Impianto fotovoltaico con agricoltura integrata "La Cipollona"

Comune di Pozzolo Formigaro (AL)

Proponente

Renantis Italia S.r.l.
c/o Copernico Milano Martesana
Viale Monza, 259, 20126 Milano
www.renantis.com – tel. 0224331
Cap. Soc. € 10.000 int.vers. .
Sede legale: Corso Italia, 3, 20122 Milano

RELAZIONE DI CALCOLO PRELIMINARE FONDAZIONI POWER STATION

Progettista

Tiemes Srl
Via Riccardo Galli, 9 – 20148 Milano
tel. 024983104/ fax. 0249631510
www.tiemes.it

0	*29/09/2023*	*Prima emissione*		*GB*	*VDA*	
Rev.	*Data emissione*	*Descrizione*		*Preparato*	*Approvato*	
Origine File: *"2318_STRU_03_Power Station_unito.pdf"*		*CODICE ELABORATO*				
		Commessa		Proc.	Tipo doc	Num	Rev
		21042	**PZZ**	**PD**	**R**	**11a**	**00**

Proprietà e diritti del presente documento sono riservati – la riproduzione è vietata /
Ownership and copyright are reserved – reproduction is strictly forbidden

REALIZZAZIONE IMPIANTO FOTOVOLTAICO

PREDIMENSIONAMENTO FONDAZIONE A PLATEA

Power Station

RELAZIONE DI CALCOLO PRELIMINARE

REGIONE	**PIEMONTE**
PROVINCIA	**ALESSANDRIA**
COMUNE	**POZZOLO FORMIGARO**
INDIRIZZO	**LAT. 44,829477** **LONG. 8,808468**

Il Progettista

Ing. Giovanni Barabino

ORDINE DEGLI INGEGNERI DELLA PROVINCIA DI GENOVA
Ing. GIOVANNI BARABINO
SEZIONE A
Civile e ambientale
N° 10955

Barabino Giovanni
Ordine degli Ingegneri della Provincia di Genova
Ingegnere
07.12.2023 10:35:20 GMT+01:00

1. NORMATIVA DI RIFERIMENTO

L'analisi della struttura è condotta utilizzando gli usuali metodi della Scienza delle Costruzioni, con il metodo degli stati limite, ed in conformità della normativa vigente in materia, in particolare:

- Legge 5 novembre 1971 n. 1086 (G.U. 21 dicembre 1971 n. 321), "Norme per la disciplina delle opere di conglomerato cementizio armato, normale e precompresso ed a struttura metallica".
- Legge 2 febbraio 1974 n. 64 (G.U. 21 marzo 1974 n. 76), "Provvedimenti per le costruzioni con particolari prescrizioni per le zone sismiche".
- Indicazioni progettive per le nuove costruzioni in zone sismiche a cura del Ministero per la Ricerca scientifica - Roma 1981.
- D.M. Infrastrutture Trasporti 17/01/2018 (G.U. 20/02/2018 n. 42 - Suppl. Ord. n. 8) "Aggiornamento delle Norme tecniche per le Costruzioni", in seguito chiamata NTC2018.
- UNI-EN 1990:2006 "Eurocodice – Criteri generali di progettazione strutturale".
- UNI-EN 1991:2004 "Eurocodice 1 – Progettazione di strutture in calcestruzzo"
- UNI-EN 1992:2005 "Eurocodice 2 – Progettazione di strutture in acciaio"
- UNI-EN 1997:2005 "Eurocodice 7 – Progettazione Geotecnica"
- UNI-EN 1998:2005 "Eurocodice 8 – Progettazione delle strutture per la resistenza sismica"

Inoltre, in mancanza di specifiche indicazioni, ad integrazione della norma precedente e per quanto con esse non in contrasto, sono state utilizzate le indicazioni contenute nelle seguenti norme:

- Circolare 21 gennaio 2019, n. 7 C.S.LL.PP. (G.U. Serie Generale n. 35 del 11/02/2019 - Suppl. Ord. n. 5), Istruzioni per l'applicazione dell'«Aggiornamento delle "Norme tecniche per le costruzioni"» di cui al decreto ministeriale 17 gennaio 2018, in seguito chiamata Circolare 2019.

2. DEFINIZIONE PROGETTO

Il progetto prevede il predimensionamento delle fondazioni di differenti strutture che andranno a comporre quello che sarà un impianto fotovoltaico nella periferia del comune di Pozzolo Formigaro, provincia di Alessandria. La presente relazione si riferisce al predimensionamento delle fondazioni della struttura Power Station.

- Sito in esame: Coordinate WGS84
    - LAT 44,829477
    - LONG 8,808468

3. ANALISI STRUTTURALE

In seguito a contatti via mail, sono stati forniti dalla committenza i dati delle strutture con relativi elaborati grafici preliminari e schede tecniche a corredo.

La struttura Power Station si compone di un modulo prefabbricato che ospita tutti i componenti cui necessita per il suo funzionamento. I carichi della sovrastruttura sono trasferiti al terreno di fondazione tramite una platea in calcestruzzo armato ed uno strato di regolarizzazione realizzato in ghiaia compattata.

3.1. ANALISI DEI CARICHI

Un'accurata valutazione dei carichi è un requisito imprescindibile di una corretta progettazione, la valutazione dei carichi e dei sovraccarichi è stata effettuata in accordo con le disposizioni del punto 3.1 delle NTC2018.

I calcoli e le verifiche sono condotti con il metodo semiprobabilistico degli stati limite secondo le indicazioni delle normative di riferimento. Le azioni introdotte direttamente sono combinate con le altre (carichi permanenti, accidentali e sisma) mediante

le combinazioni di carico descritte nei paragrafi seguenti; da esse si ottengono i valori probabilistici da impiegare successivamente nelle verifiche.

Vengono di seguito elencati i carichi di progetto in accordo alle indicazioni fornite dalla committenza e alle normative di riferimento:

- G1 e G2: Carichi permanenti strutturali e non strutturali
  - Ricadono in questa categoria i carichi degli elementi strutturali che vanno a comporre le cabine principali di contenimento degli impianti e gli impianti permanenti che trovano luogo permanete nel sistema analizzato
    - $\gamma_{calcestruzzo}$ = 25.0 kN/m^3
    - γ_{ghiaia} = 19.0 kN/m^3
    - $G_{2,cav}$ = 25.0 kN/m^3
- Q: Carichi variabili
  - Ricadono in questa categoria i carichi dati da eventuale affollamento della struttura (4.00 kN/m^2), il peso della neve, il carico dato dall'azione del vento e quello del sisma.

3.1.1. Neve

In mancanza di adeguate indagini statistiche e specifici studi locali, che tengano conto sia dell'altezza del manto nevoso che della sua densità, il carico di riferimento della neve al suolo, per località poste a quota inferiore a 1500 m sul livello del mare, non dovrà essere assunto minore di quello calcolato in base alle espressioni riportate nel seguito, cui corrispondono valori associati ad un periodo di ritorno pari a 50 anni per le varie zone indicate nella Fig. 3.4.1. delle NTC2018. Tale zonazione non tiene conto di aspetti specifici e locali che, se necessario, devono essere definiti singolarmente.

L'altitudine di riferimento (espressa in m) è la quota del suolo sul livello del mare nel sito dove è realizzata la costruzione.

$a_s := 175\ \mathrm{m}$ $\qquad \gamma_{snow} := 2\ \frac{\mathrm{kN}}{\mathrm{m}^3}$

$$q_{sk} := \begin{cases} 1{,}5\ \frac{\mathrm{kN}}{\mathrm{m}^2} & \text{if } a_s \le 200\ \mathrm{m} \\ \left(\left(1{,}35 \cdot \left(1 + \left(\frac{\frac{a_s}{\mathrm{m}}}{602}\right)^2\right)\right) \frac{\mathrm{kN}}{\mathrm{m}^2}\right) & \text{if } a_s > 200\ \mathrm{m} \\ \text{"NO"} & \text{else} \end{cases} = 1{,}5\ \frac{\mathrm{kN}}{\mathrm{m}^2}$$

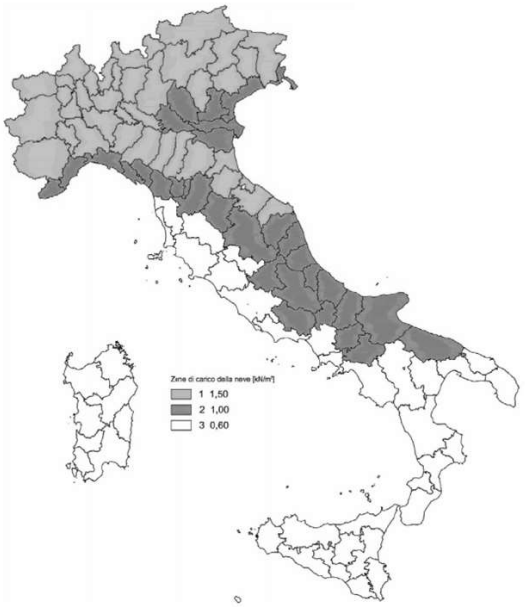

Per altitudini superiori a 1500 m sul livello del mare si deve fare riferimento alle condizioni locali di clima e di esposizione utilizzando comunque valori di carico neve non inferiori a quelli previsti per 1500 m.

Per un'opera di nuova realizzazione in fase di costruzione o per le fasi transitorie relative ad interventi sulle costruzioni esistenti, il periodo di ritorno dell'azione può essere ridotto come di seguito specificato:

per fasi di costruzione o fasi transitorie con durata prevista in sede di progetto non superiore a tre mesi, si assumerà TR ≥ 5 anni;

per fasi di costruzione o fasi transitorie con durata prevista in sede di progetto compresa fra tre mesi d un anno, si assumerà TR ≥ 10 anni.

Il coefficiente di esposizione CE tiene conto delle caratteristiche specifiche dell'area in cui sorge l'opera. Valori consigliati di questo coefficiente sono forniti in Tab. 3.4.I per diverse classi di esposizione. Se non diversamente indicato, si assumerà C_E = 0.9.

Tab. 3.4.I – *Valori di C_E per diverse classi di esposizione*

Topografia	Descrizione	C_E
Battuta dai venti	Aree pianeggianti non ostruite esposte su tutti i lati, senza costruzioni o alberi più alti	0,9
Normale	Aree in cui non è presente una significativa rimozione di neve sulla costruzione prodotta dal vento, a causa del terreno, altre costruzioni o alberi	1,0
Riparata	Aree in cui la costruzione considerata è sensibilmente più bassa del circostante terreno o circondata da costruzioni o alberi più alti	1,1

$$\boxed{C_E := 1}$$

Il coefficiente termico tiene conto della riduzione del carico della neve, a causa dello scioglimento della stessa, causata dalla perdita di calore della costruzione. Tale coefficiente dipende dalle proprietà di isolamento termico del materiale utilizzato in copertura.

In assenza di uno specifico e documentato studio, deve essere posto Ct = 1.

$$\boxed{C_t := 1}$$

I coefficienti di forma delle coperture dipendono dalla forma stessa della copertura e dall'inclinazione sull'orizzontale delle sue parti componenti e dalle condizioni climatiche locali del sito ove sorge la costruzione.

In assenza di dati suffragati da opportuna documentazione, i valori nominali del coefficiente di forma μ_1 delle coperture ad una o a due falde possono essere ricavati dalla Tab. 3.4.II, essendo α, espresso in gradi sessagesimali, l'angolo formato dalla falda con l'orizzontale.

Per lo Power Station è stata considerata una copertura di pendenza approssimabile a 0°.

$\alpha := 0\ °$

$$\mu_1 := \text{if } (\alpha \geq 0\ °) \wedge (\alpha \leq 30\ °) \quad = 0{,}8$$
$$\quad 0{,}8$$
$$\quad \text{else}$$
$$\quad \text{if } (\alpha > 30\ °) \wedge (\alpha < 60\ °)$$
$$\quad\quad 0{,}8 \cdot \left(\frac{60\ ° - \alpha}{30\ °}\right)$$
$$\quad\quad \text{else}$$
$$\quad\quad \text{if } \alpha \geq 60\ °$$
$$\quad\quad\quad 0$$
$$\quad\quad \text{else}$$
$$\quad\quad\quad \text{"OK"}$$

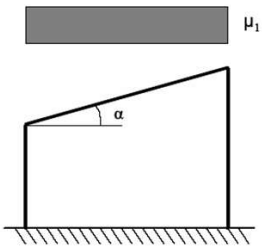

$$q_S := q_{sk} \cdot \mu_1 \cdot C_E \cdot C_t = 1{,}2\ \frac{kN}{m^2}$$

3.1.2. Vento

La velocità base di riferimento v_b è il valore medio su 10 minuti, a 10 m di altezza sul suolo su un terreno pianeggiante e omogeneo di categoria di esposizione II (vedi Tab. 3.3.II), riferito ad un periodo di ritorno TR = 50 anni.

Per altitudini superiori a 1500 m sul livello del mare, i valori della velocità base di riferimento possono essere ricavati da opportuna documentazione o da indagini statistiche adeguatamente comprovate, riferite alle condizioni locali di clima e di esposizione.

$a_s := 175\ m$

Tab. 3.3.I -*Valori dei parametri* $v_{b,0}$, a_0, k_s

Zona	Descrizione	$v_{b,0}$ [m/s]	a_0 [m]	k_s
1	Valle d'Aosta, Piemonte, Lombardia, Trentino Alto Adige, Veneto, Friuli Venezia Giulia (con l'eccezione della provincia di Trieste)	25	1000	0,40
2	Emilia Romagna	25	750	0,45
3	Toscana, Marche, Umbria, Lazio, Abruzzo, Molise, Puglia, Campania, Basilicata, Calabria (esclusa la provincia di Reggio Calabria)	27	500	0,37
4	Sicilia e provincia di Reggio Calabria	28	500	0,36
5	Sardegna (zona a oriente della retta congiungente Capo Teulada con l'Isola di Maddalena)	28	750	0,40
6	Sardegna (zona a occidente della retta congiungente Capo Teulada con l'Isola di Maddalena)	28	500	0,36
7	Liguria	28	1000	0,54
8	Provincia di Trieste	30	1500	0,50
9	Isole (con l'eccezione di Sicilia e Sardegna) e mare aperto	31	500	0,32

$v_{b,0} := 25\ \frac{m}{s}$ $\qquad a_0 := 1000\ m$ $\qquad k_s := 0,4$

$$c_a := \begin{cases} 1 & \text{if } a_s \le a_0 \\ 1 + k_s \cdot \left(\frac{a_s}{a_0} - 1\right) & \text{else} \end{cases} = 1$$

$$v_b := v_{b,0} \cdot c_a = 25\ \frac{m}{s}$$

Ove non specificato diversamente, si assumerà TR = 50 anni, cui corrisponde c_r = 1. Per un'opera di nuova realizzazione in fase di costruzione o per le fasi transitorie relative ad interventi sulle costruzioni esistenti, il periodo di ritorno dell'azione potrà essere ridotto.

$T_R := 50$

$$c_r := 0,75 \cdot \sqrt{1 - 0,2 \cdot \ln\left(-\ln\left(1 - \frac{1}{T_R}\right)\right)} = 1,0007$$

$$v_r := v_b \cdot c_r = 25,0183\ \frac{m}{s}$$

Le azioni del vento sono costituite da pressioni e depressioni agenti normalmente alle superfici, sia esterne che interne, degli elementi che compongono la costruzione (§ 3.3.4).

L'azione del vento sui singoli elementi che compongono la costruzione va determinata considerando la combinazione più gravosa delle pressioni agenti sulle due facce di ogni elemento.

Nel caso di costruzioni di grande estensione, si deve inoltre tenere conto delle azioni tangenti esercitate dal vento (§ 3.3.4). L'azione d'insieme esercitata dal vento su una costruzione è data dalla risultante delle azioni sui singoli elementi, considerando come direzione del vento quella corrispondente ad uno degli assi principali della pianta della costruzione.

Pressione del vento

$$p := q_r \cdot c_e \cdot c_p \cdot c_d$$

q_r	pressione cinetica di riferimento
c_e	coefficiente di esposizione
c_p	coefficiente di pressione/aerodinamici
c_d	coefficiente dinamico

Azione tangente del vento

$$p_f := q_r \cdot c_e \cdot c_f$$

c_e	coefficiente di esposizione
c_f	coefficiente d'attrito

Pressione cinetica di riferimento

$\rho := 1,25 \ \frac{kg}{m^3}$ densità dell'aria

$$q_r := \frac{1}{2} \cdot \rho \cdot v_r^{\ 2} = 391,1985 \ \frac{N}{m^2}$$

Il coefficiente di esposizione ce dipende dall'altezza z sul suolo del punto considerato, dalla topografia del terreno e dalla categoria di esposizione del sito ove sorge la costruzione. In assenza di analisi specifiche che tengano in conto la direzione di provenienza del vento e l'effettiva scabrezza e topografia del terreno che circonda la costruzione, per altezze sul suolo non maggiori di z = 200 m, esso è dato dalla formula riportata sotto.

Tab. 3.3.III - *Classi di rugosità del terreno*

Classe di rugosità del terreno	Descrizione
A	Aree urbane in cui almeno il 15% della superficie sia coperto da edifici la cui altezza media superi i 15 m
B	Aree urbane (non di classe A), suburbane, industriali e boschive
C	Aree con ostacoli diffusi (alberi, case, muri, recinzioni,....); aree con rugosità non riconducibile alle classi A, B, D
D	a) Mare e relativa fascia costiera (entro 2 km dalla costa); b) Lago (con larghezza massima pari ad almeno 1 km) e relativa fascia costiera (entro 1 km dalla costa) c) Aree prive di ostacoli o con al più rari ostacoli isolati (aperta campagna, aeroporti, aree agricole, pascoli, zone paludose o sabbiose, superfici innevate o ghiacciate, ...)

L'assegnazione della classe di rugosità non dipende dalla conformazione orografica e topografica del terreno. Si può assumere che il sito appartenga alla Classe A o B, purché la costruzione si trovi nell'area relativa per non meno di 1 km e comunque per non meno di 20 volte l'altezza della costruzione, per tutti i settori di provenienza del vento ampi almeno 30°. Si deve assumere che il sito appartenga alla Classe D, qualora la costruzione sorga nelle aree indicate con le lettere a) o b), oppure entro un raggio di 1 km da essa vi sia un settore ampio 30°, dove il 90% del terreno sia del tipo indicato con la lettera c). Laddove sussistano dubbi sulla scelta della classe di rugosità, si deve assegnare la classe più sfavorevole (l'azione del vento è in genere minima in Classe A e massima in Classe D).

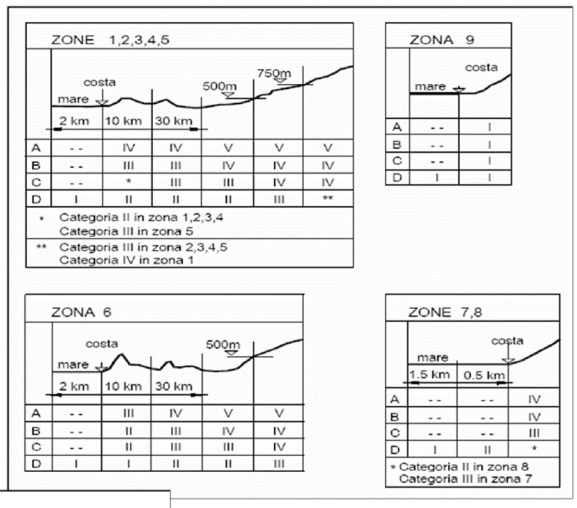

Tab. 3.3.II - *Parametri per la definizione del coefficiente di esposizione*

Categoria di esposizione del sito	K_r	z_0 [m]	z_{min} [m]
I	0,17	0,01	2
II	0,19	0,05	4
III	0,20	0,10	5
IV	0,22	0,30	8
V	0,23	0,70	12

$K_r := 0,19$ $\quad z_0 := 0,05 \ m$ $\quad z_{min} := 4 \ m$

Il coefficiente di topografia c_t, in genere funzione dell'altezza z sul suolo, tiene conto delle caratteristiche topografiche e orografiche del sito ove sorge la costruzione. In mancanza di più approfondite valutazioni (Appendice C), il coefficiente di topografia è posto di regola pari a 1 sia per le zone pianeggianti sia per quelle ondulate, collinose e montane.

$$c_t := 1$$

$$c_e := \begin{array}{l} \text{if } z \geq z_{min} \\ \quad K_r^{\,2} \cdot c_t \cdot \ln\left(\frac{z}{z_0}\right) \cdot \left(7 + c_t \cdot \ln\left(\frac{z}{z_0}\right)\right) \\ \text{else} \\ \quad \text{if } z < z_{min} \\ \quad\quad K_r^{\,2} \cdot c_t \cdot \ln\left(\frac{z_{min}}{z_0}\right) \cdot \left(7 + c_t \cdot \ln\left(\frac{z_{min}}{z_0}\right)\right) \\ \quad \text{else} \\ \quad\quad \text{"NO"} \end{array} = 1{,}8616$$

La pressione cinetica di picco del vento q_p è il valore atteso della pressione cinetica massima del vento sull'intervallo di tempo T = 10 minuti. Essa dipende dall'altezza z sul suolo, dalla ventosità della zona in esame, dal periodo di ritorno di progetto, dalle caratteristiche locali del sito ove sorge la costruzione e dalla densità dell'aria.

In mancanza di analisi specifiche che tengano in conto la direzione di provenienza del vento e l'effettiva rugosità e topografia del terreno limitrofo alla costruzione (Appendice C), per altezze sul suolo non maggiori di z = 200 m, la pressione cinetica di picco è fornita dalla relazione sotto.

$$q_p := q_r \cdot c_e \cdot c_t \cdot c_d = 0{,}7283 \ \frac{kN}{m^2}$$

Carico sulle pareti verticali

A favore di sicurezza, per il calcolo dell'azione del cento, il trasformatore è stato considerato come un parallelepipedo di dimensioni analoghe a quelle del trasformatore.

Il comportamento aerodinamico degli edifici e in particolare delle loro pareti dipende, principalmente, dai rapporti tra le dimensioni in pianta e l'altezza. Per edifici tozzi si realizza un flusso tridimensionale. Per gli edifici snelli, con l'esclusione della porzione alla base e di sommità, si realizza un flusso bidimensionale in piani orizzontali. Pertanto, in generale, i coefficienti di pressione forniti in questo paragrafo dipendono dal rapporto h/d, essendo h l'altezza dell'edificio e d la sua dimensione nella direzione del flusso incidente.

$h := 3\ m$

$d := 6{,}05\ m$

$b := 2{,}45\ m$

$\frac{h}{d} = 0{,}4959$

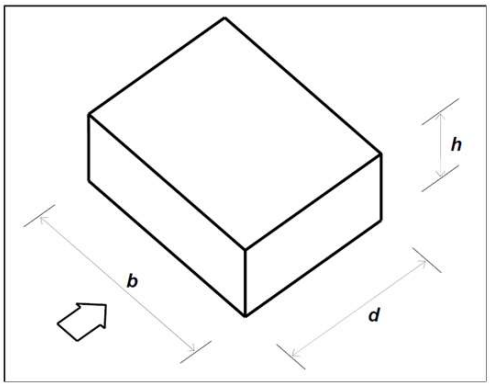

Faccia sopravento	Facce laterali	Faccia sottovento
$h/d \leq 1$: $c_{pe} = 0{,}7 + 0{,}1 \cdot h/d$ $h/d > 1$: $c_{pe} = 0{,}8$	$h/d \leq 0{,}5$: $c_{pe} = -0{,}5 - 0{,}8 \cdot h/d$ $h/d > 0{,}5$: $c_{pe} = -0{,}9$	$h/d \leq 1$: $c_{pe} = -0{,}3 - 0{,}2 \cdot h/d$ $1 < h/d \leq 5$: $c_{pe} = -0{,}5 - 0{,}05 \cdot (h/d - 1)$

Faccia sopravento

$$c_{pe,1} := \begin{cases} 0{,}7 + 0{,}1 \cdot \frac{h}{d} & \text{if } \frac{h}{d} \leq 1 \\ 0{,}8 & \text{else if } \frac{h}{d} > 1 \\ \text{"NO"} & \text{else} \end{cases} = 0{,}7496$$

Facce laterali

$$c_{pe,2} := \begin{cases} -0{,}5 - 0{,}8 \cdot \frac{h}{d} & \text{if } \frac{h}{d} \leq 0{,}5 \\ -0{,}9 & \text{else if } \frac{h}{d} > 0{,}5 \\ \text{"NO"} & \text{else} \end{cases} = -0{,}8967$$

Faccia sottovento

$$c_{pe,3} := \begin{cases} -0{,}3 - 0{,}2 \cdot \frac{h}{d} & \text{if } \frac{h}{d} \leq 1 \\ -0{,}5 - 0{,}05 \cdot \left(\frac{h}{d} - 1\right) & \text{else if } \left(\frac{h}{d} > 1\right) \wedge \left(\frac{h}{d} \leq 5\right) \\ \text{"NO"} & \text{else} \end{cases} = -0{,}3992$$

Pressioni sulle pareti laterali

$P_1 := q_p \cdot c_{pe,1} = 0,5459 \frac{kN}{m^2}$ faccia sopravento

$p_2 := q_p \cdot c_{pe,2} = -0,653 \frac{kN}{m^2}$ facce laterali

$p3 := q_p \cdot c_{pe,3} = -0,2907 \frac{kN}{m^2}$ faccia sottovento

3.1.3. Sisma

L'azione sismica viene calcolata sulla base delle considerazioni riportate nella relazione geologica intitolata "Indagini sismiche MASW aree fotovoltaiche in progetto" dello Studio di Geologia Dott. Cavalli Andrea datata Settembre 2023.

- Coordinate geografiche: long. 8,808468°, lat. 44,829477°
- Zona: 3
- Tipo di suolo: B
- Condizioni topografiche: T1
- Coefficiente di amplificazione topografica ST= 1.00
- Vita nominale VN = 50 anni
- Classe d'uso: II
- Coefficiente CU= 1.0
- Coefficiente smorzamento viscoso ξ= 5.00%
- Fattore alterazione spettro η= 1.00

Ulteriori dettagli su valori e prove effettuate sono consultabili nella relazione geologica sopra citata che verrà allegata al presente documento.

Punti del reticolo contornanti il sito:

Punto	Longitudine	Latitudine	Distanza
[°]	[°]	[km]	
14'919	8.8378	44.8440	2.8208
14'918	8.7674	44.8420	3.5250
15'140	8.7713	44.7920	5.0954
15'141	8.8416	44.7940	4.7321

Parametri spettrali

S.L.	TR	a_g/g	Fo	T*C	Fv	SS	S	CC
	anni							
S.L.C.	975	0.1164	2.4400	0.2728	1.1348	1.2000	1.2000	1.4263
S.L.V.	475	0.0853	2.4395	0.2700	0.9713	1.2000	1.2000	1.4293
S.L.D.	50	0.0304	2.4838	0.2102	0.5900	1.2000	1.2000	1.5027
S.L.O.	30	0.0225	2.5071	0.1802	0.5126	1.2000	1.2000	1.5497

TB,o	TC,o	TD,o	TB,v	TC,v	TD,v	dg	vg
sec	sec	sec	sec	sec	sec	m	m/s
0.1297	0.3891	2.0747	0.0500	0.1500	1.0000	0.028	0.087
0.1286	0.3859	1.9479	0.0500	0.1500	1.0000	0.019	0.063
0.1053	0.3158	1.7238	0.0500	0.1500	1.0000	0.005	0.018
0.0931	0.2792	1.6917	0.0500	0.1500	1.0000	0.003	0.012

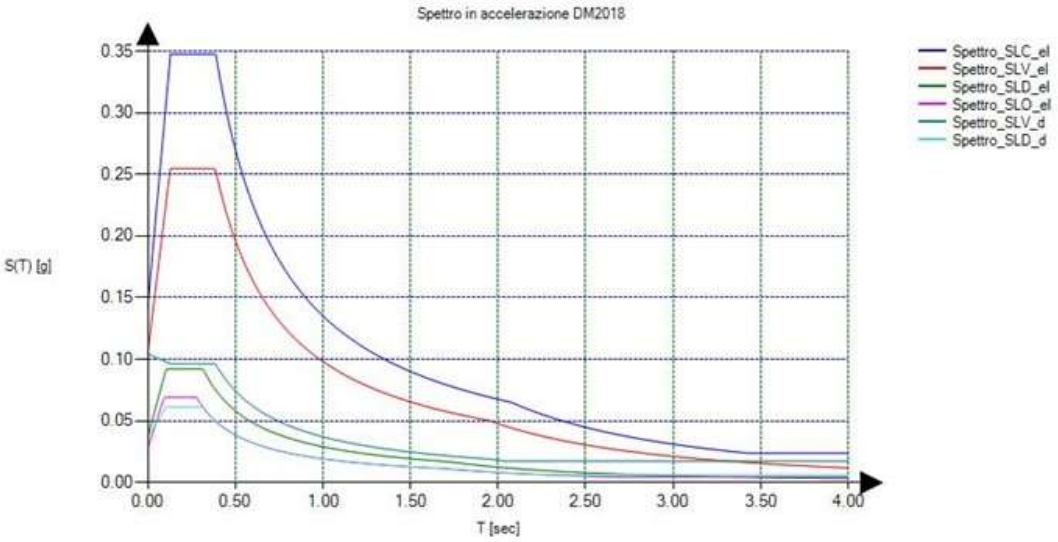

Figura 1 - Spettro in accelerazione orizzontale

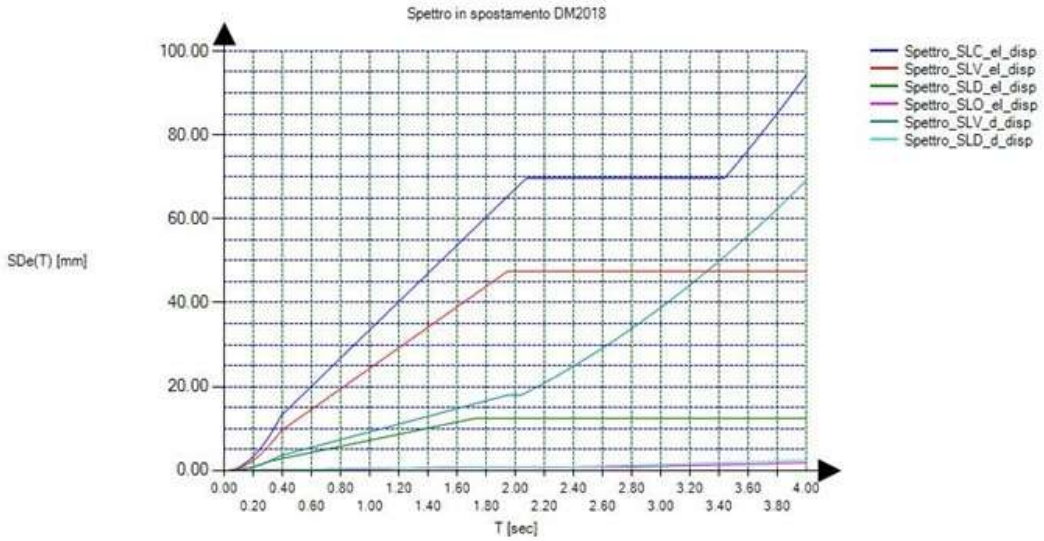

Figura 2 - Spettro in accelerazione orizzontale

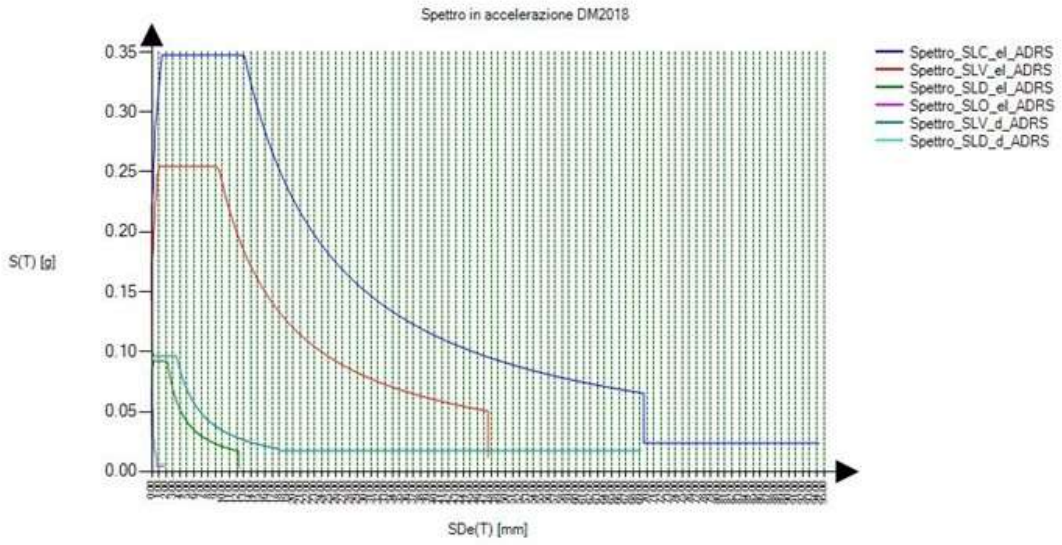

Figura 3 - Spettro in accelerazione orizzontale

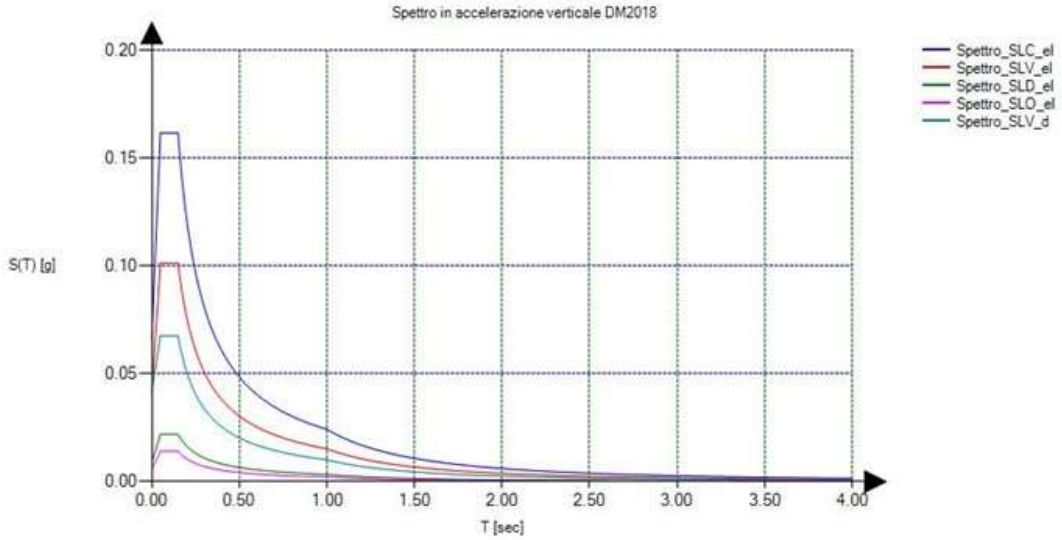

Figura 4 - Spettro in accelerazione orizzontale

3.2. COMBINAZIONE DEI CARICHI

I calcoli e le verifiche sono condotti con il metodo semiprobabilistico degli stati limite secondo le indicazioni del D.M. 2018. I carichi agenti sui solai, derivanti dall'analisi dei carichi, vengono ripartiti dal programma di calcolo in modo automatico sulle membrature (travi, pilastri, pareti, solette, platee, ecc.).

Su tutti gli elementi strutturali è inoltre possibile applicare direttamente ulteriori azioni concentrate e/o distribuite (variabili con legge lineare ed agenti lungo tutta l'asta o su tratti limitati di essa).

Le azioni introdotte direttamente sono combinate con le altre (carichi permanenti, accidentali e sisma) mediante le combinazioni di carico descritte nei tabulati di analisi e verifica; da esse si ottengono i valori probabilistici da impiegare successivamente nelle verifiche.

3.2.1. Stati limite ultimi

Le azioni sulla costruzione sono state cumulate in modo da determinare condizioni di carico tali da risultare più sfavorevoli ai fini delle singole verifiche, tenendo conto della probabilità ridotta di intervento simultaneo di tutte le azioni con i rispettivi valori più sfavorevoli, come consentito dalle norme vigenti.

Per gli stati limite ultimi sono state adottate le combinazioni del tipo:

$$\gamma_{G1} \cdot G_1 + \gamma_{G2} \cdot G_2 + \gamma_P \cdot P + \gamma_{Q1} \cdot Q_{K1} + \gamma_{Q2} \cdot \psi_{02} \cdot Q_{K2} + \gamma_{Q3} \cdot \psi_{03} \cdot Q_{K3} + \cdots \quad (1)$$

dove:

G_1, rappresenta il peso proprio di tutti gli elementi strutturali; peso proprio del terreno, quando pertinente; forze indotte dal terreno (esclusi gli effetti di carichi variabili applicati al terreno); forze risultanti dalla pressione dell'acqua (quando si configurino costanti nel tempo);

G_2, rappresenta il peso proprio di tutti gli elementi non strutturali;

P, rappresenta l'azione di pretensione e/o precompressione;

Q, azioni sulla struttura o sull'elemento strutturale con valori istantanei che possono risultare sensibilmente diversi fra loro nel tempo:

di lunga durata: agiscono con un'intensità significativa, anche non continuativamente, per un tempo non trascurabile rispetto alla vita nominale della struttura;

di breve durata: azioni che agiscono per un periodo di tempo breve rispetto alla vita nominale della struttura;

Q_{ki}, rappresenta il valore caratteristico della i-esima azione variabile;

γ_g, γ_p, γ_q, coefficienti parziali come definiti nella Tab. 2.6.I del D.M. 2018;

ψ_{0i}, sono i coefficienti di combinazione per tenere conto della ridotta probabilità di concomitanza delle azioni variabili con i rispettivi valori caratteristici.

Le combinazioni risultanti sono state costruite a partire dalle sollecitazioni caratteristiche calcolate per ogni condizione di carico elementare: ciascuna condizione di carico accidentale, a rotazione, è stata considerata sollecitazione di base (Q_{k1} nella formula precedente).

In zona sismica, oltre alle sollecitazioni derivanti dalle generiche condizioni di carico statiche, devono essere considerate anche le sollecitazioni derivanti dal sisma. L'azione sismica è stata combinata con le altre azioni secondo la seguente relazione:

$$G_1 + G_2 + P + E + \psi_{21} \cdot Q_{K1} + \psi_{22} \cdot Q_{K2} + \cdots$$

dove:

E, rappresenta l'azione sismica per lo stato limite in esame;

G_1, rappresenta peso proprio di tutti gli elementi strutturali;

G_2, rappresenta il peso proprio di tutti gli elementi non strutturali;

P, rappresenta l'azione di pretensione e/o precompressione;

ψ_{2i}, coefficiente di combinazione delle azioni variabili Q_i;

Q_{ki}, valore caratteristico dell'azione variabile Q_i.

Gli effetti dell'azione sismica sono valutati tenendo conto delle masse associate ai seguenti carichi gravitazionali:

$$G_K + \psi_{21} \cdot Q_{K1} + \psi_{22} \cdot Q_{K2} + \cdots$$

I valori dei coefficienti ψ_{2i} sono riportati nella seguente tabella:

Categoria/Azione	ψ_{2i}
Categoria A - Ambienti ad uso residenziale	0.3
Categoria B - Uffici	0.3
Categoria C - Ambienti suscettibili di affollamento	0.6
Categoria D - Ambienti ad uso commerciale	0.6
Categoria E - Biblioteche, archivi, magazzini e ambienti ad uso industriale	0.8
Categoria F - Rimesse e parcheggi (per autoveicoli di peso ≤ 30 kN)	0.6
Categoria G - Rimesse e parcheggi (per autoveicoli di peso > 30 kN)	0.3
Categoria H - Coperture	0.0
Categoria I - Coperture praticabili	*
Categoria K - Coperture per usi speciali (impianti, eliporti, ...)	*
Vento	0.0
Neve (a quota ≤ 1000 m s.l.m.)	0.0
Neve (a quota > 1000 m s.l.m.)	0.2
Variazioni termiche	0.0

* "Da valutarsi caso per caso"

3.2.2. Stato limite di danno

L'azione sismica, ottenuta dallo spettro di progetto per lo Stato Limite di Danno, è stata combinata con le altre azioni mediante una relazione del tutto analoga alla precedente:

$$G_1 + G_2 + P + E + \psi_{21} \cdot Q_{K1} + \psi_{22} \cdot Q_{K2} + \cdots$$

dove:

E, rappresenta l'azione sismica per lo stato limite in esame;

G_1, rappresenta peso proprio di tutti gli elementi strutturali;

G_2, rappresenta il peso proprio di tutti gli elementi non strutturali;

P, rappresenta l'azione di pretensione e/o precompressione;

ψ_{2i}, coefficiente di combinazione delle azioni variabili Q_i;

Q_{ki}, valore caratteristico dell'azione variabile Q_i.

Gli effetti dell'azione sismica sono valutati tenendo conto delle masse associate ai seguenti carichi gravitazionali:

$$G_K + \psi_{21} \cdot Q_{K1} + \psi_{22} \cdot Q_{K2} + \cdots$$

I valori dei coefficienti ψ_{2i} sono riportati nella tabella di cui allo SLV.

Stato limite di esercizio

Allo Stato Limite di Esercizio le sollecitazioni con cui sono state progettate le aste sono state ricavate applicando le formule riportate nel D.M. 2018 al §2.5.3. Per le verifiche agli stati limite di esercizio, a seconda dei casi, si fa riferimento alle seguenti combinazioni di carico rara, frequente e quasi permanente:

$$G_1 + G_2 + P + Q_{K1} + \psi_{02} \cdot Q_{K2} + \psi_{03} \cdot Q_{K3} + \cdots$$

$$G_1 + G_2 + P + \psi_{11} \cdot Q_{K1} + \psi_{22} \cdot Q_{K2} + \psi_{23} \cdot Q_{K3} + \cdots$$

$$G_1 + G_2 + P + \psi_{21} \cdot Q_{K1} + \psi_{22} \cdot Q_{K2} + \psi_{23} \cdot Q_{K3} + \cdots$$

dove:

G_{kj}, valore caratteristico della j-esima azione permanente;

P_{kh}, valore caratteristico della h-esima deformazione impressa;

Q_{kl}, valore caratteristico dell'azione variabile di base di ogni combinazione;

Q_{ki}, valore caratteristico della i-esima azione variabile;

ψ_{0i}, coefficiente atto a definire i valori delle azioni ammissibili di durata breve ma ancora significativi nei riguardi della possibile concomitanza con altre azioni variabili;

ψ_{1i}, coefficiente atto a definire i valori delle azioni ammissibili ai frattili di ordine 0.95 delle distribuzioni dei valori istantanei;

ψ_{2i}, coefficiente atto a definire i valori quasi permanenti delle azioni ammissibili ai valori medi delle distribuzioni dei valori istantanei.

Ai coefficienti ψ_{0i}, ψ_{1i}, ψ_{2i} sono attribuiti i seguenti valori:

Azione	ψ_{0i}	ψ_{1i}	ψ_{2i}
Categoria A – Ambienti ad uso residenziale	0.7	0.5	0.3
Categoria B – Uffici	0.7	0.5	0.3
Categoria C – Ambienti suscettibili di affollamento	0.7	0.7	0.6
Categoria D – Ambienti ad uso commerciale	0.7	0.7	0.6
Categoria E – Biblioteche. archivi. magazzini e ambienti ad uso industriale	1.0	0.9	0.8
Categoria F – Rimesse e parcheggi (per autoveicoli di peso ≤ 30 kN)	0.7	0.7	0.6
Categoria G – Rimesse e parcheggi (per autoveicoli di peso > 30 kN)	0.7	0.5	0.3
Categoria H – Coperture	0.0	0.0	0.0
Vento	0.6	0.2	0.0
Neve (a quota ≤ 1000 m s.l.m.)	0.5	0.2	0.0
Neve (a quota > 1000 m s.l.m.)	0.7	0.5	0.2
Variazioni termiche	0.6	0.5	0.0

In maniera analoga a quanto illustrato nel caso dello SLU le combinazioni risultanti sono state costruite a partire dalle sollecitazioni caratteristiche calcolate per ogni condizione di carico; a turno ogni condizione di carico accidentale è stata considerata sollecitazione di base Q_{k1}, con ciò dando origine a tanti valori combinati. Per ognuna delle combinazioni ottenute, in funzione dell'elemento (trave, pilastro, eccetera) sono state effettuate le verifiche allo SLE (tensioni e deformazioni).

4. ANALISI DELLA STRUTTURA

In questo capitolo vengono descritte le principali analisi e verifiche effettuate sulla struttura per dimostrare la rispondenza ai requisiti richiesti dalla normativa di settore.

4.1. METODO DI CALCOLO

Il modello strutturale della piastra in calcestruzzo armato di fondazione è stato analizzato con software agli elementi finiti ipotizzando un suolo alla Winkler. Il modello strutturale ha permesso di ricavare le caratteristiche di sollecitazione agenti sulla platea nelle condizioni di Stato Limite Ultimo e Stato Limite di Esercizio, con le quali sono state eseguite le verifiche della sezione di calcestruzzo armato.

Per la verifica del terreno di fondazione è stata valutata la forza di compressione agente sul terreno utilizzando la combinazione più gravosa ed è stato calcolato il carico limite sopportabile dal terreno seguendo i classici metodi della geotecnica.

4.2. ANALISI DEI MATERIALI STRUTTURALI

Per definire i materiali di cui è composta la struttura sono state forniti dalla committenza diversi elaborati quali schede tecniche e elaborati grafici dai quali è stato possibile definire la tipologia di materiale che compongono la struttura e quindi calcolarne i relativi carichi strutturali che andranno ad insistere sulla fondazione da dimensionare.

Cemento armato

Calcestruzzo a prestazione garantita secondo UNI 11104

- Cemento conforme alla norma EN 197-1
- Acqua di impasto conforme alla norma EN 1008
- Additivi conformi alla norma EN 934-2

Classe	f_{ck} MPa	α_{cc}	γ_{cls}	E_{cm} MPa	f_{cd} MPa	f_{ctm} MPa	f_{ctk} MPa	f_{ctd} MPa
C28/35	28.00	0.85	1.50	32'308.25	15.87	2.77	1.94	1.29

Classe	f_{cfm} MPa	f_{bk} MPa	f_{bd} MPa	ε_{c2}	ε_{cu}	$\sigma_{c,Rara}$ MPa	$\sigma_{c,QP}$ MPa
C28/35	3.32	4.36	2.91	0.0020	0.0035	16.80	12.60

Acciaio in barre da cemento armato

Classe acciaio	f_{yk} MPa	γ_s	f_{tk} MPa	E_s MPa	f_{yd} MPa	ε_{yd}	ε_{uk}
B450C	450.00	1.15	540.00	210'000.00	391.30	0.00186	0.07500

$(f_y/f_{y,nom})_k$	ε_{ud}	$k = (f_t/f_y)_k$	$\sigma_{s,Rara}$ MPa	Diametro minimo mandrino di piegatura Φ≤16mm	Φ>16mm
≤1.25	0.06750	1.15 - 1.35	360.00	Cls normale 4Φ Cls alleggerito 6Φ	Cls normale 7Φ Cls alleggerito 11Φ

4.3. DIMENSIONAMENTO E VERIFICA DELLA PIASTRA DI FONDAZIONE

La platea di fondazione è stata dimensionata seguendo le indicazioni della normativa di riferimento nelle condizioni di Stato Limite Ultimo e Stato Limite di Esercizio. Vengono di seguito riportate le viste tridimensionali del modello di calcolo della platea nella consizione considerata dimensionate.

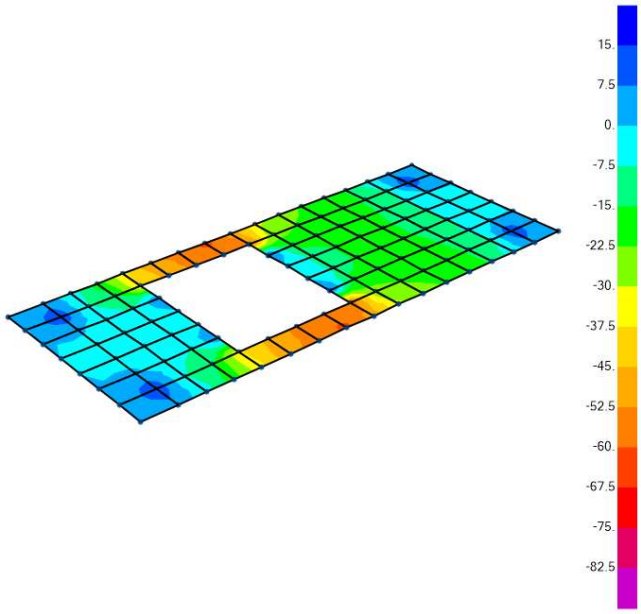

Figura 5 - Sollecitazioni M11 - SLU

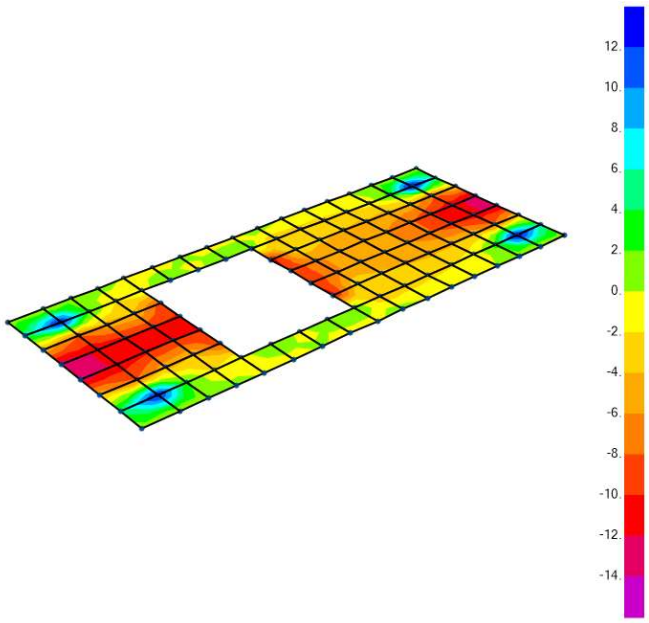

Figura 6 - Sollecitazioni M22 – SLU

VERIFICA DEGLI ELEMENTI SHELL IN DIREZIONE "1" - NTC2018

CARATTERISTICHE MECCANICHE DEI MATERIALI

Calcestruzzo

Resistenza caratteristica cubica	R_{ck}	=	35,00	N/mm²
Coefficiente che tiene in conto degli effetti di lungo termine	α_{cc}	=	0,85	-
Coefficiente di sicurezza	γ_c	=	1,50	-
Resistenza caratteristica cilindrica	f_{ck}	=	29,05	N/mm²
Resistenza di calcolo a compressione	f_{cd}	=	16,46	N/mm²
Resistenza media a compressione	f_{cm}	=	37,05	N/mm²
Resistenza media a trazione	f_{ctm}	=	2,83	N/mm²
Resistenza caratteristica a trazione (fratile 5%)	$f_{ctk,0.05}$	=	1,98	N/mm²
Resistenza caratteristica a trazione (fratile 95%)	$f_{ctk,0.95}$	=	3,69	N/mm²
Modulo di elasticità normale medio	E_{cm}	=	32588	N/mm²
Deformazione al raggiungimento della massima tensione f_{cd}	ε_{c2}	=	-0,00200	-
Deformazione ultima del calcestruzzo	ε_{cu2}	=	-0,00350	-

Acciaio per armatura

Resistenza caratteristica di snervamento	f_{yk}	=	450,00	N/mm²
Deformazione ultima dell'acciaio	ε_{ud}	=	0,06750	-
Coefficiente di sicurezza	γ_s	=	1,15	-
Resistenza di calcolo a snervamento	f_{yd}	=	391,30	N/mm²
Modulo di elasticità	E_s	=	200000	N/mm²
Deformazione dell'acciaio al raggiungimento della tensione f_{yd}	ε_{yd}	=	0,001957	-

CARATTERISTICHE DELLA SEZIONE TRASVERSALE

Altezza della sezione trasversale	h	=	300,00	mm
Larghezza della sezione trasversale	b	=	1000,00	mm

Armature predisposte nella sezione (predisporre almeno uno strato in zona tesa e uno in zona compressa)

N° Strato	N° Ferri	Diametro	z_i	Area	0.5h - z_i	z'_i
-	-	mm	mm	mm²	mm	mm
1	10	8	61,00	503	89	239
2	10	8	239,00	503	-89	61
3				0	0	0
4				0	0	0
5				0	0	0
6				0	0	0

z_i = distanza tra il bordo superiore della sezione in calcestruzzo ed il baricentro dell'armatura che si sta considerando

DOMINIO DI RESISTENZA - Fd1 + Md1

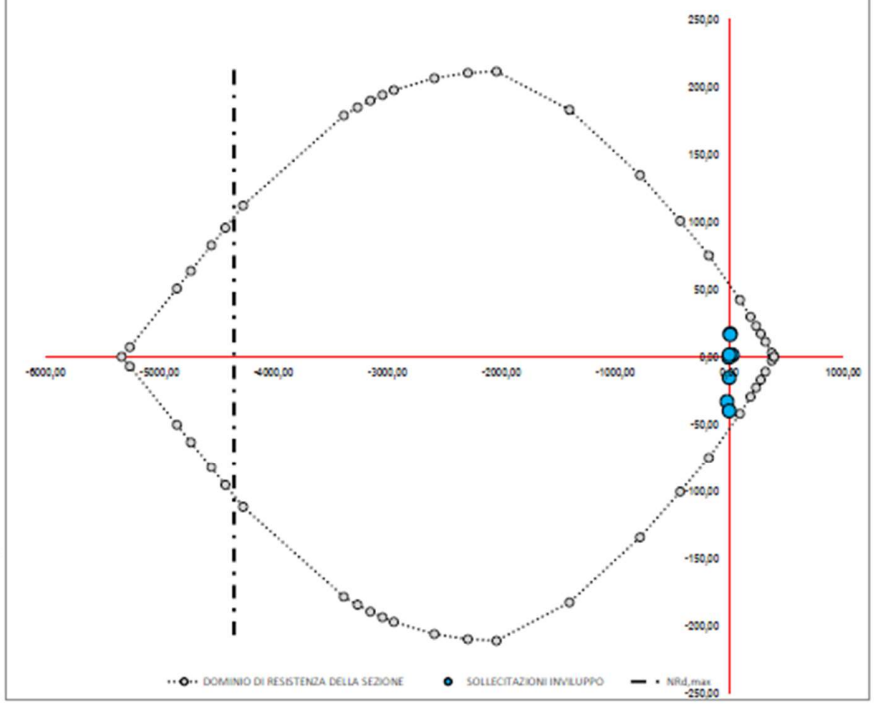

SEZIONE TRASVERSALE

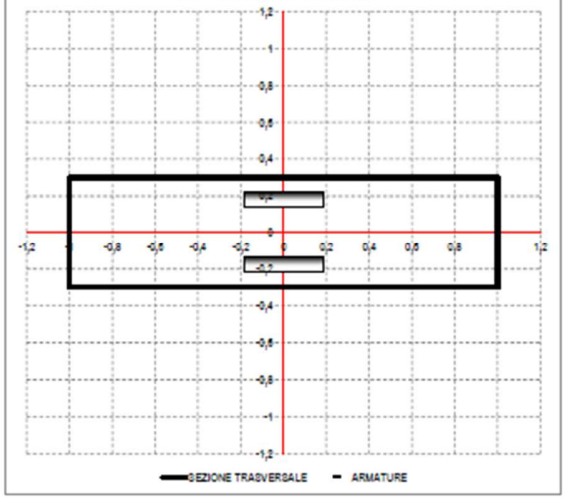

CARATTERISTICHE DELLE SOLLECITAZIONI DI DESIGN IN DIREZIONE 1

	F_{d1} [kN]	M_{d1} [kNm]	V_{d1} [kN]	e_1 [m]
Massima forza assiale in direzione 1 e momento associato	29	1	14	4,23E-02
Minima forza assiale in direzione 1 e momento associato	-19	-33	-35	1,75E+00
Massimo momento in direzione 1 e forza assiale associata	10	17	58	1,74E+00
Minimo momento in direzione 1 e forza assiale associata	0	-40	-45	0,00E+00
Massimo taglio in direzione 1 associato ai relativi valori di F_{d1} e M_{d1}	10	16	62	1,67E+00
Minimo taglio in direzione 1 associato ai relativi valori di F_{d1} e M_{d1}	-4	0	-61	1,34E-01
Massima eccentricità in direzione 1	0,00	1,44	2,55	1,02E+04
Minima eccentricità in direzione 1	0,04	-15,54	-7,04	-3,89E+02

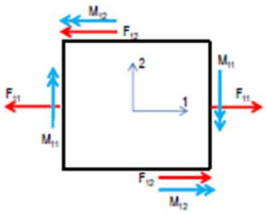

$F_{d1} = F_{11} + |F_{12}|$

$M_{d1} = M_{11} + |M_{12}|$

RESISTENZA LIMITE DELLA SEZIONE A COMPRESSIONE SEMPLICE

Massima forza di compressione sopportabile dalla sezione $N_{Rd,max}$ = **-4344,18 kN**

VERIFICA DEGLI ELEMENTI SHELL IN DIREZIONE "2" - NTC2018

CARATTERISTICHE MECCANICHE DEI MATERIALI

Calcestruzzo

Resistenza caratteristica cubica	R_{ck}	=	35,00	N/mm²
Coefficiente che tiene in conto degli effetti di lungo termine	α_{cc}	=	0,85	-
Coefficiente di sicurezza	γ_c	=	1,50	-
Resistenza caratteristica cilindrica	f_{ck}	=	29,05	N/mm²
Resistenza di calcolo a compressione	f_{cd}	=	16,46	N/mm²
Resistenza media a compressione	f_{cm}	=	37,05	N/mm²
Resistenza media a trazione	f_{ctm}	=	2,83	N/mm²
Resistenza caratteristica a trazione (fretile 5%)	$f_{ctk,0.05}$	=	1,98	N/mm²
Resistenza caratteristica a trazione (fretile 95%)	$f_{ctk,0.95}$	=	3,69	N/mm²
Modulo di elasticità normale medio	E_{cm}	=	32588	N/mm²
Deformazione al raggiungimento della massima tensione f_{cd}	ε_{c2}	=	-0,00200	-
Deformazione ultima del calcestruzzo	ε_{cu2}	=	-0,00350	-

Acciaio per armatura

Resistenza caratteristica di snervamento	f_{yk}	=	450,00	N/mm²
Deformazione ultima dell'acciaio	ε_{ud}	=	0,0675	-
Coefficiente di sicurezza	γ_s	=	1,15	-
Resistenza di calcolo a snervamento	f_{yd}	=	391,30	N/mm²
Modulo di elasticità	E_s	=	200000	N/mm²
Deformazione dell'acciaio al raggiungimento della tensione f_{yd}	ε_{yd}	=	0,001957	-

CARATTERISTICHE DELLA SEZIONE TRASVERSALE

Altezza della sezione trasversale	h	=	300,00	mm
Larghezza della sezione trasversale	b	=	1000,00	mm

Armature predisposte nella sezione (predisporre almeno uno strato in zona tesa e uno in zona compressa)

N° Strato	N° Ferri	Diametro	z_i	Area	0.5h - z_i	z'_i
-	-	mm	mm	mm²	mm	mm
1	10	8	61,00	503	89	239
2	10	8	239,00	503	-89	61
3				0	0	0
4				0	0	0
5				0	0	0
6				0	0	0

z_i = distanza tra il bordo superiore della sezione in calcestruzzo ed il baricentro dell'armatura che si sta considerando

DOMINIO DI RESISTENZA - Fd2 + Md2

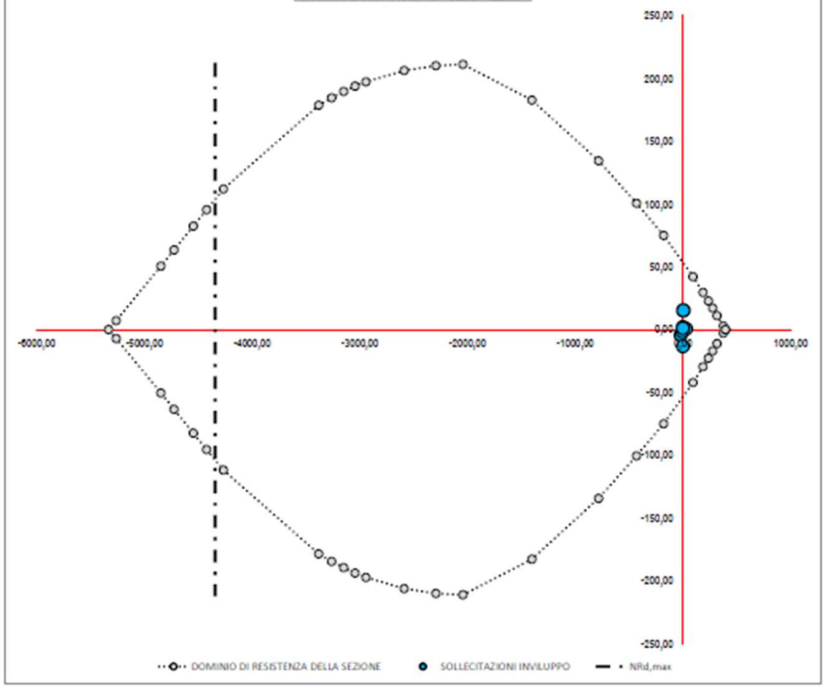

SEZIONE TRASVERSALE

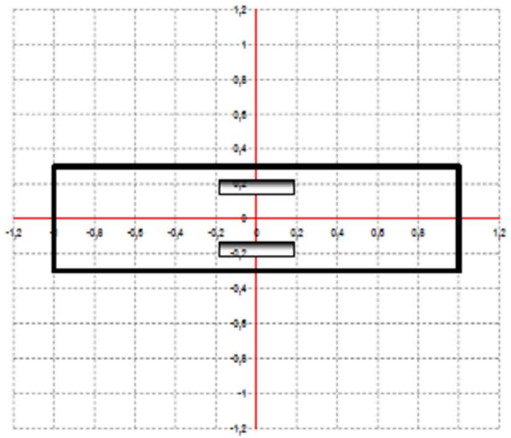

CARATTERISTICHE DELLE SOLLECITAZIONI DI DESIGN IN DIREZIONE 1

	F_{d2} [kN]	M_{d2} [kNm]	V_{d2} [kN]	e_2 [m]
Massima forza assiale in direzione 2 e momento associato	29	1	7	1,92E-02
Minima forza assiale in direzione 2 e momento associato	-20	-4	-5	2,22E-01
Massimo momento in direzione 2 e forza assiale associata	4	15	59	3,41E+00
Minimo momento in direzione 2 e forza assiale associata	0	-13	0	0,00E+00
Massimo taglio in direzione 2 associato ai relativi valori di F_{d2} e M_{d2}	4	15	59	0,00E+00
Minimo taglio in direzione 2 associato ai relativi valori di F_{d2} e M_{d2}	-7	-2	-59	2,33E-01
Massima eccentricità in direzione 2	0,01	2,09	4,66	3,36E-02
Minima eccentricità in direzione 2	0,00	1,07	0,00	-3,96E-03

$F_{d2} = F_{22} + |F_{22}|$

$M_{d2} = M_{22} + |M_{22}|$

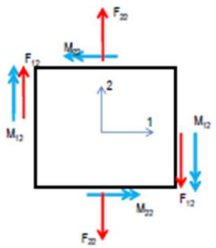

RESISTENZA LIMITE DELLA SEZIONE A COMPRESSIONE SEMPLICE

Massima forza di compressione sopportabile dalla sezione $N_{Rd,max}$ = **-4344,18 kN**

VERIFICA A TAGLIO DEGLI ELEMENTI SHELL - NTC2018

CARATTERISTICHE MECCANICHE DEI MATERIALI

Calcestruzzo

Resistenza caratteristica cubica	R_{ck}	=	35,00	N/mm^2
Coefficiente che tiene in conto degli effetti di lungo termine	α_{cc}	=	0,85	-
Coefficiente di sicurezza	γ_c	=	1,50	-
Resistenza caratteristica cilindrica	f_{ck}	=	29,05	N/mm^2
Resistenza di calcolo a compressione	f_{cd}	=	16,46	N/mm^2
Resistenza media a compressione	f_{cm}	=	37,05	N/mm^2
Resistenza media a trazione	f_{ctm}	=	2,83	N/mm^2
Resistenza caratteristica a trazione (frattile 5%)	$f_{ctk,0.05}$	=	1,98	N/mm^2
Resistenza caratteristica a trazione (frattile 95%)	$f_{ctk,0.95}$	=	3,69	N/mm^2
Modulo di elasticità normale medio	E_{cm}	=	32588	N/mm^2
Deformazione al raggiungimento della massima tensione f_{cd}	ε_{c2}	=	-0,0020	-
Deformazione ultima del calcestruzzo	ε_{cu2}	=	-0,0035	-

Acciaio per armatura

Resistenza caratteristica di snervamento	f_{yk}	=	450	N/mm^2
Deformazione ultima dell'acciaio	ε_{ud}	=	0,0675	-
Coefficiente di sicurezza	γ_s	=	1,15	-
Resistenza di calcolo a snervamento	f_{yd}	=	391,30	N/mm^2
Modulo di elasticità	E_s	=	200000	N/mm^2
Deformazione dell'acciaio al raggiungimento della tensione f_{yd}	ε_{yd}	=	0,001957	-

CARATTERISTICHE DELLA SEZIONE TRASVERSALE

Altezza della sezione trasversale	h	=	300	mm
Larghezza della sezione trasversale	b	=	1000	mm

SOLLECITAZIONI DI TAGLIO

Sollecitazione di taglio in direzione 1 associata alla presenza di momenti positivi	$V_{Ed,1,pos}$	=	62,2	kN
Sollecitazione di taglio in direzione 2 associata alla presenza di momenti positivi	$V_{Ed,2,pos}$	=	59,1	kN
Sollecitazione di taglio in direzione 1 associata alla presenza di momenti negativi	$V_{Ed,1,neg}$	=	60,8	kN
Sollecitazione di taglio in direzione 2 associata alla presenza di momenti negativi	$V_{Ed,2,neg}$	=	59,1	kN

RESISTENZA LIMITE A TAGLIO DELLA SEZIONE TRASVERSALE

Altezza utile in direzione 1 per momenti positivi	$d_{1,pos}$	=	239,00	mm
Altezza utile in direzione 2 per momenti positivi	$d_{2,pos}$	=	239,00	mm
Altezza utile in direzione 1 per momenti negativi	$d_{1,neg}$	=	239,00	mm
Altezza utile in direzione 2 per momenti negativi	$d_{2,neg}$	=	239,00	mm
Coefficiente di riduzione per effetto della fessurazione	ν	=	0,500	-
Resistenza a taglio della sezione soggetta a momenti positivi (Dir.1)	$V_{Rd1,max,pos}$	=	**983,6**	**kN**
Resistenza a taglio della sezione soggetta a momenti positivi (Dir.2)	$V_{Rd2,max,pos}$	=	**983,6**	**kN**
Resistenza a taglio della sezione soggetta a momenti negativi (Dir.1)	$V_{Rd1,max,neg}$	=	**983,6**	**kN**
Resistenza a taglio della sezione soggetta a momenti negativi (Dir.2)	$V_{Rd2,max,neg}$	=	**983,6**	**kN**
Verifica di idoneità della sezione	$\delta_{1,pos}$	= ✓	**0,06**	**-**
	$\delta_{2,pos}$	= ✓	**0,06**	**-**
	$\delta_{1,neg}$	= ✓	**0,06**	**-**
	$\delta_{2,nrg}$	= ✓	**0,06**	**-**

RESISTENZA A TAGLIO DELLA SEZIONE PRIVA DI ARMATURA IDONEA A RESISTERE AL TAGLIO

Coefficiente di resistenza al taglio	$C_{Rd,c}$	=	0,12	-
Coefficiente k in direzione 1 per momenti positivi	$k_{1,pos}$	=	1,915	-
Coefficiente k in direzione 2 per momenti positivi	$k_{2,pos}$	=	1,915	-
Coefficiente k in direzione 1 per momenti negativi	$k_{1,neg}$	=	1,915	-
Coefficiente k in direzione 2 per momenti negativi	$k_{2,neg}$	=	1,915	-
Armatura tesa inferiore in direzione 1	$A_{inf,1}$	=	503	mm^2
Armatura tesa superiore in direzione 1	$A_{sup,1}$	=	503	mm^2
Armatura tesa inferiore in direzione 2	$A_{inf,2}$	=	503	mm^2
Armatura tesa superiore in direzione 2	$A_{sup,2}$	=	503	mm^2
Rapporto geometrico d'armatura tesa in direzione 1 per momenti positivi	$\rho_{1,pos}$	=	0,00210	-
Rapporto geometrico d'armatura tesa in direzione 2 per momenti positivi	$\rho_{2,pos}$	=	0,00210	-
Rapporto geometrico d'armatura tesa in direzione 1 per momenti negativi	$\rho_{1,neg}$	=	0,00210	-
Rapporto geometrico d'armatura tesa in direzione 2 per momenti positivi	$\rho_{2,neg}$	=	0,00210	-
Tensione dovuta alla presenza della forza assiale in direzione 1	σ_1	=	0,000	MPa
Tensione dovuta alla presenza della forza assiale in direzione 2	σ_2	=	0,000	MPa
Resistenza a taglio della sezione soggetta a momenti positivi (Dir.1)	$V_{Rd1,c,pos}$	=	**100,4**	**kN**
Resistenza a taglio della sezione soggetta a momenti positivi (Dir.2)	$V_{Rd2,c,pos}$	=	**100,4**	**kN**
Resistenza a taglio della sezione soggetta a momenti negativi (Dir.1)	$V_{Rd1,c,neg}$	=	**100,4**	**kN**
Resistenza a taglio della sezione soggetta a momenti negativi (Dir.2)	$V_{Rd2,c,neg}$	=	**100,4**	**kN**
Verifica di idoneità della sezione priva di armatura a taglio	$\delta_{1,pos}$	= ✓	**0,62**	**-**
	$\delta_{2,pos}$	= ✓	**0,59**	**-**
	$\delta_{1,neg}$	= ✓	**0,61**	**-**
	$\delta_{2,nrg}$	= ✓	**0,59**	**-**

Vengono allegati i tabulati di analisi del modello strutturale.

4.4. VERIFICA DELLA CAPACITÀ PORTANTE DEL TERRENO

Per le specifiche indagini effettuate per la caratterizzazione meccanica del terreno si rimanda alla relazione geologica allegata redatto dallo Studio di Geologia Dott. Cavalli Andrea datato Agosto e Settembre 2023 e intitolata "RELAZIONE TECNICA PROVE PENETROMETRICHE DINAMICHE CONTINUE"".

Per la verifica del terreno di fondazione del Power Station sono state considerate la stratigrafie delle prova penetrometrica numero P1, P2, P3, P4, P6 e P9.

Per la consultazione delle relative tabelle stratigrafiche si rimanda alla lettura della relazione tecnica geologia sopra citata. Le stesse verranno riportate nelle successive sezioni tecniche relative ai calcoli geotecnici.

4.4.1. RIFERIMENTI TEORICI

CARICO LIMITE DI FONDAZIONI SU TERRENI

Il carico limite di una fondazione superficiale può essere definito con riferimento a quel valore massimo del carico per il quale in nessun punto del sottosuolo si raggiunge la condizione di rottura (metodo di Frolich), oppure con riferimento a quel valore del carico, maggiore del precedente, per il quale il fenomeno di rottura si è esteso ad un ampio volume del suolo (metodo di Prandtl e successivi).

Prandtl ha studiato il problema della rottura di un semispazio elastico per effetto di un carico applicato sulla sua superficie con riferimento all'acciaio, caratterizzando la resistenza a rottura con una legge del tipo:

$$\tau = c + \sigma \times tg\ \varphi \quad \textit{valida anche per i terreni.}$$

Le ipotesi e le condizioni introdotte dal Prandtl sono le seguenti:

- Materiale privo di peso e quindi $\gamma=0$
- Comportamento rigido - plastico
- Resistenza a rottura del materiale esprimibile con la relazione $\tau=c + \sigma \times tg\varphi$
- Carico uniforme, verticale ed applicato su una striscia di lunghezza infinita e di larghezza 2b (stato di deformazione piana)
- Tensioni tangenziali nulle al contatto fra la striscia di carico e la superficie limite del semispazio.

All'atto della rottura si verifica la plasticizzazione del materiale racchiuso fra la superficie limite del semispazio e la superficie *GFBCD.*

Nel triangolo *AEB* la rottura avviene secondo due famiglie di segmenti rettilinei ed inclinati di $45°+\varphi/2$ rispetto all'orizzontale.

Nelle zone *ABF e EBC* la rottura si produce lungo due famiglie di linee, l'una costituita da segmenti rettilinei passanti rispettivamente per i punti *A* ed *E* e l'altra da archi di de famiglie di spirali logaritmiche.

I poli di queste sono i punti *A* ed *E*. Nei triangoli *AFG e ECD* la rottura avviene su segmenti inclinati di $\pm(45°+ \varphi/2)$ rispetto alla verticale.

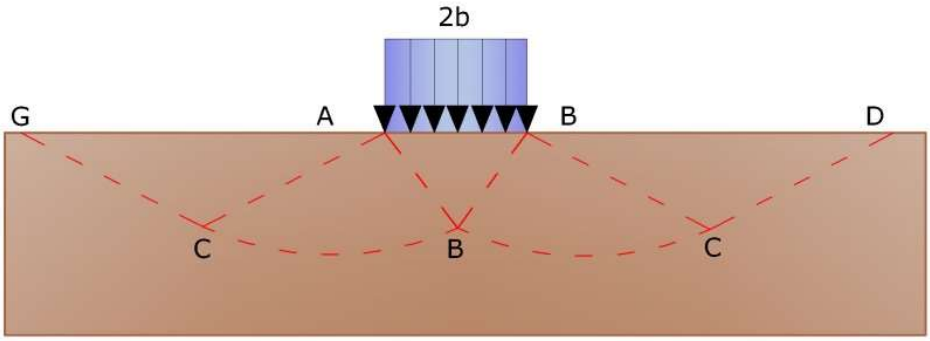

Meccanismo di rottura di Prandtl

Individuato così il volume di terreno portato a rottura dal carico limite, questo può essere calcolato scrivendo la condizione di equilibrio fra le forze agenti su qualsiasi volume di terreno delimitato in basso da una qualunque delle superfici di scorrimento.

Si arriva quindi ad una equazione q =B $\times$ c, dove il coefficiente B dipende soltanto dall'angolo di attrito φ del terreno.

$$B = cot\, g\varphi\left[e^{\pi tg\,\varphi}\, tg^{2}(45° + \varphi/2) - 1\right]$$

Per φ =0 il coefficiente B risulta pari a 5.14, quindi q=5.14 $\times$ c.

Nell'altro caso particolare di terreno privo di coesione (c=0, $\gamma \neq 0$) risulta q=0, secondo la teoria di **Prandtl**, non sarebbe dunque possibile applicare nessun carico sulla superficie limite di un terreno incoerente.

Da questa teoria, anche se non applicabile praticamente, hanno preso le mosse tutte le ricerche ed i metodi di calcolo successivi.

Infatti ***Caquot*** si pose nelle stesse condizioni di Prandtl ad eccezione del fatto che la striscia di carico non è più applicata sulla superficie limite del semispazio, ma a una profondità h, con h $\leq$ 2b; il terreno compreso tra la superficie e la profondità h ha le seguenti caratteristiche*: $\gamma \neq 0$, $\varphi = 0$, c=0*

e cioè sia un mezzo dotato di peso ma privo di resistenza.

Risolvendo le equazioni di equilibrio si arriva all'espressione:

$$q = A \times \gamma_1 + B \times c$$

che è sicuramente è un passo avanti rispetto a Prandtl, ma che ancora non rispecchia la realtà.

Metodo di Terzaghi (1955)

Terzaghi, proseguendo lo studio di Caquot, ha apportato alcune modifiche per tenere conto delle effettive caratteristiche dell'insieme opera di fondazione-terreno.

Sotto l'azione del carico trasmesso dalla fondazione il terreno che si trova a contatto con la fondazione stessa tende a sfuggire lateralmente, ma ne è impedito dalle resistenze tangenziali che si sviluppano fra la fondazione ed il terreno. Ciò com-

porta una modifica dello stato tensionale nel terreno posto direttamente al di sotto della fondazione; per tenerne conto ***Terzaghi*** assegna ai lati AB ed EB del cuneo di Prandtl una inclinazione ψ rispetto all'orizzontale, scegliendo il valore di ψ in funzione delle caratteristiche meccaniche del terreno al contatto terreno-opera di fondazione.

L'ipotesi γ_2 =0 per il terreno sotto la fondazione viene così superata ammettendo che le superfici di rottura restino inalterate, l'espressione del carico limite è quindi:

$$q = A \times \gamma \times h + B \times c + C \times \gamma \times b$$

in cui C è un coefficiente che risulta funzione dell'angolo di attrito φ del terreno posto al di sotto del piano di posa e dell'angolo φ prima definito; b è la semilarghezza della striscia.

Inoltre, basandosi su dati sperimentali, *Terzaghi* passa dal problema piano al problema spaziale introducendo dei fattori di forma.

Un ulteriore contributo è stato apportato da *Terzaghi* sull' effettivo comportamento del terreno.

Nel metodo di Prandtl si ipotizza un comportamento del terreno rigido-plastico, *Terzaghi* invece ammette questo comportamento nei terreni molto compatti.

In essi, infatti, la curva carichi-cedimenti presenta un primo tratto rettilineo, seguito da un breve tratto curvilineo (comportamento elasto-plastico); la rottura è istantanea ed il valore del carico limite risulta chiaramente individuato (rottura generale).

In un terreno molto sciolto invece la relazione carichi-cedimenti presenta un tratto curvilineo accentuato fin dai carichi più bassi per effetto di una rottura progressiva del terreno (rottura locale); di conseguenza l'individuazione del carico limite non è così chiara ed evidente come nel caso dei terreni compatti.

Per i terreni molto sciolti, Terzaghi consiglia di prendere in considerazione il carico limite il valore che si calcola con la formula precedente introducendo però dei valori ridotti delle caratteristiche meccaniche del terreno e precisamente.

$$tg\varphi_{rid} = 2/3 \times tg\varphi \text{ e } c_{rid} = 2/3 \times c$$

Esplicitando i coefficienti della formula precedente, la formula di Terzaghi può essere scritta:

$$q_{ult} = c \times N_c \times s_c + \gamma \times D \times N_q + 0.5 \times \gamma \times B \times N_\gamma \times s_\gamma$$

dove:

$$N_q = \frac{a^2}{2\cos^2(45 + \varphi/2)}$$

$$a = e^{(0.75\pi - \varphi/2)\tan\varphi}$$

$$N_c = (N_q - 1)\cot\varphi$$

$$N_\gamma = \frac{\tan\varphi}{2}\left(\frac{K_{p\gamma}}{\cos^2\varphi} - 1\right)$$

Formula di Meyerhof (1963)

Meyerhof propose una formula per il calcolo del carico limite simile a quella di *Terzaghi*.; le differenze consistono nell'introduzione di ulteriori coefficienti di forma.

Egli introdusse un coefficiente s_q che moltiplica il fattore N_q, fattori di profondità d_i e di pendenza i_i per il caso in cui il carico trasmesso alla fondazione è inclinato sulla verticale.

I valori dei coefficienti N furono ottenuti da Meyerhof ipotizzando vari archi di prova BF (v. meccanismo Prandtl) , mentre il taglio lungo i piani AF aveva dei valori approssimati.

I fattori di forma tratti da Meyerhof sono di seguito riportati, insieme all'espressione della formula.

Carico verticale $q_{ult} = c \times N_c \times s_c \times d_c + \gamma \times D \times N_q \times s_q \times d_q + 0.5 \times \gamma \times B \times N_\gamma \times s_\gamma \times d_\gamma$

Carico inclinato $q_{ul\,t} = c \times N_c \times i_c \times d_c + \gamma \times D \times N_q \times i_q \times d_q + 0.5 \times \gamma \times B \times N_\gamma \times i_\gamma \times d_\gamma$

$$N_q = e^{\pi \tan\varphi} \tan^2\left(45 + \varphi/2\right)$$
$$N_c = (N_q - 1)\cot\varphi$$
$$N_\gamma = \left(N_q - 1\right)\tan\left(1.4\varphi\right)$$

fattore di forma:

$$s_c = 1 + 0.2 k_p \frac{B}{L} \qquad \text{per } \varphi > 10$$
$$s_q = s_\gamma = 1 + 0.1 k_p \frac{B}{L} \qquad \text{per } \varphi = 0$$

fattore di profondità:

$$d_c = 1 + 0.2\sqrt{k_p}\,\frac{D}{B}$$
$$d_q = d_\gamma = 1 + 0.1\sqrt{k_p}\,\frac{D}{B} \qquad \text{per } \varphi > 10$$
$$d_q = d_\gamma = 1 \qquad \text{per } \varphi = 0$$

inclinazione:

$$i_c = i_\gamma = \left(1 - \frac{\theta}{90}\right)^2$$

$$i_\gamma = \left(1 - \frac{\theta}{\varphi}\right)^2 \qquad \text{per } \varphi > 0$$

$$i_\gamma = 0 \qquad \text{per } \varphi = 0$$

dove :

K_p = $tan^2(45°+\varphi/2)$

θ = *Inclinazione della risultante sulla verticale.*

Formula di Hansen (1970)

E' una ulteriore estensione della formula di *Meyerhof*; le estensioni consistono nell'introduzione di b_i che tiene conto della eventuale inclinazione sull'orizzontale del piano di posa e un fattore g_i per terreno in pendenza.

La formula di Hansen vale per qualsiasi rapporto *D/B*, quindi sia per fondazioni superficiali che profonde, ma lo stesso autore introdusse dei coefficienti per meglio interpretare il comportamento reale della fondazione, senza di essi, infatti, si avrebbe un aumento troppo forte del carico limite con la profondità.

Per valori di D/B <1

$$d_c = 1 + 0.4\frac{D}{B}$$

$$d_q = 1 + 2\,tan\,\varphi(1 - sin\,\varphi)\ \frac{D}{B}$$

Per valori D/B>1:

$$d_c = 1 + 0.4\,tan^{-1}\frac{D}{B}$$

$$d_q = 1 + 2\,tan\,\varphi(1 - sin\,\varphi)\ \ tan^{-1}\frac{D}{B}$$

Nel caso φ = 0

D/B	0	1	1.1	2	5	10	20	100
d'_c	0	0.40	0.33	0.44	0.55	0.59	0.61	0.62

Nei fattori seguenti le espressioni con apici (') valgono quando φ=0.

Fattore di forma:

$$s_c' = 0.2\frac{B}{L}$$

$$s_c = 1 + \frac{N_q}{N_c}\frac{B}{L}$$

$$s_c = 1 \qquad per\ fondazioni\ nastriformi$$

$$s_q = 1 + \frac{B}{L}tan\,\varphi$$

$$s_\gamma = 1 - 0.4\frac{B}{L}$$

Fattori di inclinazione del carico

$$i_c' = 0.5 - 0.5\sqrt{1 - \frac{H}{A_f c_a}}$$

$$i_c = i_q - \frac{1 - i_q}{N_q - 1}$$

$$i_q = \left(1 - \frac{0.5H}{V + A_f c_a \cot\varphi}\right)^5$$

$$i_\gamma = \left(1 - \frac{0.7H}{V + A_f c_a \cot\varphi}\right)^5 \quad (\eta = 0)$$

$$i_\gamma = \left(1 - \frac{(0.7 - \eta/450)H}{V + A_f c_a \cot\varphi}\right)^5 \quad (\eta > 0)$$

Fattori di inclinazione del terreno (fondazione su pendio):

$$g_c' = \frac{\beta}{147}$$

$$g_c = 1 - \frac{\beta}{147}$$

$$g_q = g_\gamma = (1 - 0.5\tan\beta)^5$$

Fattori di inclinazione del piano di fondazione (base inclinata)

$$b'_c = \frac{\eta°}{147°}$$
$$b_c = 1 - \frac{\eta°}{147°}$$
$$b_q = exp(-2\eta \tan\varphi)$$

Formula di Vesic (1975)

La formula di Vesic è analoga alla formula di Hansen, con Nq ed Nc come per la formula di Meyerhof ed $N\gamma$ come sotto riportato:

$$N\gamma=2(Nq+1) \times \tan(\varphi)$$

I fattori di forma e di profondità che compaiono nelle formule del calcolo della capacità portante sono uguali a quelli proposti da Hansen; alcune differenze sono invece riportate nei fattori di inclinazione del carico, del terreno (fondazione su pendio) e del piano di fondazione (base inclinata).

Formula Brich-Hansen (EC 7 – EC 8)

Affinché una fondazione possa resistere il carico di progetto con sicurezza nei riguardi della rottura generale, per tutte le combinazioni di carico relative allo SLU (stato limite ultimo), deve essere soddisfatta la seguente disuguaglianza:

$$Vd \leq Rd$$

Dove Vd è il carico di progettto allo SLU, normale alla base della fondazione, comprendente anche il peso della fondazione stessa; mentre Rd è il carico limite di progetto della fondazione nei confronti di carichi normali , tenendo conto anche dell'effetto di carichi inclinati o eccentrici.
Nella valutazione analitica del carico limite di progetto Rd si devono considerare le situazioni a breve e a lungo termine nei terreni a grana fine.

Il carico limite di progetto in condizioni non drenate si calcola come:

$$R/A' = (2 + p)\, c_u\, s_c\, i_c + q$$

Dove:

A' = B' L' area della fondazione efficace di progetto, intesa, in caso di carico eccentrico, come l'area ridotta al cui centro viene applicata la risultante del carico.

c_u Coesione non drenata.

q pressione litostatica totale sul piano di posa.

s_c Fattore di forma

$s_c = 1 + 0{,}2\,(B'/L')$ per fondazioni rettangolari
$s_c = 1{,}2$ Per fondazioni quadrate o circolari.

i_c Fattore correttivo per l'inclinazione del carico dovuta ad un carico H.

$i_c = 0{,}5\left(1+\sqrt{1-H/A'c_u}\right)$

Per le condizioni drenate il carico limite di progetto è calcolato come segue.

R/A' = c' N_c s_c i_c + q' N_q s_q i_q + 0,5 g' B' N_g s_g i_g

Dove:

$$N_q = e^{\pi \tan\varphi'} \tan^2(45+\phi'/2)$$
$$N_c = (N_q - 1)\cot\phi'$$
$$N_\gamma = 2\cdot(N_q - 1)\tan\phi'$$

Fattori di forma

$s_q = 1 + (B'/L')\cdot sen\phi'$ per forma rettangolare

$s_q = 1 + sen\phi'$ per forma quadrata o circolare

$s_\gamma = 1 - 0{,}3(B'/L')$ per forma rettangolare

$s_\gamma = 0{,}7$ per forma quadrata o circolare

$s_c = (s_q \cdot N_q - 1)/(N_q - 1)$ per forma rettangolare, quadrata o circolare.

Fattori inclinazione risultante dovuta ad un carico orizzontale H

$$i_q = [1 - H/(V + A'\cdot c'\cdot \cot\phi')]^m$$
$$i_\gamma = [1 - H/(V + A'\cdot c'\cdot \cot\phi')]^{m+1}$$
$$i_c = (i_q \cdot N_q - 1)/(N_q - 1)$$

Dove:

$$m = m_B = \frac{\left[2+\left(\frac{B'}{L'}\right)\right]}{\left[1+\left(\frac{B'}{L'}\right)\right]} \quad con \quad H//B'$$

$$m = m_L = \frac{\left[2+\left(\frac{L'}{B'}\right)\right]}{\left[1+\left(\frac{L'}{B'}\right)\right]} \quad con \quad H//L'$$

Se H forma un angolo θ con la direzione di L', l'esponente "m" viene calcolato con la seguente espressione:

$$m = m_\theta = m_L \cos^2\theta + m_B \sin^2\theta$$

Oltre ai fattori correttivi di cui sopra sono considerati quelli complementari della profondità del piano di posa e dell'inclinazione del piano di posa e del piano campagna (Hansen).

Meyerhof e Hanna (1978)

Tutta l'analisi teorica sviluppata per la determinazione del carico limite è stata basata sull'ipotesi che il terreno sia isotropico ed omogeneo fino a notevole profondità.

Tale ipotesi però non rispecchia la realtà perchè il terreno è generalmente non omogeneo con miscele di sabbia, limo e argilla in proporzioni diverse.

Le relazioni per la stima del carico limite, ricavate dall'ipotesi di terreno omogeneo risultano essere molto approssimative se il terreno è stratificato, soprattutto se le superfici di rottura interferiscono con i limiti degli strati del terreno.

Si consideri un sistema costituito da due strati di terreno distinti ed una fondazione posizionata sullo strato superiore a una profondità D dal piano campagna, le superfici di rottura a carico limite possono svilupparsi completamente sullo strato superiore oppure coinvolgere anche il secondo strato. Può accadere che lo strato superiore sia più resistente rispetto allo strato inferiore o viceversa.

In entrambi i casi verrà presentata un'analisi generale per (c = 0) e si dimostrerà sarà valida anche nel caso di terreni sabbiosi o argillosi.

Lo studio della capacità portante di un sistema a strati è stato affrontato da diversi autori: Button (1953), Meyerhof (1974), Meyerhof e Hanna (1978)

Meyerhof (1974) ha analizzato un sistema a due strati composto da sabbia densa su argilla morbida e sabbia sciolta su argilla rigida e ha supportato il suo studio con alcuni test su modello. Successivamente Meyerhof e Hanna (1978) hanno integrato lo studio di Meyerhof (1974) includendo nelle analisi il terreno privo di coesione.

Si riporta la trattazione di Meyerhof (1974) e Meyerhof e Hanna (1978).

Nella figura 12.16 (a) è rappresentata una fondazione di larghezza B approfondita D in uno strato di terreno resistente (strato 1). Lo strato debole si trova a distanza H dal piano di posa della fondazione.

Se la distanza H non è sufficiente oppure in condizioni di carico eccezionali una parte di esso verrà trasferito oltre il livello mn. Questa condizione indurrà il formarsi di superfici di rottura anche nello strato più debole (strato 2). Se la distanza H è relativamente grande, le superfici di rottura si svilupperanno completamente nello strato 1 come evidenziato in Figura 12.16b.

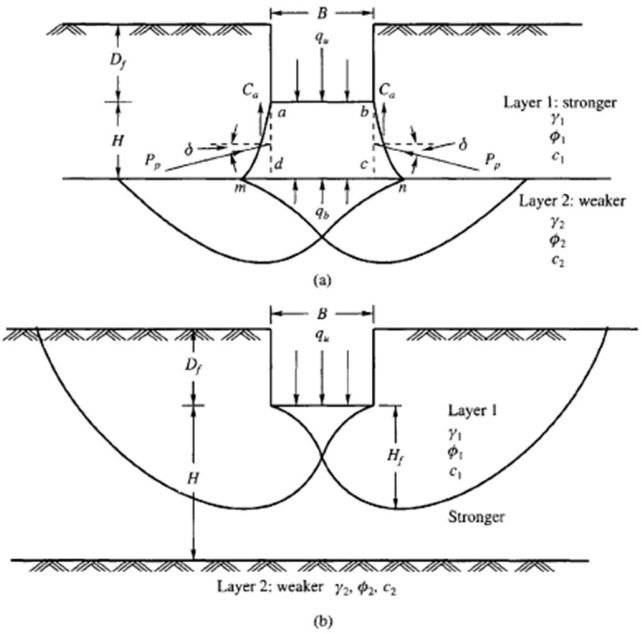

Figure 12.16 Failure of soil below strip footing under vertical load on strong layer overlying weak deposit (after Meyerhof and Hanna, 1978)

Il carico limite negli strati 1 e 2 può essere espresso dalle seguenti relazioni:

Strato 1

$$q_1 = c_1 \cdot N_{c1} + \frac{1}{2}\gamma_1 \cdot B \cdot N_{\gamma 1}$$

Strato 2

$$q_2 = c_2 \cdot N_{c2} + \frac{1}{2}\gamma_2 \cdot B \cdot N_{\gamma 2}$$

Dove:

N_{c1}, N_{g1} = fattori di capacità portante dello strato 1 con angolo di resistenza a taglio j_1

N_{c2}, N_{g2} = fattori di capacità portante dello strato 2 con angolo di resistenza a taglio j_2

Se il piano di posa della fondazione si trova ad una distanza D_f rispetto al piano campagna e la distanza H è relativamente grande l'espressione del carico limite è la seguente:

$$q_u = q_t = c_1 \cdot N_{c1} + q'_0 \cdot N_{q1} + \frac{1}{2}\gamma_1 \cdot B \cdot N_{\gamma 1}$$

Se q_1 è molto maggiore di q_2 e se la distanza H non è sufficiente a formare una condizione di plasticizzazione completa nello strato 1, allora la rottura è legata alla spinta del terreno che si sviluppa dallo strato più debole allo strato più resistente. La formulazione per la stima del carico limite diventa:

$$q_u = q_b + \frac{2 \cdot (C_a + P_p \sin\delta)}{B} - \gamma_1 \cdot H$$

Dove:

q_b= carico limite nello strato 2

Pp= spinta passiva

C_a= adesione

d=inclinazione della spinta passiva rispetto all'orizzontale

$$P_p = \frac{\gamma_1 \cdot H^2}{2\cos\delta}\left(1 + \frac{2D_f}{H}\right)K_p$$

Metodo di Richards et. Al.

Richards, Helm e Budhu (1993) hanno sviluppato una procedura che consente, in condizioni sismiche, di valutare sia il carico limite sia i cedimenti indotti, e quindi di procedere alle verifiche di entrambi gli stati limite (ultimo e di danno). La valutazione del carico limite viene perseguita mediante una semplice estensione del problema del carico limite al caso della presenza di forze di inerzia nel terreno di fondazione dovute al sisma, mentre la stima dei cedimenti viene ottenuta mediante un approccio alla Newmark (cfr. Appendice H di "Aspetti geotecnici della progettazione in zona sismica" – Associazione Geotecnica Italiana). Gli autori hanno esteso la classica formula trinomia del carico limite:

$$q_L = N_q \cdot q + N_c \cdot c + 0.5 N_\gamma \cdot \gamma \cdot B$$

Dove i fattori di capacità portante vengono calcolati con le seguenti formule:

$$N_c = (N_q - 1) \cdot cot(\phi)$$

$$N_q = \frac{K_{pE}}{K_{AE}}$$

$$N_\gamma = \left(\frac{K_{pE}}{K_{AE}} - 1\right) \cdot tan(\rho_{AE})$$

Esaminando con un approccio da equilibrio limite, un meccanismo alla Coulomb e portando in conto le forze d'inerzia agenti sul volume di terreno a rottura. In campo statico, il classico meccanismo di Prandtl può essere infatti approssimato come mostrato nella figura che segue, eliminando la zona di transizione (ventaglio di Prandtl) ridotta alla sola linea AC, che viene riguardata come una parete ideale in equilibrio sotto l'azione della spinta attiva e della spinta passiva che riceve dai cunei I e III:

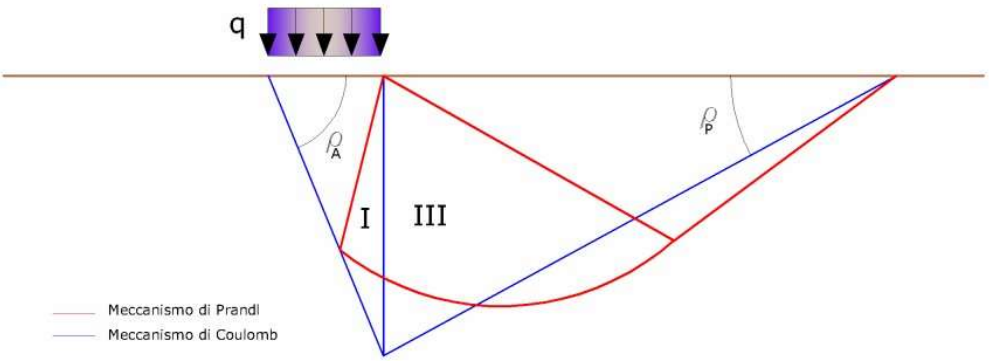

Schema di calcolo del carico limite (qL)

Gli autori hanno ricavato le espressioni degli angoli r_A e r_P che definiscono le zone di spinta attiva e passiva, e dei coefficienti di spinta attiva e passiva K_A e K_P in funzione dell'angolo di attrito interno φ del terreno e dell'angolo di attrito d terreno – parete ideale:

$$\rho_A = \varphi + tan^{-1} \cdot \left\{ \frac{\sqrt{tan(\varphi) \cdot (tan(\varphi) \cdot cot(\varphi)) \cdot (1 + tan(\delta) \cdot cot(\varphi))} - tan(\varphi)}{1 + tan(\delta) \cdot (tan(\varphi) + cot(\varphi))} \right\}$$

$$\rho_P = -\varphi + tan^{-1} \cdot \left\{ \frac{\sqrt{tan(\varphi) \cdot (tan(\varphi) \cdot cot(\varphi)) \cdot (1 + tan(\delta) \cdot cot(\varphi))} + tan(\varphi)}{1 + tan(\delta) \cdot (tan(\varphi) + cot(\varphi))} \right\}$$

$$K_A = \frac{cos^2(\varphi)}{cos(\delta) \left\{ 1 + \sqrt{\frac{sin(\varphi + \delta) \cdot sin(\varphi)}{cos(\delta)}} \right\}^2}$$

$$K_P = \frac{cos^2(\varphi)}{cos(\delta) \left\{ 1 - \sqrt{\frac{sin(\varphi + \delta) \cdot sin(\varphi)}{cos(\delta)}} \right\}^2}$$

E' comunque da osservare che l'impiego delle precedenti formule assumendo f=0.5d, conduce a valore dei coefficienti di carico limite molto prossimi a quelli basati su un analisi alla Prandtl. Richards et. Al. hanno quindi esteso l'applicazione del meccanismo di Coulomb al caso sismico, portando in conto le forze d'inerzia agenti sul volume di terreno a rottura. Tali forze di massa, dovute ad accelerazioni k_h g e k_v g, agenti rispettivamente in direzione orizzontale e verticale, sono a loro volta pari a k_h g e k_v g. Sono state così ottenute le estensioni delle espressioni di ra e rp, nonché di K_A e K_P, rispettivamente indicate come r_{AE} e r_{PE} e come K_{AE} e K_{PE} per denotare le condizioni sismiche:

$$\rho_{AE} = (\varphi - \vartheta) + tan^{-1} \cdot \left\{ \frac{\sqrt{(1 + tan^2(\varphi - \vartheta)) \cdot [1 + tan(\delta + \vartheta) \cdot cot(\varphi - \vartheta)]} - tan(\varphi - \vartheta)}{1 + tan(\delta + \vartheta) \cdot (tan(\varphi - \vartheta) + cot(\varphi - \vartheta))} \right\}$$

$$\rho_{PE} = -(\varphi - \vartheta) + tan^{-1} \cdot \left\{ \frac{\sqrt{(1 + tan^2(\varphi - \vartheta)) \cdot [1 + tan(\delta + \vartheta) \cdot cot(\varphi - \vartheta)]} - tan(\varphi - \vartheta)}{1 + tan(\delta + \vartheta) \cdot (tan(\varphi - \vartheta) + cot(\varphi - \vartheta))} \right\}$$

$$K_{AE} = \frac{cos^2(\varphi - \vartheta)}{cos(\vartheta) \cdot cos(\delta + \vartheta) \left\{ 1 + \sqrt{\frac{sin(\varphi + \delta) \cdot sin(\varphi - \vartheta)}{cos(\delta + \vartheta)}} \right\}^2}$$

$$K_{PE} = \frac{cos^2(\varphi - \vartheta)}{cos(\vartheta) \cdot cos(\delta + \vartheta) \left\{ 1 - \sqrt{\frac{sin(\varphi + \delta) \cdot sin(\varphi - \vartheta)}{cos(\delta + \vartheta)}} \right\}^2}$$

I valori di Nq e Ng sono determinabili ancora avvalendosi delle formule precedenti, impiegando naturalmente le espressioni degli angoli r_{AE} e r_{PE} e dei coefficienti K_{AE} e K_{PE} relative al caso sismico. In tali espressioni compare l'angolo q definito come:

$$tan(\theta) = \frac{k_h}{1 - k_v}$$

Nella tabella che segue sono mostrati i fattori di capacità portante calcolati per i seguenti valori dei parametri:

ϕ = 30° d = 15°

Per diversi valori dei coefficienti di spinta sismica:

$k_h/(1-k_v)$	N_q	N_γ	N_c
0	16.51037	23.75643	26.86476
0.087	13.11944	15.88906	20.9915
0.176	9.851541	9.465466	15.33132
0.268	7.297657	5.357472	10.90786
0.364	5.122904	2.604404	7.141079
0.466	3.216145	0.879102	3.838476
0.577	1.066982	1.103E-03	0.1160159

Tabella dei fattori di capacità portante per ϕ=30°

VERIFICA A CARICO LIMITE DELLE FONDAZIONE (SLU)

La verifica a carico limite delle fondazioni secondo l'approccio SLU si esegue con la seguente diseguaglianza:

$$E_d \leq \frac{R_d}{\gamma_{RV}}$$

Dove:

E_d-pressioni agenti alla base della fondazione

R_d-capacità portante di calcolo

γ_{RV}-coefficiente riduttivo della capacità portante verticale

Le pressioni agenti alla base della fondazione si calcolano con dalla seguente espressione:

$$E_d = \frac{N_d}{A_{ef}}$$

Dove:

N_d-azione normale di progetto

$A_{ef} = B_R \cdot L'$-area ridotta

<u>Fondazioni quadrate o rettangolari</u>

L'area ridotta risulta A_{ef}=B'× L'

$$L' = L - 2e_x;\ \mathrm{B'} = \mathrm{B} - \mathrm{e_y};\ \mathrm{e_x} = \frac{M_x}{N};\ \mathrm{e_y} = \frac{M_y}{N}$$

Per le verifiche a carico limite allo SLU è lecito considerare la "plasticizzazione" del terreno, in tal caso si può assumere una distribuzione uniforme delle pressioni agenti sul piano di posa.

Come evidenziato nella seguente immagine, la distribuzione delle pressioni si considera estesa sulla base "ridotta" B_R=B-2e.

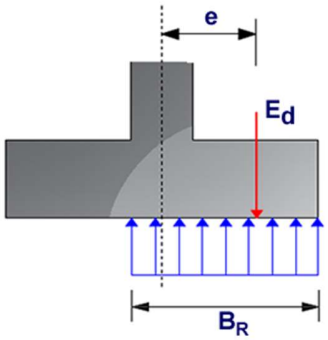

Dove:

e=N_d/M_d- eccentricità dei carichi

Fondazioni circolari

Una fondazione circolare sottoposta ad un carico verticale applicato con un'eccentricità e = Md / Nd può essere considerata equivalente ad una fondazione fittizia con un carico applicato centralmente (Figura seguente), come suggerito da Meyerhof (1953). In questo caso, l'area della fondazione fittizia, A', può essere calcolata con questa espressione:

$$A' = \frac{D^2}{2}\left(\arccos\frac{2e}{D} - \frac{2e}{D}\sqrt{1-\left(\frac{2e}{D}\right)^2}\right)$$

Il rapporto delle lunghezze dei lati della fondazione rettangolare equivalente può essere approssimato al rapporto tra le lunghezze b ed l,si ricava da:

$$\frac{B}{L'} = \frac{b}{l} =' \sqrt{\frac{D-2e}{D+2e}}$$

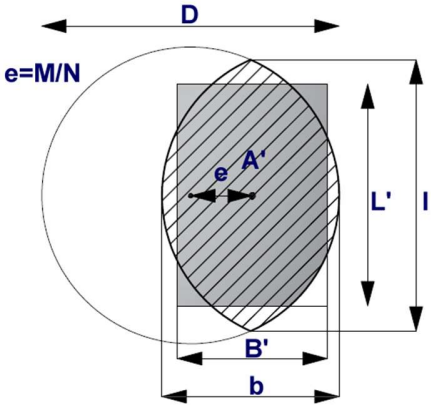

Metodo di calcolo delle dimensioni equivalenti di una fondazione circolare soggetta a carico non baricentrico

VERIFICA A SLITTAMENTO

In conformità con i criteri di progetto allo SLU, la stabilità di un plinto di fondazione deve essere verificata rispetto al collasso per slittamento oltre a quello per rottura generale. Rispetto al collasso per slittamento la resistenza viene valutata come somma di una componente dovuta all'adesione e una dovuta all'attrito fondazione-terreno; la resistenza laterale derivante dalla spinta passiva del terreno può essere messa in conto secondo una percentuale indicata dell'utente.
La resistenza di calcolo per attrito ed adesione è valutata secondo l'espressione:

$$F_{Rd} = N_{sd} \tan d + c_a A'$$

Nella quale N_{sd} è il valore di calcolo della forza verticale, d è l'angolo di resistenza a taglio alla base del plinto, c_a è l'adesione plinto-terreno e A' è l'area della fondazione efficace, intesa, in caso di carichi eccentrici, come area ridotta al centro della quale è applicata la risultante.

CARICO LIMITE DI FONDAZIONI SU ROCCIA

Per la valutazione della capacità portante ammissibile delle rocce si deve tener conto di di alcuni parametri significativi quali le caratteristiche geologiche, il tipo di roccia e la sua qualità, misurata con l'RQD. Nella capacità portante delle rocce si utilizzano normalmente fattori di sicurezza molto alti e legati in qualche modo al valore del coefficiente RQD: ad esempio, per una roccia con RQD pari al massimo a 0.75 il fattore di sicurezza varia tra 6 e 10. Per la determinazione della capacità portante di una roccia si possono usare le formule di Terzaghi, usando angolo d'attrito e coesione della roccia, o quelle proposte da **Stagg** e **Zienkiewicz** (1968) in cui i coefficienti della formula della capacità portante valgono:

$$N_q = \tan^6\left(45 + \frac{\phi}{2}\right)$$

$$N_c = 5\tan^4\left(45 + \frac{\phi}{2}\right)$$

$$N_\gamma = N_q + 1$$

Con tali coefficienti vanno usati i fattori di forma impiegati nella formula di Terzaghi.

La capacità portante ultima calcolata è comunque funzione del coefficiente RQD secondo la seguente espressione:

$$q' = q_{ult}(RQD)^2$$

Se il carotaggio in roccia non fornisce pezzi intatti (RQD tende a 0), la roccia viene trattata come un terreno stimando al meglio i parametri c e f.

FATTORI CORRETTIVI SISMICI: PAOLUCCI E PECKER

Per tener conto degli effetti inerziali indotti dal sisma sulla determinazione del q_{lim} vengono introdotti i fattori correttivi z:

$$z_q = \left(1 - \frac{k_h}{tg\phi}\right)^{0,35}$$

$$z_c = 1 - 0,32 \cdot k_h$$

$$z_\gamma = z_q$$

Dove k_h è il coefficiente sismico orizzontale.

Calcolo coefficienti sismici

Le **NTC 2008** calcolano i coefficienti k_h e k_v in dipendenza di vari fattori:

$$k_h = b'(a_{max}/g)$$

$$k_v = \pm 0,5 \times Kh$$

b Coefficiente di riduzione accelerazione massima attesa al sito;
a_{max} Accelerazione orizzontale massima attesa al sito;
g Accelerazione di gravità;

Tutti i fattori presenti nelle precedenti formule dipendono dall'accelerazione massima attesa sul sito di riferimento rigido e dalle caratteristiche geomorfologiche del territorio.

$$a_{max} = S_S\, S_T\, a_g$$

S_S (effetto di amplificazione stratigrafica): 0.90 ≤ Ss ≤ 1.80; è funzione di F_0 (Fattore massimo di amplificazione dello spettro in accelerazione orizzontale) e della categoria di suolo (A, B, C, D, E).

S_T (effetto di amplificazione topografica) per fondazioni in prossimità di pendi.

Il valore di S_T varia con il variare delle quattro categorie topografiche introdotte:

T1 ($S_T = 1.0$) T2 ($S_T = 1.20$) T3($S_T = 1.20$) T4($S_T = 1.40$).

Questi valori sono calcolati come funzione del punto in cui si trova il sito oggetto di analisi. Il parametro di entrata per il calcolo è il tempo di ritorno dell'evento sismico che è valutato come segue:

$$T_R = -V_R / \ln(1-PVR)$$

Con V_R vita di riferimento della costruzione e PVR probabilità di superamento, nella vita di riferimento, associata allo stato limite considerato. La vita di riferimento dipende dalla vita nominale della costruzione e dalla classe d'uso della costruzione (in linea con quanto previsto al punto 2.4.3 delle NTC). In ogni caso V_R dovrà essere maggiore o uguale a 35 anni.

Per l'applicazione dell'**Eurocodice 8** (progettazione geotecnica in campo sismico) il coefficiente sismico orizzontale viene così definito:

$$k_h = a_{gR}\, \gamma_I\, S / (g)$$

a_{gR} : accelerazione di picco di riferimento su suolo rigido affiorante,
γ_I: fattore di importanza,
S: soil factor e dipende dal tipo di terreno (da A ad E).

$$a_g = a_{gR}\, \gamma_I$$

è la "design ground acceleration on type A ground".

Il coefficiente sismico verticale k_v è definito in funzione di k_h, e vale:

$$k_v = \pm\, 0.5\, k_h$$

CEDIMENTI ELASTICI

I cedimenti di una fondazione rettangolare di dimensioni B´L posta sulla superficie di un semispazio elastico si possono calcolare in base aduna equazione basata sulla teoria dell'elasticità (Timoshenko e Goodier (1951)):

$$\Delta H = q_0 B' \frac{1-\mu^2}{E_s}\left(I_1 + \frac{1-2\mu}{1-\mu} I_2\right) I_F \qquad (1)$$

dove:

q_0 Intensità della pressione di contatto

B' Minima dimensione dell'area reagente,

E e m Parametri elastici del terreno.

I_i Coefficienti di influenza dipendenti da: L'/B', spessore dello strato H, coefficiente di Poisson m, profondità del piano di posa D;

I coefficienti I_1 *e* I_2 si possono calcolare utilizzando le equazioni fornite da *Steinbrenner (1934)* (V. Bowles), in funzione del rapporto *L'/B'* ed H/B, utilizzando *B'=B/2* e *L'=L/2* per i coefficienti relativi al centro e *B'=B* e *L'=L* per i coefficienti relativi al bordo.

Il coefficiente di influenza I_F deriva dalle equazioni di *Fox* (1948), che indicano il cedimento si riduce con la profondità in funzione del coefficiente di *Poisson* e del rapporto *L/B*.

In modo da semplificare l'equazione (1) si introduce il coefficiente I_S:

$$I_S = I_1 + \frac{1-2\mu}{1-\mu} I_2$$

Il cedimento dello strato di spessore H vale:

$$\Delta H = q_0 B' \frac{1-\mu^2}{E_S} I_S I_F$$

Per meglio approssimare i cedimenti si suddivide la base di appoggio in modo che il punto si trovi in corrispondenza di uno spigolo esterno comune a più rettangoli. In pratica si moltiplica per un fattore pari a 4 per il calcolo dei cedimenti al centro e per un fattore pari a 1 per i cedimenti al bordo.

Nel calcolo dei cedimenti si considera una profondità del bulbo delle tensioni pari a 5B, se il substrato roccioso si trova ad una profondità maggiore.

A tal proposito viene considerato substrato roccioso lo strato che ha un valore di E pari a 10 volte dello strato soprastante.

Il modulo elastico per terreni stratificati viene calcolato come media pesata dei moduli elastici degli strati interessati dal cedimento immediato.

CEDIMENTI EDOMETRICI

Il calcolo dei cedimenti con l'approccio edometrico consente di valutare un cedimento di consolidazione di tipo monodimensionale, prodotto dalle tensioni indotte da un carico applicato in condizioni di espansione laterale impedita. Pertanto la stima effettuata con questo metodo va considerata come empirica, piuttosto che teorica.

Tuttavia la semplicità d'uso e la facilità di controllare l'influenza dei vari parametri che intervengono nel calcolo, ne fanno un metodo molto diffuso.

L'approccio edometrico nel calcolo dei cedimenti passa essenzialmente attraverso due fasi:

il calcolo delle tensioni verticali indotte alle varie profondità con l'applicazione della teoria dell'elasticità;

la valutazione dei parametri di compressibilità attraverso la prova edometrica.

In riferimento ai risultati della prova edometrica, il cedimento è valutato come:

$$\Delta H = H_0 \cdot RR \cdot \log \frac{\sigma'_{v0} + \Delta\sigma_v}{\sigma'_{v0}}$$

se si tratta di un terreno sovraconsolidato (OCR>1), ossia se l'incremento di tensione dovuto all'applicazione del carico non fa superare la pressione di preconsolidazione s'_p ($\sigma'_{v0} + \Delta\sigma_v < s'_p$).

Se invece il terreno è normalconsolidato ($\sigma'_{v0} = s'_p$) le deformazioni avvengono nel tratto di compressione e il cedimento è valutato come:

$$\Delta H = H_0 \cdot CR \cdot \log \frac{\sigma'_{v0} + \Delta\sigma_v}{\sigma'_{v0}}$$

dove:

RR Rapporto di ricompressione;

CR Rapporto di compressione;

H_0 Spessore iniziale dello strato;

s'_{v0} Tensione verticale efficace prima dell'applicazione del carico;

Ds_v Incremento di tensione verticale dovuto all'applicazione del carico.

In alternativa ai parametri *RR* e *CR* si fa riferimento al modulo edometrico M; in tal caso però occorre scegliere opportunamente il valore del modulo da utilizzare, tenendo conto dell'intervallo tensionale ($\sigma'_{v0} + \Delta\sigma_v$) significativo per il problema in esame.

L'applicazione corretta di questo tipo di approccio richiede:

la suddivisione degli strati compressibili in una serie di piccoli strati di modesto spessore (< 2.00 m);

la stima del modulo edometrico nell'ambito di ciascuno strato;

il calcolo del cedimento come somma dei contributi valutati per ogni piccolo strato in cui è stato suddiviso il banco compressibile.

Molti usano le espressioni sopra riportate per il calcolo del cedimento di consolidazione tanto per le argille quanto per le sabbie di granulometria da fina a media, perché il modulo di elasticità impiegato è ricavato direttamente da prove di consolidazione. Tuttavia, per terreni a grana più grossa le dimensioni dei provini edometrici sono poco significative del comportamento globale dello strato e, per le sabbie, risulta preferibile impiegare prove penetrometriche statiche e dinamiche.

Cedimento secondario

Il cedimento secondario è calcolato facendo riferimento alla relazione:

$$\Delta H_s = H_c \cdot C_\alpha \cdot \log \frac{T}{T_{100}}$$

in cui:

H_c E' l'altezza dello strato in fase di consolidazione;

C_a E' il coefficiente di consolidazione secondaria come pendenza nel tratto secondario della curva *cedimento-logaritmo tempo*;

T Tempo in cui si vuole il cedimento secondario;

T_{100} Tempo necessario all'esaurimento del processo di consolidazione primaria.

CEDIMENTI DI SCHMERTMANN

Un metodo alternativo per il calcolo dei cedimenti è quello proposto da Schmertmann (1970) il quale ha correlato la variazione del bulbo delle tensioni alla deformazione. Schmertmann ha quindi proposto di considerare un diagramma delle deformazioni di forma triangolare in cui la profondità alla quale si hanno deformazioni significative è assunta pari a 4B, nel caso di fondazioni nastriformi, e pari a 2B per fondazioni quadrate o circolari.

Secondo tale approccio il cedimento si esprime attraverso la seguente espressione:

$$w = C_1 \cdot C_2 \cdot \Delta q \cdot \sum \frac{I_z \cdot \Delta z}{E}$$

nella quale:

Dq rappresenta il carico netto applicato alla fondazione;

I_z E' un fattore di deformazione il cui valore è nullo a profondità di **2B,** per fondazione circolare o quadrata, e a profondità **4B,** per fondazione nastriforme.

Il valore massimo di **I_z** si verifica a una profondità rispettivamente pari a:

B/2 per fondazione circolare o quadrata

B per fondazioni nastriformi

e vale

$$I_{z\,max} = 0.5 + 0.1 \cdot \left(\frac{\Delta q}{\sigma'_{vi}} \right)^{0.5}$$

dove s'_{vi} rappresenta la tensione verticale efficace a profondità B/2 per fondazioni quadrate o circolari, e a profondità B per fondazioni nastriformi.

E_i rappresenta il modulo di deformabilità del terreno in corrispondenza dello strato **i-esimo** considerato nel calcolo;

D_{zi} rappresenta lo spessore dello strato **i-esimo**;

C_1 e **C_2** sono due coefficienti correttivi.

Il modulo **E** viene assunto pari a **2.5 q_c** per fondazioni circolari o quadrate e a **3.5 q_c** per fondazioni nastriformi. Nei casi intermedi, si interpola in funzione del valore di **L/B**.

Il termine **q_c** che interviene nella determinazione di **E** rappresenta la resistenza alla punta fornita dalla prova CPT.

Le espressioni dei due coefficienti **C_1** e **C_2** sono:

$$C_1 = 1 - 0.5 \cdot \frac{\sigma'_{v0}}{\Delta q} > 0.5$$

che tiene conto della profondità del piano di posa.

$$C_2 = 1 + 0.2 \cdot log \frac{t}{0.1}$$

che tiene conto delle deformazioni differite nel tempo per effetto secondario.

Nell'espressione **t** rappresenta il tempo, espresso in anni dopo il termine della costruzione, in corrispondenza del quale si calcola il cedimento.

CEDIMENTI DI BURLAND e BURBIDGE

Qualora si disponga di dati ottenuti da prove penetometriche dinamiche per il calcolo dei cedimenti è possibile fare affidamento al metodo di Burland e Burbidge (1985), nel quale viene correlato un indice di compressibilità *Ic* al risultato N della prova penetrometrica dinamica. L'espressione del cedimento proposta dai due autori è la seguente:

$$S = f_S \cdot f_H \cdot f_t \cdot \left[\sigma'_{v0} \cdot B^{0.7} \cdot I_C / 3 + \left(q' - \sigma'_{v0} \right) \cdot B^{0.7} \cdot I_C \right]$$

nella quale:

q' Pressione efficace lorda;
σ'_{VO} Tensione verticale efficace alla quota d'imposta della fondazione;
B Larghezza della fondazione;
Ic Indice di compressibilità;

f_S, f_H, f_t Fattori correttivi che tengono conto rispettivamente della forma, dello spessore dello strato compressibile e del tempo, per la componente viscosa.

L'indice di compressibilità Ic è legato al valore medio Nav di Nspt all'interno di una profondità significativa z:

$$I_C = \frac{1.706}{N_{AV}^{1.4}}$$

Per quanto riguarda i valori di Nspt da utilizzare nel calcolo del valore medio N_{AV} va precisato che i valori vanno corretti, per sabbie con componente limosa sotto falda e Nspt>15, secondo l'indicazione di Terzaghi e Peck (1948)

Nc = 15 + 0.5 (Nspt -15)

dove Nc è il valore coretto da usare nei calcoli.

Per depositi ghiaiosi o sabbioso-ghiaiosi il valore corretto è pari a:

Nc = 1.25 Nspt

Le espressioni dei fattori correttivi f_S, f_H ed f_t sono rispettivamente:

$$f_S = \left(\frac{1.25 \cdot L/B}{L/B + 0.25} \right)^2$$

$$f_H = \frac{H}{z_i} \left(2 - \frac{H}{z_i} \right)$$

$$f_t = \left(1 + R_3 + R \cdot log \frac{t}{3} \right)$$

Con:

t = tempo in anni > 3;

R3 = costante pari a 0.3 per carichi statici e 0.7 per carichi dinamici;
R = 0.2 nel caso di carichi statici e 0.8 per carichi dinamici.

4.4.2. Verifiche

I dati presenti nella relazione geologica sono stati Opportunamente integrati con parametri ticipi ricavati da letteratura, questi parametri dovranno essere confermati ed eventualmente corretti in base alle indicazioni del Geologo incaricato.

DATI GENERALI

==========

Normativa	NTC 2018
Zona	Grosseto
Lat./ Long. [WGS84]	44,829477/ 8,808468
Larghezza fondazione	1,70 m
Lunghezza fondazione	3,45 m
Profondità piano di posa	0,30 m
Altezza di incastro	0,9 m

==========

4.4.2.1. Verifica su penetrometrica P1

STRATIGRAFIA TERRENO

Spessore strato [m]	Peso unità di volume [kN/m³]	Peso unità di volume saturo [kN/m³]	Angolo di attrito [°]	Coesione [kN/m²]	Coesione non drenata [kN/m²]	Modulo Elastico [kN/m²]	Modulo Edometrico [kN/m²]	Poisson	Coeff. consolidaz. primaria [cmq/s]	Coeff. consolidazione secondaria	Descrizione
0,8	17,03	17,03	27,0	0,0	44,13	5000,0	5000,0	0,0	0,0	0,0	
3,8	17,65	17,65	37,0	0,0	0,0	5000,0	5000,0	0,0	0,0	0,0	
1,2	17,65	17,65	33,0	0,0	0,0	5000,0	5000,0	0,0	0,0	0,0	
1,2	17,65	17,65	36,0	0,0	0,0	5000,0	5000,0	0,0	0,0	0,0	

Carichi di progetto agenti sulla fondazione

Nr.	Nome combinazione	Pressione normale di progetto [kN/m²]	N [kN]	Mx [kN·m]	My [kN·m]	Hx [kN]	Hy [kN]	Tipo
1	A1+M1+R3	56,00	0,00	0,00	0,00	0,00	0,00	Progetto
2	Sisma A	39,00	0,00	0,00	0,00	0,00	0,00	Progetto
3	S.L.E.	45,50	0,00	0,00	0,00	0,00	0,00	Servizio

Sisma + Coeff. parziali parametri geotecnici terreno + Resistenze

Nr	Correzione Sismica	Tangente angolo di resistenza al taglio	Coesione efficace	Coesione non drenata	Peso Unità volume in fondazione	Peso unità volume copertura	Coef. Rid. Capacità portante verticale	Coef.Rid.Capacità portante orizzontale
1	No	1	1	1	1	1	2,3	1,1
2	No	1,25	1,25	1,4	1	1	1,8	1,1
3	No	1	1	1	1	1	1	1

CARICO LIMITE FONDAZIONE COMBINAZIONE...Sisma A
Autore: HANSEN (1970)

Carico limite [Qult]	218,96 kN/m²
Resistenza di progetto[Rd]	121,65 kN/m²
Tensione [Ed]	39,0 kN/m²
Fattore sicurezza [Fs=Qult/Ed]	5,61
Condizione di verifica [Ed<=Rd]	Verificata

COEFFICIENTE DI SOTTOFONDAZIONE BOWLES (1982)

Costante di Winkler	8758,45 kN/m³

A1+M1+R3

Autore: HANSEN (1970) (Condizione drenata)

==========

Fattore [Nq]	27,36
Fattore [Nc]	39,98
Fattore [Ng]	26,07
Fattore forma [Sc]	1,34
Fattore profondità [Dc]	1,0
Fattore inclinazione carichi [Ic]	1,0
Fattore inclinazione pendio [Gc]	1,0
Fattore inclinazione base [Bc]	1,0
Fattore forma [Sq]	1,32
Fattore profondità [Dq]	1,0
Fattore inclinazione carichi [Iq]	1,0
Fattore inclinazione pendio [Gq]	1,0
Fattore inclinazione base [Bq]	1,0
Fattore forma [Sg]	0,8
Fattore profondità [Dg]	1,0
Fattore inclinazione carichi [Ig]	1,0
Fattore inclinazione pendio [Gg]	1,0
Fattore inclinazione base [Bg]	1,0
Fattore correzione sismico inerziale [zq]	1,0
Fattore correzione sismico inerziale [zg]	1,0
Fattore correzione sismico inerziale [zc]	1,0

==========

Carico limite	495,2 kN/m²
Resistenza di progetto	215,31 kN/m²
Condizione di verifica [Ed<=Rd]	Verificata

==========

Autore: TERZAGHI (1955) (Condizione drenata)

==========

Fattore [Nq]	33,85
Fattore [Nc]	49,82
Fattore [Ng]	33,89
Fattore forma [Sc]	1,0
Fattore forma [Sg]	1,0
Fattore correzione sismico inerziale [zq]	1,0

Fattore correzione sismico inerziale [zg]	1,0
Fattore correzione sismico inerziale [zc]	1,0

==========

Carico limite	674,99 kN/m²
Resistenza di progetto	293,48 kN/m²

Condizione di verifica [Ed<=Rd] Verificata

==========

Autore: MEYERHOF (1963) (Condizione drenata)

==========

Fattore [Nq]	27,36
Fattore [Nc]	39,98
Fattore [Ng]	28,02
Fattore forma [Sc]	1,34
Fattore profondità [Dc]	1,0
Fattore inclinazione carichi [Ic]	1,0
Fattore forma [Sq]	1,17
Fattore profondità [Dq]	1,0
Fattore inclinazione carichi [Iq]	1,0
Fattore forma [Sg]	1,17
Fattore profondità [Dg]	1,0
Fattore inclinazione carichi [Ig]	1,0
Fattore correzione sismico inerziale [zq]	1,0
Fattore correzione sismico inerziale [zg]	1,0
Fattore correzione sismico inerziale [zc]	1,0

==========

Carico limite	649,19 kN/m²
Resistenza di progetto	282,26 kN/m²

Condizione di verifica [Ed<=Rd] Verificata

==========

Autore: VESIC (1975) (Condizione drenata)

==========

Fattore [Nq]	27,36
Fattore [Nc]	39,98
Fattore [Ng]	37,39
Fattore forma [Sc]	1,34
Fattore profondità [Dc]	1,0
Fattore inclinazione carichi [Ic]	1,0
Fattore inclinazione pendio [Gc]	1,0
Fattore inclinazione base [Bc]	1,0
Fattore forma [Sq]	1,32
Fattore profondità [Dq]	1,0
Fattore inclinazione carichi [Iq]	1,0
Fattore inclinazione pendio [Gq]	1,0
Fattore inclinazione base [Bq]	1,0
Fattore forma [Sg]	0,8
Fattore profondità [Dg]	1,0

Fattore inclinazione carichi [Ig]	1,0
Fattore inclinazione pendio [Gg]	1,0
Fattore inclinazione base [Bg]	1,0
Fattore correzione sismico inerziale [zq]	1,0
Fattore correzione sismico inerziale [zg]	1,0
Fattore correzione sismico inerziale [zc]	1,0

==========

Carico limite	629,9 kN/m²
Resistenza di progetto	273,87 kN/m²

Condizione di verifica [Ed<=Rd] Verificata

==========

Autore: Brinch - Hansen 1970 (Condizione drenata)

==========

Fattore [Nq]	27,36
Fattore [Nc]	39,98
Fattore [Ng]	34,76
Fattore forma [Sc]	1,28
Fattore profondità [Dc]	1,0
Fattore inclinazione carichi [Ic]	1,0
Fattore inclinazione pendio [Gc]	1,0
Fattore inclinazione base [Bc]	1,0
Fattore forma [Sq]	1,27
Fattore profondità [Dq]	1,0
Fattore inclinazione carichi [Iq]	1,0
Fattore inclinazione pendio [Gq]	1,0
Fattore inclinazione base [Bq]	1,0
Fattore forma [Sg]	0,85
Fattore profondità [Dg]	1,0
Fattore inclinazione carichi [Ig]	1,0
Fattore inclinazione pendio [Gg]	1,0
Fattore inclinazione base [Bg]	1,0
Fattore correzione sismico inerziale [zq]	1,0
Fattore correzione sismico inerziale [zg]	1,0
Fattore correzione sismico inerziale [zc]	1,0

==========

Carico limite	616,41 kN/m²
Resistenza di progetto	268,0 kN/m²

Condizione di verifica [Ed<=Rd] Verificata

==========

Autore: Meyerhof and Hanna (1978) (Condizione drenata)

==========

Strato 1 sopra, strato 2 sotto

Fattori di capacità portante strato 1

Fattore [Nq]	1,0
Fattore [Nc]	5,14

Fattori di capacità portante strato 2	
Fattore [Nq]	42,92
Fattore [Nc]	55,63
Fattore [Ng]	14,03
Carico limite strato 2 (qb)	952,79 kN/m²
Carico limite strato 1 (qt)	321,86 kN/m²
Incremento carico limite strato 1	25,96 kN/m²
Coefficiente di punzonamento (ks)	0,0
Rapporto (q1/q2)	0,93
==========	
Carico limite	321,86 kN/m²
Resistenza di progetto	139,94 kN/m²
Condizione di verifica [Ed<=Rd]	Verificata
==========	

Sisma A

Autore: HANSEN (1970) (Condizione drenata)

==========	
Fattore [Nq]	14,41
Fattore [Nc]	25,43
Fattore [Ng]	10,61
Fattore forma [Sc]	1,28
Fattore profondità [Dc]	1,0
Fattore inclinazione carichi [Ic]	1,0
Fattore inclinazione pendio [Gc]	1,0
Fattore inclinazione base [Bc]	1,0
Fattore forma [Sq]	1,26
Fattore profondità [Dq]	1,0
Fattore inclinazione carichi [Iq]	1,0
Fattore inclinazione pendio [Gq]	1,0
Fattore inclinazione base [Bq]	1,0
Fattore forma [Sg]	0,8
Fattore profondità [Dg]	1,0
Fattore inclinazione carichi [Ig]	1,0
Fattore inclinazione pendio [Gg]	1,0
Fattore inclinazione base [Bg]	1,0
Fattore correzione sismico inerziale [zq]	1,0
Fattore correzione sismico inerziale [zg]	1,0
Fattore correzione sismico inerziale [zc]	1,0
==========	
Carico limite	218,96 kN/m²
Resistenza di progetto	121,65 kN/m²
Condizione di verifica [Ed<=Rd]	Verificata
==========	

Autore: TERZAGHI (1955) (Condizione drenata)

Fattore [Nq]	17,42
Fattore [Nc]	31,14
Fattore [Ng]	14,75
Fattore forma [Sc]	1,0
Fattore forma [Sg]	1,0
Fattore correzione sismico inerziale [zq]	1,0
Fattore correzione sismico inerziale [zg]	1,0
Fattore correzione sismico inerziale [zc]	1,0
Carico limite	307,5 kN/m²
Resistenza di progetto	170,83 kN/m²
Condizione di verifica [Ed<=Rd]	Verificata

Autore: MEYERHOF (1963) (Condizione drenata)

Fattore [Nq]	14,41
Fattore [Nc]	25,43
Fattore [Ng]	10,83
Fattore forma [Sc]	1,27
Fattore profondità [Dc]	1,0
Fattore inclinazione carichi [Ic]	1,0
Fattore forma [Sq]	1,14
Fattore profondità [Dq]	1,0
Fattore inclinazione carichi [Iq]	1,0
Fattore forma [Sg]	1,14
Fattore profondità [Dg]	1,0
Fattore inclinazione carichi [Ig]	1,0
Fattore correzione sismico inerziale [zq]	1,0
Fattore correzione sismico inerziale [zg]	1,0
Fattore correzione sismico inerziale [zc]	1,0
Carico limite	265,83 kN/m²
Resistenza di progetto	147,68 kN/m²
Condizione di verifica [Ed<=Rd]	Verificata

Autore: VESIC (1975) (Condizione drenata)

Fattore [Nq]	14,41
Fattore [Nc]	25,43
Fattore [Ng]	16,26
Fattore forma [Sc]	1,28
Fattore profondità [Dc]	1,0
Fattore inclinazione carichi [Ic]	1,0

Fattore inclinazione pendio [Gc]	1,0
Fattore inclinazione base [Bc]	1,0
Fattore forma [Sq]	1,26
Fattore profondità [Dq]	1,0
Fattore inclinazione carichi [Iq]	1,0
Fattore inclinazione pendio [Gq]	1,0
Fattore inclinazione base [Bq]	1,0
Fattore forma [Sg]	0,8
Fattore profondità [Dg]	1,0
Fattore inclinazione carichi [Ig]	1,0
Fattore inclinazione pendio [Gg]	1,0
Fattore inclinazione base [Bg]	1,0
Fattore correzione sismico inerziale [zq]	1,0
Fattore correzione sismico inerziale [zg]	1,0
Fattore correzione sismico inerziale [zc]	1,0

==========

Carico limite	286,12 kN/m²
Resistenza di progetto	158,95 kN/m²

Condizione di verifica [Ed<=Rd] Verificata

==========

Autore: Brinch - Hansen 1970 (Condizione drenata)

==========

Fattore [Nq]	14,41
Fattore [Nc]	25,43
Fattore [Ng]	14,15
Fattore forma [Sc]	1,25
Fattore profondità [Dc]	1,0
Fattore inclinazione carichi [Ic]	1,0
Fattore inclinazione pendio [Gc]	1,0
Fattore inclinazione base [Bc]	1,0
Fattore forma [Sq]	1,23
Fattore profondità [Dq]	1,0
Fattore inclinazione carichi [Iq]	1,0
Fattore inclinazione pendio [Gq]	1,0
Fattore inclinazione base [Bq]	1,0
Fattore forma [Sg]	0,85
Fattore profondità [Dg]	1,0
Fattore inclinazione carichi [Ig]	1,0
Fattore inclinazione pendio [Gg]	1,0
Fattore inclinazione base [Bg]	1,0
Fattore correzione sismico inerziale [zq]	1,0
Fattore correzione sismico inerziale [zg]	1,0
Fattore correzione sismico inerziale [zc]	1,0

==========

Carico limite	269,14 kN/m²
Resistenza di progetto	149,52 kN/m²

Condizione di verifica [Ed<=Rd] Verificata

==========

Autore: Meyerhof and Hanna (1978) (Condizione drenata)
==========
Strato 1 sopra, strato 2 sotto

Fattori di capacità portante strato 1
Fattore [Nq] 1,0
Fattore [Nc] 5,14

Fattori di capacità portante strato 2
Fattore [Nq] 42,92
Fattore [Nc] 55,63
Fattore [Ng] 14,03

Carico limite strato 2 (qb) 952,79 kN/m²
Carico limite strato 1 (qt) 321,86 kN/m²

Incremento carico limite strato 1 25,96 kN/m²
Coefficiente di punzonamento (ks) 0,0
Rapporto (q1/q2) 0,93
==========
Carico limite 321,86 kN/m²
Resistenza di progetto 178,81 kN/m²

Condizione di verifica [Ed<=Rd] Verificata
==========

4.4.2.2. Verifica su penetrometrica P3

STRATIGRAFIA TERRENO

Spessore strato [m]	Peso unità di volume [kN/m³]	Peso unità di volume saturo [kN/m³]	Angolo di attrito [°]	Coesione [kN/m²]	Coesione non drenata [kN/m²]	Modulo Elastico [kN/m²]	Modulo Edometrico [kN/m²]	Poisson	Coeff. consolidaz. primaria [cmq/s]	Coeff. consolidazione secondaria	Descrizione
0,4	15,85	15,85	29,0	0,0	19,61	5000,0	5000,0	0,0	0,0	0,0	
2,4	18,63	18,63	40,0	0,0	0,0	5000,0	5000,0	0,0	0,0	0,0	
2,2	17,65	17,65	35,0	0,0	0,0	5000,0	5000,0	0,0	0,0	0,0	
1,0	17,65	17,65	33,0	0,0	0,0	5000,0	5000,0	0,0	0,0	0,0	
1,0	17,65	17,65	35,0	0,0	0,0	5000,0	5000,0	0,0	0,0	0,0	

Carichi di progetto agenti sulla fondazione

Nr.	Nome combinazione	Pressione normale di progetto [kN/m²]	N [kN]	Mx [kN·m]	My [kN·m]	Hx [kN]	Hy [kN]	Tipo
1	A1+M1+R3	56,00	0,00	0,00	0,00	0,00	0,00	Progetto
2	Sisma A	39,00	0,00	0,00	0,00	0,00	0,00	Progetto

3	S.L.E.	45,50	0,00	0,00	0,00	0,00	0,00	Servizio

Sisma + Coeff. parziali parametri geotecnici terreno + Resistenze

Nr	Correzione Sismica	Tangente angolo di resistenza al taglio	Coesione efficace	Coesione non drenata	Peso Unità volume in fondazione	Peso unità volume co-pertura	Coef. Rid. Capacità portante verticale	Coef.Rid.C apacità por-tante oriz-zontale
1	No	1	1	1	1	1	2,3	1,1
2	No	1,25	1,25	1,4	1	1	1,8	1,1
3	No	1	1	1	1	1	1	1

CARICO LIMITE FONDAZIONE COMBINAZIONE...A1+M1+R3
Autore: Meyerhof and Hanna (1978)

Carico limite [Qult]	151,23 kN/m²
Resistenza di progetto[Rd]	65,75 kN/m²
Tensione [Ed]	56,0 kN/m²
Fattore sicurezza [Fs=Qult/Ed]	2,7
Condizione di verifica [Ed<=Rd]	Verificata

COEFFICIENTE DI SOTTOFONDAZIONE BOWLES (1982)
Costante di Winkler 63977,23 kN/m³

A1+M1+R3

Autore: HANSEN (1970) (Condizione drenata)

Fattore [Nq]	57,8
Fattore [Nc]	69,55
Fattore [Ng]	69,58
Fattore forma [Sc]	1,41
Fattore profondità [Dc]	1,0
Fattore inclinazione carichi [Ic]	1,0
Fattore inclinazione pendio [Gc]	1,0
Fattore inclinazione base [Bc]	1,0
Fattore forma [Sq]	1,4
Fattore profondità [Dq]	1,0
Fattore inclinazione carichi [Iq]	1,0
Fattore inclinazione pendio [Gq]	1,0
Fattore inclinazione base [Bq]	1,0
Fattore forma [Sg]	0,8
Fattore profondità [Dg]	1,0
Fattore inclinazione carichi [Ig]	1,0
Fattore inclinazione pendio [Gg]	1,0
Fattore inclinazione base [Bg]	1,0
Fattore correzione sismico inerziale [zq]	1,0
Fattore correzione sismico inerziale [zg]	1,0
Fattore correzione sismico inerziale [zc]	1,0

Carico limite	1260,9 kN/m²
Resistenza di progetto	548,22 kN/m²
Condizione di verifica [Ed<=Rd]	Verificata

Autore: TERZAGHI (1955) (Condizione drenata)

Fattore [Nq]	72,99
Fattore [Nc]	88,15
Fattore [Ng]	89,45
Fattore forma [Sc]	1,0
Fattore forma [Sg]	1,0
Fattore correzione sismico inerziale [zq]	1,0
Fattore correzione sismico inerziale [zg]	1,0
Fattore correzione sismico inerziale [zc]	1,0
Carico limite	1748,84 kN/m²
Resistenza di progetto	760,37 kN/m²
Condizione di verifica [Ed<=Rd]	Verificata

Autore: MEYERHOF (1963) (Condizione drenata)

Fattore [Nq]	57,8
Fattore [Nc]	69,55
Fattore [Ng]	80,91
Fattore forma [Sc]	1,44
Fattore profondità [Dc]	1,0
Fattore inclinazione carichi [Ic]	1,0
Fattore forma [Sq]	1,22
Fattore profondità [Dq]	1,0
Fattore inclinazione carichi [Iq]	1,0
Fattore forma [Sg]	1,22
Fattore profondità [Dg]	1,0
Fattore inclinazione carichi [Ig]	1,0
Fattore correzione sismico inerziale [zq]	1,0
Fattore correzione sismico inerziale [zg]	1,0
Fattore correzione sismico inerziale [zc]	1,0
Carico limite	1880,63 kN/m²
Resistenza di progetto	817,66 kN/m²
Condizione di verifica [Ed<=Rd]	Verificata

Autore: VESIC (1975) (Condizione drenata)

Fattore [Nq]	57,8
Fattore [Nc]	69,55
Fattore [Ng]	96,04
Fattore forma [Sc]	1,41
Fattore profondità [Dc]	1,0
Fattore inclinazione carichi [Ic]	1,0
Fattore inclinazione pendio [Gc]	1,0
Fattore inclinazione base [Bc]	1,0
Fattore forma [Sq]	1,4
Fattore profondità [Dq]	1,0

Fattore inclinazione carichi [Iq]	1,0
Fattore inclinazione pendio [Gq]	1,0
Fattore inclinazione base [Bq]	1,0
Fattore forma [Sg]	0,8
Fattore profondità [Dg]	1,0
Fattore inclinazione carichi [Ig]	1,0
Fattore inclinazione pendio [Gg]	1,0
Fattore inclinazione base [Bg]	1,0
Fattore correzione sismico inerziale [zq]	1,0
Fattore correzione sismico inerziale [zg]	1,0
Fattore correzione sismico inerziale [zc]	1,0

==========

Carico limite	1065,2 kN/m²
Resistenza di progetto	463,13 kN/m²

Condizione di verifica [Ed<=Rd] Verificata

==========

Autore: Brinch - Hansen 1970 (Condizione drenata)

==========

Fattore [Nq]	57,8
Fattore [Nc]	69,55
Fattore [Ng]	92,77
Fattore forma [Sc]	1,32
Fattore profondità [Dc]	1,0
Fattore inclinazione carichi [Ic]	1,0
Fattore inclinazione pendio [Gc]	1,0
Fattore inclinazione base [Bc]	1,0
Fattore forma [Sq]	1,31
Fattore profondità [Dq]	1,0
Fattore inclinazione carichi [Iq]	1,0
Fattore inclinazione pendio [Gq]	1,0
Fattore inclinazione base [Bq]	1,0
Fattore forma [Sg]	0,85
Fattore profondità [Dg]	1,0
Fattore inclinazione carichi [Ig]	1,0
Fattore inclinazione pendio [Gg]	1,0
Fattore inclinazione base [Bg]	1,0
Fattore correzione sismico inerziale [zq]	1,0
Fattore correzione sismico inerziale [zg]	1,0
Fattore correzione sismico inerziale [zc]	1,0

==========

Carico limite	1599,43 kN/m²
Resistenza di progetto	695,4 kN/m²

Condizione di verifica [Ed<=Rd] Verificata

==========

Autore: Meyerhof and Hanna (1978) (Condizione drenata)

==========

Strato 1 sopra, strato 2 sotto

Fattori di capacità portante strato 1

Fattore [Nq]	1,0

Fattore [Nc]	5,14
Fattori di capacità portante strato 2	
Fattore [Nq]	64,2
Fattore [Nc]	75,31
Fattore [Ng]	23,0
Carico limite strato 2 (qb)	946,0 kN/m²
Carico limite strato 1 (qt)	151,23 kN/m²
Incremento carico limite strato 1	2,31 kN/m²
Coefficiente di punzonamento (ks)	0,0
Rapporto (q1/q2)	3,61

==========

Carico limite	151,23 kN/m²
Resistenza di progetto	65,75 kN/m²
Condizione di verifica [Ed<=Rd]	Verificata

==========

Sisma A

Autore: HANSEN (1970) (Condizione drenata)

==========

Fattore [Nq]	26,59
Fattore [Nc]	39,17
Fattore [Ng]	25,08
Fattore forma [Sc]	1,33
Fattore profondità [Dc]	1,0
Fattore inclinazione carichi [Ic]	1,0
Fattore inclinazione pendio [Gc]	1,0
Fattore inclinazione base [Bc]	1,0
Fattore forma [Sq]	1,32
Fattore profondità [Dq]	1,0
Fattore inclinazione carichi [Iq]	1,0
Fattore inclinazione pendio [Gq]	1,0
Fattore inclinazione base [Bq]	1,0
Fattore forma [Sg]	0,8
Fattore profondità [Dg]	1,0
Fattore inclinazione carichi [Ig]	1,0
Fattore inclinazione pendio [Gg]	1,0
Fattore inclinazione base [Bg]	1,0
Fattore correzione sismico inerziale [zq]	1,0
Fattore correzione sismico inerziale [zg]	1,0
Fattore correzione sismico inerziale [zc]	1,0

==========

Carico limite	482,72 kN/m²
Resistenza di progetto	268,18 kN/m²
Condizione di verifica [Ed<=Rd]	Verificata

==========

Autore: TERZAGHI (1955) (Condizione drenata)

==========

Fattore [Nq]	32,87
Fattore [Nc]	48,77
Fattore [Ng]	32,74
Fattore forma [Sc]	1,0
Fattore forma [Sg]	1,0
Fattore correzione sismico inerziale [zq]	1,0
Fattore correzione sismico inerziale [zg]	1,0
Fattore correzione sismico inerziale [zc]	1,0

==========

Carico limite	669,43 kN/m²
Resistenza di progetto	371,91 kN/m²

Condizione di verifica [Ed<=Rd] Verificata

==========

Autore: MEYERHOF (1963) (Condizione drenata)

==========

Fattore [Nq]	26,59
Fattore [Nc]	39,17
Fattore [Ng]	26,89
Fattore forma [Sc]	1,34
Fattore profondità [Dc]	1,0
Fattore inclinazione carichi [Ic]	1,0
Fattore forma [Sq]	1,17
Fattore profondità [Dq]	1,0
Fattore inclinazione carichi [Iq]	1,0
Fattore forma [Sg]	1,17
Fattore profondità [Dg]	1,0
Fattore inclinazione carichi [Ig]	1,0
Fattore correzione sismico inerziale [zq]	1,0
Fattore correzione sismico inerziale [zg]	1,0
Fattore correzione sismico inerziale [zc]	1,0

==========

Carico limite	640,1 kN/m²
Resistenza di progetto	355,61 kN/m²

Condizione di verifica [Ed<=Rd] Verificata

==========

Autore: VESIC (1975) (Condizione drenata)

==========

Fattore [Nq]	26,59
Fattore [Nc]	39,17
Fattore [Ng]	36,05
Fattore forma [Sc]	1,33
Fattore profondità [Dc]	1,0
Fattore inclinazione carichi [Ic]	1,0
Fattore inclinazione pendio [Gc]	1,0
Fattore inclinazione base [Bc]	1,0
Fattore forma [Sq]	1,32
Fattore profondità [Dq]	1,0
Fattore inclinazione carichi [Iq]	1,0
Fattore inclinazione pendio [Gq]	1,0
Fattore inclinazione base [Bq]	1,0

Fattore forma [Sg]	0,8
Fattore profondità [Dg]	1,0
Fattore inclinazione carichi [Ig]	1,0
Fattore inclinazione pendio [Gg]	1,0
Fattore inclinazione base [Bg]	1,0
Fattore correzione sismico inerziale [zq]	1,0
Fattore correzione sismico inerziale [zg]	1,0
Fattore correzione sismico inerziale [zc]	1,0

==========

Carico limite	620,79 kN/m²
Resistenza di progetto	344,89 kN/m²

Condizione di verifica [Ed<=Rd] Verificata

==========

Autore: Brinch - Hansen 1970 (Condizione drenata)

==========

Fattore [Nq]	26,59
Fattore [Nc]	39,17
Fattore [Ng]	33,44
Fattore forma [Sc]	1,28
Fattore profondità [Dc]	1,0
Fattore inclinazione carichi [Ic]	1,0
Fattore inclinazione pendio [Gc]	1,0
Fattore inclinazione base [Bc]	1,0
Fattore forma [Sq]	1,27
Fattore profondità [Dq]	1,0
Fattore inclinazione carichi [Iq]	1,0
Fattore inclinazione pendio [Gq]	1,0
Fattore inclinazione base [Bq]	1,0
Fattore forma [Sg]	0,85
Fattore profondità [Dg]	1,0
Fattore inclinazione carichi [Ig]	1,0
Fattore inclinazione pendio [Gg]	1,0
Fattore inclinazione base [Bg]	1,0
Fattore correzione sismico inerziale [zq]	1,0
Fattore correzione sismico inerziale [zg]	1,0
Fattore correzione sismico inerziale [zc]	1,0

==========

Carico limite	607,1 kN/m²
Resistenza di progetto	337,28 kN/m²

Condizione di verifica [Ed<=Rd] Verificata

==========

Autore: Meyerhof and Hanna (1978) (Condizione drenata)

==========

Strato 1 sopra, strato 2 sotto

Fattori di capacità portante strato 1

Fattore [Nq]	1,0
Fattore [Nc]	5,14

Fattori di capacità portante strato 2

Fattore [Nq] 64,2
Fattore [Nc] 75,31
Fattore [Ng] 23,0

Carico limite strato 2 (qb) 946,0 kN/m²
Carico limite strato 1 (qt) 151,23 kN/m²

Incremento carico limite strato 1 2,31 kN/m²
Coefficiente di punzonamento (ks) 0,0
Rapporto (q1/q2) 3,61
==========
Carico limite 151,23 kN/m²
Resistenza di progetto 84,02 kN/m²

Condizione di verifica [Ed<=Rd] Verificata
==========

4.4.2.3. Verifica su penetrometrica P4

STRATIGRAFIA TERRENO

Spessore strato [m]	Peso unità di volume [kN/m³]	Peso unità di volume saturo [kN/m³]	Angolo di attrito [°]	Coesione [kN/m²]	Coesione non drenata [kN/m²]	Modulo Elastico [kN/m²]	Modulo Edometrico [kN/m²]	Poisson	Coeff. consolidaz. primaria [cmq/s]	Coeff. consolidazione secondaria	Descrizione
0,4	15,85	15,85	29,0	0,0	19,6133	5000,0	5000,0	0,0	0,0	0,0	
1,2	17,65	17,65	44,0	0,0	0,0	5000,0	5000,0	0,0	0,0	0,0	
3,0	17,65	17,65	36,0	0,0	0,0	5000,0	5000,0	0,0	0,0	0,0	
2,2	17,65	17,65	35,0	0,0	0,0	5000,0	5000,0	0,0	0,0	0,0	

Carichi di progetto agenti sulla fondazione

Nr.	Nome combinazione	Pressione normale di progetto [kN/m²]	N [kN]	Mx [kN·m]	My [kN·m]	Hx [kN]	Hy [kN]	Tipo
1	A1+M1+R3	56,00	0,00	0,00	0,00	0,00	0,00	Progetto
2	Sisma A	39,00	0,00	0,00	0,00	0,00	0,00	Progetto
3	S.L.E.	45,50	0,00	0,00	0,00	0,00	0,00	Servizio

Sisma + Coeff. parziali parametri geotecnici terreno + Resistenze

Nr	Correzione Sismica	Tangente angolo di resistenza al taglio	Coesione efficace	Coesione non drenata	Peso Unità volume in fondazione	Peso unità volume copertura	Coef. Rid. Capacità portante verticale	Coef.Rid.Capacità portante orizzontale
1	No	1	1	1	1	1	2,3	1,1
2	No	1,25	1,25	1,4	1	1	1,8	1,1
3	No	1	1	1	1	1	1	1

CARICO LIMITE FONDAZIONE COMBINAZIONE...A1+M1+R3
Autore: Meyerhof and Hanna (1978)

Carico limite [Qult] 160,71 kN/m²

Resistenza di progetto[Rd]	69,87 kN/m²
Tensione [Ed]	56,0 kN/m²
Fattore sicurezza [Fs=Qult/Ed]	2,87
Condizione di verifica [Ed<=Rd]	Verificata

COEFFICIENTE DI SOTTOFONDAZIONE BOWLES (1982)

Costante di Winkler	101707,3 kN/m³

A1+M1+R3

Autore: HANSEN (1970) (Condizione drenata)

Fattore [Nq]	87,5
Fattore [Nc]	95,5
Fattore [Ng]	117,51
Fattore forma [Sc]	1,45
Fattore profondità [Dc]	1,0
Fattore inclinazione carichi [Ic]	1,0
Fattore inclinazione pendio [Gc]	1,0
Fattore inclinazione base [Bc]	1,0
Fattore forma [Sq]	1,45
Fattore profondità [Dq]	1,0
Fattore inclinazione carichi [Iq]	1,0
Fattore inclinazione pendio [Gq]	1,0
Fattore inclinazione base [Bq]	1,0
Fattore forma [Sg]	0,8
Fattore profondità [Dg]	1,0
Fattore inclinazione carichi [Ig]	1,0
Fattore inclinazione pendio [Gg]	1,0
Fattore inclinazione base [Bg]	1,0
Fattore correzione sismico inerziale [zq]	1,0
Fattore correzione sismico inerziale [zg]	1,0
Fattore correzione sismico inerziale [zc]	1,0
Carico limite	2007,23 kN/m²
Resistenza di progetto	872,71 kN/m²
Condizione di verifica [Ed<=Rd]	Verificata

Autore: TERZAGHI (1955) (Condizione drenata)

Fattore [Nq]	111,51
Fattore [Nc]	122,02
Fattore [Ng]	171,89
Fattore forma [Sc]	1,0
Fattore forma [Sg]	1,0
Fattore correzione sismico inerziale [zq]	1,0
Fattore correzione sismico inerziale [zg]	1,0
Fattore correzione sismico inerziale [zc]	1,0
Carico limite	3090,76 kN/m²
Resistenza di progetto	1343,81 kN/m²

Condizione di verifica [Ed<=Rd]	Verificata

Autore: MEYERHOF (1963) (Condizione drenata)

Fattore [Nq]	87,5
Fattore [Nc]	95,5
Fattore [Ng]	144,15
Fattore forma [Sc]	1,5
Fattore profondità [Dc]	1,0
Fattore inclinazione carichi [Ic]	1,0
Fattore forma [Sq]	1,25
Fattore profondità [Dq]	1,0
Fattore inclinazione carichi [Iq]	1,0
Fattore forma [Sg]	1,25
Fattore profondità [Dg]	1,0
Fattore inclinazione carichi [Ig]	1,0
Fattore correzione sismico inerziale [zq]	1,0
Fattore correzione sismico inerziale [zg]	1,0
Fattore correzione sismico inerziale [zc]	1,0
Carico limite	3205,69 kN/m²
Resistenza di progetto	1393,78 kN/m²

Condizione di verifica [Ed<=Rd]	Verificata

Autore: VESIC (1975) (Condizione drenata)

Fattore [Nq]	87,5
Fattore [Nc]	95,5
Fattore [Ng]	160,31
Fattore forma [Sc]	1,45
Fattore profondità [Dc]	1,0
Fattore inclinazione carichi [Ic]	1,0
Fattore inclinazione pendio [Gc]	1,0
Fattore inclinazione base [Bc]	1,0
Fattore forma [Sq]	1,45
Fattore profondità [Dq]	1,0
Fattore inclinazione carichi [Iq]	1,0
Fattore inclinazione pendio [Gq]	1,0
Fattore inclinazione base [Bq]	1,0
Fattore forma [Sg]	0,8
Fattore profondità [Dg]	1,0
Fattore inclinazione carichi [Ig]	1,0
Fattore inclinazione pendio [Gg]	1,0
Fattore inclinazione base [Bg]	1,0
Fattore correzione sismico inerziale [zq]	1,0
Fattore correzione sismico inerziale [zg]	1,0
Fattore correzione sismico inerziale [zc]	1,0
Carico limite	1255,96 kN/m²
Resistenza di progetto	546,07 kN/m²

Condizione di verifica [Ed<=Rd] Verificata
==========

Autore: Brinch - Hansen 1970 (Condizione drenata)
==========

Fattore [Nq]	87,5
Fattore [Nc]	95,5
Fattore [Ng]	156,68
Fattore forma [Sc]	1,33
Fattore profondità [Dc]	1,0
Fattore inclinazione carichi [Ic]	1,0
Fattore inclinazione pendio [Gc]	1,0
Fattore inclinazione base [Bc]	1,0
Fattore forma [Sq]	1,33
Fattore profondità [Dq]	1,0
Fattore inclinazione carichi [Iq]	1,0
Fattore inclinazione pendio [Gq]	1,0
Fattore inclinazione base [Bq]	1,0
Fattore forma [Sg]	0,85
Fattore profondità [Dg]	1,0
Fattore inclinazione carichi [Ig]	1,0
Fattore inclinazione pendio [Gg]	1,0
Fattore inclinazione base [Bg]	1,0
Fattore correzione sismico inerziale [zq]	1,0
Fattore correzione sismico inerziale [zg]	1,0
Fattore correzione sismico inerziale [zc]	1,0

==========

Carico limite	2542,68 kN/m²
Resistenza di progetto	1105,51 kN/m²

Condizione di verifica [Ed<=Rd] Verificata
==========

Autore: Meyerhof and Hanna (1978) (Condizione drenata)
==========

Strato 1 sopra, strato 2 sotto

Fattori di capacità portante strato 1	
Fattore [Nq]	1,0
Fattore [Nc]	5,14
Fattori di capacità portante strato 2	
Fattore [Nq]	115,31
Fattore [Nc]	118,37
Fattore [Ng]	46,18
Carico limite strato 2 (qb)	1813,33 kN/m²
Carico limite strato 1 (qt)	160,71 kN/m²
Incremento carico limite strato 1	2,31 kN/m²
Coefficiente di punzonamento (ks)	0,0
Rapporto (q1/q2)	6,87

==========

Carico limite	160,71 kN/m²

Resistenza di progetto	69,87 kN/m²
Condizione di verifica [Ed<=Rd]	Verificata

Sisma A

Autore: HANSEN (1970) (Condizione drenata)

Fattore [Nq]	37,4
Fattore [Nc]	50,24
Fattore [Ng]	39,56
Fattore forma [Sc]	1,37
Fattore profondità [Dc]	1,0
Fattore inclinazione carichi [Ic]	1,0
Fattore inclinazione pendio [Gc]	1,0
Fattore inclinazione base [Bc]	1,0
Fattore forma [Sq]	1,36
Fattore profondità [Dq]	1,0
Fattore inclinazione carichi [Iq]	1,0
Fattore inclinazione pendio [Gq]	1,0
Fattore inclinazione base [Bq]	1,0
Fattore forma [Sg]	0,8
Fattore profondità [Dg]	1,0
Fattore inclinazione carichi [Ig]	1,0
Fattore inclinazione pendio [Gg]	1,0
Fattore inclinazione base [Bg]	1,0
Fattore correzione sismico inerziale [zq]	1,0
Fattore correzione sismico inerziale [zg]	1,0
Fattore correzione sismico inerziale [zc]	1,0
Carico limite	714,51 kN/m²
Resistenza di progetto	396,95 kN/m²
Condizione di verifica [Ed<=Rd]	Verificata

Autore: TERZAGHI (1955) (Condizione drenata)

Fattore [Nq]	46,7
Fattore [Nc]	63,08
Fattore [Ng]	50,98
Fattore forma [Sc]	1,0
Fattore forma [Sg]	1,0
Fattore correzione sismico inerziale [zq]	1,0
Fattore correzione sismico inerziale [zg]	1,0
Fattore correzione sismico inerziale [zc]	1,0
Carico limite	981,48 kN/m²
Resistenza di progetto	545,27 kN/m²
Condizione di verifica [Ed<=Rd]	Verificata

Autore: MEYERHOF (1963) (Condizione drenata)

Fattore [Nq]	37,4
Fattore [Nc]	50,24
Fattore [Ng]	43,84
Fattore forma [Sc]	1,38
Fattore profondità [Dc]	1,0
Fattore inclinazione carichi [Ic]	1,0
Fattore forma [Sq]	1,19
Fattore profondità [Dq]	1,0
Fattore inclinazione carichi [Iq]	1,0
Fattore forma [Sg]	1,19
Fattore profondità [Dg]	1,0
Fattore inclinazione carichi [Ig]	1,0
Fattore correzione sismico inerziale [zq]	1,0
Fattore correzione sismico inerziale [zg]	1,0
Fattore correzione sismico inerziale [zc]	1,0
Carico limite	988,08 kN/m²
Resistenza di progetto	548,93 kN/m²
Condizione di verifica [Ed<=Rd]	Verificata

Autore: VESIC (1975) (Condizione drenata)

Fattore [Nq]	37,4
Fattore [Nc]	50,24
Fattore [Ng]	55,65
Fattore forma [Sc]	1,37
Fattore profondità [Dc]	1,0
Fattore inclinazione carichi [Ic]	1,0
Fattore inclinazione pendio [Gc]	1,0
Fattore inclinazione base [Bc]	1,0
Fattore forma [Sq]	1,36
Fattore profondità [Dq]	1,0
Fattore inclinazione carichi [Iq]	1,0
Fattore inclinazione pendio [Gq]	1,0
Fattore inclinazione base [Bq]	1,0
Fattore forma [Sg]	0,8
Fattore profondità [Dg]	1,0
Fattore inclinazione carichi [Ig]	1,0
Fattore inclinazione pendio [Gg]	1,0
Fattore inclinazione base [Bg]	1,0
Fattore correzione sismico inerziale [zq]	1,0
Fattore correzione sismico inerziale [zg]	1,0
Fattore correzione sismico inerziale [zc]	1,0
Carico limite	835,2 kN/m²
Resistenza di progetto	464,0 kN/m²
Condizione di verifica [Ed<=Rd]	Verificata

Autore: Brinch - Hansen 1970 (Condizione drenata)

Fattore [Nq]	37,4
Fattore [Nc]	50,24
Fattore [Ng]	52,75
Fattore forma [Sc]	1,3
Fattore profondità [Dc]	1,0
Fattore inclinazione carichi [Ic]	1,0
Fattore inclinazione pendio [Gc]	1,0
Fattore inclinazione base [Bc]	1,0
Fattore forma [Sq]	1,29
Fattore profondità [Dq]	1,0
Fattore inclinazione carichi [Iq]	1,0
Fattore inclinazione pendio [Gq]	1,0
Fattore inclinazione base [Bq]	1,0
Fattore forma [Sg]	0,85
Fattore profondità [Dg]	1,0
Fattore inclinazione carichi [Ig]	1,0
Fattore inclinazione pendio [Gg]	1,0
Fattore inclinazione base [Bg]	1,0
Fattore correzione sismico inerziale [zq]	1,0
Fattore correzione sismico inerziale [zg]	1,0
Fattore correzione sismico inerziale [zc]	1,0
Carico limite	898,87 kN/m²
Resistenza di progetto	499,37 kN/m²
Condizione di verifica [Ed<=Rd]	Verificata

Autore: Meyerhof and Hanna (1978) (Condizione drenata)

Strato 1 sopra, strato 2 sotto

Fattori di capacità portante strato 1	
Fattore [Nq]	1,0
Fattore [Nc]	5,14
Fattori di capacità portante strato 2	
Fattore [Nq]	115,31
Fattore [Nc]	118,37
Fattore [Ng]	46,18
Carico limite strato 2 (qb)	1813,33 kN/m²
Carico limite strato 1 (qt)	160,71 kN/m²
Incremento carico limite strato 1	2,31 kN/m²
Coefficiente di punzonamento (ks)	0,0
Rapporto (q1/q2)	6,87
Carico limite	160,71 kN/m²
Resistenza di progetto	89,28 kN/m²
Condizione di verifica [Ed<=Rd]	Verificata

==========

4.4.2.4. Verifica su penetrometrica P5

STRATIGRAFIA TERRENO

Spessore strato [m]	Peso unità di volume [kN/m³]	Peso unità di volume saturo [kN/m³]	Angolo di attrito [°]	Coesione [kN/m²]	Coesione non drenata [kN/m²]	Modulo Elastico [kN/m²]	Modulo Edometrico [kN/m²]	Poisson	Coeff. consolidaz. primaria [cmq/s]	Coeff. consolidazione secondaria	Descrizione
0,8	16,18	16,18	29,0	0,0	24,5166	5000,0	5000,0	0,0	0,0	0,0	
3,8	17,65	17,65	36,0	0,0	0,0	5000,0	5000,0	0,0	0,0	0,0	
1,8	17,65	17,65	34,0	0,0	0,0	5000,0	5000,0	0,0	0,0	0,0	

Carichi di progetto agenti sulla fondazione

Nr.	Nome combinazione	Pressione normale di progetto [kN/m²]	N [kN]	Mx [kN·m]	My [kN·m]	Hx [kN]	Hy [kN]	Tipo
1	A1+M1+R3	56,00	0,00	0,00	0,00	0,00	0,00	Progetto
2	Sisma A	39,00	0,00	0,00	0,00	0,00	0,00	Progetto
3	S.L.E.	45,50	0,00	0,00	0,00	0,00	0,00	Servizio

Sisma + Coeff. parziali parametri geotecnici terreno + Resistenze

Nr	Correzione Sismica	Tangente angolo di resistenza al taglio	Coesione efficace	Coesione non drenata	Peso Unità volume in fondazione	Peso unità volume copertura	Coef. Rid. Capacità portante verticale	Coef.Rid.Capacità portante orizzontale
1	No	1	1	1	1	1	2,3	1,1
2	No	1,25	1,25	1,4	1	1	1,8	1,1
3	No	1	1	1	1	1	1	1

CARICO LIMITE FONDAZIONE COMBINAZIONE...A1+M1+R3
Autore: Meyerhof and Hanna (1978)

Carico limite [Qult]	178,71 kN/m²
Resistenza di progetto[Rd]	77,7 kN/m²
Tensione [Ed]	56,0 kN/m²
Fattore sicurezza [Fs=Qult/Ed]	3,19
Condizione di verifica [Ed<=Rd]	Verificata

COEFFICIENTE DI SOTTOFONDAZIONE BOWLES (1982)
Costante di Winkler 24680,57 kN/m³

A1+M1+R3

Autore: HANSEN (1970) (Condizione drenata)
==========

Fattore [Nq]	27,96
Fattore [Nc]	40,61
Fattore [Ng]	26,84
Fattore forma [Sc]	1,34

Fattore profondità [Dc]	1,0
Fattore inclinazione carichi [Ic]	1,0
Fattore inclinazione pendio [Gc]	1,0
Fattore inclinazione base [Bc]	1,0
Fattore forma [Sq]	1,33
Fattore profondità [Dq]	1,0
Fattore inclinazione carichi [Iq]	1,0
Fattore inclinazione pendio [Gq]	1,0
Fattore inclinazione base [Bq]	1,0
Fattore forma [Sg]	0,8
Fattore profondità [Dg]	1,0
Fattore inclinazione carichi [Ig]	1,0
Fattore inclinazione pendio [Gg]	1,0
Fattore inclinazione base [Bg]	1,0
Fattore correzione sismico inerziale [zq]	1,0
Fattore correzione sismico inerziale [zg]	1,0
Fattore correzione sismico inerziale [zc]	1,0

==========

Carico limite	494,07 kN/m²
Resistenza di progetto	214,81 kN/m²

Condizione di verifica [Ed<=Rd] Verificata

==========

Autore: TERZAGHI (1955) (Condizione drenata)

==========

Fattore [Nq]	34,61
Fattore [Nc]	50,64
Fattore [Ng]	34,78
Fattore forma [Sc]	1,0
Fattore forma [Sg]	1,0
Fattore correzione sismico inerziale [zq]	1,0
Fattore correzione sismico inerziale [zg]	1,0
Fattore correzione sismico inerziale [zc]	1,0

==========

Carico limite	674,77 kN/m²
Resistenza di progetto	293,38 kN/m²

Condizione di verifica [Ed<=Rd] Verificata

==========

Autore: MEYERHOF (1963) (Condizione drenata)

==========

Fattore [Nq]	27,96
Fattore [Nc]	40,61
Fattore [Ng]	28,91
Fattore forma [Sc]	1,34
Fattore profondità [Dc]	1,0
Fattore inclinazione carichi [Ic]	1,0
Fattore forma [Sq]	1,17
Fattore profondità [Dq]	1,0
Fattore inclinazione carichi [Iq]	1,0
Fattore forma [Sg]	1,17
Fattore profondità [Dg]	1,0

Fattore inclinazione carichi [Ig]	1,0
Fattore correzione sismico inerziale [zq]	1,0
Fattore correzione sismico inerziale [zg]	1,0
Fattore correzione sismico inerziale [zc]	1,0

==========

Carico limite	652,32 kN/m²
Resistenza di progetto	283,62 kN/m²

Condizione di verifica [Ed<=Rd] Verificata

==========

Autore: VESIC (1975) (Condizione drenata)

==========

Fattore [Nq]	27,96
Fattore [Nc]	40,61
Fattore [Ng]	38,44
Fattore forma [Sc]	1,34
Fattore profondità [Dc]	1,0
Fattore inclinazione carichi [Ic]	1,0
Fattore inclinazione pendio [Gc]	1,0
Fattore inclinazione base [Bc]	1,0
Fattore forma [Sq]	1,33
Fattore profondità [Dq]	1,0
Fattore inclinazione carichi [Iq]	1,0
Fattore inclinazione pendio [Gq]	1,0
Fattore inclinazione base [Bq]	1,0
Fattore forma [Sg]	0,8
Fattore profondità [Dg]	1,0
Fattore inclinazione carichi [Ig]	1,0
Fattore inclinazione pendio [Gg]	1,0
Fattore inclinazione base [Bg]	1,0
Fattore correzione sismico inerziale [zq]	1,0
Fattore correzione sismico inerziale [zg]	1,0
Fattore correzione sismico inerziale [zc]	1,0

==========

Carico limite	629,79 kN/m²
Resistenza di progetto	273,82 kN/m²

Condizione di verifica [Ed<=Rd] Verificata

==========

Autore: Brinch - Hansen 1970 (Condizione drenata)

==========

Fattore [Nq]	27,96
Fattore [Nc]	40,61
Fattore [Ng]	35,79
Fattore forma [Sc]	1,28
Fattore profondità [Dc]	1,0
Fattore inclinazione carichi [Ic]	1,0
Fattore inclinazione pendio [Gc]	1,0
Fattore inclinazione base [Bc]	1,0
Fattore forma [Sq]	1,27
Fattore profondità [Dq]	1,0
Fattore inclinazione carichi [Iq]	1,0

Fattore inclinazione pendio [Gq]	1,0
Fattore inclinazione base [Bq]	1,0
Fattore forma [Sg]	0,85
Fattore profondità [Dg]	1,0
Fattore inclinazione carichi [Ig]	1,0
Fattore inclinazione pendio [Gg]	1,0
Fattore inclinazione base [Bg]	1,0
Fattore correzione sismico inerziale [zq]	1,0
Fattore correzione sismico inerziale [zg]	1,0
Fattore correzione sismico inerziale [zc]	1,0

==========

Carico limite	617,01 kN/m²
Resistenza di progetto	268,27 kN/m²
Condizione di verifica [Ed<=Rd]	Verificata

==========

Autore: Meyerhof and Hanna (1978) (Condizione drenata)

==========

Strato 1 sopra, strato 2 sotto

Fattori di capacità portante strato 1	
Fattore [Nq]	1,0
Fattore [Nc]	5,14
Fattori di capacità portante strato 2	
Fattore [Nq]	37,75
Fattore [Nc]	50,59
Fattore [Ng]	11,94
Carico limite strato 2 (qb)	794,58 kN/m²
Carico limite strato 1 (qt)	178,71 kN/m²
Incremento carico limite strato 1	14,42 kN/m²
Coefficiente di punzonamento (ks)	0,0
Rapporto (q1/q2)	1,42

==========

Carico limite	178,71 kN/m²
Resistenza di progetto	77,7 kN/m²
Condizione di verifica [Ed<=Rd]	Verificata

==========

Sisma A

Autore: HANSEN (1970) (Condizione drenata)

==========

Fattore [Nq]	14,67
Fattore [Nc]	25,74
Fattore [Ng]	10,89
Fattore forma [Sc]	1,28
Fattore profondità [Dc]	1,0
Fattore inclinazione carichi [Ic]	1,0
Fattore inclinazione pendio [Gc]	1,0

Fattore inclinazione base [Bc]	1,0
Fattore forma [Sq]	1,26
Fattore profondità [Dq]	1,0
Fattore inclinazione carichi [Iq]	1,0
Fattore inclinazione pendio [Gq]	1,0
Fattore inclinazione base [Bq]	1,0
Fattore forma [Sg]	0,8
Fattore profondità [Dg]	1,0
Fattore inclinazione carichi [Ig]	1,0
Fattore inclinazione pendio [Gg]	1,0
Fattore inclinazione base [Bg]	1,0
Fattore correzione sismico inerziale [zq]	1,0
Fattore correzione sismico inerziale [zg]	1,0
Fattore correzione sismico inerziale [zc]	1,0

==========

Carico limite	217,2 kN/m²
Resistenza di progetto	120,67 kN/m²
Condizione di verifica [Ed<=Rd]	Verificata

==========

Autore: TERZAGHI (1955) (Condizione drenata)

==========

Fattore [Nq]	17,74
Fattore [Nc]	31,53
Fattore [Ng]	15,08
Fattore forma [Sc]	1,0
Fattore forma [Sg]	1,0
Fattore correzione sismico inerziale [zq]	1,0
Fattore correzione sismico inerziale [zg]	1,0
Fattore correzione sismico inerziale [zc]	1,0

==========

Carico limite	305,88 kN/m²
Resistenza di progetto	169,93 kN/m²
Condizione di verifica [Ed<=Rd]	Verificata

==========

Autore: MEYERHOF (1963) (Condizione drenata)

==========

Fattore [Nq]	14,67
Fattore [Nc]	25,74
Fattore [Ng]	11,13
Fattore forma [Sc]	1,27
Fattore profondità [Dc]	1,0
Fattore inclinazione carichi [Ic]	1,0
Fattore forma [Sq]	1,14
Fattore profondità [Dq]	1,0
Fattore inclinazione carichi [Iq]	1,0
Fattore forma [Sg]	1,14
Fattore profondità [Dg]	1,0
Fattore inclinazione carichi [Ig]	1,0
Fattore correzione sismico inerziale [zq]	1,0
Fattore correzione sismico inerziale [zg]	1,0

Fattore correzione sismico inerziale [zc]	1,0

==========

Carico limite	265,19 kN/m²
Resistenza di progetto	147,33 kN/m²

Condizione di verifica [Ed<=Rd]	Verificata

==========

Autore: VESIC (1975) (Condizione drenata)

==========

Fattore [Nq]	14,67
Fattore [Nc]	25,74
Fattore [Ng]	16,64
Fattore forma [Sc]	1,28
Fattore profondità [Dc]	1,0
Fattore inclinazione carichi [Ic]	1,0
Fattore inclinazione pendio [Gc]	1,0
Fattore inclinazione base [Bc]	1,0
Fattore forma [Sq]	1,26
Fattore profondità [Dq]	1,0
Fattore inclinazione carichi [Iq]	1,0
Fattore inclinazione pendio [Gq]	1,0
Fattore inclinazione base [Bq]	1,0
Fattore forma [Sg]	0,8
Fattore profondità [Dg]	1,0
Fattore inclinazione carichi [Ig]	1,0
Fattore inclinazione pendio [Gg]	1,0
Fattore inclinazione base [Bg]	1,0
Fattore correzione sismico inerziale [zq]	1,0
Fattore correzione sismico inerziale [zg]	1,0
Fattore correzione sismico inerziale [zc]	1,0

==========

Carico limite	284,5 kN/m²
Resistenza di progetto	158,05 kN/m²

Condizione di verifica [Ed<=Rd]	Verificata

==========

Autore: Brinch - Hansen 1970 (Condizione drenata)

==========

Fattore [Nq]	14,67
Fattore [Nc]	25,74
Fattore [Ng]	14,52
Fattore forma [Sc]	1,25
Fattore profondità [Dc]	1,0
Fattore inclinazione carichi [Ic]	1,0
Fattore inclinazione pendio [Gc]	1,0
Fattore inclinazione base [Bc]	1,0
Fattore forma [Sq]	1,23
Fattore profondità [Dq]	1,0
Fattore inclinazione carichi [Iq]	1,0
Fattore inclinazione pendio [Gq]	1,0
Fattore inclinazione base [Bq]	1,0
Fattore forma [Sg]	0,85

Fattore profondità [Dg]	1,0
Fattore inclinazione carichi [Ig]	1,0
Fattore inclinazione pendio [Gg]	1,0
Fattore inclinazione base [Bg]	1,0
Fattore correzione sismico inerziale [zq]	1,0
Fattore correzione sismico inerziale [zg]	1,0
Fattore correzione sismico inerziale [zc]	1,0

==========

Carico limite	267,9 kN/m²
Resistenza di progetto	148,83 kN/m²
Condizione di verifica [Ed<=Rd]	Verificata

==========

Autore: Meyerhof and Hanna (1978) (Condizione drenata)

==========

Strato 1 sopra, strato 2 sotto

Fattori di capacità portante strato 1	
Fattore [Nq]	1,0
Fattore [Nc]	5,14
Fattori di capacità portante strato 2	
Fattore [Nq]	37,75
Fattore [Nc]	50,59
Fattore [Ng]	11,94
Carico limite strato 2 (qb)	794,58 kN/m²
Carico limite strato 1 (qt)	178,71 kN/m²
Incremento carico limite strato 1	14,42 kN/m²
Coefficiente di punzonamento (ks)	0,0
Rapporto (q1/q2)	1,42

==========

Carico limite	178,71 kN/m²
Resistenza di progetto	99,28 kN/m²
Condizione di verifica [Ed<=Rd]	Verificata

==========

4.4.2.5. Verifica su penetrometrica P6

STRATIGRAFIA TERRENO

Spessore strato [m]	Peso unità di volume [kN/m³]	Peso unità di volume saturo [kN/m³]	Angolo di attrito [°]	Coesione [kN/m²]	Coesione non drenata [kN/m²]	Modulo Elastico [kN/m²]	Modulo Edometrico [kN/m²]	Poisson	Coeff. consolidaz. primaria [cmq/s]	Coeff. consolidazione secondaria	Descrizione
0,6	15,85	15,85	29,0	0,0	19,6133	5000,0	5000,0	0,0	0,0	0,0	
2,2	17,65	17,65	40,0	0,0	0,0	5000,0	5000,0	0,0	0,0	0,0	
0,6	16,18	16,18	32,0	0,0	0,0	5000,0	5000,0	0,0	0,0	0,0	
1,6	17,65	17,65	37,0	0,0	0,0	5000,0	5000,0	0,0	0,0	0,0	

2,0	17,65	17,65	33,0	0,0	0,0	5000,0	5000,0	0,0	0,0	0,0	

Carichi di progetto agenti sulla fondazione

Nr.	Nome combinazione	Pressione normale di progetto [kN/m²]	N [kN]	Mx [kN·m]	My [kN·m]	Hx [kN]	Hy [kN]	Tipo
1	A1+M1+R3	56,00	0,00	0,00	0,00	0,00	0,00	Progetto
2	Sisma A	39,00	0,00	0,00	0,00	0,00	0,00	Progetto
3	S.L.E.	45,50	0,00	0,00	0,00	0,00	0,00	Servizio

Sisma + Coeff. parziali parametri geotecnici terreno + Resistenze

Nr	Correzione Sismica	Tangente angolo di resistenza al taglio	Coesione efficace	Coesione non drenata	Peso Unità volume in fondazione	Peso unità volume copertura	Coef. Rid. Capacità portante verticale	Coef.Rid.Capacità portante orizzontale
1	No	1	1	1	1	1	2,3	1,1
2	No	1,25	1,25	1,4	1	1	1,8	1,1
3	No	1	1	1	1	1	1	1

CARICO LIMITE FONDAZIONE COMBINAZIONE...A1+M1+R3
Autore: Meyerhof and Hanna (1978)

Carico limite [Qult]	151,26 kN/m²
Resistenza di progetto[Rd]	65,76 kN/m²
Tensione [Ed]	56,0 kN/m²
Fattore sicurezza [Fs=Qult/Ed]	2,7
Condizione di verifica [Ed<=Rd]	Verificata

COEFFICIENTE DI SOTTOFONDAZIONE BOWLES (1982)
Costante di Winkler 47357,64 kN/m³

A1+M1+R3

Autore: HANSEN (1970) (Condizione drenata)
==========

Fattore [Nq]	47,11
Fattore [Nc]	59,63
Fattore [Ng]	53,49
Fattore forma [Sc]	1,39
Fattore profondità [Dc]	1,0
Fattore inclinazione carichi [Ic]	1,0
Fattore inclinazione pendio [Gc]	1,0
Fattore inclinazione base [Bc]	1,0
Fattore forma [Sq]	1,38
Fattore profondità [Dq]	1,0
Fattore inclinazione carichi [Iq]	1,0
Fattore inclinazione pendio [Gq]	1,0
Fattore inclinazione base [Bq]	1,0
Fattore forma [Sg]	0,8
Fattore profondità [Dg]	1,0
Fattore inclinazione carichi [Ig]	1,0
Fattore inclinazione pendio [Gg]	1,0
Fattore inclinazione base [Bg]	1,0

Fattore correzione sismico inerziale [zq]	1,0
Fattore correzione sismico inerziale [zg]	1,0
Fattore correzione sismico inerziale [zc]	1,0
Carico limite	939,97 kN/m²
Resistenza di progetto	408,68 kN/m²
Condizione di verifica [Ed<=Rd]	Verificata

Autore: TERZAGHI (1955) (Condizione drenata)

Fattore [Nq]	59,2
Fattore [Nc]	75,26
Fattore [Ng]	70,05
Fattore forma [Sc]	1,0
Fattore forma [Sg]	1,0
Fattore correzione sismico inerziale [zq]	1,0
Fattore correzione sismico inerziale [zg]	1,0
Fattore correzione sismico inerziale [zc]	1,0
Carico limite	1310,16 kN/m²
Resistenza di progetto	569,63 kN/m²
Condizione di verifica [Ed<=Rd]	Verificata

Autore: MEYERHOF (1963) (Condizione drenata)

Fattore [Nq]	47,11
Fattore [Nc]	59,63
Fattore [Ng]	60,75
Fattore forma [Sc]	1,41
Fattore profondità [Dc]	1,0
Fattore inclinazione carichi [Ic]	1,0
Fattore forma [Sq]	1,2
Fattore profondità [Dq]	1,0
Fattore inclinazione carichi [Iq]	1,0
Fattore forma [Sg]	1,2
Fattore profondità [Dg]	1,0
Fattore inclinazione carichi [Ig]	1,0
Fattore correzione sismico inerziale [zq]	1,0
Fattore correzione sismico inerziale [zg]	1,0
Fattore correzione sismico inerziale [zc]	1,0
Carico limite	1344,33 kN/m²
Resistenza di progetto	584,49 kN/m²
Condizione di verifica [Ed<=Rd]	Verificata

Autore: VESIC (1975) (Condizione drenata)

Fattore [Nq]	47,11

Fattore [Nc]	59,63
Fattore [Ng]	74,41
Fattore forma [Sc]	1,39
Fattore profondità [Dc]	1,0
Fattore inclinazione carichi [Ic]	1,0
Fattore inclinazione pendio [Gc]	1,0
Fattore inclinazione base [Bc]	1,0
Fattore forma [Sq]	1,38
Fattore profondità [Dq]	1,0
Fattore inclinazione carichi [Iq]	1,0
Fattore inclinazione pendio [Gq]	1,0
Fattore inclinazione base [Bq]	1,0
Fattore forma [Sg]	0,8
Fattore profondità [Dg]	1,0
Fattore inclinazione carichi [Ig]	1,0
Fattore inclinazione pendio [Gg]	1,0
Fattore inclinazione base [Bg]	1,0
Fattore correzione sismico inerziale [zq]	1,0
Fattore correzione sismico inerziale [zg]	1,0
Fattore correzione sismico inerziale [zc]	1,0

==========

Carico limite	943,46 kN/m²
Resistenza di progetto	410,2 kN/m²

Condizione di verifica [Ed<=Rd] Verificata

==========

Autore: Brinch - Hansen 1970 (Condizione drenata)

==========

Fattore [Nq]	47,11
Fattore [Nc]	59,63
Fattore [Ng]	71,31
Fattore forma [Sc]	1,31
Fattore profondità [Dc]	1,0
Fattore inclinazione carichi [Ic]	1,0
Fattore inclinazione pendio [Gc]	1,0
Fattore inclinazione base [Bc]	1,0
Fattore forma [Sq]	1,3
Fattore profondità [Dq]	1,0
Fattore inclinazione carichi [Iq]	1,0
Fattore inclinazione pendio [Gq]	1,0
Fattore inclinazione base [Bq]	1,0
Fattore forma [Sg]	0,85
Fattore profondità [Dg]	1,0
Fattore inclinazione carichi [Ig]	1,0
Fattore inclinazione pendio [Gg]	1,0
Fattore inclinazione base [Bg]	1,0
Fattore correzione sismico inerziale [zq]	1,0
Fattore correzione sismico inerziale [zg]	1,0
Fattore correzione sismico inerziale [zc]	1,0

==========

Carico limite	1183,94 kN/m²
Resistenza di progetto	514,76 kN/m²

Condizione di verifica [Ed<=Rd] Verificata
==========

Autore: Meyerhof and Hanna (1978) (Condizione drenata)
==========
Strato 1 sopra, strato 2 sotto

Fattori di capacità portante strato 1	
Fattore [Nq]	1,0
Fattore [Nc]	5,14
Fattori di capacità portante strato 2	
Fattore [Nq]	64,2
Fattore [Nc]	75,31
Fattore [Ng]	23,0
Carico limite strato 2 (qb)	1172,12 kN/m²
Carico limite strato 1 (qt)	151,26 kN/m²
Incremento carico limite strato 1	6,92 kN/m²
Coefficiente di punzonamento (ks)	0,0
Rapporto (q1/q2)	3,42

==========

Carico limite	151,26 kN/m²
Resistenza di progetto	65,76 kN/m²

Condizione di verifica [Ed<=Rd] Verificata
==========

Sisma A

Autore: HANSEN (1970) (Condizione drenata)
==========

Fattore [Nq]	22,48
Fattore [Nc]	34,73
Fattore [Ng]	19,94
Fattore forma [Sc]	1,32
Fattore profondità [Dc]	1,0
Fattore inclinazione carichi [Ic]	1,0
Fattore inclinazione pendio [Gc]	1,0
Fattore inclinazione base [Bc]	1,0
Fattore forma [Sq]	1,3
Fattore profondità [Dq]	1,0
Fattore inclinazione carichi [Iq]	1,0
Fattore inclinazione pendio [Gq]	1,0
Fattore inclinazione base [Bq]	1,0
Fattore forma [Sg]	0,8
Fattore profondità [Dg]	1,0
Fattore inclinazione carichi [Ig]	1,0
Fattore inclinazione pendio [Gg]	1,0
Fattore inclinazione base [Bg]	1,0
Fattore correzione sismico inerziale [zq]	1,0
Fattore correzione sismico inerziale [zg]	1,0
Fattore correzione sismico inerziale [zc]	1,0

Carico limite	374,54 kN/m²
Resistenza di progetto	208,08 kN/m²
Condizione di verifica [Ed<=Rd]	Verificata

Autore: TERZAGHI (1955) (Condizione drenata)

Fattore [Nq]	27,64
Fattore [Nc]	43,06
Fattore [Ng]	26,4
Fattore forma [Sc]	1,0
Fattore forma [Sg]	1,0
Fattore correzione sismico inerziale [zq]	1,0
Fattore correzione sismico inerziale [zg]	1,0
Fattore correzione sismico inerziale [zc]	1,0
Carico limite	519,03 kN/m²
Resistenza di progetto	288,35 kN/m²
Condizione di verifica [Ed<=Rd]	Verificata

Autore: MEYERHOF (1963) (Condizione drenata)

Fattore [Nq]	22,48
Fattore [Nc]	34,73
Fattore [Ng]	21,07
Fattore forma [Sc]	1,32
Fattore profondità [Dc]	1,0
Fattore inclinazione carichi [Ic]	1,0
Fattore forma [Sq]	1,16
Fattore profondità [Dq]	1,0
Fattore inclinazione carichi [Iq]	1,0
Fattore forma [Sg]	1,16
Fattore profondità [Dg]	1,0
Fattore inclinazione carichi [Ig]	1,0
Fattore correzione sismico inerziale [zq]	1,0
Fattore correzione sismico inerziale [zg]	1,0
Fattore correzione sismico inerziale [zc]	1,0
Carico limite	482,31 kN/m²
Resistenza di progetto	267,95 kN/m²
Condizione di verifica [Ed<=Rd]	Verificata

Autore: VESIC (1975) (Condizione drenata)

Fattore [Nq]	22,48
Fattore [Nc]	34,73
Fattore [Ng]	29,06
Fattore forma [Sc]	1,32

Fattore profondità [Dc]	1,0
Fattore inclinazione carichi [Ic]	1,0
Fattore inclinazione pendio [Gc]	1,0
Fattore inclinazione base [Bc]	1,0
Fattore forma [Sq]	1,3
Fattore profondità [Dq]	1,0
Fattore inclinazione carichi [Iq]	1,0
Fattore inclinazione pendio [Gq]	1,0
Fattore inclinazione base [Bq]	1,0
Fattore forma [Sg]	0,8
Fattore profondità [Dg]	1,0
Fattore inclinazione carichi [Ig]	1,0
Fattore inclinazione pendio [Gg]	1,0
Fattore inclinazione base [Bg]	1,0
Fattore correzione sismico inerziale [zq]	1,0
Fattore correzione sismico inerziale [zg]	1,0
Fattore correzione sismico inerziale [zc]	1,0

==========

Carico limite	482,06 kN/m²
Resistenza di progetto	267,81 kN/m²

Condizione di verifica [Ed<=Rd] Verificata

==========

Autore: Brinch - Hansen 1970 (Condizione drenata)

==========

Fattore [Nq]	22,48
Fattore [Nc]	34,73
Fattore [Ng]	26,58
Fattore forma [Sc]	1,27
Fattore profondità [Dc]	1,0
Fattore inclinazione carichi [Ic]	1,0
Fattore inclinazione pendio [Gc]	1,0
Fattore inclinazione base [Bc]	1,0
Fattore forma [Sq]	1,26
Fattore profondità [Dq]	1,0
Fattore inclinazione carichi [Iq]	1,0
Fattore inclinazione pendio [Gq]	1,0
Fattore inclinazione base [Bq]	1,0
Fattore forma [Sg]	0,85
Fattore profondità [Dg]	1,0
Fattore inclinazione carichi [Ig]	1,0
Fattore inclinazione pendio [Gg]	1,0
Fattore inclinazione base [Bg]	1,0
Fattore correzione sismico inerziale [zq]	1,0
Fattore correzione sismico inerziale [zg]	1,0
Fattore correzione sismico inerziale [zc]	1,0

==========

Carico limite	467,25 kN/m²
Resistenza di progetto	259,58 kN/m²

Condizione di verifica [Ed<=Rd] Verificata

==========

Autore: Meyerhof and Hanna (1978) (Condizione drenata)
==========
Strato 1 sopra, strato 2 sotto

Fattori di capacità portante strato 1
Fattore [Nq] 1,0
Fattore [Nc] 5,14

Fattori di capacità portante strato 2
Fattore [Nq] 64,2
Fattore [Nc] 75,31
Fattore [Ng] 23,0

Carico limite strato 2 (qb) 1172,12 kN/m²
Carico limite strato 1 (qt) 151,26 kN/m²

Incremento carico limite strato 1 6,92 kN/m²
Coefficiente di punzonamento (ks) 0,0
Rapporto (q1/q2) 3,42
==========
Carico limite 151,26 kN/m²
Resistenza di progetto 84,03 kN/m²

Condizione di verifica [Ed<=Rd] Verificata
==========

4.4.2.6. Verifica su penetrometrica P7

STRATIGRAFIA TERRENO

Spessore strato [m]	Peso unità di volume [kN/m³]	Peso unità di volume saturo [kN/m³]	Angolo di attrito [°]	Coesione [kN/m²]	Coesione non drenata [kN/m²]	Modulo Elastico [kN/m²]	Modulo Edometrico [kN/m²]	Poisson	Coeff. consolidaz. primaria [cmq/s]	Coeff. consolidazione secondaria	Descrizione
0,6	17,94	17,94	27,0	0,0	81,6894	5000,0	5000,0	0,0	0,0	0,0	
3,2	17,65	17,65	36,0	0,0	0,0	5000,0	5000,0	0,0	0,0	0,0	
0,6	16,18	16,18	30,0	0,0	0,0	5000,0	5000,0	0,0	0,0	0,0	
1,6	17,65	17,65	36,0	0,0	0,0	5000,0	5000,0	0,0	0,0	0,0	

Carichi di progetto agenti sulla fondazione

Nr.	Nome combinazione	Pressione normale di progetto [kN/m²]	N [kN]	Mx [kN·m]	My [kN·m]	Hx [kN]	Hy [kN]	Tipo
1	A1+M1+R3	56,00	0,00	0,00	0,00	0,00	0,00	Progetto
2	Sisma A	39,00	0,00	0,00	0,00	0,00	0,00	Progetto
3	S.L.E.	45,50	0,00	0,00	0,00	0,00	0,00	Servizio

Sisma + Coeff. parziali parametri geotecnici terreno + Resistenze

Nr	Correzione Sismica	Tangente angolo di resistenza al	Coesione efficace	Coesione non drenata	Peso Unità volume in fondazione	Peso unità volume copertura	Coef. Rid. Capacità portante	Coef.Rid.Capacità por-

		taglio					verticale	tante oriz-zontale
1	No	1	1	1	1	1	2,3	1,1
2	No	1,25	1,25	1,4	1	1	1,8	1,1
3	No	1	1	1	1	1	1	1

CARICO LIMITE FONDAZIONE COMBINAZIONE...Sisma A
Autore: HANSEN (1970)

Carico limite [Qult]	245,86 kN/m²
Resistenza di progetto[Rd]	136,59 kN/m²
Tensione [Ed]	39,0 kN/m²
Fattore sicurezza [Fs=Qult/Ed]	6,3
Condizione di verifica [Ed<=Rd]	Verificata

COEFFICIENTE DI SOTTOFONDAZIONE BOWLES (1982)
Costante di Winkler 9834,42 kN/m³

A1+M1+R3

Autore: HANSEN (1970) (Condizione drenata)
==========

Fattore [Nq]	29,63
Fattore [Nc]	42,36
Fattore [Ng]	29,03
Fattore forma [Sc]	1,34
Fattore profondità [Dc]	1,0
Fattore inclinazione carichi [Ic]	1,0
Fattore inclinazione pendio [Gc]	1,0
Fattore inclinazione base [Bc]	1,0
Fattore forma [Sq]	1,33
Fattore profondità [Dq]	1,0
Fattore inclinazione carichi [Iq]	1,0
Fattore inclinazione pendio [Gq]	1,0
Fattore inclinazione base [Bq]	1,0
Fattore forma [Sg]	0,8
Fattore profondità [Dg]	1,0
Fattore inclinazione carichi [Ig]	1,0
Fattore inclinazione pendio [Gg]	1,0
Fattore inclinazione base [Bg]	1,0
Fattore correzione sismico inerziale [zq]	1,0
Fattore correzione sismico inerziale [zg]	1,0
Fattore correzione sismico inerziale [zc]	1,0

==========

Carico limite	563,49 kN/m²
Resistenza di progetto	244,99 kN/m²
Condizione di verifica [Ed<=Rd]	Verificata

==========

Autore: TERZAGHI (1955) (Condizione drenata)
==========

Fattore [Nq]	36,75
Fattore [Nc]	52,9

Fattore [Ng]	37,23
Fattore forma [Sc]	1,0
Fattore forma [Sg]	1,0
Fattore correzione sismico inerziale [zq]	1,0
Fattore correzione sismico inerziale [zg]	1,0
Fattore correzione sismico inerziale [zc]	1,0

==========

Carico limite	758,39 kN/m²
Resistenza di progetto	329,74 kN/m²

Condizione di verifica [Ed<=Rd] Verificata

==========

Autore: MEYERHOF (1963) (Condizione drenata)

==========

Fattore [Nq]	29,63
Fattore [Nc]	42,36
Fattore [Ng]	31,44
Fattore forma [Sc]	1,35
Fattore profondità [Dc]	1,0
Fattore inclinazione carichi [Ic]	1,0
Fattore forma [Sq]	1,17
Fattore profondità [Dq]	1,0
Fattore inclinazione carichi [Iq]	1,0
Fattore forma [Sg]	1,17
Fattore profondità [Dg]	1,0
Fattore inclinazione carichi [Ig]	1,0
Fattore correzione sismico inerziale [zq]	1,0
Fattore correzione sismico inerziale [zg]	1,0
Fattore correzione sismico inerziale [zc]	1,0

==========

Carico limite	743,36 kN/m²
Resistenza di progetto	323,2 kN/m²

Condizione di verifica [Ed<=Rd] Verificata

==========

Autore: VESIC (1975) (Condizione drenata)

==========

Fattore [Nq]	29,63
Fattore [Nc]	42,36
Fattore [Ng]	41,41
Fattore forma [Sc]	1,34
Fattore profondità [Dc]	1,0
Fattore inclinazione carichi [Ic]	1,0
Fattore inclinazione pendio [Gc]	1,0
Fattore inclinazione base [Bc]	1,0
Fattore forma [Sq]	1,33
Fattore profondità [Dq]	1,0
Fattore inclinazione carichi [Iq]	1,0
Fattore inclinazione pendio [Gq]	1,0
Fattore inclinazione base [Bq]	1,0
Fattore forma [Sg]	0,8
Fattore profondità [Dg]	1,0

Fattore inclinazione carichi [Ig]	1,0
Fattore inclinazione pendio [Gg]	1,0
Fattore inclinazione base [Bg]	1,0
Fattore correzione sismico inerziale [zq]	1,0
Fattore correzione sismico inerziale [zg]	1,0
Fattore correzione sismico inerziale [zc]	1,0

==========

Carico limite	713,13 kN/m²
Resistenza di progetto	310,06 kN/m²

Condizione di verifica [Ed<=Rd] Verificata

==========

Autore: Brinch - Hansen 1970 (Condizione drenata)

==========

Fattore [Nq]	29,63
Fattore [Nc]	42,36
Fattore [Ng]	38,7
Fattore forma [Sc]	1,29
Fattore profondità [Dc]	1,0
Fattore inclinazione carichi [Ic]	1,0
Fattore inclinazione pendio [Gc]	1,0
Fattore inclinazione base [Bc]	1,0
Fattore forma [Sq]	1,28
Fattore profondità [Dq]	1,0
Fattore inclinazione carichi [Iq]	1,0
Fattore inclinazione pendio [Gq]	1,0
Fattore inclinazione base [Bq]	1,0
Fattore forma [Sg]	0,85
Fattore profondità [Dg]	1,0
Fattore inclinazione carichi [Ig]	1,0
Fattore inclinazione pendio [Gg]	1,0
Fattore inclinazione base [Bg]	1,0
Fattore correzione sismico inerziale [zq]	1,0
Fattore correzione sismico inerziale [zg]	1,0
Fattore correzione sismico inerziale [zc]	1,0

==========

Carico limite	700,06 kN/m²
Resistenza di progetto	304,37 kN/m²

Condizione di verifica [Ed<=Rd] Verificata

==========

Autore: Meyerhof and Hanna (1978) (Condizione drenata)

==========

Strato 1 sopra, strato 2 sotto

Fattori di capacità portante strato 1

Fattore [Nq]	1,0
Fattore [Nc]	5,14

Fattori di capacità portante strato 2

Fattore [Nq]	37,75
Fattore [Nc]	50,59

Fattore [Ng]	11,94
Carico limite strato 2 (qb)	696,65 kN/m²
Carico limite strato 1 (qt)	584,65 kN/m²
Incremento carico limite strato 1	28,83 kN/m²
Coefficiente di punzonamento (ks)	0,0
Rapporto (q1/q2)	0,43
Carico limite	584,65 kN/m²
Resistenza di progetto	254,2 kN/m²
Condizione di verifica [Ed<=Rd]	Verificata

Sisma A

Autore: HANSEN (1970) (Condizione drenata)

Fattore [Nq]	15,38
Fattore [Nc]	26,6
Fattore [Ng]	11,67
Fattore forma [Sc]	1,28
Fattore profondità [Dc]	1,0
Fattore inclinazione carichi [Ic]	1,0
Fattore inclinazione pendio [Gc]	1,0
Fattore inclinazione base [Bc]	1,0
Fattore forma [Sq]	1,27
Fattore profondità [Dq]	1,0
Fattore inclinazione carichi [Iq]	1,0
Fattore inclinazione pendio [Gq]	1,0
Fattore inclinazione base [Bq]	1,0
Fattore forma [Sg]	0,8
Fattore profondità [Dg]	1,0
Fattore inclinazione carichi [Ig]	1,0
Fattore inclinazione pendio [Gg]	1,0
Fattore inclinazione base [Bg]	1,0
Fattore correzione sismico inerziale [zq]	1,0
Fattore correzione sismico inerziale [zg]	1,0
Fattore correzione sismico inerziale [zc]	1,0
Carico limite	245,86 kN/m²
Resistenza di progetto	136,59 kN/m²
Condizione di verifica [Ed<=Rd]	Verificata

Autore: TERZAGHI (1955) (Condizione drenata)

Fattore [Nq]	18,64
Fattore [Nc]	32,63
Fattore [Ng]	16,0
Fattore forma [Sc]	1,0
Fattore forma [Sg]	1,0

Fattore correzione sismico inerziale [zq]	1,0
Fattore correzione sismico inerziale [zg]	1,0
Fattore correzione sismico inerziale [zc]	1,0

==========

Carico limite	341,18 kN/m²
Resistenza di progetto	189,55 kN/m²
Condizione di verifica [Ed<=Rd]	Verificata

==========

Autore: MEYERHOF (1963) (Condizione drenata)

==========

Fattore [Nq]	15,38
Fattore [Nc]	26,6
Fattore [Ng]	11,97
Fattore forma [Sc]	1,28
Fattore profondità [Dc]	1,0
Fattore inclinazione carichi [Ic]	1,0
Fattore forma [Sq]	1,14
Fattore profondità [Dq]	1,0
Fattore inclinazione carichi [Iq]	1,0
Fattore forma [Sg]	1,14
Fattore profondità [Dg]	1,0
Fattore inclinazione carichi [Ig]	1,0
Fattore correzione sismico inerziale [zq]	1,0
Fattore correzione sismico inerziale [zg]	1,0
Fattore correzione sismico inerziale [zc]	1,0

==========

Carico limite	299,42 kN/m²
Resistenza di progetto	166,34 kN/m²
Condizione di verifica [Ed<=Rd]	Verificata

==========

Autore: VESIC (1975) (Condizione drenata)

==========

Fattore [Nq]	15,38
Fattore [Nc]	26,6
Fattore [Ng]	17,72
Fattore forma [Sc]	1,28
Fattore profondità [Dc]	1,0
Fattore inclinazione carichi [Ic]	1,0
Fattore inclinazione pendio [Gc]	1,0
Fattore inclinazione base [Bc]	1,0
Fattore forma [Sq]	1,27
Fattore profondità [Dq]	1,0
Fattore inclinazione carichi [Iq]	1,0
Fattore inclinazione pendio [Gq]	1,0
Fattore inclinazione base [Bq]	1,0
Fattore forma [Sg]	0,8
Fattore profondità [Dg]	1,0
Fattore inclinazione carichi [Ig]	1,0
Fattore inclinazione pendio [Gg]	1,0
Fattore inclinazione base [Bg]	1,0

Fattore correzione sismico inerziale [zq]	1,0
Fattore correzione sismico inerziale [zg]	1,0
Fattore correzione sismico inerziale [zc]	1,0

==========

Carico limite	319,01 kN/m²
Resistenza di progetto	177,23 kN/m²

Condizione di verifica [Ed<=Rd] Verificata

==========

Autore: Brinch - Hansen 1970 (Condizione drenata)

==========

Fattore [Nq]	15,38
Fattore [Nc]	26,6
Fattore [Ng]	15,55
Fattore forma [Sc]	1,25
Fattore profondità [Dc]	1,0
Fattore inclinazione carichi [Ic]	1,0
Fattore inclinazione pendio [Gc]	1,0
Fattore inclinazione base [Bc]	1,0
Fattore forma [Sq]	1,23
Fattore profondità [Dq]	1,0
Fattore inclinazione carichi [Iq]	1,0
Fattore inclinazione pendio [Gq]	1,0
Fattore inclinazione base [Bq]	1,0
Fattore forma [Sg]	0,85
Fattore profondità [Dg]	1,0
Fattore inclinazione carichi [Ig]	1,0
Fattore inclinazione pendio [Gg]	1,0
Fattore inclinazione base [Bg]	1,0
Fattore correzione sismico inerziale [zq]	1,0
Fattore correzione sismico inerziale [zg]	1,0
Fattore correzione sismico inerziale [zc]	1,0

==========

Carico limite	301,75 kN/m²
Resistenza di progetto	167,64 kN/m²

Condizione di verifica [Ed<=Rd] Verificata

==========

Autore: Meyerhof and Hanna (1978) (Condizione drenata)

==========

Strato 1 sopra, strato 2 sotto

Fattori di capacità portante strato 1

Fattore [Nq]	1,0
Fattore [Nc]	5,14

Fattori di capacità portante strato 2

Fattore [Nq]	37,75
Fattore [Nc]	50,59
Fattore [Ng]	11,94

Carico limite strato 2 (qb) 696,65 kN/m²

Carico limite strato 1 (qt) 584,65 kN/m²

Incremento carico limite strato 1 28,83 kN/m²
Coefficiente di punzonamento (ks) 0,0
Rapporto (q1/q2) 0,43
==========
Carico limite 584,65 kN/m²
Resistenza di progetto 324,81 kN/m²

Condizione di verifica [Ed<=Rd] Verificata
==========

4.4.2.7. Verifica su penetrometrica P8

STRATIGRAFIA TERRENO

Spessore strato [m]	Peso unità di volume [kN/m³]	Peso unità di volume saturo [kN/m³]	Angolo di attrito [°]	Coesione [kN/m²]	Coesione non drenata [kN/m²]	Modulo Elastico [kN/m²]	Modulo Edometrico [kN/m²]	Poisson	Coeff. consolidaz. primaria [cmq/s]	Coeff. consolidazione secondaria	Descrizione
0,6	16,99	16,99	30,0	0,0	42,46	5000,0	5000,0	0,0	0,0	0,0	
1,8	18,63	18,63	42,0	0,0	0,0	5000,0	5000,0	0,0	0,0	0,0	
2,6	17,65	17,65	36,0	0,0	0,0	5000,0	5000,0	0,0	0,0	0,0	
2,2	17,65	17,65	34,0	0,0	0,0	5000,0	5000,0	0,0	0,0	0,0	

Carichi di progetto agenti sulla fondazione

Nr.	Nome combinazione	Pressione normale di progetto [kN/m²]	N [kN]	Mx [kN·m]	My [kN·m]	Hx [kN]	Hy [kN]	Tipo
1	A1+M1+R3	56,00	0,00	0,00	0,00	0,00	0,00	Progetto
2	Sisma A	39,00	0,00	0,00	0,00	0,00	0,00	Progetto
3	S.L.E.	45,50	0,00	0,00	0,00	0,00	0,00	Servizio

Sisma + Coeff. parziali parametri geotecnici terreno + Resistenze

Nr	Correzione Sismica	Tangente angolo di resistenza al taglio	Coesione efficace	Coesione non drenata	Peso Unità volume in fondazione	Peso unità volume copertura	Coef. Rid. Capacità portante verticale	Coef.Rid.Capacità portante orizzontale
1	No	1	1	1	1	1	2,3	1,1
2	No	1,25	1,25	1,4	1	1	1,8	1,1
3	No	1	1	1	1	1	1	1

CARICO LIMITE FONDAZIONE COMBINAZIONE...A1+M1+R3
Autore: Meyerhof and Hanna (1978)

Carico limite [Qult] 331,84 kN/m²
Resistenza di progetto[Rd] 144,28 kN/m²
Tensione [Ed] 56,0 kN/m²
Fattore sicurezza [Fs=Qult/Ed] 5,93
Condizione di verifica [Ed<=Rd] Verificata

COEFFICIENTE DI SOTTOFONDAZIONE BOWLES (1982)
Costante di Winkler 68150,52 kN/m³

A1+M1+R3

Autore: HANSEN (1970) (Condizione drenata)

Fattore [Nq]	60,36
Fattore [Nc]	71,87
Fattore [Ng]	73,55
Fattore forma [Sc]	1,41
Fattore profondità [Dc]	1,0
Fattore inclinazione carichi [Ic]	1,0
Fattore inclinazione pendio [Gc]	1,0
Fattore inclinazione base [Bc]	1,0
Fattore forma [Sq]	1,41
Fattore profondità [Dq]	1,0
Fattore inclinazione carichi [Iq]	1,0
Fattore inclinazione pendio [Gq]	1,0
Fattore inclinazione base [Bq]	1,0
Fattore forma [Sg]	0,8
Fattore profondità [Dg]	1,0
Fattore inclinazione carichi [Ig]	1,0
Fattore inclinazione pendio [Gg]	1,0
Fattore inclinazione base [Bg]	1,0
Fattore correzione sismico inerziale [zq]	1,0
Fattore correzione sismico inerziale [zg]	1,0
Fattore correzione sismico inerziale [zc]	1,0
Carico limite	1351,19 kN/m²
Resistenza di progetto	587,47 kN/m²
Condizione di verifica [Ed<=Rd]	Verificata

Autore: TERZAGHI (1955) (Condizione drenata)

Fattore [Nq]	76,31
Fattore [Nc]	91,18
Fattore [Ng]	93,89
Fattore forma [Sc]	1,0
Fattore forma [Sg]	1,0
Fattore correzione sismico inerziale [zq]	1,0
Fattore correzione sismico inerziale [zg]	1,0
Fattore correzione sismico inerziale [zc]	1,0
Carico limite	1849,06 kN/m²
Resistenza di progetto	803,94 kN/m²
Condizione di verifica [Ed<=Rd]	Verificata

Autore: MEYERHOF (1963) (Condizione drenata)

Fattore [Nq]	60,36
Fattore [Nc]	71,87
Fattore [Ng]	85,98
Fattore forma [Sc]	1,44
Fattore profondità [Dc]	1,0
Fattore inclinazione carichi [Ic]	1,0
Fattore forma [Sq]	1,22
Fattore profondità [Dq]	1,0
Fattore inclinazione carichi [Iq]	1,0
Fattore forma [Sg]	1,22
Fattore profondità [Dg]	1,0
Fattore inclinazione carichi [Ig]	1,0
Fattore correzione sismico inerziale [zq]	1,0
Fattore correzione sismico inerziale [zg]	1,0
Fattore correzione sismico inerziale [zc]	1,0

==========

Carico limite	2009,98 kN/m²
Resistenza di progetto	873,9 kN/m²

Condizione di verifica [Ed<=Rd] Verificata

==========

Autore: VESIC (1975) (Condizione drenata)

==========

Fattore [Nq]	60,36
Fattore [Nc]	71,87
Fattore [Ng]	101,36
Fattore forma [Sc]	1,41
Fattore profondità [Dc]	1,0
Fattore inclinazione carichi [Ic]	1,0
Fattore inclinazione pendio [Gc]	1,0
Fattore inclinazione base [Bc]	1,0
Fattore forma [Sq]	1,41
Fattore profondità [Dq]	1,0
Fattore inclinazione carichi [Iq]	1,0
Fattore inclinazione pendio [Gq]	1,0
Fattore inclinazione base [Bq]	1,0
Fattore forma [Sg]	0,8
Fattore profondità [Dg]	1,0
Fattore inclinazione carichi [Ig]	1,0
Fattore inclinazione pendio [Gg]	1,0
Fattore inclinazione base [Bg]	1,0
Fattore correzione sismico inerziale [zq]	1,0
Fattore correzione sismico inerziale [zg]	1,0
Fattore correzione sismico inerziale [zc]	1,0

==========

Carico limite	1096,17 kN/m²
Resistenza di progetto	476,6 kN/m²

Condizione di verifica [Ed<=Rd] Verificata

==========

Autore: Brinch - Hansen 1970 (Condizione drenata)

==========

Fattore [Nq]	60,36
Fattore [Nc]	71,87
Fattore [Ng]	98,06
Fattore forma [Sc]	1,32
Fattore profondità [Dc]	1,0
Fattore inclinazione carichi [Ic]	1,0
Fattore inclinazione pendio [Gc]	1,0
Fattore inclinazione base [Bc]	1,0
Fattore forma [Sq]	1,31
Fattore profondità [Dq]	1,0
Fattore inclinazione carichi [Iq]	1,0
Fattore inclinazione pendio [Gq]	1,0
Fattore inclinazione base [Bq]	1,0
Fattore forma [Sg]	0,85
Fattore profondità [Dg]	1,0
Fattore inclinazione carichi [Ig]	1,0
Fattore inclinazione pendio [Gg]	1,0
Fattore inclinazione base [Bg]	1,0
Fattore correzione sismico inerziale [zq]	1,0
Fattore correzione sismico inerziale [zg]	1,0
Fattore correzione sismico inerziale [zc]	1,0

==========

Carico limite	1703,76 kN/m²
Resistenza di progetto	740,77 kN/m²
Condizione di verifica [Ed<=Rd]	Verificata

==========

Autore: Meyerhof and Hanna (1978) (Condizione drenata)

==========

Strato 1 sopra, strato 2 sotto

Fattori di capacità portante strato 1

Fattore [Nq]	1,0
Fattore [Nc]	5,14

Fattori di capacità portante strato 2

Fattore [Nq]	85,37
Fattore [Nc]	93,71
Fattore [Ng]	32,39
Carico limite strato 2 (qb)	1727,01 kN/m²
Carico limite strato 1 (qt)	331,84 kN/m²
Incremento carico limite strato 1	14,99 kN/m²
Coefficiente di punzonamento (ks)	0,0
Rapporto (q1/q2)	2,35

==========

Carico limite	331,84 kN/m²
Resistenza di progetto	144,28 kN/m²
Condizione di verifica [Ed<=Rd]	Verificata

==========

Sisma A

Autore: HANSEN (1970) (Condizione drenata)

Fattore [Nq]	27,56
Fattore [Nc]	40,19
Fattore [Ng]	26,32
Fattore forma [Sc]	1,34
Fattore profondità [Dc]	1,0
Fattore inclinazione carichi [Ic]	1,0
Fattore inclinazione pendio [Gc]	1,0
Fattore inclinazione base [Bc]	1,0
Fattore forma [Sq]	1,33
Fattore profondità [Dq]	1,0
Fattore inclinazione carichi [Iq]	1,0
Fattore inclinazione pendio [Gq]	1,0
Fattore inclinazione base [Bq]	1,0
Fattore forma [Sg]	0,8
Fattore profondità [Dg]	1,0
Fattore inclinazione carichi [Ig]	1,0
Fattore inclinazione pendio [Gg]	1,0
Fattore inclinazione base [Bg]	1,0
Fattore correzione sismico inerziale [zq]	1,0
Fattore correzione sismico inerziale [zg]	1,0
Fattore correzione sismico inerziale [zc]	1,0
Carico limite	514,85 kN/m²
Resistenza di progetto	286,03 kN/m²
Condizione di verifica [Ed<=Rd]	Verificata

Autore: TERZAGHI (1955) (Condizione drenata)

Fattore [Nq]	34,1
Fattore [Nc]	50,09
Fattore [Ng]	34,19
Fattore forma [Sc]	1,0
Fattore forma [Sg]	1,0
Fattore correzione sismico inerziale [zq]	1,0
Fattore correzione sismico inerziale [zg]	1,0
Fattore correzione sismico inerziale [zc]	1,0
Carico limite	705,48 kN/m²
Resistenza di progetto	391,93 kN/m²
Condizione di verifica [Ed<=Rd]	Verificata

Autore: MEYERHOF (1963) (Condizione drenata)

Fattore [Nq]	27,56
Fattore [Nc]	40,19
Fattore [Ng]	28,32

Fattore forma [Sc]	1,34
Fattore profondità [Dc]	1,0
Fattore inclinazione carichi [Ic]	1,0
Fattore forma [Sq]	1,17
Fattore profondità [Dq]	1,0
Fattore inclinazione carichi [Iq]	1,0
Fattore forma [Sg]	1,17
Fattore profondità [Dg]	1,0
Fattore inclinazione carichi [Ig]	1,0
Fattore correzione sismico inerziale [zq]	1,0
Fattore correzione sismico inerziale [zg]	1,0
Fattore correzione sismico inerziale [zc]	1,0

==========

Carico limite	679,77 kN/m²
Resistenza di progetto	377,65 kN/m²

Condizione di verifica [Ed<=Rd] Verificata

==========

Autore: VESIC (1975) (Condizione drenata)

==========

Fattore [Nq]	27,56
Fattore [Nc]	40,19
Fattore [Ng]	37,74
Fattore forma [Sc]	1,34
Fattore profondità [Dc]	1,0
Fattore inclinazione carichi [Ic]	1,0
Fattore inclinazione pendio [Gc]	1,0
Fattore inclinazione base [Bc]	1,0
Fattore forma [Sq]	1,33
Fattore profondità [Dq]	1,0
Fattore inclinazione carichi [Iq]	1,0
Fattore inclinazione pendio [Gq]	1,0
Fattore inclinazione base [Bq]	1,0
Fattore forma [Sg]	0,8
Fattore profondità [Dg]	1,0
Fattore inclinazione carichi [Ig]	1,0
Fattore inclinazione pendio [Gg]	1,0
Fattore inclinazione base [Bg]	1,0
Fattore correzione sismico inerziale [zq]	1,0
Fattore correzione sismico inerziale [zg]	1,0
Fattore correzione sismico inerziale [zc]	1,0

==========

Carico limite	657,4 kN/m²
Resistenza di progetto	365,22 kN/m²

Condizione di verifica [Ed<=Rd] Verificata

==========

Autore: Brinch - Hansen 1970 (Condizione drenata)

==========

Fattore [Nq]	27,56
Fattore [Nc]	40,19
Fattore [Ng]	35,1

Fattore forma [Sc]	1,28
Fattore profondità [Dc]	1,0
Fattore inclinazione carichi [Ic]	1,0
Fattore inclinazione pendio [Gc]	1,0
Fattore inclinazione base [Bc]	1,0
Fattore forma [Sq]	1,27
Fattore profondità [Dq]	1,0
Fattore inclinazione carichi [Iq]	1,0
Fattore inclinazione pendio [Gq]	1,0
Fattore inclinazione base [Bq]	1,0
Fattore forma [Sg]	0,85
Fattore profondità [Dg]	1,0
Fattore inclinazione carichi [Ig]	1,0
Fattore inclinazione pendio [Gg]	1,0
Fattore inclinazione base [Bg]	1,0
Fattore correzione sismico inerziale [zq]	1,0
Fattore correzione sismico inerziale [zg]	1,0
Fattore correzione sismico inerziale [zc]	1,0

==========

Carico limite	643,72 kN/m²
Resistenza di progetto	357,62 kN/m²

Condizione di verifica [Ed<=Rd] Verificata

==========

Autore: Meyerhof and Hanna (1978) (Condizione drenata)

==========

Strato 1 sopra, strato 2 sotto

Fattori di capacità portante strato 1

Fattore [Nq]	1,0
Fattore [Nc]	5,14

Fattori di capacità portante strato 2

Fattore [Nq]	85,37
Fattore [Nc]	93,71
Fattore [Ng]	32,39

Carico limite strato 2 (qb)	1727,01 kN/m²
Carico limite strato 1 (qt)	331,84 kN/m²
Incremento carico limite strato 1	14,99 kN/m²
Coefficiente di punzonamento (ks)	0,0
Rapporto (q1/q2)	2,35

==========

Carico limite	331,84 kN/m²
Resistenza di progetto	184,36 kN/m²

Condizione di verifica [Ed<=Rd] Verificata

==========

4.4.2.8. Verifica su penetrometrica P9

STRATIGRAFIA TERRENO

Spessore strato [m]	Peso unità di volume [kN/m³]	Peso unità di volume saturo [kN/m³]	Angolo di attrito [°]	Coesione [kN/m²]	Coesione non drenata [kN/m²]	Modulo Elastico [kN/m²]	Modulo Edometrico [kN/m²]	Poisson	Coeff. consolidaz. primaria [cmq/s]	Coeff. consolidazione secondaria	Descrizione
0,6	17,29	17,29	30,0	0,0	52,2694	5000,0	5000,0	0,0	0,0	0,0	
3,6	17,65	17,65	35,0	0,0	0,0	5000,0	5000,0	0,0	0,0	0,0	
2,6	17,65	17,65	36,0	0,0	0,0	5000,0	5000,0	0,0	0,0	0,0	

Carichi di progetto agenti sulla fondazione

Nr.	Nome combinazione	Pressione normale di progetto [kN/m²]	N [kN]	Mx [kN·m]	My [kN·m]	Hx [kN]	Hy [kN]	Tipo
1	A1+M1+R3	56,00	0,00	0,00	0,00	0,00	0,00	Progetto
2	Sisma A	39,00	0,00	0,00	0,00	0,00	0,00	Progetto
3	S.L.E.	45,50	0,00	0,00	0,00	0,00	0,00	Servizio

Sisma + Coeff. parziali parametri geotecnici terreno + Resistenze

Nr	Correzione Sismica	Tangente angolo di resistenza al taglio	Coesione efficace	Coesione non drenata	Peso Unità volume in fondazione	Peso unità volume copertura	Coef. Rid. Capacità portante verticale	Coef.Rid.Capacità portante orizzontale
1	No	1	1	1	1	1	2,3	1,1
2	No	1,25	1,25	1,4	1	1	1,8	1,1
3	No	1	1	1	1	1	1	1

CARICO LIMITE FONDAZIONE COMBINAZIONE...Sisma A
Autore: HANSEN (1970)

Carico limite [Qult]	238,74 kN/m²
Resistenza di progetto[Rd]	132,64 kN/m²
Tensione [Ed]	39,0 kN/m²
Fattore sicurezza [Fs=Qult/Ed]	6,12
Condizione di verifica [Ed<=Rd]	Verificata

COEFFICIENTE DI SOTTOFONDAZIONE BOWLES (1982)
Costante di Winkler 9549,77 kN/m³

A1+M1+R3

Autore: HANSEN (1970) (Condizione drenata)
==========

Fattore [Nq]	29,37
Fattore [Nc]	42,09
Fattore [Ng]	28,69
Fattore forma [Sc]	1,34
Fattore profondità [Dc]	1,0
Fattore inclinazione carichi [Ic]	1,0
Fattore inclinazione pendio [Gc]	1,0

Fattore inclinazione base [Bc]	1,0
Fattore forma [Sq]	1,33
Fattore profondità [Dq]	1,0
Fattore inclinazione carichi [Iq]	1,0
Fattore inclinazione pendio [Gq]	1,0
Fattore inclinazione base [Bq]	1,0
Fattore forma [Sg]	0,8
Fattore profondità [Dg]	1,0
Fattore inclinazione carichi [Ig]	1,0
Fattore inclinazione pendio [Gg]	1,0
Fattore inclinazione base [Bg]	1,0
Fattore correzione sismico inerziale [zq]	1,0
Fattore correzione sismico inerziale [zg]	1,0
Fattore correzione sismico inerziale [zc]	1,0

==========

Carico limite	547,05 kN/m²
Resistenza di progetto	237,85 kN/m²
Condizione di verifica [Ed<=Rd]	Verificata

==========

Autore: TERZAGHI (1955) (Condizione drenata)

==========

Fattore [Nq]	36,42
Fattore [Nc]	52,55
Fattore [Ng]	36,86
Fattore forma [Sc]	1,0
Fattore forma [Sg]	1,0
Fattore correzione sismico inerziale [zq]	1,0
Fattore correzione sismico inerziale [zg]	1,0
Fattore correzione sismico inerziale [zc]	1,0

==========

Carico limite	739,55 kN/m²
Resistenza di progetto	321,54 kN/m²
Condizione di verifica [Ed<=Rd]	Verificata

==========

Autore: MEYERHOF (1963) (Condizione drenata)

==========

Fattore [Nq]	29,37
Fattore [Nc]	42,09
Fattore [Ng]	31,04
Fattore forma [Sc]	1,35
Fattore profondità [Dc]	1,0
Fattore inclinazione carichi [Ic]	1,0
Fattore forma [Sq]	1,17
Fattore profondità [Dq]	1,0
Fattore inclinazione carichi [Iq]	1,0
Fattore forma [Sg]	1,17
Fattore profondità [Dg]	1,0
Fattore inclinazione carichi [Ig]	1,0
Fattore correzione sismico inerziale [zq]	1,0
Fattore correzione sismico inerziale [zg]	1,0

Fattore correzione sismico inerziale [zc]	1,0

==========

Carico limite	723,44 kN/m²
Resistenza di progetto	314,54 kN/m²

Condizione di verifica [Ed<=Rd]	Verificata

==========

Autore: VESIC (1975) (Condizione drenata)

==========

Fattore [Nq]	29,37
Fattore [Nc]	42,09
Fattore [Ng]	40,94
Fattore forma [Sc]	1,34
Fattore profondità [Dc]	1,0
Fattore inclinazione carichi [Ic]	1,0
Fattore inclinazione pendio [Gc]	1,0
Fattore inclinazione base [Bc]	1,0
Fattore forma [Sq]	1,33
Fattore profondità [Dq]	1,0
Fattore inclinazione carichi [Iq]	1,0
Fattore inclinazione pendio [Gq]	1,0
Fattore inclinazione base [Bq]	1,0
Fattore forma [Sg]	0,8
Fattore profondità [Dg]	1,0
Fattore inclinazione carichi [Ig]	1,0
Fattore inclinazione pendio [Gg]	1,0
Fattore inclinazione base [Bg]	1,0
Fattore correzione sismico inerziale [zq]	1,0
Fattore correzione sismico inerziale [zg]	1,0
Fattore correzione sismico inerziale [zc]	1,0

==========

Carico limite	694,09 kN/m²
Resistenza di progetto	301,78 kN/m²

Condizione di verifica [Ed<=Rd]	Verificata

==========

Autore: Brinch - Hansen 1970 (Condizione drenata)

==========

Fattore [Nq]	29,37
Fattore [Nc]	42,09
Fattore [Ng]	38,25
Fattore forma [Sc]	1,29
Fattore profondità [Dc]	1,0
Fattore inclinazione carichi [Ic]	1,0
Fattore inclinazione pendio [Gc]	1,0
Fattore inclinazione base [Bc]	1,0
Fattore forma [Sq]	1,28
Fattore profondità [Dq]	1,0
Fattore inclinazione carichi [Iq]	1,0
Fattore inclinazione pendio [Gq]	1,0
Fattore inclinazione base [Bq]	1,0
Fattore forma [Sg]	0,85

Fattore profondità [Dg]	1,0
Fattore inclinazione carichi [Ig]	1,0
Fattore inclinazione pendio [Gg]	1,0
Fattore inclinazione base [Bg]	1,0
Fattore correzione sismico inerziale [zq]	1,0
Fattore correzione sismico inerziale [zg]	1,0
Fattore correzione sismico inerziale [zc]	1,0

==========

Carico limite	681,27 kN/m²
Resistenza di progetto	296,2 kN/m²
Condizione di verifica [Ed<=Rd]	Verificata

==========

Autore: Meyerhof and Hanna (1978) (Condizione drenata)

==========

Strato 1 sopra, strato 2 sotto

Fattori di capacità portante strato 1	
Fattore [Nq]	1,0
Fattore [Nc]	5,14
Fattori di capacità portante strato 2	
Fattore [Nq]	33,3
Fattore [Nc]	46,12
Fattore [Ng]	10,18
Carico limite strato 2 (qb)	588,77 kN/m²
Carico limite strato 1 (qt)	371,56 kN/m²
Incremento carico limite strato 1	18,45 kN/m²
Coefficiente di punzonamento (ks)	0,0
Rapporto (q1/q2)	0,57

==========

Carico limite	371,56 kN/m²
Resistenza di progetto	161,55 kN/m²
Condizione di verifica [Ed<=Rd]	Verificata

==========

Sisma A

Autore: HANSEN (1970) (Condizione drenata)

==========

Fattore [Nq]	15,27
Fattore [Nc]	26,47
Fattore [Ng]	11,54
Fattore forma [Sc]	1,28
Fattore profondità [Dc]	1,0
Fattore inclinazione carichi [Ic]	1,0
Fattore inclinazione pendio [Gc]	1,0
Fattore inclinazione base [Bc]	1,0
Fattore forma [Sq]	1,27
Fattore profondità [Dq]	1,0

Fattore inclinazione carichi [Iq]	1,0
Fattore inclinazione pendio [Gq]	1,0
Fattore inclinazione base [Bq]	1,0
Fattore forma [Sg]	0,8
Fattore profondità [Dg]	1,0
Fattore inclinazione carichi [Ig]	1,0
Fattore inclinazione pendio [Gg]	1,0
Fattore inclinazione base [Bg]	1,0
Fattore correzione sismico inerziale [zq]	1,0
Fattore correzione sismico inerziale [zg]	1,0
Fattore correzione sismico inerziale [zc]	1,0

==========

Carico limite	238,74 kN/m²
Resistenza di progetto	132,64 kN/m²
Condizione di verifica [Ed<=Rd]	Verificata

==========

Autore: TERZAGHI (1955) (Condizione drenata)

==========

Fattore [Nq]	18,5
Fattore [Nc]	32,46
Fattore [Ng]	15,86
Fattore forma [Sc]	1,0
Fattore forma [Sg]	1,0
Fattore correzione sismico inerziale [zq]	1,0
Fattore correzione sismico inerziale [zg]	1,0
Fattore correzione sismico inerziale [zc]	1,0

==========

Carico limite	332,87 kN/m²
Resistenza di progetto	184,93 kN/m²
Condizione di verifica [Ed<=Rd]	Verificata

==========

Autore: MEYERHOF (1963) (Condizione drenata)

==========

Fattore [Nq]	15,27
Fattore [Nc]	26,47
Fattore [Ng]	11,84
Fattore forma [Sc]	1,28
Fattore profondità [Dc]	1,0
Fattore inclinazione carichi [Ic]	1,0
Fattore forma [Sq]	1,14
Fattore profondità [Dq]	1,0
Fattore inclinazione carichi [Iq]	1,0
Fattore forma [Sg]	1,14
Fattore profondità [Dg]	1,0
Fattore inclinazione carichi [Ig]	1,0
Fattore correzione sismico inerziale [zq]	1,0
Fattore correzione sismico inerziale [zg]	1,0
Fattore correzione sismico inerziale [zc]	1,0

==========

Carico limite	291,46 kN/m²

Resistenza di progetto	161,92 kN/m²
Condizione di verifica [Ed<=Rd]	Verificata

==========

Autore: VESIC (1975) (Condizione drenata)

==========

Fattore [Nq]	15,27
Fattore [Nc]	26,47
Fattore [Ng]	17,55
Fattore forma [Sc]	1,28
Fattore profondità [Dc]	1,0
Fattore inclinazione carichi [Ic]	1,0
Fattore inclinazione pendio [Gc]	1,0
Fattore inclinazione base [Bc]	1,0
Fattore forma [Sq]	1,27
Fattore profondità [Dq]	1,0
Fattore inclinazione carichi [Iq]	1,0
Fattore inclinazione pendio [Gq]	1,0
Fattore inclinazione base [Bq]	1,0
Fattore forma [Sg]	0,8
Fattore profondità [Dg]	1,0
Fattore inclinazione carichi [Ig]	1,0
Fattore inclinazione pendio [Gg]	1,0
Fattore inclinazione base [Bg]	1,0
Fattore correzione sismico inerziale [zq]	1,0
Fattore correzione sismico inerziale [zg]	1,0
Fattore correzione sismico inerziale [zc]	1,0

==========

Carico limite	310,78 kN/m²
Resistenza di progetto	172,65 kN/m²
Condizione di verifica [Ed<=Rd]	Verificata

==========

Autore: Brinch - Hansen 1970 (Condizione drenata)

==========

Fattore [Nq]	15,27
Fattore [Nc]	26,47
Fattore [Ng]	15,39
Fattore forma [Sc]	1,25
Fattore profondità [Dc]	1,0
Fattore inclinazione carichi [Ic]	1,0
Fattore inclinazione pendio [Gc]	1,0
Fattore inclinazione base [Bc]	1,0
Fattore forma [Sq]	1,23
Fattore profondità [Dq]	1,0
Fattore inclinazione carichi [Iq]	1,0
Fattore inclinazione pendio [Gq]	1,0
Fattore inclinazione base [Bq]	1,0
Fattore forma [Sg]	0,85
Fattore profondità [Dg]	1,0
Fattore inclinazione carichi [Ig]	1,0
Fattore inclinazione pendio [Gg]	1,0

Fattore inclinazione base [Bg] 1,0
Fattore correzione sismico inerziale [zq] 1,0
Fattore correzione sismico inerziale [zg] 1,0
Fattore correzione sismico inerziale [zc] 1,0
==========
Carico limite 293,71 kN/m²
Resistenza di progetto 163,17 kN/m²

Condizione di verifica [Ed<=Rd] Verificata
==========

Autore: Meyerhof and Hanna (1978) (Condizione drenata)
==========
Strato 1 sopra, strato 2 sotto

Fattori di capacità portante strato 1
Fattore [Nq] 1,0
Fattore [Nc] 5,14

Fattori di capacità portante strato 2
Fattore [Nq] 33,3
Fattore [Nc] 46,12
Fattore [Ng] 10,18

Carico limite strato 2 (qb) 588,77 kN/m²
Carico limite strato 1 (qt) 371,56 kN/m²

Incremento carico limite strato 1 18,45 kN/m²
Coefficiente di punzonamento (ks) 0,0
Rapporto (q1/q2) 0,57
==========
Carico limite 371,56 kN/m²
Resistenza di progetto 206,42 kN/m²

Condizione di verifica [Ed<=Rd] Verificata
==========

4.4.2.9. Verifica su penetrometrica P10

STRATIGRAFIA TERRENO

Spessore strato [m]	Peso unità di volume [kN/m³]	Peso unità di volume saturo [kN/m³]	Angolo di attrito [°]	Coesione [kN/m²]	Coesione non drenata [kN/m²]	Modulo Elastico [kN/m²]	Modulo Edometrico [kN/m²]	Poisson	Coeff. consolidaz. primaria [cmq/s]	Coeff. consolidazione secondaria	Descrizione
0,6	16,87	16,87	30,0	0,0	39,2266	5000,0	5000,0	0,0	0,0	0,0	
2,8	17,65	17,65	39,0	0,0	0,0	5000,0	5000,0	0,0	0,0	0,0	
3,2	17,65	17,65	35,0	0,0	0,0	5000,0	5000,0	0,0	0,0	0,0	

Carichi di progetto agenti sulla fondazione

Nr.	Nome combinazione	Pressione normale di	N [kN]	Mx [kN·m]	My [kN·m]	Hx [kN]	Hy [kN]	Tipo

		progetto [kN/m²]						
1	A1+M1+R3	56,00	0,00	0,00	0,00	0,00	0,00	Progetto
2	Sisma A	39,00	0,00	0,00	0,00	0,00	0,00	Progetto
3	S.L.E.	45,50	0,00	0,00	0,00	0,00	0,00	Servizio

Sisma + Coeff. parziali parametri geotecnici terreno + Resistenze

Nr	Correzione Sismica	Tangente angolo di resistenza al taglio	Coesione efficace	Coesione non drenata	Peso Unità volume in fondazione	Peso unità volume co-pertura	Coef. Rid. Capacità portante verticale	Coef.Rid.C apacità por-tante oriz-zontale
1	No	1	1	1	1	1	2,3	1,1
2	No	1,25	1,25	1,4	1	1	1,8	1,1
3	No	1	1	1	1	1	1	1

CARICO LIMITE FONDAZIONE COMBINAZIONE...A1+M1+R3
Autore: Meyerhof and Hanna (1978)

Carico limite [Qult]	294,03 kN/m²
Resistenza di progetto[Rd]	127,84 kN/m²
Tensione [Ed]	56,0 kN/m²
Fattore sicurezza [Fs=Qult/Ed]	5,25
Condizione di verifica [Ed<=Rd]	Verificata

COEFFICIENTE DI SOTTOFONDAZIONE BOWLES (1982)
Costante di Winkler 44451,39 kN/m³

A1+M1+R3

Autore: HANSEN (1970) (Condizione drenata)

Fattore [Nq]	43,86
Fattore [Nc]	56,53
Fattore [Ng]	48,73
Fattore forma [Sc]	1,38
Fattore profondità [Dc]	1,0
Fattore inclinazione carichi [Ic]	1,0
Fattore inclinazione pendio [Gc]	1,0
Fattore inclinazione base [Bc]	1,0
Fattore forma [Sq]	1,37
Fattore profondità [Dq]	1,0
Fattore inclinazione carichi [Iq]	1,0
Fattore inclinazione pendio [Gq]	1,0
Fattore inclinazione base [Bq]	1,0
Fattore forma [Sg]	0,8
Fattore profondità [Dg]	1,0
Fattore inclinazione carichi [Ig]	1,0
Fattore inclinazione pendio [Gg]	1,0
Fattore inclinazione base [Bg]	1,0
Fattore correzione sismico inerziale [zq]	1,0
Fattore correzione sismico inerziale [zg]	1,0
Fattore correzione sismico inerziale [zc]	1,0

Carico limite 886,61 kN/m²

Resistenza di progetto	385,48 kN/m²
Condizione di verifica [Ed<=Rd]	Verificata

==========

Autore: TERZAGHI (1955) (Condizione drenata)

==========

Fattore [Nq]	55,0
Fattore [Nc]	71,23
Fattore [Ng]	63,82
Fattore forma [Sc]	1,0
Fattore forma [Sg]	1,0
Fattore correzione sismico inerziale [zq]	1,0
Fattore correzione sismico inerziale [zg]	1,0
Fattore correzione sismico inerziale [zc]	1,0

==========

Carico limite	1227,27 kN/m²
Resistenza di progetto	533,6 kN/m²
Condizione di verifica [Ed<=Rd]	Verificata

==========

Autore: MEYERHOF (1963) (Condizione drenata)

==========

Fattore [Nq]	43,86
Fattore [Nc]	56,53
Fattore [Ng]	54,92
Fattore forma [Sc]	1,4
Fattore profondità [Dc]	1,0
Fattore inclinazione carichi [Ic]	1,0
Fattore forma [Sq]	1,2
Fattore profondità [Dq]	1,0
Fattore inclinazione carichi [Iq]	1,0
Fattore forma [Sg]	1,2
Fattore profondità [Dg]	1,0
Fattore inclinazione carichi [Ig]	1,0
Fattore correzione sismico inerziale [zq]	1,0
Fattore correzione sismico inerziale [zg]	1,0
Fattore correzione sismico inerziale [zc]	1,0

==========

Carico limite	1245,78 kN/m²
Resistenza di progetto	541,64 kN/m²
Condizione di verifica [Ed<=Rd]	Verificata

==========

Autore: VESIC (1975) (Condizione drenata)

==========

Fattore [Nq]	43,86
Fattore [Nc]	56,53
Fattore [Ng]	68,01
Fattore forma [Sc]	1,38
Fattore profondità [Dc]	1,0
Fattore inclinazione carichi [Ic]	1,0

Fattore inclinazione pendio [Gc]	1,0
Fattore inclinazione base [Bc]	1,0
Fattore forma [Sq]	1,37
Fattore profondità [Dq]	1,0
Fattore inclinazione carichi [Iq]	1,0
Fattore inclinazione pendio [Gq]	1,0
Fattore inclinazione base [Bq]	1,0
Fattore forma [Sg]	0,8
Fattore profondità [Dg]	1,0
Fattore inclinazione carichi [Ig]	1,0
Fattore inclinazione pendio [Gg]	1,0
Fattore inclinazione base [Bg]	1,0
Fattore correzione sismico inerziale [zq]	1,0
Fattore correzione sismico inerziale [zg]	1,0
Fattore correzione sismico inerziale [zc]	1,0

==========

Carico limite	918,21 kN/m²
Resistenza di progetto	399,22 kN/m²

Condizione di verifica [Ed<=Rd] Verificata

==========

Autore: Brinch - Hansen 1970 (Condizione drenata)

==========

Fattore [Nq]	43,86
Fattore [Nc]	56,53
Fattore [Ng]	64,98
Fattore forma [Sc]	1,3
Fattore profondità [Dc]	1,0
Fattore inclinazione carichi [Ic]	1,0
Fattore inclinazione pendio [Gc]	1,0
Fattore inclinazione base [Bc]	1,0
Fattore forma [Sq]	1,3
Fattore profondità [Dq]	1,0
Fattore inclinazione carichi [Iq]	1,0
Fattore inclinazione pendio [Gq]	1,0
Fattore inclinazione base [Bq]	1,0
Fattore forma [Sg]	0,85
Fattore profondità [Dg]	1,0
Fattore inclinazione carichi [Ig]	1,0
Fattore inclinazione pendio [Gg]	1,0
Fattore inclinazione base [Bg]	1,0
Fattore correzione sismico inerziale [zq]	1,0
Fattore correzione sismico inerziale [zg]	1,0
Fattore correzione sismico inerziale [zc]	1,0

==========

Carico limite	1111,29 kN/m²
Resistenza di progetto	483,17 kN/m²

Condizione di verifica [Ed<=Rd] Verificata

==========

Autore: Meyerhof and Hanna (1978) (Condizione drenata)

==========

Strato 1 sopra, strato 2 sotto

Fattori di capacità portante strato 1	
Fattore [Nq]	1,0
Fattore [Nc]	5,14
Fattori di capacità portante strato 2	
Fattore [Nq]	55,96
Fattore [Nc]	67,87
Fattore [Ng]	19,46
Carico limite strato 2 (qb)	1044,29 kN/m²
Carico limite strato 1 (qt)	294,03 kN/m²
Incremento carico limite strato 1	13,84 kN/m²
Coefficiente di punzonamento (ks)	0,0
Rapporto (q1/q2)	1,45
==========	
Carico limite	294,03 kN/m²
Resistenza di progetto	127,84 kN/m²
Condizione di verifica [Ed<=Rd]	Verificata
==========	

Sisma A

Autore: HANSEN (1970) (Condizione drenata)

==========	
Fattore [Nq]	21,2
Fattore [Nc]	33,31
Fattore [Ng]	18,38
Fattore forma [Sc]	1,31
Fattore profondità [Dc]	1,0
Fattore inclinazione carichi [Ic]	1,0
Fattore inclinazione pendio [Gc]	1,0
Fattore inclinazione base [Bc]	1,0
Fattore forma [Sq]	1,3
Fattore profondità [Dq]	1,0
Fattore inclinazione carichi [Iq]	1,0
Fattore inclinazione pendio [Gq]	1,0
Fattore inclinazione base [Bq]	1,0
Fattore forma [Sg]	0,8
Fattore profondità [Dg]	1,0
Fattore inclinazione carichi [Ig]	1,0
Fattore inclinazione pendio [Gg]	1,0
Fattore inclinazione base [Bg]	1,0
Fattore correzione sismico inerziale [zq]	1,0
Fattore correzione sismico inerziale [zg]	1,0
Fattore correzione sismico inerziale [zc]	1,0
==========	
Carico limite	358,75 kN/m²
Resistenza di progetto	199,31 kN/m²
Condizione di verifica [Ed<=Rd]	Verificata

==========

Autore: TERZAGHI (1955) (Condizione drenata)

==========

Fattore [Nq]	26,01
Fattore [Nc]	41,23
Fattore [Ng]	24,34
Fattore forma [Sc]	1,0
Fattore forma [Sg]	1,0
Fattore correzione sismico inerziale [zq]	1,0
Fattore correzione sismico inerziale [zg]	1,0
Fattore correzione sismico inerziale [zc]	1,0

==========

Carico limite	493,52 kN/m²
Resistenza di progetto	274,18 kN/m²
Condizione di verifica [Ed<=Rd]	Verificata

==========

Autore: MEYERHOF (1963) (Condizione drenata)

==========

Fattore [Nq]	21,2
Fattore [Nc]	33,31
Fattore [Ng]	19,33
Fattore forma [Sc]	1,31
Fattore profondità [Dc]	1,0
Fattore inclinazione carichi [Ic]	1,0
Fattore forma [Sq]	1,16
Fattore profondità [Dq]	1,0
Fattore inclinazione carichi [Iq]	1,0
Fattore forma [Sg]	1,16
Fattore profondità [Dg]	1,0
Fattore inclinazione carichi [Ig]	1,0
Fattore correzione sismico inerziale [zq]	1,0
Fattore correzione sismico inerziale [zg]	1,0
Fattore correzione sismico inerziale [zc]	1,0

==========

Carico limite	455,97 kN/m²
Resistenza di progetto	253,32 kN/m²
Condizione di verifica [Ed<=Rd]	Verificata

==========

Autore: VESIC (1975) (Condizione drenata)

==========

Fattore [Nq]	21,2
Fattore [Nc]	33,31
Fattore [Ng]	26,93
Fattore forma [Sc]	1,31
Fattore profondità [Dc]	1,0
Fattore inclinazione carichi [Ic]	1,0
Fattore inclinazione pendio [Gc]	1,0
Fattore inclinazione base [Bc]	1,0
Fattore forma [Sq]	1,3

Fattore profondità [Dq]	1,0
Fattore inclinazione carichi [Iq]	1,0
Fattore inclinazione pendio [Gq]	1,0
Fattore inclinazione base [Bq]	1,0
Fattore forma [Sg]	0,8
Fattore profondità [Dg]	1,0
Fattore inclinazione carichi [Ig]	1,0
Fattore inclinazione pendio [Gg]	1,0
Fattore inclinazione base [Bg]	1,0
Fattore correzione sismico inerziale [zq]	1,0
Fattore correzione sismico inerziale [zg]	1,0
Fattore correzione sismico inerziale [zc]	1,0

==========

Carico limite	460,84 kN/m²
Resistenza di progetto	256,02 kN/m²

Condizione di verifica [Ed<=Rd] Verificata

==========

Autore: Brinch - Hansen 1970 (Condizione drenata)

==========

Fattore [Nq]	21,2
Fattore [Nc]	33,31
Fattore [Ng]	24,5
Fattore forma [Sc]	1,27
Fattore profondità [Dc]	1,0
Fattore inclinazione carichi [Ic]	1,0
Fattore inclinazione pendio [Gc]	1,0
Fattore inclinazione base [Bc]	1,0
Fattore forma [Sq]	1,26
Fattore profondità [Dq]	1,0
Fattore inclinazione carichi [Iq]	1,0
Fattore inclinazione pendio [Gq]	1,0
Fattore inclinazione base [Bq]	1,0
Fattore forma [Sg]	0,85
Fattore profondità [Dg]	1,0
Fattore inclinazione carichi [Ig]	1,0
Fattore inclinazione pendio [Gg]	1,0
Fattore inclinazione base [Bg]	1,0
Fattore correzione sismico inerziale [zq]	1,0
Fattore correzione sismico inerziale [zg]	1,0
Fattore correzione sismico inerziale [zc]	1,0

==========

Carico limite	445,18 kN/m²
Resistenza di progetto	247,32 kN/m²

Condizione di verifica [Ed<=Rd] Verificata

==========

Autore: Meyerhof and Hanna (1978) (Condizione drenata)

==========

Strato 1 sopra, strato 2 sotto

Fattori di capacità portante strato 1

Fattore [Nq] 1,0
Fattore [Nc] 5,14

Fattori di capacità portante strato 2
Fattore [Nq] 55,96
Fattore [Nc] 67,87
Fattore [Ng] 19,46

Carico limite strato 2 (qb) 1044,29 kN/m²
Carico limite strato 1 (qt) 294,03 kN/m²

Incremento carico limite strato 1 13,84 kN/m²
Coefficiente di punzonamento (ks) 0,0
Rapporto (q1/q2) 1,45
==========
Carico limite 294,03 kN/m²
Resistenza di progetto 163,35 kN/m²

Condizione di verifica [Ed<=Rd] Verificata
==========

4.4.2.10. Verifica su penetrometrica P11

STRATIGRAFIA TERRENO

Spessore strato [m]	Peso unità di volume [kN/m³]	Peso unità di volume saturo [kN/m³]	Angolo di attrito [°]	Coesione [kN/m²]	Coesione non drenata [kN/m²]	Modulo Elastico [kN/m²]	Modulo Edometrico [kN/m²]	Poisson	Coeff. consolidaz. primaria [cmq/s]	Coeff. consolidazione secondaria	Descrizione
0,6	17,09	17,09	30,0	0,0	45,7971	5000,0	5000,0	0,0	0,0	0,0	
2,4	17,65	17,65	40,0	0,0	0,0	5000,0	5000,0	0,0	0,0	0,0	
3,4	17,65	17,65	35,0	0,0	0,0	5000,0	5000,0	0,0	0,0	0,0	

Carichi di progetto agenti sulla fondazione

Nr.	Nome combinazione	Pressione normale di progetto [kN/m²]	N [kN]	Mx [kN·m]	My [kN·m]	Hx [kN]	Hy [kN]	Tipo
1	A1+M1+R3	56,00	0,00	0,00	0,00	0,00	0,00	Progetto
2	Sisma A	39,00	0,00	0,00	0,00	0,00	0,00	Progetto
3	S.L.E.	45,50	0,00	0,00	0,00	0,00	0,00	Servizio

Sisma + Coeff. parziali parametri geotecnici terreno + Resistenze

Nr	Correzione Sismica	Tangente angolo di resistenza al taglio	Coesione efficace	Coesione non drenata	Peso Unità volume in fondazione	Peso unità volume copertura	Coef. Rid. Capacità portante verticale	Coef.Rid.Capacità portante orizzontale
1	No	1	1	1	1	1	2,3	1,1
2	No	1,25	1,25	1,4	1	1	1,8	1,1
3	No	1	1	1	1	1	1	1

CARICO LIMITE FONDAZIONE COMBINAZIONE...A1+M1+R3

Autore: Meyerhof and Hanna (1978)

Carico limite [Qult]	347,21 kN/m²
Resistenza di progetto[Rd]	150,96 kN/m²
Tensione [Ed]	56,0 kN/m²
Fattore sicurezza [Fs=Qult/Ed]	6,2
Condizione di verifica [Ed<=Rd]	Verificata

COEFFICIENTE DI SOTTOFONDAZIONE BOWLES (1982)

Costante di Winkler	50821,86 kN/m³

A1+M1+R3

Autore: HANSEN (1970) (Condizione drenata)

Fattore [Nq]	48,69
Fattore [Nc]	61,12
Fattore [Ng]	55,81
Fattore forma [Sc]	1,39
Fattore profondità [Dc]	1,0
Fattore inclinazione carichi [Ic]	1,0
Fattore inclinazione pendio [Gc]	1,0
Fattore inclinazione base [Bc]	1,0
Fattore forma [Sq]	1,38
Fattore profondità [Dq]	1,0
Fattore inclinazione carichi [Iq]	1,0
Fattore inclinazione pendio [Gq]	1,0
Fattore inclinazione base [Bq]	1,0
Fattore forma [Sg]	0,8
Fattore profondità [Dg]	1,0
Fattore inclinazione carichi [Ig]	1,0
Fattore inclinazione pendio [Gg]	1,0
Fattore inclinazione base [Bg]	1,0
Fattore correzione sismico inerziale [zq]	1,0
Fattore correzione sismico inerziale [zg]	1,0
Fattore correzione sismico inerziale [zc]	1,0

Carico limite	1013,55 kN/m²
Resistenza di progetto	440,67 kN/m²
Condizione di verifica [Ed<=Rd]	Verificata

Autore: TERZAGHI (1955) (Condizione drenata)

Fattore [Nq]	61,23
Fattore [Nc]	77,2
Fattore [Ng]	73,01
Fattore forma [Sc]	1,0
Fattore forma [Sg]	1,0
Fattore correzione sismico inerziale [zq]	1,0
Fattore correzione sismico inerziale [zg]	1,0
Fattore correzione sismico inerziale [zc]	1,0

Carico limite	1402,19 kN/m²
Resistenza di progetto	609,65 kN/m²
Condizione di verifica [Ed<=Rd]	Verificata

==========

Autore: MEYERHOF (1963) (Condizione drenata)

==========

Fattore [Nq]	48,69
Fattore [Nc]	61,12
Fattore [Ng]	63,63
Fattore forma [Sc]	1,41
Fattore profondità [Dc]	1,0
Fattore inclinazione carichi [Ic]	1,0
Fattore forma [Sq]	1,21
Fattore profondità [Dq]	1,0
Fattore inclinazione carichi [Iq]	1,0
Fattore forma [Sg]	1,21
Fattore profondità [Dg]	1,0
Fattore inclinazione carichi [Ig]	1,0
Fattore correzione sismico inerziale [zq]	1,0
Fattore correzione sismico inerziale [zg]	1,0
Fattore correzione sismico inerziale [zc]	1,0

==========

Carico limite	1445,74 kN/m²
Resistenza di progetto	628,58 kN/m²
Condizione di verifica [Ed<=Rd]	Verificata

==========

Autore: VESIC (1975) (Condizione drenata)

==========

Fattore [Nq]	48,69
Fattore [Nc]	61,12
Fattore [Ng]	77,54
Fattore forma [Sc]	1,39
Fattore profondità [Dc]	1,0
Fattore inclinazione carichi [Ic]	1,0
Fattore inclinazione pendio [Gc]	1,0
Fattore inclinazione base [Bc]	1,0
Fattore forma [Sq]	1,38
Fattore profondità [Dq]	1,0
Fattore inclinazione carichi [Iq]	1,0
Fattore inclinazione pendio [Gq]	1,0
Fattore inclinazione base [Bq]	1,0
Fattore forma [Sg]	0,8
Fattore profondità [Dg]	1,0
Fattore inclinazione carichi [Ig]	1,0
Fattore inclinazione pendio [Gg]	1,0
Fattore inclinazione base [Bg]	1,0
Fattore correzione sismico inerziale [zq]	1,0
Fattore correzione sismico inerziale [zg]	1,0
Fattore correzione sismico inerziale [zc]	1,0

==========

Carico limite	970,69 kN/m²
Resistenza di progetto	422,04 kN/m²

Condizione di verifica [Ed<=Rd] Verificata

==========

Autore: Brinch - Hansen 1970 (Condizione drenata)

==========

Fattore [Nq]	48,69
Fattore [Nc]	61,12
Fattore [Ng]	74,42
Fattore forma [Sc]	1,31
Fattore profondità [Dc]	1,0
Fattore inclinazione carichi [Ic]	1,0
Fattore inclinazione pendio [Gc]	1,0
Fattore inclinazione base [Bc]	1,0
Fattore forma [Sq]	1,3
Fattore profondità [Dq]	1,0
Fattore inclinazione carichi [Iq]	1,0
Fattore inclinazione pendio [Gq]	1,0
Fattore inclinazione base [Bq]	1,0
Fattore forma [Sg]	0,85
Fattore profondità [Dg]	1,0
Fattore inclinazione carichi [Ig]	1,0
Fattore inclinazione pendio [Gg]	1,0
Fattore inclinazione base [Bg]	1,0
Fattore correzione sismico inerziale [zq]	1,0
Fattore correzione sismico inerziale [zg]	1,0
Fattore correzione sismico inerziale [zc]	1,0

==========

Carico limite	1270,55 kN/m²
Resistenza di progetto	552,41 kN/m²

Condizione di verifica [Ed<=Rd] Verificata

==========

Autore: Meyerhof and Hanna (1978) (Condizione drenata)

==========

Strato 1 sopra, strato 2 sotto

Fattori di capacità portante strato 1

Fattore [Nq]	1,0
Fattore [Nc]	5,14

Fattori di capacità portante strato 2

Fattore [Nq]	64,2
Fattore [Nc]	75,31
Fattore [Ng]	23,0

Carico limite strato 2 (qb)	1230,7 kN/m²
Carico limite strato 1 (qt)	347,21 kN/m²

Incremento carico limite strato 1	16,16 kN/m²
Coefficiente di punzonamento (ks)	0,0

Rapporto (q1/q2)	1,47

Carico limite	347,21 kN/m²
Resistenza di progetto	150,96 kN/m²
Condizione di verifica [Ed<=Rd]	Verificata

Sisma A

Autore: HANSEN (1970) (Condizione drenata)

Fattore [Nq]	23,1
Fattore [Nc]	35,41
Fattore [Ng]	20,69
Fattore forma [Sc]	1,32
Fattore profondità [Dc]	1,0
Fattore inclinazione carichi [Ic]	1,0
Fattore inclinazione pendio [Gc]	1,0
Fattore inclinazione base [Bc]	1,0
Fattore forma [Sq]	1,31
Fattore profondità [Dq]	1,0
Fattore inclinazione carichi [Iq]	1,0
Fattore inclinazione pendio [Gq]	1,0
Fattore inclinazione base [Bq]	1,0
Fattore forma [Sg]	0,8
Fattore profondità [Dg]	1,0
Fattore inclinazione carichi [Ig]	1,0
Fattore inclinazione pendio [Gg]	1,0
Fattore inclinazione base [Bg]	1,0
Fattore correzione sismico inerziale [zq]	1,0
Fattore correzione sismico inerziale [zg]	1,0
Fattore correzione sismico inerziale [zc]	1,0

Carico limite	402,48 kN/m²
Resistenza di progetto	223,6 kN/m²
Condizione di verifica [Ed<=Rd]	Verificata

Autore: TERZAGHI (1955) (Condizione drenata)

Fattore [Nq]	28,42
Fattore [Nc]	43,93
Fattore [Ng]	27,37
Fattore forma [Sc]	1,0
Fattore forma [Sg]	1,0
Fattore correzione sismico inerziale [zq]	1,0
Fattore correzione sismico inerziale [zg]	1,0
Fattore correzione sismico inerziale [zc]	1,0

Carico limite	553,66 kN/m²
Resistenza di progetto	307,59 kN/m²

Condizione di verifica [Ed<=Rd] Verificata

==========

Autore: MEYERHOF (1963) (Condizione drenata)

==========

Fattore [Nq]	23,1
Fattore [Nc]	35,41
Fattore [Ng]	21,92
Fattore forma [Sc]	1,32
Fattore profondità [Dc]	1,0
Fattore inclinazione carichi [Ic]	1,0
Fattore forma [Sq]	1,16
Fattore profondità [Dq]	1,0
Fattore inclinazione carichi [Iq]	1,0
Fattore forma [Sg]	1,16
Fattore profondità [Dg]	1,0
Fattore inclinazione carichi [Ig]	1,0
Fattore correzione sismico inerziale [zq]	1,0
Fattore correzione sismico inerziale [zg]	1,0
Fattore correzione sismico inerziale [zc]	1,0

==========

Carico limite	516,39 kN/m²
Resistenza di progetto	286,88 kN/m²

Condizione di verifica [Ed<=Rd] Verificata

==========

Autore: VESIC (1975) (Condizione drenata)

==========

Fattore [Nq]	23,1
Fattore [Nc]	35,41
Fattore [Ng]	30,09
Fattore forma [Sc]	1,32
Fattore profondità [Dc]	1,0
Fattore inclinazione carichi [Ic]	1,0
Fattore inclinazione pendio [Gc]	1,0
Fattore inclinazione base [Bc]	1,0
Fattore forma [Sq]	1,31
Fattore profondità [Dq]	1,0
Fattore inclinazione carichi [Iq]	1,0
Fattore inclinazione pendio [Gq]	1,0
Fattore inclinazione base [Bq]	1,0
Fattore forma [Sg]	0,8
Fattore profondità [Dg]	1,0
Fattore inclinazione carichi [Ig]	1,0
Fattore inclinazione pendio [Gg]	1,0
Fattore inclinazione base [Bg]	1,0
Fattore correzione sismico inerziale [zq]	1,0
Fattore correzione sismico inerziale [zg]	1,0
Fattore correzione sismico inerziale [zc]	1,0

==========

Carico limite	514,91 kN/m²
Resistenza di progetto	286,06 kN/m²

Condizione di verifica [Ed<=Rd] Verificata
==========

Autore: Brinch - Hansen 1970 (Condizione drenata)
==========

Fattore [Nq]	23,1
Fattore [Nc]	35,41
Fattore [Ng]	27,59
Fattore forma [Sc]	1,27
Fattore profondità [Dc]	1,0
Fattore inclinazione carichi [Ic]	1,0
Fattore inclinazione pendio [Gc]	1,0
Fattore inclinazione base [Bc]	1,0
Fattore forma [Sq]	1,26
Fattore profondità [Dq]	1,0
Fattore inclinazione carichi [Iq]	1,0
Fattore inclinazione pendio [Gq]	1,0
Fattore inclinazione base [Bq]	1,0
Fattore forma [Sg]	0,85
Fattore profondità [Dg]	1,0
Fattore inclinazione carichi [Ig]	1,0
Fattore inclinazione pendio [Gg]	1,0
Fattore inclinazione base [Bg]	1,0
Fattore correzione sismico inerziale [zq]	1,0
Fattore correzione sismico inerziale [zg]	1,0
Fattore correzione sismico inerziale [zc]	1,0

==========

Carico limite	499,76 kN/m²
Resistenza di progetto	277,65 kN/m²

Condizione di verifica [Ed<=Rd] Verificata
==========

Autore: Meyerhof and Hanna (1978) (Condizione drenata)
==========

Strato 1 sopra, strato 2 sotto

Fattori di capacità portante strato 1	
Fattore [Nq]	1,0
Fattore [Nc]	5,14
Fattori di capacità portante strato 2	
Fattore [Nq]	64,2
Fattore [Nc]	75,31
Fattore [Ng]	23,0
Carico limite strato 2 (qb)	1230,7 kN/m²
Carico limite strato 1 (qt)	347,21 kN/m²
Incremento carico limite strato 1	16,16 kN/m²
Coefficiente di punzonamento (ks)	0,0
Rapporto (q1/q2)	1,47

==========

Carico limite	347,21 kN/m²

Resistenza di progetto 192,9 kN/m²

Condizione di verifica [Ed<=Rd] Verificata
==========

4.4.2.11. Verifica su penetrometrica P12

STRATIGRAFIA TERRENO

Spessore strato [m]	Peso unità di volume [kN/m³]	Peso unità di volume saturo [kN/m³]	Angolo di attrito [°]	Coe-sione [kN/m²]	Coe-sione non dre-nata [kN/m²]	Modulo Elastico [kN/m²]	Modulo Edome-trico [kN/m²]	Poisson	Coeff. consoli-daz. pri-maria [cmq/s]	Coeff. consoli-dazione seconda-ria	Descri-zione
0,6	17,09	17,09	30,0	0,0	45,7971	5000,0	5000,0	0,0	0,0	0,0	
1,4	17,65	17,65	41,0	0,0	0,0	5000,0	5000,0	0,0	0,0	0,0	
2,6	17,65	17,65	37,0	0,0	0,0	5000,0	5000,0	0,0	0,0	0,0	
1,2	17,65	17,65	34,0	0,0	0,0	5000,0	5000,0	0,0	0,0	0,0	
1,0	17,65	17,65	36,0	0,0	0,0	5000,0	5000,0	0,0	0,0	0,0	

Carichi di progetto agenti sulla fondazione

Nr.	Nome com-binazione	Pressione normale di progetto [kN/m²]	N [kN]	Mx [kN·m]	My [kN·m]	Hx [kN]	Hy [kN]	Tipo
1	A1+M1+R3	56,00	0,00	0,00	0,00	0,00	0,00	Progetto
2	Sisma A	39,00	0,00	0,00	0,00	0,00	0,00	Progetto
3	S.L.E.	45,50	0,00	0,00	0,00	0,00	0,00	Servizio

Sisma + Coeff. parziali parametri geotecnici terreno + Resistenze

Nr	Correzione Sismica	Tangente angolo di resistenza al taglio	Coesione efficace	Coesione non drenata	Peso Unità volume in fondazione	Peso unità volume co-pertura	Coef. Rid. Capacità portante verticale	Coef.Rid.C apacità por-tante oriz-zontale
1	No	1	1	1	1	1	2,3	1,1
2	No	1,25	1,25	1,4	1	1	1,8	1,1
3	No	1	1	1	1	1	1	1

CARICO LIMITE FONDAZIONE COMBINAZIONE...A1+M1+R3
Autore: Meyerhof and Hanna (1978)

Carico limite [Qult] 352,22 kN/m²
Resistenza di progetto[Rd] 153,14 kN/m²
Tensione [Ed] 56,0 kN/m²
Fattore sicurezza [Fs=Qult/Ed] 6,29
Condizione di verifica [Ed<=Rd] Verificata

COEFFICIENTE DI SOTTOFONDAZIONE BOWLES (1982)
Costante di Winkler 57900,32 kN/m³

A1+M1+R3

Autore: HANSEN (1970) (Condizione drenata)
==========

Fattore [Nq]	54,16
Fattore [Nc]	66,21
Fattore [Ng]	64,02
Fattore forma [Sc]	1,4
Fattore profondità [Dc]	1,0
Fattore inclinazione carichi [Ic]	1,0
Fattore inclinazione pendio [Gc]	1,0
Fattore inclinazione base [Bc]	1,0
Fattore forma [Sq]	1,4
Fattore profondità [Dq]	1,0
Fattore inclinazione carichi [Iq]	1,0
Fattore inclinazione pendio [Gq]	1,0
Fattore inclinazione base [Bq]	1,0
Fattore forma [Sg]	0,8
Fattore profondità [Dg]	1,0
Fattore inclinazione carichi [Ig]	1,0
Fattore inclinazione pendio [Gg]	1,0
Fattore inclinazione base [Bg]	1,0
Fattore correzione sismico inerziale [zq]	1,0
Fattore correzione sismico inerziale [zg]	1,0
Fattore correzione sismico inerziale [zc]	1,0

==========

Carico limite	1153,63 kN/m²
Resistenza di progetto	501,58 kN/m²

Condizione di verifica [Ed<=Rd] Verificata

==========

Autore: TERZAGHI (1955) (Condizione drenata)

==========

Fattore [Nq]	68,29
Fattore [Nc]	83,82
Fattore [Ng]	83,01
Fattore forma [Sc]	1,0
Fattore forma [Sg]	1,0
Fattore correzione sismico inerziale [zq]	1,0
Fattore correzione sismico inerziale [zg]	1,0
Fattore correzione sismico inerziale [zc]	1,0

==========

Carico limite	1587,4 kN/m²
Resistenza di progetto	690,17 kN/m²

Condizione di verifica [Ed<=Rd] Verificata

==========

Autore: MEYERHOF (1963) (Condizione drenata)

==========

Fattore [Nq]	54,16
Fattore [Nc]	66,21
Fattore [Ng]	73,87
Fattore forma [Sc]	1,43
Fattore profondità [Dc]	1,0
Fattore inclinazione carichi [Ic]	1,0
Fattore forma [Sq]	1,21

Fattore profondità [Dq]	1,0
Fattore inclinazione carichi [Iq]	1,0
Fattore forma [Sg]	1,21
Fattore profondità [Dg]	1,0
Fattore inclinazione carichi [Ig]	1,0
Fattore correzione sismico inerziale [zq]	1,0
Fattore correzione sismico inerziale [zg]	1,0
Fattore correzione sismico inerziale [zc]	1,0

==========

Carico limite	1674,22 kN/m²
Resistenza di progetto	727,92 kN/m²

Condizione di verifica [Ed<=Rd] Verificata

==========

Autore: VESIC (1975) (Condizione drenata)

==========

Fattore [Nq]	54,16
Fattore [Nc]	66,21
Fattore [Ng]	88,57
Fattore forma [Sc]	1,4
Fattore profondità [Dc]	1,0
Fattore inclinazione carichi [Ic]	1,0
Fattore inclinazione pendio [Gc]	1,0
Fattore inclinazione base [Bc]	1,0
Fattore forma [Sq]	1,4
Fattore profondità [Dq]	1,0
Fattore inclinazione carichi [Iq]	1,0
Fattore inclinazione pendio [Gq]	1,0
Fattore inclinazione base [Bq]	1,0
Fattore forma [Sg]	0,8
Fattore profondità [Dg]	1,0
Fattore inclinazione carichi [Ig]	1,0
Fattore inclinazione pendio [Gg]	1,0
Fattore inclinazione base [Bg]	1,0
Fattore correzione sismico inerziale [zq]	1,0
Fattore correzione sismico inerziale [zg]	1,0
Fattore correzione sismico inerziale [zc]	1,0

==========

Carico limite	1023,0 kN/m²
Resistenza di progetto	444,78 kN/m²

Condizione di verifica [Ed<=Rd] Verificata

==========

Autore: Brinch - Hansen 1970 (Condizione drenata)

==========

Fattore [Nq]	54,16
Fattore [Nc]	66,21
Fattore [Ng]	85,35
Fattore forma [Sc]	1,31
Fattore profondità [Dc]	1,0
Fattore inclinazione carichi [Ic]	1,0
Fattore inclinazione pendio [Gc]	1,0

Fattore inclinazione base [Bc]	1,0
Fattore forma [Sq]	1,31
Fattore profondità [Dq]	1,0
Fattore inclinazione carichi [Iq]	1,0
Fattore inclinazione pendio [Gq]	1,0
Fattore inclinazione base [Bq]	1,0
Fattore forma [Sg]	0,85
Fattore profondità [Dg]	1,0
Fattore inclinazione carichi [Ig]	1,0
Fattore inclinazione pendio [Gg]	1,0
Fattore inclinazione base [Bg]	1,0
Fattore correzione sismico inerziale [zq]	1,0
Fattore correzione sismico inerziale [zg]	1,0
Fattore correzione sismico inerziale [zc]	1,0

==========

Carico limite	1447,51 kN/m²
Resistenza di progetto	629,35 kN/m²
Condizione di verifica [Ed<=Rd]	Verificata

==========

Autore: Meyerhof and Hanna (1978) (Condizione drenata)

==========

Strato 1 sopra, strato 2 sotto

Fattori di capacità portante strato 1	
Fattore [Nq]	1,0
Fattore [Nc]	5,14
Fattori di capacità portante strato 2	
Fattore [Nq]	73,9
Fattore [Nc]	83,86
Fattore [Ng]	27,26
Carico limite strato 2 (qb)	1443,43 kN/m²
Carico limite strato 1 (qt)	352,22 kN/m²
Incremento carico limite strato 1	16,16 kN/m²
Coefficiente di punzonamento (ks)	0,0
Rapporto (q1/q2)	1,74

==========

Carico limite	352,22 kN/m²
Resistenza di progetto	153,14 kN/m²
Condizione di verifica [Ed<=Rd]	Verificata

==========

Sisma A

Autore: HANSEN (1970) (Condizione drenata)

==========

Fattore [Nq]	25,21
Fattore [Nc]	37,69
Fattore [Ng]	23,32

Fattore forma [Sc]	1,33
Fattore profondità [Dc]	1,0
Fattore inclinazione carichi [Ic]	1,0
Fattore inclinazione pendio [Gc]	1,0
Fattore inclinazione base [Bc]	1,0
Fattore forma [Sq]	1,32
Fattore profondità [Dq]	1,0
Fattore inclinazione carichi [Iq]	1,0
Fattore inclinazione pendio [Gq]	1,0
Fattore inclinazione base [Bq]	1,0
Fattore forma [Sg]	0,8
Fattore profondità [Dg]	1,0
Fattore inclinazione carichi [Ig]	1,0
Fattore inclinazione pendio [Gg]	1,0
Fattore inclinazione base [Bg]	1,0
Fattore correzione sismico inerziale [zq]	1,0
Fattore correzione sismico inerziale [zg]	1,0
Fattore correzione sismico inerziale [zc]	1,0

==========

Carico limite	449,26 kN/m²
Resistenza di progetto	249,59 kN/m²

Condizione di verifica [Ed<=Rd] Verificata

==========

Autore: TERZAGHI (1955) (Condizione drenata)

==========

Fattore [Nq]	31,1
Fattore [Nc]	46,87
Fattore [Ng]	30,64
Fattore forma [Sc]	1,0
Fattore forma [Sg]	1,0
Fattore correzione sismico inerziale [zq]	1,0
Fattore correzione sismico inerziale [zg]	1,0
Fattore correzione sismico inerziale [zc]	1,0

==========

Carico limite	616,24 kN/m²
Resistenza di progetto	342,36 kN/m²

Condizione di verifica [Ed<=Rd] Verificata

==========

Autore: MEYERHOF (1963) (Condizione drenata)

==========

Fattore [Nq]	25,21
Fattore [Nc]	37,69
Fattore [Ng]	24,89
Fattore forma [Sc]	1,33
Fattore profondità [Dc]	1,0
Fattore inclinazione carichi [Ic]	1,0
Fattore forma [Sq]	1,17
Fattore profondità [Dq]	1,0
Fattore inclinazione carichi [Iq]	1,0
Fattore forma [Sg]	1,17

Fattore profondità [Dg]	1,0
Fattore inclinazione carichi [Ig]	1,0
Fattore correzione sismico inerziale [zq]	1,0
Fattore correzione sismico inerziale [zg]	1,0
Fattore correzione sismico inerziale [zc]	1,0

==========

Carico limite	582,87 kN/m²
Resistenza di progetto	323,81 kN/m²

Condizione di verifica [Ed<=Rd] Verificata

==========

Autore: VESIC (1975) (Condizione drenata)

==========

Fattore [Nq]	25,21
Fattore [Nc]	37,69
Fattore [Ng]	33,67
Fattore forma [Sc]	1,33
Fattore profondità [Dc]	1,0
Fattore inclinazione carichi [Ic]	1,0
Fattore inclinazione pendio [Gc]	1,0
Fattore inclinazione base [Bc]	1,0
Fattore forma [Sq]	1,32
Fattore profondità [Dq]	1,0
Fattore inclinazione carichi [Iq]	1,0
Fattore inclinazione pendio [Gq]	1,0
Fattore inclinazione base [Bq]	1,0
Fattore forma [Sg]	0,8
Fattore profondità [Dg]	1,0
Fattore inclinazione carichi [Ig]	1,0
Fattore inclinazione pendio [Gg]	1,0
Fattore inclinazione base [Bg]	1,0
Fattore correzione sismico inerziale [zq]	1,0
Fattore correzione sismico inerziale [zg]	1,0
Fattore correzione sismico inerziale [zc]	1,0

==========

Carico limite	573,04 kN/m²
Resistenza di progetto	318,36 kN/m²

Condizione di verifica [Ed<=Rd] Verificata

==========

Autore: Brinch - Hansen 1970 (Condizione drenata)

==========

Fattore [Nq]	25,21
Fattore [Nc]	37,69
Fattore [Ng]	31,1
Fattore forma [Sc]	1,28
Fattore profondità [Dc]	1,0
Fattore inclinazione carichi [Ic]	1,0
Fattore inclinazione pendio [Gc]	1,0
Fattore inclinazione base [Bc]	1,0
Fattore forma [Sq]	1,27
Fattore profondità [Dq]	1,0

Fattore inclinazione carichi [Iq]	1,0
Fattore inclinazione pendio [Gq]	1,0
Fattore inclinazione base [Bq]	1,0
Fattore forma [Sg]	0,85
Fattore profondità [Dg]	1,0
Fattore inclinazione carichi [Ig]	1,0
Fattore inclinazione pendio [Gg]	1,0
Fattore inclinazione base [Bg]	1,0
Fattore correzione sismico inerziale [zq]	1,0
Fattore correzione sismico inerziale [zg]	1,0
Fattore correzione sismico inerziale [zc]	1,0

==========

Carico limite	558,65 kN/m²
Resistenza di progetto	310,36 kN/m²
Condizione di verifica [Ed<=Rd]	Verificata

==========

Autore: Meyerhof and Hanna (1978) (Condizione drenata)

==========

Strato 1 sopra, strato 2 sotto

Fattori di capacità portante strato 1	
Fattore [Nq]	1,0
Fattore [Nc]	5,14
Fattori di capacità portante strato 2	
Fattore [Nq]	73,9
Fattore [Nc]	83,86
Fattore [Ng]	27,26
Carico limite strato 2 (qb)	1443,43 kN/m²
Carico limite strato 1 (qt)	352,22 kN/m²
Incremento carico limite strato 1	16,16 kN/m²
Coefficiente di punzonamento (ks)	0,0
Rapporto (q1/q2)	1,74

==========

Carico limite	352,22 kN/m²
Resistenza di progetto	195,68 kN/m²
Condizione di verifica [Ed<=Rd]	Verificata

==========

1. Model geometry

This section provides model geometry information, including items such as joint coordinates, joint restraints, and element connectivity.

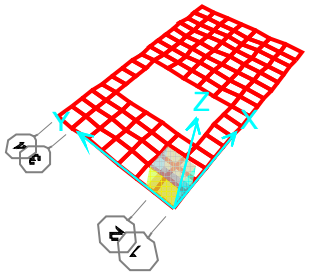

Figure 1: Finite element model

1.1. Joint coordinates

Table 1: Joint Coordinates

Table 1: Joint Coordinates

Joint	CoordSys	CoordType	GlobalX	GlobalY	GlobalZ
			m	m	m
1	GLOBAL	Cartesian	0.	0.	0.
2	GLOBAL	Cartesian	7.05	0.	0.
3	GLOBAL	Cartesian	7.05	3.45	0.
4	GLOBAL	Cartesian	0.	3.45	0.
5	GLOBAL	Cartesian	0.5	2.95	0.
6	GLOBAL	Cartesian	6.55	0.5	0.
7	GLOBAL	Cartesian	0.	9.95	0.
8	GLOBAL	Cartesian	0.5	9.95	0.
9	GLOBAL	Cartesian	0.5	10.45	0.
10	GLOBAL	Cartesian	0.	10.45	0.
11	GLOBAL	Cartesian	6.55	9.95	0.

Table 1: Joint Coordinates

Joint	CoordSys	CoordType	GlobalX	GlobalY	GlobalZ
			m	m	m
12	GLOBAL	Cartesian	7.05	9.95	0.
13	GLOBAL	Cartesian	7.05	10.45	0.
14	GLOBAL	Cartesian	6.55	10.45	0.
15	GLOBAL	Cartesian	7.05	12.9	0.
16	GLOBAL	Cartesian	7.05	13.4	0.
17	GLOBAL	Cartesian	6.55	13.4	0.
18	GLOBAL	Cartesian	6.55	12.9	0.
19	GLOBAL	Cartesian	0.5	13.4	0.
20	GLOBAL	Cartesian	0.	13.4	0.
21	GLOBAL	Cartesian	0.	12.9	0.
22	GLOBAL	Cartesian	0.5	12.9	0.
23	GLOBAL	Cartesian	1.7	12.9	0.
24	GLOBAL	Cartesian	3.5	10.45	0.
25	GLOBAL	Cartesian	1.7	2.95	0.
26	GLOBAL	Cartesian	3.5	0.5	0.
27	GLOBAL	Cartesian	3.5	0.	0.
28	GLOBAL	Cartesian	1.7	3.45	0.
29	GLOBAL	Cartesian	3.5	2.95	0.
30	GLOBAL	Cartesian	1.7	0.5	0.
31	GLOBAL	Cartesian	3.5	9.95	0.
32	GLOBAL	Cartesian	1.7	13.4	0.
33	GLOBAL	Cartesian	1.7	10.45	0.
34	GLOBAL	Cartesian	3.5	12.9	0.
35	GLOBAL	Cartesian	1.7	0.	0.
36	GLOBAL	Cartesian	3.5	3.45	0.
37	GLOBAL	Cartesian	1.7	9.95	0.
38	GLOBAL	Cartesian	3.5	13.4	0.
39	GLOBAL	Cartesian	7.05	0.99	0.
40	GLOBAL	Cartesian	6.55	0.99	0.
41	GLOBAL	Cartesian	7.05	1.48	0.
42	GLOBAL	Cartesian	6.55	1.48	0.
43	GLOBAL	Cartesian	7.05	1.97	0.
44	GLOBAL	Cartesian	6.55	1.97	0.
45	GLOBAL	Cartesian	7.05	2.46	0.
46	GLOBAL	Cartesian	6.55	2.46	0.
47	GLOBAL	Cartesian	0.	2.46	0.
48	GLOBAL	Cartesian	0.5	2.46	0.
49	GLOBAL	Cartesian	0.	1.97	0.
50	GLOBAL	Cartesian	0.5	1.97	0.
51	GLOBAL	Cartesian	0.	1.48	0.
52	GLOBAL	Cartesian	0.5	1.48	0.
53	GLOBAL	Cartesian	0.	0.99	0.
54	GLOBAL	Cartesian	0.5	0.99	0.

Table 1: Joint Coordinates

Joint	CoordSys	CoordType	GlobalX	GlobalY	GlobalZ
			m	m	m
55	GLOBAL	Cartesian	7.05	10.94	0.
56	GLOBAL	Cartesian	6.55	10.94	0.
57	GLOBAL	Cartesian	0.5	0.	0.
58	GLOBAL	Cartesian	0.5	0.5	0.
59	GLOBAL	Cartesian	0.	0.5	0.
60	GLOBAL	Cartesian	6.55	0.	0.
61	GLOBAL	Cartesian	7.05	0.5	0.
62	GLOBAL	Cartesian	7.05	2.95	0.
63	GLOBAL	Cartesian	6.55	2.95	0.
64	GLOBAL	Cartesian	6.55	3.45	0.
65	GLOBAL	Cartesian	0.5	3.45	0.
66	GLOBAL	Cartesian	0.	2.95	0.
67	GLOBAL	Cartesian	7.05	11.43	0.
68	GLOBAL	Cartesian	6.55	11.43	0.
69	GLOBAL	Cartesian	7.05	11.92	0.
70	GLOBAL	Cartesian	6.55	11.92	0.
71	GLOBAL	Cartesian	7.05	12.41	0.
72	GLOBAL	Cartesian	6.55	12.41	0.
73	GLOBAL	Cartesian	0.	12.41	0.
74	GLOBAL	Cartesian	0.5	12.41	0.
75	GLOBAL	Cartesian	0.	11.92	0.
76	GLOBAL	Cartesian	0.5	11.92	0.
77	GLOBAL	Cartesian	0.	11.43	0.
78	GLOBAL	Cartesian	0.5	11.43	0.
79	GLOBAL	Cartesian	0.	10.94	0.
80	GLOBAL	Cartesian	0.5	10.94	0.
81	GLOBAL	Cartesian	6.11429	0.5	0.
82	GLOBAL	Cartesian	6.11429	0.	0.
83	GLOBAL	Cartesian	5.67857	0.5	0.
84	GLOBAL	Cartesian	5.67857	0.	0.
85	GLOBAL	Cartesian	5.24286	0.5	0.
86	GLOBAL	Cartesian	5.24286	0.	0.
87	GLOBAL	Cartesian	4.80714	0.5	0.
88	GLOBAL	Cartesian	4.80714	0.	0.
89	GLOBAL	Cartesian	4.37143	0.5	0.
90	GLOBAL	Cartesian	4.37143	0.	0.
91	GLOBAL	Cartesian	3.93571	0.5	0.
92	GLOBAL	Cartesian	3.93571	0.	0.
93	GLOBAL	Cartesian	0.9	2.95	0.
94	GLOBAL	Cartesian	0.9	3.45	0.
95	GLOBAL	Cartesian	1.3	2.95	0.
96	GLOBAL	Cartesian	1.3	3.45	0.
97	GLOBAL	Cartesian	6.11429	0.99	0.

Table 1: Joint Coordinates

Joint	CoordSys	CoordType	GlobalX	GlobalY	GlobalZ
			m	m	m
98	GLOBAL	Cartesian	5.67857	0.99	0.
99	GLOBAL	Cartesian	5.24286	0.99	0.
100	GLOBAL	Cartesian	4.80714	0.99	0.
101	GLOBAL	Cartesian	4.37143	0.99	0.
102	GLOBAL	Cartesian	3.93571	0.99	0.
103	GLOBAL	Cartesian	3.5	0.99	0.
104	GLOBAL	Cartesian	6.11429	1.48	0.
105	GLOBAL	Cartesian	5.67857	1.48	0.
106	GLOBAL	Cartesian	5.24286	1.48	0.
107	GLOBAL	Cartesian	4.80714	1.48	0.
108	GLOBAL	Cartesian	4.37143	1.48	0.
109	GLOBAL	Cartesian	3.93571	1.48	0.
110	GLOBAL	Cartesian	3.5	1.48	0.
111	GLOBAL	Cartesian	6.11429	1.97	0.
112	GLOBAL	Cartesian	5.67857	1.97	0.
113	GLOBAL	Cartesian	5.24286	1.97	0.
114	GLOBAL	Cartesian	4.80714	1.97	0.
115	GLOBAL	Cartesian	4.37143	1.97	0.
116	GLOBAL	Cartesian	3.93571	1.97	0.
117	GLOBAL	Cartesian	3.5	1.97	0.
118	GLOBAL	Cartesian	6.11429	2.46	0.
119	GLOBAL	Cartesian	5.67857	2.46	0.
120	GLOBAL	Cartesian	5.24286	2.46	0.
121	GLOBAL	Cartesian	4.80714	2.46	0.
122	GLOBAL	Cartesian	4.37143	2.46	0.
123	GLOBAL	Cartesian	3.93571	2.46	0.
124	GLOBAL	Cartesian	3.5	2.46	0.
125	GLOBAL	Cartesian	6.11429	2.95	0.
126	GLOBAL	Cartesian	5.67857	2.95	0.
127	GLOBAL	Cartesian	5.24286	2.95	0.
128	GLOBAL	Cartesian	4.80714	2.95	0.
129	GLOBAL	Cartesian	4.37143	2.95	0.
130	GLOBAL	Cartesian	3.93571	2.95	0.
131	GLOBAL	Cartesian	0.9	2.46	0.
132	GLOBAL	Cartesian	1.3	2.46	0.
133	GLOBAL	Cartesian	1.7	2.46	0.
134	GLOBAL	Cartesian	0.9	1.97	0.
135	GLOBAL	Cartesian	1.3	1.97	0.
136	GLOBAL	Cartesian	1.7	1.97	0.
137	GLOBAL	Cartesian	0.9	1.48	0.
138	GLOBAL	Cartesian	1.3	1.48	0.
139	GLOBAL	Cartesian	1.7	1.48	0.
140	GLOBAL	Cartesian	0.9	0.99	0.

Table 1: Joint Coordinates

Joint	CoordSys	CoordType	GlobalX	GlobalY	GlobalZ
			m	m	m
141	GLOBAL	Cartesian	1.3	0.99	0.
142	GLOBAL	Cartesian	1.7	0.99	0.
143	GLOBAL	Cartesian	0.9	0.5	0.
144	GLOBAL	Cartesian	1.3	0.5	0.
145	GLOBAL	Cartesian	6.11429	10.45	0.
146	GLOBAL	Cartesian	6.11429	9.95	0.
147	GLOBAL	Cartesian	5.67857	10.45	0.
148	GLOBAL	Cartesian	5.67857	9.95	0.
149	GLOBAL	Cartesian	5.24286	10.45	0.
150	GLOBAL	Cartesian	5.24286	9.95	0.
151	GLOBAL	Cartesian	4.80714	10.45	0.
152	GLOBAL	Cartesian	4.80714	9.95	0.
153	GLOBAL	Cartesian	4.37143	10.45	0.
154	GLOBAL	Cartesian	4.37143	9.95	0.
155	GLOBAL	Cartesian	3.93571	10.45	0.
156	GLOBAL	Cartesian	3.93571	9.95	0.
157	GLOBAL	Cartesian	0.9	12.9	0.
158	GLOBAL	Cartesian	0.9	13.4	0.
159	GLOBAL	Cartesian	1.3	12.9	0.
160	GLOBAL	Cartesian	1.3	13.4	0.
161	GLOBAL	Cartesian	0.9	12.41	0.
162	GLOBAL	Cartesian	1.3	12.41	0.
163	GLOBAL	Cartesian	1.7	12.41	0.
164	GLOBAL	Cartesian	0.9	11.92	0.
165	GLOBAL	Cartesian	1.3	11.92	0.
166	GLOBAL	Cartesian	1.7	11.92	0.
167	GLOBAL	Cartesian	0.9	11.43	0.
168	GLOBAL	Cartesian	1.3	11.43	0.
169	GLOBAL	Cartesian	1.7	11.43	0.
170	GLOBAL	Cartesian	0.9	10.94	0.
171	GLOBAL	Cartesian	1.3	10.94	0.
172	GLOBAL	Cartesian	1.7	10.94	0.
173	GLOBAL	Cartesian	0.9	10.45	0.
174	GLOBAL	Cartesian	1.3	10.45	0.
175	GLOBAL	Cartesian	6.11429	10.94	0.
176	GLOBAL	Cartesian	5.67857	10.94	0.
177	GLOBAL	Cartesian	5.24286	10.94	0.
178	GLOBAL	Cartesian	4.80714	10.94	0.
179	GLOBAL	Cartesian	4.37143	10.94	0.
180	GLOBAL	Cartesian	3.93571	10.94	0.
181	GLOBAL	Cartesian	3.5	10.94	0.
182	GLOBAL	Cartesian	6.11429	11.43	0.
183	GLOBAL	Cartesian	5.67857	11.43	0.

Table 1: Joint Coordinates

Joint	CoordSys	CoordType	GlobalX	GlobalY	GlobalZ
			m	m	m
184	GLOBAL	Cartesian	5.24286	11.43	0.
185	GLOBAL	Cartesian	4.80714	11.43	0.
186	GLOBAL	Cartesian	4.37143	11.43	0.
187	GLOBAL	Cartesian	3.93571	11.43	0.
188	GLOBAL	Cartesian	3.5	11.43	0.
189	GLOBAL	Cartesian	6.11429	11.92	0.
190	GLOBAL	Cartesian	5.67857	11.92	0.
191	GLOBAL	Cartesian	5.24286	11.92	0.
192	GLOBAL	Cartesian	4.80714	11.92	0.
193	GLOBAL	Cartesian	4.37143	11.92	0.
194	GLOBAL	Cartesian	3.93571	11.92	0.
195	GLOBAL	Cartesian	3.5	11.92	0.
196	GLOBAL	Cartesian	6.11429	12.41	0.
197	GLOBAL	Cartesian	5.67857	12.41	0.
198	GLOBAL	Cartesian	5.24286	12.41	0.
199	GLOBAL	Cartesian	4.80714	12.41	0.
200	GLOBAL	Cartesian	4.37143	12.41	0.
201	GLOBAL	Cartesian	3.93571	12.41	0.
202	GLOBAL	Cartesian	3.5	12.41	0.
203	GLOBAL	Cartesian	6.11429	12.9	0.
204	GLOBAL	Cartesian	5.67857	12.9	0.
205	GLOBAL	Cartesian	5.24286	12.9	0.
206	GLOBAL	Cartesian	4.80714	12.9	0.
207	GLOBAL	Cartesian	4.37143	12.9	0.
208	GLOBAL	Cartesian	3.93571	12.9	0.
209	GLOBAL	Cartesian	0.9	0.	0.
210	GLOBAL	Cartesian	1.3	0.	0.
211	GLOBAL	Cartesian	3.05	0.5	0.
212	GLOBAL	Cartesian	3.05	0.	0.
213	GLOBAL	Cartesian	2.6	0.5	0.
214	GLOBAL	Cartesian	2.6	0.	0.
215	GLOBAL	Cartesian	2.15	0.5	0.
216	GLOBAL	Cartesian	2.15	0.	0.
217	GLOBAL	Cartesian	6.11429	3.45	0.
218	GLOBAL	Cartesian	5.67857	3.45	0.
219	GLOBAL	Cartesian	5.24286	3.45	0.
220	GLOBAL	Cartesian	4.80714	3.45	0.
221	GLOBAL	Cartesian	4.37143	3.45	0.
222	GLOBAL	Cartesian	3.93571	3.45	0.
223	GLOBAL	Cartesian	2.15	2.95	0.
224	GLOBAL	Cartesian	2.15	3.45	0.
225	GLOBAL	Cartesian	2.6	2.95	0.
226	GLOBAL	Cartesian	2.6	3.45	0.

Table 1: Joint Coordinates

Joint	CoordSys	CoordType	GlobalX	GlobalY	GlobalZ
			m	m	m
227	GLOBAL	Cartesian	3.05	2.95	0.
228	GLOBAL	Cartesian	3.05	3.45	0.
229	GLOBAL	Cartesian	0.9	9.95	0.
230	GLOBAL	Cartesian	1.3	9.95	0.
231	GLOBAL	Cartesian	3.05	10.45	0.
232	GLOBAL	Cartesian	3.05	9.95	0.
233	GLOBAL	Cartesian	2.6	10.45	0.
234	GLOBAL	Cartesian	2.6	9.95	0.
235	GLOBAL	Cartesian	2.15	10.45	0.
236	GLOBAL	Cartesian	2.15	9.95	0.
237	GLOBAL	Cartesian	6.11429	13.4	0.
238	GLOBAL	Cartesian	5.67857	13.4	0.
239	GLOBAL	Cartesian	5.24286	13.4	0.
240	GLOBAL	Cartesian	4.80714	13.4	0.
241	GLOBAL	Cartesian	4.37143	13.4	0.
242	GLOBAL	Cartesian	3.93571	13.4	0.
243	GLOBAL	Cartesian	2.15	12.9	0.
244	GLOBAL	Cartesian	2.15	13.4	0.
245	GLOBAL	Cartesian	2.6	12.9	0.
246	GLOBAL	Cartesian	2.6	13.4	0.
247	GLOBAL	Cartesian	3.05	12.9	0.
248	GLOBAL	Cartesian	3.05	13.4	0.

1.2. Element connectivity

Table 2: Connectivity - Area

Table 2: Connectivity - Area

Area	Joint1	Joint2	Joint3	Joint4
1	7	8	9	10
2	11	12	13	14
3	15	16	17	18
4	19	20	21	22
29	61	39	40	6
30	39	41	42	40
31	41	43	44	42
32	43	45	46	44
33	45	62	63	46

Table 2: Connectivity - Area

Area	Joint1	Joint2	Joint3	Joint4
34	66	47	48	5
35	47	49	50	48
36	49	51	52	50
37	51	53	54	52
38	53	59	58	54
39	13	55	56	14
40	55	67	68	56
41	67	69	70	68
42	1	57	58	59
43	69	71	72	70
44	60	2	61	6
45	71	15	18	72
46	62	3	64	63
48	65	4	66	5
49	21	73	74	22
50	73	75	76	74
51	75	77	78	76
52	77	79	80	78
53	79	10	9	80
54	60	6	81	82
55	82	81	83	84
56	84	83	85	86
57	86	85	87	88
58	88	87	89	90
59	90	89	91	92
60	92	91	26	27
61	65	5	93	94
62	94	93	95	96
63	96	95	25	28
64	6	40	97	81
65	81	97	98	83
66	83	98	99	85
67	85	99	100	87
68	87	100	101	89
69	89	101	102	91
70	91	102	103	26
71	40	42	104	97
72	97	104	105	98
73	98	105	106	99
74	99	106	107	100
75	100	107	108	101
76	101	108	109	102
77	102	109	110	103

Table 2: Connectivity - Area

Area	Joint1	Joint2	Joint3	Joint4
78	42	44	111	104
79	104	111	112	105
80	105	112	113	106
81	106	113	114	107
82	107	114	115	108
83	108	115	116	109
84	109	116	117	110
85	44	46	118	111
86	111	118	119	112
87	112	119	120	113
88	113	120	121	114
89	114	121	122	115
90	115	122	123	116
91	116	123	124	117
92	46	63	125	118
93	118	125	126	119
94	119	126	127	120
95	120	127	128	121
96	121	128	129	122
97	122	129	130	123
98	123	130	29	124
99	5	48	131	93
100	93	131	132	95
101	95	132	133	25
102	48	50	134	131
103	131	134	135	132
104	132	135	136	133
105	50	52	137	134
106	134	137	138	135
107	135	138	139	136
108	52	54	140	137
109	137	140	141	138
110	138	141	142	139
111	54	58	143	140
112	140	143	144	141
113	141	144	30	142
114	11	14	145	146
115	146	145	147	148
116	148	147	149	150
117	150	149	151	152
118	152	151	153	154
119	154	153	155	156
120	156	155	24	31

Table 2: Connectivity - Area

Area	Joint1	Joint2	Joint3	Joint4
121	19	22	157	158
122	158	157	159	160
123	160	159	23	32
124	22	74	161	157
125	157	161	162	159
126	159	162	163	23
127	74	76	164	161
128	161	164	165	162
129	162	165	166	163
130	76	78	167	164
131	164	167	168	165
132	165	168	169	166
133	78	80	170	167
134	167	170	171	168
135	168	171	172	169
136	80	9	173	170
137	170	173	174	171
138	171	174	33	172
139	14	56	175	145
140	145	175	176	147
141	147	176	177	149
142	149	177	178	151
143	151	178	179	153
144	153	179	180	155
145	155	180	181	24
146	56	68	182	175
147	175	182	183	176
148	176	183	184	177
149	177	184	185	178
150	178	185	186	179
151	179	186	187	180
152	180	187	188	181
153	68	70	189	182
154	182	189	190	183
155	183	190	191	184
156	184	191	192	185
157	185	192	193	186
158	186	193	194	187
159	187	194	195	188
160	70	72	196	189
161	189	196	197	190
162	190	197	198	191
163	191	198	199	192

Table 2: Connectivity - Area

Area	Joint1	Joint2	Joint3	Joint4
164	192	199	200	193
165	193	200	201	194
166	194	201	202	195
167	72	18	203	196
168	196	203	204	197
169	197	204	205	198
170	198	205	206	199
171	199	206	207	200
172	200	207	208	201
173	201	208	34	202
174	58	57	209	143
175	143	209	210	144
176	144	210	35	30
177	27	26	211	212
178	212	211	213	214
179	214	213	215	216
180	216	215	30	35
181	63	64	217	125
182	125	217	218	126
183	126	218	219	127
184	127	219	220	128
185	128	220	221	129
186	129	221	222	130
187	130	222	36	29
188	28	25	223	224
189	224	223	225	226
190	226	225	227	228
191	228	227	29	36
192	9	8	229	173
193	173	229	230	174
194	174	230	37	33
195	31	24	231	232
196	232	231	233	234
197	234	233	235	236
198	236	235	33	37
199	18	17	237	203
200	203	237	238	204
201	204	238	239	205
202	205	239	240	206
203	206	240	241	207
204	207	241	242	208
205	208	242	38	34
206	32	23	243	244

Table 2: Connectivity - Area

Area	Joint1	Joint2	Joint3	Joint4
207	244	243	245	246
208	246	245	247	248
209	248	247	34	38

Table 3: Area Section Assignments

Table 3: Area Section Assignments

Area	Section	MatProp
1	PLATEA_30	Default
2	PLATEA_30	Default
3	PLATEA_30	Default
4	PLATEA_30	Default
29	PLATEA_30	Default
30	PLATEA_30	Default
31	PLATEA_30	Default
32	PLATEA_30	Default
33	PLATEA_30	Default
34	PLATEA_30	Default
35	PLATEA_30	Default
36	PLATEA_30	Default
37	PLATEA_30	Default
38	PLATEA_30	Default
39	PLATEA_30	Default
40	PLATEA_30	Default
41	PLATEA_30	Default
42	PLATEA_30	Default
43	PLATEA_30	Default
44	PLATEA_30	Default
45	PLATEA_30	Default
46	PLATEA_30	Default
48	PLATEA_30	Default
49	PLATEA_30	Default
50	PLATEA_30	Default
51	PLATEA_30	Default
52	PLATEA_30	Default
53	PLATEA_30	Default
54	PLATEA_30	Default
55	PLATEA_30	Default
56	PLATEA_30	Default
57	PLATEA_30	Default

Table 3: Area Section Assignments

Area	Section	MatProp
58	PLATEA_30	Default
59	PLATEA_30	Default
60	PLATEA_30	Default
61	PLATEA_30	Default
62	PLATEA_30	Default
63	PLATEA_30	Default
64	PLATEA_30	Default
65	PLATEA_30	Default
66	PLATEA_30	Default
67	PLATEA_30	Default
68	PLATEA_30	Default
69	PLATEA_30	Default
70	PLATEA_30	Default
71	PLATEA_30	Default
72	PLATEA_30	Default
73	PLATEA_30	Default
74	PLATEA_30	Default
75	PLATEA_30	Default
76	PLATEA_30	Default
77	PLATEA_30	Default
78	PLATEA_30	Default
79	PLATEA_30	Default
80	PLATEA_30	Default
81	PLATEA_30	Default
82	PLATEA_30	Default
83	PLATEA_30	Default
84	PLATEA_30	Default
85	PLATEA_30	Default
86	PLATEA_30	Default
87	PLATEA_30	Default
88	PLATEA_30	Default
89	PLATEA_30	Default
90	PLATEA_30	Default
91	PLATEA_30	Default
92	PLATEA_30	Default
93	PLATEA_30	Default
94	PLATEA_30	Default
95	PLATEA_30	Default
96	PLATEA_30	Default
97	PLATEA_30	Default
98	PLATEA_30	Default
99	PLATEA_30	Default
100	PLATEA_30	Default

Table 3: Area Section Assignments

Area	Section	MatProp
101	PLATEA_30	Default
102	PLATEA_30	Default
103	PLATEA_30	Default
104	PLATEA_30	Default
105	PLATEA_30	Default
106	PLATEA_30	Default
107	PLATEA_30	Default
108	PLATEA_30	Default
109	PLATEA_30	Default
110	PLATEA_30	Default
111	PLATEA_30	Default
112	PLATEA_30	Default
113	PLATEA_30	Default
114	PLATEA_30	Default
115	PLATEA_30	Default
116	PLATEA_30	Default
117	PLATEA_30	Default
118	PLATEA_30	Default
119	PLATEA_30	Default
120	PLATEA_30	Default
121	PLATEA_30	Default
122	PLATEA_30	Default
123	PLATEA_30	Default
124	PLATEA_30	Default
125	PLATEA_30	Default
126	PLATEA_30	Default
127	PLATEA_30	Default
128	PLATEA_30	Default
129	PLATEA_30	Default
130	PLATEA_30	Default
131	PLATEA_30	Default
132	PLATEA_30	Default
133	PLATEA_30	Default
134	PLATEA_30	Default
135	PLATEA_30	Default
136	PLATEA_30	Default
137	PLATEA_30	Default
138	PLATEA_30	Default
139	PLATEA_30	Default
140	PLATEA_30	Default
141	PLATEA_30	Default
142	PLATEA_30	Default
143	PLATEA_30	Default

Table 3: Area Section Assignments

Area	Section	MatProp
144	PLATEA_30	Default
145	PLATEA_30	Default
146	PLATEA_30	Default
147	PLATEA_30	Default
148	PLATEA_30	Default
149	PLATEA_30	Default
150	PLATEA_30	Default
151	PLATEA_30	Default
152	PLATEA_30	Default
153	PLATEA_30	Default
154	PLATEA_30	Default
155	PLATEA_30	Default
156	PLATEA_30	Default
157	PLATEA_30	Default
158	PLATEA_30	Default
159	PLATEA_30	Default
160	PLATEA_30	Default
161	PLATEA_30	Default
162	PLATEA_30	Default
163	PLATEA_30	Default
164	PLATEA_30	Default
165	PLATEA_30	Default
166	PLATEA_30	Default
167	PLATEA_30	Default
168	PLATEA_30	Default
169	PLATEA_30	Default
170	PLATEA_30	Default
171	PLATEA_30	Default
172	PLATEA_30	Default
173	PLATEA_30	Default
174	PLATEA_30	Default
175	PLATEA_30	Default
176	PLATEA_30	Default
177	PLATEA_30	Default
178	PLATEA_30	Default
179	PLATEA_30	Default
180	PLATEA_30	Default
181	PLATEA_30	Default
182	PLATEA_30	Default
183	PLATEA_30	Default
184	PLATEA_30	Default
185	PLATEA_30	Default
186	PLATEA_30	Default

Table 3: Area Section Assignments

Area	Section	MatProp
187	PLATEA_30	Default
188	PLATEA_30	Default
189	PLATEA_30	Default
190	PLATEA_30	Default
191	PLATEA_30	Default
192	PLATEA_30	Default
193	PLATEA_30	Default
194	PLATEA_30	Default
195	PLATEA_30	Default
196	PLATEA_30	Default
197	PLATEA_30	Default
198	PLATEA_30	Default
199	PLATEA_30	Default
200	PLATEA_30	Default
201	PLATEA_30	Default
202	PLATEA_30	Default
203	PLATEA_30	Default
204	PLATEA_30	Default
205	PLATEA_30	Default
206	PLATEA_30	Default
207	PLATEA_30	Default
208	PLATEA_30	Default
209	PLATEA_30	Default

2. Material properties

This section provides material property information for materials used in the model.

Table 4: Material Properties 02 - Basic Mechanical Properties

Table 4: Material Properties 02 - Basic Mechanical Properties

Material	UnitWeight	UnitMass	E1	G12	U12	A1
	KN/m3	KN-s2/m4	KN/m2	KN/m2		1/C
B450C	7.6973E+01	7.8490E+00	210000000.			1.1700E-05
C28/35	2.4993E+01	2.5485E+00	32308000.	13461666.67	0.2	1.0000E-05
S355	7.6973E+01	7.8490E+00	210000000.	80769230.77	0.3	1.1700E-05
Tendon	7.6973E+01	7.8490E+00	196500599.9			1.1700E-05

Table 5: Material Properties 03a - Steel Data

Table 5: Material Properties 03a - Steel Data

Material	Fy KN/m2	Fu KN/m2	FinalSlope	CoupModType
S355	355000.	510000.	-0.1	Von Mises

Table 6: Material Properties 03b - Concrete Data

Table 6: Material Properties 03b - Concrete Data

Material	Fc KN/m2	eFc KN/m2	FinalSlope	CoupModType
C28/35	28000.	28000.	-0.1	Modified Darwin-Pecknold

Table 7: Material Properties 03e - Rebar Data

Table 7: Material Properties 03e - Rebar Data

Material	Fy KN/m2	Fu KN/m2	FinalSlope	CoupModType
B450C	450000.	540000.	-0.1	Von Mises

Table 8: Material Properties 03f - Tendon Data

Table 8: Material Properties 03f - Tendon Data

Material	Fy KN/m2	Fu KN/m2	FinalSlope	CoupModType
Tendon	1689905.16	1861584.63	-0.1	Von Mises

3. Section properties

This section provides section property information for objects used in the model.

3.1. Frames

Table 9: Frame Section Properties 01 - General, Part 1 of 4

Table 9: Frame Section Properties 01 - General, Part 1 of 4

SectionName	Material	Shape	t3	t2	S33Top	S33Bot	S22Left	S22Right	Area	TorsConst	I33
			m	m	m3	m3	m3	m3	m2	m4	m4
FSEC1	S355	Rectangular	0.5	0.3	0.0125	0.0125	0.0075	0.0075	0.15	0.002817	0.003125

Table 9: Frame Section Properties 01 - General, Part 2 of 4

Table 9: Frame Section Properties 01 - General, Part 2 of 4

SectionName	I22	CGOffset3	I23	CGOffset2	AS2	AS3
	m4	m	m4	m	m2	m2
FSEC1	0.001125	0.	0.	0.	0.125	0.125

Table 9: Frame Section Properties 01 - General, Part 3 of 4

Table 9: Frame Section Properties 01 - General, Part 3 of 4

SectionName	EccV3	Cw	Z33	Z22	R33	R22
	m	m6	m3	m3	m	m
FSEC1	0.	0.	0.01875	0.01125	0.144338	0.086603

Table 9: Frame Section Properties 01 - General, Part 4 of 4

Table 9: Frame Section Properties 01 - General, Part 4 of 4

SectionName	EccV2	AMod	A2Mod	A3Mod	JMod	I2Mod	I3Mod	MMod	WMod
	m								
FSEC1	0.	1.	1.	1.	1.	1.	1.	1.	1.

3.2. Areas

Table 10: Area Section Properties, Part 1 of 2

Table 10: Area Section Properties, Part 1 of 2

Section	Material	AreaType	Type	DrillDOF	Thickness	BendThick	F11Mod	F22Mod	F12Mod	M11Mod
					m	m				
PLATEA_30	C28/35	Shell	Shell-Thin	Yes	0.3	0.3	1.	1.	1.	1.

Table 10: Area Section Properties, Part 2 of 2

Table 10: Area Section Properties, Part 2 of 2

Section	M22Mod	M12Mod	V13Mod	V23Mod	MMod	WMod
PLATEA_30	1.	1.	1.	1.	1.	1.

3.3. Solids

Table 11: Solid Property Definitions

Table 11: Solid Property Definitions

SolidProp	Material	MatAngleA	MatAngleB	MatAngleC
		Degrees	Degrees	Degrees
Solid1	C28/35	0.	0.	0.

4. Load patterns

This section provides loading information as applied to the model.

4.1. Definitions

Table 12: Load Pattern Definitions

Table 12: Load Pattern Definitions

LoadPat	DesignType	SelfWtMult	AutoLoad
DEAD	Dead	1.	
G1_power station	Super Dead	0.	
G2_power station	Super Dead	0.	

Table 12: Load Pattern Definitions

LoadPat	DesignType	SelfWtMult	AutoLoad
Q_neve	Snow	0.	
Q_manutenzione	Live	0.	
EQ_X	Quake	0.	None
EQ_Y	Quake	0.	None

5. Load cases

This section provides load case information.

5.1. Definitions

Table 13: Load Case Definitions

Table 13: Load Case Definitions

Case	Type	InitialCond	ModalCase	BaseCase	MassSource	DesActOpt	DesignAct
DEAD	LinStatic	Zero				Prog Det	Non-Composite
MODAL	LinModal	Zero				Prog Det	Other
G1_power station	LinStatic	Zero				Prog Det	Long-Term Composite
G2_power station	LinStatic	Zero				Prog Det	Long-Term Composite
Q_power station	LinStatic	Zero				Prog Det	Short-Term Composite
Q_neve	LinStatic	Zero				Prog Det	Short-Term Composite
SLU_01_SC	StagedConst	Zero				Prog Det	Staged
SLU_02_SC	StagedConst	Zero				Prog Det	Staged
SLE_01_CAR_SC	StagedConst	Zero				Prog Det	Staged
SLE_02_CAR_SC	StagedConst	Zero				Prog Det	Staged
SLE_01_FREQ_SC	StagedConst	Zero				Prog Det	Staged
SLE_02_FREQ_SC	StagedConst	Zero				Prog Det	Staged
SLE_01_QP_SC	StagedConst	Zero				Prog Det	Staged
SLU_01_SNL	NonStatic	Zero				Prog Det	Non-Composite
Q_manutenzione	LinStatic	Zero				Prog Det	Short-Term Composite
EQ_X	LinStatic	Zero				Prog Det	Short-Term Composite

Table 13: Load Case Definitions

Case	Type	InitialCond	ModalCase	BaseCase	MassSource	DesActOpt	DesignAct
EQ_Y	LinStatic	Zero				Prog Det	Short-Term Composite
SLU_EQ_01_SC	StagedConst	Zero				Prog Det	Staged
SLU_EQ_02_SC	StagedConst	Zero				Prog Det	Staged
SLU_EQ_03_SC	StagedConst	Zero				Prog Det	Staged
SLU_EQ_04_SC	StagedConst	Zero				Prog Det	Staged

5.2. Static case load assignments

Table 14: Case - Static 1 - Load Assignments

Table 14: Case - Static 1 - Load Assignments

Case	LoadType	LoadName	LoadSF
DEAD	Load pattern	DEAD	1.
G1_power station	Load pattern	G1_power station	1.
G2_power station	Load pattern	G2_power station	1.
Q_power station	Load pattern	Q_manutenzione	1.
Q_neve	Load pattern	Q_neve	1.
SLU_01_SNL	Load pattern	DEAD	1.3
SLU_01_SNL	Load pattern	G1_power station	1.3
SLU_01_SNL	Load pattern	G2_power station	1.5
SLU_01_SNL	Load pattern	Q_neve	1.5
Q_manutenzione	Load pattern	Q_manutenzione	1.
EQ_X	Load pattern	EQ_X	1.
EQ_Y	Load pattern	EQ_Y	1.

5.3. Response spectrum case load assignments

Table 15: Function - Response Spectrum - User

Table 15: Function - Response Spectrum - User

Name	Period	Accel	FuncDamp
	Sec		
UNIFRS	0.	1.	0.05
UNIFRS	1.	1.	

6. Structure results

This section provides structure results, including items such as structural periods and base reactions.

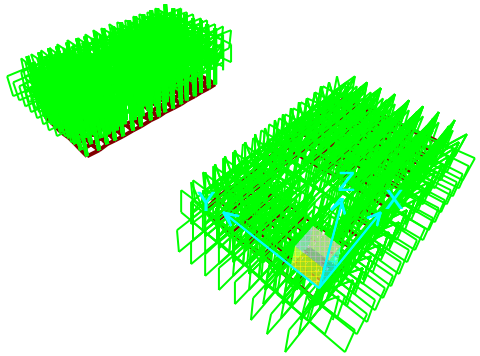

Figure 2: Deformed shape

6.1. Mass summary

Table 16: Assembled Joint Masses

Table 16: Assembled Joint Masses

Joint	MassSource	U1	U2	U3	R1	R2	R3	CenterX	CenterY	CenterZ
		KN-s2/m	KN-s2/m	KN-s2/m	KN-m-s2	KN-m-s2	KN-m-s2	m	m	m
1	MSSSRC1	4.779E-02	4.779E-02	4.779E-02	0.	0.	0.	0.	0.	0.
2	MSSSRC1	4.779E-02	4.779E-02	4.779E-02	0.	0.	0.	7.05	0.	0.
3	MSSSRC1	4.779E-02	4.779E-02	4.779E-02	0.	0.	0.	7.05	3.45	0.
4	MSSSRC1	4.779E-02	4.779E-02	4.779E-02	0.	0.	0.	0.	3.45	0.
5	MSSSRC1	0.17	0.17	0.17	0.	0.	0.	0.5	2.95	0.
6	MSSSRC1	0.18	0.18	0.18	0.	0.	0.	6.55	0.5	0.
7	MSSSRC1	4.779E-02	4.779E-02	4.779E-02	0.	0.	0.	0.	9.95	0.
8	MSSSRC1	8.601E-02	8.601E-02	8.601E-02	0.	0.	0.	0.5	9.95	0.
9	MSSSRC1	0.17	0.17	0.17	0.	0.	0.	0.5	10.45	0.
10	MSSSRC1	9.461E-02	9.461E-02	9.461E-02	0.	0.	0.	0.	10.45	0.
11	MSSSRC1	8.943E-02	8.943E-02	8.943E-02	0.	0.	0.	6.55	9.95	0.
12	MSSSRC1	4.779E-02	4.779E-02	4.779E-02	0.	0.	0.	7.05	9.95	0.

Table 16: Assembled Joint Masses

Joint	MassSource	U1	U2	U3	R1	R2	R3	CenterX	CenterY	CenterZ
		KN-s2/m	KN-s2/m	KN-s2/m	KN-m-s2	KN-m-s2	KN-m-s2	m	m	m
13	MSSSRC1	9.461E-02	9.461E-02	9.461E-02	0.	0.	0.	7.05	10.45	0.
14	MSSSRC1	0.18	0.18	0.18	0.	0.	0.	6.55	10.45	0.
15	MSSSRC1	9.461E-02	9.461E-02	9.461E-02	0.	0.	0.	7.05	12.9	0.
16	MSSSRC1	4.779E-02	4.779E-02	4.779E-02	0.	0.	0.	7.05	13.4	0.
17	MSSSRC1	8.943E-02	8.943E-02	8.943E-02	0.	0.	0.	6.55	13.4	0.
18	MSSSRC1	0.18	0.18	0.18	0.	0.	0.	6.55	12.9	0.
19	MSSSRC1	8.601E-02	8.601E-02	8.601E-02	0.	0.	0.	0.5	13.4	0.
20	MSSSRC1	4.779E-02	4.779E-02	4.779E-02	0.	0.	0.	0.	13.4	0.
21	MSSSRC1	9.461E-02	9.461E-02	9.461E-02	0.	0.	0.	0.	12.9	0.
22	MSSSRC1	0.17	0.17	0.17	0.	0.	0.	0.5	12.9	0.
23	MSSSRC1	0.12	0.12	0.12	0.	0.	0.	1.7	12.9	0.
24	MSSSRC1	0.13	0.13	0.13	0.	0.	0.	3.5	10.45	0.
25	MSSSRC1	0.12	0.12	0.12	0.	0.	0.	1.7	2.95	0.
26	MSSSRC1	0.13	0.13	0.13	0.	0.	0.	3.5	0.5	0.
27	MSSSRC1	8.465E-02	8.465E-02	8.465E-02	0.	0.	0.	3.5	0.	0.
28	MSSSRC1	8.123E-02	8.123E-02	8.123E-02	0.	0.	0.	1.7	3.45	0.
29	MSSSRC1	0.13	0.13	0.13	0.	0.	0.	3.5	2.95	0.
30	MSSSRC1	0.12	0.12	0.12	0.	0.	0.	1.7	0.5	0.
31	MSSSRC1	8.465E-02	8.465E-02	8.465E-02	0.	0.	0.	3.5	9.95	0.
32	MSSSRC1	8.123E-02	8.123E-02	8.123E-02	0.	0.	0.	1.7	13.4	0.
33	MSSSRC1	0.12	0.12	0.12	0.	0.	0.	1.7	10.45	0.
34	MSSSRC1	0.13	0.13	0.13	0.	0.	0.	3.5	12.9	0.
35	MSSSRC1	8.123E-02	8.123E-02	8.123E-02	0.	0.	0.	1.7	0.	0.
36	MSSSRC1	8.465E-02	8.465E-02	8.465E-02	0.	0.	0.	3.5	3.45	0.
37	MSSSRC1	8.123E-02	8.123E-02	8.123E-02	0.	0.	0.	1.7	9.95	0.
38	MSSSRC1	8.465E-02	8.465E-02	8.465E-02	0.	0.	0.	3.5	13.4	0.
39	MSSSRC1	9.366E-02	9.366E-02	9.366E-02	0.	0.	0.	7.05	0.99	0.
40	MSSSRC1	0.18	0.18	0.18	0.	0.	0.	6.55	0.99	0.
41	MSSSRC1	9.366E-02	9.366E-02	9.366E-02	0.	0.	0.	7.05	1.48	0.
42	MSSSRC1	0.18	0.18	0.18	0.	0.	0.	6.55	1.48	0.
43	MSSSRC1	9.366E-02	9.366E-02	9.366E-02	0.	0.	0.	7.05	1.97	0.
44	MSSSRC1	0.18	0.18	0.18	0.	0.	0.	6.55	1.97	0.
45	MSSSRC1	9.366E-02	9.366E-02	9.366E-02	0.	0.	0.	7.05	2.46	0.
46	MSSSRC1	0.18	0.18	0.18	0.	0.	0.	6.55	2.46	0.
47	MSSSRC1	9.366E-02	9.366E-02	9.366E-02	0.	0.	0.	0.	2.46	0.
48	MSSSRC1	0.17	0.17	0.17	0.	0.	0.	0.5	2.46	0.
49	MSSSRC1	9.366E-02	9.366E-02	9.366E-02	0.	0.	0.	0.	1.97	0.
50	MSSSRC1	0.17	0.17	0.17	0.	0.	0.	0.5	1.97	0.
51	MSSSRC1	9.366E-02	9.366E-02	9.366E-02	0.	0.	0.	0.	1.48	0.
52	MSSSRC1	0.17	0.17	0.17	0.	0.	0.	0.5	1.48	0.
53	MSSSRC1	9.366E-02	9.366E-02	9.366E-02	0.	0.	0.	0.	0.99	0.
54	MSSSRC1	0.17	0.17	0.17	0.	0.	0.	0.5	0.99	0.
55	MSSSRC1	9.366E-02	9.366E-02	9.366E-02	0.	0.	0.	7.05	10.94	0.

Table 16: Assembled Joint Masses

Joint	MassSource	U1	U2	U3	R1	R2	R3	CenterX	CenterY	CenterZ
		KN-s2/m	KN-s2/m	KN-s2/m	KN-m-s2	KN-m-s2	KN-m-s2	m	m	m
56	MSSSRC1	0.18	0.18	0.18	0.	0.	0.	6.55	10.94	0.
57	MSSSRC1	8.601E-02	8.601E-02	8.601E-02	0.	0.	0.	0.5	0.	0.
58	MSSSRC1	0.17	0.17	0.17	0.	0.	0.	0.5	0.5	0.
59	MSSSRC1	9.461E-02	9.461E-02	9.461E-02	0.	0.	0.	0.	0.5	0.
60	MSSSRC1	8.943E-02	8.943E-02	8.943E-02	0.	0.	0.	6.55	0.	0.
61	MSSSRC1	9.461E-02	9.461E-02	9.461E-02	0.	0.	0.	7.05	0.5	0.
62	MSSSRC1	9.461E-02	9.461E-02	9.461E-02	0.	0.	0.	7.05	2.95	0.
63	MSSSRC1	0.18	0.18	0.18	0.	0.	0.	6.55	2.95	0.
64	MSSSRC1	8.943E-02	8.943E-02	8.943E-02	0.	0.	0.	6.55	3.45	0.
65	MSSSRC1	8.601E-02	8.601E-02	8.601E-02	0.	0.	0.	0.5	3.45	0.
66	MSSSRC1	9.461E-02	9.461E-02	9.461E-02	0.	0.	0.	0.	2.95	0.
67	MSSSRC1	9.366E-02	9.366E-02	9.366E-02	0.	0.	0.	7.05	11.43	0.
68	MSSSRC1	0.18	0.18	0.18	0.	0.	0.	6.55	11.43	0.
69	MSSSRC1	9.366E-02	9.366E-02	9.366E-02	0.	0.	0.	7.05	11.92	0.
70	MSSSRC1	0.18	0.18	0.18	0.	0.	0.	6.55	11.92	0.
71	MSSSRC1	9.366E-02	9.366E-02	9.366E-02	0.	0.	0.	7.05	12.41	0.
72	MSSSRC1	0.18	0.18	0.18	0.	0.	0.	6.55	12.41	0.
73	MSSSRC1	9.366E-02	9.366E-02	9.366E-02	0.	0.	0.	0.	12.41	0.
74	MSSSRC1	0.17	0.17	0.17	0.	0.	0.	0.5	12.41	0.
75	MSSSRC1	9.366E-02	9.366E-02	9.366E-02	0.	0.	0.	0.	11.92	0.
76	MSSSRC1	0.17	0.17	0.17	0.	0.	0.	0.5	11.92	0.
77	MSSSRC1	9.366E-02	9.366E-02	9.366E-02	0.	0.	0.	0.	11.43	0.
78	MSSSRC1	0.17	0.17	0.17	0.	0.	0.	0.5	11.43	0.
79	MSSSRC1	9.366E-02	9.366E-02	9.366E-02	0.	0.	0.	0.	10.94	0.
80	MSSSRC1	0.17	0.17	0.17	0.	0.	0.	0.5	10.94	0.
81	MSSSRC1	0.16	0.16	0.16	0.	0.	0.	6.11429	0.5	0.
82	MSSSRC1	8.328E-02	8.328E-02	8.328E-02	0.	0.	0.	6.11429	0.	0.
83	MSSSRC1	0.16	0.16	0.16	0.	0.	0.	5.67857	0.5	0.
84	MSSSRC1	8.328E-02	8.328E-02	8.328E-02	0.	0.	0.	5.67857	0.	0.
85	MSSSRC1	0.16	0.16	0.16	0.	0.	0.	5.24286	0.5	0.
86	MSSSRC1	8.328E-02	8.328E-02	8.328E-02	0.	0.	0.	5.24286	0.	0.
87	MSSSRC1	0.16	0.16	0.16	0.	0.	0.	4.80714	0.5	0.
88	MSSSRC1	8.328E-02	8.328E-02	8.328E-02	0.	0.	0.	4.80714	0.	0.
89	MSSSRC1	0.16	0.16	0.16	0.	0.	0.	4.37143	0.5	0.
90	MSSSRC1	8.328E-02	8.328E-02	8.328E-02	0.	0.	0.	4.37143	0.	0.
91	MSSSRC1	0.16	0.16	0.16	0.	0.	0.	3.93571	0.5	0.
92	MSSSRC1	8.328E-02	8.328E-02	8.328E-02	0.	0.	0.	3.93571	0.	0.
93	MSSSRC1	0.15	0.15	0.15	0.	0.	0.	0.9	2.95	0.
94	MSSSRC1	7.646E-02	7.646E-02	7.646E-02	0.	0.	0.	0.9	3.45	0.
95	MSSSRC1	0.15	0.15	0.15	0.	0.	0.	1.3	2.95	0.
96	MSSSRC1	7.646E-02	7.646E-02	7.646E-02	0.	0.	0.	1.3	3.45	0.
97	MSSSRC1	0.16	0.16	0.16	0.	0.	0.	6.11429	0.99	0.
98	MSSSRC1	0.16	0.16	0.16	0.	0.	0.	5.67857	0.99	0.

Table 16: Assembled Joint Masses

Joint	MassSource	U1	U2	U3	R1	R2	R3	CenterX	CenterY	CenterZ
		KN-s2/m	KN-s2/m	KN-s2/m	KN-m-s2	KN-m-s2	KN-m-s2	m	m	m
99	MSSSRC1	0.16	0.16	0.16	0.	0.	0.	5.24286	0.99	0.
100	MSSSRC1	0.16	0.16	0.16	0.	0.	0.	4.80714	0.99	0.
101	MSSSRC1	0.16	0.16	0.16	0.	0.	0.	4.37143	0.99	0.
102	MSSSRC1	0.16	0.16	0.16	0.	0.	0.	3.93571	0.99	0.
103	MSSSRC1	8.162E-02	8.162E-02	8.162E-02	0.	0.	0.	3.5	0.99	0.
104	MSSSRC1	0.16	0.16	0.16	0.	0.	0.	6.11429	1.48	0.
105	MSSSRC1	0.16	0.16	0.16	0.	0.	0.	5.67857	1.48	0.
106	MSSSRC1	0.16	0.16	0.16	0.	0.	0.	5.24286	1.48	0.
107	MSSSRC1	0.16	0.16	0.16	0.	0.	0.	4.80714	1.48	0.
108	MSSSRC1	0.16	0.16	0.16	0.	0.	0.	4.37143	1.48	0.
109	MSSSRC1	0.16	0.16	0.16	0.	0.	0.	3.93571	1.48	0.
110	MSSSRC1	8.162E-02	8.162E-02	8.162E-02	0.	0.	0.	3.5	1.48	0.
111	MSSSRC1	0.16	0.16	0.16	0.	0.	0.	6.11429	1.97	0.
112	MSSSRC1	0.16	0.16	0.16	0.	0.	0.	5.67857	1.97	0.
113	MSSSRC1	0.16	0.16	0.16	0.	0.	0.	5.24286	1.97	0.
114	MSSSRC1	0.16	0.16	0.16	0.	0.	0.	4.80714	1.97	0.
115	MSSSRC1	0.16	0.16	0.16	0.	0.	0.	4.37143	1.97	0.
116	MSSSRC1	0.16	0.16	0.16	0.	0.	0.	3.93571	1.97	0.
117	MSSSRC1	8.162E-02	8.162E-02	8.162E-02	0.	0.	0.	3.5	1.97	0.
118	MSSSRC1	0.16	0.16	0.16	0.	0.	0.	6.11429	2.46	0.
119	MSSSRC1	0.16	0.16	0.16	0.	0.	0.	5.67857	2.46	0.
120	MSSSRC1	0.16	0.16	0.16	0.	0.	0.	5.24286	2.46	0.
121	MSSSRC1	0.16	0.16	0.16	0.	0.	0.	4.80714	2.46	0.
122	MSSSRC1	0.16	0.16	0.16	0.	0.	0.	4.37143	2.46	0.
123	MSSSRC1	0.16	0.16	0.16	0.	0.	0.	3.93571	2.46	0.
124	MSSSRC1	8.162E-02	8.162E-02	8.162E-02	0.	0.	0.	3.5	2.46	0.
125	MSSSRC1	0.16	0.16	0.16	0.	0.	0.	6.11429	2.95	0.
126	MSSSRC1	0.16	0.16	0.16	0.	0.	0.	5.67857	2.95	0.
127	MSSSRC1	0.16	0.16	0.16	0.	0.	0.	5.24286	2.95	0.
128	MSSSRC1	0.16	0.16	0.16	0.	0.	0.	4.80714	2.95	0.
129	MSSSRC1	0.16	0.16	0.16	0.	0.	0.	4.37143	2.95	0.
130	MSSSRC1	0.16	0.16	0.16	0.	0.	0.	3.93571	2.95	0.
131	MSSSRC1	0.15	0.15	0.15	0.	0.	0.	0.9	2.46	0.
132	MSSSRC1	0.15	0.15	0.15	0.	0.	0.	1.3	2.46	0.
133	MSSSRC1	7.493E-02	7.493E-02	7.493E-02	0.	0.	0.	1.7	2.46	0.
134	MSSSRC1	0.15	0.15	0.15	0.	0.	0.	0.9	1.97	0.
135	MSSSRC1	0.15	0.15	0.15	0.	0.	0.	1.3	1.97	0.
136	MSSSRC1	7.493E-02	7.493E-02	7.493E-02	0.	0.	0.	1.7	1.97	0.
137	MSSSRC1	0.15	0.15	0.15	0.	0.	0.	0.9	1.48	0.
138	MSSSRC1	0.15	0.15	0.15	0.	0.	0.	1.3	1.48	0.
139	MSSSRC1	7.493E-02	7.493E-02	7.493E-02	0.	0.	0.	1.7	1.48	0.
140	MSSSRC1	0.15	0.15	0.15	0.	0.	0.	0.9	0.99	0.
141	MSSSRC1	0.15	0.15	0.15	0.	0.	0.	1.3	0.99	0.

Table 16: Assembled Joint Masses

Joint	MassSource	U1	U2	U3	R1	R2	R3	CenterX	CenterY	CenterZ
		KN-s2/m	KN-s2/m	KN-s2/m	KN-m-s2	KN-m-s2	KN-m-s2	m	m	m
142	MSSSRC1	7.493E-02	7.493E-02	7.493E-02	0.	0.	0.	1.7	0.99	0.
143	MSSSRC1	0.15	0.15	0.15	0.	0.	0.	0.9	0.5	0.
144	MSSSRC1	0.15	0.15	0.15	0.	0.	0.	1.3	0.5	0.
145	MSSSRC1	0.16	0.16	0.16	0.	0.	0.	6.11429	10.45	0.
146	MSSSRC1	8.328E-02	8.328E-02	8.328E-02	0.	0.	0.	6.11429	9.95	0.
147	MSSSRC1	0.16	0.16	0.16	0.	0.	0.	5.67857	10.45	0.
148	MSSSRC1	8.328E-02	8.328E-02	8.328E-02	0.	0.	0.	5.67857	9.95	0.
149	MSSSRC1	0.16	0.16	0.16	0.	0.	0.	5.24286	10.45	0.
150	MSSSRC1	8.328E-02	8.328E-02	8.328E-02	0.	0.	0.	5.24286	9.95	0.
151	MSSSRC1	0.16	0.16	0.16	0.	0.	0.	4.80714	10.45	0.
152	MSSSRC1	8.328E-02	8.328E-02	8.328E-02	0.	0.	0.	4.80714	9.95	0.
153	MSSSRC1	0.16	0.16	0.16	0.	0.	0.	4.37143	10.45	0.
154	MSSSRC1	8.328E-02	8.328E-02	8.328E-02	0.	0.	0.	4.37143	9.95	0.
155	MSSSRC1	0.16	0.16	0.16	0.	0.	0.	3.93571	10.45	0.
156	MSSSRC1	8.328E-02	8.328E-02	8.328E-02	0.	0.	0.	3.93571	9.95	0.
157	MSSSRC1	0.15	0.15	0.15	0.	0.	0.	0.9	12.9	0.
158	MSSSRC1	7.646E-02	7.646E-02	7.646E-02	0.	0.	0.	0.9	13.4	0.
159	MSSSRC1	0.15	0.15	0.15	0.	0.	0.	1.3	12.9	0.
160	MSSSRC1	7.646E-02	7.646E-02	7.646E-02	0.	0.	0.	1.3	13.4	0.
161	MSSSRC1	0.15	0.15	0.15	0.	0.	0.	0.9	12.41	0.
162	MSSSRC1	0.15	0.15	0.15	0.	0.	0.	1.3	12.41	0.
163	MSSSRC1	7.493E-02	7.493E-02	7.493E-02	0.	0.	0.	1.7	12.41	0.
164	MSSSRC1	0.15	0.15	0.15	0.	0.	0.	0.9	11.92	0.
165	MSSSRC1	0.15	0.15	0.15	0.	0.	0.	1.3	11.92	0.
166	MSSSRC1	7.493E-02	7.493E-02	7.493E-02	0.	0.	0.	1.7	11.92	0.
167	MSSSRC1	0.15	0.15	0.15	0.	0.	0.	0.9	11.43	0.
168	MSSSRC1	0.15	0.15	0.15	0.	0.	0.	1.3	11.43	0.
169	MSSSRC1	7.493E-02	7.493E-02	7.493E-02	0.	0.	0.	1.7	11.43	0.
170	MSSSRC1	0.15	0.15	0.15	0.	0.	0.	0.9	10.94	0.
171	MSSSRC1	0.15	0.15	0.15	0.	0.	0.	1.3	10.94	0.
172	MSSSRC1	7.493E-02	7.493E-02	7.493E-02	0.	0.	0.	1.7	10.94	0.
173	MSSSRC1	0.15	0.15	0.15	0.	0.	0.	0.9	10.45	0.
174	MSSSRC1	0.15	0.15	0.15	0.	0.	0.	1.3	10.45	0.
175	MSSSRC1	0.16	0.16	0.16	0.	0.	0.	6.11429	10.94	0.
176	MSSSRC1	0.16	0.16	0.16	0.	0.	0.	5.67857	10.94	0.
177	MSSSRC1	0.16	0.16	0.16	0.	0.	0.	5.24286	10.94	0.
178	MSSSRC1	0.16	0.16	0.16	0.	0.	0.	4.80714	10.94	0.
179	MSSSRC1	0.16	0.16	0.16	0.	0.	0.	4.37143	10.94	0.
180	MSSSRC1	0.16	0.16	0.16	0.	0.	0.	3.93571	10.94	0.
181	MSSSRC1	8.162E-02	8.162E-02	8.162E-02	0.	0.	0.	3.5	10.94	0.
182	MSSSRC1	0.16	0.16	0.16	0.	0.	0.	6.11429	11.43	0.
183	MSSSRC1	0.16	0.16	0.16	0.	0.	0.	5.67857	11.43	0.
184	MSSSRC1	0.16	0.16	0.16	0.	0.	0.	5.24286	11.43	0.

Table 16: Assembled Joint Masses

Joint	MassSource	U1	U2	U3	R1	R2	R3	CenterX	CenterY	CenterZ
		KN-s2/m	KN-s2/m	KN-s2/m	KN-m-s2	KN-m-s2	KN-m-s2	m	m	m
185	MSSSRC1	0.16	0.16	0.16	0.	0.	0.	4.80714	11.43	0.
186	MSSSRC1	0.16	0.16	0.16	0.	0.	0.	4.37143	11.43	0.
187	MSSSRC1	0.16	0.16	0.16	0.	0.	0.	3.93571	11.43	0.
188	MSSSRC1	8.162E-02	8.162E-02	8.162E-02	0.	0.	0.	3.5	11.43	0.
189	MSSSRC1	0.16	0.16	0.16	0.	0.	0.	6.11429	11.92	0.
190	MSSSRC1	0.16	0.16	0.16	0.	0.	0.	5.67857	11.92	0.
191	MSSSRC1	0.16	0.16	0.16	0.	0.	0.	5.24286	11.92	0.
192	MSSSRC1	0.16	0.16	0.16	0.	0.	0.	4.80714	11.92	0.
193	MSSSRC1	0.16	0.16	0.16	0.	0.	0.	4.37143	11.92	0.
194	MSSSRC1	0.16	0.16	0.16	0.	0.	0.	3.93571	11.92	0.
195	MSSSRC1	8.162E-02	8.162E-02	8.162E-02	0.	0.	0.	3.5	11.92	0.
196	MSSSRC1	0.16	0.16	0.16	0.	0.	0.	6.11429	12.41	0.
197	MSSSRC1	0.16	0.16	0.16	0.	0.	0.	5.67857	12.41	0.
198	MSSSRC1	0.16	0.16	0.16	0.	0.	0.	5.24286	12.41	0.
199	MSSSRC1	0.16	0.16	0.16	0.	0.	0.	4.80714	12.41	0.
200	MSSSRC1	0.16	0.16	0.16	0.	0.	0.	4.37143	12.41	0.
201	MSSSRC1	0.16	0.16	0.16	0.	0.	0.	3.93571	12.41	0.
202	MSSSRC1	8.162E-02	8.162E-02	8.162E-02	0.	0.	0.	3.5	12.41	0.
203	MSSSRC1	0.16	0.16	0.16	0.	0.	0.	6.11429	12.9	0.
204	MSSSRC1	0.16	0.16	0.16	0.	0.	0.	5.67857	12.9	0.
205	MSSSRC1	0.16	0.16	0.16	0.	0.	0.	5.24286	12.9	0.
206	MSSSRC1	0.16	0.16	0.16	0.	0.	0.	4.80714	12.9	0.
207	MSSSRC1	0.16	0.16	0.16	0.	0.	0.	4.37143	12.9	0.
208	MSSSRC1	0.16	0.16	0.16	0.	0.	0.	3.93571	12.9	0.
209	MSSSRC1	7.646E-02	7.646E-02	7.646E-02	0.	0.	0.	0.9	0.	0.
210	MSSSRC1	7.646E-02	7.646E-02	7.646E-02	0.	0.	0.	1.3	0.	0.
211	MSSSRC1	8.601E-02	8.601E-02	8.601E-02	0.	0.	0.	3.05	0.5	0.
212	MSSSRC1	8.601E-02	8.601E-02	8.601E-02	0.	0.	0.	3.05	0.	0.
213	MSSSRC1	8.601E-02	8.601E-02	8.601E-02	0.	0.	0.	2.6	0.5	0.
214	MSSSRC1	8.601E-02	8.601E-02	8.601E-02	0.	0.	0.	2.6	0.	0.
215	MSSSRC1	8.601E-02	8.601E-02	8.601E-02	0.	0.	0.	2.15	0.5	0.
216	MSSSRC1	8.601E-02	8.601E-02	8.601E-02	0.	0.	0.	2.15	0.	0.
217	MSSSRC1	8.328E-02	8.328E-02	8.328E-02	0.	0.	0.	6.11429	3.45	0.
218	MSSSRC1	8.328E-02	8.328E-02	8.328E-02	0.	0.	0.	5.67857	3.45	0.
219	MSSSRC1	8.328E-02	8.328E-02	8.328E-02	0.	0.	0.	5.24286	3.45	0.
220	MSSSRC1	8.328E-02	8.328E-02	8.328E-02	0.	0.	0.	4.80714	3.45	0.
221	MSSSRC1	8.328E-02	8.328E-02	8.328E-02	0.	0.	0.	4.37143	3.45	0.
222	MSSSRC1	8.328E-02	8.328E-02	8.328E-02	0.	0.	0.	3.93571	3.45	0.
223	MSSSRC1	8.601E-02	8.601E-02	8.601E-02	0.	0.	0.	2.15	2.95	0.
224	MSSSRC1	8.601E-02	8.601E-02	8.601E-02	0.	0.	0.	2.15	3.45	0.
225	MSSSRC1	8.601E-02	8.601E-02	8.601E-02	0.	0.	0.	2.6	2.95	0.
226	MSSSRC1	8.601E-02	8.601E-02	8.601E-02	0.	0.	0.	2.6	3.45	0.
227	MSSSRC1	8.601E-02	8.601E-02	8.601E-02	0.	0.	0.	3.05	2.95	0.

Table 16: Assembled Joint Masses

Joint	MassSource	U1	U2	U3	R1	R2	R3	CenterX	CenterY	CenterZ
		KN-s2/m	KN-s2/m	KN-s2/m	KN-m-s2	KN-m-s2	KN-m-s2	m	m	m
228	MSSSRC1	8.601E-02	8.601E-02	8.601E-02	0.	0.	0.	3.05	3.45	0.
229	MSSSRC1	7.646E-02	7.646E-02	7.646E-02	0.	0.	0.	0.9	9.95	0.
230	MSSSRC1	7.646E-02	7.646E-02	7.646E-02	0.	0.	0.	1.3	9.95	0.
231	MSSSRC1	8.601E-02	8.601E-02	8.601E-02	0.	0.	0.	3.05	10.45	0.
232	MSSSRC1	8.601E-02	8.601E-02	8.601E-02	0.	0.	0.	3.05	9.95	0.
233	MSSSRC1	8.601E-02	8.601E-02	8.601E-02	0.	0.	0.	2.6	10.45	0.
234	MSSSRC1	8.601E-02	8.601E-02	8.601E-02	0.	0.	0.	2.6	9.95	0.
235	MSSSRC1	8.601E-02	8.601E-02	8.601E-02	0.	0.	0.	2.15	10.45	0.
236	MSSSRC1	8.601E-02	8.601E-02	8.601E-02	0.	0.	0.	2.15	9.95	0.
237	MSSSRC1	8.328E-02	8.328E-02	8.328E-02	0.	0.	0.	6.11429	13.4	0.
238	MSSSRC1	8.328E-02	8.328E-02	8.328E-02	0.	0.	0.	5.67857	13.4	0.
239	MSSSRC1	8.328E-02	8.328E-02	8.328E-02	0.	0.	0.	5.24286	13.4	0.
240	MSSSRC1	8.328E-02	8.328E-02	8.328E-02	0.	0.	0.	4.80714	13.4	0.
241	MSSSRC1	8.328E-02	8.328E-02	8.328E-02	0.	0.	0.	4.37143	13.4	0.
242	MSSSRC1	8.328E-02	8.328E-02	8.328E-02	0.	0.	0.	3.93571	13.4	0.
243	MSSSRC1	8.601E-02	8.601E-02	8.601E-02	0.	0.	0.	2.15	12.9	0.
244	MSSSRC1	8.601E-02	8.601E-02	8.601E-02	0.	0.	0.	2.15	13.4	0.
245	MSSSRC1	8.601E-02	8.601E-02	8.601E-02	0.	0.	0.	2.6	12.9	0.
246	MSSSRC1	8.601E-02	8.601E-02	8.601E-02	0.	0.	0.	2.6	13.4	0.
247	MSSSRC1	8.601E-02	8.601E-02	8.601E-02	0.	0.	0.	3.05	12.9	0.
248	MSSSRC1	8.601E-02	8.601E-02	8.601E-02	0.	0.	0.	3.05	13.4	0.
10~Link	MSSSRC1	0.	0.	0.	0.	0.	0.	0.	10.45	0.
7~Link	MSSSRC1	0.	0.	0.	0.	0.	0.	0.	9.95	0.
8~Link	MSSSRC1	0.	0.	0.	0.	0.	0.	0.5	9.95	0.
11~Link	MSSSRC1	0.	0.	0.	0.	0.	0.	6.55	9.95	0.
12~Link	MSSSRC1	0.	0.	0.	0.	0.	0.	7.05	9.95	0.
13~Link	MSSSRC1	0.	0.	0.	0.	0.	0.	7.05	10.45	0.
15~Link	MSSSRC1	0.	0.	0.	0.	0.	0.	7.05	12.9	0.
16~Link	MSSSRC1	0.	0.	0.	0.	0.	0.	7.05	13.4	0.
17~Link	MSSSRC1	0.	0.	0.	0.	0.	0.	6.55	13.4	0.
19~Link	MSSSRC1	0.	0.	0.	0.	0.	0.	0.5	13.4	0.
20~Link	MSSSRC1	0.	0.	0.	0.	0.	0.	0.	13.4	0.
21~Link	MSSSRC1	0.	0.	0.	0.	0.	0.	0.	12.9	0.
9~Link	MSSSRC1	0.	0.	0.	0.	0.	0.	0.5	10.45	0.
14~Link	MSSSRC1	0.	0.	0.	0.	0.	0.	6.55	10.45	0.
18~Link	MSSSRC1	0.	0.	0.	0.	0.	0.	6.55	12.9	0.
22~Link	MSSSRC1	0.	0.	0.	0.	0.	0.	0.5	12.9	0.
59~Link	MSSSRC1	0.	0.	0.	0.	0.	0.	0.	0.5	0.
1~Link	MSSSRC1	0.	0.	0.	0.	0.	0.	0.	0.	0.
57~Link	MSSSRC1	0.	0.	0.	0.	0.	0.	0.5	0.	0.
60~Link	MSSSRC1	0.	0.	0.	0.	0.	0.	6.55	0.	0.
2~Link	MSSSRC1	0.	0.	0.	0.	0.	0.	7.05	0.	0.
61~Link	MSSSRC1	0.	0.	0.	0.	0.	0.	7.05	0.5	0.

Table 16: Assembled Joint Masses

Joint	MassSource	U1	U2	U3	R1	R2	R3	CenterX	CenterY	CenterZ
		KN-s2/m	KN-s2/m	KN-s2/m	KN-m-s2	KN-m-s2	KN-m-s2	m	m	m
62~Link	MSSSRC1	0.	0.	0.	0.	0.	0.	7.05	2.95	0.
3~Link	MSSSRC1	0.	0.	0.	0.	0.	0.	7.05	3.45	0.
64~Link	MSSSRC1	0.	0.	0.	0.	0.	0.	6.55	3.45	0.
65~Link	MSSSRC1	0.	0.	0.	0.	0.	0.	0.5	3.45	0.
4~Link	MSSSRC1	0.	0.	0.	0.	0.	0.	0.	3.45	0.
66~Link	MSSSRC1	0.	0.	0.	0.	0.	0.	0.	2.95	0.
58~Link	MSSSRC1	0.	0.	0.	0.	0.	0.	0.5	0.5	0.
6~Link	MSSSRC1	0.	0.	0.	0.	0.	0.	6.55	0.5	0.
63~Link	MSSSRC1	0.	0.	0.	0.	0.	0.	6.55	2.95	0.
5~Link	MSSSRC1	0.	0.	0.	0.	0.	0.	0.5	2.95	0.
39~Link	MSSSRC1	0.	0.	0.	0.	0.	0.	7.05	0.99	0.
41~Link	MSSSRC1	0.	0.	0.	0.	0.	0.	7.05	1.48	0.
43~Link	MSSSRC1	0.	0.	0.	0.	0.	0.	7.05	1.97	0.
45~Link	MSSSRC1	0.	0.	0.	0.	0.	0.	7.05	2.46	0.
40~Link	MSSSRC1	0.	0.	0.	0.	0.	0.	6.55	0.99	0.
42~Link	MSSSRC1	0.	0.	0.	0.	0.	0.	6.55	1.48	0.
44~Link	MSSSRC1	0.	0.	0.	0.	0.	0.	6.55	1.97	0.
46~Link	MSSSRC1	0.	0.	0.	0.	0.	0.	6.55	2.46	0.
47~Link	MSSSRC1	0.	0.	0.	0.	0.	0.	0.	2.46	0.
49~Link	MSSSRC1	0.	0.	0.	0.	0.	0.	0.	1.97	0.
51~Link	MSSSRC1	0.	0.	0.	0.	0.	0.	0.	1.48	0.
53~Link	MSSSRC1	0.	0.	0.	0.	0.	0.	0.	0.99	0.
48~Link	MSSSRC1	0.	0.	0.	0.	0.	0.	0.5	2.46	0.
50~Link	MSSSRC1	0.	0.	0.	0.	0.	0.	0.5	1.97	0.
52~Link	MSSSRC1	0.	0.	0.	0.	0.	0.	0.5	1.48	0.
54~Link	MSSSRC1	0.	0.	0.	0.	0.	0.	0.5	0.99	0.
55~Link	MSSSRC1	0.	0.	0.	0.	0.	0.	7.05	10.94	0.
67~Link	MSSSRC1	0.	0.	0.	0.	0.	0.	7.05	11.43	0.
69~Link	MSSSRC1	0.	0.	0.	0.	0.	0.	7.05	11.92	0.
71~Link	MSSSRC1	0.	0.	0.	0.	0.	0.	7.05	12.41	0.
56~Link	MSSSRC1	0.	0.	0.	0.	0.	0.	6.55	10.94	0.
68~Link	MSSSRC1	0.	0.	0.	0.	0.	0.	6.55	11.43	0.
70~Link	MSSSRC1	0.	0.	0.	0.	0.	0.	6.55	11.92	0.
72~Link	MSSSRC1	0.	0.	0.	0.	0.	0.	6.55	12.41	0.
73~Link	MSSSRC1	0.	0.	0.	0.	0.	0.	0.	12.41	0.
75~Link	MSSSRC1	0.	0.	0.	0.	0.	0.	0.	11.92	0.
77~Link	MSSSRC1	0.	0.	0.	0.	0.	0.	0.	11.43	0.
79~Link	MSSSRC1	0.	0.	0.	0.	0.	0.	0.	10.94	0.
74~Link	MSSSRC1	0.	0.	0.	0.	0.	0.	0.5	12.41	0.
76~Link	MSSSRC1	0.	0.	0.	0.	0.	0.	0.5	11.92	0.
78~Link	MSSSRC1	0.	0.	0.	0.	0.	0.	0.5	11.43	0.
80~Link	MSSSRC1	0.	0.	0.	0.	0.	0.	0.5	10.94	0.
82~Link	MSSSRC1	0.	0.	0.	0.	0.	0.	6.11429	0.	0.

Table 16: Assembled Joint Masses

Joint	MassSource	U1	U2	U3	R1	R2	R3	CenterX	CenterY	CenterZ
		KN-s2/m	KN-s2/m	KN-s2/m	KN-m-s2	KN-m-s2	KN-m-s2	m	m	m
84~Link	MSSSRC1	0.	0.	0.	0.	0.	0.	5.67857	0.	0.
86~Link	MSSSRC1	0.	0.	0.	0.	0.	0.	5.24286	0.	0.
88~Link	MSSSRC1	0.	0.	0.	0.	0.	0.	4.80714	0.	0.
90~Link	MSSSRC1	0.	0.	0.	0.	0.	0.	4.37143	0.	0.
92~Link	MSSSRC1	0.	0.	0.	0.	0.	0.	3.93571	0.	0.
27~Link	MSSSRC1	0.	0.	0.	0.	0.	0.	3.5	0.	0.
81~Link	MSSSRC1	0.	0.	0.	0.	0.	0.	6.11429	0.5	0.
83~Link	MSSSRC1	0.	0.	0.	0.	0.	0.	5.67857	0.5	0.
85~Link	MSSSRC1	0.	0.	0.	0.	0.	0.	5.24286	0.5	0.
87~Link	MSSSRC1	0.	0.	0.	0.	0.	0.	4.80714	0.5	0.
89~Link	MSSSRC1	0.	0.	0.	0.	0.	0.	4.37143	0.5	0.
91~Link	MSSSRC1	0.	0.	0.	0.	0.	0.	3.93571	0.5	0.
26~Link	MSSSRC1	0.	0.	0.	0.	0.	0.	3.5	0.5	0.
94~Link	MSSSRC1	0.	0.	0.	0.	0.	0.	0.9	3.45	0.
96~Link	MSSSRC1	0.	0.	0.	0.	0.	0.	1.3	3.45	0.
28~Link	MSSSRC1	0.	0.	0.	0.	0.	0.	1.7	3.45	0.
93~Link	MSSSRC1	0.	0.	0.	0.	0.	0.	0.9	2.95	0.
95~Link	MSSSRC1	0.	0.	0.	0.	0.	0.	1.3	2.95	0.
25~Link	MSSSRC1	0.	0.	0.	0.	0.	0.	1.7	2.95	0.
97~Link	MSSSRC1	0.	0.	0.	0.	0.	0.	6.11429	0.99	0.
98~Link	MSSSRC1	0.	0.	0.	0.	0.	0.	5.67857	0.99	0.
99~Link	MSSSRC1	0.	0.	0.	0.	0.	0.	5.24286	0.99	0.
100~Link	MSSSRC1	0.	0.	0.	0.	0.	0.	4.80714	0.99	0.
101~Link	MSSSRC1	0.	0.	0.	0.	0.	0.	4.37143	0.99	0.
102~Link	MSSSRC1	0.	0.	0.	0.	0.	0.	3.93571	0.99	0.
103~Link	MSSSRC1	0.	0.	0.	0.	0.	0.	3.5	0.99	0.
104~Link	MSSSRC1	0.	0.	0.	0.	0.	0.	6.11429	1.48	0.
105~Link	MSSSRC1	0.	0.	0.	0.	0.	0.	5.67857	1.48	0.
106~Link	MSSSRC1	0.	0.	0.	0.	0.	0.	5.24286	1.48	0.
107~Link	MSSSRC1	0.	0.	0.	0.	0.	0.	4.80714	1.48	0.
108~Link	MSSSRC1	0.	0.	0.	0.	0.	0.	4.37143	1.48	0.
109~Link	MSSSRC1	0.	0.	0.	0.	0.	0.	3.93571	1.48	0.
110~Link	MSSSRC1	0.	0.	0.	0.	0.	0.	3.5	1.48	0.
111~Link	MSSSRC1	0.	0.	0.	0.	0.	0.	6.11429	1.97	0.
112~Link	MSSSRC1	0.	0.	0.	0.	0.	0.	5.67857	1.97	0.
113~Link	MSSSRC1	0.	0.	0.	0.	0.	0.	5.24286	1.97	0.
114~Link	MSSSRC1	0.	0.	0.	0.	0.	0.	4.80714	1.97	0.
115~Link	MSSSRC1	0.	0.	0.	0.	0.	0.	4.37143	1.97	0.
116~Link	MSSSRC1	0.	0.	0.	0.	0.	0.	3.93571	1.97	0.
117~Link	MSSSRC1	0.	0.	0.	0.	0.	0.	3.5	1.97	0.
118~Link	MSSSRC1	0.	0.	0.	0.	0.	0.	6.11429	2.46	0.
119~Link	MSSSRC1	0.	0.	0.	0.	0.	0.	5.67857	2.46	0.
120~Link	MSSSRC1	0.	0.	0.	0.	0.	0.	5.24286	2.46	0.

Table 16: Assembled Joint Masses

Joint	MassSource	U1	U2	U3	R1	R2	R3	CenterX	CenterY	CenterZ
		KN-s2/m	KN-s2/m	KN-s2/m	KN-m-s2	KN-m-s2	KN-m-s2	m	m	m
121~Link	MSSSRC1	0.	0.	0.	0.	0.	0.	4.80714	2.46	0.
122~Link	MSSSRC1	0.	0.	0.	0.	0.	0.	4.37143	2.46	0.
123~Link	MSSSRC1	0.	0.	0.	0.	0.	0.	3.93571	2.46	0.
124~Link	MSSSRC1	0.	0.	0.	0.	0.	0.	3.5	2.46	0.
125~Link	MSSSRC1	0.	0.	0.	0.	0.	0.	6.11429	2.95	0.
126~Link	MSSSRC1	0.	0.	0.	0.	0.	0.	5.67857	2.95	0.
127~Link	MSSSRC1	0.	0.	0.	0.	0.	0.	5.24286	2.95	0.
128~Link	MSSSRC1	0.	0.	0.	0.	0.	0.	4.80714	2.95	0.
129~Link	MSSSRC1	0.	0.	0.	0.	0.	0.	4.37143	2.95	0.
130~Link	MSSSRC1	0.	0.	0.	0.	0.	0.	3.93571	2.95	0.
29~Link	MSSSRC1	0.	0.	0.	0.	0.	0.	3.5	2.95	0.
131~Link	MSSSRC1	0.	0.	0.	0.	0.	0.	0.9	2.46	0.
132~Link	MSSSRC1	0.	0.	0.	0.	0.	0.	1.3	2.46	0.
133~Link	MSSSRC1	0.	0.	0.	0.	0.	0.	1.7	2.46	0.
134~Link	MSSSRC1	0.	0.	0.	0.	0.	0.	0.9	1.97	0.
135~Link	MSSSRC1	0.	0.	0.	0.	0.	0.	1.3	1.97	0.
136~Link	MSSSRC1	0.	0.	0.	0.	0.	0.	1.7	1.97	0.
137~Link	MSSSRC1	0.	0.	0.	0.	0.	0.	0.9	1.48	0.
138~Link	MSSSRC1	0.	0.	0.	0.	0.	0.	1.3	1.48	0.
139~Link	MSSSRC1	0.	0.	0.	0.	0.	0.	1.7	1.48	0.
140~Link	MSSSRC1	0.	0.	0.	0.	0.	0.	0.9	0.99	0.
141~Link	MSSSRC1	0.	0.	0.	0.	0.	0.	1.3	0.99	0.
142~Link	MSSSRC1	0.	0.	0.	0.	0.	0.	1.7	0.99	0.
143~Link	MSSSRC1	0.	0.	0.	0.	0.	0.	0.9	0.5	0.
144~Link	MSSSRC1	0.	0.	0.	0.	0.	0.	1.3	0.5	0.
30~Link	MSSSRC1	0.	0.	0.	0.	0.	0.	1.7	0.5	0.
146~Link	MSSSRC1	0.	0.	0.	0.	0.	0.	6.11429	9.95	0.
148~Link	MSSSRC1	0.	0.	0.	0.	0.	0.	5.67857	9.95	0.
150~Link	MSSSRC1	0.	0.	0.	0.	0.	0.	5.24286	9.95	0.
152~Link	MSSSRC1	0.	0.	0.	0.	0.	0.	4.80714	9.95	0.
154~Link	MSSSRC1	0.	0.	0.	0.	0.	0.	4.37143	9.95	0.
156~Link	MSSSRC1	0.	0.	0.	0.	0.	0.	3.93571	9.95	0.
31~Link	MSSSRC1	0.	0.	0.	0.	0.	0.	3.5	9.95	0.
145~Link	MSSSRC1	0.	0.	0.	0.	0.	0.	6.11429	10.45	0.
147~Link	MSSSRC1	0.	0.	0.	0.	0.	0.	5.67857	10.45	0.
149~Link	MSSSRC1	0.	0.	0.	0.	0.	0.	5.24286	10.45	0.
151~Link	MSSSRC1	0.	0.	0.	0.	0.	0.	4.80714	10.45	0.
153~Link	MSSSRC1	0.	0.	0.	0.	0.	0.	4.37143	10.45	0.
155~Link	MSSSRC1	0.	0.	0.	0.	0.	0.	3.93571	10.45	0.
24~Link	MSSSRC1	0.	0.	0.	0.	0.	0.	3.5	10.45	0.
158~Link	MSSSRC1	0.	0.	0.	0.	0.	0.	0.9	13.4	0.
160~Link	MSSSRC1	0.	0.	0.	0.	0.	0.	1.3	13.4	0.
32~Link	MSSSRC1	0.	0.	0.	0.	0.	0.	1.7	13.4	0.

Table 16: Assembled Joint Masses

Joint	MassSource	U1	U2	U3	R1	R2	R3	CenterX	CenterY	CenterZ
		KN-s2/m	KN-s2/m	KN-s2/m	KN-m-s2	KN-m-s2	KN-m-s2	m	m	m
157~Link	MSSSRC1	0.	0.	0.	0.	0.	0.	0.9	12.9	0.
159~Link	MSSSRC1	0.	0.	0.	0.	0.	0.	1.3	12.9	0.
23~Link	MSSSRC1	0.	0.	0.	0.	0.	0.	1.7	12.9	0.
161~Link	MSSSRC1	0.	0.	0.	0.	0.	0.	0.9	12.41	0.
162~Link	MSSSRC1	0.	0.	0.	0.	0.	0.	1.3	12.41	0.
163~Link	MSSSRC1	0.	0.	0.	0.	0.	0.	1.7	12.41	0.
164~Link	MSSSRC1	0.	0.	0.	0.	0.	0.	0.9	11.92	0.
165~Link	MSSSRC1	0.	0.	0.	0.	0.	0.	1.3	11.92	0.
166~Link	MSSSRC1	0.	0.	0.	0.	0.	0.	1.7	11.92	0.
167~Link	MSSSRC1	0.	0.	0.	0.	0.	0.	0.9	11.43	0.
168~Link	MSSSRC1	0.	0.	0.	0.	0.	0.	1.3	11.43	0.
169~Link	MSSSRC1	0.	0.	0.	0.	0.	0.	1.7	11.43	0.
170~Link	MSSSRC1	0.	0.	0.	0.	0.	0.	0.9	10.94	0.
171~Link	MSSSRC1	0.	0.	0.	0.	0.	0.	1.3	10.94	0.
172~Link	MSSSRC1	0.	0.	0.	0.	0.	0.	1.7	10.94	0.
173~Link	MSSSRC1	0.	0.	0.	0.	0.	0.	0.9	10.45	0.
174~Link	MSSSRC1	0.	0.	0.	0.	0.	0.	1.3	10.45	0.
33~Link	MSSSRC1	0.	0.	0.	0.	0.	0.	1.7	10.45	0.
175~Link	MSSSRC1	0.	0.	0.	0.	0.	0.	6.11429	10.94	0.
176~Link	MSSSRC1	0.	0.	0.	0.	0.	0.	5.67857	10.94	0.
177~Link	MSSSRC1	0.	0.	0.	0.	0.	0.	5.24286	10.94	0.
178~Link	MSSSRC1	0.	0.	0.	0.	0.	0.	4.80714	10.94	0.
179~Link	MSSSRC1	0.	0.	0.	0.	0.	0.	4.37143	10.94	0.
180~Link	MSSSRC1	0.	0.	0.	0.	0.	0.	3.93571	10.94	0.
181~Link	MSSSRC1	0.	0.	0.	0.	0.	0.	3.5	10.94	0.
182~Link	MSSSRC1	0.	0.	0.	0.	0.	0.	6.11429	11.43	0.
183~Link	MSSSRC1	0.	0.	0.	0.	0.	0.	5.67857	11.43	0.
184~Link	MSSSRC1	0.	0.	0.	0.	0.	0.	5.24286	11.43	0.
185~Link	MSSSRC1	0.	0.	0.	0.	0.	0.	4.80714	11.43	0.
186~Link	MSSSRC1	0.	0.	0.	0.	0.	0.	4.37143	11.43	0.
187~Link	MSSSRC1	0.	0.	0.	0.	0.	0.	3.93571	11.43	0.
188~Link	MSSSRC1	0.	0.	0.	0.	0.	0.	3.5	11.43	0.
189~Link	MSSSRC1	0.	0.	0.	0.	0.	0.	6.11429	11.92	0.
190~Link	MSSSRC1	0.	0.	0.	0.	0.	0.	5.67857	11.92	0.
191~Link	MSSSRC1	0.	0.	0.	0.	0.	0.	5.24286	11.92	0.
192~Link	MSSSRC1	0.	0.	0.	0.	0.	0.	4.80714	11.92	0.
193~Link	MSSSRC1	0.	0.	0.	0.	0.	0.	4.37143	11.92	0.
194~Link	MSSSRC1	0.	0.	0.	0.	0.	0.	3.93571	11.92	0.
195~Link	MSSSRC1	0.	0.	0.	0.	0.	0.	3.5	11.92	0.
196~Link	MSSSRC1	0.	0.	0.	0.	0.	0.	6.11429	12.41	0.
197~Link	MSSSRC1	0.	0.	0.	0.	0.	0.	5.67857	12.41	0.
198~Link	MSSSRC1	0.	0.	0.	0.	0.	0.	5.24286	12.41	0.
199~Link	MSSSRC1	0.	0.	0.	0.	0.	0.	4.80714	12.41	0.

Table 16: Assembled Joint Masses

Joint	MassSource	U1	U2	U3	R1	R2	R3	CenterX	CenterY	CenterZ
		KN-s2/m	KN-s2/m	KN-s2/m	KN-m-s2	KN-m-s2	KN-m-s2	m	m	m
200~Link	MSSSRC1	0.	0.	0.	0.	0.	0.	4.37143	12.41	0.
201~Link	MSSSRC1	0.	0.	0.	0.	0.	0.	3.93571	12.41	0.
202~Link	MSSSRC1	0.	0.	0.	0.	0.	0.	3.5	12.41	0.
203~Link	MSSSRC1	0.	0.	0.	0.	0.	0.	6.11429	12.9	0.
204~Link	MSSSRC1	0.	0.	0.	0.	0.	0.	5.67857	12.9	0.
205~Link	MSSSRC1	0.	0.	0.	0.	0.	0.	5.24286	12.9	0.
206~Link	MSSSRC1	0.	0.	0.	0.	0.	0.	4.80714	12.9	0.
207~Link	MSSSRC1	0.	0.	0.	0.	0.	0.	4.37143	12.9	0.
208~Link	MSSSRC1	0.	0.	0.	0.	0.	0.	3.93571	12.9	0.
34~Link	MSSSRC1	0.	0.	0.	0.	0.	0.	3.5	12.9	0.
209~Link	MSSSRC1	0.	0.	0.	0.	0.	0.	0.9	0.	0.
210~Link	MSSSRC1	0.	0.	0.	0.	0.	0.	1.3	0.	0.
35~Link	MSSSRC1	0.	0.	0.	0.	0.	0.	1.7	0.	0.
212~Link	MSSSRC1	0.	0.	0.	0.	0.	0.	3.05	0.	0.
214~Link	MSSSRC1	0.	0.	0.	0.	0.	0.	2.6	0.	0.
216~Link	MSSSRC1	0.	0.	0.	0.	0.	0.	2.15	0.	0.
211~Link	MSSSRC1	0.	0.	0.	0.	0.	0.	3.05	0.5	0.
213~Link	MSSSRC1	0.	0.	0.	0.	0.	0.	2.6	0.5	0.
215~Link	MSSSRC1	0.	0.	0.	0.	0.	0.	2.15	0.5	0.
217~Link	MSSSRC1	0.	0.	0.	0.	0.	0.	6.11429	3.45	0.
218~Link	MSSSRC1	0.	0.	0.	0.	0.	0.	5.67857	3.45	0.
219~Link	MSSSRC1	0.	0.	0.	0.	0.	0.	5.24286	3.45	0.
220~Link	MSSSRC1	0.	0.	0.	0.	0.	0.	4.80714	3.45	0.
221~Link	MSSSRC1	0.	0.	0.	0.	0.	0.	4.37143	3.45	0.
222~Link	MSSSRC1	0.	0.	0.	0.	0.	0.	3.93571	3.45	0.
36~Link	MSSSRC1	0.	0.	0.	0.	0.	0.	3.5	3.45	0.
224~Link	MSSSRC1	0.	0.	0.	0.	0.	0.	2.15	3.45	0.
226~Link	MSSSRC1	0.	0.	0.	0.	0.	0.	2.6	3.45	0.
228~Link	MSSSRC1	0.	0.	0.	0.	0.	0.	3.05	3.45	0.
223~Link	MSSSRC1	0.	0.	0.	0.	0.	0.	2.15	2.95	0.
225~Link	MSSSRC1	0.	0.	0.	0.	0.	0.	2.6	2.95	0.
227~Link	MSSSRC1	0.	0.	0.	0.	0.	0.	3.05	2.95	0.
229~Link	MSSSRC1	0.	0.	0.	0.	0.	0.	0.9	9.95	0.
230~Link	MSSSRC1	0.	0.	0.	0.	0.	0.	1.3	9.95	0.
37~Link	MSSSRC1	0.	0.	0.	0.	0.	0.	1.7	9.95	0.
232~Link	MSSSRC1	0.	0.	0.	0.	0.	0.	3.05	9.95	0.
234~Link	MSSSRC1	0.	0.	0.	0.	0.	0.	2.6	9.95	0.
236~Link	MSSSRC1	0.	0.	0.	0.	0.	0.	2.15	9.95	0.
231~Link	MSSSRC1	0.	0.	0.	0.	0.	0.	3.05	10.45	0.
233~Link	MSSSRC1	0.	0.	0.	0.	0.	0.	2.6	10.45	0.
235~Link	MSSSRC1	0.	0.	0.	0.	0.	0.	2.15	10.45	0.
237~Link	MSSSRC1	0.	0.	0.	0.	0.	0.	6.11429	13.4	0.
238~Link	MSSSRC1	0.	0.	0.	0.	0.	0.	5.67857	13.4	0.

Table 16: Assembled Joint Masses

Joint	MassSource	U1	U2	U3	R1	R2	R3	CenterX	CenterY	CenterZ
		KN-s2/m	KN-s2/m	KN-s2/m	KN-m-s2	KN-m-s2	KN-m-s2	m	m	m
239~Link	MSSSRC1	0.	0.	0.	0.	0.	0.	5.24286	13.4	0.
240~Link	MSSSRC1	0.	0.	0.	0.	0.	0.	4.80714	13.4	0.
241~Link	MSSSRC1	0.	0.	0.	0.	0.	0.	4.37143	13.4	0.
242~Link	MSSSRC1	0.	0.	0.	0.	0.	0.	3.93571	13.4	0.
38~Link	MSSSRC1	0.	0.	0.	0.	0.	0.	3.5	13.4	0.
244~Link	MSSSRC1	0.	0.	0.	0.	0.	0.	2.15	13.4	0.
246~Link	MSSSRC1	0.	0.	0.	0.	0.	0.	2.6	13.4	0.
248~Link	MSSSRC1	0.	0.	0.	0.	0.	0.	3.05	13.4	0.
243~Link	MSSSRC1	0.	0.	0.	0.	0.	0.	2.15	12.9	0.
245~Link	MSSSRC1	0.	0.	0.	0.	0.	0.	2.6	12.9	0.
247~Link	MSSSRC1	0.	0.	0.	0.	0.	0.	3.05	12.9	0.
SumAccelUX	MSSSRC1	30.45	0.	0.	0.	0.	0.	3.72986	6.7	0.
SumAccelUY	MSSSRC1	0.	30.45	0.	0.	0.	0.	3.72986	6.7	0.
SumAccelUZ	MSSSRC1	0.	0.	30.45	0.	0.	0.	3.72986	6.7	0.

6.2. Base reactions

Table 17: Base Reactions

Table 17: Base Reactions

OutputCase	GlobalFX	GlobalFY	GlobalFZ	GlobalMX	GlobalMY	GlobalMZ
	KN	KN	KN	KN-m	KN-m	KN-m
DEAD	0.	0.	298.599	2000.6153	-1113.7332	0.
G1_power station	0.	0.	0.	0.	0.	0.
G2_power station	0.	0.	400.	2680.	-1410.	0.
Q_power station	0.	0.	14.8	99.16	-52.17	0.
Q_neve	0.	0.	59.53	398.851	-209.8432	0.
Q_manutenzione	0.	0.	14.8	99.16	-52.17	0.
EQ_X	-80.	-4.905E-11	-4.118E-12	-5.141E-11	-116.	536.
EQ_Y	-1.461E-11	-80.	-3.783E-12	116.	1.673E-11	-282.

7. Joint results

This section provides joint results, including items such as displacements and reactions.

Table 18: Joint Displacements

Table 18: Joint Displacements

Joint	OutputCase	U1	U2	U3	R1	R2	R3
		m	m	m	Radians	Radians	Radians
1	DEAD	0.	0.	-0.000125	3.010E-18	5.389E-18	0.
1	G1_power station	0.	0.	0.	0.	0.	0.
1	G2_power station	0.	0.	-0.000556	0.00007	-0.000246	0.
1	Q_power station	0.	0.	-0.000021	2.585E-06	-9.099E-06	0.
1	Q_neve	0.	0.	-0.000067	9.402E-06	-0.000025	0.
1	Q_manutenzione	0.	0.	-0.000021	2.585E-06	-9.099E-06	0.
1	EQ_X	0.002957	0.000102	0.000148	5.861E-06	0.000171	-0.000028
1	EQ_Y	-0.000027	0.001152	0.000142	-0.000123	8.810E-06	-0.000019
2	DEAD	0.	0.	-0.000125	1.723E-18	-3.965E-18	0.
2	G1_power station	0.	0.	0.	0.	0.	0.
2	G2_power station	0.	0.	-0.000491	0.000058	0.000196	0.
2	Q_power station	0.	0.	-0.000018	2.140E-06	7.236E-06	0.
2	Q_neve	0.	0.	-0.000059	7.846E-06	0.000021	0.
2	Q_manutenzione	0.	0.	-0.000018	2.140E-06	7.236E-06	0.
2	EQ_X	0.002955	-0.0001	-0.00011	-0.000011	0.000133	-0.00003
2	EQ_Y	-0.000021	0.00102	0.000129	-0.000115	-9.450E-06	-0.000012
3	DEAD	0.	0.	-0.000125	-8.576E-20	-3.148E-18	0.
3	G1_power station	0.	0.	0.	0.	0.	0.
3	G2_power station	0.	0.	-0.000491	-0.000058	0.000196	0.
3	Q_power station	0.	0.	-0.000018	-2.140E-06	7.236E-06	0.
3	Q_neve	0.	0.	-0.000059	-7.846E-06	0.000021	0.
3	Q_manutenzione	0.	0.	-0.000018	-2.140E-06	7.236E-06	0.
3	EQ_X	0.003057	-0.000099	-0.00011	0.000011	0.000133	-0.00003
3	EQ_Y	0.000024	0.00102	-0.000129	-0.000115	9.450E-06	-0.000012
4	DEAD	0.	0.	-0.000125	-2.406E-18	2.249E-18	0.
4	G1_power station	0.	0.	0.	0.	0.	0.
4	G2_power station	0.	0.	-0.000556	-0.00007	-0.000246	0.
4	Q_power station	0.	0.	-0.000021	-2.585E-06	-9.099E-06	0.
4	Q_neve	0.	0.	-0.000067	-9.402E-06	-0.000025	0.
4	Q_manutenzione	0.	0.	-0.000021	-2.585E-06	-9.099E-06	0.
4	EQ_X	0.003057	0.000102	0.000148	-5.861E-06	0.000171	-0.00003
4	EQ_Y	0.00003	0.001152	-0.000142	-0.000123	-8.810E-06	-0.000019
5	DEAD	0.	0.	-0.000125	-1.822E-18	2.683E-18	0.
5	G1_power station	0.	0.	0.	0.	0.	0.
5	G2_power station	0.	0.	-0.0004	-0.000075	-0.000256	0.
5	Q_power station	0.	0.	-0.000015	-2.771E-06	-9.463E-06	0.
5	Q_neve	0.	0.	-0.00005	-9.824E-06	-0.000026	0.
5	Q_manutenzione	0.	0.	-0.000015	-2.771E-06	-9.463E-06	0.
5	EQ_X	0.003043	0.000087	0.000067	3.702E-06	0.0002	-0.00003
5	EQ_Y	0.000022	0.001144	-0.000078	-0.000157	-0.000017	-0.000018
6	DEAD	0.	0.	-0.000125	1.735E-18	-4.002E-18	0.

Table 18: Joint Displacements

Joint	OutputCase	U1	U2	U3	R1	R2	R3
		m	m	m	Radians	Radians	Radians
6	G1_power station	0.	0.	0.	0.	0.	0.
6	G2_power station	0.	0.	-0.000367	0.000063	0.000202	0.
6	Q_power station	0.	0.	-0.000014	2.314E-06	7.491E-06	0.
6	Q_neve	0.	0.	-0.000045	8.232E-06	0.000022	0.
6	Q_manutenzione	0.	0.	-0.000014	2.314E-06	7.491E-06	0.
6	EQ_X	0.002971	-0.000084	-0.000052	-2.075E-06	0.000161	-0.000029
6	EQ_Y	-0.000015	0.001027	0.00007	-0.000147	-0.000017	-0.000012
7	DEAD	0.	0.	-0.00075	4.199E-17	-9.237E-17	0.
7	G1_power station	0.	0.	0.	0.	0.	0.
7	G2_power station	0.	0.	-0.002352	0.00006	-0.00094	0.
7	Q_power station	0.	0.	-0.000087	2.221E-06	-0.000035	0.
7	Q_neve	0.	0.	-0.000294	9.206E-06	-0.000096	0.
7	Q_manutenzione	0.	0.	-0.000087	2.221E-06	-0.000035	0.
7	EQ_X	0.017744	0.000613	0.000412	9.427E-06	0.000308	-0.00017
7	EQ_Y	-0.000183	0.006881	0.000551	-0.000359	0.000019	-0.000115
8	DEAD	0.	0.	-0.00075	4.467E-17	-9.088E-17	0.
8	G1_power station	0.	0.	0.	0.	0.	0.
8	G2_power station	0.	0.	-0.00188	0.000043	-0.000951	0.
8	Q_power station	0.	0.	-0.00007	1.600E-06	-0.000035	0.
8	Q_neve	0.	0.	-0.000246	7.887E-06	-0.000097	0.
8	Q_manutenzione	0.	0.	-0.00007	1.600E-06	-0.000035	0.
8	EQ_X	0.017744	0.000528	0.000263	7.079E-06	0.000268	-0.000172
8	EQ_Y	-0.000183	0.006824	0.000537	-0.000328	0.000042	-0.000114
9	DEAD	0.	0.	-0.00075	4.236E-17	-9.358E-17	0.
9	G1_power station	0.	0.	0.	0.	0.	0.
9	G2_power station	0.	0.	-0.001855	0.000065	-0.000945	0.
9	Q_power station	0.	0.	-0.000069	2.410E-06	-0.000035	0.
9	Q_neve	0.	0.	-0.000242	9.589E-06	-0.000096	0.
9	Q_manutenzione	0.	0.	-0.000069	2.410E-06	-0.000035	0.
9	EQ_X	0.01783	0.000528	0.000265	-7.163E-07	0.000335	-0.00017
9	EQ_Y	-0.000126	0.006824	0.000366	-0.00039	0.000026	-0.000115
10	DEAD	0.	0.	-0.00075	4.036E-17	-9.394E-17	0.
10	G1_power station	0.	0.	0.	0.	0.	0.
10	G2_power station	0.	0.	-0.00232	0.000073	-0.000923	0.
10	Q_power station	0.	0.	-0.000086	2.687E-06	-0.000034	0.
10	Q_neve	0.	0.	-0.000289	0.00001	-0.000094	0.
10	Q_manutenzione	0.	0.	-0.000086	2.687E-06	-0.000034	0.
10	EQ_X	0.017829	0.000613	0.000413	-9.525E-06	0.000283	-0.000171
10	EQ_Y	-0.000126	0.00688	0.000376	-0.000321	0.000019	-0.000112
11	DEAD	0.	0.	-0.00075	6.245E-17	-6.505E-19	0.
11	G1_power station	0.	0.	0.	0.	0.	0.
11	G2_power station	0.	0.	-0.00165	0.000034	0.000691	0.
11	Q_power station	0.	0.	-0.000061	1.272E-06	0.000026	0.

Table 18: Joint Displacements

Joint	OutputCase	U1	U2	U3	R1	R2	R3
		m	m	m	Radians	Radians	Radians
11	Q_neve	0.	0.	-0.000211	6.326E-06	0.000069	0.
11	Q_manutenzione	0.	0.	-0.000061	1.272E-06	0.000026	0.
11	EQ_X	0.017742	-0.000502	-0.000184	-0.000013	0.000162	-0.000174
11	EQ_Y	-0.000176	0.006123	0.000484	-0.000296	-0.000039	-0.00011
12	DEAD	0.	0.	-0.00075	6.444E-17	-1.735E-18	0.
12	G1_power station	0.	0.	0.	0.	0.	0.
12	G2_power station	0.	0.	-0.001992	0.000053	0.000678	0.
12	Q_power station	0.	0.	-0.000074	1.978E-06	0.000025	0.
12	Q_neve	0.	0.	-0.000246	7.940E-06	0.000068	0.
12	Q_manutenzione	0.	0.	-0.000074	1.978E-06	0.000025	0.
12	EQ_X	0.017742	-0.000588	-0.00028	-0.000014	0.000202	-0.000172
12	EQ_Y	-0.000177	0.006068	0.000496	-0.000327	-0.000017	-0.000109
13	DEAD	0.	0.	-0.00075	6.500E-17	-3.253E-18	0.
13	G1_power station	0.	0.	0.	0.	0.	0.
13	G2_power station	0.	0.	-0.001962	0.000068	0.00066	0.
13	Q_power station	0.	0.	-0.000073	2.506E-06	0.000024	0.
13	Q_neve	0.	0.	-0.000242	8.980E-06	0.000067	0.
13	Q_manutenzione	0.	0.	-0.000073	2.506E-06	0.000024	0.
13	EQ_X	0.017828	-0.000588	-0.000283	5.927E-06	0.000176	-0.000172
13	EQ_Y	-0.000122	0.006068	0.000337	-0.00029	-0.000016	-0.000112
14	DEAD	0.	0.	-0.00075	6.153E-17	-2.602E-18	0.
14	G1_power station	0.	0.	0.	0.	0.	0.
14	G2_power station	0.	0.	-0.00163	0.000058	0.00068	0.
14	Q_power station	0.	0.	-0.00006	2.139E-06	0.000025	0.
14	Q_neve	0.	0.	-0.000208	8.262E-06	0.000069	0.
14	Q_manutenzione	0.	0.	-0.00006	2.139E-06	0.000025	0.
14	EQ_X	0.017829	-0.000502	-0.000188	-4.449E-06	0.000228	-0.000171
14	EQ_Y	-0.000122	0.006123	0.000328	-0.000357	-0.000023	-0.000109
15	DEAD	0.	0.	-0.00075	2.535E-17	-2.050E-17	0.
15	G1_power station	0.	0.	0.	0.	0.	0.
15	G2_power station	0.	0.	-0.001962	-0.000068	0.00066	0.
15	Q_power station	0.	0.	-0.000073	-2.506E-06	0.000024	0.
15	Q_neve	0.	0.	-0.000242	-8.980E-06	0.000067	0.
15	Q_manutenzione	0.	0.	-0.000073	-2.506E-06	0.000024	0.
15	EQ_X	0.018248	-0.000588	-0.000283	-5.927E-06	0.000176	-0.000171
15	EQ_Y	0.000147	0.006068	-0.000337	-0.00029	0.000016	-0.000112
16	DEAD	0.	0.	-0.00075	2.246E-17	-2.269E-17	0.
16	G1_power station	0.	0.	0.	0.	0.	0.
16	G2_power station	0.	0.	-0.001992	-0.000053	0.000678	0.
16	Q_power station	0.	0.	-0.000074	-1.978E-06	0.000025	0.
16	Q_neve	0.	0.	-0.000246	-7.940E-06	0.000068	0.
16	Q_manutenzione	0.	0.	-0.000074	-1.978E-06	0.000025	0.
16	EQ_X	0.018334	-0.000588	-0.00028	0.000014	0.000202	-0.000172

Table 18: Joint Displacements

Joint	OutputCase	U1	U2	U3	R1	R2	R3
		m	m	m	Radians	Radians	Radians
16	EQ_Y	0.000202	0.006068	-0.000496	-0.000327	0.000017	-0.000108
17	DEAD	0.	0.	-0.00075	2.082E-17	-2.198E-17	0.
17	G1_power station	0.	0.	0.	0.	0.	0.
17	G2_power station	0.	0.	-0.00165	-0.000034	0.000691	0.
17	Q_power station	0.	0.	-0.000061	-1.272E-06	0.000026	0.
17	Q_neve	0.	0.	-0.000211	-6.326E-06	0.000069	0.
17	Q_manutenzione	0.	0.	-0.000061	-1.272E-06	0.000026	0.
17	EQ_X	0.018334	-0.000502	-0.000184	0.000013	0.000162	-0.000169
17	EQ_Y	0.000202	0.006123	-0.000484	-0.000296	0.000039	-0.00011
18	DEAD	0.	0.	-0.00075	2.540E-17	-2.332E-17	0.
18	G1_power station	0.	0.	0.	0.	0.	0.
18	G2_power station	0.	0.	-0.00163	-0.000058	0.00068	0.
18	Q_power station	0.	0.	-0.00006	-2.139E-06	0.000025	0.
18	Q_neve	0.	0.	-0.000208	-8.262E-06	0.000069	0.
18	Q_manutenzione	0.	0.	-0.00006	-2.139E-06	0.000025	0.
18	EQ_X	0.018249	-0.000502	-0.000188	4.449E-06	0.000228	-0.000172
18	EQ_Y	0.000147	0.006124	-0.000328	-0.000357	0.000023	-0.000109
19	DEAD	0.	0.	-0.00075	5.013E-17	-9.931E-17	0.
19	G1_power station	0.	0.	0.	0.	0.	0.
19	G2_power station	0.	0.	-0.00188	-0.000043	-0.000951	0.
19	Q_power station	0.	0.	-0.00007	-1.600E-06	-0.000035	0.
19	Q_neve	0.	0.	-0.000246	-7.887E-06	-0.000097	0.
19	Q_manutenzione	0.	0.	-0.00007	-1.600E-06	-0.000035	0.
19	EQ_X	0.018333	0.000528	0.000263	-7.079E-06	0.000268	-0.000169
19	EQ_Y	0.000208	0.006824	-0.000537	-0.000328	-0.000042	-0.000112
20	DEAD	0.	0.	-0.00075	4.900E-17	-1.015E-16	0.
20	G1_power station	0.	0.	0.	0.	0.	0.
20	G2_power station	0.	0.	-0.002352	-0.00006	-0.00094	0.
20	Q_power station	0.	0.	-0.000087	-2.221E-06	-0.000035	0.
20	Q_neve	0.	0.	-0.000294	-9.206E-06	-0.000096	0.
20	Q_manutenzione	0.	0.	-0.000087	-2.221E-06	-0.000035	0.
20	EQ_X	0.018333	0.000613	0.000412	-9.427E-06	0.000308	-0.000172
20	EQ_Y	0.000208	0.00688	-0.000551	-0.000359	-0.000019	-0.000115
21	DEAD	0.	0.	-0.00075	4.760E-17	-1.006E-16	0.
21	G1_power station	0.	0.	0.	0.	0.	0.
21	G2_power station	0.	0.	-0.00232	-0.000073	-0.000923	0.
21	Q_power station	0.	0.	-0.000086	-2.687E-06	-0.000034	0.
21	Q_neve	0.	0.	-0.000289	-0.00001	-0.000094	0.
21	Q_manutenzione	0.	0.	-0.000086	-2.687E-06	-0.000034	0.
21	EQ_X	0.018248	0.000614	0.000413	9.525E-06	0.000283	-0.000171
21	EQ_Y	0.000152	0.00688	-0.000376	-0.000321	-0.000019	-0.00011
22	DEAD	0.	0.	-0.00075	4.814E-17	-9.739E-17	0.
22	G1_power station	0.	0.	0.	0.	0.	0.

Table 18: Joint Displacements

Joint	OutputCase	U1	U2	U3	R1	R2	R3
		m	m	m	Radians	Radians	Radians
22	G2_power station	0.	0.	-0.001855	-0.000065	-0.000945	0.
22	Q_power station	0.	0.	-0.000069	-2.410E-06	-0.000035	0.
22	Q_neve	0.	0.	-0.000242	-9.589E-06	-0.000096	0.
22	Q_manutenzione	0.	0.	-0.000069	-2.410E-06	-0.000035	0.
22	EQ_X	0.018248	0.000528	0.000265	7.163E-07	0.000335	-0.000172
22	EQ_Y	0.000152	0.006824	-0.000366	-0.00039	-0.000026	-0.000115
23	DEAD	0.	0.	-0.00075	3.887E-17	-8.669E-17	0.
23	G1_power station	0.	0.	0.	0.	0.	0.
23	G2_power station	0.	0.	-0.000751	-0.000082	-0.00083	0.
23	Q_power station	0.	0.	-0.000028	-3.027E-06	-0.000031	0.
23	Q_neve	0.	0.	-0.00013	-0.000013	-0.000084	0.
23	Q_manutenzione	0.	0.	-0.000028	-3.027E-06	-0.000031	0.
23	EQ_X	0.018248	0.000323	-3.593E-06	0.000025	0.000149	-0.000171
23	EQ_Y	0.00015	0.006685	-0.000324	-0.000279	-0.000042	-0.000117
24	DEAD	0.	0.	-0.00075	4.875E-17	-3.719E-17	0.
24	G1_power station	0.	0.	0.	0.	0.	0.
24	G2_power station	0.	0.	-0.00009	0.000077	0.000168	0.
24	Q_power station	0.	0.	-3.320E-06	2.850E-06	6.202E-06	0.
24	Q_neve	0.	0.	-0.000059	0.000013	0.000013	0.
24	Q_manutenzione	0.	0.	-3.320E-06	2.850E-06	6.202E-06	0.
24	EQ_X	0.017829	0.000019	-0.000027	6.970E-06	-0.000028	-0.00017
24	EQ_Y	-0.000123	0.006457	0.000267	-0.000234	-1.842E-07	-0.000112
25	DEAD	0.	0.	-0.000125	2.534E-19	1.902E-18	0.
25	G1_power station	0.	0.	0.	0.	0.	0.
25	G2_power station	0.	0.	-0.000092	-0.000068	-0.000221	0.
25	Q_power station	0.	0.	-3.400E-06	-2.506E-06	-8.174E-06	0.
25	Q_neve	0.	0.	-0.000019	-0.000011	-0.000022	0.
25	Q_manutenzione	0.	0.	-3.400E-06	-2.506E-06	-8.174E-06	0.
25	EQ_X	0.003043	0.000053	-0.000055	0.000017	0.000048	-0.000029
25	EQ_Y	0.000021	0.001121	-0.000051	-0.000058	-0.000027	-0.00002
26	DEAD	0.	0.	-0.000125	5.641E-20	-2.812E-19	0.
26	G1_power station	0.	0.	0.	0.	0.	0.
26	G2_power station	0.	0.	0.00006	0.000033	0.000041	0.
26	Q_power station	0.	0.	2.204E-06	1.229E-06	1.532E-06	0.
26	Q_neve	0.	0.	-3.132E-06	7.581E-06	2.612E-06	0.
26	Q_manutenzione	0.	0.	2.204E-06	1.229E-06	1.532E-06	0.
26	EQ_X	0.002971	4.415E-06	-9.240E-06	1.273E-06	-0.000039	-0.000028
26	EQ_Y	-0.000016	0.001067	0.000022	-0.000029	-4.142E-06	-0.000016
27	DEAD	0.	0.	-0.000125	3.018E-19	-4.146E-19	0.
27	G1_power station	0.	0.	0.	0.	0.	0.
27	G2_power station	0.	0.	0.000045	0.000025	0.000019	0.
27	Q_power station	0.	0.	1.661E-06	9.193E-07	7.072E-07	0.
27	Q_neve	0.	0.	-6.735E-06	6.778E-06	2.274E-07	0.

Table 18: Joint Displacements

Joint	OutputCase	U1	U2	U3	R1	R2	R3
		m	m	m	Radians	Radians	Radians
27	Q_manutenzione	0.	0.	1.661E-06	9.193E-07	7.072E-07	0.
27	EQ_X	0.002957	4.321E-06	-8.554E-06	-2.906E-06	-0.000042	-0.000028
27	EQ_Y	-0.000025	0.001067	0.000038	-0.000031	3.027E-06	-0.000021
28	DEAD	0.	0.	-0.000125	3.175E-19	1.105E-18	0.
28	G1_power station	0.	0.	0.	0.	0.	0.
28	G2_power station	0.	0.	-0.000122	-0.000053	-0.000212	0.
28	Q_power station	0.	0.	-4.510E-06	-1.968E-06	-7.851E-06	0.
28	Q_neve	0.	0.	-0.000024	-9.140E-06	-0.00002	0.
28	Q_manutenzione	0.	0.	-4.510E-06	-1.968E-06	-7.851E-06	0.
28	EQ_X	0.003057	0.000053	-0.00005	4.443E-06	0.000032	-0.000028
28	EQ_Y	0.000032	0.00112	-0.000081	-0.000061	-0.000041	-0.000026
29	DEAD	0.	0.	-0.000125	2.665E-18	1.100E-18	0.
29	G1_power station	0.	0.	0.	0.	0.	0.
29	G2_power station	0.	0.	0.00006	-0.000033	0.000041	0.
29	Q_power station	0.	0.	2.204E-06	-1.229E-06	1.532E-06	0.
29	Q_neve	0.	0.	-3.132E-06	-7.581E-06	2.612E-06	0.
29	Q_manutenzione	0.	0.	2.204E-06	-1.229E-06	1.532E-06	0.
29	EQ_X	0.003043	4.523E-06	-9.240E-06	-1.273E-06	-0.000039	-0.000029
29	EQ_Y	0.000019	0.001067	-0.000022	-0.000029	4.142E-06	-0.000018
30	DEAD	0.	0.	-0.000125	2.248E-18	3.660E-18	0.
30	G1_power station	0.	0.	0.	0.	0.	0.
30	G2_power station	0.	0.	-0.000092	0.000068	-0.000221	0.
30	Q_power station	0.	0.	-3.400E-06	2.506E-06	-8.174E-06	0.
30	Q_neve	0.	0.	-0.000019	0.000011	-0.000022	0.
30	Q_manutenzione	0.	0.	-3.400E-06	2.506E-06	-8.174E-06	0.
30	EQ_X	0.002971	0.000053	-0.000055	-0.000017	0.000048	-0.000028
30	EQ_Y	-0.000017	0.00112	0.000051	-0.000058	0.000027	-0.000023
31	DEAD	0.	0.	-0.00075	4.260E-17	-4.315E-17	0.
31	G1_power station	0.	0.	0.	0.	0.	0.
31	G2_power station	0.	0.	-0.000114	0.000022	0.000089	0.
31	Q_power station	0.	0.	-4.208E-06	8.218E-07	3.276E-06	0.
31	Q_neve	0.	0.	-0.000064	7.549E-06	4.825E-06	0.
31	Q_manutenzione	0.	0.	-4.208E-06	8.218E-07	3.276E-06	0.
31	EQ_X	0.017744	0.000019	-0.000028	8.385E-07	-0.000031	-0.00017
31	EQ_Y	-0.000181	0.006457	0.000385	-0.000236	0.000013	-0.000118
32	DEAD	0.	0.	-0.00075	4.033E-17	-7.665E-17	0.
32	G1_power station	0.	0.	0.	0.	0.	0.
32	G2_power station	0.	0.	-0.000783	-0.000046	-0.000789	0.
32	Q_power station	0.	0.	-0.000029	-1.701E-06	-0.000029	0.
32	Q_neve	0.	0.	-0.000135	-9.387E-06	-0.000079	0.
32	Q_manutenzione	0.	0.	-0.000029	-1.701E-06	-0.000029	0.
32	EQ_X	0.018333	0.000323	2.777E-06	3.046E-06	0.000124	-0.00017
32	EQ_Y	0.00021	0.006685	-0.000465	-0.000283	-0.000063	-0.000122

Table 18: Joint Displacements

Joint	OutputCase	U1	U2	U3	R1	R2	R3
		m	m	m	Radians	Radians	Radians
33	DEAD	0.	0.	-0.00075	4.458E-17	-9.064E-17	0.
33	G1_power station	0.	0.	0.	0.	0.	0.
33	G2_power station	0.	0.	-0.000751	0.000082	-0.00083	0.
33	Q_power station	0.	0.	-0.000028	3.027E-06	-0.000031	0.
33	Q_neve	0.	0.	-0.00013	0.000013	-0.000084	0.
33	Q_manutenzione	0.	0.	-0.000028	3.027E-06	-0.000031	0.
33	EQ_X	0.017829	0.000323	-3.593E-06	-0.000025	0.000149	-0.00017
33	EQ_Y	-0.000124	0.006684	0.000324	-0.000279	0.000042	-0.000119
34	DEAD	0.	0.	-0.00075	1.148E-17	-3.251E-17	0.
34	G1_power station	0.	0.	0.	0.	0.	0.
34	G2_power station	0.	0.	-0.00009	-0.000077	0.000168	0.
34	Q_power station	0.	0.	-3.320E-06	-2.850E-06	6.202E-06	0.
34	Q_neve	0.	0.	-0.000059	-0.000013	0.000013	0.
34	Q_manutenzione	0.	0.	-3.320E-06	-2.850E-06	6.202E-06	0.
34	EQ_X	0.018248	0.000019	-0.000027	-6.970E-06	-0.000028	-0.00017
34	EQ_Y	0.000148	0.006458	-0.000267	-0.000234	1.842E-07	-0.000114
35	DEAD	0.	0.	-0.000125	2.711E-18	3.029E-18	0.
35	G1_power station	0.	0.	0.	0.	0.	0.
35	G2_power station	0.	0.	-0.000122	0.000053	-0.000212	0.
35	Q_power station	0.	0.	-4.510E-06	1.968E-06	-7.851E-06	0.
35	Q_neve	0.	0.	-0.000024	9.140E-06	-0.00002	0.
35	Q_manutenzione	0.	0.	-4.510E-06	1.968E-06	-7.851E-06	0.
35	EQ_X	0.002957	0.000053	-0.00005	-4.443E-06	0.000032	-0.000028
35	EQ_Y	-0.000029	0.001119	0.000081	-0.000061	0.000041	-0.000027
36	DEAD	0.	0.	-0.000125	2.066E-18	1.300E-18	0.
36	G1_power station	0.	0.	0.	0.	0.	0.
36	G2_power station	0.	0.	0.000045	-0.000025	0.000019	0.
36	Q_power station	0.	0.	1.661E-06	-9.193E-07	7.072E-07	0.
36	Q_neve	0.	0.	-6.735E-06	-6.778E-06	2.274E-07	0.
36	Q_manutenzione	0.	0.	1.661E-06	-9.193E-07	7.072E-07	0.
36	EQ_X	0.003057	4.429E-06	-8.554E-06	2.906E-06	-0.000042	-0.000028
36	EQ_Y	0.000029	0.001068	-0.000038	-0.000031	-3.027E-06	-0.000023
37	DEAD	0.	0.	-0.00075	4.510E-17	-9.219E-17	0.
37	G1_power station	0.	0.	0.	0.	0.	0.
37	G2_power station	0.	0.	-0.000783	0.000046	-0.000789	0.
37	Q_power station	0.	0.	-0.000029	1.701E-06	-0.000029	0.
37	Q_neve	0.	0.	-0.000135	9.387E-06	-0.000079	0.
37	Q_manutenzione	0.	0.	-0.000029	1.701E-06	-0.000029	0.
37	EQ_X	0.017744	0.000323	2.777E-06	-3.046E-06	0.000124	-0.000169
37	EQ_Y	-0.000185	0.006684	0.000465	-0.000283	0.000063	-0.000124
38	DEAD	0.	0.	-0.00075	1.316E-17	-3.198E-17	0.
38	G1_power station	0.	0.	0.	0.	0.	0.
38	G2_power station	0.	0.	-0.000114	-0.000022	0.000089	0.

Table 18: Joint Displacements

Joint	OutputCase	U1	U2	U3	R1	R2	R3
		m	m	m	Radians	Radians	Radians
38	Q_power station	0.	0.	-4.208E-06	-8.218E-07	3.276E-06	0.
38	Q_neve	0.	0.	-0.000064	-7.549E-06	4.825E-06	0.
38	Q_manutenzione	0.	0.	-4.208E-06	-8.218E-07	3.276E-06	0.
38	EQ_X	0.018333	0.000019	-0.000028	-8.385E-07	-0.000031	-0.000169
38	EQ_Y	0.000206	0.006459	-0.000385	-0.000236	-0.000013	-0.00012
39	DEAD	0.	0.	-0.000125	1.890E-18	-3.957E-18	0.
39	G1_power station	0.	0.	0.	0.	0.	0.
39	G2_power station	0.	0.	-0.000423	0.000072	0.000179	0.
39	Q_power station	0.	0.	-0.000016	2.659E-06	6.641E-06	0.
39	Q_neve	0.	0.	-0.000051	8.197E-06	0.00002	0.
39	Q_manutenzione	0.	0.	-0.000016	2.659E-06	6.641E-06	0.
39	EQ_X	0.002985	-0.000099	-0.000103	0.000021	0.00011	-0.000029
39	EQ_Y	-8.337E-06	0.00102	0.000034	-0.000071	-9.535E-06	-0.000012
40	DEAD	0.	0.	-0.000125	2.086E-18	-3.686E-18	0.
40	G1_power station	0.	0.	0.	0.	0.	0.
40	G2_power station	0.	0.	-0.000331	0.000069	0.000189	0.
40	Q_power station	0.	0.	-0.000012	2.542E-06	7.006E-06	0.
40	Q_neve	0.	0.	-0.000041	8.069E-06	0.000021	0.
40	Q_manutenzione	0.	0.	-0.000012	2.542E-06	7.006E-06	0.
40	EQ_X	0.002985	-0.000084	-0.000051	2.956E-06	0.000088	-0.000028
40	EQ_Y	-8.495E-06	0.001026	0.000029	-0.000051	-5.803E-06	-0.000013
41	DEAD	0.	0.	-0.000125	1.532E-18	-3.765E-18	0.
41	G1_power station	0.	0.	0.	0.	0.	0.
41	G2_power station	0.	0.	-0.000397	0.00003	0.000174	0.
41	Q_power station	0.	0.	-0.000015	1.115E-06	6.422E-06	0.
41	Q_neve	0.	0.	-0.000048	3.342E-06	0.000019	0.
41	Q_manutenzione	0.	0.	-0.000015	1.115E-06	6.422E-06	0.
41	EQ_X	0.002999	-0.000099	-0.000096	8.445E-06	0.000093	-0.000028
41	EQ_Y	-1.989E-06	0.00102	9.128E-06	-0.000039	-8.182E-07	-0.000013
42	DEAD	0.	0.	-0.000125	1.590E-18	-3.742E-18	0.
42	G1_power station	0.	0.	0.	0.	0.	0.
42	G2_power station	0.	0.	-0.000308	0.000026	0.00018	0.
42	Q_power station	0.	0.	-0.000011	9.511E-07	6.666E-06	0.
42	Q_neve	0.	0.	-0.000038	2.995E-06	0.00002	0.
42	Q_manutenzione	0.	0.	-0.000011	9.511E-07	6.666E-06	0.
42	EQ_X	0.002999	-0.000084	-0.00005	1.523E-06	0.000088	-0.00003
42	EQ_Y	-1.983E-06	0.001026	8.434E-06	-0.000036	-1.417E-06	-0.000013
43	DEAD	0.	0.	-0.000125	9.021E-19	-3.845E-18	0.
43	G1_power station	0.	0.	0.	0.	0.	0.
43	G2_power station	0.	0.	-0.000397	-0.00003	0.000174	0.
43	Q_power station	0.	0.	-0.000015	-1.115E-06	6.422E-06	0.
43	Q_neve	0.	0.	-0.000048	-3.342E-06	0.000019	0.
43	Q_manutenzione	0.	0.	-0.000015	-1.115E-06	6.422E-06	0.

Table 18: Joint Displacements

Joint	OutputCase	U1	U2	U3	R1	R2	R3
		m	m	m	Radians	Radians	Radians
43	EQ_X	0.003013	-0.000099	-0.000096	-8.445E-06	0.000093	-0.00003
43	EQ_Y	4.551E-06	0.00102	-9.128E-06	-0.000039	8.182E-07	-0.000013
44	DEAD	0.	0.	-0.000125	6.870E-19	-3.686E-18	0.
44	G1_power station	0.	0.	0.	0.	0.	0.
44	G2_power station	0.	0.	-0.000308	-0.000026	0.00018	0.
44	Q_power station	0.	0.	-0.000011	-9.511E-07	6.666E-06	0.
44	Q_neve	0.	0.	-0.000038	-2.995E-06	0.00002	0.
44	Q_manutenzione	0.	0.	-0.000011	-9.511E-07	6.666E-06	0.
44	EQ_X	0.003013	-0.000084	-0.00005	-1.523E-06	0.000088	-0.000029
44	EQ_Y	4.561E-06	0.001026	-8.434E-06	-0.000036	1.417E-06	-0.000013
45	DEAD	0.	0.	-0.000125	1.240E-19	-3.742E-18	0.
45	G1_power station	0.	0.	0.	0.	0.	0.
45	G2_power station	0.	0.	-0.000423	-0.000072	0.000179	0.
45	Q_power station	0.	0.	-0.000016	-2.659E-06	6.641E-06	0.
45	Q_neve	0.	0.	-0.000051	-8.197E-06	0.00002	0.
45	Q_manutenzione	0.	0.	-0.000016	-2.659E-06	6.641E-06	0.
45	EQ_X	0.003028	-0.000099	-0.000103	-0.000021	0.00011	-0.00003
45	EQ_Y	0.000011	0.00102	-0.000034	-0.000071	9.535E-06	-0.000012
46	DEAD	0.	0.	-0.000125	3.408E-19	-3.558E-18	0.
46	G1_power station	0.	0.	0.	0.	0.	0.
46	G2_power station	0.	0.	-0.000331	-0.000069	0.000189	0.
46	Q_power station	0.	0.	-0.000012	-2.542E-06	7.006E-06	0.
46	Q_neve	0.	0.	-0.000041	-8.069E-06	0.000021	0.
46	Q_manutenzione	0.	0.	-0.000012	-2.542E-06	7.006E-06	0.
46	EQ_X	0.003028	-0.000084	-0.000051	-2.956E-06	0.000088	-0.000031
46	EQ_Y	0.000011	0.001027	-0.000029	-0.000051	5.803E-06	-0.000013
47	DEAD	0.	0.	-0.000125	-1.944E-18	3.524E-18	0.
47	G1_power station	0.	0.	0.	0.	0.	0.
47	G2_power station	0.	0.	-0.000478	-0.000078	-0.000233	0.
47	Q_power station	0.	0.	-0.000018	-2.902E-06	-8.608E-06	0.
47	Q_neve	0.	0.	-0.000057	-9.049E-06	-0.000024	0.
47	Q_manutenzione	0.	0.	-0.000018	-2.902E-06	-8.608E-06	0.
47	EQ_X	0.003028	0.000102	0.000137	0.000024	0.00015	-0.00003
47	EQ_Y	0.000014	0.001152	-0.000039	-0.000078	-9.373E-06	-0.000018
48	DEAD	0.	0.	-0.000125	-1.399E-18	3.551E-18	0.
48	G1_power station	0.	0.	0.	0.	0.	0.
48	G2_power station	0.	0.	-0.000359	-0.000077	-0.000245	0.
48	Q_power station	0.	0.	-0.000013	-2.850E-06	-9.067E-06	0.
48	Q_neve	0.	0.	-0.000045	-9.141E-06	-0.000025	0.
48	Q_manutenzione	0.	0.	-0.000013	-2.850E-06	-9.067E-06	0.
48	EQ_X	0.003028	0.000087	0.000064	6.768E-06	0.00013	-0.00003
48	EQ_Y	0.000014	0.001143	-0.000034	-0.000058	-5.931E-06	-0.000016
49	DEAD	0.	0.	-0.000125	-5.998E-19	4.309E-18	0.

Table 18: Joint Displacements

Joint	OutputCase	U1	U2	U3	R1	R2	R3
		m	m	m	Radians	Radians	Radians
49	G1_power station	0.	0.	0.	0.	0.	0.
49	G2_power station	0.	0.	-0.000449	-0.000032	-0.000228	0.
49	Q_power station	0.	0.	-0.000017	-1.197E-06	-8.426E-06	0.
49	Q_neve	0.	0.	-0.000054	-3.629E-06	-0.000024	0.
49	Q_manutenzione	0.	0.	-0.000017	-1.197E-06	-8.426E-06	0.
49	EQ_X	0.003013	0.000102	0.000128	9.246E-06	0.000134	-0.00003
49	EQ_Y	5.941E-06	0.001151	-0.000011	-0.000046	-7.826E-07	-0.000016
50	DEAD	0.	0.	-0.000125	-1.880E-19	4.209E-18	0.
50	G1_power station	0.	0.	0.	0.	0.	0.
50	G2_power station	0.	0.	-0.000333	-0.000029	-0.000238	0.
50	Q_power station	0.	0.	-0.000012	-1.060E-06	-8.799E-06	0.
50	Q_neve	0.	0.	-0.000041	-3.374E-06	-0.000025	0.
50	Q_manutenzione	0.	0.	-0.000012	-1.060E-06	-8.799E-06	0.
50	EQ_X	0.003013	0.000087	0.000062	2.742E-06	0.00013	-0.000029
50	EQ_Y	5.924E-06	0.001143	-9.977E-06	-0.000042	-1.622E-06	-0.000017
51	DEAD	0.	0.	-0.000125	9.358E-19	4.792E-18	0.
51	G1_power station	0.	0.	0.	0.	0.	0.
51	G2_power station	0.	0.	-0.000449	0.000032	-0.000228	0.
51	Q_power station	0.	0.	-0.000017	1.197E-06	-8.426E-06	0.
51	Q_neve	0.	0.	-0.000054	3.629E-06	-0.000024	0.
51	Q_manutenzione	0.	0.	-0.000017	1.197E-06	-8.426E-06	0.
51	EQ_X	0.002999	0.000102	0.000128	-9.246E-06	0.000134	-0.000028
51	EQ_Y	-2.041E-06	0.001151	0.000011	-0.000046	7.826E-07	-0.000017
52	DEAD	0.	0.	-0.000125	1.623E-18	4.635E-18	0.
52	G1_power station	0.	0.	0.	0.	0.	0.
52	G2_power station	0.	0.	-0.000333	0.000029	-0.000238	0.
52	Q_power station	0.	0.	-0.000012	1.060E-06	-8.799E-06	0.
52	Q_neve	0.	0.	-0.000041	3.374E-06	-0.000025	0.
52	Q_manutenzione	0.	0.	-0.000012	1.060E-06	-8.799E-06	0.
52	EQ_X	0.002999	0.000087	0.000062	-2.742E-06	0.00013	-0.000029
52	EQ_Y	-2.007E-06	0.001143	9.977E-06	-0.000042	1.622E-06	-0.000017
53	DEAD	0.	0.	-0.000125	2.341E-18	5.135E-18	0.
53	G1_power station	0.	0.	0.	0.	0.	0.
53	G2_power station	0.	0.	-0.000478	0.000078	-0.000233	0.
53	Q_power station	0.	0.	-0.000018	2.902E-06	-8.608E-06	0.
53	Q_neve	0.	0.	-0.000057	9.049E-06	-0.000024	0.
53	Q_manutenzione	0.	0.	-0.000018	2.902E-06	-8.608E-06	0.
53	EQ_X	0.002985	0.000101	0.000137	-0.000024	0.00015	-0.000028
53	EQ_Y	-0.00001	0.001152	0.000039	-0.000078	9.373E-06	-0.000018
54	DEAD	0.	0.	-0.000125	2.358E-18	5.096E-18	0.
54	G1_power station	0.	0.	0.	0.	0.	0.
54	G2_power station	0.	0.	-0.000359	0.000077	-0.000245	0.
54	Q_power station	0.	0.	-0.000013	2.850E-06	-9.067E-06	0.

Table 18: Joint Displacements

Joint	OutputCase	U1	U2	U3	R1	R2	R3
		m	m	m	Radians	Radians	Radians
54	Q_neve	0.	0.	-0.000045	9.141E-06	-0.000025	0.
54	Q_manutenzione	0.	0.	-0.000013	2.850E-06	-9.067E-06	0.
54	EQ_X	0.002985	0.000087	0.000064	-6.768E-06	0.00013	-0.000027
54	EQ_Y	-0.00001	0.001143	0.000034	-0.000058	5.931E-06	-0.000017
55	DEAD	0.	0.	-0.00075	6.614E-17	-1.061E-17	0.
55	G1_power station	0.	0.	0.	0.	0.	0.
55	G2_power station	0.	0.	-0.001927	0.000071	0.000659	0.
55	Q_power station	0.	0.	-0.000071	2.639E-06	0.000024	0.
55	Q_neve	0.	0.	-0.000237	8.504E-06	0.000067	0.
55	Q_manutenzione	0.	0.	-0.000071	2.639E-06	0.000024	0.
55	EQ_X	0.017912	-0.000588	-0.000275	0.00002	0.000179	-0.000171
55	EQ_Y	-0.000068	0.006068	0.000191	-0.000284	-0.000013	-0.000109
56	DEAD	0.	0.	-0.00075	5.899E-17	-6.781E-18	0.
56	G1_power station	0.	0.	0.	0.	0.	0.
56	G2_power station	0.	0.	-0.001596	0.000067	0.000665	0.
56	Q_power station	0.	0.	-0.000059	2.465E-06	0.000025	0.
56	Q_neve	0.	0.	-0.000204	8.233E-06	0.000068	0.
56	Q_manutenzione	0.	0.	-0.000059	2.465E-06	0.000025	0.
56	EQ_X	0.017912	-0.000502	-0.000189	1.565E-06	0.000154	-0.00017
56	EQ_Y	-0.000068	0.006123	0.000184	-0.000261	-9.828E-06	-0.00011
57	DEAD	0.	0.	-0.000125	2.873E-18	5.178E-18	0.
57	G1_power station	0.	0.	0.	0.	0.	0.
57	G2_power station	0.	0.	-0.00043	0.000055	-0.00026	0.
57	Q_power station	0.	0.	-0.000016	2.035E-06	-9.631E-06	0.
57	Q_neve	0.	0.	-0.000054	8.257E-06	-0.000026	0.
57	Q_manutenzione	0.	0.	-0.000016	2.035E-06	-9.631E-06	0.
57	EQ_X	0.002957	0.000087	0.000067	3.084E-06	0.000134	-0.000031
57	EQ_Y	-0.000028	0.001143	0.000134	-0.000094	0.00003	-0.000017
58	DEAD	0.	0.	-0.000125	3.009E-18	5.264E-18	0.
58	G1_power station	0.	0.	0.	0.	0.	0.
58	G2_power station	0.	0.	-0.0004	0.000075	-0.000256	0.
58	Q_power station	0.	0.	-0.000015	2.771E-06	-9.463E-06	0.
58	Q_neve	0.	0.	-0.00005	9.824E-06	-0.000026	0.
58	Q_manutenzione	0.	0.	-0.000015	2.771E-06	-9.463E-06	0.
58	EQ_X	0.002972	0.000087	0.000067	-3.702E-06	0.0002	-0.000028
58	EQ_Y	-0.000019	0.001144	0.000078	-0.000157	0.000017	-0.000018
59	DEAD	0.	0.	-0.000125	2.676E-18	5.302E-18	0.
59	G1_power station	0.	0.	0.	0.	0.	0.
59	G2_power station	0.	0.	-0.000519	0.000081	-0.00023	0.
59	Q_power station	0.	0.	-0.000019	2.993E-06	-8.515E-06	0.
59	Q_neve	0.	0.	-0.000062	0.00001	-0.000024	0.
59	Q_manutenzione	0.	0.	-0.000019	2.993E-06	-8.515E-06	0.
59	EQ_X	0.002972	0.000102	0.000147	-0.000013	0.000146	-0.000029

Table 18: Joint Displacements

Joint	OutputCase	U1	U2	U3	R1	R2	R3
		m	m	m	Radians	Radians	Radians
59	EQ_Y	-0.000019	0.001152	0.000085	-0.000085	9.988E-06	-0.000015
60	DEAD	0.	0.	-0.000125	1.447E-18	-4.170E-18	0.
60	G1_power station	0.	0.	0.	0.	0.	0.
60	G2_power station	0.	0.	-0.000391	0.000041	0.00021	0.
60	Q_power station	0.	0.	-0.000014	1.521E-06	7.782E-06	0.
60	Q_neve	0.	0.	-0.000049	6.465E-06	0.000022	0.
60	Q_manutenzione	0.	0.	-0.000014	1.521E-06	7.782E-06	0.
60	EQ_X	0.002956	-0.000084	-0.000048	-9.401E-06	0.000095	-0.000032
60	EQ_Y	-0.000021	0.001026	0.000121	-0.000086	-0.000031	-0.000013
61	DEAD	0.	0.	-0.000125	1.584E-18	-4.028E-18	0.
61	G1_power station	0.	0.	0.	0.	0.	0.
61	G2_power station	0.	0.	-0.00046	0.000071	0.000179	0.
61	Q_power station	0.	0.	-0.000017	2.610E-06	6.607E-06	0.
61	Q_neve	0.	0.	-0.000055	8.768E-06	0.00002	0.
61	Q_manutenzione	0.	0.	-0.000017	2.610E-06	6.607E-06	0.
61	EQ_X	0.002971	-0.000099	-0.000112	8.090E-06	0.000107	-0.00003
61	EQ_Y	-0.000015	0.00102	0.000076	-0.000078	-0.00001	-0.000015
62	DEAD	0.	0.	-0.000125	-1.421E-19	-3.365E-18	0.
62	G1_power station	0.	0.	0.	0.	0.	0.
62	G2_power station	0.	0.	-0.00046	-0.000071	0.000179	0.
62	Q_power station	0.	0.	-0.000017	-2.610E-06	6.607E-06	0.
62	Q_neve	0.	0.	-0.000055	-8.768E-06	0.00002	0.
62	Q_manutenzione	0.	0.	-0.000017	-2.610E-06	6.607E-06	0.
62	EQ_X	0.003043	-0.000099	-0.000112	-8.090E-06	0.000107	-0.000029
62	EQ_Y	0.000017	0.00102	-0.000076	-0.000078	0.00001	-0.000015
63	DEAD	0.	0.	-0.000125	2.880E-20	-3.525E-18	0.
63	G1_power station	0.	0.	0.	0.	0.	0.
63	G2_power station	0.	0.	-0.000367	-0.000063	0.000202	0.
63	Q_power station	0.	0.	-0.000014	-2.314E-06	7.491E-06	0.
63	Q_neve	0.	0.	-0.000045	-8.232E-06	0.000022	0.
63	Q_manutenzione	0.	0.	-0.000014	-2.314E-06	7.491E-06	0.
63	EQ_X	0.003043	-0.000084	-0.000052	2.075E-06	0.000161	-0.00003
63	EQ_Y	0.000017	0.001027	-0.00007	-0.000147	0.000017	-0.000012
64	DEAD	0.	0.	-0.000125	1.084E-19	-3.415E-18	0.
64	G1_power station	0.	0.	0.	0.	0.	0.
64	G2_power station	0.	0.	-0.000391	-0.000041	0.00021	0.
64	Q_power station	0.	0.	-0.000014	-1.521E-06	7.782E-06	0.
64	Q_neve	0.	0.	-0.000049	-6.465E-06	0.000022	0.
64	Q_manutenzione	0.	0.	-0.000014	-1.521E-06	7.782E-06	0.
64	EQ_X	0.003057	-0.000084	-0.000048	9.401E-06	0.000095	-0.000027
64	EQ_Y	0.000024	0.001027	-0.000121	-0.000086	0.000031	-0.000013
65	DEAD	0.	0.	-0.000125	-1.925E-18	1.952E-18	0.
65	G1_power station	0.	0.	0.	0.	0.	0.

Table 18: Joint Displacements

Joint	OutputCase	U1	U2	U3	R1	R2	R3
		m	m	m	Radians	Radians	Radians
65	G2_power station	0.	0.	-0.00043	-0.000055	-0.00026	0.
65	Q_power station	0.	0.	-0.000016	-2.035E-06	-9.631E-06	0.
65	Q_neve	0.	0.	-0.000054	-8.257E-06	-0.000026	0.
65	Q_manutenzione	0.	0.	-0.000016	-2.035E-06	-9.631E-06	0.
65	EQ_X	0.003057	0.000087	0.000067	-3.084E-06	0.000134	-0.000027
65	EQ_Y	0.000031	0.001143	-0.000134	-0.000094	-0.00003	-0.000016
66	DEAD	0.	0.	-0.000125	-2.433E-18	2.683E-18	0.
66	G1_power station	0.	0.	0.	0.	0.	0.
66	G2_power station	0.	0.	-0.000519	-0.000081	-0.00023	0.
66	Q_power station	0.	0.	-0.000019	-2.993E-06	-8.515E-06	0.
66	Q_neve	0.	0.	-0.000062	-0.00001	-0.000024	0.
66	Q_manutenzione	0.	0.	-0.000019	-2.993E-06	-8.515E-06	0.
66	EQ_X	0.003042	0.000102	0.000147	0.000013	0.000146	-0.000029
66	EQ_Y	0.000022	0.001152	-0.000085	-0.000085	-9.988E-06	-0.000014
67	DEAD	0.	0.	-0.00075	5.950E-17	-1.601E-17	0.
67	G1_power station	0.	0.	0.	0.	0.	0.
67	G2_power station	0.	0.	-0.0019	0.00003	0.000652	0.
67	Q_power station	0.	0.	-0.00007	1.119E-06	0.000024	0.
67	Q_neve	0.	0.	-0.000234	3.486E-06	0.000066	0.
67	Q_manutenzione	0.	0.	-0.00007	1.119E-06	0.000024	0.
67	EQ_X	0.017996	-0.000588	-0.000268	8.072E-06	0.000162	-0.00017
67	EQ_Y	-0.000014	0.006068	0.000061	-0.000253	-2.145E-06	-0.00011
68	DEAD	0.	0.	-0.00075	5.468E-17	-1.411E-17	0.
68	G1_power station	0.	0.	0.	0.	0.	0.
68	G2_power station	0.	0.	-0.001572	0.000025	0.000655	0.
68	Q_power station	0.	0.	-0.000058	9.338E-07	0.000024	0.
68	Q_neve	0.	0.	-0.000201	3.085E-06	0.000067	0.
68	Q_manutenzione	0.	0.	-0.000058	9.338E-07	0.000024	0.
68	EQ_X	0.017996	-0.000502	-0.000188	1.074E-06	0.000154	-0.000172
68	EQ_Y	-0.000014	0.006123	0.00006	-0.000246	-2.800E-06	-0.00011
69	DEAD	0.	0.	-0.00075	5.030E-17	-1.864E-17	0.
69	G1_power station	0.	0.	0.	0.	0.	0.
69	G2_power station	0.	0.	-0.0019	-0.00003	0.000652	0.
69	Q_power station	0.	0.	-0.00007	-1.119E-06	0.000024	0.
69	Q_neve	0.	0.	-0.000234	-3.486E-06	0.000066	0.
69	Q_manutenzione	0.	0.	-0.00007	-1.119E-06	0.000024	0.
69	EQ_X	0.018079	-0.000588	-0.000268	-8.072E-06	0.000162	-0.000172
69	EQ_Y	0.000039	0.006068	-0.000061	-0.000253	2.145E-06	-0.00011
70	DEAD	0.	0.	-0.00075	4.674E-17	-1.800E-17	0.
70	G1_power station	0.	0.	0.	0.	0.	0.
70	G2_power station	0.	0.	-0.001572	-0.000025	0.000655	0.
70	Q_power station	0.	0.	-0.000058	-9.338E-07	0.000024	0.
70	Q_neve	0.	0.	-0.000201	-3.085E-06	0.000067	0.

Table 18: Joint Displacements

Joint	OutputCase	U1	U2	U3	R1	R2	R3
		m	m	m	Radians	Radians	Radians
70	Q_manutenzione	0.	0.	-0.000058	-9.338E-07	0.000024	0.
70	EQ_X	0.01808	-0.000502	-0.000188	-1.074E-06	0.000154	-0.000171
70	EQ_Y	0.000039	0.006123	-0.00006	-0.000246	2.800E-06	-0.000109
71	DEAD	0.	0.	-0.00075	3.761E-17	-2.298E-17	0.
71	G1_power station	0.	0.	0.	0.	0.	0.
71	G2_power station	0.	0.	-0.001927	-0.000071	0.000659	0.
71	Q_power station	0.	0.	-0.000071	-2.639E-06	0.000024	0.
71	Q_neve	0.	0.	-0.000237	-8.504E-06	0.000067	0.
71	Q_manutenzione	0.	0.	-0.000071	-2.639E-06	0.000024	0.
71	EQ_X	0.018164	-0.000588	-0.000275	-0.00002	0.000179	-0.000172
71	EQ_Y	0.000093	0.006068	-0.000191	-0.000284	0.000013	-0.000109
72	DEAD	0.	0.	-0.00075	3.535E-17	-2.170E-17	0.
72	G1_power station	0.	0.	0.	0.	0.	0.
72	G2_power station	0.	0.	-0.001596	-0.000067	0.000665	0.
72	Q_power station	0.	0.	-0.000059	-2.465E-06	0.000025	0.
72	Q_neve	0.	0.	-0.000204	-8.233E-06	0.000068	0.
72	Q_manutenzione	0.	0.	-0.000059	-2.465E-06	0.000025	0.
72	EQ_X	0.018164	-0.000502	-0.000189	-1.565E-06	0.000154	-0.000172
72	EQ_Y	0.000093	0.006123	-0.000184	-0.000261	9.828E-06	-0.00011
73	DEAD	0.	0.	-0.00075	4.152E-17	-9.975E-17	0.
73	G1_power station	0.	0.	0.	0.	0.	0.
73	G2_power station	0.	0.	-0.002282	-0.000073	-0.000924	0.
73	Q_power station	0.	0.	-0.000084	-2.712E-06	-0.000034	0.
73	Q_neve	0.	0.	-0.000285	-9.053E-06	-0.000095	0.
73	Q_manutenzione	0.	0.	-0.000084	-2.712E-06	-0.000034	0.
73	EQ_X	0.018164	0.000614	0.000404	0.000022	0.000287	-0.000172
73	EQ_Y	0.000096	0.00688	-0.000215	-0.000316	-0.000015	-0.000115
74	DEAD	0.	0.	-0.00075	4.127E-17	-9.823E-17	0.
74	G1_power station	0.	0.	0.	0.	0.	0.
74	G2_power station	0.	0.	-0.001818	-0.000071	-0.000933	0.
74	Q_power station	0.	0.	-0.000067	-2.611E-06	-0.000035	0.
74	Q_neve	0.	0.	-0.000237	-9.026E-06	-0.000096	0.
74	Q_manutenzione	0.	0.	-0.000067	-2.611E-06	-0.000035	0.
74	EQ_X	0.018164	0.000528	0.000263	4.927E-06	0.000265	-0.000172
74	EQ_Y	0.000096	0.006823	-0.000207	-0.000292	-0.000012	-0.000112
75	DEAD	0.	0.	-0.00075	3.456E-17	-9.941E-17	0.
75	G1_power station	0.	0.	0.	0.	0.	0.
75	G2_power station	0.	0.	-0.002255	-0.000031	-0.000918	0.
75	Q_power station	0.	0.	-0.000083	-1.133E-06	-0.000034	0.
75	Q_neve	0.	0.	-0.000281	-3.645E-06	-0.000094	0.
75	Q_manutenzione	0.	0.	-0.000083	-1.133E-06	-0.000034	0.
75	EQ_X	0.018079	0.000613	0.000396	8.574E-06	0.000271	-0.000172
75	EQ_Y	0.000041	0.00688	-0.000069	-0.000285	-2.698E-06	-0.000113

Table 18: Joint Displacements

Joint	OutputCase	U1	U2	U3	R1	R2	R3
		m	m	m	Radians	Radians	Radians
76	DEAD	0.	0.	-0.00075	3.497E-17	-9.723E-17	0.
76	G1_power station	0.	0.	0.	0.	0.	0.
76	G2_power station	0.	0.	-0.001794	-0.000026	-0.000925	0.
76	Q_power station	0.	0.	-0.000066	-9.763E-07	-0.000034	0.
76	Q_neve	0.	0.	-0.000234	-3.341E-06	-0.000095	0.
76	Q_manutenzione	0.	0.	-0.000066	-9.763E-07	-0.000034	0.
76	EQ_X	0.01808	0.000528	0.000261	2.127E-06	0.000266	-0.000171
76	EQ_Y	0.000041	0.006823	-0.000068	-0.000277	-3.599E-06	-0.000114
77	DEAD	0.	0.	-0.00075	3.177E-17	-9.829E-17	0.
77	G1_power station	0.	0.	0.	0.	0.	0.
77	G2_power station	0.	0.	-0.002255	0.000031	-0.000918	0.
77	Q_power station	0.	0.	-0.000083	1.133E-06	-0.000034	0.
77	Q_neve	0.	0.	-0.000281	3.645E-06	-0.000094	0.
77	Q_manutenzione	0.	0.	-0.000083	1.133E-06	-0.000034	0.
77	EQ_X	0.017996	0.000613	0.000396	-8.574E-06	0.000271	-0.00017
77	EQ_Y	-0.000014	0.00688	0.000069	-0.000285	2.698E-06	-0.000113
78	DEAD	0.	0.	-0.00075	3.340E-17	-9.649E-17	0.
78	G1_power station	0.	0.	0.	0.	0.	0.
78	G2_power station	0.	0.	-0.001794	0.000026	-0.000925	0.
78	Q_power station	0.	0.	-0.000066	9.763E-07	-0.000034	0.
78	Q_neve	0.	0.	-0.000234	3.341E-06	-0.000095	0.
78	Q_manutenzione	0.	0.	-0.000066	9.763E-07	-0.000034	0.
78	EQ_X	0.017996	0.000528	0.000261	-2.127E-06	0.000266	-0.000171
78	EQ_Y	-0.000014	0.006823	0.000068	-0.000277	3.599E-06	-0.000113
79	DEAD	0.	0.	-0.00075	3.524E-17	-9.411E-17	0.
79	G1_power station	0.	0.	0.	0.	0.	0.
79	G2_power station	0.	0.	-0.002282	0.000073	-0.000924	0.
79	Q_power station	0.	0.	-0.000084	2.712E-06	-0.000034	0.
79	Q_neve	0.	0.	-0.000285	9.053E-06	-0.000095	0.
79	Q_manutenzione	0.	0.	-0.000084	2.712E-06	-0.000034	0.
79	EQ_X	0.017912	0.000613	0.000404	-0.000022	0.000287	-0.00017
79	EQ_Y	-0.00007	0.00688	0.000215	-0.000316	0.000015	-0.000114
80	DEAD	0.	0.	-0.00075	3.661E-17	-9.584E-17	0.
80	G1_power station	0.	0.	0.	0.	0.	0.
80	G2_power station	0.	0.	-0.001818	0.000071	-0.000933	0.
80	Q_power station	0.	0.	-0.000067	2.611E-06	-0.000035	0.
80	Q_neve	0.	0.	-0.000237	9.026E-06	-0.000096	0.
80	Q_manutenzione	0.	0.	-0.000067	2.611E-06	-0.000035	0.
80	EQ_X	0.017913	0.000528	0.000263	-4.927E-06	0.000265	-0.000169
80	EQ_Y	-0.00007	0.006823	0.000207	-0.000292	0.000012	-0.000113
81	DEAD	0.	0.	-0.000125	2.073E-18	-3.746E-18	0.
81	G1_power station	0.	0.	0.	0.	0.	0.
81	G2_power station	0.	0.	-0.000273	0.00005	0.000215	0.

Table 18: Joint Displacements

Joint	OutputCase	U1	U2	U3	R1	R2	R3
		m	m	m	Radians	Radians	Radians
81	Q_power station	0.	0.	-0.00001	1.860E-06	7.972E-06	0.
81	Q_neve	0.	0.	-0.000035	7.355E-06	0.000022	0.
81	Q_manutenzione	0.	0.	-0.00001	1.860E-06	7.972E-06	0.
81	EQ_X	0.002971	-0.000072	-7.843E-06	-8.630E-06	0.000065	-0.000029
81	EQ_Y	-0.000015	0.001032	0.000061	-0.000066	-0.000022	-0.000011
82	DEAD	0.	0.	-0.000125	1.656E-18	-4.073E-18	0.
82	G1_power station	0.	0.	0.	0.	0.	0.
82	G2_power station	0.	0.	-0.000296	0.000041	0.000221	0.
82	Q_power station	0.	0.	-0.000011	1.519E-06	8.187E-06	0.
82	Q_neve	0.	0.	-0.000039	6.650E-06	0.000023	0.
82	Q_manutenzione	0.	0.	-0.000011	1.519E-06	8.187E-06	0.
82	EQ_X	0.002956	-0.000071	-5.201E-06	-6.710E-06	0.000083	-0.000029
82	EQ_Y	-0.000021	0.001032	0.000102	-0.000087	-0.000048	-0.000012
83	DEAD	0.	0.	-0.000125	1.995E-18	-3.239E-18	0.
83	G1_power station	0.	0.	0.	0.	0.	0.
83	G2_power station	0.	0.	-0.000185	0.000037	0.00019	0.
83	Q_power station	0.	0.	-6.837E-06	1.360E-06	7.023E-06	0.
83	Q_neve	0.	0.	-0.000026	6.358E-06	0.000019	0.
83	Q_manutenzione	0.	0.	-6.837E-06	1.360E-06	7.023E-06	0.
83	EQ_X	0.002971	-0.000059	0.000014	-0.00001	0.000035	-0.000029
83	EQ_Y	-0.000015	0.001037	0.000052	-0.00006	-0.000022	-0.000013
84	DEAD	0.	0.	-0.000125	2.175E-18	-3.374E-18	0.
84	G1_power station	0.	0.	0.	0.	0.	0.
84	G2_power station	0.	0.	-0.000202	0.000032	0.000203	0.
84	Q_power station	0.	0.	-7.478E-06	1.172E-06	7.509E-06	0.
84	Q_neve	0.	0.	-0.000029	6.007E-06	0.00002	0.
84	Q_manutenzione	0.	0.	-7.478E-06	1.172E-06	7.509E-06	0.
84	EQ_X	0.002956	-0.000059	0.00002	-0.000014	0.000037	-0.000029
84	EQ_Y	-0.000021	0.001037	0.000082	-0.000062	-0.000043	-0.000012
85	DEAD	0.	0.	-0.000125	1.903E-18	-2.556E-18	0.
85	G1_power station	0.	0.	0.	0.	0.	0.
85	G2_power station	0.	0.	-0.000109	0.000026	0.000157	0.
85	Q_power station	0.	0.	-4.040E-06	9.480E-07	5.799E-06	0.
85	Q_neve	0.	0.	-0.000018	5.566E-06	0.000016	0.
85	Q_manutenzione	0.	0.	-4.040E-06	9.480E-07	5.799E-06	0.
85	EQ_X	0.002971	-0.000046	0.000024	-9.596E-06	0.00001	-0.000029
85	EQ_Y	-0.000015	0.001042	0.000042	-0.000043	-0.00002	-0.000012
86	DEAD	0.	0.	-0.000125	2.266E-18	-1.947E-18	0.
86	G1_power station	0.	0.	0.	0.	0.	0.
86	G2_power station	0.	0.	-0.000121	0.000021	0.000167	0.
86	Q_power station	0.	0.	-4.487E-06	7.826E-07	6.181E-06	0.
86	Q_neve	0.	0.	-0.000021	5.278E-06	0.000016	0.
86	Q_manutenzione	0.	0.	-4.487E-06	7.826E-07	6.181E-06	0.

Table 18: Joint Displacements

Joint	OutputCase	U1	U2	U3	R1	R2	R3
		m	m	m	Radians	Radians	Radians
86	EQ_X	0.002956	-0.000046	0.000029	-0.000013	8.318E-06	-0.000029
86	EQ_Y	-0.000022	0.001042	0.000065	-0.000046	-0.000034	-0.000013
87	DEAD	0.	0.	-0.000125	1.444E-18	-1.603E-18	0.
87	G1_power station	0.	0.	0.	0.	0.	0.
87	G2_power station	0.	0.	-0.000048	0.000018	0.000124	0.
87	Q_power station	0.	0.	-1.785E-06	6.755E-07	4.574E-06	0.
87	Q_neve	0.	0.	-0.000012	5.119E-06	0.000012	0.
87	Q_manutenzione	0.	0.	-1.785E-06	6.755E-07	4.574E-06	0.
87	EQ_X	0.002971	-0.000033	0.000024	-7.723E-06	-8.097E-06	-0.000029
87	EQ_Y	-0.000016	0.001048	0.000035	-0.000035	-0.000016	-0.000014
88	DEAD	0.	0.	-0.000125	1.278E-18	-8.886E-19	0.
88	G1_power station	0.	0.	0.	0.	0.	0.
88	G2_power station	0.	0.	-0.000057	0.000014	0.000129	0.
88	Q_power station	0.	0.	-2.101E-06	5.332E-07	4.784E-06	0.
88	Q_neve	0.	0.	-0.000015	4.917E-06	0.000012	0.
88	Q_manutenzione	0.	0.	-2.101E-06	5.332E-07	4.784E-06	0.
88	EQ_X	0.002956	-0.000033	0.000028	-0.000011	-0.000011	-0.000029
88	EQ_Y	-0.000022	0.001048	0.000053	-0.000036	-0.000025	-0.000012
89	DEAD	0.	0.	-0.000125	6.357E-19	-1.138E-18	0.
89	G1_power station	0.	0.	0.	0.	0.	0.
89	G2_power station	0.	0.	-8.594E-07	0.000015	0.000095	0.
89	Q_power station	0.	0.	-3.180E-08	5.636E-07	3.504E-06	0.
89	Q_neve	0.	0.	-8.056E-06	5.098E-06	8.477E-06	0.
89	Q_manutenzione	0.	0.	-3.180E-08	5.636E-07	3.504E-06	0.
89	EQ_X	0.002971	-0.000021	0.000017	-5.428E-06	-0.000021	-0.000029
89	EQ_Y	-0.000016	0.001054	0.000029	-0.000029	-0.000011	-0.000013
90	DEAD	0.	0.	-0.000125	6.798E-19	-5.184E-19	0.
90	G1_power station	0.	0.	0.	0.	0.	0.
90	G2_power station	0.	0.	-8.079E-06	0.000012	0.000095	0.
90	Q_power station	0.	0.	-2.989E-07	4.541E-07	3.516E-06	0.
90	Q_neve	0.	0.	-0.000011	5.012E-06	8.170E-06	0.
90	Q_manutenzione	0.	0.	-2.989E-07	4.541E-07	3.516E-06	0.
90	EQ_X	0.002956	-0.000021	0.000021	-7.940E-06	-0.000024	-0.000029
90	EQ_Y	-0.000023	0.001054	0.000044	-0.00003	-0.000016	-0.000014
91	DEAD	0.	0.	-0.000125	3.835E-19	-7.280E-19	0.
91	G1_power station	0.	0.	0.	0.	0.	0.
91	G2_power station	0.	0.	0.000035	0.000017	0.00007	0.
91	Q_power station	0.	0.	1.291E-06	6.375E-07	2.586E-06	0.
91	Q_neve	0.	0.	-4.985E-06	5.597E-06	5.691E-06	0.
91	Q_manutenzione	0.	0.	1.291E-06	6.375E-07	2.586E-06	0.
91	EQ_X	0.002971	-8.048E-06	5.930E-06	-2.484E-06	-0.000031	-0.000029
91	EQ_Y	-0.000016	0.00106	0.000025	-0.000026	-7.325E-06	-0.000016
92	DEAD	0.	0.	-0.000125	1.215E-19	-5.253E-19	0.

Table 18: Joint Displacements

Joint	OutputCase	U1	U2	U3	R1	R2	R3
		m	m	m	Radians	Radians	Radians
92	G1_power station	0.	0.	0.	0.	0.	0.
92	G2_power station	0.	0.	0.000026	0.000015	0.000063	0.
92	Q_power station	0.	0.	9.735E-07	5.542E-07	2.317E-06	0.
92	Q_neve	0.	0.	-7.856E-06	5.580E-06	4.628E-06	0.
92	Q_manutenzione	0.	0.	9.735E-07	5.542E-07	2.317E-06	0.
92	EQ_X	0.002957	-8.061E-06	7.923E-06	-5.298E-06	-0.000034	-0.000029
92	EQ_Y	-0.000024	0.00106	0.000039	-0.000028	-7.291E-06	-0.000014
93	DEAD	0.	0.	-0.000125	-1.030E-18	2.704E-18	0.
93	G1_power station	0.	0.	0.	0.	0.	0.
93	G2_power station	0.	0.	-0.000293	-0.000067	-0.000272	0.
93	Q_power station	0.	0.	-0.000011	-2.481E-06	-0.00001	0.
93	Q_neve	0.	0.	-0.000039	-9.437E-06	-0.000027	0.
93	Q_manutenzione	0.	0.	-0.000011	-2.481E-06	-0.00001	0.
93	EQ_X	0.003043	0.000076	9.674E-06	-3.454E-07	0.00011	-0.000029
93	EQ_Y	0.000022	0.001136	-0.000071	-0.000077	-0.000022	-0.000018
94	DEAD	0.	0.	-0.000125	-1.059E-18	1.506E-18	0.
94	G1_power station	0.	0.	0.	0.	0.	0.
94	G2_power station	0.	0.	-0.000323	-0.000059	-0.000272	0.
94	Q_power station	0.	0.	-0.000012	-2.173E-06	-0.00001	0.
94	Q_neve	0.	0.	-0.000043	-8.887E-06	-0.000027	0.
94	Q_manutenzione	0.	0.	-0.000012	-2.173E-06	-0.00001	0.
94	EQ_X	0.003057	0.000076	0.000012	2.908E-06	0.000124	-0.00003
94	EQ_Y	0.000031	0.001136	-0.000117	-0.000097	-0.000047	-0.000018
95	DEAD	0.	0.	-0.000125	-2.575E-19	2.153E-18	0.
95	G1_power station	0.	0.	0.	0.	0.	0.
95	G2_power station	0.	0.	-0.000187	-0.000061	-0.000253	0.
95	Q_power station	0.	0.	-6.929E-06	-2.265E-06	-9.367E-06	0.
95	Q_neve	0.	0.	-0.000028	-9.318E-06	-0.000025	0.
95	Q_manutenzione	0.	0.	-6.929E-06	-2.265E-06	-9.367E-06	0.
95	EQ_X	0.003043	0.000064	-0.000029	2.839E-06	0.000081	-0.000029
95	EQ_Y	0.000022	0.001129	-0.000061	-0.000072	-0.000025	-0.000018
96	DEAD	0.	0.	-0.000125	-3.317E-19	1.531E-18	0.
96	G1_power station	0.	0.	0.	0.	0.	0.
96	G2_power station	0.	0.	-0.000217	-0.000055	-0.000257	0.
96	Q_power station	0.	0.	-8.017E-06	-2.048E-06	-9.502E-06	0.
96	Q_neve	0.	0.	-0.000033	-8.945E-06	-0.000025	0.
96	Q_manutenzione	0.	0.	-8.017E-06	-2.048E-06	-9.502E-06	0.
96	EQ_X	0.003057	0.000064	-0.000028	-1.729E-06	0.000076	-0.000029
96	EQ_Y	0.000031	0.001129	-0.000098	-0.000076	-0.000045	-0.000019
97	DEAD	0.	0.	-0.000125	2.049E-18	-3.713E-18	0.
97	G1_power station	0.	0.	0.	0.	0.	0.
97	G2_power station	0.	0.	-0.000248	0.00005	0.000192	0.
97	Q_power station	0.	0.	-9.162E-06	1.836E-06	7.087E-06	0.

Table 18: Joint Displacements

Joint	OutputCase	U1	U2	U3	R1	R2	R3
		m	m	m	Radians	Radians	Radians
97	Q_neve	0.	0.	-0.000032	6.529E-06	0.000021	0.
97	Q_manutenzione	0.	0.	-9.162E-06	1.836E-06	7.087E-06	0.
97	EQ_X	0.002985	-0.000072	-0.000014	-0.00001	0.000071	-0.000029
97	EQ_Y	-8.625E-06	0.001032	0.000029	-0.000055	-2.171E-06	-0.000013
98	DEAD	0.	0.	-0.000125	2.196E-18	-3.201E-18	0.
98	G1_power station	0.	0.	0.	0.	0.	0.
98	G2_power station	0.	0.	-0.000167	0.000032	0.000174	0.
98	Q_power station	0.	0.	-6.190E-06	1.194E-06	6.442E-06	0.
98	Q_neve	0.	0.	-0.000023	5.138E-06	0.000018	0.
98	Q_manutenzione	0.	0.	-6.190E-06	1.194E-06	6.442E-06	0.
98	EQ_X	0.002985	-0.000059	9.204E-06	-8.921E-06	0.000036	-0.000029
98	EQ_Y	-8.661E-06	0.001037	0.000026	-0.000044	-7.198E-06	-0.000012
99	DEAD	0.	0.	-0.000125	1.924E-18	-2.738E-18	0.
99	G1_power station	0.	0.	0.	0.	0.	0.
99	G2_power station	0.	0.	-0.000097	0.000021	0.000146	0.
99	Q_power station	0.	0.	-3.603E-06	7.798E-07	5.409E-06	0.
99	Q_neve	0.	0.	-0.000016	4.283E-06	0.000015	0.
99	Q_manutenzione	0.	0.	-3.603E-06	7.798E-07	5.409E-06	0.
99	EQ_X	0.002985	-0.000046	0.000019	-6.801E-06	0.000012	-0.000029
99	EQ_Y	-8.742E-06	0.001042	0.000023	-0.000036	-8.770E-06	-0.000014
100	DEAD	0.	0.	-0.000125	1.633E-18	-2.437E-18	0.
100	G1_power station	0.	0.	0.	0.	0.	0.
100	G2_power station	0.	0.	-0.00004	0.000014	0.000118	0.
100	Q_power station	0.	0.	-1.479E-06	5.337E-07	4.358E-06	0.
100	Q_neve	0.	0.	-0.00001	3.839E-06	0.000011	0.
100	Q_manutenzione	0.	0.	-1.479E-06	5.337E-07	4.358E-06	0.
100	EQ_X	0.002985	-0.000033	0.000021	-4.905E-06	-5.792E-06	-0.000029
100	EQ_Y	-8.819E-06	0.001048	0.000019	-0.000029	-8.075E-06	-0.000013
101	DEAD	0.	0.	-0.000125	1.274E-18	-1.653E-18	0.
101	G1_power station	0.	0.	0.	0.	0.	0.
101	G2_power station	0.	0.	5.869E-06	0.000012	0.000094	0.
101	Q_power station	0.	0.	2.171E-07	4.263E-07	3.462E-06	0.
101	Q_neve	0.	0.	-5.829E-06	3.763E-06	8.658E-06	0.
101	Q_manutenzione	0.	0.	2.171E-07	4.263E-07	3.462E-06	0.
101	EQ_X	0.002985	-0.000021	0.000015	-2.953E-06	-0.000018	-0.000029
101	EQ_Y	-8.865E-06	0.001054	0.000016	-0.000024	-6.581E-06	-0.000014
102	DEAD	0.	0.	-0.000125	7.936E-19	-1.057E-18	0.
102	G1_power station	0.	0.	0.	0.	0.	0.
102	G2_power station	0.	0.	0.000042	0.000013	0.000076	0.
102	Q_power station	0.	0.	1.572E-06	4.902E-07	2.798E-06	0.
102	Q_neve	0.	0.	-2.529E-06	4.202E-06	6.645E-06	0.
102	Q_manutenzione	0.	0.	1.572E-06	4.902E-07	2.798E-06	0.
102	EQ_X	0.002985	-8.059E-06	5.271E-06	-2.164E-07	-0.000027	-0.000029

Table 18: Joint Displacements

Joint	OutputCase	U1	U2	U3	R1	R2	R3
		m	m	m	Radians	Radians	Radians
102	EQ_Y	-8.799E-06	0.00106	0.000013	-0.000021	-5.145E-06	-0.000014
103	DEAD	0.	0.	-0.000125	7.047E-19	-4.253E-19	0.
103	G1_power station	0.	0.	0.	0.	0.	0.
103	G2_power station	0.	0.	0.000074	0.000023	0.000073	0.
103	Q_power station	0.	0.	2.736E-06	8.500E-07	2.712E-06	0.
103	Q_neve	0.	0.	2.285E-07	5.584E-06	6.546E-06	0.
103	Q_manutenzione	0.	0.	2.736E-06	8.500E-07	2.712E-06	0.
103	EQ_X	0.002985	4.596E-06	-7.092E-06	4.949E-06	-0.000029	-0.000029
103	EQ_Y	-8.821E-06	0.001066	0.000011	-0.000019	-5.691E-06	-0.000014
104	DEAD	0.	0.	-0.000125	1.838E-18	-3.551E-18	0.
104	G1_power station	0.	0.	0.	0.	0.	0.
104	G2_power station	0.	0.	-0.00023	0.00002	0.000176	0.
104	Q_power station	0.	0.	-8.495E-06	7.442E-07	6.521E-06	0.
104	Q_neve	0.	0.	-0.000029	2.553E-06	0.000019	0.
104	Q_manutenzione	0.	0.	-8.495E-06	7.442E-07	6.521E-06	0.
104	EQ_X	0.002999	-0.000072	-0.000017	-2.492E-06	0.000065	-0.000029
104	EQ_Y	-2.016E-06	0.001032	7.986E-06	-0.000034	-5.096E-07	-0.000013
105	DEAD	0.	0.	-0.000125	1.598E-18	-3.038E-18	0.
105	G1_power station	0.	0.	0.	0.	0.	0.
105	G2_power station	0.	0.	-0.000156	0.000013	0.000162	0.
105	Q_power station	0.	0.	-5.756E-06	4.888E-07	5.985E-06	0.
105	Q_neve	0.	0.	-0.000021	1.994E-06	0.000017	0.
105	Q_manutenzione	0.	0.	-5.756E-06	4.888E-07	5.985E-06	0.
105	EQ_X	0.002999	-0.000059	5.944E-06	-3.590E-06	0.000038	-0.000029
105	EQ_Y	-2.057E-06	0.001037	7.738E-06	-0.000033	-1.077E-06	-0.000013
106	DEAD	0.	0.	-0.000125	1.760E-18	-3.193E-18	0.
106	G1_power station	0.	0.	0.	0.	0.	0.
106	G2_power station	0.	0.	-0.00009	8.252E-06	0.000139	0.
106	Q_power station	0.	0.	-3.327E-06	3.053E-07	5.133E-06	0.
106	Q_neve	0.	0.	-0.000014	1.605E-06	0.000014	0.
106	Q_manutenzione	0.	0.	-3.327E-06	3.053E-07	5.133E-06	0.
106	EQ_X	0.002999	-0.000046	0.000017	-2.644E-06	0.000014	-0.000029
106	EQ_Y	-2.067E-06	0.001043	6.998E-06	-0.000029	-2.180E-06	-0.000013
107	DEAD	0.	0.	-0.000125	1.369E-18	-2.821E-18	0.
107	G1_power station	0.	0.	0.	0.	0.	0.
107	G2_power station	0.	0.	-0.000035	5.450E-06	0.000114	0.
107	Q_power station	0.	0.	-1.293E-06	2.016E-07	4.211E-06	0.
107	Q_neve	0.	0.	-8.874E-06	1.410E-06	0.000011	0.
107	Q_manutenzione	0.	0.	-1.293E-06	2.016E-07	4.211E-06	0.
107	EQ_X	0.002999	-0.000033	0.000019	-1.728E-06	-4.189E-06	-0.000029
107	EQ_Y	-2.092E-06	0.001048	5.967E-06	-0.000025	-2.406E-06	-0.000014
108	DEAD	0.	0.	-0.000125	1.059E-18	-2.016E-18	0.
108	G1_power station	0.	0.	0.	0.	0.	0.

Table 18: Joint Displacements

Joint	OutputCase	U1	U2	U3	R1	R2	R3
		m	m	m	Radians	Radians	Radians
108	G2_power station	0.	0.	9.852E-06	4.318E-06	0.000093	0.
108	Q_power station	0.	0.	3.645E-07	1.598E-07	3.436E-06	0.
108	Q_neve	0.	0.	-4.540E-06	1.380E-06	8.775E-06	0.
108	Q_manutenzione	0.	0.	3.645E-07	1.598E-07	3.436E-06	0.
108	EQ_X	0.002999	-0.000021	0.000014	-8.841E-07	-0.000016	-0.000029
108	EQ_Y	-2.073E-06	0.001054	4.973E-06	-0.000021	-2.117E-06	-0.000013
109	DEAD	0.	0.	-0.000125	1.249E-18	-1.213E-18	0.
109	G1_power station	0.	0.	0.	0.	0.	0.
109	G2_power station	0.	0.	0.000047	5.115E-06	0.00008	0.
109	Q_power station	0.	0.	1.746E-06	1.893E-07	2.969E-06	0.
109	Q_neve	0.	0.	-1.073E-06	1.563E-06	7.366E-06	0.
109	Q_manutenzione	0.	0.	1.746E-06	1.893E-07	2.969E-06	0.
109	EQ_X	0.003	-8.023E-06	5.391E-06	2.904E-07	-0.000023	-0.000029
109	EQ_Y	-2.068E-06	0.00106	4.120E-06	-0.000017	-1.847E-06	-0.000014
110	DEAD	0.	0.	-0.000125	1.077E-18	-8.250E-19	0.
110	G1_power station	0.	0.	0.	0.	0.	0.
110	G2_power station	0.	0.	0.000081	7.283E-06	0.000077	0.
110	Q_power station	0.	0.	3.005E-06	2.695E-07	2.858E-06	0.
110	Q_neve	0.	0.	2.073E-06	1.914E-06	7.271E-06	0.
110	Q_manutenzione	0.	0.	3.005E-06	2.695E-07	2.858E-06	0.
110	EQ_X	0.003	4.683E-06	-5.441E-06	1.751E-06	-0.000025	-0.000029
110	EQ_Y	-2.048E-06	0.001066	3.316E-06	-0.000014	-1.851E-06	-0.000014
111	DEAD	0.	0.	-0.000125	1.101E-18	-3.280E-18	0.
111	G1_power station	0.	0.	0.	0.	0.	0.
111	G2_power station	0.	0.	-0.00023	-0.00002	0.000176	0.
111	Q_power station	0.	0.	-8.495E-06	-7.442E-07	6.521E-06	0.
111	Q_neve	0.	0.	-0.000029	-2.553E-06	0.000019	0.
111	Q_manutenzione	0.	0.	-8.495E-06	-7.442E-07	6.521E-06	0.
111	EQ_X	0.003014	-0.000072	-0.000017	2.492E-06	0.000065	-0.00003
111	EQ_Y	4.602E-06	0.001032	-7.986E-06	-0.000034	5.096E-07	-0.000013
112	DEAD	0.	0.	-0.000125	1.074E-18	-3.415E-18	0.
112	G1_power station	0.	0.	0.	0.	0.	0.
112	G2_power station	0.	0.	-0.000156	-0.000013	0.000162	0.
112	Q_power station	0.	0.	-5.756E-06	-4.888E-07	5.985E-06	0.
112	Q_neve	0.	0.	-0.000021	-1.994E-06	0.000017	0.
112	Q_manutenzione	0.	0.	-5.756E-06	-4.888E-07	5.985E-06	0.
112	EQ_X	0.003014	-0.000059	5.944E-06	3.590E-06	0.000038	-0.000029
112	EQ_Y	4.644E-06	0.001037	-7.738E-06	-0.000033	1.077E-06	-0.000013
113	DEAD	0.	0.	-0.000125	9.085E-19	-3.253E-18	0.
113	G1_power station	0.	0.	0.	0.	0.	0.
113	G2_power station	0.	0.	-0.00009	-8.252E-06	0.000139	0.
113	Q_power station	0.	0.	-3.327E-06	-3.053E-07	5.133E-06	0.
113	Q_neve	0.	0.	-0.000014	-1.605E-06	0.000014	0.

Table 18: Joint Displacements

Joint	OutputCase	U1	U2	U3	R1	R2	R3
		m	m	m	Radians	Radians	Radians
113	Q_manutenzione	0.	0.	-3.327E-06	-3.053E-07	5.133E-06	0.
113	EQ_X	0.003014	-0.000046	0.000017	2.644E-06	0.000014	-0.000029
113	EQ_Y	4.645E-06	0.001043	-6.998E-06	-0.000029	2.180E-06	-0.000013
114	DEAD	0.	0.	-0.000125	1.016E-18	-2.921E-18	0.
114	G1_power station	0.	0.	0.	0.	0.	0.
114	G2_power station	0.	0.	-0.000035	-5.450E-06	0.000114	0.
114	Q_power station	0.	0.	-1.293E-06	-2.016E-07	4.211E-06	0.
114	Q_neve	0.	0.	-8.874E-06	-1.410E-06	0.000011	0.
114	Q_manutenzione	0.	0.	-1.293E-06	-2.016E-07	4.211E-06	0.
114	EQ_X	0.003014	-0.000033	0.000019	1.728E-06	-4.189E-06	-0.000029
114	EQ_Y	4.652E-06	0.001048	-5.967E-06	-0.000025	2.406E-06	-0.000013
115	DEAD	0.	0.	-0.000125	9.066E-19	-1.887E-18	0.
115	G1_power station	0.	0.	0.	0.	0.	0.
115	G2_power station	0.	0.	9.852E-06	-4.318E-06	0.000093	0.
115	Q_power station	0.	0.	3.645E-07	-1.598E-07	3.436E-06	0.
115	Q_neve	0.	0.	-4.540E-06	-1.380E-06	8.775E-06	0.
115	Q_manutenzione	0.	0.	3.645E-07	-1.598E-07	3.436E-06	0.
115	EQ_X	0.003014	-0.000021	0.000014	8.841E-07	-0.000016	-0.000029
115	EQ_Y	4.615E-06	0.001054	-4.973E-06	-0.000021	2.117E-06	-0.000014
116	DEAD	0.	0.	-0.000125	1.409E-18	-8.772E-19	0.
116	G1_power station	0.	0.	0.	0.	0.	0.
116	G2_power station	0.	0.	0.000047	-5.115E-06	0.00008	0.
116	Q_power station	0.	0.	1.746E-06	-1.893E-07	2.969E-06	0.
116	Q_neve	0.	0.	-1.073E-06	-1.563E-06	7.366E-06	0.
116	Q_manutenzione	0.	0.	1.746E-06	-1.893E-07	2.969E-06	0.
116	EQ_X	0.003014	-8.004E-06	5.391E-06	-2.904E-07	-0.000023	-0.000029
116	EQ_Y	4.623E-06	0.00106	-4.120E-06	-0.000017	1.847E-06	-0.000014
117	DEAD	0.	0.	-0.000125	1.816E-18	-4.337E-19	0.
117	G1_power station	0.	0.	0.	0.	0.	0.
117	G2_power station	0.	0.	0.000081	-7.283E-06	0.000077	0.
117	Q_power station	0.	0.	3.005E-06	-2.695E-07	2.858E-06	0.
117	Q_neve	0.	0.	2.073E-06	-1.914E-06	7.271E-06	0.
117	Q_manutenzione	0.	0.	3.005E-06	-2.695E-07	2.858E-06	0.
117	EQ_X	0.003014	4.720E-06	-5.441E-06	-1.751E-06	-0.000025	-0.000029
117	EQ_Y	4.640E-06	0.001066	-3.316E-06	-0.000014	1.851E-06	-0.000014
118	DEAD	0.	0.	-0.000125	2.744E-19	-3.314E-18	0.
118	G1_power station	0.	0.	0.	0.	0.	0.
118	G2_power station	0.	0.	-0.000248	-0.00005	0.000192	0.
118	Q_power station	0.	0.	-9.162E-06	-1.836E-06	7.087E-06	0.
118	Q_neve	0.	0.	-0.000032	-6.529E-06	0.000021	0.
118	Q_manutenzione	0.	0.	-9.162E-06	-1.836E-06	7.087E-06	0.
118	EQ_X	0.003028	-0.000071	-0.000014	0.00001	0.000071	-0.000029
118	EQ_Y	0.000011	0.001032	-0.000029	-0.000055	2.171E-06	-0.000013

Table 18: Joint Displacements

Joint	OutputCase	U1	U2	U3	R1	R2	R3
		m	m	m	Radians	Radians	Radians
119	DEAD	0.	0.	-0.000125	2.643E-19	-3.297E-18	0.
119	G1_power station	0.	0.	0.	0.	0.	0.
119	G2_power station	0.	0.	-0.000167	-0.000032	0.000174	0.
119	Q_power station	0.	0.	-6.190E-06	-1.194E-06	6.442E-06	0.
119	Q_neve	0.	0.	-0.000023	-5.138E-06	0.000018	0.
119	Q_manutenzione	0.	0.	-6.190E-06	-1.194E-06	6.442E-06	0.
119	EQ_X	0.003028	-0.000059	9.204E-06	8.921E-06	0.000036	-0.000029
119	EQ_Y	0.000011	0.001037	-0.000026	-0.000044	7.198E-06	-0.000013
120	DEAD	0.	0.	-0.000125	5.692E-19	-3.151E-18	0.
120	G1_power station	0.	0.	0.	0.	0.	0.
120	G2_power station	0.	0.	-0.000097	-0.000021	0.000146	0.
120	Q_power station	0.	0.	-3.603E-06	-7.798E-07	5.409E-06	0.
120	Q_neve	0.	0.	-0.000016	-4.283E-06	0.000015	0.
120	Q_manutenzione	0.	0.	-3.603E-06	-7.798E-07	5.409E-06	0.
120	EQ_X	0.003028	-0.000046	0.000019	6.801E-06	0.000012	-0.000029
120	EQ_Y	0.000011	0.001043	-0.000023	-0.000036	8.770E-06	-0.000013
121	DEAD	0.	0.	-0.000125	8.741E-19	-2.638E-18	0.
121	G1_power station	0.	0.	0.	0.	0.	0.
121	G2_power station	0.	0.	-0.00004	-0.000014	0.000118	0.
121	Q_power station	0.	0.	-1.479E-06	-5.337E-07	4.358E-06	0.
121	Q_neve	0.	0.	-0.00001	-3.839E-06	0.000011	0.
121	Q_manutenzione	0.	0.	-1.479E-06	-5.337E-07	4.358E-06	0.
121	EQ_X	0.003028	-0.000033	0.000021	4.905E-06	-5.792E-06	-0.000029
121	EQ_Y	0.000011	0.001048	-0.000019	-0.000029	8.075E-06	-0.000013
122	DEAD	0.	0.	-0.000125	1.453E-18	-1.658E-18	0.
122	G1_power station	0.	0.	0.	0.	0.	0.
122	G2_power station	0.	0.	5.869E-06	-0.000012	0.000094	0.
122	Q_power station	0.	0.	2.171E-07	-4.263E-07	3.462E-06	0.
122	Q_neve	0.	0.	-5.829E-06	-3.763E-06	8.658E-06	0.
122	Q_manutenzione	0.	0.	2.171E-07	-4.263E-07	3.462E-06	0.
122	EQ_X	0.003028	-0.000021	0.000015	2.953E-06	-0.000018	-0.000029
122	EQ_Y	0.000011	0.001054	-0.000016	-0.000024	6.581E-06	-0.000014
123	DEAD	0.	0.	-0.000125	1.716E-18	-3.860E-19	0.
123	G1_power station	0.	0.	0.	0.	0.	0.
123	G2_power station	0.	0.	0.000042	-0.000013	0.000076	0.
123	Q_power station	0.	0.	1.572E-06	-4.902E-07	2.798E-06	0.
123	Q_neve	0.	0.	-2.529E-06	-4.202E-06	6.645E-06	0.
123	Q_manutenzione	0.	0.	1.572E-06	-4.902E-07	2.798E-06	0.
123	EQ_X	0.003028	-8.021E-06	5.271E-06	2.164E-07	-0.000027	-0.000029
123	EQ_Y	0.000011	0.00106	-0.000013	-0.000021	5.145E-06	-0.000015
124	DEAD	0.	0.	-0.000125	2.201E-18	0.	0.
124	G1_power station	0.	0.	0.	0.	0.	0.
124	G2_power station	0.	0.	0.000074	-0.000023	0.000073	0.

Table 18: Joint Displacements

Joint	OutputCase	U1	U2	U3	R1	R2	R3
		m	m	m	Radians	Radians	Radians
124	Q_power station	0.	0.	2.736E-06	-8.500E-07	2.712E-06	0.
124	Q_neve	0.	0.	2.285E-07	-5.584E-06	6.546E-06	0.
124	Q_manutenzione	0.	0.	2.736E-06	-8.500E-07	2.712E-06	0.
124	EQ_X	0.003028	4.703E-06	-7.092E-06	-4.949E-06	-0.000029	-0.00003
124	EQ_Y	0.000011	0.001067	-0.000011	-0.000019	5.691E-06	-0.000013
125	DEAD	0.	0.	-0.000125	2.086E-20	-3.339E-18	0.
125	G1_power station	0.	0.	0.	0.	0.	0.
125	G2_power station	0.	0.	-0.000273	-0.00005	0.000215	0.
125	Q_power station	0.	0.	-0.00001	-1.860E-06	7.972E-06	0.
125	Q_neve	0.	0.	-0.000035	-7.355E-06	0.000022	0.
125	Q_manutenzione	0.	0.	-0.00001	-1.860E-06	7.972E-06	0.
125	EQ_X	0.003043	-0.000072	-7.843E-06	8.630E-06	0.000065	-0.000029
125	EQ_Y	0.000018	0.001032	-0.000061	-0.000066	0.000022	-0.000012
126	DEAD	0.	0.	-0.000125	2.711E-19	-3.087E-18	0.
126	G1_power station	0.	0.	0.	0.	0.	0.
126	G2_power station	0.	0.	-0.000185	-0.000037	0.00019	0.
126	Q_power station	0.	0.	-6.837E-06	-1.360E-06	7.023E-06	0.
126	Q_neve	0.	0.	-0.000026	-6.358E-06	0.000019	0.
126	Q_manutenzione	0.	0.	-6.837E-06	-1.360E-06	7.023E-06	0.
126	EQ_X	0.003043	-0.000059	0.000014	0.00001	0.000035	-0.000029
126	EQ_Y	0.000018	0.001037	-0.000052	-0.00006	0.000022	-0.000013
127	DEAD	0.	0.	-0.000125	6.449E-19	-2.817E-18	0.
127	G1_power station	0.	0.	0.	0.	0.	0.
127	G2_power station	0.	0.	-0.000109	-0.000026	0.000157	0.
127	Q_power station	0.	0.	-4.040E-06	-9.480E-07	5.799E-06	0.
127	Q_neve	0.	0.	-0.000018	-5.566E-06	0.000016	0.
127	Q_manutenzione	0.	0.	-4.040E-06	-9.480E-07	5.799E-06	0.
127	EQ_X	0.003043	-0.000046	0.000024	9.596E-06	0.00001	-0.000029
127	EQ_Y	0.000018	0.001043	-0.000042	-0.000043	0.00002	-0.000013
128	DEAD	0.	0.	-0.000125	1.079E-18	-1.935E-18	0.
128	G1_power station	0.	0.	0.	0.	0.	0.
128	G2_power station	0.	0.	-0.000048	-0.000018	0.000124	0.
128	Q_power station	0.	0.	-1.785E-06	-6.755E-07	4.574E-06	0.
128	Q_neve	0.	0.	-0.000012	-5.119E-06	0.000012	0.
128	Q_manutenzione	0.	0.	-1.785E-06	-6.755E-07	4.574E-06	0.
128	EQ_X	0.003043	-0.000033	0.000024	7.723E-06	-8.097E-06	-0.000029
128	EQ_Y	0.000018	0.001048	-0.000035	-0.000035	0.000016	-0.000014
129	DEAD	0.	0.	-0.000125	1.667E-18	-1.251E-18	0.
129	G1_power station	0.	0.	0.	0.	0.	0.
129	G2_power station	0.	0.	-8.594E-07	-0.000015	0.000095	0.
129	Q_power station	0.	0.	-3.180E-08	-5.636E-07	3.504E-06	0.
129	Q_neve	0.	0.	-8.056E-06	-5.098E-06	8.477E-06	0.
129	Q_manutenzione	0.	0.	-3.180E-08	-5.636E-07	3.504E-06	0.

Table 18: Joint Displacements

Joint	OutputCase	U1	U2	U3	R1	R2	R3
		m	m	m	Radians	Radians	Radians
129	EQ_X	0.003042	-0.000021	0.000017	5.428E-06	-0.000021	-0.000029
129	EQ_Y	0.000019	0.001054	-0.000029	-0.000029	0.000011	-0.000014
130	DEAD	0.	0.	-0.000125	2.060E-18	1.275E-19	0.
130	G1_power station	0.	0.	0.	0.	0.	0.
130	G2_power station	0.	0.	0.000035	-0.000017	0.00007	0.
130	Q_power station	0.	0.	1.291E-06	-6.375E-07	2.586E-06	0.
130	Q_neve	0.	0.	-4.985E-06	-5.597E-06	5.691E-06	0.
130	Q_manutenzione	0.	0.	1.291E-06	-6.375E-07	2.586E-06	0.
130	EQ_X	0.003043	-7.979E-06	5.930E-06	2.484E-06	-0.000031	-0.000029
130	EQ_Y	0.000019	0.00106	-0.000025	-0.000026	7.325E-06	-0.000016
131	DEAD	0.	0.	-0.000125	-3.795E-19	3.540E-18	0.
131	G1_power station	0.	0.	0.	0.	0.	0.
131	G2_power station	0.	0.	-0.000259	-0.000063	-0.000253	0.
131	Q_power station	0.	0.	-9.592E-06	-2.322E-06	-9.373E-06	0.
131	Q_neve	0.	0.	-0.000034	-8.114E-06	-0.000026	0.
131	Q_manutenzione	0.	0.	-9.592E-06	-2.322E-06	-9.373E-06	0.
131	EQ_X	0.003028	0.000076	0.000012	-4.407E-06	0.000119	-0.000029
131	EQ_Y	0.000014	0.001136	-0.000033	-0.000063	-3.116E-06	-0.000018
132	DEAD	0.	0.	-0.000125	6.593E-20	3.084E-18	0.
132	G1_power station	0.	0.	0.	0.	0.	0.
132	G2_power station	0.	0.	-0.000158	-0.000054	-0.00025	0.
132	Q_power station	0.	0.	-5.857E-06	-1.986E-06	-9.233E-06	0.
132	Q_neve	0.	0.	-0.000024	-7.662E-06	-0.000025	0.
132	Q_manutenzione	0.	0.	-5.857E-06	-1.986E-06	-9.233E-06	0.
132	EQ_X	0.003028	0.000064	-0.00003	1.803E-06	0.000092	-0.000029
132	EQ_Y	0.000013	0.001129	-0.000031	-0.000053	-9.781E-06	-0.000017
133	DEAD	0.	0.	-0.000125	9.286E-19	2.550E-18	0.
133	G1_power station	0.	0.	0.	0.	0.	0.
133	G2_power station	0.	0.	-0.000059	-0.000059	-0.000252	0.
133	Q_power station	0.	0.	-2.179E-06	-2.172E-06	-9.311E-06	0.
133	Q_neve	0.	0.	-0.000014	-8.704E-06	-0.000026	0.
133	Q_manutenzione	0.	0.	-2.179E-06	-2.172E-06	-9.311E-06	0.
133	EQ_X	0.003028	0.000052	-0.000065	0.000017	0.000088	-0.00003
133	EQ_Y	0.000014	0.001122	-0.000026	-0.000044	-0.000014	-0.000014
134	DEAD	0.	0.	-0.000125	3.581E-19	4.402E-18	0.
134	G1_power station	0.	0.	0.	0.	0.	0.
134	G2_power station	0.	0.	-0.000237	-0.000025	-0.000243	0.
134	Q_power station	0.	0.	-8.756E-06	-9.299E-07	-8.982E-06	0.
134	Q_neve	0.	0.	-0.000031	-3.155E-06	-0.000025	0.
134	Q_manutenzione	0.	0.	-8.756E-06	-9.299E-07	-8.982E-06	0.
134	EQ_X	0.003013	0.000076	0.000013	-2.196E-08	0.000114	-0.000029
134	EQ_Y	5.832E-06	0.001136	-9.395E-06	-0.00004	-1.167E-06	-0.000016
135	DEAD	0.	0.	-0.000125	1.047E-18	3.924E-18	0.

Table 18: Joint Displacements

Joint	OutputCase	U1	U2	U3	R1	R2	R3
		m	m	m	Radians	Radians	Radians
135	G1_power station	0.	0.	0.	0.	0.	0.
135	G2_power station	0.	0.	-0.000139	-0.000022	-0.000247	0.
135	Q_power station	0.	0.	-5.132E-06	-8.148E-07	-9.141E-06	0.
135	Q_neve	0.	0.	-0.000021	-3.017E-06	-0.000025	0.
135	Q_manutenzione	0.	0.	-5.132E-06	-8.148E-07	-9.141E-06	0.
135	EQ_X	0.003014	0.000064	-0.00003	8.304E-07	0.000102	-0.000029
135	EQ_Y	5.820E-06	0.001129	-8.805E-06	-0.000038	-2.272E-06	-0.000016
136	DEAD	0.	0.	-0.000125	1.492E-18	3.309E-18	0.
136	G1_power station	0.	0.	0.	0.	0.	0.
136	G2_power station	0.	0.	-0.000039	-0.000021	-0.000252	0.
136	Q_power station	0.	0.	-1.439E-06	-7.948E-07	-9.325E-06	0.
136	Q_neve	0.	0.	-0.000011	-3.146E-06	-0.000026	0.
136	Q_manutenzione	0.	0.	-1.439E-06	-7.948E-07	-9.325E-06	0.
136	EQ_X	0.003014	0.000053	-0.00007	4.519E-06	0.000096	-0.000029
136	EQ_Y	5.820E-06	0.001122	-7.503E-06	-0.000032	-4.104E-06	-0.000016
137	DEAD	0.	0.	-0.000125	1.762E-18	4.798E-18	0.
137	G1_power station	0.	0.	0.	0.	0.	0.
137	G2_power station	0.	0.	-0.000237	0.000025	-0.000243	0.
137	Q_power station	0.	0.	-8.756E-06	9.299E-07	-8.982E-06	0.
137	Q_neve	0.	0.	-0.000031	3.155E-06	-0.000025	0.
137	Q_manutenzione	0.	0.	-8.756E-06	9.299E-07	-8.982E-06	0.
137	EQ_X	0.002999	0.000076	0.000013	2.196E-08	0.000114	-0.000028
137	EQ_Y	-1.916E-06	0.001136	9.395E-06	-0.00004	1.167E-06	-0.000017
138	DEAD	0.	0.	-0.000125	2.033E-18	4.371E-18	0.
138	G1_power station	0.	0.	0.	0.	0.	0.
138	G2_power station	0.	0.	-0.000139	0.000022	-0.000247	0.
138	Q_power station	0.	0.	-5.132E-06	8.148E-07	-9.141E-06	0.
138	Q_neve	0.	0.	-0.000021	3.017E-06	-0.000025	0.
138	Q_manutenzione	0.	0.	-5.132E-06	8.148E-07	-9.141E-06	0.
138	EQ_X	0.002999	0.000064	-0.00003	-8.304E-07	0.000102	-0.000029
138	EQ_Y	-1.934E-06	0.001129	8.805E-06	-0.000038	2.272E-06	-0.000016
139	DEAD	0.	0.	-0.000125	2.402E-18	3.903E-18	0.
139	G1_power station	0.	0.	0.	0.	0.	0.
139	G2_power station	0.	0.	-0.000039	0.000021	-0.000252	0.
139	Q_power station	0.	0.	-1.439E-06	7.948E-07	-9.325E-06	0.
139	Q_neve	0.	0.	-0.000011	3.146E-06	-0.000026	0.
139	Q_manutenzione	0.	0.	-1.439E-06	7.948E-07	-9.325E-06	0.
139	EQ_X	0.002999	0.000053	-0.00007	-4.519E-06	0.000096	-0.000029
139	EQ_Y	-1.983E-06	0.001122	7.503E-06	-0.000032	4.104E-06	-0.000017
140	DEAD	0.	0.	-0.000125	2.765E-18	4.972E-18	0.
140	G1_power station	0.	0.	0.	0.	0.	0.
140	G2_power station	0.	0.	-0.000259	0.000063	-0.000253	0.
140	Q_power station	0.	0.	-9.592E-06	2.322E-06	-9.373E-06	0.

Table 18: Joint Displacements

Joint	OutputCase	U1	U2	U3	R1	R2	R3
		m	m	m	Radians	Radians	Radians
140	Q_neve	0.	0.	-0.000034	8.114E-06	-0.000026	0.
140	Q_manutenzione	0.	0.	-9.592E-06	2.322E-06	-9.373E-06	0.
140	EQ_X	0.002985	0.000076	0.000012	4.407E-06	0.000119	-0.000028
140	EQ_Y	-9.883E-06	0.001136	0.000033	-0.000063	3.116E-06	-0.000018
141	DEAD	0.	0.	-0.000125	2.656E-18	4.411E-18	0.
141	G1_power station	0.	0.	0.	0.	0.	0.
141	G2_power station	0.	0.	-0.000158	0.000054	-0.00025	0.
141	Q_power station	0.	0.	-5.857E-06	1.986E-06	-9.233E-06	0.
141	Q_neve	0.	0.	-0.000024	7.662E-06	-0.000025	0.
141	Q_manutenzione	0.	0.	-5.857E-06	1.986E-06	-9.233E-06	0.
141	EQ_X	0.002985	0.000064	-0.00003	-1.803E-06	0.000092	-0.000029
141	EQ_Y	-9.650E-06	0.001128	0.000031	-0.000053	9.781E-06	-0.000018
142	DEAD	0.	0.	-0.000125	2.484E-18	4.058E-18	0.
142	G1_power station	0.	0.	0.	0.	0.	0.
142	G2_power station	0.	0.	-0.000059	0.000059	-0.000252	0.
142	Q_power station	0.	0.	-2.179E-06	2.172E-06	-9.311E-06	0.
142	Q_neve	0.	0.	-0.000014	8.704E-06	-0.000026	0.
142	Q_manutenzione	0.	0.	-2.179E-06	2.172E-06	-9.311E-06	0.
142	EQ_X	0.002985	0.000053	-0.000065	-0.000017	0.000088	-0.000029
142	EQ_Y	-9.831E-06	0.001122	0.000026	-0.000044	0.000014	-0.000014
143	DEAD	0.	0.	-0.000125	2.656E-18	4.832E-18	0.
143	G1_power station	0.	0.	0.	0.	0.	0.
143	G2_power station	0.	0.	-0.000293	0.000067	-0.000272	0.
143	Q_power station	0.	0.	-0.000011	2.481E-06	-0.00001	0.
143	Q_neve	0.	0.	-0.000039	9.437E-06	-0.000027	0.
143	Q_manutenzione	0.	0.	-0.000011	2.481E-06	-0.00001	0.
143	EQ_X	0.002972	0.000076	9.674E-06	3.454E-07	0.00011	-0.000029
143	EQ_Y	-0.000019	0.001136	0.000071	-0.000077	0.000022	-0.000019
144	DEAD	0.	0.	-0.000125	2.801E-18	4.333E-18	0.
144	G1_power station	0.	0.	0.	0.	0.	0.
144	G2_power station	0.	0.	-0.000187	0.000061	-0.000253	0.
144	Q_power station	0.	0.	-6.929E-06	2.265E-06	-9.367E-06	0.
144	Q_neve	0.	0.	-0.000028	9.318E-06	-0.000025	0.
144	Q_manutenzione	0.	0.	-6.929E-06	2.265E-06	-9.367E-06	0.
144	EQ_X	0.002972	0.000064	-0.000029	-2.839E-06	0.000081	-0.000028
144	EQ_Y	-0.000018	0.001128	0.000061	-0.000072	0.000025	-0.000019
145	DEAD	0.	0.	-0.00075	5.864E-17	-3.131E-19	0.
145	G1_power station	0.	0.	0.	0.	0.	0.
145	G2_power station	0.	0.	-0.00133	0.000043	0.000684	0.
145	Q_power station	0.	0.	-0.000049	1.591E-06	0.000025	0.
145	Q_neve	0.	0.	-0.000178	7.154E-06	0.000068	0.
145	Q_manutenzione	0.	0.	-0.000049	1.591E-06	0.000025	0.
145	EQ_X	0.017829	-0.000428	-0.000116	-0.000011	0.000128	-0.000171

Table 18: Joint Displacements

Joint	OutputCase	U1	U2	U3	R1	R2	R3
		m	m	m	Radians	Radians	Radians
145	EQ_Y	-0.000122	0.00617	0.000316	-0.000275	-0.000029	-0.000108
146	DEAD	0.	0.	-0.00075	5.994E-17	3.181E-18	0.
146	G1_power station	0.	0.	0.	0.	0.	0.
146	G2_power station	0.	0.	-0.001347	0.00003	0.000694	0.
146	Q_power station	0.	0.	-0.00005	1.116E-06	0.000026	0.
146	Q_neve	0.	0.	-0.000181	6.104E-06	0.000069	0.
146	Q_manutenzione	0.	0.	-0.00005	1.116E-06	0.000026	0.
146	EQ_X	0.017743	-0.000428	-0.000112	-0.000011	0.000145	-0.000171
146	EQ_Y	-0.000176	0.00617	0.000461	-0.000295	-0.000057	-0.000109
147	DEAD	0.	0.	-0.00075	5.269E-17	2.168E-18	0.
147	G1_power station	0.	0.	0.	0.	0.	0.
147	G2_power station	0.	0.	-0.001041	0.000026	0.000637	0.
147	Q_power station	0.	0.	-0.000039	9.715E-07	0.000024	0.
147	Q_neve	0.	0.	-0.000149	5.873E-06	0.000063	0.
147	Q_manutenzione	0.	0.	-0.000039	9.715E-07	0.000024	0.
147	EQ_X	0.017829	-0.000353	-0.000069	-0.000013	0.000089	-0.000171
147	EQ_Y	-0.000122	0.006217	0.000303	-0.000266	-0.000029	-0.00011
148	DEAD	0.	0.	-0.00075	5.676E-17	8.023E-18	0.
148	G1_power station	0.	0.	0.	0.	0.	0.
148	G2_power station	0.	0.	-0.001052	0.000015	0.000655	0.
148	Q_power station	0.	0.	-0.000039	5.658E-07	0.000024	0.
148	Q_neve	0.	0.	-0.000152	4.943E-06	0.000064	0.
148	Q_manutenzione	0.	0.	-0.000039	5.658E-07	0.000024	0.
148	EQ_X	0.017743	-0.000353	-0.000062	-0.000018	0.000091	-0.000171
148	EQ_Y	-0.000177	0.006217	0.000437	-0.000269	-0.000053	-0.000108
149	DEAD	0.	0.	-0.00075	4.790E-17	3.471E-18	0.
149	G1_power station	0.	0.	0.	0.	0.	0.
149	G2_power station	0.	0.	-0.000778	0.000012	0.00057	0.
149	Q_power station	0.	0.	-0.000029	4.393E-07	0.000021	0.
149	Q_neve	0.	0.	-0.000123	4.807E-06	0.000056	0.
149	Q_manutenzione	0.	0.	-0.000029	4.393E-07	0.000021	0.
149	EQ_X	0.017829	-0.000279	-0.000038	-0.000011	0.000054	-0.000171
149	EQ_Y	-0.000122	0.006265	0.000291	-0.000247	-0.000026	-0.000109
150	DEAD	0.	0.	-0.00075	5.131E-17	1.032E-17	0.
150	G1_power station	0.	0.	0.	0.	0.	0.
150	G2_power station	0.	0.	-0.000781	-7.546E-07	0.000585	0.
150	Q_power station	0.	0.	-0.000029	-2.792E-08	0.000022	0.
150	Q_neve	0.	0.	-0.000125	3.709E-06	0.000057	0.
150	Q_manutenzione	0.	0.	-0.000029	-2.792E-08	0.000022	0.
150	EQ_X	0.017743	-0.000279	-0.000031	-0.000017	0.000052	-0.000171
150	EQ_Y	-0.000177	0.006265	0.000416	-0.00025	-0.000043	-0.00011
151	DEAD	0.	0.	-0.00075	4.450E-17	2.181E-18	0.
151	G1_power station	0.	0.	0.	0.	0.	0.

Table 18: Joint Displacements

Joint	OutputCase	U1	U2	U3	R1	R2	R3
		m	m	m	Radians	Radians	Radians
151	G2_power station	0.	0.	-0.000546	2.388E-06	0.000491	0.
151	Q_power station	0.	0.	-0.00002	8.837E-08	0.000018	0.
151	Q_neve	0.	0.	-0.000101	4.217E-06	0.000047	0.
151	Q_manutenzione	0.	0.	-0.00002	8.837E-08	0.000018	0.
151	EQ_X	0.017829	-0.000204	-0.000021	-8.538E-06	0.000025	-0.000171
151	EQ_Y	-0.000122	0.006312	0.000281	-0.000237	-0.000021	-0.00011
152	DEAD	0.	0.	-0.00075	4.462E-17	6.302E-18	0.
152	G1_power station	0.	0.	0.	0.	0.	0.
152	G2_power station	0.	0.	-0.000544	-0.000012	0.000499	0.
152	Q_power station	0.	0.	-0.00002	-4.363E-07	0.000018	0.
152	Q_neve	0.	0.	-0.000103	2.988E-06	0.000047	0.
152	Q_manutenzione	0.	0.	-0.00002	-4.363E-07	0.000018	0.
152	EQ_X	0.017743	-0.000204	-0.000015	-0.000014	0.000021	-0.000171
152	EQ_Y	-0.000177	0.006312	0.0004	-0.000238	-0.000031	-0.000109
153	DEAD	0.	0.	-0.00075	4.228E-17	-4.998E-18	0.
153	G1_power station	0.	0.	0.	0.	0.	0.
153	G2_power station	0.	0.	-0.000351	4.940E-07	0.000404	0.
153	Q_power station	0.	0.	-0.000013	1.828E-08	0.000015	0.
153	Q_neve	0.	0.	-0.000082	4.396E-06	0.000038	0.
153	Q_manutenzione	0.	0.	-0.000013	1.828E-08	0.000015	0.
153	EQ_X	0.017829	-0.00013	-0.000015	-4.626E-06	2.685E-06	-0.000171
153	EQ_Y	-0.000123	0.00636	0.000273	-0.00023	-0.000014	-0.00011
154	DEAD	0.	0.	-0.00075	4.211E-17	-4.929E-18	0.
154	G1_power station	0.	0.	0.	0.	0.	0.
154	G2_power station	0.	0.	-0.000348	-0.000015	0.0004	0.
154	Q_power station	0.	0.	-0.000013	-5.435E-07	0.000015	0.
154	Q_neve	0.	0.	-0.000084	3.106E-06	0.000037	0.
154	Q_manutenzione	0.	0.	-0.000013	-5.435E-07	0.000015	0.
154	EQ_X	0.017743	-0.00013	-0.000012	-8.688E-06	-2.747E-06	-0.000171
154	EQ_Y	-0.000178	0.00636	0.000389	-0.000231	-0.000019	-0.000111
155	DEAD	0.	0.	-0.00075	4.352E-17	-1.887E-17	0.
155	G1_power station	0.	0.	0.	0.	0.	0.
155	G2_power station	0.	0.	-0.000196	0.000013	0.000306	0.
155	Q_power station	0.	0.	-7.242E-06	4.913E-07	0.000011	0.
155	Q_neve	0.	0.	-0.000068	6.088E-06	0.000027	0.
155	Q_manutenzione	0.	0.	-7.242E-06	4.913E-07	0.000011	0.
155	EQ_X	0.017829	-0.000055	-0.000018	7.147E-07	-0.000014	-0.000171
155	EQ_Y	-0.000123	0.006408	0.000269	-0.000228	-7.046E-06	-0.000112
156	DEAD	0.	0.	-0.00075	4.033E-17	-2.134E-17	0.
156	G1_power station	0.	0.	0.	0.	0.	0.
156	G2_power station	0.	0.	-0.000198	-7.840E-06	0.000281	0.
156	Q_power station	0.	0.	-7.338E-06	-2.901E-07	0.00001	0.
156	Q_neve	0.	0.	-0.000071	4.206E-06	0.000024	0.

Table 18: Joint Displacements

Joint	OutputCase	U1	U2	U3	R1	R2	R3
		m	m	m	Radians	Radians	Radians
156	Q_manutenzione	0.	0.	-7.338E-06	-2.901E-07	0.00001	0.
156	EQ_X	0.017743	-0.000055	-0.000017	-3.701E-06	-0.00002	-0.000171
156	EQ_Y	-0.000179	0.006408	0.000384	-0.00023	-5.082E-06	-0.00011
157	DEAD	0.	0.	-0.00075	4.812E-17	-9.598E-17	0.
157	G1_power station	0.	0.	0.	0.	0.	0.
157	G2_power station	0.	0.	-0.001474	-0.000057	-0.000951	0.
157	Q_power station	0.	0.	-0.000055	-2.091E-06	-0.000035	0.
157	Q_neve	0.	0.	-0.000203	-9.161E-06	-0.000097	0.
157	Q_manutenzione	0.	0.	-0.000055	-2.091E-06	-0.000035	0.
157	EQ_X	0.018248	0.000459	0.000155	-2.866E-06	0.000239	-0.000171
157	EQ_Y	0.000151	0.006778	-0.000354	-0.000308	-0.000033	-0.000114
158	DEAD	0.	0.	-0.00075	4.982E-17	-9.359E-17	0.
158	G1_power station	0.	0.	0.	0.	0.	0.
158	G2_power station	0.	0.	-0.001499	-0.000045	-0.000952	0.
158	Q_power station	0.	0.	-0.000055	-1.653E-06	-0.000035	0.
158	Q_neve	0.	0.	-0.000207	-8.332E-06	-0.000096	0.
158	Q_manutenzione	0.	0.	-0.000055	-1.653E-06	-0.000035	0.
158	EQ_X	0.018334	0.00046	0.000155	-1.375E-06	0.000252	-0.000172
158	EQ_Y	0.000209	0.006778	-0.000516	-0.000328	-0.000062	-0.000115
159	DEAD	0.	0.	-0.00075	4.564E-17	-9.216E-17	0.
159	G1_power station	0.	0.	0.	0.	0.	0.
159	G2_power station	0.	0.	-0.001101	-0.000053	-0.00091	0.
159	Q_power station	0.	0.	-0.000041	-1.967E-06	-0.000034	0.
159	Q_neve	0.	0.	-0.000165	-9.331E-06	-0.000092	0.
159	Q_manutenzione	0.	0.	-0.000041	-1.967E-06	-0.000034	0.
159	EQ_X	0.018248	0.000391	0.000067	2.435E-06	0.0002	-0.000171
159	EQ_Y	0.000151	0.006732	-0.00034	-0.000299	-0.000037	-0.000115
160	DEAD	0.	0.	-0.00075	4.754E-17	-8.669E-17	0.
160	G1_power station	0.	0.	0.	0.	0.	0.
160	G2_power station	0.	0.	-0.001125	-0.00004	-0.000907	0.
160	Q_power station	0.	0.	-0.000042	-1.492E-06	-0.000034	0.
160	Q_neve	0.	0.	-0.00017	-8.355E-06	-0.000091	0.
160	Q_manutenzione	0.	0.	-0.000042	-1.492E-06	-0.000034	0.
160	EQ_X	0.018333	0.000391	0.000067	-5.839E-06	0.000192	-0.000171
160	EQ_Y	0.000209	0.006732	-0.00049	-0.000303	-0.000063	-0.000115
161	DEAD	0.	0.	-0.00075	4.185E-17	-9.701E-17	0.
161	G1_power station	0.	0.	0.	0.	0.	0.
161	G2_power station	0.	0.	-0.001445	-0.000056	-0.000933	0.
161	Q_power station	0.	0.	-0.000053	-2.068E-06	-0.000035	0.
161	Q_neve	0.	0.	-0.000199	-7.980E-06	-0.000095	0.
161	Q_manutenzione	0.	0.	-0.000053	-2.068E-06	-0.000035	0.
161	EQ_X	0.018164	0.000459	0.000158	-5.557E-06	0.00025	-0.000171
161	EQ_Y	0.000096	0.006778	-0.000203	-0.000294	-9.593E-06	-0.000114

Table 18: Joint Displacements

Joint	OutputCase	U1	U2	U3	R1	R2	R3
		m	m	m	Radians	Radians	Radians
162	DEAD	0.	0.	-0.00075	4.099E-17	-9.447E-17	0.
162	G1_power station	0.	0.	0.	0.	0.	0.
162	G2_power station	0.	0.	-0.001075	-0.00005	-0.000915	0.
162	Q_power station	0.	0.	-0.00004	-1.860E-06	-0.000034	0.
162	Q_neve	0.	0.	-0.000161	-7.903E-06	-0.000093	0.
162	Q_manutenzione	0.	0.	-0.00004	-1.860E-06	-0.000034	0.
162	EQ_X	0.018164	0.000391	0.000065	3.370E-06	0.000216	-0.000171
162	EQ_Y	0.000096	0.006732	-0.000198	-0.000281	-0.000017	-0.000113
163	DEAD	0.	0.	-0.00075	3.946E-17	-9.420E-17	0.
163	G1_power station	0.	0.	0.	0.	0.	0.
163	G2_power station	0.	0.	-0.000711	-0.00007	-0.000916	0.
163	Q_power station	0.	0.	-0.000026	-2.598E-06	-0.000034	0.
163	Q_neve	0.	0.	-0.000124	-0.00001	-0.000094	0.
163	Q_manutenzione	0.	0.	-0.000026	-2.598E-06	-0.000034	0.
163	EQ_X	0.018164	0.000323	-0.000018	0.000026	0.000211	-0.000172
163	EQ_Y	0.000096	0.006687	-0.00019	-0.000267	-0.000021	-0.000111
164	DEAD	0.	0.	-0.00075	3.518E-17	-9.541E-17	0.
164	G1_power station	0.	0.	0.	0.	0.	0.
164	G2_power station	0.	0.	-0.001424	-0.000023	-0.000923	0.
164	Q_power station	0.	0.	-0.000053	-8.484E-07	-0.000034	0.
164	Q_neve	0.	0.	-0.000196	-3.136E-06	-0.000095	0.
164	Q_manutenzione	0.	0.	-0.000053	-8.484E-07	-0.000034	0.
164	EQ_X	0.01808	0.00046	0.000159	-2.297E-07	0.000246	-0.000171
164	EQ_Y	0.000041	0.006778	-0.000066	-0.000271	-3.356E-06	-0.000113
165	DEAD	0.	0.	-0.00075	3.566E-17	-9.541E-17	0.
165	G1_power station	0.	0.	0.	0.	0.	0.
165	G2_power station	0.	0.	-0.001056	-0.000022	-0.00092	0.
165	Q_power station	0.	0.	-0.000039	-8.008E-07	-0.000034	0.
165	Q_neve	0.	0.	-0.000158	-3.188E-06	-0.000094	0.
165	Q_manutenzione	0.	0.	-0.000039	-8.008E-07	-0.000034	0.
165	EQ_X	0.01808	0.000391	0.000064	1.884E-06	0.00023	-0.000171
165	EQ_Y	0.000041	0.006732	-0.000065	-0.000265	-4.667E-06	-0.000113
166	DEAD	0.	0.	-0.00075	3.435E-17	-9.758E-17	0.
166	G1_power station	0.	0.	0.	0.	0.	0.
166	G2_power station	0.	0.	-0.000688	-0.000024	-0.000921	0.
166	Q_power station	0.	0.	-0.000025	-8.942E-07	-0.000034	0.
166	Q_neve	0.	0.	-0.00012	-3.633E-06	-0.000095	0.
166	Q_manutenzione	0.	0.	-0.000025	-8.942E-07	-0.000034	0.
166	EQ_X	0.01808	0.000323	-0.000026	7.409E-06	0.000223	-0.000171
166	EQ_Y	0.000041	0.006687	-0.000062	-0.000256	-6.664E-06	-0.000113
167	DEAD	0.	0.	-0.00075	3.430E-17	-9.614E-17	0.
167	G1_power station	0.	0.	0.	0.	0.	0.
167	G2_power station	0.	0.	-0.001424	0.000023	-0.000923	0.

Table 18: Joint Displacements

Joint	OutputCase	U1	U2	U3	R1	R2	R3
		m	m	m	Radians	Radians	Radians
167	Q_power station	0.	0.	-0.000053	8.484E-07	-0.000034	0.
167	Q_neve	0.	0.	-0.000196	3.136E-06	-0.000095	0.
167	Q_manutenzione	0.	0.	-0.000053	8.484E-07	-0.000034	0.
167	EQ_X	0.017996	0.00046	0.000159	2.297E-07	0.000246	-0.00017
167	EQ_Y	-0.000014	0.006777	0.000066	-0.000271	3.356E-06	-0.000114
168	DEAD	0.	0.	-0.00075	3.563E-17	-9.604E-17	0.
168	G1_power station	0.	0.	0.	0.	0.	0.
168	G2_power station	0.	0.	-0.001056	0.000022	-0.00092	0.
168	Q_power station	0.	0.	-0.000039	8.008E-07	-0.000034	0.
168	Q_neve	0.	0.	-0.000158	3.188E-06	-0.000094	0.
168	Q_manutenzione	0.	0.	-0.000039	8.008E-07	-0.000034	0.
168	EQ_X	0.017996	0.000391	0.000064	-1.884E-06	0.00023	-0.000171
168	EQ_Y	-0.000014	0.006732	0.000065	-0.000265	4.667E-06	-0.000112
169	DEAD	0.	0.	-0.00075	3.703E-17	-9.681E-17	0.
169	G1_power station	0.	0.	0.	0.	0.	0.
169	G2_power station	0.	0.	-0.000688	0.000024	-0.000921	0.
169	Q_power station	0.	0.	-0.000025	8.942E-07	-0.000034	0.
169	Q_neve	0.	0.	-0.00012	3.633E-06	-0.000095	0.
169	Q_manutenzione	0.	0.	-0.000025	8.942E-07	-0.000034	0.
169	EQ_X	0.017996	0.000323	-0.000026	-7.409E-06	0.000223	-0.000171
169	EQ_Y	-0.000014	0.006687	0.000062	-0.000256	6.664E-06	-0.000114
170	DEAD	0.	0.	-0.00075	3.840E-17	-9.276E-17	0.
170	G1_power station	0.	0.	0.	0.	0.	0.
170	G2_power station	0.	0.	-0.001445	0.000056	-0.000933	0.
170	Q_power station	0.	0.	-0.000053	2.068E-06	-0.000035	0.
170	Q_neve	0.	0.	-0.000199	7.980E-06	-0.000095	0.
170	Q_manutenzione	0.	0.	-0.000053	2.068E-06	-0.000035	0.
170	EQ_X	0.017913	0.00046	0.000158	5.557E-06	0.00025	-0.00017
170	EQ_Y	-0.00007	0.006778	0.000203	-0.000294	9.593E-06	-0.000114
171	DEAD	0.	0.	-0.00075	3.994E-17	-9.231E-17	0.
171	G1_power station	0.	0.	0.	0.	0.	0.
171	G2_power station	0.	0.	-0.001075	0.00005	-0.000915	0.
171	Q_power station	0.	0.	-0.00004	1.860E-06	-0.000034	0.
171	Q_neve	0.	0.	-0.000161	7.903E-06	-0.000093	0.
171	Q_manutenzione	0.	0.	-0.00004	1.860E-06	-0.000034	0.
171	EQ_X	0.017913	0.000391	0.000065	-3.370E-06	0.000216	-0.00017
171	EQ_Y	-0.000069	0.006731	0.000198	-0.000281	0.000017	-0.000115
172	DEAD	0.	0.	-0.00075	4.293E-17	-9.458E-17	0.
172	G1_power station	0.	0.	0.	0.	0.	0.
172	G2_power station	0.	0.	-0.000711	0.00007	-0.000916	0.
172	Q_power station	0.	0.	-0.000026	2.598E-06	-0.000034	0.
172	Q_neve	0.	0.	-0.000124	0.00001	-0.000094	0.
172	Q_manutenzione	0.	0.	-0.000026	2.598E-06	-0.000034	0.

Table 18: Joint Displacements

Joint	OutputCase	U1	U2	U3	R1	R2	R3
		m	m	m	Radians	Radians	Radians
172	EQ_X	0.017913	0.000323	-0.000018	-0.000026	0.000211	-0.00017
172	EQ_Y	-0.00007	0.006686	0.00019	-0.000267	0.000021	-0.00011
173	DEAD	0.	0.	-0.00075	4.327E-17	-9.254E-17	0.
173	G1_power station	0.	0.	0.	0.	0.	0.
173	G2_power station	0.	0.	-0.001474	0.000057	-0.000951	0.
173	Q_power station	0.	0.	-0.000055	2.091E-06	-0.000035	0.
173	Q_neve	0.	0.	-0.000203	9.161E-06	-0.000097	0.
173	Q_manutenzione	0.	0.	-0.000055	2.091E-06	-0.000035	0.
173	EQ_X	0.017829	0.00046	0.000155	2.866E-06	0.000239	-0.000171
173	EQ_Y	-0.000126	0.006778	0.000354	-0.000308	0.000033	-0.000116
174	DEAD	0.	0.	-0.00075	4.401E-17	-9.097E-17	0.
174	G1_power station	0.	0.	0.	0.	0.	0.
174	G2_power station	0.	0.	-0.001101	0.000053	-0.00091	0.
174	Q_power station	0.	0.	-0.000041	1.967E-06	-0.000034	0.
174	Q_neve	0.	0.	-0.000165	9.331E-06	-0.000092	0.
174	Q_manutenzione	0.	0.	-0.000041	1.967E-06	-0.000034	0.
174	EQ_X	0.017829	0.000391	0.000067	-2.435E-06	0.0002	-0.00017
174	EQ_Y	-0.000125	0.006731	0.00034	-0.000299	0.000037	-0.000115
175	DEAD	0.	0.	-0.00075	5.407E-17	-6.547E-18	0.
175	G1_power station	0.	0.	0.	0.	0.	0.
175	G2_power station	0.	0.	-0.001306	0.000046	0.000657	0.
175	Q_power station	0.	0.	-0.000048	1.700E-06	0.000024	0.
175	Q_neve	0.	0.	-0.000174	6.552E-06	0.000066	0.
175	Q_manutenzione	0.	0.	-0.000048	1.700E-06	0.000024	0.
175	EQ_X	0.017912	-0.000428	-0.000123	-0.000012	0.000134	-0.000171
175	EQ_Y	-0.000068	0.00617	0.000181	-0.000263	-6.503E-06	-0.000109
176	DEAD	0.	0.	-0.00075	4.859E-17	-3.253E-18	0.
176	G1_power station	0.	0.	0.	0.	0.	0.
176	G2_power station	0.	0.	-0.001028	0.000027	0.000618	0.
176	Q_power station	0.	0.	-0.000038	9.851E-07	0.000023	0.
176	Q_neve	0.	0.	-0.000146	4.994E-06	0.000062	0.
176	Q_manutenzione	0.	0.	-0.000038	9.851E-07	0.000023	0.
176	EQ_X	0.017912	-0.000353	-0.000075	-0.00001	0.000091	-0.000171
176	EQ_Y	-0.000068	0.006218	0.000177	-0.00025	-0.000012	-0.000109
177	DEAD	0.	0.	-0.00075	4.417E-17	-5.429E-19	0.
177	G1_power station	0.	0.	0.	0.	0.	0.
177	G2_power station	0.	0.	-0.000771	0.000013	0.000557	0.
177	Q_power station	0.	0.	-0.000029	4.945E-07	0.000021	0.
177	Q_neve	0.	0.	-0.000121	3.975E-06	0.000055	0.
177	Q_manutenzione	0.	0.	-0.000029	4.945E-07	0.000021	0.
177	EQ_X	0.017912	-0.000279	-0.000043	-7.652E-06	0.000057	-0.000171
177	EQ_Y	-0.000068	0.006265	0.000172	-0.000239	-0.000013	-0.00011
178	DEAD	0.	0.	-0.00075	3.976E-17	-1.058E-18	0.

Table 18: Joint Displacements

Joint	OutputCase	U1	U2	U3	R1	R2	R3
		m	m	m	Radians	Radians	Radians
178	G1_power station	0.	0.	0.	0.	0.	0.
178	G2_power station	0.	0.	-0.000544	5.454E-06	0.000484	0.
178	Q_power station	0.	0.	-0.00002	2.018E-07	0.000018	0.
178	Q_neve	0.	0.	-0.000099	3.457E-06	0.000047	0.
178	Q_manutenzione	0.	0.	-0.00002	2.018E-07	0.000018	0.
178	EQ_X	0.017912	-0.000204	-0.000024	-4.947E-06	0.000029	-0.000171
178	EQ_Y	-0.000068	0.006313	0.000167	-0.00023	-0.000011	-0.000109
179	DEAD	0.	0.	-0.00075	3.795E-17	-5.406E-18	0.
179	G1_power station	0.	0.	0.	0.	0.	0.
179	G2_power station	0.	0.	-0.000349	4.458E-06	0.000408	0.
179	Q_power station	0.	0.	-0.000013	1.650E-07	0.000015	0.
179	Q_neve	0.	0.	-0.00008	3.637E-06	0.000038	0.
179	Q_manutenzione	0.	0.	-0.000013	1.650E-07	0.000015	0.
179	EQ_X	0.017912	-0.00013	-0.000016	-1.687E-06	7.398E-06	-0.000171
179	EQ_Y	-0.000069	0.006361	0.000162	-0.000224	-8.491E-06	-0.000111
180	DEAD	0.	0.	-0.00075	4.012E-17	-1.637E-17	0.
180	G1_power station	0.	0.	0.	0.	0.	0.
180	G2_power station	0.	0.	-0.000188	0.000019	0.000336	0.
180	Q_power station	0.	0.	-6.946E-06	7.116E-07	0.000012	0.
180	Q_neve	0.	0.	-0.000065	5.478E-06	0.000031	0.
180	Q_manutenzione	0.	0.	-6.946E-06	7.116E-07	0.000012	0.
180	EQ_X	0.017912	-0.000055	-0.000017	3.191E-06	-6.965E-06	-0.000171
180	EQ_Y	-0.000068	0.006409	0.000159	-0.00022	-5.523E-06	-0.00011
181	DEAD	0.	0.	-0.00075	4.610E-17	-1.778E-17	0.
181	G1_power station	0.	0.	0.	0.	0.	0.
181	G2_power station	0.	0.	-0.000049	0.000072	0.000324	0.
181	Q_power station	0.	0.	-1.797E-06	2.661E-06	0.000012	0.
181	Q_neve	0.	0.	-0.000053	0.000011	0.00003	0.
181	Q_manutenzione	0.	0.	-1.797E-06	2.661E-06	0.000012	0.
181	EQ_X	0.017912	0.000019	-0.000021	0.000012	-0.000011	-0.000171
181	EQ_Y	-0.000068	0.006457	0.000157	-0.000219	-6.167E-06	-0.000111
182	DEAD	0.	0.	-0.00075	4.923E-17	-1.038E-17	0.
182	G1_power station	0.	0.	0.	0.	0.	0.
182	G2_power station	0.	0.	-0.00129	0.000019	0.00064	0.
182	Q_power station	0.	0.	-0.000048	7.052E-07	0.000024	0.
182	Q_neve	0.	0.	-0.000172	2.593E-06	0.000065	0.
182	Q_manutenzione	0.	0.	-0.000048	7.052E-07	0.000024	0.
182	EQ_X	0.017996	-0.000428	-0.000126	-2.964E-06	0.000127	-0.000171
182	EQ_Y	-0.000014	0.00617	0.000059	-0.000242	-1.984E-06	-0.000109
183	DEAD	0.	0.	-0.00075	4.489E-17	-8.727E-18	0.
183	G1_power station	0.	0.	0.	0.	0.	0.
183	G2_power station	0.	0.	-0.001018	0.000011	0.000604	0.
183	Q_power station	0.	0.	-0.000038	4.236E-07	0.000022	0.

Table 18: Joint Displacements

Joint	OutputCase	U1	U2	U3	R1	R2	R3
		m	m	m	Radians	Radians	Radians
183	Q_neve	0.	0.	-0.000145	1.975E-06	0.00006	0.
183	Q_manutenzione	0.	0.	-0.000038	4.236E-07	0.000022	0.
183	EQ_X	0.017996	-0.000353	-0.000078	-4.002E-06	0.000093	-0.000171
183	EQ_Y	-0.000014	0.006218	0.000058	-0.000238	-2.583E-06	-0.00011
184	DEAD	0.	0.	-0.00075	4.029E-17	-5.614E-18	0.
184	G1_power station	0.	0.	0.	0.	0.	0.
184	G2_power station	0.	0.	-0.000766	5.749E-06	0.000548	0.
184	Q_power station	0.	0.	-0.000028	2.127E-07	0.00002	0.
184	Q_neve	0.	0.	-0.00012	1.527E-06	0.000054	0.
184	Q_manutenzione	0.	0.	-0.000028	2.127E-07	0.00002	0.
184	EQ_X	0.017996	-0.000279	-0.000045	-2.886E-06	0.000059	-0.000171
184	EQ_Y	-0.000014	0.006265	0.000057	-0.000232	-3.579E-06	-0.000109
185	DEAD	0.	0.	-0.00075	3.873E-17	-5.746E-18	0.
185	G1_power station	0.	0.	0.	0.	0.	0.
185	G2_power station	0.	0.	-0.000542	2.491E-06	0.00048	0.
185	Q_power station	0.	0.	-0.00002	9.216E-08	0.000018	0.
185	Q_neve	0.	0.	-0.000098	1.305E-06	0.000046	0.
185	Q_manutenzione	0.	0.	-0.00002	9.216E-08	0.000018	0.
185	EQ_X	0.017996	-0.000204	-0.000026	-1.660E-06	0.000031	-0.000171
185	EQ_Y	-0.000014	0.006313	0.000055	-0.000225	-3.525E-06	-0.00011
186	DEAD	0.	0.	-0.00075	3.277E-17	-8.240E-18	0.
186	G1_power station	0.	0.	0.	0.	0.	0.
186	G2_power station	0.	0.	-0.000347	2.679E-06	0.000413	0.
186	Q_power station	0.	0.	-0.000013	9.914E-08	0.000015	0.
186	Q_neve	0.	0.	-0.000079	1.433E-06	0.000039	0.
186	Q_manutenzione	0.	0.	-0.000013	9.914E-08	0.000015	0.
186	EQ_X	0.017996	-0.00013	-0.000017	-2.797E-07	0.000011	-0.000171
186	EQ_Y	-0.000014	0.006361	0.000054	-0.000219	-2.802E-06	-0.00011
187	DEAD	0.	0.	-0.00075	3.057E-17	-1.301E-17	0.
187	G1_power station	0.	0.	0.	0.	0.	0.
187	G2_power station	0.	0.	-0.00018	9.845E-06	0.000363	0.
187	Q_power station	0.	0.	-6.644E-06	3.643E-07	0.000013	0.
187	Q_neve	0.	0.	-0.000063	2.291E-06	0.000034	0.
187	Q_manutenzione	0.	0.	-6.644E-06	3.643E-07	0.000013	0.
187	EQ_X	0.017996	-0.000055	-0.000015	1.767E-06	-1.581E-06	-0.000171
187	EQ_Y	-0.000014	0.006409	0.000053	-0.000215	-2.137E-06	-0.00011
188	DEAD	0.	0.	-0.00075	3.332E-17	-1.388E-17	0.
188	G1_power station	0.	0.	0.	0.	0.	0.
188	G2_power station	0.	0.	-0.000026	0.000022	0.000347	0.
188	Q_power station	0.	0.	-9.650E-07	8.294E-07	0.000013	0.
188	Q_neve	0.	0.	-0.000049	3.734E-06	0.000033	0.
188	Q_manutenzione	0.	0.	-9.650E-07	8.294E-07	0.000013	0.
188	EQ_X	0.017996	0.000019	-0.000017	4.343E-06	-4.833E-06	-0.000171

Table 18: Joint Displacements

Joint	OutputCase	U1	U2	U3	R1	R2	R3
		m	m	m	Radians	Radians	Radians
188	EQ_Y	-0.000014	0.006457	0.000052	-0.000212	-1.968E-06	-0.00011
189	DEAD	0.	0.	-0.00075	4.206E-17	-1.725E-17	0.
189	G1_power station	0.	0.	0.	0.	0.	0.
189	G2_power station	0.	0.	-0.00129	-0.000019	0.00064	0.
189	Q_power station	0.	0.	-0.000048	-7.052E-07	0.000024	0.
189	Q_neve	0.	0.	-0.000172	-2.593E-06	0.000065	0.
189	Q_manutenzione	0.	0.	-0.000048	-7.052E-07	0.000024	0.
189	EQ_X	0.01808	-0.000428	-0.000126	2.964E-06	0.000127	-0.000172
189	EQ_Y	0.000039	0.00617	-0.000059	-0.000242	1.984E-06	-0.00011
190	DEAD	0.	0.	-0.00075	3.902E-17	-1.323E-17	0.
190	G1_power station	0.	0.	0.	0.	0.	0.
190	G2_power station	0.	0.	-0.001018	-0.000011	0.000604	0.
190	Q_power station	0.	0.	-0.000038	-4.236E-07	0.000022	0.
190	Q_neve	0.	0.	-0.000145	-1.975E-06	0.00006	0.
190	Q_manutenzione	0.	0.	-0.000038	-4.236E-07	0.000022	0.
190	EQ_X	0.01808	-0.000353	-0.000078	4.002E-06	0.000093	-0.000171
190	EQ_Y	0.00004	0.006218	-0.000058	-0.000238	2.583E-06	-0.000109
191	DEAD	0.	0.	-0.00075	3.507E-17	-9.811E-18	0.
191	G1_power station	0.	0.	0.	0.	0.	0.
191	G2_power station	0.	0.	-0.000766	-5.749E-06	0.000548	0.
191	Q_power station	0.	0.	-0.000028	-2.127E-07	0.00002	0.
191	Q_neve	0.	0.	-0.00012	-1.527E-06	0.000054	0.
191	Q_manutenzione	0.	0.	-0.000028	-2.127E-07	0.00002	0.
191	EQ_X	0.01808	-0.000279	-0.000045	2.886E-06	0.000059	-0.000171
191	EQ_Y	0.00004	0.006265	-0.000057	-0.000232	3.579E-06	-0.00011
192	DEAD	0.	0.	-0.00075	2.953E-17	-9.702E-18	0.
192	G1_power station	0.	0.	0.	0.	0.	0.
192	G2_power station	0.	0.	-0.000542	-2.491E-06	0.00048	0.
192	Q_power station	0.	0.	-0.00002	-9.216E-08	0.000018	0.
192	Q_neve	0.	0.	-0.000098	-1.305E-06	0.000046	0.
192	Q_manutenzione	0.	0.	-0.00002	-9.216E-08	0.000018	0.
192	EQ_X	0.01808	-0.000204	-0.000026	1.660E-06	0.000031	-0.000171
192	EQ_Y	0.00004	0.006313	-0.000055	-0.000225	3.525E-06	-0.00011
193	DEAD	0.	0.	-0.00075	2.743E-17	-1.344E-17	0.
193	G1_power station	0.	0.	0.	0.	0.	0.
193	G2_power station	0.	0.	-0.000347	-2.679E-06	0.000413	0.
193	Q_power station	0.	0.	-0.000013	-9.914E-08	0.000015	0.
193	Q_neve	0.	0.	-0.000079	-1.433E-06	0.000039	0.
193	Q_manutenzione	0.	0.	-0.000013	-9.914E-08	0.000015	0.
193	EQ_X	0.01808	-0.00013	-0.000017	2.797E-07	0.000011	-0.000171
193	EQ_Y	0.000039	0.006361	-0.000054	-0.000219	2.802E-06	-0.00011
194	DEAD	0.	0.	-0.00075	2.325E-17	-1.453E-17	0.
194	G1_power station	0.	0.	0.	0.	0.	0.

Table 18: Joint Displacements

Joint	OutputCase	U1	U2	U3	R1	R2	R3
		m	m	m	Radians	Radians	Radians
194	G2_power station	0.	0.	-0.00018	-9.845E-06	0.000363	0.
194	Q_power station	0.	0.	-6.644E-06	-3.643E-07	0.000013	0.
194	Q_neve	0.	0.	-0.000063	-2.291E-06	0.000034	0.
194	Q_manutenzione	0.	0.	-6.644E-06	-3.643E-07	0.000013	0.
194	EQ_X	0.01808	-0.000055	-0.000015	-1.767E-06	-1.581E-06	-0.000171
194	EQ_Y	0.00004	0.006409	-0.000053	-0.000215	2.137E-06	-0.00011
195	DEAD	0.	0.	-0.00075	2.009E-17	-1.572E-17	0.
195	G1_power station	0.	0.	0.	0.	0.	0.
195	G2_power station	0.	0.	-0.000026	-0.000022	0.000347	0.
195	Q_power station	0.	0.	-9.650E-07	-8.294E-07	0.000013	0.
195	Q_neve	0.	0.	-0.000049	-3.734E-06	0.000033	0.
195	Q_manutenzione	0.	0.	-9.650E-07	-8.294E-07	0.000013	0.
195	EQ_X	0.01808	0.00002	-0.000017	-4.343E-06	-4.833E-06	-0.000171
195	EQ_Y	0.00004	0.006457	-0.000052	-0.000212	1.968E-06	-0.000111
196	DEAD	0.	0.	-0.00075	3.401E-17	-2.066E-17	0.
196	G1_power station	0.	0.	0.	0.	0.	0.
196	G2_power station	0.	0.	-0.001306	-0.000046	0.000657	0.
196	Q_power station	0.	0.	-0.000048	-1.700E-06	0.000024	0.
196	Q_neve	0.	0.	-0.000174	-6.552E-06	0.000066	0.
196	Q_manutenzione	0.	0.	-0.000048	-1.700E-06	0.000024	0.
196	EQ_X	0.018164	-0.000428	-0.000123	0.000012	0.000134	-0.000171
196	EQ_Y	0.000093	0.00617	-0.000181	-0.000263	6.503E-06	-0.000109
197	DEAD	0.	0.	-0.00075	3.104E-17	-1.624E-17	0.
197	G1_power station	0.	0.	0.	0.	0.	0.
197	G2_power station	0.	0.	-0.001028	-0.000027	0.000618	0.
197	Q_power station	0.	0.	-0.000038	-9.851E-07	0.000023	0.
197	Q_neve	0.	0.	-0.000146	-4.994E-06	0.000062	0.
197	Q_manutenzione	0.	0.	-0.000038	-9.851E-07	0.000023	0.
197	EQ_X	0.018164	-0.000353	-0.000075	0.00001	0.000091	-0.000171
197	EQ_Y	0.000093	0.006218	-0.000177	-0.00025	0.000012	-0.000109
198	DEAD	0.	0.	-0.00075	2.838E-17	-1.538E-17	0.
198	G1_power station	0.	0.	0.	0.	0.	0.
198	G2_power station	0.	0.	-0.000771	-0.000013	0.000557	0.
198	Q_power station	0.	0.	-0.000029	-4.945E-07	0.000021	0.
198	Q_neve	0.	0.	-0.000121	-3.975E-06	0.000055	0.
198	Q_manutenzione	0.	0.	-0.000029	-4.945E-07	0.000021	0.
198	EQ_X	0.018164	-0.000278	-0.000043	7.652E-06	0.000057	-0.000171
198	EQ_Y	0.000094	0.006265	-0.000172	-0.000239	0.000013	-0.00011
199	DEAD	0.	0.	-0.00075	2.398E-17	-1.495E-17	0.
199	G1_power station	0.	0.	0.	0.	0.	0.
199	G2_power station	0.	0.	-0.000544	-5.454E-06	0.000484	0.
199	Q_power station	0.	0.	-0.00002	-2.018E-07	0.000018	0.
199	Q_neve	0.	0.	-0.000099	-3.457E-06	0.000047	0.

Table 18: Joint Displacements

Joint	OutputCase	U1	U2	U3	R1	R2	R3
		m	m	m	Radians	Radians	Radians
199	Q_manutenzione	0.	0.	-0.00002	-2.018E-07	0.000018	0.
199	EQ_X	0.018164	-0.000204	-0.000024	4.947E-06	0.000029	-0.000171
199	EQ_Y	0.000094	0.006313	-0.000167	-0.00023	0.000011	-0.00011
200	DEAD	0.	0.	-0.00075	2.010E-17	-1.555E-17	0.
200	G1_power station	0.	0.	0.	0.	0.	0.
200	G2_power station	0.	0.	-0.000349	-4.458E-06	0.000408	0.
200	Q_power station	0.	0.	-0.000013	-1.650E-07	0.000015	0.
200	Q_neve	0.	0.	-0.00008	-3.637E-06	0.000038	0.
200	Q_manutenzione	0.	0.	-0.000013	-1.650E-07	0.000015	0.
200	EQ_X	0.018164	-0.000129	-0.000016	1.687E-06	7.398E-06	-0.000171
200	EQ_Y	0.000094	0.006361	-0.000162	-0.000224	8.491E-06	-0.000111
201	DEAD	0.	0.	-0.00075	1.613E-17	-1.978E-17	0.
201	G1_power station	0.	0.	0.	0.	0.	0.
201	G2_power station	0.	0.	-0.000188	-0.000019	0.000336	0.
201	Q_power station	0.	0.	-6.946E-06	-7.116E-07	0.000012	0.
201	Q_neve	0.	0.	-0.000065	-5.478E-06	0.000031	0.
201	Q_manutenzione	0.	0.	-6.946E-06	-7.116E-07	0.000012	0.
201	EQ_X	0.018164	-0.000055	-0.000017	-3.191E-06	-6.965E-06	-0.000171
201	EQ_Y	0.000094	0.006409	-0.000159	-0.00022	5.523E-06	-0.000111
202	DEAD	0.	0.	-0.00075	8.675E-18	-2.012E-17	0.
202	G1_power station	0.	0.	0.	0.	0.	0.
202	G2_power station	0.	0.	-0.000049	-0.000072	0.000324	0.
202	Q_power station	0.	0.	-1.797E-06	-2.661E-06	0.000012	0.
202	Q_neve	0.	0.	-0.000053	-0.000011	0.00003	0.
202	Q_manutenzione	0.	0.	-1.797E-06	-2.661E-06	0.000012	0.
202	EQ_X	0.018164	0.00002	-0.000021	-0.000012	-0.000011	-0.000171
202	EQ_Y	0.000094	0.006457	-0.000157	-0.000219	6.167E-06	-0.00011
203	DEAD	0.	0.	-0.00075	2.568E-17	-2.206E-17	0.
203	G1_power station	0.	0.	0.	0.	0.	0.
203	G2_power station	0.	0.	-0.00133	-0.000043	0.000684	0.
203	Q_power station	0.	0.	-0.000049	-1.591E-06	0.000025	0.
203	Q_neve	0.	0.	-0.000178	-7.154E-06	0.000068	0.
203	Q_manutenzione	0.	0.	-0.000049	-1.591E-06	0.000025	0.
203	EQ_X	0.018248	-0.000428	-0.000116	0.000011	0.000128	-0.000171
203	EQ_Y	0.000147	0.00617	-0.000316	-0.000275	0.000029	-0.000108
204	DEAD	0.	0.	-0.00075	2.444E-17	-1.868E-17	0.
204	G1_power station	0.	0.	0.	0.	0.	0.
204	G2_power station	0.	0.	-0.001041	-0.000026	0.000637	0.
204	Q_power station	0.	0.	-0.000039	-9.715E-07	0.000024	0.
204	Q_neve	0.	0.	-0.000149	-5.873E-06	0.000063	0.
204	Q_manutenzione	0.	0.	-0.000039	-9.715E-07	0.000024	0.
204	EQ_X	0.018248	-0.000353	-0.000069	0.000013	0.000089	-0.000171
204	EQ_Y	0.000147	0.006218	-0.000303	-0.000266	0.000029	-0.000109

Table 18: Joint Displacements

Joint	OutputCase	U1	U2	U3	R1	R2	R3
		m	m	m	Radians	Radians	Radians
205	DEAD	0.	0.	-0.00075	2.270E-17	-1.821E-17	0.
205	G1_power station	0.	0.	0.	0.	0.	0.
205	G2_power station	0.	0.	-0.000778	-0.000012	0.00057	0.
205	Q_power station	0.	0.	-0.000029	-4.393E-07	0.000021	0.
205	Q_neve	0.	0.	-0.000123	-4.807E-06	0.000056	0.
205	Q_manutenzione	0.	0.	-0.000029	-4.393E-07	0.000021	0.
205	EQ_X	0.018248	-0.000278	-0.000038	0.000011	0.000054	-0.000171
205	EQ_Y	0.000147	0.006265	-0.000291	-0.000247	0.000026	-0.000109
206	DEAD	0.	0.	-0.00075	2.022E-17	-1.926E-17	0.
206	G1_power station	0.	0.	0.	0.	0.	0.
206	G2_power station	0.	0.	-0.000546	-2.388E-06	0.000491	0.
206	Q_power station	0.	0.	-0.00002	-8.837E-08	0.000018	0.
206	Q_neve	0.	0.	-0.000101	-4.217E-06	0.000047	0.
206	Q_manutenzione	0.	0.	-0.00002	-8.837E-08	0.000018	0.
206	EQ_X	0.018248	-0.000204	-0.000021	8.538E-06	0.000025	-0.000171
206	EQ_Y	0.000148	0.006313	-0.000281	-0.000237	0.000021	-0.00011
207	DEAD	0.	0.	-0.00075	1.629E-17	-2.147E-17	0.
207	G1_power station	0.	0.	0.	0.	0.	0.
207	G2_power station	0.	0.	-0.000351	-4.940E-07	0.000404	0.
207	Q_power station	0.	0.	-0.000013	-1.828E-08	0.000015	0.
207	Q_neve	0.	0.	-0.000082	-4.396E-06	0.000038	0.
207	Q_manutenzione	0.	0.	-0.000013	-1.828E-08	0.000015	0.
207	EQ_X	0.018248	-0.000129	-0.000015	4.626E-06	2.685E-06	-0.000171
207	EQ_Y	0.000148	0.006361	-0.000273	-0.00023	0.000014	-0.00011
208	DEAD	0.	0.	-0.00075	1.344E-17	-2.461E-17	0.
208	G1_power station	0.	0.	0.	0.	0.	0.
208	G2_power station	0.	0.	-0.000196	-0.000013	0.000306	0.
208	Q_power station	0.	0.	-7.242E-06	-4.913E-07	0.000011	0.
208	Q_neve	0.	0.	-0.000068	-6.088E-06	0.000027	0.
208	Q_manutenzione	0.	0.	-7.242E-06	-4.913E-07	0.000011	0.
208	EQ_X	0.018248	-0.000055	-0.000018	-7.147E-07	-0.000014	-0.000171
208	EQ_Y	0.000148	0.006409	-0.000269	-0.000228	7.046E-06	-0.000112
209	DEAD	0.	0.	-0.000125	2.927E-18	4.751E-18	0.
209	G1_power station	0.	0.	0.	0.	0.	0.
209	G2_power station	0.	0.	-0.000323	0.000059	-0.000272	0.
209	Q_power station	0.	0.	-0.000012	2.173E-06	-0.00001	0.
209	Q_neve	0.	0.	-0.000043	8.887E-06	-0.000027	0.
209	Q_manutenzione	0.	0.	-0.000012	2.173E-06	-0.00001	0.
209	EQ_X	0.002957	0.000076	0.000012	-2.908E-06	0.000124	-0.000028
209	EQ_Y	-0.000028	0.001136	0.000117	-0.000097	0.000047	-0.000018
210	DEAD	0.	0.	-0.000125	2.827E-18	4.079E-18	0.
210	G1_power station	0.	0.	0.	0.	0.	0.
210	G2_power station	0.	0.	-0.000217	0.000055	-0.000257	0.

Table 18: Joint Displacements

Joint	OutputCase	U1	U2	U3	R1	R2	R3
		m	m	m	Radians	Radians	Radians
210	Q_power station	0.	0.	-8.017E-06	2.048E-06	-9.502E-06	0.
210	Q_neve	0.	0.	-0.000033	8.945E-06	-0.000025	0.
210	Q_manutenzione	0.	0.	-8.017E-06	2.048E-06	-9.502E-06	0.
210	EQ_X	0.002957	0.000064	-0.000028	1.729E-06	0.000076	-0.000028
210	EQ_Y	-0.000028	0.001128	0.000098	-0.000076	0.000045	-0.000021
211	DEAD	0.	0.	-0.000125	4.781E-19	6.524E-19	0.
211	G1_power station	0.	0.	0.	0.	0.	0.
211	G2_power station	0.	0.	0.000063	0.000046	-0.000023	0.
211	Q_power station	0.	0.	2.326E-06	1.715E-06	-8.552E-07	0.
211	Q_neve	0.	0.	-3.504E-06	8.729E-06	-3.645E-06	0.
211	Q_manutenzione	0.	0.	2.326E-06	1.715E-06	-8.552E-07	0.
211	EQ_X	0.002971	0.000017	-0.00003	-4.043E-06	-0.000048	-0.000027
211	EQ_Y	-0.000015	0.001077	0.000023	-0.000039	6.193E-06	-0.00003
212	DEAD	0.	0.	-0.000125	1.235E-18	-1.897E-19	0.
212	G1_power station	0.	0.	0.	0.	0.	0.
212	G2_power station	0.	0.	0.000043	0.000033	-0.000031	0.
212	Q_power station	0.	0.	1.597E-06	1.215E-06	-1.132E-06	0.
212	Q_neve	0.	0.	-7.565E-06	7.550E-06	-4.220E-06	0.
212	Q_manutenzione	0.	0.	1.597E-06	1.215E-06	-1.132E-06	0.
212	EQ_X	0.002957	0.000017	-0.000028	-3.315E-06	-0.000044	-0.000028
212	EQ_Y	-0.000028	0.001077	0.000042	-0.000036	0.000014	-0.000023
213	DEAD	0.	0.	-0.000125	1.694E-18	1.254E-18	0.
213	G1_power station	0.	0.	0.	0.	0.	0.
213	G2_power station	0.	0.	0.00004	0.000053	-0.000081	0.
213	Q_power station	0.	0.	1.462E-06	1.977E-06	-3.012E-06	0.
213	Q_neve	0.	0.	-6.219E-06	9.269E-06	-8.456E-06	0.
213	Q_manutenzione	0.	0.	1.462E-06	1.977E-06	-3.012E-06	0.
213	EQ_X	0.002971	0.000029	-0.000049	-8.810E-06	-0.000038	-0.000027
213	EQ_Y	-0.000014	0.00109	0.000028	-0.000046	0.000018	-0.000029
214	DEAD	0.	0.	-0.000125	1.518E-18	8.582E-19	0.
214	G1_power station	0.	0.	0.	0.	0.	0.
214	G2_power station	0.	0.	0.000016	0.00004	-0.00009	0.
214	Q_power station	0.	0.	5.952E-07	1.485E-06	-3.331E-06	0.
214	Q_neve	0.	0.	-0.000011	8.189E-06	-9.192E-06	0.
214	Q_manutenzione	0.	0.	5.952E-07	1.485E-06	-3.331E-06	0.
214	EQ_X	0.002958	0.000029	-0.000046	-4.920E-06	-0.000034	-0.000026
214	EQ_Y	-0.00003	0.00109	0.00005	-0.000043	0.000026	-0.000036
215	DEAD	0.	0.	-0.000125	1.507E-18	2.229E-18	0.
215	G1_power station	0.	0.	0.	0.	0.	0.
215	G2_power station	0.	0.	-0.000011	0.000062	-0.000144	0.
215	Q_power station	0.	0.	-4.085E-07	2.308E-06	-5.322E-06	0.
215	Q_neve	0.	0.	-0.000011	0.00001	-0.000014	0.
215	Q_manutenzione	0.	0.	-4.085E-07	2.308E-06	-5.322E-06	0.

Table 18: Joint Displacements

Joint	OutputCase	U1	U2	U3	R1	R2	R3
		m	m	m	Radians	Radians	Radians
215	EQ_X	0.002971	0.000041	-0.000061	-0.000015	-0.000011	-0.000027
215	EQ_Y	-0.000015	0.001105	0.000038	-0.000053	0.000027	-0.000037
216	DEAD	0.	0.	-0.000125	2.059E-18	1.765E-18	0.
216	G1_power station	0.	0.	0.	0.	0.	0.
216	G2_power station	0.	0.	-0.000039	0.000048	-0.000154	0.
216	Q_power station	0.	0.	-1.426E-06	1.761E-06	-5.697E-06	0.
216	Q_neve	0.	0.	-0.000016	8.784E-06	-0.000015	0.
216	Q_manutenzione	0.	0.	-1.426E-06	1.761E-06	-5.697E-06	0.
216	EQ_X	0.002958	0.000041	-0.000056	-6.185E-06	-6.045E-06	-0.000028
216	EQ_Y	-0.000031	0.001106	0.000064	-0.000051	0.000035	-0.00003
217	DEAD	0.	0.	-0.000125	4.042E-19	-3.186E-18	0.
217	G1_power station	0.	0.	0.	0.	0.	0.
217	G2_power station	0.	0.	-0.000296	-0.000041	0.000221	0.
217	Q_power station	0.	0.	-0.000011	-1.519E-06	8.187E-06	0.
217	Q_neve	0.	0.	-0.000039	-6.650E-06	0.000023	0.
217	Q_manutenzione	0.	0.	-0.000011	-1.519E-06	8.187E-06	0.
217	EQ_X	0.003058	-0.000072	-5.201E-06	6.710E-06	0.000083	-0.00003
217	EQ_Y	0.000024	0.001032	-0.000102	-0.000087	0.000048	-0.000012
218	DEAD	0.	0.	-0.000125	-4.743E-20	-2.792E-18	0.
218	G1_power station	0.	0.	0.	0.	0.	0.
218	G2_power station	0.	0.	-0.000202	-0.000032	0.000203	0.
218	Q_power station	0.	0.	-7.478E-06	-1.172E-06	7.509E-06	0.
218	Q_neve	0.	0.	-0.000029	-6.007E-06	0.00002	0.
218	Q_manutenzione	0.	0.	-7.478E-06	-1.172E-06	7.509E-06	0.
218	EQ_X	0.003057	-0.000059	0.00002	0.000014	0.000037	-0.000029
218	EQ_Y	0.000024	0.001037	-0.000082	-0.000062	0.000043	-0.000012
219	DEAD	0.	0.	-0.000125	9.581E-19	-2.004E-18	0.
219	G1_power station	0.	0.	0.	0.	0.	0.
219	G2_power station	0.	0.	-0.000121	-0.000021	0.000167	0.
219	Q_power station	0.	0.	-4.487E-06	-7.826E-07	6.181E-06	0.
219	Q_neve	0.	0.	-0.000021	-5.278E-06	0.000016	0.
219	Q_manutenzione	0.	0.	-4.487E-06	-7.826E-07	6.181E-06	0.
219	EQ_X	0.003057	-0.000046	0.000029	0.000013	8.318E-06	-0.000029
219	EQ_Y	0.000024	0.001043	-0.000065	-0.000046	0.000034	-0.000013
220	DEAD	0.	0.	-0.000125	1.414E-18	-1.486E-18	0.
220	G1_power station	0.	0.	0.	0.	0.	0.
220	G2_power station	0.	0.	-0.000057	-0.000014	0.000129	0.
220	Q_power station	0.	0.	-2.101E-06	-5.332E-07	4.784E-06	0.
220	Q_neve	0.	0.	-0.000015	-4.917E-06	0.000012	0.
220	Q_manutenzione	0.	0.	-2.101E-06	-5.332E-07	4.784E-06	0.
220	EQ_X	0.003057	-0.000033	0.000028	0.000011	-0.000011	-0.000029
220	EQ_Y	0.000025	0.001048	-0.000053	-0.000036	0.000025	-0.000013
221	DEAD	0.	0.	-0.000125	1.651E-18	-5.546E-19	0.

Table 18: Joint Displacements

Joint	OutputCase	U1	U2	U3	R1	R2	R3
		m	m	m	Radians	Radians	Radians
221	G1_power station	0.	0.	0.	0.	0.	0.
221	G2_power station	0.	0.	-8.079E-06	-0.000012	0.000095	0.
221	Q_power station	0.	0.	-2.989E-07	-4.541E-07	3.516E-06	0.
221	Q_neve	0.	0.	-0.000011	-5.012E-06	8.170E-06	0.
221	Q_manutenzione	0.	0.	-2.989E-07	-4.541E-07	3.516E-06	0.
221	EQ_X	0.003057	-0.000021	0.000021	7.940E-06	-0.000024	-0.000029
221	EQ_Y	0.000026	0.001054	-0.000044	-0.00003	0.000016	-0.000014
222	DEAD	0.	0.	-0.000125	2.235E-18	4.167E-19	0.
222	G1_power station	0.	0.	0.	0.	0.	0.
222	G2_power station	0.	0.	0.000026	-0.000015	0.000063	0.
222	Q_power station	0.	0.	9.735E-07	-5.542E-07	2.317E-06	0.
222	Q_neve	0.	0.	-7.856E-06	-5.580E-06	4.628E-06	0.
222	Q_manutenzione	0.	0.	9.735E-07	-5.542E-07	2.317E-06	0.
222	EQ_X	0.003057	-7.962E-06	7.923E-06	5.298E-06	-0.000034	-0.000029
222	EQ_Y	0.000027	0.00106	-0.000039	-0.000028	7.291E-06	-0.000015
223	DEAD	0.	0.	-0.000125	1.301E-18	1.924E-18	0.
223	G1_power station	0.	0.	0.	0.	0.	0.
223	G2_power station	0.	0.	-0.000011	-0.000062	-0.000144	0.
223	Q_power station	0.	0.	-4.085E-07	-2.308E-06	-5.322E-06	0.
223	Q_neve	0.	0.	-0.000011	-0.00001	-0.000014	0.
223	Q_manutenzione	0.	0.	-4.085E-07	-2.308E-06	-5.322E-06	0.
223	EQ_X	0.003043	0.00004	-0.000061	0.000015	-0.000011	-0.000026
223	EQ_Y	0.000018	0.001108	-0.000038	-0.000053	-0.000027	-0.000035
224	DEAD	0.	0.	-0.000125	9.082E-19	1.552E-18	0.
224	G1_power station	0.	0.	0.	0.	0.	0.
224	G2_power station	0.	0.	-0.000039	-0.000048	-0.000154	0.
224	Q_power station	0.	0.	-1.426E-06	-1.761E-06	-5.697E-06	0.
224	Q_neve	0.	0.	-0.000016	-8.784E-06	-0.000015	0.
224	Q_manutenzione	0.	0.	-1.426E-06	-1.761E-06	-5.697E-06	0.
224	EQ_X	0.003056	0.00004	-0.000056	6.185E-06	-6.045E-06	-0.000027
224	EQ_Y	0.000033	0.001108	-0.000064	-0.000051	-0.000035	-0.000028
225	DEAD	0.	0.	-0.000125	1.077E-18	1.924E-18	0.
225	G1_power station	0.	0.	0.	0.	0.	0.
225	G2_power station	0.	0.	0.00004	-0.000053	-0.000081	0.
225	Q_power station	0.	0.	1.462E-06	-1.977E-06	-3.012E-06	0.
225	Q_neve	0.	0.	-6.219E-06	-9.269E-06	-8.456E-06	0.
225	Q_manutenzione	0.	0.	1.462E-06	-1.977E-06	-3.012E-06	0.
225	EQ_X	0.003043	0.000028	-0.000049	8.810E-06	-0.000038	-0.000027
225	EQ_Y	0.000017	0.001093	-0.000028	-0.000046	-0.000018	-0.000029
226	DEAD	0.	0.	-0.000125	1.355E-18	1.227E-18	0.
226	G1_power station	0.	0.	0.	0.	0.	0.
226	G2_power station	0.	0.	0.000016	-0.00004	-0.00009	0.
226	Q_power station	0.	0.	5.952E-07	-1.485E-06	-3.331E-06	0.

Table 18: Joint Displacements

Joint	OutputCase	U1	U2	U3	R1	R2	R3
		m	m	m	Radians	Radians	Radians
226	Q_neve	0.	0.	-0.000011	-8.189E-06	-9.192E-06	0.
226	Q_manutenzione	0.	0.	5.952E-07	-1.485E-06	-3.331E-06	0.
226	EQ_X	0.003056	0.000028	-0.000046	4.920E-06	-0.000034	-0.000025
226	EQ_Y	0.000033	0.001093	-0.00005	-0.000043	-0.000026	-0.000037
227	DEAD	0.	0.	-0.000125	2.270E-18	2.004E-18	0.
227	G1_power station	0.	0.	0.	0.	0.	0.
227	G2_power station	0.	0.	0.000063	-0.000046	-0.000023	0.
227	Q_power station	0.	0.	2.326E-06	-1.715E-06	-8.552E-07	0.
227	Q_neve	0.	0.	-3.504E-06	-8.729E-06	-3.645E-06	0.
227	Q_manutenzione	0.	0.	2.326E-06	-1.715E-06	-8.552E-07	0.
227	EQ_X	0.003043	0.000017	-0.00003	4.043E-06	-0.000048	-0.000026
227	EQ_Y	0.000017	0.001079	-0.000023	-0.000039	-6.193E-06	-0.000032
228	DEAD	0.	0.	-0.000125	1.972E-18	1.301E-18	0.
228	G1_power station	0.	0.	0.	0.	0.	0.
228	G2_power station	0.	0.	0.000043	-0.000033	-0.000031	0.
228	Q_power station	0.	0.	1.597E-06	-1.215E-06	-1.132E-06	0.
228	Q_neve	0.	0.	-7.565E-06	-7.550E-06	-4.220E-06	0.
228	Q_manutenzione	0.	0.	1.597E-06	-1.215E-06	-1.132E-06	0.
228	EQ_X	0.003056	0.000017	-0.000028	3.315E-06	-0.000044	-0.000027
228	EQ_Y	0.000031	0.001079	-0.000042	-0.000036	-0.000014	-0.000025
229	DEAD	0.	0.	-0.00075	4.654E-17	-9.043E-17	0.
229	G1_power station	0.	0.	0.	0.	0.	0.
229	G2_power station	0.	0.	-0.001499	0.000045	-0.000952	0.
229	Q_power station	0.	0.	-0.000055	1.653E-06	-0.000035	0.
229	Q_neve	0.	0.	-0.000207	8.332E-06	-0.000096	0.
229	Q_manutenzione	0.	0.	-0.000055	1.653E-06	-0.000035	0.
229	EQ_X	0.017744	0.000459	0.000155	1.375E-06	0.000252	-0.00017
229	EQ_Y	-0.000183	0.006778	0.000516	-0.000328	0.000062	-0.000115
230	DEAD	0.	0.	-0.00075	4.606E-17	-9.198E-17	0.
230	G1_power station	0.	0.	0.	0.	0.	0.
230	G2_power station	0.	0.	-0.001125	0.00004	-0.000907	0.
230	Q_power station	0.	0.	-0.000042	1.492E-06	-0.000034	0.
230	Q_neve	0.	0.	-0.00017	8.355E-06	-0.000091	0.
230	Q_manutenzione	0.	0.	-0.000042	1.492E-06	-0.000034	0.
230	EQ_X	0.017744	0.000391	0.000067	5.839E-06	0.000192	-0.00017
230	EQ_Y	-0.000184	0.006731	0.00049	-0.000303	0.000063	-0.000117
231	DEAD	0.	0.	-0.00075	4.598E-17	-6.551E-17	0.
231	G1_power station	0.	0.	0.	0.	0.	0.
231	G2_power station	0.	0.	-0.000088	0.000093	-0.000138	0.
231	Q_power station	0.	0.	-3.266E-06	3.458E-06	-5.105E-06	0.
231	Q_neve	0.	0.	-0.000061	0.000015	-0.000018	0.
231	Q_manutenzione	0.	0.	-3.266E-06	3.458E-06	-5.105E-06	0.
231	EQ_X	0.017829	0.000095	-0.000042	-2.876E-06	-0.000034	-0.000168

Table 18: Joint Displacements

Joint	OutputCase	U1	U2	U3	R1	R2	R3
		m	m	m	Radians	Radians	Radians
231	EQ_Y	-0.000122	0.006511	0.000272	-0.00025	0.000019	-0.000127
232	DEAD	0.	0.	-0.00075	4.526E-17	-6.349E-17	0.
232	G1_power station	0.	0.	0.	0.	0.	0.
232	G2_power station	0.	0.	-0.00012	0.000035	-0.000136	0.
232	Q_power station	0.	0.	-4.456E-06	1.311E-06	-5.026E-06	0.
232	Q_neve	0.	0.	-0.000067	8.884E-06	-0.000017	0.
232	Q_manutenzione	0.	0.	-4.456E-06	1.311E-06	-5.026E-06	0.
232	EQ_X	0.017744	0.000095	-0.000042	4.506E-07	-0.000028	-0.000169
232	EQ_Y	-0.000183	0.006511	0.000395	-0.000245	0.000031	-0.00012
233	DEAD	0.	0.	-0.00075	4.514E-17	-7.959E-17	0.
233	G1_power station	0.	0.	0.	0.	0.	0.
233	G2_power station	0.	0.	-0.000206	0.000092	-0.000382	0.
233	Q_power station	0.	0.	-7.612E-06	3.400E-06	-0.000014	0.
233	Q_neve	0.	0.	-0.000074	0.000014	-0.000041	0.
233	Q_manutenzione	0.	0.	-7.612E-06	3.400E-06	-0.000014	0.
233	EQ_X	0.017829	0.000171	-0.000053	-0.000011	-7.063E-06	-0.000169
233	EQ_Y	-0.000121	0.006568	0.000284	-0.000259	0.000036	-0.000125
234	DEAD	0.	0.	-0.00075	4.261E-17	-7.737E-17	0.
234	G1_power station	0.	0.	0.	0.	0.	0.
234	G2_power station	0.	0.	-0.000239	0.00004	-0.000385	0.
234	Q_power station	0.	0.	-8.831E-06	1.466E-06	-0.000014	0.
234	Q_neve	0.	0.	-0.00008	9.207E-06	-0.000041	0.
234	Q_manutenzione	0.	0.	-8.831E-06	1.466E-06	-0.000014	0.
234	EQ_X	0.017744	0.000171	-0.000049	-2.182E-06	-9.875E-07	-0.000168
234	EQ_Y	-0.000185	0.006568	0.000413	-0.000256	0.000048	-0.000133
235	DEAD	0.	0.	-0.00075	4.213E-17	-8.742E-17	0.
235	G1_power station	0.	0.	0.	0.	0.	0.
235	G2_power station	0.	0.	-0.000429	0.000093	-0.000607	0.
235	Q_power station	0.	0.	-0.000016	3.459E-06	-0.000022	0.
235	Q_neve	0.	0.	-0.000097	0.000014	-0.000062	0.
235	Q_manutenzione	0.	0.	-0.000016	3.459E-06	-0.000022	0.
235	EQ_X	0.017829	0.000247	-0.000045	-0.00002	0.000047	-0.000168
235	EQ_Y	-0.000121	0.006626	0.000303	-0.00027	0.000047	-0.000134
236	DEAD	0.	0.	-0.00075	4.250E-17	-8.763E-17	0.
236	G1_power station	0.	0.	0.	0.	0.	0.
236	G2_power station	0.	0.	-0.000464	0.000045	-0.000612	0.
236	Q_power station	0.	0.	-0.000017	1.660E-06	-0.000023	0.
236	Q_neve	0.	0.	-0.000103	9.534E-06	-0.000062	0.
236	Q_manutenzione	0.	0.	-0.000017	1.660E-06	-0.000023	0.
236	EQ_X	0.017744	0.000247	-0.000038	-4.812E-06	0.000056	-0.000169
236	EQ_Y	-0.000186	0.006627	0.000438	-0.000269	0.000059	-0.000126
237	DEAD	0.	0.	-0.00075	2.270E-17	-2.147E-17	0.
237	G1_power station	0.	0.	0.	0.	0.	0.

Table 18: Joint Displacements

Joint	OutputCase	U1	U2	U3	R1	R2	R3
		m	m	m	Radians	Radians	Radians
237	G2_power station	0.	0.	-0.001347	-0.00003	0.000694	0.
237	Q_power station	0.	0.	-0.00005	-1.116E-06	0.000026	0.
237	Q_neve	0.	0.	-0.000181	-6.104E-06	0.000069	0.
237	Q_manutenzione	0.	0.	-0.00005	-1.116E-06	0.000026	0.
237	EQ_X	0.018334	-0.000428	-0.000112	0.000011	0.000145	-0.000172
237	EQ_Y	0.000201	0.00617	-0.000461	-0.000295	0.000057	-0.000109
238	DEAD	0.	0.	-0.00075	2.141E-17	-2.148E-17	0.
238	G1_power station	0.	0.	0.	0.	0.	0.
238	G2_power station	0.	0.	-0.001052	-0.000015	0.000655	0.
238	Q_power station	0.	0.	-0.000039	-5.658E-07	0.000024	0.
238	Q_neve	0.	0.	-0.000152	-4.943E-06	0.000064	0.
238	Q_manutenzione	0.	0.	-0.000039	-5.658E-07	0.000024	0.
238	EQ_X	0.018334	-0.000353	-0.000062	0.000018	0.000091	-0.000171
238	EQ_Y	0.000202	0.006218	-0.000437	-0.000269	0.000053	-0.000108
239	DEAD	0.	0.	-0.00075	1.923E-17	-2.038E-17	0.
239	G1_power station	0.	0.	0.	0.	0.	0.
239	G2_power station	0.	0.	-0.000781	7.546E-07	0.000585	0.
239	Q_power station	0.	0.	-0.000029	2.792E-08	0.000022	0.
239	Q_neve	0.	0.	-0.000125	-3.709E-06	0.000057	0.
239	Q_manutenzione	0.	0.	-0.000029	2.792E-08	0.000022	0.
239	EQ_X	0.018334	-0.000279	-0.000031	0.000017	0.000052	-0.000171
239	EQ_Y	0.000202	0.006265	-0.000416	-0.00025	0.000043	-0.00011
240	DEAD	0.	0.	-0.00075	1.834E-17	-2.244E-17	0.
240	G1_power station	0.	0.	0.	0.	0.	0.
240	G2_power station	0.	0.	-0.000544	0.000012	0.000499	0.
240	Q_power station	0.	0.	-0.00002	4.363E-07	0.000018	0.
240	Q_neve	0.	0.	-0.000103	-2.988E-06	0.000047	0.
240	Q_manutenzione	0.	0.	-0.00002	4.363E-07	0.000018	0.
240	EQ_X	0.018333	-0.000204	-0.000015	0.000014	0.000021	-0.000171
240	EQ_Y	0.000203	0.006313	-0.0004	-0.000238	0.000031	-0.000109
241	DEAD	0.	0.	-0.00075	1.431E-17	-2.307E-17	0.
241	G1_power station	0.	0.	0.	0.	0.	0.
241	G2_power station	0.	0.	-0.000348	0.000015	0.0004	0.
241	Q_power station	0.	0.	-0.000013	5.435E-07	0.000015	0.
241	Q_neve	0.	0.	-0.000084	-3.106E-06	0.000037	0.
241	Q_manutenzione	0.	0.	-0.000013	5.435E-07	0.000015	0.
241	EQ_X	0.018333	-0.000129	-0.000012	8.688E-06	-2.747E-06	-0.000171
241	EQ_Y	0.000203	0.006361	-0.000389	-0.000231	0.000019	-0.000111
242	DEAD	0.	0.	-0.00075	1.518E-17	-2.572E-17	0.
242	G1_power station	0.	0.	0.	0.	0.	0.
242	G2_power station	0.	0.	-0.000198	7.840E-06	0.000281	0.
242	Q_power station	0.	0.	-7.338E-06	2.901E-07	0.00001	0.
242	Q_neve	0.	0.	-0.000071	-4.206E-06	0.000024	0.

Table 18: Joint Displacements

Joint	OutputCase	U1	U2	U3	R1	R2	R3
		m	m	m	Radians	Radians	Radians
242	Q_manutenzione	0.	0.	-7.338E-06	2.901E-07	0.00001	0.
242	EQ_X	0.018333	-0.000055	-0.000017	3.701E-06	-0.00002	-0.000171
242	EQ_Y	0.000205	0.006409	-0.000384	-0.00023	5.082E-06	-0.000111
243	DEAD	0.	0.	-0.00075	3.386E-17	-6.962E-17	0.
243	G1_power station	0.	0.	0.	0.	0.	0.
243	G2_power station	0.	0.	-0.000429	-0.000093	-0.000607	0.
243	Q_power station	0.	0.	-0.000016	-3.459E-06	-0.000022	0.
243	Q_neve	0.	0.	-0.000097	-0.000014	-0.000062	0.
243	Q_manutenzione	0.	0.	-0.000016	-3.459E-06	-0.000022	0.
243	EQ_X	0.018248	0.000247	-0.000045	0.00002	0.000047	-0.000168
243	EQ_Y	0.000147	0.006629	-0.000303	-0.00027	-0.000047	-0.000132
244	DEAD	0.	0.	-0.00075	3.632E-17	-6.313E-17	0.
244	G1_power station	0.	0.	0.	0.	0.	0.
244	G2_power station	0.	0.	-0.000464	-0.000045	-0.000612	0.
244	Q_power station	0.	0.	-0.000017	-1.660E-06	-0.000023	0.
244	Q_neve	0.	0.	-0.000103	-9.534E-06	-0.000062	0.
244	Q_manutenzione	0.	0.	-0.000017	-1.660E-06	-0.000023	0.
244	EQ_X	0.018333	0.000247	-0.000038	4.812E-06	0.000056	-0.000169
244	EQ_Y	0.000211	0.006629	-0.000438	-0.000269	-0.000059	-0.000124
245	DEAD	0.	0.	-0.00075	2.566E-17	-5.782E-17	0.
245	G1_power station	0.	0.	0.	0.	0.	0.
245	G2_power station	0.	0.	-0.000206	-0.000092	-0.000382	0.
245	Q_power station	0.	0.	-7.612E-06	-3.400E-06	-0.000014	0.
245	Q_neve	0.	0.	-0.000074	-0.000014	-0.000041	0.
245	Q_manutenzione	0.	0.	-7.612E-06	-3.400E-06	-0.000014	0.
245	EQ_X	0.018248	0.000171	-0.000053	0.000011	-7.063E-06	-0.000169
245	EQ_Y	0.000146	0.00657	-0.000284	-0.000259	-0.000036	-0.000125
246	DEAD	0.	0.	-0.00075	2.938E-17	-5.128E-17	0.
246	G1_power station	0.	0.	0.	0.	0.	0.
246	G2_power station	0.	0.	-0.000239	-0.00004	-0.000385	0.
246	Q_power station	0.	0.	-8.831E-06	-1.466E-06	-0.000014	0.
246	Q_neve	0.	0.	-0.00008	-9.207E-06	-0.000041	0.
246	Q_manutenzione	0.	0.	-8.831E-06	-1.466E-06	-0.000014	0.
246	EQ_X	0.018333	0.000171	-0.000049	2.182E-06	-9.875E-07	-0.000167
246	EQ_Y	0.000211	0.006571	-0.000413	-0.000256	-0.000048	-0.000133
247	DEAD	0.	0.	-0.00075	2.156E-17	-4.933E-17	0.
247	G1_power station	0.	0.	0.	0.	0.	0.
247	G2_power station	0.	0.	-0.000088	-0.000093	-0.000138	0.
247	Q_power station	0.	0.	-3.266E-06	-3.458E-06	-5.105E-06	0.
247	Q_neve	0.	0.	-0.000061	-0.000015	-0.000018	0.
247	Q_manutenzione	0.	0.	-3.266E-06	-3.458E-06	-5.105E-06	0.
247	EQ_X	0.018248	0.000095	-0.000042	2.876E-06	-0.000034	-0.000168
247	EQ_Y	0.000147	0.006513	-0.000272	-0.00025	-0.000019	-0.000129

Table 18: Joint Displacements

Joint	OutputCase	U1	U2	U3	R1	R2	R3
		m	m	m	Radians	Radians	Radians
248	DEAD	0.	0.	-0.00075	2.263E-17	-3.779E-17	0.
248	G1_power station	0.	0.	0.	0.	0.	0.
248	G2_power station	0.	0.	-0.00012	-0.000035	-0.000136	0.
248	Q_power station	0.	0.	-4.456E-06	-1.311E-06	-5.026E-06	0.
248	Q_neve	0.	0.	-0.000067	-8.884E-06	-0.000017	0.
248	Q_manutenzione	0.	0.	-4.456E-06	-1.311E-06	-5.026E-06	0.
248	EQ_X	0.018333	0.000095	-0.000042	-4.506E-07	-0.000028	-0.000169
248	EQ_Y	0.000209	0.006513	-0.000395	-0.000245	-0.000031	-0.000121
10~Link	DEAD	0.	0.	0.	0.	0.	0.
10~Link	G1_power station	0.	0.	0.	0.	0.	0.
10~Link	G2_power station	0.	0.	0.	0.	0.	0.
10~Link	Q_power station	0.	0.	0.	0.	0.	0.
10~Link	Q_neve	0.	0.	0.	0.	0.	0.
10~Link	Q_manutenzione	0.	0.	0.	0.	0.	0.
10~Link	EQ_X	0.	0.	0.	0.	0.	0.
10~Link	EQ_Y	0.	0.	0.	0.	0.	0.
7~Link	DEAD	0.	0.	0.	0.	0.	0.
7~Link	G1_power station	0.	0.	0.	0.	0.	0.
7~Link	G2_power station	0.	0.	0.	0.	0.	0.
7~Link	Q_power station	0.	0.	0.	0.	0.	0.
7~Link	Q_neve	0.	0.	0.	0.	0.	0.
7~Link	Q_manutenzione	0.	0.	0.	0.	0.	0.
7~Link	EQ_X	0.	0.	0.	0.	0.	0.
7~Link	EQ_Y	0.	0.	0.	0.	0.	0.
8~Link	DEAD	0.	0.	0.	0.	0.	0.
8~Link	G1_power station	0.	0.	0.	0.	0.	0.
8~Link	G2_power station	0.	0.	0.	0.	0.	0.
8~Link	Q_power station	0.	0.	0.	0.	0.	0.
8~Link	Q_neve	0.	0.	0.	0.	0.	0.
8~Link	Q_manutenzione	0.	0.	0.	0.	0.	0.
8~Link	EQ_X	0.	0.	0.	0.	0.	0.
8~Link	EQ_Y	0.	0.	0.	0.	0.	0.
11~Link	DEAD	0.	0.	0.	0.	0.	0.
11~Link	G1_power station	0.	0.	0.	0.	0.	0.
11~Link	G2_power station	0.	0.	0.	0.	0.	0.
11~Link	Q_power station	0.	0.	0.	0.	0.	0.
11~Link	Q_neve	0.	0.	0.	0.	0.	0.
11~Link	Q_manutenzione	0.	0.	0.	0.	0.	0.
11~Link	EQ_X	0.	0.	0.	0.	0.	0.
11~Link	EQ_Y	0.	0.	0.	0.	0.	0.
12~Link	DEAD	0.	0.	0.	0.	0.	0.
12~Link	G1_power station	0.	0.	0.	0.	0.	0.
12~Link	G2_power station	0.	0.	0.	0.	0.	0.

Table 18: Joint Displacements

Joint	OutputCase	U1	U2	U3	R1	R2	R3
		m	m	m	Radians	Radians	Radians
12~Link	Q_power station	0.	0.	0.	0.	0.	0.
12~Link	Q_neve	0.	0.	0.	0.	0.	0.
12~Link	Q_manutenzione	0.	0.	0.	0.	0.	0.
12~Link	EQ_X	0.	0.	0.	0.	0.	0.
12~Link	EQ_Y	0.	0.	0.	0.	0.	0.
13~Link	DEAD	0.	0.	0.	0.	0.	0.
13~Link	G1_power station	0.	0.	0.	0.	0.	0.
13~Link	G2_power station	0.	0.	0.	0.	0.	0.
13~Link	Q_power station	0.	0.	0.	0.	0.	0.
13~Link	Q_neve	0.	0.	0.	0.	0.	0.
13~Link	Q_manutenzione	0.	0.	0.	0.	0.	0.
13~Link	EQ_X	0.	0.	0.	0.	0.	0.
13~Link	EQ_Y	0.	0.	0.	0.	0.	0.
15~Link	DEAD	0.	0.	0.	0.	0.	0.
15~Link	G1_power station	0.	0.	0.	0.	0.	0.
15~Link	G2_power station	0.	0.	0.	0.	0.	0.
15~Link	Q_power station	0.	0.	0.	0.	0.	0.
15~Link	Q_neve	0.	0.	0.	0.	0.	0.
15~Link	Q_manutenzione	0.	0.	0.	0.	0.	0.
15~Link	EQ_X	0.	0.	0.	0.	0.	0.
15~Link	EQ_Y	0.	0.	0.	0.	0.	0.
16~Link	DEAD	0.	0.	0.	0.	0.	0.
16~Link	G1_power station	0.	0.	0.	0.	0.	0.
16~Link	G2_power station	0.	0.	0.	0.	0.	0.
16~Link	Q_power station	0.	0.	0.	0.	0.	0.
16~Link	Q_neve	0.	0.	0.	0.	0.	0.
16~Link	Q_manutenzione	0.	0.	0.	0.	0.	0.
16~Link	EQ_X	0.	0.	0.	0.	0.	0.
16~Link	EQ_Y	0.	0.	0.	0.	0.	0.
17~Link	DEAD	0.	0.	0.	0.	0.	0.
17~Link	G1_power station	0.	0.	0.	0.	0.	0.
17~Link	G2_power station	0.	0.	0.	0.	0.	0.
17~Link	Q_power station	0.	0.	0.	0.	0.	0.
17~Link	Q_neve	0.	0.	0.	0.	0.	0.
17~Link	Q_manutenzione	0.	0.	0.	0.	0.	0.
17~Link	EQ_X	0.	0.	0.	0.	0.	0.
17~Link	EQ_Y	0.	0.	0.	0.	0.	0.
19~Link	DEAD	0.	0.	0.	0.	0.	0.
19~Link	G1_power station	0.	0.	0.	0.	0.	0.
19~Link	G2_power station	0.	0.	0.	0.	0.	0.
19~Link	Q_power station	0.	0.	0.	0.	0.	0.
19~Link	Q_neve	0.	0.	0.	0.	0.	0.
19~Link	Q_manutenzione	0.	0.	0.	0.	0.	0.

Table 18: Joint Displacements

Joint	OutputCase	U1	U2	U3	R1	R2	R3
		m	m	m	Radians	Radians	Radians
19~Link	EQ_X	0.	0.	0.	0.	0.	0.
19~Link	EQ_Y	0.	0.	0.	0.	0.	0.
20~Link	DEAD	0.	0.	0.	0.	0.	0.
20~Link	G1_power station	0.	0.	0.	0.	0.	0.
20~Link	G2_power station	0.	0.	0.	0.	0.	0.
20~Link	Q_power station	0.	0.	0.	0.	0.	0.
20~Link	Q_neve	0.	0.	0.	0.	0.	0.
20~Link	Q_manutenzione	0.	0.	0.	0.	0.	0.
20~Link	EQ_X	0.	0.	0.	0.	0.	0.
20~Link	EQ_Y	0.	0.	0.	0.	0.	0.
21~Link	DEAD	0.	0.	0.	0.	0.	0.
21~Link	G1_power station	0.	0.	0.	0.	0.	0.
21~Link	G2_power station	0.	0.	0.	0.	0.	0.
21~Link	Q_power station	0.	0.	0.	0.	0.	0.
21~Link	Q_neve	0.	0.	0.	0.	0.	0.
21~Link	Q_manutenzione	0.	0.	0.	0.	0.	0.
21~Link	EQ_X	0.	0.	0.	0.	0.	0.
21~Link	EQ_Y	0.	0.	0.	0.	0.	0.
9~Link	DEAD	0.	0.	0.	0.	0.	0.
9~Link	G1_power station	0.	0.	0.	0.	0.	0.
9~Link	G2_power station	0.	0.	0.	0.	0.	0.
9~Link	Q_power station	0.	0.	0.	0.	0.	0.
9~Link	Q_neve	0.	0.	0.	0.	0.	0.
9~Link	Q_manutenzione	0.	0.	0.	0.	0.	0.
9~Link	EQ_X	0.	0.	0.	0.	0.	0.
9~Link	EQ_Y	0.	0.	0.	0.	0.	0.
14~Link	DEAD	0.	0.	0.	0.	0.	0.
14~Link	G1_power station	0.	0.	0.	0.	0.	0.
14~Link	G2_power station	0.	0.	0.	0.	0.	0.
14~Link	Q_power station	0.	0.	0.	0.	0.	0.
14~Link	Q_neve	0.	0.	0.	0.	0.	0.
14~Link	Q_manutenzione	0.	0.	0.	0.	0.	0.
14~Link	EQ_X	0.	0.	0.	0.	0.	0.
14~Link	EQ_Y	0.	0.	0.	0.	0.	0.
18~Link	DEAD	0.	0.	0.	0.	0.	0.
18~Link	G1_power station	0.	0.	0.	0.	0.	0.
18~Link	G2_power station	0.	0.	0.	0.	0.	0.
18~Link	Q_power station	0.	0.	0.	0.	0.	0.
18~Link	Q_neve	0.	0.	0.	0.	0.	0.
18~Link	Q_manutenzione	0.	0.	0.	0.	0.	0.
18~Link	EQ_X	0.	0.	0.	0.	0.	0.
18~Link	EQ_Y	0.	0.	0.	0.	0.	0.
22~Link	DEAD	0.	0.	0.	0.	0.	0.

Table 18: Joint Displacements

Joint	OutputCase	U1	U2	U3	R1	R2	R3
		m	m	m	Radians	Radians	Radians
22~Link	G1_power station	0.	0.	0.	0.	0.	0.
22~Link	G2_power station	0.	0.	0.	0.	0.	0.
22~Link	Q_power station	0.	0.	0.	0.	0.	0.
22~Link	Q_neve	0.	0.	0.	0.	0.	0.
22~Link	Q_manutenzione	0.	0.	0.	0.	0.	0.
22~Link	EQ_X	0.	0.	0.	0.	0.	0.
22~Link	EQ_Y	0.	0.	0.	0.	0.	0.
59~Link	DEAD	0.	0.	0.	0.	0.	0.
59~Link	G1_power station	0.	0.	0.	0.	0.	0.
59~Link	G2_power station	0.	0.	0.	0.	0.	0.
59~Link	Q_power station	0.	0.	0.	0.	0.	0.
59~Link	Q_neve	0.	0.	0.	0.	0.	0.
59~Link	Q_manutenzione	0.	0.	0.	0.	0.	0.
59~Link	EQ_X	0.	0.	0.	0.	0.	0.
59~Link	EQ_Y	0.	0.	0.	0.	0.	0.
1~Link	DEAD	0.	0.	0.	0.	0.	0.
1~Link	G1_power station	0.	0.	0.	0.	0.	0.
1~Link	G2_power station	0.	0.	0.	0.	0.	0.
1~Link	Q_power station	0.	0.	0.	0.	0.	0.
1~Link	Q_neve	0.	0.	0.	0.	0.	0.
1~Link	Q_manutenzione	0.	0.	0.	0.	0.	0.
1~Link	EQ_X	0.	0.	0.	0.	0.	0.
1~Link	EQ_Y	0.	0.	0.	0.	0.	0.
57~Link	DEAD	0.	0.	0.	0.	0.	0.
57~Link	G1_power station	0.	0.	0.	0.	0.	0.
57~Link	G2_power station	0.	0.	0.	0.	0.	0.
57~Link	Q_power station	0.	0.	0.	0.	0.	0.
57~Link	Q_neve	0.	0.	0.	0.	0.	0.
57~Link	Q_manutenzione	0.	0.	0.	0.	0.	0.
57~Link	EQ_X	0.	0.	0.	0.	0.	0.
57~Link	EQ_Y	0.	0.	0.	0.	0.	0.
60~Link	DEAD	0.	0.	0.	0.	0.	0.
60~Link	G1_power station	0.	0.	0.	0.	0.	0.
60~Link	G2_power station	0.	0.	0.	0.	0.	0.
60~Link	Q_power station	0.	0.	0.	0.	0.	0.
60~Link	Q_neve	0.	0.	0.	0.	0.	0.
60~Link	Q_manutenzione	0.	0.	0.	0.	0.	0.
60~Link	EQ_X	0.	0.	0.	0.	0.	0.
60~Link	EQ_Y	0.	0.	0.	0.	0.	0.
2~Link	DEAD	0.	0.	0.	0.	0.	0.
2~Link	G1_power station	0.	0.	0.	0.	0.	0.
2~Link	G2_power station	0.	0.	0.	0.	0.	0.
2~Link	Q_power station	0.	0.	0.	0.	0.	0.

Table 18: Joint Displacements

Joint	OutputCase	U1	U2	U3	R1	R2	R3
		m	m	m	Radians	Radians	Radians
2~Link	Q_neve	0.	0.	0.	0.	0.	0.
2~Link	Q_manutenzione	0.	0.	0.	0.	0.	0.
2~Link	EQ_X	0.	0.	0.	0.	0.	0.
2~Link	EQ_Y	0.	0.	0.	0.	0.	0.
61~Link	DEAD	0.	0.	0.	0.	0.	0.
61~Link	G1_power station	0.	0.	0.	0.	0.	0.
61~Link	G2_power station	0.	0.	0.	0.	0.	0.
61~Link	Q_power station	0.	0.	0.	0.	0.	0.
61~Link	Q_neve	0.	0.	0.	0.	0.	0.
61~Link	Q_manutenzione	0.	0.	0.	0.	0.	0.
61~Link	EQ_X	0.	0.	0.	0.	0.	0.
61~Link	EQ_Y	0.	0.	0.	0.	0.	0.
62~Link	DEAD	0.	0.	0.	0.	0.	0.
62~Link	G1_power station	0.	0.	0.	0.	0.	0.
62~Link	G2_power station	0.	0.	0.	0.	0.	0.
62~Link	Q_power station	0.	0.	0.	0.	0.	0.
62~Link	Q_neve	0.	0.	0.	0.	0.	0.
62~Link	Q_manutenzione	0.	0.	0.	0.	0.	0.
62~Link	EQ_X	0.	0.	0.	0.	0.	0.
62~Link	EQ_Y	0.	0.	0.	0.	0.	0.
3~Link	DEAD	0.	0.	0.	0.	0.	0.
3~Link	G1_power station	0.	0.	0.	0.	0.	0.
3~Link	G2_power station	0.	0.	0.	0.	0.	0.
3~Link	Q_power station	0.	0.	0.	0.	0.	0.
3~Link	Q_neve	0.	0.	0.	0.	0.	0.
3~Link	Q_manutenzione	0.	0.	0.	0.	0.	0.
3~Link	EQ_X	0.	0.	0.	0.	0.	0.
3~Link	EQ_Y	0.	0.	0.	0.	0.	0.
64~Link	DEAD	0.	0.	0.	0.	0.	0.
64~Link	G1_power station	0.	0.	0.	0.	0.	0.
64~Link	G2_power station	0.	0.	0.	0.	0.	0.
64~Link	Q_power station	0.	0.	0.	0.	0.	0.
64~Link	Q_neve	0.	0.	0.	0.	0.	0.
64~Link	Q_manutenzione	0.	0.	0.	0.	0.	0.
64~Link	EQ_X	0.	0.	0.	0.	0.	0.
64~Link	EQ_Y	0.	0.	0.	0.	0.	0.
65~Link	DEAD	0.	0.	0.	0.	0.	0.
65~Link	G1_power station	0.	0.	0.	0.	0.	0.
65~Link	G2_power station	0.	0.	0.	0.	0.	0.
65~Link	Q_power station	0.	0.	0.	0.	0.	0.
65~Link	Q_neve	0.	0.	0.	0.	0.	0.
65~Link	Q_manutenzione	0.	0.	0.	0.	0.	0.
65~Link	EQ_X	0.	0.	0.	0.	0.	0.

Table 18: Joint Displacements

Joint	OutputCase	U1	U2	U3	R1	R2	R3
		m	m	m	Radians	Radians	Radians
65~Link	EQ_Y	0.	0.	0.	0.	0.	0.
4~Link	DEAD	0.	0.	0.	0.	0.	0.
4~Link	G1_power station	0.	0.	0.	0.	0.	0.
4~Link	G2_power station	0.	0.	0.	0.	0.	0.
4~Link	Q_power station	0.	0.	0.	0.	0.	0.
4~Link	Q_neve	0.	0.	0.	0.	0.	0.
4~Link	Q_manutenzione	0.	0.	0.	0.	0.	0.
4~Link	EQ_X	0.	0.	0.	0.	0.	0.
4~Link	EQ_Y	0.	0.	0.	0.	0.	0.
66~Link	DEAD	0.	0.	0.	0.	0.	0.
66~Link	G1_power station	0.	0.	0.	0.	0.	0.
66~Link	G2_power station	0.	0.	0.	0.	0.	0.
66~Link	Q_power station	0.	0.	0.	0.	0.	0.
66~Link	Q_neve	0.	0.	0.	0.	0.	0.
66~Link	Q_manutenzione	0.	0.	0.	0.	0.	0.
66~Link	EQ_X	0.	0.	0.	0.	0.	0.
66~Link	EQ_Y	0.	0.	0.	0.	0.	0.
58~Link	DEAD	0.	0.	0.	0.	0.	0.
58~Link	G1_power station	0.	0.	0.	0.	0.	0.
58~Link	G2_power station	0.	0.	0.	0.	0.	0.
58~Link	Q_power station	0.	0.	0.	0.	0.	0.
58~Link	Q_neve	0.	0.	0.	0.	0.	0.
58~Link	Q_manutenzione	0.	0.	0.	0.	0.	0.
58~Link	EQ_X	0.	0.	0.	0.	0.	0.
58~Link	EQ_Y	0.	0.	0.	0.	0.	0.
6~Link	DEAD	0.	0.	0.	0.	0.	0.
6~Link	G1_power station	0.	0.	0.	0.	0.	0.
6~Link	G2_power station	0.	0.	0.	0.	0.	0.
6~Link	Q_power station	0.	0.	0.	0.	0.	0.
6~Link	Q_neve	0.	0.	0.	0.	0.	0.
6~Link	Q_manutenzione	0.	0.	0.	0.	0.	0.
6~Link	EQ_X	0.	0.	0.	0.	0.	0.
6~Link	EQ_Y	0.	0.	0.	0.	0.	0.
63~Link	DEAD	0.	0.	0.	0.	0.	0.
63~Link	G1_power station	0.	0.	0.	0.	0.	0.
63~Link	G2_power station	0.	0.	0.	0.	0.	0.
63~Link	Q_power station	0.	0.	0.	0.	0.	0.
63~Link	Q_neve	0.	0.	0.	0.	0.	0.
63~Link	Q_manutenzione	0.	0.	0.	0.	0.	0.
63~Link	EQ_X	0.	0.	0.	0.	0.	0.
63~Link	EQ_Y	0.	0.	0.	0.	0.	0.
5~Link	DEAD	0.	0.	0.	0.	0.	0.
5~Link	G1_power station	0.	0.	0.	0.	0.	0.

Table 18: Joint Displacements

Joint	OutputCase	U1	U2	U3	R1	R2	R3
		m	m	m	Radians	Radians	Radians
5~Link	G2_power station	0.	0.	0.	0.	0.	0.
5~Link	Q_power station	0.	0.	0.	0.	0.	0.
5~Link	Q_neve	0.	0.	0.	0.	0.	0.
5~Link	Q_manutenzione	0.	0.	0.	0.	0.	0.
5~Link	EQ_X	0.	0.	0.	0.	0.	0.
5~Link	EQ_Y	0.	0.	0.	0.	0.	0.
39~Link	DEAD	0.	0.	0.	0.	0.	0.
39~Link	G1_power station	0.	0.	0.	0.	0.	0.
39~Link	G2_power station	0.	0.	0.	0.	0.	0.
39~Link	Q_power station	0.	0.	0.	0.	0.	0.
39~Link	Q_neve	0.	0.	0.	0.	0.	0.
39~Link	Q_manutenzione	0.	0.	0.	0.	0.	0.
39~Link	EQ_X	0.	0.	0.	0.	0.	0.
39~Link	EQ_Y	0.	0.	0.	0.	0.	0.
41~Link	DEAD	0.	0.	0.	0.	0.	0.
41~Link	G1_power station	0.	0.	0.	0.	0.	0.
41~Link	G2_power station	0.	0.	0.	0.	0.	0.
41~Link	Q_power station	0.	0.	0.	0.	0.	0.
41~Link	Q_neve	0.	0.	0.	0.	0.	0.
41~Link	Q_manutenzione	0.	0.	0.	0.	0.	0.
41~Link	EQ_X	0.	0.	0.	0.	0.	0.
41~Link	EQ_Y	0.	0.	0.	0.	0.	0.
43~Link	DEAD	0.	0.	0.	0.	0.	0.
43~Link	G1_power station	0.	0.	0.	0.	0.	0.
43~Link	G2_power station	0.	0.	0.	0.	0.	0.
43~Link	Q_power station	0.	0.	0.	0.	0.	0.
43~Link	Q_neve	0.	0.	0.	0.	0.	0.
43~Link	Q_manutenzione	0.	0.	0.	0.	0.	0.
43~Link	EQ_X	0.	0.	0.	0.	0.	0.
43~Link	EQ_Y	0.	0.	0.	0.	0.	0.
45~Link	DEAD	0.	0.	0.	0.	0.	0.
45~Link	G1_power station	0.	0.	0.	0.	0.	0.
45~Link	G2_power station	0.	0.	0.	0.	0.	0.
45~Link	Q_power station	0.	0.	0.	0.	0.	0.
45~Link	Q_neve	0.	0.	0.	0.	0.	0.
45~Link	Q_manutenzione	0.	0.	0.	0.	0.	0.
45~Link	EQ_X	0.	0.	0.	0.	0.	0.
45~Link	EQ_Y	0.	0.	0.	0.	0.	0.
40~Link	DEAD	0.	0.	0.	0.	0.	0.
40~Link	G1_power station	0.	0.	0.	0.	0.	0.
40~Link	G2_power station	0.	0.	0.	0.	0.	0.
40~Link	Q_power station	0.	0.	0.	0.	0.	0.
40~Link	Q_neve	0.	0.	0.	0.	0.	0.

Table 18: Joint Displacements

Joint	OutputCase	U1	U2	U3	R1	R2	R3
		m	m	m	Radians	Radians	Radians
40~Link	Q_manutenzione	0.	0.	0.	0.	0.	0.
40~Link	EQ_X	0.	0.	0.	0.	0.	0.
40~Link	EQ_Y	0.	0.	0.	0.	0.	0.
42~Link	DEAD	0.	0.	0.	0.	0.	0.
42~Link	G1_power station	0.	0.	0.	0.	0.	0.
42~Link	G2_power station	0.	0.	0.	0.	0.	0.
42~Link	Q_power station	0.	0.	0.	0.	0.	0.
42~Link	Q_neve	0.	0.	0.	0.	0.	0.
42~Link	Q_manutenzione	0.	0.	0.	0.	0.	0.
42~Link	EQ_X	0.	0.	0.	0.	0.	0.
42~Link	EQ_Y	0.	0.	0.	0.	0.	0.
44~Link	DEAD	0.	0.	0.	0.	0.	0.
44~Link	G1_power station	0.	0.	0.	0.	0.	0.
44~Link	G2_power station	0.	0.	0.	0.	0.	0.
44~Link	Q_power station	0.	0.	0.	0.	0.	0.
44~Link	Q_neve	0.	0.	0.	0.	0.	0.
44~Link	Q_manutenzione	0.	0.	0.	0.	0.	0.
44~Link	EQ_X	0.	0.	0.	0.	0.	0.
44~Link	EQ_Y	0.	0.	0.	0.	0.	0.
46~Link	DEAD	0.	0.	0.	0.	0.	0.
46~Link	G1_power station	0.	0.	0.	0.	0.	0.
46~Link	G2_power station	0.	0.	0.	0.	0.	0.
46~Link	Q_power station	0.	0.	0.	0.	0.	0.
46~Link	Q_neve	0.	0.	0.	0.	0.	0.
46~Link	Q_manutenzione	0.	0.	0.	0.	0.	0.
46~Link	EQ_X	0.	0.	0.	0.	0.	0.
46~Link	EQ_Y	0.	0.	0.	0.	0.	0.
47~Link	DEAD	0.	0.	0.	0.	0.	0.
47~Link	G1_power station	0.	0.	0.	0.	0.	0.
47~Link	G2_power station	0.	0.	0.	0.	0.	0.
47~Link	Q_power station	0.	0.	0.	0.	0.	0.
47~Link	Q_neve	0.	0.	0.	0.	0.	0.
47~Link	Q_manutenzione	0.	0.	0.	0.	0.	0.
47~Link	EQ_X	0.	0.	0.	0.	0.	0.
47~Link	EQ_Y	0.	0.	0.	0.	0.	0.
49~Link	DEAD	0.	0.	0.	0.	0.	0.
49~Link	G1_power station	0.	0.	0.	0.	0.	0.
49~Link	G2_power station	0.	0.	0.	0.	0.	0.
49~Link	Q_power station	0.	0.	0.	0.	0.	0.
49~Link	Q_neve	0.	0.	0.	0.	0.	0.
49~Link	Q_manutenzione	0.	0.	0.	0.	0.	0.
49~Link	EQ_X	0.	0.	0.	0.	0.	0.
49~Link	EQ_Y	0.	0.	0.	0.	0.	0.

Table 18: Joint Displacements

Joint	OutputCase	U1	U2	U3	R1	R2	R3
		m	m	m	Radians	Radians	Radians
51~Link	DEAD	0.	0.	0.	0.	0.	0.
51~Link	G1_power station	0.	0.	0.	0.	0.	0.
51~Link	G2_power station	0.	0.	0.	0.	0.	0.
51~Link	Q_power station	0.	0.	0.	0.	0.	0.
51~Link	Q_neve	0.	0.	0.	0.	0.	0.
51~Link	Q_manutenzione	0.	0.	0.	0.	0.	0.
51~Link	EQ_X	0.	0.	0.	0.	0.	0.
51~Link	EQ_Y	0.	0.	0.	0.	0.	0.
53~Link	DEAD	0.	0.	0.	0.	0.	0.
53~Link	G1_power station	0.	0.	0.	0.	0.	0.
53~Link	G2_power station	0.	0.	0.	0.	0.	0.
53~Link	Q_power station	0.	0.	0.	0.	0.	0.
53~Link	Q_neve	0.	0.	0.	0.	0.	0.
53~Link	Q_manutenzione	0.	0.	0.	0.	0.	0.
53~Link	EQ_X	0.	0.	0.	0.	0.	0.
53~Link	EQ_Y	0.	0.	0.	0.	0.	0.
48~Link	DEAD	0.	0.	0.	0.	0.	0.
48~Link	G1_power station	0.	0.	0.	0.	0.	0.
48~Link	G2_power station	0.	0.	0.	0.	0.	0.
48~Link	Q_power station	0.	0.	0.	0.	0.	0.
48~Link	Q_neve	0.	0.	0.	0.	0.	0.
48~Link	Q_manutenzione	0.	0.	0.	0.	0.	0.
48~Link	EQ_X	0.	0.	0.	0.	0.	0.
48~Link	EQ_Y	0.	0.	0.	0.	0.	0.
50~Link	DEAD	0.	0.	0.	0.	0.	0.
50~Link	G1_power station	0.	0.	0.	0.	0.	0.
50~Link	G2_power station	0.	0.	0.	0.	0.	0.
50~Link	Q_power station	0.	0.	0.	0.	0.	0.
50~Link	Q_neve	0.	0.	0.	0.	0.	0.
50~Link	Q_manutenzione	0.	0.	0.	0.	0.	0.
50~Link	EQ_X	0.	0.	0.	0.	0.	0.
50~Link	EQ_Y	0.	0.	0.	0.	0.	0.
52~Link	DEAD	0.	0.	0.	0.	0.	0.
52~Link	G1_power station	0.	0.	0.	0.	0.	0.
52~Link	G2_power station	0.	0.	0.	0.	0.	0.
52~Link	Q_power station	0.	0.	0.	0.	0.	0.
52~Link	Q_neve	0.	0.	0.	0.	0.	0.
52~Link	Q_manutenzione	0.	0.	0.	0.	0.	0.
52~Link	EQ_X	0.	0.	0.	0.	0.	0.
52~Link	EQ_Y	0.	0.	0.	0.	0.	0.
54~Link	DEAD	0.	0.	0.	0.	0.	0.
54~Link	G1_power station	0.	0.	0.	0.	0.	0.
54~Link	G2_power station	0.	0.	0.	0.	0.	0.

Table 18: Joint Displacements

Joint	OutputCase	U1	U2	U3	R1	R2	R3
		m	m	m	Radians	Radians	Radians
54~Link	Q_power station	0.	0.	0.	0.	0.	0.
54~Link	Q_neve	0.	0.	0.	0.	0.	0.
54~Link	Q_manutenzione	0.	0.	0.	0.	0.	0.
54~Link	EQ_X	0.	0.	0.	0.	0.	0.
54~Link	EQ_Y	0.	0.	0.	0.	0.	0.
55~Link	DEAD	0.	0.	0.	0.	0.	0.
55~Link	G1_power station	0.	0.	0.	0.	0.	0.
55~Link	G2_power station	0.	0.	0.	0.	0.	0.
55~Link	Q_power station	0.	0.	0.	0.	0.	0.
55~Link	Q_neve	0.	0.	0.	0.	0.	0.
55~Link	Q_manutenzione	0.	0.	0.	0.	0.	0.
55~Link	EQ_X	0.	0.	0.	0.	0.	0.
55~Link	EQ_Y	0.	0.	0.	0.	0.	0.
67~Link	DEAD	0.	0.	0.	0.	0.	0.
67~Link	G1_power station	0.	0.	0.	0.	0.	0.
67~Link	G2_power station	0.	0.	0.	0.	0.	0.
67~Link	Q_power station	0.	0.	0.	0.	0.	0.
67~Link	Q_neve	0.	0.	0.	0.	0.	0.
67~Link	Q_manutenzione	0.	0.	0.	0.	0.	0.
67~Link	EQ_X	0.	0.	0.	0.	0.	0.
67~Link	EQ_Y	0.	0.	0.	0.	0.	0.
69~Link	DEAD	0.	0.	0.	0.	0.	0.
69~Link	G1_power station	0.	0.	0.	0.	0.	0.
69~Link	G2_power station	0.	0.	0.	0.	0.	0.
69~Link	Q_power station	0.	0.	0.	0.	0.	0.
69~Link	Q_neve	0.	0.	0.	0.	0.	0.
69~Link	Q_manutenzione	0.	0.	0.	0.	0.	0.
69~Link	EQ_X	0.	0.	0.	0.	0.	0.
69~Link	EQ_Y	0.	0.	0.	0.	0.	0.
71~Link	DEAD	0.	0.	0.	0.	0.	0.
71~Link	G1_power station	0.	0.	0.	0.	0.	0.
71~Link	G2_power station	0.	0.	0.	0.	0.	0.
71~Link	Q_power station	0.	0.	0.	0.	0.	0.
71~Link	Q_neve	0.	0.	0.	0.	0.	0.
71~Link	Q_manutenzione	0.	0.	0.	0.	0.	0.
71~Link	EQ_X	0.	0.	0.	0.	0.	0.
71~Link	EQ_Y	0.	0.	0.	0.	0.	0.
56~Link	DEAD	0.	0.	0.	0.	0.	0.
56~Link	G1_power station	0.	0.	0.	0.	0.	0.
56~Link	G2_power station	0.	0.	0.	0.	0.	0.
56~Link	Q_power station	0.	0.	0.	0.	0.	0.
56~Link	Q_neve	0.	0.	0.	0.	0.	0.
56~Link	Q_manutenzione	0.	0.	0.	0.	0.	0.

Table 18: Joint Displacements

Joint	OutputCase	U1	U2	U3	R1	R2	R3
		m	m	m	Radians	Radians	Radians
56~Link	EQ_X	0.	0.	0.	0.	0.	0.
56~Link	EQ_Y	0.	0.	0.	0.	0.	0.
68~Link	DEAD	0.	0.	0.	0.	0.	0.
68~Link	G1_power station	0.	0.	0.	0.	0.	0.
68~Link	G2_power station	0.	0.	0.	0.	0.	0.
68~Link	Q_power station	0.	0.	0.	0.	0.	0.
68~Link	Q_neve	0.	0.	0.	0.	0.	0.
68~Link	Q_manutenzione	0.	0.	0.	0.	0.	0.
68~Link	EQ_X	0.	0.	0.	0.	0.	0.
68~Link	EQ_Y	0.	0.	0.	0.	0.	0.
70~Link	DEAD	0.	0.	0.	0.	0.	0.
70~Link	G1_power station	0.	0.	0.	0.	0.	0.
70~Link	G2_power station	0.	0.	0.	0.	0.	0.
70~Link	Q_power station	0.	0.	0.	0.	0.	0.
70~Link	Q_neve	0.	0.	0.	0.	0.	0.
70~Link	Q_manutenzione	0.	0.	0.	0.	0.	0.
70~Link	EQ_X	0.	0.	0.	0.	0.	0.
70~Link	EQ_Y	0.	0.	0.	0.	0.	0.
72~Link	DEAD	0.	0.	0.	0.	0.	0.
72~Link	G1_power station	0.	0.	0.	0.	0.	0.
72~Link	G2_power station	0.	0.	0.	0.	0.	0.
72~Link	Q_power station	0.	0.	0.	0.	0.	0.
72~Link	Q_neve	0.	0.	0.	0.	0.	0.
72~Link	Q_manutenzione	0.	0.	0.	0.	0.	0.
72~Link	EQ_X	0.	0.	0.	0.	0.	0.
72~Link	EQ_Y	0.	0.	0.	0.	0.	0.
73~Link	DEAD	0.	0.	0.	0.	0.	0.
73~Link	G1_power station	0.	0.	0.	0.	0.	0.
73~Link	G2_power station	0.	0.	0.	0.	0.	0.
73~Link	Q_power station	0.	0.	0.	0.	0.	0.
73~Link	Q_neve	0.	0.	0.	0.	0.	0.
73~Link	Q_manutenzione	0.	0.	0.	0.	0.	0.
73~Link	EQ_X	0.	0.	0.	0.	0.	0.
73~Link	EQ_Y	0.	0.	0.	0.	0.	0.
75~Link	DEAD	0.	0.	0.	0.	0.	0.
75~Link	G1_power station	0.	0.	0.	0.	0.	0.
75~Link	G2_power station	0.	0.	0.	0.	0.	0.
75~Link	Q_power station	0.	0.	0.	0.	0.	0.
75~Link	Q_neve	0.	0.	0.	0.	0.	0.
75~Link	Q_manutenzione	0.	0.	0.	0.	0.	0.
75~Link	EQ_X	0.	0.	0.	0.	0.	0.
75~Link	EQ_Y	0.	0.	0.	0.	0.	0.
77~Link	DEAD	0.	0.	0.	0.	0.	0.

Table 18: Joint Displacements

Joint	OutputCase	U1	U2	U3	R1	R2	R3
		m	m	m	Radians	Radians	Radians
77~Link	G1_power station	0.	0.	0.	0.	0.	0.
77~Link	G2_power station	0.	0.	0.	0.	0.	0.
77~Link	Q_power station	0.	0.	0.	0.	0.	0.
77~Link	Q_neve	0.	0.	0.	0.	0.	0.
77~Link	Q_manutenzione	0.	0.	0.	0.	0.	0.
77~Link	EQ_X	0.	0.	0.	0.	0.	0.
77~Link	EQ_Y	0.	0.	0.	0.	0.	0.
79~Link	DEAD	0.	0.	0.	0.	0.	0.
79~Link	G1_power station	0.	0.	0.	0.	0.	0.
79~Link	G2_power station	0.	0.	0.	0.	0.	0.
79~Link	Q_power station	0.	0.	0.	0.	0.	0.
79~Link	Q_neve	0.	0.	0.	0.	0.	0.
79~Link	Q_manutenzione	0.	0.	0.	0.	0.	0.
79~Link	EQ_X	0.	0.	0.	0.	0.	0.
79~Link	EQ_Y	0.	0.	0.	0.	0.	0.
74~Link	DEAD	0.	0.	0.	0.	0.	0.
74~Link	G1_power station	0.	0.	0.	0.	0.	0.
74~Link	G2_power station	0.	0.	0.	0.	0.	0.
74~Link	Q_power station	0.	0.	0.	0.	0.	0.
74~Link	Q_neve	0.	0.	0.	0.	0.	0.
74~Link	Q_manutenzione	0.	0.	0.	0.	0.	0.
74~Link	EQ_X	0.	0.	0.	0.	0.	0.
74~Link	EQ_Y	0.	0.	0.	0.	0.	0.
76~Link	DEAD	0.	0.	0.	0.	0.	0.
76~Link	G1_power station	0.	0.	0.	0.	0.	0.
76~Link	G2_power station	0.	0.	0.	0.	0.	0.
76~Link	Q_power station	0.	0.	0.	0.	0.	0.
76~Link	Q_neve	0.	0.	0.	0.	0.	0.
76~Link	Q_manutenzione	0.	0.	0.	0.	0.	0.
76~Link	EQ_X	0.	0.	0.	0.	0.	0.
76~Link	EQ_Y	0.	0.	0.	0.	0.	0.
78~Link	DEAD	0.	0.	0.	0.	0.	0.
78~Link	G1_power station	0.	0.	0.	0.	0.	0.
78~Link	G2_power station	0.	0.	0.	0.	0.	0.
78~Link	Q_power station	0.	0.	0.	0.	0.	0.
78~Link	Q_neve	0.	0.	0.	0.	0.	0.
78~Link	Q_manutenzione	0.	0.	0.	0.	0.	0.
78~Link	EQ_X	0.	0.	0.	0.	0.	0.
78~Link	EQ_Y	0.	0.	0.	0.	0.	0.
80~Link	DEAD	0.	0.	0.	0.	0.	0.
80~Link	G1_power station	0.	0.	0.	0.	0.	0.
80~Link	G2_power station	0.	0.	0.	0.	0.	0.
80~Link	Q_power station	0.	0.	0.	0.	0.	0.

Table 18: Joint Displacements

Joint	OutputCase	U1	U2	U3	R1	R2	R3
		m	m	m	Radians	Radians	Radians
80~Link	Q_neve	0.	0.	0.	0.	0.	0.
80~Link	Q_manutenzione	0.	0.	0.	0.	0.	0.
80~Link	EQ_X	0.	0.	0.	0.	0.	0.
80~Link	EQ_Y	0.	0.	0.	0.	0.	0.
82~Link	DEAD	0.	0.	0.	0.	0.	0.
82~Link	G1_power station	0.	0.	0.	0.	0.	0.
82~Link	G2_power station	0.	0.	0.	0.	0.	0.
82~Link	Q_power station	0.	0.	0.	0.	0.	0.
82~Link	Q_neve	0.	0.	0.	0.	0.	0.
82~Link	Q_manutenzione	0.	0.	0.	0.	0.	0.
82~Link	EQ_X	0.	0.	0.	0.	0.	0.
82~Link	EQ_Y	0.	0.	0.	0.	0.	0.
84~Link	DEAD	0.	0.	0.	0.	0.	0.
84~Link	G1_power station	0.	0.	0.	0.	0.	0.
84~Link	G2_power station	0.	0.	0.	0.	0.	0.
84~Link	Q_power station	0.	0.	0.	0.	0.	0.
84~Link	Q_neve	0.	0.	0.	0.	0.	0.
84~Link	Q_manutenzione	0.	0.	0.	0.	0.	0.
84~Link	EQ_X	0.	0.	0.	0.	0.	0.
84~Link	EQ_Y	0.	0.	0.	0.	0.	0.
86~Link	DEAD	0.	0.	0.	0.	0.	0.
86~Link	G1_power station	0.	0.	0.	0.	0.	0.
86~Link	G2_power station	0.	0.	0.	0.	0.	0.
86~Link	Q_power station	0.	0.	0.	0.	0.	0.
86~Link	Q_neve	0.	0.	0.	0.	0.	0.
86~Link	Q_manutenzione	0.	0.	0.	0.	0.	0.
86~Link	EQ_X	0.	0.	0.	0.	0.	0.
86~Link	EQ_Y	0.	0.	0.	0.	0.	0.
88~Link	DEAD	0.	0.	0.	0.	0.	0.
88~Link	G1_power station	0.	0.	0.	0.	0.	0.
88~Link	G2_power station	0.	0.	0.	0.	0.	0.
88~Link	Q_power station	0.	0.	0.	0.	0.	0.
88~Link	Q_neve	0.	0.	0.	0.	0.	0.
88~Link	Q_manutenzione	0.	0.	0.	0.	0.	0.
88~Link	EQ_X	0.	0.	0.	0.	0.	0.
88~Link	EQ_Y	0.	0.	0.	0.	0.	0.
90~Link	DEAD	0.	0.	0.	0.	0.	0.
90~Link	G1_power station	0.	0.	0.	0.	0.	0.
90~Link	G2_power station	0.	0.	0.	0.	0.	0.
90~Link	Q_power station	0.	0.	0.	0.	0.	0.
90~Link	Q_neve	0.	0.	0.	0.	0.	0.
90~Link	Q_manutenzione	0.	0.	0.	0.	0.	0.
90~Link	EQ_X	0.	0.	0.	0.	0.	0.

Table 18: Joint Displacements

Joint	OutputCase	U1	U2	U3	R1	R2	R3
		m	m	m	Radians	Radians	Radians
90~Link	EQ_Y	0.	0.	0.	0.	0.	0.
92~Link	DEAD	0.	0.	0.	0.	0.	0.
92~Link	G1_power station	0.	0.	0.	0.	0.	0.
92~Link	G2_power station	0.	0.	0.	0.	0.	0.
92~Link	Q_power station	0.	0.	0.	0.	0.	0.
92~Link	Q_neve	0.	0.	0.	0.	0.	0.
92~Link	Q_manutenzione	0.	0.	0.	0.	0.	0.
92~Link	EQ_X	0.	0.	0.	0.	0.	0.
92~Link	EQ_Y	0.	0.	0.	0.	0.	0.
27~Link	DEAD	0.	0.	0.	0.	0.	0.
27~Link	G1_power station	0.	0.	0.	0.	0.	0.
27~Link	G2_power station	0.	0.	0.	0.	0.	0.
27~Link	Q_power station	0.	0.	0.	0.	0.	0.
27~Link	Q_neve	0.	0.	0.	0.	0.	0.
27~Link	Q_manutenzione	0.	0.	0.	0.	0.	0.
27~Link	EQ_X	0.	0.	0.	0.	0.	0.
27~Link	EQ_Y	0.	0.	0.	0.	0.	0.
81~Link	DEAD	0.	0.	0.	0.	0.	0.
81~Link	G1_power station	0.	0.	0.	0.	0.	0.
81~Link	G2_power station	0.	0.	0.	0.	0.	0.
81~Link	Q_power station	0.	0.	0.	0.	0.	0.
81~Link	Q_neve	0.	0.	0.	0.	0.	0.
81~Link	Q_manutenzione	0.	0.	0.	0.	0.	0.
81~Link	EQ_X	0.	0.	0.	0.	0.	0.
81~Link	EQ_Y	0.	0.	0.	0.	0.	0.
83~Link	DEAD	0.	0.	0.	0.	0.	0.
83~Link	G1_power station	0.	0.	0.	0.	0.	0.
83~Link	G2_power station	0.	0.	0.	0.	0.	0.
83~Link	Q_power station	0.	0.	0.	0.	0.	0.
83~Link	Q_neve	0.	0.	0.	0.	0.	0.
83~Link	Q_manutenzione	0.	0.	0.	0.	0.	0.
83~Link	EQ_X	0.	0.	0.	0.	0.	0.
83~Link	EQ_Y	0.	0.	0.	0.	0.	0.
85~Link	DEAD	0.	0.	0.	0.	0.	0.
85~Link	G1_power station	0.	0.	0.	0.	0.	0.
85~Link	G2_power station	0.	0.	0.	0.	0.	0.
85~Link	Q_power station	0.	0.	0.	0.	0.	0.
85~Link	Q_neve	0.	0.	0.	0.	0.	0.
85~Link	Q_manutenzione	0.	0.	0.	0.	0.	0.
85~Link	EQ_X	0.	0.	0.	0.	0.	0.
85~Link	EQ_Y	0.	0.	0.	0.	0.	0.
87~Link	DEAD	0.	0.	0.	0.	0.	0.
87~Link	G1_power station	0.	0.	0.	0.	0.	0.

Table 18: Joint Displacements

Joint	OutputCase	U1	U2	U3	R1	R2	R3
		m	m	m	Radians	Radians	Radians
87~Link	G2_power station	0.	0.	0.	0.	0.	0.
87~Link	Q_power station	0.	0.	0.	0.	0.	0.
87~Link	Q_neve	0.	0.	0.	0.	0.	0.
87~Link	Q_manutenzione	0.	0.	0.	0.	0.	0.
87~Link	EQ_X	0.	0.	0.	0.	0.	0.
87~Link	EQ_Y	0.	0.	0.	0.	0.	0.
89~Link	DEAD	0.	0.	0.	0.	0.	0.
89~Link	G1_power station	0.	0.	0.	0.	0.	0.
89~Link	G2_power station	0.	0.	0.	0.	0.	0.
89~Link	Q_power station	0.	0.	0.	0.	0.	0.
89~Link	Q_neve	0.	0.	0.	0.	0.	0.
89~Link	Q_manutenzione	0.	0.	0.	0.	0.	0.
89~Link	EQ_X	0.	0.	0.	0.	0.	0.
89~Link	EQ_Y	0.	0.	0.	0.	0.	0.
91~Link	DEAD	0.	0.	0.	0.	0.	0.
91~Link	G1_power station	0.	0.	0.	0.	0.	0.
91~Link	G2_power station	0.	0.	0.	0.	0.	0.
91~Link	Q_power station	0.	0.	0.	0.	0.	0.
91~Link	Q_neve	0.	0.	0.	0.	0.	0.
91~Link	Q_manutenzione	0.	0.	0.	0.	0.	0.
91~Link	EQ_X	0.	0.	0.	0.	0.	0.
91~Link	EQ_Y	0.	0.	0.	0.	0.	0.
26~Link	DEAD	0.	0.	0.	0.	0.	0.
26~Link	G1_power station	0.	0.	0.	0.	0.	0.
26~Link	G2_power station	0.	0.	0.	0.	0.	0.
26~Link	Q_power station	0.	0.	0.	0.	0.	0.
26~Link	Q_neve	0.	0.	0.	0.	0.	0.
26~Link	Q_manutenzione	0.	0.	0.	0.	0.	0.
26~Link	EQ_X	0.	0.	0.	0.	0.	0.
26~Link	EQ_Y	0.	0.	0.	0.	0.	0.
94~Link	DEAD	0.	0.	0.	0.	0.	0.
94~Link	G1_power station	0.	0.	0.	0.	0.	0.
94~Link	G2_power station	0.	0.	0.	0.	0.	0.
94~Link	Q_power station	0.	0.	0.	0.	0.	0.
94~Link	Q_neve	0.	0.	0.	0.	0.	0.
94~Link	Q_manutenzione	0.	0.	0.	0.	0.	0.
94~Link	EQ_X	0.	0.	0.	0.	0.	0.
94~Link	EQ_Y	0.	0.	0.	0.	0.	0.
96~Link	DEAD	0.	0.	0.	0.	0.	0.
96~Link	G1_power station	0.	0.	0.	0.	0.	0.
96~Link	G2_power station	0.	0.	0.	0.	0.	0.
96~Link	Q_power station	0.	0.	0.	0.	0.	0.
96~Link	Q_neve	0.	0.	0.	0.	0.	0.

Table 18: Joint Displacements

Joint	OutputCase	U1	U2	U3	R1	R2	R3
		m	m	m	Radians	Radians	Radians
96~Link	Q_manutenzione	0.	0.	0.	0.	0.	0.
96~Link	EQ_X	0.	0.	0.	0.	0.	0.
96~Link	EQ_Y	0.	0.	0.	0.	0.	0.
28~Link	DEAD	0.	0.	0.	0.	0.	0.
28~Link	G1_power station	0.	0.	0.	0.	0.	0.
28~Link	G2_power station	0.	0.	0.	0.	0.	0.
28~Link	Q_power station	0.	0.	0.	0.	0.	0.
28~Link	Q_neve	0.	0.	0.	0.	0.	0.
28~Link	Q_manutenzione	0.	0.	0.	0.	0.	0.
28~Link	EQ_X	0.	0.	0.	0.	0.	0.
28~Link	EQ_Y	0.	0.	0.	0.	0.	0.
93~Link	DEAD	0.	0.	0.	0.	0.	0.
93~Link	G1_power station	0.	0.	0.	0.	0.	0.
93~Link	G2_power station	0.	0.	0.	0.	0.	0.
93~Link	Q_power station	0.	0.	0.	0.	0.	0.
93~Link	Q_neve	0.	0.	0.	0.	0.	0.
93~Link	Q_manutenzione	0.	0.	0.	0.	0.	0.
93~Link	EQ_X	0.	0.	0.	0.	0.	0.
93~Link	EQ_Y	0.	0.	0.	0.	0.	0.
95~Link	DEAD	0.	0.	0.	0.	0.	0.
95~Link	G1_power station	0.	0.	0.	0.	0.	0.
95~Link	G2_power station	0.	0.	0.	0.	0.	0.
95~Link	Q_power station	0.	0.	0.	0.	0.	0.
95~Link	Q_neve	0.	0.	0.	0.	0.	0.
95~Link	Q_manutenzione	0.	0.	0.	0.	0.	0.
95~Link	EQ_X	0.	0.	0.	0.	0.	0.
95~Link	EQ_Y	0.	0.	0.	0.	0.	0.
25~Link	DEAD	0.	0.	0.	0.	0.	0.
25~Link	G1_power station	0.	0.	0.	0.	0.	0.
25~Link	G2_power station	0.	0.	0.	0.	0.	0.
25~Link	Q_power station	0.	0.	0.	0.	0.	0.
25~Link	Q_neve	0.	0.	0.	0.	0.	0.
25~Link	Q_manutenzione	0.	0.	0.	0.	0.	0.
25~Link	EQ_X	0.	0.	0.	0.	0.	0.
25~Link	EQ_Y	0.	0.	0.	0.	0.	0.
97~Link	DEAD	0.	0.	0.	0.	0.	0.
97~Link	G1_power station	0.	0.	0.	0.	0.	0.
97~Link	G2_power station	0.	0.	0.	0.	0.	0.
97~Link	Q_power station	0.	0.	0.	0.	0.	0.
97~Link	Q_neve	0.	0.	0.	0.	0.	0.
97~Link	Q_manutenzione	0.	0.	0.	0.	0.	0.
97~Link	EQ_X	0.	0.	0.	0.	0.	0.
97~Link	EQ_Y	0.	0.	0.	0.	0.	0.

Table 18: Joint Displacements

Joint	OutputCase	U1	U2	U3	R1	R2	R3
		m	m	m	Radians	Radians	Radians
98~Link	DEAD	0.	0.	0.	0.	0.	0.
98~Link	G1_power station	0.	0.	0.	0.	0.	0.
98~Link	G2_power station	0.	0.	0.	0.	0.	0.
98~Link	Q_power station	0.	0.	0.	0.	0.	0.
98~Link	Q_neve	0.	0.	0.	0.	0.	0.
98~Link	Q_manutenzione	0.	0.	0.	0.	0.	0.
98~Link	EQ_X	0.	0.	0.	0.	0.	0.
98~Link	EQ_Y	0.	0.	0.	0.	0.	0.
99~Link	DEAD	0.	0.	0.	0.	0.	0.
99~Link	G1_power station	0.	0.	0.	0.	0.	0.
99~Link	G2_power station	0.	0.	0.	0.	0.	0.
99~Link	Q_power station	0.	0.	0.	0.	0.	0.
99~Link	Q_neve	0.	0.	0.	0.	0.	0.
99~Link	Q_manutenzione	0.	0.	0.	0.	0.	0.
99~Link	EQ_X	0.	0.	0.	0.	0.	0.
99~Link	EQ_Y	0.	0.	0.	0.	0.	0.
100~Link	DEAD	0.	0.	0.	0.	0.	0.
100~Link	G1_power station	0.	0.	0.	0.	0.	0.
100~Link	G2_power station	0.	0.	0.	0.	0.	0.
100~Link	Q_power station	0.	0.	0.	0.	0.	0.
100~Link	Q_neve	0.	0.	0.	0.	0.	0.
100~Link	Q_manutenzione	0.	0.	0.	0.	0.	0.
100~Link	EQ_X	0.	0.	0.	0.	0.	0.
100~Link	EQ_Y	0.	0.	0.	0.	0.	0.
101~Link	DEAD	0.	0.	0.	0.	0.	0.
101~Link	G1_power station	0.	0.	0.	0.	0.	0.
101~Link	G2_power station	0.	0.	0.	0.	0.	0.
101~Link	Q_power station	0.	0.	0.	0.	0.	0.
101~Link	Q_neve	0.	0.	0.	0.	0.	0.
101~Link	Q_manutenzione	0.	0.	0.	0.	0.	0.
101~Link	EQ_X	0.	0.	0.	0.	0.	0.
101~Link	EQ_Y	0.	0.	0.	0.	0.	0.
102~Link	DEAD	0.	0.	0.	0.	0.	0.
102~Link	G1_power station	0.	0.	0.	0.	0.	0.
102~Link	G2_power station	0.	0.	0.	0.	0.	0.
102~Link	Q_power station	0.	0.	0.	0.	0.	0.
102~Link	Q_neve	0.	0.	0.	0.	0.	0.
102~Link	Q_manutenzione	0.	0.	0.	0.	0.	0.
102~Link	EQ_X	0.	0.	0.	0.	0.	0.
102~Link	EQ_Y	0.	0.	0.	0.	0.	0.
103~Link	DEAD	0.	0.	0.	0.	0.	0.
103~Link	G1_power station	0.	0.	0.	0.	0.	0.
103~Link	G2_power station	0.	0.	0.	0.	0.	0.

Table 18: Joint Displacements

Joint	OutputCase	U1	U2	U3	R1	R2	R3
		m	m	m	Radians	Radians	Radians
103~Link	Q_power station	0.	0.	0.	0.	0.	0.
103~Link	Q_neve	0.	0.	0.	0.	0.	0.
103~Link	Q_manutenzione	0.	0.	0.	0.	0.	0.
103~Link	EQ_X	0.	0.	0.	0.	0.	0.
103~Link	EQ_Y	0.	0.	0.	0.	0.	0.
104~Link	DEAD	0.	0.	0.	0.	0.	0.
104~Link	G1_power station	0.	0.	0.	0.	0.	0.
104~Link	G2_power station	0.	0.	0.	0.	0.	0.
104~Link	Q_power station	0.	0.	0.	0.	0.	0.
104~Link	Q_neve	0.	0.	0.	0.	0.	0.
104~Link	Q_manutenzione	0.	0.	0.	0.	0.	0.
104~Link	EQ_X	0.	0.	0.	0.	0.	0.
104~Link	EQ_Y	0.	0.	0.	0.	0.	0.
105~Link	DEAD	0.	0.	0.	0.	0.	0.
105~Link	G1_power station	0.	0.	0.	0.	0.	0.
105~Link	G2_power station	0.	0.	0.	0.	0.	0.
105~Link	Q_power station	0.	0.	0.	0.	0.	0.
105~Link	Q_neve	0.	0.	0.	0.	0.	0.
105~Link	Q_manutenzione	0.	0.	0.	0.	0.	0.
105~Link	EQ_X	0.	0.	0.	0.	0.	0.
105~Link	EQ_Y	0.	0.	0.	0.	0.	0.
106~Link	DEAD	0.	0.	0.	0.	0.	0.
106~Link	G1_power station	0.	0.	0.	0.	0.	0.
106~Link	G2_power station	0.	0.	0.	0.	0.	0.
106~Link	Q_power station	0.	0.	0.	0.	0.	0.
106~Link	Q_neve	0.	0.	0.	0.	0.	0.
106~Link	Q_manutenzione	0.	0.	0.	0.	0.	0.
106~Link	EQ_X	0.	0.	0.	0.	0.	0.
106~Link	EQ_Y	0.	0.	0.	0.	0.	0.
107~Link	DEAD	0.	0.	0.	0.	0.	0.
107~Link	G1_power station	0.	0.	0.	0.	0.	0.
107~Link	G2_power station	0.	0.	0.	0.	0.	0.
107~Link	Q_power station	0.	0.	0.	0.	0.	0.
107~Link	Q_neve	0.	0.	0.	0.	0.	0.
107~Link	Q_manutenzione	0.	0.	0.	0.	0.	0.
107~Link	EQ_X	0.	0.	0.	0.	0.	0.
107~Link	EQ_Y	0.	0.	0.	0.	0.	0.
108~Link	DEAD	0.	0.	0.	0.	0.	0.
108~Link	G1_power station	0.	0.	0.	0.	0.	0.
108~Link	G2_power station	0.	0.	0.	0.	0.	0.
108~Link	Q_power station	0.	0.	0.	0.	0.	0.
108~Link	Q_neve	0.	0.	0.	0.	0.	0.
108~Link	Q_manutenzione	0.	0.	0.	0.	0.	0.

Table 18: Joint Displacements

Joint	OutputCase	U1	U2	U3	R1	R2	R3
		m	m	m	Radians	Radians	Radians
108~Link	EQ_X	0.	0.	0.	0.	0.	0.
108~Link	EQ_Y	0.	0.	0.	0.	0.	0.
109~Link	DEAD	0.	0.	0.	0.	0.	0.
109~Link	G1_power station	0.	0.	0.	0.	0.	0.
109~Link	G2_power station	0.	0.	0.	0.	0.	0.
109~Link	Q_power station	0.	0.	0.	0.	0.	0.
109~Link	Q_neve	0.	0.	0.	0.	0.	0.
109~Link	Q_manutenzione	0.	0.	0.	0.	0.	0.
109~Link	EQ_X	0.	0.	0.	0.	0.	0.
109~Link	EQ_Y	0.	0.	0.	0.	0.	0.
110~Link	DEAD	0.	0.	0.	0.	0.	0.
110~Link	G1_power station	0.	0.	0.	0.	0.	0.
110~Link	G2_power station	0.	0.	0.	0.	0.	0.
110~Link	Q_power station	0.	0.	0.	0.	0.	0.
110~Link	Q_neve	0.	0.	0.	0.	0.	0.
110~Link	Q_manutenzione	0.	0.	0.	0.	0.	0.
110~Link	EQ_X	0.	0.	0.	0.	0.	0.
110~Link	EQ_Y	0.	0.	0.	0.	0.	0.
111~Link	DEAD	0.	0.	0.	0.	0.	0.
111~Link	G1_power station	0.	0.	0.	0.	0.	0.
111~Link	G2_power station	0.	0.	0.	0.	0.	0.
111~Link	Q_power station	0.	0.	0.	0.	0.	0.
111~Link	Q_neve	0.	0.	0.	0.	0.	0.
111~Link	Q_manutenzione	0.	0.	0.	0.	0.	0.
111~Link	EQ_X	0.	0.	0.	0.	0.	0.
111~Link	EQ_Y	0.	0.	0.	0.	0.	0.
112~Link	DEAD	0.	0.	0.	0.	0.	0.
112~Link	G1_power station	0.	0.	0.	0.	0.	0.
112~Link	G2_power station	0.	0.	0.	0.	0.	0.
112~Link	Q_power station	0.	0.	0.	0.	0.	0.
112~Link	Q_neve	0.	0.	0.	0.	0.	0.
112~Link	Q_manutenzione	0.	0.	0.	0.	0.	0.
112~Link	EQ_X	0.	0.	0.	0.	0.	0.
112~Link	EQ_Y	0.	0.	0.	0.	0.	0.
113~Link	DEAD	0.	0.	0.	0.	0.	0.
113~Link	G1_power station	0.	0.	0.	0.	0.	0.
113~Link	G2_power station	0.	0.	0.	0.	0.	0.
113~Link	Q_power station	0.	0.	0.	0.	0.	0.
113~Link	Q_neve	0.	0.	0.	0.	0.	0.
113~Link	Q_manutenzione	0.	0.	0.	0.	0.	0.
113~Link	EQ_X	0.	0.	0.	0.	0.	0.
113~Link	EQ_Y	0.	0.	0.	0.	0.	0.
114~Link	DEAD	0.	0.	0.	0.	0.	0.

Table 18: Joint Displacements

Joint	OutputCase	U1	U2	U3	R1	R2	R3
		m	m	m	Radians	Radians	Radians
114~Link	G1_power station	0.	0.	0.	0.	0.	0.
114~Link	G2_power station	0.	0.	0.	0.	0.	0.
114~Link	Q_power station	0.	0.	0.	0.	0.	0.
114~Link	Q_neve	0.	0.	0.	0.	0.	0.
114~Link	Q_manutenzione	0.	0.	0.	0.	0.	0.
114~Link	EQ_X	0.	0.	0.	0.	0.	0.
114~Link	EQ_Y	0.	0.	0.	0.	0.	0.
115~Link	DEAD	0.	0.	0.	0.	0.	0.
115~Link	G1_power station	0.	0.	0.	0.	0.	0.
115~Link	G2_power station	0.	0.	0.	0.	0.	0.
115~Link	Q_power station	0.	0.	0.	0.	0.	0.
115~Link	Q_neve	0.	0.	0.	0.	0.	0.
115~Link	Q_manutenzione	0.	0.	0.	0.	0.	0.
115~Link	EQ_X	0.	0.	0.	0.	0.	0.
115~Link	EQ_Y	0.	0.	0.	0.	0.	0.
116~Link	DEAD	0.	0.	0.	0.	0.	0.
116~Link	G1_power station	0.	0.	0.	0.	0.	0.
116~Link	G2_power station	0.	0.	0.	0.	0.	0.
116~Link	Q_power station	0.	0.	0.	0.	0.	0.
116~Link	Q_neve	0.	0.	0.	0.	0.	0.
116~Link	Q_manutenzione	0.	0.	0.	0.	0.	0.
116~Link	EQ_X	0.	0.	0.	0.	0.	0.
116~Link	EQ_Y	0.	0.	0.	0.	0.	0.
117~Link	DEAD	0.	0.	0.	0.	0.	0.
117~Link	G1_power station	0.	0.	0.	0.	0.	0.
117~Link	G2_power station	0.	0.	0.	0.	0.	0.
117~Link	Q_power station	0.	0.	0.	0.	0.	0.
117~Link	Q_neve	0.	0.	0.	0.	0.	0.
117~Link	Q_manutenzione	0.	0.	0.	0.	0.	0.
117~Link	EQ_X	0.	0.	0.	0.	0.	0.
117~Link	EQ_Y	0.	0.	0.	0.	0.	0.
118~Link	DEAD	0.	0.	0.	0.	0.	0.
118~Link	G1_power station	0.	0.	0.	0.	0.	0.
118~Link	G2_power station	0.	0.	0.	0.	0.	0.
118~Link	Q_power station	0.	0.	0.	0.	0.	0.
118~Link	Q_neve	0.	0.	0.	0.	0.	0.
118~Link	Q_manutenzione	0.	0.	0.	0.	0.	0.
118~Link	EQ_X	0.	0.	0.	0.	0.	0.
118~Link	EQ_Y	0.	0.	0.	0.	0.	0.
119~Link	DEAD	0.	0.	0.	0.	0.	0.
119~Link	G1_power station	0.	0.	0.	0.	0.	0.
119~Link	G2_power station	0.	0.	0.	0.	0.	0.
119~Link	Q_power station	0.	0.	0.	0.	0.	0.

Table 18: Joint Displacements

Joint	OutputCase	U1	U2	U3	R1	R2	R3
		m	m	m	Radians	Radians	Radians
119~Link	Q_neve	0.	0.	0.	0.	0.	0.
119~Link	Q_manutenzione	0.	0.	0.	0.	0.	0.
119~Link	EQ_X	0.	0.	0.	0.	0.	0.
119~Link	EQ_Y	0.	0.	0.	0.	0.	0.
120~Link	DEAD	0.	0.	0.	0.	0.	0.
120~Link	G1_power station	0.	0.	0.	0.	0.	0.
120~Link	G2_power station	0.	0.	0.	0.	0.	0.
120~Link	Q_power station	0.	0.	0.	0.	0.	0.
120~Link	Q_neve	0.	0.	0.	0.	0.	0.
120~Link	Q_manutenzione	0.	0.	0.	0.	0.	0.
120~Link	EQ_X	0.	0.	0.	0.	0.	0.
120~Link	EQ_Y	0.	0.	0.	0.	0.	0.
121~Link	DEAD	0.	0.	0.	0.	0.	0.
121~Link	G1_power station	0.	0.	0.	0.	0.	0.
121~Link	G2_power station	0.	0.	0.	0.	0.	0.
121~Link	Q_power station	0.	0.	0.	0.	0.	0.
121~Link	Q_neve	0.	0.	0.	0.	0.	0.
121~Link	Q_manutenzione	0.	0.	0.	0.	0.	0.
121~Link	EQ_X	0.	0.	0.	0.	0.	0.
121~Link	EQ_Y	0.	0.	0.	0.	0.	0.
122~Link	DEAD	0.	0.	0.	0.	0.	0.
122~Link	G1_power station	0.	0.	0.	0.	0.	0.
122~Link	G2_power station	0.	0.	0.	0.	0.	0.
122~Link	Q_power station	0.	0.	0.	0.	0.	0.
122~Link	Q_neve	0.	0.	0.	0.	0.	0.
122~Link	Q_manutenzione	0.	0.	0.	0.	0.	0.
122~Link	EQ_X	0.	0.	0.	0.	0.	0.
122~Link	EQ_Y	0.	0.	0.	0.	0.	0.
123~Link	DEAD	0.	0.	0.	0.	0.	0.
123~Link	G1_power station	0.	0.	0.	0.	0.	0.
123~Link	G2_power station	0.	0.	0.	0.	0.	0.
123~Link	Q_power station	0.	0.	0.	0.	0.	0.
123~Link	Q_neve	0.	0.	0.	0.	0.	0.
123~Link	Q_manutenzione	0.	0.	0.	0.	0.	0.
123~Link	EQ_X	0.	0.	0.	0.	0.	0.
123~Link	EQ_Y	0.	0.	0.	0.	0.	0.
124~Link	DEAD	0.	0.	0.	0.	0.	0.
124~Link	G1_power station	0.	0.	0.	0.	0.	0.
124~Link	G2_power station	0.	0.	0.	0.	0.	0.
124~Link	Q_power station	0.	0.	0.	0.	0.	0.
124~Link	Q_neve	0.	0.	0.	0.	0.	0.
124~Link	Q_manutenzione	0.	0.	0.	0.	0.	0.
124~Link	EQ_X	0.	0.	0.	0.	0.	0.

Table 18: Joint Displacements

Joint	OutputCase	U1	U2	U3	R1	R2	R3
		m	m	m	Radians	Radians	Radians
124~Link	EQ_Y	0.	0.	0.	0.	0.	0.
125~Link	DEAD	0.	0.	0.	0.	0.	0.
125~Link	G1_power station	0.	0.	0.	0.	0.	0.
125~Link	G2_power station	0.	0.	0.	0.	0.	0.
125~Link	Q_power station	0.	0.	0.	0.	0.	0.
125~Link	Q_neve	0.	0.	0.	0.	0.	0.
125~Link	Q_manutenzione	0.	0.	0.	0.	0.	0.
125~Link	EQ_X	0.	0.	0.	0.	0.	0.
125~Link	EQ_Y	0.	0.	0.	0.	0.	0.
126~Link	DEAD	0.	0.	0.	0.	0.	0.
126~Link	G1_power station	0.	0.	0.	0.	0.	0.
126~Link	G2_power station	0.	0.	0.	0.	0.	0.
126~Link	Q_power station	0.	0.	0.	0.	0.	0.
126~Link	Q_neve	0.	0.	0.	0.	0.	0.
126~Link	Q_manutenzione	0.	0.	0.	0.	0.	0.
126~Link	EQ_X	0.	0.	0.	0.	0.	0.
126~Link	EQ_Y	0.	0.	0.	0.	0.	0.
127~Link	DEAD	0.	0.	0.	0.	0.	0.
127~Link	G1_power station	0.	0.	0.	0.	0.	0.
127~Link	G2_power station	0.	0.	0.	0.	0.	0.
127~Link	Q_power station	0.	0.	0.	0.	0.	0.
127~Link	Q_neve	0.	0.	0.	0.	0.	0.
127~Link	Q_manutenzione	0.	0.	0.	0.	0.	0.
127~Link	EQ_X	0.	0.	0.	0.	0.	0.
127~Link	EQ_Y	0.	0.	0.	0.	0.	0.
128~Link	DEAD	0.	0.	0.	0.	0.	0.
128~Link	G1_power station	0.	0.	0.	0.	0.	0.
128~Link	G2_power station	0.	0.	0.	0.	0.	0.
128~Link	Q_power station	0.	0.	0.	0.	0.	0.
128~Link	Q_neve	0.	0.	0.	0.	0.	0.
128~Link	Q_manutenzione	0.	0.	0.	0.	0.	0.
128~Link	EQ_X	0.	0.	0.	0.	0.	0.
128~Link	EQ_Y	0.	0.	0.	0.	0.	0.
129~Link	DEAD	0.	0.	0.	0.	0.	0.
129~Link	G1_power station	0.	0.	0.	0.	0.	0.
129~Link	G2_power station	0.	0.	0.	0.	0.	0.
129~Link	Q_power station	0.	0.	0.	0.	0.	0.
129~Link	Q_neve	0.	0.	0.	0.	0.	0.
129~Link	Q_manutenzione	0.	0.	0.	0.	0.	0.
129~Link	EQ_X	0.	0.	0.	0.	0.	0.
129~Link	EQ_Y	0.	0.	0.	0.	0.	0.
130~Link	DEAD	0.	0.	0.	0.	0.	0.
130~Link	G1_power station	0.	0.	0.	0.	0.	0.

Table 18: Joint Displacements

Joint	OutputCase	U1	U2	U3	R1	R2	R3
		m	m	m	Radians	Radians	Radians
130~Link	G2_power station	0.	0.	0.	0.	0.	0.
130~Link	Q_power station	0.	0.	0.	0.	0.	0.
130~Link	Q_neve	0.	0.	0.	0.	0.	0.
130~Link	Q_manutenzione	0.	0.	0.	0.	0.	0.
130~Link	EQ_X	0.	0.	0.	0.	0.	0.
130~Link	EQ_Y	0.	0.	0.	0.	0.	0.
29~Link	DEAD	0.	0.	0.	0.	0.	0.
29~Link	G1_power station	0.	0.	0.	0.	0.	0.
29~Link	G2_power station	0.	0.	0.	0.	0.	0.
29~Link	Q_power station	0.	0.	0.	0.	0.	0.
29~Link	Q_neve	0.	0.	0.	0.	0.	0.
29~Link	Q_manutenzione	0.	0.	0.	0.	0.	0.
29~Link	EQ_X	0.	0.	0.	0.	0.	0.
29~Link	EQ_Y	0.	0.	0.	0.	0.	0.
131~Link	DEAD	0.	0.	0.	0.	0.	0.
131~Link	G1_power station	0.	0.	0.	0.	0.	0.
131~Link	G2_power station	0.	0.	0.	0.	0.	0.
131~Link	Q_power station	0.	0.	0.	0.	0.	0.
131~Link	Q_neve	0.	0.	0.	0.	0.	0.
131~Link	Q_manutenzione	0.	0.	0.	0.	0.	0.
131~Link	EQ_X	0.	0.	0.	0.	0.	0.
131~Link	EQ_Y	0.	0.	0.	0.	0.	0.
132~Link	DEAD	0.	0.	0.	0.	0.	0.
132~Link	G1_power station	0.	0.	0.	0.	0.	0.
132~Link	G2_power station	0.	0.	0.	0.	0.	0.
132~Link	Q_power station	0.	0.	0.	0.	0.	0.
132~Link	Q_neve	0.	0.	0.	0.	0.	0.
132~Link	Q_manutenzione	0.	0.	0.	0.	0.	0.
132~Link	EQ_X	0.	0.	0.	0.	0.	0.
132~Link	EQ_Y	0.	0.	0.	0.	0.	0.
133~Link	DEAD	0.	0.	0.	0.	0.	0.
133~Link	G1_power station	0.	0.	0.	0.	0.	0.
133~Link	G2_power station	0.	0.	0.	0.	0.	0.
133~Link	Q_power station	0.	0.	0.	0.	0.	0.
133~Link	Q_neve	0.	0.	0.	0.	0.	0.
133~Link	Q_manutenzione	0.	0.	0.	0.	0.	0.
133~Link	EQ_X	0.	0.	0.	0.	0.	0.
133~Link	EQ_Y	0.	0.	0.	0.	0.	0.
134~Link	DEAD	0.	0.	0.	0.	0.	0.
134~Link	G1_power station	0.	0.	0.	0.	0.	0.
134~Link	G2_power station	0.	0.	0.	0.	0.	0.
134~Link	Q_power station	0.	0.	0.	0.	0.	0.
134~Link	Q_neve	0.	0.	0.	0.	0.	0.

Table 18: Joint Displacements

Joint	OutputCase	U1	U2	U3	R1	R2	R3
		m	m	m	Radians	Radians	Radians
134~Link	Q_manutenzione	0.	0.	0.	0.	0.	0.
134~Link	EQ_X	0.	0.	0.	0.	0.	0.
134~Link	EQ_Y	0.	0.	0.	0.	0.	0.
135~Link	DEAD	0.	0.	0.	0.	0.	0.
135~Link	G1_power station	0.	0.	0.	0.	0.	0.
135~Link	G2_power station	0.	0.	0.	0.	0.	0.
135~Link	Q_power station	0.	0.	0.	0.	0.	0.
135~Link	Q_neve	0.	0.	0.	0.	0.	0.
135~Link	Q_manutenzione	0.	0.	0.	0.	0.	0.
135~Link	EQ_X	0.	0.	0.	0.	0.	0.
135~Link	EQ_Y	0.	0.	0.	0.	0.	0.
136~Link	DEAD	0.	0.	0.	0.	0.	0.
136~Link	G1_power station	0.	0.	0.	0.	0.	0.
136~Link	G2_power station	0.	0.	0.	0.	0.	0.
136~Link	Q_power station	0.	0.	0.	0.	0.	0.
136~Link	Q_neve	0.	0.	0.	0.	0.	0.
136~Link	Q_manutenzione	0.	0.	0.	0.	0.	0.
136~Link	EQ_X	0.	0.	0.	0.	0.	0.
136~Link	EQ_Y	0.	0.	0.	0.	0.	0.
137~Link	DEAD	0.	0.	0.	0.	0.	0.
137~Link	G1_power station	0.	0.	0.	0.	0.	0.
137~Link	G2_power station	0.	0.	0.	0.	0.	0.
137~Link	Q_power station	0.	0.	0.	0.	0.	0.
137~Link	Q_neve	0.	0.	0.	0.	0.	0.
137~Link	Q_manutenzione	0.	0.	0.	0.	0.	0.
137~Link	EQ_X	0.	0.	0.	0.	0.	0.
137~Link	EQ_Y	0.	0.	0.	0.	0.	0.
138~Link	DEAD	0.	0.	0.	0.	0.	0.
138~Link	G1_power station	0.	0.	0.	0.	0.	0.
138~Link	G2_power station	0.	0.	0.	0.	0.	0.
138~Link	Q_power station	0.	0.	0.	0.	0.	0.
138~Link	Q_neve	0.	0.	0.	0.	0.	0.
138~Link	Q_manutenzione	0.	0.	0.	0.	0.	0.
138~Link	EQ_X	0.	0.	0.	0.	0.	0.
138~Link	EQ_Y	0.	0.	0.	0.	0.	0.
139~Link	DEAD	0.	0.	0.	0.	0.	0.
139~Link	G1_power station	0.	0.	0.	0.	0.	0.
139~Link	G2_power station	0.	0.	0.	0.	0.	0.
139~Link	Q_power station	0.	0.	0.	0.	0.	0.
139~Link	Q_neve	0.	0.	0.	0.	0.	0.
139~Link	Q_manutenzione	0.	0.	0.	0.	0.	0.
139~Link	EQ_X	0.	0.	0.	0.	0.	0.
139~Link	EQ_Y	0.	0.	0.	0.	0.	0.

Table 18: Joint Displacements

Joint	OutputCase	U1	U2	U3	R1	R2	R3
		m	m	m	Radians	Radians	Radians
140~Link	DEAD	0.	0.	0.	0.	0.	0.
140~Link	G1_power station	0.	0.	0.	0.	0.	0.
140~Link	G2_power station	0.	0.	0.	0.	0.	0.
140~Link	Q_power station	0.	0.	0.	0.	0.	0.
140~Link	Q_neve	0.	0.	0.	0.	0.	0.
140~Link	Q_manutenzione	0.	0.	0.	0.	0.	0.
140~Link	EQ_X	0.	0.	0.	0.	0.	0.
140~Link	EQ_Y	0.	0.	0.	0.	0.	0.
141~Link	DEAD	0.	0.	0.	0.	0.	0.
141~Link	G1_power station	0.	0.	0.	0.	0.	0.
141~Link	G2_power station	0.	0.	0.	0.	0.	0.
141~Link	Q_power station	0.	0.	0.	0.	0.	0.
141~Link	Q_neve	0.	0.	0.	0.	0.	0.
141~Link	Q_manutenzione	0.	0.	0.	0.	0.	0.
141~Link	EQ_X	0.	0.	0.	0.	0.	0.
141~Link	EQ_Y	0.	0.	0.	0.	0.	0.
142~Link	DEAD	0.	0.	0.	0.	0.	0.
142~Link	G1_power station	0.	0.	0.	0.	0.	0.
142~Link	G2_power station	0.	0.	0.	0.	0.	0.
142~Link	Q_power station	0.	0.	0.	0.	0.	0.
142~Link	Q_neve	0.	0.	0.	0.	0.	0.
142~Link	Q_manutenzione	0.	0.	0.	0.	0.	0.
142~Link	EQ_X	0.	0.	0.	0.	0.	0.
142~Link	EQ_Y	0.	0.	0.	0.	0.	0.
143~Link	DEAD	0.	0.	0.	0.	0.	0.
143~Link	G1_power station	0.	0.	0.	0.	0.	0.
143~Link	G2_power station	0.	0.	0.	0.	0.	0.
143~Link	Q_power station	0.	0.	0.	0.	0.	0.
143~Link	Q_neve	0.	0.	0.	0.	0.	0.
143~Link	Q_manutenzione	0.	0.	0.	0.	0.	0.
143~Link	EQ_X	0.	0.	0.	0.	0.	0.
143~Link	EQ_Y	0.	0.	0.	0.	0.	0.
144~Link	DEAD	0.	0.	0.	0.	0.	0.
144~Link	G1_power station	0.	0.	0.	0.	0.	0.
144~Link	G2_power station	0.	0.	0.	0.	0.	0.
144~Link	Q_power station	0.	0.	0.	0.	0.	0.
144~Link	Q_neve	0.	0.	0.	0.	0.	0.
144~Link	Q_manutenzione	0.	0.	0.	0.	0.	0.
144~Link	EQ_X	0.	0.	0.	0.	0.	0.
144~Link	EQ_Y	0.	0.	0.	0.	0.	0.
30~Link	DEAD	0.	0.	0.	0.	0.	0.
30~Link	G1_power station	0.	0.	0.	0.	0.	0.
30~Link	G2_power station	0.	0.	0.	0.	0.	0.

Table 18: Joint Displacements

Joint	OutputCase	U1	U2	U3	R1	R2	R3
		m	m	m	Radians	Radians	Radians
30~Link	Q_power station	0.	0.	0.	0.	0.	0.
30~Link	Q_neve	0.	0.	0.	0.	0.	0.
30~Link	Q_manutenzione	0.	0.	0.	0.	0.	0.
30~Link	EQ_X	0.	0.	0.	0.	0.	0.
30~Link	EQ_Y	0.	0.	0.	0.	0.	0.
146~Link	DEAD	0.	0.	0.	0.	0.	0.
146~Link	G1_power station	0.	0.	0.	0.	0.	0.
146~Link	G2_power station	0.	0.	0.	0.	0.	0.
146~Link	Q_power station	0.	0.	0.	0.	0.	0.
146~Link	Q_neve	0.	0.	0.	0.	0.	0.
146~Link	Q_manutenzione	0.	0.	0.	0.	0.	0.
146~Link	EQ_X	0.	0.	0.	0.	0.	0.
146~Link	EQ_Y	0.	0.	0.	0.	0.	0.
148~Link	DEAD	0.	0.	0.	0.	0.	0.
148~Link	G1_power station	0.	0.	0.	0.	0.	0.
148~Link	G2_power station	0.	0.	0.	0.	0.	0.
148~Link	Q_power station	0.	0.	0.	0.	0.	0.
148~Link	Q_neve	0.	0.	0.	0.	0.	0.
148~Link	Q_manutenzione	0.	0.	0.	0.	0.	0.
148~Link	EQ_X	0.	0.	0.	0.	0.	0.
148~Link	EQ_Y	0.	0.	0.	0.	0.	0.
150~Link	DEAD	0.	0.	0.	0.	0.	0.
150~Link	G1_power station	0.	0.	0.	0.	0.	0.
150~Link	G2_power station	0.	0.	0.	0.	0.	0.
150~Link	Q_power station	0.	0.	0.	0.	0.	0.
150~Link	Q_neve	0.	0.	0.	0.	0.	0.
150~Link	Q_manutenzione	0.	0.	0.	0.	0.	0.
150~Link	EQ_X	0.	0.	0.	0.	0.	0.
150~Link	EQ_Y	0.	0.	0.	0.	0.	0.
152~Link	DEAD	0.	0.	0.	0.	0.	0.
152~Link	G1_power station	0.	0.	0.	0.	0.	0.
152~Link	G2_power station	0.	0.	0.	0.	0.	0.
152~Link	Q_power station	0.	0.	0.	0.	0.	0.
152~Link	Q_neve	0.	0.	0.	0.	0.	0.
152~Link	Q_manutenzione	0.	0.	0.	0.	0.	0.
152~Link	EQ_X	0.	0.	0.	0.	0.	0.
152~Link	EQ_Y	0.	0.	0.	0.	0.	0.
154~Link	DEAD	0.	0.	0.	0.	0.	0.
154~Link	G1_power station	0.	0.	0.	0.	0.	0.
154~Link	G2_power station	0.	0.	0.	0.	0.	0.
154~Link	Q_power station	0.	0.	0.	0.	0.	0.
154~Link	Q_neve	0.	0.	0.	0.	0.	0.
154~Link	Q_manutenzione	0.	0.	0.	0.	0.	0.

Table 18: Joint Displacements

Joint	OutputCase	U1	U2	U3	R1	R2	R3
		m	m	m	Radians	Radians	Radians
154~Link	EQ_X	0.	0.	0.	0.	0.	0.
154~Link	EQ_Y	0.	0.	0.	0.	0.	0.
156~Link	DEAD	0.	0.	0.	0.	0.	0.
156~Link	G1_power station	0.	0.	0.	0.	0.	0.
156~Link	G2_power station	0.	0.	0.	0.	0.	0.
156~Link	Q_power station	0.	0.	0.	0.	0.	0.
156~Link	Q_neve	0.	0.	0.	0.	0.	0.
156~Link	Q_manutenzione	0.	0.	0.	0.	0.	0.
156~Link	EQ_X	0.	0.	0.	0.	0.	0.
156~Link	EQ_Y	0.	0.	0.	0.	0.	0.
31~Link	DEAD	0.	0.	0.	0.	0.	0.
31~Link	G1_power station	0.	0.	0.	0.	0.	0.
31~Link	G2_power station	0.	0.	0.	0.	0.	0.
31~Link	Q_power station	0.	0.	0.	0.	0.	0.
31~Link	Q_neve	0.	0.	0.	0.	0.	0.
31~Link	Q_manutenzione	0.	0.	0.	0.	0.	0.
31~Link	EQ_X	0.	0.	0.	0.	0.	0.
31~Link	EQ_Y	0.	0.	0.	0.	0.	0.
145~Link	DEAD	0.	0.	0.	0.	0.	0.
145~Link	G1_power station	0.	0.	0.	0.	0.	0.
145~Link	G2_power station	0.	0.	0.	0.	0.	0.
145~Link	Q_power station	0.	0.	0.	0.	0.	0.
145~Link	Q_neve	0.	0.	0.	0.	0.	0.
145~Link	Q_manutenzione	0.	0.	0.	0.	0.	0.
145~Link	EQ_X	0.	0.	0.	0.	0.	0.
145~Link	EQ_Y	0.	0.	0.	0.	0.	0.
147~Link	DEAD	0.	0.	0.	0.	0.	0.
147~Link	G1_power station	0.	0.	0.	0.	0.	0.
147~Link	G2_power station	0.	0.	0.	0.	0.	0.
147~Link	Q_power station	0.	0.	0.	0.	0.	0.
147~Link	Q_neve	0.	0.	0.	0.	0.	0.
147~Link	Q_manutenzione	0.	0.	0.	0.	0.	0.
147~Link	EQ_X	0.	0.	0.	0.	0.	0.
147~Link	EQ_Y	0.	0.	0.	0.	0.	0.
149~Link	DEAD	0.	0.	0.	0.	0.	0.
149~Link	G1_power station	0.	0.	0.	0.	0.	0.
149~Link	G2_power station	0.	0.	0.	0.	0.	0.
149~Link	Q_power station	0.	0.	0.	0.	0.	0.
149~Link	Q_neve	0.	0.	0.	0.	0.	0.
149~Link	Q_manutenzione	0.	0.	0.	0.	0.	0.
149~Link	EQ_X	0.	0.	0.	0.	0.	0.
149~Link	EQ_Y	0.	0.	0.	0.	0.	0.
151~Link	DEAD	0.	0.	0.	0.	0.	0.

Table 18: Joint Displacements

Joint	OutputCase	U1	U2	U3	R1	R2	R3
		m	m	m	Radians	Radians	Radians
151~Link	G1_power station	0.	0.	0.	0.	0.	0.
151~Link	G2_power station	0.	0.	0.	0.	0.	0.
151~Link	Q_power station	0.	0.	0.	0.	0.	0.
151~Link	Q_neve	0.	0.	0.	0.	0.	0.
151~Link	Q_manutenzione	0.	0.	0.	0.	0.	0.
151~Link	EQ_X	0.	0.	0.	0.	0.	0.
151~Link	EQ_Y	0.	0.	0.	0.	0.	0.
153~Link	DEAD	0.	0.	0.	0.	0.	0.
153~Link	G1_power station	0.	0.	0.	0.	0.	0.
153~Link	G2_power station	0.	0.	0.	0.	0.	0.
153~Link	Q_power station	0.	0.	0.	0.	0.	0.
153~Link	Q_neve	0.	0.	0.	0.	0.	0.
153~Link	Q_manutenzione	0.	0.	0.	0.	0.	0.
153~Link	EQ_X	0.	0.	0.	0.	0.	0.
153~Link	EQ_Y	0.	0.	0.	0.	0.	0.
155~Link	DEAD	0.	0.	0.	0.	0.	0.
155~Link	G1_power station	0.	0.	0.	0.	0.	0.
155~Link	G2_power station	0.	0.	0.	0.	0.	0.
155~Link	Q_power station	0.	0.	0.	0.	0.	0.
155~Link	Q_neve	0.	0.	0.	0.	0.	0.
155~Link	Q_manutenzione	0.	0.	0.	0.	0.	0.
155~Link	EQ_X	0.	0.	0.	0.	0.	0.
155~Link	EQ_Y	0.	0.	0.	0.	0.	0.
24~Link	DEAD	0.	0.	0.	0.	0.	0.
24~Link	G1_power station	0.	0.	0.	0.	0.	0.
24~Link	G2_power station	0.	0.	0.	0.	0.	0.
24~Link	Q_power station	0.	0.	0.	0.	0.	0.
24~Link	Q_neve	0.	0.	0.	0.	0.	0.
24~Link	Q_manutenzione	0.	0.	0.	0.	0.	0.
24~Link	EQ_X	0.	0.	0.	0.	0.	0.
24~Link	EQ_Y	0.	0.	0.	0.	0.	0.
158~Link	DEAD	0.	0.	0.	0.	0.	0.
158~Link	G1_power station	0.	0.	0.	0.	0.	0.
158~Link	G2_power station	0.	0.	0.	0.	0.	0.
158~Link	Q_power station	0.	0.	0.	0.	0.	0.
158~Link	Q_neve	0.	0.	0.	0.	0.	0.
158~Link	Q_manutenzione	0.	0.	0.	0.	0.	0.
158~Link	EQ_X	0.	0.	0.	0.	0.	0.
158~Link	EQ_Y	0.	0.	0.	0.	0.	0.
160~Link	DEAD	0.	0.	0.	0.	0.	0.
160~Link	G1_power station	0.	0.	0.	0.	0.	0.
160~Link	G2_power station	0.	0.	0.	0.	0.	0.
160~Link	Q_power station	0.	0.	0.	0.	0.	0.

Table 18: Joint Displacements

Joint	OutputCase	U1	U2	U3	R1	R2	R3
		m	m	m	Radians	Radians	Radians
160~Link	Q_neve	0.	0.	0.	0.	0.	0.
160~Link	Q_manutenzione	0.	0.	0.	0.	0.	0.
160~Link	EQ_X	0.	0.	0.	0.	0.	0.
160~Link	EQ_Y	0.	0.	0.	0.	0.	0.
32~Link	DEAD	0.	0.	0.	0.	0.	0.
32~Link	G1_power station	0.	0.	0.	0.	0.	0.
32~Link	G2_power station	0.	0.	0.	0.	0.	0.
32~Link	Q_power station	0.	0.	0.	0.	0.	0.
32~Link	Q_neve	0.	0.	0.	0.	0.	0.
32~Link	Q_manutenzione	0.	0.	0.	0.	0.	0.
32~Link	EQ_X	0.	0.	0.	0.	0.	0.
32~Link	EQ_Y	0.	0.	0.	0.	0.	0.
157~Link	DEAD	0.	0.	0.	0.	0.	0.
157~Link	G1_power station	0.	0.	0.	0.	0.	0.
157~Link	G2_power station	0.	0.	0.	0.	0.	0.
157~Link	Q_power station	0.	0.	0.	0.	0.	0.
157~Link	Q_neve	0.	0.	0.	0.	0.	0.
157~Link	Q_manutenzione	0.	0.	0.	0.	0.	0.
157~Link	EQ_X	0.	0.	0.	0.	0.	0.
157~Link	EQ_Y	0.	0.	0.	0.	0.	0.
159~Link	DEAD	0.	0.	0.	0.	0.	0.
159~Link	G1_power station	0.	0.	0.	0.	0.	0.
159~Link	G2_power station	0.	0.	0.	0.	0.	0.
159~Link	Q_power station	0.	0.	0.	0.	0.	0.
159~Link	Q_neve	0.	0.	0.	0.	0.	0.
159~Link	Q_manutenzione	0.	0.	0.	0.	0.	0.
159~Link	EQ_X	0.	0.	0.	0.	0.	0.
159~Link	EQ_Y	0.	0.	0.	0.	0.	0.
23~Link	DEAD	0.	0.	0.	0.	0.	0.
23~Link	G1_power station	0.	0.	0.	0.	0.	0.
23~Link	G2_power station	0.	0.	0.	0.	0.	0.
23~Link	Q_power station	0.	0.	0.	0.	0.	0.
23~Link	Q_neve	0.	0.	0.	0.	0.	0.
23~Link	Q_manutenzione	0.	0.	0.	0.	0.	0.
23~Link	EQ_X	0.	0.	0.	0.	0.	0.
23~Link	EQ_Y	0.	0.	0.	0.	0.	0.
161~Link	DEAD	0.	0.	0.	0.	0.	0.
161~Link	G1_power station	0.	0.	0.	0.	0.	0.
161~Link	G2_power station	0.	0.	0.	0.	0.	0.
161~Link	Q_power station	0.	0.	0.	0.	0.	0.
161~Link	Q_neve	0.	0.	0.	0.	0.	0.
161~Link	Q_manutenzione	0.	0.	0.	0.	0.	0.
161~Link	EQ_X	0.	0.	0.	0.	0.	0.

Table 18: Joint Displacements

Joint	OutputCase	U1	U2	U3	R1	R2	R3
		m	m	m	Radians	Radians	Radians
161~Link	EQ_Y	0.	0.	0.	0.	0.	0.
162~Link	DEAD	0.	0.	0.	0.	0.	0.
162~Link	G1_power station	0.	0.	0.	0.	0.	0.
162~Link	G2_power station	0.	0.	0.	0.	0.	0.
162~Link	Q_power station	0.	0.	0.	0.	0.	0.
162~Link	Q_neve	0.	0.	0.	0.	0.	0.
162~Link	Q_manutenzione	0.	0.	0.	0.	0.	0.
162~Link	EQ_X	0.	0.	0.	0.	0.	0.
162~Link	EQ_Y	0.	0.	0.	0.	0.	0.
163~Link	DEAD	0.	0.	0.	0.	0.	0.
163~Link	G1_power station	0.	0.	0.	0.	0.	0.
163~Link	G2_power station	0.	0.	0.	0.	0.	0.
163~Link	Q_power station	0.	0.	0.	0.	0.	0.
163~Link	Q_neve	0.	0.	0.	0.	0.	0.
163~Link	Q_manutenzione	0.	0.	0.	0.	0.	0.
163~Link	EQ_X	0.	0.	0.	0.	0.	0.
163~Link	EQ_Y	0.	0.	0.	0.	0.	0.
164~Link	DEAD	0.	0.	0.	0.	0.	0.
164~Link	G1_power station	0.	0.	0.	0.	0.	0.
164~Link	G2_power station	0.	0.	0.	0.	0.	0.
164~Link	Q_power station	0.	0.	0.	0.	0.	0.
164~Link	Q_neve	0.	0.	0.	0.	0.	0.
164~Link	Q_manutenzione	0.	0.	0.	0.	0.	0.
164~Link	EQ_X	0.	0.	0.	0.	0.	0.
164~Link	EQ_Y	0.	0.	0.	0.	0.	0.
165~Link	DEAD	0.	0.	0.	0.	0.	0.
165~Link	G1_power station	0.	0.	0.	0.	0.	0.
165~Link	G2_power station	0.	0.	0.	0.	0.	0.
165~Link	Q_power station	0.	0.	0.	0.	0.	0.
165~Link	Q_neve	0.	0.	0.	0.	0.	0.
165~Link	Q_manutenzione	0.	0.	0.	0.	0.	0.
165~Link	EQ_X	0.	0.	0.	0.	0.	0.
165~Link	EQ_Y	0.	0.	0.	0.	0.	0.
166~Link	DEAD	0.	0.	0.	0.	0.	0.
166~Link	G1_power station	0.	0.	0.	0.	0.	0.
166~Link	G2_power station	0.	0.	0.	0.	0.	0.
166~Link	Q_power station	0.	0.	0.	0.	0.	0.
166~Link	Q_neve	0.	0.	0.	0.	0.	0.
166~Link	Q_manutenzione	0.	0.	0.	0.	0.	0.
166~Link	EQ_X	0.	0.	0.	0.	0.	0.
166~Link	EQ_Y	0.	0.	0.	0.	0.	0.
167~Link	DEAD	0.	0.	0.	0.	0.	0.
167~Link	G1_power station	0.	0.	0.	0.	0.	0.

Table 18: Joint Displacements

Joint	OutputCase	U1	U2	U3	R1	R2	R3
		m	m	m	Radians	Radians	Radians
167~Link	G2_power station	0.	0.	0.	0.	0.	0.
167~Link	Q_power station	0.	0.	0.	0.	0.	0.
167~Link	Q_neve	0.	0.	0.	0.	0.	0.
167~Link	Q_manutenzione	0.	0.	0.	0.	0.	0.
167~Link	EQ_X	0.	0.	0.	0.	0.	0.
167~Link	EQ_Y	0.	0.	0.	0.	0.	0.
168~Link	DEAD	0.	0.	0.	0.	0.	0.
168~Link	G1_power station	0.	0.	0.	0.	0.	0.
168~Link	G2_power station	0.	0.	0.	0.	0.	0.
168~Link	Q_power station	0.	0.	0.	0.	0.	0.
168~Link	Q_neve	0.	0.	0.	0.	0.	0.
168~Link	Q_manutenzione	0.	0.	0.	0.	0.	0.
168~Link	EQ_X	0.	0.	0.	0.	0.	0.
168~Link	EQ_Y	0.	0.	0.	0.	0.	0.
169~Link	DEAD	0.	0.	0.	0.	0.	0.
169~Link	G1_power station	0.	0.	0.	0.	0.	0.
169~Link	G2_power station	0.	0.	0.	0.	0.	0.
169~Link	Q_power station	0.	0.	0.	0.	0.	0.
169~Link	Q_neve	0.	0.	0.	0.	0.	0.
169~Link	Q_manutenzione	0.	0.	0.	0.	0.	0.
169~Link	EQ_X	0.	0.	0.	0.	0.	0.
169~Link	EQ_Y	0.	0.	0.	0.	0.	0.
170~Link	DEAD	0.	0.	0.	0.	0.	0.
170~Link	G1_power station	0.	0.	0.	0.	0.	0.
170~Link	G2_power station	0.	0.	0.	0.	0.	0.
170~Link	Q_power station	0.	0.	0.	0.	0.	0.
170~Link	Q_neve	0.	0.	0.	0.	0.	0.
170~Link	Q_manutenzione	0.	0.	0.	0.	0.	0.
170~Link	EQ_X	0.	0.	0.	0.	0.	0.
170~Link	EQ_Y	0.	0.	0.	0.	0.	0.
171~Link	DEAD	0.	0.	0.	0.	0.	0.
171~Link	G1_power station	0.	0.	0.	0.	0.	0.
171~Link	G2_power station	0.	0.	0.	0.	0.	0.
171~Link	Q_power station	0.	0.	0.	0.	0.	0.
171~Link	Q_neve	0.	0.	0.	0.	0.	0.
171~Link	Q_manutenzione	0.	0.	0.	0.	0.	0.
171~Link	EQ_X	0.	0.	0.	0.	0.	0.
171~Link	EQ_Y	0.	0.	0.	0.	0.	0.
172~Link	DEAD	0.	0.	0.	0.	0.	0.
172~Link	G1_power station	0.	0.	0.	0.	0.	0.
172~Link	G2_power station	0.	0.	0.	0.	0.	0.
172~Link	Q_power station	0.	0.	0.	0.	0.	0.
172~Link	Q_neve	0.	0.	0.	0.	0.	0.

Table 18: Joint Displacements

Joint	OutputCase	U1	U2	U3	R1	R2	R3
		m	m	m	Radians	Radians	Radians
172~Link	Q_manutenzione	0.	0.	0.	0.	0.	0.
172~Link	EQ_X	0.	0.	0.	0.	0.	0.
172~Link	EQ_Y	0.	0.	0.	0.	0.	0.
173~Link	DEAD	0.	0.	0.	0.	0.	0.
173~Link	G1_power station	0.	0.	0.	0.	0.	0.
173~Link	G2_power station	0.	0.	0.	0.	0.	0.
173~Link	Q_power station	0.	0.	0.	0.	0.	0.
173~Link	Q_neve	0.	0.	0.	0.	0.	0.
173~Link	Q_manutenzione	0.	0.	0.	0.	0.	0.
173~Link	EQ_X	0.	0.	0.	0.	0.	0.
173~Link	EQ_Y	0.	0.	0.	0.	0.	0.
174~Link	DEAD	0.	0.	0.	0.	0.	0.
174~Link	G1_power station	0.	0.	0.	0.	0.	0.
174~Link	G2_power station	0.	0.	0.	0.	0.	0.
174~Link	Q_power station	0.	0.	0.	0.	0.	0.
174~Link	Q_neve	0.	0.	0.	0.	0.	0.
174~Link	Q_manutenzione	0.	0.	0.	0.	0.	0.
174~Link	EQ_X	0.	0.	0.	0.	0.	0.
174~Link	EQ_Y	0.	0.	0.	0.	0.	0.
33~Link	DEAD	0.	0.	0.	0.	0.	0.
33~Link	G1_power station	0.	0.	0.	0.	0.	0.
33~Link	G2_power station	0.	0.	0.	0.	0.	0.
33~Link	Q_power station	0.	0.	0.	0.	0.	0.
33~Link	Q_neve	0.	0.	0.	0.	0.	0.
33~Link	Q_manutenzione	0.	0.	0.	0.	0.	0.
33~Link	EQ_X	0.	0.	0.	0.	0.	0.
33~Link	EQ_Y	0.	0.	0.	0.	0.	0.
175~Link	DEAD	0.	0.	0.	0.	0.	0.
175~Link	G1_power station	0.	0.	0.	0.	0.	0.
175~Link	G2_power station	0.	0.	0.	0.	0.	0.
175~Link	Q_power station	0.	0.	0.	0.	0.	0.
175~Link	Q_neve	0.	0.	0.	0.	0.	0.
175~Link	Q_manutenzione	0.	0.	0.	0.	0.	0.
175~Link	EQ_X	0.	0.	0.	0.	0.	0.
175~Link	EQ_Y	0.	0.	0.	0.	0.	0.
176~Link	DEAD	0.	0.	0.	0.	0.	0.
176~Link	G1_power station	0.	0.	0.	0.	0.	0.
176~Link	G2_power station	0.	0.	0.	0.	0.	0.
176~Link	Q_power station	0.	0.	0.	0.	0.	0.
176~Link	Q_neve	0.	0.	0.	0.	0.	0.
176~Link	Q_manutenzione	0.	0.	0.	0.	0.	0.
176~Link	EQ_X	0.	0.	0.	0.	0.	0.
176~Link	EQ_Y	0.	0.	0.	0.	0.	0.

Table 18: Joint Displacements

Joint	OutputCase	U1	U2	U3	R1	R2	R3
		m	m	m	Radians	Radians	Radians
177~Link	DEAD	0.	0.	0.	0.	0.	0.
177~Link	G1_power station	0.	0.	0.	0.	0.	0.
177~Link	G2_power station	0.	0.	0.	0.	0.	0.
177~Link	Q_power station	0.	0.	0.	0.	0.	0.
177~Link	Q_neve	0.	0.	0.	0.	0.	0.
177~Link	Q_manutenzione	0.	0.	0.	0.	0.	0.
177~Link	EQ_X	0.	0.	0.	0.	0.	0.
177~Link	EQ_Y	0.	0.	0.	0.	0.	0.
178~Link	DEAD	0.	0.	0.	0.	0.	0.
178~Link	G1_power station	0.	0.	0.	0.	0.	0.
178~Link	G2_power station	0.	0.	0.	0.	0.	0.
178~Link	Q_power station	0.	0.	0.	0.	0.	0.
178~Link	Q_neve	0.	0.	0.	0.	0.	0.
178~Link	Q_manutenzione	0.	0.	0.	0.	0.	0.
178~Link	EQ_X	0.	0.	0.	0.	0.	0.
178~Link	EQ_Y	0.	0.	0.	0.	0.	0.
179~Link	DEAD	0.	0.	0.	0.	0.	0.
179~Link	G1_power station	0.	0.	0.	0.	0.	0.
179~Link	G2_power station	0.	0.	0.	0.	0.	0.
179~Link	Q_power station	0.	0.	0.	0.	0.	0.
179~Link	Q_neve	0.	0.	0.	0.	0.	0.
179~Link	Q_manutenzione	0.	0.	0.	0.	0.	0.
179~Link	EQ_X	0.	0.	0.	0.	0.	0.
179~Link	EQ_Y	0.	0.	0.	0.	0.	0.
180~Link	DEAD	0.	0.	0.	0.	0.	0.
180~Link	G1_power station	0.	0.	0.	0.	0.	0.
180~Link	G2_power station	0.	0.	0.	0.	0.	0.
180~Link	Q_power station	0.	0.	0.	0.	0.	0.
180~Link	Q_neve	0.	0.	0.	0.	0.	0.
180~Link	Q_manutenzione	0.	0.	0.	0.	0.	0.
180~Link	EQ_X	0.	0.	0.	0.	0.	0.
180~Link	EQ_Y	0.	0.	0.	0.	0.	0.
181~Link	DEAD	0.	0.	0.	0.	0.	0.
181~Link	G1_power station	0.	0.	0.	0.	0.	0.
181~Link	G2_power station	0.	0.	0.	0.	0.	0.
181~Link	Q_power station	0.	0.	0.	0.	0.	0.
181~Link	Q_neve	0.	0.	0.	0.	0.	0.
181~Link	Q_manutenzione	0.	0.	0.	0.	0.	0.
181~Link	EQ_X	0.	0.	0.	0.	0.	0.
181~Link	EQ_Y	0.	0.	0.	0.	0.	0.
182~Link	DEAD	0.	0.	0.	0.	0.	0.
182~Link	G1_power station	0.	0.	0.	0.	0.	0.
182~Link	G2_power station	0.	0.	0.	0.	0.	0.

Table 18: Joint Displacements

Joint	OutputCase	U1	U2	U3	R1	R2	R3
		m	m	m	Radians	Radians	Radians
182~Link	Q_power station	0.	0.	0.	0.	0.	0.
182~Link	Q_neve	0.	0.	0.	0.	0.	0.
182~Link	Q_manutenzione	0.	0.	0.	0.	0.	0.
182~Link	EQ_X	0.	0.	0.	0.	0.	0.
182~Link	EQ_Y	0.	0.	0.	0.	0.	0.
183~Link	DEAD	0.	0.	0.	0.	0.	0.
183~Link	G1_power station	0.	0.	0.	0.	0.	0.
183~Link	G2_power station	0.	0.	0.	0.	0.	0.
183~Link	Q_power station	0.	0.	0.	0.	0.	0.
183~Link	Q_neve	0.	0.	0.	0.	0.	0.
183~Link	Q_manutenzione	0.	0.	0.	0.	0.	0.
183~Link	EQ_X	0.	0.	0.	0.	0.	0.
183~Link	EQ_Y	0.	0.	0.	0.	0.	0.
184~Link	DEAD	0.	0.	0.	0.	0.	0.
184~Link	G1_power station	0.	0.	0.	0.	0.	0.
184~Link	G2_power station	0.	0.	0.	0.	0.	0.
184~Link	Q_power station	0.	0.	0.	0.	0.	0.
184~Link	Q_neve	0.	0.	0.	0.	0.	0.
184~Link	Q_manutenzione	0.	0.	0.	0.	0.	0.
184~Link	EQ_X	0.	0.	0.	0.	0.	0.
184~Link	EQ_Y	0.	0.	0.	0.	0.	0.
185~Link	DEAD	0.	0.	0.	0.	0.	0.
185~Link	G1_power station	0.	0.	0.	0.	0.	0.
185~Link	G2_power station	0.	0.	0.	0.	0.	0.
185~Link	Q_power station	0.	0.	0.	0.	0.	0.
185~Link	Q_neve	0.	0.	0.	0.	0.	0.
185~Link	Q_manutenzione	0.	0.	0.	0.	0.	0.
185~Link	EQ_X	0.	0.	0.	0.	0.	0.
185~Link	EQ_Y	0.	0.	0.	0.	0.	0.
186~Link	DEAD	0.	0.	0.	0.	0.	0.
186~Link	G1_power station	0.	0.	0.	0.	0.	0.
186~Link	G2_power station	0.	0.	0.	0.	0.	0.
186~Link	Q_power station	0.	0.	0.	0.	0.	0.
186~Link	Q_neve	0.	0.	0.	0.	0.	0.
186~Link	Q_manutenzione	0.	0.	0.	0.	0.	0.
186~Link	EQ_X	0.	0.	0.	0.	0.	0.
186~Link	EQ_Y	0.	0.	0.	0.	0.	0.
187~Link	DEAD	0.	0.	0.	0.	0.	0.
187~Link	G1_power station	0.	0.	0.	0.	0.	0.
187~Link	G2_power station	0.	0.	0.	0.	0.	0.
187~Link	Q_power station	0.	0.	0.	0.	0.	0.
187~Link	Q_neve	0.	0.	0.	0.	0.	0.
187~Link	Q_manutenzione	0.	0.	0.	0.	0.	0.

Table 18: Joint Displacements

Joint	OutputCase	U1	U2	U3	R1	R2	R3
		m	m	m	Radians	Radians	Radians
187~Link	EQ_X	0.	0.	0.	0.	0.	0.
187~Link	EQ_Y	0.	0.	0.	0.	0.	0.
188~Link	DEAD	0.	0.	0.	0.	0.	0.
188~Link	G1_power station	0.	0.	0.	0.	0.	0.
188~Link	G2_power station	0.	0.	0.	0.	0.	0.
188~Link	Q_power station	0.	0.	0.	0.	0.	0.
188~Link	Q_neve	0.	0.	0.	0.	0.	0.
188~Link	Q_manutenzione	0.	0.	0.	0.	0.	0.
188~Link	EQ_X	0.	0.	0.	0.	0.	0.
188~Link	EQ_Y	0.	0.	0.	0.	0.	0.
189~Link	DEAD	0.	0.	0.	0.	0.	0.
189~Link	G1_power station	0.	0.	0.	0.	0.	0.
189~Link	G2_power station	0.	0.	0.	0.	0.	0.
189~Link	Q_power station	0.	0.	0.	0.	0.	0.
189~Link	Q_neve	0.	0.	0.	0.	0.	0.
189~Link	Q_manutenzione	0.	0.	0.	0.	0.	0.
189~Link	EQ_X	0.	0.	0.	0.	0.	0.
189~Link	EQ_Y	0.	0.	0.	0.	0.	0.
190~Link	DEAD	0.	0.	0.	0.	0.	0.
190~Link	G1_power station	0.	0.	0.	0.	0.	0.
190~Link	G2_power station	0.	0.	0.	0.	0.	0.
190~Link	Q_power station	0.	0.	0.	0.	0.	0.
190~Link	Q_neve	0.	0.	0.	0.	0.	0.
190~Link	Q_manutenzione	0.	0.	0.	0.	0.	0.
190~Link	EQ_X	0.	0.	0.	0.	0.	0.
190~Link	EQ_Y	0.	0.	0.	0.	0.	0.
191~Link	DEAD	0.	0.	0.	0.	0.	0.
191~Link	G1_power station	0.	0.	0.	0.	0.	0.
191~Link	G2_power station	0.	0.	0.	0.	0.	0.
191~Link	Q_power station	0.	0.	0.	0.	0.	0.
191~Link	Q_neve	0.	0.	0.	0.	0.	0.
191~Link	Q_manutenzione	0.	0.	0.	0.	0.	0.
191~Link	EQ_X	0.	0.	0.	0.	0.	0.
191~Link	EQ_Y	0.	0.	0.	0.	0.	0.
192~Link	DEAD	0.	0.	0.	0.	0.	0.
192~Link	G1_power station	0.	0.	0.	0.	0.	0.
192~Link	G2_power station	0.	0.	0.	0.	0.	0.
192~Link	Q_power station	0.	0.	0.	0.	0.	0.
192~Link	Q_neve	0.	0.	0.	0.	0.	0.
192~Link	Q_manutenzione	0.	0.	0.	0.	0.	0.
192~Link	EQ_X	0.	0.	0.	0.	0.	0.
192~Link	EQ_Y	0.	0.	0.	0.	0.	0.
193~Link	DEAD	0.	0.	0.	0.	0.	0.

Table 18: Joint Displacements

Joint	OutputCase	U1	U2	U3	R1	R2	R3
		m	m	m	Radians	Radians	Radians
193~Link	G1_power station	0.	0.	0.	0.	0.	0.
193~Link	G2_power station	0.	0.	0.	0.	0.	0.
193~Link	Q_power station	0.	0.	0.	0.	0.	0.
193~Link	Q_neve	0.	0.	0.	0.	0.	0.
193~Link	Q_manutenzione	0.	0.	0.	0.	0.	0.
193~Link	EQ_X	0.	0.	0.	0.	0.	0.
193~Link	EQ_Y	0.	0.	0.	0.	0.	0.
194~Link	DEAD	0.	0.	0.	0.	0.	0.
194~Link	G1_power station	0.	0.	0.	0.	0.	0.
194~Link	G2_power station	0.	0.	0.	0.	0.	0.
194~Link	Q_power station	0.	0.	0.	0.	0.	0.
194~Link	Q_neve	0.	0.	0.	0.	0.	0.
194~Link	Q_manutenzione	0.	0.	0.	0.	0.	0.
194~Link	EQ_X	0.	0.	0.	0.	0.	0.
194~Link	EQ_Y	0.	0.	0.	0.	0.	0.
195~Link	DEAD	0.	0.	0.	0.	0.	0.
195~Link	G1_power station	0.	0.	0.	0.	0.	0.
195~Link	G2_power station	0.	0.	0.	0.	0.	0.
195~Link	Q_power station	0.	0.	0.	0.	0.	0.
195~Link	Q_neve	0.	0.	0.	0.	0.	0.
195~Link	Q_manutenzione	0.	0.	0.	0.	0.	0.
195~Link	EQ_X	0.	0.	0.	0.	0.	0.
195~Link	EQ_Y	0.	0.	0.	0.	0.	0.
196~Link	DEAD	0.	0.	0.	0.	0.	0.
196~Link	G1_power station	0.	0.	0.	0.	0.	0.
196~Link	G2_power station	0.	0.	0.	0.	0.	0.
196~Link	Q_power station	0.	0.	0.	0.	0.	0.
196~Link	Q_neve	0.	0.	0.	0.	0.	0.
196~Link	Q_manutenzione	0.	0.	0.	0.	0.	0.
196~Link	EQ_X	0.	0.	0.	0.	0.	0.
196~Link	EQ_Y	0.	0.	0.	0.	0.	0.
197~Link	DEAD	0.	0.	0.	0.	0.	0.
197~Link	G1_power station	0.	0.	0.	0.	0.	0.
197~Link	G2_power station	0.	0.	0.	0.	0.	0.
197~Link	Q_power station	0.	0.	0.	0.	0.	0.
197~Link	Q_neve	0.	0.	0.	0.	0.	0.
197~Link	Q_manutenzione	0.	0.	0.	0.	0.	0.
197~Link	EQ_X	0.	0.	0.	0.	0.	0.
197~Link	EQ_Y	0.	0.	0.	0.	0.	0.
198~Link	DEAD	0.	0.	0.	0.	0.	0.
198~Link	G1_power station	0.	0.	0.	0.	0.	0.
198~Link	G2_power station	0.	0.	0.	0.	0.	0.
198~Link	Q_power station	0.	0.	0.	0.	0.	0.

Table 18: Joint Displacements

Joint	OutputCase	U1	U2	U3	R1	R2	R3
		m	m	m	Radians	Radians	Radians
198~Link	Q_neve	0.	0.	0.	0.	0.	0.
198~Link	Q_manutenzione	0.	0.	0.	0.	0.	0.
198~Link	EQ_X	0.	0.	0.	0.	0.	0.
198~Link	EQ_Y	0.	0.	0.	0.	0.	0.
199~Link	DEAD	0.	0.	0.	0.	0.	0.
199~Link	G1_power station	0.	0.	0.	0.	0.	0.
199~Link	G2_power station	0.	0.	0.	0.	0.	0.
199~Link	Q_power station	0.	0.	0.	0.	0.	0.
199~Link	Q_neve	0.	0.	0.	0.	0.	0.
199~Link	Q_manutenzione	0.	0.	0.	0.	0.	0.
199~Link	EQ_X	0.	0.	0.	0.	0.	0.
199~Link	EQ_Y	0.	0.	0.	0.	0.	0.
200~Link	DEAD	0.	0.	0.	0.	0.	0.
200~Link	G1_power station	0.	0.	0.	0.	0.	0.
200~Link	G2_power station	0.	0.	0.	0.	0.	0.
200~Link	Q_power station	0.	0.	0.	0.	0.	0.
200~Link	Q_neve	0.	0.	0.	0.	0.	0.
200~Link	Q_manutenzione	0.	0.	0.	0.	0.	0.
200~Link	EQ_X	0.	0.	0.	0.	0.	0.
200~Link	EQ_Y	0.	0.	0.	0.	0.	0.
201~Link	DEAD	0.	0.	0.	0.	0.	0.
201~Link	G1_power station	0.	0.	0.	0.	0.	0.
201~Link	G2_power station	0.	0.	0.	0.	0.	0.
201~Link	Q_power station	0.	0.	0.	0.	0.	0.
201~Link	Q_neve	0.	0.	0.	0.	0.	0.
201~Link	Q_manutenzione	0.	0.	0.	0.	0.	0.
201~Link	EQ_X	0.	0.	0.	0.	0.	0.
201~Link	EQ_Y	0.	0.	0.	0.	0.	0.
202~Link	DEAD	0.	0.	0.	0.	0.	0.
202~Link	G1_power station	0.	0.	0.	0.	0.	0.
202~Link	G2_power station	0.	0.	0.	0.	0.	0.
202~Link	Q_power station	0.	0.	0.	0.	0.	0.
202~Link	Q_neve	0.	0.	0.	0.	0.	0.
202~Link	Q_manutenzione	0.	0.	0.	0.	0.	0.
202~Link	EQ_X	0.	0.	0.	0.	0.	0.
202~Link	EQ_Y	0.	0.	0.	0.	0.	0.
203~Link	DEAD	0.	0.	0.	0.	0.	0.
203~Link	G1_power station	0.	0.	0.	0.	0.	0.
203~Link	G2_power station	0.	0.	0.	0.	0.	0.
203~Link	Q_power station	0.	0.	0.	0.	0.	0.
203~Link	Q_neve	0.	0.	0.	0.	0.	0.
203~Link	Q_manutenzione	0.	0.	0.	0.	0.	0.
203~Link	EQ_X	0.	0.	0.	0.	0.	0.

Table 18: Joint Displacements

Joint	OutputCase	U1	U2	U3	R1	R2	R3
		m	m	m	Radians	Radians	Radians
203~Link	EQ_Y	0.	0.	0.	0.	0.	0.
204~Link	DEAD	0.	0.	0.	0.	0.	0.
204~Link	G1_power station	0.	0.	0.	0.	0.	0.
204~Link	G2_power station	0.	0.	0.	0.	0.	0.
204~Link	Q_power station	0.	0.	0.	0.	0.	0.
204~Link	Q_neve	0.	0.	0.	0.	0.	0.
204~Link	Q_manutenzione	0.	0.	0.	0.	0.	0.
204~Link	EQ_X	0.	0.	0.	0.	0.	0.
204~Link	EQ_Y	0.	0.	0.	0.	0.	0.
205~Link	DEAD	0.	0.	0.	0.	0.	0.
205~Link	G1_power station	0.	0.	0.	0.	0.	0.
205~Link	G2_power station	0.	0.	0.	0.	0.	0.
205~Link	Q_power station	0.	0.	0.	0.	0.	0.
205~Link	Q_neve	0.	0.	0.	0.	0.	0.
205~Link	Q_manutenzione	0.	0.	0.	0.	0.	0.
205~Link	EQ_X	0.	0.	0.	0.	0.	0.
205~Link	EQ_Y	0.	0.	0.	0.	0.	0.
206~Link	DEAD	0.	0.	0.	0.	0.	0.
206~Link	G1_power station	0.	0.	0.	0.	0.	0.
206~Link	G2_power station	0.	0.	0.	0.	0.	0.
206~Link	Q_power station	0.	0.	0.	0.	0.	0.
206~Link	Q_neve	0.	0.	0.	0.	0.	0.
206~Link	Q_manutenzione	0.	0.	0.	0.	0.	0.
206~Link	EQ_X	0.	0.	0.	0.	0.	0.
206~Link	EQ_Y	0.	0.	0.	0.	0.	0.
207~Link	DEAD	0.	0.	0.	0.	0.	0.
207~Link	G1_power station	0.	0.	0.	0.	0.	0.
207~Link	G2_power station	0.	0.	0.	0.	0.	0.
207~Link	Q_power station	0.	0.	0.	0.	0.	0.
207~Link	Q_neve	0.	0.	0.	0.	0.	0.
207~Link	Q_manutenzione	0.	0.	0.	0.	0.	0.
207~Link	EQ_X	0.	0.	0.	0.	0.	0.
207~Link	EQ_Y	0.	0.	0.	0.	0.	0.
208~Link	DEAD	0.	0.	0.	0.	0.	0.
208~Link	G1_power station	0.	0.	0.	0.	0.	0.
208~Link	G2_power station	0.	0.	0.	0.	0.	0.
208~Link	Q_power station	0.	0.	0.	0.	0.	0.
208~Link	Q_neve	0.	0.	0.	0.	0.	0.
208~Link	Q_manutenzione	0.	0.	0.	0.	0.	0.
208~Link	EQ_X	0.	0.	0.	0.	0.	0.
208~Link	EQ_Y	0.	0.	0.	0.	0.	0.
34~Link	DEAD	0.	0.	0.	0.	0.	0.
34~Link	G1_power station	0.	0.	0.	0.	0.	0.

Table 18: Joint Displacements

Joint	OutputCase	U1	U2	U3	R1	R2	R3
		m	m	m	Radians	Radians	Radians
34~Link	G2_power station	0.	0.	0.	0.	0.	0.
34~Link	Q_power station	0.	0.	0.	0.	0.	0.
34~Link	Q_neve	0.	0.	0.	0.	0.	0.
34~Link	Q_manutenzione	0.	0.	0.	0.	0.	0.
34~Link	EQ_X	0.	0.	0.	0.	0.	0.
34~Link	EQ_Y	0.	0.	0.	0.	0.	0.
209~Link	DEAD	0.	0.	0.	0.	0.	0.
209~Link	G1_power station	0.	0.	0.	0.	0.	0.
209~Link	G2_power station	0.	0.	0.	0.	0.	0.
209~Link	Q_power station	0.	0.	0.	0.	0.	0.
209~Link	Q_neve	0.	0.	0.	0.	0.	0.
209~Link	Q_manutenzione	0.	0.	0.	0.	0.	0.
209~Link	EQ_X	0.	0.	0.	0.	0.	0.
209~Link	EQ_Y	0.	0.	0.	0.	0.	0.
210~Link	DEAD	0.	0.	0.	0.	0.	0.
210~Link	G1_power station	0.	0.	0.	0.	0.	0.
210~Link	G2_power station	0.	0.	0.	0.	0.	0.
210~Link	Q_power station	0.	0.	0.	0.	0.	0.
210~Link	Q_neve	0.	0.	0.	0.	0.	0.
210~Link	Q_manutenzione	0.	0.	0.	0.	0.	0.
210~Link	EQ_X	0.	0.	0.	0.	0.	0.
210~Link	EQ_Y	0.	0.	0.	0.	0.	0.
35~Link	DEAD	0.	0.	0.	0.	0.	0.
35~Link	G1_power station	0.	0.	0.	0.	0.	0.
35~Link	G2_power station	0.	0.	0.	0.	0.	0.
35~Link	Q_power station	0.	0.	0.	0.	0.	0.
35~Link	Q_neve	0.	0.	0.	0.	0.	0.
35~Link	Q_manutenzione	0.	0.	0.	0.	0.	0.
35~Link	EQ_X	0.	0.	0.	0.	0.	0.
35~Link	EQ_Y	0.	0.	0.	0.	0.	0.
212~Link	DEAD	0.	0.	0.	0.	0.	0.
212~Link	G1_power station	0.	0.	0.	0.	0.	0.
212~Link	G2_power station	0.	0.	0.	0.	0.	0.
212~Link	Q_power station	0.	0.	0.	0.	0.	0.
212~Link	Q_neve	0.	0.	0.	0.	0.	0.
212~Link	Q_manutenzione	0.	0.	0.	0.	0.	0.
212~Link	EQ_X	0.	0.	0.	0.	0.	0.
212~Link	EQ_Y	0.	0.	0.	0.	0.	0.
214~Link	DEAD	0.	0.	0.	0.	0.	0.
214~Link	G1_power station	0.	0.	0.	0.	0.	0.
214~Link	G2_power station	0.	0.	0.	0.	0.	0.
214~Link	Q_power station	0.	0.	0.	0.	0.	0.
214~Link	Q_neve	0.	0.	0.	0.	0.	0.

Table 18: Joint Displacements

Joint	OutputCase	U1	U2	U3	R1	R2	R3
		m	m	m	Radians	Radians	Radians
214~Link	Q_manutenzione	0.	0.	0.	0.	0.	0.
214~Link	EQ_X	0.	0.	0.	0.	0.	0.
214~Link	EQ_Y	0.	0.	0.	0.	0.	0.
216~Link	DEAD	0.	0.	0.	0.	0.	0.
216~Link	G1_power station	0.	0.	0.	0.	0.	0.
216~Link	G2_power station	0.	0.	0.	0.	0.	0.
216~Link	Q_power station	0.	0.	0.	0.	0.	0.
216~Link	Q_neve	0.	0.	0.	0.	0.	0.
216~Link	Q_manutenzione	0.	0.	0.	0.	0.	0.
216~Link	EQ_X	0.	0.	0.	0.	0.	0.
216~Link	EQ_Y	0.	0.	0.	0.	0.	0.
211~Link	DEAD	0.	0.	0.	0.	0.	0.
211~Link	G1_power station	0.	0.	0.	0.	0.	0.
211~Link	G2_power station	0.	0.	0.	0.	0.	0.
211~Link	Q_power station	0.	0.	0.	0.	0.	0.
211~Link	Q_neve	0.	0.	0.	0.	0.	0.
211~Link	Q_manutenzione	0.	0.	0.	0.	0.	0.
211~Link	EQ_X	0.	0.	0.	0.	0.	0.
211~Link	EQ_Y	0.	0.	0.	0.	0.	0.
213~Link	DEAD	0.	0.	0.	0.	0.	0.
213~Link	G1_power station	0.	0.	0.	0.	0.	0.
213~Link	G2_power station	0.	0.	0.	0.	0.	0.
213~Link	Q_power station	0.	0.	0.	0.	0.	0.
213~Link	Q_neve	0.	0.	0.	0.	0.	0.
213~Link	Q_manutenzione	0.	0.	0.	0.	0.	0.
213~Link	EQ_X	0.	0.	0.	0.	0.	0.
213~Link	EQ_Y	0.	0.	0.	0.	0.	0.
215~Link	DEAD	0.	0.	0.	0.	0.	0.
215~Link	G1_power station	0.	0.	0.	0.	0.	0.
215~Link	G2_power station	0.	0.	0.	0.	0.	0.
215~Link	Q_power station	0.	0.	0.	0.	0.	0.
215~Link	Q_neve	0.	0.	0.	0.	0.	0.
215~Link	Q_manutenzione	0.	0.	0.	0.	0.	0.
215~Link	EQ_X	0.	0.	0.	0.	0.	0.
215~Link	EQ_Y	0.	0.	0.	0.	0.	0.
217~Link	DEAD	0.	0.	0.	0.	0.	0.
217~Link	G1_power station	0.	0.	0.	0.	0.	0.
217~Link	G2_power station	0.	0.	0.	0.	0.	0.
217~Link	Q_power station	0.	0.	0.	0.	0.	0.
217~Link	Q_neve	0.	0.	0.	0.	0.	0.
217~Link	Q_manutenzione	0.	0.	0.	0.	0.	0.
217~Link	EQ_X	0.	0.	0.	0.	0.	0.
217~Link	EQ_Y	0.	0.	0.	0.	0.	0.

Table 18: Joint Displacements

Joint	OutputCase	U1	U2	U3	R1	R2	R3
		m	m	m	Radians	Radians	Radians
218~Link	DEAD	0.	0.	0.	0.	0.	0.
218~Link	G1_power station	0.	0.	0.	0.	0.	0.
218~Link	G2_power station	0.	0.	0.	0.	0.	0.
218~Link	Q_power station	0.	0.	0.	0.	0.	0.
218~Link	Q_neve	0.	0.	0.	0.	0.	0.
218~Link	Q_manutenzione	0.	0.	0.	0.	0.	0.
218~Link	EQ_X	0.	0.	0.	0.	0.	0.
218~Link	EQ_Y	0.	0.	0.	0.	0.	0.
219~Link	DEAD	0.	0.	0.	0.	0.	0.
219~Link	G1_power station	0.	0.	0.	0.	0.	0.
219~Link	G2_power station	0.	0.	0.	0.	0.	0.
219~Link	Q_power station	0.	0.	0.	0.	0.	0.
219~Link	Q_neve	0.	0.	0.	0.	0.	0.
219~Link	Q_manutenzione	0.	0.	0.	0.	0.	0.
219~Link	EQ_X	0.	0.	0.	0.	0.	0.
219~Link	EQ_Y	0.	0.	0.	0.	0.	0.
220~Link	DEAD	0.	0.	0.	0.	0.	0.
220~Link	G1_power station	0.	0.	0.	0.	0.	0.
220~Link	G2_power station	0.	0.	0.	0.	0.	0.
220~Link	Q_power station	0.	0.	0.	0.	0.	0.
220~Link	Q_neve	0.	0.	0.	0.	0.	0.
220~Link	Q_manutenzione	0.	0.	0.	0.	0.	0.
220~Link	EQ_X	0.	0.	0.	0.	0.	0.
220~Link	EQ_Y	0.	0.	0.	0.	0.	0.
221~Link	DEAD	0.	0.	0.	0.	0.	0.
221~Link	G1_power station	0.	0.	0.	0.	0.	0.
221~Link	G2_power station	0.	0.	0.	0.	0.	0.
221~Link	Q_power station	0.	0.	0.	0.	0.	0.
221~Link	Q_neve	0.	0.	0.	0.	0.	0.
221~Link	Q_manutenzione	0.	0.	0.	0.	0.	0.
221~Link	EQ_X	0.	0.	0.	0.	0.	0.
221~Link	EQ_Y	0.	0.	0.	0.	0.	0.
222~Link	DEAD	0.	0.	0.	0.	0.	0.
222~Link	G1_power station	0.	0.	0.	0.	0.	0.
222~Link	G2_power station	0.	0.	0.	0.	0.	0.
222~Link	Q_power station	0.	0.	0.	0.	0.	0.
222~Link	Q_neve	0.	0.	0.	0.	0.	0.
222~Link	Q_manutenzione	0.	0.	0.	0.	0.	0.
222~Link	EQ_X	0.	0.	0.	0.	0.	0.
222~Link	EQ_Y	0.	0.	0.	0.	0.	0.
36~Link	DEAD	0.	0.	0.	0.	0.	0.
36~Link	G1_power station	0.	0.	0.	0.	0.	0.
36~Link	G2_power station	0.	0.	0.	0.	0.	0.

Table 18: Joint Displacements

Joint	OutputCase	U1	U2	U3	R1	R2	R3
		m	m	m	Radians	Radians	Radians
36~Link	Q_power station	0.	0.	0.	0.	0.	0.
36~Link	Q_neve	0.	0.	0.	0.	0.	0.
36~Link	Q_manutenzione	0.	0.	0.	0.	0.	0.
36~Link	EQ_X	0.	0.	0.	0.	0.	0.
36~Link	EQ_Y	0.	0.	0.	0.	0.	0.
224~Link	DEAD	0.	0.	0.	0.	0.	0.
224~Link	G1_power station	0.	0.	0.	0.	0.	0.
224~Link	G2_power station	0.	0.	0.	0.	0.	0.
224~Link	Q_power station	0.	0.	0.	0.	0.	0.
224~Link	Q_neve	0.	0.	0.	0.	0.	0.
224~Link	Q_manutenzione	0.	0.	0.	0.	0.	0.
224~Link	EQ_X	0.	0.	0.	0.	0.	0.
224~Link	EQ_Y	0.	0.	0.	0.	0.	0.
226~Link	DEAD	0.	0.	0.	0.	0.	0.
226~Link	G1_power station	0.	0.	0.	0.	0.	0.
226~Link	G2_power station	0.	0.	0.	0.	0.	0.
226~Link	Q_power station	0.	0.	0.	0.	0.	0.
226~Link	Q_neve	0.	0.	0.	0.	0.	0.
226~Link	Q_manutenzione	0.	0.	0.	0.	0.	0.
226~Link	EQ_X	0.	0.	0.	0.	0.	0.
226~Link	EQ_Y	0.	0.	0.	0.	0.	0.
228~Link	DEAD	0.	0.	0.	0.	0.	0.
228~Link	G1_power station	0.	0.	0.	0.	0.	0.
228~Link	G2_power station	0.	0.	0.	0.	0.	0.
228~Link	Q_power station	0.	0.	0.	0.	0.	0.
228~Link	Q_neve	0.	0.	0.	0.	0.	0.
228~Link	Q_manutenzione	0.	0.	0.	0.	0.	0.
228~Link	EQ_X	0.	0.	0.	0.	0.	0.
228~Link	EQ_Y	0.	0.	0.	0.	0.	0.
223~Link	DEAD	0.	0.	0.	0.	0.	0.
223~Link	G1_power station	0.	0.	0.	0.	0.	0.
223~Link	G2_power station	0.	0.	0.	0.	0.	0.
223~Link	Q_power station	0.	0.	0.	0.	0.	0.
223~Link	Q_neve	0.	0.	0.	0.	0.	0.
223~Link	Q_manutenzione	0.	0.	0.	0.	0.	0.
223~Link	EQ_X	0.	0.	0.	0.	0.	0.
223~Link	EQ_Y	0.	0.	0.	0.	0.	0.
225~Link	DEAD	0.	0.	0.	0.	0.	0.
225~Link	G1_power station	0.	0.	0.	0.	0.	0.
225~Link	G2_power station	0.	0.	0.	0.	0.	0.
225~Link	Q_power station	0.	0.	0.	0.	0.	0.
225~Link	Q_neve	0.	0.	0.	0.	0.	0.
225~Link	Q_manutenzione	0.	0.	0.	0.	0.	0.

Table 18: Joint Displacements

Joint	OutputCase	U1	U2	U3	R1	R2	R3
		m	m	m	Radians	Radians	Radians
225~Link	EQ_X	0.	0.	0.	0.	0.	0.
225~Link	EQ_Y	0.	0.	0.	0.	0.	0.
227~Link	DEAD	0.	0.	0.	0.	0.	0.
227~Link	G1_power station	0.	0.	0.	0.	0.	0.
227~Link	G2_power station	0.	0.	0.	0.	0.	0.
227~Link	Q_power station	0.	0.	0.	0.	0.	0.
227~Link	Q_neve	0.	0.	0.	0.	0.	0.
227~Link	Q_manutenzione	0.	0.	0.	0.	0.	0.
227~Link	EQ_X	0.	0.	0.	0.	0.	0.
227~Link	EQ_Y	0.	0.	0.	0.	0.	0.
229~Link	DEAD	0.	0.	0.	0.	0.	0.
229~Link	G1_power station	0.	0.	0.	0.	0.	0.
229~Link	G2_power station	0.	0.	0.	0.	0.	0.
229~Link	Q_power station	0.	0.	0.	0.	0.	0.
229~Link	Q_neve	0.	0.	0.	0.	0.	0.
229~Link	Q_manutenzione	0.	0.	0.	0.	0.	0.
229~Link	EQ_X	0.	0.	0.	0.	0.	0.
229~Link	EQ_Y	0.	0.	0.	0.	0.	0.
230~Link	DEAD	0.	0.	0.	0.	0.	0.
230~Link	G1_power station	0.	0.	0.	0.	0.	0.
230~Link	G2_power station	0.	0.	0.	0.	0.	0.
230~Link	Q_power station	0.	0.	0.	0.	0.	0.
230~Link	Q_neve	0.	0.	0.	0.	0.	0.
230~Link	Q_manutenzione	0.	0.	0.	0.	0.	0.
230~Link	EQ_X	0.	0.	0.	0.	0.	0.
230~Link	EQ_Y	0.	0.	0.	0.	0.	0.
37~Link	DEAD	0.	0.	0.	0.	0.	0.
37~Link	G1_power station	0.	0.	0.	0.	0.	0.
37~Link	G2_power station	0.	0.	0.	0.	0.	0.
37~Link	Q_power station	0.	0.	0.	0.	0.	0.
37~Link	Q_neve	0.	0.	0.	0.	0.	0.
37~Link	Q_manutenzione	0.	0.	0.	0.	0.	0.
37~Link	EQ_X	0.	0.	0.	0.	0.	0.
37~Link	EQ_Y	0.	0.	0.	0.	0.	0.
232~Link	DEAD	0.	0.	0.	0.	0.	0.
232~Link	G1_power station	0.	0.	0.	0.	0.	0.
232~Link	G2_power station	0.	0.	0.	0.	0.	0.
232~Link	Q_power station	0.	0.	0.	0.	0.	0.
232~Link	Q_neve	0.	0.	0.	0.	0.	0.
232~Link	Q_manutenzione	0.	0.	0.	0.	0.	0.
232~Link	EQ_X	0.	0.	0.	0.	0.	0.
232~Link	EQ_Y	0.	0.	0.	0.	0.	0.
234~Link	DEAD	0.	0.	0.	0.	0.	0.

Table 18: Joint Displacements

Joint	OutputCase	U1	U2	U3	R1	R2	R3
		m	m	m	Radians	Radians	Radians
234~Link	G1_power station	0.	0.	0.	0.	0.	0.
234~Link	G2_power station	0.	0.	0.	0.	0.	0.
234~Link	Q_power station	0.	0.	0.	0.	0.	0.
234~Link	Q_neve	0.	0.	0.	0.	0.	0.
234~Link	Q_manutenzione	0.	0.	0.	0.	0.	0.
234~Link	EQ_X	0.	0.	0.	0.	0.	0.
234~Link	EQ_Y	0.	0.	0.	0.	0.	0.
236~Link	DEAD	0.	0.	0.	0.	0.	0.
236~Link	G1_power station	0.	0.	0.	0.	0.	0.
236~Link	G2_power station	0.	0.	0.	0.	0.	0.
236~Link	Q_power station	0.	0.	0.	0.	0.	0.
236~Link	Q_neve	0.	0.	0.	0.	0.	0.
236~Link	Q_manutenzione	0.	0.	0.	0.	0.	0.
236~Link	EQ_X	0.	0.	0.	0.	0.	0.
236~Link	EQ_Y	0.	0.	0.	0.	0.	0.
231~Link	DEAD	0.	0.	0.	0.	0.	0.
231~Link	G1_power station	0.	0.	0.	0.	0.	0.
231~Link	G2_power station	0.	0.	0.	0.	0.	0.
231~Link	Q_power station	0.	0.	0.	0.	0.	0.
231~Link	Q_neve	0.	0.	0.	0.	0.	0.
231~Link	Q_manutenzione	0.	0.	0.	0.	0.	0.
231~Link	EQ_X	0.	0.	0.	0.	0.	0.
231~Link	EQ_Y	0.	0.	0.	0.	0.	0.
233~Link	DEAD	0.	0.	0.	0.	0.	0.
233~Link	G1_power station	0.	0.	0.	0.	0.	0.
233~Link	G2_power station	0.	0.	0.	0.	0.	0.
233~Link	Q_power station	0.	0.	0.	0.	0.	0.
233~Link	Q_neve	0.	0.	0.	0.	0.	0.
233~Link	Q_manutenzione	0.	0.	0.	0.	0.	0.
233~Link	EQ_X	0.	0.	0.	0.	0.	0.
233~Link	EQ_Y	0.	0.	0.	0.	0.	0.
235~Link	DEAD	0.	0.	0.	0.	0.	0.
235~Link	G1_power station	0.	0.	0.	0.	0.	0.
235~Link	G2_power station	0.	0.	0.	0.	0.	0.
235~Link	Q_power station	0.	0.	0.	0.	0.	0.
235~Link	Q_neve	0.	0.	0.	0.	0.	0.
235~Link	Q_manutenzione	0.	0.	0.	0.	0.	0.
235~Link	EQ_X	0.	0.	0.	0.	0.	0.
235~Link	EQ_Y	0.	0.	0.	0.	0.	0.
237~Link	DEAD	0.	0.	0.	0.	0.	0.
237~Link	G1_power station	0.	0.	0.	0.	0.	0.
237~Link	G2_power station	0.	0.	0.	0.	0.	0.
237~Link	Q_power station	0.	0.	0.	0.	0.	0.

Table 18: Joint Displacements

Joint	OutputCase	U1	U2	U3	R1	R2	R3
		m	m	m	Radians	Radians	Radians
237~Link	Q_neve	0.	0.	0.	0.	0.	0.
237~Link	Q_manutenzione	0.	0.	0.	0.	0.	0.
237~Link	EQ_X	0.	0.	0.	0.	0.	0.
237~Link	EQ_Y	0.	0.	0.	0.	0.	0.
238~Link	DEAD	0.	0.	0.	0.	0.	0.
238~Link	G1_power station	0.	0.	0.	0.	0.	0.
238~Link	G2_power station	0.	0.	0.	0.	0.	0.
238~Link	Q_power station	0.	0.	0.	0.	0.	0.
238~Link	Q_neve	0.	0.	0.	0.	0.	0.
238~Link	Q_manutenzione	0.	0.	0.	0.	0.	0.
238~Link	EQ_X	0.	0.	0.	0.	0.	0.
238~Link	EQ_Y	0.	0.	0.	0.	0.	0.
239~Link	DEAD	0.	0.	0.	0.	0.	0.
239~Link	G1_power station	0.	0.	0.	0.	0.	0.
239~Link	G2_power station	0.	0.	0.	0.	0.	0.
239~Link	Q_power station	0.	0.	0.	0.	0.	0.
239~Link	Q_neve	0.	0.	0.	0.	0.	0.
239~Link	Q_manutenzione	0.	0.	0.	0.	0.	0.
239~Link	EQ_X	0.	0.	0.	0.	0.	0.
239~Link	EQ_Y	0.	0.	0.	0.	0.	0.
240~Link	DEAD	0.	0.	0.	0.	0.	0.
240~Link	G1_power station	0.	0.	0.	0.	0.	0.
240~Link	G2_power station	0.	0.	0.	0.	0.	0.
240~Link	Q_power station	0.	0.	0.	0.	0.	0.
240~Link	Q_neve	0.	0.	0.	0.	0.	0.
240~Link	Q_manutenzione	0.	0.	0.	0.	0.	0.
240~Link	EQ_X	0.	0.	0.	0.	0.	0.
240~Link	EQ_Y	0.	0.	0.	0.	0.	0.
241~Link	DEAD	0.	0.	0.	0.	0.	0.
241~Link	G1_power station	0.	0.	0.	0.	0.	0.
241~Link	G2_power station	0.	0.	0.	0.	0.	0.
241~Link	Q_power station	0.	0.	0.	0.	0.	0.
241~Link	Q_neve	0.	0.	0.	0.	0.	0.
241~Link	Q_manutenzione	0.	0.	0.	0.	0.	0.
241~Link	EQ_X	0.	0.	0.	0.	0.	0.
241~Link	EQ_Y	0.	0.	0.	0.	0.	0.
242~Link	DEAD	0.	0.	0.	0.	0.	0.
242~Link	G1_power station	0.	0.	0.	0.	0.	0.
242~Link	G2_power station	0.	0.	0.	0.	0.	0.
242~Link	Q_power station	0.	0.	0.	0.	0.	0.
242~Link	Q_neve	0.	0.	0.	0.	0.	0.
242~Link	Q_manutenzione	0.	0.	0.	0.	0.	0.
242~Link	EQ_X	0.	0.	0.	0.	0.	0.

Table 18: Joint Displacements

Joint	OutputCase	U1	U2	U3	R1	R2	R3
		m	m	m	Radians	Radians	Radians
242~Link	EQ_Y	0.	0.	0.	0.	0.	0.
38~Link	DEAD	0.	0.	0.	0.	0.	0.
38~Link	G1_power station	0.	0.	0.	0.	0.	0.
38~Link	G2_power station	0.	0.	0.	0.	0.	0.
38~Link	Q_power station	0.	0.	0.	0.	0.	0.
38~Link	Q_neve	0.	0.	0.	0.	0.	0.
38~Link	Q_manutenzione	0.	0.	0.	0.	0.	0.
38~Link	EQ_X	0.	0.	0.	0.	0.	0.
38~Link	EQ_Y	0.	0.	0.	0.	0.	0.
244~Link	DEAD	0.	0.	0.	0.	0.	0.
244~Link	G1_power station	0.	0.	0.	0.	0.	0.
244~Link	G2_power station	0.	0.	0.	0.	0.	0.
244~Link	Q_power station	0.	0.	0.	0.	0.	0.
244~Link	Q_neve	0.	0.	0.	0.	0.	0.
244~Link	Q_manutenzione	0.	0.	0.	0.	0.	0.
244~Link	EQ_X	0.	0.	0.	0.	0.	0.
244~Link	EQ_Y	0.	0.	0.	0.	0.	0.
246~Link	DEAD	0.	0.	0.	0.	0.	0.
246~Link	G1_power station	0.	0.	0.	0.	0.	0.
246~Link	G2_power station	0.	0.	0.	0.	0.	0.
246~Link	Q_power station	0.	0.	0.	0.	0.	0.
246~Link	Q_neve	0.	0.	0.	0.	0.	0.
246~Link	Q_manutenzione	0.	0.	0.	0.	0.	0.
246~Link	EQ_X	0.	0.	0.	0.	0.	0.
246~Link	EQ_Y	0.	0.	0.	0.	0.	0.
248~Link	DEAD	0.	0.	0.	0.	0.	0.
248~Link	G1_power station	0.	0.	0.	0.	0.	0.
248~Link	G2_power station	0.	0.	0.	0.	0.	0.
248~Link	Q_power station	0.	0.	0.	0.	0.	0.
248~Link	Q_neve	0.	0.	0.	0.	0.	0.
248~Link	Q_manutenzione	0.	0.	0.	0.	0.	0.
248~Link	EQ_X	0.	0.	0.	0.	0.	0.
248~Link	EQ_Y	0.	0.	0.	0.	0.	0.
243~Link	DEAD	0.	0.	0.	0.	0.	0.
243~Link	G1_power station	0.	0.	0.	0.	0.	0.
243~Link	G2_power station	0.	0.	0.	0.	0.	0.
243~Link	Q_power station	0.	0.	0.	0.	0.	0.
243~Link	Q_neve	0.	0.	0.	0.	0.	0.
243~Link	Q_manutenzione	0.	0.	0.	0.	0.	0.
243~Link	EQ_X	0.	0.	0.	0.	0.	0.
243~Link	EQ_Y	0.	0.	0.	0.	0.	0.
245~Link	DEAD	0.	0.	0.	0.	0.	0.
245~Link	G1_power station	0.	0.	0.	0.	0.	0.

Table 18: Joint Displacements

Joint	OutputCase	U1	U2	U3	R1	R2	R3
		m	m	m	Radians	Radians	Radians
245~Link	G2_power station	0.	0.	0.	0.	0.	0.
245~Link	Q_power station	0.	0.	0.	0.	0.	0.
245~Link	Q_neve	0.	0.	0.	0.	0.	0.
245~Link	Q_manutenzione	0.	0.	0.	0.	0.	0.
245~Link	EQ_X	0.	0.	0.	0.	0.	0.
245~Link	EQ_Y	0.	0.	0.	0.	0.	0.
247~Link	DEAD	0.	0.	0.	0.	0.	0.
247~Link	G1_power station	0.	0.	0.	0.	0.	0.
247~Link	G2_power station	0.	0.	0.	0.	0.	0.
247~Link	Q_power station	0.	0.	0.	0.	0.	0.
247~Link	Q_neve	0.	0.	0.	0.	0.	0.
247~Link	Q_manutenzione	0.	0.	0.	0.	0.	0.
247~Link	EQ_X	0.	0.	0.	0.	0.	0.
247~Link	EQ_Y	0.	0.	0.	0.	0.	0.

Table 19: Joint Reactions

Table 19: Joint Reactions

Joint	OutputCase	F1	F2	F3	M1	M2	M3
		KN	KN	KN	KN-m	KN-m	KN-m
1	DEAD	0.	0.	0.469	0.	0.	0.
1	G1_power station	0.	0.	0.	0.	0.	0.
1	G2_power station	0.	0.	2.085	0.	0.	0.
1	Q_power station	0.	0.	0.077	0.	0.	0.
1	Q_neve	0.	0.	0.25	0.	0.	0.
1	Q_manutenzione	0.	0.	0.077	0.	0.	0.
1	EQ_X	-1.331	-0.046	-0.554	0.	0.	0.
1	EQ_Y	0.012	-0.518	-0.532	0.	0.	0.
2	DEAD	0.	0.	0.469	0.	0.	0.
2	G1_power station	0.	0.	0.	0.	0.	0.
2	G2_power station	0.	0.	1.841	0.	0.	0.
2	Q_power station	0.	0.	0.068	0.	0.	0.
2	Q_neve	0.	0.	0.222	0.	0.	0.
2	Q_manutenzione	0.	0.	0.068	0.	0.	0.
2	EQ_X	-2.66	0.09	0.412	0.	0.	0.
2	EQ_Y	0.019	-0.918	-0.484	0.	0.	0.
3	DEAD	0.	0.	0.469	0.	0.	0.
3	G1_power station	0.	0.	0.	0.	0.	0.
3	G2_power station	0.	0.	1.841	0.	0.	0.
3	Q_power station	0.	0.	0.068	0.	0.	0.
3	Q_neve	0.	0.	0.222	0.	0.	0.

Table 19: Joint Reactions

Joint	OutputCase	F1	F2	F3	M1	M2	M3
		KN	KN	KN	KN-m	KN-m	KN-m
3	Q_manutenzione	0.	0.	0.068	0.	0.	0.
3	EQ_X	-1.376	0.044	0.412	0.	0.	0.
3	EQ_Y	-0.011	-0.459	0.484	0.	0.	0.
4	DEAD	0.	0.	0.469	0.	0.	0.
4	G1_power station	0.	0.	0.	0.	0.	0.
4	G2_power station	0.	0.	2.085	0.	0.	0.
4	Q_power station	0.	0.	0.077	0.	0.	0.
4	Q_neve	0.	0.	0.25	0.	0.	0.
4	Q_manutenzione	0.	0.	0.077	0.	0.	0.
4	EQ_X	-1.376	-0.046	-0.554	0.	0.	0.
4	EQ_Y	-0.014	-0.518	0.532	0.	0.	0.
5	DEAD	0.	0.	1.67	0.	0.	0.
5	G1_power station	0.	0.	0.	0.	0.	0.
5	G2_power station	0.	0.	5.349	0.	0.	0.
5	Q_power station	0.	0.	0.198	0.	0.	0.
5	Q_neve	0.	0.	0.663	0.	0.	0.
5	Q_manutenzione	0.	0.	0.198	0.	0.	0.
5	EQ_X	0.	0.	-0.895	0.	0.	0.
5	EQ_Y	0.	0.	1.048	0.	0.	0.
6	DEAD	0.	0.	1.736	0.	0.	0.
6	G1_power station	0.	0.	0.	0.	0.	0.
6	G2_power station	0.	0.	5.101	0.	0.	0.
6	Q_power station	0.	0.	0.189	0.	0.	0.
6	Q_neve	0.	0.	0.626	0.	0.	0.
6	Q_manutenzione	0.	0.	0.189	0.	0.	0.
6	EQ_X	0.	0.	0.716	0.	0.	0.
6	EQ_Y	0.	0.	-0.97	0.	0.	0.
7	DEAD	0.	0.	0.469	0.	0.	0.
7	G1_power station	0.	0.	0.	0.	0.	0.
7	G2_power station	0.	0.	1.47	0.	0.	0.
7	Q_power station	0.	0.	0.054	0.	0.	0.
7	Q_neve	0.	0.	0.184	0.	0.	0.
7	Q_manutenzione	0.	0.	0.054	0.	0.	0.
7	EQ_X	-1.331	-0.046	-0.258	0.	0.	0.
7	EQ_Y	0.014	-0.516	-0.344	0.	0.	0.
8	DEAD	0.	0.	0.844	0.	0.	0.
8	G1_power station	0.	0.	0.	0.	0.	0.
8	G2_power station	0.	0.	2.115	0.	0.	0.
8	Q_power station	0.	0.	0.078	0.	0.	0.
8	Q_neve	0.	0.	0.277	0.	0.	0.
8	Q_manutenzione	0.	0.	0.078	0.	0.	0.
8	EQ_X	0.	-0.103	-0.296	0.	0.	0.
8	EQ_Y	0.	-1.331	-0.605	0.	0.	0.

Table 19: Joint Reactions

Joint	OutputCase	F1	F2	F3	M1	M2	M3
		KN	KN	KN	KN-m	KN-m	KN-m
9	DEAD	0.	0.	1.67	0.	0.	0.
9	G1_power station	0.	0.	0.	0.	0.	0.
9	G2_power station	0.	0.	4.133	0.	0.	0.
9	Q_power station	0.	0.	0.153	0.	0.	0.
9	Q_neve	0.	0.	0.539	0.	0.	0.
9	Q_manutenzione	0.	0.	0.153	0.	0.	0.
9	EQ_X	0.	0.	-0.59	0.	0.	0.
9	EQ_Y	0.	0.	-0.814	0.	0.	0.
10	DEAD	0.	0.	0.928	0.	0.	0.
10	G1_power station	0.	0.	0.	0.	0.	0.
10	G2_power station	0.	0.	2.871	0.	0.	0.
10	Q_power station	0.	0.	0.106	0.	0.	0.
10	Q_neve	0.	0.	0.358	0.	0.	0.
10	Q_manutenzione	0.	0.	0.106	0.	0.	0.
10	EQ_X	-2.648	0.	-0.512	0.	0.	0.
10	EQ_Y	0.019	0.	-0.466	0.	0.	0.
11	DEAD	0.	0.	0.877	0.	0.	0.
11	G1_power station	0.	0.	0.	0.	0.	0.
11	G2_power station	0.	0.	1.93	0.	0.	0.
11	Q_power station	0.	0.	0.071	0.	0.	0.
11	Q_neve	0.	0.	0.247	0.	0.	0.
11	Q_manutenzione	0.	0.	0.071	0.	0.	0.
11	EQ_X	-1.331	0.141	0.215	0.	0.	0.
11	EQ_Y	0.013	-1.719	-0.566	0.	0.	0.
12	DEAD	0.	0.	0.469	0.	0.	0.
12	G1_power station	0.	0.	0.	0.	0.	0.
12	G2_power station	0.	0.	1.245	0.	0.	0.
12	Q_power station	0.	0.	0.046	0.	0.	0.
12	Q_neve	0.	0.	0.154	0.	0.	0.
12	Q_manutenzione	0.	0.	0.046	0.	0.	0.
12	EQ_X	-2.661	0.088	0.175	0.	0.	0.
12	EQ_Y	0.026	-0.91	-0.31	0.	0.	0.
13	DEAD	0.	0.	0.928	0.	0.	0.
13	G1_power station	0.	0.	0.	0.	0.	0.
13	G2_power station	0.	0.	2.428	0.	0.	0.
13	Q_power station	0.	0.	0.09	0.	0.	0.
13	Q_neve	0.	0.	0.299	0.	0.	0.
13	Q_manutenzione	0.	0.	0.09	0.	0.	0.
13	EQ_X	-2.648	0.	0.35	0.	0.	0.
13	EQ_Y	0.018	0.	-0.417	0.	0.	0.
14	DEAD	0.	0.	1.736	0.	0.	0.
14	G1_power station	0.	0.	0.	0.	0.	0.
14	G2_power station	0.	0.	3.774	0.	0.	0.

Table 19: Joint Reactions

Joint	OutputCase	F1	F2	F3	M1	M2	M3
		KN	KN	KN	KN-m	KN-m	KN-m
14	Q_power station	0.	0.	0.14	0.	0.	0.
14	Q_neve	0.	0.	0.482	0.	0.	0.
14	Q_manutenzione	0.	0.	0.14	0.	0.	0.
14	EQ_X	0.	0.	0.436	0.	0.	0.
14	EQ_Y	0.	0.	-0.759	0.	0.	0.
15	DEAD	0.	0.	0.928	0.	0.	0.
15	G1_power station	0.	0.	0.	0.	0.	0.
15	G2_power station	0.	0.	2.428	0.	0.	0.
15	Q_power station	0.	0.	0.09	0.	0.	0.
15	Q_neve	0.	0.	0.299	0.	0.	0.
15	Q_manutenzione	0.	0.	0.09	0.	0.	0.
15	EQ_X	-2.71	0.	0.35	0.	0.	0.
15	EQ_Y	-0.022	0.	0.417	0.	0.	0.
16	DEAD	0.	0.	0.469	0.	0.	0.
16	G1_power station	0.	0.	0.	0.	0.	0.
16	G2_power station	0.	0.	1.245	0.	0.	0.
16	Q_power station	0.	0.	0.046	0.	0.	0.
16	Q_neve	0.	0.	0.154	0.	0.	0.
16	Q_manutenzione	0.	0.	0.046	0.	0.	0.
16	EQ_X	-1.375	0.044	0.175	0.	0.	0.
16	EQ_Y	-0.015	-0.455	0.31	0.	0.	0.
17	DEAD	0.	0.	0.877	0.	0.	0.
17	G1_power station	0.	0.	0.	0.	0.	0.
17	G2_power station	0.	0.	1.93	0.	0.	0.
17	Q_power station	0.	0.	0.071	0.	0.	0.
17	Q_neve	0.	0.	0.247	0.	0.	0.
17	Q_manutenzione	0.	0.	0.071	0.	0.	0.
17	EQ_X	0.	0.071	0.215	0.	0.	0.
17	EQ_Y	0.	-0.859	0.566	0.	0.	0.
18	DEAD	0.	0.	1.736	0.	0.	0.
18	G1_power station	0.	0.	0.	0.	0.	0.
18	G2_power station	0.	0.	3.774	0.	0.	0.
18	Q_power station	0.	0.	0.14	0.	0.	0.
18	Q_neve	0.	0.	0.482	0.	0.	0.
18	Q_manutenzione	0.	0.	0.14	0.	0.	0.
18	EQ_X	0.	0.	0.436	0.	0.	0.
18	EQ_Y	0.	0.	0.759	0.	0.	0.
19	DEAD	0.	0.	0.844	0.	0.	0.
19	G1_power station	0.	0.	0.	0.	0.	0.
19	G2_power station	0.	0.	2.115	0.	0.	0.
19	Q_power station	0.	0.	0.078	0.	0.	0.
19	Q_neve	0.	0.	0.277	0.	0.	0.
19	Q_manutenzione	0.	0.	0.078	0.	0.	0.

Table 19: Joint Reactions

Joint	OutputCase	F1	F2	F3	M1	M2	M3
		KN	KN	KN	KN-m	KN-m	KN-m
19	EQ_X	0.	-0.071	-0.296	0.	0.	0.
19	EQ_Y	0.	-0.921	0.605	0.	0.	0.
20	DEAD	0.	0.	0.469	0.	0.	0.
20	G1_power station	0.	0.	0.	0.	0.	0.
20	G2_power station	0.	0.	1.47	0.	0.	0.
20	Q_power station	0.	0.	0.054	0.	0.	0.
20	Q_neve	0.	0.	0.184	0.	0.	0.
20	Q_manutenzione	0.	0.	0.054	0.	0.	0.
20	EQ_X	-1.375	-0.046	-0.258	0.	0.	0.
20	EQ_Y	-0.016	-0.516	0.344	0.	0.	0.
21	DEAD	0.	0.	0.928	0.	0.	0.
21	G1_power station	0.	0.	0.	0.	0.	0.
21	G2_power station	0.	0.	2.871	0.	0.	0.
21	Q_power station	0.	0.	0.106	0.	0.	0.
21	Q_neve	0.	0.	0.358	0.	0.	0.
21	Q_manutenzione	0.	0.	0.106	0.	0.	0.
21	EQ_X	-2.71	0.	-0.512	0.	0.	0.
21	EQ_Y	-0.023	0.	0.466	0.	0.	0.
22	DEAD	0.	0.	1.67	0.	0.	0.
22	G1_power station	0.	0.	0.	0.	0.	0.
22	G2_power station	0.	0.	4.133	0.	0.	0.
22	Q_power station	0.	0.	0.153	0.	0.	0.
22	Q_neve	0.	0.	0.539	0.	0.	0.
22	Q_manutenzione	0.	0.	0.153	0.	0.	0.
22	EQ_X	0.	0.	-0.59	0.	0.	0.
22	EQ_Y	0.	0.	0.814	0.	0.	0.
23	DEAD	0.	0.	1.164	0.	0.	0.
23	G1_power station	0.	0.	0.	0.	0.	0.
23	G2_power station	0.	0.	1.166	0.	0.	0.
23	Q_power station	0.	0.	0.043	0.	0.	0.
23	Q_neve	0.	0.	0.201	0.	0.	0.
23	Q_manutenzione	0.	0.	0.043	0.	0.	0.
23	EQ_X	0.	0.	5.577E-03	0.	0.	0.
23	EQ_Y	0.	0.	0.503	0.	0.	0.
24	DEAD	0.	0.	1.23	0.	0.	0.
24	G1_power station	0.	0.	0.	0.	0.	0.
24	G2_power station	0.	0.	0.147	0.	0.	0.
24	Q_power station	0.	0.	5.447E-03	0.	0.	0.
24	Q_neve	0.	0.	0.097	0.	0.	0.
24	Q_manutenzione	0.	0.	5.447E-03	0.	0.	0.
24	EQ_X	0.	0.	0.044	0.	0.	0.
24	EQ_Y	0.	0.	-0.439	0.	0.	0.
25	DEAD	0.	0.	1.164	0.	0.	0.

Table 19: Joint Reactions

Joint	OutputCase	F1	F2	F3	M1	M2	M3
		KN	KN	KN	KN-m	KN-m	KN-m
25	G1_power station	0.	0.	0.	0.	0.	0.
25	G2_power station	0.	0.	0.856	0.	0.	0.
25	Q_power station	0.	0.	0.032	0.	0.	0.
25	Q_neve	0.	0.	0.176	0.	0.	0.
25	Q_manutenzione	0.	0.	0.032	0.	0.	0.
25	EQ_X	0.	0.	0.51	0.	0.	0.
25	EQ_Y	0.	0.	0.474	0.	0.	0.
26	DEAD	0.	0.	1.23	0.	0.	0.
26	G1_power station	0.	0.	0.	0.	0.	0.
26	G2_power station	0.	0.	-0.587	0.	0.	0.
26	Q_power station	0.	0.	-0.022	0.	0.	0.
26	Q_neve	0.	0.	0.031	0.	0.	0.
26	Q_manutenzione	0.	0.	-0.022	0.	0.	0.
26	EQ_X	0.	0.	0.091	0.	0.	0.
26	EQ_Y	0.	0.	-0.22	0.	0.	0.
27	DEAD	0.	0.	0.83	0.	0.	0.
27	G1_power station	0.	0.	0.	0.	0.	0.
27	G2_power station	0.	0.	-0.298	0.	0.	0.
27	Q_power station	0.	0.	-0.011	0.	0.	0.
27	Q_neve	0.	0.	0.045	0.	0.	0.
27	Q_manutenzione	0.	0.	-0.011	0.	0.	0.
27	EQ_X	0.	-6.890E-03	0.057	0.	0.	0.
27	EQ_Y	0.	-1.701	-0.251	0.	0.	0.
28	DEAD	0.	0.	0.797	0.	0.	0.
28	G1_power station	0.	0.	0.	0.	0.	0.
28	G2_power station	0.	0.	0.777	0.	0.	0.
28	Q_power station	0.	0.	0.029	0.	0.	0.
28	Q_neve	0.	0.	0.152	0.	0.	0.
28	Q_manutenzione	0.	0.	0.029	0.	0.	0.
28	EQ_X	0.	-0.04	0.316	0.	0.	0.
28	EQ_Y	0.	-0.857	0.517	0.	0.	0.
29	DEAD	0.	0.	1.23	0.	0.	0.
29	G1_power station	0.	0.	0.	0.	0.	0.
29	G2_power station	0.	0.	-0.587	0.	0.	0.
29	Q_power station	0.	0.	-0.022	0.	0.	0.
29	Q_neve	0.	0.	0.031	0.	0.	0.
29	Q_manutenzione	0.	0.	-0.022	0.	0.	0.
29	EQ_X	0.	0.	0.091	0.	0.	0.
29	EQ_Y	0.	0.	0.22	0.	0.	0.
30	DEAD	0.	0.	1.164	0.	0.	0.
30	G1_power station	0.	0.	0.	0.	0.	0.
30	G2_power station	0.	0.	0.856	0.	0.	0.
30	Q_power station	0.	0.	0.032	0.	0.	0.

Table 19: Joint Reactions

Joint	OutputCase	F1	F2	F3	M1	M2	M3
		KN	KN	KN	KN-m	KN-m	KN-m
30	Q_neve	0.	0.	0.176	0.	0.	0.
30	Q_manutenzione	0.	0.	0.032	0.	0.	0.
30	EQ_X	0.	0.	0.51	0.	0.	0.
30	EQ_Y	0.	0.	-0.474	0.	0.	0.
31	DEAD	0.	0.	0.83	0.	0.	0.
31	G1_power station	0.	0.	0.	0.	0.	0.
31	G2_power station	0.	0.	0.126	0.	0.	0.
31	Q_power station	0.	0.	4.659E-03	0.	0.	0.
31	Q_neve	0.	0.	0.071	0.	0.	0.
31	Q_manutenzione	0.	0.	4.659E-03	0.	0.	0.
31	EQ_X	0.	-5.084E-03	0.031	0.	0.	0.
31	EQ_Y	0.	-1.716	-0.427	0.	0.	0.
32	DEAD	0.	0.	0.797	0.	0.	0.
32	G1_power station	0.	0.	0.	0.	0.	0.
32	G2_power station	0.	0.	0.832	0.	0.	0.
32	Q_power station	0.	0.	0.031	0.	0.	0.
32	Q_neve	0.	0.	0.144	0.	0.	0.
32	Q_manutenzione	0.	0.	0.031	0.	0.	0.
32	EQ_X	0.	-0.041	-2.951E-03	0.	0.	0.
32	EQ_Y	0.	-0.852	0.494	0.	0.	0.
33	DEAD	0.	0.	1.164	0.	0.	0.
33	G1_power station	0.	0.	0.	0.	0.	0.
33	G2_power station	0.	0.	1.166	0.	0.	0.
33	Q_power station	0.	0.	0.043	0.	0.	0.
33	Q_neve	0.	0.	0.201	0.	0.	0.
33	Q_manutenzione	0.	0.	0.043	0.	0.	0.
33	EQ_X	0.	0.	5.577E-03	0.	0.	0.
33	EQ_Y	0.	0.	-0.503	0.	0.	0.
34	DEAD	0.	0.	1.23	0.	0.	0.
34	G1_power station	0.	0.	0.	0.	0.	0.
34	G2_power station	0.	0.	0.147	0.	0.	0.
34	Q_power station	0.	0.	5.447E-03	0.	0.	0.
34	Q_neve	0.	0.	0.097	0.	0.	0.
34	Q_manutenzione	0.	0.	5.447E-03	0.	0.	0.
34	EQ_X	0.	0.	0.044	0.	0.	0.
34	EQ_Y	0.	0.	0.439	0.	0.	0.
35	DEAD	0.	0.	0.797	0.	0.	0.
35	G1_power station	0.	0.	0.	0.	0.	0.
35	G2_power station	0.	0.	0.777	0.	0.	0.
35	Q_power station	0.	0.	0.029	0.	0.	0.
35	Q_neve	0.	0.	0.152	0.	0.	0.
35	Q_manutenzione	0.	0.	0.029	0.	0.	0.
35	EQ_X	0.	-0.081	0.316	0.	0.	0.

Table 19: Joint Reactions

Joint	OutputCase	F1	F2	F3	M1	M2	M3
		KN	KN	KN	KN-m	KN-m	KN-m
35	EQ_Y	0.	-1.712	-0.517	0.	0.	0.
36	DEAD	0.	0.	0.83	0.	0.	0.
36	G1_power station	0.	0.	0.	0.	0.	0.
36	G2_power station	0.	0.	-0.298	0.	0.	0.
36	Q_power station	0.	0.	-0.011	0.	0.	0.
36	Q_neve	0.	0.	0.045	0.	0.	0.
36	Q_manutenzione	0.	0.	-0.011	0.	0.	0.
36	EQ_X	0.	-3.531E-03	0.057	0.	0.	0.
36	EQ_Y	0.	-0.851	0.251	0.	0.	0.
37	DEAD	0.	0.	0.797	0.	0.	0.
37	G1_power station	0.	0.	0.	0.	0.	0.
37	G2_power station	0.	0.	0.832	0.	0.	0.
37	Q_power station	0.	0.	0.031	0.	0.	0.
37	Q_neve	0.	0.	0.144	0.	0.	0.
37	Q_manutenzione	0.	0.	0.031	0.	0.	0.
37	EQ_X	0.	-0.082	-2.951E-03	0.	0.	0.
37	EQ_Y	0.	-1.704	-0.494	0.	0.	0.
38	DEAD	0.	0.	0.83	0.	0.	0.
38	G1_power station	0.	0.	0.	0.	0.	0.
38	G2_power station	0.	0.	0.126	0.	0.	0.
38	Q_power station	0.	0.	4.659E-03	0.	0.	0.
38	Q_neve	0.	0.	0.071	0.	0.	0.
38	Q_manutenzione	0.	0.	4.659E-03	0.	0.	0.
38	EQ_X	0.	-2.556E-03	0.031	0.	0.	0.
38	EQ_Y	0.	-0.858	0.427	0.	0.	0.
39	DEAD	0.	0.	0.918	0.	0.	0.
39	G1_power station	0.	0.	0.	0.	0.	0.
39	G2_power station	0.	0.	3.11	0.	0.	0.
39	Q_power station	0.	0.	0.115	0.	0.	0.
39	Q_neve	0.	0.	0.373	0.	0.	0.
39	Q_manutenzione	0.	0.	0.115	0.	0.	0.
39	EQ_X	-2.633	0.	0.758	0.	0.	0.
39	EQ_Y	7.353E-03	0.	-0.253	0.	0.	0.
40	DEAD	0.	0.	1.719	0.	0.	0.
40	G1_power station	0.	0.	0.	0.	0.	0.
40	G2_power station	0.	0.	4.557	0.	0.	0.
40	Q_power station	0.	0.	0.169	0.	0.	0.
40	Q_neve	0.	0.	0.56	0.	0.	0.
40	Q_manutenzione	0.	0.	0.169	0.	0.	0.
40	EQ_X	0.	0.	0.7	0.	0.	0.
40	EQ_Y	0.	0.	-0.405	0.	0.	0.
41	DEAD	0.	0.	0.918	0.	0.	0.
41	G1_power station	0.	0.	0.	0.	0.	0.

Table 19: Joint Reactions

Joint	OutputCase	F1	F2	F3	M1	M2	M3
		KN	KN	KN	KN-m	KN-m	KN-m
41	G2_power station	0.	0.	2.914	0.	0.	0.
41	Q_power station	0.	0.	0.108	0.	0.	0.
41	Q_neve	0.	0.	0.351	0.	0.	0.
41	Q_manutenzione	0.	0.	0.108	0.	0.	0.
41	EQ_X	-2.645	0.	0.702	0.	0.	0.
41	EQ_Y	1.754E-03	0.	-0.067	0.	0.	0.
42	DEAD	0.	0.	1.719	0.	0.	0.
42	G1_power station	0.	0.	0.	0.	0.	0.
42	G2_power station	0.	0.	4.231	0.	0.	0.
42	Q_power station	0.	0.	0.157	0.	0.	0.
42	Q_neve	0.	0.	0.521	0.	0.	0.
42	Q_manutenzione	0.	0.	0.157	0.	0.	0.
42	EQ_X	0.	0.	0.683	0.	0.	0.
42	EQ_Y	0.	0.	-0.116	0.	0.	0.
43	DEAD	0.	0.	0.918	0.	0.	0.
43	G1_power station	0.	0.	0.	0.	0.	0.
43	G2_power station	0.	0.	2.914	0.	0.	0.
43	Q_power station	0.	0.	0.108	0.	0.	0.
43	Q_neve	0.	0.	0.351	0.	0.	0.
43	Q_manutenzione	0.	0.	0.108	0.	0.	0.
43	EQ_X	-2.658	0.	0.702	0.	0.	0.
43	EQ_Y	-4.014E-03	0.	0.067	0.	0.	0.
44	DEAD	0.	0.	1.719	0.	0.	0.
44	G1_power station	0.	0.	0.	0.	0.	0.
44	G2_power station	0.	0.	4.231	0.	0.	0.
44	Q_power station	0.	0.	0.157	0.	0.	0.
44	Q_neve	0.	0.	0.521	0.	0.	0.
44	Q_manutenzione	0.	0.	0.157	0.	0.	0.
44	EQ_X	0.	0.	0.683	0.	0.	0.
44	EQ_Y	0.	0.	0.116	0.	0.	0.
45	DEAD	0.	0.	0.918	0.	0.	0.
45	G1_power station	0.	0.	0.	0.	0.	0.
45	G2_power station	0.	0.	3.11	0.	0.	0.
45	Q_power station	0.	0.	0.115	0.	0.	0.
45	Q_neve	0.	0.	0.373	0.	0.	0.
45	Q_manutenzione	0.	0.	0.115	0.	0.	0.
45	EQ_X	-2.671	0.	0.758	0.	0.	0.
45	EQ_Y	-9.621E-03	0.	0.253	0.	0.	0.
46	DEAD	0.	0.	1.719	0.	0.	0.
46	G1_power station	0.	0.	0.	0.	0.	0.
46	G2_power station	0.	0.	4.557	0.	0.	0.
46	Q_power station	0.	0.	0.169	0.	0.	0.
46	Q_neve	0.	0.	0.56	0.	0.	0.

Table 19: Joint Reactions

Joint	OutputCase	F1	F2	F3	M1	M2	M3
		KN	KN	KN	KN-m	KN-m	KN-m
46	Q_manutenzione	0.	0.	0.169	0.	0.	0.
46	EQ_X	0.	0.	0.7	0.	0.	0.
46	EQ_Y	0.	0.	0.405	0.	0.	0.
47	DEAD	0.	0.	0.918	0.	0.	0.
47	G1_power station	0.	0.	0.	0.	0.	0.
47	G2_power station	0.	0.	3.515	0.	0.	0.
47	Q_power station	0.	0.	0.13	0.	0.	0.
47	Q_neve	0.	0.	0.419	0.	0.	0.
47	Q_manutenzione	0.	0.	0.13	0.	0.	0.
47	EQ_X	-2.67	0.	-1.003	0.	0.	0.
47	EQ_Y	-0.012	0.	0.288	0.	0.	0.
48	DEAD	0.	0.	1.653	0.	0.	0.
48	G1_power station	0.	0.	0.	0.	0.	0.
48	G2_power station	0.	0.	4.754	0.	0.	0.
48	Q_power station	0.	0.	0.176	0.	0.	0.
48	Q_neve	0.	0.	0.59	0.	0.	0.
48	Q_manutenzione	0.	0.	0.176	0.	0.	0.
48	EQ_X	0.	0.	-0.845	0.	0.	0.
48	EQ_Y	0.	0.	0.454	0.	0.	0.
49	DEAD	0.	0.	0.918	0.	0.	0.
49	G1_power station	0.	0.	0.	0.	0.	0.
49	G2_power station	0.	0.	3.303	0.	0.	0.
49	Q_power station	0.	0.	0.122	0.	0.	0.
49	Q_neve	0.	0.	0.395	0.	0.	0.
49	Q_manutenzione	0.	0.	0.122	0.	0.	0.
49	EQ_X	-2.658	0.	-0.941	0.	0.	0.
49	EQ_Y	-5.240E-03	0.	0.079	0.	0.	0.
50	DEAD	0.	0.	1.653	0.	0.	0.
50	G1_power station	0.	0.	0.	0.	0.	0.
50	G2_power station	0.	0.	4.403	0.	0.	0.
50	Q_power station	0.	0.	0.163	0.	0.	0.
50	Q_neve	0.	0.	0.549	0.	0.	0.
50	Q_manutenzione	0.	0.	0.163	0.	0.	0.
50	EQ_X	0.	0.	-0.814	0.	0.	0.
50	EQ_Y	0.	0.	0.132	0.	0.	0.
51	DEAD	0.	0.	0.918	0.	0.	0.
51	G1_power station	0.	0.	0.	0.	0.	0.
51	G2_power station	0.	0.	3.303	0.	0.	0.
51	Q_power station	0.	0.	0.122	0.	0.	0.
51	Q_neve	0.	0.	0.395	0.	0.	0.
51	Q_manutenzione	0.	0.	0.122	0.	0.	0.
51	EQ_X	-2.645	0.	-0.941	0.	0.	0.
51	EQ_Y	1.800E-03	0.	-0.079	0.	0.	0.

Table 19: Joint Reactions

Joint	OutputCase	F1	F2	F3	M1	M2	M3
		KN	KN	KN	KN-m	KN-m	KN-m
52	DEAD	0.	0.	1.653	0.	0.	0.
52	G1_power station	0.	0.	0.	0.	0.	0.
52	G2_power station	0.	0.	4.403	0.	0.	0.
52	Q_power station	0.	0.	0.163	0.	0.	0.
52	Q_neve	0.	0.	0.549	0.	0.	0.
52	Q_manutenzione	0.	0.	0.163	0.	0.	0.
52	EQ_X	0.	0.	-0.814	0.	0.	0.
52	EQ_Y	0.	0.	-0.132	0.	0.	0.
53	DEAD	0.	0.	0.918	0.	0.	0.
53	G1_power station	0.	0.	0.	0.	0.	0.
53	G2_power station	0.	0.	3.515	0.	0.	0.
53	Q_power station	0.	0.	0.13	0.	0.	0.
53	Q_neve	0.	0.	0.419	0.	0.	0.
53	Q_manutenzione	0.	0.	0.13	0.	0.	0.
53	EQ_X	-2.633	0.	-1.003	0.	0.	0.
53	EQ_Y	9.162E-03	0.	-0.288	0.	0.	0.
54	DEAD	0.	0.	1.653	0.	0.	0.
54	G1_power station	0.	0.	0.	0.	0.	0.
54	G2_power station	0.	0.	4.754	0.	0.	0.
54	Q_power station	0.	0.	0.176	0.	0.	0.
54	Q_neve	0.	0.	0.59	0.	0.	0.
54	Q_manutenzione	0.	0.	0.176	0.	0.	0.
54	EQ_X	0.	0.	-0.845	0.	0.	0.
54	EQ_Y	0.	0.	-0.454	0.	0.	0.
55	DEAD	0.	0.	0.918	0.	0.	0.
55	G1_power station	0.	0.	0.	0.	0.	0.
55	G2_power station	0.	0.	2.36	0.	0.	0.
55	Q_power station	0.	0.	0.087	0.	0.	0.
55	Q_neve	0.	0.	0.291	0.	0.	0.
55	Q_manutenzione	0.	0.	0.087	0.	0.	0.
55	EQ_X	-2.633	0.	0.337	0.	0.	0.
55	EQ_Y	9.996E-03	0.	-0.234	0.	0.	0.
56	DEAD	0.	0.	1.719	0.	0.	0.
56	G1_power station	0.	0.	0.	0.	0.	0.
56	G2_power station	0.	0.	3.658	0.	0.	0.
56	Q_power station	0.	0.	0.135	0.	0.	0.
56	Q_neve	0.	0.	0.467	0.	0.	0.
56	Q_manutenzione	0.	0.	0.135	0.	0.	0.
56	EQ_X	0.	0.	0.432	0.	0.	0.
56	EQ_Y	0.	0.	-0.422	0.	0.	0.
57	DEAD	0.	0.	0.844	0.	0.	0.
57	G1_power station	0.	0.	0.	0.	0.	0.
57	G2_power station	0.	0.	2.905	0.	0.	0.

Table 19: Joint Reactions

Joint	OutputCase	F1	F2	F3	M1	M2	M3
		KN	KN	KN	KN-m	KN-m	KN-m
57	Q_power station	0.	0.	0.107	0.	0.	0.
57	Q_neve	0.	0.	0.364	0.	0.	0.
57	Q_manutenzione	0.	0.	0.107	0.	0.	0.
57	EQ_X	0.	-0.102	-0.452	0.	0.	0.
57	EQ_Y	0.	-1.337	-0.902	0.	0.	0.
58	DEAD	0.	0.	1.67	0.	0.	0.
58	G1_power station	0.	0.	0.	0.	0.	0.
58	G2_power station	0.	0.	5.349	0.	0.	0.
58	Q_power station	0.	0.	0.198	0.	0.	0.
58	Q_neve	0.	0.	0.663	0.	0.	0.
58	Q_manutenzione	0.	0.	0.198	0.	0.	0.
58	EQ_X	0.	0.	-0.895	0.	0.	0.
58	EQ_Y	0.	0.	-1.048	0.	0.	0.
59	DEAD	0.	0.	0.928	0.	0.	0.
59	G1_power station	0.	0.	0.	0.	0.	0.
59	G2_power station	0.	0.	3.854	0.	0.	0.
59	Q_power station	0.	0.	0.143	0.	0.	0.
59	Q_neve	0.	0.	0.459	0.	0.	0.
59	Q_manutenzione	0.	0.	0.143	0.	0.	0.
59	EQ_X	-2.648	0.	-1.093	0.	0.	0.
59	EQ_Y	0.017	0.	-0.63	0.	0.	0.
60	DEAD	0.	0.	0.877	0.	0.	0.
60	G1_power station	0.	0.	0.	0.	0.	0.
60	G2_power station	0.	0.	2.741	0.	0.	0.
60	Q_power station	0.	0.	0.101	0.	0.	0.
60	Q_neve	0.	0.	0.34	0.	0.	0.
60	Q_manutenzione	0.	0.	0.101	0.	0.	0.
60	EQ_X	-1.33	0.142	0.34	0.	0.	0.
60	EQ_Y	9.565E-03	-1.729	-0.847	0.	0.	0.
61	DEAD	0.	0.	0.928	0.	0.	0.
61	G1_power station	0.	0.	0.	0.	0.	0.
61	G2_power station	0.	0.	3.414	0.	0.	0.
61	Q_power station	0.	0.	0.126	0.	0.	0.
61	Q_neve	0.	0.	0.409	0.	0.	0.
61	Q_manutenzione	0.	0.	0.126	0.	0.	0.
61	EQ_X	-2.647	0.	0.833	0.	0.	0.
61	EQ_Y	0.013	0.	-0.567	0.	0.	0.
62	DEAD	0.	0.	0.928	0.	0.	0.
62	G1_power station	0.	0.	0.	0.	0.	0.
62	G2_power station	0.	0.	3.414	0.	0.	0.
62	Q_power station	0.	0.	0.126	0.	0.	0.
62	Q_neve	0.	0.	0.409	0.	0.	0.
62	Q_manutenzione	0.	0.	0.126	0.	0.	0.

Table 19: Joint Reactions

Joint	OutputCase	F1	F2	F3	M1	M2	M3
		KN	KN	KN	KN-m	KN-m	KN-m
62	EQ_X	-2.711	0.	0.833	0.	0.	0.
62	EQ_Y	-0.016	0.	0.567	0.	0.	0.
63	DEAD	0.	0.	1.736	0.	0.	0.
63	G1_power station	0.	0.	0.	0.	0.	0.
63	G2_power station	0.	0.	5.101	0.	0.	0.
63	Q_power station	0.	0.	0.189	0.	0.	0.
63	Q_neve	0.	0.	0.626	0.	0.	0.
63	Q_manutenzione	0.	0.	0.189	0.	0.	0.
63	EQ_X	0.	0.	0.716	0.	0.	0.
63	EQ_Y	0.	0.	0.97	0.	0.	0.
64	DEAD	0.	0.	0.877	0.	0.	0.
64	G1_power station	0.	0.	0.	0.	0.	0.
64	G2_power station	0.	0.	2.741	0.	0.	0.
64	Q_power station	0.	0.	0.101	0.	0.	0.
64	Q_neve	0.	0.	0.34	0.	0.	0.
64	Q_manutenzione	0.	0.	0.101	0.	0.	0.
64	EQ_X	0.	0.071	0.34	0.	0.	0.
64	EQ_Y	0.	-0.865	0.847	0.	0.	0.
65	DEAD	0.	0.	0.844	0.	0.	0.
65	G1_power station	0.	0.	0.	0.	0.	0.
65	G2_power station	0.	0.	2.905	0.	0.	0.
65	Q_power station	0.	0.	0.107	0.	0.	0.
65	Q_neve	0.	0.	0.364	0.	0.	0.
65	Q_manutenzione	0.	0.	0.107	0.	0.	0.
65	EQ_X	0.	-0.071	-0.452	0.	0.	0.
65	EQ_Y	0.	-0.926	0.902	0.	0.	0.
66	DEAD	0.	0.	0.928	0.	0.	0.
66	G1_power station	0.	0.	0.	0.	0.	0.
66	G2_power station	0.	0.	3.854	0.	0.	0.
66	Q_power station	0.	0.	0.143	0.	0.	0.
66	Q_neve	0.	0.	0.459	0.	0.	0.
66	Q_manutenzione	0.	0.	0.143	0.	0.	0.
66	EQ_X	-2.711	0.	-1.093	0.	0.	0.
66	EQ_Y	-0.02	0.	0.63	0.	0.	0.
67	DEAD	0.	0.	0.918	0.	0.	0.
67	G1_power station	0.	0.	0.	0.	0.	0.
67	G2_power station	0.	0.	2.327	0.	0.	0.
67	Q_power station	0.	0.	0.086	0.	0.	0.
67	Q_neve	0.	0.	0.287	0.	0.	0.
67	Q_manutenzione	0.	0.	0.086	0.	0.	0.
67	EQ_X	-2.645	0.	0.328	0.	0.	0.
67	EQ_Y	2.114E-03	0.	-0.075	0.	0.	0.
68	DEAD	0.	0.	1.719	0.	0.	0.

Table 19: Joint Reactions

Joint	OutputCase	F1	F2	F3	M1	M2	M3
		KN	KN	KN	KN-m	KN-m	KN-m
68	G1_power station	0.	0.	0.	0.	0.	0.
68	G2_power station	0.	0.	3.605	0.	0.	0.
68	Q_power station	0.	0.	0.133	0.	0.	0.
68	Q_neve	0.	0.	0.46	0.	0.	0.
68	Q_manutenzione	0.	0.	0.133	0.	0.	0.
68	EQ_X	0.	0.	0.431	0.	0.	0.
68	EQ_Y	0.	0.	-0.138	0.	0.	0.
69	DEAD	0.	0.	0.918	0.	0.	0.
69	G1_power station	0.	0.	0.	0.	0.	0.
69	G2_power station	0.	0.	2.327	0.	0.	0.
69	Q_power station	0.	0.	0.086	0.	0.	0.
69	Q_neve	0.	0.	0.287	0.	0.	0.
69	Q_manutenzione	0.	0.	0.086	0.	0.	0.
69	EQ_X	-2.658	0.	0.328	0.	0.	0.
69	EQ_Y	-5.796E-03	0.	0.075	0.	0.	0.
70	DEAD	0.	0.	1.719	0.	0.	0.
70	G1_power station	0.	0.	0.	0.	0.	0.
70	G2_power station	0.	0.	3.605	0.	0.	0.
70	Q_power station	0.	0.	0.133	0.	0.	0.
70	Q_neve	0.	0.	0.46	0.	0.	0.
70	Q_manutenzione	0.	0.	0.133	0.	0.	0.
70	EQ_X	0.	0.	0.431	0.	0.	0.
70	EQ_Y	0.	0.	0.138	0.	0.	0.
71	DEAD	0.	0.	0.918	0.	0.	0.
71	G1_power station	0.	0.	0.	0.	0.	0.
71	G2_power station	0.	0.	2.36	0.	0.	0.
71	Q_power station	0.	0.	0.087	0.	0.	0.
71	Q_neve	0.	0.	0.291	0.	0.	0.
71	Q_manutenzione	0.	0.	0.087	0.	0.	0.
71	EQ_X	-2.67	0.	0.337	0.	0.	0.
71	EQ_Y	-0.014	0.	0.234	0.	0.	0.
72	DEAD	0.	0.	1.719	0.	0.	0.
72	G1_power station	0.	0.	0.	0.	0.	0.
72	G2_power station	0.	0.	3.658	0.	0.	0.
72	Q_power station	0.	0.	0.135	0.	0.	0.
72	Q_neve	0.	0.	0.467	0.	0.	0.
72	Q_manutenzione	0.	0.	0.135	0.	0.	0.
72	EQ_X	0.	0.	0.432	0.	0.	0.
72	EQ_Y	0.	0.	0.422	0.	0.	0.
73	DEAD	0.	0.	0.918	0.	0.	0.
73	G1_power station	0.	0.	0.	0.	0.	0.
73	G2_power station	0.	0.	2.796	0.	0.	0.
73	Q_power station	0.	0.	0.103	0.	0.	0.

Table 19: Joint Reactions

Joint	OutputCase	F1	F2	F3	M1	M2	M3
		KN	KN	KN	KN-m	KN-m	KN-m
73	Q_neve	0.	0.	0.349	0.	0.	0.
73	Q_manutenzione	0.	0.	0.103	0.	0.	0.
73	EQ_X	-2.67	0.	-0.495	0.	0.	0.
73	EQ_Y	-0.014	0.	0.263	0.	0.	0.
74	DEAD	0.	0.	1.653	0.	0.	0.
74	G1_power station	0.	0.	0.	0.	0.	0.
74	G2_power station	0.	0.	4.01	0.	0.	0.
74	Q_power station	0.	0.	0.148	0.	0.	0.
74	Q_neve	0.	0.	0.523	0.	0.	0.
74	Q_manutenzione	0.	0.	0.148	0.	0.	0.
74	EQ_X	0.	0.	-0.58	0.	0.	0.
74	EQ_Y	0.	0.	0.456	0.	0.	0.
75	DEAD	0.	0.	0.918	0.	0.	0.
75	G1_power station	0.	0.	0.	0.	0.	0.
75	G2_power station	0.	0.	2.763	0.	0.	0.
75	Q_power station	0.	0.	0.102	0.	0.	0.
75	Q_neve	0.	0.	0.345	0.	0.	0.
75	Q_manutenzione	0.	0.	0.102	0.	0.	0.
75	EQ_X	-2.658	0.	-0.485	0.	0.	0.
75	EQ_Y	-6.001E-03	0.	0.085	0.	0.	0.
76	DEAD	0.	0.	1.653	0.	0.	0.
76	G1_power station	0.	0.	0.	0.	0.	0.
76	G2_power station	0.	0.	3.956	0.	0.	0.
76	Q_power station	0.	0.	0.146	0.	0.	0.
76	Q_neve	0.	0.	0.516	0.	0.	0.
76	Q_manutenzione	0.	0.	0.146	0.	0.	0.
76	EQ_X	0.	0.	-0.576	0.	0.	0.
76	EQ_Y	0.	0.	0.149	0.	0.	0.
77	DEAD	0.	0.	0.918	0.	0.	0.
77	G1_power station	0.	0.	0.	0.	0.	0.
77	G2_power station	0.	0.	2.763	0.	0.	0.
77	Q_power station	0.	0.	0.102	0.	0.	0.
77	Q_neve	0.	0.	0.345	0.	0.	0.
77	Q_manutenzione	0.	0.	0.102	0.	0.	0.
77	EQ_X	-2.645	0.	-0.485	0.	0.	0.
77	EQ_Y	2.122E-03	0.	-0.085	0.	0.	0.
78	DEAD	0.	0.	1.653	0.	0.	0.
78	G1_power station	0.	0.	0.	0.	0.	0.
78	G2_power station	0.	0.	3.956	0.	0.	0.
78	Q_power station	0.	0.	0.146	0.	0.	0.
78	Q_neve	0.	0.	0.516	0.	0.	0.
78	Q_manutenzione	0.	0.	0.146	0.	0.	0.
78	EQ_X	0.	0.	-0.576	0.	0.	0.

Table 19: Joint Reactions

Joint	OutputCase	F1	F2	F3	M1	M2	M3
		KN	KN	KN	KN-m	KN-m	KN-m
78	EQ_Y	0.	0.	-0.149	0.	0.	0.
79	DEAD	0.	0.	0.918	0.	0.	0.
79	G1_power station	0.	0.	0.	0.	0.	0.
79	G2_power station	0.	0.	2.796	0.	0.	0.
79	Q_power station	0.	0.	0.103	0.	0.	0.
79	Q_neve	0.	0.	0.349	0.	0.	0.
79	Q_manutenzione	0.	0.	0.103	0.	0.	0.
79	EQ_X	-2.633	0.	-0.495	0.	0.	0.
79	EQ_Y	0.01	0.	-0.263	0.	0.	0.
80	DEAD	0.	0.	1.653	0.	0.	0.
80	G1_power station	0.	0.	0.	0.	0.	0.
80	G2_power station	0.	0.	4.01	0.	0.	0.
80	Q_power station	0.	0.	0.148	0.	0.	0.
80	Q_neve	0.	0.	0.523	0.	0.	0.
80	Q_manutenzione	0.	0.	0.148	0.	0.	0.
80	EQ_X	0.	0.	-0.58	0.	0.	0.
80	EQ_Y	0.	0.	-0.456	0.	0.	0.
81	DEAD	0.	0.	1.617	0.	0.	0.
81	G1_power station	0.	0.	0.	0.	0.	0.
81	G2_power station	0.	0.	3.539	0.	0.	0.
81	Q_power station	0.	0.	0.131	0.	0.	0.
81	Q_neve	0.	0.	0.455	0.	0.	0.
81	Q_manutenzione	0.	0.	0.131	0.	0.	0.
81	EQ_X	0.	0.	0.101	0.	0.	0.
81	EQ_Y	0.	0.	-0.792	0.	0.	0.
82	DEAD	0.	0.	0.817	0.	0.	0.
82	G1_power station	0.	0.	0.	0.	0.	0.
82	G2_power station	0.	0.	1.932	0.	0.	0.
82	Q_power station	0.	0.	0.071	0.	0.	0.
82	Q_neve	0.	0.	0.253	0.	0.	0.
82	Q_manutenzione	0.	0.	0.071	0.	0.	0.
82	EQ_X	0.	0.112	0.034	0.	0.	0.
82	EQ_Y	0.	-1.618	-0.668	0.	0.	0.
83	DEAD	0.	0.	1.617	0.	0.	0.
83	G1_power station	0.	0.	0.	0.	0.	0.
83	G2_power station	0.	0.	2.391	0.	0.	0.
83	Q_power station	0.	0.	0.088	0.	0.	0.
83	Q_neve	0.	0.	0.337	0.	0.	0.
83	Q_manutenzione	0.	0.	0.088	0.	0.	0.
83	EQ_X	0.	0.	-0.181	0.	0.	0.
83	EQ_Y	0.	0.	-0.667	0.	0.	0.
84	DEAD	0.	0.	0.817	0.	0.	0.
84	G1_power station	0.	0.	0.	0.	0.	0.

Table 19: Joint Reactions

Joint	OutputCase	F1	F2	F3	M1	M2	M3
		KN	KN	KN	KN-m	KN-m	KN-m
84	G2_power station	0.	0.	1.321	0.	0.	0.
84	Q_power station	0.	0.	0.049	0.	0.	0.
84	Q_neve	0.	0.	0.191	0.	0.	0.
84	Q_manutenzione	0.	0.	0.049	0.	0.	0.
84	EQ_X	0.	0.092	-0.13	0.	0.	0.
84	EQ_Y	0.	-1.626	-0.537	0.	0.	0.
85	DEAD	0.	0.	1.617	0.	0.	0.
85	G1_power station	0.	0.	0.	0.	0.	0.
85	G2_power station	0.	0.	1.413	0.	0.	0.
85	Q_power station	0.	0.	0.052	0.	0.	0.
85	Q_neve	0.	0.	0.238	0.	0.	0.
85	Q_manutenzione	0.	0.	0.052	0.	0.	0.
85	EQ_X	0.	0.	-0.305	0.	0.	0.
85	EQ_Y	0.	0.	-0.549	0.	0.	0.
86	DEAD	0.	0.	0.817	0.	0.	0.
86	G1_power station	0.	0.	0.	0.	0.	0.
86	G2_power station	0.	0.	0.793	0.	0.	0.
86	Q_power station	0.	0.	0.029	0.	0.	0.
86	Q_neve	0.	0.	0.138	0.	0.	0.
86	Q_manutenzione	0.	0.	0.029	0.	0.	0.
86	EQ_X	0.	0.072	-0.191	0.	0.	0.
86	EQ_Y	0.	-1.635	-0.428	0.	0.	0.
87	DEAD	0.	0.	1.617	0.	0.	0.
87	G1_power station	0.	0.	0.	0.	0.	0.
87	G2_power station	0.	0.	0.624	0.	0.	0.
87	Q_power station	0.	0.	0.023	0.	0.	0.
87	Q_neve	0.	0.	0.161	0.	0.	0.
87	Q_manutenzione	0.	0.	0.023	0.	0.	0.
87	EQ_X	0.	0.	-0.307	0.	0.	0.
87	EQ_Y	0.	0.	-0.449	0.	0.	0.
88	DEAD	0.	0.	0.817	0.	0.	0.
88	G1_power station	0.	0.	0.	0.	0.	0.
88	G2_power station	0.	0.	0.371	0.	0.	0.
88	Q_power station	0.	0.	0.014	0.	0.	0.
88	Q_neve	0.	0.	0.098	0.	0.	0.
88	Q_manutenzione	0.	0.	0.014	0.	0.	0.
88	EQ_X	0.	0.052	-0.185	0.	0.	0.
88	EQ_Y	0.	-1.644	-0.345	0.	0.	0.
89	DEAD	0.	0.	1.617	0.	0.	0.
89	G1_power station	0.	0.	0.	0.	0.	0.
89	G2_power station	0.	0.	0.011	0.	0.	0.
89	Q_power station	0.	0.	4.115E-04	0.	0.	0.
89	Q_neve	0.	0.	0.104	0.	0.	0.

Table 19: Joint Reactions

Joint	OutputCase	F1	F2	F3	M1	M2	M3
		KN	KN	KN	KN-m	KN-m	KN-m
89	Q_manutenzione	0.	0.	4.115E-04	0.	0.	0.
89	EQ_X	0.	0.	-0.223	0.	0.	0.
89	EQ_Y	0.	0.	-0.374	0.	0.	0.
90	DEAD	0.	0.	0.817	0.	0.	0.
90	G1_power station	0.	0.	0.	0.	0.	0.
90	G2_power station	0.	0.	0.053	0.	0.	0.
90	Q_power station	0.	0.	1.954E-03	0.	0.	0.
90	Q_neve	0.	0.	0.07	0.	0.	0.
90	Q_manutenzione	0.	0.	1.954E-03	0.	0.	0.
90	EQ_X	0.	0.032	-0.135	0.	0.	0.
90	EQ_Y	0.	-1.653	-0.287	0.	0.	0.
91	DEAD	0.	0.	1.617	0.	0.	0.
91	G1_power station	0.	0.	0.	0.	0.	0.
91	G2_power station	0.	0.	-0.451	0.	0.	0.
91	Q_power station	0.	0.	-0.017	0.	0.	0.
91	Q_neve	0.	0.	0.065	0.	0.	0.
91	Q_manutenzione	0.	0.	-0.017	0.	0.	0.
91	EQ_X	0.	0.	-0.077	0.	0.	0.
91	EQ_Y	0.	0.	-0.322	0.	0.	0.
92	DEAD	0.	0.	0.817	0.	0.	0.
92	G1_power station	0.	0.	0.	0.	0.	0.
92	G2_power station	0.	0.	-0.172	0.	0.	0.
92	Q_power station	0.	0.	-6.362E-03	0.	0.	0.
92	Q_neve	0.	0.	0.051	0.	0.	0.
92	Q_manutenzione	0.	0.	-6.362E-03	0.	0.	0.
92	EQ_X	0.	0.013	-0.052	0.	0.	0.
92	EQ_Y	0.	-1.662	-0.254	0.	0.	0.
93	DEAD	0.	0.	1.485	0.	0.	0.
93	G1_power station	0.	0.	0.	0.	0.	0.
93	G2_power station	0.	0.	3.477	0.	0.	0.
93	Q_power station	0.	0.	0.129	0.	0.	0.
93	Q_neve	0.	0.	0.461	0.	0.	0.
93	Q_manutenzione	0.	0.	0.129	0.	0.	0.
93	EQ_X	0.	0.	-0.115	0.	0.	0.
93	EQ_Y	0.	0.	0.838	0.	0.	0.
94	DEAD	0.	0.	0.75	0.	0.	0.
94	G1_power station	0.	0.	0.	0.	0.	0.
94	G2_power station	0.	0.	1.941	0.	0.	0.
94	Q_power station	0.	0.	0.072	0.	0.	0.
94	Q_neve	0.	0.	0.26	0.	0.	0.
94	Q_manutenzione	0.	0.	0.072	0.	0.	0.
94	EQ_X	0.	-0.055	-0.07	0.	0.	0.
94	EQ_Y	0.	-0.818	0.702	0.	0.	0.

Table 19: Joint Reactions

Joint	OutputCase	F1	F2	F3	M1	M2	M3
		KN	KN	KN	KN-m	KN-m	KN-m
95	DEAD	0.	0.	1.485	0.	0.	0.
95	G1_power station	0.	0.	0.	0.	0.	0.
95	G2_power station	0.	0.	2.225	0.	0.	0.
95	Q_power station	0.	0.	0.082	0.	0.	0.
95	Q_neve	0.	0.	0.336	0.	0.	0.
95	Q_manutenzione	0.	0.	0.082	0.	0.	0.
95	EQ_X	0.	0.	0.339	0.	0.	0.
95	EQ_Y	0.	0.	0.726	0.	0.	0.
96	DEAD	0.	0.	0.75	0.	0.	0.
96	G1_power station	0.	0.	0.	0.	0.	0.
96	G2_power station	0.	0.	1.3	0.	0.	0.
96	Q_power station	0.	0.	0.048	0.	0.	0.
96	Q_neve	0.	0.	0.198	0.	0.	0.
96	Q_manutenzione	0.	0.	0.048	0.	0.	0.
96	EQ_X	0.	-0.046	0.166	0.	0.	0.
96	EQ_Y	0.	-0.813	0.59	0.	0.	0.
97	DEAD	0.	0.	1.601	0.	0.	0.
97	G1_power station	0.	0.	0.	0.	0.	0.
97	G2_power station	0.	0.	3.172	0.	0.	0.
97	Q_power station	0.	0.	0.117	0.	0.	0.
97	Q_neve	0.	0.	0.405	0.	0.	0.
97	Q_manutenzione	0.	0.	0.117	0.	0.	0.
97	EQ_X	0.	0.	0.175	0.	0.	0.
97	EQ_Y	0.	0.	-0.366	0.	0.	0.
98	DEAD	0.	0.	1.601	0.	0.	0.
98	G1_power station	0.	0.	0.	0.	0.	0.
98	G2_power station	0.	0.	2.143	0.	0.	0.
98	Q_power station	0.	0.	0.079	0.	0.	0.
98	Q_neve	0.	0.	0.296	0.	0.	0.
98	Q_manutenzione	0.	0.	0.079	0.	0.	0.
98	EQ_X	0.	0.	-0.118	0.	0.	0.
98	EQ_Y	0.	0.	-0.338	0.	0.	0.
99	DEAD	0.	0.	1.601	0.	0.	0.
99	G1_power station	0.	0.	0.	0.	0.	0.
99	G2_power station	0.	0.	1.248	0.	0.	0.
99	Q_power station	0.	0.	0.046	0.	0.	0.
99	Q_neve	0.	0.	0.204	0.	0.	0.
99	Q_manutenzione	0.	0.	0.046	0.	0.	0.
99	EQ_X	0.	0.	-0.25	0.	0.	0.
99	EQ_Y	0.	0.	-0.292	0.	0.	0.
100	DEAD	0.	0.	1.601	0.	0.	0.
100	G1_power station	0.	0.	0.	0.	0.	0.
100	G2_power station	0.	0.	0.512	0.	0.	0.

Table 19: Joint Reactions

Joint	OutputCase	F1	F2	F3	M1	M2	M3
		KN	KN	KN	KN-m	KN-m	KN-m
100	Q_power station	0.	0.	0.019	0.	0.	0.
100	Q_neve	0.	0.	0.131	0.	0.	0.
100	Q_manutenzione	0.	0.	0.019	0.	0.	0.
100	EQ_X	0.	0.	-0.264	0.	0.	0.
100	EQ_Y	0.	0.	-0.244	0.	0.	0.
101	DEAD	0.	0.	1.601	0.	0.	0.
101	G1_power station	0.	0.	0.	0.	0.	0.
101	G2_power station	0.	0.	-0.075	0.	0.	0.
101	Q_power station	0.	0.	-2.782E-03	0.	0.	0.
101	Q_neve	0.	0.	0.075	0.	0.	0.
101	Q_manutenzione	0.	0.	-2.782E-03	0.	0.	0.
101	EQ_X	0.	0.	-0.195	0.	0.	0.
101	EQ_Y	0.	0.	-0.203	0.	0.	0.
102	DEAD	0.	0.	1.601	0.	0.	0.
102	G1_power station	0.	0.	0.	0.	0.	0.
102	G2_power station	0.	0.	-0.544	0.	0.	0.
102	Q_power station	0.	0.	-0.02	0.	0.	0.
102	Q_neve	0.	0.	0.032	0.	0.	0.
102	Q_manutenzione	0.	0.	-0.02	0.	0.	0.
102	EQ_X	0.	0.	-0.068	0.	0.	0.
102	EQ_Y	0.	0.	-0.17	0.	0.	0.
103	DEAD	0.	0.	0.8	0.	0.	0.
103	G1_power station	0.	0.	0.	0.	0.	0.
103	G2_power station	0.	0.	-0.474	0.	0.	0.
103	Q_power station	0.	0.	-0.018	0.	0.	0.
103	Q_neve	0.	0.	-1.463E-03	0.	0.	0.
103	Q_manutenzione	0.	0.	-0.018	0.	0.	0.
103	EQ_X	0.	0.	0.045	0.	0.	0.
103	EQ_Y	0.	0.	-0.071	0.	0.	0.
104	DEAD	0.	0.	1.601	0.	0.	0.
104	G1_power station	0.	0.	0.	0.	0.	0.
104	G2_power station	0.	0.	2.941	0.	0.	0.
104	Q_power station	0.	0.	0.109	0.	0.	0.
104	Q_neve	0.	0.	0.375	0.	0.	0.
104	Q_manutenzione	0.	0.	0.109	0.	0.	0.
104	EQ_X	0.	0.	0.212	0.	0.	0.
104	EQ_Y	0.	0.	-0.102	0.	0.	0.
105	DEAD	0.	0.	1.601	0.	0.	0.
105	G1_power station	0.	0.	0.	0.	0.	0.
105	G2_power station	0.	0.	1.993	0.	0.	0.
105	Q_power station	0.	0.	0.074	0.	0.	0.
105	Q_neve	0.	0.	0.273	0.	0.	0.
105	Q_manutenzione	0.	0.	0.074	0.	0.	0.

Table 19: Joint Reactions

Joint	OutputCase	F1	F2	F3	M1	M2	M3
		KN	KN	KN	KN-m	KN-m	KN-m
105	EQ_X	0.	0.	-0.076	0.	0.	0.
105	EQ_Y	0.	0.	-0.099	0.	0.	0.
106	DEAD	0.	0.	1.601	0.	0.	0.
106	G1_power station	0.	0.	0.	0.	0.	0.
106	G2_power station	0.	0.	1.152	0.	0.	0.
106	Q_power station	0.	0.	0.043	0.	0.	0.
106	Q_neve	0.	0.	0.185	0.	0.	0.
106	Q_manutenzione	0.	0.	0.043	0.	0.	0.
106	EQ_X	0.	0.	-0.219	0.	0.	0.
106	EQ_Y	0.	0.	-0.09	0.	0.	0.
107	DEAD	0.	0.	1.601	0.	0.	0.
107	G1_power station	0.	0.	0.	0.	0.	0.
107	G2_power station	0.	0.	0.448	0.	0.	0.
107	Q_power station	0.	0.	0.017	0.	0.	0.
107	Q_neve	0.	0.	0.114	0.	0.	0.
107	Q_manutenzione	0.	0.	0.017	0.	0.	0.
107	EQ_X	0.	0.	-0.243	0.	0.	0.
107	EQ_Y	0.	0.	-0.076	0.	0.	0.
108	DEAD	0.	0.	1.601	0.	0.	0.
108	G1_power station	0.	0.	0.	0.	0.	0.
108	G2_power station	0.	0.	-0.126	0.	0.	0.
108	Q_power station	0.	0.	-4.670E-03	0.	0.	0.
108	Q_neve	0.	0.	0.058	0.	0.	0.
108	Q_manutenzione	0.	0.	-4.670E-03	0.	0.	0.
108	EQ_X	0.	0.	-0.183	0.	0.	0.
108	EQ_Y	0.	0.	-0.064	0.	0.	0.
109	DEAD	0.	0.	1.601	0.	0.	0.
109	G1_power station	0.	0.	0.	0.	0.	0.
109	G2_power station	0.	0.	-0.605	0.	0.	0.
109	Q_power station	0.	0.	-0.022	0.	0.	0.
109	Q_neve	0.	0.	0.014	0.	0.	0.
109	Q_manutenzione	0.	0.	-0.022	0.	0.	0.
109	EQ_X	0.	0.	-0.069	0.	0.	0.
109	EQ_Y	0.	0.	-0.053	0.	0.	0.
110	DEAD	0.	0.	0.8	0.	0.	0.
110	G1_power station	0.	0.	0.	0.	0.	0.
110	G2_power station	0.	0.	-0.52	0.	0.	0.
110	Q_power station	0.	0.	-0.019	0.	0.	0.
110	Q_neve	0.	0.	-0.013	0.	0.	0.
110	Q_manutenzione	0.	0.	-0.019	0.	0.	0.
110	EQ_X	0.	0.	0.035	0.	0.	0.
110	EQ_Y	0.	0.	-0.021	0.	0.	0.
111	DEAD	0.	0.	1.601	0.	0.	0.

Table 19: Joint Reactions

Joint	OutputCase	F1	F2	F3	M1	M2	M3
		KN	KN	KN	KN-m	KN-m	KN-m
111	G1_power station	0.	0.	0.	0.	0.	0.
111	G2_power station	0.	0.	2.941	0.	0.	0.
111	Q_power station	0.	0.	0.109	0.	0.	0.
111	Q_neve	0.	0.	0.375	0.	0.	0.
111	Q_manutenzione	0.	0.	0.109	0.	0.	0.
111	EQ_X	0.	0.	0.212	0.	0.	0.
111	EQ_Y	0.	0.	0.102	0.	0.	0.
112	DEAD	0.	0.	1.601	0.	0.	0.
112	G1_power station	0.	0.	0.	0.	0.	0.
112	G2_power station	0.	0.	1.993	0.	0.	0.
112	Q_power station	0.	0.	0.074	0.	0.	0.
112	Q_neve	0.	0.	0.273	0.	0.	0.
112	Q_manutenzione	0.	0.	0.074	0.	0.	0.
112	EQ_X	0.	0.	-0.076	0.	0.	0.
112	EQ_Y	0.	0.	0.099	0.	0.	0.
113	DEAD	0.	0.	1.601	0.	0.	0.
113	G1_power station	0.	0.	0.	0.	0.	0.
113	G2_power station	0.	0.	1.152	0.	0.	0.
113	Q_power station	0.	0.	0.043	0.	0.	0.
113	Q_neve	0.	0.	0.185	0.	0.	0.
113	Q_manutenzione	0.	0.	0.043	0.	0.	0.
113	EQ_X	0.	0.	-0.219	0.	0.	0.
113	EQ_Y	0.	0.	0.09	0.	0.	0.
114	DEAD	0.	0.	1.601	0.	0.	0.
114	G1_power station	0.	0.	0.	0.	0.	0.
114	G2_power station	0.	0.	0.448	0.	0.	0.
114	Q_power station	0.	0.	0.017	0.	0.	0.
114	Q_neve	0.	0.	0.114	0.	0.	0.
114	Q_manutenzione	0.	0.	0.017	0.	0.	0.
114	EQ_X	0.	0.	-0.243	0.	0.	0.
114	EQ_Y	0.	0.	0.076	0.	0.	0.
115	DEAD	0.	0.	1.601	0.	0.	0.
115	G1_power station	0.	0.	0.	0.	0.	0.
115	G2_power station	0.	0.	-0.126	0.	0.	0.
115	Q_power station	0.	0.	-4.670E-03	0.	0.	0.
115	Q_neve	0.	0.	0.058	0.	0.	0.
115	Q_manutenzione	0.	0.	-4.670E-03	0.	0.	0.
115	EQ_X	0.	0.	-0.183	0.	0.	0.
115	EQ_Y	0.	0.	0.064	0.	0.	0.
116	DEAD	0.	0.	1.601	0.	0.	0.
116	G1_power station	0.	0.	0.	0.	0.	0.
116	G2_power station	0.	0.	-0.605	0.	0.	0.
116	Q_power station	0.	0.	-0.022	0.	0.	0.

Table 19: Joint Reactions

Joint	OutputCase	F1	F2	F3	M1	M2	M3
		KN	KN	KN	KN-m	KN-m	KN-m
116	Q_neve	0.	0.	0.014	0.	0.	0.
116	Q_manutenzione	0.	0.	-0.022	0.	0.	0.
116	EQ_X	0.	0.	-0.069	0.	0.	0.
116	EQ_Y	0.	0.	0.053	0.	0.	0.
117	DEAD	0.	0.	0.8	0.	0.	0.
117	G1_power station	0.	0.	0.	0.	0.	0.
117	G2_power station	0.	0.	-0.52	0.	0.	0.
117	Q_power station	0.	0.	-0.019	0.	0.	0.
117	Q_neve	0.	0.	-0.013	0.	0.	0.
117	Q_manutenzione	0.	0.	-0.019	0.	0.	0.
117	EQ_X	0.	0.	0.035	0.	0.	0.
117	EQ_Y	0.	0.	0.021	0.	0.	0.
118	DEAD	0.	0.	1.601	0.	0.	0.
118	G1_power station	0.	0.	0.	0.	0.	0.
118	G2_power station	0.	0.	3.172	0.	0.	0.
118	Q_power station	0.	0.	0.117	0.	0.	0.
118	Q_neve	0.	0.	0.405	0.	0.	0.
118	Q_manutenzione	0.	0.	0.117	0.	0.	0.
118	EQ_X	0.	0.	0.175	0.	0.	0.
118	EQ_Y	0.	0.	0.366	0.	0.	0.
119	DEAD	0.	0.	1.601	0.	0.	0.
119	G1_power station	0.	0.	0.	0.	0.	0.
119	G2_power station	0.	0.	2.143	0.	0.	0.
119	Q_power station	0.	0.	0.079	0.	0.	0.
119	Q_neve	0.	0.	0.296	0.	0.	0.
119	Q_manutenzione	0.	0.	0.079	0.	0.	0.
119	EQ_X	0.	0.	-0.118	0.	0.	0.
119	EQ_Y	0.	0.	0.338	0.	0.	0.
120	DEAD	0.	0.	1.601	0.	0.	0.
120	G1_power station	0.	0.	0.	0.	0.	0.
120	G2_power station	0.	0.	1.248	0.	0.	0.
120	Q_power station	0.	0.	0.046	0.	0.	0.
120	Q_neve	0.	0.	0.204	0.	0.	0.
120	Q_manutenzione	0.	0.	0.046	0.	0.	0.
120	EQ_X	0.	0.	-0.25	0.	0.	0.
120	EQ_Y	0.	0.	0.292	0.	0.	0.
121	DEAD	0.	0.	1.601	0.	0.	0.
121	G1_power station	0.	0.	0.	0.	0.	0.
121	G2_power station	0.	0.	0.512	0.	0.	0.
121	Q_power station	0.	0.	0.019	0.	0.	0.
121	Q_neve	0.	0.	0.131	0.	0.	0.
121	Q_manutenzione	0.	0.	0.019	0.	0.	0.
121	EQ_X	0.	0.	-0.264	0.	0.	0.

Table 19: Joint Reactions

Joint	OutputCase	F1	F2	F3	M1	M2	M3
		KN	KN	KN	KN-m	KN-m	KN-m
121	EQ_Y	0.	0.	0.244	0.	0.	0.
122	DEAD	0.	0.	1.601	0.	0.	0.
122	G1_power station	0.	0.	0.	0.	0.	0.
122	G2_power station	0.	0.	-0.075	0.	0.	0.
122	Q_power station	0.	0.	-2.782E-03	0.	0.	0.
122	Q_neve	0.	0.	0.075	0.	0.	0.
122	Q_manutenzione	0.	0.	-2.782E-03	0.	0.	0.
122	EQ_X	0.	0.	-0.195	0.	0.	0.
122	EQ_Y	0.	0.	0.203	0.	0.	0.
123	DEAD	0.	0.	1.601	0.	0.	0.
123	G1_power station	0.	0.	0.	0.	0.	0.
123	G2_power station	0.	0.	-0.544	0.	0.	0.
123	Q_power station	0.	0.	-0.02	0.	0.	0.
123	Q_neve	0.	0.	0.032	0.	0.	0.
123	Q_manutenzione	0.	0.	-0.02	0.	0.	0.
123	EQ_X	0.	0.	-0.068	0.	0.	0.
123	EQ_Y	0.	0.	0.17	0.	0.	0.
124	DEAD	0.	0.	0.8	0.	0.	0.
124	G1_power station	0.	0.	0.	0.	0.	0.
124	G2_power station	0.	0.	-0.474	0.	0.	0.
124	Q_power station	0.	0.	-0.018	0.	0.	0.
124	Q_neve	0.	0.	-1.463E-03	0.	0.	0.
124	Q_manutenzione	0.	0.	-0.018	0.	0.	0.
124	EQ_X	0.	0.	0.045	0.	0.	0.
124	EQ_Y	0.	0.	0.071	0.	0.	0.
125	DEAD	0.	0.	1.617	0.	0.	0.
125	G1_power station	0.	0.	0.	0.	0.	0.
125	G2_power station	0.	0.	3.539	0.	0.	0.
125	Q_power station	0.	0.	0.131	0.	0.	0.
125	Q_neve	0.	0.	0.455	0.	0.	0.
125	Q_manutenzione	0.	0.	0.131	0.	0.	0.
125	EQ_X	0.	0.	0.101	0.	0.	0.
125	EQ_Y	0.	0.	0.792	0.	0.	0.
126	DEAD	0.	0.	1.617	0.	0.	0.
126	G1_power station	0.	0.	0.	0.	0.	0.
126	G2_power station	0.	0.	2.391	0.	0.	0.
126	Q_power station	0.	0.	0.088	0.	0.	0.
126	Q_neve	0.	0.	0.337	0.	0.	0.
126	Q_manutenzione	0.	0.	0.088	0.	0.	0.
126	EQ_X	0.	0.	-0.181	0.	0.	0.
126	EQ_Y	0.	0.	0.667	0.	0.	0.
127	DEAD	0.	0.	1.617	0.	0.	0.
127	G1_power station	0.	0.	0.	0.	0.	0.

Table 19: Joint Reactions

Joint	OutputCase	F1	F2	F3	M1	M2	M3
		KN	KN	KN	KN-m	KN-m	KN-m
127	G2_power station	0.	0.	1.413	0.	0.	0.
127	Q_power station	0.	0.	0.052	0.	0.	0.
127	Q_neve	0.	0.	0.238	0.	0.	0.
127	Q_manutenzione	0.	0.	0.052	0.	0.	0.
127	EQ_X	0.	0.	-0.305	0.	0.	0.
127	EQ_Y	0.	0.	0.549	0.	0.	0.
128	DEAD	0.	0.	1.617	0.	0.	0.
128	G1_power station	0.	0.	0.	0.	0.	0.
128	G2_power station	0.	0.	0.624	0.	0.	0.
128	Q_power station	0.	0.	0.023	0.	0.	0.
128	Q_neve	0.	0.	0.161	0.	0.	0.
128	Q_manutenzione	0.	0.	0.023	0.	0.	0.
128	EQ_X	0.	0.	-0.307	0.	0.	0.
128	EQ_Y	0.	0.	0.449	0.	0.	0.
129	DEAD	0.	0.	1.617	0.	0.	0.
129	G1_power station	0.	0.	0.	0.	0.	0.
129	G2_power station	0.	0.	0.011	0.	0.	0.
129	Q_power station	0.	0.	4.115E-04	0.	0.	0.
129	Q_neve	0.	0.	0.104	0.	0.	0.
129	Q_manutenzione	0.	0.	4.115E-04	0.	0.	0.
129	EQ_X	0.	0.	-0.223	0.	0.	0.
129	EQ_Y	0.	0.	0.374	0.	0.	0.
130	DEAD	0.	0.	1.617	0.	0.	0.
130	G1_power station	0.	0.	0.	0.	0.	0.
130	G2_power station	0.	0.	-0.451	0.	0.	0.
130	Q_power station	0.	0.	-0.017	0.	0.	0.
130	Q_neve	0.	0.	0.065	0.	0.	0.
130	Q_manutenzione	0.	0.	-0.017	0.	0.	0.
130	EQ_X	0.	0.	-0.077	0.	0.	0.
130	EQ_Y	0.	0.	0.322	0.	0.	0.
131	DEAD	0.	0.	1.47	0.	0.	0.
131	G1_power station	0.	0.	0.	0.	0.	0.
131	G2_power station	0.	0.	3.049	0.	0.	0.
131	Q_power station	0.	0.	0.113	0.	0.	0.
131	Q_neve	0.	0.	0.403	0.	0.	0.
131	Q_manutenzione	0.	0.	0.113	0.	0.	0.
131	EQ_X	0.	0.	-0.142	0.	0.	0.
131	EQ_Y	0.	0.	0.391	0.	0.	0.
132	DEAD	0.	0.	1.47	0.	0.	0.
132	G1_power station	0.	0.	0.	0.	0.	0.
132	G2_power station	0.	0.	1.862	0.	0.	0.
132	Q_power station	0.	0.	0.069	0.	0.	0.
132	Q_neve	0.	0.	0.283	0.	0.	0.

Table 19: Joint Reactions

Joint	OutputCase	F1	F2	F3	M1	M2	M3
		KN	KN	KN	KN-m	KN-m	KN-m
132	Q_manutenzione	0.	0.	0.069	0.	0.	0.
132	EQ_X	0.	0.	0.348	0.	0.	0.
132	EQ_Y	0.	0.	0.36	0.	0.	0.
133	DEAD	0.	0.	0.735	0.	0.	0.
133	G1_power station	0.	0.	0.	0.	0.	0.
133	G2_power station	0.	0.	0.346	0.	0.	0.
133	Q_power station	0.	0.	0.013	0.	0.	0.
133	Q_neve	0.	0.	0.082	0.	0.	0.
133	Q_manutenzione	0.	0.	0.013	0.	0.	0.
133	EQ_X	0.	0.	0.38	0.	0.	0.
133	EQ_Y	0.	0.	0.151	0.	0.	0.
134	DEAD	0.	0.	1.47	0.	0.	0.
134	G1_power station	0.	0.	0.	0.	0.	0.
134	G2_power station	0.	0.	2.783	0.	0.	0.
134	Q_power station	0.	0.	0.103	0.	0.	0.
134	Q_neve	0.	0.	0.37	0.	0.	0.
134	Q_manutenzione	0.	0.	0.103	0.	0.	0.
134	EQ_X	0.	0.	-0.15	0.	0.	0.
134	EQ_Y	0.	0.	0.11	0.	0.	0.
135	DEAD	0.	0.	1.47	0.	0.	0.
135	G1_power station	0.	0.	0.	0.	0.	0.
135	G2_power station	0.	0.	1.631	0.	0.	0.
135	Q_power station	0.	0.	0.06	0.	0.	0.
135	Q_neve	0.	0.	0.25	0.	0.	0.
135	Q_manutenzione	0.	0.	0.06	0.	0.	0.
135	EQ_X	0.	0.	0.357	0.	0.	0.
135	EQ_Y	0.	0.	0.104	0.	0.	0.
136	DEAD	0.	0.	0.735	0.	0.	0.
136	G1_power station	0.	0.	0.	0.	0.	0.
136	G2_power station	0.	0.	0.229	0.	0.	0.
136	Q_power station	0.	0.	8.459E-03	0.	0.	0.
136	Q_neve	0.	0.	0.065	0.	0.	0.
136	Q_manutenzione	0.	0.	8.459E-03	0.	0.	0.
136	EQ_X	0.	0.	0.409	0.	0.	0.
136	EQ_Y	0.	0.	0.044	0.	0.	0.
137	DEAD	0.	0.	1.47	0.	0.	0.
137	G1_power station	0.	0.	0.	0.	0.	0.
137	G2_power station	0.	0.	2.783	0.	0.	0.
137	Q_power station	0.	0.	0.103	0.	0.	0.
137	Q_neve	0.	0.	0.37	0.	0.	0.
137	Q_manutenzione	0.	0.	0.103	0.	0.	0.
137	EQ_X	0.	0.	-0.15	0.	0.	0.
137	EQ_Y	0.	0.	-0.11	0.	0.	0.

Table 19: Joint Reactions

Joint	OutputCase	F1	F2	F3	M1	M2	M3
		KN	KN	KN	KN-m	KN-m	KN-m
138	DEAD	0.	0.	1.47	0.	0.	0.
138	G1_power station	0.	0.	0.	0.	0.	0.
138	G2_power station	0.	0.	1.631	0.	0.	0.
138	Q_power station	0.	0.	0.06	0.	0.	0.
138	Q_neve	0.	0.	0.25	0.	0.	0.
138	Q_manutenzione	0.	0.	0.06	0.	0.	0.
138	EQ_X	0.	0.	0.357	0.	0.	0.
138	EQ_Y	0.	0.	-0.104	0.	0.	0.
139	DEAD	0.	0.	0.735	0.	0.	0.
139	G1_power station	0.	0.	0.	0.	0.	0.
139	G2_power station	0.	0.	0.229	0.	0.	0.
139	Q_power station	0.	0.	8.459E-03	0.	0.	0.
139	Q_neve	0.	0.	0.065	0.	0.	0.
139	Q_manutenzione	0.	0.	8.459E-03	0.	0.	0.
139	EQ_X	0.	0.	0.409	0.	0.	0.
139	EQ_Y	0.	0.	-0.044	0.	0.	0.
140	DEAD	0.	0.	1.47	0.	0.	0.
140	G1_power station	0.	0.	0.	0.	0.	0.
140	G2_power station	0.	0.	3.049	0.	0.	0.
140	Q_power station	0.	0.	0.113	0.	0.	0.
140	Q_neve	0.	0.	0.403	0.	0.	0.
140	Q_manutenzione	0.	0.	0.113	0.	0.	0.
140	EQ_X	0.	0.	-0.142	0.	0.	0.
140	EQ_Y	0.	0.	-0.391	0.	0.	0.
141	DEAD	0.	0.	1.47	0.	0.	0.
141	G1_power station	0.	0.	0.	0.	0.	0.
141	G2_power station	0.	0.	1.862	0.	0.	0.
141	Q_power station	0.	0.	0.069	0.	0.	0.
141	Q_neve	0.	0.	0.283	0.	0.	0.
141	Q_manutenzione	0.	0.	0.069	0.	0.	0.
141	EQ_X	0.	0.	0.348	0.	0.	0.
141	EQ_Y	0.	0.	-0.36	0.	0.	0.
142	DEAD	0.	0.	0.735	0.	0.	0.
142	G1_power station	0.	0.	0.	0.	0.	0.
142	G2_power station	0.	0.	0.346	0.	0.	0.
142	Q_power station	0.	0.	0.013	0.	0.	0.
142	Q_neve	0.	0.	0.082	0.	0.	0.
142	Q_manutenzione	0.	0.	0.013	0.	0.	0.
142	EQ_X	0.	0.	0.38	0.	0.	0.
142	EQ_Y	0.	0.	-0.151	0.	0.	0.
143	DEAD	0.	0.	1.485	0.	0.	0.
143	G1_power station	0.	0.	0.	0.	0.	0.
143	G2_power station	0.	0.	3.477	0.	0.	0.

Table 19: Joint Reactions

Joint	OutputCase	F1	F2	F3	M1	M2	M3
		KN	KN	KN	KN-m	KN-m	KN-m
143	Q_power station	0.	0.	0.129	0.	0.	0.
143	Q_neve	0.	0.	0.461	0.	0.	0.
143	Q_manutenzione	0.	0.	0.129	0.	0.	0.
143	EQ_X	0.	0.	-0.115	0.	0.	0.
143	EQ_Y	0.	0.	-0.838	0.	0.	0.
144	DEAD	0.	0.	1.485	0.	0.	0.
144	G1_power station	0.	0.	0.	0.	0.	0.
144	G2_power station	0.	0.	2.225	0.	0.	0.
144	Q_power station	0.	0.	0.082	0.	0.	0.
144	Q_neve	0.	0.	0.336	0.	0.	0.
144	Q_manutenzione	0.	0.	0.082	0.	0.	0.
144	EQ_X	0.	0.	0.339	0.	0.	0.
144	EQ_Y	0.	0.	-0.726	0.	0.	0.
145	DEAD	0.	0.	1.617	0.	0.	0.
145	G1_power station	0.	0.	0.	0.	0.	0.
145	G2_power station	0.	0.	2.868	0.	0.	0.
145	Q_power station	0.	0.	0.106	0.	0.	0.
145	Q_neve	0.	0.	0.384	0.	0.	0.
145	Q_manutenzione	0.	0.	0.106	0.	0.	0.
145	EQ_X	0.	0.	0.251	0.	0.	0.
145	EQ_Y	0.	0.	-0.682	0.	0.	0.
146	DEAD	0.	0.	0.817	0.	0.	0.
146	G1_power station	0.	0.	0.	0.	0.	0.
146	G2_power station	0.	0.	1.468	0.	0.	0.
146	Q_power station	0.	0.	0.054	0.	0.	0.
146	Q_neve	0.	0.	0.197	0.	0.	0.
146	Q_manutenzione	0.	0.	0.054	0.	0.	0.
146	EQ_X	0.	0.112	0.122	0.	0.	0.
146	EQ_Y	0.	-1.613	-0.503	0.	0.	0.
147	DEAD	0.	0.	1.617	0.	0.	0.
147	G1_power station	0.	0.	0.	0.	0.	0.
147	G2_power station	0.	0.	2.245	0.	0.	0.
147	Q_power station	0.	0.	0.083	0.	0.	0.
147	Q_neve	0.	0.	0.322	0.	0.	0.
147	Q_manutenzione	0.	0.	0.083	0.	0.	0.
147	EQ_X	0.	0.	0.149	0.	0.	0.
147	EQ_Y	0.	0.	-0.655	0.	0.	0.
148	DEAD	0.	0.	0.817	0.	0.	0.
148	G1_power station	0.	0.	0.	0.	0.	0.
148	G2_power station	0.	0.	1.146	0.	0.	0.
148	Q_power station	0.	0.	0.042	0.	0.	0.
148	Q_neve	0.	0.	0.165	0.	0.	0.
148	Q_manutenzione	0.	0.	0.042	0.	0.	0.

Table 19: Joint Reactions

Joint	OutputCase	F1	F2	F3	M1	M2	M3
		KN	KN	KN	KN-m	KN-m	KN-m
148	EQ_X	0.	0.092	0.067	0.	0.	0.
148	EQ_Y	0.	-1.625	-0.476	0.	0.	0.
149	DEAD	0.	0.	1.617	0.	0.	0.
149	G1_power station	0.	0.	0.	0.	0.	0.
149	G2_power station	0.	0.	1.677	0.	0.	0.
149	Q_power station	0.	0.	0.062	0.	0.	0.
149	Q_neve	0.	0.	0.266	0.	0.	0.
149	Q_manutenzione	0.	0.	0.062	0.	0.	0.
149	EQ_X	0.	0.	0.082	0.	0.	0.
149	EQ_Y	0.	0.	-0.628	0.	0.	0.
150	DEAD	0.	0.	0.817	0.	0.	0.
150	G1_power station	0.	0.	0.	0.	0.	0.
150	G2_power station	0.	0.	0.85	0.	0.	0.
150	Q_power station	0.	0.	0.031	0.	0.	0.
150	Q_neve	0.	0.	0.137	0.	0.	0.
150	Q_manutenzione	0.	0.	0.031	0.	0.	0.
150	EQ_X	0.	0.073	0.034	0.	0.	0.
150	EQ_Y	0.	-1.638	-0.454	0.	0.	0.
151	DEAD	0.	0.	1.617	0.	0.	0.
151	G1_power station	0.	0.	0.	0.	0.	0.
151	G2_power station	0.	0.	1.178	0.	0.	0.
151	Q_power station	0.	0.	0.044	0.	0.	0.
151	Q_neve	0.	0.	0.217	0.	0.	0.
151	Q_manutenzione	0.	0.	0.044	0.	0.	0.
151	EQ_X	0.	0.	0.045	0.	0.	0.
151	EQ_Y	0.	0.	-0.606	0.	0.	0.
152	DEAD	0.	0.	0.817	0.	0.	0.
152	G1_power station	0.	0.	0.	0.	0.	0.
152	G2_power station	0.	0.	0.593	0.	0.	0.
152	Q_power station	0.	0.	0.022	0.	0.	0.
152	Q_neve	0.	0.	0.112	0.	0.	0.
152	Q_manutenzione	0.	0.	0.022	0.	0.	0.
152	EQ_X	0.	0.053	0.017	0.	0.	0.
152	EQ_Y	0.	-1.65	-0.436	0.	0.	0.
153	DEAD	0.	0.	1.617	0.	0.	0.
153	G1_power station	0.	0.	0.	0.	0.	0.
153	G2_power station	0.	0.	0.757	0.	0.	0.
153	Q_power station	0.	0.	0.028	0.	0.	0.
153	Q_neve	0.	0.	0.178	0.	0.	0.
153	Q_manutenzione	0.	0.	0.028	0.	0.	0.
153	EQ_X	0.	0.	0.032	0.	0.	0.
153	EQ_Y	0.	0.	-0.59	0.	0.	0.
154	DEAD	0.	0.	0.817	0.	0.	0.

Table 19: Joint Reactions

Joint	OutputCase	F1	F2	F3	M1	M2	M3
		KN	KN	KN	KN-m	KN-m	KN-m
154	G1_power station	0.	0.	0.	0.	0.	0.
154	G2_power station	0.	0.	0.379	0.	0.	0.
154	Q_power station	0.	0.	0.014	0.	0.	0.
154	Q_neve	0.	0.	0.092	0.	0.	0.
154	Q_manutenzione	0.	0.	0.014	0.	0.	0.
154	EQ_X	0.	0.034	0.013	0.	0.	0.
154	EQ_Y	0.	-1.663	-0.424	0.	0.	0.
155	DEAD	0.	0.	1.617	0.	0.	0.
155	G1_power station	0.	0.	0.	0.	0.	0.
155	G2_power station	0.	0.	0.422	0.	0.	0.
155	Q_power station	0.	0.	0.016	0.	0.	0.
155	Q_neve	0.	0.	0.147	0.	0.	0.
155	Q_manutenzione	0.	0.	0.016	0.	0.	0.
155	EQ_X	0.	0.	0.038	0.	0.	0.
155	EQ_Y	0.	0.	-0.58	0.	0.	0.
156	DEAD	0.	0.	0.817	0.	0.	0.
156	G1_power station	0.	0.	0.	0.	0.	0.
156	G2_power station	0.	0.	0.216	0.	0.	0.
156	Q_power station	0.	0.	7.994E-03	0.	0.	0.
156	Q_neve	0.	0.	0.077	0.	0.	0.
156	Q_manutenzione	0.	0.	7.994E-03	0.	0.	0.
156	EQ_X	0.	0.014	0.018	0.	0.	0.
156	EQ_Y	0.	-1.675	-0.418	0.	0.	0.
157	DEAD	0.	0.	1.485	0.	0.	0.
157	G1_power station	0.	0.	0.	0.	0.	0.
157	G2_power station	0.	0.	2.918	0.	0.	0.
157	Q_power station	0.	0.	0.108	0.	0.	0.
157	Q_neve	0.	0.	0.402	0.	0.	0.
157	Q_manutenzione	0.	0.	0.108	0.	0.	0.
157	EQ_X	0.	0.	-0.306	0.	0.	0.
157	EQ_Y	0.	0.	0.701	0.	0.	0.
158	DEAD	0.	0.	0.75	0.	0.	0.
158	G1_power station	0.	0.	0.	0.	0.	0.
158	G2_power station	0.	0.	1.499	0.	0.	0.
158	Q_power station	0.	0.	0.055	0.	0.	0.
158	Q_neve	0.	0.	0.207	0.	0.	0.
158	Q_manutenzione	0.	0.	0.055	0.	0.	0.
158	EQ_X	0.	-0.055	-0.155	0.	0.	0.
158	EQ_Y	0.	-0.813	0.516	0.	0.	0.
159	DEAD	0.	0.	1.485	0.	0.	0.
159	G1_power station	0.	0.	0.	0.	0.	0.
159	G2_power station	0.	0.	2.18	0.	0.	0.
159	Q_power station	0.	0.	0.081	0.	0.	0.

Table 19: Joint Reactions

Joint	OutputCase	F1	F2	F3	M1	M2	M3
		KN	KN	KN	KN-m	KN-m	KN-m
159	Q_neve	0.	0.	0.327	0.	0.	0.
159	Q_manutenzione	0.	0.	0.081	0.	0.	0.
159	EQ_X	0.	0.	-0.132	0.	0.	0.
159	EQ_Y	0.	0.	0.673	0.	0.	0.
160	DEAD	0.	0.	0.75	0.	0.	0.
160	G1_power station	0.	0.	0.	0.	0.	0.
160	G2_power station	0.	0.	1.125	0.	0.	0.
160	Q_power station	0.	0.	0.042	0.	0.	0.
160	Q_neve	0.	0.	0.17	0.	0.	0.
160	Q_manutenzione	0.	0.	0.042	0.	0.	0.
160	EQ_X	0.	-0.047	-0.067	0.	0.	0.
160	EQ_Y	0.	-0.808	0.49	0.	0.	0.
161	DEAD	0.	0.	1.47	0.	0.	0.
161	G1_power station	0.	0.	0.	0.	0.	0.
161	G2_power station	0.	0.	2.832	0.	0.	0.
161	Q_power station	0.	0.	0.105	0.	0.	0.
161	Q_neve	0.	0.	0.389	0.	0.	0.
161	Q_manutenzione	0.	0.	0.105	0.	0.	0.
161	EQ_X	0.	0.	-0.31	0.	0.	0.
161	EQ_Y	0.	0.	0.398	0.	0.	0.
162	DEAD	0.	0.	1.47	0.	0.	0.
162	G1_power station	0.	0.	0.	0.	0.	0.
162	G2_power station	0.	0.	2.107	0.	0.	0.
162	Q_power station	0.	0.	0.078	0.	0.	0.
162	Q_neve	0.	0.	0.315	0.	0.	0.
162	Q_manutenzione	0.	0.	0.078	0.	0.	0.
162	EQ_X	0.	0.	-0.128	0.	0.	0.
162	EQ_Y	0.	0.	0.388	0.	0.	0.
163	DEAD	0.	0.	0.735	0.	0.	0.
163	G1_power station	0.	0.	0.	0.	0.	0.
163	G2_power station	0.	0.	0.697	0.	0.	0.
163	Q_power station	0.	0.	0.026	0.	0.	0.
163	Q_neve	0.	0.	0.121	0.	0.	0.
163	Q_manutenzione	0.	0.	0.026	0.	0.	0.
163	EQ_X	0.	0.	0.018	0.	0.	0.
163	EQ_Y	0.	0.	0.186	0.	0.	0.
164	DEAD	0.	0.	1.47	0.	0.	0.
164	G1_power station	0.	0.	0.	0.	0.	0.
164	G2_power station	0.	0.	2.792	0.	0.	0.
164	Q_power station	0.	0.	0.103	0.	0.	0.
164	Q_neve	0.	0.	0.384	0.	0.	0.
164	Q_manutenzione	0.	0.	0.103	0.	0.	0.
164	EQ_X	0.	0.	-0.312	0.	0.	0.

Table 19: Joint Reactions

Joint	OutputCase	F1	F2	F3	M1	M2	M3
		KN	KN	KN	KN-m	KN-m	KN-m
164	EQ_Y	0.	0.	0.13	0.	0.	0.
165	DEAD	0.	0.	1.47	0.	0.	0.
165	G1_power station	0.	0.	0.	0.	0.	0.
165	G2_power station	0.	0.	2.07	0.	0.	0.
165	Q_power station	0.	0.	0.077	0.	0.	0.
165	Q_neve	0.	0.	0.31	0.	0.	0.
165	Q_manutenzione	0.	0.	0.077	0.	0.	0.
165	EQ_X	0.	0.	-0.125	0.	0.	0.
165	EQ_Y	0.	0.	0.127	0.	0.	0.
166	DEAD	0.	0.	0.735	0.	0.	0.
166	G1_power station	0.	0.	0.	0.	0.	0.
166	G2_power station	0.	0.	0.674	0.	0.	0.
166	Q_power station	0.	0.	0.025	0.	0.	0.
166	Q_neve	0.	0.	0.118	0.	0.	0.
166	Q_manutenzione	0.	0.	0.025	0.	0.	0.
166	EQ_X	0.	0.	0.026	0.	0.	0.
166	EQ_Y	0.	0.	0.061	0.	0.	0.
167	DEAD	0.	0.	1.47	0.	0.	0.
167	G1_power station	0.	0.	0.	0.	0.	0.
167	G2_power station	0.	0.	2.792	0.	0.	0.
167	Q_power station	0.	0.	0.103	0.	0.	0.
167	Q_neve	0.	0.	0.384	0.	0.	0.
167	Q_manutenzione	0.	0.	0.103	0.	0.	0.
167	EQ_X	0.	0.	-0.312	0.	0.	0.
167	EQ_Y	0.	0.	-0.13	0.	0.	0.
168	DEAD	0.	0.	1.47	0.	0.	0.
168	G1_power station	0.	0.	0.	0.	0.	0.
168	G2_power station	0.	0.	2.07	0.	0.	0.
168	Q_power station	0.	0.	0.077	0.	0.	0.
168	Q_neve	0.	0.	0.31	0.	0.	0.
168	Q_manutenzione	0.	0.	0.077	0.	0.	0.
168	EQ_X	0.	0.	-0.125	0.	0.	0.
168	EQ_Y	0.	0.	-0.127	0.	0.	0.
169	DEAD	0.	0.	0.735	0.	0.	0.
169	G1_power station	0.	0.	0.	0.	0.	0.
169	G2_power station	0.	0.	0.674	0.	0.	0.
169	Q_power station	0.	0.	0.025	0.	0.	0.
169	Q_neve	0.	0.	0.118	0.	0.	0.
169	Q_manutenzione	0.	0.	0.025	0.	0.	0.
169	EQ_X	0.	0.	0.026	0.	0.	0.
169	EQ_Y	0.	0.	-0.061	0.	0.	0.
170	DEAD	0.	0.	1.47	0.	0.	0.
170	G1_power station	0.	0.	0.	0.	0.	0.

Table 19: Joint Reactions

Joint	OutputCase	F1	F2	F3	M1	M2	M3
		KN	KN	KN	KN-m	KN-m	KN-m
170	G2_power station	0.	0.	2.832	0.	0.	0.
170	Q_power station	0.	0.	0.105	0.	0.	0.
170	Q_neve	0.	0.	0.389	0.	0.	0.
170	Q_manutenzione	0.	0.	0.105	0.	0.	0.
170	EQ_X	0.	0.	-0.31	0.	0.	0.
170	EQ_Y	0.	0.	-0.398	0.	0.	0.
171	DEAD	0.	0.	1.47	0.	0.	0.
171	G1_power station	0.	0.	0.	0.	0.	0.
171	G2_power station	0.	0.	2.107	0.	0.	0.
171	Q_power station	0.	0.	0.078	0.	0.	0.
171	Q_neve	0.	0.	0.315	0.	0.	0.
171	Q_manutenzione	0.	0.	0.078	0.	0.	0.
171	EQ_X	0.	0.	-0.128	0.	0.	0.
171	EQ_Y	0.	0.	-0.388	0.	0.	0.
172	DEAD	0.	0.	0.735	0.	0.	0.
172	G1_power station	0.	0.	0.	0.	0.	0.
172	G2_power station	0.	0.	0.697	0.	0.	0.
172	Q_power station	0.	0.	0.026	0.	0.	0.
172	Q_neve	0.	0.	0.121	0.	0.	0.
172	Q_manutenzione	0.	0.	0.026	0.	0.	0.
172	EQ_X	0.	0.	0.018	0.	0.	0.
172	EQ_Y	0.	0.	-0.186	0.	0.	0.
173	DEAD	0.	0.	1.485	0.	0.	0.
173	G1_power station	0.	0.	0.	0.	0.	0.
173	G2_power station	0.	0.	2.918	0.	0.	0.
173	Q_power station	0.	0.	0.108	0.	0.	0.
173	Q_neve	0.	0.	0.402	0.	0.	0.
173	Q_manutenzione	0.	0.	0.108	0.	0.	0.
173	EQ_X	0.	0.	-0.306	0.	0.	0.
173	EQ_Y	0.	0.	-0.701	0.	0.	0.
174	DEAD	0.	0.	1.485	0.	0.	0.
174	G1_power station	0.	0.	0.	0.	0.	0.
174	G2_power station	0.	0.	2.18	0.	0.	0.
174	Q_power station	0.	0.	0.081	0.	0.	0.
174	Q_neve	0.	0.	0.327	0.	0.	0.
174	Q_manutenzione	0.	0.	0.081	0.	0.	0.
174	EQ_X	0.	0.	-0.132	0.	0.	0.
174	EQ_Y	0.	0.	-0.673	0.	0.	0.
175	DEAD	0.	0.	1.601	0.	0.	0.
175	G1_power station	0.	0.	0.	0.	0.	0.
175	G2_power station	0.	0.	2.789	0.	0.	0.
175	Q_power station	0.	0.	0.103	0.	0.	0.
175	Q_neve	0.	0.	0.372	0.	0.	0.

Table 19: Joint Reactions

Joint	OutputCase	F1	F2	F3	M1	M2	M3
		KN	KN	KN	KN-m	KN-m	KN-m
175	Q_manutenzione	0.	0.	0.103	0.	0.	0.
175	EQ_X	0.	0.	0.263	0.	0.	0.
175	EQ_Y	0.	0.	-0.387	0.	0.	0.
176	DEAD	0.	0.	1.601	0.	0.	0.
176	G1_power station	0.	0.	0.	0.	0.	0.
176	G2_power station	0.	0.	2.194	0.	0.	0.
176	Q_power station	0.	0.	0.081	0.	0.	0.
176	Q_neve	0.	0.	0.312	0.	0.	0.
176	Q_manutenzione	0.	0.	0.081	0.	0.	0.
176	EQ_X	0.	0.	0.159	0.	0.	0.
176	EQ_Y	0.	0.	-0.379	0.	0.	0.
177	DEAD	0.	0.	1.601	0.	0.	0.
177	G1_power station	0.	0.	0.	0.	0.	0.
177	G2_power station	0.	0.	1.646	0.	0.	0.
177	Q_power station	0.	0.	0.061	0.	0.	0.
177	Q_neve	0.	0.	0.258	0.	0.	0.
177	Q_manutenzione	0.	0.	0.061	0.	0.	0.
177	EQ_X	0.	0.	0.091	0.	0.	0.
177	EQ_Y	0.	0.	-0.367	0.	0.	0.
178	DEAD	0.	0.	1.601	0.	0.	0.
178	G1_power station	0.	0.	0.	0.	0.	0.
178	G2_power station	0.	0.	1.161	0.	0.	0.
178	Q_power station	0.	0.	0.043	0.	0.	0.
178	Q_neve	0.	0.	0.211	0.	0.	0.
178	Q_manutenzione	0.	0.	0.043	0.	0.	0.
178	EQ_X	0.	0.	0.051	0.	0.	0.
178	EQ_Y	0.	0.	-0.356	0.	0.	0.
179	DEAD	0.	0.	1.601	0.	0.	0.
179	G1_power station	0.	0.	0.	0.	0.	0.
179	G2_power station	0.	0.	0.746	0.	0.	0.
179	Q_power station	0.	0.	0.028	0.	0.	0.
179	Q_neve	0.	0.	0.171	0.	0.	0.
179	Q_manutenzione	0.	0.	0.028	0.	0.	0.
179	EQ_X	0.	0.	0.035	0.	0.	0.
179	EQ_Y	0.	0.	-0.346	0.	0.	0.
180	DEAD	0.	0.	1.601	0.	0.	0.
180	G1_power station	0.	0.	0.	0.	0.	0.
180	G2_power station	0.	0.	0.401	0.	0.	0.
180	Q_power station	0.	0.	0.015	0.	0.	0.
180	Q_neve	0.	0.	0.139	0.	0.	0.
180	Q_manutenzione	0.	0.	0.015	0.	0.	0.
180	EQ_X	0.	0.	0.035	0.	0.	0.
180	EQ_Y	0.	0.	-0.34	0.	0.	0.

Table 19: Joint Reactions

Joint	OutputCase	F1	F2	F3	M1	M2	M3
		KN	KN	KN	KN-m	KN-m	KN-m
181	DEAD	0.	0.	0.8	0.	0.	0.
181	G1_power station	0.	0.	0.	0.	0.	0.
181	G2_power station	0.	0.	0.052	0.	0.	0.
181	Q_power station	0.	0.	1.918E-03	0.	0.	0.
181	Q_neve	0.	0.	0.056	0.	0.	0.
181	Q_manutenzione	0.	0.	1.918E-03	0.	0.	0.
181	EQ_X	0.	0.	0.022	0.	0.	0.
181	EQ_Y	0.	0.	-0.167	0.	0.	0.
182	DEAD	0.	0.	1.601	0.	0.	0.
182	G1_power station	0.	0.	0.	0.	0.	0.
182	G2_power station	0.	0.	2.753	0.	0.	0.
182	Q_power station	0.	0.	0.102	0.	0.	0.
182	Q_neve	0.	0.	0.367	0.	0.	0.
182	Q_manutenzione	0.	0.	0.102	0.	0.	0.
182	EQ_X	0.	0.	0.27	0.	0.	0.
182	EQ_Y	0.	0.	-0.126	0.	0.	0.
183	DEAD	0.	0.	1.601	0.	0.	0.
183	G1_power station	0.	0.	0.	0.	0.	0.
183	G2_power station	0.	0.	2.173	0.	0.	0.
183	Q_power station	0.	0.	0.08	0.	0.	0.
183	Q_neve	0.	0.	0.309	0.	0.	0.
183	Q_manutenzione	0.	0.	0.08	0.	0.	0.
183	EQ_X	0.	0.	0.167	0.	0.	0.
183	EQ_Y	0.	0.	-0.124	0.	0.	0.
184	DEAD	0.	0.	1.601	0.	0.	0.
184	G1_power station	0.	0.	0.	0.	0.	0.
184	G2_power station	0.	0.	1.635	0.	0.	0.
184	Q_power station	0.	0.	0.061	0.	0.	0.
184	Q_neve	0.	0.	0.255	0.	0.	0.
184	Q_manutenzione	0.	0.	0.061	0.	0.	0.
184	EQ_X	0.	0.	0.097	0.	0.	0.
184	EQ_Y	0.	0.	-0.121	0.	0.	0.
185	DEAD	0.	0.	1.601	0.	0.	0.
185	G1_power station	0.	0.	0.	0.	0.	0.
185	G2_power station	0.	0.	1.156	0.	0.	0.
185	Q_power station	0.	0.	0.043	0.	0.	0.
185	Q_neve	0.	0.	0.208	0.	0.	0.
185	Q_manutenzione	0.	0.	0.043	0.	0.	0.
185	EQ_X	0.	0.	0.055	0.	0.	0.
185	EQ_Y	0.	0.	-0.118	0.	0.	0.
186	DEAD	0.	0.	1.601	0.	0.	0.
186	G1_power station	0.	0.	0.	0.	0.	0.
186	G2_power station	0.	0.	0.742	0.	0.	0.

Table 19: Joint Reactions

Joint	OutputCase	F1	F2	F3	M1	M2	M3
		KN	KN	KN	KN-m	KN-m	KN-m
186	Q_power station	0.	0.	0.027	0.	0.	0.
186	Q_neve	0.	0.	0.169	0.	0.	0.
186	Q_manutenzione	0.	0.	0.027	0.	0.	0.
186	EQ_X	0.	0.	0.036	0.	0.	0.
186	EQ_Y	0.	0.	-0.115	0.	0.	0.
187	DEAD	0.	0.	1.601	0.	0.	0.
187	G1_power station	0.	0.	0.	0.	0.	0.
187	G2_power station	0.	0.	0.383	0.	0.	0.
187	Q_power station	0.	0.	0.014	0.	0.	0.
187	Q_neve	0.	0.	0.135	0.	0.	0.
187	Q_manutenzione	0.	0.	0.014	0.	0.	0.
187	EQ_X	0.	0.	0.032	0.	0.	0.
187	EQ_Y	0.	0.	-0.112	0.	0.	0.
188	DEAD	0.	0.	0.8	0.	0.	0.
188	G1_power station	0.	0.	0.	0.	0.	0.
188	G2_power station	0.	0.	0.028	0.	0.	0.
188	Q_power station	0.	0.	1.030E-03	0.	0.	0.
188	Q_neve	0.	0.	0.052	0.	0.	0.
188	Q_manutenzione	0.	0.	1.030E-03	0.	0.	0.
188	EQ_X	0.	0.	0.018	0.	0.	0.
188	EQ_Y	0.	0.	-0.055	0.	0.	0.
189	DEAD	0.	0.	1.601	0.	0.	0.
189	G1_power station	0.	0.	0.	0.	0.	0.
189	G2_power station	0.	0.	2.753	0.	0.	0.
189	Q_power station	0.	0.	0.102	0.	0.	0.
189	Q_neve	0.	0.	0.367	0.	0.	0.
189	Q_manutenzione	0.	0.	0.102	0.	0.	0.
189	EQ_X	0.	0.	0.27	0.	0.	0.
189	EQ_Y	0.	0.	0.126	0.	0.	0.
190	DEAD	0.	0.	1.601	0.	0.	0.
190	G1_power station	0.	0.	0.	0.	0.	0.
190	G2_power station	0.	0.	2.173	0.	0.	0.
190	Q_power station	0.	0.	0.08	0.	0.	0.
190	Q_neve	0.	0.	0.309	0.	0.	0.
190	Q_manutenzione	0.	0.	0.08	0.	0.	0.
190	EQ_X	0.	0.	0.167	0.	0.	0.
190	EQ_Y	0.	0.	0.124	0.	0.	0.
191	DEAD	0.	0.	1.601	0.	0.	0.
191	G1_power station	0.	0.	0.	0.	0.	0.
191	G2_power station	0.	0.	1.635	0.	0.	0.
191	Q_power station	0.	0.	0.061	0.	0.	0.
191	Q_neve	0.	0.	0.255	0.	0.	0.
191	Q_manutenzione	0.	0.	0.061	0.	0.	0.

Table 19: Joint Reactions

Joint	OutputCase	F1	F2	F3	M1	M2	M3
		KN	KN	KN	KN-m	KN-m	KN-m
191	EQ_X	0.	0.	0.097	0.	0.	0.
191	EQ_Y	0.	0.	0.121	0.	0.	0.
192	DEAD	0.	0.	1.601	0.	0.	0.
192	G1_power station	0.	0.	0.	0.	0.	0.
192	G2_power station	0.	0.	1.156	0.	0.	0.
192	Q_power station	0.	0.	0.043	0.	0.	0.
192	Q_neve	0.	0.	0.208	0.	0.	0.
192	Q_manutenzione	0.	0.	0.043	0.	0.	0.
192	EQ_X	0.	0.	0.055	0.	0.	0.
192	EQ_Y	0.	0.	0.118	0.	0.	0.
193	DEAD	0.	0.	1.601	0.	0.	0.
193	G1_power station	0.	0.	0.	0.	0.	0.
193	G2_power station	0.	0.	0.742	0.	0.	0.
193	Q_power station	0.	0.	0.027	0.	0.	0.
193	Q_neve	0.	0.	0.169	0.	0.	0.
193	Q_manutenzione	0.	0.	0.027	0.	0.	0.
193	EQ_X	0.	0.	0.036	0.	0.	0.
193	EQ_Y	0.	0.	0.115	0.	0.	0.
194	DEAD	0.	0.	1.601	0.	0.	0.
194	G1_power station	0.	0.	0.	0.	0.	0.
194	G2_power station	0.	0.	0.383	0.	0.	0.
194	Q_power station	0.	0.	0.014	0.	0.	0.
194	Q_neve	0.	0.	0.135	0.	0.	0.
194	Q_manutenzione	0.	0.	0.014	0.	0.	0.
194	EQ_X	0.	0.	0.032	0.	0.	0.
194	EQ_Y	0.	0.	0.112	0.	0.	0.
195	DEAD	0.	0.	0.8	0.	0.	0.
195	G1_power station	0.	0.	0.	0.	0.	0.
195	G2_power station	0.	0.	0.028	0.	0.	0.
195	Q_power station	0.	0.	1.030E-03	0.	0.	0.
195	Q_neve	0.	0.	0.052	0.	0.	0.
195	Q_manutenzione	0.	0.	1.030E-03	0.	0.	0.
195	EQ_X	0.	0.	0.018	0.	0.	0.
195	EQ_Y	0.	0.	0.055	0.	0.	0.
196	DEAD	0.	0.	1.601	0.	0.	0.
196	G1_power station	0.	0.	0.	0.	0.	0.
196	G2_power station	0.	0.	2.789	0.	0.	0.
196	Q_power station	0.	0.	0.103	0.	0.	0.
196	Q_neve	0.	0.	0.372	0.	0.	0.
196	Q_manutenzione	0.	0.	0.103	0.	0.	0.
196	EQ_X	0.	0.	0.263	0.	0.	0.
196	EQ_Y	0.	0.	0.387	0.	0.	0.
197	DEAD	0.	0.	1.601	0.	0.	0.

Table 19: Joint Reactions

Joint	OutputCase	F1	F2	F3	M1	M2	M3
		KN	KN	KN	KN-m	KN-m	KN-m
197	G1_power station	0.	0.	0.	0.	0.	0.
197	G2_power station	0.	0.	2.194	0.	0.	0.
197	Q_power station	0.	0.	0.081	0.	0.	0.
197	Q_neve	0.	0.	0.312	0.	0.	0.
197	Q_manutenzione	0.	0.	0.081	0.	0.	0.
197	EQ_X	0.	0.	0.159	0.	0.	0.
197	EQ_Y	0.	0.	0.379	0.	0.	0.
198	DEAD	0.	0.	1.601	0.	0.	0.
198	G1_power station	0.	0.	0.	0.	0.	0.
198	G2_power station	0.	0.	1.646	0.	0.	0.
198	Q_power station	0.	0.	0.061	0.	0.	0.
198	Q_neve	0.	0.	0.258	0.	0.	0.
198	Q_manutenzione	0.	0.	0.061	0.	0.	0.
198	EQ_X	0.	0.	0.091	0.	0.	0.
198	EQ_Y	0.	0.	0.367	0.	0.	0.
199	DEAD	0.	0.	1.601	0.	0.	0.
199	G1_power station	0.	0.	0.	0.	0.	0.
199	G2_power station	0.	0.	1.161	0.	0.	0.
199	Q_power station	0.	0.	0.043	0.	0.	0.
199	Q_neve	0.	0.	0.211	0.	0.	0.
199	Q_manutenzione	0.	0.	0.043	0.	0.	0.
199	EQ_X	0.	0.	0.051	0.	0.	0.
199	EQ_Y	0.	0.	0.356	0.	0.	0.
200	DEAD	0.	0.	1.601	0.	0.	0.
200	G1_power station	0.	0.	0.	0.	0.	0.
200	G2_power station	0.	0.	0.746	0.	0.	0.
200	Q_power station	0.	0.	0.028	0.	0.	0.
200	Q_neve	0.	0.	0.171	0.	0.	0.
200	Q_manutenzione	0.	0.	0.028	0.	0.	0.
200	EQ_X	0.	0.	0.035	0.	0.	0.
200	EQ_Y	0.	0.	0.346	0.	0.	0.
201	DEAD	0.	0.	1.601	0.	0.	0.
201	G1_power station	0.	0.	0.	0.	0.	0.
201	G2_power station	0.	0.	0.401	0.	0.	0.
201	Q_power station	0.	0.	0.015	0.	0.	0.
201	Q_neve	0.	0.	0.139	0.	0.	0.
201	Q_manutenzione	0.	0.	0.015	0.	0.	0.
201	EQ_X	0.	0.	0.035	0.	0.	0.
201	EQ_Y	0.	0.	0.34	0.	0.	0.
202	DEAD	0.	0.	0.8	0.	0.	0.
202	G1_power station	0.	0.	0.	0.	0.	0.
202	G2_power station	0.	0.	0.052	0.	0.	0.
202	Q_power station	0.	0.	1.918E-03	0.	0.	0.

Table 19: Joint Reactions

Joint	OutputCase	F1	F2	F3	M1	M2	M3
		KN	KN	KN	KN-m	KN-m	KN-m
202	Q_neve	0.	0.	0.056	0.	0.	0.
202	Q_manutenzione	0.	0.	1.918E-03	0.	0.	0.
202	EQ_X	0.	0.	0.022	0.	0.	0.
202	EQ_Y	0.	0.	0.167	0.	0.	0.
203	DEAD	0.	0.	1.617	0.	0.	0.
203	G1_power station	0.	0.	0.	0.	0.	0.
203	G2_power station	0.	0.	2.868	0.	0.	0.
203	Q_power station	0.	0.	0.106	0.	0.	0.
203	Q_neve	0.	0.	0.384	0.	0.	0.
203	Q_manutenzione	0.	0.	0.106	0.	0.	0.
203	EQ_X	0.	0.	0.251	0.	0.	0.
203	EQ_Y	0.	0.	0.682	0.	0.	0.
204	DEAD	0.	0.	1.617	0.	0.	0.
204	G1_power station	0.	0.	0.	0.	0.	0.
204	G2_power station	0.	0.	2.245	0.	0.	0.
204	Q_power station	0.	0.	0.083	0.	0.	0.
204	Q_neve	0.	0.	0.322	0.	0.	0.
204	Q_manutenzione	0.	0.	0.083	0.	0.	0.
204	EQ_X	0.	0.	0.149	0.	0.	0.
204	EQ_Y	0.	0.	0.655	0.	0.	0.
205	DEAD	0.	0.	1.617	0.	0.	0.
205	G1_power station	0.	0.	0.	0.	0.	0.
205	G2_power station	0.	0.	1.677	0.	0.	0.
205	Q_power station	0.	0.	0.062	0.	0.	0.
205	Q_neve	0.	0.	0.266	0.	0.	0.
205	Q_manutenzione	0.	0.	0.062	0.	0.	0.
205	EQ_X	0.	0.	0.082	0.	0.	0.
205	EQ_Y	0.	0.	0.628	0.	0.	0.
206	DEAD	0.	0.	1.617	0.	0.	0.
206	G1_power station	0.	0.	0.	0.	0.	0.
206	G2_power station	0.	0.	1.178	0.	0.	0.
206	Q_power station	0.	0.	0.044	0.	0.	0.
206	Q_neve	0.	0.	0.217	0.	0.	0.
206	Q_manutenzione	0.	0.	0.044	0.	0.	0.
206	EQ_X	0.	0.	0.045	0.	0.	0.
206	EQ_Y	0.	0.	0.606	0.	0.	0.
207	DEAD	0.	0.	1.617	0.	0.	0.
207	G1_power station	0.	0.	0.	0.	0.	0.
207	G2_power station	0.	0.	0.757	0.	0.	0.
207	Q_power station	0.	0.	0.028	0.	0.	0.
207	Q_neve	0.	0.	0.178	0.	0.	0.
207	Q_manutenzione	0.	0.	0.028	0.	0.	0.
207	EQ_X	0.	0.	0.032	0.	0.	0.

Table 19: Joint Reactions

Joint	OutputCase	F1	F2	F3	M1	M2	M3
		KN	KN	KN	KN-m	KN-m	KN-m
207	EQ_Y	0.	0.	0.59	0.	0.	0.
208	DEAD	0.	0.	1.617	0.	0.	0.
208	G1_power station	0.	0.	0.	0.	0.	0.
208	G2_power station	0.	0.	0.422	0.	0.	0.
208	Q_power station	0.	0.	0.016	0.	0.	0.
208	Q_neve	0.	0.	0.147	0.	0.	0.
208	Q_manutenzione	0.	0.	0.016	0.	0.	0.
208	EQ_X	0.	0.	0.038	0.	0.	0.
208	EQ_Y	0.	0.	0.58	0.	0.	0.
209	DEAD	0.	0.	0.75	0.	0.	0.
209	G1_power station	0.	0.	0.	0.	0.	0.
209	G2_power station	0.	0.	1.941	0.	0.	0.
209	Q_power station	0.	0.	0.072	0.	0.	0.
209	Q_neve	0.	0.	0.26	0.	0.	0.
209	Q_manutenzione	0.	0.	0.072	0.	0.	0.
209	EQ_X	0.	-0.109	-0.07	0.	0.	0.
209	EQ_Y	0.	-1.636	-0.702	0.	0.	0.
210	DEAD	0.	0.	0.75	0.	0.	0.
210	G1_power station	0.	0.	0.	0.	0.	0.
210	G2_power station	0.	0.	1.3	0.	0.	0.
210	Q_power station	0.	0.	0.048	0.	0.	0.
210	Q_neve	0.	0.	0.198	0.	0.	0.
210	Q_manutenzione	0.	0.	0.048	0.	0.	0.
210	EQ_X	0.	-0.093	0.166	0.	0.	0.
210	EQ_Y	0.	-1.625	-0.59	0.	0.	0.
211	DEAD	0.	0.	0.844	0.	0.	0.
211	G1_power station	0.	0.	0.	0.	0.	0.
211	G2_power station	0.	0.	-0.424	0.	0.	0.
211	Q_power station	0.	0.	-0.016	0.	0.	0.
211	Q_neve	0.	0.	0.024	0.	0.	0.
211	Q_manutenzione	0.	0.	-0.016	0.	0.	0.
211	EQ_X	0.	0.	0.201	0.	0.	0.
211	EQ_Y	0.	0.	-0.153	0.	0.	0.
212	DEAD	0.	0.	0.844	0.	0.	0.
212	G1_power station	0.	0.	0.	0.	0.	0.
212	G2_power station	0.	0.	-0.291	0.	0.	0.
212	Q_power station	0.	0.	-0.011	0.	0.	0.
212	Q_neve	0.	0.	0.051	0.	0.	0.
212	Q_manutenzione	0.	0.	-0.011	0.	0.	0.
212	EQ_X	0.	-0.027	0.189	0.	0.	0.
212	EQ_Y	0.	-1.744	-0.28	0.	0.	0.
213	DEAD	0.	0.	0.844	0.	0.	0.
213	G1_power station	0.	0.	0.	0.	0.	0.

Table 19: Joint Reactions

Joint	OutputCase	F1	F2	F3	M1	M2	M3
		KN	KN	KN	KN-m	KN-m	KN-m
213	G2_power station	0.	0.	-0.267	0.	0.	0.
213	Q_power station	0.	0.	-9.867E-03	0.	0.	0.
213	Q_neve	0.	0.	0.042	0.	0.	0.
213	Q_manutenzione	0.	0.	-9.867E-03	0.	0.	0.
213	EQ_X	0.	0.	0.334	0.	0.	0.
213	EQ_Y	0.	0.	-0.19	0.	0.	0.
214	DEAD	0.	0.	0.844	0.	0.	0.
214	G1_power station	0.	0.	0.	0.	0.	0.
214	G2_power station	0.	0.	-0.109	0.	0.	0.
214	Q_power station	0.	0.	-4.017E-03	0.	0.	0.
214	Q_neve	0.	0.	0.071	0.	0.	0.
214	Q_manutenzione	0.	0.	-4.017E-03	0.	0.	0.
214	EQ_X	0.	-0.047	0.311	0.	0.	0.
214	EQ_Y	0.	-1.766	-0.34	0.	0.	0.
215	DEAD	0.	0.	0.844	0.	0.	0.
215	G1_power station	0.	0.	0.	0.	0.	0.
215	G2_power station	0.	0.	0.075	0.	0.	0.
215	Q_power station	0.	0.	2.757E-03	0.	0.	0.
215	Q_neve	0.	0.	0.076	0.	0.	0.
215	Q_manutenzione	0.	0.	2.757E-03	0.	0.	0.
215	EQ_X	0.	0.	0.412	0.	0.	0.
215	EQ_Y	0.	0.	-0.258	0.	0.	0.
216	DEAD	0.	0.	0.844	0.	0.	0.
216	G1_power station	0.	0.	0.	0.	0.	0.
216	G2_power station	0.	0.	0.26	0.	0.	0.
216	Q_power station	0.	0.	9.625E-03	0.	0.	0.
216	Q_neve	0.	0.	0.107	0.	0.	0.
216	Q_manutenzione	0.	0.	9.625E-03	0.	0.	0.
216	EQ_X	0.	-0.066	0.377	0.	0.	0.
216	EQ_Y	0.	-1.791	-0.433	0.	0.	0.
217	DEAD	0.	0.	0.817	0.	0.	0.
217	G1_power station	0.	0.	0.	0.	0.	0.
217	G2_power station	0.	0.	1.932	0.	0.	0.
217	Q_power station	0.	0.	0.071	0.	0.	0.
217	Q_neve	0.	0.	0.253	0.	0.	0.
217	Q_manutenzione	0.	0.	0.071	0.	0.	0.
217	EQ_X	0.	0.056	0.034	0.	0.	0.
217	EQ_Y	0.	-0.809	0.668	0.	0.	0.
218	DEAD	0.	0.	0.817	0.	0.	0.
218	G1_power station	0.	0.	0.	0.	0.	0.
218	G2_power station	0.	0.	1.321	0.	0.	0.
218	Q_power station	0.	0.	0.049	0.	0.	0.
218	Q_neve	0.	0.	0.191	0.	0.	0.

Table 19: Joint Reactions

Joint	OutputCase	F1	F2	F3	M1	M2	M3
		KN	KN	KN	KN-m	KN-m	KN-m
218	Q_manutenzione	0.	0.	0.049	0.	0.	0.
218	EQ_X	0.	0.046	-0.13	0.	0.	0.
218	EQ_Y	0.	-0.813	0.537	0.	0.	0.
219	DEAD	0.	0.	0.817	0.	0.	0.
219	G1_power station	0.	0.	0.	0.	0.	0.
219	G2_power station	0.	0.	0.793	0.	0.	0.
219	Q_power station	0.	0.	0.029	0.	0.	0.
219	Q_neve	0.	0.	0.138	0.	0.	0.
219	Q_manutenzione	0.	0.	0.029	0.	0.	0.
219	EQ_X	0.	0.036	-0.191	0.	0.	0.
219	EQ_Y	0.	-0.818	0.428	0.	0.	0.
220	DEAD	0.	0.	0.817	0.	0.	0.
220	G1_power station	0.	0.	0.	0.	0.	0.
220	G2_power station	0.	0.	0.371	0.	0.	0.
220	Q_power station	0.	0.	0.014	0.	0.	0.
220	Q_neve	0.	0.	0.098	0.	0.	0.
220	Q_manutenzione	0.	0.	0.014	0.	0.	0.
220	EQ_X	0.	0.026	-0.185	0.	0.	0.
220	EQ_Y	0.	-0.822	0.345	0.	0.	0.
221	DEAD	0.	0.	0.817	0.	0.	0.
221	G1_power station	0.	0.	0.	0.	0.	0.
221	G2_power station	0.	0.	0.053	0.	0.	0.
221	Q_power station	0.	0.	1.954E-03	0.	0.	0.
221	Q_neve	0.	0.	0.07	0.	0.	0.
221	Q_manutenzione	0.	0.	1.954E-03	0.	0.	0.
221	EQ_X	0.	0.016	-0.135	0.	0.	0.
221	EQ_Y	0.	-0.827	0.287	0.	0.	0.
222	DEAD	0.	0.	0.817	0.	0.	0.
222	G1_power station	0.	0.	0.	0.	0.	0.
222	G2_power station	0.	0.	-0.172	0.	0.	0.
222	Q_power station	0.	0.	-6.362E-03	0.	0.	0.
222	Q_neve	0.	0.	0.051	0.	0.	0.
222	Q_manutenzione	0.	0.	-6.362E-03	0.	0.	0.
222	EQ_X	0.	6.244E-03	-0.052	0.	0.	0.
222	EQ_Y	0.	-0.831	0.254	0.	0.	0.
223	DEAD	0.	0.	0.844	0.	0.	0.
223	G1_power station	0.	0.	0.	0.	0.	0.
223	G2_power station	0.	0.	0.075	0.	0.	0.
223	Q_power station	0.	0.	2.757E-03	0.	0.	0.
223	Q_neve	0.	0.	0.076	0.	0.	0.
223	Q_manutenzione	0.	0.	2.757E-03	0.	0.	0.
223	EQ_X	0.	0.	0.412	0.	0.	0.
223	EQ_Y	0.	0.	0.258	0.	0.	0.

Table 19: Joint Reactions

Joint	OutputCase	F1	F2	F3	M1	M2	M3
		KN	KN	KN	KN-m	KN-m	KN-m
224	DEAD	0.	0.	0.844	0.	0.	0.
224	G1_power station	0.	0.	0.	0.	0.	0.
224	G2_power station	0.	0.	0.26	0.	0.	0.
224	Q_power station	0.	0.	9.625E-03	0.	0.	0.
224	Q_neve	0.	0.	0.107	0.	0.	0.
224	Q_manutenzione	0.	0.	9.625E-03	0.	0.	0.
224	EQ_X	0.	-0.033	0.377	0.	0.	0.
224	EQ_Y	0.	-0.897	0.433	0.	0.	0.
225	DEAD	0.	0.	0.844	0.	0.	0.
225	G1_power station	0.	0.	0.	0.	0.	0.
225	G2_power station	0.	0.	-0.267	0.	0.	0.
225	Q_power station	0.	0.	-9.867E-03	0.	0.	0.
225	Q_neve	0.	0.	0.042	0.	0.	0.
225	Q_manutenzione	0.	0.	-9.867E-03	0.	0.	0.
225	EQ_X	0.	0.	0.334	0.	0.	0.
225	EQ_Y	0.	0.	0.19	0.	0.	0.
226	DEAD	0.	0.	0.844	0.	0.	0.
226	G1_power station	0.	0.	0.	0.	0.	0.
226	G2_power station	0.	0.	-0.109	0.	0.	0.
226	Q_power station	0.	0.	-4.017E-03	0.	0.	0.
226	Q_neve	0.	0.	0.071	0.	0.	0.
226	Q_manutenzione	0.	0.	-4.017E-03	0.	0.	0.
226	EQ_X	0.	-0.023	0.311	0.	0.	0.
226	EQ_Y	0.	-0.885	0.34	0.	0.	0.
227	DEAD	0.	0.	0.844	0.	0.	0.
227	G1_power station	0.	0.	0.	0.	0.	0.
227	G2_power station	0.	0.	-0.424	0.	0.	0.
227	Q_power station	0.	0.	-0.016	0.	0.	0.
227	Q_neve	0.	0.	0.024	0.	0.	0.
227	Q_manutenzione	0.	0.	-0.016	0.	0.	0.
227	EQ_X	0.	0.	0.201	0.	0.	0.
227	EQ_Y	0.	0.	0.153	0.	0.	0.
228	DEAD	0.	0.	0.844	0.	0.	0.
228	G1_power station	0.	0.	0.	0.	0.	0.
228	G2_power station	0.	0.	-0.291	0.	0.	0.
228	Q_power station	0.	0.	-0.011	0.	0.	0.
228	Q_neve	0.	0.	0.051	0.	0.	0.
228	Q_manutenzione	0.	0.	-0.011	0.	0.	0.
228	EQ_X	0.	-0.014	0.189	0.	0.	0.
228	EQ_Y	0.	-0.874	0.28	0.	0.	0.
229	DEAD	0.	0.	0.75	0.	0.	0.
229	G1_power station	0.	0.	0.	0.	0.	0.
229	G2_power station	0.	0.	1.499	0.	0.	0.

Table 19: Joint Reactions

Joint	OutputCase	F1	F2	F3	M1	M2	M3
		KN	KN	KN	KN-m	KN-m	KN-m
229	Q_power station	0.	0.	0.055	0.	0.	0.
229	Q_neve	0.	0.	0.207	0.	0.	0.
229	Q_manutenzione	0.	0.	0.055	0.	0.	0.
229	EQ_X	0.	-0.11	-0.155	0.	0.	0.
229	EQ_Y	0.	-1.627	-0.516	0.	0.	0.
230	DEAD	0.	0.	0.75	0.	0.	0.
230	G1_power station	0.	0.	0.	0.	0.	0.
230	G2_power station	0.	0.	1.125	0.	0.	0.
230	Q_power station	0.	0.	0.042	0.	0.	0.
230	Q_neve	0.	0.	0.17	0.	0.	0.
230	Q_manutenzione	0.	0.	0.042	0.	0.	0.
230	EQ_X	0.	-0.094	-0.067	0.	0.	0.
230	EQ_Y	0.	-1.616	-0.49	0.	0.	0.
231	DEAD	0.	0.	0.844	0.	0.	0.
231	G1_power station	0.	0.	0.	0.	0.	0.
231	G2_power station	0.	0.	0.099	0.	0.	0.
231	Q_power station	0.	0.	3.674E-03	0.	0.	0.
231	Q_neve	0.	0.	0.068	0.	0.	0.
231	Q_manutenzione	0.	0.	3.674E-03	0.	0.	0.
231	EQ_X	0.	0.	0.048	0.	0.	0.
231	EQ_Y	0.	0.	-0.306	0.	0.	0.
232	DEAD	0.	0.	0.844	0.	0.	0.
232	G1_power station	0.	0.	0.	0.	0.	0.
232	G2_power station	0.	0.	0.135	0.	0.	0.
232	Q_power station	0.	0.	5.013E-03	0.	0.	0.
232	Q_neve	0.	0.	0.075	0.	0.	0.
232	Q_manutenzione	0.	0.	5.013E-03	0.	0.	0.
232	EQ_X	0.	-0.026	0.047	0.	0.	0.
232	EQ_Y	0.	-1.758	-0.445	0.	0.	0.
233	DEAD	0.	0.	0.844	0.	0.	0.
233	G1_power station	0.	0.	0.	0.	0.	0.
233	G2_power station	0.	0.	0.231	0.	0.	0.
233	Q_power station	0.	0.	8.564E-03	0.	0.	0.
233	Q_neve	0.	0.	0.083	0.	0.	0.
233	Q_manutenzione	0.	0.	8.564E-03	0.	0.	0.
233	EQ_X	0.	0.	0.059	0.	0.	0.
233	EQ_Y	0.	0.	-0.32	0.	0.	0.
234	DEAD	0.	0.	0.844	0.	0.	0.
234	G1_power station	0.	0.	0.	0.	0.	0.
234	G2_power station	0.	0.	0.269	0.	0.	0.
234	Q_power station	0.	0.	9.935E-03	0.	0.	0.
234	Q_neve	0.	0.	0.09	0.	0.	0.
234	Q_manutenzione	0.	0.	9.935E-03	0.	0.	0.

Table 19: Joint Reactions

Joint	OutputCase	F1	F2	F3	M1	M2	M3
		KN	KN	KN	KN-m	KN-m	KN-m
234	EQ_X	0.	-0.046	0.056	0.	0.	0.
234	EQ_Y	0.	-1.773	-0.465	0.	0.	0.
235	DEAD	0.	0.	0.844	0.	0.	0.
235	G1_power station	0.	0.	0.	0.	0.	0.
235	G2_power station	0.	0.	0.483	0.	0.	0.
235	Q_power station	0.	0.	0.018	0.	0.	0.
235	Q_neve	0.	0.	0.109	0.	0.	0.
235	Q_manutenzione	0.	0.	0.018	0.	0.	0.
235	EQ_X	0.	0.	0.05	0.	0.	0.
235	EQ_Y	0.	0.	-0.341	0.	0.	0.
236	DEAD	0.	0.	0.844	0.	0.	0.
236	G1_power station	0.	0.	0.	0.	0.	0.
236	G2_power station	0.	0.	0.522	0.	0.	0.
236	Q_power station	0.	0.	0.019	0.	0.	0.
236	Q_neve	0.	0.	0.116	0.	0.	0.
236	Q_manutenzione	0.	0.	0.019	0.	0.	0.
236	EQ_X	0.	-0.067	0.043	0.	0.	0.
236	EQ_Y	0.	-1.789	-0.492	0.	0.	0.
237	DEAD	0.	0.	0.817	0.	0.	0.
237	G1_power station	0.	0.	0.	0.	0.	0.
237	G2_power station	0.	0.	1.468	0.	0.	0.
237	Q_power station	0.	0.	0.054	0.	0.	0.
237	Q_neve	0.	0.	0.197	0.	0.	0.
237	Q_manutenzione	0.	0.	0.054	0.	0.	0.
237	EQ_X	0.	0.056	0.122	0.	0.	0.
237	EQ_Y	0.	-0.807	0.503	0.	0.	0.
238	DEAD	0.	0.	0.817	0.	0.	0.
238	G1_power station	0.	0.	0.	0.	0.	0.
238	G2_power station	0.	0.	1.146	0.	0.	0.
238	Q_power station	0.	0.	0.042	0.	0.	0.
238	Q_neve	0.	0.	0.165	0.	0.	0.
238	Q_manutenzione	0.	0.	0.042	0.	0.	0.
238	EQ_X	0.	0.046	0.067	0.	0.	0.
238	EQ_Y	0.	-0.813	0.476	0.	0.	0.
239	DEAD	0.	0.	0.817	0.	0.	0.
239	G1_power station	0.	0.	0.	0.	0.	0.
239	G2_power station	0.	0.	0.85	0.	0.	0.
239	Q_power station	0.	0.	0.031	0.	0.	0.
239	Q_neve	0.	0.	0.137	0.	0.	0.
239	Q_manutenzione	0.	0.	0.031	0.	0.	0.
239	EQ_X	0.	0.036	0.034	0.	0.	0.
239	EQ_Y	0.	-0.819	0.454	0.	0.	0.
240	DEAD	0.	0.	0.817	0.	0.	0.

Table 19: Joint Reactions

Joint	OutputCase	F1	F2	F3	M1	M2	M3
		KN	KN	KN	KN-m	KN-m	KN-m
240	G1_power station	0.	0.	0.	0.	0.	0.
240	G2_power station	0.	0.	0.593	0.	0.	0.
240	Q_power station	0.	0.	0.022	0.	0.	0.
240	Q_neve	0.	0.	0.112	0.	0.	0.
240	Q_manutenzione	0.	0.	0.022	0.	0.	0.
240	EQ_X	0.	0.027	0.017	0.	0.	0.
240	EQ_Y	0.	-0.825	0.436	0.	0.	0.
241	DEAD	0.	0.	0.817	0.	0.	0.
241	G1_power station	0.	0.	0.	0.	0.	0.
241	G2_power station	0.	0.	0.379	0.	0.	0.
241	Q_power station	0.	0.	0.014	0.	0.	0.
241	Q_neve	0.	0.	0.092	0.	0.	0.
241	Q_manutenzione	0.	0.	0.014	0.	0.	0.
241	EQ_X	0.	0.017	0.013	0.	0.	0.
241	EQ_Y	0.	-0.831	0.424	0.	0.	0.
242	DEAD	0.	0.	0.817	0.	0.	0.
242	G1_power station	0.	0.	0.	0.	0.	0.
242	G2_power station	0.	0.	0.216	0.	0.	0.
242	Q_power station	0.	0.	7.994E-03	0.	0.	0.
242	Q_neve	0.	0.	0.077	0.	0.	0.
242	Q_manutenzione	0.	0.	7.994E-03	0.	0.	0.
242	EQ_X	0.	7.185E-03	0.018	0.	0.	0.
242	EQ_Y	0.	-0.838	0.418	0.	0.	0.
243	DEAD	0.	0.	0.844	0.	0.	0.
243	G1_power station	0.	0.	0.	0.	0.	0.
243	G2_power station	0.	0.	0.483	0.	0.	0.
243	Q_power station	0.	0.	0.018	0.	0.	0.
243	Q_neve	0.	0.	0.109	0.	0.	0.
243	Q_manutenzione	0.	0.	0.018	0.	0.	0.
243	EQ_X	0.	0.	0.05	0.	0.	0.
243	EQ_Y	0.	0.	0.341	0.	0.	0.
244	DEAD	0.	0.	0.844	0.	0.	0.
244	G1_power station	0.	0.	0.	0.	0.	0.
244	G2_power station	0.	0.	0.522	0.	0.	0.
244	Q_power station	0.	0.	0.019	0.	0.	0.
244	Q_neve	0.	0.	0.116	0.	0.	0.
244	Q_manutenzione	0.	0.	0.019	0.	0.	0.
244	EQ_X	0.	-0.033	0.043	0.	0.	0.
244	EQ_Y	0.	-0.895	0.492	0.	0.	0.
245	DEAD	0.	0.	0.844	0.	0.	0.
245	G1_power station	0.	0.	0.	0.	0.	0.
245	G2_power station	0.	0.	0.231	0.	0.	0.
245	Q_power station	0.	0.	8.564E-03	0.	0.	0.

Table 19: Joint Reactions

Joint	OutputCase	F1	F2	F3	M1	M2	M3
		KN	KN	KN	KN-m	KN-m	KN-m
245	Q_neve	0.	0.	0.083	0.	0.	0.
245	Q_manutenzione	0.	0.	8.564E-03	0.	0.	0.
245	EQ_X	0.	0.	0.059	0.	0.	0.
245	EQ_Y	0.	0.	0.32	0.	0.	0.
246	DEAD	0.	0.	0.844	0.	0.	0.
246	G1_power station	0.	0.	0.	0.	0.	0.
246	G2_power station	0.	0.	0.269	0.	0.	0.
246	Q_power station	0.	0.	9.935E-03	0.	0.	0.
246	Q_neve	0.	0.	0.09	0.	0.	0.
246	Q_manutenzione	0.	0.	9.935E-03	0.	0.	0.
246	EQ_X	0.	-0.023	0.056	0.	0.	0.
246	EQ_Y	0.	-0.887	0.465	0.	0.	0.
247	DEAD	0.	0.	0.844	0.	0.	0.
247	G1_power station	0.	0.	0.	0.	0.	0.
247	G2_power station	0.	0.	0.099	0.	0.	0.
247	Q_power station	0.	0.	3.674E-03	0.	0.	0.
247	Q_neve	0.	0.	0.068	0.	0.	0.
247	Q_manutenzione	0.	0.	3.674E-03	0.	0.	0.
247	EQ_X	0.	0.	0.048	0.	0.	0.
247	EQ_Y	0.	0.	0.306	0.	0.	0.
248	DEAD	0.	0.	0.844	0.	0.	0.
248	G1_power station	0.	0.	0.	0.	0.	0.
248	G2_power station	0.	0.	0.135	0.	0.	0.
248	Q_power station	0.	0.	5.013E-03	0.	0.	0.
248	Q_neve	0.	0.	0.075	0.	0.	0.
248	Q_manutenzione	0.	0.	5.013E-03	0.	0.	0.
248	EQ_X	0.	-0.013	0.047	0.	0.	0.
248	EQ_Y	0.	-0.879	0.445	0.	0.	0.

8. Area results

This section provides area results, including items such as forces and stresses.

Table 20: Element Forces - Area Shells, Part 1 of 3

Table 20: Element Forces - Area Shells, Part 1 of 3

Area	AreaElem	Joint	OutputCase	F11	F22	F12
				KN/m	KN/m	KN/m
1	1	7	DEAD	0.	0.	0.
1	1	8	DEAD	0.	0.	0.

Table 20: Element Forces - Area Shells, Part 1 of 3

Area	AreaElem	Joint	OutputCase	F11	F22	F12
				KN/m	KN/m	KN/m
1	1	9	DEAD	0.	0.	0.
1	1	10	DEAD	0.	0.	0.
1	1	7	G1_power station	0.	0.	0.
1	1	8	G1_power station	0.	0.	0.
1	1	9	G1_power station	0.	0.	0.
1	1	10	G1_power station	0.	0.	0.
1	1	7	G2_power station	0.	0.	0.
1	1	8	G2_power station	0.	0.	0.
1	1	9	G2_power station	0.	0.	0.
1	1	10	G2_power station	0.	0.	0.
1	1	7	Q_power station	0.	0.	0.
1	1	8	Q_power station	0.	0.	0.
1	1	9	Q_power station	0.	0.	0.
1	1	10	Q_power station	0.	0.	0.
1	1	7	Q_neve	0.	0.	0.
1	1	8	Q_neve	0.	0.	0.
1	1	9	Q_neve	0.	0.	0.
1	1	10	Q_neve	0.	0.	0.
1	1	7	Q_manutenzione	0.	0.	0.
1	1	8	Q_manutenzione	0.	0.	0.
1	1	9	Q_manutenzione	0.	0.	0.
1	1	10	Q_manutenzione	0.	0.	0.
1	1	7	EQ_X	-1.88	-4.86	1.79
1	1	8	EQ_X	-0.85	0.29	3.33
1	1	9	EQ_X	13.08	3.07	1.92
1	1	10	EQ_X	12.06	-2.07	0.39
1	1	7	EQ_Y	-6.58	-7.06	2.12
1	1	8	EQ_Y	-3.13	10.16	1.23
1	1	9	EQ_Y	3.42	11.47	2.97
1	1	10	EQ_Y	-2.758E-02	-5.75	3.86
2	2	11	DEAD	0.	0.	0.
2	2	12	DEAD	0.	0.	0.
2	2	13	DEAD	0.	0.	0.
2	2	14	DEAD	0.	0.	0.
2	2	11	G1_power station	0.	0.	0.
2	2	12	G1_power station	0.	0.	0.
2	2	13	G1_power station	0.	0.	0.
2	2	14	G1_power station	0.	0.	0.
2	2	11	G2_power station	0.	0.	0.
2	2	12	G2_power station	0.	0.	0.
2	2	13	G2_power station	0.	0.	0.
2	2	14	G2_power station	0.	0.	0.
2	2	11	Q_power station	0.	0.	0.

Table 20: Element Forces - Area Shells, Part 1 of 3

Area	AreaElem	Joint	OutputCase	F11	F22	F12
				KN/m	KN/m	KN/m
2	2	12	Q_power station	0.	0.	0.
2	2	13	Q_power station	0.	0.	0.
2	2	14	Q_power station	0.	0.	0.
2	2	11	Q_neve	0.	0.	0.
2	2	12	Q_neve	0.	0.	0.
2	2	13	Q_neve	0.	0.	0.
2	2	14	Q_neve	0.	0.	0.
2	2	11	Q_manutenzione	0.	0.	0.
2	2	12	Q_manutenzione	0.	0.	0.
2	2	13	Q_manutenzione	0.	0.	0.
2	2	14	Q_manutenzione	0.	0.	0.
2	2	11	EQ_X	-4.93	-1.27	5.15
2	2	12	EQ_X	-3.31	6.83	3.82
2	2	13	EQ_X	-11.74	5.14	1.91
2	2	14	EQ_X	-13.36	-2.96	3.24
2	2	11	EQ_Y	-2.26	11.02	-0.57
2	2	12	EQ_Y	-5.29	-4.11	-1.86
2	2	13	EQ_Y	0.22	-3.	-3.36
2	2	14	EQ_Y	3.24	12.12	-2.06
3	3	15	DEAD	0.	0.	0.
3	3	16	DEAD	0.	0.	0.
3	3	17	DEAD	0.	0.	0.
3	3	18	DEAD	0.	0.	0.
3	3	15	G1_power station	0.	0.	0.
3	3	16	G1_power station	0.	0.	0.
3	3	17	G1_power station	0.	0.	0.
3	3	18	G1_power station	0.	0.	0.
3	3	15	G2_power station	0.	0.	0.
3	3	16	G2_power station	0.	0.	0.
3	3	17	G2_power station	0.	0.	0.
3	3	18	G2_power station	0.	0.	0.
3	3	15	Q_power station	0.	0.	0.
3	3	16	Q_power station	0.	0.	0.
3	3	17	Q_power station	0.	0.	0.
3	3	18	Q_power station	0.	0.	0.
3	3	15	Q_neve	0.	0.	0.
3	3	16	Q_neve	0.	0.	0.
3	3	17	Q_neve	0.	0.	0.
3	3	18	Q_neve	0.	0.	0.
3	3	15	Q_manutenzione	0.	0.	0.
3	3	16	Q_manutenzione	0.	0.	0.
3	3	17	Q_manutenzione	0.	0.	0.
3	3	18	Q_manutenzione	0.	0.	0.

Table 20: Element Forces - Area Shells, Part 1 of 3

Area	AreaElem	Joint	OutputCase	F11	F22	F12
				KN/m	KN/m	KN/m
3	3	15	EQ_X	-12.07	2.7	-0.63
3	3	16	EQ_X	1.97	5.51	-1.97
3	3	17	EQ_X	0.9	0.17	-3.52
3	3	18	EQ_X	-13.14	-2.64	-2.18
3	3	15	EQ_Y	-0.25	4.76	-3.32
3	3	16	EQ_Y	5.31	5.87	-1.83
3	3	17	EQ_Y	2.29	-9.19	-0.52
3	3	18	EQ_Y	-3.27	-10.31	-2.02
4	4	19	DEAD	0.	0.	0.
4	4	20	DEAD	0.	0.	0.
4	4	21	DEAD	0.	0.	0.
4	4	22	DEAD	0.	0.	0.
4	4	19	G1_power station	0.	0.	0.
4	4	20	G1_power station	0.	0.	0.
4	4	21	G1_power station	0.	0.	0.
4	4	22	G1_power station	0.	0.	0.
4	4	19	G2_power station	0.	0.	0.
4	4	20	G2_power station	0.	0.	0.
4	4	21	G2_power station	0.	0.	0.
4	4	22	G2_power station	0.	0.	0.
4	4	19	Q_power station	0.	0.	0.
4	4	20	Q_power station	0.	0.	0.
4	4	21	Q_power station	0.	0.	0.
4	4	22	Q_power station	0.	0.	0.
4	4	19	Q_neve	0.	0.	0.
4	4	20	Q_neve	0.	0.	0.
4	4	21	Q_neve	0.	0.	0.
4	4	22	Q_neve	0.	0.	0.
4	4	19	Q_manutenzione	0.	0.	0.
4	4	20	Q_manutenzione	0.	0.	0.
4	4	21	Q_manutenzione	0.	0.	0.
4	4	22	Q_manutenzione	0.	0.	0.
4	4	19	EQ_X	-0.82	-0.22	-3.46
4	4	20	EQ_X	-1.84	-5.33	-1.86
4	4	21	EQ_X	12.2	-2.52	-0.48
4	4	22	EQ_X	13.22	2.59	-2.08
4	4	19	EQ_Y	3.06	-9.25	1.06
4	4	20	EQ_Y	6.16	6.28	2.01
4	4	21	EQ_Y	-0.19	5.01	3.66
4	4	22	EQ_Y	-3.3	-10.53	2.71
29	29	61	DEAD	0.	0.	0.
29	29	39	DEAD	0.	0.	0.
29	29	40	DEAD	0.	0.	0.

Table 20: Element Forces - Area Shells, Part 1 of 3

Area	AreaElem	Joint	OutputCase	F11	F22	F12
				KN/m	KN/m	KN/m
29	29	6	DEAD	0.	0.	0.
29	29	61	G1_power station	0.	0.	0.
29	29	39	G1_power station	0.	0.	0.
29	29	40	G1_power station	0.	0.	0.
29	29	6	G1_power station	0.	0.	0.
29	29	61	G2_power station	0.	0.	0.
29	29	39	G2_power station	0.	0.	0.
29	29	40	G2_power station	0.	0.	0.
29	29	6	G2_power station	0.	0.	0.
29	29	61	Q_power station	0.	0.	0.
29	29	39	Q_power station	0.	0.	0.
29	29	40	Q_power station	0.	0.	0.
29	29	6	Q_power station	0.	0.	0.
29	29	61	Q_neve	0.	0.	0.
29	29	39	Q_neve	0.	0.	0.
29	29	40	Q_neve	0.	0.	0.
29	29	6	Q_neve	0.	0.	0.
29	29	61	Q_manutenzione	0.	0.	0.
29	29	39	Q_manutenzione	0.	0.	0.
29	29	40	Q_manutenzione	0.	0.	0.
29	29	6	Q_manutenzione	0.	0.	0.
29	29	61	EQ_X	-11.81	4.82	-2.45
29	29	39	EQ_X	-0.11	7.16	-3.58
29	29	40	EQ_X	-1.87	-1.6	-5.13
29	29	6	EQ_X	-13.56	-3.94	-4.01
29	29	61	EQ_Y	1.39	2.93	-3.99
29	29	39	EQ_Y	3.73	3.4	-1.79
29	29	40	EQ_Y	0.69	-11.82	1.27
29	29	6	EQ_Y	-1.66	-12.29	-0.93
30	30	39	DEAD	0.	0.	0.
30	30	41	DEAD	0.	0.	0.
30	30	42	DEAD	0.	0.	0.
30	30	40	DEAD	0.	0.	0.
30	30	39	G1_power station	0.	0.	0.
30	30	41	G1_power station	0.	0.	0.
30	30	42	G1_power station	0.	0.	0.
30	30	40	G1_power station	0.	0.	0.
30	30	39	G2_power station	0.	0.	0.
30	30	41	G2_power station	0.	0.	0.
30	30	42	G2_power station	0.	0.	0.
30	30	40	G2_power station	0.	0.	0.
30	30	39	Q_power station	0.	0.	0.
30	30	41	Q_power station	0.	0.	0.

Table 20: Element Forces - Area Shells, Part 1 of 3

Area	AreaElem	Joint	OutputCase	F11	F22	F12
				KN/m	KN/m	KN/m
30	30	42	Q_power station	0.	0.	0.
30	30	40	Q_power station	0.	0.	0.
30	30	39	Q_neve	0.	0.	0.
30	30	41	Q_neve	0.	0.	0.
30	30	42	Q_neve	0.	0.	0.
30	30	40	Q_neve	0.	0.	0.
30	30	39	Q_manutenzione	0.	0.	0.
30	30	41	Q_manutenzione	0.	0.	0.
30	30	42	Q_manutenzione	0.	0.	0.
30	30	40	Q_manutenzione	0.	0.	0.
30	30	39	EQ_X	-2.05	-2.53	-1.94
30	30	41	EQ_X	-5.67	-3.25	-0.97
30	30	42	EQ_X	-5.17	-0.77	-0.66
30	30	40	EQ_X	-1.55	-4.834E-02	-1.63
30	30	39	EQ_Y	2.58	-2.36	0.88
30	30	41	EQ_Y	-0.71	-3.02	1.75
30	30	42	EQ_Y	-0.49	-1.9	1.58
30	30	40	EQ_Y	2.8	-1.25	0.7
31	31	41	DEAD	0.	0.	0.
31	31	43	DEAD	0.	0.	0.
31	31	44	DEAD	0.	0.	0.
31	31	42	DEAD	0.	0.	0.
31	31	41	G1_power station	0.	0.	0.
31	31	43	G1_power station	0.	0.	0.
31	31	44	G1_power station	0.	0.	0.
31	31	42	G1_power station	0.	0.	0.
31	31	41	G2_power station	0.	0.	0.
31	31	43	G2_power station	0.	0.	0.
31	31	44	G2_power station	0.	0.	0.
31	31	42	G2_power station	0.	0.	0.
31	31	41	Q_power station	0.	0.	0.
31	31	43	Q_power station	0.	0.	0.
31	31	44	Q_power station	0.	0.	0.
31	31	42	Q_power station	0.	0.	0.
31	31	41	Q_neve	0.	0.	0.
31	31	43	Q_neve	0.	0.	0.
31	31	44	Q_neve	0.	0.	0.
31	31	42	Q_neve	0.	0.	0.
31	31	41	Q_manutenzione	0.	0.	0.
31	31	43	Q_manutenzione	0.	0.	0.
31	31	44	Q_manutenzione	0.	0.	0.
31	31	42	Q_manutenzione	0.	0.	0.
31	31	41	EQ_X	-6.06	-5.19	-0.44

Table 20: Element Forces - Area Shells, Part 1 of 3

Area	AreaElem	Joint	OutputCase	F11	F22	F12
				KN/m	KN/m	KN/m
31	31	43	EQ_X	-6.	-5.18	-3.906E-02
31	31	44	EQ_X	-5.03	-0.35	-4.484E-02
31	31	42	EQ_X	-5.09	-0.36	-0.45
31	31	41	EQ_Y	4.766E-02	0.77	1.34
31	31	43	EQ_Y	-3.003E-02	0.75	1.35
31	31	44	EQ_Y	-2.288E-02	0.79	2.52
31	31	42	EQ_Y	5.482E-02	0.8	2.51
32	32	43	DEAD	0.	0.	0.
32	32	45	DEAD	0.	0.	0.
32	32	46	DEAD	0.	0.	0.
32	32	44	DEAD	0.	0.	0.
32	32	43	G1_power station	0.	0.	0.
32	32	45	G1_power station	0.	0.	0.
32	32	46	G1_power station	0.	0.	0.
32	32	44	G1_power station	0.	0.	0.
32	32	43	G2_power station	0.	0.	0.
32	32	45	G2_power station	0.	0.	0.
32	32	46	G2_power station	0.	0.	0.
32	32	44	G2_power station	0.	0.	0.
32	32	43	Q_power station	0.	0.	0.
32	32	45	Q_power station	0.	0.	0.
32	32	46	Q_power station	0.	0.	0.
32	32	44	Q_power station	0.	0.	0.
32	32	43	Q_neve	0.	0.	0.
32	32	45	Q_neve	0.	0.	0.
32	32	46	Q_neve	0.	0.	0.
32	32	44	Q_neve	0.	0.	0.
32	32	43	Q_manutenzione	0.	0.	0.
32	32	45	Q_manutenzione	0.	0.	0.
32	32	46	Q_manutenzione	0.	0.	0.
32	32	44	Q_manutenzione	0.	0.	0.
32	32	43	EQ_X	-5.91	-4.72	0.59
32	32	45	EQ_X	-2.23	-3.99	1.47
32	32	46	EQ_X	-1.44	-2.157E-02	1.
32	32	44	EQ_X	-5.11	-0.76	0.13
32	32	43	EQ_Y	0.74	4.59	1.78
32	32	45	EQ_Y	-2.6	3.92	0.93
32	32	46	EQ_Y	-2.81	2.88	0.78
32	32	44	EQ_Y	0.53	3.55	1.63
33	33	45	DEAD	0.	0.	0.
33	33	62	DEAD	0.	0.	0.
33	33	63	DEAD	0.	0.	0.
33	33	46	DEAD	0.	0.	0.

Table 20: Element Forces - Area Shells, Part 1 of 3

Area	AreaElem	Joint	OutputCase	F11	F22	F12
				KN/m	KN/m	KN/m
33	33	45	G1_power station	0.	0.	0.
33	33	62	G1_power station	0.	0.	0.
33	33	63	G1_power station	0.	0.	0.
33	33	46	G1_power station	0.	0.	0.
33	33	45	G2_power station	0.	0.	0.
33	33	62	G2_power station	0.	0.	0.
33	33	63	G2_power station	0.	0.	0.
33	33	46	G2_power station	0.	0.	0.
33	33	45	Q_power station	0.	0.	0.
33	33	62	Q_power station	0.	0.	0.
33	33	63	Q_power station	0.	0.	0.
33	33	46	Q_power station	0.	0.	0.
33	33	45	Q_neve	0.	0.	0.
33	33	62	Q_neve	0.	0.	0.
33	33	63	Q_neve	0.	0.	0.
33	33	46	Q_neve	0.	0.	0.
33	33	45	Q_manutenzione	0.	0.	0.
33	33	62	Q_manutenzione	0.	0.	0.
33	33	63	Q_manutenzione	0.	0.	0.
33	33	46	Q_manutenzione	0.	0.	0.
33	33	45	EQ_X	-0.67	3.78	2.74
33	33	62	EQ_X	-12.32	1.45	2.05
33	33	63	EQ_X	-13.22	-3.06	3.96
33	33	46	EQ_X	-1.58	-0.73	4.65
33	33	45	EQ_Y	-3.72	-1.69	-1.74
33	33	62	EQ_Y	-1.44	-1.23	-3.95
33	33	63	EQ_Y	1.61	14.01	-0.86
33	33	46	EQ_Y	-0.67	13.55	1.36
34	34	66	DEAD	0.	0.	0.
34	34	47	DEAD	0.	0.	0.
34	34	48	DEAD	0.	0.	0.
34	34	5	DEAD	0.	0.	0.
34	34	66	G1_power station	0.	0.	0.
34	34	47	G1_power station	0.	0.	0.
34	34	48	G1_power station	0.	0.	0.
34	34	5	G1_power station	0.	0.	0.
34	34	66	G2_power station	0.	0.	0.
34	34	47	G2_power station	0.	0.	0.
34	34	48	G2_power station	0.	0.	0.
34	34	5	G2_power station	0.	0.	0.
34	34	66	Q_power station	0.	0.	0.
34	34	47	Q_power station	0.	0.	0.
34	34	48	Q_power station	0.	0.	0.

Table 20: Element Forces - Area Shells, Part 1 of 3

Area	AreaElem	Joint	OutputCase	F11	F22	F12
				KN/m	KN/m	KN/m
34	34	5	Q_power station	0.	0.	0.
34	34	66	Q_neve	0.	0.	0.
34	34	47	Q_neve	0.	0.	0.
34	34	48	Q_neve	0.	0.	0.
34	34	5	Q_neve	0.	0.	0.
34	34	66	Q_manutenzione	0.	0.	0.
34	34	47	Q_manutenzione	0.	0.	0.
34	34	48	Q_manutenzione	0.	0.	0.
34	34	5	Q_manutenzione	0.	0.	0.
34	34	66	EQ_X	12.57	-0.69	2.28
34	34	47	EQ_X	0.75	-3.06	3.07
34	34	48	EQ_X	1.53	0.87	5.12
34	34	5	EQ_X	13.35	3.23	4.33
34	34	66	EQ_Y	-1.27	-0.38	4.49
34	34	47	EQ_Y	-4.66	-1.06	1.88
34	34	48	EQ_Y	-1.48	14.8	-1.19
34	34	5	EQ_Y	1.9	15.47	1.43
35	35	47	DEAD	0.	0.	0.
35	35	49	DEAD	0.	0.	0.
35	35	50	DEAD	0.	0.	0.
35	35	48	DEAD	0.	0.	0.
35	35	47	G1_power station	0.	0.	0.
35	35	49	G1_power station	0.	0.	0.
35	35	50	G1_power station	0.	0.	0.
35	35	48	G1_power station	0.	0.	0.
35	35	47	G2_power station	0.	0.	0.
35	35	49	G2_power station	0.	0.	0.
35	35	50	G2_power station	0.	0.	0.
35	35	48	G2_power station	0.	0.	0.
35	35	47	Q_power station	0.	0.	0.
35	35	49	Q_power station	0.	0.	0.
35	35	50	Q_power station	0.	0.	0.
35	35	48	Q_power station	0.	0.	0.
35	35	47	Q_neve	0.	0.	0.
35	35	49	Q_neve	0.	0.	0.
35	35	50	Q_neve	0.	0.	0.
35	35	48	Q_neve	0.	0.	0.
35	35	47	Q_manutenzione	0.	0.	0.
35	35	49	Q_manutenzione	0.	0.	0.
35	35	50	Q_manutenzione	0.	0.	0.
35	35	48	Q_manutenzione	0.	0.	0.
35	35	47	EQ_X	2.52	5.79	1.91
35	35	49	EQ_X	5.9	6.46	1.05

Table 20: Element Forces - Area Shells, Part 1 of 3

Area	AreaElem	Joint	OutputCase	F11	F22	F12
				KN/m	KN/m	KN/m
35	35	50	EQ_X	4.86	1.26	0.64
35	35	48	EQ_X	1.48	0.58	1.5
35	35	47	EQ_Y	-3.6	4.22	-1.7
35	35	49	EQ_Y	0.68	5.07	-2.84
35	35	50	EQ_Y	0.55	4.44	-2.4
35	35	48	EQ_Y	-3.73	3.58	-1.25
36	36	49	DEAD	0.	0.	0.
36	36	51	DEAD	0.	0.	0.
36	36	52	DEAD	0.	0.	0.
36	36	50	DEAD	0.	0.	0.
36	36	49	G1_power station	0.	0.	0.
36	36	51	G1_power station	0.	0.	0.
36	36	52	G1_power station	0.	0.	0.
36	36	50	G1_power station	0.	0.	0.
36	36	49	G2_power station	0.	0.	0.
36	36	51	G2_power station	0.	0.	0.
36	36	52	G2_power station	0.	0.	0.
36	36	50	G2_power station	0.	0.	0.
36	36	49	Q_power station	0.	0.	0.
36	36	51	Q_power station	0.	0.	0.
36	36	52	Q_power station	0.	0.	0.
36	36	50	Q_power station	0.	0.	0.
36	36	49	Q_neve	0.	0.	0.
36	36	51	Q_neve	0.	0.	0.
36	36	52	Q_neve	0.	0.	0.
36	36	50	Q_neve	0.	0.	0.
36	36	49	Q_manutenzione	0.	0.	0.
36	36	51	Q_manutenzione	0.	0.	0.
36	36	52	Q_manutenzione	0.	0.	0.
36	36	50	Q_manutenzione	0.	0.	0.
36	36	49	EQ_X	6.24	8.13	0.34
36	36	51	EQ_X	6.09	8.1	-0.14
36	36	52	EQ_X	4.7	1.19	1.635E-02
36	36	50	EQ_X	4.85	1.22	0.5
36	36	49	EQ_Y	-0.61	-1.34	-2.18
36	36	51	EQ_Y	0.43	-1.13	-2.14
36	36	52	EQ_Y	0.72	0.32	-4.36
36	36	50	EQ_Y	-0.32	0.11	-4.4
37	37	51	DEAD	0.	0.	0.
37	37	53	DEAD	0.	0.	0.
37	37	54	DEAD	0.	0.	0.
37	37	52	DEAD	0.	0.	0.
37	37	51	G1_power station	0.	0.	0.

Table 20: Element Forces - Area Shells, Part 1 of 3

Area	AreaElem	Joint	OutputCase	F11	F22	F12
				KN/m	KN/m	KN/m
37	37	53	G1_power station	0.	0.	0.
37	37	54	G1_power station	0.	0.	0.
37	37	52	G1_power station	0.	0.	0.
37	37	51	G2_power station	0.	0.	0.
37	37	53	G2_power station	0.	0.	0.
37	37	54	G2_power station	0.	0.	0.
37	37	52	G2_power station	0.	0.	0.
37	37	51	Q_power station	0.	0.	0.
37	37	53	Q_power station	0.	0.	0.
37	37	54	Q_power station	0.	0.	0.
37	37	52	Q_power station	0.	0.	0.
37	37	51	Q_neve	0.	0.	0.
37	37	53	Q_neve	0.	0.	0.
37	37	54	Q_neve	0.	0.	0.
37	37	52	Q_neve	0.	0.	0.
37	37	51	Q_manutenzione	0.	0.	0.
37	37	53	Q_manutenzione	0.	0.	0.
37	37	54	Q_manutenzione	0.	0.	0.
37	37	52	Q_manutenzione	0.	0.	0.
37	37	51	EQ_X	5.88	7.06	-0.78
37	37	53	EQ_X	2.21	6.32	-1.72
37	37	54	EQ_X	1.15	1.02	-1.37
37	37	52	EQ_X	4.82	1.75	-0.43
37	37	51	EQ_Y	-0.79	-7.25	-2.68
37	37	53	EQ_Y	3.41	-6.41	-1.44
37	37	54	EQ_Y	4.07	-3.12	-0.98
37	37	52	EQ_Y	-0.14	-3.96	-2.22
38	38	53	DEAD	0.	0.	0.
38	38	59	DEAD	0.	0.	0.
38	38	58	DEAD	0.	0.	0.
38	38	54	DEAD	0.	0.	0.
38	38	53	G1_power station	0.	0.	0.
38	38	59	G1_power station	0.	0.	0.
38	38	58	G1_power station	0.	0.	0.
38	38	54	G1_power station	0.	0.	0.
38	38	53	G2_power station	0.	0.	0.
38	38	59	G2_power station	0.	0.	0.
38	38	58	G2_power station	0.	0.	0.
38	38	54	G2_power station	0.	0.	0.
38	38	53	Q_power station	0.	0.	0.
38	38	59	Q_power station	0.	0.	0.
38	38	58	Q_power station	0.	0.	0.
38	38	54	Q_power station	0.	0.	0.

Table 20: Element Forces - Area Shells, Part 1 of 3

Area	AreaElem	Joint	OutputCase	F11	F22	F12
				KN/m	KN/m	KN/m
38	38	53	Q_neve	0.	0.	0.
38	38	59	Q_neve	0.	0.	0.
38	38	58	Q_neve	0.	0.	0.
38	38	54	Q_neve	0.	0.	0.
38	38	53	Q_manutenzione	0.	0.	0.
38	38	59	Q_manutenzione	0.	0.	0.
38	38	58	Q_manutenzione	0.	0.	0.
38	38	54	Q_manutenzione	0.	0.	0.
38	38	53	EQ_X	0.47	-2.38	-3.12
38	38	59	EQ_X	12.47	2.115E-02	-2.43
38	38	58	EQ_X	13.24	3.84	-4.42
38	38	54	EQ_X	1.23	1.44	-5.11
38	38	53	EQ_Y	4.64	-0.26	2.19
38	38	59	EQ_Y	0.92	-1.	4.79
38	38	58	EQ_Y	-1.88	-14.99	1.84
38	38	54	EQ_Y	1.84	-14.24	-0.76
39	39	13	DEAD	0.	0.	0.
39	39	55	DEAD	0.	0.	0.
39	39	56	DEAD	0.	0.	0.
39	39	14	DEAD	0.	0.	0.
39	39	13	G1_power station	0.	0.	0.
39	39	55	G1_power station	0.	0.	0.
39	39	56	G1_power station	0.	0.	0.
39	39	14	G1_power station	0.	0.	0.
39	39	13	G2_power station	0.	0.	0.
39	39	55	G2_power station	0.	0.	0.
39	39	56	G2_power station	0.	0.	0.
39	39	14	G2_power station	0.	0.	0.
39	39	13	Q_power station	0.	0.	0.
39	39	55	Q_power station	0.	0.	0.
39	39	56	Q_power station	0.	0.	0.
39	39	14	Q_power station	0.	0.	0.
39	39	13	Q_neve	0.	0.	0.
39	39	55	Q_neve	0.	0.	0.
39	39	56	Q_neve	0.	0.	0.
39	39	14	Q_neve	0.	0.	0.
39	39	13	Q_manutenzione	0.	0.	0.
39	39	55	Q_manutenzione	0.	0.	0.
39	39	56	Q_manutenzione	0.	0.	0.
39	39	14	Q_manutenzione	0.	0.	0.
39	39	13	EQ_X	-11.81	4.83	-2.46
39	39	55	EQ_X	-0.11	7.16	-3.58
39	39	56	EQ_X	-1.87	-1.6	-5.13

Table 20: Element Forces - Area Shells, Part 1 of 3

Area	AreaElem	Joint	OutputCase	F11	F22	F12
				KN/m	KN/m	KN/m
39	39	14	EQ_X	-13.56	-3.94	-4.01
39	39	13	EQ_Y	1.4	2.89	-3.99
39	39	55	EQ_Y	3.73	3.36	-1.78
39	39	56	EQ_Y	0.7	-11.84	1.28
39	39	14	EQ_Y	-1.64	-12.31	-0.93
40	40	55	DEAD	0.	0.	0.
40	40	67	DEAD	0.	0.	0.
40	40	68	DEAD	0.	0.	0.
40	40	56	DEAD	0.	0.	0.
40	40	55	G1_power station	0.	0.	0.
40	40	67	G1_power station	0.	0.	0.
40	40	68	G1_power station	0.	0.	0.
40	40	56	G1_power station	0.	0.	0.
40	40	55	G2_power station	0.	0.	0.
40	40	67	G2_power station	0.	0.	0.
40	40	68	G2_power station	0.	0.	0.
40	40	56	G2_power station	0.	0.	0.
40	40	55	Q_power station	0.	0.	0.
40	40	67	Q_power station	0.	0.	0.
40	40	68	Q_power station	0.	0.	0.
40	40	56	Q_power station	0.	0.	0.
40	40	55	Q_neve	0.	0.	0.
40	40	67	Q_neve	0.	0.	0.
40	40	68	Q_neve	0.	0.	0.
40	40	56	Q_neve	0.	0.	0.
40	40	55	Q_manutenzione	0.	0.	0.
40	40	67	Q_manutenzione	0.	0.	0.
40	40	68	Q_manutenzione	0.	0.	0.
40	40	56	Q_manutenzione	0.	0.	0.
40	40	55	EQ_X	-2.05	-2.52	-1.94
40	40	67	EQ_X	-5.67	-3.25	-0.97
40	40	68	EQ_X	-5.17	-0.77	-0.66
40	40	56	EQ_X	-1.56	-4.663E-02	-1.63
40	40	55	EQ_Y	2.59	-2.38	0.88
40	40	67	EQ_Y	-0.71	-3.04	1.75
40	40	68	EQ_Y	-0.49	-1.92	1.59
40	40	56	EQ_Y	2.81	-1.26	0.71
41	41	67	DEAD	0.	0.	0.
41	41	69	DEAD	0.	0.	0.
41	41	70	DEAD	0.	0.	0.
41	41	68	DEAD	0.	0.	0.
41	41	67	G1_power station	0.	0.	0.
41	41	69	G1_power station	0.	0.	0.

Table 20: Element Forces - Area Shells, Part 1 of 3

Area	AreaElem	Joint	OutputCase	F11	F22	F12
				KN/m	KN/m	KN/m
41	41	70	G1_power station	0.	0.	0.
41	41	68	G1_power station	0.	0.	0.
41	41	67	G2_power station	0.	0.	0.
41	41	69	G2_power station	0.	0.	0.
41	41	70	G2_power station	0.	0.	0.
41	41	68	G2_power station	0.	0.	0.
41	41	67	Q_power station	0.	0.	0.
41	41	69	Q_power station	0.	0.	0.
41	41	70	Q_power station	0.	0.	0.
41	41	68	Q_power station	0.	0.	0.
41	41	67	Q_neve	0.	0.	0.
41	41	69	Q_neve	0.	0.	0.
41	41	70	Q_neve	0.	0.	0.
41	41	68	Q_neve	0.	0.	0.
41	41	67	Q_manutenzione	0.	0.	0.
41	41	69	Q_manutenzione	0.	0.	0.
41	41	70	Q_manutenzione	0.	0.	0.
41	41	68	Q_manutenzione	0.	0.	0.
41	41	67	EQ_X	-6.06	-5.19	-0.44
41	41	69	EQ_X	-6.	-5.18	-3.983E-02
41	41	70	EQ_X	-5.03	-0.35	-4.578E-02
41	41	68	EQ_X	-5.09	-0.36	-0.45
41	41	67	EQ_Y	4.941E-02	0.76	1.34
41	41	69	EQ_Y	-3.584E-02	0.74	1.35
41	41	70	EQ_Y	-2.756E-02	0.78	2.52
41	41	68	EQ_Y	5.769E-02	0.8	2.52
42	42	1	DEAD	0.	0.	0.
42	42	57	DEAD	0.	0.	0.
42	42	58	DEAD	0.	0.	0.
42	42	59	DEAD	0.	0.	0.
42	42	1	G1_power station	0.	0.	0.
42	42	57	G1_power station	0.	0.	0.
42	42	58	G1_power station	0.	0.	0.
42	42	59	G1_power station	0.	0.	0.
42	42	1	G2_power station	0.	0.	0.
42	42	57	G2_power station	0.	0.	0.
42	42	58	G2_power station	0.	0.	0.
42	42	59	G2_power station	0.	0.	0.
42	42	1	Q_power station	0.	0.	0.
42	42	57	Q_power station	0.	0.	0.
42	42	58	Q_power station	0.	0.	0.
42	42	59	Q_power station	0.	0.	0.
42	42	1	Q_neve	0.	0.	0.

Table 20: Element Forces - Area Shells, Part 1 of 3

Area	AreaElem	Joint	OutputCase	F11	F22	F12
				KN/m	KN/m	KN/m
42	42	57	Q_neve	0.	0.	0.
42	42	58	Q_neve	0.	0.	0.
42	42	59	Q_neve	0.	0.	0.
42	42	1	Q_manutenzione	0.	0.	0.
42	42	57	Q_manutenzione	0.	0.	0.
42	42	58	Q_manutenzione	0.	0.	0.
42	42	59	Q_manutenzione	0.	0.	0.
42	42	1	EQ_X	-1.88	-4.86	1.79
42	42	57	EQ_X	-0.85	0.28	3.33
42	42	58	EQ_X	13.08	3.07	1.92
42	42	59	EQ_X	12.06	-2.07	0.39
42	42	1	EQ_Y	-6.57	-7.05	2.12
42	42	57	EQ_Y	-3.12	10.19	1.22
42	42	58	EQ_Y	3.42	11.49	2.96
42	42	59	EQ_Y	-2.576E-02	-5.74	3.86
43	43	69	DEAD	0.	0.	0.
43	43	71	DEAD	0.	0.	0.
43	43	72	DEAD	0.	0.	0.
43	43	70	DEAD	0.	0.	0.
43	43	69	G1_power station	0.	0.	0.
43	43	71	G1_power station	0.	0.	0.
43	43	72	G1_power station	0.	0.	0.
43	43	70	G1_power station	0.	0.	0.
43	43	69	G2_power station	0.	0.	0.
43	43	71	G2_power station	0.	0.	0.
43	43	72	G2_power station	0.	0.	0.
43	43	70	G2_power station	0.	0.	0.
43	43	69	Q_power station	0.	0.	0.
43	43	71	Q_power station	0.	0.	0.
43	43	72	Q_power station	0.	0.	0.
43	43	70	Q_power station	0.	0.	0.
43	43	69	Q_neve	0.	0.	0.
43	43	71	Q_neve	0.	0.	0.
43	43	72	Q_neve	0.	0.	0.
43	43	70	Q_neve	0.	0.	0.
43	43	69	Q_manutenzione	0.	0.	0.
43	43	71	Q_manutenzione	0.	0.	0.
43	43	72	Q_manutenzione	0.	0.	0.
43	43	70	Q_manutenzione	0.	0.	0.
43	43	69	EQ_X	-5.91	-4.72	0.59
43	43	71	EQ_X	-2.23	-3.99	1.47
43	43	72	EQ_X	-1.43	-2.115E-02	1.
43	43	70	EQ_X	-5.11	-0.76	0.12

Table 20: Element Forces - Area Shells, Part 1 of 3

Area	AreaElem	Joint	OutputCase	F11	F22	F12
				KN/m	KN/m	KN/m
43	43	69	EQ_Y	0.73	4.59	1.79
43	43	71	EQ_Y	-2.61	3.92	0.93
43	43	72	EQ_Y	-2.82	2.88	0.78
43	43	70	EQ_Y	0.53	3.55	1.64
44	44	60	DEAD	0.	0.	0.
44	44	2	DEAD	0.	0.	0.
44	44	61	DEAD	0.	0.	0.
44	44	6	DEAD	0.	0.	0.
44	44	60	G1_power station	0.	0.	0.
44	44	2	G1_power station	0.	0.	0.
44	44	61	G1_power station	0.	0.	0.
44	44	6	G1_power station	0.	0.	0.
44	44	60	G2_power station	0.	0.	0.
44	44	2	G2_power station	0.	0.	0.
44	44	61	G2_power station	0.	0.	0.
44	44	6	G2_power station	0.	0.	0.
44	44	60	Q_power station	0.	0.	0.
44	44	2	Q_power station	0.	0.	0.
44	44	61	Q_power station	0.	0.	0.
44	44	6	Q_power station	0.	0.	0.
44	44	60	Q_neve	0.	0.	0.
44	44	2	Q_neve	0.	0.	0.
44	44	61	Q_neve	0.	0.	0.
44	44	6	Q_neve	0.	0.	0.
44	44	60	Q_manutenzione	0.	0.	0.
44	44	2	Q_manutenzione	0.	0.	0.
44	44	61	Q_manutenzione	0.	0.	0.
44	44	6	Q_manutenzione	0.	0.	0.
44	44	60	EQ_X	-4.92	-1.27	5.15
44	44	2	EQ_X	-3.3	6.82	3.82
44	44	61	EQ_X	-11.74	5.13	1.91
44	44	6	EQ_X	-13.36	-2.96	3.24
44	44	60	EQ_Y	-2.3	11.03	-0.56
44	44	2	EQ_Y	-5.32	-4.06	-1.86
44	44	61	EQ_Y	0.21	-2.96	-3.35
44	44	6	EQ_Y	3.23	12.14	-2.06
45	45	71	DEAD	0.	0.	0.
45	45	15	DEAD	0.	0.	0.
45	45	18	DEAD	0.	0.	0.
45	45	72	DEAD	0.	0.	0.
45	45	71	G1_power station	0.	0.	0.
45	45	15	G1_power station	0.	0.	0.
45	45	18	G1_power station	0.	0.	0.

Table 20: Element Forces - Area Shells, Part 1 of 3

Area	AreaElem	Joint	OutputCase	F11	F22	F12
				KN/m	KN/m	KN/m
45	45	72	G1_power station	0.	0.	0.
45	45	71	G2_power station	0.	0.	0.
45	45	15	G2_power station	0.	0.	0.
45	45	18	G2_power station	0.	0.	0.
45	45	72	G2_power station	0.	0.	0.
45	45	71	Q_power station	0.	0.	0.
45	45	15	Q_power station	0.	0.	0.
45	45	18	Q_power station	0.	0.	0.
45	45	72	Q_power station	0.	0.	0.
45	45	71	Q_neve	0.	0.	0.
45	45	15	Q_neve	0.	0.	0.
45	45	18	Q_neve	0.	0.	0.
45	45	72	Q_neve	0.	0.	0.
45	45	71	Q_manutenzione	0.	0.	0.
45	45	15	Q_manutenzione	0.	0.	0.
45	45	18	Q_manutenzione	0.	0.	0.
45	45	72	Q_manutenzione	0.	0.	0.
45	45	71	EQ_X	-0.67	3.78	2.74
45	45	15	EQ_X	-12.32	1.45	2.05
45	45	18	EQ_X	-13.22	-3.06	3.96
45	45	72	EQ_X	-1.57	-0.73	4.65
45	45	71	EQ_Y	-3.73	-1.68	-1.73
45	45	15	EQ_Y	-1.45	-1.22	-3.95
45	45	18	EQ_Y	1.6	14.01	-0.86
45	45	72	EQ_Y	-0.68	13.56	1.36
46	46	62	DEAD	0.	0.	0.
46	46	3	DEAD	0.	0.	0.
46	46	64	DEAD	0.	0.	0.
46	46	63	DEAD	0.	0.	0.
46	46	62	G1_power station	0.	0.	0.
46	46	3	G1_power station	0.	0.	0.
46	46	64	G1_power station	0.	0.	0.
46	46	63	G1_power station	0.	0.	0.
46	46	62	G2_power station	0.	0.	0.
46	46	3	G2_power station	0.	0.	0.
46	46	64	G2_power station	0.	0.	0.
46	46	63	G2_power station	0.	0.	0.
46	46	62	Q_power station	0.	0.	0.
46	46	3	Q_power station	0.	0.	0.
46	46	64	Q_power station	0.	0.	0.
46	46	63	Q_power station	0.	0.	0.
46	46	62	Q_neve	0.	0.	0.
46	46	3	Q_neve	0.	0.	0.

Table 20: Element Forces - Area Shells, Part 1 of 3

Area	AreaElem	Joint	OutputCase	F11	F22	F12
				KN/m	KN/m	KN/m
46	46	64	Q_neve	0.	0.	0.
46	46	63	Q_neve	0.	0.	0.
46	46	62	Q_manutenzione	0.	0.	0.
46	46	3	Q_manutenzione	0.	0.	0.
46	46	64	Q_manutenzione	0.	0.	0.
46	46	63	Q_manutenzione	0.	0.	0.
46	46	62	EQ_X	-12.07	2.7	-0.63
46	46	3	EQ_X	1.97	5.51	-1.97
46	46	64	EQ_X	0.9	0.17	-3.52
46	46	63	EQ_X	-13.14	-2.64	-2.18
46	46	62	EQ_Y	-0.24	4.74	-3.32
46	46	3	EQ_Y	5.33	5.86	-1.83
46	46	64	EQ_Y	2.32	-9.2	-0.53
46	46	63	EQ_Y	-3.25	-10.32	-2.02
48	48	65	DEAD	0.	0.	0.
48	48	4	DEAD	0.	0.	0.
48	48	66	DEAD	0.	0.	0.
48	48	5	DEAD	0.	0.	0.
48	48	65	G1_power station	0.	0.	0.
48	48	4	G1_power station	0.	0.	0.
48	48	66	G1_power station	0.	0.	0.
48	48	5	G1_power station	0.	0.	0.
48	48	65	G2_power station	0.	0.	0.
48	48	4	G2_power station	0.	0.	0.
48	48	66	G2_power station	0.	0.	0.
48	48	5	G2_power station	0.	0.	0.
48	48	65	Q_power station	0.	0.	0.
48	48	4	Q_power station	0.	0.	0.
48	48	66	Q_power station	0.	0.	0.
48	48	5	Q_power station	0.	0.	0.
48	48	65	Q_neve	0.	0.	0.
48	48	4	Q_neve	0.	0.	0.
48	48	66	Q_neve	0.	0.	0.
48	48	5	Q_neve	0.	0.	0.
48	48	65	Q_manutenzione	0.	0.	0.
48	48	4	Q_manutenzione	0.	0.	0.
48	48	66	Q_manutenzione	0.	0.	0.
48	48	5	Q_manutenzione	0.	0.	0.
48	48	65	EQ_X	-0.82	-0.22	-3.46
48	48	4	EQ_X	-1.84	-5.33	-1.85
48	48	66	EQ_X	12.2	-2.52	-0.48
48	48	5	EQ_X	13.23	2.59	-2.08
48	48	65	EQ_Y	3.04	-9.27	1.05

Table 20: Element Forces - Area Shells, Part 1 of 3

Area	AreaElem	Joint	OutputCase	F11	F22	F12
				KN/m	KN/m	KN/m
48	48	4	EQ_Y	6.15	6.27	2.
48	48	66	EQ_Y	-0.19	5.	3.65
48	48	5	EQ_Y	-3.3	-10.54	2.7
49	49	21	DEAD	0.	0.	0.
49	49	73	DEAD	0.	0.	0.
49	49	74	DEAD	0.	0.	0.
49	49	22	DEAD	0.	0.	0.
49	49	21	G1_power station	0.	0.	0.
49	49	73	G1_power station	0.	0.	0.
49	49	74	G1_power station	0.	0.	0.
49	49	22	G1_power station	0.	0.	0.
49	49	21	G2_power station	0.	0.	0.
49	49	73	G2_power station	0.	0.	0.
49	49	74	G2_power station	0.	0.	0.
49	49	22	G2_power station	0.	0.	0.
49	49	21	Q_power station	0.	0.	0.
49	49	73	Q_power station	0.	0.	0.
49	49	74	Q_power station	0.	0.	0.
49	49	22	Q_power station	0.	0.	0.
49	49	21	Q_neve	0.	0.	0.
49	49	73	Q_neve	0.	0.	0.
49	49	74	Q_neve	0.	0.	0.
49	49	22	Q_neve	0.	0.	0.
49	49	21	Q_manutenzione	0.	0.	0.
49	49	73	Q_manutenzione	0.	0.	0.
49	49	74	Q_manutenzione	0.	0.	0.
49	49	22	Q_manutenzione	0.	0.	0.
49	49	21	EQ_X	12.57	-0.7	2.28
49	49	73	EQ_X	0.75	-3.06	3.07
49	49	74	EQ_X	1.54	0.87	5.12
49	49	22	EQ_X	13.35	3.23	4.33
49	49	21	EQ_Y	-1.26	-0.36	4.5
49	49	73	EQ_Y	-4.66	-1.04	1.88
49	49	74	EQ_Y	-1.49	14.81	-1.19
49	49	22	EQ_Y	1.91	15.49	1.44
50	50	73	DEAD	0.	0.	0.
50	50	75	DEAD	0.	0.	0.
50	50	76	DEAD	0.	0.	0.
50	50	74	DEAD	0.	0.	0.
50	50	73	G1_power station	0.	0.	0.
50	50	75	G1_power station	0.	0.	0.
50	50	76	G1_power station	0.	0.	0.
50	50	74	G1_power station	0.	0.	0.

Table 20: Element Forces - Area Shells, Part 1 of 3

Area	AreaElem	Joint	OutputCase	F11	F22	F12
				KN/m	KN/m	KN/m
50	50	73	G2_power station	0.	0.	0.
50	50	75	G2_power station	0.	0.	0.
50	50	76	G2_power station	0.	0.	0.
50	50	74	G2_power station	0.	0.	0.
50	50	73	Q_power station	0.	0.	0.
50	50	75	Q_power station	0.	0.	0.
50	50	76	Q_power station	0.	0.	0.
50	50	74	Q_power station	0.	0.	0.
50	50	73	Q_neve	0.	0.	0.
50	50	75	Q_neve	0.	0.	0.
50	50	76	Q_neve	0.	0.	0.
50	50	74	Q_neve	0.	0.	0.
50	50	73	Q_manutenzione	0.	0.	0.
50	50	75	Q_manutenzione	0.	0.	0.
50	50	76	Q_manutenzione	0.	0.	0.
50	50	74	Q_manutenzione	0.	0.	0.
50	50	73	EQ_X	2.52	5.78	1.91
50	50	75	EQ_X	5.9	6.46	1.05
50	50	76	EQ_X	4.86	1.26	0.64
50	50	74	EQ_X	1.48	0.58	1.5
50	50	73	EQ_Y	-3.61	4.23	-1.7
50	50	75	EQ_Y	0.68	5.09	-2.85
50	50	76	EQ_Y	0.55	4.45	-2.4
50	50	74	EQ_Y	-3.73	3.6	-1.26
51	51	75	DEAD	0.	0.	0.
51	51	77	DEAD	0.	0.	0.
51	51	78	DEAD	0.	0.	0.
51	51	76	DEAD	0.	0.	0.
51	51	75	G1_power station	0.	0.	0.
51	51	77	G1_power station	0.	0.	0.
51	51	78	G1_power station	0.	0.	0.
51	51	76	G1_power station	0.	0.	0.
51	51	75	G2_power station	0.	0.	0.
51	51	77	G2_power station	0.	0.	0.
51	51	78	G2_power station	0.	0.	0.
51	51	76	G2_power station	0.	0.	0.
51	51	75	Q_power station	0.	0.	0.
51	51	77	Q_power station	0.	0.	0.
51	51	78	Q_power station	0.	0.	0.
51	51	76	Q_power station	0.	0.	0.
51	51	75	Q_neve	0.	0.	0.
51	51	77	Q_neve	0.	0.	0.
51	51	78	Q_neve	0.	0.	0.

Table 20: Element Forces - Area Shells, Part 1 of 3

Area	AreaElem	Joint	OutputCase	F11	F22	F12
				KN/m	KN/m	KN/m
51	51	76	Q_neve	0.	0.	0.
51	51	75	Q_manutenzione	0.	0.	0.
51	51	77	Q_manutenzione	0.	0.	0.
51	51	78	Q_manutenzione	0.	0.	0.
51	51	76	Q_manutenzione	0.	0.	0.
51	51	75	EQ_X	6.24	8.13	0.34
51	51	77	EQ_X	6.09	8.1	-0.14
51	51	78	EQ_X	4.7	1.19	1.861E-02
51	51	76	EQ_X	4.85	1.22	0.5
51	51	75	EQ_Y	-0.61	-1.35	-2.19
51	51	77	EQ_Y	0.43	-1.14	-2.15
51	51	78	EQ_Y	0.72	0.31	-4.38
51	51	76	EQ_Y	-0.32	0.1	-4.42
52	52	77	DEAD	0.	0.	0.
52	52	79	DEAD	0.	0.	0.
52	52	80	DEAD	0.	0.	0.
52	52	78	DEAD	0.	0.	0.
52	52	77	G1_power station	0.	0.	0.
52	52	79	G1_power station	0.	0.	0.
52	52	80	G1_power station	0.	0.	0.
52	52	78	G1_power station	0.	0.	0.
52	52	77	G2_power station	0.	0.	0.
52	52	79	G2_power station	0.	0.	0.
52	52	80	G2_power station	0.	0.	0.
52	52	78	G2_power station	0.	0.	0.
52	52	77	Q_power station	0.	0.	0.
52	52	79	Q_power station	0.	0.	0.
52	52	80	Q_power station	0.	0.	0.
52	52	78	Q_power station	0.	0.	0.
52	52	77	Q_neve	0.	0.	0.
52	52	79	Q_neve	0.	0.	0.
52	52	80	Q_neve	0.	0.	0.
52	52	78	Q_neve	0.	0.	0.
52	52	77	Q_manutenzione	0.	0.	0.
52	52	79	Q_manutenzione	0.	0.	0.
52	52	80	Q_manutenzione	0.	0.	0.
52	52	78	Q_manutenzione	0.	0.	0.
52	52	77	EQ_X	5.88	7.06	-0.78
52	52	79	EQ_X	2.21	6.33	-1.72
52	52	80	EQ_X	1.14	1.02	-1.37
52	52	78	EQ_X	4.82	1.76	-0.43
52	52	77	EQ_Y	-0.79	-7.27	-2.69
52	52	79	EQ_Y	3.42	-6.43	-1.45

Table 20: Element Forces - Area Shells, Part 1 of 3

Area	AreaElem	Joint	OutputCase	F11	F22	F12
				KN/m	KN/m	KN/m
52	52	80	EQ_Y	4.07	-3.14	-0.99
52	52	78	EQ_Y	-0.13	-3.98	-2.22
53	53	79	DEAD	0.	0.	0.
53	53	10	DEAD	0.	0.	0.
53	53	9	DEAD	0.	0.	0.
53	53	80	DEAD	0.	0.	0.
53	53	79	G1_power station	0.	0.	0.
53	53	10	G1_power station	0.	0.	0.
53	53	9	G1_power station	0.	0.	0.
53	53	80	G1_power station	0.	0.	0.
53	53	79	G2_power station	0.	0.	0.
53	53	10	G2_power station	0.	0.	0.
53	53	9	G2_power station	0.	0.	0.
53	53	80	G2_power station	0.	0.	0.
53	53	79	Q_power station	0.	0.	0.
53	53	10	Q_power station	0.	0.	0.
53	53	9	Q_power station	0.	0.	0.
53	53	80	Q_power station	0.	0.	0.
53	53	79	Q_neve	0.	0.	0.
53	53	10	Q_neve	0.	0.	0.
53	53	9	Q_neve	0.	0.	0.
53	53	80	Q_neve	0.	0.	0.
53	53	79	Q_manutenzione	0.	0.	0.
53	53	10	Q_manutenzione	0.	0.	0.
53	53	9	Q_manutenzione	0.	0.	0.
53	53	80	Q_manutenzione	0.	0.	0.
53	53	79	EQ_X	0.46	-2.38	-3.12
53	53	10	EQ_X	12.47	2.420E-02	-2.43
53	53	9	EQ_X	13.24	3.84	-4.42
53	53	80	EQ_X	1.23	1.44	-5.11
53	53	79	EQ_Y	4.64	-0.28	2.19
53	53	10	EQ_Y	0.92	-1.03	4.79
53	53	9	EQ_Y	-1.88	-15.01	1.84
53	53	80	EQ_Y	1.85	-14.27	-0.76
54	54	60	DEAD	0.	0.	0.
54	54	6	DEAD	0.	0.	0.
54	54	81	DEAD	0.	0.	0.
54	54	82	DEAD	0.	0.	0.
54	54	60	G1_power station	0.	0.	0.
54	54	6	G1_power station	0.	0.	0.
54	54	81	G1_power station	0.	0.	0.
54	54	82	G1_power station	0.	0.	0.
54	54	60	G2_power station	0.	0.	0.

Table 20: Element Forces - Area Shells, Part 1 of 3

Area	AreaElem	Joint	OutputCase	F11	F22	F12
				KN/m	KN/m	KN/m
54	54	6	G2_power station	0.	0.	0.
54	54	81	G2_power station	0.	0.	0.
54	54	82	G2_power station	0.	0.	0.
54	54	60	Q_power station	0.	0.	0.
54	54	6	Q_power station	0.	0.	0.
54	54	81	Q_power station	0.	0.	0.
54	54	82	Q_power station	0.	0.	0.
54	54	60	Q_neve	0.	0.	0.
54	54	6	Q_neve	0.	0.	0.
54	54	81	Q_neve	0.	0.	0.
54	54	82	Q_neve	0.	0.	0.
54	54	60	Q_manutenzione	0.	0.	0.
54	54	6	Q_manutenzione	0.	0.	0.
54	54	81	Q_manutenzione	0.	0.	0.
54	54	82	Q_manutenzione	0.	0.	0.
54	54	60	EQ_X	-13.31	-2.95	6.02
54	54	6	EQ_X	10.47	1.8	3.07
54	54	81	EQ_X	10.02	-0.4	0.79
54	54	82	EQ_X	-13.76	-5.16	3.74
54	54	60	EQ_Y	-1.04	11.29	2.29
54	54	6	EQ_Y	4.6	12.41	4.62
54	54	81	EQ_Y	2.09	-0.1	5.77
54	54	82	EQ_Y	-3.55	-1.23	3.43
55	55	82	DEAD	0.	0.	0.
55	55	81	DEAD	0.	0.	0.
55	55	83	DEAD	0.	0.	0.
55	55	84	DEAD	0.	0.	0.
55	55	82	G1_power station	0.	0.	0.
55	55	81	G1_power station	0.	0.	0.
55	55	83	G1_power station	0.	0.	0.
55	55	84	G1_power station	0.	0.	0.
55	55	82	G2_power station	0.	0.	0.
55	55	81	G2_power station	0.	0.	0.
55	55	83	G2_power station	0.	0.	0.
55	55	84	G2_power station	0.	0.	0.
55	55	82	Q_power station	0.	0.	0.
55	55	81	Q_power station	0.	0.	0.
55	55	83	Q_power station	0.	0.	0.
55	55	84	Q_power station	0.	0.	0.
55	55	82	Q_neve	0.	0.	0.
55	55	81	Q_neve	0.	0.	0.
55	55	83	Q_neve	0.	0.	0.
55	55	84	Q_neve	0.	0.	0.

Table 20: Element Forces - Area Shells, Part 1 of 3

Area	AreaElem	Joint	OutputCase	F11	F22	F12
				KN/m	KN/m	KN/m
55	55	82	Q_manutenzione	0.	0.	0.
55	55	81	Q_manutenzione	0.	0.	0.
55	55	83	Q_manutenzione	0.	0.	0.
55	55	84	Q_manutenzione	0.	0.	0.
55	55	82	EQ_X	-2.9	-2.99	1.3
55	55	81	EQ_X	2.793E-02	-2.4	1.3
55	55	83	EQ_X	0.51	1.521E-02	0.17
55	55	84	EQ_X	-2.42	-0.57	0.17
55	55	82	EQ_Y	5.55	0.59	2.58
55	55	81	EQ_Y	2.55	-1.041E-02	2.28
55	55	83	EQ_Y	3.23	3.38	1.43
55	55	84	EQ_Y	6.23	3.98	1.73
56	56	84	DEAD	0.	0.	0.
56	56	83	DEAD	0.	0.	0.
56	56	85	DEAD	0.	0.	0.
56	56	86	DEAD	0.	0.	0.
56	56	84	G1_power station	0.	0.	0.
56	56	83	G1_power station	0.	0.	0.
56	56	85	G1_power station	0.	0.	0.
56	56	86	G1_power station	0.	0.	0.
56	56	84	G2_power station	0.	0.	0.
56	56	83	G2_power station	0.	0.	0.
56	56	85	G2_power station	0.	0.	0.
56	56	86	G2_power station	0.	0.	0.
56	56	84	Q_power station	0.	0.	0.
56	56	83	Q_power station	0.	0.	0.
56	56	85	Q_power station	0.	0.	0.
56	56	86	Q_power station	0.	0.	0.
56	56	84	Q_neve	0.	0.	0.
56	56	83	Q_neve	0.	0.	0.
56	56	85	Q_neve	0.	0.	0.
56	56	86	Q_neve	0.	0.	0.
56	56	84	Q_manutenzione	0.	0.	0.
56	56	83	Q_manutenzione	0.	0.	0.
56	56	85	Q_manutenzione	0.	0.	0.
56	56	86	Q_manutenzione	0.	0.	0.
56	56	84	EQ_X	-1.19	-0.33	-6.431E-02
56	56	83	EQ_X	-1.23	-0.33	-0.22
56	56	85	EQ_X	-1.21	-0.21	-0.28
56	56	86	EQ_X	-1.17	-0.2	-0.12
56	56	84	EQ_Y	9.22	4.58	0.79
56	56	83	EQ_Y	4.6	3.65	1.82
56	56	85	EQ_Y	4.47	3.01	1.58

Table 20: Element Forces - Area Shells, Part 1 of 3

Area	AreaElem	Joint	OutputCase	F11	F22	F12
				KN/m	KN/m	KN/m
56	56	86	EQ_Y	9.09	3.93	0.55
57	57	86	DEAD	0.	0.	0.
57	57	85	DEAD	0.	0.	0.
57	57	87	DEAD	0.	0.	0.
57	57	88	DEAD	0.	0.	0.
57	57	86	G1_power station	0.	0.	0.
57	57	85	G1_power station	0.	0.	0.
57	57	87	G1_power station	0.	0.	0.
57	57	88	G1_power station	0.	0.	0.
57	57	86	G2_power station	0.	0.	0.
57	57	85	G2_power station	0.	0.	0.
57	57	87	G2_power station	0.	0.	0.
57	57	88	G2_power station	0.	0.	0.
57	57	86	Q_power station	0.	0.	0.
57	57	85	Q_power station	0.	0.	0.
57	57	87	Q_power station	0.	0.	0.
57	57	88	Q_power station	0.	0.	0.
57	57	86	Q_neve	0.	0.	0.
57	57	85	Q_neve	0.	0.	0.
57	57	87	Q_neve	0.	0.	0.
57	57	88	Q_neve	0.	0.	0.
57	57	86	Q_manutenzione	0.	0.	0.
57	57	85	Q_manutenzione	0.	0.	0.
57	57	87	Q_manutenzione	0.	0.	0.
57	57	88	Q_manutenzione	0.	0.	0.
57	57	86	EQ_X	-1.69	-0.31	-0.22
57	57	85	EQ_X	-1.41	-0.25	-0.27
57	57	87	EQ_X	-1.37	-7.825E-02	-0.34
57	57	88	EQ_X	-1.66	-0.14	-0.29
57	57	86	EQ_Y	11.19	4.35	0.84
57	57	85	EQ_Y	6.37	3.39	1.23
57	57	87	EQ_Y	6.38	3.41	1.52
57	57	88	EQ_Y	11.2	4.38	1.13
58	58	88	DEAD	0.	0.	0.
58	58	87	DEAD	0.	0.	0.
58	58	89	DEAD	0.	0.	0.
58	58	90	DEAD	0.	0.	0.
58	58	88	G1_power station	0.	0.	0.
58	58	87	G1_power station	0.	0.	0.
58	58	89	G1_power station	0.	0.	0.
58	58	90	G1_power station	0.	0.	0.
58	58	88	G2_power station	0.	0.	0.
58	58	87	G2_power station	0.	0.	0.

Table 20: Element Forces - Area Shells, Part 1 of 3

Area	AreaElem	Joint	OutputCase	F11	F22	F12
				KN/m	KN/m	KN/m
58	58	89	G2_power station	0.	0.	0.
58	58	90	G2_power station	0.	0.	0.
58	58	88	Q_power station	0.	0.	0.
58	58	87	Q_power station	0.	0.	0.
58	58	89	Q_power station	0.	0.	0.
58	58	90	Q_power station	0.	0.	0.
58	58	88	Q_neve	0.	0.	0.
58	58	87	Q_neve	0.	0.	0.
58	58	89	Q_neve	0.	0.	0.
58	58	90	Q_neve	0.	0.	0.
58	58	88	Q_manutenzione	0.	0.	0.
58	58	87	Q_manutenzione	0.	0.	0.
58	58	89	Q_manutenzione	0.	0.	0.
58	58	90	Q_manutenzione	0.	0.	0.
58	58	88	EQ_X	-2.57	-0.32	-0.35
58	58	87	EQ_X	-1.34	-7.273E-02	-0.34
58	58	89	EQ_X	-1.34	-3.889E-02	-0.4
58	58	90	EQ_X	-2.56	-0.28	-0.41
58	58	88	EQ_Y	14.55	5.05	1.49
58	58	87	EQ_Y	7.13	3.56	1.57
58	58	89	EQ_Y	7.09	3.38	1.83
58	58	90	EQ_Y	14.51	4.86	1.75
59	59	90	DEAD	0.	0.	0.
59	59	89	DEAD	0.	0.	0.
59	59	91	DEAD	0.	0.	0.
59	59	92	DEAD	0.	0.	0.
59	59	90	G1_power station	0.	0.	0.
59	59	89	G1_power station	0.	0.	0.
59	59	91	G1_power station	0.	0.	0.
59	59	92	G1_power station	0.	0.	0.
59	59	90	G2_power station	0.	0.	0.
59	59	89	G2_power station	0.	0.	0.
59	59	91	G2_power station	0.	0.	0.
59	59	92	G2_power station	0.	0.	0.
59	59	90	Q_power station	0.	0.	0.
59	59	89	Q_power station	0.	0.	0.
59	59	91	Q_power station	0.	0.	0.
59	59	92	Q_power station	0.	0.	0.
59	59	90	Q_neve	0.	0.	0.
59	59	89	Q_neve	0.	0.	0.
59	59	91	Q_neve	0.	0.	0.
59	59	92	Q_neve	0.	0.	0.
59	59	90	Q_manutenzione	0.	0.	0.

Table 20: Element Forces - Area Shells, Part 1 of 3

Area	AreaElem	Joint	OutputCase	F11	F22	F12
				KN/m	KN/m	KN/m
59	59	89	Q_manutenzione	0.	0.	0.
59	59	91	Q_manutenzione	0.	0.	0.
59	59	92	Q_manutenzione	0.	0.	0.
59	59	90	EQ_X	-4.18	-0.61	-0.53
59	59	89	EQ_X	-0.79	7.065E-02	-0.52
59	59	91	EQ_X	-0.78	0.1	-0.72
59	59	92	EQ_X	-4.17	-0.58	-0.73
59	59	90	EQ_Y	21.7	6.3	2.2
59	59	89	EQ_Y	5.35	3.03	2.71
59	59	91	EQ_Y	5.66	4.6	4.44
59	59	92	EQ_Y	22.01	7.87	3.93
60	60	92	DEAD	0.	0.	0.
60	60	91	DEAD	0.	0.	0.
60	60	26	DEAD	0.	0.	0.
60	60	27	DEAD	0.	0.	0.
60	60	92	G1_power station	0.	0.	0.
60	60	91	G1_power station	0.	0.	0.
60	60	26	G1_power station	0.	0.	0.
60	60	27	G1_power station	0.	0.	0.
60	60	92	G2_power station	0.	0.	0.
60	60	91	G2_power station	0.	0.	0.
60	60	26	G2_power station	0.	0.	0.
60	60	27	G2_power station	0.	0.	0.
60	60	92	Q_power station	0.	0.	0.
60	60	91	Q_power station	0.	0.	0.
60	60	26	Q_power station	0.	0.	0.
60	60	27	Q_power station	0.	0.	0.
60	60	92	Q_neve	0.	0.	0.
60	60	91	Q_neve	0.	0.	0.
60	60	26	Q_neve	0.	0.	0.
60	60	27	Q_neve	0.	0.	0.
60	60	92	Q_manutenzione	0.	0.	0.
60	60	91	Q_manutenzione	0.	0.	0.
60	60	26	Q_manutenzione	0.	0.	0.
60	60	27	Q_manutenzione	0.	0.	0.
60	60	92	EQ_X	-6.8	-1.1	-1.
60	60	91	EQ_X	0.69	0.39	-0.45
60	60	26	EQ_X	1.01	2.02	-7.363E-02
60	60	27	EQ_X	-6.48	0.52	-0.63
60	60	92	EQ_Y	38.68	11.2	7.2
60	60	91	EQ_Y	-3.21	2.83	3.6
60	60	26	EQ_Y	-4.83	-5.28	2.26
60	60	27	EQ_Y	37.05	3.09	5.86

Table 20: Element Forces - Area Shells, Part 1 of 3

Area	AreaElem	Joint	OutputCase	F11	F22	F12
				KN/m	KN/m	KN/m
61	61	65	DEAD	0.	0.	0.
61	61	5	DEAD	0.	0.	0.
61	61	93	DEAD	0.	0.	0.
61	61	94	DEAD	0.	0.	0.
61	61	65	G1_power station	0.	0.	0.
61	61	5	G1_power station	0.	0.	0.
61	61	93	G1_power station	0.	0.	0.
61	61	94	G1_power station	0.	0.	0.
61	61	65	G2_power station	0.	0.	0.
61	61	5	G2_power station	0.	0.	0.
61	61	93	G2_power station	0.	0.	0.
61	61	94	G2_power station	0.	0.	0.
61	61	65	Q_power station	0.	0.	0.
61	61	5	Q_power station	0.	0.	0.
61	61	93	Q_power station	0.	0.	0.
61	61	94	Q_power station	0.	0.	0.
61	61	65	Q_neve	0.	0.	0.
61	61	5	Q_neve	0.	0.	0.
61	61	93	Q_neve	0.	0.	0.
61	61	94	Q_neve	0.	0.	0.
61	61	65	Q_manutenzione	0.	0.	0.
61	61	5	Q_manutenzione	0.	0.	0.
61	61	93	Q_manutenzione	0.	0.	0.
61	61	94	Q_manutenzione	0.	0.	0.
61	61	65	EQ_X	5.	0.95	-4.19
61	61	5	EQ_X	-11.55	-2.37	-1.43
61	61	93	EQ_X	-11.08	8.941E-03	0.23
61	61	94	EQ_X	5.48	3.32	-2.54
61	61	65	EQ_Y	4.88	-8.9	-1.1
61	61	5	EQ_Y	-5.73	-11.03	-3.85
61	61	93	EQ_Y	-3.04	2.43	-4.45
61	61	94	EQ_Y	7.57	4.56	-1.7
62	62	94	DEAD	0.	0.	0.
62	62	93	DEAD	0.	0.	0.
62	62	95	DEAD	0.	0.	0.
62	62	96	DEAD	0.	0.	0.
62	62	94	G1_power station	0.	0.	0.
62	62	93	G1_power station	0.	0.	0.
62	62	95	G1_power station	0.	0.	0.
62	62	96	G1_power station	0.	0.	0.
62	62	94	G2_power station	0.	0.	0.
62	62	93	G2_power station	0.	0.	0.
62	62	95	G2_power station	0.	0.	0.

Table 20: Element Forces - Area Shells, Part 1 of 3

Area	AreaElem	Joint	OutputCase	F11	F22	F12
				KN/m	KN/m	KN/m
62	62	96	G2_power station	0.	0.	0.
62	62	94	Q_power station	0.	0.	0.
62	62	93	Q_power station	0.	0.	0.
62	62	95	Q_power station	0.	0.	0.
62	62	96	Q_power station	0.	0.	0.
62	62	94	Q_neve	0.	0.	0.
62	62	93	Q_neve	0.	0.	0.
62	62	95	Q_neve	0.	0.	0.
62	62	96	Q_neve	0.	0.	0.
62	62	94	Q_manutenzione	0.	0.	0.
62	62	93	Q_manutenzione	0.	0.	0.
62	62	95	Q_manutenzione	0.	0.	0.
62	62	96	Q_manutenzione	0.	0.	0.
62	62	94	EQ_X	-2.84	1.66	-1.07
62	62	93	EQ_X	-1.51	1.92	-0.59
62	62	95	EQ_X	-2.06	-0.84	-0.2
62	62	96	EQ_X	-3.39	-1.11	-0.68
62	62	94	EQ_Y	7.19	4.48	0.1
62	62	93	EQ_Y	-8.9	1.26	-0.36
62	62	95	EQ_Y	-9.38	-1.12	2.38
62	62	96	EQ_Y	6.72	2.1	2.84
63	63	96	DEAD	0.	0.	0.
63	63	95	DEAD	0.	0.	0.
63	63	25	DEAD	0.	0.	0.
63	63	28	DEAD	0.	0.	0.
63	63	96	G1_power station	0.	0.	0.
63	63	95	G1_power station	0.	0.	0.
63	63	25	G1_power station	0.	0.	0.
63	63	28	G1_power station	0.	0.	0.
63	63	96	G2_power station	0.	0.	0.
63	63	95	G2_power station	0.	0.	0.
63	63	25	G2_power station	0.	0.	0.
63	63	28	G2_power station	0.	0.	0.
63	63	96	Q_power station	0.	0.	0.
63	63	95	Q_power station	0.	0.	0.
63	63	25	Q_power station	0.	0.	0.
63	63	28	Q_power station	0.	0.	0.
63	63	96	Q_neve	0.	0.	0.
63	63	95	Q_neve	0.	0.	0.
63	63	25	Q_neve	0.	0.	0.
63	63	28	Q_neve	0.	0.	0.
63	63	96	Q_manutenzione	0.	0.	0.
63	63	95	Q_manutenzione	0.	0.	0.

Table 20: Element Forces - Area Shells, Part 1 of 3

Area	AreaElem	Joint	OutputCase	F11	F22	F12
				KN/m	KN/m	KN/m
63	63	25	Q_manutenzione	0.	0.	0.
63	63	28	Q_manutenzione	0.	0.	0.
63	63	96	EQ_X	-7.1	-1.85	-1.18
63	63	95	EQ_X	2.58	8.418E-02	-0.14
63	63	25	EQ_X	3.03	2.33	0.37
63	63	28	EQ_X	-6.65	0.4	-0.67
63	63	96	EQ_Y	20.64	4.88	6.3
63	63	95	EQ_Y	-23.52	-3.95	0.91
63	63	25	EQ_Y	-25.97	-16.19	-2.73
63	63	28	EQ_Y	18.2	-7.35	2.66
64	64	6	DEAD	0.	0.	0.
64	64	40	DEAD	0.	0.	0.
64	64	97	DEAD	0.	0.	0.
64	64	81	DEAD	0.	0.	0.
64	64	6	G1_power station	0.	0.	0.
64	64	40	G1_power station	0.	0.	0.
64	64	97	G1_power station	0.	0.	0.
64	64	81	G1_power station	0.	0.	0.
64	64	6	G2_power station	0.	0.	0.
64	64	40	G2_power station	0.	0.	0.
64	64	97	G2_power station	0.	0.	0.
64	64	81	G2_power station	0.	0.	0.
64	64	6	Q_power station	0.	0.	0.
64	64	40	Q_power station	0.	0.	0.
64	64	97	Q_power station	0.	0.	0.
64	64	81	Q_power station	0.	0.	0.
64	64	6	Q_neve	0.	0.	0.
64	64	40	Q_neve	0.	0.	0.
64	64	97	Q_neve	0.	0.	0.
64	64	81	Q_neve	0.	0.	0.
64	64	6	Q_manutenzione	0.	0.	0.
64	64	40	Q_manutenzione	0.	0.	0.
64	64	97	Q_manutenzione	0.	0.	0.
64	64	81	Q_manutenzione	0.	0.	0.
64	64	6	EQ_X	10.27	0.82	-4.18
64	64	40	EQ_X	-4.07	-2.04	-5.81
64	64	97	EQ_X	-4.35	-3.45	-3.44
64	64	81	EQ_X	9.99	-0.58	-1.81
64	64	6	EQ_Y	-0.29	-12.02	5.75
64	64	40	EQ_Y	0.52	-11.86	4.12
64	64	97	EQ_Y	3.4	2.52	5.78
64	64	81	EQ_Y	2.59	2.36	7.41
65	65	81	DEAD	0.	0.	0.

Table 20: Element Forces - Area Shells, Part 1 of 3

Area	AreaElem	Joint	OutputCase	F11	F22	F12
				KN/m	KN/m	KN/m
65	65	97	DEAD	0.	0.	0.
65	65	98	DEAD	0.	0.	0.
65	65	83	DEAD	0.	0.	0.
65	65	81	G1_power station	0.	0.	0.
65	65	97	G1_power station	0.	0.	0.
65	65	98	G1_power station	0.	0.	0.
65	65	83	G1_power station	0.	0.	0.
65	65	81	G2_power station	0.	0.	0.
65	65	97	G2_power station	0.	0.	0.
65	65	98	G2_power station	0.	0.	0.
65	65	83	G2_power station	0.	0.	0.
65	65	81	Q_power station	0.	0.	0.
65	65	97	Q_power station	0.	0.	0.
65	65	98	Q_power station	0.	0.	0.
65	65	83	Q_power station	0.	0.	0.
65	65	81	Q_neve	0.	0.	0.
65	65	97	Q_neve	0.	0.	0.
65	65	98	Q_neve	0.	0.	0.
65	65	83	Q_neve	0.	0.	0.
65	65	81	Q_manutenzione	0.	0.	0.
65	65	97	Q_manutenzione	0.	0.	0.
65	65	98	Q_manutenzione	0.	0.	0.
65	65	83	Q_manutenzione	0.	0.	0.
65	65	81	EQ_X	-7.691E-03	-2.58	-1.3
65	65	97	EQ_X	-0.92	-2.76	-2.08
65	65	98	EQ_X	-0.51	-0.71	-0.6
65	65	83	EQ_X	0.4	-0.53	0.17
65	65	81	EQ_Y	3.04	2.45	3.93
65	65	97	EQ_Y	1.21	2.08	5.54
65	65	98	EQ_Y	1.19	1.97	4.06
65	65	83	EQ_Y	3.02	2.34	2.45
66	66	83	DEAD	0.	0.	0.
66	66	98	DEAD	0.	0.	0.
66	66	99	DEAD	0.	0.	0.
66	66	85	DEAD	0.	0.	0.
66	66	83	G1_power station	0.	0.	0.
66	66	98	G1_power station	0.	0.	0.
66	66	99	G1_power station	0.	0.	0.
66	66	85	G1_power station	0.	0.	0.
66	66	83	G2_power station	0.	0.	0.
66	66	98	G2_power station	0.	0.	0.
66	66	99	G2_power station	0.	0.	0.
66	66	85	G2_power station	0.	0.	0.

Table 20: Element Forces - Area Shells, Part 1 of 3

Area	AreaElem	Joint	OutputCase	F11	F22	F12
				KN/m	KN/m	KN/m
66	66	83	Q_power station	0.	0.	0.
66	66	98	Q_power station	0.	0.	0.
66	66	99	Q_power station	0.	0.	0.
66	66	85	Q_power station	0.	0.	0.
66	66	83	Q_neve	0.	0.	0.
66	66	98	Q_neve	0.	0.	0.
66	66	99	Q_neve	0.	0.	0.
66	66	85	Q_neve	0.	0.	0.
66	66	83	Q_manutenzione	0.	0.	0.
66	66	98	Q_manutenzione	0.	0.	0.
66	66	99	Q_manutenzione	0.	0.	0.
66	66	85	Q_manutenzione	0.	0.	0.
66	66	83	EQ_X	-1.34	-0.88	-0.22
66	66	98	EQ_X	-1.18	-0.85	-0.27
66	66	99	EQ_X	-1.04	-0.15	-0.56
66	66	85	EQ_X	-1.2	-0.18	-0.51
66	66	83	EQ_Y	4.39	2.61	2.84
66	66	98	EQ_Y	2.24	2.18	3.4
66	66	99	EQ_Y	2.45	3.21	3.61
66	66	85	EQ_Y	4.59	3.64	3.04
67	67	85	DEAD	0.	0.	0.
67	67	99	DEAD	0.	0.	0.
67	67	100	DEAD	0.	0.	0.
67	67	87	DEAD	0.	0.	0.
67	67	85	G1_power station	0.	0.	0.
67	67	99	G1_power station	0.	0.	0.
67	67	100	G1_power station	0.	0.	0.
67	67	87	G1_power station	0.	0.	0.
67	67	85	G2_power station	0.	0.	0.
67	67	99	G2_power station	0.	0.	0.
67	67	100	G2_power station	0.	0.	0.
67	67	87	G2_power station	0.	0.	0.
67	67	85	Q_power station	0.	0.	0.
67	67	99	Q_power station	0.	0.	0.
67	67	100	Q_power station	0.	0.	0.
67	67	87	Q_power station	0.	0.	0.
67	67	85	Q_neve	0.	0.	0.
67	67	99	Q_neve	0.	0.	0.
67	67	100	Q_neve	0.	0.	0.
67	67	87	Q_neve	0.	0.	0.
67	67	85	Q_manutenzione	0.	0.	0.
67	67	99	Q_manutenzione	0.	0.	0.
67	67	100	Q_manutenzione	0.	0.	0.

Table 20: Element Forces - Area Shells, Part 1 of 3

Area	AreaElem	Joint	OutputCase	F11	F22	F12
				KN/m	KN/m	KN/m
67	67	87	Q_manutenzione	0.	0.	0.
67	67	85	EQ_X	-1.4	-0.22	-0.5
67	67	99	EQ_X	-1.05	-0.15	-0.42
67	67	100	EQ_X	-1.05	-0.16	-0.31
67	67	87	EQ_X	-1.4	-0.23	-0.39
67	67	85	EQ_Y	6.5	4.02	2.69
67	67	99	EQ_Y	2.36	3.19	3.22
67	67	100	EQ_Y	2.46	3.66	2.62
67	67	87	EQ_Y	6.59	4.49	2.09
68	68	87	DEAD	0.	0.	0.
68	68	100	DEAD	0.	0.	0.
68	68	101	DEAD	0.	0.	0.
68	68	89	DEAD	0.	0.	0.
68	68	87	G1_power station	0.	0.	0.
68	68	100	G1_power station	0.	0.	0.
68	68	101	G1_power station	0.	0.	0.
68	68	89	G1_power station	0.	0.	0.
68	68	87	G2_power station	0.	0.	0.
68	68	100	G2_power station	0.	0.	0.
68	68	101	G2_power station	0.	0.	0.
68	68	89	G2_power station	0.	0.	0.
68	68	87	Q_power station	0.	0.	0.
68	68	100	Q_power station	0.	0.	0.
68	68	101	Q_power station	0.	0.	0.
68	68	89	Q_power station	0.	0.	0.
68	68	87	Q_neve	0.	0.	0.
68	68	100	Q_neve	0.	0.	0.
68	68	101	Q_neve	0.	0.	0.
68	68	89	Q_neve	0.	0.	0.
68	68	87	Q_manutenzione	0.	0.	0.
68	68	100	Q_manutenzione	0.	0.	0.
68	68	101	Q_manutenzione	0.	0.	0.
68	68	89	Q_manutenzione	0.	0.	0.
68	68	87	EQ_X	-1.37	-0.22	-0.39
68	68	100	EQ_X	-0.54	-5.434E-02	-0.3
68	68	101	EQ_X	-0.58	-0.28	-0.34
68	68	89	EQ_X	-1.42	-0.45	-0.43
68	68	87	EQ_Y	7.35	4.64	2.14
68	68	100	EQ_Y	1.73	3.52	2.36
68	68	101	EQ_Y	2.04	5.07	2.94
68	68	89	EQ_Y	7.66	6.19	2.73
69	69	89	DEAD	0.	0.	0.
69	69	101	DEAD	0.	0.	0.

Table 20: Element Forces - Area Shells, Part 1 of 3

Area	AreaElem	Joint	OutputCase	F11	F22	F12
				KN/m	KN/m	KN/m
69	69	102	DEAD	0.	0.	0.
69	69	91	DEAD	0.	0.	0.
69	69	89	G1_power station	0.	0.	0.
69	69	101	G1_power station	0.	0.	0.
69	69	102	G1_power station	0.	0.	0.
69	69	91	G1_power station	0.	0.	0.
69	69	89	G2_power station	0.	0.	0.
69	69	101	G2_power station	0.	0.	0.
69	69	102	G2_power station	0.	0.	0.
69	69	91	G2_power station	0.	0.	0.
69	69	89	Q_power station	0.	0.	0.
69	69	101	Q_power station	0.	0.	0.
69	69	102	Q_power station	0.	0.	0.
69	69	91	Q_power station	0.	0.	0.
69	69	89	Q_neve	0.	0.	0.
69	69	101	Q_neve	0.	0.	0.
69	69	102	Q_neve	0.	0.	0.
69	69	91	Q_neve	0.	0.	0.
69	69	89	Q_manutenzione	0.	0.	0.
69	69	101	Q_manutenzione	0.	0.	0.
69	69	102	Q_manutenzione	0.	0.	0.
69	69	91	Q_manutenzione	0.	0.	0.
69	69	89	EQ_X	-0.87	-0.34	-0.55
69	69	101	EQ_X	0.11	-0.14	-0.12
69	69	102	EQ_X	9.634E-02	-0.2	0.21
69	69	91	EQ_X	-0.88	-0.4	-0.22
69	69	89	EQ_Y	5.91	5.84	3.6
69	69	101	EQ_Y	-0.58	4.54	1.9
69	69	102	EQ_Y	-0.28	6.04	4.436E-02
69	69	91	EQ_Y	6.21	7.33	1.75
70	70	91	DEAD	0.	0.	0.
70	70	102	DEAD	0.	0.	0.
70	70	103	DEAD	0.	0.	0.
70	70	26	DEAD	0.	0.	0.
70	70	91	G1_power station	0.	0.	0.
70	70	102	G1_power station	0.	0.	0.
70	70	103	G1_power station	0.	0.	0.
70	70	26	G1_power station	0.	0.	0.
70	70	91	G2_power station	0.	0.	0.
70	70	102	G2_power station	0.	0.	0.
70	70	103	G2_power station	0.	0.	0.
70	70	26	G2_power station	0.	0.	0.
70	70	91	Q_power station	0.	0.	0.

Table 20: Element Forces - Area Shells, Part 1 of 3

Area	AreaElem	Joint	OutputCase	F11	F22	F12
				KN/m	KN/m	KN/m
70	70	102	Q_power station	0.	0.	0.
70	70	103	Q_power station	0.	0.	0.
70	70	26	Q_power station	0.	0.	0.
70	70	91	Q_neve	0.	0.	0.
70	70	102	Q_neve	0.	0.	0.
70	70	103	Q_neve	0.	0.	0.
70	70	26	Q_neve	0.	0.	0.
70	70	91	Q_manutenzione	0.	0.	0.
70	70	102	Q_manutenzione	0.	0.	0.
70	70	103	Q_manutenzione	0.	0.	0.
70	70	26	Q_manutenzione	0.	0.	0.
70	70	91	EQ_X	0.59	-0.1	5.284E-02
70	70	102	EQ_X	-0.39	-0.3	0.35
70	70	103	EQ_X	0.4	3.66	1.04
70	70	26	EQ_X	1.38	3.85	0.74
70	70	91	EQ_Y	-2.66	5.56	0.91
70	70	102	EQ_Y	1.8	6.45	-0.92
70	70	103	EQ_Y	-0.68	-5.95	-3.33
70	70	26	EQ_Y	-5.15	-6.84	-1.49
71	71	40	DEAD	0.	0.	0.
71	71	42	DEAD	0.	0.	0.
71	71	104	DEAD	0.	0.	0.
71	71	97	DEAD	0.	0.	0.
71	71	40	G1_power station	0.	0.	0.
71	71	42	G1_power station	0.	0.	0.
71	71	104	G1_power station	0.	0.	0.
71	71	97	G1_power station	0.	0.	0.
71	71	40	G2_power station	0.	0.	0.
71	71	42	G2_power station	0.	0.	0.
71	71	104	G2_power station	0.	0.	0.
71	71	97	G2_power station	0.	0.	0.
71	71	40	Q_power station	0.	0.	0.
71	71	42	Q_power station	0.	0.	0.
71	71	104	Q_power station	0.	0.	0.
71	71	97	Q_power station	0.	0.	0.
71	71	40	Q_neve	0.	0.	0.
71	71	42	Q_neve	0.	0.	0.
71	71	104	Q_neve	0.	0.	0.
71	71	97	Q_neve	0.	0.	0.
71	71	40	Q_manutenzione	0.	0.	0.
71	71	42	Q_manutenzione	0.	0.	0.
71	71	104	Q_manutenzione	0.	0.	0.
71	71	97	Q_manutenzione	0.	0.	0.

Table 20: Element Forces - Area Shells, Part 1 of 3

Area	AreaElem	Joint	OutputCase	F11	F22	F12
				KN/m	KN/m	KN/m
71	71	40	EQ_X	-3.76	-0.49	-2.31
71	71	42	EQ_X	-3.84	-0.51	-0.71
71	71	104	EQ_X	-3.68	0.28	-1.34
71	71	97	EQ_X	-3.6	0.3	-2.94
71	71	40	EQ_Y	2.64	-1.28	3.55
71	71	42	EQ_Y	0.38	-1.73	2.71
71	71	104	EQ_Y	0.53	-1.	4.22
71	71	97	EQ_Y	2.78	-0.55	5.07
72	72	97	DEAD	0.	0.	0.
72	72	104	DEAD	0.	0.	0.
72	72	105	DEAD	0.	0.	0.
72	72	98	DEAD	0.	0.	0.
72	72	97	G1_power station	0.	0.	0.
72	72	104	G1_power station	0.	0.	0.
72	72	105	G1_power station	0.	0.	0.
72	72	98	G1_power station	0.	0.	0.
72	72	97	G2_power station	0.	0.	0.
72	72	104	G2_power station	0.	0.	0.
72	72	105	G2_power station	0.	0.	0.
72	72	98	G2_power station	0.	0.	0.
72	72	97	Q_power station	0.	0.	0.
72	72	104	Q_power station	0.	0.	0.
72	72	105	Q_power station	0.	0.	0.
72	72	98	Q_power station	0.	0.	0.
72	72	97	Q_neve	0.	0.	0.
72	72	104	Q_neve	0.	0.	0.
72	72	105	Q_neve	0.	0.	0.
72	72	98	Q_neve	0.	0.	0.
72	72	97	Q_manutenzione	0.	0.	0.
72	72	104	Q_manutenzione	0.	0.	0.
72	72	105	Q_manutenzione	0.	0.	0.
72	72	98	Q_manutenzione	0.	0.	0.
72	72	97	EQ_X	-0.17	0.98	-1.58
72	72	104	EQ_X	-2.87	0.44	-1.71
72	72	105	EQ_X	-3.1	-0.68	-1.48
72	72	98	EQ_X	-0.39	-0.14	-1.35
72	72	97	EQ_Y	0.6	-0.98	4.82
72	72	104	EQ_Y	0.72	-0.96	4.98
72	72	105	EQ_Y	1.28	1.88	5.37
72	72	98	EQ_Y	1.17	1.86	5.21
73	73	98	DEAD	0.	0.	0.
73	73	105	DEAD	0.	0.	0.
73	73	106	DEAD	0.	0.	0.

Table 20: Element Forces - Area Shells, Part 1 of 3

Area	AreaElem	Joint	OutputCase	F11	F22	F12
				KN/m	KN/m	KN/m
73	73	99	DEAD	0.	0.	0.
73	73	98	G1_power station	0.	0.	0.
73	73	105	G1_power station	0.	0.	0.
73	73	106	G1_power station	0.	0.	0.
73	73	99	G1_power station	0.	0.	0.
73	73	98	G2_power station	0.	0.	0.
73	73	105	G2_power station	0.	0.	0.
73	73	106	G2_power station	0.	0.	0.
73	73	99	G2_power station	0.	0.	0.
73	73	98	Q_power station	0.	0.	0.
73	73	105	Q_power station	0.	0.	0.
73	73	106	Q_power station	0.	0.	0.
73	73	99	Q_power station	0.	0.	0.
73	73	98	Q_neve	0.	0.	0.
73	73	105	Q_neve	0.	0.	0.
73	73	106	Q_neve	0.	0.	0.
73	73	99	Q_neve	0.	0.	0.
73	73	98	Q_manutenzione	0.	0.	0.
73	73	105	Q_manutenzione	0.	0.	0.
73	73	106	Q_manutenzione	0.	0.	0.
73	73	99	Q_manutenzione	0.	0.	0.
73	73	98	EQ_X	-1.07	-0.28	-1.02
73	73	105	EQ_X	-1.73	-0.41	-0.77
73	73	106	EQ_X	-1.65	-7.378E-03	-6.109E-02
73	73	99	EQ_X	-0.99	0.12	-0.3
73	73	98	EQ_Y	2.22	2.07	4.56
73	73	105	EQ_Y	0.56	1.74	5.01
73	73	106	EQ_Y	0.64	2.16	3.8
73	73	99	EQ_Y	2.3	2.49	3.35
74	74	99	DEAD	0.	0.	0.
74	74	106	DEAD	0.	0.	0.
74	74	107	DEAD	0.	0.	0.
74	74	100	DEAD	0.	0.	0.
74	74	99	G1_power station	0.	0.	0.
74	74	106	G1_power station	0.	0.	0.
74	74	107	G1_power station	0.	0.	0.
74	74	100	G1_power station	0.	0.	0.
74	74	99	G2_power station	0.	0.	0.
74	74	106	G2_power station	0.	0.	0.
74	74	107	G2_power station	0.	0.	0.
74	74	100	G2_power station	0.	0.	0.
74	74	99	Q_power station	0.	0.	0.
74	74	106	Q_power station	0.	0.	0.

Table 20: Element Forces - Area Shells, Part 1 of 3

Area	AreaElem	Joint	OutputCase	F11	F22	F12
				KN/m	KN/m	KN/m
74	74	107	Q_power station	0.	0.	0.
74	74	100	Q_power station	0.	0.	0.
74	74	99	Q_neve	0.	0.	0.
74	74	106	Q_neve	0.	0.	0.
74	74	107	Q_neve	0.	0.	0.
74	74	100	Q_neve	0.	0.	0.
74	74	99	Q_manutenzione	0.	0.	0.
74	74	106	Q_manutenzione	0.	0.	0.
74	74	107	Q_manutenzione	0.	0.	0.
74	74	100	Q_manutenzione	0.	0.	0.
74	74	99	EQ_X	-0.99	0.12	-0.16
74	74	106	EQ_X	-0.97	0.13	2.748E-02
74	74	107	EQ_X	-1.02	-0.13	7.022E-02
74	74	100	EQ_X	-1.04	-0.13	-0.11
74	74	99	EQ_Y	2.22	2.47	2.97
74	74	106	EQ_Y	1.02	2.23	3.07
74	74	107	EQ_Y	1.23	3.27	3.02
74	74	100	EQ_Y	2.42	3.51	2.92
75	75	100	DEAD	0.	0.	0.
75	75	107	DEAD	0.	0.	0.
75	75	108	DEAD	0.	0.	0.
75	75	101	DEAD	0.	0.	0.
75	75	100	G1_power station	0.	0.	0.
75	75	107	G1_power station	0.	0.	0.
75	75	108	G1_power station	0.	0.	0.
75	75	101	G1_power station	0.	0.	0.
75	75	100	G2_power station	0.	0.	0.
75	75	107	G2_power station	0.	0.	0.
75	75	108	G2_power station	0.	0.	0.
75	75	101	G2_power station	0.	0.	0.
75	75	100	Q_power station	0.	0.	0.
75	75	107	Q_power station	0.	0.	0.
75	75	108	Q_power station	0.	0.	0.
75	75	101	Q_power station	0.	0.	0.
75	75	100	Q_neve	0.	0.	0.
75	75	107	Q_neve	0.	0.	0.
75	75	108	Q_neve	0.	0.	0.
75	75	101	Q_neve	0.	0.	0.
75	75	100	Q_manutenzione	0.	0.	0.
75	75	107	Q_manutenzione	0.	0.	0.
75	75	108	Q_manutenzione	0.	0.	0.
75	75	101	Q_manutenzione	0.	0.	0.
75	75	100	EQ_X	-0.53	-2.965E-02	-0.1

Table 20: Element Forces - Area Shells, Part 1 of 3

Area	AreaElem	Joint	OutputCase	F11	F22	F12
				KN/m	KN/m	KN/m
75	75	107	EQ_X	-0.42	-7.386E-03	0.28
75	75	108	EQ_X	-0.45	-0.15	0.52
75	75	101	EQ_X	-0.56	-0.18	0.14
75	75	100	EQ_Y	1.7	3.37	2.66
75	75	107	EQ_Y	0.18	3.06	1.83
75	75	108	EQ_Y	0.42	4.23	5.949E-02
75	75	101	EQ_Y	1.94	4.53	0.89
76	76	101	DEAD	0.	0.	0.
76	76	108	DEAD	0.	0.	0.
76	76	109	DEAD	0.	0.	0.
76	76	102	DEAD	0.	0.	0.
76	76	101	G1_power station	0.	0.	0.
76	76	108	G1_power station	0.	0.	0.
76	76	109	G1_power station	0.	0.	0.
76	76	102	G1_power station	0.	0.	0.
76	76	101	G2_power station	0.	0.	0.
76	76	108	G2_power station	0.	0.	0.
76	76	109	G2_power station	0.	0.	0.
76	76	102	G2_power station	0.	0.	0.
76	76	101	Q_power station	0.	0.	0.
76	76	108	Q_power station	0.	0.	0.
76	76	109	Q_power station	0.	0.	0.
76	76	102	Q_power station	0.	0.	0.
76	76	101	Q_neve	0.	0.	0.
76	76	108	Q_neve	0.	0.	0.
76	76	109	Q_neve	0.	0.	0.
76	76	102	Q_neve	0.	0.	0.
76	76	101	Q_manutenzione	0.	0.	0.
76	76	108	Q_manutenzione	0.	0.	0.
76	76	109	Q_manutenzione	0.	0.	0.
76	76	102	Q_manutenzione	0.	0.	0.
76	76	101	EQ_X	0.13	-3.831E-02	0.36
76	76	108	EQ_X	-0.29	-0.12	0.6
76	76	109	EQ_X	-0.13	0.68	0.7
76	76	102	EQ_X	0.29	0.76	0.46
76	76	101	EQ_Y	-0.68	4.01	-0.16
76	76	108	EQ_Y	0.74	4.29	-0.96
76	76	109	EQ_Y	0.34	2.29	-1.38
76	76	102	EQ_Y	-1.09	2.	-0.59
77	77	102	DEAD	0.	0.	0.
77	77	109	DEAD	0.	0.	0.
77	77	110	DEAD	0.	0.	0.
77	77	103	DEAD	0.	0.	0.

Table 20: Element Forces - Area Shells, Part 1 of 3

Area	AreaElem	Joint	OutputCase	F11	F22	F12
				KN/m	KN/m	KN/m
77	77	102	G1_power station	0.	0.	0.
77	77	109	G1_power station	0.	0.	0.
77	77	110	G1_power station	0.	0.	0.
77	77	103	G1_power station	0.	0.	0.
77	77	102	G2_power station	0.	0.	0.
77	77	109	G2_power station	0.	0.	0.
77	77	110	G2_power station	0.	0.	0.
77	77	103	G2_power station	0.	0.	0.
77	77	102	Q_power station	0.	0.	0.
77	77	109	Q_power station	0.	0.	0.
77	77	110	Q_power station	0.	0.	0.
77	77	103	Q_power station	0.	0.	0.
77	77	102	Q_neve	0.	0.	0.
77	77	109	Q_neve	0.	0.	0.
77	77	110	Q_neve	0.	0.	0.
77	77	103	Q_neve	0.	0.	0.
77	77	102	Q_manutenzione	0.	0.	0.
77	77	109	Q_manutenzione	0.	0.	0.
77	77	110	Q_manutenzione	0.	0.	0.
77	77	103	Q_manutenzione	0.	0.	0.
77	77	102	EQ_X	-0.2	0.66	0.6
77	77	109	EQ_X	-7.584E-02	0.69	0.46
77	77	110	EQ_X	0.14	1.75	7.496E-02
77	77	103	EQ_X	1.605E-02	1.73	0.21
77	77	102	EQ_Y	0.99	2.42	-1.55
77	77	109	EQ_Y	7.089E-03	2.22	-1.06
77	77	110	EQ_Y	-0.56	-0.61	-0.31
77	77	103	EQ_Y	0.42	-0.41	-0.79
78	78	42	DEAD	0.	0.	0.
78	78	44	DEAD	0.	0.	0.
78	78	111	DEAD	0.	0.	0.
78	78	104	DEAD	0.	0.	0.
78	78	42	G1_power station	0.	0.	0.
78	78	44	G1_power station	0.	0.	0.
78	78	111	G1_power station	0.	0.	0.
78	78	104	G1_power station	0.	0.	0.
78	78	42	G2_power station	0.	0.	0.
78	78	44	G2_power station	0.	0.	0.
78	78	111	G2_power station	0.	0.	0.
78	78	104	G2_power station	0.	0.	0.
78	78	42	Q_power station	0.	0.	0.
78	78	44	Q_power station	0.	0.	0.
78	78	111	Q_power station	0.	0.	0.

Table 20: Element Forces - Area Shells, Part 1 of 3

Area	AreaElem	Joint	OutputCase	F11	F22	F12
				KN/m	KN/m	KN/m
78	78	104	Q_power station	0.	0.	0.
78	78	42	Q_neve	0.	0.	0.
78	78	44	Q_neve	0.	0.	0.
78	78	111	Q_neve	0.	0.	0.
78	78	104	Q_neve	0.	0.	0.
78	78	42	Q_manutenzione	0.	0.	0.
78	78	44	Q_manutenzione	0.	0.	0.
78	78	111	Q_manutenzione	0.	0.	0.
78	78	104	Q_manutenzione	0.	0.	0.
78	78	42	EQ_X	-3.76	-9.739E-02	-0.49
78	78	44	EQ_X	-3.79	-0.1	-0.2
78	78	111	EQ_X	-3.72	0.23	-0.2
78	78	104	EQ_X	-3.69	0.24	-0.49
78	78	42	EQ_Y	0.92	0.98	3.64
78	78	44	EQ_Y	-0.8	0.63	3.69
78	78	111	EQ_Y	-0.8	0.62	4.16
78	78	104	EQ_Y	0.92	0.96	4.12
79	79	104	DEAD	0.	0.	0.
79	79	111	DEAD	0.	0.	0.
79	79	112	DEAD	0.	0.	0.
79	79	105	DEAD	0.	0.	0.
79	79	104	G1_power station	0.	0.	0.
79	79	111	G1_power station	0.	0.	0.
79	79	112	G1_power station	0.	0.	0.
79	79	105	G1_power station	0.	0.	0.
79	79	104	G2_power station	0.	0.	0.
79	79	111	G2_power station	0.	0.	0.
79	79	112	G2_power station	0.	0.	0.
79	79	105	G2_power station	0.	0.	0.
79	79	104	Q_power station	0.	0.	0.
79	79	111	Q_power station	0.	0.	0.
79	79	112	Q_power station	0.	0.	0.
79	79	105	Q_power station	0.	0.	0.
79	79	104	Q_neve	0.	0.	0.
79	79	111	Q_neve	0.	0.	0.
79	79	112	Q_neve	0.	0.	0.
79	79	105	Q_neve	0.	0.	0.
79	79	104	Q_manutenzione	0.	0.	0.
79	79	111	Q_manutenzione	0.	0.	0.
79	79	112	Q_manutenzione	0.	0.	0.
79	79	105	Q_manutenzione	0.	0.	0.
79	79	104	EQ_X	-2.88	0.4	-0.87
79	79	111	EQ_X	-2.84	0.41	0.46

Table 20: Element Forces - Area Shells, Part 1 of 3

Area	AreaElem	Joint	OutputCase	F11	F22	F12
				KN/m	KN/m	KN/m
79	79	112	EQ_X	-2.77	0.79	0.61
79	79	105	EQ_X	-2.8	0.78	-0.72
79	79	104	EQ_Y	1.11	1.	4.88
79	79	111	EQ_Y	-0.81	0.62	4.91
79	79	112	EQ_Y	-0.82	0.56	4.95
79	79	105	EQ_Y	1.1	0.95	4.91
80	80	105	DEAD	0.	0.	0.
80	80	112	DEAD	0.	0.	0.
80	80	113	DEAD	0.	0.	0.
80	80	106	DEAD	0.	0.	0.
80	80	105	G1_power station	0.	0.	0.
80	80	112	G1_power station	0.	0.	0.
80	80	113	G1_power station	0.	0.	0.
80	80	106	G1_power station	0.	0.	0.
80	80	105	G2_power station	0.	0.	0.
80	80	112	G2_power station	0.	0.	0.
80	80	113	G2_power station	0.	0.	0.
80	80	106	G2_power station	0.	0.	0.
80	80	105	Q_power station	0.	0.	0.
80	80	112	Q_power station	0.	0.	0.
80	80	113	Q_power station	0.	0.	0.
80	80	106	Q_power station	0.	0.	0.
80	80	105	Q_neve	0.	0.	0.
80	80	112	Q_neve	0.	0.	0.
80	80	113	Q_neve	0.	0.	0.
80	80	106	Q_neve	0.	0.	0.
80	80	105	Q_manutenzione	0.	0.	0.
80	80	112	Q_manutenzione	0.	0.	0.
80	80	113	Q_manutenzione	0.	0.	0.
80	80	106	Q_manutenzione	0.	0.	0.
80	80	105	EQ_X	-1.44	1.05	-9.881E-03
80	80	112	EQ_X	-1.27	1.09	0.21
80	80	113	EQ_X	-1.45	0.2	0.35
80	80	106	EQ_X	-1.61	0.17	0.13
80	80	105	EQ_Y	0.37	0.8	4.55
80	80	112	EQ_Y	0.14	0.75	4.65
80	80	113	EQ_Y	0.14	0.78	4.71
80	80	106	EQ_Y	0.38	0.83	4.61
81	81	106	DEAD	0.	0.	0.
81	81	113	DEAD	0.	0.	0.
81	81	114	DEAD	0.	0.	0.
81	81	107	DEAD	0.	0.	0.
81	81	106	G1_power station	0.	0.	0.

Table 20: Element Forces - Area Shells, Part 1 of 3

Area	AreaElem	Joint	OutputCase	F11	F22	F12
				KN/m	KN/m	KN/m
81	81	113	G1_power station	0.	0.	0.
81	81	114	G1_power station	0.	0.	0.
81	81	107	G1_power station	0.	0.	0.
81	81	106	G2_power station	0.	0.	0.
81	81	113	G2_power station	0.	0.	0.
81	81	114	G2_power station	0.	0.	0.
81	81	107	G2_power station	0.	0.	0.
81	81	106	Q_power station	0.	0.	0.
81	81	113	Q_power station	0.	0.	0.
81	81	114	Q_power station	0.	0.	0.
81	81	107	Q_power station	0.	0.	0.
81	81	106	Q_neve	0.	0.	0.
81	81	113	Q_neve	0.	0.	0.
81	81	114	Q_neve	0.	0.	0.
81	81	107	Q_neve	0.	0.	0.
81	81	106	Q_manutenzione	0.	0.	0.
81	81	113	Q_manutenzione	0.	0.	0.
81	81	114	Q_manutenzione	0.	0.	0.
81	81	107	Q_manutenzione	0.	0.	0.
81	81	106	EQ_X	-0.93	0.3	0.21
81	81	113	EQ_X	-0.78	0.33	0.47
81	81	114	EQ_X	-0.79	0.27	0.7
81	81	107	EQ_X	-0.94	0.24	0.44
81	81	106	EQ_Y	0.76	0.9	3.88
81	81	113	EQ_Y	-2.128E-03	0.75	3.92
81	81	114	EQ_Y	1.794E-02	0.85	2.03
81	81	107	EQ_Y	0.78	1.	1.99
82	82	107	DEAD	0.	0.	0.
82	82	114	DEAD	0.	0.	0.
82	82	115	DEAD	0.	0.	0.
82	82	108	DEAD	0.	0.	0.
82	82	107	G1_power station	0.	0.	0.
82	82	114	G1_power station	0.	0.	0.
82	82	115	G1_power station	0.	0.	0.
82	82	108	G1_power station	0.	0.	0.
82	82	107	G2_power station	0.	0.	0.
82	82	114	G2_power station	0.	0.	0.
82	82	115	G2_power station	0.	0.	0.
82	82	108	G2_power station	0.	0.	0.
82	82	107	Q_power station	0.	0.	0.
82	82	114	Q_power station	0.	0.	0.
82	82	115	Q_power station	0.	0.	0.
82	82	108	Q_power station	0.	0.	0.

Table 20: Element Forces - Area Shells, Part 1 of 3

Area	AreaElem	Joint	OutputCase	F11	F22	F12
				KN/m	KN/m	KN/m
82	82	107	Q_neve	0.	0.	0.
82	82	114	Q_neve	0.	0.	0.
82	82	115	Q_neve	0.	0.	0.
82	82	108	Q_neve	0.	0.	0.
82	82	107	Q_manutenzione	0.	0.	0.
82	82	114	Q_manutenzione	0.	0.	0.
82	82	115	Q_manutenzione	0.	0.	0.
82	82	108	Q_manutenzione	0.	0.	0.
82	82	107	EQ_X	-0.35	0.36	0.65
82	82	114	EQ_X	-0.58	0.31	0.81
82	82	115	EQ_X	-0.63	0.11	0.86
82	82	108	EQ_X	-0.39	0.16	0.7
82	82	107	EQ_Y	-0.27	0.79	0.81
82	82	114	EQ_Y	1.03	1.05	0.89
82	82	115	EQ_Y	1.17	1.74	0.36
82	82	108	EQ_Y	-0.13	1.48	0.28
83	83	108	DEAD	0.	0.	0.
83	83	115	DEAD	0.	0.	0.
83	83	116	DEAD	0.	0.	0.
83	83	109	DEAD	0.	0.	0.
83	83	108	G1_power station	0.	0.	0.
83	83	115	G1_power station	0.	0.	0.
83	83	116	G1_power station	0.	0.	0.
83	83	109	G1_power station	0.	0.	0.
83	83	108	G2_power station	0.	0.	0.
83	83	115	G2_power station	0.	0.	0.
83	83	116	G2_power station	0.	0.	0.
83	83	109	G2_power station	0.	0.	0.
83	83	108	Q_power station	0.	0.	0.
83	83	115	Q_power station	0.	0.	0.
83	83	116	Q_power station	0.	0.	0.
83	83	109	Q_power station	0.	0.	0.
83	83	108	Q_neve	0.	0.	0.
83	83	115	Q_neve	0.	0.	0.
83	83	116	Q_neve	0.	0.	0.
83	83	109	Q_neve	0.	0.	0.
83	83	108	Q_manutenzione	0.	0.	0.
83	83	115	Q_manutenzione	0.	0.	0.
83	83	116	Q_manutenzione	0.	0.	0.
83	83	109	Q_manutenzione	0.	0.	0.
83	83	108	EQ_X	-0.22	0.19	0.78
83	83	115	EQ_X	-0.13	0.21	0.98
83	83	116	EQ_X	-0.1	0.35	0.74

Table 20: Element Forces - Area Shells, Part 1 of 3

Area	AreaElem	Joint	OutputCase	F11	F22	F12
				KN/m	KN/m	KN/m
83	83	109	EQ_X	-0.19	0.34	0.54
83	83	108	EQ_Y	0.19	1.54	-0.73
83	83	115	EQ_Y	0.13	1.53	-1.06
83	83	116	EQ_Y	0.26	2.2	-1.41
83	83	109	EQ_Y	0.32	2.22	-1.09
84	84	109	DEAD	0.	0.	0.
84	84	116	DEAD	0.	0.	0.
84	84	117	DEAD	0.	0.	0.
84	84	110	DEAD	0.	0.	0.
84	84	109	G1_power station	0.	0.	0.
84	84	116	G1_power station	0.	0.	0.
84	84	117	G1_power station	0.	0.	0.
84	84	110	G1_power station	0.	0.	0.
84	84	109	G2_power station	0.	0.	0.
84	84	116	G2_power station	0.	0.	0.
84	84	117	G2_power station	0.	0.	0.
84	84	110	G2_power station	0.	0.	0.
84	84	109	Q_power station	0.	0.	0.
84	84	116	Q_power station	0.	0.	0.
84	84	117	Q_power station	0.	0.	0.
84	84	110	Q_power station	0.	0.	0.
84	84	109	Q_neve	0.	0.	0.
84	84	116	Q_neve	0.	0.	0.
84	84	117	Q_neve	0.	0.	0.
84	84	110	Q_neve	0.	0.	0.
84	84	109	Q_manutenzione	0.	0.	0.
84	84	116	Q_manutenzione	0.	0.	0.
84	84	117	Q_manutenzione	0.	0.	0.
84	84	110	Q_manutenzione	0.	0.	0.
84	84	109	EQ_X	-0.14	0.35	0.3
84	84	116	EQ_X	-3.261E-02	0.37	0.29
84	84	117	EQ_X	4.268E-02	0.74	0.43
84	84	110	EQ_X	-6.894E-02	0.72	0.44
84	84	109	EQ_Y	-7.238E-03	2.15	-0.76
84	84	116	EQ_Y	3.974E-02	2.16	-0.74
84	84	117	EQ_Y	0.15	2.69	-1.09
84	84	110	EQ_Y	9.946E-02	2.68	-1.11
85	85	44	DEAD	0.	0.	0.
85	85	46	DEAD	0.	0.	0.
85	85	118	DEAD	0.	0.	0.
85	85	111	DEAD	0.	0.	0.
85	85	44	G1_power station	0.	0.	0.
85	85	46	G1_power station	0.	0.	0.

Table 20: Element Forces - Area Shells, Part 1 of 3

Area	AreaElem	Joint	OutputCase	F11	F22	F12
				KN/m	KN/m	KN/m
85	85	118	G1_power station	0.	0.	0.
85	85	111	G1_power station	0.	0.	0.
85	85	44	G2_power station	0.	0.	0.
85	85	46	G2_power station	0.	0.	0.
85	85	118	G2_power station	0.	0.	0.
85	85	111	G2_power station	0.	0.	0.
85	85	44	Q_power station	0.	0.	0.
85	85	46	Q_power station	0.	0.	0.
85	85	118	Q_power station	0.	0.	0.
85	85	111	Q_power station	0.	0.	0.
85	85	44	Q_neve	0.	0.	0.
85	85	46	Q_neve	0.	0.	0.
85	85	118	Q_neve	0.	0.	0.
85	85	111	Q_neve	0.	0.	0.
85	85	44	Q_manutenzione	0.	0.	0.
85	85	46	Q_manutenzione	0.	0.	0.
85	85	118	Q_manutenzione	0.	0.	0.
85	85	111	Q_manutenzione	0.	0.	0.
85	85	44	EQ_X	-3.87	-0.51	-2.546E-02
85	85	46	EQ_X	-3.81	-0.5	1.81
85	85	118	EQ_X	-3.53	0.94	2.56
85	85	111	EQ_X	-3.58	0.93	0.72
85	85	44	EQ_Y	-0.25	3.39	2.8
85	85	46	EQ_Y	-2.61	2.92	3.67
85	85	118	EQ_Y	-2.77	2.14	5.23
85	85	111	EQ_Y	-0.4	2.61	4.36
86	86	111	DEAD	0.	0.	0.
86	86	118	DEAD	0.	0.	0.
86	86	119	DEAD	0.	0.	0.
86	86	112	DEAD	0.	0.	0.
86	86	111	G1_power station	0.	0.	0.
86	86	118	G1_power station	0.	0.	0.
86	86	119	G1_power station	0.	0.	0.
86	86	112	G1_power station	0.	0.	0.
86	86	111	G2_power station	0.	0.	0.
86	86	118	G2_power station	0.	0.	0.
86	86	119	G2_power station	0.	0.	0.
86	86	112	G2_power station	0.	0.	0.
86	86	111	Q_power station	0.	0.	0.
86	86	118	Q_power station	0.	0.	0.
86	86	119	Q_power station	0.	0.	0.
86	86	112	Q_power station	0.	0.	0.
86	86	111	Q_neve	0.	0.	0.

Table 20: Element Forces - Area Shells, Part 1 of 3

Area	AreaElem	Joint	OutputCase	F11	F22	F12
				KN/m	KN/m	KN/m
86	86	118	Q_neve	0.	0.	0.
86	86	119	Q_neve	0.	0.	0.
86	86	112	Q_neve	0.	0.	0.
86	86	111	Q_manutenzione	0.	0.	0.
86	86	118	Q_manutenzione	0.	0.	0.
86	86	119	Q_manutenzione	0.	0.	0.
86	86	112	Q_manutenzione	0.	0.	0.
86	86	111	EQ_X	-2.7	1.11	1.37
86	86	118	EQ_X	0.49	1.74	1.55
86	86	119	EQ_X	0.23	0.48	1.63
86	86	112	EQ_X	-2.95	-0.15	1.45
86	86	111	EQ_Y	-0.41	2.61	5.1
86	86	118	EQ_Y	-0.51	2.59	5.06
86	86	119	EQ_Y	-1.09	-0.28	5.49
86	86	112	EQ_Y	-0.99	-0.26	5.54
87	87	112	DEAD	0.	0.	0.
87	87	119	DEAD	0.	0.	0.
87	87	120	DEAD	0.	0.	0.
87	87	113	DEAD	0.	0.	0.
87	87	112	G1_power station	0.	0.	0.
87	87	119	G1_power station	0.	0.	0.
87	87	120	G1_power station	0.	0.	0.
87	87	113	G1_power station	0.	0.	0.
87	87	112	G2_power station	0.	0.	0.
87	87	119	G2_power station	0.	0.	0.
87	87	120	G2_power station	0.	0.	0.
87	87	113	G2_power station	0.	0.	0.
87	87	112	Q_power station	0.	0.	0.
87	87	119	Q_power station	0.	0.	0.
87	87	120	Q_power station	0.	0.	0.
87	87	113	Q_power station	0.	0.	0.
87	87	112	Q_neve	0.	0.	0.
87	87	119	Q_neve	0.	0.	0.
87	87	120	Q_neve	0.	0.	0.
87	87	113	Q_neve	0.	0.	0.
87	87	112	Q_manutenzione	0.	0.	0.
87	87	119	Q_manutenzione	0.	0.	0.
87	87	120	Q_manutenzione	0.	0.	0.
87	87	113	Q_manutenzione	0.	0.	0.
87	87	112	EQ_X	-1.46	0.14	1.05
87	87	119	EQ_X	9.531E-02	0.46	1.31
87	87	120	EQ_X	0.13	0.65	0.85
87	87	113	EQ_X	-1.42	0.34	0.59

Table 20: Element Forces - Area Shells, Part 1 of 3

Area	AreaElem	Joint	OutputCase	F11	F22	F12
				KN/m	KN/m	KN/m
87	87	112	EQ_Y	-2.626E-02	-6.944E-02	5.24
87	87	119	EQ_Y	-2.01	-0.47	4.85
87	87	120	EQ_Y	-2.11	-0.95	3.66
87	87	113	EQ_Y	-0.12	-0.56	4.06
88	88	113	DEAD	0.	0.	0.
88	88	120	DEAD	0.	0.	0.
88	88	121	DEAD	0.	0.	0.
88	88	114	DEAD	0.	0.	0.
88	88	113	G1_power station	0.	0.	0.
88	88	120	G1_power station	0.	0.	0.
88	88	121	G1_power station	0.	0.	0.
88	88	114	G1_power station	0.	0.	0.
88	88	113	G2_power station	0.	0.	0.
88	88	120	G2_power station	0.	0.	0.
88	88	121	G2_power station	0.	0.	0.
88	88	114	G2_power station	0.	0.	0.
88	88	113	Q_power station	0.	0.	0.
88	88	120	Q_power station	0.	0.	0.
88	88	121	Q_power station	0.	0.	0.
88	88	114	Q_power station	0.	0.	0.
88	88	113	Q_neve	0.	0.	0.
88	88	120	Q_neve	0.	0.	0.
88	88	121	Q_neve	0.	0.	0.
88	88	114	Q_neve	0.	0.	0.
88	88	113	Q_manutenzione	0.	0.	0.
88	88	120	Q_manutenzione	0.	0.	0.
88	88	121	Q_manutenzione	0.	0.	0.
88	88	114	Q_manutenzione	0.	0.	0.
88	88	113	EQ_X	-0.75	0.47	0.71
88	88	120	EQ_X	-4.784E-02	0.61	0.79
88	88	121	EQ_X	-5.820E-02	0.56	0.81
88	88	114	EQ_X	-0.76	0.42	0.74
88	88	113	EQ_Y	-0.27	-0.59	3.26
88	88	120	EQ_Y	-1.84	-0.9	3.37
88	88	121	EQ_Y	-1.99	-1.66	3.29
88	88	114	EQ_Y	-0.42	-1.35	3.18
89	89	114	DEAD	0.	0.	0.
89	89	121	DEAD	0.	0.	0.
89	89	122	DEAD	0.	0.	0.
89	89	115	DEAD	0.	0.	0.
89	89	114	G1_power station	0.	0.	0.
89	89	121	G1_power station	0.	0.	0.
89	89	122	G1_power station	0.	0.	0.

Table 20: Element Forces - Area Shells, Part 1 of 3

Area	AreaElem	Joint	OutputCase	F11	F22	F12
				KN/m	KN/m	KN/m
89	89	115	G1_power station	0.	0.	0.
89	89	114	G2_power station	0.	0.	0.
89	89	121	G2_power station	0.	0.	0.
89	89	122	G2_power station	0.	0.	0.
89	89	115	G2_power station	0.	0.	0.
89	89	114	Q_power station	0.	0.	0.
89	89	121	Q_power station	0.	0.	0.
89	89	122	Q_power station	0.	0.	0.
89	89	115	Q_power station	0.	0.	0.
89	89	114	Q_neve	0.	0.	0.
89	89	121	Q_neve	0.	0.	0.
89	89	122	Q_neve	0.	0.	0.
89	89	115	Q_neve	0.	0.	0.
89	89	114	Q_manutenzione	0.	0.	0.
89	89	121	Q_manutenzione	0.	0.	0.
89	89	122	Q_manutenzione	0.	0.	0.
89	89	115	Q_manutenzione	0.	0.	0.
89	89	114	EQ_X	-0.55	0.46	0.85
89	89	121	EQ_X	-0.3	0.51	0.73
89	89	122	EQ_X	-0.29	0.58	0.92
89	89	115	EQ_X	-0.54	0.53	1.04
89	89	114	EQ_Y	0.59	-1.15	2.03
89	89	121	EQ_Y	-0.93	-1.45	2.9
89	89	122	EQ_Y	-1.06	-2.12	0.76
89	89	115	EQ_Y	0.46	-1.82	-0.11
90	90	115	DEAD	0.	0.	0.
90	90	122	DEAD	0.	0.	0.
90	90	123	DEAD	0.	0.	0.
90	90	116	DEAD	0.	0.	0.
90	90	115	G1_power station	0.	0.	0.
90	90	122	G1_power station	0.	0.	0.
90	90	123	G1_power station	0.	0.	0.
90	90	116	G1_power station	0.	0.	0.
90	90	115	G2_power station	0.	0.	0.
90	90	122	G2_power station	0.	0.	0.
90	90	123	G2_power station	0.	0.	0.
90	90	116	G2_power station	0.	0.	0.
90	90	115	Q_power station	0.	0.	0.
90	90	122	Q_power station	0.	0.	0.
90	90	123	Q_power station	0.	0.	0.
90	90	116	Q_power station	0.	0.	0.
90	90	115	Q_neve	0.	0.	0.
90	90	122	Q_neve	0.	0.	0.

Table 20: Element Forces - Area Shells, Part 1 of 3

Area	AreaElem	Joint	OutputCase	F11	F22	F12
				KN/m	KN/m	KN/m
90	90	123	Q_neve	0.	0.	0.
90	90	116	Q_neve	0.	0.	0.
90	90	115	Q_manutenzione	0.	0.	0.
90	90	122	Q_manutenzione	0.	0.	0.
90	90	123	Q_manutenzione	0.	0.	0.
90	90	116	Q_manutenzione	0.	0.	0.
90	90	115	EQ_X	-5.077E-02	0.62	1.15
90	90	122	EQ_X	-0.75	0.49	1.11
90	90	123	EQ_X	-0.95	-0.53	1.05
90	90	116	EQ_X	-0.25	-0.39	1.1
90	90	115	EQ_Y	-0.58	-2.02	-1.53
90	90	122	EQ_Y	1.85	-1.54	-0.63
90	90	123	EQ_Y	2.75	2.92	-1.18
90	90	116	EQ_Y	0.31	2.43	-2.08
91	91	116	DEAD	0.	0.	0.
91	91	123	DEAD	0.	0.	0.
91	91	124	DEAD	0.	0.	0.
91	91	117	DEAD	0.	0.	0.
91	91	116	G1_power station	0.	0.	0.
91	91	123	G1_power station	0.	0.	0.
91	91	124	G1_power station	0.	0.	0.
91	91	117	G1_power station	0.	0.	0.
91	91	116	G2_power station	0.	0.	0.
91	91	123	G2_power station	0.	0.	0.
91	91	124	G2_power station	0.	0.	0.
91	91	117	G2_power station	0.	0.	0.
91	91	116	Q_power station	0.	0.	0.
91	91	123	Q_power station	0.	0.	0.
91	91	124	Q_power station	0.	0.	0.
91	91	117	Q_power station	0.	0.	0.
91	91	116	Q_neve	0.	0.	0.
91	91	123	Q_neve	0.	0.	0.
91	91	124	Q_neve	0.	0.	0.
91	91	117	Q_neve	0.	0.	0.
91	91	116	Q_manutenzione	0.	0.	0.
91	91	123	Q_manutenzione	0.	0.	0.
91	91	124	Q_manutenzione	0.	0.	0.
91	91	117	Q_manutenzione	0.	0.	0.
91	91	116	EQ_X	-0.18	-0.37	0.66
91	91	123	EQ_X	0.31	-0.27	1.01
91	91	124	EQ_X	0.31	-0.28	0.35
91	91	117	EQ_X	-0.18	-0.37	-8.401E-03
91	91	116	EQ_Y	8.547E-02	2.39	-1.41

Table 20: Element Forces - Area Shells, Part 1 of 3

Area	AreaElem	Joint	OutputCase	F11	F22	F12
				KN/m	KN/m	KN/m
91	91	123	EQ_Y	-1.05	2.16	-2.47
91	91	124	EQ_Y	-0.24	6.21	-1.23
91	91	117	EQ_Y	0.9	6.44	-0.17
92	92	46	DEAD	0.	0.	0.
92	92	63	DEAD	0.	0.	0.
92	92	125	DEAD	0.	0.	0.
92	92	118	DEAD	0.	0.	0.
92	92	46	G1_power station	0.	0.	0.
92	92	63	G1_power station	0.	0.	0.
92	92	125	G1_power station	0.	0.	0.
92	92	118	G1_power station	0.	0.	0.
92	92	46	G2_power station	0.	0.	0.
92	92	63	G2_power station	0.	0.	0.
92	92	125	G2_power station	0.	0.	0.
92	92	118	G2_power station	0.	0.	0.
92	92	46	Q_power station	0.	0.	0.
92	92	63	Q_power station	0.	0.	0.
92	92	125	Q_power station	0.	0.	0.
92	92	118	Q_power station	0.	0.	0.
92	92	46	Q_neve	0.	0.	0.
92	92	63	Q_neve	0.	0.	0.
92	92	125	Q_neve	0.	0.	0.
92	92	118	Q_neve	0.	0.	0.
92	92	46	Q_manutenzione	0.	0.	0.
92	92	63	Q_manutenzione	0.	0.	0.
92	92	125	Q_manutenzione	0.	0.	0.
92	92	118	Q_manutenzione	0.	0.	0.
92	92	46	EQ_X	-3.95	-1.2	5.46
92	92	63	EQ_X	11.61	1.91	4.49
92	92	125	EQ_X	11.36	0.66	2.62
92	92	118	EQ_X	-4.21	-2.46	3.6
92	92	46	EQ_Y	-0.48	13.59	4.25
92	92	63	EQ_Y	0.18	13.72	5.89
92	92	125	EQ_Y	-2.69	-0.63	7.63
92	92	118	EQ_Y	-3.35	-0.76	5.98
93	93	118	DEAD	0.	0.	0.
93	93	125	DEAD	0.	0.	0.
93	93	126	DEAD	0.	0.	0.
93	93	119	DEAD	0.	0.	0.
93	93	118	G1_power station	0.	0.	0.
93	93	125	G1_power station	0.	0.	0.
93	93	126	G1_power station	0.	0.	0.
93	93	119	G1_power station	0.	0.	0.

Table 20: Element Forces - Area Shells, Part 1 of 3

Area	AreaElem	Joint	OutputCase	F11	F22	F12
				KN/m	KN/m	KN/m
93	93	118	G2_power station	0.	0.	0.
93	93	125	G2_power station	0.	0.	0.
93	93	126	G2_power station	0.	0.	0.
93	93	119	G2_power station	0.	0.	0.
93	93	118	Q_power station	0.	0.	0.
93	93	125	Q_power station	0.	0.	0.
93	93	126	Q_power station	0.	0.	0.
93	93	119	Q_power station	0.	0.	0.
93	93	118	Q_neve	0.	0.	0.
93	93	125	Q_neve	0.	0.	0.
93	93	126	Q_neve	0.	0.	0.
93	93	119	Q_neve	0.	0.	0.
93	93	118	Q_manutenzione	0.	0.	0.
93	93	125	Q_manutenzione	0.	0.	0.
93	93	126	Q_manutenzione	0.	0.	0.
93	93	119	Q_manutenzione	0.	0.	0.
93	93	118	EQ_X	-0.19	-1.66	2.59
93	93	125	EQ_X	2.91	-1.04	1.94
93	93	126	EQ_X	3.18	0.34	0.5
93	93	119	EQ_X	8.054E-02	-0.28	1.16
93	93	118	EQ_Y	-1.09	-0.31	5.81
93	93	125	EQ_Y	-3.24	-0.74	4.15
93	93	126	EQ_Y	-3.22	-0.68	2.74
93	93	119	EQ_Y	-1.08	-0.25	4.4
94	94	119	DEAD	0.	0.	0.
94	94	126	DEAD	0.	0.	0.
94	94	127	DEAD	0.	0.	0.
94	94	120	DEAD	0.	0.	0.
94	94	119	G1_power station	0.	0.	0.
94	94	126	G1_power station	0.	0.	0.
94	94	127	G1_power station	0.	0.	0.
94	94	120	G1_power station	0.	0.	0.
94	94	119	G2_power station	0.	0.	0.
94	94	126	G2_power station	0.	0.	0.
94	94	127	G2_power station	0.	0.	0.
94	94	120	G2_power station	0.	0.	0.
94	94	119	Q_power station	0.	0.	0.
94	94	126	Q_power station	0.	0.	0.
94	94	127	Q_power station	0.	0.	0.
94	94	120	Q_power station	0.	0.	0.
94	94	119	Q_neve	0.	0.	0.
94	94	126	Q_neve	0.	0.	0.
94	94	127	Q_neve	0.	0.	0.

Table 20: Element Forces - Area Shells, Part 1 of 3

Area	AreaElem	Joint	OutputCase	F11	F22	F12
				KN/m	KN/m	KN/m
94	94	120	Q_neve	0.	0.	0.
94	94	119	Q_manutenzione	0.	0.	0.
94	94	126	Q_manutenzione	0.	0.	0.
94	94	127	Q_manutenzione	0.	0.	0.
94	94	120	Q_manutenzione	0.	0.	0.
94	94	119	EQ_X	-5.817E-02	-0.31	0.84
94	94	126	EQ_X	1.49	-1.282E-03	0.78
94	94	127	EQ_X	1.61	0.55	0.9
94	94	120	EQ_X	5.288E-02	0.24	0.96
94	94	119	EQ_Y	-2.01	-0.43	3.75
94	94	126	EQ_Y	-4.72	-0.98	3.21
94	94	127	EQ_Y	-4.92	-1.96	3.49
94	94	120	EQ_Y	-2.2	-1.42	4.03
95	95	120	DEAD	0.	0.	0.
95	95	127	DEAD	0.	0.	0.
95	95	128	DEAD	0.	0.	0.
95	95	121	DEAD	0.	0.	0.
95	95	120	G1_power station	0.	0.	0.
95	95	127	G1_power station	0.	0.	0.
95	95	128	G1_power station	0.	0.	0.
95	95	121	G1_power station	0.	0.	0.
95	95	120	G2_power station	0.	0.	0.
95	95	127	G2_power station	0.	0.	0.
95	95	128	G2_power station	0.	0.	0.
95	95	121	G2_power station	0.	0.	0.
95	95	120	Q_power station	0.	0.	0.
95	95	127	Q_power station	0.	0.	0.
95	95	128	Q_power station	0.	0.	0.
95	95	121	Q_power station	0.	0.	0.
95	95	120	Q_neve	0.	0.	0.
95	95	127	Q_neve	0.	0.	0.
95	95	128	Q_neve	0.	0.	0.
95	95	121	Q_neve	0.	0.	0.
95	95	120	Q_manutenzione	0.	0.	0.
95	95	127	Q_manutenzione	0.	0.	0.
95	95	128	Q_manutenzione	0.	0.	0.
95	95	121	Q_manutenzione	0.	0.	0.
95	95	120	EQ_X	-0.13	0.21	0.9
95	95	127	EQ_X	1.21	0.47	0.73
95	95	128	EQ_X	1.23	0.58	0.56
95	95	121	EQ_X	-0.11	0.31	0.72
95	95	120	EQ_Y	-1.93	-1.36	3.73
95	95	127	EQ_Y	-6.95	-2.37	3.14

Table 20: Element Forces - Area Shells, Part 1 of 3

Area	AreaElem	Joint	OutputCase	F11	F22	F12
				KN/m	KN/m	KN/m
95	95	128	EQ_Y	-7.05	-2.89	2.56
95	95	121	EQ_Y	-2.03	-1.88	3.15
96	96	121	DEAD	0.	0.	0.
96	96	128	DEAD	0.	0.	0.
96	96	129	DEAD	0.	0.	0.
96	96	122	DEAD	0.	0.	0.
96	96	121	G1_power station	0.	0.	0.
96	96	128	G1_power station	0.	0.	0.
96	96	129	G1_power station	0.	0.	0.
96	96	122	G1_power station	0.	0.	0.
96	96	121	G2_power station	0.	0.	0.
96	96	128	G2_power station	0.	0.	0.
96	96	129	G2_power station	0.	0.	0.
96	96	122	G2_power station	0.	0.	0.
96	96	121	Q_power station	0.	0.	0.
96	96	128	Q_power station	0.	0.	0.
96	96	129	Q_power station	0.	0.	0.
96	96	122	Q_power station	0.	0.	0.
96	96	121	Q_neve	0.	0.	0.
96	96	128	Q_neve	0.	0.	0.
96	96	129	Q_neve	0.	0.	0.
96	96	122	Q_neve	0.	0.	0.
96	96	121	Q_manutenzione	0.	0.	0.
96	96	128	Q_manutenzione	0.	0.	0.
96	96	129	Q_manutenzione	0.	0.	0.
96	96	122	Q_manutenzione	0.	0.	0.
96	96	121	EQ_X	-0.35	0.26	0.64
96	96	128	EQ_X	0.81	0.49	0.5
96	96	129	EQ_X	0.86	0.75	0.38
96	96	122	EQ_X	-0.3	0.52	0.52
96	96	121	EQ_Y	-0.98	-1.67	2.76
96	96	128	EQ_Y	-7.76	-3.03	2.7
96	96	129	EQ_Y	-8.02	-4.35	3.2
96	96	122	EQ_Y	-1.24	-3.	3.26
97	97	122	DEAD	0.	0.	0.
97	97	129	DEAD	0.	0.	0.
97	97	130	DEAD	0.	0.	0.
97	97	123	DEAD	0.	0.	0.
97	97	122	G1_power station	0.	0.	0.
97	97	129	G1_power station	0.	0.	0.
97	97	130	G1_power station	0.	0.	0.
97	97	123	G1_power station	0.	0.	0.
97	97	122	G2_power station	0.	0.	0.

Table 20: Element Forces - Area Shells, Part 1 of 3

Area	AreaElem	Joint	OutputCase	F11	F22	F12
				KN/m	KN/m	KN/m
97	97	129	G2_power station	0.	0.	0.
97	97	130	G2_power station	0.	0.	0.
97	97	123	G2_power station	0.	0.	0.
97	97	122	Q_power station	0.	0.	0.
97	97	129	Q_power station	0.	0.	0.
97	97	130	Q_power station	0.	0.	0.
97	97	123	Q_power station	0.	0.	0.
97	97	122	Q_neve	0.	0.	0.
97	97	129	Q_neve	0.	0.	0.
97	97	130	Q_neve	0.	0.	0.
97	97	123	Q_neve	0.	0.	0.
97	97	122	Q_manutenzione	0.	0.	0.
97	97	129	Q_manutenzione	0.	0.	0.
97	97	130	Q_manutenzione	0.	0.	0.
97	97	123	Q_manutenzione	0.	0.	0.
97	97	122	EQ_X	-0.76	0.43	0.71
97	97	129	EQ_X	-0.21	0.54	0.14
97	97	130	EQ_X	-0.16	0.8	0.47
97	97	123	EQ_X	-0.7	0.7	1.04
97	97	122	EQ_Y	1.68	-2.41	1.87
97	97	129	EQ_Y	-5.43	-3.84	3.99
97	97	130	EQ_Y	-5.65	-4.93	1.45
97	97	123	EQ_Y	1.46	-3.51	-0.68
98	98	123	DEAD	0.	0.	0.
98	98	130	DEAD	0.	0.	0.
98	98	29	DEAD	0.	0.	0.
98	98	124	DEAD	0.	0.	0.
98	98	123	G1_power station	0.	0.	0.
98	98	130	G1_power station	0.	0.	0.
98	98	29	G1_power station	0.	0.	0.
98	98	124	G1_power station	0.	0.	0.
98	98	123	G2_power station	0.	0.	0.
98	98	130	G2_power station	0.	0.	0.
98	98	29	G2_power station	0.	0.	0.
98	98	124	G2_power station	0.	0.	0.
98	98	123	Q_power station	0.	0.	0.
98	98	130	Q_power station	0.	0.	0.
98	98	29	Q_power station	0.	0.	0.
98	98	124	Q_power station	0.	0.	0.
98	98	123	Q_neve	0.	0.	0.
98	98	130	Q_neve	0.	0.	0.
98	98	29	Q_neve	0.	0.	0.
98	98	124	Q_neve	0.	0.	0.

Table 20: Element Forces - Area Shells, Part 1 of 3

Area	AreaElem	Joint	OutputCase	F11	F22	F12
				KN/m	KN/m	KN/m
98	98	123	Q_manutenzione	0.	0.	0.
98	98	130	Q_manutenzione	0.	0.	0.
98	98	29	Q_manutenzione	0.	0.	0.
98	98	124	Q_manutenzione	0.	0.	0.
98	98	123	EQ_X	0.55	0.95	1.
98	98	130	EQ_X	-2.72	0.29	0.64
98	98	29	EQ_X	-3.64	-4.3	1.61
98	98	124	EQ_X	-0.37	-3.64	1.97
98	98	123	EQ_Y	-2.34	-4.27	-1.97
98	98	130	EQ_Y	4.73	-2.86	-5.351E-02
98	98	29	EQ_Y	8.81	17.57	-3.67
98	98	124	EQ_Y	1.75	16.16	-5.59
99	99	5	DEAD	0.	0.	0.
99	99	48	DEAD	0.	0.	0.
99	99	131	DEAD	0.	0.	0.
99	99	93	DEAD	0.	0.	0.
99	99	5	G1_power station	0.	0.	0.
99	99	48	G1_power station	0.	0.	0.
99	99	131	G1_power station	0.	0.	0.
99	99	93	G1_power station	0.	0.	0.
99	99	5	G2_power station	0.	0.	0.
99	99	48	G2_power station	0.	0.	0.
99	99	131	G2_power station	0.	0.	0.
99	99	93	G2_power station	0.	0.	0.
99	99	5	Q_power station	0.	0.	0.
99	99	48	Q_power station	0.	0.	0.
99	99	131	Q_power station	0.	0.	0.
99	99	93	Q_power station	0.	0.	0.
99	99	5	Q_neve	0.	0.	0.
99	99	48	Q_neve	0.	0.	0.
99	99	131	Q_neve	0.	0.	0.
99	99	93	Q_neve	0.	0.	0.
99	99	5	Q_manutenzione	0.	0.	0.
99	99	48	Q_manutenzione	0.	0.	0.
99	99	131	Q_manutenzione	0.	0.	0.
99	99	93	Q_manutenzione	0.	0.	0.
99	99	5	EQ_X	-11.43	-1.72	4.99
99	99	48	EQ_X	4.57	1.48	6.15
99	99	131	EQ_X	4.65	1.87	4.5
99	99	93	EQ_X	-11.35	-1.33	3.33
99	99	5	EQ_Y	-0.53	14.99	-5.12
99	99	48	EQ_Y	-3.25	14.44	-3.95
99	99	131	EQ_Y	-5.86	1.4	-5.83

Table 20: Element Forces - Area Shells, Part 1 of 3

Area	AreaElem	Joint	OutputCase	F11	F22	F12
				KN/m	KN/m	KN/m
99	99	93	EQ_Y	-3.14	1.95	-7.
100	100	93	DEAD	0.	0.	0.
100	100	131	DEAD	0.	0.	0.
100	100	132	DEAD	0.	0.	0.
100	100	95	DEAD	0.	0.	0.
100	100	93	G1_power station	0.	0.	0.
100	100	131	G1_power station	0.	0.	0.
100	100	132	G1_power station	0.	0.	0.
100	100	95	G1_power station	0.	0.	0.
100	100	93	G2_power station	0.	0.	0.
100	100	131	G2_power station	0.	0.	0.
100	100	132	G2_power station	0.	0.	0.
100	100	95	G2_power station	0.	0.	0.
100	100	93	Q_power station	0.	0.	0.
100	100	131	Q_power station	0.	0.	0.
100	100	132	Q_power station	0.	0.	0.
100	100	95	Q_power station	0.	0.	0.
100	100	93	Q_neve	0.	0.	0.
100	100	131	Q_neve	0.	0.	0.
100	100	132	Q_neve	0.	0.	0.
100	100	95	Q_neve	0.	0.	0.
100	100	93	Q_manutenzione	0.	0.	0.
100	100	131	Q_manutenzione	0.	0.	0.
100	100	132	Q_manutenzione	0.	0.	0.
100	100	95	Q_manutenzione	0.	0.	0.
100	100	93	EQ_X	-1.78	0.59	2.51
100	100	131	EQ_X	1.17	1.18	3.8
100	100	132	EQ_X	0.72	-1.04	2.46
100	100	95	EQ_X	-2.22	-1.63	1.18
100	100	93	EQ_Y	-9.	0.77	-2.91
100	100	131	EQ_Y	-5.06	1.56	-7.13
100	100	132	EQ_Y	-4.91	2.3	-7.78
100	100	95	EQ_Y	-8.85	1.51	-3.56
101	101	95	DEAD	0.	0.	0.
101	101	132	DEAD	0.	0.	0.
101	101	133	DEAD	0.	0.	0.
101	101	25	DEAD	0.	0.	0.
101	101	95	G1_power station	0.	0.	0.
101	101	132	G1_power station	0.	0.	0.
101	101	133	G1_power station	0.	0.	0.
101	101	25	G1_power station	0.	0.	0.
101	101	95	G2_power station	0.	0.	0.
101	101	132	G2_power station	0.	0.	0.

Table 20: Element Forces - Area Shells, Part 1 of 3

Area	AreaElem	Joint	OutputCase	F11	F22	F12
				KN/m	KN/m	KN/m
101	101	133	G2_power station	0.	0.	0.
101	101	25	G2_power station	0.	0.	0.
101	101	95	Q_power station	0.	0.	0.
101	101	132	Q_power station	0.	0.	0.
101	101	133	Q_power station	0.	0.	0.
101	101	25	Q_power station	0.	0.	0.
101	101	95	Q_neve	0.	0.	0.
101	101	132	Q_neve	0.	0.	0.
101	101	133	Q_neve	0.	0.	0.
101	101	25	Q_neve	0.	0.	0.
101	101	95	Q_manutenzione	0.	0.	0.
101	101	132	Q_manutenzione	0.	0.	0.
101	101	133	Q_manutenzione	0.	0.	0.
101	101	25	Q_manutenzione	0.	0.	0.
101	101	95	EQ_X	2.42	-0.7	1.24
101	101	132	EQ_X	-0.39	-1.27	1.68
101	101	133	EQ_X	0.24	1.87	2.55
101	101	25	EQ_X	3.05	2.43	2.11
101	101	95	EQ_Y	-22.99	-1.32	-5.03
101	101	132	EQ_Y	3.98	4.08	-6.52
101	101	133	EQ_Y	-1.98	-25.73	-14.07
101	101	25	EQ_Y	-28.95	-31.12	-12.57
102	102	48	DEAD	0.	0.	0.
102	102	50	DEAD	0.	0.	0.
102	102	134	DEAD	0.	0.	0.
102	102	131	DEAD	0.	0.	0.
102	102	48	G1_power station	0.	0.	0.
102	102	50	G1_power station	0.	0.	0.
102	102	134	G1_power station	0.	0.	0.
102	102	131	G1_power station	0.	0.	0.
102	102	48	G2_power station	0.	0.	0.
102	102	50	G2_power station	0.	0.	0.
102	102	134	G2_power station	0.	0.	0.
102	102	131	G2_power station	0.	0.	0.
102	102	48	Q_power station	0.	0.	0.
102	102	50	Q_power station	0.	0.	0.
102	102	134	Q_power station	0.	0.	0.
102	102	131	Q_power station	0.	0.	0.
102	102	48	Q_neve	0.	0.	0.
102	102	50	Q_neve	0.	0.	0.
102	102	134	Q_neve	0.	0.	0.
102	102	131	Q_neve	0.	0.	0.
102	102	48	Q_manutenzione	0.	0.	0.

Table 20: Element Forces - Area Shells, Part 1 of 3

Area	AreaElem	Joint	OutputCase	F11	F22	F12
				KN/m	KN/m	KN/m
102	102	50	Q_manutenzione	0.	0.	0.
102	102	134	Q_manutenzione	0.	0.	0.
102	102	131	Q_manutenzione	0.	0.	0.
102	102	48	EQ_X	4.52	1.19	2.54
102	102	50	EQ_X	3.78	1.04	0.79
102	102	134	EQ_X	3.27	-1.5	1.91
102	102	131	EQ_X	4.01	-1.35	3.65
102	102	48	EQ_Y	-5.5	3.23	-4.02
102	102	50	EQ_Y	-1.42	4.04	-4.53
102	102	134	EQ_Y	-1.4	4.17	-7.39
102	102	131	EQ_Y	-5.47	3.35	-6.87
103	103	131	DEAD	0.	0.	0.
103	103	134	DEAD	0.	0.	0.
103	103	135	DEAD	0.	0.	0.
103	103	132	DEAD	0.	0.	0.
103	103	131	G1_power station	0.	0.	0.
103	103	134	G1_power station	0.	0.	0.
103	103	135	G1_power station	0.	0.	0.
103	103	132	G1_power station	0.	0.	0.
103	103	131	G2_power station	0.	0.	0.
103	103	134	G2_power station	0.	0.	0.
103	103	135	G2_power station	0.	0.	0.
103	103	132	G2_power station	0.	0.	0.
103	103	131	Q_power station	0.	0.	0.
103	103	134	Q_power station	0.	0.	0.
103	103	135	Q_power station	0.	0.	0.
103	103	132	Q_power station	0.	0.	0.
103	103	131	Q_neve	0.	0.	0.
103	103	134	Q_neve	0.	0.	0.
103	103	135	Q_neve	0.	0.	0.
103	103	132	Q_neve	0.	0.	0.
103	103	131	Q_manutenzione	0.	0.	0.
103	103	134	Q_manutenzione	0.	0.	0.
103	103	135	Q_manutenzione	0.	0.	0.
103	103	132	Q_manutenzione	0.	0.	0.
103	103	131	EQ_X	0.52	-2.05	2.96
103	103	134	EQ_X	2.06	-1.74	2.53
103	103	135	EQ_X	2.26	-0.72	2.44
103	103	132	EQ_X	0.73	-1.03	2.87
103	103	131	EQ_Y	-4.67	3.51	-8.17
103	103	134	EQ_Y	0.64	4.57	-7.71
103	103	135	EQ_Y	-1.22	-4.68	-7.8
103	103	132	EQ_Y	-6.52	-5.74	-8.26

Table 20: Element Forces - Area Shells, Part 1 of 3

Area	AreaElem	Joint	OutputCase	F11	F22	F12
				KN/m	KN/m	KN/m
104	104	132	DEAD	0.	0.	0.
104	104	135	DEAD	0.	0.	0.
104	104	136	DEAD	0.	0.	0.
104	104	133	DEAD	0.	0.	0.
104	104	132	G1_power station	0.	0.	0.
104	104	135	G1_power station	0.	0.	0.
104	104	136	G1_power station	0.	0.	0.
104	104	133	G1_power station	0.	0.	0.
104	104	132	G2_power station	0.	0.	0.
104	104	135	G2_power station	0.	0.	0.
104	104	136	G2_power station	0.	0.	0.
104	104	133	G2_power station	0.	0.	0.
104	104	132	Q_power station	0.	0.	0.
104	104	135	Q_power station	0.	0.	0.
104	104	136	Q_power station	0.	0.	0.
104	104	133	Q_power station	0.	0.	0.
104	104	132	Q_neve	0.	0.	0.
104	104	135	Q_neve	0.	0.	0.
104	104	136	Q_neve	0.	0.	0.
104	104	133	Q_neve	0.	0.	0.
104	104	132	Q_manutenzione	0.	0.	0.
104	104	135	Q_manutenzione	0.	0.	0.
104	104	136	Q_manutenzione	0.	0.	0.
104	104	133	Q_manutenzione	0.	0.	0.
104	104	132	EQ_X	-0.39	-1.25	2.09
104	104	135	EQ_X	1.07	-0.96	1.56
104	104	136	EQ_X	0.58	-3.41	0.26
104	104	133	EQ_X	-0.88	-3.7	0.79
104	104	132	EQ_Y	2.37	-3.96	-7.
104	104	135	EQ_Y	-0.92	-4.62	-4.87
104	104	136	EQ_Y	-0.53	-2.65	1.53
104	104	133	EQ_Y	2.77	-1.99	-0.59
105	105	50	DEAD	0.	0.	0.
105	105	52	DEAD	0.	0.	0.
105	105	137	DEAD	0.	0.	0.
105	105	134	DEAD	0.	0.	0.
105	105	50	G1_power station	0.	0.	0.
105	105	52	G1_power station	0.	0.	0.
105	105	137	G1_power station	0.	0.	0.
105	105	134	G1_power station	0.	0.	0.
105	105	50	G2_power station	0.	0.	0.
105	105	52	G2_power station	0.	0.	0.
105	105	137	G2_power station	0.	0.	0.

Table 20: Element Forces - Area Shells, Part 1 of 3

Area	AreaElem	Joint	OutputCase	F11	F22	F12
				KN/m	KN/m	KN/m
105	105	134	G2_power station	0.	0.	0.
105	105	50	Q_power station	0.	0.	0.
105	105	52	Q_power station	0.	0.	0.
105	105	137	Q_power station	0.	0.	0.
105	105	134	Q_power station	0.	0.	0.
105	105	50	Q_neve	0.	0.	0.
105	105	52	Q_neve	0.	0.	0.
105	105	137	Q_neve	0.	0.	0.
105	105	134	Q_neve	0.	0.	0.
105	105	50	Q_manutenzione	0.	0.	0.
105	105	52	Q_manutenzione	0.	0.	0.
105	105	137	Q_manutenzione	0.	0.	0.
105	105	134	Q_manutenzione	0.	0.	0.
105	105	50	EQ_X	3.77	1.	0.65
105	105	52	EQ_X	3.37	0.92	0.17
105	105	137	EQ_X	3.09	-0.51	0.13
105	105	134	EQ_X	3.48	-0.43	0.61
105	105	50	EQ_Y	-2.29	-0.29	-6.54
105	105	52	EQ_Y	2.31	0.63	-6.45
105	105	137	EQ_Y	2.57	1.94	-6.54
105	105	134	EQ_Y	-2.02	1.02	-6.63
106	106	134	DEAD	0.	0.	0.
106	106	137	DEAD	0.	0.	0.
106	106	138	DEAD	0.	0.	0.
106	106	135	DEAD	0.	0.	0.
106	106	134	G1_power station	0.	0.	0.
106	106	137	G1_power station	0.	0.	0.
106	106	138	G1_power station	0.	0.	0.
106	106	135	G1_power station	0.	0.	0.
106	106	134	G2_power station	0.	0.	0.
106	106	137	G2_power station	0.	0.	0.
106	106	138	G2_power station	0.	0.	0.
106	106	135	G2_power station	0.	0.	0.
106	106	134	Q_power station	0.	0.	0.
106	106	137	Q_power station	0.	0.	0.
106	106	138	Q_power station	0.	0.	0.
106	106	135	Q_power station	0.	0.	0.
106	106	134	Q_neve	0.	0.	0.
106	106	137	Q_neve	0.	0.	0.
106	106	138	Q_neve	0.	0.	0.
106	106	135	Q_neve	0.	0.	0.
106	106	134	Q_manutenzione	0.	0.	0.
106	106	137	Q_manutenzione	0.	0.	0.

Table 20: Element Forces - Area Shells, Part 1 of 3

Area	AreaElem	Joint	OutputCase	F11	F22	F12
				KN/m	KN/m	KN/m
106	106	138	Q_manutenzione	0.	0.	0.
106	106	135	Q_manutenzione	0.	0.	0.
106	106	134	EQ_X	2.27	-0.67	1.23
106	106	137	EQ_X	2.41	-0.64	-0.48
106	106	138	EQ_X	2.02	-2.6	-0.64
106	106	135	EQ_X	1.88	-2.63	1.07
106	106	134	EQ_Y	5.840E-03	1.43	-6.95
106	106	137	EQ_Y	-0.14	1.4	-7.15
106	106	138	EQ_Y	8.804E-02	2.52	-4.4
106	106	135	EQ_Y	0.23	2.55	-4.2
107	107	135	DEAD	0.	0.	0.
107	107	138	DEAD	0.	0.	0.
107	107	139	DEAD	0.	0.	0.
107	107	136	DEAD	0.	0.	0.
107	107	135	G1_power station	0.	0.	0.
107	107	138	G1_power station	0.	0.	0.
107	107	139	G1_power station	0.	0.	0.
107	107	136	G1_power station	0.	0.	0.
107	107	135	G2_power station	0.	0.	0.
107	107	138	G2_power station	0.	0.	0.
107	107	139	G2_power station	0.	0.	0.
107	107	136	G2_power station	0.	0.	0.
107	107	135	Q_power station	0.	0.	0.
107	107	138	Q_power station	0.	0.	0.
107	107	139	Q_power station	0.	0.	0.
107	107	136	Q_power station	0.	0.	0.
107	107	135	Q_neve	0.	0.	0.
107	107	138	Q_neve	0.	0.	0.
107	107	139	Q_neve	0.	0.	0.
107	107	136	Q_neve	0.	0.	0.
107	107	135	Q_manutenzione	0.	0.	0.
107	107	138	Q_manutenzione	0.	0.	0.
107	107	139	Q_manutenzione	0.	0.	0.
107	107	136	Q_manutenzione	0.	0.	0.
107	107	135	EQ_X	0.69	-2.86	0.19
107	107	138	EQ_X	0.64	-2.87	-0.15
107	107	139	EQ_X	0.23	-4.93	4.830E-02
107	107	136	EQ_X	0.28	-4.92	0.38
107	107	135	EQ_Y	0.52	2.61	-1.28
107	107	138	EQ_Y	-0.71	2.36	-1.24
107	107	139	EQ_Y	-0.48	3.51	-3.97
107	107	136	EQ_Y	0.75	3.76	-4.02
108	108	52	DEAD	0.	0.	0.

Table 20: Element Forces - Area Shells, Part 1 of 3

Area	AreaElem	Joint	OutputCase	F11	F22	F12
				KN/m	KN/m	KN/m
108	108	54	DEAD	0.	0.	0.
108	108	140	DEAD	0.	0.	0.
108	108	137	DEAD	0.	0.	0.
108	108	52	G1_power station	0.	0.	0.
108	108	54	G1_power station	0.	0.	0.
108	108	140	G1_power station	0.	0.	0.
108	108	137	G1_power station	0.	0.	0.
108	108	52	G2_power station	0.	0.	0.
108	108	54	G2_power station	0.	0.	0.
108	108	140	G2_power station	0.	0.	0.
108	108	137	G2_power station	0.	0.	0.
108	108	52	Q_power station	0.	0.	0.
108	108	54	Q_power station	0.	0.	0.
108	108	140	Q_power station	0.	0.	0.
108	108	137	Q_power station	0.	0.	0.
108	108	52	Q_neve	0.	0.	0.
108	108	54	Q_neve	0.	0.	0.
108	108	140	Q_neve	0.	0.	0.
108	108	137	Q_neve	0.	0.	0.
108	108	52	Q_manutenzione	0.	0.	0.
108	108	54	Q_manutenzione	0.	0.	0.
108	108	140	Q_manutenzione	0.	0.	0.
108	108	137	Q_manutenzione	0.	0.	0.
108	108	52	EQ_X	3.49	1.49	-0.28
108	108	54	EQ_X	3.73	1.54	-2.39
108	108	140	EQ_X	3.22	-1.03	-3.05
108	108	137	EQ_X	2.98	-1.08	-0.94
108	108	52	EQ_Y	1.46	-3.64	-4.31
108	108	54	EQ_Y	5.83	-2.77	-3.63
108	108	140	EQ_Y	6.17	-1.04	-6.74
108	108	137	EQ_Y	1.8	-1.92	-7.41
109	109	137	DEAD	0.	0.	0.
109	109	140	DEAD	0.	0.	0.
109	109	141	DEAD	0.	0.	0.
109	109	138	DEAD	0.	0.	0.
109	109	137	G1_power station	0.	0.	0.
109	109	140	G1_power station	0.	0.	0.
109	109	141	G1_power station	0.	0.	0.
109	109	138	G1_power station	0.	0.	0.
109	109	137	G2_power station	0.	0.	0.
109	109	140	G2_power station	0.	0.	0.
109	109	141	G2_power station	0.	0.	0.
109	109	138	G2_power station	0.	0.	0.

Table 20: Element Forces - Area Shells, Part 1 of 3

Area	AreaElem	Joint	OutputCase	F11	F22	F12
				KN/m	KN/m	KN/m
109	109	137	Q_power station	0.	0.	0.
109	109	140	Q_power station	0.	0.	0.
109	109	141	Q_power station	0.	0.	0.
109	109	138	Q_power station	0.	0.	0.
109	109	137	Q_neve	0.	0.	0.
109	109	140	Q_neve	0.	0.	0.
109	109	141	Q_neve	0.	0.	0.
109	109	138	Q_neve	0.	0.	0.
109	109	137	Q_manutenzione	0.	0.	0.
109	109	140	Q_manutenzione	0.	0.	0.
109	109	141	Q_manutenzione	0.	0.	0.
109	109	138	Q_manutenzione	0.	0.	0.
109	109	137	EQ_X	2.3	-1.21	-1.55
109	109	140	EQ_X	-0.77	-1.83	-1.92
109	109	141	EQ_X	-0.86	-2.28	-1.91
109	109	138	EQ_X	2.21	-1.67	-1.54
109	109	137	EQ_Y	-0.91	-2.46	-8.02
109	109	140	EQ_Y	5.41	-1.2	-8.34
109	109	141	EQ_Y	7.91	11.32	-8.53
109	109	138	EQ_Y	1.59	10.05	-8.21
110	110	138	DEAD	0.	0.	0.
110	110	141	DEAD	0.	0.	0.
110	110	142	DEAD	0.	0.	0.
110	110	139	DEAD	0.	0.	0.
110	110	138	G1_power station	0.	0.	0.
110	110	141	G1_power station	0.	0.	0.
110	110	142	G1_power station	0.	0.	0.
110	110	139	G1_power station	0.	0.	0.
110	110	138	G2_power station	0.	0.	0.
110	110	141	G2_power station	0.	0.	0.
110	110	142	G2_power station	0.	0.	0.
110	110	139	G2_power station	0.	0.	0.
110	110	138	Q_power station	0.	0.	0.
110	110	141	Q_power station	0.	0.	0.
110	110	142	Q_power station	0.	0.	0.
110	110	139	Q_power station	0.	0.	0.
110	110	138	Q_neve	0.	0.	0.
110	110	141	Q_neve	0.	0.	0.
110	110	142	Q_neve	0.	0.	0.
110	110	139	Q_neve	0.	0.	0.
110	110	138	Q_manutenzione	0.	0.	0.
110	110	141	Q_manutenzione	0.	0.	0.
110	110	142	Q_manutenzione	0.	0.	0.

Table 20: Element Forces - Area Shells, Part 1 of 3

Area	AreaElem	Joint	OutputCase	F11	F22	F12
				KN/m	KN/m	KN/m
110	110	139	Q_manutenzione	0.	0.	0.
110	110	138	EQ_X	0.83	-1.94	-1.05
110	110	141	EQ_X	0.16	-2.08	-1.08
110	110	142	EQ_X	-0.24	-4.05	-0.71
110	110	139	EQ_X	0.44	-3.91	-0.68
110	110	138	EQ_Y	0.79	9.89	-5.04
110	110	141	EQ_Y	-2.56	9.22	-7.58
110	110	142	EQ_Y	-2.54	9.33	-0.76
110	110	139	EQ_Y	0.81	10.	1.78
111	111	54	DEAD	0.	0.	0.
111	111	58	DEAD	0.	0.	0.
111	111	143	DEAD	0.	0.	0.
111	111	140	DEAD	0.	0.	0.
111	111	54	G1_power station	0.	0.	0.
111	111	58	G1_power station	0.	0.	0.
111	111	143	G1_power station	0.	0.	0.
111	111	140	G1_power station	0.	0.	0.
111	111	54	G2_power station	0.	0.	0.
111	111	58	G2_power station	0.	0.	0.
111	111	143	G2_power station	0.	0.	0.
111	111	140	G2_power station	0.	0.	0.
111	111	54	Q_power station	0.	0.	0.
111	111	58	Q_power station	0.	0.	0.
111	111	143	Q_power station	0.	0.	0.
111	111	140	Q_power station	0.	0.	0.
111	111	54	Q_neve	0.	0.	0.
111	111	58	Q_neve	0.	0.	0.
111	111	143	Q_neve	0.	0.	0.
111	111	140	Q_neve	0.	0.	0.
111	111	54	Q_manutenzione	0.	0.	0.
111	111	58	Q_manutenzione	0.	0.	0.
111	111	143	Q_manutenzione	0.	0.	0.
111	111	140	Q_manutenzione	0.	0.	0.
111	111	54	EQ_X	3.81	1.95	-6.13
111	111	58	EQ_X	-11.83	-1.18	-5.1
111	111	143	EQ_X	-11.68	-0.43	-3.49
111	111	140	EQ_X	3.96	2.69	-4.52
111	111	54	EQ_Y	3.6	-13.89	-3.42
111	111	58	EQ_Y	0.2	-14.57	-4.47
111	111	143	EQ_Y	3.09	-0.12	-6.29
111	111	140	EQ_Y	6.5	0.56	-5.24
112	112	140	DEAD	0.	0.	0.
112	112	143	DEAD	0.	0.	0.

Table 20: Element Forces - Area Shells, Part 1 of 3

Area	AreaElem	Joint	OutputCase	F11	F22	F12
				KN/m	KN/m	KN/m
112	112	144	DEAD	0.	0.	0.
112	112	141	DEAD	0.	0.	0.
112	112	140	G1_power station	0.	0.	0.
112	112	143	G1_power station	0.	0.	0.
112	112	144	G1_power station	0.	0.	0.
112	112	141	G1_power station	0.	0.	0.
112	112	140	G2_power station	0.	0.	0.
112	112	143	G2_power station	0.	0.	0.
112	112	144	G2_power station	0.	0.	0.
112	112	141	G2_power station	0.	0.	0.
112	112	140	Q_power station	0.	0.	0.
112	112	143	Q_power station	0.	0.	0.
112	112	144	Q_power station	0.	0.	0.
112	112	141	Q_power station	0.	0.	0.
112	112	140	Q_neve	0.	0.	0.
112	112	143	Q_neve	0.	0.	0.
112	112	144	Q_neve	0.	0.	0.
112	112	141	Q_neve	0.	0.	0.
112	112	140	Q_manutenzione	0.	0.	0.
112	112	143	Q_manutenzione	0.	0.	0.
112	112	144	Q_manutenzione	0.	0.	0.
112	112	141	Q_manutenzione	0.	0.	0.
112	112	140	EQ_X	-2.255E-02	1.9	-3.39
112	112	143	EQ_X	-3.49	1.21	-2.83
112	112	144	EQ_X	-3.89	-0.81	-0.73
112	112	141	EQ_X	-0.43	-0.12	-1.29
112	112	140	EQ_Y	5.73	0.41	-6.85
112	112	143	EQ_Y	9.51	1.17	-2.22
112	112	144	EQ_Y	9.63	1.75	-3.5
112	112	141	EQ_Y	5.85	1.	-8.12
113	113	141	DEAD	0.	0.	0.
113	113	144	DEAD	0.	0.	0.
113	113	30	DEAD	0.	0.	0.
113	113	142	DEAD	0.	0.	0.
113	113	141	G1_power station	0.	0.	0.
113	113	144	G1_power station	0.	0.	0.
113	113	30	G1_power station	0.	0.	0.
113	113	142	G1_power station	0.	0.	0.
113	113	141	G2_power station	0.	0.	0.
113	113	144	G2_power station	0.	0.	0.
113	113	30	G2_power station	0.	0.	0.
113	113	142	G2_power station	0.	0.	0.
113	113	141	Q_power station	0.	0.	0.

Table 20: Element Forces - Area Shells, Part 1 of 3

Area	AreaElem	Joint	OutputCase	F11	F22	F12
				KN/m	KN/m	KN/m
113	113	144	Q_power station	0.	0.	0.
113	113	30	Q_power station	0.	0.	0.
113	113	142	Q_power station	0.	0.	0.
113	113	141	Q_neve	0.	0.	0.
113	113	144	Q_neve	0.	0.	0.
113	113	30	Q_neve	0.	0.	0.
113	113	142	Q_neve	0.	0.	0.
113	113	141	Q_manutenzione	0.	0.	0.
113	113	144	Q_manutenzione	0.	0.	0.
113	113	30	Q_manutenzione	0.	0.	0.
113	113	142	Q_manutenzione	0.	0.	0.
113	113	141	EQ_X	0.59	8.400E-02	-0.46
113	113	144	EQ_X	-2.88	-0.61	-0.45
113	113	30	EQ_X	-3.44	-3.43	0.22
113	113	142	EQ_X	2.368E-02	-2.74	0.2
113	113	141	EQ_Y	-4.62	-1.1	-7.18
113	113	144	EQ_Y	24.68	4.76	-5.7
113	113	30	EQ_Y	32.22	42.43	-14.35
113	113	142	EQ_Y	2.91	36.57	-15.82
114	114	11	DEAD	0.	0.	0.
114	114	14	DEAD	0.	0.	0.
114	114	145	DEAD	0.	0.	0.
114	114	146	DEAD	0.	0.	0.
114	114	11	G1_power station	0.	0.	0.
114	114	14	G1_power station	0.	0.	0.
114	114	145	G1_power station	0.	0.	0.
114	114	146	G1_power station	0.	0.	0.
114	114	11	G2_power station	0.	0.	0.
114	114	14	G2_power station	0.	0.	0.
114	114	145	G2_power station	0.	0.	0.
114	114	146	G2_power station	0.	0.	0.
114	114	11	Q_power station	0.	0.	0.
114	114	14	Q_power station	0.	0.	0.
114	114	145	Q_power station	0.	0.	0.
114	114	146	Q_power station	0.	0.	0.
114	114	11	Q_neve	0.	0.	0.
114	114	14	Q_neve	0.	0.	0.
114	114	145	Q_neve	0.	0.	0.
114	114	146	Q_neve	0.	0.	0.
114	114	11	Q_manutenzione	0.	0.	0.
114	114	14	Q_manutenzione	0.	0.	0.
114	114	145	Q_manutenzione	0.	0.	0.
114	114	146	Q_manutenzione	0.	0.	0.

Table 20: Element Forces - Area Shells, Part 1 of 3

Area	AreaElem	Joint	OutputCase	F11	F22	F12
				KN/m	KN/m	KN/m
114	114	11	EQ_X	-13.32	-2.95	6.02
114	114	14	EQ_X	10.46	1.81	3.07
114	114	145	EQ_X	10.02	-0.4	0.79
114	114	146	EQ_X	-13.76	-5.16	3.74
114	114	11	EQ_Y	-1.	11.27	2.29
114	114	14	EQ_Y	4.61	12.39	4.62
114	114	145	EQ_Y	2.11	-0.11	5.77
114	114	146	EQ_Y	-3.5	-1.24	3.43
115	115	146	DEAD	0.	0.	0.
115	115	145	DEAD	0.	0.	0.
115	115	147	DEAD	0.	0.	0.
115	115	148	DEAD	0.	0.	0.
115	115	146	G1_power station	0.	0.	0.
115	115	145	G1_power station	0.	0.	0.
115	115	147	G1_power station	0.	0.	0.
115	115	148	G1_power station	0.	0.	0.
115	115	146	G2_power station	0.	0.	0.
115	115	145	G2_power station	0.	0.	0.
115	115	147	G2_power station	0.	0.	0.
115	115	148	G2_power station	0.	0.	0.
115	115	146	Q_power station	0.	0.	0.
115	115	145	Q_power station	0.	0.	0.
115	115	147	Q_power station	0.	0.	0.
115	115	148	Q_power station	0.	0.	0.
115	115	146	Q_neve	0.	0.	0.
115	115	145	Q_neve	0.	0.	0.
115	115	147	Q_neve	0.	0.	0.
115	115	148	Q_neve	0.	0.	0.
115	115	146	Q_manutenzione	0.	0.	0.
115	115	145	Q_manutenzione	0.	0.	0.
115	115	147	Q_manutenzione	0.	0.	0.
115	115	148	Q_manutenzione	0.	0.	0.
115	115	146	EQ_X	-2.91	-2.99	1.3
115	115	145	EQ_X	2.347E-02	-2.4	1.3
115	115	147	EQ_X	0.51	1.513E-02	0.17
115	115	148	EQ_X	-2.43	-0.57	0.17
115	115	146	EQ_Y	5.59	0.58	2.58
115	115	145	EQ_Y	2.58	-2.221E-02	2.29
115	115	147	EQ_Y	3.26	3.38	1.44
115	115	148	EQ_Y	6.27	3.98	1.73
116	116	148	DEAD	0.	0.	0.
116	116	147	DEAD	0.	0.	0.
116	116	149	DEAD	0.	0.	0.

Table 20: Element Forces - Area Shells, Part 1 of 3

Area	AreaElem	Joint	OutputCase	F11	F22	F12
				KN/m	KN/m	KN/m
116	116	150	DEAD	0.	0.	0.
116	116	148	G1_power station	0.	0.	0.
116	116	147	G1_power station	0.	0.	0.
116	116	149	G1_power station	0.	0.	0.
116	116	150	G1_power station	0.	0.	0.
116	116	148	G2_power station	0.	0.	0.
116	116	147	G2_power station	0.	0.	0.
116	116	149	G2_power station	0.	0.	0.
116	116	150	G2_power station	0.	0.	0.
116	116	148	Q_power station	0.	0.	0.
116	116	147	Q_power station	0.	0.	0.
116	116	149	Q_power station	0.	0.	0.
116	116	150	Q_power station	0.	0.	0.
116	116	148	Q_neve	0.	0.	0.
116	116	147	Q_neve	0.	0.	0.
116	116	149	Q_neve	0.	0.	0.
116	116	150	Q_neve	0.	0.	0.
116	116	148	Q_manutenzione	0.	0.	0.
116	116	147	Q_manutenzione	0.	0.	0.
116	116	149	Q_manutenzione	0.	0.	0.
116	116	150	Q_manutenzione	0.	0.	0.
116	116	148	EQ_X	-1.2	-0.33	-6.478E-02
116	116	147	EQ_X	-1.24	-0.33	-0.22
116	116	149	EQ_X	-1.21	-0.21	-0.28
116	116	150	EQ_X	-1.17	-0.21	-0.12
116	116	148	EQ_Y	9.27	4.58	0.8
116	116	147	EQ_Y	4.63	3.65	1.82
116	116	149	EQ_Y	4.5	3.01	1.58
116	116	150	EQ_Y	9.14	3.94	0.56
117	117	150	DEAD	0.	0.	0.
117	117	149	DEAD	0.	0.	0.
117	117	151	DEAD	0.	0.	0.
117	117	152	DEAD	0.	0.	0.
117	117	150	G1_power station	0.	0.	0.
117	117	149	G1_power station	0.	0.	0.
117	117	151	G1_power station	0.	0.	0.
117	117	152	G1_power station	0.	0.	0.
117	117	150	G2_power station	0.	0.	0.
117	117	149	G2_power station	0.	0.	0.
117	117	151	G2_power station	0.	0.	0.
117	117	152	G2_power station	0.	0.	0.
117	117	150	Q_power station	0.	0.	0.
117	117	149	Q_power station	0.	0.	0.

Table 20: Element Forces - Area Shells, Part 1 of 3

Area	AreaElem	Joint	OutputCase	F11	F22	F12
				KN/m	KN/m	KN/m
117	117	151	Q_power station	0.	0.	0.
117	117	152	Q_power station	0.	0.	0.
117	117	150	Q_neve	0.	0.	0.
117	117	149	Q_neve	0.	0.	0.
117	117	151	Q_neve	0.	0.	0.
117	117	152	Q_neve	0.	0.	0.
117	117	150	Q_manutenzione	0.	0.	0.
117	117	149	Q_manutenzione	0.	0.	0.
117	117	151	Q_manutenzione	0.	0.	0.
117	117	152	Q_manutenzione	0.	0.	0.
117	117	150	EQ_X	-1.7	-0.31	-0.22
117	117	149	EQ_X	-1.41	-0.25	-0.27
117	117	151	EQ_X	-1.38	-8.058E-02	-0.34
117	117	152	EQ_X	-1.67	-0.14	-0.29
117	117	150	EQ_Y	11.25	4.36	0.84
117	117	149	EQ_Y	6.41	3.39	1.24
117	117	151	EQ_Y	6.41	3.43	1.53
117	117	152	EQ_Y	11.26	4.4	1.13
118	118	152	DEAD	0.	0.	0.
118	118	151	DEAD	0.	0.	0.
118	118	153	DEAD	0.	0.	0.
118	118	154	DEAD	0.	0.	0.
118	118	152	G1_power station	0.	0.	0.
118	118	151	G1_power station	0.	0.	0.
118	118	153	G1_power station	0.	0.	0.
118	118	154	G1_power station	0.	0.	0.
118	118	152	G2_power station	0.	0.	0.
118	118	151	G2_power station	0.	0.	0.
118	118	153	G2_power station	0.	0.	0.
118	118	154	G2_power station	0.	0.	0.
118	118	152	Q_power station	0.	0.	0.
118	118	151	Q_power station	0.	0.	0.
118	118	153	Q_power station	0.	0.	0.
118	118	154	Q_power station	0.	0.	0.
118	118	152	Q_neve	0.	0.	0.
118	118	151	Q_neve	0.	0.	0.
118	118	153	Q_neve	0.	0.	0.
118	118	154	Q_neve	0.	0.	0.
118	118	152	Q_manutenzione	0.	0.	0.
118	118	151	Q_manutenzione	0.	0.	0.
118	118	153	Q_manutenzione	0.	0.	0.
118	118	154	Q_manutenzione	0.	0.	0.
118	118	152	EQ_X	-2.59	-0.32	-0.35

Table 20: Element Forces - Area Shells, Part 1 of 3

Area	AreaElem	Joint	OutputCase	F11	F22	F12
				KN/m	KN/m	KN/m
118	118	151	EQ_X	-1.35	-7.494E-02	-0.34
118	118	153	EQ_X	-1.34	-4.202E-02	-0.4
118	118	154	EQ_X	-2.58	-0.29	-0.42
118	118	152	EQ_Y	14.63	5.07	1.5
118	118	151	EQ_Y	7.17	3.58	1.58
118	118	153	EQ_Y	7.13	3.4	1.84
118	118	154	EQ_Y	14.6	4.9	1.77
119	119	154	DEAD	0.	0.	0.
119	119	153	DEAD	0.	0.	0.
119	119	155	DEAD	0.	0.	0.
119	119	156	DEAD	0.	0.	0.
119	119	154	G1_power station	0.	0.	0.
119	119	153	G1_power station	0.	0.	0.
119	119	155	G1_power station	0.	0.	0.
119	119	156	G1_power station	0.	0.	0.
119	119	154	G2_power station	0.	0.	0.
119	119	153	G2_power station	0.	0.	0.
119	119	155	G2_power station	0.	0.	0.
119	119	156	G2_power station	0.	0.	0.
119	119	154	Q_power station	0.	0.	0.
119	119	153	Q_power station	0.	0.	0.
119	119	155	Q_power station	0.	0.	0.
119	119	156	Q_power station	0.	0.	0.
119	119	154	Q_neve	0.	0.	0.
119	119	153	Q_neve	0.	0.	0.
119	119	155	Q_neve	0.	0.	0.
119	119	156	Q_neve	0.	0.	0.
119	119	154	Q_manutenzione	0.	0.	0.
119	119	153	Q_manutenzione	0.	0.	0.
119	119	155	Q_manutenzione	0.	0.	0.
119	119	156	Q_manutenzione	0.	0.	0.
119	119	154	EQ_X	-4.2	-0.61	-0.53
119	119	153	EQ_X	-0.79	6.858E-02	-0.52
119	119	155	EQ_X	-0.78	9.487E-02	-0.72
119	119	156	EQ_X	-4.2	-0.59	-0.73
119	119	154	EQ_Y	21.85	6.35	2.22
119	119	153	EQ_Y	5.35	3.05	2.73
119	119	155	EQ_Y	5.67	4.64	4.48
119	119	156	EQ_Y	22.17	7.94	3.97
120	120	156	DEAD	0.	0.	0.
120	120	155	DEAD	0.	0.	0.
120	120	24	DEAD	0.	0.	0.
120	120	31	DEAD	0.	0.	0.

Table 20: Element Forces - Area Shells, Part 1 of 3

Area	AreaElem	Joint	OutputCase	F11	F22	F12
				KN/m	KN/m	KN/m
120	120	156	G1_power station	0.	0.	0.
120	120	155	G1_power station	0.	0.	0.
120	120	24	G1_power station	0.	0.	0.
120	120	31	G1_power station	0.	0.	0.
120	120	156	G2_power station	0.	0.	0.
120	120	155	G2_power station	0.	0.	0.
120	120	24	G2_power station	0.	0.	0.
120	120	31	G2_power station	0.	0.	0.
120	120	156	Q_power station	0.	0.	0.
120	120	155	Q_power station	0.	0.	0.
120	120	24	Q_power station	0.	0.	0.
120	120	31	Q_power station	0.	0.	0.
120	120	156	Q_neve	0.	0.	0.
120	120	155	Q_neve	0.	0.	0.
120	120	24	Q_neve	0.	0.	0.
120	120	31	Q_neve	0.	0.	0.
120	120	156	Q_manutenzione	0.	0.	0.
120	120	155	Q_manutenzione	0.	0.	0.
120	120	24	Q_manutenzione	0.	0.	0.
120	120	31	Q_manutenzione	0.	0.	0.
120	120	156	EQ_X	-6.85	-1.12	-1.01
120	120	155	EQ_X	0.7	0.39	-0.45
120	120	24	EQ_X	1.03	2.03	-7.450E-02
120	120	31	EQ_X	-6.53	0.52	-0.63
120	120	156	EQ_Y	39.01	11.31	7.27
120	120	155	EQ_Y	-3.31	2.85	3.63
120	120	24	EQ_Y	-4.95	-5.36	2.28
120	120	31	EQ_Y	37.37	3.11	5.91
121	121	19	DEAD	0.	0.	0.
121	121	22	DEAD	0.	0.	0.
121	121	157	DEAD	0.	0.	0.
121	121	158	DEAD	0.	0.	0.
121	121	19	G1_power station	0.	0.	0.
121	121	22	G1_power station	0.	0.	0.
121	121	157	G1_power station	0.	0.	0.
121	121	158	G1_power station	0.	0.	0.
121	121	19	G2_power station	0.	0.	0.
121	121	22	G2_power station	0.	0.	0.
121	121	157	G2_power station	0.	0.	0.
121	121	158	G2_power station	0.	0.	0.
121	121	19	Q_power station	0.	0.	0.
121	121	22	Q_power station	0.	0.	0.
121	121	157	Q_power station	0.	0.	0.

Table 20: Element Forces - Area Shells, Part 1 of 3

Area	AreaElem	Joint	OutputCase	F11	F22	F12
				KN/m	KN/m	KN/m
121	121	158	Q_power station	0.	0.	0.
121	121	19	Q_neve	0.	0.	0.
121	121	22	Q_neve	0.	0.	0.
121	121	157	Q_neve	0.	0.	0.
121	121	158	Q_neve	0.	0.	0.
121	121	19	Q_manutenzione	0.	0.	0.
121	121	22	Q_manutenzione	0.	0.	0.
121	121	157	Q_manutenzione	0.	0.	0.
121	121	158	Q_manutenzione	0.	0.	0.
121	121	19	EQ_X	5.	0.94	-4.2
121	121	22	EQ_X	-11.55	-2.37	-1.43
121	121	157	EQ_X	-11.08	7.343E-03	0.22
121	121	158	EQ_X	5.47	3.32	-2.55
121	121	19	EQ_Y	4.92	-8.88	-1.09
121	121	22	EQ_Y	-5.74	-11.01	-3.84
121	121	157	EQ_Y	-3.04	2.45	-4.44
121	121	158	EQ_Y	7.61	4.58	-1.68
122	122	158	DEAD	0.	0.	0.
122	122	157	DEAD	0.	0.	0.
122	122	159	DEAD	0.	0.	0.
122	122	160	DEAD	0.	0.	0.
122	122	158	G1_power station	0.	0.	0.
122	122	157	G1_power station	0.	0.	0.
122	122	159	G1_power station	0.	0.	0.
122	122	160	G1_power station	0.	0.	0.
122	122	158	G2_power station	0.	0.	0.
122	122	157	G2_power station	0.	0.	0.
122	122	159	G2_power station	0.	0.	0.
122	122	160	G2_power station	0.	0.	0.
122	122	158	Q_power station	0.	0.	0.
122	122	157	Q_power station	0.	0.	0.
122	122	159	Q_power station	0.	0.	0.
122	122	160	Q_power station	0.	0.	0.
122	122	158	Q_neve	0.	0.	0.
122	122	157	Q_neve	0.	0.	0.
122	122	159	Q_neve	0.	0.	0.
122	122	160	Q_neve	0.	0.	0.
122	122	158	Q_manutenzione	0.	0.	0.
122	122	157	Q_manutenzione	0.	0.	0.
122	122	159	Q_manutenzione	0.	0.	0.
122	122	160	Q_manutenzione	0.	0.	0.
122	122	158	EQ_X	-2.85	1.65	-1.07
122	122	157	EQ_X	-1.5	1.92	-0.59

Table 20: Element Forces - Area Shells, Part 1 of 3

Area	AreaElem	Joint	OutputCase	F11	F22	F12
				KN/m	KN/m	KN/m
122	122	159	EQ_X	-2.06	-0.85	-0.21
122	122	160	EQ_X	-3.41	-1.12	-0.68
122	122	158	EQ_Y	7.3	4.52	0.13
122	122	157	EQ_Y	-8.96	1.27	-0.34
122	122	159	EQ_Y	-9.43	-1.1	2.41
122	122	160	EQ_Y	6.83	2.15	2.88
123	123	160	DEAD	0.	0.	0.
123	123	159	DEAD	0.	0.	0.
123	123	23	DEAD	0.	0.	0.
123	123	32	DEAD	0.	0.	0.
123	123	160	G1_power station	0.	0.	0.
123	123	159	G1_power station	0.	0.	0.
123	123	23	G1_power station	0.	0.	0.
123	123	32	G1_power station	0.	0.	0.
123	123	160	G2_power station	0.	0.	0.
123	123	159	G2_power station	0.	0.	0.
123	123	23	G2_power station	0.	0.	0.
123	123	32	G2_power station	0.	0.	0.
123	123	160	Q_power station	0.	0.	0.
123	123	159	Q_power station	0.	0.	0.
123	123	23	Q_power station	0.	0.	0.
123	123	32	Q_power station	0.	0.	0.
123	123	160	Q_neve	0.	0.	0.
123	123	159	Q_neve	0.	0.	0.
123	123	23	Q_neve	0.	0.	0.
123	123	32	Q_neve	0.	0.	0.
123	123	160	Q_manutenzione	0.	0.	0.
123	123	159	Q_manutenzione	0.	0.	0.
123	123	23	Q_manutenzione	0.	0.	0.
123	123	32	Q_manutenzione	0.	0.	0.
123	123	160	EQ_X	-7.14	-1.86	-1.19
123	123	159	EQ_X	2.6	8.451E-02	-0.14
123	123	23	EQ_X	3.05	2.35	0.37
123	123	32	EQ_X	-6.69	0.4	-0.68
123	123	160	EQ_Y	20.91	4.96	6.37
123	123	159	EQ_Y	-23.69	-3.96	0.94
123	123	23	EQ_Y	-26.16	-16.3	-2.74
123	123	32	EQ_Y	18.44	-7.38	2.69
124	124	22	DEAD	0.	0.	0.
124	124	74	DEAD	0.	0.	0.
124	124	161	DEAD	0.	0.	0.
124	124	157	DEAD	0.	0.	0.
124	124	22	G1_power station	0.	0.	0.

Table 20: Element Forces - Area Shells, Part 1 of 3

Area	AreaElem	Joint	OutputCase	F11	F22	F12
				KN/m	KN/m	KN/m
124	124	74	G1_power station	0.	0.	0.
124	124	161	G1_power station	0.	0.	0.
124	124	157	G1_power station	0.	0.	0.
124	124	22	G2_power station	0.	0.	0.
124	124	74	G2_power station	0.	0.	0.
124	124	161	G2_power station	0.	0.	0.
124	124	157	G2_power station	0.	0.	0.
124	124	22	Q_power station	0.	0.	0.
124	124	74	Q_power station	0.	0.	0.
124	124	161	Q_power station	0.	0.	0.
124	124	157	Q_power station	0.	0.	0.
124	124	22	Q_neve	0.	0.	0.
124	124	74	Q_neve	0.	0.	0.
124	124	161	Q_neve	0.	0.	0.
124	124	157	Q_neve	0.	0.	0.
124	124	22	Q_manutenzione	0.	0.	0.
124	124	74	Q_manutenzione	0.	0.	0.
124	124	161	Q_manutenzione	0.	0.	0.
124	124	157	Q_manutenzione	0.	0.	0.
124	124	22	EQ_X	-11.43	-1.73	4.99
124	124	74	EQ_X	4.58	1.47	6.15
124	124	161	EQ_X	4.66	1.87	4.5
124	124	157	EQ_X	-11.35	-1.33	3.33
124	124	22	EQ_Y	-0.53	15.	-5.11
124	124	74	EQ_Y	-3.28	14.46	-3.95
124	124	161	EQ_Y	-5.88	1.43	-5.83
124	124	157	EQ_Y	-3.14	1.98	-6.99
125	125	157	DEAD	0.	0.	0.
125	125	161	DEAD	0.	0.	0.
125	125	162	DEAD	0.	0.	0.
125	125	159	DEAD	0.	0.	0.
125	125	157	G1_power station	0.	0.	0.
125	125	161	G1_power station	0.	0.	0.
125	125	162	G1_power station	0.	0.	0.
125	125	159	G1_power station	0.	0.	0.
125	125	157	G2_power station	0.	0.	0.
125	125	161	G2_power station	0.	0.	0.
125	125	162	G2_power station	0.	0.	0.
125	125	159	G2_power station	0.	0.	0.
125	125	157	Q_power station	0.	0.	0.
125	125	161	Q_power station	0.	0.	0.
125	125	162	Q_power station	0.	0.	0.
125	125	159	Q_power station	0.	0.	0.

Table 20: Element Forces - Area Shells, Part 1 of 3

Area	AreaElem	Joint	OutputCase	F11	F22	F12
				KN/m	KN/m	KN/m
125	125	157	Q_neve	0.	0.	0.
125	125	161	Q_neve	0.	0.	0.
125	125	162	Q_neve	0.	0.	0.
125	125	159	Q_neve	0.	0.	0.
125	125	157	Q_manutenzione	0.	0.	0.
125	125	161	Q_manutenzione	0.	0.	0.
125	125	162	Q_manutenzione	0.	0.	0.
125	125	159	Q_manutenzione	0.	0.	0.
125	125	157	EQ_X	-1.77	0.58	2.51
125	125	161	EQ_X	1.17	1.17	3.8
125	125	162	EQ_X	0.73	-1.05	2.47
125	125	159	EQ_X	-2.22	-1.64	1.18
125	125	157	EQ_Y	-9.05	0.79	-2.9
125	125	161	EQ_Y	-5.09	1.58	-7.14
125	125	162	EQ_Y	-4.95	2.33	-7.82
125	125	159	EQ_Y	-8.9	1.54	-3.58
126	126	159	DEAD	0.	0.	0.
126	126	162	DEAD	0.	0.	0.
126	126	163	DEAD	0.	0.	0.
126	126	23	DEAD	0.	0.	0.
126	126	159	G1_power station	0.	0.	0.
126	126	162	G1_power station	0.	0.	0.
126	126	163	G1_power station	0.	0.	0.
126	126	23	G1_power station	0.	0.	0.
126	126	159	G2_power station	0.	0.	0.
126	126	162	G2_power station	0.	0.	0.
126	126	163	G2_power station	0.	0.	0.
126	126	23	G2_power station	0.	0.	0.
126	126	159	Q_power station	0.	0.	0.
126	126	162	Q_power station	0.	0.	0.
126	126	163	Q_power station	0.	0.	0.
126	126	23	Q_power station	0.	0.	0.
126	126	159	Q_neve	0.	0.	0.
126	126	162	Q_neve	0.	0.	0.
126	126	163	Q_neve	0.	0.	0.
126	126	23	Q_neve	0.	0.	0.
126	126	159	Q_manutenzione	0.	0.	0.
126	126	162	Q_manutenzione	0.	0.	0.
126	126	163	Q_manutenzione	0.	0.	0.
126	126	23	Q_manutenzione	0.	0.	0.
126	126	159	EQ_X	2.44	-0.7	1.24
126	126	162	EQ_X	-0.4	-1.27	1.69
126	126	163	EQ_X	0.24	1.89	2.56

Table 20: Element Forces - Area Shells, Part 1 of 3

Area	AreaElem	Joint	OutputCase	F11	F22	F12
				KN/m	KN/m	KN/m
126	126	23	EQ_X	3.08	2.46	2.12
126	126	159	EQ_Y	-23.16	-1.31	-5.05
126	126	162	EQ_Y	4.01	4.12	-6.56
126	126	163	EQ_Y	-1.99	-25.89	-14.16
126	126	23	EQ_Y	-29.16	-31.33	-12.65
127	127	74	DEAD	0.	0.	0.
127	127	76	DEAD	0.	0.	0.
127	127	164	DEAD	0.	0.	0.
127	127	161	DEAD	0.	0.	0.
127	127	74	G1_power station	0.	0.	0.
127	127	76	G1_power station	0.	0.	0.
127	127	164	G1_power station	0.	0.	0.
127	127	161	G1_power station	0.	0.	0.
127	127	74	G2_power station	0.	0.	0.
127	127	76	G2_power station	0.	0.	0.
127	127	164	G2_power station	0.	0.	0.
127	127	161	G2_power station	0.	0.	0.
127	127	74	Q_power station	0.	0.	0.
127	127	76	Q_power station	0.	0.	0.
127	127	164	Q_power station	0.	0.	0.
127	127	161	Q_power station	0.	0.	0.
127	127	74	Q_neve	0.	0.	0.
127	127	76	Q_neve	0.	0.	0.
127	127	164	Q_neve	0.	0.	0.
127	127	161	Q_neve	0.	0.	0.
127	127	74	Q_manutenzione	0.	0.	0.
127	127	76	Q_manutenzione	0.	0.	0.
127	127	164	Q_manutenzione	0.	0.	0.
127	127	161	Q_manutenzione	0.	0.	0.
127	127	74	EQ_X	4.52	1.19	2.54
127	127	76	EQ_X	3.78	1.04	0.79
127	127	164	EQ_X	3.27	-1.5	1.91
127	127	161	EQ_X	4.01	-1.35	3.66
127	127	74	EQ_Y	-5.52	3.24	-4.02
127	127	76	EQ_Y	-1.43	4.06	-4.55
127	127	164	EQ_Y	-1.4	4.18	-7.42
127	127	161	EQ_Y	-5.5	3.36	-6.9
128	128	161	DEAD	0.	0.	0.
128	128	164	DEAD	0.	0.	0.
128	128	165	DEAD	0.	0.	0.
128	128	162	DEAD	0.	0.	0.
128	128	161	G1_power station	0.	0.	0.
128	128	164	G1_power station	0.	0.	0.

Table 20: Element Forces - Area Shells, Part 1 of 3

Area	AreaElem	Joint	OutputCase	F11	F22	F12
				KN/m	KN/m	KN/m
128	128	165	G1_power station	0.	0.	0.
128	128	162	G1_power station	0.	0.	0.
128	128	161	G2_power station	0.	0.	0.
128	128	164	G2_power station	0.	0.	0.
128	128	165	G2_power station	0.	0.	0.
128	128	162	G2_power station	0.	0.	0.
128	128	161	Q_power station	0.	0.	0.
128	128	164	Q_power station	0.	0.	0.
128	128	165	Q_power station	0.	0.	0.
128	128	162	Q_power station	0.	0.	0.
128	128	161	Q_neve	0.	0.	0.
128	128	164	Q_neve	0.	0.	0.
128	128	165	Q_neve	0.	0.	0.
128	128	162	Q_neve	0.	0.	0.
128	128	161	Q_manutenzione	0.	0.	0.
128	128	164	Q_manutenzione	0.	0.	0.
128	128	165	Q_manutenzione	0.	0.	0.
128	128	162	Q_manutenzione	0.	0.	0.
128	128	161	EQ_X	0.53	-2.05	2.96
128	128	164	EQ_X	2.05	-1.74	2.53
128	128	165	EQ_X	2.26	-0.72	2.45
128	128	162	EQ_X	0.73	-1.02	2.88
128	128	161	EQ_Y	-4.71	3.52	-8.21
128	128	164	EQ_Y	0.64	4.59	-7.74
128	128	165	EQ_Y	-1.22	-4.71	-7.83
128	128	162	EQ_Y	-6.57	-5.78	-8.29
129	129	162	DEAD	0.	0.	0.
129	129	165	DEAD	0.	0.	0.
129	129	166	DEAD	0.	0.	0.
129	129	163	DEAD	0.	0.	0.
129	129	162	G1_power station	0.	0.	0.
129	129	165	G1_power station	0.	0.	0.
129	129	166	G1_power station	0.	0.	0.
129	129	163	G1_power station	0.	0.	0.
129	129	162	G2_power station	0.	0.	0.
129	129	165	G2_power station	0.	0.	0.
129	129	166	G2_power station	0.	0.	0.
129	129	163	G2_power station	0.	0.	0.
129	129	162	Q_power station	0.	0.	0.
129	129	165	Q_power station	0.	0.	0.
129	129	166	Q_power station	0.	0.	0.
129	129	163	Q_power station	0.	0.	0.
129	129	162	Q_neve	0.	0.	0.

Table 20: Element Forces - Area Shells, Part 1 of 3

Area	AreaElem	Joint	OutputCase	F11	F22	F12
				KN/m	KN/m	KN/m
129	129	165	Q_neve	0.	0.	0.
129	129	166	Q_neve	0.	0.	0.
129	129	163	Q_neve	0.	0.	0.
129	129	162	Q_manutenzione	0.	0.	0.
129	129	165	Q_manutenzione	0.	0.	0.
129	129	166	Q_manutenzione	0.	0.	0.
129	129	163	Q_manutenzione	0.	0.	0.
129	129	162	EQ_X	-0.39	-1.25	2.1
129	129	165	EQ_X	1.07	-0.95	1.56
129	129	166	EQ_X	0.58	-3.4	0.26
129	129	163	EQ_X	-0.88	-3.7	0.79
129	129	162	EQ_Y	2.39	-3.99	-7.03
129	129	165	EQ_Y	-0.93	-4.65	-4.89
129	129	166	EQ_Y	-0.53	-2.67	1.55
129	129	163	EQ_Y	2.79	-2.01	-0.59
130	130	76	DEAD	0.	0.	0.
130	130	78	DEAD	0.	0.	0.
130	130	167	DEAD	0.	0.	0.
130	130	164	DEAD	0.	0.	0.
130	130	76	G1_power station	0.	0.	0.
130	130	78	G1_power station	0.	0.	0.
130	130	167	G1_power station	0.	0.	0.
130	130	164	G1_power station	0.	0.	0.
130	130	76	G2_power station	0.	0.	0.
130	130	78	G2_power station	0.	0.	0.
130	130	167	G2_power station	0.	0.	0.
130	130	164	G2_power station	0.	0.	0.
130	130	76	Q_power station	0.	0.	0.
130	130	78	Q_power station	0.	0.	0.
130	130	167	Q_power station	0.	0.	0.
130	130	164	Q_power station	0.	0.	0.
130	130	76	Q_neve	0.	0.	0.
130	130	78	Q_neve	0.	0.	0.
130	130	167	Q_neve	0.	0.	0.
130	130	164	Q_neve	0.	0.	0.
130	130	76	Q_manutenzione	0.	0.	0.
130	130	78	Q_manutenzione	0.	0.	0.
130	130	167	Q_manutenzione	0.	0.	0.
130	130	164	Q_manutenzione	0.	0.	0.
130	130	76	EQ_X	3.77	1.	0.65
130	130	78	EQ_X	3.37	0.92	0.17
130	130	167	EQ_X	3.09	-0.51	0.13
130	130	164	EQ_X	3.48	-0.43	0.61

Table 20: Element Forces - Area Shells, Part 1 of 3

Area	AreaElem	Joint	OutputCase	F11	F22	F12
				KN/m	KN/m	KN/m
130	130	76	EQ_Y	-2.3	-0.29	-6.57
130	130	78	EQ_Y	2.33	0.63	-6.48
130	130	167	EQ_Y	2.59	1.94	-6.57
130	130	164	EQ_Y	-2.04	1.02	-6.66
131	131	164	DEAD	0.	0.	0.
131	131	167	DEAD	0.	0.	0.
131	131	168	DEAD	0.	0.	0.
131	131	165	DEAD	0.	0.	0.
131	131	164	G1_power station	0.	0.	0.
131	131	167	G1_power station	0.	0.	0.
131	131	168	G1_power station	0.	0.	0.
131	131	165	G1_power station	0.	0.	0.
131	131	164	G2_power station	0.	0.	0.
131	131	167	G2_power station	0.	0.	0.
131	131	168	G2_power station	0.	0.	0.
131	131	165	G2_power station	0.	0.	0.
131	131	164	Q_power station	0.	0.	0.
131	131	167	Q_power station	0.	0.	0.
131	131	168	Q_power station	0.	0.	0.
131	131	165	Q_power station	0.	0.	0.
131	131	164	Q_neve	0.	0.	0.
131	131	167	Q_neve	0.	0.	0.
131	131	168	Q_neve	0.	0.	0.
131	131	165	Q_neve	0.	0.	0.
131	131	164	Q_manutenzione	0.	0.	0.
131	131	167	Q_manutenzione	0.	0.	0.
131	131	168	Q_manutenzione	0.	0.	0.
131	131	165	Q_manutenzione	0.	0.	0.
131	131	164	EQ_X	2.27	-0.67	1.23
131	131	167	EQ_X	2.41	-0.64	-0.48
131	131	168	EQ_X	2.02	-2.6	-0.64
131	131	165	EQ_X	1.88	-2.63	1.07
131	131	164	EQ_Y	1.033E-02	1.43	-6.98
131	131	167	EQ_Y	-0.14	1.39	-7.18
131	131	168	EQ_Y	8.391E-02	2.52	-4.42
131	131	165	EQ_Y	0.24	2.55	-4.22
132	132	165	DEAD	0.	0.	0.
132	132	168	DEAD	0.	0.	0.
132	132	169	DEAD	0.	0.	0.
132	132	166	DEAD	0.	0.	0.
132	132	165	G1_power station	0.	0.	0.
132	132	168	G1_power station	0.	0.	0.
132	132	169	G1_power station	0.	0.	0.

Table 20: Element Forces - Area Shells, Part 1 of 3

Area	AreaElem	Joint	OutputCase	F11	F22	F12
				KN/m	KN/m	KN/m
132	132	166	G1_power station	0.	0.	0.
132	132	165	G2_power station	0.	0.	0.
132	132	168	G2_power station	0.	0.	0.
132	132	169	G2_power station	0.	0.	0.
132	132	166	G2_power station	0.	0.	0.
132	132	165	Q_power station	0.	0.	0.
132	132	168	Q_power station	0.	0.	0.
132	132	169	Q_power station	0.	0.	0.
132	132	166	Q_power station	0.	0.	0.
132	132	165	Q_neve	0.	0.	0.
132	132	168	Q_neve	0.	0.	0.
132	132	169	Q_neve	0.	0.	0.
132	132	166	Q_neve	0.	0.	0.
132	132	165	Q_manutenzione	0.	0.	0.
132	132	168	Q_manutenzione	0.	0.	0.
132	132	169	Q_manutenzione	0.	0.	0.
132	132	166	Q_manutenzione	0.	0.	0.
132	132	165	EQ_X	0.69	-2.86	0.19
132	132	168	EQ_X	0.64	-2.87	-0.15
132	132	169	EQ_X	0.23	-4.93	5.050E-02
132	132	166	EQ_X	0.28	-4.93	0.39
132	132	165	EQ_Y	0.52	2.61	-1.28
132	132	168	EQ_Y	-0.71	2.36	-1.24
132	132	169	EQ_Y	-0.48	3.51	-3.99
132	132	166	EQ_Y	0.75	3.76	-4.04
133	133	78	DEAD	0.	0.	0.
133	133	80	DEAD	0.	0.	0.
133	133	170	DEAD	0.	0.	0.
133	133	167	DEAD	0.	0.	0.
133	133	78	G1_power station	0.	0.	0.
133	133	80	G1_power station	0.	0.	0.
133	133	170	G1_power station	0.	0.	0.
133	133	167	G1_power station	0.	0.	0.
133	133	78	G2_power station	0.	0.	0.
133	133	80	G2_power station	0.	0.	0.
133	133	170	G2_power station	0.	0.	0.
133	133	167	G2_power station	0.	0.	0.
133	133	78	Q_power station	0.	0.	0.
133	133	80	Q_power station	0.	0.	0.
133	133	170	Q_power station	0.	0.	0.
133	133	167	Q_power station	0.	0.	0.
133	133	78	Q_neve	0.	0.	0.
133	133	80	Q_neve	0.	0.	0.

Table 20: Element Forces - Area Shells, Part 1 of 3

Area	AreaElem	Joint	OutputCase	F11	F22	F12
				KN/m	KN/m	KN/m
133	133	170	Q_neve	0.	0.	0.
133	133	167	Q_neve	0.	0.	0.
133	133	78	Q_manutenzione	0.	0.	0.
133	133	80	Q_manutenzione	0.	0.	0.
133	133	170	Q_manutenzione	0.	0.	0.
133	133	167	Q_manutenzione	0.	0.	0.
133	133	78	EQ_X	3.49	1.49	-0.28
133	133	80	EQ_X	3.73	1.54	-2.39
133	133	170	EQ_X	3.21	-1.03	-3.04
133	133	167	EQ_X	2.97	-1.07	-0.93
133	133	78	EQ_Y	1.47	-3.66	-4.33
133	133	80	EQ_Y	5.86	-2.78	-3.64
133	133	170	EQ_Y	6.2	-1.06	-6.76
133	133	167	EQ_Y	1.81	-1.94	-7.45
134	134	167	DEAD	0.	0.	0.
134	134	170	DEAD	0.	0.	0.
134	134	171	DEAD	0.	0.	0.
134	134	168	DEAD	0.	0.	0.
134	134	167	G1_power station	0.	0.	0.
134	134	170	G1_power station	0.	0.	0.
134	134	171	G1_power station	0.	0.	0.
134	134	168	G1_power station	0.	0.	0.
134	134	167	G2_power station	0.	0.	0.
134	134	170	G2_power station	0.	0.	0.
134	134	171	G2_power station	0.	0.	0.
134	134	168	G2_power station	0.	0.	0.
134	134	167	Q_power station	0.	0.	0.
134	134	170	Q_power station	0.	0.	0.
134	134	171	Q_power station	0.	0.	0.
134	134	168	Q_power station	0.	0.	0.
134	134	167	Q_neve	0.	0.	0.
134	134	170	Q_neve	0.	0.	0.
134	134	171	Q_neve	0.	0.	0.
134	134	168	Q_neve	0.	0.	0.
134	134	167	Q_manutenzione	0.	0.	0.
134	134	170	Q_manutenzione	0.	0.	0.
134	134	171	Q_manutenzione	0.	0.	0.
134	134	168	Q_manutenzione	0.	0.	0.
134	134	167	EQ_X	2.3	-1.21	-1.54
134	134	170	EQ_X	-0.77	-1.82	-1.91
134	134	171	EQ_X	-0.87	-2.28	-1.91
134	134	168	EQ_X	2.21	-1.67	-1.54
134	134	167	EQ_Y	-0.92	-2.48	-8.06

Table 20: Element Forces - Area Shells, Part 1 of 3

Area	AreaElem	Joint	OutputCase	F11	F22	F12
				KN/m	KN/m	KN/m
134	134	170	EQ_Y	5.45	-1.21	-8.38
134	134	171	EQ_Y	7.97	11.36	-8.57
134	134	168	EQ_Y	1.6	10.09	-8.25
135	135	168	DEAD	0.	0.	0.
135	135	171	DEAD	0.	0.	0.
135	135	172	DEAD	0.	0.	0.
135	135	169	DEAD	0.	0.	0.
135	135	168	G1_power station	0.	0.	0.
135	135	171	G1_power station	0.	0.	0.
135	135	172	G1_power station	0.	0.	0.
135	135	169	G1_power station	0.	0.	0.
135	135	168	G2_power station	0.	0.	0.
135	135	171	G2_power station	0.	0.	0.
135	135	172	G2_power station	0.	0.	0.
135	135	169	G2_power station	0.	0.	0.
135	135	168	Q_power station	0.	0.	0.
135	135	171	Q_power station	0.	0.	0.
135	135	172	Q_power station	0.	0.	0.
135	135	169	Q_power station	0.	0.	0.
135	135	168	Q_neve	0.	0.	0.
135	135	171	Q_neve	0.	0.	0.
135	135	172	Q_neve	0.	0.	0.
135	135	169	Q_neve	0.	0.	0.
135	135	168	Q_manutenzione	0.	0.	0.
135	135	171	Q_manutenzione	0.	0.	0.
135	135	172	Q_manutenzione	0.	0.	0.
135	135	169	Q_manutenzione	0.	0.	0.
135	135	168	EQ_X	0.83	-1.95	-1.04
135	135	171	EQ_X	0.16	-2.08	-1.07
135	135	172	EQ_X	-0.23	-4.05	-0.71
135	135	169	EQ_X	0.44	-3.92	-0.68
135	135	168	EQ_Y	0.8	9.93	-5.06
135	135	171	EQ_Y	-2.58	9.25	-7.63
135	135	172	EQ_Y	-2.56	9.35	-0.76
135	135	169	EQ_Y	0.82	10.02	1.8
136	136	80	DEAD	0.	0.	0.
136	136	9	DEAD	0.	0.	0.
136	136	173	DEAD	0.	0.	0.
136	136	170	DEAD	0.	0.	0.
136	136	80	G1_power station	0.	0.	0.
136	136	9	G1_power station	0.	0.	0.
136	136	173	G1_power station	0.	0.	0.
136	136	170	G1_power station	0.	0.	0.

Table 20: Element Forces - Area Shells, Part 1 of 3

Area	AreaElem	Joint	OutputCase	F11	F22	F12
				KN/m	KN/m	KN/m
136	136	80	G2_power station	0.	0.	0.
136	136	9	G2_power station	0.	0.	0.
136	136	173	G2_power station	0.	0.	0.
136	136	170	G2_power station	0.	0.	0.
136	136	80	Q_power station	0.	0.	0.
136	136	9	Q_power station	0.	0.	0.
136	136	173	Q_power station	0.	0.	0.
136	136	170	Q_power station	0.	0.	0.
136	136	80	Q_neve	0.	0.	0.
136	136	9	Q_neve	0.	0.	0.
136	136	173	Q_neve	0.	0.	0.
136	136	170	Q_neve	0.	0.	0.
136	136	80	Q_manutenzione	0.	0.	0.
136	136	9	Q_manutenzione	0.	0.	0.
136	136	173	Q_manutenzione	0.	0.	0.
136	136	170	Q_manutenzione	0.	0.	0.
136	136	80	EQ_X	3.81	1.96	-6.13
136	136	9	EQ_X	-11.83	-1.17	-5.11
136	136	173	EQ_X	-11.68	-0.43	-3.49
136	136	170	EQ_X	3.96	2.7	-4.52
136	136	80	EQ_Y	3.63	-13.91	-3.41
136	136	9	EQ_Y	0.21	-14.6	-4.46
136	136	173	EQ_Y	3.09	-0.16	-6.29
136	136	170	EQ_Y	6.52	0.53	-5.24
137	137	170	DEAD	0.	0.	0.
137	137	173	DEAD	0.	0.	0.
137	137	174	DEAD	0.	0.	0.
137	137	171	DEAD	0.	0.	0.
137	137	170	G1_power station	0.	0.	0.
137	137	173	G1_power station	0.	0.	0.
137	137	174	G1_power station	0.	0.	0.
137	137	171	G1_power station	0.	0.	0.
137	137	170	G2_power station	0.	0.	0.
137	137	173	G2_power station	0.	0.	0.
137	137	174	G2_power station	0.	0.	0.
137	137	171	G2_power station	0.	0.	0.
137	137	170	Q_power station	0.	0.	0.
137	137	173	Q_power station	0.	0.	0.
137	137	174	Q_power station	0.	0.	0.
137	137	171	Q_power station	0.	0.	0.
137	137	170	Q_neve	0.	0.	0.
137	137	173	Q_neve	0.	0.	0.
137	137	174	Q_neve	0.	0.	0.

Table 20: Element Forces - Area Shells, Part 1 of 3

Area	AreaElem	Joint	OutputCase	F11	F22	F12
				KN/m	KN/m	KN/m
137	137	171	Q_neve	0.	0.	0.
137	137	170	Q_manutenzione	0.	0.	0.
137	137	173	Q_manutenzione	0.	0.	0.
137	137	174	Q_manutenzione	0.	0.	0.
137	137	171	Q_manutenzione	0.	0.	0.
137	137	170	EQ_X	-2.815E-02	1.9	-3.39
137	137	173	EQ_X	-3.49	1.21	-2.83
137	137	174	EQ_X	-3.9	-0.81	-0.73
137	137	171	EQ_X	-0.43	-0.11	-1.29
137	137	170	EQ_Y	5.77	0.38	-6.86
137	137	173	EQ_Y	9.57	1.14	-2.21
137	137	174	EQ_Y	9.69	1.72	-3.51
137	137	171	EQ_Y	5.89	0.96	-8.17
138	138	171	DEAD	0.	0.	0.
138	138	174	DEAD	0.	0.	0.
138	138	33	DEAD	0.	0.	0.
138	138	172	DEAD	0.	0.	0.
138	138	171	G1_power station	0.	0.	0.
138	138	174	G1_power station	0.	0.	0.
138	138	33	G1_power station	0.	0.	0.
138	138	172	G1_power station	0.	0.	0.
138	138	171	G2_power station	0.	0.	0.
138	138	174	G2_power station	0.	0.	0.
138	138	33	G2_power station	0.	0.	0.
138	138	172	G2_power station	0.	0.	0.
138	138	171	Q_power station	0.	0.	0.
138	138	174	Q_power station	0.	0.	0.
138	138	33	Q_power station	0.	0.	0.
138	138	172	Q_power station	0.	0.	0.
138	138	171	Q_neve	0.	0.	0.
138	138	174	Q_neve	0.	0.	0.
138	138	33	Q_neve	0.	0.	0.
138	138	172	Q_neve	0.	0.	0.
138	138	171	Q_manutenzione	0.	0.	0.
138	138	174	Q_manutenzione	0.	0.	0.
138	138	33	Q_manutenzione	0.	0.	0.
138	138	172	Q_manutenzione	0.	0.	0.
138	138	171	EQ_X	0.59	9.128E-02	-0.45
138	138	174	EQ_X	-2.9	-0.61	-0.44
138	138	33	EQ_X	-3.47	-3.46	0.23
138	138	172	EQ_X	2.229E-02	-2.76	0.22
138	138	171	EQ_Y	-4.66	-1.15	-7.22
138	138	174	EQ_Y	24.87	4.75	-5.73

Table 20: Element Forces - Area Shells, Part 1 of 3

Area	AreaElem	Joint	OutputCase	F11	F22	F12
				KN/m	KN/m	KN/m
138	138	33	EQ_Y	32.45	42.66	-14.44
138	138	172	EQ_Y	2.92	36.76	-15.93
139	139	14	DEAD	0.	0.	0.
139	139	56	DEAD	0.	0.	0.
139	139	175	DEAD	0.	0.	0.
139	139	145	DEAD	0.	0.	0.
139	139	14	G1_power station	0.	0.	0.
139	139	56	G1_power station	0.	0.	0.
139	139	175	G1_power station	0.	0.	0.
139	139	145	G1_power station	0.	0.	0.
139	139	14	G2_power station	0.	0.	0.
139	139	56	G2_power station	0.	0.	0.
139	139	175	G2_power station	0.	0.	0.
139	139	145	G2_power station	0.	0.	0.
139	139	14	Q_power station	0.	0.	0.
139	139	56	Q_power station	0.	0.	0.
139	139	175	Q_power station	0.	0.	0.
139	139	145	Q_power station	0.	0.	0.
139	139	14	Q_neve	0.	0.	0.
139	139	56	Q_neve	0.	0.	0.
139	139	175	Q_neve	0.	0.	0.
139	139	145	Q_neve	0.	0.	0.
139	139	14	Q_manutenzione	0.	0.	0.
139	139	56	Q_manutenzione	0.	0.	0.
139	139	175	Q_manutenzione	0.	0.	0.
139	139	145	Q_manutenzione	0.	0.	0.
139	139	14	EQ_X	10.27	0.83	-4.18
139	139	56	EQ_X	-4.07	-2.04	-5.81
139	139	175	EQ_X	-4.35	-3.45	-3.44
139	139	145	EQ_X	9.99	-0.58	-1.81
139	139	14	EQ_Y	-0.27	-12.03	5.76
139	139	56	EQ_Y	0.53	-11.87	4.13
139	139	175	EQ_Y	3.41	2.51	5.79
139	139	145	EQ_Y	2.61	2.35	7.42
140	140	145	DEAD	0.	0.	0.
140	140	175	DEAD	0.	0.	0.
140	140	176	DEAD	0.	0.	0.
140	140	147	DEAD	0.	0.	0.
140	140	145	G1_power station	0.	0.	0.
140	140	175	G1_power station	0.	0.	0.
140	140	176	G1_power station	0.	0.	0.
140	140	147	G1_power station	0.	0.	0.
140	140	145	G2_power station	0.	0.	0.

Table 20: Element Forces - Area Shells, Part 1 of 3

Area	AreaElem	Joint	OutputCase	F11	F22	F12
				KN/m	KN/m	KN/m
140	140	175	G2_power station	0.	0.	0.
140	140	176	G2_power station	0.	0.	0.
140	140	147	G2_power station	0.	0.	0.
140	140	145	Q_power station	0.	0.	0.
140	140	175	Q_power station	0.	0.	0.
140	140	176	Q_power station	0.	0.	0.
140	140	147	Q_power station	0.	0.	0.
140	140	145	Q_neve	0.	0.	0.
140	140	175	Q_neve	0.	0.	0.
140	140	176	Q_neve	0.	0.	0.
140	140	147	Q_neve	0.	0.	0.
140	140	145	Q_manutenzione	0.	0.	0.
140	140	175	Q_manutenzione	0.	0.	0.
140	140	176	Q_manutenzione	0.	0.	0.
140	140	147	Q_manutenzione	0.	0.	0.
140	140	145	EQ_X	-1.239E-02	-2.58	-1.31
140	140	175	EQ_X	-0.92	-2.76	-2.08
140	140	176	EQ_X	-0.51	-0.71	-0.6
140	140	147	EQ_X	0.4	-0.53	0.17
140	140	145	EQ_Y	3.07	2.44	3.94
140	140	175	EQ_Y	1.23	2.08	5.55
140	140	176	EQ_Y	1.2	1.97	4.07
140	140	147	EQ_Y	3.05	2.34	2.46
141	141	147	DEAD	0.	0.	0.
141	141	176	DEAD	0.	0.	0.
141	141	177	DEAD	0.	0.	0.
141	141	149	DEAD	0.	0.	0.
141	141	147	G1_power station	0.	0.	0.
141	141	176	G1_power station	0.	0.	0.
141	141	177	G1_power station	0.	0.	0.
141	141	149	G1_power station	0.	0.	0.
141	141	147	G2_power station	0.	0.	0.
141	141	176	G2_power station	0.	0.	0.
141	141	177	G2_power station	0.	0.	0.
141	141	149	G2_power station	0.	0.	0.
141	141	147	Q_power station	0.	0.	0.
141	141	176	Q_power station	0.	0.	0.
141	141	177	Q_power station	0.	0.	0.
141	141	149	Q_power station	0.	0.	0.
141	141	147	Q_neve	0.	0.	0.
141	141	176	Q_neve	0.	0.	0.
141	141	177	Q_neve	0.	0.	0.
141	141	149	Q_neve	0.	0.	0.

Table 20: Element Forces - Area Shells, Part 1 of 3

Area	AreaElem	Joint	OutputCase	F11	F22	F12
				KN/m	KN/m	KN/m
141	141	147	Q_manutenzione	0.	0.	0.
141	141	176	Q_manutenzione	0.	0.	0.
141	141	177	Q_manutenzione	0.	0.	0.
141	141	149	Q_manutenzione	0.	0.	0.
141	141	147	EQ_X	-1.35	-0.88	-0.22
141	141	176	EQ_X	-1.18	-0.85	-0.27
141	141	177	EQ_X	-1.04	-0.15	-0.56
141	141	149	EQ_X	-1.21	-0.18	-0.51
141	141	147	EQ_Y	4.42	2.61	2.84
141	141	176	EQ_Y	2.25	2.18	3.41
141	141	177	EQ_Y	2.46	3.22	3.62
141	141	149	EQ_Y	4.63	3.65	3.05
142	142	149	DEAD	0.	0.	0.
142	142	177	DEAD	0.	0.	0.
142	142	178	DEAD	0.	0.	0.
142	142	151	DEAD	0.	0.	0.
142	142	149	G1_power station	0.	0.	0.
142	142	177	G1_power station	0.	0.	0.
142	142	178	G1_power station	0.	0.	0.
142	142	151	G1_power station	0.	0.	0.
142	142	149	G2_power station	0.	0.	0.
142	142	177	G2_power station	0.	0.	0.
142	142	178	G2_power station	0.	0.	0.
142	142	151	G2_power station	0.	0.	0.
142	142	149	Q_power station	0.	0.	0.
142	142	177	Q_power station	0.	0.	0.
142	142	178	Q_power station	0.	0.	0.
142	142	151	Q_power station	0.	0.	0.
142	142	149	Q_neve	0.	0.	0.
142	142	177	Q_neve	0.	0.	0.
142	142	178	Q_neve	0.	0.	0.
142	142	151	Q_neve	0.	0.	0.
142	142	149	Q_manutenzione	0.	0.	0.
142	142	177	Q_manutenzione	0.	0.	0.
142	142	178	Q_manutenzione	0.	0.	0.
142	142	151	Q_manutenzione	0.	0.	0.
142	142	149	EQ_X	-1.41	-0.22	-0.5
142	142	177	EQ_X	-1.05	-0.15	-0.42
142	142	178	EQ_X	-1.05	-0.16	-0.31
142	142	151	EQ_X	-1.41	-0.23	-0.39
142	142	149	EQ_Y	6.53	4.03	2.71
142	142	177	EQ_Y	2.37	3.2	3.23
142	142	178	EQ_Y	2.47	3.68	2.63

Table 20: Element Forces - Area Shells, Part 1 of 3

Area	AreaElem	Joint	OutputCase	F11	F22	F12
				KN/m	KN/m	KN/m
142	142	151	EQ_Y	6.63	4.51	2.11
143	143	151	DEAD	0.	0.	0.
143	143	178	DEAD	0.	0.	0.
143	143	179	DEAD	0.	0.	0.
143	143	153	DEAD	0.	0.	0.
143	143	151	G1_power station	0.	0.	0.
143	143	178	G1_power station	0.	0.	0.
143	143	179	G1_power station	0.	0.	0.
143	143	153	G1_power station	0.	0.	0.
143	143	151	G2_power station	0.	0.	0.
143	143	178	G2_power station	0.	0.	0.
143	143	179	G2_power station	0.	0.	0.
143	143	153	G2_power station	0.	0.	0.
143	143	151	Q_power station	0.	0.	0.
143	143	178	Q_power station	0.	0.	0.
143	143	179	Q_power station	0.	0.	0.
143	143	153	Q_power station	0.	0.	0.
143	143	151	Q_neve	0.	0.	0.
143	143	178	Q_neve	0.	0.	0.
143	143	179	Q_neve	0.	0.	0.
143	143	153	Q_neve	0.	0.	0.
143	143	151	Q_manutenzione	0.	0.	0.
143	143	178	Q_manutenzione	0.	0.	0.
143	143	179	Q_manutenzione	0.	0.	0.
143	143	153	Q_manutenzione	0.	0.	0.
143	143	151	EQ_X	-1.38	-0.23	-0.39
143	143	178	EQ_X	-0.53	-5.679E-02	-0.3
143	143	179	EQ_X	-0.58	-0.29	-0.34
143	143	153	EQ_X	-1.43	-0.45	-0.43
143	143	151	EQ_Y	7.38	4.66	2.16
143	143	178	EQ_Y	1.73	3.53	2.37
143	143	179	EQ_Y	2.05	5.1	2.96
143	143	153	EQ_Y	7.7	6.23	2.74
144	144	153	DEAD	0.	0.	0.
144	144	179	DEAD	0.	0.	0.
144	144	180	DEAD	0.	0.	0.
144	144	155	DEAD	0.	0.	0.
144	144	153	G1_power station	0.	0.	0.
144	144	179	G1_power station	0.	0.	0.
144	144	180	G1_power station	0.	0.	0.
144	144	155	G1_power station	0.	0.	0.
144	144	153	G2_power station	0.	0.	0.
144	144	179	G2_power station	0.	0.	0.

Table 20: Element Forces - Area Shells, Part 1 of 3

Area	AreaElem	Joint	OutputCase	F11	F22	F12
				KN/m	KN/m	KN/m
144	144	180	G2_power station	0.	0.	0.
144	144	155	G2_power station	0.	0.	0.
144	144	153	Q_power station	0.	0.	0.
144	144	179	Q_power station	0.	0.	0.
144	144	180	Q_power station	0.	0.	0.
144	144	155	Q_power station	0.	0.	0.
144	144	153	Q_neve	0.	0.	0.
144	144	179	Q_neve	0.	0.	0.
144	144	180	Q_neve	0.	0.	0.
144	144	155	Q_neve	0.	0.	0.
144	144	153	Q_manutenzione	0.	0.	0.
144	144	179	Q_manutenzione	0.	0.	0.
144	144	180	Q_manutenzione	0.	0.	0.
144	144	155	Q_manutenzione	0.	0.	0.
144	144	153	EQ_X	-0.87	-0.34	-0.55
144	144	179	EQ_X	0.11	-0.15	-0.12
144	144	180	EQ_X	9.980E-02	-0.21	0.22
144	144	155	EQ_X	-0.88	-0.4	-0.22
144	144	153	EQ_Y	5.92	5.88	3.63
144	144	179	EQ_Y	-0.6	4.58	1.9
144	144	180	EQ_Y	-0.3	6.09	2.884E-02
144	144	155	EQ_Y	6.22	7.39	1.75
145	145	155	DEAD	0.	0.	0.
145	145	180	DEAD	0.	0.	0.
145	145	181	DEAD	0.	0.	0.
145	145	24	DEAD	0.	0.	0.
145	145	155	G1_power station	0.	0.	0.
145	145	180	G1_power station	0.	0.	0.
145	145	181	G1_power station	0.	0.	0.
145	145	24	G1_power station	0.	0.	0.
145	145	155	G2_power station	0.	0.	0.
145	145	180	G2_power station	0.	0.	0.
145	145	181	G2_power station	0.	0.	0.
145	145	24	G2_power station	0.	0.	0.
145	145	155	Q_power station	0.	0.	0.
145	145	180	Q_power station	0.	0.	0.
145	145	181	Q_power station	0.	0.	0.
145	145	24	Q_power station	0.	0.	0.
145	145	155	Q_neve	0.	0.	0.
145	145	180	Q_neve	0.	0.	0.
145	145	181	Q_neve	0.	0.	0.
145	145	24	Q_neve	0.	0.	0.
145	145	155	Q_manutenzione	0.	0.	0.

Table 20: Element Forces - Area Shells, Part 1 of 3

Area	AreaElem	Joint	OutputCase	F11	F22	F12
				KN/m	KN/m	KN/m
145	145	180	Q_manutenzione	0.	0.	0.
145	145	181	Q_manutenzione	0.	0.	0.
145	145	24	Q_manutenzione	0.	0.	0.
145	145	155	EQ_X	0.6	-0.11	5.418E-02
145	145	180	EQ_X	-0.39	-0.31	0.35
145	145	181	EQ_X	0.4	3.68	1.05
145	145	24	EQ_X	1.4	3.88	0.75
145	145	155	EQ_Y	-2.76	5.6	0.91
145	145	180	EQ_Y	1.82	6.51	-0.94
145	145	181	EQ_Y	-0.69	-6.05	-3.39
145	145	24	EQ_Y	-5.28	-6.96	-1.54
146	146	56	DEAD	0.	0.	0.
146	146	68	DEAD	0.	0.	0.
146	146	182	DEAD	0.	0.	0.
146	146	175	DEAD	0.	0.	0.
146	146	56	G1_power station	0.	0.	0.
146	146	68	G1_power station	0.	0.	0.
146	146	182	G1_power station	0.	0.	0.
146	146	175	G1_power station	0.	0.	0.
146	146	56	G2_power station	0.	0.	0.
146	146	68	G2_power station	0.	0.	0.
146	146	182	G2_power station	0.	0.	0.
146	146	175	G2_power station	0.	0.	0.
146	146	56	Q_power station	0.	0.	0.
146	146	68	Q_power station	0.	0.	0.
146	146	182	Q_power station	0.	0.	0.
146	146	175	Q_power station	0.	0.	0.
146	146	56	Q_neve	0.	0.	0.
146	146	68	Q_neve	0.	0.	0.
146	146	182	Q_neve	0.	0.	0.
146	146	175	Q_neve	0.	0.	0.
146	146	56	Q_manutenzione	0.	0.	0.
146	146	68	Q_manutenzione	0.	0.	0.
146	146	182	Q_manutenzione	0.	0.	0.
146	146	175	Q_manutenzione	0.	0.	0.
146	146	56	EQ_X	-3.76	-0.49	-2.31
146	146	68	EQ_X	-3.84	-0.5	-0.71
146	146	182	EQ_X	-3.68	0.28	-1.34
146	146	175	EQ_X	-3.6	0.3	-2.94
146	146	56	EQ_Y	2.64	-1.29	3.56
146	146	68	EQ_Y	0.38	-1.74	2.72
146	146	182	EQ_Y	0.53	-1.	4.23
146	146	175	EQ_Y	2.79	-0.55	5.08

Table 20: Element Forces - Area Shells, Part 1 of 3

Area	AreaElem	Joint	OutputCase	F11	F22	F12
				KN/m	KN/m	KN/m
147	147	175	DEAD	0.	0.	0.
147	147	182	DEAD	0.	0.	0.
147	147	183	DEAD	0.	0.	0.
147	147	176	DEAD	0.	0.	0.
147	147	175	G1_power station	0.	0.	0.
147	147	182	G1_power station	0.	0.	0.
147	147	183	G1_power station	0.	0.	0.
147	147	176	G1_power station	0.	0.	0.
147	147	175	G2_power station	0.	0.	0.
147	147	182	G2_power station	0.	0.	0.
147	147	183	G2_power station	0.	0.	0.
147	147	176	G2_power station	0.	0.	0.
147	147	175	Q_power station	0.	0.	0.
147	147	182	Q_power station	0.	0.	0.
147	147	183	Q_power station	0.	0.	0.
147	147	176	Q_power station	0.	0.	0.
147	147	175	Q_neve	0.	0.	0.
147	147	182	Q_neve	0.	0.	0.
147	147	183	Q_neve	0.	0.	0.
147	147	176	Q_neve	0.	0.	0.
147	147	175	Q_manutenzione	0.	0.	0.
147	147	182	Q_manutenzione	0.	0.	0.
147	147	183	Q_manutenzione	0.	0.	0.
147	147	176	Q_manutenzione	0.	0.	0.
147	147	175	EQ_X	-0.17	0.98	-1.58
147	147	182	EQ_X	-2.87	0.44	-1.72
147	147	183	EQ_X	-3.1	-0.68	-1.48
147	147	176	EQ_X	-0.39	-0.14	-1.35
147	147	175	EQ_Y	0.61	-0.99	4.83
147	147	182	EQ_Y	0.72	-0.97	5.
147	147	183	EQ_Y	1.29	1.89	5.39
147	147	176	EQ_Y	1.18	1.86	5.23
148	148	176	DEAD	0.	0.	0.
148	148	183	DEAD	0.	0.	0.
148	148	184	DEAD	0.	0.	0.
148	148	177	DEAD	0.	0.	0.
148	148	176	G1_power station	0.	0.	0.
148	148	183	G1_power station	0.	0.	0.
148	148	184	G1_power station	0.	0.	0.
148	148	177	G1_power station	0.	0.	0.
148	148	176	G2_power station	0.	0.	0.
148	148	183	G2_power station	0.	0.	0.
148	148	184	G2_power station	0.	0.	0.

Table 20: Element Forces - Area Shells, Part 1 of 3

Area	AreaElem	Joint	OutputCase	F11	F22	F12
				KN/m	KN/m	KN/m
148	148	177	G2_power station	0.	0.	0.
148	148	176	Q_power station	0.	0.	0.
148	148	183	Q_power station	0.	0.	0.
148	148	184	Q_power station	0.	0.	0.
148	148	177	Q_power station	0.	0.	0.
148	148	176	Q_neve	0.	0.	0.
148	148	183	Q_neve	0.	0.	0.
148	148	184	Q_neve	0.	0.	0.
148	148	177	Q_neve	0.	0.	0.
148	148	176	Q_manutenzione	0.	0.	0.
148	148	183	Q_manutenzione	0.	0.	0.
148	148	184	Q_manutenzione	0.	0.	0.
148	148	177	Q_manutenzione	0.	0.	0.
148	148	176	EQ_X	-1.07	-0.28	-1.02
148	148	183	EQ_X	-1.73	-0.41	-0.78
148	148	184	EQ_X	-1.65	-8.746E-03	-6.196E-02
148	148	177	EQ_X	-0.99	0.12	-0.3
148	148	176	EQ_Y	2.23	2.07	4.57
148	148	183	EQ_Y	0.56	1.74	5.02
148	148	184	EQ_Y	0.65	2.16	3.81
148	148	177	EQ_Y	2.32	2.5	3.36
149	149	177	DEAD	0.	0.	0.
149	149	184	DEAD	0.	0.	0.
149	149	185	DEAD	0.	0.	0.
149	149	178	DEAD	0.	0.	0.
149	149	177	G1_power station	0.	0.	0.
149	149	184	G1_power station	0.	0.	0.
149	149	185	G1_power station	0.	0.	0.
149	149	178	G1_power station	0.	0.	0.
149	149	177	G2_power station	0.	0.	0.
149	149	184	G2_power station	0.	0.	0.
149	149	185	G2_power station	0.	0.	0.
149	149	178	G2_power station	0.	0.	0.
149	149	177	Q_power station	0.	0.	0.
149	149	184	Q_power station	0.	0.	0.
149	149	185	Q_power station	0.	0.	0.
149	149	178	Q_power station	0.	0.	0.
149	149	177	Q_neve	0.	0.	0.
149	149	184	Q_neve	0.	0.	0.
149	149	185	Q_neve	0.	0.	0.
149	149	178	Q_neve	0.	0.	0.
149	149	177	Q_manutenzione	0.	0.	0.
149	149	184	Q_manutenzione	0.	0.	0.

Table 20: Element Forces - Area Shells, Part 1 of 3

Area	AreaElem	Joint	OutputCase	F11	F22	F12
				KN/m	KN/m	KN/m
149	149	185	Q_manutenzione	0.	0.	0.
149	149	178	Q_manutenzione	0.	0.	0.
149	149	177	EQ_X	-0.99	0.12	-0.16
149	149	184	EQ_X	-0.97	0.13	2.705E-02
149	149	185	EQ_X	-1.02	-0.13	6.988E-02
149	149	178	EQ_X	-1.05	-0.14	-0.11
149	149	177	EQ_Y	2.23	2.48	2.98
149	149	184	EQ_Y	1.02	2.24	3.07
149	149	185	EQ_Y	1.23	3.29	3.03
149	149	178	EQ_Y	2.44	3.53	2.93
150	150	178	DEAD	0.	0.	0.
150	150	185	DEAD	0.	0.	0.
150	150	186	DEAD	0.	0.	0.
150	150	179	DEAD	0.	0.	0.
150	150	178	G1_power station	0.	0.	0.
150	150	185	G1_power station	0.	0.	0.
150	150	186	G1_power station	0.	0.	0.
150	150	179	G1_power station	0.	0.	0.
150	150	178	G2_power station	0.	0.	0.
150	150	185	G2_power station	0.	0.	0.
150	150	186	G2_power station	0.	0.	0.
150	150	179	G2_power station	0.	0.	0.
150	150	178	Q_power station	0.	0.	0.
150	150	185	Q_power station	0.	0.	0.
150	150	186	Q_power station	0.	0.	0.
150	150	179	Q_power station	0.	0.	0.
150	150	178	Q_neve	0.	0.	0.
150	150	185	Q_neve	0.	0.	0.
150	150	186	Q_neve	0.	0.	0.
150	150	179	Q_neve	0.	0.	0.
150	150	178	Q_manutenzione	0.	0.	0.
150	150	185	Q_manutenzione	0.	0.	0.
150	150	186	Q_manutenzione	0.	0.	0.
150	150	179	Q_manutenzione	0.	0.	0.
150	150	178	EQ_X	-0.53	-3.253E-02	-0.1
150	150	185	EQ_X	-0.42	-1.021E-02	0.28
150	150	186	EQ_X	-0.45	-0.16	0.52
150	150	179	EQ_X	-0.56	-0.18	0.14
150	150	178	EQ_Y	1.7	3.39	2.67
150	150	185	EQ_Y	0.18	3.08	1.83
150	150	186	EQ_Y	0.41	4.26	4.561E-02
150	150	179	EQ_Y	1.94	4.56	0.88
151	151	179	DEAD	0.	0.	0.

Table 20: Element Forces - Area Shells, Part 1 of 3

Area	AreaElem	Joint	OutputCase	F11	F22	F12
				KN/m	KN/m	KN/m
151	151	186	DEAD	0.	0.	0.
151	151	187	DEAD	0.	0.	0.
151	151	180	DEAD	0.	0.	0.
151	151	179	G1_power station	0.	0.	0.
151	151	186	G1_power station	0.	0.	0.
151	151	187	G1_power station	0.	0.	0.
151	151	180	G1_power station	0.	0.	0.
151	151	179	G2_power station	0.	0.	0.
151	151	186	G2_power station	0.	0.	0.
151	151	187	G2_power station	0.	0.	0.
151	151	180	G2_power station	0.	0.	0.
151	151	179	Q_power station	0.	0.	0.
151	151	186	Q_power station	0.	0.	0.
151	151	187	Q_power station	0.	0.	0.
151	151	180	Q_power station	0.	0.	0.
151	151	179	Q_neve	0.	0.	0.
151	151	186	Q_neve	0.	0.	0.
151	151	187	Q_neve	0.	0.	0.
151	151	180	Q_neve	0.	0.	0.
151	151	179	Q_manutenzione	0.	0.	0.
151	151	186	Q_manutenzione	0.	0.	0.
151	151	187	Q_manutenzione	0.	0.	0.
151	151	180	Q_manutenzione	0.	0.	0.
151	151	179	EQ_X	0.13	-4.195E-02	0.37
151	151	186	EQ_X	-0.29	-0.13	0.6
151	151	187	EQ_X	-0.13	0.68	0.71
151	151	180	EQ_X	0.29	0.76	0.47
151	151	179	EQ_Y	-0.71	4.03	-0.17
151	151	186	EQ_Y	0.74	4.33	-0.98
151	151	187	EQ_Y	0.34	2.29	-1.41
151	151	180	EQ_Y	-1.12	2.	-0.61
152	152	180	DEAD	0.	0.	0.
152	152	187	DEAD	0.	0.	0.
152	152	188	DEAD	0.	0.	0.
152	152	181	DEAD	0.	0.	0.
152	152	180	G1_power station	0.	0.	0.
152	152	187	G1_power station	0.	0.	0.
152	152	188	G1_power station	0.	0.	0.
152	152	181	G1_power station	0.	0.	0.
152	152	180	G2_power station	0.	0.	0.
152	152	187	G2_power station	0.	0.	0.
152	152	188	G2_power station	0.	0.	0.
152	152	181	G2_power station	0.	0.	0.

Table 20: Element Forces - Area Shells, Part 1 of 3

Area	AreaElem	Joint	OutputCase	F11	F22	F12
				KN/m	KN/m	KN/m
152	152	180	Q_power station	0.	0.	0.
152	152	187	Q_power station	0.	0.	0.
152	152	188	Q_power station	0.	0.	0.
152	152	181	Q_power station	0.	0.	0.
152	152	180	Q_neve	0.	0.	0.
152	152	187	Q_neve	0.	0.	0.
152	152	188	Q_neve	0.	0.	0.
152	152	181	Q_neve	0.	0.	0.
152	152	180	Q_manutenzione	0.	0.	0.
152	152	187	Q_manutenzione	0.	0.	0.
152	152	188	Q_manutenzione	0.	0.	0.
152	152	181	Q_manutenzione	0.	0.	0.
152	152	180	EQ_X	-0.2	0.66	0.6
152	152	187	EQ_X	-7.536E-02	0.69	0.47
152	152	188	EQ_X	0.14	1.75	7.410E-02
152	152	181	EQ_X	1.458E-02	1.73	0.21
152	152	180	EQ_Y	1.	2.42	-1.58
152	152	187	EQ_Y	3.860E-03	2.22	-1.08
152	152	188	EQ_Y	-0.56	-0.62	-0.3
152	152	181	EQ_Y	0.43	-0.42	-0.8
153	153	68	DEAD	0.	0.	0.
153	153	70	DEAD	0.	0.	0.
153	153	189	DEAD	0.	0.	0.
153	153	182	DEAD	0.	0.	0.
153	153	68	G1_power station	0.	0.	0.
153	153	70	G1_power station	0.	0.	0.
153	153	189	G1_power station	0.	0.	0.
153	153	182	G1_power station	0.	0.	0.
153	153	68	G2_power station	0.	0.	0.
153	153	70	G2_power station	0.	0.	0.
153	153	189	G2_power station	0.	0.	0.
153	153	182	G2_power station	0.	0.	0.
153	153	68	Q_power station	0.	0.	0.
153	153	70	Q_power station	0.	0.	0.
153	153	189	Q_power station	0.	0.	0.
153	153	182	Q_power station	0.	0.	0.
153	153	68	Q_neve	0.	0.	0.
153	153	70	Q_neve	0.	0.	0.
153	153	189	Q_neve	0.	0.	0.
153	153	182	Q_neve	0.	0.	0.
153	153	68	Q_manutenzione	0.	0.	0.
153	153	70	Q_manutenzione	0.	0.	0.
153	153	189	Q_manutenzione	0.	0.	0.

Table 20: Element Forces - Area Shells, Part 1 of 3

Area	AreaElem	Joint	OutputCase	F11	F22	F12
				KN/m	KN/m	KN/m
153	153	182	Q_manutenzione	0.	0.	0.
153	153	68	EQ_X	-3.76	-9.629E-02	-0.49
153	153	70	EQ_X	-3.79	-0.1	-0.2
153	153	189	EQ_X	-3.72	0.23	-0.2
153	153	182	EQ_X	-3.69	0.24	-0.49
153	153	68	EQ_Y	0.92	0.97	3.65
153	153	70	EQ_Y	-0.8	0.63	3.7
153	153	189	EQ_Y	-0.8	0.62	4.18
153	153	182	EQ_Y	0.92	0.96	4.13
154	154	182	DEAD	0.	0.	0.
154	154	189	DEAD	0.	0.	0.
154	154	190	DEAD	0.	0.	0.
154	154	183	DEAD	0.	0.	0.
154	154	182	G1_power station	0.	0.	0.
154	154	189	G1_power station	0.	0.	0.
154	154	190	G1_power station	0.	0.	0.
154	154	183	G1_power station	0.	0.	0.
154	154	182	G2_power station	0.	0.	0.
154	154	189	G2_power station	0.	0.	0.
154	154	190	G2_power station	0.	0.	0.
154	154	183	G2_power station	0.	0.	0.
154	154	182	Q_power station	0.	0.	0.
154	154	189	Q_power station	0.	0.	0.
154	154	190	Q_power station	0.	0.	0.
154	154	183	Q_power station	0.	0.	0.
154	154	182	Q_neve	0.	0.	0.
154	154	189	Q_neve	0.	0.	0.
154	154	190	Q_neve	0.	0.	0.
154	154	183	Q_neve	0.	0.	0.
154	154	182	Q_manutenzione	0.	0.	0.
154	154	189	Q_manutenzione	0.	0.	0.
154	154	190	Q_manutenzione	0.	0.	0.
154	154	183	Q_manutenzione	0.	0.	0.
154	154	182	EQ_X	-2.88	0.4	-0.87
154	154	189	EQ_X	-2.84	0.41	0.45
154	154	190	EQ_X	-2.77	0.79	0.61
154	154	183	EQ_X	-2.81	0.78	-0.72
154	154	182	EQ_Y	1.11	1.	4.89
154	154	189	EQ_Y	-0.82	0.61	4.93
154	154	190	EQ_Y	-0.83	0.56	4.96
154	154	183	EQ_Y	1.1	0.95	4.93
155	155	183	DEAD	0.	0.	0.
155	155	190	DEAD	0.	0.	0.

Table 20: Element Forces - Area Shells, Part 1 of 3

Area	AreaElem	Joint	OutputCase	F11	F22	F12
				KN/m	KN/m	KN/m
155	155	191	DEAD	0.	0.	0.
155	155	184	DEAD	0.	0.	0.
155	155	183	G1_power station	0.	0.	0.
155	155	190	G1_power station	0.	0.	0.
155	155	191	G1_power station	0.	0.	0.
155	155	184	G1_power station	0.	0.	0.
155	155	183	G2_power station	0.	0.	0.
155	155	190	G2_power station	0.	0.	0.
155	155	191	G2_power station	0.	0.	0.
155	155	184	G2_power station	0.	0.	0.
155	155	183	Q_power station	0.	0.	0.
155	155	190	Q_power station	0.	0.	0.
155	155	191	Q_power station	0.	0.	0.
155	155	184	Q_power station	0.	0.	0.
155	155	183	Q_neve	0.	0.	0.
155	155	190	Q_neve	0.	0.	0.
155	155	191	Q_neve	0.	0.	0.
155	155	184	Q_neve	0.	0.	0.
155	155	183	Q_manutenzione	0.	0.	0.
155	155	190	Q_manutenzione	0.	0.	0.
155	155	191	Q_manutenzione	0.	0.	0.
155	155	184	Q_manutenzione	0.	0.	0.
155	155	183	EQ_X	-1.44	1.05	-1.120E-02
155	155	190	EQ_X	-1.27	1.09	0.21
155	155	191	EQ_X	-1.45	0.2	0.34
155	155	184	EQ_X	-1.61	0.17	0.12
155	155	183	EQ_Y	0.38	0.8	4.56
155	155	190	EQ_Y	0.14	0.75	4.67
155	155	191	EQ_Y	0.14	0.78	4.73
155	155	184	EQ_Y	0.38	0.83	4.63
156	156	184	DEAD	0.	0.	0.
156	156	191	DEAD	0.	0.	0.
156	156	192	DEAD	0.	0.	0.
156	156	185	DEAD	0.	0.	0.
156	156	184	G1_power station	0.	0.	0.
156	156	191	G1_power station	0.	0.	0.
156	156	192	G1_power station	0.	0.	0.
156	156	185	G1_power station	0.	0.	0.
156	156	184	G2_power station	0.	0.	0.
156	156	191	G2_power station	0.	0.	0.
156	156	192	G2_power station	0.	0.	0.
156	156	185	G2_power station	0.	0.	0.
156	156	184	Q_power station	0.	0.	0.

Table 20: Element Forces - Area Shells, Part 1 of 3

Area	AreaElem	Joint	OutputCase	F11	F22	F12
				KN/m	KN/m	KN/m
156	156	191	Q_power station	0.	0.	0.
156	156	192	Q_power station	0.	0.	0.
156	156	185	Q_power station	0.	0.	0.
156	156	184	Q_neve	0.	0.	0.
156	156	191	Q_neve	0.	0.	0.
156	156	192	Q_neve	0.	0.	0.
156	156	185	Q_neve	0.	0.	0.
156	156	184	Q_manutenzione	0.	0.	0.
156	156	191	Q_manutenzione	0.	0.	0.
156	156	192	Q_manutenzione	0.	0.	0.
156	156	185	Q_manutenzione	0.	0.	0.
156	156	184	EQ_X	-0.93	0.3	0.21
156	156	191	EQ_X	-0.78	0.33	0.47
156	156	192	EQ_X	-0.79	0.27	0.7
156	156	185	EQ_X	-0.94	0.24	0.44
156	156	184	EQ_Y	0.76	0.91	3.89
156	156	191	EQ_Y	-1.223E-03	0.75	3.93
156	156	192	EQ_Y	1.938E-02	0.86	2.03
156	156	185	EQ_Y	0.78	1.01	1.99
157	157	185	DEAD	0.	0.	0.
157	157	192	DEAD	0.	0.	0.
157	157	193	DEAD	0.	0.	0.
157	157	186	DEAD	0.	0.	0.
157	157	185	G1_power station	0.	0.	0.
157	157	192	G1_power station	0.	0.	0.
157	157	193	G1_power station	0.	0.	0.
157	157	186	G1_power station	0.	0.	0.
157	157	185	G2_power station	0.	0.	0.
157	157	192	G2_power station	0.	0.	0.
157	157	193	G2_power station	0.	0.	0.
157	157	186	G2_power station	0.	0.	0.
157	157	185	Q_power station	0.	0.	0.
157	157	192	Q_power station	0.	0.	0.
157	157	193	Q_power station	0.	0.	0.
157	157	186	Q_power station	0.	0.	0.
157	157	185	Q_neve	0.	0.	0.
157	157	192	Q_neve	0.	0.	0.
157	157	193	Q_neve	0.	0.	0.
157	157	186	Q_neve	0.	0.	0.
157	157	185	Q_manutenzione	0.	0.	0.
157	157	192	Q_manutenzione	0.	0.	0.
157	157	193	Q_manutenzione	0.	0.	0.
157	157	186	Q_manutenzione	0.	0.	0.

Table 20: Element Forces - Area Shells, Part 1 of 3

Area	AreaElem	Joint	OutputCase	F11	F22	F12
				KN/m	KN/m	KN/m
157	157	185	EQ_X	-0.34	0.36	0.65
157	157	192	EQ_X	-0.59	0.31	0.81
157	157	193	EQ_X	-0.63	0.11	0.86
157	157	186	EQ_X	-0.39	0.15	0.71
157	157	185	EQ_Y	-0.28	0.8	0.8
157	157	192	EQ_Y	1.04	1.06	0.88
157	157	193	EQ_Y	1.18	1.75	0.35
157	157	186	EQ_Y	-0.14	1.49	0.27
158	158	186	DEAD	0.	0.	0.
158	158	193	DEAD	0.	0.	0.
158	158	194	DEAD	0.	0.	0.
158	158	187	DEAD	0.	0.	0.
158	158	186	G1_power station	0.	0.	0.
158	158	193	G1_power station	0.	0.	0.
158	158	194	G1_power station	0.	0.	0.
158	158	187	G1_power station	0.	0.	0.
158	158	186	G2_power station	0.	0.	0.
158	158	193	G2_power station	0.	0.	0.
158	158	194	G2_power station	0.	0.	0.
158	158	187	G2_power station	0.	0.	0.
158	158	186	Q_power station	0.	0.	0.
158	158	193	Q_power station	0.	0.	0.
158	158	194	Q_power station	0.	0.	0.
158	158	187	Q_power station	0.	0.	0.
158	158	186	Q_neve	0.	0.	0.
158	158	193	Q_neve	0.	0.	0.
158	158	194	Q_neve	0.	0.	0.
158	158	187	Q_neve	0.	0.	0.
158	158	186	Q_manutenzione	0.	0.	0.
158	158	193	Q_manutenzione	0.	0.	0.
158	158	194	Q_manutenzione	0.	0.	0.
158	158	187	Q_manutenzione	0.	0.	0.
158	158	186	EQ_X	-0.22	0.19	0.79
158	158	193	EQ_X	-0.13	0.2	0.98
158	158	194	EQ_X	-0.1	0.35	0.74
158	158	187	EQ_X	-0.19	0.33	0.54
158	158	186	EQ_Y	0.19	1.55	-0.75
158	158	193	EQ_Y	0.13	1.54	-1.08
158	158	194	EQ_Y	0.26	2.22	-1.42
158	158	187	EQ_Y	0.32	2.23	-1.1
159	159	187	DEAD	0.	0.	0.
159	159	194	DEAD	0.	0.	0.
159	159	195	DEAD	0.	0.	0.

Table 20: Element Forces - Area Shells, Part 1 of 3

Area	AreaElem	Joint	OutputCase	F11	F22	F12
				KN/m	KN/m	KN/m
159	159	188	DEAD	0.	0.	0.
159	159	187	G1_power station	0.	0.	0.
159	159	194	G1_power station	0.	0.	0.
159	159	195	G1_power station	0.	0.	0.
159	159	188	G1_power station	0.	0.	0.
159	159	187	G2_power station	0.	0.	0.
159	159	194	G2_power station	0.	0.	0.
159	159	195	G2_power station	0.	0.	0.
159	159	188	G2_power station	0.	0.	0.
159	159	187	Q_power station	0.	0.	0.
159	159	194	Q_power station	0.	0.	0.
159	159	195	Q_power station	0.	0.	0.
159	159	188	Q_power station	0.	0.	0.
159	159	187	Q_neve	0.	0.	0.
159	159	194	Q_neve	0.	0.	0.
159	159	195	Q_neve	0.	0.	0.
159	159	188	Q_neve	0.	0.	0.
159	159	187	Q_manutenzione	0.	0.	0.
159	159	194	Q_manutenzione	0.	0.	0.
159	159	195	Q_manutenzione	0.	0.	0.
159	159	188	Q_manutenzione	0.	0.	0.
159	159	187	EQ_X	-0.14	0.34	0.3
159	159	194	EQ_X	-3.261E-02	0.37	0.29
159	159	195	EQ_X	4.264E-02	0.74	0.43
159	159	188	EQ_X	-6.900E-02	0.72	0.44
159	159	187	EQ_Y	-7.759E-03	2.17	-0.77
159	159	194	EQ_Y	3.996E-02	2.18	-0.75
159	159	195	EQ_Y	0.15	2.71	-1.11
159	159	188	EQ_Y	9.991E-02	2.71	-1.13
160	160	70	DEAD	0.	0.	0.
160	160	72	DEAD	0.	0.	0.
160	160	196	DEAD	0.	0.	0.
160	160	189	DEAD	0.	0.	0.
160	160	70	G1_power station	0.	0.	0.
160	160	72	G1_power station	0.	0.	0.
160	160	196	G1_power station	0.	0.	0.
160	160	189	G1_power station	0.	0.	0.
160	160	70	G2_power station	0.	0.	0.
160	160	72	G2_power station	0.	0.	0.
160	160	196	G2_power station	0.	0.	0.
160	160	189	G2_power station	0.	0.	0.
160	160	70	Q_power station	0.	0.	0.
160	160	72	Q_power station	0.	0.	0.

Table 20: Element Forces - Area Shells, Part 1 of 3

Area	AreaElem	Joint	OutputCase	F11	F22	F12
				KN/m	KN/m	KN/m
160	160	196	Q_power station	0.	0.	0.
160	160	189	Q_power station	0.	0.	0.
160	160	70	Q_neve	0.	0.	0.
160	160	72	Q_neve	0.	0.	0.
160	160	196	Q_neve	0.	0.	0.
160	160	189	Q_neve	0.	0.	0.
160	160	70	Q_manutenzione	0.	0.	0.
160	160	72	Q_manutenzione	0.	0.	0.
160	160	196	Q_manutenzione	0.	0.	0.
160	160	189	Q_manutenzione	0.	0.	0.
160	160	70	EQ_X	-3.87	-0.51	-2.689E-02
160	160	72	EQ_X	-3.81	-0.5	1.81
160	160	196	EQ_X	-3.52	0.94	2.56
160	160	189	EQ_X	-3.58	0.93	0.72
160	160	70	EQ_Y	-0.25	3.39	2.81
160	160	72	EQ_Y	-2.63	2.92	3.68
160	160	196	EQ_Y	-2.78	2.14	5.24
160	160	189	EQ_Y	-0.41	2.62	4.37
161	161	189	DEAD	0.	0.	0.
161	161	196	DEAD	0.	0.	0.
161	161	197	DEAD	0.	0.	0.
161	161	190	DEAD	0.	0.	0.
161	161	189	G1_power station	0.	0.	0.
161	161	196	G1_power station	0.	0.	0.
161	161	197	G1_power station	0.	0.	0.
161	161	190	G1_power station	0.	0.	0.
161	161	189	G2_power station	0.	0.	0.
161	161	196	G2_power station	0.	0.	0.
161	161	197	G2_power station	0.	0.	0.
161	161	190	G2_power station	0.	0.	0.
161	161	189	Q_power station	0.	0.	0.
161	161	196	Q_power station	0.	0.	0.
161	161	197	Q_power station	0.	0.	0.
161	161	190	Q_power station	0.	0.	0.
161	161	189	Q_neve	0.	0.	0.
161	161	196	Q_neve	0.	0.	0.
161	161	197	Q_neve	0.	0.	0.
161	161	190	Q_neve	0.	0.	0.
161	161	189	Q_manutenzione	0.	0.	0.
161	161	196	Q_manutenzione	0.	0.	0.
161	161	197	Q_manutenzione	0.	0.	0.
161	161	190	Q_manutenzione	0.	0.	0.
161	161	189	EQ_X	-2.7	1.11	1.37

Table 20: Element Forces - Area Shells, Part 1 of 3

Area	AreaElem	Joint	OutputCase	F11	F22	F12
				KN/m	KN/m	KN/m
161	161	196	EQ_X	0.49	1.74	1.55
161	161	197	EQ_X	0.24	0.48	1.63
161	161	190	EQ_X	-2.95	-0.15	1.45
161	161	189	EQ_Y	-0.42	2.61	5.12
161	161	196	EQ_Y	-0.53	2.59	5.07
161	161	197	EQ_Y	-1.1	-0.28	5.51
161	161	190	EQ_Y	-0.99	-0.26	5.55
162	162	190	DEAD	0.	0.	0.
162	162	197	DEAD	0.	0.	0.
162	162	198	DEAD	0.	0.	0.
162	162	191	DEAD	0.	0.	0.
162	162	190	G1_power station	0.	0.	0.
162	162	197	G1_power station	0.	0.	0.
162	162	198	G1_power station	0.	0.	0.
162	162	191	G1_power station	0.	0.	0.
162	162	190	G2_power station	0.	0.	0.
162	162	197	G2_power station	0.	0.	0.
162	162	198	G2_power station	0.	0.	0.
162	162	191	G2_power station	0.	0.	0.
162	162	190	Q_power station	0.	0.	0.
162	162	197	Q_power station	0.	0.	0.
162	162	198	Q_power station	0.	0.	0.
162	162	191	Q_power station	0.	0.	0.
162	162	190	Q_neve	0.	0.	0.
162	162	197	Q_neve	0.	0.	0.
162	162	198	Q_neve	0.	0.	0.
162	162	191	Q_neve	0.	0.	0.
162	162	190	Q_manutenzione	0.	0.	0.
162	162	197	Q_manutenzione	0.	0.	0.
162	162	198	Q_manutenzione	0.	0.	0.
162	162	191	Q_manutenzione	0.	0.	0.
162	162	190	EQ_X	-1.46	0.14	1.05
162	162	197	EQ_X	9.722E-02	0.46	1.31
162	162	198	EQ_X	0.14	0.65	0.85
162	162	191	EQ_X	-1.42	0.34	0.59
162	162	190	EQ_Y	-2.911E-02	-6.997E-02	5.26
162	162	197	EQ_Y	-2.03	-0.47	4.86
162	162	198	EQ_Y	-2.13	-0.96	3.68
162	162	191	EQ_Y	-0.13	-0.56	4.07
163	163	191	DEAD	0.	0.	0.
163	163	198	DEAD	0.	0.	0.
163	163	199	DEAD	0.	0.	0.
163	163	192	DEAD	0.	0.	0.

Table 20: Element Forces - Area Shells, Part 1 of 3

Area	AreaElem	Joint	OutputCase	F11	F22	F12
				KN/m	KN/m	KN/m
163	163	191	G1_power station	0.	0.	0.
163	163	198	G1_power station	0.	0.	0.
163	163	199	G1_power station	0.	0.	0.
163	163	192	G1_power station	0.	0.	0.
163	163	191	G2_power station	0.	0.	0.
163	163	198	G2_power station	0.	0.	0.
163	163	199	G2_power station	0.	0.	0.
163	163	192	G2_power station	0.	0.	0.
163	163	191	Q_power station	0.	0.	0.
163	163	198	Q_power station	0.	0.	0.
163	163	199	Q_power station	0.	0.	0.
163	163	192	Q_power station	0.	0.	0.
163	163	191	Q_neve	0.	0.	0.
163	163	198	Q_neve	0.	0.	0.
163	163	199	Q_neve	0.	0.	0.
163	163	192	Q_neve	0.	0.	0.
163	163	191	Q_manutenzione	0.	0.	0.
163	163	198	Q_manutenzione	0.	0.	0.
163	163	199	Q_manutenzione	0.	0.	0.
163	163	192	Q_manutenzione	0.	0.	0.
163	163	191	EQ_X	-0.75	0.47	0.71
163	163	198	EQ_X	-4.697E-02	0.61	0.79
163	163	199	EQ_X	-5.707E-02	0.56	0.81
163	163	192	EQ_X	-0.76	0.42	0.74
163	163	191	EQ_Y	-0.27	-0.59	3.27
163	163	198	EQ_Y	-1.84	-0.9	3.38
163	163	199	EQ_Y	-2.	-1.67	3.3
163	163	192	EQ_Y	-0.42	-1.36	3.19
164	164	192	DEAD	0.	0.	0.
164	164	199	DEAD	0.	0.	0.
164	164	200	DEAD	0.	0.	0.
164	164	193	DEAD	0.	0.	0.
164	164	192	G1_power station	0.	0.	0.
164	164	199	G1_power station	0.	0.	0.
164	164	200	G1_power station	0.	0.	0.
164	164	193	G1_power station	0.	0.	0.
164	164	192	G2_power station	0.	0.	0.
164	164	199	G2_power station	0.	0.	0.
164	164	200	G2_power station	0.	0.	0.
164	164	193	G2_power station	0.	0.	0.
164	164	192	Q_power station	0.	0.	0.
164	164	199	Q_power station	0.	0.	0.
164	164	200	Q_power station	0.	0.	0.

Table 20: Element Forces - Area Shells, Part 1 of 3

Area	AreaElem	Joint	OutputCase	F11	F22	F12
				KN/m	KN/m	KN/m
164	164	193	Q_power station	0.	0.	0.
164	164	192	Q_neve	0.	0.	0.
164	164	199	Q_neve	0.	0.	0.
164	164	200	Q_neve	0.	0.	0.
164	164	193	Q_neve	0.	0.	0.
164	164	192	Q_manutenzione	0.	0.	0.
164	164	199	Q_manutenzione	0.	0.	0.
164	164	200	Q_manutenzione	0.	0.	0.
164	164	193	Q_manutenzione	0.	0.	0.
164	164	192	EQ_X	-0.56	0.46	0.85
164	164	199	EQ_X	-0.31	0.51	0.73
164	164	200	EQ_X	-0.29	0.58	0.92
164	164	193	EQ_X	-0.54	0.53	1.04
164	164	192	EQ_Y	0.6	-1.15	2.03
164	164	199	EQ_Y	-0.92	-1.46	2.91
164	164	200	EQ_Y	-1.06	-2.13	0.76
164	164	193	EQ_Y	0.46	-1.83	-0.12
165	165	193	DEAD	0.	0.	0.
165	165	200	DEAD	0.	0.	0.
165	165	201	DEAD	0.	0.	0.
165	165	194	DEAD	0.	0.	0.
165	165	193	G1_power station	0.	0.	0.
165	165	200	G1_power station	0.	0.	0.
165	165	201	G1_power station	0.	0.	0.
165	165	194	G1_power station	0.	0.	0.
165	165	193	G2_power station	0.	0.	0.
165	165	200	G2_power station	0.	0.	0.
165	165	201	G2_power station	0.	0.	0.
165	165	194	G2_power station	0.	0.	0.
165	165	193	Q_power station	0.	0.	0.
165	165	200	Q_power station	0.	0.	0.
165	165	201	Q_power station	0.	0.	0.
165	165	194	Q_power station	0.	0.	0.
165	165	193	Q_neve	0.	0.	0.
165	165	200	Q_neve	0.	0.	0.
165	165	201	Q_neve	0.	0.	0.
165	165	194	Q_neve	0.	0.	0.
165	165	193	Q_manutenzione	0.	0.	0.
165	165	200	Q_manutenzione	0.	0.	0.
165	165	201	Q_manutenzione	0.	0.	0.
165	165	194	Q_manutenzione	0.	0.	0.
165	165	193	EQ_X	-4.990E-02	0.63	1.16
165	165	200	EQ_X	-0.75	0.49	1.11

Table 20: Element Forces - Area Shells, Part 1 of 3

Area	AreaElem	Joint	OutputCase	F11	F22	F12
				KN/m	KN/m	KN/m
165	165	201	EQ_X	-0.96	-0.53	1.05
165	165	194	EQ_X	-0.25	-0.39	1.1
165	165	193	EQ_Y	-0.59	-2.04	-1.55
165	165	200	EQ_Y	1.89	-1.54	-0.64
165	165	201	EQ_Y	2.79	2.96	-1.2
165	165	194	EQ_Y	0.31	2.46	-2.11
166	166	194	DEAD	0.	0.	0.
166	166	201	DEAD	0.	0.	0.
166	166	202	DEAD	0.	0.	0.
166	166	195	DEAD	0.	0.	0.
166	166	194	G1_power station	0.	0.	0.
166	166	201	G1_power station	0.	0.	0.
166	166	202	G1_power station	0.	0.	0.
166	166	195	G1_power station	0.	0.	0.
166	166	194	G2_power station	0.	0.	0.
166	166	201	G2_power station	0.	0.	0.
166	166	202	G2_power station	0.	0.	0.
166	166	195	G2_power station	0.	0.	0.
166	166	194	Q_power station	0.	0.	0.
166	166	201	Q_power station	0.	0.	0.
166	166	202	Q_power station	0.	0.	0.
166	166	195	Q_power station	0.	0.	0.
166	166	194	Q_neve	0.	0.	0.
166	166	201	Q_neve	0.	0.	0.
166	166	202	Q_neve	0.	0.	0.
166	166	195	Q_neve	0.	0.	0.
166	166	194	Q_manutenzione	0.	0.	0.
166	166	201	Q_manutenzione	0.	0.	0.
166	166	202	Q_manutenzione	0.	0.	0.
166	166	195	Q_manutenzione	0.	0.	0.
166	166	194	EQ_X	-0.18	-0.38	0.66
166	166	201	EQ_X	0.31	-0.28	1.02
166	166	202	EQ_X	0.31	-0.28	0.35
166	166	195	EQ_X	-0.18	-0.38	-9.398E-03
166	166	194	EQ_Y	8.866E-02	2.42	-1.43
166	166	201	EQ_Y	-1.06	2.19	-2.5
166	166	202	EQ_Y	-0.25	6.26	-1.24
166	166	195	EQ_Y	0.9	6.49	-0.16
167	167	72	DEAD	0.	0.	0.
167	167	18	DEAD	0.	0.	0.
167	167	203	DEAD	0.	0.	0.
167	167	196	DEAD	0.	0.	0.
167	167	72	G1_power station	0.	0.	0.

Table 20: Element Forces - Area Shells, Part 1 of 3

Area	AreaElem	Joint	OutputCase	F11	F22	F12
				KN/m	KN/m	KN/m
167	167	18	G1_power station	0.	0.	0.
167	167	203	G1_power station	0.	0.	0.
167	167	196	G1_power station	0.	0.	0.
167	167	72	G2_power station	0.	0.	0.
167	167	18	G2_power station	0.	0.	0.
167	167	203	G2_power station	0.	0.	0.
167	167	196	G2_power station	0.	0.	0.
167	167	72	Q_power station	0.	0.	0.
167	167	18	Q_power station	0.	0.	0.
167	167	203	Q_power station	0.	0.	0.
167	167	196	Q_power station	0.	0.	0.
167	167	72	Q_neve	0.	0.	0.
167	167	18	Q_neve	0.	0.	0.
167	167	203	Q_neve	0.	0.	0.
167	167	196	Q_neve	0.	0.	0.
167	167	72	Q_manutenzione	0.	0.	0.
167	167	18	Q_manutenzione	0.	0.	0.
167	167	203	Q_manutenzione	0.	0.	0.
167	167	196	Q_manutenzione	0.	0.	0.
167	167	72	EQ_X	-3.95	-1.2	5.46
167	167	18	EQ_X	11.62	1.91	4.49
167	167	203	EQ_X	11.37	0.66	2.62
167	167	196	EQ_X	-4.2	-2.46	3.59
167	167	72	EQ_Y	-0.49	13.6	4.26
167	167	18	EQ_Y	0.16	13.73	5.9
167	167	203	EQ_Y	-2.71	-0.63	7.63
167	167	196	EQ_Y	-3.36	-0.76	5.99
168	168	196	DEAD	0.	0.	0.
168	168	203	DEAD	0.	0.	0.
168	168	204	DEAD	0.	0.	0.
168	168	197	DEAD	0.	0.	0.
168	168	196	G1_power station	0.	0.	0.
168	168	203	G1_power station	0.	0.	0.
168	168	204	G1_power station	0.	0.	0.
168	168	197	G1_power station	0.	0.	0.
168	168	196	G2_power station	0.	0.	0.
168	168	203	G2_power station	0.	0.	0.
168	168	204	G2_power station	0.	0.	0.
168	168	197	G2_power station	0.	0.	0.
168	168	196	Q_power station	0.	0.	0.
168	168	203	Q_power station	0.	0.	0.
168	168	204	Q_power station	0.	0.	0.
168	168	197	Q_power station	0.	0.	0.

Table 20: Element Forces - Area Shells, Part 1 of 3

Area	AreaElem	Joint	OutputCase	F11	F22	F12
				KN/m	KN/m	KN/m
168	168	196	Q_neve	0.	0.	0.
168	168	203	Q_neve	0.	0.	0.
168	168	204	Q_neve	0.	0.	0.
168	168	197	Q_neve	0.	0.	0.
168	168	196	Q_manutenzione	0.	0.	0.
168	168	203	Q_manutenzione	0.	0.	0.
168	168	204	Q_manutenzione	0.	0.	0.
168	168	197	Q_manutenzione	0.	0.	0.
168	168	196	EQ_X	-0.19	-1.66	2.59
168	168	203	EQ_X	2.91	-1.04	1.94
168	168	204	EQ_X	3.18	0.34	0.5
168	168	197	EQ_X	8.235E-02	-0.28	1.15
168	168	196	EQ_Y	-1.11	-0.31	5.83
168	168	203	EQ_Y	-3.26	-0.74	4.17
168	168	204	EQ_Y	-3.25	-0.68	2.75
168	168	197	EQ_Y	-1.1	-0.25	4.41
169	169	197	DEAD	0.	0.	0.
169	169	204	DEAD	0.	0.	0.
169	169	205	DEAD	0.	0.	0.
169	169	198	DEAD	0.	0.	0.
169	169	197	G1_power station	0.	0.	0.
169	169	204	G1_power station	0.	0.	0.
169	169	205	G1_power station	0.	0.	0.
169	169	198	G1_power station	0.	0.	0.
169	169	197	G2_power station	0.	0.	0.
169	169	204	G2_power station	0.	0.	0.
169	169	205	G2_power station	0.	0.	0.
169	169	198	G2_power station	0.	0.	0.
169	169	197	Q_power station	0.	0.	0.
169	169	204	Q_power station	0.	0.	0.
169	169	205	Q_power station	0.	0.	0.
169	169	198	Q_power station	0.	0.	0.
169	169	197	Q_neve	0.	0.	0.
169	169	204	Q_neve	0.	0.	0.
169	169	205	Q_neve	0.	0.	0.
169	169	198	Q_neve	0.	0.	0.
169	169	197	Q_manutenzione	0.	0.	0.
169	169	204	Q_manutenzione	0.	0.	0.
169	169	205	Q_manutenzione	0.	0.	0.
169	169	198	Q_manutenzione	0.	0.	0.
169	169	197	EQ_X	-5.634E-02	-0.31	0.84
169	169	204	EQ_X	1.5	-8.046E-04	0.78
169	169	205	EQ_X	1.61	0.56	0.9

Table 20: Element Forces - Area Shells, Part 1 of 3

Area	AreaElem	Joint	OutputCase	F11	F22	F12
				KN/m	KN/m	KN/m
169	169	198	EQ_X	5.489E-02	0.24	0.96
169	169	197	EQ_Y	-2.02	-0.43	3.77
169	169	204	EQ_Y	-4.75	-0.98	3.22
169	169	205	EQ_Y	-4.95	-1.97	3.5
169	169	198	EQ_Y	-2.22	-1.42	4.04
170	170	198	DEAD	0.	0.	0.
170	170	205	DEAD	0.	0.	0.
170	170	206	DEAD	0.	0.	0.
170	170	199	DEAD	0.	0.	0.
170	170	198	G1_power station	0.	0.	0.
170	170	205	G1_power station	0.	0.	0.
170	170	206	G1_power station	0.	0.	0.
170	170	199	G1_power station	0.	0.	0.
170	170	198	G2_power station	0.	0.	0.
170	170	205	G2_power station	0.	0.	0.
170	170	206	G2_power station	0.	0.	0.
170	170	199	G2_power station	0.	0.	0.
170	170	198	Q_power station	0.	0.	0.
170	170	205	Q_power station	0.	0.	0.
170	170	206	Q_power station	0.	0.	0.
170	170	199	Q_power station	0.	0.	0.
170	170	198	Q_neve	0.	0.	0.
170	170	205	Q_neve	0.	0.	0.
170	170	206	Q_neve	0.	0.	0.
170	170	199	Q_neve	0.	0.	0.
170	170	198	Q_manutenzione	0.	0.	0.
170	170	205	Q_manutenzione	0.	0.	0.
170	170	206	Q_manutenzione	0.	0.	0.
170	170	199	Q_manutenzione	0.	0.	0.
170	170	198	EQ_X	-0.13	0.21	0.9
170	170	205	EQ_X	1.21	0.48	0.73
170	170	206	EQ_X	1.23	0.58	0.55
170	170	199	EQ_X	-0.11	0.31	0.72
170	170	198	EQ_Y	-1.94	-1.36	3.75
170	170	205	EQ_Y	-6.99	-2.37	3.16
170	170	206	EQ_Y	-7.09	-2.9	2.58
170	170	199	EQ_Y	-2.04	-1.89	3.16
171	171	199	DEAD	0.	0.	0.
171	171	206	DEAD	0.	0.	0.
171	171	207	DEAD	0.	0.	0.
171	171	200	DEAD	0.	0.	0.
171	171	199	G1_power station	0.	0.	0.
171	171	206	G1_power station	0.	0.	0.

Table 20: Element Forces - Area Shells, Part 1 of 3

Area	AreaElem	Joint	OutputCase	F11	F22	F12
				KN/m	KN/m	KN/m
171	171	207	G1_power station	0.	0.	0.
171	171	200	G1_power station	0.	0.	0.
171	171	199	G2_power station	0.	0.	0.
171	171	206	G2_power station	0.	0.	0.
171	171	207	G2_power station	0.	0.	0.
171	171	200	G2_power station	0.	0.	0.
171	171	199	Q_power station	0.	0.	0.
171	171	206	Q_power station	0.	0.	0.
171	171	207	Q_power station	0.	0.	0.
171	171	200	Q_power station	0.	0.	0.
171	171	199	Q_neve	0.	0.	0.
171	171	206	Q_neve	0.	0.	0.
171	171	207	Q_neve	0.	0.	0.
171	171	200	Q_neve	0.	0.	0.
171	171	199	Q_manutenzione	0.	0.	0.
171	171	206	Q_manutenzione	0.	0.	0.
171	171	207	Q_manutenzione	0.	0.	0.
171	171	200	Q_manutenzione	0.	0.	0.
171	171	199	EQ_X	-0.36	0.26	0.64
171	171	206	EQ_X	0.81	0.49	0.5
171	171	207	EQ_X	0.86	0.76	0.38
171	171	200	EQ_X	-0.3	0.52	0.52
171	171	199	EQ_Y	-0.97	-1.68	2.78
171	171	206	EQ_Y	-7.79	-3.04	2.72
171	171	207	EQ_Y	-8.06	-4.39	3.22
171	171	200	EQ_Y	-1.24	-3.02	3.27
172	172	200	DEAD	0.	0.	0.
172	172	207	DEAD	0.	0.	0.
172	172	208	DEAD	0.	0.	0.
172	172	201	DEAD	0.	0.	0.
172	172	200	G1_power station	0.	0.	0.
172	172	207	G1_power station	0.	0.	0.
172	172	208	G1_power station	0.	0.	0.
172	172	201	G1_power station	0.	0.	0.
172	172	200	G2_power station	0.	0.	0.
172	172	207	G2_power station	0.	0.	0.
172	172	208	G2_power station	0.	0.	0.
172	172	201	G2_power station	0.	0.	0.
172	172	200	Q_power station	0.	0.	0.
172	172	207	Q_power station	0.	0.	0.
172	172	208	Q_power station	0.	0.	0.
172	172	201	Q_power station	0.	0.	0.
172	172	200	Q_neve	0.	0.	0.

Table 20: Element Forces - Area Shells, Part 1 of 3

Area	AreaElem	Joint	OutputCase	F11	F22	F12
				KN/m	KN/m	KN/m
172	172	207	Q_neve	0.	0.	0.
172	172	208	Q_neve	0.	0.	0.
172	172	201	Q_neve	0.	0.	0.
172	172	200	Q_manutenzione	0.	0.	0.
172	172	207	Q_manutenzione	0.	0.	0.
172	172	208	Q_manutenzione	0.	0.	0.
172	172	201	Q_manutenzione	0.	0.	0.
172	172	200	EQ_X	-0.76	0.43	0.71
172	172	207	EQ_X	-0.21	0.54	0.14
172	172	208	EQ_X	-0.16	0.81	0.47
172	172	201	EQ_X	-0.71	0.7	1.04
172	172	200	EQ_Y	1.71	-2.43	1.87
172	172	207	EQ_Y	-5.43	-3.86	4.02
172	172	208	EQ_Y	-5.65	-4.97	1.45
172	172	201	EQ_Y	1.49	-3.54	-0.7
173	173	201	DEAD	0.	0.	0.
173	173	208	DEAD	0.	0.	0.
173	173	34	DEAD	0.	0.	0.
173	173	202	DEAD	0.	0.	0.
173	173	201	G1_power station	0.	0.	0.
173	173	208	G1_power station	0.	0.	0.
173	173	34	G1_power station	0.	0.	0.
173	173	202	G1_power station	0.	0.	0.
173	173	201	G2_power station	0.	0.	0.
173	173	208	G2_power station	0.	0.	0.
173	173	34	G2_power station	0.	0.	0.
173	173	202	G2_power station	0.	0.	0.
173	173	201	Q_power station	0.	0.	0.
173	173	208	Q_power station	0.	0.	0.
173	173	34	Q_power station	0.	0.	0.
173	173	202	Q_power station	0.	0.	0.
173	173	201	Q_neve	0.	0.	0.
173	173	208	Q_neve	0.	0.	0.
173	173	34	Q_neve	0.	0.	0.
173	173	202	Q_neve	0.	0.	0.
173	173	201	Q_manutenzione	0.	0.	0.
173	173	208	Q_manutenzione	0.	0.	0.
173	173	34	Q_manutenzione	0.	0.	0.
173	173	202	Q_manutenzione	0.	0.	0.
173	173	201	EQ_X	0.56	0.95	1.01
173	173	208	EQ_X	-2.74	0.29	0.64
173	173	34	EQ_X	-3.67	-4.33	1.62
173	173	202	EQ_X	-0.37	-3.67	1.98

Table 20: Element Forces - Area Shells, Part 1 of 3

Area	AreaElem	Joint	OutputCase	F11	F22	F12
				KN/m	KN/m	KN/m
173	173	201	EQ_Y	-2.36	-4.31	-2.
173	173	208	EQ_Y	4.83	-2.88	-6.495E-02
173	173	34	EQ_Y	8.96	17.77	-3.73
173	173	202	EQ_Y	1.76	16.33	-5.67
174	174	58	DEAD	0.	0.	0.
174	174	57	DEAD	0.	0.	0.
174	174	209	DEAD	0.	0.	0.
174	174	143	DEAD	0.	0.	0.
174	174	58	G1_power station	0.	0.	0.
174	174	57	G1_power station	0.	0.	0.
174	174	209	G1_power station	0.	0.	0.
174	174	143	G1_power station	0.	0.	0.
174	174	58	G2_power station	0.	0.	0.
174	174	57	G2_power station	0.	0.	0.
174	174	209	G2_power station	0.	0.	0.
174	174	143	G2_power station	0.	0.	0.
174	174	58	Q_power station	0.	0.	0.
174	174	57	Q_power station	0.	0.	0.
174	174	209	Q_power station	0.	0.	0.
174	174	143	Q_power station	0.	0.	0.
174	174	58	Q_neve	0.	0.	0.
174	174	57	Q_neve	0.	0.	0.
174	174	209	Q_neve	0.	0.	0.
174	174	143	Q_neve	0.	0.	0.
174	174	58	Q_manutenzione	0.	0.	0.
174	174	57	Q_manutenzione	0.	0.	0.
174	174	209	Q_manutenzione	0.	0.	0.
174	174	143	Q_manutenzione	0.	0.	0.
174	174	58	EQ_X	-11.98	-1.94	1.24
174	174	57	EQ_X	5.67	1.59	3.86
174	174	209	EQ_X	6.16	4.03	2.08
174	174	143	EQ_X	-11.49	0.5	-0.54
174	174	58	EQ_Y	5.49	11.91	-3.34
174	174	57	EQ_Y	-6.14	9.58	-0.76
174	174	209	EQ_Y	-8.59	-2.7	-1.14
174	174	143	EQ_Y	3.04	-0.37	-3.72
175	175	143	DEAD	0.	0.	0.
175	175	209	DEAD	0.	0.	0.
175	175	210	DEAD	0.	0.	0.
175	175	144	DEAD	0.	0.	0.
175	175	143	G1_power station	0.	0.	0.
175	175	209	G1_power station	0.	0.	0.
175	175	210	G1_power station	0.	0.	0.

Table 20: Element Forces - Area Shells, Part 1 of 3

Area	AreaElem	Joint	OutputCase	F11	F22	F12
				KN/m	KN/m	KN/m
175	175	144	G1_power station	0.	0.	0.
175	175	143	G2_power station	0.	0.	0.
175	175	209	G2_power station	0.	0.	0.
175	175	210	G2_power station	0.	0.	0.
175	175	144	G2_power station	0.	0.	0.
175	175	143	Q_power station	0.	0.	0.
175	175	209	Q_power station	0.	0.	0.
175	175	210	Q_power station	0.	0.	0.
175	175	144	Q_power station	0.	0.	0.
175	175	143	Q_neve	0.	0.	0.
175	175	209	Q_neve	0.	0.	0.
175	175	210	Q_neve	0.	0.	0.
175	175	144	Q_neve	0.	0.	0.
175	175	143	Q_manutenzione	0.	0.	0.
175	175	209	Q_manutenzione	0.	0.	0.
175	175	210	Q_manutenzione	0.	0.	0.
175	175	144	Q_manutenzione	0.	0.	0.
175	175	143	EQ_X	-3.3	2.14	0.12
175	175	209	EQ_X	-0.13	2.77	0.47
175	175	210	EQ_X	-0.6	0.45	-0.46
175	175	144	EQ_X	-3.76	-0.18	-0.81
175	175	143	EQ_Y	9.46	0.91	0.36
175	175	209	EQ_Y	-10.5	-3.08	1.08
175	175	210	EQ_Y	-9.84	0.21	3.78
175	175	144	EQ_Y	10.12	4.2	3.05
176	176	144	DEAD	0.	0.	0.
176	176	210	DEAD	0.	0.	0.
176	176	35	DEAD	0.	0.	0.
176	176	30	DEAD	0.	0.	0.
176	176	144	G1_power station	0.	0.	0.
176	176	210	G1_power station	0.	0.	0.
176	176	35	G1_power station	0.	0.	0.
176	176	30	G1_power station	0.	0.	0.
176	176	144	G2_power station	0.	0.	0.
176	176	210	G2_power station	0.	0.	0.
176	176	35	G2_power station	0.	0.	0.
176	176	30	G2_power station	0.	0.	0.
176	176	144	Q_power station	0.	0.	0.
176	176	210	Q_power station	0.	0.	0.
176	176	35	Q_power station	0.	0.	0.
176	176	30	Q_power station	0.	0.	0.
176	176	144	Q_neve	0.	0.	0.
176	176	210	Q_neve	0.	0.	0.

Table 20: Element Forces - Area Shells, Part 1 of 3

Area	AreaElem	Joint	OutputCase	F11	F22	F12
				KN/m	KN/m	KN/m
176	176	35	Q_neve	0.	0.	0.
176	176	30	Q_neve	0.	0.	0.
176	176	144	Q_manutenzione	0.	0.	0.
176	176	210	Q_manutenzione	0.	0.	0.
176	176	35	Q_manutenzione	0.	0.	0.
176	176	30	Q_manutenzione	0.	0.	0.
176	176	144	EQ_X	-2.75	2.079E-02	-0.53
176	176	210	EQ_X	0.22	0.61	-0.85
176	176	35	EQ_X	2.532E-02	-0.35	-0.44
176	176	30	EQ_X	-2.94	-0.95	-0.12
176	176	144	EQ_Y	25.17	7.21	0.85
176	176	210	EQ_Y	-25.27	-2.88	6.59
176	176	35	EQ_Y	-22.51	10.91	2.01
176	176	30	EQ_Y	27.93	21.	-3.73
177	177	27	DEAD	0.	0.	0.
177	177	26	DEAD	0.	0.	0.
177	177	211	DEAD	0.	0.	0.
177	177	212	DEAD	0.	0.	0.
177	177	27	G1_power station	0.	0.	0.
177	177	26	G1_power station	0.	0.	0.
177	177	211	G1_power station	0.	0.	0.
177	177	212	G1_power station	0.	0.	0.
177	177	27	G2_power station	0.	0.	0.
177	177	26	G2_power station	0.	0.	0.
177	177	211	G2_power station	0.	0.	0.
177	177	212	G2_power station	0.	0.	0.
177	177	27	Q_power station	0.	0.	0.
177	177	26	Q_power station	0.	0.	0.
177	177	211	Q_power station	0.	0.	0.
177	177	212	Q_power station	0.	0.	0.
177	177	27	Q_neve	0.	0.	0.
177	177	26	Q_neve	0.	0.	0.
177	177	211	Q_neve	0.	0.	0.
177	177	212	Q_neve	0.	0.	0.
177	177	27	Q_manutenzione	0.	0.	0.
177	177	26	Q_manutenzione	0.	0.	0.
177	177	211	Q_manutenzione	0.	0.	0.
177	177	212	Q_manutenzione	0.	0.	0.
177	177	27	EQ_X	-7.48	0.32	0.4
177	177	26	EQ_X	3.21	2.46	0.62
177	177	211	EQ_X	2.87	0.74	0.94
177	177	212	EQ_X	-7.82	-1.4	0.71
177	177	27	EQ_Y	55.5	6.78	0.72

Table 20: Element Forces - Area Shells, Part 1 of 3

Area	AreaElem	Joint	OutputCase	F11	F22	F12
				KN/m	KN/m	KN/m
177	177	26	EQ_Y	-26.17	-9.55	1.46
177	177	211	EQ_Y	-25.32	-5.28	-0.46
177	177	212	EQ_Y	56.36	11.06	-1.19
178	178	212	DEAD	0.	0.	0.
178	178	211	DEAD	0.	0.	0.
178	178	213	DEAD	0.	0.	0.
178	178	214	DEAD	0.	0.	0.
178	178	212	G1_power station	0.	0.	0.
178	178	211	G1_power station	0.	0.	0.
178	178	213	G1_power station	0.	0.	0.
178	178	214	G1_power station	0.	0.	0.
178	178	212	G2_power station	0.	0.	0.
178	178	211	G2_power station	0.	0.	0.
178	178	213	G2_power station	0.	0.	0.
178	178	214	G2_power station	0.	0.	0.
178	178	212	Q_power station	0.	0.	0.
178	178	211	Q_power station	0.	0.	0.
178	178	213	Q_power station	0.	0.	0.
178	178	214	Q_power station	0.	0.	0.
178	178	212	Q_neve	0.	0.	0.
178	178	211	Q_neve	0.	0.	0.
178	178	213	Q_neve	0.	0.	0.
178	178	214	Q_neve	0.	0.	0.
178	178	212	Q_manutenzione	0.	0.	0.
178	178	211	Q_manutenzione	0.	0.	0.
178	178	213	Q_manutenzione	0.	0.	0.
178	178	214	Q_manutenzione	0.	0.	0.
178	178	212	EQ_X	-3.92	-0.62	0.73
178	178	211	EQ_X	-0.76	1.367E-02	0.62
178	178	213	EQ_X	-0.69	0.39	0.56
178	178	214	EQ_X	-3.84	-0.24	0.66
178	178	212	EQ_Y	46.81	9.15	-2.17
178	178	211	EQ_Y	-16.57	-3.53	-3.36
178	178	213	EQ_Y	-16.63	-3.83	-4.46
178	178	214	EQ_Y	46.75	8.84	-3.27
179	179	214	DEAD	0.	0.	0.
179	179	213	DEAD	0.	0.	0.
179	179	215	DEAD	0.	0.	0.
179	179	216	DEAD	0.	0.	0.
179	179	214	G1_power station	0.	0.	0.
179	179	213	G1_power station	0.	0.	0.
179	179	215	G1_power station	0.	0.	0.
179	179	216	G1_power station	0.	0.	0.

Table 20: Element Forces - Area Shells, Part 1 of 3

Area	AreaElem	Joint	OutputCase	F11	F22	F12
				KN/m	KN/m	KN/m
179	179	214	G2_power station	0.	0.	0.
179	179	213	G2_power station	0.	0.	0.
179	179	215	G2_power station	0.	0.	0.
179	179	216	G2_power station	0.	0.	0.
179	179	214	Q_power station	0.	0.	0.
179	179	213	Q_power station	0.	0.	0.
179	179	215	Q_power station	0.	0.	0.
179	179	216	Q_power station	0.	0.	0.
179	179	214	Q_neve	0.	0.	0.
179	179	213	Q_neve	0.	0.	0.
179	179	215	Q_neve	0.	0.	0.
179	179	216	Q_neve	0.	0.	0.
179	179	214	Q_manutenzione	0.	0.	0.
179	179	213	Q_manutenzione	0.	0.	0.
179	179	215	Q_manutenzione	0.	0.	0.
179	179	216	Q_manutenzione	0.	0.	0.
179	179	214	EQ_X	-0.51	0.42	0.55
179	179	213	EQ_X	-4.14	-0.3	0.58
179	179	215	EQ_X	-4.09	-5.351E-02	0.55
179	179	216	EQ_X	-0.46	0.67	0.52
179	179	214	EQ_Y	18.53	3.2	-6.85
179	179	213	EQ_Y	12.59	2.01	-5.11
179	179	215	EQ_Y	11.66	-2.68	-6.69
179	179	216	EQ_Y	17.59	-1.49	-8.43
180	180	216	DEAD	0.	0.	0.
180	180	215	DEAD	0.	0.	0.
180	180	30	DEAD	0.	0.	0.
180	180	35	DEAD	0.	0.	0.
180	180	216	G1_power station	0.	0.	0.
180	180	215	G1_power station	0.	0.	0.
180	180	30	G1_power station	0.	0.	0.
180	180	35	G1_power station	0.	0.	0.
180	180	216	G2_power station	0.	0.	0.
180	180	215	G2_power station	0.	0.	0.
180	180	30	G2_power station	0.	0.	0.
180	180	35	G2_power station	0.	0.	0.
180	180	216	Q_power station	0.	0.	0.
180	180	215	Q_power station	0.	0.	0.
180	180	30	Q_power station	0.	0.	0.
180	180	35	Q_power station	0.	0.	0.
180	180	216	Q_neve	0.	0.	0.
180	180	215	Q_neve	0.	0.	0.
180	180	30	Q_neve	0.	0.	0.

Table 20: Element Forces - Area Shells, Part 1 of 3

Area	AreaElem	Joint	OutputCase	F11	F22	F12
				KN/m	KN/m	KN/m
180	180	35	Q_neve	0.	0.	0.
180	180	216	Q_manutenzione	0.	0.	0.
180	180	215	Q_manutenzione	0.	0.	0.
180	180	30	Q_manutenzione	0.	0.	0.
180	180	35	Q_manutenzione	0.	0.	0.
180	180	216	EQ_X	2.39	1.24	0.45
180	180	215	EQ_X	-6.76	-0.59	0.51
180	180	30	EQ_X	-6.99	-1.76	0.38
180	180	35	EQ_X	2.15	7.371E-02	0.32
180	180	216	EQ_Y	-32.27	-11.46	-9.18
180	180	215	EQ_Y	58.2	6.63	-12.29
180	180	30	EQ_Y	62.45	27.9	-10.91
180	180	35	EQ_Y	-28.01	9.81	-7.8
181	181	63	DEAD	0.	0.	0.
181	181	64	DEAD	0.	0.	0.
181	181	217	DEAD	0.	0.	0.
181	181	125	DEAD	0.	0.	0.
181	181	63	G1_power station	0.	0.	0.
181	181	64	G1_power station	0.	0.	0.
181	181	217	G1_power station	0.	0.	0.
181	181	125	G1_power station	0.	0.	0.
181	181	63	G2_power station	0.	0.	0.
181	181	64	G2_power station	0.	0.	0.
181	181	217	G2_power station	0.	0.	0.
181	181	125	G2_power station	0.	0.	0.
181	181	63	Q_power station	0.	0.	0.
181	181	64	Q_power station	0.	0.	0.
181	181	217	Q_power station	0.	0.	0.
181	181	125	Q_power station	0.	0.	0.
181	181	63	Q_neve	0.	0.	0.
181	181	64	Q_neve	0.	0.	0.
181	181	217	Q_neve	0.	0.	0.
181	181	125	Q_neve	0.	0.	0.
181	181	63	Q_manutenzione	0.	0.	0.
181	181	64	Q_manutenzione	0.	0.	0.
181	181	217	Q_manutenzione	0.	0.	0.
181	181	125	Q_manutenzione	0.	0.	0.
181	181	63	EQ_X	11.7	2.33	-1.65
181	181	64	EQ_X	-4.39	-0.89	-4.27
181	181	217	EQ_X	-4.92	-3.52	-2.47
181	181	125	EQ_X	11.17	-0.3	0.15
181	181	63	EQ_Y	-4.69	-10.6	4.73
181	181	64	EQ_Y	0.97	-9.47	2.35

Table 20: Element Forces - Area Shells, Part 1 of 3

Area	AreaElem	Joint	OutputCase	F11	F22	F12
				KN/m	KN/m	KN/m
181	181	217	EQ_Y	3.48	3.06	3.52
181	181	125	EQ_Y	-2.18	1.93	5.9
182	182	125	DEAD	0.	0.	0.
182	182	217	DEAD	0.	0.	0.
182	182	218	DEAD	0.	0.	0.
182	182	126	DEAD	0.	0.	0.
182	182	125	G1_power station	0.	0.	0.
182	182	217	G1_power station	0.	0.	0.
182	182	218	G1_power station	0.	0.	0.
182	182	126	G1_power station	0.	0.	0.
182	182	125	G2_power station	0.	0.	0.
182	182	217	G2_power station	0.	0.	0.
182	182	218	G2_power station	0.	0.	0.
182	182	126	G2_power station	0.	0.	0.
182	182	125	Q_power station	0.	0.	0.
182	182	217	Q_power station	0.	0.	0.
182	182	218	Q_power station	0.	0.	0.
182	182	126	Q_power station	0.	0.	0.
182	182	125	Q_neve	0.	0.	0.
182	182	217	Q_neve	0.	0.	0.
182	182	218	Q_neve	0.	0.	0.
182	182	126	Q_neve	0.	0.	0.
182	182	125	Q_manutenzione	0.	0.	0.
182	182	217	Q_manutenzione	0.	0.	0.
182	182	218	Q_manutenzione	0.	0.	0.
182	182	126	Q_manutenzione	0.	0.	0.
182	182	125	EQ_X	2.72	-1.99	-0.53
182	182	217	EQ_X	2.63	-2.01	-0.57
182	182	218	EQ_X	3.09	0.27	0.26
182	182	126	EQ_X	3.17	0.29	0.31
182	182	125	EQ_Y	-2.73	1.82	2.43
182	182	217	EQ_Y	-5.91	1.18	2.72
182	182	218	EQ_Y	-6.57	-2.13	1.89
182	182	126	EQ_Y	-3.39	-1.49	1.61
183	183	126	DEAD	0.	0.	0.
183	183	218	DEAD	0.	0.	0.
183	183	219	DEAD	0.	0.	0.
183	183	127	DEAD	0.	0.	0.
183	183	126	G1_power station	0.	0.	0.
183	183	218	G1_power station	0.	0.	0.
183	183	219	G1_power station	0.	0.	0.
183	183	127	G1_power station	0.	0.	0.
183	183	126	G2_power station	0.	0.	0.

Table 20: Element Forces - Area Shells, Part 1 of 3

Area	AreaElem	Joint	OutputCase	F11	F22	F12
				KN/m	KN/m	KN/m
183	183	218	G2_power station	0.	0.	0.
183	183	219	G2_power station	0.	0.	0.
183	183	127	G2_power station	0.	0.	0.
183	183	126	Q_power station	0.	0.	0.
183	183	218	Q_power station	0.	0.	0.
183	183	219	Q_power station	0.	0.	0.
183	183	127	Q_power station	0.	0.	0.
183	183	126	Q_neve	0.	0.	0.
183	183	218	Q_neve	0.	0.	0.
183	183	219	Q_neve	0.	0.	0.
183	183	127	Q_neve	0.	0.	0.
183	183	126	Q_manutenzione	0.	0.	0.
183	183	218	Q_manutenzione	0.	0.	0.
183	183	219	Q_manutenzione	0.	0.	0.
183	183	127	Q_manutenzione	0.	0.	0.
183	183	126	EQ_X	1.48	-4.980E-02	0.58
183	183	218	EQ_X	3.2	0.29	0.31
183	183	219	EQ_X	3.21	0.32	0.29
183	183	127	EQ_X	1.49	-2.057E-02	0.55
183	183	126	EQ_Y	-4.89	-1.79	2.08
183	183	218	EQ_Y	-10.01	-2.82	0.95
183	183	219	EQ_Y	-9.88	-2.15	0.74
183	183	127	EQ_Y	-4.75	-1.12	1.87
184	184	127	DEAD	0.	0.	0.
184	184	219	DEAD	0.	0.	0.
184	184	220	DEAD	0.	0.	0.
184	184	128	DEAD	0.	0.	0.
184	184	127	G1_power station	0.	0.	0.
184	184	219	G1_power station	0.	0.	0.
184	184	220	G1_power station	0.	0.	0.
184	184	128	G1_power station	0.	0.	0.
184	184	127	G2_power station	0.	0.	0.
184	184	219	G2_power station	0.	0.	0.
184	184	220	G2_power station	0.	0.	0.
184	184	128	G2_power station	0.	0.	0.
184	184	127	Q_power station	0.	0.	0.
184	184	219	Q_power station	0.	0.	0.
184	184	220	Q_power station	0.	0.	0.
184	184	128	Q_power station	0.	0.	0.
184	184	127	Q_neve	0.	0.	0.
184	184	219	Q_neve	0.	0.	0.
184	184	220	Q_neve	0.	0.	0.
184	184	128	Q_neve	0.	0.	0.

Table 20: Element Forces - Area Shells, Part 1 of 3

Area	AreaElem	Joint	OutputCase	F11	F22	F12
				KN/m	KN/m	KN/m
184	184	127	Q_manutenzione	0.	0.	0.
184	184	219	Q_manutenzione	0.	0.	0.
184	184	220	Q_manutenzione	0.	0.	0.
184	184	128	Q_manutenzione	0.	0.	0.
184	184	127	EQ_X	1.09	-0.1	0.38
184	184	219	EQ_X	2.38	0.16	0.34
184	184	220	EQ_X	2.43	0.4	0.29
184	184	128	EQ_X	1.14	0.14	0.33
184	184	127	EQ_Y	-6.78	-1.53	1.53
184	184	219	EQ_Y	-12.66	-2.7	1.13
184	184	220	EQ_Y	-12.63	-2.58	1.47
184	184	128	EQ_Y	-6.76	-1.4	1.87
185	185	128	DEAD	0.	0.	0.
185	185	220	DEAD	0.	0.	0.
185	185	221	DEAD	0.	0.	0.
185	185	129	DEAD	0.	0.	0.
185	185	128	G1_power station	0.	0.	0.
185	185	220	G1_power station	0.	0.	0.
185	185	221	G1_power station	0.	0.	0.
185	185	129	G1_power station	0.	0.	0.
185	185	128	G2_power station	0.	0.	0.
185	185	220	G2_power station	0.	0.	0.
185	185	221	G2_power station	0.	0.	0.
185	185	129	G2_power station	0.	0.	0.
185	185	128	Q_power station	0.	0.	0.
185	185	220	Q_power station	0.	0.	0.
185	185	221	Q_power station	0.	0.	0.
185	185	129	Q_power station	0.	0.	0.
185	185	128	Q_neve	0.	0.	0.
185	185	220	Q_neve	0.	0.	0.
185	185	221	Q_neve	0.	0.	0.
185	185	129	Q_neve	0.	0.	0.
185	185	128	Q_manutenzione	0.	0.	0.
185	185	220	Q_manutenzione	0.	0.	0.
185	185	221	Q_manutenzione	0.	0.	0.
185	185	129	Q_manutenzione	0.	0.	0.
185	185	128	EQ_X	0.72	5.507E-02	0.27
185	185	220	EQ_X	2.02	0.32	9.560E-02
185	185	221	EQ_X	2.04	0.39	-5.135E-02
185	185	129	EQ_X	0.73	0.13	0.13
185	185	128	EQ_Y	-7.46	-1.54	2.01
185	185	220	EQ_Y	-17.04	-3.46	1.84
185	185	221	EQ_Y	-17.01	-3.33	2.2

Table 20: Element Forces - Area Shells, Part 1 of 3

Area	AreaElem	Joint	OutputCase	F11	F22	F12
				KN/m	KN/m	KN/m
185	185	129	EQ_Y	-7.44	-1.42	2.37
186	186	129	DEAD	0.	0.	0.
186	186	221	DEAD	0.	0.	0.
186	186	222	DEAD	0.	0.	0.
186	186	130	DEAD	0.	0.	0.
186	186	129	G1_power station	0.	0.	0.
186	186	221	G1_power station	0.	0.	0.
186	186	222	G1_power station	0.	0.	0.
186	186	130	G1_power station	0.	0.	0.
186	186	129	G2_power station	0.	0.	0.
186	186	221	G2_power station	0.	0.	0.
186	186	222	G2_power station	0.	0.	0.
186	186	130	G2_power station	0.	0.	0.
186	186	129	Q_power station	0.	0.	0.
186	186	221	Q_power station	0.	0.	0.
186	186	222	Q_power station	0.	0.	0.
186	186	130	Q_power station	0.	0.	0.
186	186	129	Q_neve	0.	0.	0.
186	186	221	Q_neve	0.	0.	0.
186	186	222	Q_neve	0.	0.	0.
186	186	130	Q_neve	0.	0.	0.
186	186	129	Q_manutenzione	0.	0.	0.
186	186	221	Q_manutenzione	0.	0.	0.
186	186	222	Q_manutenzione	0.	0.	0.
186	186	130	Q_manutenzione	0.	0.	0.
186	186	129	EQ_X	-0.34	-8.141E-02	-0.11
186	186	221	EQ_X	2.87	0.56	-0.23
186	186	222	EQ_X	2.94	0.92	-0.61
186	186	130	EQ_X	-0.27	0.28	-0.49
186	186	129	EQ_Y	-4.84	-0.9	3.17
186	186	221	EQ_Y	-26.1	-5.15	2.9
186	186	222	EQ_Y	-26.32	-6.21	4.66
186	186	130	EQ_Y	-5.05	-1.96	4.93
187	187	130	DEAD	0.	0.	0.
187	187	222	DEAD	0.	0.	0.
187	187	36	DEAD	0.	0.	0.
187	187	29	DEAD	0.	0.	0.
187	187	130	G1_power station	0.	0.	0.
187	187	222	G1_power station	0.	0.	0.
187	187	36	G1_power station	0.	0.	0.
187	187	29	G1_power station	0.	0.	0.
187	187	130	G2_power station	0.	0.	0.
187	187	222	G2_power station	0.	0.	0.

Table 20: Element Forces - Area Shells, Part 1 of 3

Area	AreaElem	Joint	OutputCase	F11	F22	F12
				KN/m	KN/m	KN/m
187	187	36	G2_power station	0.	0.	0.
187	187	29	G2_power station	0.	0.	0.
187	187	130	Q_power station	0.	0.	0.
187	187	222	Q_power station	0.	0.	0.
187	187	36	Q_power station	0.	0.	0.
187	187	29	Q_power station	0.	0.	0.
187	187	130	Q_neve	0.	0.	0.
187	187	222	Q_neve	0.	0.	0.
187	187	36	Q_neve	0.	0.	0.
187	187	29	Q_neve	0.	0.	0.
187	187	130	Q_manutenzione	0.	0.	0.
187	187	222	Q_manutenzione	0.	0.	0.
187	187	36	Q_manutenzione	0.	0.	0.
187	187	29	Q_manutenzione	0.	0.	0.
187	187	130	EQ_X	-2.83	-0.23	-0.32
187	187	222	EQ_X	5.84	1.5	-1.21
187	187	36	EQ_X	5.39	-0.73	-0.71
187	187	29	EQ_X	-3.28	-2.47	0.18
187	187	130	EQ_Y	5.32	0.11	3.42
187	187	222	EQ_Y	-44.63	-9.88	7.57
187	187	36	EQ_Y	-42.59	0.35	5.39
187	187	29	EQ_Y	7.37	10.34	1.24
188	188	28	DEAD	0.	0.	0.
188	188	25	DEAD	0.	0.	0.
188	188	223	DEAD	0.	0.	0.
188	188	224	DEAD	0.	0.	0.
188	188	28	G1_power station	0.	0.	0.
188	188	25	G1_power station	0.	0.	0.
188	188	223	G1_power station	0.	0.	0.
188	188	224	G1_power station	0.	0.	0.
188	188	28	G2_power station	0.	0.	0.
188	188	25	G2_power station	0.	0.	0.
188	188	223	G2_power station	0.	0.	0.
188	188	224	G2_power station	0.	0.	0.
188	188	28	Q_power station	0.	0.	0.
188	188	25	Q_power station	0.	0.	0.
188	188	223	Q_power station	0.	0.	0.
188	188	224	Q_power station	0.	0.	0.
188	188	28	Q_neve	0.	0.	0.
188	188	25	Q_neve	0.	0.	0.
188	188	223	Q_neve	0.	0.	0.
188	188	224	Q_neve	0.	0.	0.
188	188	28	Q_manutenzione	0.	0.	0.

Table 20: Element Forces - Area Shells, Part 1 of 3

Area	AreaElem	Joint	OutputCase	F11	F22	F12
				KN/m	KN/m	KN/m
188	188	25	Q_manutenzione	0.	0.	0.
188	188	223	Q_manutenzione	0.	0.	0.
188	188	224	Q_manutenzione	0.	0.	0.
188	188	28	EQ_X	-8.99	-6.976E-02	0.68
188	188	25	EQ_X	8.72	3.47	0.85
188	188	223	EQ_X	8.28	1.26	1.12
188	188	224	EQ_X	-9.43	-2.28	0.95
188	188	28	EQ_Y	28.78	-5.23	-5.78
188	188	25	EQ_Y	-62.28	-23.45	-8.1
188	188	223	EQ_Y	-58.92	-6.65	-9.43
188	188	224	EQ_Y	32.14	11.56	-7.11
189	189	224	DEAD	0.	0.	0.
189	189	223	DEAD	0.	0.	0.
189	189	225	DEAD	0.	0.	0.
189	189	226	DEAD	0.	0.	0.
189	189	224	G1_power station	0.	0.	0.
189	189	223	G1_power station	0.	0.	0.
189	189	225	G1_power station	0.	0.	0.
189	189	226	G1_power station	0.	0.	0.
189	189	224	G2_power station	0.	0.	0.
189	189	223	G2_power station	0.	0.	0.
189	189	225	G2_power station	0.	0.	0.
189	189	226	G2_power station	0.	0.	0.
189	189	224	Q_power station	0.	0.	0.
189	189	223	Q_power station	0.	0.	0.
189	189	225	Q_power station	0.	0.	0.
189	189	226	Q_power station	0.	0.	0.
189	189	224	Q_neve	0.	0.	0.
189	189	223	Q_neve	0.	0.	0.
189	189	225	Q_neve	0.	0.	0.
189	189	226	Q_neve	0.	0.	0.
189	189	224	Q_manutenzione	0.	0.	0.
189	189	223	Q_manutenzione	0.	0.	0.
189	189	225	Q_manutenzione	0.	0.	0.
189	189	226	Q_manutenzione	0.	0.	0.
189	189	224	EQ_X	-3.85	-1.16	1.
189	189	223	EQ_X	3.04	0.22	0.99
189	189	225	EQ_X	3.13	0.67	0.97
189	189	226	EQ_X	-3.75	-0.7	0.98
189	189	224	EQ_Y	-8.21	3.49	-7.04
189	189	223	EQ_Y	-21.24	0.89	-5.87
189	189	225	EQ_Y	-21.93	-2.55	-4.98
189	189	226	EQ_Y	-8.9	5.716E-02	-6.15

Table 20: Element Forces - Area Shells, Part 1 of 3

Area	AreaElem	Joint	OutputCase	F11	F22	F12
				KN/m	KN/m	KN/m
190	190	226	DEAD	0.	0.	0.
190	190	225	DEAD	0.	0.	0.
190	190	227	DEAD	0.	0.	0.
190	190	228	DEAD	0.	0.	0.
190	190	226	G1_power station	0.	0.	0.
190	190	225	G1_power station	0.	0.	0.
190	190	227	G1_power station	0.	0.	0.
190	190	228	G1_power station	0.	0.	0.
190	190	226	G2_power station	0.	0.	0.
190	190	225	G2_power station	0.	0.	0.
190	190	227	G2_power station	0.	0.	0.
190	190	228	G2_power station	0.	0.	0.
190	190	226	Q_power station	0.	0.	0.
190	190	225	Q_power station	0.	0.	0.
190	190	227	Q_power station	0.	0.	0.
190	190	228	Q_power station	0.	0.	0.
190	190	226	Q_neve	0.	0.	0.
190	190	225	Q_neve	0.	0.	0.
190	190	227	Q_neve	0.	0.	0.
190	190	228	Q_neve	0.	0.	0.
190	190	226	Q_manutenzione	0.	0.	0.
190	190	225	Q_manutenzione	0.	0.	0.
190	190	227	Q_manutenzione	0.	0.	0.
190	190	228	Q_manutenzione	0.	0.	0.
190	190	226	EQ_X	1.9	0.43	1.05
190	190	225	EQ_X	-2.7	-0.49	0.95
190	190	227	EQ_X	-2.61	-1.031E-02	1.01
190	190	228	EQ_X	1.99	0.91	1.11
190	190	226	EQ_Y	-37.72	-5.71	-4.18
190	190	225	EQ_Y	7.91	3.42	-4.79
190	190	227	EQ_Y	7.58	1.8	-4.39
190	190	228	EQ_Y	-38.05	-7.33	-3.78
191	191	228	DEAD	0.	0.	0.
191	191	227	DEAD	0.	0.	0.
191	191	29	DEAD	0.	0.	0.
191	191	36	DEAD	0.	0.	0.
191	191	228	G1_power station	0.	0.	0.
191	191	227	G1_power station	0.	0.	0.
191	191	29	G1_power station	0.	0.	0.
191	191	36	G1_power station	0.	0.	0.
191	191	228	G2_power station	0.	0.	0.
191	191	227	G2_power station	0.	0.	0.
191	191	29	G2_power station	0.	0.	0.

Table 20: Element Forces - Area Shells, Part 1 of 3

Area	AreaElem	Joint	OutputCase	F11	F22	F12
				KN/m	KN/m	KN/m
191	191	36	G2_power station	0.	0.	0.
191	191	228	Q_power station	0.	0.	0.
191	191	227	Q_power station	0.	0.	0.
191	191	29	Q_power station	0.	0.	0.
191	191	36	Q_power station	0.	0.	0.
191	191	228	Q_neve	0.	0.	0.
191	191	227	Q_neve	0.	0.	0.
191	191	29	Q_neve	0.	0.	0.
191	191	36	Q_neve	0.	0.	0.
191	191	228	Q_manutenzione	0.	0.	0.
191	191	227	Q_manutenzione	0.	0.	0.
191	191	29	Q_manutenzione	0.	0.	0.
191	191	36	Q_manutenzione	0.	0.	0.
191	191	228	EQ_X	8.1	2.13	1.07
191	191	227	EQ_X	-8.32	-1.15	1.34
191	191	29	EQ_X	-8.81	-3.57	0.99
191	191	36	EQ_X	7.61	-0.29	0.72
191	191	228	EQ_Y	-58.18	-11.36	-3.46
191	191	227	EQ_Y	26.26	5.53	-3.57
191	191	29	EQ_Y	28.05	14.47	-1.48
191	191	36	EQ_Y	-56.4	-2.42	-1.37
192	192	9	DEAD	0.	0.	0.
192	192	8	DEAD	0.	0.	0.
192	192	229	DEAD	0.	0.	0.
192	192	173	DEAD	0.	0.	0.
192	192	9	G1_power station	0.	0.	0.
192	192	8	G1_power station	0.	0.	0.
192	192	229	G1_power station	0.	0.	0.
192	192	173	G1_power station	0.	0.	0.
192	192	9	G2_power station	0.	0.	0.
192	192	8	G2_power station	0.	0.	0.
192	192	229	G2_power station	0.	0.	0.
192	192	173	G2_power station	0.	0.	0.
192	192	9	Q_power station	0.	0.	0.
192	192	8	Q_power station	0.	0.	0.
192	192	229	Q_power station	0.	0.	0.
192	192	173	Q_power station	0.	0.	0.
192	192	9	Q_neve	0.	0.	0.
192	192	8	Q_neve	0.	0.	0.
192	192	229	Q_neve	0.	0.	0.
192	192	173	Q_neve	0.	0.	0.
192	192	9	Q_manutenzione	0.	0.	0.
192	192	8	Q_manutenzione	0.	0.	0.

Table 20: Element Forces - Area Shells, Part 1 of 3

Area	AreaElem	Joint	OutputCase	F11	F22	F12
				KN/m	KN/m	KN/m
192	192	229	Q_manutenzione	0.	0.	0.
192	192	173	Q_manutenzione	0.	0.	0.
192	192	9	EQ_X	-11.98	-1.94	1.23
192	192	8	EQ_X	5.68	1.59	3.86
192	192	229	EQ_X	6.17	4.03	2.08
192	192	173	EQ_X	-11.49	0.5	-0.55
192	192	9	EQ_Y	5.5	11.89	-3.33
192	192	8	EQ_Y	-6.18	9.55	-0.75
192	192	229	EQ_Y	-8.64	-2.73	-1.12
192	192	173	EQ_Y	3.04	-0.4	-3.7
193	193	173	DEAD	0.	0.	0.
193	193	229	DEAD	0.	0.	0.
193	193	230	DEAD	0.	0.	0.
193	193	174	DEAD	0.	0.	0.
193	193	173	G1_power station	0.	0.	0.
193	193	229	G1_power station	0.	0.	0.
193	193	230	G1_power station	0.	0.	0.
193	193	174	G1_power station	0.	0.	0.
193	193	173	G2_power station	0.	0.	0.
193	193	229	G2_power station	0.	0.	0.
193	193	230	G2_power station	0.	0.	0.
193	193	174	G2_power station	0.	0.	0.
193	193	173	Q_power station	0.	0.	0.
193	193	229	Q_power station	0.	0.	0.
193	193	230	Q_power station	0.	0.	0.
193	193	174	Q_power station	0.	0.	0.
193	193	173	Q_neve	0.	0.	0.
193	193	229	Q_neve	0.	0.	0.
193	193	230	Q_neve	0.	0.	0.
193	193	174	Q_neve	0.	0.	0.
193	193	173	Q_manutenzione	0.	0.	0.
193	193	229	Q_manutenzione	0.	0.	0.
193	193	230	Q_manutenzione	0.	0.	0.
193	193	174	Q_manutenzione	0.	0.	0.
193	193	173	EQ_X	-3.31	2.14	0.11
193	193	229	EQ_X	-0.12	2.78	0.47
193	193	230	EQ_X	-0.58	0.46	-0.47
193	193	174	EQ_X	-3.77	-0.18	-0.82
193	193	173	EQ_Y	9.52	0.9	0.38
193	193	229	EQ_Y	-10.62	-3.13	1.11
193	193	230	EQ_Y	-9.97	0.14	3.82
193	193	174	EQ_Y	10.18	4.17	3.09
194	194	174	DEAD	0.	0.	0.

Table 20: Element Forces - Area Shells, Part 1 of 3

Area	AreaElem	Joint	OutputCase	F11	F22	F12
				KN/m	KN/m	KN/m
194	194	230	DEAD	0.	0.	0.
194	194	37	DEAD	0.	0.	0.
194	194	33	DEAD	0.	0.	0.
194	194	174	G1_power station	0.	0.	0.
194	194	230	G1_power station	0.	0.	0.
194	194	37	G1_power station	0.	0.	0.
194	194	33	G1_power station	0.	0.	0.
194	194	174	G2_power station	0.	0.	0.
194	194	230	G2_power station	0.	0.	0.
194	194	37	G2_power station	0.	0.	0.
194	194	33	G2_power station	0.	0.	0.
194	194	174	Q_power station	0.	0.	0.
194	194	230	Q_power station	0.	0.	0.
194	194	37	Q_power station	0.	0.	0.
194	194	33	Q_power station	0.	0.	0.
194	194	174	Q_neve	0.	0.	0.
194	194	230	Q_neve	0.	0.	0.
194	194	37	Q_neve	0.	0.	0.
194	194	33	Q_neve	0.	0.	0.
194	194	174	Q_manutenzione	0.	0.	0.
194	194	230	Q_manutenzione	0.	0.	0.
194	194	37	Q_manutenzione	0.	0.	0.
194	194	33	Q_manutenzione	0.	0.	0.
194	194	174	EQ_X	-2.77	2.108E-02	-0.53
194	194	230	EQ_X	0.26	0.63	-0.86
194	194	37	EQ_X	6.202E-02	-0.35	-0.45
194	194	33	EQ_X	-2.97	-0.96	-0.12
194	194	174	EQ_Y	25.36	7.21	0.87
194	194	230	EQ_Y	-25.56	-2.98	6.66
194	194	37	EQ_Y	-22.78	10.93	2.05
194	194	33	EQ_Y	28.14	21.12	-3.74
195	195	31	DEAD	0.	0.	0.
195	195	24	DEAD	0.	0.	0.
195	195	231	DEAD	0.	0.	0.
195	195	232	DEAD	0.	0.	0.
195	195	31	G1_power station	0.	0.	0.
195	195	24	G1_power station	0.	0.	0.
195	195	231	G1_power station	0.	0.	0.
195	195	232	G1_power station	0.	0.	0.
195	195	31	G2_power station	0.	0.	0.
195	195	24	G2_power station	0.	0.	0.
195	195	231	G2_power station	0.	0.	0.
195	195	232	G2_power station	0.	0.	0.

Table 20: Element Forces - Area Shells, Part 1 of 3

Area	AreaElem	Joint	OutputCase	F11	F22	F12
				KN/m	KN/m	KN/m
195	195	31	Q_power station	0.	0.	0.
195	195	24	Q_power station	0.	0.	0.
195	195	231	Q_power station	0.	0.	0.
195	195	232	Q_power station	0.	0.	0.
195	195	31	Q_neve	0.	0.	0.
195	195	24	Q_neve	0.	0.	0.
195	195	231	Q_neve	0.	0.	0.
195	195	232	Q_neve	0.	0.	0.
195	195	31	Q_manutenzione	0.	0.	0.
195	195	24	Q_manutenzione	0.	0.	0.
195	195	231	Q_manutenzione	0.	0.	0.
195	195	232	Q_manutenzione	0.	0.	0.
195	195	31	EQ_X	-7.54	0.31	0.4
195	195	24	EQ_X	3.27	2.48	0.63
195	195	231	EQ_X	2.93	0.75	0.94
195	195	232	EQ_X	-7.89	-1.41	0.72
195	195	31	EQ_Y	55.99	6.83	0.71
195	195	24	EQ_Y	-26.57	-9.68	1.44
195	195	231	EQ_Y	-25.7	-5.34	-0.5
195	195	232	EQ_Y	56.86	11.18	-1.23
196	196	232	DEAD	0.	0.	0.
196	196	231	DEAD	0.	0.	0.
196	196	233	DEAD	0.	0.	0.
196	196	234	DEAD	0.	0.	0.
196	196	232	G1_power station	0.	0.	0.
196	196	231	G1_power station	0.	0.	0.
196	196	233	G1_power station	0.	0.	0.
196	196	234	G1_power station	0.	0.	0.
196	196	232	G2_power station	0.	0.	0.
196	196	231	G2_power station	0.	0.	0.
196	196	233	G2_power station	0.	0.	0.
196	196	234	G2_power station	0.	0.	0.
196	196	232	Q_power station	0.	0.	0.
196	196	231	Q_power station	0.	0.	0.
196	196	233	Q_power station	0.	0.	0.
196	196	234	Q_power station	0.	0.	0.
196	196	232	Q_neve	0.	0.	0.
196	196	231	Q_neve	0.	0.	0.
196	196	233	Q_neve	0.	0.	0.
196	196	234	Q_neve	0.	0.	0.
196	196	232	Q_manutenzione	0.	0.	0.
196	196	231	Q_manutenzione	0.	0.	0.
196	196	233	Q_manutenzione	0.	0.	0.

Table 20: Element Forces - Area Shells, Part 1 of 3

Area	AreaElem	Joint	OutputCase	F11	F22	F12
				KN/m	KN/m	KN/m
196	196	234	Q_manutenzione	0.	0.	0.
196	196	232	EQ_X	-3.95	-0.63	0.73
196	196	231	EQ_X	-0.74	1.484E-02	0.63
196	196	233	EQ_X	-0.67	0.39	0.57
196	196	234	EQ_X	-3.87	-0.25	0.67
196	196	232	EQ_Y	47.09	9.22	-2.22
196	196	231	EQ_Y	-16.74	-3.54	-3.41
196	196	233	EQ_Y	-16.81	-3.87	-4.51
196	196	234	EQ_Y	47.03	8.9	-3.32
197	197	234	DEAD	0.	0.	0.
197	197	233	DEAD	0.	0.	0.
197	197	235	DEAD	0.	0.	0.
197	197	236	DEAD	0.	0.	0.
197	197	234	G1_power station	0.	0.	0.
197	197	233	G1_power station	0.	0.	0.
197	197	235	G1_power station	0.	0.	0.
197	197	236	G1_power station	0.	0.	0.
197	197	234	G2_power station	0.	0.	0.
197	197	233	G2_power station	0.	0.	0.
197	197	235	G2_power station	0.	0.	0.
197	197	236	G2_power station	0.	0.	0.
197	197	234	Q_power station	0.	0.	0.
197	197	233	Q_power station	0.	0.	0.
197	197	235	Q_power station	0.	0.	0.
197	197	236	Q_power station	0.	0.	0.
197	197	234	Q_neve	0.	0.	0.
197	197	233	Q_neve	0.	0.	0.
197	197	235	Q_neve	0.	0.	0.
197	197	236	Q_neve	0.	0.	0.
197	197	234	Q_manutenzione	0.	0.	0.
197	197	233	Q_manutenzione	0.	0.	0.
197	197	235	Q_manutenzione	0.	0.	0.
197	197	236	Q_manutenzione	0.	0.	0.
197	197	234	EQ_X	-0.5	0.43	0.55
197	197	233	EQ_X	-4.17	-0.31	0.58
197	197	235	EQ_X	-4.12	-5.351E-02	0.56
197	197	236	EQ_X	-0.45	0.68	0.53
197	197	234	EQ_Y	18.48	3.19	-6.92
197	197	233	EQ_Y	12.75	2.04	-5.17
197	197	235	EQ_Y	11.81	-2.68	-6.75
197	197	236	EQ_Y	17.54	-1.54	-8.5
198	198	236	DEAD	0.	0.	0.
198	198	235	DEAD	0.	0.	0.

Table 20: Element Forces - Area Shells, Part 1 of 3

Area	AreaElem	Joint	OutputCase	F11	F22	F12
				KN/m	KN/m	KN/m
198	198	33	DEAD	0.	0.	0.
198	198	37	DEAD	0.	0.	0.
198	198	236	G1_power station	0.	0.	0.
198	198	235	G1_power station	0.	0.	0.
198	198	33	G1_power station	0.	0.	0.
198	198	37	G1_power station	0.	0.	0.
198	198	236	G2_power station	0.	0.	0.
198	198	235	G2_power station	0.	0.	0.
198	198	33	G2_power station	0.	0.	0.
198	198	37	G2_power station	0.	0.	0.
198	198	236	Q_power station	0.	0.	0.
198	198	235	Q_power station	0.	0.	0.
198	198	33	Q_power station	0.	0.	0.
198	198	37	Q_power station	0.	0.	0.
198	198	236	Q_neve	0.	0.	0.
198	198	235	Q_neve	0.	0.	0.
198	198	33	Q_neve	0.	0.	0.
198	198	37	Q_neve	0.	0.	0.
198	198	236	Q_manutenzione	0.	0.	0.
198	198	235	Q_manutenzione	0.	0.	0.
198	198	33	Q_manutenzione	0.	0.	0.
198	198	37	Q_manutenzione	0.	0.	0.
198	198	236	EQ_X	2.45	1.26	0.46
198	198	235	EQ_X	-6.83	-0.59	0.52
198	198	33	EQ_X	-7.06	-1.78	0.39
198	198	37	EQ_X	2.21	7.489E-02	0.32
198	198	236	EQ_Y	-32.69	-11.58	-9.24
198	198	235	EQ_Y	58.7	6.7	-12.37
198	198	33	EQ_Y	62.98	28.08	-10.96
198	198	37	EQ_Y	-28.41	9.81	-7.84
199	199	18	DEAD	0.	0.	0.
199	199	17	DEAD	0.	0.	0.
199	199	237	DEAD	0.	0.	0.
199	199	203	DEAD	0.	0.	0.
199	199	18	G1_power station	0.	0.	0.
199	199	17	G1_power station	0.	0.	0.
199	199	237	G1_power station	0.	0.	0.
199	199	203	G1_power station	0.	0.	0.
199	199	18	G2_power station	0.	0.	0.
199	199	17	G2_power station	0.	0.	0.
199	199	237	G2_power station	0.	0.	0.
199	199	203	G2_power station	0.	0.	0.
199	199	18	Q_power station	0.	0.	0.

Table 20: Element Forces - Area Shells, Part 1 of 3

Area	AreaElem	Joint	OutputCase	F11	F22	F12
				KN/m	KN/m	KN/m
199	199	17	Q_power station	0.	0.	0.
199	199	237	Q_power station	0.	0.	0.
199	199	203	Q_power station	0.	0.	0.
199	199	18	Q_neve	0.	0.	0.
199	199	17	Q_neve	0.	0.	0.
199	199	237	Q_neve	0.	0.	0.
199	199	203	Q_neve	0.	0.	0.
199	199	18	Q_manutenzione	0.	0.	0.
199	199	17	Q_manutenzione	0.	0.	0.
199	199	237	Q_manutenzione	0.	0.	0.
199	199	203	Q_manutenzione	0.	0.	0.
199	199	18	EQ_X	11.7	2.33	-1.65
199	199	17	EQ_X	-4.39	-0.89	-4.27
199	199	237	EQ_X	-4.91	-3.52	-2.47
199	199	203	EQ_X	11.18	-0.3	0.15
199	199	18	EQ_Y	-4.7	-10.59	4.74
199	199	17	EQ_Y	0.95	-9.46	2.35
199	199	237	EQ_Y	3.45	3.06	3.52
199	199	203	EQ_Y	-2.2	1.93	5.9
200	200	203	DEAD	0.	0.	0.
200	200	237	DEAD	0.	0.	0.
200	200	238	DEAD	0.	0.	0.
200	200	204	DEAD	0.	0.	0.
200	200	203	G1_power station	0.	0.	0.
200	200	237	G1_power station	0.	0.	0.
200	200	238	G1_power station	0.	0.	0.
200	200	204	G1_power station	0.	0.	0.
200	200	203	G2_power station	0.	0.	0.
200	200	237	G2_power station	0.	0.	0.
200	200	238	G2_power station	0.	0.	0.
200	200	204	G2_power station	0.	0.	0.
200	200	203	Q_power station	0.	0.	0.
200	200	237	Q_power station	0.	0.	0.
200	200	238	Q_power station	0.	0.	0.
200	200	204	Q_power station	0.	0.	0.
200	200	203	Q_neve	0.	0.	0.
200	200	237	Q_neve	0.	0.	0.
200	200	238	Q_neve	0.	0.	0.
200	200	204	Q_neve	0.	0.	0.
200	200	203	Q_manutenzione	0.	0.	0.
200	200	237	Q_manutenzione	0.	0.	0.
200	200	238	Q_manutenzione	0.	0.	0.
200	200	204	Q_manutenzione	0.	0.	0.

Table 20: Element Forces - Area Shells, Part 1 of 3

Area	AreaElem	Joint	OutputCase	F11	F22	F12
				KN/m	KN/m	KN/m
200	200	203	EQ_X	2.72	-1.99	-0.53
200	200	237	EQ_X	2.64	-2.01	-0.57
200	200	238	EQ_X	3.09	0.27	0.26
200	200	204	EQ_X	3.17	0.29	0.3
200	200	203	EQ_Y	-2.75	1.82	2.44
200	200	237	EQ_Y	-5.94	1.19	2.72
200	200	238	EQ_Y	-6.61	-2.13	1.9
200	200	204	EQ_Y	-3.41	-1.49	1.61
201	201	204	DEAD	0.	0.	0.
201	201	238	DEAD	0.	0.	0.
201	201	239	DEAD	0.	0.	0.
201	201	205	DEAD	0.	0.	0.
201	201	204	G1_power station	0.	0.	0.
201	201	238	G1_power station	0.	0.	0.
201	201	239	G1_power station	0.	0.	0.
201	201	205	G1_power station	0.	0.	0.
201	201	204	G2_power station	0.	0.	0.
201	201	238	G2_power station	0.	0.	0.
201	201	239	G2_power station	0.	0.	0.
201	201	205	G2_power station	0.	0.	0.
201	201	204	Q_power station	0.	0.	0.
201	201	238	Q_power station	0.	0.	0.
201	201	239	Q_power station	0.	0.	0.
201	201	205	Q_power station	0.	0.	0.
201	201	204	Q_neve	0.	0.	0.
201	201	238	Q_neve	0.	0.	0.
201	201	239	Q_neve	0.	0.	0.
201	201	205	Q_neve	0.	0.	0.
201	201	204	Q_manutenzione	0.	0.	0.
201	201	238	Q_manutenzione	0.	0.	0.
201	201	239	Q_manutenzione	0.	0.	0.
201	201	205	Q_manutenzione	0.	0.	0.
201	201	204	EQ_X	1.49	-4.966E-02	0.58
201	201	238	EQ_X	3.21	0.29	0.31
201	201	239	EQ_X	3.21	0.32	0.29
201	201	205	EQ_X	1.49	-2.021E-02	0.55
201	201	204	EQ_Y	-4.92	-1.79	2.09
201	201	238	EQ_Y	-10.06	-2.82	0.96
201	201	239	EQ_Y	-9.93	-2.15	0.75
201	201	205	EQ_Y	-4.78	-1.12	1.88
202	202	205	DEAD	0.	0.	0.
202	202	239	DEAD	0.	0.	0.
202	202	240	DEAD	0.	0.	0.

Table 20: Element Forces - Area Shells, Part 1 of 3

Area	AreaElem	Joint	OutputCase	F11	F22	F12
				KN/m	KN/m	KN/m
202	202	206	DEAD	0.	0.	0.
202	202	205	G1_power station	0.	0.	0.
202	202	239	G1_power station	0.	0.	0.
202	202	240	G1_power station	0.	0.	0.
202	202	206	G1_power station	0.	0.	0.
202	202	205	G2_power station	0.	0.	0.
202	202	239	G2_power station	0.	0.	0.
202	202	240	G2_power station	0.	0.	0.
202	202	206	G2_power station	0.	0.	0.
202	202	205	Q_power station	0.	0.	0.
202	202	239	Q_power station	0.	0.	0.
202	202	240	Q_power station	0.	0.	0.
202	202	206	Q_power station	0.	0.	0.
202	202	205	Q_neve	0.	0.	0.
202	202	239	Q_neve	0.	0.	0.
202	202	240	Q_neve	0.	0.	0.
202	202	206	Q_neve	0.	0.	0.
202	202	205	Q_manutenzione	0.	0.	0.
202	202	239	Q_manutenzione	0.	0.	0.
202	202	240	Q_manutenzione	0.	0.	0.
202	202	206	Q_manutenzione	0.	0.	0.
202	202	205	EQ_X	1.1	-9.954E-02	0.38
202	202	239	EQ_X	2.39	0.16	0.34
202	202	240	EQ_X	2.43	0.4	0.29
202	202	206	EQ_X	1.15	0.14	0.33
202	202	205	EQ_Y	-6.82	-1.53	1.54
202	202	239	EQ_Y	-12.72	-2.71	1.14
202	202	240	EQ_Y	-12.7	-2.59	1.48
202	202	206	EQ_Y	-6.79	-1.41	1.88
203	203	206	DEAD	0.	0.	0.
203	203	240	DEAD	0.	0.	0.
203	203	241	DEAD	0.	0.	0.
203	203	207	DEAD	0.	0.	0.
203	203	206	G1_power station	0.	0.	0.
203	203	240	G1_power station	0.	0.	0.
203	203	241	G1_power station	0.	0.	0.
203	203	207	G1_power station	0.	0.	0.
203	203	206	G2_power station	0.	0.	0.
203	203	240	G2_power station	0.	0.	0.
203	203	241	G2_power station	0.	0.	0.
203	203	207	G2_power station	0.	0.	0.
203	203	206	Q_power station	0.	0.	0.
203	203	240	Q_power station	0.	0.	0.

Table 20: Element Forces - Area Shells, Part 1 of 3

Area	AreaElem	Joint	OutputCase	F11	F22	F12
				KN/m	KN/m	KN/m
203	203	241	Q_power station	0.	0.	0.
203	203	207	Q_power station	0.	0.	0.
203	203	206	Q_neve	0.	0.	0.
203	203	240	Q_neve	0.	0.	0.
203	203	241	Q_neve	0.	0.	0.
203	203	207	Q_neve	0.	0.	0.
203	203	206	Q_manutenzione	0.	0.	0.
203	203	240	Q_manutenzione	0.	0.	0.
203	203	241	Q_manutenzione	0.	0.	0.
203	203	207	Q_manutenzione	0.	0.	0.
203	203	206	EQ_X	0.72	5.621E-02	0.27
203	203	240	EQ_X	2.03	0.32	9.373E-02
203	203	241	EQ_X	2.05	0.4	-5.385E-02
203	203	207	EQ_X	0.74	0.13	0.12
203	203	206	EQ_Y	-7.49	-1.55	2.02
203	203	240	EQ_Y	-17.13	-3.48	1.86
203	203	241	EQ_Y	-17.11	-3.36	2.22
203	203	207	EQ_Y	-7.47	-1.43	2.39
204	204	207	DEAD	0.	0.	0.
204	204	241	DEAD	0.	0.	0.
204	204	242	DEAD	0.	0.	0.
204	204	208	DEAD	0.	0.	0.
204	204	207	G1_power station	0.	0.	0.
204	204	241	G1_power station	0.	0.	0.
204	204	242	G1_power station	0.	0.	0.
204	204	208	G1_power station	0.	0.	0.
204	204	207	G2_power station	0.	0.	0.
204	204	241	G2_power station	0.	0.	0.
204	204	242	G2_power station	0.	0.	0.
204	204	208	G2_power station	0.	0.	0.
204	204	207	Q_power station	0.	0.	0.
204	204	241	Q_power station	0.	0.	0.
204	204	242	Q_power station	0.	0.	0.
204	204	208	Q_power station	0.	0.	0.
204	204	207	Q_neve	0.	0.	0.
204	204	241	Q_neve	0.	0.	0.
204	204	242	Q_neve	0.	0.	0.
204	204	208	Q_neve	0.	0.	0.
204	204	207	Q_manutenzione	0.	0.	0.
204	204	241	Q_manutenzione	0.	0.	0.
204	204	242	Q_manutenzione	0.	0.	0.
204	204	208	Q_manutenzione	0.	0.	0.
204	204	207	EQ_X	-0.34	-8.092E-02	-0.12

Table 20: Element Forces - Area Shells, Part 1 of 3

Area	AreaElem	Joint	OutputCase	F11	F22	F12
				KN/m	KN/m	KN/m
204	204	241	EQ_X	2.89	0.57	-0.24
204	204	242	EQ_X	2.97	0.93	-0.61
204	204	208	EQ_X	-0.27	0.28	-0.49
204	204	207	EQ_Y	-4.84	-0.9	3.19
204	204	241	EQ_Y	-26.28	-5.19	2.92
204	204	242	EQ_Y	-26.5	-6.27	4.7
204	204	208	EQ_Y	-5.06	-1.98	4.97
205	205	208	DEAD	0.	0.	0.
205	205	242	DEAD	0.	0.	0.
205	205	38	DEAD	0.	0.	0.
205	205	34	DEAD	0.	0.	0.
205	205	208	G1_power station	0.	0.	0.
205	205	242	G1_power station	0.	0.	0.
205	205	38	G1_power station	0.	0.	0.
205	205	34	G1_power station	0.	0.	0.
205	205	208	G2_power station	0.	0.	0.
205	205	242	G2_power station	0.	0.	0.
205	205	38	G2_power station	0.	0.	0.
205	205	34	G2_power station	0.	0.	0.
205	205	208	Q_power station	0.	0.	0.
205	205	242	Q_power station	0.	0.	0.
205	205	38	Q_power station	0.	0.	0.
205	205	34	Q_power station	0.	0.	0.
205	205	208	Q_neve	0.	0.	0.
205	205	242	Q_neve	0.	0.	0.
205	205	38	Q_neve	0.	0.	0.
205	205	34	Q_neve	0.	0.	0.
205	205	208	Q_manutenzione	0.	0.	0.
205	205	242	Q_manutenzione	0.	0.	0.
205	205	38	Q_manutenzione	0.	0.	0.
205	205	34	Q_manutenzione	0.	0.	0.
205	205	208	EQ_X	-2.85	-0.23	-0.32
205	205	242	EQ_X	5.89	1.52	-1.22
205	205	38	EQ_X	5.44	-0.73	-0.72
205	205	34	EQ_X	-3.3	-2.48	0.18
205	205	208	EQ_Y	5.43	0.11	3.45
205	205	242	EQ_Y	-44.98	-9.97	7.64
205	205	38	EQ_Y	-42.92	0.36	5.43
205	205	34	EQ_Y	7.5	10.44	1.24
206	206	32	DEAD	0.	0.	0.
206	206	23	DEAD	0.	0.	0.
206	206	243	DEAD	0.	0.	0.
206	206	244	DEAD	0.	0.	0.

Table 20: Element Forces - Area Shells, Part 1 of 3

Area	AreaElem	Joint	OutputCase	F11	F22	F12
				KN/m	KN/m	KN/m
206	206	32	G1_power station	0.	0.	0.
206	206	23	G1_power station	0.	0.	0.
206	206	243	G1_power station	0.	0.	0.
206	206	244	G1_power station	0.	0.	0.
206	206	32	G2_power station	0.	0.	0.
206	206	23	G2_power station	0.	0.	0.
206	206	243	G2_power station	0.	0.	0.
206	206	244	G2_power station	0.	0.	0.
206	206	32	Q_power station	0.	0.	0.
206	206	23	Q_power station	0.	0.	0.
206	206	243	Q_power station	0.	0.	0.
206	206	244	Q_power station	0.	0.	0.
206	206	32	Q_neve	0.	0.	0.
206	206	23	Q_neve	0.	0.	0.
206	206	243	Q_neve	0.	0.	0.
206	206	244	Q_neve	0.	0.	0.
206	206	32	Q_manutenzione	0.	0.	0.
206	206	23	Q_manutenzione	0.	0.	0.
206	206	243	Q_manutenzione	0.	0.	0.
206	206	244	Q_manutenzione	0.	0.	0.
206	206	32	EQ_X	-9.04	-7.122E-02	0.68
206	206	23	EQ_X	8.79	3.49	0.86
206	206	243	EQ_X	8.34	1.27	1.13
206	206	244	EQ_X	-9.49	-2.29	0.96
206	206	32	EQ_Y	29.16	-5.23	-5.81
206	206	23	EQ_Y	-62.77	-23.62	-8.14
206	206	243	EQ_Y	-59.39	-6.71	-9.49
206	206	244	EQ_Y	32.54	11.68	-7.16
207	207	244	DEAD	0.	0.	0.
207	207	243	DEAD	0.	0.	0.
207	207	245	DEAD	0.	0.	0.
207	207	246	DEAD	0.	0.	0.
207	207	244	G1_power station	0.	0.	0.
207	207	243	G1_power station	0.	0.	0.
207	207	245	G1_power station	0.	0.	0.
207	207	246	G1_power station	0.	0.	0.
207	207	244	G2_power station	0.	0.	0.
207	207	243	G2_power station	0.	0.	0.
207	207	245	G2_power station	0.	0.	0.
207	207	246	G2_power station	0.	0.	0.
207	207	244	Q_power station	0.	0.	0.
207	207	243	Q_power station	0.	0.	0.
207	207	245	Q_power station	0.	0.	0.

Table 20: Element Forces - Area Shells, Part 1 of 3

Area	AreaElem	Joint	OutputCase	F11	F22	F12
				KN/m	KN/m	KN/m
207	207	246	Q_power station	0.	0.	0.
207	207	244	Q_neve	0.	0.	0.
207	207	243	Q_neve	0.	0.	0.
207	207	245	Q_neve	0.	0.	0.
207	207	246	Q_neve	0.	0.	0.
207	207	244	Q_manutenzione	0.	0.	0.
207	207	243	Q_manutenzione	0.	0.	0.
207	207	245	Q_manutenzione	0.	0.	0.
207	207	246	Q_manutenzione	0.	0.	0.
207	207	244	EQ_X	-3.86	-1.17	1.01
207	207	243	EQ_X	3.07	0.22	1.
207	207	245	EQ_X	3.16	0.68	0.98
207	207	246	EQ_X	-3.77	-0.71	0.99
207	207	244	EQ_Y	-8.12	3.55	-7.1
207	207	243	EQ_Y	-21.42	0.88	-5.92
207	207	245	EQ_Y	-22.12	-2.58	-5.03
207	207	246	EQ_Y	-8.81	8.190E-02	-6.21
208	208	246	DEAD	0.	0.	0.
208	208	245	DEAD	0.	0.	0.
208	208	247	DEAD	0.	0.	0.
208	208	248	DEAD	0.	0.	0.
208	208	246	G1_power station	0.	0.	0.
208	208	245	G1_power station	0.	0.	0.
208	208	247	G1_power station	0.	0.	0.
208	208	248	G1_power station	0.	0.	0.
208	208	246	G2_power station	0.	0.	0.
208	208	245	G2_power station	0.	0.	0.
208	208	247	G2_power station	0.	0.	0.
208	208	248	G2_power station	0.	0.	0.
208	208	246	Q_power station	0.	0.	0.
208	208	245	Q_power station	0.	0.	0.
208	208	247	Q_power station	0.	0.	0.
208	208	248	Q_power station	0.	0.	0.
208	208	246	Q_neve	0.	0.	0.
208	208	245	Q_neve	0.	0.	0.
208	208	247	Q_neve	0.	0.	0.
208	208	248	Q_neve	0.	0.	0.
208	208	246	Q_manutenzione	0.	0.	0.
208	208	245	Q_manutenzione	0.	0.	0.
208	208	247	Q_manutenzione	0.	0.	0.
208	208	248	Q_manutenzione	0.	0.	0.
208	208	246	EQ_X	1.92	0.43	1.06
208	208	245	EQ_X	-2.72	-0.5	0.96

Table 20: Element Forces - Area Shells, Part 1 of 3

Area	AreaElem	Joint	OutputCase	F11	F22	F12
				KN/m	KN/m	KN/m
208	208	247	EQ_X	-2.62	-1.084E-02	1.02
208	208	248	EQ_X	2.02	0.92	1.12
208	208	246	EQ_Y	-37.93	-5.74	-4.23
208	208	245	EQ_Y	8.03	3.45	-4.84
208	208	247	EQ_Y	7.7	1.8	-4.44
208	208	248	EQ_Y	-38.26	-7.39	-3.83
209	209	248	DEAD	0.	0.	0.
209	209	247	DEAD	0.	0.	0.
209	209	34	DEAD	0.	0.	0.
209	209	38	DEAD	0.	0.	0.
209	209	248	G1_power station	0.	0.	0.
209	209	247	G1_power station	0.	0.	0.
209	209	34	G1_power station	0.	0.	0.
209	209	38	G1_power station	0.	0.	0.
209	209	248	G2_power station	0.	0.	0.
209	209	247	G2_power station	0.	0.	0.
209	209	34	G2_power station	0.	0.	0.
209	209	38	G2_power station	0.	0.	0.
209	209	248	Q_power station	0.	0.	0.
209	209	247	Q_power station	0.	0.	0.
209	209	34	Q_power station	0.	0.	0.
209	209	38	Q_power station	0.	0.	0.
209	209	248	Q_neve	0.	0.	0.
209	209	247	Q_neve	0.	0.	0.
209	209	34	Q_neve	0.	0.	0.
209	209	38	Q_neve	0.	0.	0.
209	209	248	Q_manutenzione	0.	0.	0.
209	209	247	Q_manutenzione	0.	0.	0.
209	209	34	Q_manutenzione	0.	0.	0.
209	209	38	Q_manutenzione	0.	0.	0.
209	209	248	EQ_X	8.16	2.15	1.07
209	209	247	EQ_X	-8.38	-1.16	1.35
209	209	34	EQ_X	-8.87	-3.6	1.
209	209	38	EQ_X	7.68	-0.29	0.72
209	209	248	EQ_Y	-58.67	-11.47	-3.51
209	209	247	EQ_Y	26.62	5.59	-3.62
209	209	34	EQ_Y	28.43	14.63	-1.51
209	209	38	EQ_Y	-56.86	-2.43	-1.4

Table 20: Element Forces - Area Shells, Part 2 of 3

Table 20: Element Forces - Area Shells, Part 2 of 3

Area	Joint	OutputCase	M11	M22	M12
			KN-m/m	KN-m/m	KN-m/m
1	7	DEAD	3.120E-13	4.100E-13	2.364E-13
1	8	DEAD	-7.699E-13	-5.776E-13	2.819E-13
1	9	DEAD	-3.251E-13	-3.181E-13	2.364E-13
1	10	DEAD	-1.101E-13	-8.279E-13	1.909E-13
1	7	G1_power station	0.	0.	0.
1	8	G1_power station	0.	0.	0.
1	9	G1_power station	0.	0.	0.
1	10	G1_power station	0.	0.	0.
1	7	G2_power station	0.3109	0.2743	-2.4142
1	8	G2_power station	3.0271	-0.2659	-1.7691
1	9	G2_power station	9.226	9.0857	-1.2038
1	10	G2_power station	-0.2992	3.3838	-1.8489
1	7	Q_power station	0.0115	0.0101	-0.0893
1	8	Q_power station	0.112	-0.0098	-0.0655
1	9	Q_power station	0.3414	0.3362	-0.0445
1	10	Q_power station	-0.0111	0.1252	-0.0684
1	7	Q_neve	0.0311	0.0257	-0.1968
1	8	Q_neve	0.2066	-0.0239	-0.1279
1	9	Q_neve	0.7802	0.7162	-0.073
1	10	Q_neve	-0.0277	0.2064	-0.1419
1	7	Q_manutenzione	0.0115	0.0101	-0.0893
1	8	Q_manutenzione	0.112	-0.0098	-0.0655
1	9	Q_manutenzione	0.3414	0.3362	-0.0445
1	10	Q_manutenzione	-0.0111	0.1252	-0.0684
1	7	EQ_X	-2.522	-0.8961	2.5619
1	8	EQ_X	14.3646	2.1301	-3.0031
1	9	EQ_X	-19.3916	-5.4022	-2.3272
1	10	EQ_X	2.2616	-4.6667	3.2378
1	7	EQ_Y	-0.9601	-3.0438	3.2629
1	8	EQ_Y	-5.7529	3.0485	4.2259
1	9	EQ_Y	-6.3852	-23.721	-1.8522
1	10	EQ_Y	2.4017	14.2619	-2.8152
2	11	DEAD	2.640E-13	-2.623E-15	2.172E-13
2	12	DEAD	-9.410E-14	-4.087E-13	2.172E-13
2	13	DEAD	-2.706E-13	6.003E-13	3.082E-13
2	14	DEAD	5.998E-13	-2.153E-13	3.082E-13
2	11	G1_power station	0.	0.	0.
2	12	G1_power station	0.	0.	0.
2	13	G1_power station	0.	0.	0.
2	14	G1_power station	0.	0.	0.
2	11	G2_power station	3.494	-0.2734	2.1499

Table 20: Element Forces - Area Shells, Part 2 of 3

Area	Joint	OutputCase	M11	M22	M12
			KN-m/m	KN-m/m	KN-m/m
2	12	G2_power station	0.2547	0.2756	2.625
2	13	G2_power station	-0.2718	3.8684	2.0695
2	14	G2_power station	8.9913	9.5844	1.5943
2	11	Q_power station	0.1293	-0.0101	0.0795
2	12	Q_power station	0.0094	0.0102	0.0971
2	13	Q_power station	-0.0101	0.1431	0.0766
2	14	Q_power station	0.3327	0.3546	0.059
2	11	Q_neve	0.2491	-0.0248	0.1753
2	12	Q_neve	0.0246	0.0259	0.2242
2	13	Q_neve	-0.0247	0.2767	0.17
2	14	Q_neve	0.7456	0.7865	0.1211
2	11	Q_manutenzione	0.1293	-0.0101	0.0795
2	12	Q_manutenzione	0.0094	0.0102	0.0971
2	13	Q_manutenzione	-0.0101	0.1431	0.0766
2	14	Q_manutenzione	0.3327	0.3546	0.059
2	11	EQ_X	-14.3509	-2.1693	-2.9012
2	12	EQ_X	2.5462	0.9046	2.6903
2	13	EQ_X	-2.2967	4.9681	3.4104
2	14	EQ_X	19.6991	5.6054	-2.1812
2	11	EQ_Y	-5.5992	2.746	-4.1023
2	12	EQ_Y	-0.9195	-2.8557	-3.1507
2	13	EQ_Y	2.3149	13.8723	2.7799
2	14	EQ_Y	-6.0298	-22.8012	1.8283
3	15	DEAD	-1.084E-12	-1.421E-12	4.550E-14
3	16	DEAD	1.076E-12	5.029E-13	1.365E-13
3	17	DEAD	-9.587E-13	-1.068E-12	-4.550E-14
3	18	DEAD	-1.635E-13	-5.095E-13	-1.365E-13
3	15	G1_power station	0.	0.	0.
3	16	G1_power station	0.	0.	0.
3	17	G1_power station	0.	0.	0.
3	18	G1_power station	0.	0.	0.
3	15	G2_power station	-0.2718	3.8684	-2.0695
3	16	G2_power station	0.2547	0.2756	-2.625
3	17	G2_power station	3.494	-0.2734	-2.1499
3	18	G2_power station	8.9913	9.5844	-1.5943
3	15	Q_power station	-0.0101	0.1431	-0.0766
3	16	Q_power station	0.0094	0.0102	-0.0971
3	17	Q_power station	0.1293	-0.0101	-0.0795
3	18	Q_power station	0.3327	0.3546	-0.059
3	15	Q_neve	-0.0247	0.2767	-0.17
3	16	Q_neve	0.0246	0.0259	-0.2242
3	17	Q_neve	0.2491	-0.0248	-0.1753
3	18	Q_neve	0.7456	0.7865	-0.1211

Table 20: Element Forces - Area Shells, Part 2 of 3

Area	Joint	OutputCase	M11	M22	M12
			KN-m/m	KN-m/m	KN-m/m
3	15	Q_manutenzione	-0.0101	0.1431	-0.0766
3	16	Q_manutenzione	0.0094	0.0102	-0.0971
3	17	Q_manutenzione	0.1293	-0.0101	-0.0795
3	18	Q_manutenzione	0.3327	0.3546	-0.059
3	15	EQ_X	-2.2967	4.9681	-3.4104
3	16	EQ_X	2.5462	0.9046	-2.6903
3	17	EQ_X	-14.3509	-2.1693	2.9012
3	18	EQ_X	19.6991	5.6054	2.1812
3	15	EQ_Y	-2.3149	-13.8723	2.7799
3	16	EQ_Y	0.9195	2.8557	-3.1507
3	17	EQ_Y	5.5992	-2.746	-4.1023
3	18	EQ_Y	6.0298	22.8012	1.8283
4	19	DEAD	-2.110E-13	9.461E-14	1.243E-13
4	20	DEAD	-5.736E-13	-4.654E-13	7.881E-14
4	21	DEAD	4.146E-13	7.658E-13	3.331E-14
4	22	DEAD	-1.154E-12	1.830E-13	7.881E-14
4	19	G1_power station	0.	0.	0.
4	20	G1_power station	0.	0.	0.
4	21	G1_power station	0.	0.	0.
4	22	G1_power station	0.	0.	0.
4	19	G2_power station	3.0271	-0.2659	1.7691
4	20	G2_power station	0.3109	0.2743	2.4142
4	21	G2_power station	-0.2992	3.3838	1.8489
4	22	G2_power station	9.226	9.0857	1.2038
4	19	Q_power station	0.112	-0.0098	0.0655
4	20	Q_power station	0.0115	0.0101	0.0893
4	21	Q_power station	-0.0111	0.1252	0.0684
4	22	Q_power station	0.3414	0.3362	0.0445
4	19	Q_neve	0.2066	-0.0239	0.1279
4	20	Q_neve	0.0311	0.0257	0.1968
4	21	Q_neve	-0.0277	0.2064	0.1419
4	22	Q_neve	0.7802	0.7162	0.073
4	19	Q_manutenzione	0.112	-0.0098	0.0655
4	20	Q_manutenzione	0.0115	0.0101	0.0893
4	21	Q_manutenzione	-0.0111	0.1252	0.0684
4	22	Q_manutenzione	0.3414	0.3362	0.0445
4	19	EQ_X	14.3646	2.1301	3.0031
4	20	EQ_X	-2.522	-0.8961	-2.5619
4	21	EQ_X	2.2616	-4.6667	-3.2378
4	22	EQ_X	-19.3916	-5.4022	2.3272
4	19	EQ_Y	5.7529	-3.0485	4.2259
4	20	EQ_Y	0.9601	3.0438	3.2629
4	21	EQ_Y	-2.4017	-14.2619	-2.8152

Table 20: Element Forces - Area Shells, Part 2 of 3

Area	Joint	OutputCase	M11	M22	M12
			KN-m/m	KN-m/m	KN-m/m
4	22	EQ_Y	6.3852	23.721	-1.8522
29	61	DEAD	-6.205E-16	5.582E-14	-9.208E-15
29	39	DEAD	-3.146E-14	3.234E-14	-5.044E-15
29	40	DEAD	9.750E-14	3.449E-14	-4.334E-14
29	6	DEAD	7.661E-14	9.491E-14	-2.780E-14
29	61	G1_power station	0.	0.	0.
29	39	G1_power station	0.	0.	0.
29	40	G1_power station	0.	0.	0.
29	6	G1_power station	0.	0.	0.
29	61	G2_power station	-0.3125	3.2841	-0.0711
29	39	G2_power station	0.198	-2.9141	-0.3633
29	40	G2_power station	1.0015	-5.43	0.5026
29	6	G2_power station	9.7935	9.4133	0.7948
29	61	Q_power station	-0.0116	0.1215	-0.0026
29	39	Q_power station	0.0073	-0.1078	-0.0134
29	40	Q_power station	0.0371	-0.2009	0.0186
29	6	Q_power station	0.3624	0.3483	0.0294
29	61	Q_neve	-0.0288	0.2292	-0.0272
29	39	Q_neve	0.0179	-0.4008	-0.0519
29	40	Q_neve	0.0323	-0.6561	0.0209
29	6	Q_neve	0.8349	0.781	0.0456
29	61	Q_manutenzione	-0.0116	0.1215	-0.0026
29	39	Q_manutenzione	0.0073	-0.1078	-0.0134
29	40	Q_manutenzione	0.0371	-0.2009	0.0186
29	6	Q_manutenzione	0.3624	0.3483	0.0294
29	61	EQ_X	-2.2849	4.8906	-0.5395
29	39	EQ_X	1.3801	-1.2013	-0.0541
29	40	EQ_X	-8.529	-1.718	4.6958
29	6	EQ_X	20.1487	5.5347	4.2104
29	61	EQ_Y	-2.3646	-9.3953	2.6404
29	39	EQ_Y	0.7913	11.0358	-2.7879
29	40	EQ_Y	2.5444	0.2167	-3.4085
29	6	EQ_Y	4.6027	29.7556	2.0199
30	39	DEAD	1.709E-14	2.372E-14	-3.436E-14
30	41	DEAD	-5.321E-14	-1.355E-13	-1.882E-14
30	42	DEAD	-1.135E-14	-1.526E-13	-1.161E-14
30	40	DEAD	7.619E-14	3.371E-14	-7.448E-15
30	39	G1_power station	0.	0.	0.
30	41	G1_power station	0.	0.	0.
30	42	G1_power station	0.	0.	0.
30	40	G1_power station	0.	0.	0.
30	39	G2_power station	0.1467	-3.1704	0.5843
30	41	G2_power station	-0.0383	-9.1882	0.6606

Table 20: Element Forces - Area Shells, Part 2 of 3

Area	Joint	OutputCase	M11	M22	M12
			KN-m/m	KN-m/m	KN-m/m
30	42	G2_power station	-1.4271	-7.7277	0.8627
30	40	G2_power station	1.0679	-5.098	0.7864
30	39	Q_power station	0.0054	-0.1173	0.0216
30	41	Q_power station	-0.0014	-0.34	0.0244
30	42	Q_power station	-0.0528	-0.2859	0.0319
30	40	Q_power station	0.0395	-0.1886	0.0291
30	39	Q_neve	0.0131	-0.4252	0.0381
30	41	Q_neve	-0.0037	-1.0136	0.0514
30	42	Q_neve	-0.1906	-0.9101	0.0665
30	40	Q_neve	0.0384	-0.6258	0.0533
30	39	Q_manutenzione	0.0054	-0.1173	0.0216
30	41	Q_manutenzione	-0.0014	-0.34	0.0244
30	42	Q_manutenzione	-0.0528	-0.2859	0.0319
30	40	Q_manutenzione	0.0395	-0.1886	0.0291
30	39	EQ_X	1.4408	-0.8978	2.4531
30	41	EQ_X	-0.4033	-2.6595	1.7713
30	42	EQ_X	-1.9596	-0.7715	0.7321
30	40	EQ_X	-8.536	-1.7529	1.4139
30	39	EQ_Y	0.1801	7.9796	-1.7071
30	41	EQ_Y	-0.0314	1.4575	-0.6687
30	42	EQ_Y	0.5275	1.8936	-0.401
30	40	EQ_Y	3.1331	3.1603	-1.4394
31	41	DEAD	-6.252E-14	-1.328E-13	0.
31	43	DEAD	-1.001E-14	-7.505E-14	1.138E-14
31	44	DEAD	3.133E-14	-1.414E-13	0.
31	42	DEAD	-1.481E-15	-1.006E-13	-1.138E-14
31	41	G1_power station	0.	0.	0.
31	43	G1_power station	0.	0.	0.
31	44	G1_power station	0.	0.	0.
31	42	G1_power station	0.	0.	0.
31	41	G2_power station	0.011	-8.9416	0.2689
31	43	G2_power station	0.011	-8.9416	-0.2689
31	44	G2_power station	-1.4655	-7.92	-0.2689
31	42	G2_power station	-1.4655	-7.92	0.2689
31	41	Q_power station	4.070E-04	-0.3308	0.0099
31	43	Q_power station	4.070E-04	-0.3308	-0.0099
31	44	Q_power station	-0.0542	-0.293	-0.0099
31	42	Q_power station	-0.0542	-0.293	0.0099
31	41	Q_neve	7.121E-04	-0.9914	0.021
31	43	Q_neve	7.121E-04	-0.9914	-0.021
31	44	Q_neve	-0.1941	-0.9275	-0.021
31	42	Q_neve	-0.1941	-0.9275	0.021
31	41	Q_manutenzione	4.070E-04	-0.3308	0.0099

Table 20: Element Forces - Area Shells, Part 2 of 3

Area	Joint	OutputCase	M11	M22	M12
			KN-m/m	KN-m/m	KN-m/m
31	43	Q_manutenzione	4.070E-04	-0.3308	-0.0099
31	44	Q_manutenzione	-0.0542	-0.293	-0.0099
31	42	Q_manutenzione	-0.0542	-0.293	0.0099
31	41	EQ_X	-0.3881	-2.5835	0.4194
31	43	EQ_X	-0.3881	-2.5835	-0.4194
31	44	EQ_X	-1.9747	-0.8468	-0.4194
31	42	EQ_X	-1.9747	-0.8468	0.4194
31	41	EQ_Y	0.0571	1.8999	-0.3062
31	43	EQ_Y	-0.0571	-1.8999	-0.3062
31	44	EQ_Y	-0.4523	-1.5177	-0.3802
31	42	EQ_Y	0.4523	1.5177	-0.3802
32	43	DEAD	-4.708E-14	-1.469E-13	-5.924E-15
32	45	DEAD	-3.546E-14	-9.797E-14	-8.972E-15
32	46	DEAD	7.663E-14	-4.027E-14	-4.005E-14
32	44	DEAD	5.270E-14	-3.256E-14	2.404E-15
32	43	G1_power station	0.	0.	0.
32	45	G1_power station	0.	0.	0.
32	46	G1_power station	0.	0.	0.
32	44	G1_power station	0.	0.	0.
32	43	G2_power station	-0.0383	-9.1882	-0.6606
32	45	G2_power station	0.1467	-3.1704	-0.5843
32	46	G2_power station	1.0679	-5.098	-0.7864
32	44	G2_power station	-1.4271	-7.7277	-0.8627
32	43	Q_power station	-0.0014	-0.34	-0.0244
32	45	Q_power station	0.0054	-0.1173	-0.0216
32	46	Q_power station	0.0395	-0.1886	-0.0291
32	44	Q_power station	-0.0528	-0.2859	-0.0319
32	43	Q_neve	-0.0037	-1.0136	-0.0514
32	45	Q_neve	0.0131	-0.4252	-0.0381
32	46	Q_neve	0.0384	-0.6258	-0.0533
32	44	Q_neve	-0.1906	-0.9101	-0.0665
32	43	Q_manutenzione	-0.0014	-0.34	-0.0244
32	45	Q_manutenzione	0.0054	-0.1173	-0.0216
32	46	Q_manutenzione	0.0395	-0.1886	-0.0291
32	44	Q_manutenzione	-0.0528	-0.2859	-0.0319
32	43	EQ_X	-0.4033	-2.6595	-1.7713
32	45	EQ_X	1.4408	-0.8978	-2.4531
32	46	EQ_X	-8.536	-1.7529	-1.4139
32	44	EQ_X	-1.9596	-0.7715	-0.7321
32	43	EQ_Y	0.0314	-1.4575	-0.6687
32	45	EQ_Y	-0.1801	-7.9796	-1.7071
32	46	EQ_Y	-3.1331	-3.1603	-1.4394
32	44	EQ_Y	-0.5275	-1.8936	-0.401

Table 20: Element Forces - Area Shells, Part 2 of 3

Area	Joint	OutputCase	M11	M22	M12
			KN-m/m	KN-m/m	KN-m/m
33	45	DEAD	-2.334E-14	-7.729E-14	-4.093E-14
33	62	DEAD	-6.038E-14	-3.941E-14	-3.677E-14
33	63	DEAD	-1.196E-14	-2.041E-14	-1.818E-14
33	46	DEAD	7.187E-14	-6.074E-14	-2.640E-15
33	45	G1_power station	0.	0.	0.
33	62	G1_power station	0.	0.	0.
33	63	G1_power station	0.	0.	0.
33	46	G1_power station	0.	0.	0.
33	45	G2_power station	0.198	-2.9141	0.3633
33	62	G2_power station	-0.3125	3.2841	0.0711
33	63	G2_power station	9.7935	9.4133	-0.7948
33	46	G2_power station	1.0015	-5.43	-0.5026
33	45	Q_power station	0.0073	-0.1078	0.0134
33	62	Q_power station	-0.0116	0.1215	0.0026
33	63	Q_power station	0.3624	0.3483	-0.0294
33	46	Q_power station	0.0371	-0.2009	-0.0186
33	45	Q_neve	0.0179	-0.4008	0.0519
33	62	Q_neve	-0.0288	0.2292	0.0272
33	63	Q_neve	0.8349	0.781	-0.0456
33	46	Q_neve	0.0323	-0.6561	-0.0209
33	45	Q_manutenzione	0.0073	-0.1078	0.0134
33	62	Q_manutenzione	-0.0116	0.1215	0.0026
33	63	Q_manutenzione	0.3624	0.3483	-0.0294
33	46	Q_manutenzione	0.0371	-0.2009	-0.0186
33	45	EQ_X	1.3801	-1.2013	0.0541
33	62	EQ_X	-2.2849	4.8906	0.5395
33	63	EQ_X	20.1487	5.5347	-4.2104
33	46	EQ_X	-8.529	-1.718	-4.6958
33	45	EQ_Y	-0.7913	-11.0358	-2.7879
33	62	EQ_Y	2.3646	9.3953	2.6404
33	63	EQ_Y	-4.6027	-29.7556	2.0199
33	46	EQ_Y	-2.5444	-0.2167	-3.4085
34	66	DEAD	-1.745E-14	1.078E-13	9.195E-14
34	47	DEAD	-8.392E-15	-2.606E-13	9.195E-14
34	48	DEAD	-7.860E-14	-9.551E-14	9.195E-14
34	5	DEAD	1.578E-14	-3.738E-14	9.195E-14
34	66	G1_power station	0.	0.	0.
34	47	G1_power station	0.	0.	0.
34	48	G1_power station	0.	0.	0.
34	5	G1_power station	0.	0.	0.
34	66	G2_power station	-0.3372	2.7844	-0.292
34	47	G2_power station	0.2087	-3.5408	-0.5697
34	48	G2_power station	1.4775	-6.0687	0.2473

Table 20: Element Forces - Area Shells, Part 2 of 3

Area	Joint	OutputCase	M11	M22	M12
			KN-m/m	KN-m/m	KN-m/m
34	5	G2_power station	10.1496	9.0232	0.5249
34	66	Q_power station	-0.0125	0.103	-0.0108
34	47	Q_power station	0.0077	-0.131	-0.0211
34	48	Q_power station	0.0547	-0.2245	0.0091
34	5	Q_power station	0.3755	0.3339	0.0194
34	66	Q_neve	-0.0315	0.1649	-0.0545
34	47	Q_neve	0.019	-0.4817	-0.0772
34	48	Q_neve	0.0882	-0.7394	-0.0113
34	5	Q_neve	0.8717	0.7286	0.0114
34	66	Q_manutenzione	-0.0125	0.103	-0.0108
34	47	Q_manutenzione	0.0077	-0.131	-0.0211
34	48	Q_manutenzione	0.0547	-0.2245	0.0091
34	5	Q_manutenzione	0.3755	0.3339	0.0194
34	66	EQ_X	2.2533	-4.5718	0.6595
34	47	EQ_X	-1.3568	1.4529	0.1718
34	48	EQ_X	8.0439	2.0718	-4.4507
34	5	EQ_X	-20.0042	-5.3734	-3.963
34	66	EQ_Y	2.4478	9.7291	-2.7515
34	47	EQ_Y	-0.8309	-11.3948	2.8429
34	48	EQ_Y	-2.4418	0.0344	3.465
34	5	EQ_Y	-4.749	-30.863	-2.1295
35	47	DEAD	1.401E-14	-1.011E-13	9.676E-14
35	49	DEAD	7.322E-14	-2.871E-13	8.538E-14
35	50	DEAD	-1.339E-13	-1.238E-13	7.401E-14
35	48	DEAD	-9.457E-14	-2.728E-13	8.538E-14
35	47	G1_power station	0.	0.	0.
35	49	G1_power station	0.	0.	0.
35	50	G1_power station	0.	0.	0.
35	48	G1_power station	0.	0.	0.
35	47	G2_power station	0.1545	-3.8117	0.4215
35	49	G2_power station	-0.0455	-9.84	0.5595
35	50	G2_power station	-0.6782	-8.4453	0.7029
35	48	G2_power station	1.5451	-5.7306	0.5649
35	47	Q_power station	0.0057	-0.141	0.0156
35	49	Q_power station	-0.0017	-0.3641	0.0207
35	50	Q_power station	-0.0251	-0.3125	0.026
35	48	Q_power station	0.0572	-0.212	0.0209
35	47	Q_neve	0.0137	-0.5079	0.0177
35	49	Q_neve	-0.0045	-1.0985	0.0387
35	50	Q_neve	-0.104	-1.0045	0.0471
35	48	Q_neve	0.0944	-0.7086	0.0261
35	47	Q_manutenzione	0.0057	-0.141	0.0156
35	49	Q_manutenzione	-0.0017	-0.3641	0.0207

Table 20: Element Forces - Area Shells, Part 2 of 3

Area	Joint	OutputCase	M11	M22	M12
			KN-m/m	KN-m/m	KN-m/m
35	50	Q_manutenzione	-0.0251	-0.3125	0.026
35	48	Q_manutenzione	0.0572	-0.212	0.0209
35	47	EQ_X	-1.4128	1.1731	-2.3285
35	49	EQ_X	0.3988	2.9069	-1.698
35	50	EQ_X	1.4942	1.019	-0.6618
35	48	EQ_X	8.0463	2.0836	-1.2923
35	47	EQ_Y	-0.1809	-8.1448	1.696
35	49	EQ_Y	0.0284	-1.4835	0.658
35	50	EQ_Y	-0.4835	-2.0129	0.3934
35	48	EQ_Y	-3.0918	-3.2158	1.4314
36	49	DEAD	4.897E-14	-2.935E-13	5.430E-14
36	51	DEAD	2.995E-14	-1.521E-13	7.705E-14
36	52	DEAD	-6.621E-14	-1.868E-13	7.705E-14
36	50	DEAD	-1.506E-13	-3.725E-13	5.430E-14
36	49	G1_power station	0.	0.	0.
36	51	G1_power station	0.	0.	0.
36	52	G1_power station	0.	0.	0.
36	50	G1_power station	0.	0.	0.
36	49	G2_power station	0.0032	-9.5964	0.2236
36	51	G2_power station	0.0032	-9.5964	-0.2236
36	52	G2_power station	-0.7183	-8.6457	-0.2236
36	50	G2_power station	-0.7183	-8.6457	0.2236
36	49	Q_power station	1.192E-04	-0.3551	0.0083
36	51	Q_power station	1.192E-04	-0.3551	-0.0083
36	52	Q_power station	-0.0266	-0.3199	-0.0083
36	50	Q_power station	-0.0266	-0.3199	0.0083
36	49	Q_neve	-1.519E-04	-1.0767	0.0154
36	51	Q_neve	-1.519E-04	-1.0767	-0.0154
36	52	Q_neve	-0.1076	-1.0226	-0.0154
36	50	Q_neve	-0.1076	-1.0226	0.0154
36	49	Q_manutenzione	1.192E-04	-0.3551	0.0083
36	51	Q_manutenzione	1.192E-04	-0.3551	-0.0083
36	52	Q_manutenzione	-0.0266	-0.3199	-0.0083
36	50	Q_manutenzione	-0.0266	-0.3199	0.0083
36	49	EQ_X	0.3813	2.8196	-0.394
36	51	EQ_X	0.3813	2.8196	0.394
36	52	EQ_X	1.5137	1.1163	0.394
36	50	EQ_X	1.5137	1.1163	-0.394
36	49	EQ_Y	-0.0638	-1.9442	0.3029
36	51	EQ_Y	0.0638	1.9442	0.3029
36	52	EQ_Y	0.401	1.6002	0.4067
36	50	EQ_Y	-0.401	-1.6002	0.4067
37	51	DEAD	1.250E-14	-2.643E-13	5.078E-14

Table 20: Element Forces - Area Shells, Part 2 of 3

Area	Joint	OutputCase	M11	M22	M12
			KN-m/m	KN-m/m	KN-m/m
37	53	DEAD	3.144E-14	-1.513E-13	1.666E-14
37	54	DEAD	-6.997E-14	-6.241E-14	2.803E-14
37	52	DEAD	-3.965E-14	-1.656E-13	6.216E-14
37	51	G1_power station	0.	0.	0.
37	53	G1_power station	0.	0.	0.
37	54	G1_power station	0.	0.	0.
37	52	G1_power station	0.	0.	0.
37	51	G2_power station	-0.0455	-9.84	-0.5595
37	53	G2_power station	0.1545	-3.8117	-0.4215
37	54	G2_power station	1.5451	-5.7306	-0.5649
37	52	G2_power station	-0.6782	-8.4453	-0.7029
37	51	Q_power station	-0.0017	-0.3641	-0.0207
37	53	Q_power station	0.0057	-0.141	-0.0156
37	54	Q_power station	0.0572	-0.212	-0.0209
37	52	Q_power station	-0.0251	-0.3125	-0.026
37	51	Q_neve	-0.0045	-1.0985	-0.0387
37	53	Q_neve	0.0137	-0.5079	-0.0177
37	54	Q_neve	0.0944	-0.7086	-0.0261
37	52	Q_neve	-0.104	-1.0045	-0.0471
37	51	Q_manutenzione	-0.0017	-0.3641	-0.0207
37	53	Q_manutenzione	0.0057	-0.141	-0.0156
37	54	Q_manutenzione	0.0572	-0.212	-0.0209
37	52	Q_manutenzione	-0.0251	-0.3125	-0.026
37	51	EQ_X	0.3988	2.9069	1.698
37	53	EQ_X	-1.4128	1.1731	2.3285
37	54	EQ_X	8.0463	2.0836	1.2923
37	52	EQ_X	1.4942	1.019	0.6618
37	51	EQ_Y	-0.0284	1.4835	0.658
37	53	EQ_Y	0.1809	8.1448	1.696
37	54	EQ_Y	3.0918	3.2158	1.4314
37	52	EQ_Y	0.4835	2.0129	0.3934
38	53	DEAD	7.582E-14	-5.154E-14	1.490E-14
38	59	DEAD	3.169E-14	-3.575E-14	3.765E-14
38	58	DEAD	-2.656E-14	-1.742E-14	3.765E-14
38	54	DEAD	-1.105E-13	-2.007E-13	1.490E-14
38	53	G1_power station	0.	0.	0.
38	59	G1_power station	0.	0.	0.
38	58	G1_power station	0.	0.	0.
38	54	G1_power station	0.	0.	0.
38	53	G2_power station	0.2087	-3.5408	0.5697
38	59	G2_power station	-0.3372	2.7844	0.292
38	58	G2_power station	10.1496	9.0232	-0.5249
38	54	G2_power station	1.4775	-6.0687	-0.2473

Table 20: Element Forces - Area Shells, Part 2 of 3

Area	Joint	OutputCase	M11	M22	M12
			KN-m/m	KN-m/m	KN-m/m
38	53	Q_power station	0.0077	-0.131	0.0211
38	59	Q_power station	-0.0125	0.103	0.0108
38	58	Q_power station	0.3755	0.3339	-0.0194
38	54	Q_power station	0.0547	-0.2245	-0.0091
38	53	Q_neve	0.019	-0.4817	0.0772
38	59	Q_neve	-0.0315	0.1649	0.0545
38	58	Q_neve	0.8717	0.7286	-0.0114
38	54	Q_neve	0.0882	-0.7394	0.0113
38	53	Q_manutenzione	0.0077	-0.131	0.0211
38	59	Q_manutenzione	-0.0125	0.103	0.0108
38	58	Q_manutenzione	0.3755	0.3339	-0.0194
38	54	Q_manutenzione	0.0547	-0.2245	-0.0091
38	53	EQ_X	-1.3568	1.4529	-0.1718
38	59	EQ_X	2.2533	-4.5718	-0.6595
38	58	EQ_X	-20.0042	-5.3734	3.963
38	54	EQ_X	8.0439	2.0718	4.4507
38	53	EQ_Y	0.8309	11.3948	2.8429
38	59	EQ_Y	-2.4478	-9.7291	-2.7515
38	58	EQ_Y	4.749	30.863	-2.1295
38	54	EQ_Y	2.4418	-0.0344	3.465
39	13	DEAD	-2.603E-13	7.870E-13	6.831E-13
39	55	DEAD	-8.374E-15	-4.838E-13	9.106E-13
39	56	DEAD	1.002E-12	-5.440E-13	6.831E-13
39	14	DEAD	4.353E-13	9.633E-14	4.555E-13
39	13	G1_power station	0.	0.	0.
39	55	G1_power station	0.	0.	0.
39	56	G1_power station	0.	0.	0.
39	14	G1_power station	0.	0.	0.
39	13	G2_power station	-0.2973	3.7405	0.1477
39	55	G2_power station	0.1958	-2.694	-0.1694
39	56	G2_power station	0.0785	-5.2785	0.715
39	14	G2_power station	9.0179	9.7177	1.0321
39	13	Q_power station	-0.011	0.1384	0.0055
39	55	Q_power station	0.0072	-0.0997	-0.0063
39	56	Q_power station	0.0029	-0.1953	0.0265
39	14	Q_power station	0.3337	0.3596	0.0382
39	13	Q_neve	-0.0273	0.2637	-0.0058
39	55	Q_neve	0.0177	-0.4069	-0.0329
39	56	Q_neve	-0.0702	-0.6716	0.0404
39	14	Q_neve	0.748	0.7986	0.0675
39	13	Q_manutenzione	-0.011	0.1384	0.0055
39	55	Q_manutenzione	0.0072	-0.0997	-0.0063
39	56	Q_manutenzione	0.0029	-0.1953	0.0265

Table 20: Element Forces - Area Shells, Part 2 of 3

Area	Joint	OutputCase	M11	M22	M12
			KN-m/m	KN-m/m	KN-m/m
39	14	Q_manutenzione	0.3337	0.3596	0.0382
39	13	EQ_X	-2.2827	5.038	-0.5124
39	55	EQ_X	1.3796	-1.0651	-0.0287
39	56	EQ_X	-8.9658	-1.6583	4.7182
39	14	EQ_X	19.6958	5.5887	4.2345
39	13	EQ_Y	-2.371	-9.5569	2.4016
39	55	EQ_Y	0.7928	10.9943	-3.0655
39	56	EQ_Y	2.4924	0.2219	-3.6971
39	14	EQ_Y	4.4708	29.7015	1.77
40	55	DEAD	-5.031E-14	-7.090E-13	7.356E-13
40	67	DEAD	-9.157E-14	-1.442E-12	5.991E-13
40	68	DEAD	6.345E-14	-9.592E-13	7.356E-13
40	56	DEAD	9.323E-13	1.281E-13	8.721E-13
40	55	G1_power station	0.	0.	0.
40	67	G1_power station	0.	0.	0.
40	68	G1_power station	0.	0.	0.
40	56	G1_power station	0.	0.	0.
40	55	G2_power station	0.1467	-2.9394	0.7454
40	67	G2_power station	-0.039	-9.2254	0.7651
40	68	G2_power station	-2.4393	-7.7894	0.9659
40	56	G2_power station	0.1437	-4.9527	0.9462
40	55	Q_power station	0.0054	-0.1088	0.0276
40	67	Q_power station	-0.0014	-0.3413	0.0283
40	68	Q_power station	-0.0903	-0.2882	0.0357
40	56	Q_power station	0.0053	-0.1832	0.035
40	55	Q_neve	0.013	-0.4303	0.0538
40	67	Q_neve	-0.0039	-1.0568	0.0617
40	68	Q_neve	-0.3027	-0.9589	0.0758
40	56	Q_neve	-0.0643	-0.6419	0.068
40	55	Q_manutenzione	0.0054	-0.1088	0.0276
40	67	Q_manutenzione	-0.0014	-0.3413	0.0283
40	68	Q_manutenzione	-0.0903	-0.2882	0.0357
40	56	Q_manutenzione	0.0053	-0.1832	0.035
40	55	EQ_X	1.4407	-0.7598	2.475
40	67	EQ_X	-0.4038	-2.5497	1.7867
40	68	EQ_X	-2.3857	-0.723	0.7437
40	56	EQ_X	-8.9731	-1.6946	1.432
40	55	EQ_Y	0.1801	7.9308	-2.0136
40	67	EQ_Y	-0.0309	1.4617	-0.9917
40	68	EQ_Y	0.5144	1.9076	-0.7297
40	56	EQ_Y	3.0819	3.1692	-1.7516
41	67	DEAD	2.768E-13	-1.584E-12	4.203E-13
41	69	DEAD	-2.174E-13	-1.145E-12	3.293E-13

Table 20: Element Forces - Area Shells, Part 2 of 3

Area	Joint	OutputCase	M11	M22	M12
			KN-m/m	KN-m/m	KN-m/m
41	70	DEAD	-7.557E-15	-1.641E-12	4.203E-13
41	68	DEAD	-1.833E-13	-7.010E-13	5.113E-13
41	67	G1_power station	0.	0.	0.
41	69	G1_power station	0.	0.	0.
41	70	G1_power station	0.	0.	0.
41	68	G1_power station	0.	0.	0.
41	67	G2_power station	0.0112	-8.9746	0.304
41	69	G2_power station	0.0112	-8.9746	-0.304
41	70	G2_power station	-2.4781	-7.9835	-0.304
41	68	G2_power station	-2.4781	-7.9835	0.304
41	67	Q_power station	4.145E-04	-0.3321	0.0112
41	69	Q_power station	4.145E-04	-0.3321	-0.0112
41	70	Q_power station	-0.0917	-0.2954	-0.0112
41	68	Q_power station	-0.0917	-0.2954	0.0112
41	67	Q_neve	6.514E-04	-1.0342	0.0243
41	69	Q_neve	6.514E-04	-1.0342	-0.0243
41	70	Q_neve	-0.3062	-0.9765	-0.0243
41	68	Q_neve	-0.3062	-0.9765	0.0243
41	67	Q_manutenzione	4.145E-04	-0.3321	0.0112
41	69	Q_manutenzione	4.145E-04	-0.3321	-0.0112
41	70	Q_manutenzione	-0.0917	-0.2954	-0.0112
41	68	Q_manutenzione	-0.0917	-0.2954	0.0112
41	67	EQ_X	-0.3884	-2.4727	0.424
41	69	EQ_X	-0.3884	-2.4727	-0.424
41	70	EQ_X	-2.4009	-0.7987	-0.424
41	68	EQ_X	-2.4009	-0.7987	0.424
41	67	EQ_Y	0.0566	1.8992	-0.6356
41	69	EQ_Y	-0.0566	-1.8992	-0.6356
41	70	EQ_Y	-0.4396	-1.5334	-0.7165
41	68	EQ_Y	0.4396	1.5334	-0.7165
42	1	DEAD	9.696E-15	-2.364E-14	-1.138E-14
42	57	DEAD	4.075E-14	-1.828E-14	-2.275E-14
42	58	DEAD	-4.007E-14	6.879E-14	1.138E-14
42	59	DEAD	4.217E-14	-7.942E-14	2.275E-14
42	1	G1_power station	0.	0.	0.
42	57	G1_power station	0.	0.	0.
42	58	G1_power station	0.	0.	0.
42	59	G1_power station	0.	0.	0.
42	1	G2_power station	0.3245	0.2801	-2.2286
42	57	G2_power station	3.8554	-0.2919	-1.5476
42	58	G2_power station	10.1187	8.8684	-1.0108
42	59	G2_power station	-0.3085	2.928	-1.6918
42	1	Q_power station	0.012	0.0104	-0.0825

Table 20: Element Forces - Area Shells, Part 2 of 3

Area	Joint	OutputCase	M11	M22	M12
			KN-m/m	KN-m/m	KN-m/m
42	57	Q_power station	0.1427	-0.0108	-0.0573
42	58	Q_power station	0.3744	0.3281	-0.0374
42	59	Q_power station	-0.0114	0.1083	-0.0626
42	1	Q_neve	0.032	0.0263	-0.1799
42	57	Q_neve	0.2897	-0.0265	-0.1091
42	58	Q_neve	0.8687	0.7139	-0.057
42	59	Q_neve	-0.0286	0.1797	-0.1277
42	1	Q_manutenzione	0.012	0.0104	-0.0825
42	57	Q_manutenzione	0.1427	-0.0108	-0.0573
42	58	Q_manutenzione	0.3744	0.3281	-0.0374
42	59	Q_manutenzione	-0.0114	0.1083	-0.0626
42	1	EQ_X	-2.5226	-0.8918	2.5319
42	57	EQ_X	13.7085	2.1362	-3.0303
42	58	EQ_X	-20.0032	-5.3684	-2.3253
42	59	EQ_X	2.2641	-4.5174	3.237
42	1	EQ_Y	-0.9804	-3.0607	3.054
42	57	EQ_Y	-5.2759	3.0565	3.956
42	58	EQ_Y	-6.1315	-23.5393	-2.1738
42	59	EQ_Y	2.4118	14.5689	-3.0759
43	69	DEAD	-3.412E-13	-1.621E-12	5.088E-13
43	71	DEAD	4.669E-13	-2.057E-12	3.511E-13
43	72	DEAD	-5.914E-13	-1.781E-12	4.633E-13
43	70	DEAD	-3.749E-13	-1.897E-12	3.056E-13
43	69	G1_power station	0.	0.	0.
43	71	G1_power station	0.	0.	0.
43	72	G1_power station	0.	0.	0.
43	70	G1_power station	0.	0.	0.
43	69	G2_power station	-0.039	-9.2254	-0.7651
43	71	G2_power station	0.1467	-2.9394	-0.7454
43	72	G2_power station	0.1437	-4.9527	-0.9462
43	70	G2_power station	-2.4393	-7.7894	-0.9659
43	69	Q_power station	-0.0014	-0.3413	-0.0283
43	71	Q_power station	0.0054	-0.1088	-0.0276
43	72	Q_power station	0.0053	-0.1832	-0.035
43	70	Q_power station	-0.0903	-0.2882	-0.0357
43	69	Q_neve	-0.0039	-1.0568	-0.0617
43	71	Q_neve	0.013	-0.4303	-0.0538
43	72	Q_neve	-0.0643	-0.6419	-0.068
43	70	Q_neve	-0.3027	-0.9589	-0.0758
43	69	Q_manutenzione	-0.0014	-0.3413	-0.0283
43	71	Q_manutenzione	0.0054	-0.1088	-0.0276
43	72	Q_manutenzione	0.0053	-0.1832	-0.035
43	70	Q_manutenzione	-0.0903	-0.2882	-0.0357

Table 20: Element Forces - Area Shells, Part 2 of 3

Area	Joint	OutputCase	M11	M22	M12
			KN-m/m	KN-m/m	KN-m/m
43	69	EQ_X	-0.4038	-2.5497	-1.7867
43	71	EQ_X	1.4407	-0.7598	-2.475
43	72	EQ_X	-8.9731	-1.6946	-1.432
43	70	EQ_X	-2.3857	-0.723	-0.7437
43	69	EQ_Y	0.0309	-1.4617	-0.9917
43	71	EQ_Y	-0.1801	-7.9308	-2.0136
43	72	EQ_Y	-3.0819	-3.1692	-1.7516
43	70	EQ_Y	-0.5144	-1.9076	-0.7297
44	60	DEAD	-6.356E-14	4.073E-14	1.794E-14
44	2	DEAD	2.940E-15	-4.969E-14	2.932E-14
44	61	DEAD	-3.085E-14	-5.047E-16	-4.808E-15
44	6	DEAD	3.565E-14	4.558E-14	-1.618E-14
44	60	G1_power station	0.	0.	0.
44	2	G1_power station	0.	0.	0.
44	61	G1_power station	0.	0.	0.
44	6	G1_power station	0.	0.	0.
44	60	G2_power station	4.0027	-0.2846	1.8455
44	2	G2_power station	0.2814	0.2748	2.3987
44	61	G2_power station	-0.2863	3.4154	1.8689
44	6	G2_power station	9.7653	9.2725	1.3157
44	60	Q_power station	0.1481	-0.0105	0.0683
44	2	Q_power station	0.0104	0.0102	0.0888
44	61	Q_power station	-0.0106	0.1264	0.0691
44	6	Q_power station	0.3613	0.3431	0.0487
44	60	Q_neve	0.3091	-0.026	0.1459
44	2	Q_neve	0.027	0.0258	0.2017
44	61	Q_neve	-0.0262	0.2424	0.1505
44	6	Q_neve	0.8323	0.7681	0.0947
44	60	Q_manutenzione	0.1481	-0.0105	0.0683
44	2	Q_manutenzione	0.0104	0.0102	0.0888
44	61	Q_manutenzione	-0.0106	0.1264	0.0691
44	6	Q_manutenzione	0.3613	0.3431	0.0487
44	60	EQ_X	-13.9063	-2.1707	-2.9505
44	2	EQ_X	2.5498	0.9011	2.6497
44	61	EQ_X	-2.2995	4.8176	3.3869
44	6	EQ_X	20.1517	5.55	-2.2134
44	60	EQ_Y	-5.3265	2.753	-3.9245
44	2	EQ_Y	-0.9314	-2.8679	-3.0077
44	61	EQ_Y	2.3212	14.034	2.9582
44	6	EQ_Y	-5.8976	-22.7459	2.0413
45	71	DEAD	4.136E-13	-2.154E-12	1.576E-13
45	15	DEAD	-8.063E-13	-1.594E-12	-2.153E-13
45	18	DEAD	-7.354E-13	-1.346E-12	1.576E-13

Table 20: Element Forces - Area Shells, Part 2 of 3

Area	Joint	OutputCase	M11	M22	M12
			KN-m/m	KN-m/m	KN-m/m
45	72	DEAD	-6.584E-13	-1.946E-12	5.770E-14
45	71	G1_power station	0.	0.	0.
45	15	G1_power station	0.	0.	0.
45	18	G1_power station	0.	0.	0.
45	72	G1_power station	0.	0.	0.
45	71	G2_power station	0.1958	-2.694	0.1694
45	15	G2_power station	-0.2973	3.7405	-0.1477
45	18	G2_power station	9.0179	9.7177	-1.0321
45	72	G2_power station	0.0785	-5.2785	-0.715
45	71	Q_power station	0.0072	-0.0997	0.0063
45	15	Q_power station	-0.011	0.1384	-0.0055
45	18	Q_power station	0.3337	0.3596	-0.0382
45	72	Q_power station	0.0029	-0.1953	-0.0265
45	71	Q_neve	0.0177	-0.4069	0.0329
45	15	Q_neve	-0.0273	0.2637	0.0058
45	18	Q_neve	0.748	0.7986	-0.0675
45	72	Q_neve	-0.0702	-0.6716	-0.0404
45	71	Q_manutenzione	0.0072	-0.0997	0.0063
45	15	Q_manutenzione	-0.011	0.1384	-0.0055
45	18	Q_manutenzione	0.3337	0.3596	-0.0382
45	72	Q_manutenzione	0.0029	-0.1953	-0.0265
45	71	EQ_X	1.3796	-1.0651	0.0287
45	15	EQ_X	-2.2827	5.038	0.5124
45	18	EQ_X	19.6958	5.5887	-4.2345
45	72	EQ_X	-8.9658	-1.6583	-4.7182
45	71	EQ_Y	-0.7928	-10.9943	-3.0655
45	15	EQ_Y	2.371	9.5569	2.4016
45	18	EQ_Y	-4.4708	-29.7015	1.77
45	72	EQ_Y	-2.4924	-0.2219	-3.6971
46	62	DEAD	-1.392E-14	3.807E-14	-1.970E-14
46	3	DEAD	-7.691E-14	-4.047E-14	-1.970E-14
46	64	DEAD	1.310E-14	3.664E-14	-1.970E-14
46	63	DEAD	-4.705E-14	-2.767E-14	-1.970E-14
46	62	G1_power station	0.	0.	0.
46	3	G1_power station	0.	0.	0.
46	64	G1_power station	0.	0.	0.
46	63	G1_power station	0.	0.	0.
46	62	G2_power station	-0.2863	3.4154	-1.8689
46	3	G2_power station	0.2814	0.2748	-2.3987
46	64	G2_power station	4.0027	-0.2846	-1.8455
46	63	G2_power station	9.7653	9.2725	-1.3157
46	62	Q_power station	-0.0106	0.1264	-0.0691
46	3	Q_power station	0.0104	0.0102	-0.0888

Table 20: Element Forces - Area Shells, Part 2 of 3

Area	Joint	OutputCase	M11	M22	M12
			KN-m/m	KN-m/m	KN-m/m
46	64	Q_power station	0.1481	-0.0105	-0.0683
46	63	Q_power station	0.3613	0.3431	-0.0487
46	62	Q_neve	-0.0262	0.2424	-0.1505
46	3	Q_neve	0.027	0.0258	-0.2017
46	64	Q_neve	0.3091	-0.026	-0.1459
46	63	Q_neve	0.8323	0.7681	-0.0947
46	62	Q_manutenzione	-0.0106	0.1264	-0.0691
46	3	Q_manutenzione	0.0104	0.0102	-0.0888
46	64	Q_manutenzione	0.1481	-0.0105	-0.0683
46	63	Q_manutenzione	0.3613	0.3431	-0.0487
46	62	EQ_X	-2.2995	4.8176	-3.3869
46	3	EQ_X	2.5498	0.9011	-2.6497
46	64	EQ_X	-13.9063	-2.1707	2.9505
46	63	EQ_X	20.1517	5.55	2.2134
46	62	EQ_Y	-2.3212	-14.034	2.9582
46	3	EQ_Y	0.9314	2.8679	-3.0077
46	64	EQ_Y	5.3265	-2.753	-3.9245
46	63	EQ_Y	5.8976	22.7459	2.0413
48	65	DEAD	2.730E-14	-8.605E-14	7.225E-14
48	4	DEAD	3.344E-14	-1.206E-14	6.087E-14
48	66	DEAD	-1.252E-14	2.202E-14	7.225E-14
48	5	DEAD	3.060E-14	7.610E-14	8.362E-14
48	65	G1_power station	0.	0.	0.
48	4	G1_power station	0.	0.	0.
48	66	G1_power station	0.	0.	0.
48	5	G1_power station	0.	0.	0.
48	65	G2_power station	3.8554	-0.2919	1.5476
48	4	G2_power station	0.3245	0.2801	2.2286
48	66	G2_power station	-0.3085	2.928	1.6918
48	5	G2_power station	10.1187	8.8684	1.0108
48	65	Q_power station	0.1427	-0.0108	0.0573
48	4	Q_power station	0.012	0.0104	0.0825
48	66	Q_power station	-0.0114	0.1083	0.0626
48	5	Q_power station	0.3744	0.3281	0.0374
48	65	Q_neve	0.2897	-0.0265	0.1091
48	4	Q_neve	0.032	0.0263	0.1799
48	66	Q_neve	-0.0286	0.1797	0.1277
48	5	Q_neve	0.8687	0.7139	0.057
48	65	Q_manutenzione	0.1427	-0.0108	0.0573
48	4	Q_manutenzione	0.012	0.0104	0.0825
48	66	Q_manutenzione	-0.0114	0.1083	0.0626
48	5	Q_manutenzione	0.3744	0.3281	0.0374
48	65	EQ_X	13.7085	2.1362	3.0303

Table 20: Element Forces - Area Shells, Part 2 of 3

Area	Joint	OutputCase	M11	M22	M12
			KN-m/m	KN-m/m	KN-m/m
48	4	EQ_X	-2.5226	-0.8918	-2.5319
48	66	EQ_X	2.2641	-4.5174	-3.237
48	5	EQ_X	-20.0032	-5.3684	2.3253
48	65	EQ_Y	5.2759	-3.0565	3.956
48	4	EQ_Y	0.9804	3.0607	3.054
48	66	EQ_Y	-2.4118	-14.5689	-3.0759
48	5	EQ_Y	6.1315	23.5393	-2.1738
49	21	DEAD	7.108E-13	1.001E-12	2.224E-13
49	73	DEAD	-4.143E-13	9.037E-13	1.769E-13
49	74	DEAD	5.174E-13	1.672E-12	4.035E-14
49	22	DEAD	-1.313E-12	2.325E-13	8.585E-14
49	21	G1_power station	0.	0.	0.
49	73	G1_power station	0.	0.	0.
49	74	G1_power station	0.	0.	0.
49	22	G1_power station	0.	0.	0.
49	21	G2_power station	-0.3299	3.2305	-0.1095
49	73	G2_power station	0.2075	-3.0518	-0.3964
49	74	G2_power station	0.6427	-5.6615	0.4199
49	22	G2_power station	9.2589	9.2502	0.7068
49	21	Q_power station	-0.0122	0.1195	-0.0041
49	73	Q_power station	0.0077	-0.1129	-0.0147
49	74	Q_power station	0.0238	-0.2095	0.0155
49	22	Q_power station	0.3426	0.3423	0.0262
49	21	Q_neve	-0.0309	0.1905	-0.0376
49	73	Q_neve	0.0188	-0.4742	-0.0609
49	74	Q_neve	0.0042	-0.7415	0.0033
49	22	Q_neve	0.7834	0.732	0.0266
49	21	Q_manutenzione	-0.0122	0.1195	-0.0041
49	73	Q_manutenzione	0.0077	-0.1129	-0.0147
49	74	Q_manutenzione	0.0238	-0.2095	0.0155
49	22	Q_manutenzione	0.3426	0.3423	0.0262
49	21	EQ_X	2.2517	-4.7163	0.6588
49	73	EQ_X	-1.3567	1.2746	0.1746
49	74	EQ_X	8.553	1.9867	-4.43
49	22	EQ_X	-19.3919	-5.4038	-3.9459
49	21	EQ_Y	2.4583	10.0386	-2.4059
49	73	EQ_Y	-0.8327	-11.2201	3.2404
49	74	EQ_Y	-2.3221	0.1602	3.8855
49	22	EQ_Y	-4.4961	-30.6856	-1.7608
50	73	DEAD	-3.138E-13	1.084E-12	2.627E-14
50	75	DEAD	-6.602E-14	9.041E-13	7.177E-14
50	76	DEAD	-4.082E-14	1.084E-12	2.627E-14
50	74	DEAD	1.842E-13	7.904E-13	-1.923E-14

Table 20: Element Forces - Area Shells, Part 2 of 3

Area	Joint	OutputCase	M11	M22	M12
			KN-m/m	KN-m/m	KN-m/m
50	73	G1_power station	0.	0.	0.
50	75	G1_power station	0.	0.	0.
50	76	G1_power station	0.	0.	0.
50	74	G1_power station	0.	0.	0.
50	73	G2_power station	0.1554	-3.3123	0.5688
50	75	G2_power station	-0.0471	-9.3295	0.6593
50	76	G2_power station	-1.4361	-7.9268	0.7922
50	74	G2_power station	0.7099	-5.3254	0.7016
50	73	Q_power station	0.0057	-0.1226	0.021
50	75	Q_power station	-0.0017	-0.3452	0.0244
50	76	Q_power station	-0.0531	-0.2933	0.0293
50	74	Q_power station	0.0263	-0.197	0.026
50	73	Q_neve	0.0138	-0.4994	0.0316
50	75	Q_neve	-0.0048	-1.1036	0.0484
50	76	Q_neve	-0.1815	-1.0104	0.0547
50	74	Q_neve	0.0103	-0.7108	0.0379
50	73	Q_manutenzione	0.0057	-0.1226	0.021
50	75	Q_manutenzione	-0.0017	-0.3452	0.0244
50	76	Q_manutenzione	-0.0531	-0.2933	0.0293
50	74	Q_manutenzione	0.0263	-0.197	0.026
50	73	EQ_X	-1.4129	0.9935	-2.3241
50	75	EQ_X	0.4005	2.7069	-1.6969
50	76	EQ_X	1.9115	0.92	-0.643
50	74	EQ_X	8.5565	2.0043	-1.2703
50	73	EQ_Y	-0.1805	-7.9593	2.1353
50	75	EQ_Y	0.0279	-1.4357	1.1195
50	76	EQ_Y	-0.4482	-1.9762	0.8633
50	74	EQ_Y	-2.9736	-3.097	1.8792
51	75	DEAD	2.692E-13	9.151E-13	8.585E-14
51	77	DEAD	-5.040E-13	-1.132E-13	1.769E-13
51	78	DEAD	-7.212E-14	-2.452E-13	1.769E-13
51	76	DEAD	-4.812E-13	5.466E-13	8.585E-14
51	75	G1_power station	0.	0.	0.
51	77	G1_power station	0.	0.	0.
51	78	G1_power station	0.	0.	0.
51	76	G1_power station	0.	0.	0.
51	75	G2_power station	0.0022	-9.083	0.2561
51	77	G2_power station	0.0022	-9.083	-0.2561
51	78	G2_power station	-1.4757	-8.1244	-0.2561
51	76	G2_power station	-1.4757	-8.1244	0.2561
51	75	Q_power station	8.124E-05	-0.3361	0.0095
51	77	Q_power station	8.124E-05	-0.3361	-0.0095
51	78	Q_power station	-0.0546	-0.3006	-0.0095

Table 20: Element Forces - Area Shells, Part 2 of 3

Area	Joint	OutputCase	M11	M22	M12
			KN-m/m	KN-m/m	KN-m/m
51	76	Q_power station	-0.0546	-0.3006	0.0095
51	75	Q_neve	-3.479E-04	-1.0815	0.0184
51	77	Q_neve	-3.479E-04	-1.0815	-0.0184
51	78	Q_neve	-0.1851	-1.0282	-0.0184
51	76	Q_neve	-0.1851	-1.0282	0.0184
51	75	Q_manutenzione	8.124E-05	-0.3361	0.0095
51	77	Q_manutenzione	8.124E-05	-0.3361	-0.0095
51	78	Q_manutenzione	-0.0546	-0.3006	-0.0095
51	76	Q_manutenzione	-0.0546	-0.3006	0.0095
51	75	EQ_X	0.3832	2.6206	-0.3905
51	77	EQ_X	0.3832	2.6206	0.3905
51	78	EQ_X	1.931	1.0172	0.3905
51	76	EQ_X	1.931	1.0172	-0.3905
51	75	EQ_Y	-0.0628	-1.8892	0.7749
51	77	EQ_Y	0.0628	1.8892	0.7749
51	78	EQ_Y	0.3664	1.5669	0.8863
51	76	EQ_Y	-0.3664	-1.5669	0.8863
52	77	DEAD	-2.964E-13	-1.899E-13	3.730E-13
52	79	DEAD	1.903E-13	-8.863E-13	3.274E-13
52	80	DEAD	-1.371E-13	-1.032E-12	9.993E-14
52	78	DEAD	-1.509E-13	1.375E-13	1.454E-13
52	77	G1_power station	0.	0.	0.
52	79	G1_power station	0.	0.	0.
52	80	G1_power station	0.	0.	0.
52	78	G1_power station	0.	0.	0.
52	77	G2_power station	-0.0471	-9.3295	-0.6593
52	79	G2_power station	0.1554	-3.3123	-0.5688
52	80	G2_power station	0.7099	-5.3254	-0.7016
52	78	G2_power station	-1.4361	-7.9268	-0.7922
52	77	Q_power station	-0.0017	-0.3452	-0.0244
52	79	Q_power station	0.0057	-0.1226	-0.021
52	80	Q_power station	0.0263	-0.197	-0.026
52	78	Q_power station	-0.0531	-0.2933	-0.0293
52	77	Q_neve	-0.0048	-1.1036	-0.0484
52	79	Q_neve	0.0138	-0.4994	-0.0316
52	80	Q_neve	0.0103	-0.7108	-0.0379
52	78	Q_neve	-0.1815	-1.0104	-0.0547
52	77	Q_manutenzione	-0.0017	-0.3452	-0.0244
52	79	Q_manutenzione	0.0057	-0.1226	-0.021
52	80	Q_manutenzione	0.0263	-0.197	-0.026
52	78	Q_manutenzione	-0.0531	-0.2933	-0.0293
52	77	EQ_X	0.4005	2.7069	1.6969
52	79	EQ_X	-1.4129	0.9935	2.3241

Table 20: Element Forces - Area Shells, Part 2 of 3

Area	Joint	OutputCase	M11	M22	M12
			KN-m/m	KN-m/m	KN-m/m
52	80	EQ_X	8.5565	2.0043	1.2703
52	78	EQ_X	1.9115	0.92	0.643
52	77	EQ_Y	-0.0279	1.4357	1.1195
52	79	EQ_Y	0.1805	7.9593	2.1353
52	80	EQ_Y	2.9736	3.097	1.8792
52	78	EQ_Y	0.4482	1.9762	0.8633
53	79	DEAD	9.200E-14	-1.278E-12	1.192E-13
53	10	DEAD	4.791E-14	-3.333E-13	1.647E-13
53	9	DEAD	-3.744E-13	-6.069E-13	3.012E-13
53	80	DEAD	-5.448E-14	-1.118E-12	2.557E-13
53	79	G1_power station	0.	0.	0.
53	10	G1_power station	0.	0.	0.
53	9	G1_power station	0.	0.	0.
53	80	G1_power station	0.	0.	0.
53	79	G2_power station	0.2075	-3.0518	0.3964
53	10	G2_power station	-0.3299	3.2305	0.1095
53	9	G2_power station	9.2589	9.2502	-0.7068
53	80	G2_power station	0.6427	-5.6615	-0.4199
53	79	Q_power station	0.0077	-0.1129	0.0147
53	10	Q_power station	-0.0122	0.1195	0.0041
53	9	Q_power station	0.3426	0.3423	-0.0262
53	80	Q_power station	0.0238	-0.2095	-0.0155
53	79	Q_neve	0.0188	-0.4742	0.0609
53	10	Q_neve	-0.0309	0.1905	0.0376
53	9	Q_neve	0.7834	0.732	-0.0266
53	80	Q_neve	0.0042	-0.7415	-0.0033
53	79	Q_manutenzione	0.0077	-0.1129	0.0147
53	10	Q_manutenzione	-0.0122	0.1195	0.0041
53	9	Q_manutenzione	0.3426	0.3423	-0.0262
53	80	Q_manutenzione	0.0238	-0.2095	-0.0155
53	79	EQ_X	-1.3567	1.2746	-0.1746
53	10	EQ_X	2.2517	-4.7163	-0.6588
53	9	EQ_X	-19.3919	-5.4038	3.9459
53	80	EQ_X	8.553	1.9867	4.43
53	79	EQ_Y	0.8327	11.2201	3.2404
53	10	EQ_Y	-2.4583	-10.0386	-2.4059
53	9	EQ_Y	4.4961	30.6856	-1.7608
53	80	EQ_Y	2.3221	-0.1602	3.8855
54	60	DEAD	6.829E-14	4.642E-14	-1.490E-14
54	6	DEAD	-5.441E-15	5.496E-14	-2.627E-14
54	81	DEAD	1.764E-13	2.114E-13	-3.765E-14
54	82	DEAD	-6.516E-14	-7.302E-14	-2.627E-14
54	60	G1_power station	0.	0.	0.

Table 20: Element Forces - Area Shells, Part 2 of 3

Area	Joint	OutputCase	M11	M22	M12
			KN-m/m	KN-m/m	KN-m/m
54	6	G1_power station	0.	0.	0.
54	81	G1_power station	0.	0.	0.
54	82	G1_power station	0.	0.	0.
54	60	G2_power station	3.8088	-0.3234	-1.921E-04
54	6	G2_power station	9.9313	9.3057	0.8495
54	81	G2_power station	-3.3699	1.7766	0.7241
54	82	G2_power station	-0.1806	0.1933	-0.1256
54	60	Q_power station	0.1409	-0.012	-7.109E-06
54	6	Q_power station	0.3675	0.3443	0.0314
54	81	Q_power station	-0.1247	0.0657	0.0268
54	82	Q_power station	-0.0067	0.0072	-0.0046
54	60	Q_neve	0.2906	-0.0296	-0.0269
54	6	Q_neve	0.8474	0.7711	0.047
54	81	Q_neve	-0.4239	0.0793	0.033
54	82	Q_neve	-0.1169	0.0175	-0.0409
54	60	Q_manutenzione	0.1409	-0.012	-7.109E-06
54	6	Q_manutenzione	0.3675	0.3443	0.0314
54	81	Q_manutenzione	-0.1247	0.0657	0.0268
54	82	Q_manutenzione	-0.0067	0.0072	-0.0046
54	60	EQ_X	8.6561	2.3418	-2.9948
54	6	EQ_X	-29.9848	-4.4773	-2.3521
54	81	EQ_X	-3.5759	-3.0753	2.7237
54	82	EQ_X	-12.4158	-0.6813	2.0809
54	60	EQ_Y	-5.416	2.7351	0.4248
54	6	EQ_Y	-5.8674	-22.7398	-5.2326
54	81	EQ_Y	1.2231	7.9861	-5.9437
54	82	EQ_Y	-0.0129	-1.8282	-0.2863
55	82	DEAD	1.909E-14	-2.560E-14	-6.873E-14
55	81	DEAD	8.028E-14	1.804E-13	-3.460E-14
55	83	DEAD	1.385E-13	2.560E-14	-2.322E-14
55	84	DEAD	2.054E-13	-1.295E-14	-5.735E-14
55	82	G1_power station	0.	0.	0.
55	81	G1_power station	0.	0.	0.
55	83	G1_power station	0.	0.	0.
55	84	G1_power station	0.	0.	0.
55	82	G2_power station	-0.4521	0.139	0.9918
55	81	G2_power station	-3.0752	1.8356	1.2788
55	83	G2_power station	-5.2575	-0.6815	1.7234
55	84	G2_power station	-5.6385	-0.0182	1.4364
55	82	Q_power station	-0.0167	0.0051	0.0367
55	81	Q_power station	-0.1138	0.0679	0.0473
55	83	Q_power station	-0.1945	-0.0252	0.0638
55	84	Q_power station	-0.2086	-6.740E-04	0.0531

Table 20: Element Forces - Area Shells, Part 2 of 3

Area	Joint	OutputCase	M11	M22	M12
			KN-m/m	KN-m/m	KN-m/m
55	82	Q_neve	-0.1422	0.0124	0.0594
55	81	Q_neve	-0.3971	0.0846	0.084
55	83	Q_neve	-0.6278	-0.1506	0.1246
55	84	Q_neve	-0.6443	-0.0018	0.0999
55	82	Q_manutenzione	-0.0167	0.0051	0.0367
55	81	Q_manutenzione	-0.1138	0.0679	0.0473
55	83	Q_manutenzione	-0.1945	-0.0252	0.0638
55	84	Q_manutenzione	-0.2086	-6.740E-04	0.0531
55	82	EQ_X	-10.0132	-0.2008	1.564
55	81	EQ_X	-5.7504	-3.5102	1.1642
55	83	EQ_X	-5.2383	-1.0343	0.2023
55	84	EQ_X	-5.4006	0.0207	0.6022
55	82	EQ_Y	-0.2593	-1.8775	-3.665
55	81	EQ_Y	1.2692	7.9953	-2.4134
55	83	EQ_Y	0.2928	0.3564	-2.0993
55	84	EQ_Y	1.648	0.7122	-3.3509
56	84	DEAD	1.658E-13	-1.990E-14	-2.756E-14
56	83	DEAD	2.936E-13	6.026E-14	-4.808E-15
56	85	DEAD	-6.316E-14	-3.839E-14	4.070E-14
56	86	DEAD	3.263E-13	-1.511E-14	1.794E-14
56	84	G1_power station	0.	0.	0.
56	83	G1_power station	0.	0.	0.
56	85	G1_power station	0.	0.	0.
56	86	G1_power station	0.	0.	0.
56	84	G2_power station	-5.4234	0.0248	1.524
56	83	G2_power station	-5.4203	-0.714	1.5668
56	85	G2_power station	-6.0028	-1.1972	1.3977
56	86	G2_power station	-6.546	-0.012	1.3549
56	84	Q_power station	-0.2007	9.176E-04	0.0564
56	83	Q_power station	-0.2006	-0.0264	0.058
56	85	Q_power station	-0.2221	-0.0443	0.0517
56	86	Q_power station	-0.2422	-4.447E-04	0.0501
56	84	Q_neve	-0.6246	0.0021	0.107
56	83	Q_neve	-0.6426	-0.1536	0.1114
56	85	Q_neve	-0.7021	-0.2027	0.0956
56	86	Q_neve	-0.7354	-0.0013	0.0912
56	84	Q_manutenzione	-0.2007	9.176E-04	0.0564
56	83	Q_manutenzione	-0.2006	-0.0264	0.058
56	85	Q_manutenzione	-0.2221	-0.0443	0.0517
56	86	Q_manutenzione	-0.2422	-4.447E-04	0.0501
56	84	EQ_X	-5.6852	-0.0362	0.0596
56	83	EQ_X	-5.0003	-0.9867	0.0549
56	85	EQ_X	-3.6148	-0.3498	-0.1465

Table 20: Element Forces - Area Shells, Part 2 of 3

Area	Joint	OutputCase	M11	M22	M12
			KN-m/m	KN-m/m	KN-m/m
56	86	EQ_X	-3.7785	0.005	-0.1419
56	84	EQ_Y	1.6119	0.705	-2.284
56	83	EQ_Y	0.3292	0.3637	-2.3245
56	85	EQ_Y	0.8964	1.5474	-1.928
56	86	EQ_Y	1.5136	-0.2154	-1.8874
57	86	DEAD	3.035E-13	-9.005E-15	1.165E-13
57	85	DEAD	6.258E-14	-3.122E-14	8.233E-14
57	87	DEAD	3.049E-13	1.346E-13	9.371E-14
57	88	DEAD	3.840E-14	-1.558E-14	1.278E-13
57	86	G1_power station	0.	0.	0.
57	85	G1_power station	0.	0.	0.
57	87	G1_power station	0.	0.	0.
57	88	G1_power station	0.	0.	0.
57	86	G2_power station	-6.5084	-0.0045	1.0974
57	85	G2_power station	-6.0279	-1.2022	1.141
57	87	G2_power station	-5.4933	-1.2073	0.8568
57	88	G2_power station	-6.0954	0.0078	0.8132
57	86	Q_power station	-0.2408	-1.663E-04	0.0406
57	85	Q_power station	-0.223	-0.0445	0.0422
57	87	Q_power station	-0.2033	-0.0447	0.0317
57	88	Q_power station	-0.2255	2.873E-04	0.0301
57	86	Q_neve	-0.7317	-5.875E-04	0.0662
57	85	Q_neve	-0.7044	-0.2031	0.0721
57	87	Q_neve	-0.6442	-0.2079	0.0447
57	88	Q_neve	-0.6855	8.985E-04	0.0388
57	86	Q_manutenzione	-0.2408	-1.663E-04	0.0406
57	85	Q_manutenzione	-0.223	-0.0445	0.0422
57	87	Q_manutenzione	-0.2033	-0.0447	0.0317
57	88	Q_manutenzione	-0.2255	2.873E-04	0.0301
57	86	EQ_X	-3.8202	-0.0034	-0.277
57	85	EQ_X	-3.5909	-0.345	-0.2292
57	87	EQ_X	-2.5418	-0.0942	-0.2945
57	88	EQ_X	-2.5844	0.0028	-0.3423
57	86	EQ_Y	1.5337	-0.2113	-1.6041
57	85	EQ_Y	0.8917	1.5465	-1.4989
57	87	EQ_Y	0.8988	0.8229	-1.1839
57	88	EQ_Y	1.4889	0.0648	-1.289
58	88	DEAD	1.406E-13	-4.292E-14	9.195E-14
58	87	DEAD	1.583E-13	1.458E-13	1.033E-13
58	89	DEAD	4.248E-14	1.254E-14	9.195E-14
58	90	DEAD	-3.931E-14	-2.344E-14	8.057E-14
58	88	G1_power station	0.	0.	0.
58	87	G1_power station	0.	0.	0.

Table 20: Element Forces - Area Shells, Part 2 of 3

Area	Joint	OutputCase	M11	M22	M12
			KN-m/m	KN-m/m	KN-m/m
58	89	G1_power station	0.	0.	0.
58	90	G1_power station	0.	0.	0.
58	88	G2_power station	-6.0835	0.0102	0.5006
58	87	G2_power station	-5.5003	-1.2087	0.5623
58	89	G2_power station	-4.6093	-1.0903	0.2394
58	90	G2_power station	-5.3516	-0.0418	0.1777
58	88	Q_power station	-0.2251	3.759E-04	0.0185
58	87	Q_power station	-0.2035	-0.0447	0.0208
58	89	Q_power station	-0.1705	-0.0403	0.0089
58	90	Q_power station	-0.198	-0.0015	0.0066
58	88	Q_neve	-0.6842	0.0012	0.0079
58	87	Q_neve	-0.6448	-0.208	0.016
58	89	Q_neve	-0.5404	-0.1979	-0.0162
58	90	Q_neve	-0.598	-0.0048	-0.0244
58	88	Q_manutenzione	-0.2251	3.759E-04	0.0185
58	87	Q_manutenzione	-0.2035	-0.0447	0.0208
58	89	Q_manutenzione	-0.1705	-0.0403	0.0089
58	90	Q_manutenzione	-0.198	-0.0015	0.0066
58	88	EQ_X	-2.5996	-2.222E-04	-0.3742
58	87	EQ_X	-2.5325	-0.0924	-0.3256
58	89	EQ_X	-1.7948	0.0129	-0.3423
58	90	EQ_X	-1.8047	-0.0023	-0.391
58	88	EQ_Y	1.5027	0.0676	-0.9662
58	87	EQ_Y	0.893	0.8217	-0.9497
58	89	EQ_Y	0.8799	0.8035	-0.6848
58	90	EQ_Y	1.4177	-0.0025	-0.7012
59	90	DEAD	2.985E-14	-1.700E-14	7.201E-14
59	89	DEAD	8.419E-14	2.250E-14	6.480E-14
59	91	DEAD	8.673E-14	2.850E-14	2.651E-14
59	92	DEAD	-2.672E-14	4.810E-14	5.342E-14
59	90	G1_power station	0.	0.	0.
59	89	G1_power station	0.	0.	0.
59	91	G1_power station	0.	0.	0.
59	92	G1_power station	0.	0.	0.
59	90	G2_power station	-5.316	-0.0346	-0.1718
59	89	G2_power station	-4.6201	-1.0925	-0.1227
59	91	G2_power station	-4.1614	-1.4236	-0.5842
59	92	G2_power station	-5.4812	0.1499	-0.6333
59	90	Q_power station	-0.1967	-0.0013	-0.0064
59	89	Q_power station	-0.1709	-0.0404	-0.0045
59	91	Q_power station	-0.154	-0.0527	-0.0216
59	92	Q_power station	-0.2028	0.0055	-0.0234
59	90	Q_neve	-0.5948	-0.0042	-0.0585

Table 20: Element Forces - Area Shells, Part 2 of 3

Area	Joint	OutputCase	M11	M22	M12
			KN-m/m	KN-m/m	KN-m/m
59	89	Q_neve	-0.5408	-0.198	-0.0538
59	91	Q_neve	-0.4735	-0.2253	-0.0996
59	92	Q_neve	-0.5841	0.0189	-0.1043
59	90	Q_manutenzione	-0.1967	-0.0013	-0.0064
59	89	Q_manutenzione	-0.1709	-0.0404	-0.0045
59	91	Q_manutenzione	-0.154	-0.0527	-0.0216
59	92	Q_manutenzione	-0.2028	0.0055	-0.0234
59	90	EQ_X	-1.8122	-0.0038	-0.3634
59	89	EQ_X	-1.785	0.0149	-0.3844
59	91	EQ_X	-1.3371	0.2237	-0.3891
59	92	EQ_X	-1.374	0.0523	-0.3681
59	90	EQ_Y	1.4098	-0.0041	-0.3977
59	89	EQ_Y	0.8876	0.805	-0.4705
59	91	EQ_Y	0.8056	1.1034	-0.1863
59	92	EQ_Y	1.4656	-0.0031	-0.1135
60	92	DEAD	-1.299E-14	7.065E-14	1.760E-15
60	91	DEAD	-6.515E-15	7.351E-15	3.589E-14
60	26	DEAD	1.534E-13	-1.893E-14	2.451E-14
60	27	DEAD	6.316E-14	-1.967E-14	-9.616E-15
60	92	G1_power station	0.	0.	0.
60	91	G1_power station	0.	0.	0.
60	26	G1_power station	0.	0.	0.
60	27	G1_power station	0.	0.	0.
60	92	G2_power station	-5.449	0.1563	-1.0314
60	91	G2_power station	-4.0314	-1.3976	-1.4567
60	26	G2_power station	-5.8092	-0.2414	-2.3647
60	27	G2_power station	-9.0951	-0.3056	-1.9394
60	92	Q_power station	-0.2016	0.0058	-0.0382
60	91	Q_power station	-0.1492	-0.0517	-0.0539
60	26	Q_power station	-0.2149	-0.0089	-0.0875
60	27	Q_power station	-0.3365	-0.0113	-0.0718
60	92	Q_neve	-0.5857	0.0186	-0.1365
60	91	Q_neve	-0.4555	-0.2217	-0.1911
60	26	Q_neve	-0.6228	-0.0316	-0.2711
60	27	Q_neve	-0.8862	-0.0367	-0.2165
60	92	Q_manutenzione	-0.2016	0.0058	-0.0382
60	91	Q_manutenzione	-0.1492	-0.0517	-0.0539
60	26	Q_manutenzione	-0.2149	-0.0089	-0.0875
60	27	Q_manutenzione	-0.3365	-0.0113	-0.0718
60	92	EQ_X	-1.4216	0.0428	-0.3389
60	91	EQ_X	-1.264	0.2383	-0.4338
60	26	EQ_X	-1.5229	0.7873	-0.3879
60	27	EQ_X	-1.3374	-0.1441	-0.2929

Table 20: Element Forces - Area Shells, Part 2 of 3

Area	Joint	OutputCase	M11	M22	M12
			KN-m/m	KN-m/m	KN-m/m
60	92	EQ_Y	1.4272	-0.0107	0.1624
60	91	EQ_Y	0.8178	1.1059	0.1914
60	26	EQ_Y	0.6835	1.0897	0.6237
60	27	EQ_Y	2.0083	-0.0267	0.5946
61	65	DEAD	1.247E-13	-7.263E-14	1.068E-13
61	5	DEAD	5.141E-14	7.055E-14	1.068E-13
61	93	DEAD	9.489E-16	-8.644E-15	1.296E-13
61	94	DEAD	1.017E-14	8.741E-16	1.296E-13
61	65	G1_power station	0.	0.	0.
61	5	G1_power station	0.	0.	0.
61	93	G1_power station	0.	0.	0.
61	94	G1_power station	0.	0.	0.
61	65	G2_power station	3.6465	-0.3337	-0.4705
61	5	G2_power station	10.3104	8.9067	0.4054
61	93	G2_power station	-2.3022	1.8842	0.1192
61	94	G2_power station	0.4521	0.1639	-0.7567
61	65	Q_power station	0.1349	-0.0123	-0.0174
61	5	Q_power station	0.3815	0.3295	0.015
61	93	Q_power station	-0.0852	0.0697	0.0044
61	94	Q_power station	0.0167	0.0061	-0.028
61	65	Q_neve	0.2699	-0.0305	-0.0846
61	5	Q_neve	0.8863	0.7174	-0.0075
61	93	Q_neve	-0.3036	0.0756	-0.041
61	94	Q_neve	-0.05	0.0135	-0.118
61	65	Q_manutenzione	0.1349	-0.0123	-0.0174
61	5	Q_manutenzione	0.3815	0.3295	0.015
61	93	Q_manutenzione	-0.0852	0.0697	0.0044
61	94	Q_manutenzione	0.0167	0.0061	-0.028
61	65	EQ_X	-9.1154	-2.4285	3.4202
61	5	EQ_X	30.3693	4.7061	2.66
61	93	EQ_X	4.0829	3.5779	-2.1989
61	94	EQ_X	12.405	0.6658	-1.4386
61	65	EQ_Y	5.3832	-3.035	-0.8647
61	5	EQ_Y	6.0981	23.5326	5.434
61	93	EQ_Y	-1.0089	-8.2048	6.1081
61	94	EQ_Y	0.5012	2.1175	-0.1907
62	94	DEAD	-4.765E-15	-2.382E-14	1.099E-13
62	93	DEAD	2.138E-13	4.986E-14	1.213E-13
62	95	DEAD	-1.330E-14	-6.648E-14	8.714E-14
62	96	DEAD	-5.228E-15	4.702E-14	7.577E-14
62	94	G1_power station	0.	0.	0.
62	93	G1_power station	0.	0.	0.
62	95	G1_power station	0.	0.	0.

Table 20: Element Forces - Area Shells, Part 2 of 3

Area	Joint	OutputCase	M11	M22	M12
			KN-m/m	KN-m/m	KN-m/m
62	96	G1_power station	0.	0.	0.
62	94	G2_power station	0.2033	0.1141	0.2101
62	93	G2_power station	-2.0116	1.9423	0.3959
62	95	G2_power station	-4.4935	-0.5122	0.6268
62	96	G2_power station	-5.5448	0.2089	0.4409
62	94	Q_power station	0.0075	0.0042	0.0078
62	93	Q_power station	-0.0744	0.0719	0.0146
62	95	Q_power station	-0.1663	-0.019	0.0232
62	96	Q_power station	-0.2052	0.0077	0.0163
62	94	Q_neve	-0.0732	0.0089	-0.0355
62	93	Q_neve	-0.2765	0.081	-0.0222
62	95	Q_neve	-0.5171	-0.1427	-0.0073
62	96	Q_neve	-0.6118	0.0254	-0.0206
62	94	Q_manutenzione	0.0075	0.0042	0.0078
62	93	Q_manutenzione	-0.0744	0.0719	0.0146
62	95	Q_manutenzione	-0.1663	-0.019	0.0232
62	96	Q_manutenzione	-0.2052	0.0077	0.0163
62	94	EQ_X	10.2496	0.2347	-1.1949
62	93	EQ_X	6.004	3.9621	-0.6026
62	95	EQ_X	5.6426	1.421	0.5124
62	96	EQ_X	7.0142	-0.2179	-0.0798
62	94	EQ_Y	0.6993	2.1571	3.5513
62	93	EQ_Y	-1.0366	-8.2104	2.3102
62	95	EQ_Y	0.1218	-0.6066	2.0629
62	96	EQ_Y	-1.063	-0.8017	3.304
63	96	DEAD	1.747E-13	1.102E-13	1.117E-13
63	95	DEAD	-3.478E-14	-1.095E-13	1.003E-13
63	25	DEAD	1.562E-13	8.602E-14	1.117E-13
63	28	DEAD	-3.336E-14	-3.415E-14	1.230E-13
63	96	G1_power station	0.	0.	0.
63	95	G1_power station	0.	0.	0.
63	25	G1_power station	0.	0.	0.
63	28	G1_power station	0.	0.	0.
63	96	G2_power station	-5.3584	0.2462	0.5285
63	95	G2_power station	-4.4746	-0.5084	-0.1289
63	25	G2_power station	-7.1265	1.1202	-0.8771
63	28	G2_power station	-10.9045	-0.4974	-0.2197
63	96	Q_power station	-0.1983	0.0091	0.0196
63	95	Q_power station	-0.1656	-0.0188	-0.0048
63	25	Q_power station	-0.2637	0.0414	-0.0325
63	28	Q_power station	-0.4035	-0.0184	-0.0081
63	96	Q_neve	-0.5991	0.028	-0.0111
63	95	Q_neve	-0.5089	-0.141	-0.0911

Table 20: Element Forces - Area Shells, Part 2 of 3

Area	Joint	OutputCase	M11	M22	M12
			KN-m/m	KN-m/m	KN-m/m
63	25	Q_neve	-0.7839	0.0949	-0.1604
63	28	Q_neve	-1.1065	-0.0573	-0.0805
63	96	Q_manutenzione	-0.1983	0.0091	0.0196
63	95	Q_manutenzione	-0.1656	-0.0188	-0.0048
63	25	Q_manutenzione	-0.2637	0.0414	-0.0325
63	28	Q_manutenzione	-0.4035	-0.0184	-0.0081
63	96	EQ_X	7.2897	-0.1628	0.6414
63	95	EQ_X	5.2686	1.3462	1.2809
63	25	EQ_X	6.7042	-1.1897	1.9532
63	28	EQ_X	8.7525	0.4972	1.3137
63	96	EQ_Y	-0.9916	-0.7874	2.3655
63	95	EQ_Y	0.0504	-0.6209	2.2985
63	25	EQ_Y	0.5227	-1.2869	1.8731
63	28	EQ_Y	-0.7063	0.2874	1.9401
64	6	DEAD	1.447E-14	8.941E-14	-6.216E-14
64	40	DEAD	-1.614E-14	2.868E-14	0.
64	97	DEAD	-5.438E-15	-4.426E-14	-1.666E-14
64	81	DEAD	1.360E-13	3.864E-14	0.
64	6	G1_power station	0.	0.	0.
64	40	G1_power station	0.	0.	0.
64	97	G1_power station	0.	0.	0.
64	81	G1_power station	0.	0.	0.
64	6	G2_power station	9.9595	9.4465	2.2442
64	40	G2_power station	0.8994	-5.4505	2.7175
64	97	G2_power station	-1.8428	-2.9258	3.3868
64	81	G2_power station	-3.3885	1.6837	2.9135
64	6	Q_power station	0.3685	0.3495	0.083
64	40	Q_power station	0.0333	-0.2017	0.1005
64	97	Q_power station	-0.0682	-0.1083	0.1253
64	81	Q_power station	-0.1254	0.0623	0.1078
64	6	Q_neve	0.8499	0.7841	0.1717
64	40	Q_neve	0.0233	-0.6579	0.2177
64	97	Q_neve	-0.3137	-0.4639	0.2769
64	81	Q_neve	-0.4256	0.071	0.2309
64	6	Q_manutenzione	0.3685	0.3495	0.083
64	40	Q_manutenzione	0.0333	-0.2017	0.1005
64	97	Q_manutenzione	-0.0682	-0.1083	0.1253
64	81	Q_manutenzione	-0.1254	0.0623	0.1078
64	6	EQ_X	-29.9879	-4.4926	4.0709
64	40	EQ_X	3.2217	0.6322	4.5411
64	97	EQ_X	-8.4581	0.2155	-0.3948
64	81	EQ_X	-3.5887	-3.139	-0.8651
64	6	EQ_Y	4.6329	29.7617	-4.8592

Table 20: Element Forces - Area Shells, Part 2 of 3

Area	Joint	OutputCase	M11	M22	M12
			KN-m/m	KN-m/m	KN-m/m
64	40	EQ_Y	2.5876	0.2254	1.0393
64	97	EQ_Y	0.098	7.144	0.5011
64	81	EQ_Y	-1.1725	-3.9921	-5.3974
65	81	DEAD	1.393E-13	7.093E-14	3.928E-15
65	97	DEAD	1.061E-13	-1.761E-14	-1.466E-14
65	98	DEAD	3.553E-14	-4.433E-15	-3.020E-14
65	83	DEAD	9.335E-14	8.904E-14	8.092E-15
65	81	G1_power station	0.	0.	0.
65	97	G1_power station	0.	0.	0.
65	98	G1_power station	0.	0.	0.
65	83	G1_power station	0.	0.	0.
65	81	G2_power station	-3.0938	1.7426	2.4861
65	97	G2_power station	-1.9796	-2.9531	2.7512
65	98	G2_power station	-4.9736	-2.716	2.2428
65	83	G2_power station	-5.2524	-0.6562	1.9778
65	81	Q_power station	-0.1145	0.0645	0.092
65	97	Q_power station	-0.0732	-0.1093	0.1018
65	98	Q_power station	-0.184	-0.1005	0.083
65	83	Q_power station	-0.1943	-0.0243	0.0732
65	81	Q_neve	-0.3987	0.0763	0.1932
65	97	Q_neve	-0.326	-0.4663	0.2207
65	98	Q_neve	-0.6323	-0.4659	0.1762
65	83	Q_neve	-0.6273	-0.1482	0.1488
65	81	Q_manutenzione	-0.1145	0.0645	0.092
65	97	Q_manutenzione	-0.0732	-0.1093	0.1018
65	98	Q_manutenzione	-0.184	-0.1005	0.083
65	83	Q_manutenzione	-0.1943	-0.0243	0.0732
65	81	EQ_X	-5.7632	-3.5739	-0.3386
65	97	EQ_X	-7.1361	0.4799	-0.558
65	98	EQ_X	-4.5925	-0.5672	-0.2558
65	83	EQ_X	-5.2263	-0.9744	-0.0364
65	81	EQ_Y	-1.1264	-3.9829	-2.1179
65	97	EQ_Y	0.2503	7.1745	-2.4135
65	98	EQ_Y	-0.1827	1.55	-2.1228
65	83	EQ_Y	0.8644	3.2147	-1.8273
66	83	DEAD	3.681E-13	1.386E-13	1.161E-14
66	98	DEAD	3.016E-14	1.641E-14	1.578E-14
66	99	DEAD	1.548E-13	-6.432E-15	3.436E-14
66	85	DEAD	-1.106E-13	-4.918E-15	4.990E-14
66	83	G1_power station	0.	0.	0.
66	98	G1_power station	0.	0.	0.
66	99	G1_power station	0.	0.	0.
66	85	G1_power station	0.	0.	0.

Table 20: Element Forces - Area Shells, Part 2 of 3

Area	Joint	OutputCase	M11	M22	M12
			KN-m/m	KN-m/m	KN-m/m
66	83	G2_power station	-5.4152	-0.6887	1.77
66	98	G2_power station	-4.8918	-2.6996	1.7752
66	99	G2_power station	-5.4498	-2.44	1.4552
66	85	G2_power station	-6.0032	-1.1994	1.4501
66	83	Q_power station	-0.2004	-0.0255	0.0655
66	98	Q_power station	-0.181	-0.0999	0.0657
66	99	Q_power station	-0.2016	-0.0903	0.0538
66	85	Q_power station	-0.2221	-0.0444	0.0537
66	83	Q_neve	-0.6421	-0.1511	0.1312
66	98	Q_neve	-0.625	-0.4644	0.1355
66	99	Q_neve	-0.6799	-0.4539	0.1073
66	85	Q_neve	-0.7021	-0.2029	0.103
66	83	Q_manutenzione	-0.2004	-0.0255	0.0655
66	98	Q_manutenzione	-0.181	-0.0999	0.0657
66	99	Q_manutenzione	-0.2016	-0.0903	0.0538
66	85	Q_manutenzione	-0.2221	-0.0444	0.0537
66	83	EQ_X	-4.9883	-0.9268	-0.1423
66	98	EQ_X	-4.7718	-0.603	-0.2377
66	99	EQ_X	-3.5051	-0.2265	-0.2816
66	85	EQ_X	-3.6186	-0.3688	-0.1862
66	83	EQ_Y	0.9008	3.222	-1.9749
66	98	EQ_Y	-0.2397	1.5386	-1.4189
66	99	EQ_Y	0.3436	1.604	-1.1655
66	85	EQ_Y	0.7613	0.872	-1.7215
67	85	DEAD	9.809E-14	6.349E-14	4.117E-14
67	99	DEAD	-4.476E-14	-4.899E-14	4.117E-14
67	100	DEAD	1.351E-13	7.771E-14	6.392E-14
67	87	DEAD	2.681E-13	8.183E-14	6.392E-14
67	85	G1_power station	0.	0.	0.
67	99	G1_power station	0.	0.	0.
67	100	G1_power station	0.	0.	0.
67	87	G1_power station	0.	0.	0.
67	85	G2_power station	-6.0283	-1.2044	1.1752
67	99	G2_power station	-5.4517	-2.4404	1.1257
67	100	G2_power station	-4.9212	-2.0273	0.8367
67	87	G2_power station	-5.4903	-1.1925	0.8862
67	85	Q_power station	-0.223	-0.0446	0.0435
67	99	Q_power station	-0.2017	-0.0903	0.0416
67	100	Q_power station	-0.1821	-0.075	0.031
67	87	Q_power station	-0.2031	-0.0441	0.0328
67	85	Q_neve	-0.7044	-0.2033	0.0779
67	99	Q_neve	-0.6801	-0.454	0.0778
67	100	Q_neve	-0.616	-0.4255	0.0507

Table 20: Element Forces - Area Shells, Part 2 of 3

Area	Joint	OutputCase	M11	M22	M12
			KN-m/m	KN-m/m	KN-m/m
67	87	Q_neve	-0.6439	-0.2062	0.0508
67	85	Q_manutenzione	-0.223	-0.0446	0.0435
67	99	Q_manutenzione	-0.2017	-0.0903	0.0416
67	100	Q_manutenzione	-0.1821	-0.075	0.031
67	87	Q_manutenzione	-0.2031	-0.0441	0.0328
67	85	EQ_X	-3.5947	-0.364	-0.2606
67	99	EQ_X	-3.5111	-0.2277	-0.2622
67	100	EQ_X	-2.5041	-0.0724	-0.2788
67	87	EQ_X	-2.5431	-0.1009	-0.2772
67	85	EQ_Y	0.7567	0.8711	-1.2974
67	99	EQ_Y	0.3289	1.601	-1.157
67	100	EQ_Y	0.4114	0.9406	-0.9561
67	87	EQ_Y	0.9309	0.9834	-1.0965
68	87	DEAD	8.382E-14	5.371E-14	1.147E-13
68	100	DEAD	8.322E-14	5.158E-14	8.057E-14
68	101	DEAD	2.388E-13	1.803E-13	6.920E-14
68	89	DEAD	8.180E-14	4.447E-14	1.033E-13
68	87	G1_power station	0.	0.	0.
68	100	G1_power station	0.	0.	0.
68	101	G1_power station	0.	0.	0.
68	89	G1_power station	0.	0.	0.
68	87	G2_power station	-5.4973	-1.1939	0.5866
68	100	G2_power station	-4.9214	-2.0274	0.5779
68	101	G2_power station	-3.8933	-1.6439	0.2872
68	89	G2_power station	-4.6232	-1.1598	0.2959
68	87	Q_power station	-0.2034	-0.0442	0.0217
68	100	Q_power station	-0.1821	-0.075	0.0214
68	101	Q_power station	-0.1441	-0.0608	0.0106
68	89	Q_power station	-0.1711	-0.0429	0.0109
68	87	Q_neve	-0.6445	-0.2063	0.0215
68	100	Q_neve	-0.616	-0.4255	0.0254
68	101	Q_neve	-0.4916	-0.3975	-0.0045
68	89	Q_neve	-0.5419	-0.2053	-0.0083
68	87	Q_manutenzione	-0.2034	-0.0442	0.0217
68	100	Q_manutenzione	-0.1821	-0.075	0.0214
68	101	Q_manutenzione	-0.1441	-0.0608	0.0106
68	89	Q_manutenzione	-0.1711	-0.0429	0.0109
68	87	EQ_X	-2.5339	-0.099	-0.3036
68	100	EQ_X	-2.5022	-0.072	-0.2798
68	101	EQ_X	-1.7101	-0.0102	-0.3012
68	89	EQ_X	-1.7884	0.0448	-0.325
68	87	EQ_Y	0.9251	0.9822	-0.8676
68	100	EQ_Y	0.4097	0.9402	-0.8079

Table 20: Element Forces - Area Shells, Part 2 of 3

Area	Joint	OutputCase	M11	M22	M12
			KN-m/m	KN-m/m	KN-m/m
68	101	EQ_Y	0.4439	0.8351	-0.632
68	89	EQ_Y	0.8855	0.8312	-0.6918
69	89	DEAD	6.913E-14	5.130E-14	4.597E-14
69	101	DEAD	1.104E-13	1.588E-13	8.843E-14
69	102	DEAD	1.402E-13	1.679E-13	4.597E-14
69	91	DEAD	5.213E-14	3.779E-15	4.293E-14
69	89	G1_power station	0.	0.	0.
69	101	G1_power station	0.	0.	0.
69	102	G1_power station	0.	0.	0.
69	91	G1_power station	0.	0.	0.
69	89	G2_power station	-4.634	-1.162	-0.0431
69	101	G2_power station	-3.8884	-1.6429	-0.0242
69	102	G2_power station	-2.7013	-1.361	-0.4484
69	91	G2_power station	-4.1133	-1.1831	-0.4673
69	89	Q_power station	-0.1715	-0.043	-0.0016
69	101	Q_power station	-0.1439	-0.0608	-8.969E-04
69	102	Q_power station	-0.0999	-0.0504	-0.0166
69	91	Q_power station	-0.1522	-0.0438	-0.0173
69	89	Q_neve	-0.5422	-0.2053	-0.0434
69	101	Q_neve	-0.4914	-0.3975	-0.0392
69	102	Q_neve	-0.3346	-0.3748	-0.087
69	91	Q_neve	-0.4684	-0.1996	-0.0912
69	89	Q_manutenzione	-0.1715	-0.043	-0.0016
69	101	Q_manutenzione	-0.1439	-0.0608	-8.969E-04
69	102	Q_manutenzione	-0.0999	-0.0504	-0.0166
69	91	Q_manutenzione	-0.1522	-0.0438	-0.0173
69	89	EQ_X	-1.7786	0.0467	-0.3578
69	101	EQ_X	-1.7111	-0.0104	-0.3434
69	102	EQ_X	-1.0078	0.1293	-0.4226
69	91	EQ_X	-1.3682	0.0684	-0.437
69	89	EQ_Y	0.8931	0.8328	-0.4784
69	101	EQ_Y	0.4395	0.8342	-0.514
69	102	EQ_Y	0.3963	0.9479	-0.3598
69	91	EQ_Y	0.7518	0.8341	-0.3242
70	91	DEAD	2.084E-16	-3.720E-15	1.970E-14
70	102	DEAD	1.151E-13	1.571E-13	8.328E-15
70	103	DEAD	1.197E-13	1.499E-13	1.970E-14
70	26	DEAD	1.919E-13	9.739E-14	3.108E-14
70	91	G1_power station	0.	0.	0.
70	102	G1_power station	0.	0.	0.
70	103	G1_power station	0.	0.	0.
70	26	G1_power station	0.	0.	0.
70	91	G2_power station	-3.9833	-1.1571	-1.3312

Table 20: Element Forces - Area Shells, Part 2 of 3

Area	Joint	OutputCase	M11	M22	M12
			KN-m/m	KN-m/m	KN-m/m
70	102	G2_power station	-2.9274	-1.4062	-0.8959
70	103	G2_power station	1.4012	-2.3365	-2.5141
70	26	G2_power station	-6.089	-1.6403	-2.9494
70	91	Q_power station	-0.1474	-0.0428	-0.0493
70	102	Q_power station	-0.1083	-0.052	-0.0331
70	103	Q_power station	0.0518	-0.0864	-0.093
70	26	Q_power station	-0.2253	-0.0607	-0.1091
70	91	Q_neve	-0.4503	-0.196	-0.1852
70	102	Q_neve	-0.3605	-0.38	-0.1433
70	103	Q_neve	0.149	-0.5112	-0.3275
70	26	Q_neve	-0.6529	-0.1823	-0.3694
70	91	Q_manutenzione	-0.1474	-0.0428	-0.0493
70	102	Q_manutenzione	-0.1083	-0.052	-0.0331
70	103	Q_manutenzione	0.0518	-0.0864	-0.093
70	26	Q_manutenzione	-0.2253	-0.0607	-0.1091
70	91	EQ_X	-1.295	0.083	-0.5341
70	102	EQ_X	-1.0779	0.1153	-0.632
70	103	EQ_X	0.3055	-0.526	-1.0584
70	26	EQ_X	-1.4009	1.3974	-0.9605
70	91	EQ_Y	0.764	0.8366	-0.0019
70	102	EQ_Y	0.4179	0.9523	-0.3693
70	103	EQ_Y	-0.2342	0.878	-0.1387
70	26	EQ_Y	0.9423	2.3839	0.2286
71	40	DEAD	-2.831E-14	2.710E-15	-1.161E-14
71	42	DEAD	-5.509E-14	-1.678E-13	1.226E-14
71	104	DEAD	9.398E-14	-6.839E-14	-3.436E-14
71	97	DEAD	7.475E-15	8.528E-15	8.799E-16
71	40	G1_power station	0.	0.	0.
71	42	G1_power station	0.	0.	0.
71	104	G1_power station	0.	0.	0.
71	97	G1_power station	0.	0.	0.
71	40	G2_power station	0.9658	-5.1184	1.8957
71	42	G2_power station	-1.3937	-7.721	0.959
71	104	G2_power station	-2.7829	-6.6282	1.3366
71	97	G2_power station	-1.8692	-3.0579	2.2733
71	40	Q_power station	0.0357	-0.1894	0.0701
71	42	Q_power station	-0.0516	-0.2857	0.0355
71	104	Q_power station	-0.103	-0.2452	0.0495
71	97	Q_power station	-0.0692	-0.1131	0.0841
71	40	Q_neve	0.0293	-0.6276	0.1503
71	42	Q_neve	-0.1874	-0.9095	0.074
71	104	Q_neve	-0.4097	-0.8488	0.1072
71	97	Q_neve	-0.3161	-0.4758	0.1836

Table 20: Element Forces - Area Shells, Part 2 of 3

Area	Joint	OutputCase	M11	M22	M12
			KN-m/m	KN-m/m	KN-m/m
71	40	Q_manutenzione	0.0357	-0.1894	0.0701
71	42	Q_manutenzione	-0.0516	-0.2857	0.0355
71	104	Q_manutenzione	-0.103	-0.2452	0.0495
71	97	Q_manutenzione	-0.0692	-0.1131	0.0841
71	40	EQ_X	3.2147	0.5972	1.2575
71	42	EQ_X	-4.1654	-1.2126	0.6108
71	104	EQ_X	-3.8319	-0.1211	1.0415
71	97	EQ_X	-8.5033	-0.0108	1.6882
71	40	EQ_Y	3.1764	3.1689	0.01
71	42	EQ_Y	0.4633	1.8808	-0.4318
71	104	EQ_Y	0.4205	1.0245	-0.2634
71	97	EQ_Y	-0.289	5.2095	0.1784
72	97	DEAD	1.400E-13	7.609E-14	-2.780E-14
72	104	DEAD	9.427E-14	-8.420E-14	-8.799E-16
72	105	DEAD	2.049E-15	-2.723E-13	-5.044E-15
72	98	DEAD	8.716E-14	8.502E-14	-1.226E-14
72	97	G1_power station	0.	0.	0.
72	104	G1_power station	0.	0.	0.
72	105	G1_power station	0.	0.	0.
72	98	G1_power station	0.	0.	0.
72	97	G2_power station	-2.006	-3.0853	2.2361
72	104	G2_power station	-2.8053	-6.6327	1.5106
72	105	G2_power station	-4.311	-4.7619	1.3287
72	98	G2_power station	-4.9815	-2.7554	2.0542
72	97	Q_power station	-0.0742	-0.1142	0.0827
72	104	Q_power station	-0.1038	-0.2454	0.0559
72	105	Q_power station	-0.1595	-0.1762	0.0492
72	98	Q_power station	-0.1843	-0.102	0.076
72	97	Q_neve	-0.3284	-0.4783	0.1807
72	104	Q_neve	-0.4116	-0.8492	0.1228
72	105	Q_neve	-0.5867	-0.7073	0.1071
72	98	Q_neve	-0.633	-0.4693	0.165
72	97	Q_manutenzione	-0.0742	-0.1142	0.0827
72	104	Q_manutenzione	-0.1038	-0.2454	0.0559
72	105	Q_manutenzione	-0.1595	-0.1762	0.0492
72	98	Q_manutenzione	-0.1843	-0.102	0.076
72	97	EQ_X	-7.1813	0.2536	0.2967
72	104	EQ_X	-4.183	-0.1914	0.4733
72	105	EQ_X	-4.5838	0.2279	-0.0708
72	98	EQ_X	-4.5747	-0.478	-0.2474
72	97	EQ_Y	-0.1366	5.2399	-0.7369
72	104	EQ_Y	0.3309	1.0066	-0.0905
72	105	EQ_Y	-0.0842	1.1733	-0.3661

Table 20: Element Forces - Area Shells, Part 2 of 3

Area	Joint	OutputCase	M11	M22	M12
			KN-m/m	KN-m/m	KN-m/m
72	98	EQ_Y	-0.0427	2.2499	-1.0126
73	98	DEAD	1.069E-13	1.084E-13	4.181E-14
73	105	DEAD	-1.838E-13	-3.107E-13	-3.692E-15
73	106	DEAD	8.845E-14	-1.812E-14	3.044E-14
73	99	DEAD	6.643E-14	1.923E-14	7.594E-14
73	98	G1_power station	0.	0.	0.
73	105	G1_power station	0.	0.	0.
73	106	G1_power station	0.	0.	0.
73	99	G1_power station	0.	0.	0.
73	98	G2_power station	-4.8997	-2.7391	1.576
73	105	G2_power station	-4.3381	-4.7674	1.1418
73	106	G2_power station	-4.9825	-3.4324	0.8392
73	99	G2_power station	-5.4538	-2.4601	1.2735
73	98	Q_power station	-0.1813	-0.1013	0.0583
73	105	Q_power station	-0.1605	-0.1764	0.0422
73	106	Q_power station	-0.1844	-0.127	0.0311
73	99	Q_power station	-0.2018	-0.091	0.0471
73	98	Q_neve	-0.6257	-0.4678	0.1231
73	105	Q_neve	-0.5892	-0.7078	0.0908
73	106	Q_neve	-0.6507	-0.6052	0.0641
73	99	Q_neve	-0.6803	-0.4557	0.0964
73	98	Q_manutenzione	-0.1813	-0.1013	0.0583
73	105	Q_manutenzione	-0.1605	-0.1764	0.0422
73	106	Q_manutenzione	-0.1844	-0.127	0.0311
73	99	Q_manutenzione	-0.2018	-0.091	0.0471
73	98	EQ_X	-4.7539	-0.5138	-0.285
73	105	EQ_X	-4.4998	0.2447	-0.2034
73	106	EQ_X	-3.5409	0.0578	-0.2052
73	99	EQ_X	-3.5066	-0.234	-0.2868
73	98	EQ_Y	-0.0997	2.2385	-0.9727
73	105	EQ_Y	-0.0188	1.1864	-0.6224
73	106	EQ_Y	0.0142	0.6318	-0.6514
73	99	EQ_Y	0.2996	1.3843	-1.0017
74	99	DEAD	-1.300E-14	-1.207E-14	4.926E-14
74	106	DEAD	2.005E-14	-6.073E-14	5.342E-14
74	107	DEAD	1.320E-13	-3.533E-15	4.926E-14
74	100	DEAD	6.697E-14	3.260E-15	6.480E-14
74	99	G1_power station	0.	0.	0.
74	106	G1_power station	0.	0.	0.
74	107	G1_power station	0.	0.	0.
74	100	G1_power station	0.	0.	0.
74	99	G2_power station	-5.4558	-2.4605	0.9382
74	106	G2_power station	-4.9744	-3.4308	0.6705

Table 20: Element Forces - Area Shells, Part 2 of 3

Area	Joint	OutputCase	M11	M22	M12
			KN-m/m	KN-m/m	KN-m/m
74	107	G2_power station	-4.529	-2.5208	0.4544
74	100	G2_power station	-4.9222	-2.0321	0.7221
74	99	Q_power station	-0.2019	-0.091	0.0347
74	106	Q_power station	-0.1841	-0.1269	0.0248
74	107	Q_power station	-0.1676	-0.0933	0.0168
74	100	Q_power station	-0.1821	-0.0752	0.0267
74	99	Q_neve	-0.6805	-0.4557	0.0663
74	106	Q_neve	-0.65	-0.6051	0.049
74	107	Q_neve	-0.5899	-0.536	0.0289
74	100	Q_neve	-0.6161	-0.4261	0.0462
74	99	Q_manutenzione	-0.2019	-0.091	0.0347
74	106	Q_manutenzione	-0.1841	-0.1269	0.0248
74	107	Q_manutenzione	-0.1676	-0.0933	0.0168
74	100	Q_manutenzione	-0.1821	-0.0752	0.0267
74	99	EQ_X	-3.5126	-0.2352	-0.2555
74	106	EQ_X	-3.5379	0.0584	-0.1874
74	107	EQ_X	-2.5021	0.0126	-0.169
74	100	EQ_X	-2.5039	-0.0713	-0.2371
74	99	EQ_Y	0.285	1.3814	-0.8663
74	106	EQ_Y	0.0157	0.6322	-0.7147
74	107	EQ_Y	0.1188	0.4174	-0.6577
74	100	EQ_Y	0.4227	0.9973	-0.8093
75	100	DEAD	4.600E-14	-1.434E-14	1.073E-14
75	107	DEAD	1.485E-13	-3.711E-14	3.044E-14
75	108	DEAD	5.169E-14	-8.828E-14	2.211E-14
75	101	DEAD	2.324E-13	1.094E-13	4.181E-14
75	100	G1_power station	0.	0.	0.
75	107	G1_power station	0.	0.	0.
75	108	G1_power station	0.	0.	0.
75	101	G1_power station	0.	0.	0.
75	100	G2_power station	-4.9224	-2.0322	0.4585
75	107	G2_power station	-4.5278	-2.5205	0.3355
75	108	G2_power station	-3.3473	-1.9236	0.1328
75	101	G2_power station	-3.8972	-1.663	0.2558
75	100	Q_power station	-0.1821	-0.0752	0.017
75	107	Q_power station	-0.1675	-0.0933	0.0124
75	108	Q_power station	-0.1238	-0.0712	0.0049
75	101	Q_power station	-0.1442	-0.0615	0.0095
75	100	Q_neve	-0.6161	-0.4261	0.0204
75	107	Q_neve	-0.59	-0.536	0.0172
75	108	Q_neve	-0.444	-0.4952	-0.0042
75	101	Q_neve	-0.492	-0.3991	-9.626E-04
75	100	Q_manutenzione	-0.1821	-0.0752	0.017

Table 20: Element Forces - Area Shells, Part 2 of 3

Area	Joint	OutputCase	M11	M22	M12
			KN-m/m	KN-m/m	KN-m/m
75	107	Q_manutenzione	-0.1675	-0.0933	0.0124
75	108	Q_manutenzione	-0.1238	-0.0712	0.0049
75	101	Q_manutenzione	-0.1442	-0.0615	0.0095
75	100	EQ_X	-2.502	-0.0709	-0.2369
75	107	EQ_X	-2.5056	0.0119	-0.1599
75	108	EQ_X	-1.6093	-0.0518	-0.1764
75	101	EQ_X	-1.7076	0.0023	-0.2534
75	100	EQ_Y	0.421	0.9969	-0.6939
75	107	EQ_Y	0.1125	0.4161	-0.6354
75	108	EQ_Y	0.1349	0.3375	-0.561
75	101	EQ_Y	0.4439	0.8349	-0.6195
76	101	DEAD	6.134E-14	3.788E-14	6.609E-14
76	108	DEAD	9.547E-14	-1.111E-13	2.475E-14
76	109	DEAD	1.751E-13	6.063E-14	-1.354E-14
76	102	DEAD	1.410E-13	1.505E-13	4.750E-14
76	101	G1_power station	0.	0.	0.
76	108	G1_power station	0.	0.	0.
76	109	G1_power station	0.	0.	0.
76	102	G1_power station	0.	0.	0.
76	101	G2_power station	-3.8922	-1.662	-0.0733
76	108	G2_power station	-3.3595	-1.9261	-0.0087
76	109	G2_power station	-1.6201	-1.9084	-0.3377
76	102	G2_power station	-2.7031	-1.3698	-0.4023
76	101	Q_power station	-0.144	-0.0615	-0.0027
76	108	Q_power station	-0.1243	-0.0713	-3.202E-04
76	109	Q_power station	-0.0599	-0.0706	-0.0125
76	102	Q_power station	-0.1	-0.0507	-0.0149
76	101	Q_neve	-0.4917	-0.3991	-0.0376
76	108	Q_neve	-0.4455	-0.4955	-0.0198
76	109	Q_neve	-0.2269	-0.5164	-0.0572
76	102	Q_neve	-0.3355	-0.3793	-0.075
76	101	Q_manutenzione	-0.144	-0.0615	-0.0027
76	108	Q_manutenzione	-0.1243	-0.0713	-3.202E-04
76	109	Q_manutenzione	-0.0599	-0.0706	-0.0125
76	102	Q_manutenzione	-0.1	-0.0507	-0.0149
76	101	EQ_X	-1.7086	0.0021	-0.3111
76	108	EQ_X	-1.6144	-0.0529	-0.2025
76	109	EQ_X	-0.7804	-0.2655	-0.2788
76	102	EQ_X	-1.0226	0.0553	-0.3874
76	101	EQ_Y	0.4394	0.834	-0.5087
76	108	EQ_Y	0.1364	0.3378	-0.5207
76	109	EQ_Y	0.0857	0.3234	-0.4486
76	102	EQ_Y	0.3823	0.8781	-0.4366

Table 20: Element Forces - Area Shells, Part 2 of 3

Area	Joint	OutputCase	M11	M22	M12
			KN-m/m	KN-m/m	KN-m/m
77	102	DEAD	9.008E-14	1.170E-13	1.730E-14
77	109	DEAD	2.468E-13	1.038E-13	2.035E-14
77	110	DEAD	-9.336E-14	-1.522E-14	2.868E-14
77	103	DEAD	1.415E-13	1.237E-13	-1.378E-14
77	102	G1_power station	0.	0.	0.
77	109	G1_power station	0.	0.	0.
77	110	G1_power station	0.	0.	0.
77	103	G1_power station	0.	0.	0.
77	102	G2_power station	-2.9292	-1.415	-1.0107
77	109	G2_power station	-1.5418	-1.8927	-0.4854
77	110	G2_power station	-0.266	-2.1204	-0.4433
77	103	G2_power station	1.4072	-2.3068	-0.9685
77	102	Q_power station	-0.1084	-0.0524	-0.0374
77	109	Q_power station	-0.057	-0.07	-0.018
77	110	Q_power station	-0.0098	-0.0785	-0.0164
77	103	Q_power station	0.0521	-0.0854	-0.0358
77	102	Q_neve	-0.3614	-0.3845	-0.1458
77	109	Q_neve	-0.2185	-0.5147	-0.0742
77	110	Q_neve	-0.029	-0.5638	-0.0745
77	103	Q_neve	0.1511	-0.5006	-0.1461
77	102	Q_manutenzione	-0.1084	-0.0524	-0.0374
77	109	Q_manutenzione	-0.057	-0.07	-0.018
77	110	Q_manutenzione	-0.0098	-0.0785	-0.0164
77	103	Q_manutenzione	0.0521	-0.0854	-0.0358
77	102	EQ_X	-1.0927	0.0413	-0.5616
77	109	EQ_X	-0.7599	-0.2614	-0.304
77	110	EQ_X	-0.0636	-0.5059	-0.3078
77	103	EQ_X	0.3328	-0.3891	-0.5653
77	102	EQ_Y	0.404	0.8824	-0.3548
77	109	EQ_Y	0.0678	0.3198	-0.4164
77	110	EQ_Y	0.0635	0.3425	-0.45
77	103	EQ_Y	-0.21	0.9989	-0.3884
78	42	DEAD	-2.988E-14	-1.606E-13	-2.640E-15
78	44	DEAD	6.030E-14	-1.293E-13	-1.818E-14
78	111	DEAD	6.682E-14	4.981E-14	-3.677E-14
78	104	DEAD	3.329E-14	-2.303E-13	-4.093E-14
78	42	G1_power station	0.	0.	0.
78	44	G1_power station	0.	0.	0.
78	111	G1_power station	0.	0.	0.
78	104	G1_power station	0.	0.	0.
78	42	G2_power station	-1.4322	-7.9133	0.3888
78	44	G2_power station	-1.4322	-7.9133	-0.3888
78	111	G2_power station	-2.7612	-6.5196	-0.3888

Table 20: Element Forces - Area Shells, Part 2 of 3

Area	Joint	OutputCase	M11	M22	M12
			KN-m/m	KN-m/m	KN-m/m
78	104	G2_power station	-2.7612	-6.5196	0.3888
78	42	Q_power station	-0.053	-0.2928	0.0144
78	44	Q_power station	-0.053	-0.2928	-0.0144
78	111	Q_power station	-0.1022	-0.2412	-0.0144
78	104	Q_power station	-0.1022	-0.2412	0.0144
78	42	Q_neve	-0.1909	-0.9269	0.0307
78	44	Q_neve	-0.1909	-0.9269	-0.0307
78	111	Q_neve	-0.4078	-0.8391	-0.0307
78	104	Q_neve	-0.4078	-0.8391	0.0307
78	42	Q_manutenzione	-0.053	-0.2928	0.0144
78	44	Q_manutenzione	-0.053	-0.2928	-0.0144
78	111	Q_manutenzione	-0.1022	-0.2412	-0.0144
78	104	Q_manutenzione	-0.1022	-0.2412	0.0144
78	42	EQ_X	-4.1805	-1.288	0.2791
78	44	EQ_X	-4.1805	-1.288	-0.2791
78	111	EQ_X	-3.8123	-0.0229	-0.2791
78	104	EQ_X	-3.8123	-0.0229	0.2791
78	42	EQ_Y	0.3881	1.5048	-0.3101
78	44	EQ_Y	-0.3881	-1.5048	-0.3101
78	111	EQ_Y	-0.4754	-1.2992	-0.1979
78	104	EQ_Y	0.4754	1.2992	-0.1979
79	104	DEAD	7.036E-14	-2.463E-13	-4.808E-15
79	111	DEAD	-4.465E-14	7.709E-15	-2.756E-14
79	112	DEAD	3.528E-15	-3.445E-14	1.794E-14
79	105	DEAD	5.204E-14	-8.899E-14	4.070E-14
79	104	G1_power station	0.	0.	0.
79	111	G1_power station	0.	0.	0.
79	112	G1_power station	0.	0.	0.
79	105	G1_power station	0.	0.	0.
79	104	G2_power station	-2.7836	-6.5241	0.4797
79	111	G2_power station	-2.7836	-6.5241	-0.4797
79	112	G2_power station	-4.3152	-4.7828	-0.4797
79	105	G2_power station	-4.3152	-4.7828	0.4797
79	104	Q_power station	-0.103	-0.2414	0.0178
79	111	Q_power station	-0.103	-0.2414	-0.0178
79	112	Q_power station	-0.1597	-0.177	-0.0178
79	105	Q_power station	-0.1597	-0.177	0.0178
79	104	Q_neve	-0.4097	-0.8395	0.0389
79	111	Q_neve	-0.4097	-0.8395	-0.0389
79	112	Q_neve	-0.5871	-0.7092	-0.0389
79	105	Q_neve	-0.5871	-0.7092	0.0389
79	104	Q_manutenzione	-0.103	-0.2414	0.0178
79	111	Q_manutenzione	-0.103	-0.2414	-0.0178

Table 20: Element Forces - Area Shells, Part 2 of 3

Area	Joint	OutputCase	M11	M22	M12
			KN-m/m	KN-m/m	KN-m/m
79	112	Q_manutenzione	-0.1597	-0.177	-0.0178
79	105	Q_manutenzione	-0.1597	-0.177	0.0178
79	104	EQ_X	-4.1634	-0.0931	0.0763
79	111	EQ_X	-4.1634	-0.0931	-0.0763
79	112	EQ_X	-4.6004	0.1452	-0.0763
79	105	EQ_X	-4.6004	0.1452	0.0763
79	104	EQ_Y	0.3859	1.2813	-0.1057
79	111	EQ_Y	-0.3859	-1.2813	-0.1057
79	112	EQ_Y	0.1064	-1.0622	-0.1758
79	105	EQ_Y	-0.1064	1.0622	-0.1758
80	105	DEAD	-2.072E-13	-1.662E-13	6.568E-15
80	112	DEAD	5.504E-14	-1.454E-14	2.932E-14
80	113	DEAD	-1.526E-14	-5.956E-14	6.568E-15
80	106	DEAD	8.206E-14	-1.866E-13	-1.618E-14
80	105	G1_power station	0.	0.	0.
80	112	G1_power station	0.	0.	0.
80	113	G1_power station	0.	0.	0.
80	106	G1_power station	0.	0.	0.
80	105	G2_power station	-4.3423	-4.7883	0.3447
80	112	G2_power station	-4.3423	-4.7883	-0.3447
80	113	G2_power station	-4.9851	-3.4454	-0.3447
80	106	G2_power station	-4.9851	-3.4454	0.3447
80	105	Q_power station	-0.1607	-0.1772	0.0128
80	112	Q_power station	-0.1607	-0.1772	-0.0128
80	113	Q_power station	-0.1844	-0.1275	-0.0128
80	106	Q_power station	-0.1844	-0.1275	0.0128
80	105	Q_neve	-0.5896	-0.7097	0.0271
80	112	Q_neve	-0.5896	-0.7097	-0.0271
80	113	Q_neve	-0.6509	-0.6064	-0.0271
80	106	Q_neve	-0.6509	-0.6064	0.0271
80	105	Q_manutenzione	-0.1607	-0.1772	0.0128
80	112	Q_manutenzione	-0.1607	-0.1772	-0.0128
80	113	Q_manutenzione	-0.1844	-0.1275	-0.0128
80	106	Q_manutenzione	-0.1844	-0.1275	0.0128
80	105	EQ_X	-4.5163	0.162	-0.0658
80	112	EQ_X	-4.5163	0.162	0.0658
80	113	EQ_X	-3.537	0.0772	0.0658
80	106	EQ_X	-3.537	0.0772	-0.0658
80	105	EQ_Y	-0.041	1.0753	-0.3522
80	112	EQ_Y	0.041	-1.0753	-0.3522
80	113	EQ_Y	-0.0148	-0.6349	-0.4886
80	106	EQ_Y	0.0148	0.6349	-0.4886
81	106	DEAD	-1.566E-14	-2.169E-13	2.035E-14

Table 20: Element Forces - Area Shells, Part 2 of 3

Area	Joint	OutputCase	M11	M22	M12
			KN-m/m	KN-m/m	KN-m/m
81	113	DEAD	3.374E-14	-2.323E-14	-2.516E-14
81	114	DEAD	5.260E-14	-1.214E-14	-1.378E-14
81	107	DEAD	1.091E-13	-9.006E-14	3.172E-14
81	106	G1_power station	0.	0.	0.
81	113	G1_power station	0.	0.	0.
81	114	G1_power station	0.	0.	0.
81	107	G1_power station	0.	0.	0.
81	106	G2_power station	-4.977	-3.4438	0.1948
81	113	G2_power station	-4.977	-3.4438	-0.1948
81	114	G2_power station	-4.5294	-2.5228	-0.1948
81	107	G2_power station	-4.5294	-2.5228	0.1948
81	106	Q_power station	-0.1842	-0.1274	0.0072
81	113	Q_power station	-0.1842	-0.1274	-0.0072
81	114	Q_power station	-0.1676	-0.0933	-0.0072
81	107	Q_power station	-0.1676	-0.0933	0.0072
81	106	Q_neve	-0.6503	-0.6063	0.0136
81	113	Q_neve	-0.6503	-0.6063	-0.0136
81	114	Q_neve	-0.5899	-0.5362	-0.0136
81	107	Q_neve	-0.5899	-0.5362	0.0136
81	106	Q_manutenzione	-0.1842	-0.1274	0.0072
81	113	Q_manutenzione	-0.1842	-0.1274	-0.0072
81	114	Q_manutenzione	-0.1676	-0.0933	-0.0072
81	107	Q_manutenzione	-0.1676	-0.0933	0.0072
81	106	EQ_X	-3.534	0.0778	-0.0637
81	113	EQ_X	-3.534	0.0778	0.0637
81	114	EQ_X	-2.5022	0.0124	0.0637
81	107	EQ_X	-2.5022	0.0124	-0.0637
81	106	EQ_Y	0.0163	0.6352	-0.5711
81	113	EQ_Y	-0.0163	-0.6352	-0.5711
81	114	EQ_Y	-0.1162	-0.4045	-0.599
81	107	EQ_Y	0.1162	0.4045	-0.599
82	107	DEAD	1.858E-13	-8.235E-14	3.108E-14
82	114	DEAD	1.013E-13	5.969E-15	1.970E-14
82	115	DEAD	2.641E-13	-3.258E-14	8.328E-15
82	108	DEAD	3.585E-14	8.844E-14	1.970E-14
82	107	G1_power station	0.	0.	0.
82	114	G1_power station	0.	0.	0.
82	115	G1_power station	0.	0.	0.
82	108	G1_power station	0.	0.	0.
82	107	G2_power station	-4.5282	-2.5226	0.0787
82	114	G2_power station	-4.5282	-2.5226	-0.0787
82	115	G2_power station	-3.3529	-1.9518	-0.0787
82	108	G2_power station	-3.3529	-1.9518	0.0787

Table 20: Element Forces - Area Shells, Part 2 of 3

Area	Joint	OutputCase	M11	M22	M12
			KN-m/m	KN-m/m	KN-m/m
82	107	Q_power station	-0.1675	-0.0933	0.0029
82	114	Q_power station	-0.1675	-0.0933	-0.0029
82	115	Q_power station	-0.1241	-0.0722	-0.0029
82	108	Q_power station	-0.1241	-0.0722	0.0029
82	107	Q_neve	-0.59	-0.5362	0.0021
82	114	Q_neve	-0.59	-0.5362	-0.0021
82	115	Q_neve	-0.4446	-0.4983	-0.0021
82	108	Q_neve	-0.4446	-0.4983	0.0021
82	107	Q_manutenzione	-0.1675	-0.0933	0.0029
82	114	Q_manutenzione	-0.1675	-0.0933	-0.0029
82	115	Q_manutenzione	-0.1241	-0.0722	-0.0029
82	108	Q_manutenzione	-0.1241	-0.0722	0.0029
82	107	EQ_X	-2.5056	0.0117	-0.0587
82	114	EQ_X	-2.5056	0.0117	0.0587
82	115	EQ_X	-1.6109	-0.0599	0.0587
82	108	EQ_X	-1.6109	-0.0599	-0.0587
82	107	EQ_Y	0.1099	0.4032	-0.5818
82	114	EQ_Y	-0.1099	-0.4032	-0.5818
82	115	EQ_Y	-0.1342	-0.3338	-0.5459
82	108	EQ_Y	0.1342	0.3338	-0.5459
83	108	DEAD	9.738E-14	7.820E-14	-1.666E-14
83	115	DEAD	2.051E-13	-2.348E-14	-3.108E-14
83	116	DEAD	1.941E-13	1.180E-13	-6.216E-14
83	109	DEAD	1.923E-13	-1.921E-14	-8.328E-15
83	108	G1_power station	0.	0.	0.
83	115	G1_power station	0.	0.	0.
83	116	G1_power station	0.	0.	0.
83	109	G1_power station	0.	0.	0.
83	108	G2_power station	-3.3651	-1.9542	-0.0554
83	115	G2_power station	-3.3651	-1.9542	0.0554
83	116	G2_power station	-1.6062	-1.839	0.0554
83	109	G2_power station	-1.6062	-1.839	-0.0554
83	108	Q_power station	-0.1245	-0.0723	-0.0021
83	115	Q_power station	-0.1245	-0.0723	0.0021
83	116	Q_power station	-0.0594	-0.068	0.0021
83	109	Q_power station	-0.0594	-0.068	-0.0021
83	108	Q_neve	-0.4461	-0.4986	-0.0127
83	115	Q_neve	-0.4461	-0.4986	0.0127
83	116	Q_neve	-0.2254	-0.5088	0.0127
83	109	Q_neve	-0.2254	-0.5088	-0.0127
83	108	Q_manutenzione	-0.1245	-0.0723	-0.0021
83	115	Q_manutenzione	-0.1245	-0.0723	0.0021
83	116	Q_manutenzione	-0.0594	-0.068	0.0021

Table 20: Element Forces - Area Shells, Part 2 of 3

Area	Joint	OutputCase	M11	M22	M12
			KN-m/m	KN-m/m	KN-m/m
83	109	Q_manutenzione	-0.0594	-0.068	-0.0021
83	108	EQ_X	-1.6161	-0.0609	-0.0816
83	115	EQ_X	-1.6161	-0.0609	0.0816
83	116	EQ_X	-0.7756	-0.2413	0.0816
83	109	EQ_X	-0.7756	-0.2413	-0.0816
83	108	EQ_Y	0.1357	0.3341	-0.5008
83	115	EQ_Y	-0.1357	-0.3341	-0.5008
83	116	EQ_Y	-0.0833	-0.3115	-0.4675
83	109	EQ_Y	0.0833	0.3115	-0.4675
84	109	DEAD	2.319E-13	1.436E-14	-1.249E-14
84	116	DEAD	1.160E-13	1.317E-13	-5.799E-14
84	117	DEAD	4.561E-14	7.266E-14	-4.662E-14
84	110	DEAD	-7.740E-14	1.203E-13	-1.116E-15
84	109	G1_power station	0.	0.	0.
84	116	G1_power station	0.	0.	0.
84	117	G1_power station	0.	0.	0.
84	110	G1_power station	0.	0.	0.
84	109	G2_power station	-1.528	-1.8233	-0.1507
84	116	G2_power station	-1.528	-1.8233	0.1507
84	117	G2_power station	-0.2855	-2.218	0.1507
84	110	G2_power station	-0.2855	-2.218	-0.1507
84	109	Q_power station	-0.0565	-0.0675	-0.0056
84	116	Q_power station	-0.0565	-0.0675	0.0056
84	117	Q_power station	-0.0106	-0.0821	0.0056
84	110	Q_power station	-0.0106	-0.0821	-0.0056
84	109	Q_neve	-0.2169	-0.5071	-0.0244
84	116	Q_neve	-0.2169	-0.5071	0.0244
84	117	Q_neve	-0.0311	-0.574	0.0244
84	110	Q_neve	-0.0311	-0.574	-0.0244
84	109	Q_manutenzione	-0.0565	-0.0675	-0.0056
84	116	Q_manutenzione	-0.0565	-0.0675	0.0056
84	117	Q_manutenzione	-0.0106	-0.0821	0.0056
84	110	Q_manutenzione	-0.0106	-0.0821	-0.0056
84	109	EQ_X	-0.7551	-0.2372	-0.1015
84	116	EQ_X	-0.7551	-0.2372	0.1015
84	117	EQ_X	-0.0691	-0.5333	0.1015
84	110	EQ_X	-0.0691	-0.5333	-0.1015
84	109	EQ_Y	0.0654	0.3079	-0.4558
84	116	EQ_Y	-0.0654	-0.3079	-0.4558
84	117	EQ_Y	-0.0682	-0.3657	-0.4563
84	110	EQ_Y	0.0682	0.3657	-0.4563
85	44	DEAD	2.083E-14	1.771E-15	-3.436E-14
85	46	DEAD	1.087E-13	-5.658E-14	3.928E-15

Table 20: Element Forces - Area Shells, Part 2 of 3

Area	Joint	OutputCase	M11	M22	M12
			KN-m/m	KN-m/m	KN-m/m
85	118	DEAD	-3.889E-14	-9.208E-14	-1.161E-14
85	111	DEAD	6.039E-14	-1.618E-13	-3.020E-14
85	44	G1_power station	0.	0.	0.
85	46	G1_power station	0.	0.	0.
85	118	G1_power station	0.	0.	0.
85	111	G1_power station	0.	0.	0.
85	44	G2_power station	-1.3937	-7.721	-0.959
85	46	G2_power station	0.9658	-5.1184	-1.8957
85	118	G2_power station	-1.8692	-3.0579	-2.2733
85	111	G2_power station	-2.7829	-6.6282	-1.3366
85	44	Q_power station	-0.0516	-0.2857	-0.0355
85	46	Q_power station	0.0357	-0.1894	-0.0701
85	118	Q_power station	-0.0692	-0.1131	-0.0841
85	111	Q_power station	-0.103	-0.2452	-0.0495
85	44	Q_neve	-0.1874	-0.9095	-0.074
85	46	Q_neve	0.0293	-0.6276	-0.1503
85	118	Q_neve	-0.3161	-0.4758	-0.1836
85	111	Q_neve	-0.4097	-0.8488	-0.1072
85	44	Q_manutenzione	-0.0516	-0.2857	-0.0355
85	46	Q_manutenzione	0.0357	-0.1894	-0.0701
85	118	Q_manutenzione	-0.0692	-0.1131	-0.0841
85	111	Q_manutenzione	-0.103	-0.2452	-0.0495
85	44	EQ_X	-4.1654	-1.2126	-0.6108
85	46	EQ_X	3.2147	0.5972	-1.2575
85	118	EQ_X	-8.5033	-0.0108	-1.6882
85	111	EQ_X	-3.8319	-0.1211	-1.0415
85	44	EQ_Y	-0.4633	-1.8808	-0.4318
85	46	EQ_Y	-3.1764	-3.1689	0.01
85	118	EQ_Y	0.289	-5.2095	0.1784
85	111	EQ_Y	-0.4205	-1.0245	-0.2634
86	111	DEAD	-2.966E-14	-1.692E-13	-6.568E-15
86	118	DEAD	2.088E-14	-9.050E-14	-2.627E-14
86	119	DEAD	-8.938E-14	-2.289E-13	-6.568E-15
86	112	DEAD	-4.880E-14	-2.936E-14	-2.627E-14
86	111	G1_power station	0.	0.	0.
86	118	G1_power station	0.	0.	0.
86	119	G1_power station	0.	0.	0.
86	112	G1_power station	0.	0.	0.
86	111	G2_power station	-2.8053	-6.6327	-1.5106
86	118	G2_power station	-2.006	-3.0853	-2.2361
86	119	G2_power station	-4.9815	-2.7554	-2.0542
86	112	G2_power station	-4.311	-4.7619	-1.3287
86	111	Q_power station	-0.1038	-0.2454	-0.0559

Table 20: Element Forces - Area Shells, Part 2 of 3

Area	Joint	OutputCase	M11	M22	M12
			KN-m/m	KN-m/m	KN-m/m
86	118	Q_power station	-0.0742	-0.1142	-0.0827
86	119	Q_power station	-0.1843	-0.102	-0.076
86	112	Q_power station	-0.1595	-0.1762	-0.0492
86	111	Q_neve	-0.4116	-0.8492	-0.1228
86	118	Q_neve	-0.3284	-0.4783	-0.1807
86	119	Q_neve	-0.633	-0.4693	-0.165
86	112	Q_neve	-0.5867	-0.7073	-0.1071
86	111	Q_manutenzione	-0.1038	-0.2454	-0.0559
86	118	Q_manutenzione	-0.0742	-0.1142	-0.0827
86	119	Q_manutenzione	-0.1843	-0.102	-0.076
86	112	Q_manutenzione	-0.1595	-0.1762	-0.0492
86	111	EQ_X	-4.183	-0.1914	-0.4733
86	118	EQ_X	-7.1813	0.2536	-0.2967
86	119	EQ_X	-4.5747	-0.478	0.2474
86	112	EQ_X	-4.5838	0.2279	0.0708
86	111	EQ_Y	-0.3309	-1.0066	-0.0905
86	118	EQ_Y	0.1366	-5.2399	-0.7369
86	119	EQ_Y	0.0427	-2.2499	-1.0126
86	112	EQ_Y	0.0842	-1.1733	-0.3661
87	112	DEAD	4.356E-14	-7.051E-15	1.794E-14
87	119	DEAD	-1.413E-13	-2.405E-13	-4.808E-15
87	120	DEAD	1.715E-13	1.854E-14	-4.808E-15
87	113	DEAD	-4.749E-14	-1.125E-13	1.794E-14
87	112	G1_power station	0.	0.	0.
87	119	G1_power station	0.	0.	0.
87	120	G1_power station	0.	0.	0.
87	113	G1_power station	0.	0.	0.
87	112	G2_power station	-4.3381	-4.7674	-1.1418
87	119	G2_power station	-4.8997	-2.7391	-1.576
87	120	G2_power station	-5.4538	-2.4601	-1.2735
87	113	G2_power station	-4.9825	-3.4324	-0.8392
87	112	Q_power station	-0.1605	-0.1764	-0.0422
87	119	Q_power station	-0.1813	-0.1013	-0.0583
87	120	Q_power station	-0.2018	-0.091	-0.0471
87	113	Q_power station	-0.1844	-0.127	-0.0311
87	112	Q_neve	-0.5892	-0.7078	-0.0908
87	119	Q_neve	-0.6257	-0.4678	-0.1231
87	120	Q_neve	-0.6803	-0.4557	-0.0964
87	113	Q_neve	-0.6507	-0.6052	-0.0641
87	112	Q_manutenzione	-0.1605	-0.1764	-0.0422
87	119	Q_manutenzione	-0.1813	-0.1013	-0.0583
87	120	Q_manutenzione	-0.2018	-0.091	-0.0471
87	113	Q_manutenzione	-0.1844	-0.127	-0.0311

Table 20: Element Forces - Area Shells, Part 2 of 3

Area	Joint	OutputCase	M11	M22	M12
			KN-m/m	KN-m/m	KN-m/m
87	112	EQ_X	-4.4998	0.2447	0.2034
87	119	EQ_X	-4.7539	-0.5138	0.285
87	120	EQ_X	-3.5066	-0.234	0.2868
87	113	EQ_X	-3.5409	0.0578	0.2052
87	112	EQ_Y	0.0188	-1.1864	-0.6224
87	119	EQ_Y	0.0997	-2.2385	-0.9727
87	120	EQ_Y	-0.2996	-1.3843	-1.0017
87	113	EQ_Y	-0.0142	-0.6318	-0.6514
88	113	DEAD	6.088E-14	-6.203E-14	-1.730E-14
88	120	DEAD	1.321E-13	2.681E-14	-4.838E-14
88	121	DEAD	4.666E-14	-3.074E-14	-2.868E-14
88	114	DEAD	5.673E-14	-8.744E-15	-3.700E-14
88	113	G1_power station	0.	0.	0.
88	120	G1_power station	0.	0.	0.
88	121	G1_power station	0.	0.	0.
88	114	G1_power station	0.	0.	0.
88	113	G2_power station	-4.9744	-3.4308	-0.6705
88	120	G2_power station	-5.4558	-2.4605	-0.9382
88	121	G2_power station	-4.9222	-2.0321	-0.7221
88	114	G2_power station	-4.529	-2.5208	-0.4544
88	113	Q_power station	-0.1841	-0.1269	-0.0248
88	120	Q_power station	-0.2019	-0.091	-0.0347
88	121	Q_power station	-0.1821	-0.0752	-0.0267
88	114	Q_power station	-0.1676	-0.0933	-0.0168
88	113	Q_neve	-0.65	-0.6051	-0.049
88	120	Q_neve	-0.6805	-0.4557	-0.0663
88	121	Q_neve	-0.6161	-0.4261	-0.0462
88	114	Q_neve	-0.5899	-0.536	-0.0289
88	113	Q_manutenzione	-0.1841	-0.1269	-0.0248
88	120	Q_manutenzione	-0.2019	-0.091	-0.0347
88	121	Q_manutenzione	-0.1821	-0.0752	-0.0267
88	114	Q_manutenzione	-0.1676	-0.0933	-0.0168
88	113	EQ_X	-3.5379	0.0584	0.1874
88	120	EQ_X	-3.5126	-0.2352	0.2555
88	121	EQ_X	-2.5039	-0.0713	0.2371
88	114	EQ_X	-2.5021	0.0126	0.169
88	113	EQ_Y	-0.0157	-0.6322	-0.7147
88	120	EQ_Y	-0.285	-1.3814	-0.8663
88	121	EQ_Y	-0.4227	-0.9973	-0.8093
88	114	EQ_Y	-0.1188	-0.4174	-0.6577
89	114	DEAD	7.616E-14	4.810E-14	-2.234E-14
89	121	DEAD	4.692E-14	-4.234E-14	-5.231E-14
89	122	DEAD	2.966E-13	1.604E-13	-5.647E-14

Table 20: Element Forces - Area Shells, Part 2 of 3

Area	Joint	OutputCase	M11	M22	M12
			KN-m/m	KN-m/m	KN-m/m
89	115	DEAD	3.086E-13	1.056E-13	-6.804E-15
89	114	G1_power station	0.	0.	0.
89	121	G1_power station	0.	0.	0.
89	122	G1_power station	0.	0.	0.
89	115	G1_power station	0.	0.	0.
89	114	G2_power station	-4.5278	-2.5205	-0.3355
89	121	G2_power station	-4.9224	-2.0322	-0.4585
89	122	G2_power station	-3.8972	-1.663	-0.2558
89	115	G2_power station	-3.3473	-1.9236	-0.1328
89	114	Q_power station	-0.1675	-0.0933	-0.0124
89	121	Q_power station	-0.1821	-0.0752	-0.017
89	122	Q_power station	-0.1442	-0.0615	-0.0095
89	115	Q_power station	-0.1238	-0.0712	-0.0049
89	114	Q_neve	-0.59	-0.536	-0.0172
89	121	Q_neve	-0.6161	-0.4261	-0.0204
89	122	Q_neve	-0.492	-0.3991	9.626E-04
89	115	Q_neve	-0.444	-0.4952	0.0042
89	114	Q_manutenzione	-0.1675	-0.0933	-0.0124
89	121	Q_manutenzione	-0.1821	-0.0752	-0.017
89	122	Q_manutenzione	-0.1442	-0.0615	-0.0095
89	115	Q_manutenzione	-0.1238	-0.0712	-0.0049
89	114	EQ_X	-2.5056	0.0119	0.1599
89	121	EQ_X	-2.502	-0.0709	0.2369
89	122	EQ_X	-1.7076	0.0023	0.2534
89	115	EQ_X	-1.6093	-0.0518	0.1764
89	114	EQ_Y	-0.1125	-0.4161	-0.6354
89	121	EQ_Y	-0.421	-0.9969	-0.6939
89	122	EQ_Y	-0.4439	-0.8349	-0.6195
89	115	EQ_Y	-0.1349	-0.3375	-0.561
90	115	DEAD	2.489E-13	1.210E-13	-5.495E-14
90	122	DEAD	2.399E-13	1.352E-13	-3.219E-14
90	123	DEAD	1.821E-13	1.622E-13	-4.357E-14
90	116	DEAD	1.418E-13	1.999E-14	-6.632E-14
90	115	G1_power station	0.	0.	0.
90	122	G1_power station	0.	0.	0.
90	123	G1_power station	0.	0.	0.
90	116	G1_power station	0.	0.	0.
90	115	G2_power station	-3.3595	-1.9261	0.0087
90	122	G2_power station	-3.8922	-1.662	0.0733
90	123	G2_power station	-2.7031	-1.3698	0.4023
90	116	G2_power station	-1.6201	-1.9084	0.3377
90	115	Q_power station	-0.1243	-0.0713	3.202E-04
90	122	Q_power station	-0.144	-0.0615	0.0027

Table 20: Element Forces - Area Shells, Part 2 of 3

Area	Joint	OutputCase	M11	M22	M12
			KN-m/m	KN-m/m	KN-m/m
90	123	Q_power station	-0.1	-0.0507	0.0149
90	116	Q_power station	-0.0599	-0.0706	0.0125
90	115	Q_neve	-0.4455	-0.4955	0.0198
90	122	Q_neve	-0.4917	-0.3991	0.0376
90	123	Q_neve	-0.3355	-0.3793	0.075
90	116	Q_neve	-0.2269	-0.5164	0.0572
90	115	Q_manutenzione	-0.1243	-0.0713	3.202E-04
90	122	Q_manutenzione	-0.144	-0.0615	0.0027
90	123	Q_manutenzione	-0.1	-0.0507	0.0149
90	116	Q_manutenzione	-0.0599	-0.0706	0.0125
90	115	EQ_X	-1.6144	-0.0529	0.2025
90	122	EQ_X	-1.7086	0.0021	0.3111
90	123	EQ_X	-1.0226	0.0553	0.3874
90	116	EQ_X	-0.7804	-0.2655	0.2788
90	115	EQ_Y	-0.1364	-0.3378	-0.5207
90	122	EQ_Y	-0.4394	-0.834	-0.5087
90	123	EQ_Y	-0.3823	-0.8781	-0.4366
90	116	EQ_Y	-0.0857	-0.3234	-0.4486
91	116	DEAD	9.079E-14	7.676E-15	-6.239E-14
91	123	DEAD	2.502E-13	1.328E-13	-7.793E-14
91	124	DEAD	-7.273E-14	4.323E-14	-6.239E-14
91	117	DEAD	5.111E-14	9.298E-14	-6.656E-14
91	116	G1_power station	0.	0.	0.
91	123	G1_power station	0.	0.	0.
91	124	G1_power station	0.	0.	0.
91	117	G1_power station	0.	0.	0.
91	116	G2_power station	-1.5418	-1.8927	0.4854
91	123	G2_power station	-2.9292	-1.415	1.0107
91	124	G2_power station	1.4072	-2.3068	0.9685
91	117	G2_power station	-0.266	-2.1204	0.4433
91	116	Q_power station	-0.057	-0.07	0.018
91	123	Q_power station	-0.1084	-0.0524	0.0374
91	124	Q_power station	0.0521	-0.0854	0.0358
91	117	Q_power station	-0.0098	-0.0785	0.0164
91	116	Q_neve	-0.2185	-0.5147	0.0742
91	123	Q_neve	-0.3614	-0.3845	0.1458
91	124	Q_neve	0.1511	-0.5006	0.1461
91	117	Q_neve	-0.029	-0.5638	0.0745
91	116	Q_manutenzione	-0.057	-0.07	0.018
91	123	Q_manutenzione	-0.1084	-0.0524	0.0374
91	124	Q_manutenzione	0.0521	-0.0854	0.0358
91	117	Q_manutenzione	-0.0098	-0.0785	0.0164
91	116	EQ_X	-0.7599	-0.2614	0.304

Table 20: Element Forces - Area Shells, Part 2 of 3

Area	Joint	OutputCase	M11	M22	M12
			KN-m/m	KN-m/m	KN-m/m
91	123	EQ_X	-1.0927	0.0413	0.5616
91	124	EQ_X	0.3328	-0.3891	0.5653
91	117	EQ_X	-0.0636	-0.5059	0.3078
91	116	EQ_Y	-0.0678	-0.3198	-0.4164
91	123	EQ_Y	-0.404	-0.8824	-0.3548
91	124	EQ_Y	0.21	-0.9989	-0.3884
91	117	EQ_Y	-0.0635	-0.3425	-0.45
92	46	DEAD	8.146E-14	-5.696E-14	6.568E-15
92	63	DEAD	2.265E-15	-2.087E-14	6.568E-15
92	125	DEAD	5.729E-14	6.106E-14	6.568E-15
92	118	DEAD	-1.622E-14	-1.474E-13	6.568E-15
92	46	G1_power station	0.	0.	0.
92	63	G1_power station	0.	0.	0.
92	125	G1_power station	0.	0.	0.
92	118	G1_power station	0.	0.	0.
92	46	G2_power station	0.8994	-5.4505	-2.7175
92	63	G2_power station	9.9595	9.4465	-2.2442
92	125	G2_power station	-3.3885	1.6837	-2.9135
92	118	G2_power station	-1.8428	-2.9258	-3.3868
92	46	Q_power station	0.0333	-0.2017	-0.1005
92	63	Q_power station	0.3685	0.3495	-0.083
92	125	Q_power station	-0.1254	0.0623	-0.1078
92	118	Q_power station	-0.0682	-0.1083	-0.1253
92	46	Q_neve	0.0233	-0.6579	-0.2177
92	63	Q_neve	0.8499	0.7841	-0.1717
92	125	Q_neve	-0.4256	0.071	-0.2309
92	118	Q_neve	-0.3137	-0.4639	-0.2769
92	46	Q_manutenzione	0.0333	-0.2017	-0.1005
92	63	Q_manutenzione	0.3685	0.3495	-0.083
92	125	Q_manutenzione	-0.1254	0.0623	-0.1078
92	118	Q_manutenzione	-0.0682	-0.1083	-0.1253
92	46	EQ_X	3.2217	0.6322	-4.5411
92	63	EQ_X	-29.9879	-4.4926	-4.0709
92	125	EQ_X	-3.5887	-3.139	0.8651
92	118	EQ_X	-8.4581	0.2155	0.3948
92	46	EQ_Y	-2.5876	-0.2254	1.0393
92	63	EQ_Y	-4.6329	-29.7617	-4.8592
92	125	EQ_Y	1.1725	3.9921	-5.3974
92	118	EQ_Y	-0.098	-7.144	0.5011
93	118	DEAD	2.147E-14	-1.354E-13	-1.760E-15
93	125	DEAD	2.011E-13	1.103E-13	-1.314E-14
93	126	DEAD	-7.238E-14	7.791E-14	-2.451E-14
93	119	DEAD	-7.472E-14	-1.087E-13	-1.314E-14

Table 20: Element Forces - Area Shells, Part 2 of 3

Area	Joint	OutputCase	M11	M22	M12
			KN-m/m	KN-m/m	KN-m/m
93	118	G1_power station	0.	0.	0.
93	125	G1_power station	0.	0.	0.
93	126	G1_power station	0.	0.	0.
93	119	G1_power station	0.	0.	0.
93	118	G2_power station	-1.9796	-2.9531	-2.7512
93	125	G2_power station	-3.0938	1.7426	-2.4861
93	126	G2_power station	-5.2524	-0.6562	-1.9778
93	119	G2_power station	-4.9736	-2.716	-2.2428
93	118	Q_power station	-0.0732	-0.1093	-0.1018
93	125	Q_power station	-0.1145	0.0645	-0.092
93	126	Q_power station	-0.1943	-0.0243	-0.0732
93	119	Q_power station	-0.184	-0.1005	-0.083
93	118	Q_neve	-0.326	-0.4663	-0.2207
93	125	Q_neve	-0.3987	0.0763	-0.1932
93	126	Q_neve	-0.6273	-0.1482	-0.1488
93	119	Q_neve	-0.6323	-0.4659	-0.1762
93	118	Q_manutenzione	-0.0732	-0.1093	-0.1018
93	125	Q_manutenzione	-0.1145	0.0645	-0.092
93	126	Q_manutenzione	-0.1943	-0.0243	-0.0732
93	119	Q_manutenzione	-0.184	-0.1005	-0.083
93	118	EQ_X	-7.1361	0.4799	0.558
93	125	EQ_X	-5.7632	-3.5739	0.3386
93	126	EQ_X	-5.2263	-0.9744	0.0364
93	119	EQ_X	-4.5925	-0.5672	0.2558
93	118	EQ_Y	-0.2503	-7.1745	-2.4135
93	125	EQ_Y	1.1264	3.9829	-2.1179
93	126	EQ_Y	-0.8644	-3.2147	-1.8273
93	119	EQ_Y	0.1827	-1.55	-2.1228
94	119	DEAD	-1.301E-13	-1.245E-13	-3.700E-14
94	126	DEAD	4.522E-14	1.017E-13	-4.838E-14
94	127	DEAD	6.191E-14	1.187E-13	-4.838E-14
94	120	DEAD	1.576E-13	-5.328E-14	-3.700E-14
94	119	G1_power station	0.	0.	0.
94	126	G1_power station	0.	0.	0.
94	127	G1_power station	0.	0.	0.
94	120	G1_power station	0.	0.	0.
94	119	G2_power station	-4.8918	-2.6996	-1.7752
94	126	G2_power station	-5.4152	-0.6887	-1.77
94	127	G2_power station	-6.0032	-1.1994	-1.4501
94	120	G2_power station	-5.4498	-2.44	-1.4552
94	119	Q_power station	-0.181	-0.0999	-0.0657
94	126	Q_power station	-0.2004	-0.0255	-0.0655
94	127	Q_power station	-0.2221	-0.0444	-0.0537

Table 20: Element Forces - Area Shells, Part 2 of 3

Area	Joint	OutputCase	M11	M22	M12
			KN-m/m	KN-m/m	KN-m/m
94	120	Q_power station	-0.2016	-0.0903	-0.0538
94	119	Q_neve	-0.625	-0.4644	-0.1355
94	126	Q_neve	-0.6421	-0.1511	-0.1312
94	127	Q_neve	-0.7021	-0.2029	-0.103
94	120	Q_neve	-0.6799	-0.4539	-0.1073
94	119	Q_manutenzione	-0.181	-0.0999	-0.0657
94	126	Q_manutenzione	-0.2004	-0.0255	-0.0655
94	127	Q_manutenzione	-0.2221	-0.0444	-0.0537
94	120	Q_manutenzione	-0.2016	-0.0903	-0.0538
94	119	EQ_X	-4.7718	-0.603	0.2377
94	126	EQ_X	-4.9883	-0.9268	0.1423
94	127	EQ_X	-3.6186	-0.3688	0.1862
94	120	EQ_X	-3.5051	-0.2265	0.2816
94	119	EQ_Y	0.2397	-1.5386	-1.4189
94	126	EQ_Y	-0.9008	-3.222	-1.9749
94	127	EQ_Y	-0.7613	-0.872	-1.7215
94	120	EQ_Y	-0.3436	-1.604	-1.1655
95	120	DEAD	1.188E-13	-4.016E-14	-5.430E-14
95	127	DEAD	2.596E-13	1.358E-13	-5.430E-14
95	128	DEAD	1.004E-13	7.218E-14	-7.705E-14
95	121	DEAD	3.350E-14	2.918E-14	-7.705E-14
95	120	G1_power station	0.	0.	0.
95	127	G1_power station	0.	0.	0.
95	128	G1_power station	0.	0.	0.
95	121	G1_power station	0.	0.	0.
95	120	G2_power station	-5.4517	-2.4404	-1.1257
95	127	G2_power station	-6.0283	-1.2044	-1.1752
95	128	G2_power station	-5.4903	-1.1925	-0.8862
95	121	G2_power station	-4.9212	-2.0273	-0.8367
95	120	Q_power station	-0.2017	-0.0903	-0.0416
95	127	Q_power station	-0.223	-0.0446	-0.0435
95	128	Q_power station	-0.2031	-0.0441	-0.0328
95	121	Q_power station	-0.1821	-0.075	-0.031
95	120	Q_neve	-0.6801	-0.454	-0.0778
95	127	Q_neve	-0.7044	-0.2033	-0.0779
95	128	Q_neve	-0.6439	-0.2062	-0.0508
95	121	Q_neve	-0.616	-0.4255	-0.0507
95	120	Q_manutenzione	-0.2017	-0.0903	-0.0416
95	127	Q_manutenzione	-0.223	-0.0446	-0.0435
95	128	Q_manutenzione	-0.2031	-0.0441	-0.0328
95	121	Q_manutenzione	-0.1821	-0.075	-0.031
95	120	EQ_X	-3.5111	-0.2277	0.2622
95	127	EQ_X	-3.5947	-0.364	0.2606

Table 20: Element Forces - Area Shells, Part 2 of 3

Area	Joint	OutputCase	M11	M22	M12
			KN-m/m	KN-m/m	KN-m/m
95	128	EQ_X	-2.5431	-0.1009	0.2772
95	121	EQ_X	-2.5041	-0.0724	0.2788
95	120	EQ_Y	-0.3289	-1.601	-1.157
95	127	EQ_Y	-0.7567	-0.8711	-1.2974
95	128	EQ_Y	-0.9309	-0.9834	-1.0965
95	121	EQ_Y	-0.4114	-0.9406	-0.9561
96	121	DEAD	9.700E-14	3.425E-14	-8.515E-14
96	128	DEAD	6.016E-14	5.485E-14	-1.090E-13
96	129	DEAD	1.994E-13	6.837E-14	-3.964E-14
96	122	DEAD	2.436E-13	8.471E-14	-7.489E-14
96	121	G1_power station	0.	0.	0.
96	128	G1_power station	0.	0.	0.
96	129	G1_power station	0.	0.	0.
96	122	G1_power station	0.	0.	0.
96	121	G2_power station	-4.9214	-2.0274	-0.5779
96	128	G2_power station	-5.4973	-1.1939	-0.5866
96	129	G2_power station	-4.6232	-1.1598	-0.2959
96	122	G2_power station	-3.8933	-1.6439	-0.2872
96	121	Q_power station	-0.1821	-0.075	-0.0214
96	128	Q_power station	-0.2034	-0.0442	-0.0217
96	129	Q_power station	-0.1711	-0.0429	-0.0109
96	122	Q_power station	-0.1441	-0.0608	-0.0106
96	121	Q_neve	-0.616	-0.4255	-0.0254
96	128	Q_neve	-0.6445	-0.2063	-0.0215
96	129	Q_neve	-0.5419	-0.2053	0.0083
96	122	Q_neve	-0.4916	-0.3975	0.0045
96	121	Q_manutenzione	-0.1821	-0.075	-0.0214
96	128	Q_manutenzione	-0.2034	-0.0442	-0.0217
96	129	Q_manutenzione	-0.1711	-0.0429	-0.0109
96	122	Q_manutenzione	-0.1441	-0.0608	-0.0106
96	121	EQ_X	-2.5022	-0.072	0.2798
96	128	EQ_X	-2.5339	-0.099	0.3036
96	129	EQ_X	-1.7884	0.0448	0.325
96	122	EQ_X	-1.7101	-0.0102	0.3012
96	121	EQ_Y	-0.4097	-0.9402	-0.8079
96	128	EQ_Y	-0.9251	-0.9822	-0.8676
96	129	EQ_Y	-0.8855	-0.8312	-0.6918
96	122	EQ_Y	-0.4439	-0.8351	-0.632
97	122	DEAD	2.812E-13	9.133E-14	-3.788E-14
97	129	DEAD	2.603E-13	6.850E-14	-5.342E-14
97	130	DEAD	2.713E-13	1.098E-13	-6.063E-14
97	123	DEAD	1.395E-13	7.845E-14	-6.480E-14
97	122	G1_power station	0.	0.	0.

Table 20: Element Forces - Area Shells, Part 2 of 3

Area	Joint	OutputCase	M11	M22	M12
			KN-m/m	KN-m/m	KN-m/m
97	129	G1_power station	0.	0.	0.
97	130	G1_power station	0.	0.	0.
97	123	G1_power station	0.	0.	0.
97	122	G2_power station	-3.8884	-1.6429	0.0242
97	129	G2_power station	-4.634	-1.162	0.0431
97	130	G2_power station	-4.1133	-1.1831	0.4673
97	123	G2_power station	-2.7013	-1.361	0.4484
97	122	Q_power station	-0.1439	-0.0608	8.969E-04
97	129	Q_power station	-0.1715	-0.043	0.0016
97	130	Q_power station	-0.1522	-0.0438	0.0173
97	123	Q_power station	-0.0999	-0.0504	0.0166
97	122	Q_neve	-0.4914	-0.3975	0.0392
97	129	Q_neve	-0.5422	-0.2053	0.0434
97	130	Q_neve	-0.4684	-0.1996	0.0912
97	123	Q_neve	-0.3346	-0.3748	0.087
97	122	Q_manutenzione	-0.1439	-0.0608	8.969E-04
97	129	Q_manutenzione	-0.1715	-0.043	0.0016
97	130	Q_manutenzione	-0.1522	-0.0438	0.0173
97	123	Q_manutenzione	-0.0999	-0.0504	0.0166
97	122	EQ_X	-1.7111	-0.0104	0.3434
97	129	EQ_X	-1.7786	0.0467	0.3578
97	130	EQ_X	-1.3682	0.0684	0.437
97	123	EQ_X	-1.0078	0.1293	0.4226
97	122	EQ_Y	-0.4395	-0.8342	-0.514
97	129	EQ_Y	-0.8931	-0.8328	-0.4784
97	130	EQ_Y	-0.7518	-0.8341	-0.3242
97	123	EQ_Y	-0.3963	-0.9479	-0.3598
98	123	DEAD	1.918E-13	8.796E-14	-6.263E-14
98	130	DEAD	2.043E-13	9.582E-14	-7.401E-14
98	29	DEAD	1.235E-13	-4.855E-14	-1.081E-13
98	124	DEAD	2.229E-14	2.096E-13	-9.676E-14
98	123	G1_power station	0.	0.	0.
98	130	G1_power station	0.	0.	0.
98	29	G1_power station	0.	0.	0.
98	124	G1_power station	0.	0.	0.
98	123	G2_power station	-2.9274	-1.4062	0.8959
98	130	G2_power station	-3.9833	-1.1571	1.3312
98	29	G2_power station	-6.089	-1.6403	2.9494
98	124	G2_power station	1.4012	-2.3365	2.5141
98	123	Q_power station	-0.1083	-0.052	0.0331
98	130	Q_power station	-0.1474	-0.0428	0.0493
98	29	Q_power station	-0.2253	-0.0607	0.1091
98	124	Q_power station	0.0518	-0.0864	0.093

Table 20: Element Forces - Area Shells, Part 2 of 3

Area	Joint	OutputCase	M11	M22	M12
			KN-m/m	KN-m/m	KN-m/m
98	123	Q_neve	-0.3605	-0.38	0.1433
98	130	Q_neve	-0.4503	-0.196	0.1852
98	29	Q_neve	-0.6529	-0.1823	0.3694
98	124	Q_neve	0.149	-0.5112	0.3275
98	123	Q_manutenzione	-0.1083	-0.052	0.0331
98	130	Q_manutenzione	-0.1474	-0.0428	0.0493
98	29	Q_manutenzione	-0.2253	-0.0607	0.1091
98	124	Q_manutenzione	0.0518	-0.0864	0.093
98	123	EQ_X	-1.0779	0.1153	0.632
98	130	EQ_X	-1.295	0.083	0.5341
98	29	EQ_X	-1.4009	1.3974	0.9605
98	124	EQ_X	0.3055	-0.526	1.0584
98	123	EQ_Y	-0.4179	-0.9523	-0.3693
98	130	EQ_Y	-0.764	-0.8366	-0.0019
98	29	EQ_Y	-0.9423	-2.3839	0.2286
98	124	EQ_Y	0.2342	-0.878	-0.1387
99	5	DEAD	1.391E-14	-4.483E-14	1.060E-13
99	48	DEAD	-1.038E-13	-9.233E-14	1.329E-13
99	131	DEAD	2.386E-14	-1.998E-13	1.173E-13
99	93	DEAD	-1.850E-14	-7.010E-15	1.101E-13
99	5	G1_power station	0.	0.	0.
99	48	G1_power station	0.	0.	0.
99	131	G1_power station	0.	0.	0.
99	93	G1_power station	0.	0.	0.
99	5	G2_power station	10.3414	9.0616	1.836
99	48	G2_power station	1.3659	-6.091	2.3201
99	131	G2_power station	-0.2901	-3.5736	2.8034
99	93	G2_power station	-2.3224	1.7833	2.3192
99	5	Q_power station	0.3826	0.3353	0.0679
99	48	Q_power station	0.0505	-0.2254	0.0858
99	131	Q_power station	-0.0107	-0.1322	0.1037
99	93	Q_power station	-0.0859	0.066	0.0858
99	5	Q_neve	0.8892	0.7321	0.121
99	48	Q_neve	0.0783	-0.7414	0.1694
99	131	Q_neve	-0.1302	-0.5448	0.2066
99	93	Q_neve	-0.3057	0.0652	0.1582
99	5	Q_manutenzione	0.3826	0.3353	0.0679
99	48	Q_manutenzione	0.0505	-0.2254	0.0858
99	131	Q_manutenzione	-0.0107	-0.1322	0.1037
99	93	Q_manutenzione	-0.0859	0.066	0.0858
99	5	EQ_X	30.3683	4.7011	-3.8841
99	48	EQ_X	-3.8518	-0.3073	-4.4237
99	131	EQ_X	7.5909	-0.1221	0.5032

Table 20: Element Forces - Area Shells, Part 2 of 3

Area	Joint	OutputCase	M11	M22	M12
			KN-m/m	KN-m/m	KN-m/m
99	93	EQ_X	4.1004	3.6654	1.0429
99	5	EQ_Y	-4.7823	-30.8696	5.0571
99	48	EQ_Y	-2.4959	0.0236	-1.3613
99	131	EQ_Y	-0.0902	-7.8366	-0.8431
99	93	EQ_Y	1.4038	3.8585	5.5753
100	93	DEAD	1.679E-13	5.799E-14	1.272E-13
100	131	DEAD	8.415E-14	-1.925E-13	1.044E-13
100	132	DEAD	8.826E-14	1.116E-15	1.158E-13
100	95	DEAD	4.517E-15	-1.129E-13	1.386E-13
100	93	G1_power station	0.	0.	0.
100	131	G1_power station	0.	0.	0.
100	132	G1_power station	0.	0.	0.
100	95	G1_power station	0.	0.	0.
100	93	G2_power station	-2.0318	1.8414	1.707
100	131	G2_power station	-0.4265	-3.6009	1.9551
100	132	G2_power station	-2.2787	-3.0456	1.0341
100	95	G2_power station	-4.5011	-0.5502	0.786
100	93	Q_power station	-0.0752	0.0681	0.0632
100	131	Q_power station	-0.0158	-0.1332	0.0723
100	132	Q_power station	-0.0843	-0.1127	0.0383
100	95	Q_power station	-0.1665	-0.0204	0.0291
100	93	Q_neve	-0.2786	0.0706	0.0971
100	131	Q_neve	-0.1427	-0.5473	0.1224
100	132	Q_neve	-0.2988	-0.513	0.0286
100	95	Q_neve	-0.5168	-0.1416	0.0033
100	93	Q_manutenzione	-0.0752	0.0681	0.0632
100	131	Q_manutenzione	-0.0158	-0.1332	0.0723
100	132	Q_manutenzione	-0.0843	-0.1127	0.0383
100	95	Q_manutenzione	-0.1665	-0.0204	0.0291
100	93	EQ_X	6.0215	4.0496	0.8774
100	131	EQ_X	6.4175	-0.3567	1.1065
100	132	EQ_X	3.3596	0.6587	1.2516
100	95	EQ_X	5.6485	1.4503	1.0225
100	93	EQ_Y	1.3761	3.853	2.0518
100	131	EQ_Y	-0.2356	-7.8657	2.4064
100	132	EQ_Y	0.6313	-2.2694	2.1387
100	95	EQ_Y	-0.4206	-3.3186	1.7841
101	95	DEAD	7.577E-15	-5.922E-14	7.881E-14
101	132	DEAD	1.172E-13	2.683E-15	1.016E-13
101	133	DEAD	-7.490E-14	-1.986E-13	7.881E-14
101	25	DEAD	1.997E-13	5.527E-15	5.606E-14
101	95	G1_power station	0.	0.	0.
101	132	G1_power station	0.	0.	0.

Table 20: Element Forces - Area Shells, Part 2 of 3

Area	Joint	OutputCase	M11	M22	M12
			KN-m/m	KN-m/m	KN-m/m
101	133	G1_power station	0.	0.	0.
101	25	G1_power station	0.	0.	0.
101	95	G2_power station	-4.4822	-0.5464	-0.2494
101	132	G2_power station	-2.4543	-3.0808	-0.1371
101	133	G2_power station	1.6568	-4.7109	-2.2602
101	25	G2_power station	-7.1647	0.9291	-2.3726
101	95	Q_power station	-0.1658	-0.0202	-0.0092
101	132	Q_power station	-0.0908	-0.114	-0.0051
101	133	Q_power station	0.0613	-0.1743	-0.0836
101	25	Q_power station	-0.2651	0.0344	-0.0878
101	95	Q_neve	-0.5086	-0.1399	-0.1101
101	132	Q_neve	-0.3209	-0.5174	-0.0943
101	133	Q_neve	0.1825	-0.724	-0.3312
101	25	Q_neve	-0.7932	0.0482	-0.3471
101	95	Q_manutenzione	-0.1658	-0.0202	-0.0092
101	132	Q_manutenzione	-0.0908	-0.114	-0.0051
101	133	Q_manutenzione	0.0613	-0.1743	-0.0836
101	25	Q_manutenzione	-0.2651	0.0344	-0.0878
101	95	EQ_X	5.2745	1.3755	1.8345
101	132	EQ_X	3.749	0.7366	1.8753
101	133	EQ_X	-1.5334	2.4294	3.637
101	25	EQ_X	6.6922	-1.2497	3.5963
101	95	EQ_Y	-0.492	-3.3329	1.8828
101	132	EQ_Y	0.7032	-2.255	1.5064
101	133	EQ_Y	-0.202	-2.7718	1.4125
101	25	EQ_Y	0.5159	-1.3207	1.7889
102	48	DEAD	-1.606E-13	-3.081E-13	8.538E-14
102	50	DEAD	-1.242E-13	-1.576E-13	8.233E-14
102	134	DEAD	-4.544E-14	-2.100E-13	8.538E-14
102	131	DEAD	9.053E-14	2.869E-14	1.278E-13
102	48	G1_power station	0.	0.	0.
102	50	G1_power station	0.	0.	0.
102	134	G1_power station	0.	0.	0.
102	131	G1_power station	0.	0.	0.
102	48	G2_power station	1.4335	-5.753	1.5121
102	50	G2_power station	-0.6537	-8.4404	0.6998
102	134	G2_power station	-0.7697	-7.6764	0.9054
102	131	G2_power station	-0.3169	-3.7077	1.7176
102	48	Q_power station	0.053	-0.2129	0.0559
102	50	Q_power station	-0.0242	-0.3123	0.0259
102	134	Q_power station	-0.0285	-0.284	0.0335
102	131	Q_power station	-0.0117	-0.1372	0.0636
102	48	Q_neve	0.0845	-0.7105	0.105

Table 20: Element Forces - Area Shells, Part 2 of 3

Area	Joint	OutputCase	M11	M22	M12
			KN-m/m	KN-m/m	KN-m/m
102	50	Q_neve	-0.1018	-1.004	0.0439
102	134	Q_neve	-0.1683	-0.9748	0.0574
102	131	Q_neve	-0.1326	-0.557	0.1186
102	48	Q_manutenzione	0.053	-0.2129	0.0559
102	50	Q_manutenzione	-0.0242	-0.3123	0.0259
102	134	Q_manutenzione	-0.0285	-0.284	0.0335
102	131	Q_manutenzione	-0.0117	-0.1372	0.0636
102	48	EQ_X	-3.8495	-0.2956	-1.1009
102	50	EQ_X	3.7402	1.4682	-0.4641
102	134	EQ_X	2.4723	0.5829	-0.8004
102	131	EQ_X	7.6431	0.1391	-1.4372
102	48	EQ_Y	-3.1459	-3.2266	-0.0589
102	50	EQ_Y	-0.415	-1.9992	0.5122
102	134	EQ_Y	-0.3782	-1.1396	0.3662
102	131	EQ_Y	0.3538	-5.6165	-0.2048
103	131	DEAD	4.443E-14	3.993E-15	9.043E-14
103	134	DEAD	4.415E-14	-1.839E-13	1.287E-13
103	135	DEAD	8.282E-14	-7.706E-14	1.132E-13
103	132	DEAD	6.832E-14	-1.995E-13	9.459E-14
103	131	G1_power station	0.	0.	0.
103	134	G1_power station	0.	0.	0.
103	135	G1_power station	0.	0.	0.
103	132	G1_power station	0.	0.	0.
103	131	G2_power station	-0.4533	-3.735	1.4005
103	134	G2_power station	-0.8	-7.6824	0.9468
103	135	G2_power station	-0.5217	-6.7442	0.4469
103	132	G2_power station	-2.3118	-3.2115	0.9006
103	131	Q_power station	-0.0168	-0.1382	0.0518
103	134	Q_power station	-0.0296	-0.2843	0.035
103	135	Q_power station	-0.0193	-0.2495	0.0165
103	132	Q_power station	-0.0855	-0.1188	0.0333
103	131	Q_neve	-0.1451	-0.5595	0.0813
103	134	Q_neve	-0.1713	-0.9754	0.0575
103	135	Q_neve	-0.1246	-0.9315	0.0039
103	132	Q_neve	-0.3026	-0.5321	0.0278
103	131	Q_manutenzione	-0.0168	-0.1382	0.0518
103	134	Q_manutenzione	-0.0296	-0.2843	0.035
103	135	Q_manutenzione	-0.0193	-0.2495	0.0165
103	132	Q_manutenzione	-0.0855	-0.1188	0.0333
103	131	EQ_X	6.4698	-0.0956	0.2001
103	134	EQ_X	2.8046	0.6494	-0.2056
103	135	EQ_X	2.1212	0.6751	0.6542
103	132	EQ_X	3.3701	0.7116	1.0599

Table 20: Element Forces - Area Shells, Part 2 of 3

Area	Joint	OutputCase	M11	M22	M12
			KN-m/m	KN-m/m	KN-m/m
103	131	EQ_Y	0.2084	-5.6456	0.7212
103	134	EQ_Y	-0.2894	-1.1219	0.1933
103	135	EQ_Y	0.1714	-1.4767	0.5369
103	132	EQ_Y	0.4696	-3.0779	1.0648
104	132	DEAD	1.042E-13	-1.843E-13	1.123E-13
104	135	DEAD	2.261E-13	-4.070E-14	8.955E-14
104	136	DEAD	-3.520E-14	-6.200E-14	7.817E-14
104	133	DEAD	-2.415E-14	-1.317E-13	1.009E-13
104	132	G1_power station	0.	0.	0.
104	135	G1_power station	0.	0.	0.
104	136	G1_power station	0.	0.	0.
104	133	G1_power station	0.	0.	0.
104	132	G2_power station	-2.4875	-3.2466	-0.2423
104	135	G2_power station	-0.4603	-6.7319	0.18
104	136	G2_power station	-0.3279	-6.238	0.0023
104	133	G2_power station	1.6924	-4.5331	-0.42
104	132	Q_power station	-0.092	-0.1201	-0.009
104	135	Q_power station	-0.017	-0.2491	0.0067
104	136	Q_power station	-0.0121	-0.2308	8.638E-05
104	133	Q_power station	0.0626	-0.1677	-0.0155
104	132	Q_neve	-0.3247	-0.5365	-0.0923
104	135	Q_neve	-0.1173	-0.93	-0.0232
104	136	Q_neve	-0.0365	-0.9205	-0.0413
104	133	Q_neve	0.1877	-0.6982	-0.1104
104	132	Q_manutenzione	-0.092	-0.1201	-0.009
104	135	Q_manutenzione	-0.017	-0.2491	0.0067
104	136	Q_manutenzione	-0.0121	-0.2308	8.638E-05
104	133	Q_manutenzione	0.0626	-0.1677	-0.0155
104	132	EQ_X	3.7596	0.7895	1.7666
104	135	EQ_X	1.9689	0.6446	0.8983
104	136	EQ_X	0.3031	1.308	0.8474
104	133	EQ_X	-1.5943	2.1245	1.7157
104	132	EQ_Y	0.5415	-3.0635	1.1875
104	135	EQ_Y	0.1079	-1.4894	0.8865
104	136	EQ_Y	0.0246	-1.1771	1.0295
104	133	EQ_Y	-0.1166	-2.3445	1.3305
105	50	DEAD	-6.312E-14	-3.483E-13	5.078E-14
105	52	DEAD	-6.083E-14	-1.820E-13	2.803E-14
105	137	DEAD	-1.044E-13	-2.132E-13	2.803E-14
105	134	DEAD	-3.523E-14	-2.588E-13	5.078E-14
105	50	G1_power station	0.	0.	0.
105	52	G1_power station	0.	0.	0.
105	137	G1_power station	0.	0.	0.

Table 20: Element Forces - Area Shells, Part 2 of 3

Area	Joint	OutputCase	M11	M22	M12
			KN-m/m	KN-m/m	KN-m/m
105	134	G1_power station	0.	0.	0.
105	50	G2_power station	-0.6938	-8.6408	0.2667
105	52	G2_power station	-0.6938	-8.6408	-0.2667
105	137	G2_power station	-0.7561	-7.6084	-0.2667
105	134	G2_power station	-0.7561	-7.6084	0.2667
105	50	Q_power station	-0.0257	-0.3197	0.0099
105	52	Q_power station	-0.0257	-0.3197	-0.0099
105	137	Q_power station	-0.028	-0.2815	-0.0099
105	134	Q_power station	-0.028	-0.2815	0.0099
105	50	Q_neve	-0.1054	-1.0221	0.0166
105	52	Q_neve	-0.1054	-1.0221	-0.0166
105	137	Q_neve	-0.1672	-0.9694	-0.0166
105	134	Q_neve	-0.1672	-0.9694	0.0166
105	50	Q_manutenzione	-0.0257	-0.3197	0.0099
105	52	Q_manutenzione	-0.0257	-0.3197	-0.0099
105	137	Q_manutenzione	-0.028	-0.2815	-0.0099
105	134	Q_manutenzione	-0.028	-0.2815	0.0099
105	50	EQ_X	3.7597	1.5655	-0.2093
105	52	EQ_X	3.7597	1.5655	0.2093
105	137	EQ_X	2.4525	0.484	0.2093
105	134	EQ_X	2.4525	0.484	-0.2093
105	50	EQ_Y	-0.3325	-1.5865	0.3883
105	52	EQ_Y	0.3325	1.5865	0.3883
105	137	EQ_Y	0.4374	1.4356	0.332
105	134	EQ_Y	-0.4374	-1.4356	0.332
106	134	DEAD	1.404E-14	-2.387E-13	5.735E-14
106	137	DEAD	-7.975E-14	-1.916E-13	4.293E-14
106	138	DEAD	1.690E-13	-1.463E-13	3.460E-14
106	135	DEAD	1.151E-13	-1.048E-13	8.843E-14
106	134	G1_power station	0.	0.	0.
106	137	G1_power station	0.	0.	0.
106	138	G1_power station	0.	0.	0.
106	135	G1_power station	0.	0.	0.
106	134	G2_power station	-0.7864	-7.6145	0.2355
106	137	G2_power station	-0.7864	-7.6145	-0.2355
106	138	G2_power station	-0.4998	-6.6342	-0.2355
106	135	G2_power station	-0.4998	-6.6342	0.2355
106	134	Q_power station	-0.0291	-0.2817	0.0087
106	137	Q_power station	-0.0291	-0.2817	-0.0087
106	138	Q_power station	-0.0185	-0.2455	-0.0087
106	135	Q_power station	-0.0185	-0.2455	0.0087
106	134	Q_neve	-0.1702	-0.97	0.0104
106	137	Q_neve	-0.1702	-0.97	-0.0104

Table 20: Element Forces - Area Shells, Part 2 of 3

Area	Joint	OutputCase	M11	M22	M12
			KN-m/m	KN-m/m	KN-m/m
106	138	Q_neve	-0.1222	-0.9195	-0.0104
106	135	Q_neve	-0.1222	-0.9195	0.0104
106	134	Q_manutenzione	-0.0291	-0.2817	0.0087
106	137	Q_manutenzione	-0.0291	-0.2817	-0.0087
106	138	Q_manutenzione	-0.0185	-0.2455	-0.0087
106	135	Q_manutenzione	-0.0185	-0.2455	0.0087
106	134	EQ_X	2.7848	0.5505	0.0645
106	137	EQ_X	2.7848	0.5505	-0.0645
106	138	EQ_X	2.1202	0.6704	-0.0645
106	135	EQ_X	2.1202	0.6704	0.0645
106	134	EQ_Y	-0.3486	-1.4178	0.2966
106	137	EQ_Y	0.3486	1.4178	0.2966
106	138	EQ_Y	-0.191	1.3788	0.4332
106	135	EQ_Y	0.191	-1.3788	0.4332
107	135	DEAD	2.729E-13	-4.999E-14	6.896E-14
107	138	DEAD	1.309E-13	-1.803E-13	7.313E-14
107	139	DEAD	9.656E-14	-1.126E-13	6.896E-14
107	136	DEAD	-1.506E-13	-1.547E-13	8.450E-14
107	135	G1_power station	0.	0.	0.
107	138	G1_power station	0.	0.	0.
107	139	G1_power station	0.	0.	0.
107	136	G1_power station	0.	0.	0.
107	135	G2_power station	-0.4383	-6.622	0.041
107	138	G2_power station	-0.4383	-6.622	-0.041
107	139	G2_power station	-0.3697	-6.4475	-0.041
107	136	G2_power station	-0.3697	-6.4475	0.041
107	135	Q_power station	-0.0162	-0.245	0.0015
107	138	Q_power station	-0.0162	-0.245	-0.0015
107	139	Q_power station	-0.0137	-0.2386	-0.0015
107	136	Q_power station	-0.0137	-0.2386	0.0015
107	135	Q_neve	-0.1149	-0.9181	-0.0098
107	138	Q_neve	-0.1149	-0.9181	0.0098
107	139	Q_neve	-0.0407	-0.9417	0.0098
107	136	Q_neve	-0.0407	-0.9417	-0.0098
107	135	Q_manutenzione	-0.0162	-0.245	0.0015
107	138	Q_manutenzione	-0.0162	-0.245	-0.0015
107	139	Q_manutenzione	-0.0137	-0.2386	-0.0015
107	136	Q_manutenzione	-0.0137	-0.2386	0.0015
107	135	EQ_X	1.968	0.64	0.2793
107	138	EQ_X	1.968	0.64	-0.2793
107	139	EQ_X	0.3225	1.4052	-0.2793
107	136	EQ_X	0.3225	1.4052	0.2793
107	135	EQ_Y	0.1274	-1.3915	0.6916

Table 20: Element Forces - Area Shells, Part 2 of 3

Area	Joint	OutputCase	M11	M22	M12
			KN-m/m	KN-m/m	KN-m/m
107	138	EQ_Y	-0.1274	1.3915	0.6916
107	139	EQ_Y	-0.0333	1.1339	0.918
107	136	EQ_Y	0.0333	-1.1339	0.918
108	52	DEAD	-2.578E-14	-2.038E-13	5.735E-14
108	54	DEAD	-6.942E-14	-6.740E-14	6.873E-14
108	140	DEAD	4.959E-14	-3.178E-14	3.460E-14
108	137	DEAD	-5.947E-14	-2.224E-13	2.322E-14
108	52	G1_power station	0.	0.	0.
108	54	G1_power station	0.	0.	0.
108	140	G1_power station	0.	0.	0.
108	137	G1_power station	0.	0.	0.
108	52	G2_power station	-0.6537	-8.4404	-0.6998
108	54	G2_power station	1.4335	-5.753	-1.5121
108	140	G2_power station	-0.3169	-3.7077	-1.7176
108	137	G2_power station	-0.7697	-7.6764	-0.9054
108	52	Q_power station	-0.0242	-0.3123	-0.0259
108	54	Q_power station	0.053	-0.2129	-0.0559
108	140	Q_power station	-0.0117	-0.1372	-0.0636
108	137	Q_power station	-0.0285	-0.284	-0.0335
108	52	Q_neve	-0.1018	-1.004	-0.0439
108	54	Q_neve	0.0845	-0.7105	-0.105
108	140	Q_neve	-0.1326	-0.557	-0.1186
108	137	Q_neve	-0.1683	-0.9748	-0.0574
108	52	Q_manutenzione	-0.0242	-0.3123	-0.0259
108	54	Q_manutenzione	0.053	-0.2129	-0.0559
108	140	Q_manutenzione	-0.0117	-0.1372	-0.0636
108	137	Q_manutenzione	-0.0285	-0.284	-0.0335
108	52	EQ_X	3.7402	1.4682	0.4641
108	54	EQ_X	-3.8495	-0.2956	1.1009
108	140	EQ_X	7.6431	0.1391	1.4372
108	137	EQ_X	2.4723	0.5829	0.8004
108	52	EQ_Y	0.415	1.9992	0.5122
108	54	EQ_Y	3.1459	3.2266	-0.0589
108	140	EQ_Y	-0.3538	5.6165	-0.2048
108	137	EQ_Y	0.3782	1.1396	0.3662
109	137	DEAD	-9.587E-14	-2.563E-13	3.260E-14
109	140	DEAD	8.783E-14	-4.711E-14	2.640E-15
109	141	DEAD	9.752E-14	2.808E-14	-1.290E-14
109	138	DEAD	2.044E-13	-1.466E-13	3.677E-14
109	137	G1_power station	0.	0.	0.
109	140	G1_power station	0.	0.	0.
109	141	G1_power station	0.	0.	0.
109	138	G1_power station	0.	0.	0.

Table 20: Element Forces - Area Shells, Part 2 of 3

Area	Joint	OutputCase	M11	M22	M12
			KN-m/m	KN-m/m	KN-m/m
109	137	G2_power station	-0.8	-7.6824	-0.9468
109	140	G2_power station	-0.4533	-3.735	-1.4005
109	141	G2_power station	-2.3118	-3.2115	-0.9006
109	138	G2_power station	-0.5217	-6.7442	-0.4469
109	137	Q_power station	-0.0296	-0.2843	-0.035
109	140	Q_power station	-0.0168	-0.1382	-0.0518
109	141	Q_power station	-0.0855	-0.1188	-0.0333
109	138	Q_power station	-0.0193	-0.2495	-0.0165
109	137	Q_neve	-0.1713	-0.9754	-0.0575
109	140	Q_neve	-0.1451	-0.5595	-0.0813
109	141	Q_neve	-0.3026	-0.5321	-0.0278
109	138	Q_neve	-0.1246	-0.9315	-0.0039
109	137	Q_manutenzione	-0.0296	-0.2843	-0.035
109	140	Q_manutenzione	-0.0168	-0.1382	-0.0518
109	141	Q_manutenzione	-0.0855	-0.1188	-0.0333
109	138	Q_manutenzione	-0.0193	-0.2495	-0.0165
109	137	EQ_X	2.8046	0.6494	0.2056
109	140	EQ_X	6.4698	-0.0956	-0.2001
109	141	EQ_X	3.3701	0.7116	-1.0599
109	138	EQ_X	2.1212	0.6751	-0.6542
109	137	EQ_Y	0.2894	1.1219	0.1933
109	140	EQ_Y	-0.2084	5.6456	0.7212
109	141	EQ_Y	-0.4696	3.0779	1.0648
109	138	EQ_Y	-0.1714	1.4767	0.5369
110	138	DEAD	8.478E-14	-1.711E-13	2.692E-14
110	141	DEAD	6.528E-14	3.613E-14	1.116E-15
110	142	DEAD	8.762E-14	4.792E-14	-7.212E-15
110	139	DEAD	2.831E-14	-8.047E-14	5.799E-14
110	138	G1_power station	0.	0.	0.
110	141	G1_power station	0.	0.	0.
110	142	G1_power station	0.	0.	0.
110	139	G1_power station	0.	0.	0.
110	138	G2_power station	-0.4603	-6.7319	-0.18
110	141	G2_power station	-2.4875	-3.2466	0.2423
110	142	G2_power station	1.6924	-4.5331	0.42
110	139	G2_power station	-0.3279	-6.238	-0.0023
110	138	Q_power station	-0.017	-0.2491	-0.0067
110	141	Q_power station	-0.092	-0.1201	0.009
110	142	Q_power station	0.0626	-0.1677	0.0155
110	139	Q_power station	-0.0121	-0.2308	-8.638E-05
110	138	Q_neve	-0.1173	-0.93	0.0232
110	141	Q_neve	-0.3247	-0.5365	0.0923
110	142	Q_neve	0.1877	-0.6982	0.1104

Table 20: Element Forces - Area Shells, Part 2 of 3

Area	Joint	OutputCase	M11	M22	M12
			KN-m/m	KN-m/m	KN-m/m
110	139	Q_neve	-0.0365	-0.9205	0.0413
110	138	Q_manutenzione	-0.017	-0.2491	-0.0067
110	141	Q_manutenzione	-0.092	-0.1201	0.009
110	142	Q_manutenzione	0.0626	-0.1677	0.0155
110	139	Q_manutenzione	-0.0121	-0.2308	-8.638E-05
110	138	EQ_X	1.9689	0.6446	-0.8983
110	141	EQ_X	3.7596	0.7895	-1.7666
110	142	EQ_X	-1.5943	2.1245	-1.7157
110	139	EQ_X	0.3031	1.308	-0.8474
110	138	EQ_Y	-0.1079	1.4894	0.8865
110	141	EQ_Y	-0.5415	3.0635	1.1875
110	142	EQ_Y	0.1166	2.3445	1.3305
110	139	EQ_Y	-0.0246	1.1771	1.0295
111	54	DEAD	-3.554E-14	-1.594E-13	2.275E-14
111	58	DEAD	1.099E-13	8.180E-15	-2.275E-14
111	143	DEAD	5.689E-14	2.970E-14	-2.275E-14
111	140	DEAD	8.142E-14	2.492E-15	2.275E-14
111	54	G1_power station	0.	0.	0.
111	58	G1_power station	0.	0.	0.
111	143	G1_power station	0.	0.	0.
111	140	G1_power station	0.	0.	0.
111	54	G2_power station	1.3659	-6.091	-2.3201
111	58	G2_power station	10.3414	9.0616	-1.836
111	143	G2_power station	-2.3224	1.7833	-2.3192
111	140	G2_power station	-0.2901	-3.5736	-2.8034
111	54	Q_power station	0.0505	-0.2254	-0.0858
111	58	Q_power station	0.3826	0.3353	-0.0679
111	143	Q_power station	-0.0859	0.066	-0.0858
111	140	Q_power station	-0.0107	-0.1322	-0.1037
111	54	Q_neve	0.0783	-0.7414	-0.1694
111	58	Q_neve	0.8892	0.7321	-0.121
111	143	Q_neve	-0.3057	0.0652	-0.1582
111	140	Q_neve	-0.1302	-0.5448	-0.2066
111	54	Q_manutenzione	0.0505	-0.2254	-0.0858
111	58	Q_manutenzione	0.3826	0.3353	-0.0679
111	143	Q_manutenzione	-0.0859	0.066	-0.0858
111	140	Q_manutenzione	-0.0107	-0.1322	-0.1037
111	54	EQ_X	-3.8518	-0.3073	4.4237
111	58	EQ_X	30.3683	4.7011	3.8841
111	143	EQ_X	4.1004	3.6654	-1.0429
111	140	EQ_X	7.5909	-0.1221	-0.5032
111	54	EQ_Y	2.4959	-0.0236	-1.3613
111	58	EQ_Y	4.7823	30.8696	5.0571

Table 20: Element Forces - Area Shells, Part 2 of 3

Area	Joint	OutputCase	M11	M22	M12
			KN-m/m	KN-m/m	KN-m/m
111	143	EQ_Y	-1.4038	-3.8585	5.5753
111	140	EQ_Y	0.0902	7.8366	-0.8431
112	140	DEAD	3.940E-14	7.701E-15	-2.387E-14
112	143	DEAD	5.453E-14	3.339E-14	7.212E-15
112	144	DEAD	9.770E-14	-1.103E-13	-3.524E-14
112	141	DEAD	1.811E-13	1.201E-13	-2.692E-14
112	140	G1_power station	0.	0.	0.
112	143	G1_power station	0.	0.	0.
112	144	G1_power station	0.	0.	0.
112	141	G1_power station	0.	0.	0.
112	140	G2_power station	-0.4265	-3.6009	-1.9551
112	143	G2_power station	-2.0318	1.8414	-1.707
112	144	G2_power station	-4.5011	-0.5502	-0.786
112	141	G2_power station	-2.2787	-3.0456	-1.0341
112	140	Q_power station	-0.0158	-0.1332	-0.0723
112	143	Q_power station	-0.0752	0.0681	-0.0632
112	144	Q_power station	-0.1665	-0.0204	-0.0291
112	141	Q_power station	-0.0843	-0.1127	-0.0383
112	140	Q_neve	-0.1427	-0.5473	-0.1224
112	143	Q_neve	-0.2786	0.0706	-0.0971
112	144	Q_neve	-0.5168	-0.1416	-0.0033
112	141	Q_neve	-0.2988	-0.513	-0.0286
112	140	Q_manutenzione	-0.0158	-0.1332	-0.0723
112	143	Q_manutenzione	-0.0752	0.0681	-0.0632
112	144	Q_manutenzione	-0.1665	-0.0204	-0.0291
112	141	Q_manutenzione	-0.0843	-0.1127	-0.0383
112	140	EQ_X	6.4175	-0.3567	-1.1065
112	143	EQ_X	6.0215	4.0496	-0.8774
112	144	EQ_X	5.6485	1.4503	-1.0225
112	141	EQ_X	3.3596	0.6587	-1.2516
112	140	EQ_Y	0.2356	7.8657	2.4064
112	143	EQ_Y	-1.3761	-3.853	2.0518
112	144	EQ_Y	0.4206	3.3186	1.7841
112	141	EQ_Y	-0.6313	2.2694	2.1387
113	141	DEAD	5.876E-14	1.045E-13	-3.132E-14
113	144	DEAD	1.339E-13	-1.156E-13	-7.448E-15
113	30	DEAD	1.498E-13	1.500E-13	-5.407E-14
113	142	DEAD	4.010E-14	-3.878E-14	-1.882E-14
113	141	G1_power station	0.	0.	0.
113	144	G1_power station	0.	0.	0.
113	30	G1_power station	0.	0.	0.
113	142	G1_power station	0.	0.	0.
113	141	G2_power station	-2.4543	-3.0808	0.1371

Table 20: Element Forces - Area Shells, Part 2 of 3

Area	Joint	OutputCase	M11	M22	M12
			KN-m/m	KN-m/m	KN-m/m
113	144	G2_power station	-4.4822	-0.5464	0.2494
113	30	G2_power station	-7.1647	0.9291	2.3726
113	142	G2_power station	1.6568	-4.7109	2.2602
113	141	Q_power station	-0.0908	-0.114	0.0051
113	144	Q_power station	-0.1658	-0.0202	0.0092
113	30	Q_power station	-0.2651	0.0344	0.0878
113	142	Q_power station	0.0613	-0.1743	0.0836
113	141	Q_neve	-0.3209	-0.5174	0.0943
113	144	Q_neve	-0.5086	-0.1399	0.1101
113	30	Q_neve	-0.7932	0.0482	0.3471
113	142	Q_neve	0.1825	-0.724	0.3312
113	141	Q_manutenzione	-0.0908	-0.114	0.0051
113	144	Q_manutenzione	-0.1658	-0.0202	0.0092
113	30	Q_manutenzione	-0.2651	0.0344	0.0878
113	142	Q_manutenzione	0.0613	-0.1743	0.0836
113	141	EQ_X	3.749	0.7366	-1.8753
113	144	EQ_X	5.2745	1.3755	-1.8345
113	30	EQ_X	6.6922	-1.2497	-3.5963
113	142	EQ_X	-1.5334	2.4294	-3.637
113	141	EQ_Y	-0.7032	2.255	1.5064
113	144	EQ_Y	0.492	3.3329	1.8828
113	30	EQ_Y	-0.5159	1.3207	1.7889
113	142	EQ_Y	0.202	2.7718	1.4125
114	11	DEAD	1.055E-12	6.796E-14	3.354E-13
114	14	DEAD	5.788E-13	5.272E-14	2.733E-13
114	145	DEAD	3.836E-13	-2.847E-13	4.264E-13
114	146	DEAD	-4.684E-14	-7.242E-14	4.098E-13
114	11	G1_power station	0.	0.	0.
114	14	G1_power station	0.	0.	0.
114	145	G1_power station	0.	0.	0.
114	146	G1_power station	0.	0.	0.
114	11	G2_power station	3.3006	-0.312	0.4619
114	14	G2_power station	9.1549	9.6171	1.197
114	145	G2_power station	-5.7899	1.8976	1.1638
114	146	G2_power station	-2.445	0.1947	0.4287
114	11	Q_power station	0.1221	-0.0115	0.0171
114	14	Q_power station	0.3387	0.3558	0.0443
114	145	Q_power station	-0.2142	0.0702	0.0431
114	146	Q_power station	-0.0905	0.0072	0.0159
114	11	Q_neve	0.2308	-0.0285	0.0176
114	14	Q_neve	0.7604	0.7895	0.0791
114	145	Q_neve	-0.6897	0.0762	0.0734
114	146	Q_neve	-0.3669	0.0176	0.0118

Table 20: Element Forces - Area Shells, Part 2 of 3

Area	Joint	OutputCase	M11	M22	M12
			KN-m/m	KN-m/m	KN-m/m
114	11	Q_manutenzione	0.1221	-0.0115	0.0171
114	14	Q_manutenzione	0.3387	0.3558	0.0443
114	145	Q_manutenzione	-0.2142	0.0702	0.0431
114	146	Q_manutenzione	-0.0905	0.0072	0.0159
114	11	EQ_X	8.2158	2.3441	-2.9298
114	14	EQ_X	-30.4394	-4.4223	-2.3232
114	145	EQ_X	-4.6577	-3.1281	2.7475
114	146	EQ_X	-13.54	-0.6824	2.1409
114	11	EQ_Y	-5.6894	2.728	0.1822
114	14	EQ_Y	-5.9981	-22.7949	-5.4842
114	145	EQ_Y	1.1219	7.9882	-6.2348
114	146	EQ_Y	-0.1798	-1.8273	-0.5684
115	146	DEAD	6.770E-13	3.324E-13	3.793E-13
115	145	DEAD	1.718E-13	-4.824E-13	6.068E-13
115	147	DEAD	3.016E-13	-1.272E-12	6.978E-13
115	148	DEAD	1.161E-12	3.708E-13	4.703E-13
115	146	G1_power station	0.	0.	0.
115	145	G1_power station	0.	0.	0.
115	147	G1_power station	0.	0.	0.
115	148	G1_power station	0.	0.	0.
115	146	G2_power station	-2.7005	0.1436	1.6344
115	145	G2_power station	-5.5034	1.9549	1.766
115	147	G2_power station	-9.816	-0.7906	2.248
115	148	G2_power station	-10.1714	-0.0182	2.1164
115	146	Q_power station	-0.0999	0.0053	0.0605
115	145	Q_power station	-0.2036	0.0723	0.0653
115	147	Q_power station	-0.3632	-0.0293	0.0832
115	148	Q_power station	-0.3763	-6.750E-04	0.0783
115	146	Q_neve	-0.3905	0.0129	0.1199
115	145	Q_neve	-0.6637	0.0814	0.1282
115	147	Q_neve	-1.1214	-0.1791	0.1714
115	148	Q_neve	-1.1351	-0.0019	0.1631
115	146	Q_manutenzione	-0.0999	0.0053	0.0605
115	145	Q_manutenzione	-0.2036	0.0723	0.0653
115	147	Q_manutenzione	-0.3632	-0.0293	0.0832
115	148	Q_manutenzione	-0.3763	-6.750E-04	0.0783
115	146	EQ_X	-11.1309	-0.2006	1.6051
115	145	EQ_X	-6.8354	-3.5636	1.1726
115	147	EQ_X	-6.8449	-1.1674	0.1831
115	148	EQ_X	-7.0899	0.0182	0.6156
115	146	EQ_Y	-0.4341	-1.8782	-3.9784
115	145	EQ_Y	1.1716	7.9981	-2.7245
115	147	EQ_Y	0.3268	0.4176	-2.4215

Table 20: Element Forces - Area Shells, Part 2 of 3

Area	Joint	OutputCase	M11	M22	M12
			KN-m/m	KN-m/m	KN-m/m
115	148	EQ_Y	1.6849	0.7124	-3.6754
116	148	DEAD	5.374E-13	1.722E-13	7.093E-13
116	147	DEAD	7.265E-13	-1.100E-12	6.638E-13
116	149	DEAD	-7.936E-13	-1.295E-12	7.093E-13
116	150	DEAD	3.966E-13	2.532E-13	7.548E-13
116	148	G1_power station	0.	0.	0.
116	147	G1_power station	0.	0.	0.
116	149	G1_power station	0.	0.	0.
116	150	G1_power station	0.	0.	0.
116	148	G2_power station	-9.9361	0.0288	2.2098
116	147	G2_power station	-9.9868	-0.8247	2.0943
116	149	G2_power station	-12.7743	-1.5564	1.8886
116	150	G2_power station	-13.4809	-0.0229	2.004
116	148	Q_power station	-0.3676	0.0011	0.0818
116	147	Q_power station	-0.3695	-0.0305	0.0775
116	149	Q_power station	-0.4726	-0.0576	0.0699
116	150	Q_power station	-0.4988	-8.489E-04	0.0741
116	148	Q_neve	-1.1134	0.0025	0.1693
116	147	Q_neve	-1.137	-0.1823	0.1575
116	149	Q_neve	-1.426	-0.2584	0.1368
116	150	Q_neve	-1.4754	-0.0025	0.1486
116	148	Q_manutenzione	-0.3676	0.0011	0.0818
116	147	Q_manutenzione	-0.3695	-0.0305	0.0775
116	149	Q_manutenzione	-0.4726	-0.0576	0.0699
116	150	Q_manutenzione	-0.4988	-8.489E-04	0.0741
116	148	EQ_X	-7.3703	-0.0378	0.0266
116	147	EQ_X	-6.6088	-1.1202	0.0074
116	149	EQ_X	-5.4835	-0.5301	-0.2369
116	150	EQ_X	-5.7446	0.0027	-0.2177
116	148	EQ_Y	1.641	0.7036	-2.6058
116	147	EQ_Y	0.3658	0.4254	-2.6421
116	149	EQ_Y	1.1013	1.6714	-2.227
116	150	EQ_Y	1.7911	-0.2135	-2.1907
117	150	DEAD	3.384E-13	-4.605E-14	9.570E-13
117	149	DEAD	-3.252E-13	-8.925E-13	6.673E-13
117	151	DEAD	-4.238E-13	-8.537E-13	5.930E-13
117	152	DEAD	-1.770E-12	3.474E-13	8.039E-13
117	150	G1_power station	0.	0.	0.
117	149	G1_power station	0.	0.	0.
117	151	G1_power station	0.	0.	0.
117	152	G1_power station	0.	0.	0.
117	150	G2_power station	-13.4157	-0.0099	1.6607
117	149	G2_power station	-12.8075	-1.5631	1.5527

Table 20: Element Forces - Area Shells, Part 2 of 3

Area	Joint	OutputCase	M11	M22	M12
			KN-m/m	KN-m/m	KN-m/m
117	151	G2_power station	-14.3451	-1.8603	1.1238
117	152	G2_power station	-15.41	0.0326	1.2318
117	150	Q_power station	-0.4964	-3.663E-04	0.0614
117	149	Q_power station	-0.4739	-0.0578	0.0575
117	151	Q_power station	-0.5308	-0.0688	0.0416
117	152	Q_power station	-0.5702	0.0012	0.0456
117	150	Q_neve	-1.469	-0.0012	0.1133
117	149	Q_neve	-1.4291	-0.259	0.1042
117	151	Q_neve	-1.578	-0.2947	0.0609
117	152	Q_neve	-1.6654	0.0034	0.07
117	150	Q_manutenzione	-0.4964	-3.663E-04	0.0614
117	149	Q_manutenzione	-0.4739	-0.0578	0.0575
117	151	Q_manutenzione	-0.5308	-0.0688	0.0416
117	152	Q_manutenzione	-0.5702	0.0012	0.0456
117	150	EQ_X	-5.7851	-0.0054	-0.4104
117	149	EQ_X	-5.4596	-0.5253	-0.3563
117	151	EQ_X	-4.3562	-0.2797	-0.4696
117	152	EQ_X	-4.4945	0.0013	-0.5237
117	150	EQ_Y	1.8035	-0.2111	-1.8726
117	149	EQ_Y	1.0993	1.671	-1.7659
117	151	EQ_Y	1.2729	1.0246	-1.4027
117	152	EQ_Y	2.001	0.0636	-1.5093
118	152	DEAD	-6.981E-13	3.772E-13	4.553E-13
118	151	DEAD	-1.496E-12	-8.160E-13	4.719E-13
118	153	DEAD	-1.062E-12	-3.509E-13	2.278E-13
118	154	DEAD	-3.180E-12	-4.975E-13	2.899E-13
118	152	G1_power station	0.	0.	0.
118	151	G1_power station	0.	0.	0.
118	153	G1_power station	0.	0.	0.
118	154	G1_power station	0.	0.	0.
118	152	G2_power station	-15.3516	0.0443	0.69
118	151	G2_power station	-14.3603	-1.8633	0.6203
118	153	G2_power station	-15.5008	-2.0007	-0.0414
118	154	G2_power station	-17.406	-0.1657	0.0283
118	152	Q_power station	-0.568	0.0016	0.0255
118	151	Q_power station	-0.5313	-0.0689	0.023
118	153	Q_power station	-0.5735	-0.074	-0.0015
118	154	Q_power station	-0.644	-0.0061	0.001
118	152	Q_neve	-1.6595	0.0046	0.0144
118	151	Q_neve	-1.5793	-0.295	0.0101
118	153	Q_neve	-1.6728	-0.311	-0.0576
118	154	Q_neve	-1.8469	-0.0176	-0.0533
118	152	Q_manutenzione	-0.568	0.0016	0.0255

Table 20: Element Forces - Area Shells, Part 2 of 3

Area	Joint	OutputCase	M11	M22	M12
			KN-m/m	KN-m/m	KN-m/m
118	151	Q_manutenzione	-0.5313	-0.0689	0.023
118	153	Q_manutenzione	-0.5735	-0.074	-0.0015
118	154	Q_manutenzione	-0.644	-0.0061	0.001
118	152	EQ_X	-4.5119	-0.0022	-0.613
118	151	EQ_X	-4.345	-0.2775	-0.5387
118	153	EQ_X	-3.2761	-0.1407	-0.5982
118	154	EQ_X	-3.3545	-0.0043	-0.6725
118	152	EQ_Y	2.0062	0.0646	-1.1206
118	151	EQ_Y	1.2703	1.0241	-1.1079
118	153	EQ_Y	1.3906	1.0795	-0.7627
118	154	EQ_Y	2.1497	0.0085	-0.7755
119	154	DEAD	-1.218E-12	1.524E-13	2.083E-13
119	153	DEAD	-2.884E-12	-9.053E-13	-1.923E-14
119	155	DEAD	-1.980E-12	-3.823E-13	-1.557E-13
119	156	DEAD	-4.215E-12	8.436E-14	7.177E-14
119	154	G1_power station	0.	0.	0.
119	153	G1_power station	0.	0.	0.
119	155	G1_power station	0.	0.	0.
119	156	G1_power station	0.	0.	0.
119	154	G2_power station	-17.2516	-0.1348	-0.6634
119	153	G2_power station	-15.5161	-2.0038	-1.076
119	155	G2_power station	-17.9809	-2.7156	-2.4111
119	156	G2_power station	-22.5321	0.7535	-1.9986
119	154	Q_power station	-0.6383	-0.005	-0.0245
119	153	Q_power station	-0.5741	-0.0741	-0.0398
119	155	Q_power station	-0.6653	-0.1005	-0.0892
119	156	Q_power station	-0.8337	0.0279	-0.0739
119	154	Q_neve	-1.8319	-0.0146	-0.1232
119	153	Q_neve	-1.6735	-0.3112	-0.1644
119	155	Q_neve	-1.8897	-0.3764	-0.2994
119	156	Q_neve	-2.3244	0.0809	-0.2583
119	154	Q_manutenzione	-0.6383	-0.005	-0.0245
119	153	Q_manutenzione	-0.5741	-0.0741	-0.0398
119	155	Q_manutenzione	-0.6653	-0.1005	-0.0892
119	156	Q_manutenzione	-0.8337	0.0279	-0.0739
119	154	EQ_X	-3.3711	-0.0076	-0.6666
119	153	EQ_X	-3.2582	-0.1371	-0.6913
119	155	EQ_X	-2.3029	0.2732	-0.7158
119	156	EQ_X	-2.3373	0.0829	-0.6912
119	154	EQ_Y	2.1267	0.0039	-0.3573
119	153	EQ_Y	1.4058	1.0825	-0.465
119	155	EQ_Y	1.4264	1.6262	-0.0491
119	156	EQ_Y	2.4509	-0.0204	0.0586

Table 20: Element Forces - Area Shells, Part 2 of 3

Area	Joint	OutputCase	M11	M22	M12
			KN-m/m	KN-m/m	KN-m/m
120	156	DEAD	-3.178E-12	1.725E-13	-2.944E-13
120	155	DEAD	-2.733E-12	-4.044E-13	-4.597E-13
120	24	DEAD	-3.337E-12	1.953E-13	-7.039E-13
120	31	DEAD	-4.098E-12	1.417E-13	-4.597E-13
120	156	G1_power station	0.	0.	0.
120	155	G1_power station	0.	0.	0.
120	24	G1_power station	0.	0.	0.
120	31	G1_power station	0.	0.	0.
120	156	G2_power station	-22.4861	0.7627	-3.1507
120	155	G2_power station	-17.2346	-2.5664	-5.4924
120	24	G2_power station	-28.7932	3.5871	-8.7512
120	31	G2_power station	-41.902	-1.7909	-6.4096
120	156	Q_power station	-0.832	0.0282	-0.1166
120	155	Q_power station	-0.6377	-0.095	-0.2032
120	24	Q_power station	-1.0653	0.1327	-0.3238
120	31	Q_power station	-1.5504	-0.0663	-0.2372
120	156	Q_neve	-2.326	0.0805	-0.3658
120	155	Q_neve	-1.808	-0.36	-0.616
120	24	Q_neve	-2.9582	0.3515	-0.9312
120	31	Q_neve	-4.1962	-0.1882	-0.6809
120	156	Q_manutenzione	-0.832	0.0282	-0.1166
120	155	Q_manutenzione	-0.6377	-0.095	-0.2032
120	24	Q_manutenzione	-1.0653	0.1327	-0.3238
120	31	Q_manutenzione	-1.5504	-0.0663	-0.2372
120	156	EQ_X	-2.4383	0.0627	-0.6481
120	155	EQ_X	-2.1776	0.2982	-0.7673
120	24	EQ_X	-2.1697	1.2931	-0.6156
120	31	EQ_X	-1.4248	-0.2292	-0.4964
120	156	EQ_Y	2.3955	-0.0315	0.4693
120	155	EQ_Y	1.4294	1.6268	0.5416
120	24	EQ_Y	1.493	1.5377	1.2047
120	31	EQ_Y	3.5391	-0.0033	1.1324
121	19	DEAD	-4.654E-13	9.525E-14	1.461E-13
121	22	DEAD	-2.488E-13	2.663E-13	1.461E-13
121	157	DEAD	-2.834E-13	7.323E-13	-1.724E-13
121	158	DEAD	-1.682E-12	-6.210E-13	-1.724E-13
121	19	G1_power station	0.	0.	0.
121	22	G1_power station	0.	0.	0.
121	157	G1_power station	0.	0.	0.
121	158	G1_power station	0.	0.	0.
121	19	G2_power station	2.8439	-0.3026	-0.1818
121	22	G2_power station	9.4093	9.1224	0.581
121	157	G2_power station	-5.0026	1.7921	0.2326

Table 20: Element Forces - Area Shells, Part 2 of 3

Area	Joint	OutputCase	M11	M22	M12
			KN-m/m	KN-m/m	KN-m/m
121	158	G2_power station	-2.7517	0.0971	-0.5302
121	19	Q_power station	0.1052	-0.0112	-0.0067
121	22	Q_power station	0.3481	0.3375	0.0215
121	157	Q_power station	-0.1851	0.0663	0.0086
121	158	Q_power station	-0.1018	0.0036	-0.0196
121	19	Q_neve	0.1892	-0.0274	-0.061
121	22	Q_neve	0.7969	0.7195	0.0051
121	157	Q_neve	-0.5702	0.0468	-0.036
121	158	Q_neve	-0.3668	0.0067	-0.1021
121	19	Q_manutenzione	0.1052	-0.0112	-0.0067
121	22	Q_manutenzione	0.3481	0.3375	0.0215
121	157	Q_manutenzione	-0.1851	0.0663	0.0086
121	158	Q_manutenzione	-0.1018	0.0036	-0.0196
121	19	EQ_X	-8.4677	-2.4363	3.3951
121	22	EQ_X	30.9825	4.6726	2.692
121	157	EQ_X	5.516	3.6612	-2.1253
121	158	EQ_X	14.0458	0.6846	-1.4221
121	19	EQ_Y	5.8601	-3.027	-0.4889
121	22	EQ_Y	6.3504	23.7141	5.8262
121	157	EQ_Y	-0.6575	-8.0515	6.581
121	158	EQ_Y	1.0485	2.1248	0.2659
122	158	DEAD	-8.525E-13	-2.797E-13	-3.460E-13
122	157	DEAD	-2.260E-13	5.223E-13	-3.460E-13
122	159	DEAD	-9.208E-13	-7.495E-14	-5.735E-13
122	160	DEAD	-1.705E-12	2.265E-13	-5.735E-13
122	158	G1_power station	0.	0.	0.
122	157	G1_power station	0.	0.	0.
122	159	G1_power station	0.	0.	0.
122	160	G1_power station	0.	0.	0.
122	158	G2_power station	-2.9103	0.0654	0.323
122	157	G2_power station	-4.734	1.8458	0.2476
122	159	G2_power station	-10.1622	-1.4658	0.0209
122	160	G2_power station	-13.3084	0.5014	0.0963
122	158	Q_power station	-0.1077	0.0024	0.012
122	157	Q_power station	-0.1752	0.0683	0.0092
122	159	Q_power station	-0.376	-0.0542	7.738E-04
122	160	Q_power station	-0.4924	0.0186	0.0036
122	158	Q_neve	-0.3811	0.0038	-0.0328
122	157	Q_neve	-0.5453	0.0518	-0.044
122	159	Q_neve	-1.0745	-0.2607	-0.0757
122	160	Q_neve	-1.3755	0.0545	-0.0645
122	158	Q_manutenzione	-0.1077	0.0024	0.012
122	157	Q_manutenzione	-0.1752	0.0683	0.0092

Table 20: Element Forces - Area Shells, Part 2 of 3

Area	Joint	OutputCase	M11	M22	M12
			KN-m/m	KN-m/m	KN-m/m
122	159	Q_manutenzione	-0.376	-0.0542	7.738E-04
122	160	Q_manutenzione	-0.4924	0.0186	0.0036
122	158	EQ_X	11.8704	0.2495	-1.1454
122	157	EQ_X	7.4361	4.0452	-0.406
122	159	EQ_X	8.0344	1.5388	0.8533
122	160	EQ_X	10.0222	-0.3334	0.1139
122	158	EQ_Y	1.2449	2.1641	4.0972
122	157	EQ_Y	-0.6845	-8.0569	2.8495
122	159	EQ_Y	0.5181	-0.369	2.69
122	160	EQ_Y	-0.4147	-0.8239	3.9378
123	160	DEAD	-2.225E-12	-4.357E-14	-8.618E-13
123	159	DEAD	-5.207E-13	-1.116E-15	-8.618E-13
123	23	DEAD	-1.736E-12	-5.495E-14	-1.135E-12
123	32	DEAD	-1.351E-12	-5.799E-14	-1.135E-12
123	160	G1_power station	0.	0.	0.
123	159	G1_power station	0.	0.	0.
123	23	G1_power station	0.	0.	0.
123	32	G1_power station	0.	0.	0.
123	160	G2_power station	-12.9911	0.5649	-0.2693
123	159	G2_power station	-9.9581	-1.425	-2.0124
123	23	G2_power station	-18.7663	1.8504	-4.3356
123	32	G2_power station	-29.8755	-1.1557	-2.5925
123	160	Q_power station	-0.4807	0.0209	-0.01
123	159	Q_power station	-0.3685	-0.0527	-0.0745
123	23	Q_power station	-0.6944	0.0685	-0.1604
123	32	Q_power station	-1.1054	-0.0428	-0.0959
123	160	Q_neve	-1.3501	0.0596	-0.0998
123	159	Q_neve	-1.0479	-0.2554	-0.288
123	23	Q_neve	-1.927	0.1493	-0.5131
123	32	Q_neve	-2.9664	-0.1215	-0.3249
123	160	Q_manutenzione	-0.4807	0.0209	-0.01
123	159	Q_manutenzione	-0.3685	-0.0527	-0.0745
123	23	Q_manutenzione	-0.6944	0.0685	-0.1604
123	32	Q_manutenzione	-1.1054	-0.0428	-0.0959
123	160	EQ_X	10.3043	-0.2769	0.9604
123	159	EQ_X	7.5595	1.4438	1.9833
123	23	EQ_X	10.8831	-2.0352	3.0196
123	32	EQ_X	14.578	0.794	1.9968
123	160	EQ_Y	-0.3284	-0.8067	3.0745
123	159	EQ_Y	0.422	-0.3882	3.048
123	23	EQ_Y	1.2625	-1.1681	2.6972
123	32	EQ_Y	0.1251	0.3339	2.7238
124	22	DEAD	-7.781E-14	2.358E-13	-1.666E-14

Table 20: Element Forces - Area Shells, Part 2 of 3

Area	Joint	OutputCase	M11	M22	M12
			KN-m/m	KN-m/m	KN-m/m
124	74	DEAD	-3.798E-13	1.736E-12	2.885E-14
124	161	DEAD	2.748E-13	9.070E-13	-6.216E-14
124	157	DEAD	-1.522E-13	9.629E-13	-1.077E-13
124	22	G1_power station	0.	0.	0.
124	74	G1_power station	0.	0.	0.
124	161	G1_power station	0.	0.	0.
124	157	G1_power station	0.	0.	0.
124	22	G2_power station	9.4422	9.2868	2.0028
124	74	G2_power station	0.5358	-5.6828	2.4616
124	161	G2_power station	-2.363	-3.2865	2.8455
124	157	G2_power station	-5.0376	1.617	2.3867
124	22	Q_power station	0.3494	0.3436	0.0741
124	74	Q_power station	0.0198	-0.2103	0.0911
124	161	Q_power station	-0.0874	-0.1216	0.1053
124	157	Q_power station	-0.1864	0.0598	0.0883
124	22	Q_neve	0.8001	0.7353	0.1331
124	74	Q_neve	-0.0052	-0.7434	0.1799
124	161	Q_neve	-0.3371	-0.5607	0.2062
124	157	Q_neve	-0.574	0.0282	0.1594
124	22	Q_manutenzione	0.3494	0.3436	0.0741
124	74	Q_manutenzione	0.0198	-0.2103	0.0911
124	161	Q_manutenzione	-0.0874	-0.1216	0.1053
124	157	Q_manutenzione	-0.1864	0.0598	0.0883
124	22	EQ_X	30.9822	4.6711	-3.8351
124	74	EQ_X	-3.3444	-0.3928	-4.3577
124	161	EQ_X	8.6971	-0.0925	0.6392
124	157	EQ_X	5.5311	3.7366	1.1618
124	22	EQ_Y	-4.5309	-30.6925	5.4851
124	74	EQ_Y	-2.376	0.1494	-0.9141
124	161	EQ_Y	0.0888	-7.7441	-0.348
124	157	EQ_Y	1.758	4.0262	6.0512
125	157	DEAD	-4.000E-13	1.020E-12	-1.576E-13
125	161	DEAD	-1.110E-13	9.075E-13	-6.662E-14
125	162	DEAD	2.029E-13	1.305E-12	-1.576E-13
125	159	DEAD	-1.249E-12	-1.391E-13	-2.486E-13
125	157	G1_power station	0.	0.	0.
125	161	G1_power station	0.	0.	0.
125	162	G1_power station	0.	0.	0.
125	159	G1_power station	0.	0.	0.
125	157	G2_power station	-4.769	1.6708	1.5711
125	161	G2_power station	-2.4962	-3.3131	1.7421
125	162	G2_power station	-5.2607	-2.6586	0.3119
125	159	G2_power station	-10.1245	-1.2777	0.1409

Table 20: Element Forces - Area Shells, Part 2 of 3

Area	Joint	OutputCase	M11	M22	M12
			KN-m/m	KN-m/m	KN-m/m
125	157	Q_power station	-0.1765	0.0618	0.0581
125	161	Q_power station	-0.0924	-0.1226	0.0645
125	162	Q_power station	-0.1946	-0.0984	0.0115
125	159	Q_power station	-0.3746	-0.0473	0.0052
125	157	Q_neve	-0.5491	0.0332	0.0773
125	161	Q_neve	-0.3493	-0.5632	0.0961
125	162	Q_neve	-0.5951	-0.5236	-0.0487
125	159	Q_neve	-1.069	-0.2331	-0.0674
125	157	Q_manutenzione	-0.1765	0.0618	0.0581
125	161	Q_manutenzione	-0.0924	-0.1226	0.0645
125	162	Q_manutenzione	-0.1946	-0.0984	0.0115
125	159	Q_manutenzione	-0.3746	-0.0473	0.0052
125	157	EQ_X	7.4512	4.1207	1.103
125	161	EQ_X	7.5258	-0.3268	1.3776
125	162	EQ_X	4.6975	0.6217	1.7499
125	159	EQ_X	8.057	1.6518	1.4754
125	157	EQ_Y	1.731	4.0208	2.5913
125	161	EQ_Y	-0.0582	-7.7735	2.9456
125	162	EQ_Y	0.8297	-2.1806	2.7341
125	159	EQ_Y	-0.0354	-3.1364	2.3798
126	159	DEAD	-4.671E-13	1.118E-13	-5.350E-13
126	162	DEAD	-6.028E-14	1.115E-12	-1.255E-13
126	163	DEAD	3.292E-13	1.090E-12	-4.895E-13
126	23	DEAD	-2.028E-12	-1.627E-12	-8.991E-13
126	159	G1_power station	0.	0.	0.
126	162	G1_power station	0.	0.	0.
126	163	G1_power station	0.	0.	0.
126	23	G1_power station	0.	0.	0.
126	159	G2_power station	-9.9205	-1.2368	-2.2534
126	162	G2_power station	-5.8166	-2.7697	-1.5955
126	163	G2_power station	4.4616	-6.3066	-6.5734
126	23	G2_power station	-19.1499	-0.0679	-7.2312
126	159	Q_power station	-0.3671	-0.0458	-0.0834
126	162	Q_power station	-0.2152	-0.1025	-0.059
126	163	Q_power station	0.1651	-0.2333	-0.2432
126	23	Q_power station	-0.7085	-0.0025	-0.2676
126	159	Q_neve	-1.0424	-0.2278	-0.3167
126	162	Q_neve	-0.6546	-0.5355	-0.2431
126	163	Q_neve	0.459	-0.9285	-0.762
126	23	Q_neve	-1.9742	-0.0867	-0.8356
126	159	Q_manutenzione	-0.3671	-0.0458	-0.0834
126	162	Q_manutenzione	-0.2152	-0.1025	-0.059
126	163	Q_manutenzione	0.1651	-0.2333	-0.2432

Table 20: Element Forces - Area Shells, Part 2 of 3

Area	Joint	OutputCase	M11	M22	M12
			KN-m/m	KN-m/m	KN-m/m
126	23	Q_manutenzione	-0.7085	-0.0025	-0.2676
126	159	EQ_X	7.5821	1.5568	2.7362
126	162	EQ_X	5.2334	0.7289	2.7678
126	163	EQ_X	-2.4864	3.5068	5.6013
126	23	EQ_X	10.8428	-2.2367	5.5697
126	159	EQ_Y	-0.1315	-3.1557	2.5847
126	162	EQ_Y	0.9306	-2.1604	2.1389
126	163	EQ_Y	-0.3973	-2.6237	2.2249
126	23	EQ_Y	1.3116	-0.9226	2.6707
127	74	DEAD	-5.118E-13	7.834E-13	2.627E-14
127	76	DEAD	9.520E-13	1.236E-12	-1.923E-14
127	164	DEAD	-1.058E-12	5.104E-13	2.627E-14
127	161	DEAD	9.883E-14	1.338E-12	7.177E-14
127	74	G1_power station	0.	0.	0.
127	76	G1_power station	0.	0.	0.
127	164	G1_power station	0.	0.	0.
127	161	G1_power station	0.	0.	0.
127	74	G2_power station	0.603	-5.3468	1.6105
127	76	G2_power station	-1.4209	-7.9237	0.7605
127	164	G2_power station	-2.1785	-7.2508	0.8509
127	161	G2_power station	-2.3938	-3.4402	1.7008
127	74	Q_power station	0.0223	-0.1978	0.0596
127	76	Q_power station	-0.0526	-0.2932	0.0281
127	164	Q_power station	-0.0806	-0.2683	0.0315
127	161	Q_power station	-0.0886	-0.1273	0.0629
127	74	Q_neve	9.418E-04	-0.7127	0.112
127	76	Q_neve	-0.1802	-1.0101	0.0483
127	164	Q_neve	-0.3119	-0.9927	0.05
127	161	Q_neve	-0.3399	-0.5751	0.1137
127	74	Q_manutenzione	0.0223	-0.1978	0.0596
127	76	Q_manutenzione	-0.0526	-0.2932	0.0281
127	164	Q_manutenzione	-0.0806	-0.2683	0.0315
127	161	Q_manutenzione	-0.0886	-0.1273	0.0629
127	74	EQ_X	-3.3409	-0.3752	-1.0329
127	76	EQ_X	4.1619	1.3701	-0.4175
127	164	EQ_X	3.2508	0.6559	-0.6824
127	161	EQ_X	8.7483	0.1633	-1.2978
127	74	EQ_Y	-3.0275	-3.1078	0.4163
127	76	EQ_Y	-0.3794	-1.9624	1.0015
127	164	EQ_Y	-0.3252	-1.119	0.8858
127	161	EQ_Y	0.5334	-5.521	0.3007
128	161	DEAD	-3.648E-13	1.071E-12	3.520E-15
128	164	DEAD	1.240E-13	9.506E-13	1.234E-13

Table 20: Element Forces - Area Shells, Part 2 of 3

Area	Joint	OutputCase	M11	M22	M12
			KN-m/m	KN-m/m	KN-m/m
128	165	DEAD	-4.103E-13	5.707E-13	4.902E-14
128	162	DEAD	2.832E-13	9.278E-13	-1.496E-13
128	161	G1_power station	0.	0.	0.
128	164	G1_power station	0.	0.	0.
128	165	G1_power station	0.	0.	0.
128	162	G1_power station	0.	0.	0.
128	161	G2_power station	-2.5269	-3.4668	1.0687
128	164	G2_power station	-2.2357	-7.2622	0.741
128	165	G2_power station	-1.6736	-7.0121	-0.1957
128	162	G2_power station	-5.3042	-2.8759	0.132
128	161	Q_power station	-0.0935	-0.1283	0.0395
128	164	Q_power station	-0.0827	-0.2687	0.0274
128	165	Q_power station	-0.0619	-0.2594	-0.0072
128	162	Q_power station	-0.1963	-0.1064	0.0049
128	161	Q_neve	-0.3522	-0.5775	0.0449
128	164	Q_neve	-0.3175	-0.9938	0.0351
128	165	Q_neve	-0.2428	-1.0205	-0.0618
128	162	Q_neve	-0.5998	-0.5469	-0.052
128	161	Q_manutenzione	-0.0935	-0.1283	0.0395
128	164	Q_manutenzione	-0.0827	-0.2687	0.0274
128	165	Q_manutenzione	-0.0619	-0.2594	-0.0072
128	162	Q_manutenzione	-0.1963	-0.1064	0.0049
128	161	EQ_X	7.5769	-0.071	0.5027
128	164	EQ_X	3.5923	0.7242	-0.0132
128	165	EQ_X	2.7863	1.1811	1.0356
128	162	EQ_X	4.7255	0.7622	1.5515
128	161	EQ_Y	0.3864	-5.5504	1.2707
128	164	EQ_Y	-0.2338	-1.1007	0.7437
128	165	EQ_Y	0.2011	-1.4453	1.1324
128	162	EQ_Y	0.6663	-2.9979	1.6594
129	162	DEAD	-7.773E-14	8.230E-13	-3.092E-13
129	165	DEAD	-4.273E-15	6.246E-13	-1.227E-13
129	166	DEAD	1.083E-12	8.912E-13	-4.002E-13
129	163	DEAD	2.801E-13	1.228E-12	-3.502E-13
129	162	G1_power station	0.	0.	0.
129	165	G1_power station	0.	0.	0.
129	166	G1_power station	0.	0.	0.
129	163	G1_power station	0.	0.	0.
129	162	G2_power station	-5.86	-2.987	-1.9396
129	165	G2_power station	-1.4857	-6.9745	-0.619
129	166	G2_power station	-0.8541	-6.9379	-0.616
129	163	G2_power station	4.5239	-5.995	-1.9366
129	162	Q_power station	-0.2168	-0.1105	-0.0718

Table 20: Element Forces - Area Shells, Part 2 of 3

Area	Joint	OutputCase	M11	M22	M12
			KN-m/m	KN-m/m	KN-m/m
129	165	Q_power station	-0.055	-0.2581	-0.0229
129	166	Q_power station	-0.0316	-0.2567	-0.0228
129	163	Q_power station	0.1674	-0.2218	-0.0717
129	162	Q_neve	-0.6593	-0.5588	-0.2638
129	165	Q_neve	-0.223	-1.0165	-0.1047
129	166	Q_neve	-0.0884	-1.0557	-0.1057
129	163	Q_neve	0.4666	-0.8907	-0.2648
129	162	Q_manutenzione	-0.2168	-0.1105	-0.0718
129	165	Q_manutenzione	-0.055	-0.2581	-0.0229
129	166	Q_manutenzione	-0.0316	-0.2567	-0.0228
129	163	Q_manutenzione	0.1674	-0.2218	-0.0717
129	162	EQ_X	5.2615	0.8694	2.6468
129	165	EQ_X	2.5863	1.1411	1.338
129	166	EQ_X	0.4879	2.1246	1.2493
129	163	EQ_X	-2.5826	3.026	2.5582
129	162	EQ_Y	0.7672	-2.9777	1.8477
129	165	EQ_Y	0.1207	-1.4613	1.5082
129	166	EQ_Y	0.0831	-1.149	1.6382
129	163	EQ_Y	-0.309	-2.1825	1.9777
130	76	DEAD	8.041E-13	8.583E-13	1.278E-13
130	78	DEAD	-5.110E-13	-2.891E-13	2.355E-13
130	167	DEAD	2.467E-13	-1.763E-14	8.233E-14
130	164	DEAD	-1.216E-12	6.677E-15	5.349E-14
130	76	G1_power station	0.	0.	0.
130	78	G1_power station	0.	0.	0.
130	167	G1_power station	0.	0.	0.
130	164	G1_power station	0.	0.	0.
130	76	G2_power station	-1.4605	-8.1214	0.2619
130	78	G2_power station	-1.4605	-8.1214	-0.2619
130	167	G2_power station	-2.176	-7.2383	-0.2619
130	164	G2_power station	-2.176	-7.2383	0.2619
130	76	Q_power station	-0.054	-0.3005	0.0097
130	78	Q_power station	-0.054	-0.3005	-0.0097
130	167	Q_power station	-0.0805	-0.2678	-0.0097
130	164	Q_power station	-0.0805	-0.2678	0.0097
130	76	Q_neve	-0.1837	-1.028	0.0155
130	78	Q_neve	-0.1837	-1.028	-0.0155
130	167	Q_neve	-0.3119	-0.9927	-0.0155
130	164	Q_neve	-0.3119	-0.9927	0.0155
130	76	Q_manutenzione	-0.054	-0.3005	0.0097
130	78	Q_manutenzione	-0.054	-0.3005	-0.0097
130	167	Q_manutenzione	-0.0805	-0.2678	-0.0097
130	164	Q_manutenzione	-0.0805	-0.2678	0.0097

Table 20: Element Forces - Area Shells, Part 2 of 3

Area	Joint	OutputCase	M11	M22	M12
			KN-m/m	KN-m/m	KN-m/m
130	76	EQ_X	4.1813	1.4673	-0.1784
130	78	EQ_X	4.1813	1.4673	0.1784
130	167	EQ_X	3.2354	0.5789	0.1784
130	164	EQ_X	3.2354	0.5789	-0.1784
130	76	EQ_Y	-0.2975	-1.5531	0.8878
130	78	EQ_Y	0.2975	1.5531	0.8878
130	167	EQ_Y	0.3841	1.4134	0.8578
130	164	EQ_Y	-0.3841	-1.4134	0.8578
131	164	DEAD	2.247E-13	3.126E-13	4.645E-14
131	167	DEAD	-1.133E-12	-4.543E-13	1.208E-13
131	168	DEAD	9.641E-13	-3.586E-13	1.375E-13
131	165	DEAD	3.119E-13	7.629E-13	-1.571E-14
131	164	G1_power station	0.	0.	0.
131	167	G1_power station	0.	0.	0.
131	168	G1_power station	0.	0.	0.
131	165	G1_power station	0.	0.	0.
131	164	G2_power station	-2.2332	-7.2498	0.0973
131	167	G2_power station	-2.2332	-7.2498	-0.0973
131	168	G2_power station	-1.6204	-6.746	-0.0973
131	165	G2_power station	-1.6204	-6.746	0.0973
131	164	Q_power station	-0.0826	-0.2682	0.0036
131	167	Q_power station	-0.0826	-0.2682	-0.0036
131	168	Q_power station	-0.06	-0.2496	-0.0036
131	165	Q_power station	-0.06	-0.2496	0.0036
131	164	Q_neve	-0.3175	-0.9938	-0.004
131	167	Q_neve	-0.3175	-0.9938	0.004
131	168	Q_neve	-0.2373	-0.9933	0.004
131	165	Q_neve	-0.2373	-0.9933	-0.004
131	164	Q_manutenzione	-0.0826	-0.2682	0.0036
131	167	Q_manutenzione	-0.0826	-0.2682	-0.0036
131	168	Q_manutenzione	-0.06	-0.2496	-0.0036
131	165	Q_manutenzione	-0.06	-0.2496	0.0036
131	164	EQ_X	3.5769	0.6472	0.16
131	167	EQ_X	3.5769	0.6472	-0.16
131	168	EQ_X	2.7728	1.1134	-0.16
131	165	EQ_X	2.7728	1.1134	0.16
131	164	EQ_Y	-0.2927	-1.3951	0.8537
131	167	EQ_Y	0.2927	1.3951	0.8537
131	168	EQ_Y	-0.2186	1.358	1.0158
131	165	EQ_Y	0.2186	-1.358	1.0158
132	165	DEAD	2.152E-13	8.590E-13	2.721E-14
132	168	DEAD	-3.970E-13	-8.830E-13	6.825E-14
132	169	DEAD	7.043E-13	-5.175E-13	2.092E-13

Table 20: Element Forces - Area Shells, Part 2 of 3

Area	Joint	OutputCase	M11	M22	M12
			KN-m/m	KN-m/m	KN-m/m
132	166	DEAD	6.268E-13	1.408E-13	-6.825E-14
132	165	G1_power station	0.	0.	0.
132	168	G1_power station	0.	0.	0.
132	169	G1_power station	0.	0.	0.
132	166	G1_power station	0.	0.	0.
132	165	G2_power station	-1.4325	-6.7084	-0.1911
132	168	G2_power station	-1.4325	-6.7084	0.1911
132	169	G2_power station	-0.9382	-7.3583	0.1911
132	166	G2_power station	-0.9382	-7.3583	-0.1911
132	165	Q_power station	-0.053	-0.2482	-0.0071
132	168	Q_power station	-0.053	-0.2482	0.0071
132	169	Q_power station	-0.0347	-0.2723	0.0071
132	166	Q_power station	-0.0347	-0.2723	-0.0071
132	165	Q_neve	-0.2176	-0.9894	-0.0337
132	168	Q_neve	-0.2176	-0.9894	0.0337
132	169	Q_neve	-0.0967	-1.0974	0.0337
132	166	Q_neve	-0.0967	-1.0974	-0.0337
132	165	Q_manutenzione	-0.053	-0.2482	-0.0071
132	168	Q_manutenzione	-0.053	-0.2482	0.0071
132	169	Q_manutenzione	-0.0347	-0.2723	0.0071
132	166	Q_manutenzione	-0.0347	-0.2723	-0.0071
132	165	EQ_X	2.5728	1.0734	0.4184
132	168	EQ_X	2.5728	1.0734	-0.4184
132	169	EQ_X	0.5236	2.303	-0.4184
132	166	EQ_X	0.5236	2.303	0.4184
132	165	EQ_Y	0.1382	-1.3741	1.2887
132	168	EQ_Y	-0.1382	1.3741	1.2887
132	169	EQ_Y	-0.0952	1.0886	1.5356
132	166	EQ_Y	0.0952	-1.0886	1.5356
133	78	DEAD	-4.489E-13	-7.855E-14	2.816E-14
133	80	DEAD	-2.259E-13	-1.062E-12	8.585E-14
133	170	DEAD	-1.370E-12	-1.136E-12	3.922E-13
133	167	DEAD	3.770E-13	-2.317E-13	1.769E-13
133	78	G1_power station	0.	0.	0.
133	80	G1_power station	0.	0.	0.
133	170	G1_power station	0.	0.	0.
133	167	G1_power station	0.	0.	0.
133	78	G2_power station	-1.4209	-7.9237	-0.7605
133	80	G2_power station	0.603	-5.3468	-1.6105
133	170	G2_power station	-2.3938	-3.4402	-1.7008
133	167	G2_power station	-2.1785	-7.2508	-0.8509
133	78	Q_power station	-0.0526	-0.2932	-0.0281
133	80	Q_power station	0.0223	-0.1978	-0.0596

Table 20: Element Forces - Area Shells, Part 2 of 3

Area	Joint	OutputCase	M11	M22	M12
			KN-m/m	KN-m/m	KN-m/m
133	170	Q_power station	-0.0886	-0.1273	-0.0629
133	167	Q_power station	-0.0806	-0.2683	-0.0315
133	78	Q_neve	-0.1802	-1.0101	-0.0483
133	80	Q_neve	9.418E-04	-0.7127	-0.112
133	170	Q_neve	-0.3399	-0.5751	-0.1137
133	167	Q_neve	-0.3119	-0.9927	-0.05
133	78	Q_manutenzione	-0.0526	-0.2932	-0.0281
133	80	Q_manutenzione	0.0223	-0.1978	-0.0596
133	170	Q_manutenzione	-0.0886	-0.1273	-0.0629
133	167	Q_manutenzione	-0.0806	-0.2683	-0.0315
133	78	EQ_X	4.1619	1.3701	0.4175
133	80	EQ_X	-3.3409	-0.3752	1.0329
133	170	EQ_X	8.7483	0.1633	1.2978
133	167	EQ_X	3.2508	0.6559	0.6824
133	78	EQ_Y	0.3794	1.9624	1.0015
133	80	EQ_Y	3.0275	3.1078	0.4163
133	170	EQ_Y	-0.5334	5.521	0.3007
133	167	EQ_Y	0.3252	1.119	0.8858
134	167	DEAD	-1.210E-12	-4.839E-13	3.415E-13
134	170	DEAD	-1.990E-13	-1.102E-12	2.172E-13
134	171	DEAD	-1.296E-13	-5.407E-13	3.415E-13
134	168	DEAD	1.007E-12	-5.333E-13	3.082E-13
134	167	G1_power station	0.	0.	0.
134	170	G1_power station	0.	0.	0.
134	171	G1_power station	0.	0.	0.
134	168	G1_power station	0.	0.	0.
134	167	G2_power station	-2.2357	-7.2622	-0.741
134	170	G2_power station	-2.5269	-3.4668	-1.0687
134	171	G2_power station	-5.3042	-2.8759	-0.132
134	168	G2_power station	-1.6736	-7.0121	0.1957
134	167	Q_power station	-0.0827	-0.2687	-0.0274
134	170	Q_power station	-0.0935	-0.1283	-0.0395
134	171	Q_power station	-0.1963	-0.1064	-0.0049
134	168	Q_power station	-0.0619	-0.2594	0.0072
134	167	Q_neve	-0.3175	-0.9938	-0.0351
134	170	Q_neve	-0.3522	-0.5775	-0.0449
134	171	Q_neve	-0.5998	-0.5469	0.052
134	168	Q_neve	-0.2428	-1.0205	0.0618
134	167	Q_manutenzione	-0.0827	-0.2687	-0.0274
134	170	Q_manutenzione	-0.0935	-0.1283	-0.0395
134	171	Q_manutenzione	-0.1963	-0.1064	-0.0049
134	168	Q_manutenzione	-0.0619	-0.2594	0.0072
134	167	EQ_X	3.5923	0.7242	0.0132

Table 20: Element Forces - Area Shells, Part 2 of 3

Area	Joint	OutputCase	M11	M22	M12
			KN-m/m	KN-m/m	KN-m/m
134	170	EQ_X	7.5769	-0.071	-0.5027
134	171	EQ_X	4.7255	0.7622	-1.5515
134	168	EQ_X	2.7863	1.1811	-1.0356
134	167	EQ_Y	0.2338	1.1007	0.7437
134	170	EQ_Y	-0.3864	5.5504	1.2707
134	171	EQ_Y	-0.6663	2.9979	1.6594
134	168	EQ_Y	-0.2011	1.4453	1.1324
135	168	DEAD	-9.338E-13	-1.051E-12	3.582E-13
135	171	DEAD	3.158E-13	-4.970E-13	2.461E-13
135	172	DEAD	1.128E-13	-1.005E-12	4.037E-13
135	169	DEAD	5.774E-13	-5.539E-13	2.006E-13
135	168	G1_power station	0.	0.	0.
135	171	G1_power station	0.	0.	0.
135	172	G1_power station	0.	0.	0.
135	169	G1_power station	0.	0.	0.
135	168	G2_power station	-1.4857	-6.9745	0.619
135	171	G2_power station	-5.86	-2.987	1.9396
135	172	G2_power station	4.5239	-5.995	1.9366
135	169	G2_power station	-0.8541	-6.9379	0.616
135	168	Q_power station	-0.055	-0.2581	0.0229
135	171	Q_power station	-0.2168	-0.1105	0.0718
135	172	Q_power station	0.1674	-0.2218	0.0717
135	169	Q_power station	-0.0316	-0.2567	0.0228
135	168	Q_neve	-0.223	-1.0165	0.1047
135	171	Q_neve	-0.6593	-0.5588	0.2638
135	172	Q_neve	0.4666	-0.8907	0.2648
135	169	Q_neve	-0.0884	-1.0557	0.1057
135	168	Q_manutenzione	-0.055	-0.2581	0.0229
135	171	Q_manutenzione	-0.2168	-0.1105	0.0718
135	172	Q_manutenzione	0.1674	-0.2218	0.0717
135	169	Q_manutenzione	-0.0316	-0.2567	0.0228
135	168	EQ_X	2.5863	1.1411	-1.338
135	171	EQ_X	5.2615	0.8694	-2.6468
135	172	EQ_X	-2.5826	3.026	-2.5582
135	169	EQ_X	0.4879	2.1246	-1.2493
135	168	EQ_Y	-0.1207	1.4613	1.5082
135	171	EQ_Y	-0.7672	2.9777	1.8477
135	172	EQ_Y	0.309	2.1825	1.9777
135	169	EQ_Y	-0.0831	1.149	1.6382
136	80	DEAD	-3.698E-13	-1.097E-12	2.057E-13
136	9	DEAD	-9.626E-14	-5.952E-13	2.390E-13
136	173	DEAD	-4.380E-13	-8.926E-13	-2.181E-14
136	170	DEAD	-1.086E-12	-9.023E-13	1.025E-13

Table 20: Element Forces - Area Shells, Part 2 of 3

Area	Joint	OutputCase	M11	M22	M12
			KN-m/m	KN-m/m	KN-m/m
136	80	G1_power station	0.	0.	0.
136	9	G1_power station	0.	0.	0.
136	173	G1_power station	0.	0.	0.
136	170	G1_power station	0.	0.	0.
136	80	G2_power station	0.5358	-5.6828	-2.4616
136	9	G2_power station	9.4422	9.2868	-2.0028
136	173	G2_power station	-5.0376	1.617	-2.3867
136	170	G2_power station	-2.363	-3.2865	-2.8455
136	80	Q_power station	0.0198	-0.2103	-0.0911
136	9	Q_power station	0.3494	0.3436	-0.0741
136	173	Q_power station	-0.1864	0.0598	-0.0883
136	170	Q_power station	-0.0874	-0.1216	-0.1053
136	80	Q_neve	-0.0052	-0.7434	-0.1799
136	9	Q_neve	0.8001	0.7353	-0.1331
136	173	Q_neve	-0.574	0.0282	-0.1594
136	170	Q_neve	-0.3371	-0.5607	-0.2062
136	80	Q_manutenzione	0.0198	-0.2103	-0.0911
136	9	Q_manutenzione	0.3494	0.3436	-0.0741
136	173	Q_manutenzione	-0.1864	0.0598	-0.0883
136	170	Q_manutenzione	-0.0874	-0.1216	-0.1053
136	80	EQ_X	-3.3444	-0.3928	4.3577
136	9	EQ_X	30.9822	4.6711	3.8351
136	173	EQ_X	5.5311	3.7366	-1.1618
136	170	EQ_X	8.6971	-0.0925	-0.6392
136	80	EQ_Y	2.376	-0.1494	-0.9141
136	9	EQ_Y	4.5309	30.6925	5.4851
136	173	EQ_Y	-1.758	-4.0262	6.0512
136	170	EQ_Y	-0.0888	7.7441	-0.348
137	170	DEAD	-2.836E-13	-6.988E-13	1.480E-13
137	173	DEAD	-1.076E-12	-1.007E-12	1.025E-13
137	174	DEAD	1.260E-13	-5.623E-13	1.935E-13
137	171	DEAD	-3.028E-13	-6.880E-13	2.390E-13
137	170	G1_power station	0.	0.	0.
137	173	G1_power station	0.	0.	0.
137	174	G1_power station	0.	0.	0.
137	171	G1_power station	0.	0.	0.
137	170	G2_power station	-2.4962	-3.3131	-1.7421
137	173	G2_power station	-4.769	1.6708	-1.5711
137	174	G2_power station	-10.1245	-1.2777	-0.1409
137	171	G2_power station	-5.2607	-2.6586	-0.3119
137	170	Q_power station	-0.0924	-0.1226	-0.0645
137	173	Q_power station	-0.1765	0.0618	-0.0581
137	174	Q_power station	-0.3746	-0.0473	-0.0052

Table 20: Element Forces - Area Shells, Part 2 of 3

Area	Joint	OutputCase	M11	M22	M12
			KN-m/m	KN-m/m	KN-m/m
137	171	Q_power station	-0.1946	-0.0984	-0.0115
137	170	Q_neve	-0.3493	-0.5632	-0.0961
137	173	Q_neve	-0.5491	0.0332	-0.0773
137	174	Q_neve	-1.069	-0.2331	0.0674
137	171	Q_neve	-0.5951	-0.5236	0.0487
137	170	Q_manutenzione	-0.0924	-0.1226	-0.0645
137	173	Q_manutenzione	-0.1765	0.0618	-0.0581
137	174	Q_manutenzione	-0.3746	-0.0473	-0.0052
137	171	Q_manutenzione	-0.1946	-0.0984	-0.0115
137	170	EQ_X	7.5258	-0.3268	-1.3776
137	173	EQ_X	7.4512	4.1207	-1.103
137	174	EQ_X	8.057	1.6518	-1.4754
137	171	EQ_X	4.6975	0.6217	-1.7499
137	170	EQ_Y	0.0582	7.7735	2.9456
137	173	EQ_Y	-1.731	-4.0208	2.5913
137	174	EQ_Y	0.0354	3.1364	2.3798
137	171	EQ_Y	-0.8297	2.1806	2.7341
138	171	DEAD	4.517E-13	-5.829E-13	2.303E-13
138	174	DEAD	-2.606E-13	-7.415E-13	1.105E-13
138	33	DEAD	8.046E-15	2.020E-13	3.214E-13
138	172	DEAD	1.489E-13	-6.049E-13	5.200E-13
138	171	G1_power station	0.	0.	0.
138	174	G1_power station	0.	0.	0.
138	33	G1_power station	0.	0.	0.
138	172	G1_power station	0.	0.	0.
138	171	G2_power station	-5.8166	-2.7697	1.5955
138	174	G2_power station	-9.9205	-1.2368	2.2534
138	33	G2_power station	-19.1499	-0.0679	7.2312
138	172	G2_power station	4.4616	-6.3066	6.5734
138	171	Q_power station	-0.2152	-0.1025	0.059
138	174	Q_power station	-0.3671	-0.0458	0.0834
138	33	Q_power station	-0.7085	-0.0025	0.2676
138	172	Q_power station	0.1651	-0.2333	0.2432
138	171	Q_neve	-0.6546	-0.5355	0.2431
138	174	Q_neve	-1.0424	-0.2278	0.3167
138	33	Q_neve	-1.9742	-0.0867	0.8356
138	172	Q_neve	0.459	-0.9285	0.762
138	171	Q_manutenzione	-0.2152	-0.1025	0.059
138	174	Q_manutenzione	-0.3671	-0.0458	0.0834
138	33	Q_manutenzione	-0.7085	-0.0025	0.2676
138	172	Q_manutenzione	0.1651	-0.2333	0.2432
138	171	EQ_X	5.2334	0.7289	-2.7678
138	174	EQ_X	7.5821	1.5568	-2.7362

Table 20: Element Forces - Area Shells, Part 2 of 3

Area	Joint	OutputCase	M11	M22	M12
			KN-m/m	KN-m/m	KN-m/m
138	33	EQ_X	10.8428	-2.2367	-5.5697
138	172	EQ_X	-2.4864	3.5068	-5.6013
138	171	EQ_Y	-0.9306	2.1604	2.1389
138	174	EQ_Y	0.1315	3.1557	2.5847
138	33	EQ_Y	-1.3116	0.9226	2.6707
138	172	EQ_Y	0.3973	2.6237	2.2249
139	14	DEAD	9.126E-13	1.257E-13	6.183E-13
139	56	DEAD	4.151E-13	-6.505E-13	5.517E-13
139	175	DEAD	-5.776E-13	-5.000E-13	8.003E-13
139	145	DEAD	-1.196E-13	-8.667E-13	5.517E-13
139	14	G1_power station	0.	0.	0.
139	56	G1_power station	0.	0.	0.
139	175	G1_power station	0.	0.	0.
139	145	G1_power station	0.	0.	0.
139	14	G2_power station	9.1816	9.7504	2.5419
139	56	G2_power station	-0.0232	-5.2989	2.9513
139	175	G2_power station	-4.414	-2.9758	3.6635
139	145	G2_power station	-5.8086	1.8038	3.2541
139	14	Q_power station	0.3397	0.3608	0.0941
139	56	Q_power station	-8.595E-04	-0.1961	0.1092
139	175	Q_power station	-0.1633	-0.1101	0.1355
139	145	Q_power station	-0.2149	0.0667	0.1204
139	14	Q_neve	0.7628	0.8016	0.1985
139	56	Q_neve	-0.0792	-0.6734	0.2384
139	175	Q_neve	-0.5963	-0.504	0.3009
139	145	Q_neve	-0.6913	0.0679	0.2611
139	14	Q_manutenzione	0.3397	0.3608	0.0941
139	56	Q_manutenzione	-8.595E-04	-0.1961	0.1092
139	175	Q_manutenzione	-0.1633	-0.1101	0.1355
139	145	Q_manutenzione	-0.2149	0.0667	0.1204
139	14	EQ_X	-30.4427	-4.439	4.0901
139	56	EQ_X	2.785	0.6919	4.5552
139	175	EQ_X	-9.4983	0.1567	-0.3917
139	145	EQ_X	-4.6703	-3.1914	-0.8569
139	14	EQ_Y	4.5025	29.7079	-5.1407
139	56	EQ_Y	2.5351	0.2304	0.7357
139	175	EQ_Y	0.0598	7.196	0.1754
139	145	EQ_Y	-1.2737	-3.9898	-5.701
140	145	DEAD	-3.862E-13	-1.092E-12	7.978E-13
140	175	DEAD	2.764E-13	-3.630E-13	7.978E-13
140	176	DEAD	8.197E-13	-5.234E-13	7.523E-13
140	147	DEAD	7.087E-13	-3.857E-13	7.523E-13
140	145	G1_power station	0.	0.	0.

Table 20: Element Forces - Area Shells, Part 2 of 3

Area	Joint	OutputCase	M11	M22	M12
			KN-m/m	KN-m/m	KN-m/m
140	175	G1_power station	0.	0.	0.
140	176	G1_power station	0.	0.	0.
140	147	G1_power station	0.	0.	0.
140	145	G2_power station	-5.5221	1.8611	2.877
140	175	G2_power station	-4.5501	-3.0031	3.0558
140	176	G2_power station	-9.5931	-3.0062	2.5722
140	147	G2_power station	-9.811	-0.7655	2.3933
140	145	Q_power station	-0.2043	0.0689	0.1064
140	175	Q_power station	-0.1684	-0.1111	0.1131
140	176	Q_power station	-0.3549	-0.1112	0.0952
140	147	Q_power station	-0.363	-0.0283	0.0886
140	145	Q_neve	-0.6654	0.0731	0.2275
140	175	Q_neve	-0.6086	-0.5064	0.2467
140	176	Q_neve	-1.1343	-0.535	0.204
140	147	Q_neve	-1.1209	-0.1767	0.1847
140	145	Q_manutenzione	-0.2043	0.0689	0.1064
140	175	Q_manutenzione	-0.1684	-0.1111	0.1131
140	176	Q_manutenzione	-0.3549	-0.1112	0.0952
140	147	Q_manutenzione	-0.363	-0.0283	0.0886
140	145	EQ_X	-6.848	-3.627	-0.3475
140	175	EQ_X	-8.176	0.4211	-0.5703
140	176	EQ_X	-6.1419	-0.7383	-0.2886
140	147	EQ_X	-6.8328	-1.1068	-0.0659
140	145	EQ_Y	-1.224	-3.9798	-2.443
140	175	EQ_Y	0.2119	7.2264	-2.7528
140	176	EQ_Y	-0.1519	1.6449	-2.4695
140	147	EQ_Y	0.8984	3.2757	-2.1597
141	147	DEAD	1.079E-12	-3.275E-13	6.831E-13
141	176	DEAD	1.381E-13	-5.210E-13	6.831E-13
141	177	DEAD	5.895E-13	-3.161E-13	6.831E-13
141	149	DEAD	-1.090E-12	-9.305E-13	6.831E-13
141	147	G1_power station	0.	0.	0.
141	176	G1_power station	0.	0.	0.
141	177	G1_power station	0.	0.	0.
141	149	G1_power station	0.	0.	0.
141	147	G2_power station	-9.9818	-0.7997	2.1897
141	176	G2_power station	-9.5114	-2.9899	2.1116
141	177	G2_power station	-12.1189	-2.9762	1.7692
141	149	G2_power station	-12.7751	-1.5602	1.8473
141	147	Q_power station	-0.3693	-0.0296	0.081
141	176	Q_power station	-0.3519	-0.1106	0.0781
141	177	Q_power station	-0.4484	-0.1101	0.0655
141	149	Q_power station	-0.4727	-0.0577	0.0684

Table 20: Element Forces - Area Shells, Part 2 of 3

Area	Joint	OutputCase	M11	M22	M12
			KN-m/m	KN-m/m	KN-m/m
141	147	Q_neve	-1.1365	-0.1798	0.1665
141	176	Q_neve	-1.127	-0.5335	0.1633
141	177	Q_neve	-1.3962	-0.5525	0.132
141	149	Q_neve	-1.426	-0.2588	0.1353
141	147	Q_manutenzione	-0.3693	-0.0296	0.081
141	176	Q_manutenzione	-0.3519	-0.1106	0.0781
141	177	Q_manutenzione	-0.4484	-0.1101	0.0655
141	149	Q_manutenzione	-0.4727	-0.0577	0.0684
141	147	EQ_X	-6.5967	-1.0596	-0.2006
141	176	EQ_X	-6.321	-0.7742	-0.2904
141	177	EQ_X	-5.3037	-0.4782	-0.3623
141	149	EQ_X	-5.4868	-0.5467	-0.2725
141	147	EQ_Y	0.9374	3.2835	-2.3028
141	176	EQ_Y	-0.2091	1.6334	-1.7612
141	177	EQ_Y	0.4737	1.7494	-1.4908
141	149	EQ_Y	0.9667	0.9982	-2.0324
142	149	DEAD	2.786E-13	-8.447E-13	5.911E-13
142	177	DEAD	-2.570E-13	-2.859E-13	4.956E-13
142	178	DEAD	1.695E-14	-5.148E-13	5.911E-13
142	151	DEAD	-9.055E-13	-7.978E-13	4.501E-13
142	149	G1_power station	0.	0.	0.
142	177	G1_power station	0.	0.	0.
142	178	G1_power station	0.	0.	0.
142	151	G1_power station	0.	0.	0.
142	149	G2_power station	-12.8083	-1.5669	1.5017
142	177	G2_power station	-12.12	-2.9765	1.3922
142	178	G2_power station	-13.2798	-2.7667	0.9815
142	151	G2_power station	-14.3426	-1.848	1.091
142	149	Q_power station	-0.4739	-0.058	0.0556
142	177	Q_power station	-0.4484	-0.1101	0.0515
142	178	Q_power station	-0.4914	-0.1024	0.0363
142	151	Q_power station	-0.5307	-0.0684	0.0404
142	149	Q_neve	-1.4291	-0.2594	0.102
142	177	Q_neve	-1.3964	-0.5525	0.097
142	178	Q_neve	-1.5028	-0.5485	0.0568
142	151	Q_neve	-1.5777	-0.2933	0.0617
142	149	Q_manutenzione	-0.4739	-0.058	0.0556
142	177	Q_manutenzione	-0.4484	-0.1101	0.0515
142	178	Q_manutenzione	-0.4914	-0.1024	0.0363
142	151	Q_manutenzione	-0.5307	-0.0684	0.0404
142	149	EQ_X	-5.4629	-0.5419	-0.3842
142	177	EQ_X	-5.3096	-0.4794	-0.3683
142	178	EQ_X	-4.236	-0.3619	-0.4197

Table 20: Element Forces - Area Shells, Part 2 of 3

Area	Joint	OutputCase	M11	M22	M12
			KN-m/m	KN-m/m	KN-m/m
142	151	EQ_X	-4.3585	-0.2915	-0.4356
142	149	EQ_Y	0.9646	0.9978	-1.5766
142	177	EQ_Y	0.4587	1.7464	-1.4547
142	178	EQ_Y	0.6429	1.1508	-1.2118
142	151	EQ_Y	1.3035	1.1776	-1.3337
143	151	DEAD	-9.955E-13	-8.580E-13	3.537E-13
143	178	DEAD	-6.628E-13	-1.079E-12	2.749E-13
143	179	DEAD	-1.087E-12	-1.040E-12	1.717E-13
143	153	DEAD	-1.675E-12	-6.810E-13	9.289E-14
143	151	G1_power station	0.	0.	0.
143	178	G1_power station	0.	0.	0.
143	179	G1_power station	0.	0.	0.
143	153	G1_power station	0.	0.	0.
143	151	G2_power station	-14.3579	-1.8511	0.5782
143	178	G2_power station	-13.2702	-2.7648	0.5157
143	179	G2_power station	-13.3149	-2.5386	-0.1445
143	153	G2_power station	-15.5107	-2.0503	-0.082
143	151	Q_power station	-0.5312	-0.0685	0.0214
143	178	Q_power station	-0.491	-0.1023	0.0191
143	179	Q_power station	-0.4927	-0.0939	-0.0053
143	153	Q_power station	-0.5739	-0.0759	-0.003
143	151	Q_neve	-1.579	-0.2935	0.0098
143	178	Q_neve	-1.5018	-0.5483	0.0098
143	179	Q_neve	-1.4782	-0.5392	-0.0585
143	153	Q_neve	-1.6739	-0.3166	-0.0584
143	151	Q_manutenzione	-0.5312	-0.0685	0.0214
143	178	Q_manutenzione	-0.491	-0.1023	0.0191
143	179	Q_manutenzione	-0.4927	-0.0939	-0.0053
143	153	Q_manutenzione	-0.5739	-0.0759	-0.003
143	151	EQ_X	-4.3473	-0.2892	-0.5023
143	178	EQ_X	-4.2338	-0.3615	-0.457
143	179	EQ_X	-3.0893	-0.3165	-0.5218
143	153	EQ_X	-3.2644	-0.0823	-0.5672
143	151	EQ_Y	1.3009	1.1771	-1.0447
143	178	EQ_Y	0.6408	1.1503	-1.0161
143	179	EQ_Y	0.7518	1.1081	-0.7754
143	153	EQ_Y	1.4026	1.1396	-0.804
144	153	DEAD	-2.982E-12	-9.746E-13	-9.641E-14
144	179	DEAD	-1.863E-12	-1.348E-12	-1.253E-13
144	180	DEAD	-2.299E-12	-8.381E-13	-3.239E-13
144	155	DEAD	-1.999E-12	-9.380E-13	-2.163E-13
144	153	G1_power station	0.	0.	0.
144	179	G1_power station	0.	0.	0.

Table 20: Element Forces - Area Shells, Part 2 of 3

Area	Joint	OutputCase	M11	M22	M12
			KN-m/m	KN-m/m	KN-m/m
144	180	G1_power station	0.	0.	0.
144	155	G1_power station	0.	0.	0.
144	153	G2_power station	-15.526	-2.0533	-0.9878
144	179	G2_power station	-13.3002	-2.5357	-1.1261
144	180	G2_power station	-11.513	-1.4474	-2.7075
144	155	G2_power station	-17.9745	-2.6837	-2.5692
144	153	Q_power station	-0.5745	-0.076	-0.0365
144	179	Q_power station	-0.4921	-0.0938	-0.0417
144	180	Q_power station	-0.426	-0.0536	-0.1002
144	155	Q_power station	-0.6651	-0.0993	-0.0951
144	153	Q_neve	-1.6746	-0.3167	-0.1519
144	179	Q_neve	-1.477	-0.539	-0.1623
144	180	Q_neve	-1.2452	-0.437	-0.3288
144	155	Q_neve	-1.8886	-0.3709	-0.3184
144	153	Q_manutenzione	-0.5745	-0.076	-0.0365
144	179	Q_manutenzione	-0.4921	-0.0938	-0.0417
144	180	Q_manutenzione	-0.426	-0.0536	-0.1002
144	155	Q_manutenzione	-0.6651	-0.0993	-0.0951
144	153	EQ_X	-3.2465	-0.0787	-0.6483
144	179	EQ_X	-3.0923	-0.3171	-0.6161
144	180	EQ_X	-1.7828	-0.0953	-0.7635
144	155	EQ_X	-2.3571	0.0019	-0.7957
144	153	EQ_Y	1.4178	1.1427	-0.5091
144	179	EQ_Y	0.7454	1.1068	-0.5863
144	180	EQ_Y	0.734	1.3392	-0.3454
144	155	EQ_Y	1.3457	1.223	-0.2682
145	155	DEAD	-2.931E-12	-1.132E-12	-5.381E-13
145	180	DEAD	-2.471E-12	-9.599E-13	-7.201E-13
145	181	DEAD	1.210E-12	-2.270E-12	-1.721E-12
145	24	DEAD	-2.994E-12	1.065E-12	-1.539E-12
145	155	G1_power station	0.	0.	0.
145	180	G1_power station	0.	0.	0.
145	181	G1_power station	0.	0.	0.
145	24	G1_power station	0.	0.	0.
145	155	G2_power station	-17.2282	-2.5345	-5.8957
145	180	G2_power station	-12.665	-1.6778	-5.1286
145	181	G2_power station	6.6338	-7.9006	-12.9308
145	24	G2_power station	-29.132	1.8931	-13.6979
145	155	Q_power station	-0.6374	-0.0938	-0.2181
145	180	Q_power station	-0.4686	-0.0621	-0.1898
145	181	Q_power station	0.2454	-0.2923	-0.4784
145	24	Q_power station	-1.0779	0.07	-0.5068
145	155	Q_neve	-1.8069	-0.3545	-0.6636

Table 20: Element Forces - Area Shells, Part 2 of 3

Area	Joint	OutputCase	M11	M22	M12
			KN-m/m	KN-m/m	KN-m/m
145	180	Q_neve	-1.3655	-0.4611	-0.5872
145	181	Q_neve	0.6807	-1.1366	-1.4022
145	24	Q_neve	-2.9953	0.1663	-1.4786
145	155	Q_manutenzione	-0.6374	-0.0938	-0.2181
145	180	Q_manutenzione	-0.4686	-0.0621	-0.1898
145	181	Q_manutenzione	0.2454	-0.2923	-0.4784
145	24	Q_manutenzione	-1.0779	0.07	-0.5068
145	155	EQ_X	-2.2318	0.027	-0.9394
145	180	EQ_X	-1.8886	-0.1165	-1.1208
145	181	EQ_X	0.418	-1.1834	-1.7608
145	24	EQ_X	-1.9512	2.3854	-1.5795
145	155	EQ_Y	1.3488	1.2236	0.2422
145	180	EQ_Y	0.7889	1.3502	-0.3194
145	181	EQ_Y	-0.4617	1.3608	0.1445
145	24	EQ_Y	1.8786	3.4659	0.7061
146	56	DEAD	3.728E-13	5.540E-14	9.772E-13
146	68	DEAD	7.047E-14	-1.049E-12	8.984E-13
146	182	DEAD	8.620E-13	-5.020E-13	7.042E-13
146	175	DEAD	-5.893E-13	-1.072E-12	6.254E-13
146	56	G1_power station	0.	0.	0.
146	68	G1_power station	0.	0.	0.
146	182	G1_power station	0.	0.	0.
146	175	G1_power station	0.	0.	0.
146	56	G2_power station	0.0419	-4.973	2.0781
146	68	G2_power station	-2.4042	-7.7823	1.0696
146	182	G2_power station	-5.4422	-6.8481	1.4657
146	175	G2_power station	-4.4403	-3.1071	2.4741
146	56	Q_power station	0.0016	-0.184	0.0769
146	68	Q_power station	-0.089	-0.2879	0.0396
146	182	Q_power station	-0.2014	-0.2534	0.0542
146	175	Q_power station	-0.1643	-0.115	0.0915
146	56	Q_neve	-0.0733	-0.6437	0.1663
146	68	Q_neve	-0.2993	-0.9583	0.0836
146	182	Q_neve	-0.7024	-0.9191	0.1181
146	175	Q_neve	-0.5987	-0.5158	0.2008
146	56	Q_manutenzione	0.0016	-0.184	0.0769
146	68	Q_manutenzione	-0.089	-0.2879	0.0396
146	182	Q_manutenzione	-0.2014	-0.2534	0.0542
146	175	Q_manutenzione	-0.1643	-0.115	0.0915
146	56	EQ_X	2.7777	0.6556	1.2681
146	68	EQ_X	-4.5919	-1.1642	0.6192
146	182	EQ_X	-4.8428	-0.1833	1.0419
146	175	EQ_X	-9.5437	-0.0701	1.6908

Table 20: Element Forces - Area Shells, Part 2 of 3

Area	Joint	OutputCase	M11	M22	M12
			KN-m/m	KN-m/m	KN-m/m
146	56	EQ_Y	3.1246	3.1778	-0.317
146	68	EQ_Y	0.4499	1.8947	-0.7719
146	182	EQ_Y	0.4124	1.055	-0.6168
146	175	EQ_Y	-0.3272	5.2611	-0.1619
147	175	DEAD	-1.059E-13	-1.073E-12	7.154E-13
147	182	DEAD	-8.180E-13	-6.773E-13	4.834E-13
147	183	DEAD	1.157E-12	-7.659E-13	6.244E-13
147	176	DEAD	7.064E-13	1.190E-13	6.200E-13
147	175	G1_power station	0.	0.	0.
147	182	G1_power station	0.	0.	0.
147	183	G1_power station	0.	0.	0.
147	176	G1_power station	0.	0.	0.
147	175	G2_power station	-4.5764	-3.1343	2.4643
147	182	G2_power station	-5.4651	-6.8527	1.65
147	183	G2_power station	-8.9743	-5.1723	1.482
147	176	G2_power station	-9.601	-3.0459	2.2963
147	175	Q_power station	-0.1693	-0.116	0.0912
147	182	Q_power station	-0.2022	-0.2535	0.0611
147	183	Q_power station	-0.332	-0.1914	0.0548
147	176	Q_power station	-0.3552	-0.1127	0.085
147	175	Q_neve	-0.6109	-0.5183	0.1999
147	182	Q_neve	-0.7043	-0.9195	0.1345
147	183	Q_neve	-1.095	-0.8033	0.1197
147	176	Q_neve	-1.135	-0.5384	0.1851
147	175	Q_manutenzione	-0.1693	-0.116	0.0912
147	182	Q_manutenzione	-0.2022	-0.2535	0.0611
147	183	Q_manutenzione	-0.332	-0.1914	0.0548
147	176	Q_manutenzione	-0.3552	-0.1127	0.085
147	175	EQ_X	-8.2213	0.1944	0.2842
147	182	EQ_X	-5.1944	-0.2536	0.4674
147	183	EQ_X	-6.0964	0.0478	-0.0893
147	176	EQ_X	-6.1242	-0.6496	-0.2724
147	175	EQ_Y	-0.1751	5.2915	-1.0905
147	182	EQ_Y	0.323	1.0372	-0.4536
147	183	EQ_Y	-0.0716	1.219	-0.7341
147	176	EQ_Y	-0.0119	2.3447	-1.3711
148	176	DEAD	4.558E-13	-1.644E-13	6.831E-13
148	183	DEAD	4.125E-13	-7.538E-13	6.164E-13
148	184	DEAD	3.192E-13	-8.470E-13	6.831E-13
148	177	DEAD	4.807E-13	-1.395E-13	4.344E-13
148	176	G1_power station	0.	0.	0.
148	183	G1_power station	0.	0.	0.
148	184	G1_power station	0.	0.	0.

Table 20: Element Forces - Area Shells, Part 2 of 3

Area	Joint	OutputCase	M11	M22	M12
			KN-m/m	KN-m/m	KN-m/m
148	177	G1_power station	0.	0.	0.
148	176	G2_power station	-9.5193	-3.0295	1.8253
148	183	G2_power station	-9.0034	-5.1782	1.2995
148	184	G2_power station	-11.5857	-4.0077	0.9874
148	177	G2_power station	-12.1222	-2.9931	1.5131
148	176	Q_power station	-0.3522	-0.1121	0.0675
148	183	Q_power station	-0.3331	-0.1916	0.0481
148	184	Q_power station	-0.4287	-0.1483	0.0365
148	177	Q_power station	-0.4485	-0.1107	0.056
148	176	Q_neve	-1.1277	-0.537	0.1433
148	183	Q_neve	-1.0976	-0.8039	0.1036
148	184	Q_neve	-1.3625	-0.7243	0.0755
148	177	Q_neve	-1.3965	-0.5539	0.1152
148	176	Q_manutenzione	-0.3522	-0.1121	0.0675
148	183	Q_manutenzione	-0.3331	-0.1916	0.0481
148	184	Q_manutenzione	-0.4287	-0.1483	0.0365
148	177	Q_manutenzione	-0.4485	-0.1107	0.056
148	176	EQ_X	-6.3033	-0.6854	-0.3303
148	183	EQ_X	-6.0127	0.0646	-0.23
148	184	EQ_X	-5.297	-0.2214	-0.2477
148	177	EQ_X	-5.305	-0.485	-0.3481
148	176	EQ_Y	-0.0691	2.3333	-1.3274
148	183	EQ_Y	-0.0059	1.2321	-0.9871
148	184	EQ_Y	0.0587	0.6951	-1.0018
148	177	EQ_Y	0.4299	1.5304	-1.3421
149	177	DEAD	-2.193E-13	-1.815E-13	6.129E-13
149	184	DEAD	5.272E-13	-7.781E-13	3.687E-13
149	185	DEAD	-5.492E-13	-1.929E-13	3.854E-13
149	178	DEAD	8.358E-14	-2.662E-13	5.508E-13
149	177	G1_power station	0.	0.	0.
149	184	G1_power station	0.	0.	0.
149	185	G1_power station	0.	0.	0.
149	178	G1_power station	0.	0.	0.
149	177	G2_power station	-12.1234	-2.9934	1.1271
149	184	G2_power station	-11.5842	-4.0074	0.8038
149	185	G2_power station	-12.5061	-3.2464	0.5053
149	178	G2_power station	-13.2846	-2.791	0.8286
149	177	Q_power station	-0.4486	-0.1108	0.0417
149	184	Q_power station	-0.4286	-0.1483	0.0297
149	185	Q_power station	-0.4627	-0.1201	0.0187
149	178	Q_power station	-0.4915	-0.1033	0.0307
149	177	Q_neve	-1.3966	-0.5539	0.0794
149	184	Q_neve	-1.3625	-0.7243	0.0587

Table 20: Element Forces - Area Shells, Part 2 of 3

Area	Joint	OutputCase	M11	M22	M12
			KN-m/m	KN-m/m	KN-m/m
149	185	Q_neve	-1.4404	-0.676	0.0298
149	178	Q_neve	-1.5033	-0.551	0.0504
149	177	Q_manutenzione	-0.4486	-0.1108	0.0417
149	184	Q_manutenzione	-0.4286	-0.1483	0.0297
149	185	Q_manutenzione	-0.4627	-0.1201	0.0187
149	178	Q_manutenzione	-0.4915	-0.1033	0.0307
149	177	EQ_X	-5.311	-0.4861	-0.3428
149	184	EQ_X	-5.2945	-0.2209	-0.2399
149	185	EQ_X	-4.1787	-0.3425	-0.243
149	178	EQ_X	-4.2367	-0.3655	-0.3459
149	177	EQ_Y	0.4149	1.5274	-1.1797
149	184	EQ_Y	0.0605	0.6954	-1.0411
149	185	EQ_Y	0.1973	0.5024	-0.9478
149	178	EQ_Y	0.6535	1.204	-1.0864
150	178	DEAD	-4.369E-13	-2.295E-13	3.723E-13
150	185	DEAD	-5.554E-13	-3.225E-13	6.908E-13
150	186	DEAD	-7.782E-13	-1.117E-12	5.998E-13
150	179	DEAD	-1.113E-12	-9.254E-13	2.813E-13
150	178	G1_power station	0.	0.	0.
150	185	G1_power station	0.	0.	0.
150	186	G1_power station	0.	0.	0.
150	179	G1_power station	0.	0.	0.
150	178	G2_power station	-13.2751	-2.7891	0.3566
150	185	G2_power station	-12.53	-3.2512	0.2742
150	186	G2_power station	-11.281	-2.913	-0.2716
150	179	G2_power station	-13.314	-2.5337	-0.1892
150	178	Q_power station	-0.4912	-0.1032	0.0132
150	185	Q_power station	-0.4636	-0.1203	0.0101
150	186	Q_power station	-0.4174	-0.1078	-0.01
150	179	Q_power station	-0.4926	-0.0937	-0.007
150	178	Q_neve	-1.5024	-0.5508	0.0028
150	185	Q_neve	-1.4431	-0.6765	0.0064
150	186	Q_neve	-1.2819	-0.6674	-0.0504
150	179	Q_neve	-1.478	-0.5384	-0.054
150	178	Q_manutenzione	-0.4912	-0.1032	0.0132
150	185	Q_manutenzione	-0.4636	-0.1203	0.0101
150	186	Q_manutenzione	-0.4174	-0.1078	-0.01
150	179	Q_manutenzione	-0.4926	-0.0937	-0.007
150	178	EQ_X	-4.2345	-0.365	-0.3811
150	185	EQ_X	-4.1834	-0.3434	-0.2505
150	186	EQ_X	-2.896	-0.484	-0.3012
150	179	EQ_X	-3.0849	-0.2945	-0.4318
150	178	EQ_Y	0.6514	1.2036	-0.922

Table 20: Element Forces - Area Shells, Part 2 of 3

Area	Joint	OutputCase	M11	M22	M12
			KN-m/m	KN-m/m	KN-m/m
150	185	EQ_Y	0.1911	0.5011	-0.8808
150	186	EQ_Y	0.2389	0.4422	-0.7512
150	179	EQ_Y	0.7535	1.1164	-0.7924
151	179	DEAD	-2.035E-12	-7.260E-13	3.589E-14
151	186	DEAD	-9.213E-13	-1.089E-12	2.301E-13
151	187	DEAD	-1.262E-12	-2.046E-12	-9.616E-15
151	180	DEAD	-2.218E-12	-1.840E-12	-3.614E-13
151	179	G1_power station	0.	0.	0.
151	186	G1_power station	0.	0.	0.
151	187	G1_power station	0.	0.	0.
151	180	G1_power station	0.	0.	0.
151	179	G2_power station	-13.2992	-2.5308	-1.3273
151	186	G2_power station	-11.359	-2.9286	-0.7984
151	187	G2_power station	-6.6641	-4.6066	-2.1879
151	180	G2_power station	-11.5893	-1.829	-2.7168
151	179	Q_power station	-0.4921	-0.0936	-0.0491
151	186	Q_power station	-0.4203	-0.1084	-0.0295
151	187	Q_power station	-0.2466	-0.1704	-0.081
151	180	Q_power station	-0.4288	-0.0677	-0.1005
151	179	Q_neve	-1.4769	-0.5381	-0.1738
151	186	Q_neve	-1.2901	-0.6691	-0.1055
151	187	Q_neve	-0.7574	-0.8677	-0.2513
151	180	Q_neve	-1.2538	-0.48	-0.3196
151	179	Q_manutenzione	-0.4921	-0.0936	-0.0491
151	186	Q_manutenzione	-0.4203	-0.1084	-0.0295
151	187	Q_manutenzione	-0.2466	-0.1704	-0.081
151	180	Q_manutenzione	-0.4288	-0.0677	-0.1005
151	179	EQ_X	-3.0879	-0.2951	-0.5508
151	186	EQ_X	-2.9025	-0.4853	-0.354
151	187	EQ_X	-1.4479	-0.8493	-0.4854
151	180	EQ_X	-1.8086	-0.2242	-0.6822
151	179	EQ_Y	0.747	1.1151	-0.6137
151	186	EQ_Y	0.244	0.4433	-0.6543
151	187	EQ_Y	0.1601	0.4688	-0.512
151	180	EQ_Y	0.714	1.2395	-0.4714
152	180	DEAD	-2.547E-12	-1.700E-12	-6.401E-13
152	187	DEAD	-1.358E-12	-1.750E-12	-4.703E-13
152	188	DEAD	4.451E-13	-2.030E-12	-5.946E-13
152	181	DEAD	1.167E-12	-1.409E-12	-6.068E-13
152	180	G1_power station	0.	0.	0.
152	187	G1_power station	0.	0.	0.
152	188	G1_power station	0.	0.	0.
152	181	G1_power station	0.	0.	0.

Table 20: Element Forces - Area Shells, Part 2 of 3

Area	Joint	OutputCase	M11	M22	M12
			KN-m/m	KN-m/m	KN-m/m
152	180	G2_power station	-12.7413	-2.0594	-5.5747
152	187	G2_power station	-6.2894	-4.5317	-2.7851
152	188	G2_power station	-1.2792	-6.4493	-2.5522
152	181	G2_power station	6.7857	-7.1412	-5.3419
152	180	Q_power station	-0.4714	-0.0762	-0.2063
152	187	Q_power station	-0.2327	-0.1677	-0.103
152	188	Q_power station	-0.0473	-0.2386	-0.0944
152	181	Q_power station	0.2511	-0.2642	-0.1976
152	180	Q_neve	-1.3741	-0.504	-0.6203
152	187	Q_neve	-0.7188	-0.86	-0.3144
152	188	Q_neve	-0.1322	-1.0877	-0.2965
152	181	Q_neve	0.6979	-1.0506	-0.6025
152	180	Q_manutenzione	-0.4714	-0.0762	-0.2063
152	187	Q_manutenzione	-0.2327	-0.1677	-0.103
152	188	Q_manutenzione	-0.0473	-0.2386	-0.0944
152	181	Q_manutenzione	0.2511	-0.2642	-0.1976
152	180	EQ_X	-1.9144	-0.2454	-0.9643
152	187	EQ_X	-1.4172	-0.8432	-0.5271
152	188	EQ_X	-0.0903	-1.2678	-0.5504
152	181	EQ_X	0.4657	-0.9451	-0.9875
152	180	EQ_Y	0.7689	1.2505	-0.3
152	187	EQ_Y	0.1224	0.4612	-0.4332
152	188	EQ_Y	0.1286	0.5111	-0.4835
152	181	EQ_Y	-0.4276	1.531	-0.3503
153	68	DEAD	-2.765E-13	-8.111E-13	6.472E-13
153	70	DEAD	-6.244E-13	-1.685E-12	5.107E-13
153	189	DEAD	3.947E-13	-1.277E-12	6.927E-13
153	182	DEAD	1.196E-12	-5.020E-13	8.292E-13
153	68	G1_power station	0.	0.	0.
153	70	G1_power station	0.	0.	0.
153	189	G1_power station	0.	0.	0.
153	182	G1_power station	0.	0.	0.
153	68	G2_power station	-2.4431	-7.9765	0.4294
153	70	G2_power station	-2.4431	-7.9765	-0.4294
153	189	G2_power station	-5.4204	-6.7392	-0.4294
153	182	G2_power station	-5.4204	-6.7392	0.4294
153	68	Q_power station	-0.0904	-0.2951	0.0159
153	70	Q_power station	-0.0904	-0.2951	-0.0159
153	189	Q_power station	-0.2006	-0.2494	-0.0159
153	182	Q_power station	-0.2006	-0.2494	0.0159
153	68	Q_neve	-0.3028	-0.9758	0.0342
153	70	Q_neve	-0.3028	-0.9758	-0.0342
153	189	Q_neve	-0.7005	-0.9094	-0.0342

Table 20: Element Forces - Area Shells, Part 2 of 3

Area	Joint	OutputCase	M11	M22	M12
			KN-m/m	KN-m/m	KN-m/m
153	182	Q_neve	-0.7005	-0.9094	0.0342
153	68	Q_manutenzione	-0.0904	-0.2951	0.0159
153	70	Q_manutenzione	-0.0904	-0.2951	-0.0159
153	189	Q_manutenzione	-0.2006	-0.2494	-0.0159
153	182	Q_manutenzione	-0.2006	-0.2494	0.0159
153	68	EQ_X	-4.607	-1.2399	0.2807
153	70	EQ_X	-4.607	-1.2399	-0.2807
153	189	EQ_X	-4.8232	-0.0852	-0.2807
153	182	EQ_X	-4.8232	-0.0852	0.2807
153	68	EQ_Y	0.3751	1.5205	-0.6579
153	70	EQ_Y	-0.3751	-1.5205	-0.6579
153	189	EQ_Y	-0.4673	-1.3298	-0.557
153	182	EQ_Y	0.4673	1.3298	-0.557
154	182	DEAD	-9.983E-13	-7.117E-13	7.241E-13
154	189	DEAD	6.260E-13	-1.122E-12	6.664E-13
154	190	DEAD	2.758E-13	-1.167E-12	4.056E-13
154	183	DEAD	1.331E-12	-5.987E-13	6.209E-13
154	182	G1_power station	0.	0.	0.
154	189	G1_power station	0.	0.	0.
154	190	G1_power station	0.	0.	0.
154	183	G1_power station	0.	0.	0.
154	182	G2_power station	-5.4433	-6.7438	0.5291
154	189	G2_power station	-5.4433	-6.7438	-0.5291
154	190	G2_power station	-8.9783	-5.1924	-0.5291
154	183	G2_power station	-8.9783	-5.1924	0.5291
154	182	Q_power station	-0.2014	-0.2495	0.0196
154	189	Q_power station	-0.2014	-0.2495	-0.0196
154	190	Q_power station	-0.3322	-0.1921	-0.0196
154	183	Q_power station	-0.3322	-0.1921	0.0196
154	182	Q_neve	-0.7024	-0.9098	0.0429
154	189	Q_neve	-0.7024	-0.9098	-0.0429
154	190	Q_neve	-1.0953	-0.8051	-0.0429
154	183	Q_neve	-1.0953	-0.8051	0.0429
154	182	Q_manutenzione	-0.2014	-0.2495	0.0196
154	189	Q_manutenzione	-0.2014	-0.2495	-0.0196
154	190	Q_manutenzione	-0.3322	-0.1921	-0.0196
154	183	Q_manutenzione	-0.3322	-0.1921	0.0196
154	182	EQ_X	-5.1748	-0.1555	0.0722
154	189	EQ_X	-5.1748	-0.1555	-0.0722
154	190	EQ_X	-6.113	-0.0352	-0.0722
154	183	EQ_X	-6.113	-0.0352	0.0722
154	182	EQ_Y	0.378	1.312	-0.4743
154	189	EQ_Y	-0.378	-1.312	-0.4743

Table 20: Element Forces - Area Shells, Part 2 of 3

Area	Joint	OutputCase	M11	M22	M12
			KN-m/m	KN-m/m	KN-m/m
154	190	EQ_Y	0.0938	-1.1079	-0.5483
154	183	EQ_Y	-0.0938	1.1079	-0.5483
155	183	DEAD	5.550E-13	-8.601E-13	6.497E-13
155	190	DEAD	6.153E-13	-4.590E-13	4.799E-13
155	191	DEAD	8.862E-14	-1.281E-12	5.587E-13
155	184	DEAD	2.057E-13	-3.225E-13	5.709E-13
155	183	G1_power station	0.	0.	0.
155	190	G1_power station	0.	0.	0.
155	191	G1_power station	0.	0.	0.
155	184	G1_power station	0.	0.	0.
155	183	G2_power station	-9.0075	-5.1983	0.3962
155	190	G2_power station	-9.0075	-5.1983	-0.3962
155	191	G2_power station	-11.5888	-4.0236	-0.3962
155	184	G2_power station	-11.5888	-4.0236	0.3962
155	183	Q_power station	-0.3333	-0.1923	0.0147
155	190	Q_power station	-0.3333	-0.1923	-0.0147
155	191	Q_power station	-0.4288	-0.1489	-0.0147
155	184	Q_power station	-0.4288	-0.1489	0.0147
155	183	Q_neve	-1.098	-0.8056	0.0311
155	190	Q_neve	-1.098	-0.8056	-0.0311
155	191	Q_neve	-1.3628	-0.7257	-0.0311
155	184	Q_neve	-1.3628	-0.7257	0.0311
155	183	Q_manutenzione	-0.3333	-0.1923	0.0147
155	190	Q_manutenzione	-0.3333	-0.1923	-0.0147
155	191	Q_manutenzione	-0.4288	-0.1489	-0.0147
155	184	Q_manutenzione	-0.4288	-0.1489	0.0147
155	183	EQ_X	-6.0293	-0.0185	-0.0776
155	190	EQ_X	-6.0293	-0.0185	0.0776
155	191	EQ_X	-5.2932	-0.2023	0.0776
155	184	EQ_X	-5.2932	-0.2023	-0.0776
155	183	EQ_Y	-0.0281	1.121	-0.7214
155	190	EQ_Y	0.0281	-1.121	-0.7214
155	191	EQ_Y	-0.0593	-0.698	-0.8447
155	184	EQ_Y	0.0593	0.698	-0.8447
156	184	DEAD	6.468E-13	-2.419E-13	4.152E-13
156	191	DEAD	2.489E-13	-1.286E-12	6.882E-13
156	192	DEAD	-7.979E-13	-1.459E-12	6.882E-13
156	185	DEAD	-9.911E-13	-1.479E-12	4.152E-13
156	184	G1_power station	0.	0.	0.
156	191	G1_power station	0.	0.	0.
156	192	G1_power station	0.	0.	0.
156	185	G1_power station	0.	0.	0.
156	184	G2_power station	-11.5874	-4.0233	0.2265

Table 20: Element Forces - Area Shells, Part 2 of 3

Area	Joint	OutputCase	M11	M22	M12
			KN-m/m	KN-m/m	KN-m/m
156	191	G2_power station	-11.5874	-4.0233	-0.2265
156	192	G2_power station	-12.5048	-3.24	-0.2265
156	185	G2_power station	-12.5048	-3.24	0.2265
156	184	Q_power station	-0.4287	-0.1489	0.0084
156	191	Q_power station	-0.4287	-0.1489	-0.0084
156	192	Q_power station	-0.4627	-0.1199	-0.0084
156	185	Q_power station	-0.4627	-0.1199	0.0084
156	184	Q_neve	-1.3628	-0.7257	0.0154
156	191	Q_neve	-1.3628	-0.7257	-0.0154
156	192	Q_neve	-1.4403	-0.6754	-0.0154
156	185	Q_neve	-1.4403	-0.6754	0.0154
156	184	Q_manutenzione	-0.4287	-0.1489	0.0084
156	191	Q_manutenzione	-0.4287	-0.1489	-0.0084
156	192	Q_manutenzione	-0.4627	-0.1199	-0.0084
156	185	Q_manutenzione	-0.4627	-0.1199	0.0084
156	184	EQ_X	-5.2907	-0.2018	-0.0852
156	191	EQ_X	-5.2907	-0.2018	0.0852
156	192	EQ_X	-4.1788	-0.3432	0.0852
156	185	EQ_X	-4.1788	-0.3432	-0.0852
156	184	EQ_Y	0.061	0.6984	-0.9033
156	191	EQ_Y	-0.061	-0.6984	-0.9033
156	192	EQ_Y	-0.1945	-0.4884	-0.8966
156	185	EQ_Y	0.1945	0.4884	-0.8966
157	185	DEAD	-5.810E-13	-1.275E-12	6.462E-13
157	192	DEAD	-6.758E-13	-1.603E-12	3.565E-13
157	193	DEAD	-1.002E-12	-6.494E-13	5.097E-13
157	186	DEAD	-7.100E-13	-1.228E-12	7.206E-13
157	185	G1_power station	0.	0.	0.
157	192	G1_power station	0.	0.	0.
157	193	G1_power station	0.	0.	0.
157	186	G1_power station	0.	0.	0.
157	185	G2_power station	-12.5287	-3.2448	-0.0131
157	192	G2_power station	-12.5287	-3.2448	0.0131
157	193	G2_power station	-11.3098	-3.0569	0.0131
157	186	G2_power station	-11.3098	-3.0569	-0.0131
157	185	Q_power station	-0.4636	-0.1201	-4.850E-04
157	192	Q_power station	-0.4636	-0.1201	4.850E-04
157	193	Q_power station	-0.4185	-0.1131	4.850E-04
157	186	Q_power station	-0.4185	-0.1131	-4.850E-04
157	185	Q_neve	-1.443	-0.6759	-0.0089
157	192	Q_neve	-1.443	-0.6759	0.0089
157	193	Q_neve	-1.2849	-0.6822	0.0089
157	186	Q_neve	-1.2849	-0.6822	-0.0089

Table 20: Element Forces - Area Shells, Part 2 of 3

Area	Joint	OutputCase	M11	M22	M12
			KN-m/m	KN-m/m	KN-m/m
157	185	Q_manutenzione	-0.4636	-0.1201	-4.850E-04
157	192	Q_manutenzione	-0.4636	-0.1201	4.850E-04
157	193	Q_manutenzione	-0.4185	-0.1131	4.850E-04
157	186	Q_manutenzione	-0.4185	-0.1131	-4.850E-04
157	185	EQ_X	-4.1835	-0.3441	-0.096
157	192	EQ_X	-4.1835	-0.3441	0.096
157	193	EQ_X	-2.8985	-0.4967	0.096
157	186	EQ_X	-2.8985	-0.4967	-0.096
157	185	EQ_Y	0.1883	0.4872	-0.8342
157	192	EQ_Y	-0.1883	-0.4872	-0.8342
157	193	EQ_Y	-0.2386	-0.4405	-0.7448
157	186	EQ_Y	0.2386	0.4405	-0.7448
158	186	DEAD	-9.852E-13	-9.813E-13	3.870E-13
158	193	DEAD	-2.163E-13	-8.860E-13	5.235E-13
158	194	DEAD	-5.188E-13	-1.652E-12	2.960E-13
158	187	DEAD	-9.330E-13	-9.201E-13	1.595E-13
158	186	G1_power station	0.	0.	0.
158	193	G1_power station	0.	0.	0.
158	194	G1_power station	0.	0.	0.
158	187	G1_power station	0.	0.	0.
158	186	G2_power station	-11.3878	-3.0725	-0.4982
158	193	G2_power station	-11.3878	-3.0725	0.4982
158	194	G2_power station	-6.5906	-4.2393	0.4982
158	187	G2_power station	-6.5906	-4.2393	-0.4982
158	186	Q_power station	-0.4213	-0.1137	-0.0184
158	193	Q_power station	-0.4213	-0.1137	0.0184
158	194	Q_power station	-0.2439	-0.1569	0.0184
158	187	Q_power station	-0.2439	-0.1569	-0.0184
158	186	Q_neve	-1.293	-0.6839	-0.0597
158	193	Q_neve	-1.293	-0.6839	0.0597
158	194	Q_neve	-0.7499	-0.8299	0.0597
158	187	Q_neve	-0.7499	-0.8299	-0.0597
158	186	Q_manutenzione	-0.4213	-0.1137	-0.0184
158	193	Q_manutenzione	-0.4213	-0.1137	0.0184
158	194	Q_manutenzione	-0.2439	-0.1569	0.0184
158	187	Q_manutenzione	-0.2439	-0.1569	-0.0184
158	186	EQ_X	-2.9051	-0.498	-0.1423
158	193	EQ_X	-2.9051	-0.498	0.1423
158	194	EQ_X	-1.4406	-0.8125	0.1423
158	187	EQ_X	-1.4406	-0.8125	-0.1423
158	186	EQ_Y	0.2437	0.4415	-0.6407
158	193	EQ_Y	-0.2437	-0.4415	-0.6407
158	194	EQ_Y	-0.1551	-0.4437	-0.5585

Table 20: Element Forces - Area Shells, Part 2 of 3

Area	Joint	OutputCase	M11	M22	M12
			KN-m/m	KN-m/m	KN-m/m
158	187	EQ_Y	0.1551	0.4437	-0.5585
159	187	DEAD	-1.012E-12	-9.867E-13	-6.989E-14
159	194	DEAD	-1.004E-12	-1.742E-12	3.396E-13
159	195	DEAD	-2.617E-13	-1.601E-12	3.851E-13
159	188	DEAD	2.023E-13	-2.265E-12	-2.439E-14
159	187	G1_power station	0.	0.	0.
159	194	G1_power station	0.	0.	0.
159	195	G1_power station	0.	0.	0.
159	188	G1_power station	0.	0.	0.
159	187	G2_power station	-6.216	-4.1644	-0.8738
159	194	G2_power station	-6.216	-4.1644	0.8738
159	195	G2_power station	-1.3746	-6.9259	0.8738
159	188	G2_power station	-1.3746	-6.9259	-0.8738
159	187	Q_power station	-0.23	-0.1541	-0.0323
159	194	Q_power station	-0.23	-0.1541	0.0323
159	195	Q_power station	-0.0509	-0.2563	0.0323
159	188	Q_power station	-0.0509	-0.2563	-0.0323
159	187	Q_neve	-0.7112	-0.8221	-0.1003
159	194	Q_neve	-0.7112	-0.8221	0.1003
159	195	Q_neve	-0.1419	-1.1363	0.1003
159	188	Q_neve	-0.1419	-1.1363	-0.1003
159	187	Q_manutenzione	-0.23	-0.1541	-0.0323
159	194	Q_manutenzione	-0.23	-0.1541	0.0323
159	195	Q_manutenzione	-0.0509	-0.2563	0.0323
159	188	Q_manutenzione	-0.0509	-0.2563	-0.0323
159	187	EQ_X	-1.4098	-0.8064	-0.1791
159	194	EQ_X	-1.4098	-0.8064	0.1791
159	195	EQ_X	-0.0984	-1.3084	0.1791
159	188	EQ_X	-0.0984	-1.3084	-0.1791
159	187	EQ_Y	0.1174	0.4361	-0.5175
159	194	EQ_Y	-0.1174	-0.4361	-0.5175
159	195	EQ_Y	-0.1386	-0.5611	-0.4966
159	188	EQ_Y	0.1386	0.5611	-0.4966
160	70	DEAD	-9.208E-13	-1.695E-12	4.719E-13
160	72	DEAD	-5.270E-13	-2.064E-12	3.066E-13
160	196	DEAD	2.509E-13	-1.024E-12	2.899E-13
160	189	DEAD	4.285E-13	-1.108E-12	5.341E-13
160	70	G1_power station	0.	0.	0.
160	72	G1_power station	0.	0.	0.
160	196	G1_power station	0.	0.	0.
160	189	G1_power station	0.	0.	0.
160	70	G2_power station	-2.4042	-7.7823	-1.0696
160	72	G2_power station	0.0419	-4.973	-2.0781

Table 20: Element Forces - Area Shells, Part 2 of 3

Area	Joint	OutputCase	M11	M22	M12
			KN-m/m	KN-m/m	KN-m/m
160	196	G2_power station	-4.4403	-3.1071	-2.4741
160	189	G2_power station	-5.4422	-6.8481	-1.4657
160	70	Q_power station	-0.089	-0.2879	-0.0396
160	72	Q_power station	0.0016	-0.184	-0.0769
160	196	Q_power station	-0.1643	-0.115	-0.0915
160	189	Q_power station	-0.2014	-0.2534	-0.0542
160	70	Q_neve	-0.2993	-0.9583	-0.0836
160	72	Q_neve	-0.0733	-0.6437	-0.1663
160	196	Q_neve	-0.5987	-0.5158	-0.2008
160	189	Q_neve	-0.7024	-0.9191	-0.1181
160	70	Q_manutenzione	-0.089	-0.2879	-0.0396
160	72	Q_manutenzione	0.0016	-0.184	-0.0769
160	196	Q_manutenzione	-0.1643	-0.115	-0.0915
160	189	Q_manutenzione	-0.2014	-0.2534	-0.0542
160	70	EQ_X	-4.5919	-1.1642	-0.6192
160	72	EQ_X	2.7777	0.6556	-1.2681
160	196	EQ_X	-9.5437	-0.0701	-1.6908
160	189	EQ_X	-4.8428	-0.1833	-1.0419
160	70	EQ_Y	-0.4499	-1.8947	-0.7719
160	72	EQ_Y	-3.1246	-3.1778	-0.317
160	196	EQ_Y	0.3272	-5.2611	-0.1619
160	189	EQ_Y	-0.4124	-1.055	-0.6168
161	189	DEAD	4.399E-13	-9.954E-13	3.845E-13
161	196	DEAD	5.325E-13	-1.424E-12	4.300E-13
161	197	DEAD	5.650E-13	-9.158E-13	4.300E-13
161	190	DEAD	1.571E-13	-1.117E-12	3.845E-13
161	189	G1_power station	0.	0.	0.
161	196	G1_power station	0.	0.	0.
161	197	G1_power station	0.	0.	0.
161	190	G1_power station	0.	0.	0.
161	189	G2_power station	-5.4651	-6.8527	-1.65
161	196	G2_power station	-4.5764	-3.1343	-2.4643
161	197	G2_power station	-9.601	-3.0459	-2.2963
161	190	G2_power station	-8.9743	-5.1723	-1.482
161	189	Q_power station	-0.2022	-0.2535	-0.0611
161	196	Q_power station	-0.1693	-0.116	-0.0912
161	197	Q_power station	-0.3552	-0.1127	-0.085
161	190	Q_power station	-0.332	-0.1914	-0.0548
161	189	Q_neve	-0.7043	-0.9195	-0.1345
161	196	Q_neve	-0.6109	-0.5183	-0.1999
161	197	Q_neve	-1.135	-0.5384	-0.1851
161	190	Q_neve	-1.095	-0.8033	-0.1197
161	189	Q_manutenzione	-0.2022	-0.2535	-0.0611

Table 20: Element Forces - Area Shells, Part 2 of 3

Area	Joint	OutputCase	M11	M22	M12
			KN-m/m	KN-m/m	KN-m/m
161	196	Q_manutenzione	-0.1693	-0.116	-0.0912
161	197	Q_manutenzione	-0.3552	-0.1127	-0.085
161	190	Q_manutenzione	-0.332	-0.1914	-0.0548
161	189	EQ_X	-5.1944	-0.2536	-0.4674
161	196	EQ_X	-8.2213	0.1944	-0.2842
161	197	EQ_X	-6.1242	-0.6496	0.2724
161	190	EQ_X	-6.0964	0.0478	0.0893
161	189	EQ_Y	-0.323	-1.0372	-0.4536
161	196	EQ_Y	0.1751	-5.2915	-1.0905
161	197	EQ_Y	0.0119	-2.3447	-1.3711
161	190	EQ_Y	0.0716	-1.219	-0.7341
162	190	DEAD	7.102E-13	-9.706E-13	4.501E-13
162	197	DEAD	3.726E-13	-1.347E-12	3.758E-13
162	198	DEAD	-3.818E-13	-6.976E-13	4.956E-13
162	191	DEAD	3.499E-13	-1.188E-12	6.488E-13
162	190	G1_power station	0.	0.	0.
162	197	G1_power station	0.	0.	0.
162	198	G1_power station	0.	0.	0.
162	191	G1_power station	0.	0.	0.
162	190	G2_power station	-9.0034	-5.1782	-1.2995
162	197	G2_power station	-9.5193	-3.0295	-1.8253
162	198	G2_power station	-12.1222	-2.9931	-1.5131
162	191	G2_power station	-11.5857	-4.0077	-0.9874
162	190	Q_power station	-0.3331	-0.1916	-0.0481
162	197	Q_power station	-0.3522	-0.1121	-0.0675
162	198	Q_power station	-0.4485	-0.1107	-0.056
162	191	Q_power station	-0.4287	-0.1483	-0.0365
162	190	Q_neve	-1.0976	-0.8039	-0.1036
162	197	Q_neve	-1.1277	-0.537	-0.1433
162	198	Q_neve	-1.3965	-0.5539	-0.1152
162	191	Q_neve	-1.3625	-0.7243	-0.0755
162	190	Q_manutenzione	-0.3331	-0.1916	-0.0481
162	197	Q_manutenzione	-0.3522	-0.1121	-0.0675
162	198	Q_manutenzione	-0.4485	-0.1107	-0.056
162	191	Q_manutenzione	-0.4287	-0.1483	-0.0365
162	190	EQ_X	-6.0127	0.0646	0.23
162	197	EQ_X	-6.3033	-0.6854	0.3303
162	198	EQ_X	-5.305	-0.485	0.3481
162	191	EQ_X	-5.297	-0.2214	0.2477
162	190	EQ_Y	0.0059	-1.2321	-0.9871
162	197	EQ_Y	0.0691	-2.3333	-1.3274
162	198	EQ_Y	-0.4299	-1.5304	-1.3421
162	191	EQ_Y	-0.0587	-0.6951	-1.0018

Table 20: Element Forces - Area Shells, Part 2 of 3

Area	Joint	OutputCase	M11	M22	M12
			KN-m/m	KN-m/m	KN-m/m
163	191	DEAD	3.001E-13	-1.368E-12	7.286E-13
163	198	DEAD	-2.189E-13	-7.258E-13	6.376E-13
163	199	DEAD	6.117E-14	-9.243E-13	6.376E-13
163	192	DEAD	-7.991E-13	-8.964E-13	7.286E-13
163	191	G1_power station	0.	0.	0.
163	198	G1_power station	0.	0.	0.
163	199	G1_power station	0.	0.	0.
163	192	G1_power station	0.	0.	0.
163	191	G2_power station	-11.5842	-4.0074	-0.8038
163	198	G2_power station	-12.1234	-2.9934	-1.1271
163	199	G2_power station	-13.2846	-2.791	-0.8286
163	192	G2_power station	-12.5061	-3.2464	-0.5053
163	191	Q_power station	-0.4286	-0.1483	-0.0297
163	198	Q_power station	-0.4486	-0.1108	-0.0417
163	199	Q_power station	-0.4915	-0.1033	-0.0307
163	192	Q_power station	-0.4627	-0.1201	-0.0187
163	191	Q_neve	-1.3625	-0.7243	-0.0587
163	198	Q_neve	-1.3966	-0.5539	-0.0794
163	199	Q_neve	-1.5033	-0.551	-0.0504
163	192	Q_neve	-1.4404	-0.676	-0.0298
163	191	Q_manutenzione	-0.4286	-0.1483	-0.0297
163	198	Q_manutenzione	-0.4486	-0.1108	-0.0417
163	199	Q_manutenzione	-0.4915	-0.1033	-0.0307
163	192	Q_manutenzione	-0.4627	-0.1201	-0.0187
163	191	EQ_X	-5.2945	-0.2209	0.2399
163	198	EQ_X	-5.311	-0.4861	0.3428
163	199	EQ_X	-4.2367	-0.3655	0.3459
163	192	EQ_X	-4.1787	-0.3425	0.243
163	191	EQ_Y	-0.0605	-0.6954	-1.0411
163	198	EQ_Y	-0.4149	-1.5274	-1.1797
163	199	EQ_Y	-0.6535	-1.204	-1.0864
163	192	EQ_Y	-0.1973	-0.5024	-0.9478
164	192	DEAD	-7.855E-13	-7.918E-13	5.053E-13
164	199	DEAD	-2.006E-13	-7.709E-13	6.129E-13
164	200	DEAD	-1.143E-13	-7.122E-13	4.142E-13
164	193	DEAD	-1.054E-12	-2.034E-12	3.854E-13
164	192	G1_power station	0.	0.	0.
164	199	G1_power station	0.	0.	0.
164	200	G1_power station	0.	0.	0.
164	193	G1_power station	0.	0.	0.
164	192	G2_power station	-12.53	-3.2512	-0.2742
164	199	G2_power station	-13.2751	-2.7891	-0.3566
164	200	G2_power station	-13.314	-2.5337	0.1892

Table 20: Element Forces - Area Shells, Part 2 of 3

Area	Joint	OutputCase	M11	M22	M12
			KN-m/m	KN-m/m	KN-m/m
164	193	G2_power station	-11.281	-2.913	0.2716
164	192	Q_power station	-0.4636	-0.1203	-0.0101
164	199	Q_power station	-0.4912	-0.1032	-0.0132
164	200	Q_power station	-0.4926	-0.0937	0.007
164	193	Q_power station	-0.4174	-0.1078	0.01
164	192	Q_neve	-1.4431	-0.6765	-0.0064
164	199	Q_neve	-1.5024	-0.5508	-0.0028
164	200	Q_neve	-1.478	-0.5384	0.054
164	193	Q_neve	-1.2819	-0.6674	0.0504
164	192	Q_manutenzione	-0.4636	-0.1203	-0.0101
164	199	Q_manutenzione	-0.4912	-0.1032	-0.0132
164	200	Q_manutenzione	-0.4926	-0.0937	0.007
164	193	Q_manutenzione	-0.4174	-0.1078	0.01
164	192	EQ_X	-4.1834	-0.3434	0.2505
164	199	EQ_X	-4.2345	-0.365	0.3811
164	200	EQ_X	-3.0849	-0.2945	0.4318
164	193	EQ_X	-2.896	-0.484	0.3012
164	192	EQ_Y	-0.1911	-0.5011	-0.8808
164	199	EQ_Y	-0.6514	-1.2036	-0.922
164	200	EQ_Y	-0.7535	-1.1164	-0.7924
164	193	EQ_Y	-0.2389	-0.4422	-0.7512
165	193	DEAD	2.278E-15	-1.611E-12	4.476E-13
165	200	DEAD	-1.503E-12	-6.604E-13	5.097E-13
165	201	DEAD	-3.504E-13	-9.173E-13	6.296E-13
165	194	DEAD	-8.547E-13	-1.514E-12	6.462E-13
165	193	G1_power station	0.	0.	0.
165	200	G1_power station	0.	0.	0.
165	201	G1_power station	0.	0.	0.
165	194	G1_power station	0.	0.	0.
165	193	G2_power station	-11.359	-2.9286	0.7984
165	200	G2_power station	-13.2992	-2.5308	1.3273
165	201	G2_power station	-11.5893	-1.829	2.7168
165	194	G2_power station	-6.6641	-4.6066	2.1879
165	193	Q_power station	-0.4203	-0.1084	0.0295
165	200	Q_power station	-0.4921	-0.0936	0.0491
165	201	Q_power station	-0.4288	-0.0677	0.1005
165	194	Q_power station	-0.2466	-0.1704	0.081
165	193	Q_neve	-1.2901	-0.6691	0.1055
165	200	Q_neve	-1.4769	-0.5381	0.1738
165	201	Q_neve	-1.2538	-0.48	0.3196
165	194	Q_neve	-0.7574	-0.8677	0.2513
165	193	Q_manutenzione	-0.4203	-0.1084	0.0295
165	200	Q_manutenzione	-0.4921	-0.0936	0.0491

Table 20: Element Forces - Area Shells, Part 2 of 3

Area	Joint	OutputCase	M11	M22	M12
			KN-m/m	KN-m/m	KN-m/m
165	201	Q_manutenzione	-0.4288	-0.0677	0.1005
165	194	Q_manutenzione	-0.2466	-0.1704	0.081
165	193	EQ_X	-2.9025	-0.4853	0.354
165	200	EQ_X	-3.0879	-0.2951	0.5508
165	201	EQ_X	-1.8086	-0.2242	0.6822
165	194	EQ_X	-1.4479	-0.8493	0.4854
165	193	EQ_Y	-0.244	-0.4433	-0.6543
165	200	EQ_Y	-0.747	-1.1151	-0.6137
165	201	EQ_Y	-0.714	-1.2395	-0.4714
165	194	EQ_Y	-0.1601	-0.4688	-0.512
166	194	DEAD	-8.305E-13	-1.595E-12	5.299E-13
166	201	DEAD	-6.849E-13	-7.405E-13	8.029E-13
166	202	DEAD	2.267E-14	-1.971E-12	7.574E-13
166	195	DEAD	-2.412E-13	-1.525E-12	4.844E-13
166	194	G1_power station	0.	0.	0.
166	201	G1_power station	0.	0.	0.
166	202	G1_power station	0.	0.	0.
166	195	G1_power station	0.	0.	0.
166	194	G2_power station	-6.2894	-4.5317	2.7851
166	201	G2_power station	-12.7413	-2.0594	5.5747
166	202	G2_power station	6.7857	-7.1412	5.3419
166	195	G2_power station	-1.2792	-6.4493	2.5522
166	194	Q_power station	-0.2327	-0.1677	0.103
166	201	Q_power station	-0.4714	-0.0762	0.2063
166	202	Q_power station	0.2511	-0.2642	0.1976
166	195	Q_power station	-0.0473	-0.2386	0.0944
166	194	Q_neve	-0.7188	-0.86	0.3144
166	201	Q_neve	-1.3741	-0.504	0.6203
166	202	Q_neve	0.6979	-1.0506	0.6025
166	195	Q_neve	-0.1322	-1.0877	0.2965
166	194	Q_manutenzione	-0.2327	-0.1677	0.103
166	201	Q_manutenzione	-0.4714	-0.0762	0.2063
166	202	Q_manutenzione	0.2511	-0.2642	0.1976
166	195	Q_manutenzione	-0.0473	-0.2386	0.0944
166	194	EQ_X	-1.4172	-0.8432	0.5271
166	201	EQ_X	-1.9144	-0.2454	0.9643
166	202	EQ_X	0.4657	-0.9451	0.9875
166	195	EQ_X	-0.0903	-1.2678	0.5504
166	194	EQ_Y	-0.1224	-0.4612	-0.4332
166	201	EQ_Y	-0.7689	-1.2505	-0.3
166	202	EQ_Y	0.4276	-1.531	-0.3503
166	195	EQ_Y	-0.1286	-0.5111	-0.4835
167	72	DEAD	-3.620E-13	-1.810E-12	1.243E-13

Table 20: Element Forces - Area Shells, Part 2 of 3

Area	Joint	OutputCase	M11	M22	M12
			KN-m/m	KN-m/m	KN-m/m
167	18	DEAD	1.230E-13	-1.276E-12	3.331E-14
167	203	DEAD	-2.028E-13	-1.014E-12	3.331E-14
167	196	DEAD	1.003E-13	-1.390E-12	1.243E-13
167	72	G1_power station	0.	0.	0.
167	18	G1_power station	0.	0.	0.
167	203	G1_power station	0.	0.	0.
167	196	G1_power station	0.	0.	0.
167	72	G2_power station	-0.0232	-5.2989	-2.9513
167	18	G2_power station	9.1816	9.7504	-2.5419
167	203	G2_power station	-5.8086	1.8038	-3.2541
167	196	G2_power station	-4.414	-2.9758	-3.6635
167	72	Q_power station	-8.595E-04	-0.1961	-0.1092
167	18	Q_power station	0.3397	0.3608	-0.0941
167	203	Q_power station	-0.2149	0.0667	-0.1204
167	196	Q_power station	-0.1633	-0.1101	-0.1355
167	72	Q_neve	-0.0792	-0.6734	-0.2384
167	18	Q_neve	0.7628	0.8016	-0.1985
167	203	Q_neve	-0.6913	0.0679	-0.2611
167	196	Q_neve	-0.5963	-0.504	-0.3009
167	72	Q_manutenzione	-8.595E-04	-0.1961	-0.1092
167	18	Q_manutenzione	0.3397	0.3608	-0.0941
167	203	Q_manutenzione	-0.2149	0.0667	-0.1204
167	196	Q_manutenzione	-0.1633	-0.1101	-0.1355
167	72	EQ_X	2.785	0.6919	-4.5552
167	18	EQ_X	-30.4427	-4.439	-4.0901
167	203	EQ_X	-4.6703	-3.1914	0.8569
167	196	EQ_X	-9.4983	0.1567	0.3917
167	72	EQ_Y	-2.5351	-0.2304	0.7357
167	18	EQ_Y	-4.5025	-29.7079	-5.1407
167	203	EQ_Y	1.2737	3.9898	-5.701
167	196	EQ_Y	-0.0598	-7.196	0.1754
168	196	DEAD	6.241E-13	-1.308E-12	3.082E-13
168	203	DEAD	2.936E-13	-9.963E-13	1.717E-13
168	204	DEAD	4.990E-13	-1.115E-12	2.172E-13
168	197	DEAD	3.960E-13	-7.574E-13	3.537E-13
168	196	G1_power station	0.	0.	0.
168	203	G1_power station	0.	0.	0.
168	204	G1_power station	0.	0.	0.
168	197	G1_power station	0.	0.	0.
168	196	G2_power station	-4.5501	-3.0031	-3.0558
168	203	G2_power station	-5.5221	1.8611	-2.877
168	204	G2_power station	-9.811	-0.7655	-2.3933
168	197	G2_power station	-9.5931	-3.0062	-2.5722

Table 20: Element Forces - Area Shells, Part 2 of 3

Area	Joint	OutputCase	M11	M22	M12
			KN-m/m	KN-m/m	KN-m/m
168	196	Q_power station	-0.1684	-0.1111	-0.1131
168	203	Q_power station	-0.2043	0.0689	-0.1064
168	204	Q_power station	-0.363	-0.0283	-0.0886
168	197	Q_power station	-0.3549	-0.1112	-0.0952
168	196	Q_neve	-0.6086	-0.5064	-0.2467
168	203	Q_neve	-0.6654	0.0731	-0.2275
168	204	Q_neve	-1.1209	-0.1767	-0.1847
168	197	Q_neve	-1.1343	-0.535	-0.204
168	196	Q_manutenzione	-0.1684	-0.1111	-0.1131
168	203	Q_manutenzione	-0.2043	0.0689	-0.1064
168	204	Q_manutenzione	-0.363	-0.0283	-0.0886
168	197	Q_manutenzione	-0.3549	-0.1112	-0.0952
168	196	EQ_X	-8.176	0.4211	0.5703
168	203	EQ_X	-6.848	-3.627	0.3475
168	204	EQ_X	-6.8328	-1.1068	0.0659
168	197	EQ_X	-6.1419	-0.7383	0.2886
168	196	EQ_Y	-0.2119	-7.2264	-2.7528
168	203	EQ_Y	1.224	3.9798	-2.443
168	204	EQ_Y	-0.8984	-3.2757	-2.1597
168	197	EQ_Y	0.1519	-1.6449	-2.4695
169	197	DEAD	7.413E-13	-7.944E-13	3.441E-13
169	204	DEAD	1.724E-13	-8.283E-13	3.319E-13
169	205	DEAD	-5.442E-13	-1.215E-12	2.076E-13
169	198	DEAD	-7.832E-13	-9.648E-13	3.774E-13
169	197	G1_power station	0.	0.	0.
169	204	G1_power station	0.	0.	0.
169	205	G1_power station	0.	0.	0.
169	198	G1_power station	0.	0.	0.
169	197	G2_power station	-9.5114	-2.9899	-2.1116
169	204	G2_power station	-9.9818	-0.7997	-2.1897
169	205	G2_power station	-12.7751	-1.5602	-1.8473
169	198	G2_power station	-12.1189	-2.9762	-1.7692
169	197	Q_power station	-0.3519	-0.1106	-0.0781
169	204	Q_power station	-0.3693	-0.0296	-0.081
169	205	Q_power station	-0.4727	-0.0577	-0.0684
169	198	Q_power station	-0.4484	-0.1101	-0.0655
169	197	Q_neve	-1.127	-0.5335	-0.1633
169	204	Q_neve	-1.1365	-0.1798	-0.1665
169	205	Q_neve	-1.426	-0.2588	-0.1353
169	198	Q_neve	-1.3962	-0.5525	-0.132
169	197	Q_manutenzione	-0.3519	-0.1106	-0.0781
169	204	Q_manutenzione	-0.3693	-0.0296	-0.081
169	205	Q_manutenzione	-0.4727	-0.0577	-0.0684

Table 20: Element Forces - Area Shells, Part 2 of 3

Area	Joint	OutputCase	M11	M22	M12
			KN-m/m	KN-m/m	KN-m/m
169	198	Q_manutenzione	-0.4484	-0.1101	-0.0655
169	197	EQ_X	-6.321	-0.7742	0.2904
169	204	EQ_X	-6.5967	-1.0596	0.2006
169	205	EQ_X	-5.4868	-0.5467	0.2725
169	198	EQ_X	-5.3037	-0.4782	0.3623
169	197	EQ_Y	0.2091	-1.6334	-1.7612
169	204	EQ_Y	-0.9374	-3.2835	-2.3028
169	205	EQ_Y	-0.9667	-0.9982	-2.0324
169	198	EQ_Y	-0.4737	-1.7494	-1.4908
170	198	DEAD	2.266E-13	-3.899E-13	4.466E-13
170	205	DEAD	-3.511E-13	-1.241E-12	3.556E-13
170	206	DEAD	-4.105E-13	-8.449E-13	4.466E-13
170	199	DEAD	-3.056E-13	-4.670E-13	5.376E-13
170	198	G1_power station	0.	0.	0.
170	205	G1_power station	0.	0.	0.
170	206	G1_power station	0.	0.	0.
170	199	G1_power station	0.	0.	0.
170	198	G2_power station	-12.12	-2.9765	-1.3922
170	205	G2_power station	-12.8083	-1.5669	-1.5017
170	206	G2_power station	-14.3426	-1.848	-1.091
170	199	G2_power station	-13.2798	-2.7667	-0.9815
170	198	Q_power station	-0.4484	-0.1101	-0.0515
170	205	Q_power station	-0.4739	-0.058	-0.0556
170	206	Q_power station	-0.5307	-0.0684	-0.0404
170	199	Q_power station	-0.4914	-0.1024	-0.0363
170	198	Q_neve	-1.3964	-0.5525	-0.097
170	205	Q_neve	-1.4291	-0.2594	-0.102
170	206	Q_neve	-1.5777	-0.2933	-0.0617
170	199	Q_neve	-1.5028	-0.5485	-0.0568
170	198	Q_manutenzione	-0.4484	-0.1101	-0.0515
170	205	Q_manutenzione	-0.4739	-0.058	-0.0556
170	206	Q_manutenzione	-0.5307	-0.0684	-0.0404
170	199	Q_manutenzione	-0.4914	-0.1024	-0.0363
170	198	EQ_X	-5.3096	-0.4794	0.3683
170	205	EQ_X	-5.4629	-0.5419	0.3842
170	206	EQ_X	-4.3585	-0.2915	0.4356
170	199	EQ_X	-4.236	-0.3619	0.4197
170	198	EQ_Y	-0.4587	-1.7464	-1.4547
170	205	EQ_Y	-0.9646	-0.9978	-1.5766
170	206	EQ_Y	-1.3035	-1.1776	-1.3337
170	199	EQ_Y	-0.6429	-1.1508	-1.2118
171	199	DEAD	5.234E-14	1.130E-14	5.648E-13
171	206	DEAD	5.963E-14	-9.516E-13	5.360E-13

Table 20: Element Forces - Area Shells, Part 2 of 3

Area	Joint	OutputCase	M11	M22	M12
			KN-m/m	KN-m/m	KN-m/m
171	207	DEAD	-1.097E-12	-8.191E-13	5.648E-13
171	200	DEAD	-3.158E-13	-6.444E-13	6.725E-13
171	199	G1_power station	0.	0.	0.
171	206	G1_power station	0.	0.	0.
171	207	G1_power station	0.	0.	0.
171	200	G1_power station	0.	0.	0.
171	199	G2_power station	-13.2702	-2.7648	-0.5157
171	206	G2_power station	-14.3579	-1.8511	-0.5782
171	207	G2_power station	-15.5107	-2.0503	0.082
171	200	G2_power station	-13.3149	-2.5386	0.1445
171	199	Q_power station	-0.491	-0.1023	-0.0191
171	206	Q_power station	-0.5312	-0.0685	-0.0214
171	207	Q_power station	-0.5739	-0.0759	0.003
171	200	Q_power station	-0.4927	-0.0939	0.0053
171	199	Q_neve	-1.5018	-0.5483	-0.0098
171	206	Q_neve	-1.579	-0.2935	-0.0098
171	207	Q_neve	-1.6739	-0.3166	0.0584
171	200	Q_neve	-1.4782	-0.5392	0.0585
171	199	Q_manutenzione	-0.491	-0.1023	-0.0191
171	206	Q_manutenzione	-0.5312	-0.0685	-0.0214
171	207	Q_manutenzione	-0.5739	-0.0759	0.003
171	200	Q_manutenzione	-0.4927	-0.0939	0.0053
171	199	EQ_X	-4.2338	-0.3615	0.457
171	206	EQ_X	-4.3473	-0.2892	0.5023
171	207	EQ_X	-3.2644	-0.0823	0.5672
171	200	EQ_X	-3.0893	-0.3165	0.5218
171	199	EQ_Y	-0.6408	-1.1503	-1.0161
171	206	EQ_Y	-1.3009	-1.1771	-1.0447
171	207	EQ_Y	-1.4026	-1.1396	-0.804
171	200	EQ_Y	-0.7518	-1.1081	-0.7754
172	200	DEAD	-1.535E-12	-5.077E-13	6.296E-13
172	207	DEAD	1.424E-13	-7.796E-13	4.764E-13
172	208	DEAD	-1.296E-12	-4.053E-13	4.476E-13
172	201	DEAD	-9.646E-14	-8.820E-13	5.219E-13
172	200	G1_power station	0.	0.	0.
172	207	G1_power station	0.	0.	0.
172	208	G1_power station	0.	0.	0.
172	201	G1_power station	0.	0.	0.
172	200	G2_power station	-13.3002	-2.5357	1.1261
172	207	G2_power station	-15.526	-2.0533	0.9878
172	208	G2_power station	-17.9745	-2.6837	2.5692
172	201	G2_power station	-11.513	-1.4474	2.7075
172	200	Q_power station	-0.4921	-0.0938	0.0417

Table 20: Element Forces - Area Shells, Part 2 of 3

Area	Joint	OutputCase	M11	M22	M12
			KN-m/m	KN-m/m	KN-m/m
172	207	Q_power station	-0.5745	-0.076	0.0365
172	208	Q_power station	-0.6651	-0.0993	0.0951
172	201	Q_power station	-0.426	-0.0536	0.1002
172	200	Q_neve	-1.477	-0.539	0.1623
172	207	Q_neve	-1.6746	-0.3167	0.1519
172	208	Q_neve	-1.8886	-0.3709	0.3184
172	201	Q_neve	-1.2452	-0.437	0.3288
172	200	Q_manutenzione	-0.4921	-0.0938	0.0417
172	207	Q_manutenzione	-0.5745	-0.076	0.0365
172	208	Q_manutenzione	-0.6651	-0.0993	0.0951
172	201	Q_manutenzione	-0.426	-0.0536	0.1002
172	200	EQ_X	-3.0923	-0.3171	0.6161
172	207	EQ_X	-3.2465	-0.0787	0.6483
172	208	EQ_X	-2.3571	0.0019	0.7957
172	201	EQ_X	-1.7828	-0.0953	0.7635
172	200	EQ_Y	-0.7454	-1.1068	-0.5863
172	207	EQ_Y	-1.4178	-1.1427	-0.5091
172	208	EQ_Y	-1.3457	-1.223	-0.2682
172	201	EQ_Y	-0.734	-1.3392	-0.3454
173	201	DEAD	-7.505E-13	-5.295E-13	8.618E-13
173	208	DEAD	-7.742E-13	-6.891E-13	4.312E-13
173	34	DEAD	-1.410E-12	2.178E-12	1.135E-12
173	202	DEAD	1.700E-13	-1.702E-12	1.250E-12
173	201	G1_power station	0.	0.	0.
173	208	G1_power station	0.	0.	0.
173	34	G1_power station	0.	0.	0.
173	202	G1_power station	0.	0.	0.
173	201	G2_power station	-12.665	-1.6778	5.1286
173	208	G2_power station	-17.2282	-2.5345	5.8957
173	34	G2_power station	-29.132	1.8931	13.6979
173	202	G2_power station	6.6338	-7.9006	12.9308
173	201	Q_power station	-0.4686	-0.0621	0.1898
173	208	Q_power station	-0.6374	-0.0938	0.2181
173	34	Q_power station	-1.0779	0.07	0.5068
173	202	Q_power station	0.2454	-0.2923	0.4784
173	201	Q_neve	-1.3655	-0.4611	0.5872
173	208	Q_neve	-1.8069	-0.3545	0.6636
173	34	Q_neve	-2.9953	0.1663	1.4786
173	202	Q_neve	0.6807	-1.1366	1.4022
173	201	Q_manutenzione	-0.4686	-0.0621	0.1898
173	208	Q_manutenzione	-0.6374	-0.0938	0.2181
173	34	Q_manutenzione	-1.0779	0.07	0.5068
173	202	Q_manutenzione	0.2454	-0.2923	0.4784

Table 20: Element Forces - Area Shells, Part 2 of 3

Area	Joint	OutputCase	M11	M22	M12
			KN-m/m	KN-m/m	KN-m/m
173	201	EQ_X	-1.8886	-0.1165	1.1208
173	208	EQ_X	-2.2318	0.027	0.9394
173	34	EQ_X	-1.9512	2.3854	1.5795
173	202	EQ_X	0.418	-1.1834	1.7608
173	201	EQ_Y	-0.7889	-1.3502	-0.3194
173	208	EQ_Y	-1.3488	-1.2236	0.2422
173	34	EQ_Y	-1.8786	-3.4659	0.7061
173	202	EQ_Y	0.4617	-1.3608	0.1445
174	58	DEAD	1.224E-13	8.542E-14	-1.794E-14
174	57	DEAD	1.045E-13	-2.274E-14	4.808E-15
174	209	DEAD	1.025E-13	5.414E-14	4.808E-15
174	143	DEAD	2.198E-14	-9.384E-14	-1.794E-14
174	58	G1_power station	0.	0.	0.
174	57	G1_power station	0.	0.	0.
174	209	G1_power station	0.	0.	0.
174	143	G1_power station	0.	0.	0.
174	58	G2_power station	10.3104	8.9067	-0.4054
174	57	G2_power station	3.6465	-0.3337	0.4705
174	209	G2_power station	0.4521	0.1639	0.7567
174	143	G2_power station	-2.3022	1.8842	-0.1192
174	58	Q_power station	0.3815	0.3295	-0.015
174	57	Q_power station	0.1349	-0.0123	0.0174
174	209	Q_power station	0.0167	0.0061	0.028
174	143	Q_power station	-0.0852	0.0697	-0.0044
174	58	Q_neve	0.8863	0.7174	0.0075
174	57	Q_neve	0.2699	-0.0305	0.0846
174	209	Q_neve	-0.05	0.0135	0.118
174	143	Q_neve	-0.3036	0.0756	0.041
174	58	Q_manutenzione	0.3815	0.3295	-0.015
174	57	Q_manutenzione	0.1349	-0.0123	0.0174
174	209	Q_manutenzione	0.0167	0.0061	0.028
174	143	Q_manutenzione	-0.0852	0.0697	-0.0044
174	58	EQ_X	30.3693	4.7061	-2.66
174	57	EQ_X	-9.1154	-2.4285	-3.4202
174	209	EQ_X	12.405	0.6658	1.4386
174	143	EQ_X	4.0829	3.5779	2.1989
174	58	EQ_Y	-6.0981	-23.5326	5.434
174	57	EQ_Y	-5.3832	3.035	-0.8647
174	209	EQ_Y	-0.5012	-2.1175	-0.1907
174	143	EQ_Y	1.0089	8.2048	6.1081
175	143	DEAD	3.600E-14	-6.595E-14	4.808E-15
175	209	DEAD	4.292E-15	-6.354E-15	-6.568E-15
175	210	DEAD	2.308E-13	2.079E-14	-1.794E-14

Table 20: Element Forces - Area Shells, Part 2 of 3

Area	Joint	OutputCase	M11	M22	M12
			KN-m/m	KN-m/m	KN-m/m
175	144	DEAD	1.394E-13	5.479E-14	-6.568E-15
175	143	G1_power station	0.	0.	0.
175	209	G1_power station	0.	0.	0.
175	210	G1_power station	0.	0.	0.
175	144	G1_power station	0.	0.	0.
175	143	G2_power station	-2.0116	1.9423	-0.3959
175	209	G2_power station	0.2033	0.1141	-0.2101
175	210	G2_power station	-5.5448	0.2089	-0.4409
175	144	G2_power station	-4.4935	-0.5122	-0.6268
175	143	Q_power station	-0.0744	0.0719	-0.0146
175	209	Q_power station	0.0075	0.0042	-0.0078
175	210	Q_power station	-0.2052	0.0077	-0.0163
175	144	Q_power station	-0.1663	-0.019	-0.0232
175	143	Q_neve	-0.2765	0.081	0.0222
175	209	Q_neve	-0.0732	0.0089	0.0355
175	210	Q_neve	-0.6118	0.0254	0.0206
175	144	Q_neve	-0.5171	-0.1427	0.0073
175	143	Q_manutenzione	-0.0744	0.0719	-0.0146
175	209	Q_manutenzione	0.0075	0.0042	-0.0078
175	210	Q_manutenzione	-0.2052	0.0077	-0.0163
175	144	Q_manutenzione	-0.1663	-0.019	-0.0232
175	143	EQ_X	6.004	3.9621	0.6026
175	209	EQ_X	10.2496	0.2347	1.1949
175	210	EQ_X	7.0142	-0.2179	0.0798
175	144	EQ_X	5.6426	1.421	-0.5124
175	143	EQ_Y	1.0366	8.2104	2.3102
175	209	EQ_Y	-0.6993	-2.1571	3.5513
175	210	EQ_Y	1.063	0.8017	3.304
175	144	EQ_Y	-0.1218	0.6066	2.0629
176	144	DEAD	1.602E-13	8.232E-14	-4.597E-14
176	210	DEAD	5.164E-14	-4.263E-14	-2.322E-14
176	35	DEAD	3.266E-13	2.687E-14	-4.597E-14
176	30	DEAD	5.591E-14	-8.955E-14	-6.873E-14
176	144	G1_power station	0.	0.	0.
176	210	G1_power station	0.	0.	0.
176	35	G1_power station	0.	0.	0.
176	30	G1_power station	0.	0.	0.
176	144	G2_power station	-4.4746	-0.5084	0.1289
176	210	G2_power station	-5.3584	0.2462	-0.5285
176	35	G2_power station	-10.9045	-0.4974	0.2197
176	30	G2_power station	-7.1265	1.1202	0.8771
176	144	Q_power station	-0.1656	-0.0188	0.0048
176	210	Q_power station	-0.1983	0.0091	-0.0196

Table 20: Element Forces - Area Shells, Part 2 of 3

Area	Joint	OutputCase	M11	M22	M12
			KN-m/m	KN-m/m	KN-m/m
176	35	Q_power station	-0.4035	-0.0184	0.0081
176	30	Q_power station	-0.2637	0.0414	0.0325
176	144	Q_neve	-0.5089	-0.141	0.0911
176	210	Q_neve	-0.5991	0.028	0.0111
176	35	Q_neve	-1.1065	-0.0573	0.0805
176	30	Q_neve	-0.7839	0.0949	0.1604
176	144	Q_manutenzione	-0.1656	-0.0188	0.0048
176	210	Q_manutenzione	-0.1983	0.0091	-0.0196
176	35	Q_manutenzione	-0.4035	-0.0184	0.0081
176	30	Q_manutenzione	-0.2637	0.0414	0.0325
176	144	EQ_X	5.2686	1.3462	-1.2809
176	210	EQ_X	7.2897	-0.1628	-0.6414
176	35	EQ_X	8.7525	0.4972	-1.3137
176	30	EQ_X	6.7042	-1.1897	-1.9532
176	144	EQ_Y	-0.0504	0.6209	2.2985
176	210	EQ_Y	0.9916	0.7874	2.3655
176	35	EQ_Y	0.7063	-0.2874	1.9401
176	30	EQ_Y	-0.5227	1.2869	1.8731
177	27	DEAD	-7.620E-14	-5.799E-14	-9.435E-14
177	26	DEAD	2.847E-13	1.820E-14	-6.023E-14
177	211	DEAD	-2.643E-14	-2.187E-13	-8.298E-14
177	212	DEAD	1.496E-13	2.531E-14	-1.171E-13
177	27	G1_power station	0.	0.	0.
177	26	G1_power station	0.	0.	0.
177	211	G1_power station	0.	0.	0.
177	212	G1_power station	0.	0.	0.
177	27	G2_power station	-6.1387	0.2857	-1.6265
177	26	G2_power station	-12.5211	-1.5838	-1.9717
177	211	G2_power station	-8.5547	0.41	-1.0755
177	212	G2_power station	-9.9003	-0.1755	-0.7302
177	27	Q_power station	-0.2271	0.0106	-0.0602
177	26	Q_power station	-0.4633	-0.0586	-0.073
177	211	Q_power station	-0.3165	0.0152	-0.0398
177	212	Q_power station	-0.3663	-0.0065	-0.027
177	27	Q_neve	-0.5658	0.0274	-0.1653
177	26	Q_neve	-1.3479	-0.1767	-0.1906
177	211	Q_neve	-0.6994	0.0474	-0.081
177	212	Q_neve	-0.8691	-0.0181	-0.0556
177	27	Q_manutenzione	-0.2271	0.0106	-0.0602
177	26	Q_manutenzione	-0.4633	-0.0586	-0.073
177	211	Q_manutenzione	-0.3165	0.0152	-0.0398
177	212	Q_manutenzione	-0.3663	-0.0065	-0.027
177	27	EQ_X	-0.6145	5.332E-04	-0.063

Table 20: Element Forces - Area Shells, Part 2 of 3

Area	Joint	OutputCase	M11	M22	M12
			KN-m/m	KN-m/m	KN-m/m
177	26	EQ_X	-3.1233	0.4672	0.2673
177	211	EQ_X	0.5721	-0.0864	0.655
177	212	EQ_X	0.055	2.194E-04	0.3247
177	27	EQ_Y	1.6077	-0.1068	0.7318
177	26	EQ_Y	1.6567	1.2843	1.0747
177	211	EQ_Y	1.8799	-0.2974	1.1109
177	212	EQ_Y	1.9232	0.1013	0.7679
178	212	DEAD	1.172E-13	-1.108E-14	-6.023E-14
178	211	DEAD	1.362E-13	-1.751E-13	-1.285E-13
178	213	DEAD	7.166E-14	6.855E-14	-1.171E-13
178	214	DEAD	2.300E-13	5.525E-14	-4.885E-14
178	212	G1_power station	0.	0.	0.
178	211	G1_power station	0.	0.	0.
178	213	G1_power station	0.	0.	0.
178	214	G1_power station	0.	0.	0.
178	212	G2_power station	-9.4667	-0.0887	-0.9742
178	211	G2_power station	-8.9883	0.3232	-0.9613
178	213	G2_power station	-9.8001	-0.0816	-1.0287
178	214	G2_power station	-9.7383	0.0438	-1.0416
178	212	Q_power station	-0.3503	-0.0033	-0.036
178	211	Q_power station	-0.3326	0.012	-0.0356
178	213	Q_power station	-0.3626	-0.003	-0.0381
178	214	Q_power station	-0.3603	0.0016	-0.0385
178	212	Q_neve	-0.8154	-0.0074	-0.0813
178	211	Q_neve	-0.7531	0.0366	-0.0746
178	213	Q_neve	-0.7957	-0.0092	-0.0843
178	214	Q_neve	-0.7913	0.0057	-0.0911
178	212	Q_manutenzione	-0.3503	-0.0033	-0.036
178	211	Q_manutenzione	-0.3326	0.012	-0.0356
178	213	Q_manutenzione	-0.3626	-0.003	-0.0381
178	214	Q_manutenzione	-0.3603	0.0016	-0.0385
178	212	EQ_X	0.243	0.0378	0.3545
178	211	EQ_X	0.3841	-0.124	0.5674
178	213	EQ_X	2.8425	0.0187	0.5374
178	214	EQ_X	2.85	-0.0114	0.3245
178	212	EQ_Y	1.9329	0.1033	0.9773
178	211	EQ_Y	1.8702	-0.2994	0.9049
178	213	EQ_Y	1.7541	0.14	0.9194
178	214	EQ_Y	1.807	-0.0717	0.9918
179	214	DEAD	2.124E-13	5.768E-14	-4.902E-14
179	213	DEAD	6.390E-14	6.527E-14	-3.520E-15
179	215	DEAD	2.679E-13	-4.044E-14	-3.520E-15
179	216	DEAD	5.679E-14	-7.266E-14	-4.902E-14

Table 20: Element Forces - Area Shells, Part 2 of 3

Area	Joint	OutputCase	M11	M22	M12
			KN-m/m	KN-m/m	KN-m/m
179	214	G1_power station	0.	0.	0.
179	213	G1_power station	0.	0.	0.
179	215	G1_power station	0.	0.	0.
179	216	G1_power station	0.	0.	0.
179	214	G2_power station	-9.7266	0.0461	-0.9999
179	213	G2_power station	-9.8119	-0.084	-1.0999
179	215	G2_power station	-10.3598	0.0707	-1.1934
179	216	G2_power station	-10.9375	-0.0282	-1.0934
179	214	Q_power station	-0.3599	0.0017	-0.037
179	213	Q_power station	-0.363	-0.0031	-0.0407
179	215	Q_power station	-0.3833	0.0026	-0.0442
179	216	Q_power station	-0.4047	-0.001	-0.0405
179	214	Q_neve	-0.79	0.0059	-0.0817
179	213	Q_neve	-0.797	-0.0095	-0.0998
179	215	Q_neve	-0.9125	0.0145	-0.1124
179	216	Q_neve	-0.9869	-0.0021	-0.0943
179	214	Q_manutenzione	-0.3599	0.0017	-0.037
179	213	Q_manutenzione	-0.363	-0.0031	-0.0407
179	215	Q_manutenzione	-0.3833	0.0026	-0.0442
179	216	Q_manutenzione	-0.4047	-0.001	-0.0405
179	214	EQ_X	2.797	-0.022	0.2819
179	213	EQ_X	2.8956	0.0293	0.5807
179	215	EQ_X	5.68	-0.0197	0.6687
179	216	EQ_X	6.2379	-0.0189	0.3699
179	214	EQ_Y	1.8153	-0.07	0.9852
179	213	EQ_Y	1.7458	0.1384	0.9811
179	215	EQ_Y	1.2048	-0.2953	0.9771
179	216	EQ_Y	1.1599	0.1423	0.9812
180	216	DEAD	5.187E-14	-8.564E-14	-8.714E-14
180	215	DEAD	2.672E-13	-1.394E-14	-9.852E-14
180	30	DEAD	1.599E-13	-5.721E-14	-1.099E-13
180	35	DEAD	3.781E-13	2.872E-14	-9.852E-14
180	216	G1_power station	0.	0.	0.
180	215	G1_power station	0.	0.	0.
180	30	G1_power station	0.	0.	0.
180	35	G1_power station	0.	0.	0.
180	216	G2_power station	-11.4938	-0.1395	-1.2499
180	215	G2_power station	-9.8035	0.1819	-1.2331
180	30	G2_power station	-15.1585	-0.4862	-0.0902
180	35	G2_power station	-7.2953	0.2245	-0.1071
180	216	Q_power station	-0.4253	-0.0052	-0.0462
180	215	Q_power station	-0.3627	0.0067	-0.0456
180	30	Q_power station	-0.5609	-0.018	-0.0033

Table 20: Element Forces - Area Shells, Part 2 of 3

Area	Joint	OutputCase	M11	M22	M12
			KN-m/m	KN-m/m	KN-m/m
180	35	Q_power station	-0.2699	0.0083	-0.004
180	216	Q_neve	-1.0553	-0.0158	-0.1137
180	215	Q_neve	-0.8441	0.0282	-0.1191
180	30	Q_neve	-1.6739	-0.0831	0.0203
180	35	Q_neve	-0.7068	0.0227	0.0257
180	216	Q_manutenzione	-0.4253	-0.0052	-0.0462
180	215	Q_manutenzione	-0.3627	0.0067	-0.0456
180	30	Q_manutenzione	-0.5609	-0.018	-0.0033
180	35	Q_manutenzione	-0.2699	0.0083	-0.004
180	216	EQ_X	6.8488	0.1033	0.4508
180	215	EQ_X	5.0691	-0.1419	0.766
180	30	EQ_X	14.0765	0.2847	-0.5036
180	35	EQ_X	5.4864	-0.156	-0.8188
180	216	EQ_Y	1.0001	0.1103	1.1494
180	215	EQ_Y	1.3646	-0.2634	0.7817
180	30	EQ_Y	-1.0519	1.1811	1.1328
180	35	EQ_Y	0.977	-0.2332	1.5005
181	63	DEAD	-1.940E-14	-1.908E-14	-1.760E-15
181	64	DEAD	-4.705E-14	2.000E-14	-2.451E-14
181	217	DEAD	1.384E-13	1.217E-13	-2.451E-14
181	125	DEAD	8.235E-14	1.858E-14	-1.760E-15
181	63	G1_power station	0.	0.	0.
181	64	G1_power station	0.	0.	0.
181	217	G1_power station	0.	0.	0.
181	125	G1_power station	0.	0.	0.
181	63	G2_power station	9.9313	9.3057	-0.8495
181	64	G2_power station	3.8088	-0.3234	1.921E-04
181	217	G2_power station	-0.1806	0.1933	0.1256
181	125	G2_power station	-3.3699	1.7766	-0.7241
181	63	Q_power station	0.3675	0.3443	-0.0314
181	64	Q_power station	0.1409	-0.012	7.109E-06
181	217	Q_power station	-0.0067	0.0072	0.0046
181	125	Q_power station	-0.1247	0.0657	-0.0268
181	63	Q_neve	0.8474	0.7711	-0.047
181	64	Q_neve	0.2906	-0.0296	0.0269
181	217	Q_neve	-0.1169	0.0175	0.0409
181	125	Q_neve	-0.4239	0.0793	-0.033
181	63	Q_manutenzione	0.3675	0.3443	-0.0314
181	64	Q_manutenzione	0.1409	-0.012	7.109E-06
181	217	Q_manutenzione	-0.0067	0.0072	0.0046
181	125	Q_manutenzione	-0.1247	0.0657	-0.0268
181	63	EQ_X	-29.9848	-4.4773	2.3521
181	64	EQ_X	8.6561	2.3418	2.9948

Table 20: Element Forces - Area Shells, Part 2 of 3

Area	Joint	OutputCase	M11	M22	M12
			KN-m/m	KN-m/m	KN-m/m
181	217	EQ_X	-12.4158	-0.6813	-2.0809
181	125	EQ_X	-3.5759	-3.0753	-2.7237
181	63	EQ_Y	5.8674	22.7398	-5.2326
181	64	EQ_Y	5.416	-2.7351	0.4248
181	217	EQ_Y	0.0129	1.8282	-0.2863
181	125	EQ_Y	-1.2231	-7.9861	-5.9437
182	125	DEAD	1.555E-13	4.784E-14	-3.589E-14
182	217	DEAD	8.766E-14	1.042E-13	2.099E-14
182	218	DEAD	3.745E-14	-1.669E-13	9.616E-15
182	126	DEAD	-4.743E-14	7.721E-14	-4.726E-14
182	125	G1_power station	0.	0.	0.
182	217	G1_power station	0.	0.	0.
182	218	G1_power station	0.	0.	0.
182	126	G1_power station	0.	0.	0.
182	125	G2_power station	-3.0752	1.8356	-1.2788
182	217	G2_power station	-0.4521	0.139	-0.9918
182	218	G2_power station	-5.6385	-0.0182	-1.4364
182	126	G2_power station	-5.2575	-0.6815	-1.7234
182	125	Q_power station	-0.1138	0.0679	-0.0473
182	217	Q_power station	-0.0167	0.0051	-0.0367
182	218	Q_power station	-0.2086	-6.740E-04	-0.0531
182	126	Q_power station	-0.1945	-0.0252	-0.0638
182	125	Q_neve	-0.3971	0.0846	-0.084
182	217	Q_neve	-0.1422	0.0124	-0.0594
182	218	Q_neve	-0.6443	-0.0018	-0.0999
182	126	Q_neve	-0.6278	-0.1506	-0.1246
182	125	Q_manutenzione	-0.1138	0.0679	-0.0473
182	217	Q_manutenzione	-0.0167	0.0051	-0.0367
182	218	Q_manutenzione	-0.2086	-6.740E-04	-0.0531
182	126	Q_manutenzione	-0.1945	-0.0252	-0.0638
182	125	EQ_X	-5.7504	-3.5102	-1.1642
182	217	EQ_X	-10.0132	-0.2008	-1.564
182	218	EQ_X	-5.4006	0.0207	-0.6022
182	126	EQ_X	-5.2383	-1.0343	-0.2023
182	125	EQ_Y	-1.2692	-7.9953	-2.4134
182	217	EQ_Y	0.2593	1.8775	-3.665
182	218	EQ_Y	-1.648	-0.7122	-3.3509
182	126	EQ_Y	-0.2928	-0.3564	-2.0993
183	126	DEAD	3.669E-14	9.125E-14	-3.155E-14
183	218	DEAD	6.998E-14	-1.518E-13	-7.705E-14
183	219	DEAD	1.661E-13	5.570E-14	-9.981E-14
183	127	DEAD	8.847E-14	7.711E-14	-5.430E-14
183	126	G1_power station	0.	0.	0.

Table 20: Element Forces - Area Shells, Part 2 of 3

Area	Joint	OutputCase	M11	M22	M12
			KN-m/m	KN-m/m	KN-m/m
183	218	G1_power station	0.	0.	0.
183	219	G1_power station	0.	0.	0.
183	127	G1_power station	0.	0.	0.
183	126	G2_power station	-5.4203	-0.714	-1.5668
183	218	G2_power station	-5.4234	0.0248	-1.524
183	219	G2_power station	-6.546	-0.012	-1.3549
183	127	G2_power station	-6.0028	-1.1972	-1.3977
183	126	Q_power station	-0.2006	-0.0264	-0.058
183	218	Q_power station	-0.2007	9.176E-04	-0.0564
183	219	Q_power station	-0.2422	-4.447E-04	-0.0501
183	127	Q_power station	-0.2221	-0.0443	-0.0517
183	126	Q_neve	-0.6426	-0.1536	-0.1114
183	218	Q_neve	-0.6246	0.0021	-0.107
183	219	Q_neve	-0.7354	-0.0013	-0.0912
183	127	Q_neve	-0.7021	-0.2027	-0.0956
183	126	Q_manutenzione	-0.2006	-0.0264	-0.058
183	218	Q_manutenzione	-0.2007	9.176E-04	-0.0564
183	219	Q_manutenzione	-0.2422	-4.447E-04	-0.0501
183	127	Q_manutenzione	-0.2221	-0.0443	-0.0517
183	126	EQ_X	-5.0003	-0.9867	-0.0549
183	218	EQ_X	-5.6852	-0.0362	-0.0596
183	219	EQ_X	-3.7785	0.005	0.1419
183	127	EQ_X	-3.6148	-0.3498	0.1465
183	126	EQ_Y	-0.3292	-0.3637	-2.3245
183	218	EQ_Y	-1.6119	-0.705	-2.284
183	219	EQ_Y	-1.5136	0.2154	-1.8874
183	127	EQ_Y	-0.8964	-1.5474	-1.928
184	127	DEAD	2.001E-13	6.799E-14	-9.019E-14
184	219	DEAD	1.797E-13	1.025E-13	-9.019E-14
184	220	DEAD	5.361E-14	1.822E-14	-6.744E-14
184	128	DEAD	9.863E-14	1.068E-13	-6.744E-14
184	127	G1_power station	0.	0.	0.
184	219	G1_power station	0.	0.	0.
184	220	G1_power station	0.	0.	0.
184	128	G1_power station	0.	0.	0.
184	127	G2_power station	-6.0279	-1.2022	-1.141
184	219	G2_power station	-6.5084	-0.0045	-1.0974
184	220	G2_power station	-6.0954	0.0078	-0.8132
184	128	G2_power station	-5.4933	-1.2073	-0.8568
184	127	Q_power station	-0.223	-0.0445	-0.0422
184	219	Q_power station	-0.2408	-1.663E-04	-0.0406
184	220	Q_power station	-0.2255	2.873E-04	-0.0301
184	128	Q_power station	-0.2033	-0.0447	-0.0317

Table 20: Element Forces - Area Shells, Part 2 of 3

Area	Joint	OutputCase	M11	M22	M12
			KN-m/m	KN-m/m	KN-m/m
184	127	Q_neve	-0.7044	-0.2031	-0.0721
184	219	Q_neve	-0.7317	-5.875E-04	-0.0662
184	220	Q_neve	-0.6855	8.985E-04	-0.0388
184	128	Q_neve	-0.6442	-0.2079	-0.0447
184	127	Q_manutenzione	-0.223	-0.0445	-0.0422
184	219	Q_manutenzione	-0.2408	-1.663E-04	-0.0406
184	220	Q_manutenzione	-0.2255	2.873E-04	-0.0301
184	128	Q_manutenzione	-0.2033	-0.0447	-0.0317
184	127	EQ_X	-3.5909	-0.345	0.2292
184	219	EQ_X	-3.8202	-0.0034	0.277
184	220	EQ_X	-2.5844	0.0028	0.3423
184	128	EQ_X	-2.5418	-0.0942	0.2945
184	127	EQ_Y	-0.8917	-1.5465	-1.4989
184	219	EQ_Y	-1.5337	0.2113	-1.6041
184	220	EQ_Y	-1.4889	-0.0648	-1.289
184	128	EQ_Y	-0.8988	-0.8229	-1.1839
185	128	DEAD	9.917E-14	1.297E-13	-5.254E-14
185	220	DEAD	6.611E-14	5.236E-15	-2.979E-14
185	221	DEAD	2.243E-13	-2.955E-14	-5.254E-14
185	129	DEAD	1.884E-13	1.048E-13	-7.529E-14
185	128	G1_power station	0.	0.	0.
185	220	G1_power station	0.	0.	0.
185	221	G1_power station	0.	0.	0.
185	129	G1_power station	0.	0.	0.
185	128	G2_power station	-5.5003	-1.2087	-0.5623
185	220	G2_power station	-6.0835	0.0102	-0.5006
185	221	G2_power station	-5.3516	-0.0418	-0.1777
185	129	G2_power station	-4.6093	-1.0903	-0.2394
185	128	Q_power station	-0.2035	-0.0447	-0.0208
185	220	Q_power station	-0.2251	3.759E-04	-0.0185
185	221	Q_power station	-0.198	-0.0015	-0.0066
185	129	Q_power station	-0.1705	-0.0403	-0.0089
185	128	Q_neve	-0.6448	-0.208	-0.016
185	220	Q_neve	-0.6842	0.0012	-0.0079
185	221	Q_neve	-0.598	-0.0048	0.0244
185	129	Q_neve	-0.5404	-0.1979	0.0162
185	128	Q_manutenzione	-0.2035	-0.0447	-0.0208
185	220	Q_manutenzione	-0.2251	3.759E-04	-0.0185
185	221	Q_manutenzione	-0.198	-0.0015	-0.0066
185	129	Q_manutenzione	-0.1705	-0.0403	-0.0089
185	128	EQ_X	-2.5325	-0.0924	0.3256
185	220	EQ_X	-2.5996	-2.222E-04	0.3742
185	221	EQ_X	-1.8047	-0.0023	0.391

Table 20: Element Forces - Area Shells, Part 2 of 3

Area	Joint	OutputCase	M11	M22	M12
			KN-m/m	KN-m/m	KN-m/m
185	129	EQ_X	-1.7948	0.0129	0.3423
185	128	EQ_Y	-0.893	-0.8217	-0.9497
185	220	EQ_Y	-1.5027	-0.0676	-0.9662
185	221	EQ_Y	-1.4177	0.0025	-0.7012
185	129	EQ_Y	-0.8799	-0.8035	-0.6848
186	129	DEAD	2.686E-13	1.154E-13	-7.049E-14
186	221	DEAD	1.215E-13	-3.319E-14	-8.186E-14
186	222	DEAD	1.904E-13	3.153E-14	-4.773E-14
186	130	DEAD	2.537E-13	1.161E-13	-3.636E-14
186	129	G1_power station	0.	0.	0.
186	221	G1_power station	0.	0.	0.
186	222	G1_power station	0.	0.	0.
186	130	G1_power station	0.	0.	0.
186	129	G2_power station	-4.6201	-1.0925	0.1227
186	221	G2_power station	-5.316	-0.0346	0.1718
186	222	G2_power station	-5.4812	0.1499	0.6333
186	130	G2_power station	-4.1614	-1.4236	0.5842
186	129	Q_power station	-0.1709	-0.0404	0.0045
186	221	Q_power station	-0.1967	-0.0013	0.0064
186	222	Q_power station	-0.2028	0.0055	0.0234
186	130	Q_power station	-0.154	-0.0527	0.0216
186	129	Q_neve	-0.5408	-0.198	0.0538
186	221	Q_neve	-0.5948	-0.0042	0.0585
186	222	Q_neve	-0.5841	0.0189	0.1043
186	130	Q_neve	-0.4735	-0.2253	0.0996
186	129	Q_manutenzione	-0.1709	-0.0404	0.0045
186	221	Q_manutenzione	-0.1967	-0.0013	0.0064
186	222	Q_manutenzione	-0.2028	0.0055	0.0234
186	130	Q_manutenzione	-0.154	-0.0527	0.0216
186	129	EQ_X	-1.785	0.0149	0.3844
186	221	EQ_X	-1.8122	-0.0038	0.3634
186	222	EQ_X	-1.374	0.0523	0.3681
186	130	EQ_X	-1.3371	0.2237	0.3891
186	129	EQ_Y	-0.8876	-0.805	-0.4705
186	221	EQ_Y	-1.4098	0.0041	-0.3977
186	222	EQ_Y	-1.4656	0.0031	-0.1135
186	130	EQ_Y	-0.8056	-1.1034	-0.1863
187	130	DEAD	1.813E-13	1.060E-13	-6.040E-14
187	222	DEAD	1.496E-13	6.375E-15	-3.520E-15
187	36	DEAD	1.586E-13	-4.192E-14	7.856E-15
187	29	DEAD	1.410E-13	-7.041E-14	-4.902E-14
187	130	G1_power station	0.	0.	0.
187	222	G1_power station	0.	0.	0.

Table 20: Element Forces - Area Shells, Part 2 of 3

Area	Joint	OutputCase	M11	M22	M12
			KN-m/m	KN-m/m	KN-m/m
187	36	G1_power station	0.	0.	0.
187	29	G1_power station	0.	0.	0.
187	130	G2_power station	-4.0314	-1.3976	1.4567
187	222	G2_power station	-5.449	0.1563	1.0314
187	36	G2_power station	-9.0951	-0.3056	1.9394
187	29	G2_power station	-5.8092	-0.2414	2.3647
187	130	Q_power station	-0.1492	-0.0517	0.0539
187	222	Q_power station	-0.2016	0.0058	0.0382
187	36	Q_power station	-0.3365	-0.0113	0.0718
187	29	Q_power station	-0.2149	-0.0089	0.0875
187	130	Q_neve	-0.4555	-0.2217	0.1911
187	222	Q_neve	-0.5857	0.0186	0.1365
187	36	Q_neve	-0.8862	-0.0367	0.2165
187	29	Q_neve	-0.6228	-0.0316	0.2711
187	130	Q_manutenzione	-0.1492	-0.0517	0.0539
187	222	Q_manutenzione	-0.2016	0.0058	0.0382
187	36	Q_manutenzione	-0.3365	-0.0113	0.0718
187	29	Q_manutenzione	-0.2149	-0.0089	0.0875
187	130	EQ_X	-1.264	0.2383	0.4338
187	222	EQ_X	-1.4216	0.0428	0.3389
187	36	EQ_X	-1.3374	-0.1441	0.2929
187	29	EQ_X	-1.5229	0.7873	0.3879
187	130	EQ_Y	-0.8178	-1.1059	0.1914
187	222	EQ_Y	-1.4272	0.0107	0.1624
187	36	EQ_Y	-2.0083	0.0267	0.5946
187	29	EQ_Y	-0.6835	-1.0897	0.6237
188	28	DEAD	6.464E-14	-8.397E-15	8.538E-14
188	25	DEAD	-2.435E-14	2.377E-14	1.081E-13
188	223	DEAD	3.498E-15	-1.435E-13	8.538E-14
188	224	DEAD	-2.277E-13	-3.247E-15	6.263E-14
188	28	G1_power station	0.	0.	0.
188	25	G1_power station	0.	0.	0.
188	223	G1_power station	0.	0.	0.
188	224	G1_power station	0.	0.	0.
188	28	G2_power station	-7.2953	0.2245	0.1071
188	25	G2_power station	-15.1585	-0.4862	0.0902
188	223	G2_power station	-9.8035	0.1819	1.2331
188	224	G2_power station	-11.4938	-0.1395	1.2499
188	28	Q_power station	-0.2699	0.0083	0.004
188	25	Q_power station	-0.5609	-0.018	0.0033
188	223	Q_power station	-0.3627	0.0067	0.0456
188	224	Q_power station	-0.4253	-0.0052	0.0462
188	28	Q_neve	-0.7068	0.0227	-0.0257

Table 20: Element Forces - Area Shells, Part 2 of 3

Area	Joint	OutputCase	M11	M22	M12
			KN-m/m	KN-m/m	KN-m/m
188	25	Q_neve	-1.6739	-0.0831	-0.0203
188	223	Q_neve	-0.8441	0.0282	0.1191
188	224	Q_neve	-1.0553	-0.0158	0.1137
188	28	Q_manutenzione	-0.2699	0.0083	0.004
188	25	Q_manutenzione	-0.5609	-0.018	0.0033
188	223	Q_manutenzione	-0.3627	0.0067	0.0456
188	224	Q_manutenzione	-0.4253	-0.0052	0.0462
188	28	EQ_X	5.4864	-0.156	0.8188
188	25	EQ_X	14.0765	0.2847	0.5036
188	223	EQ_X	5.0691	-0.1419	-0.766
188	224	EQ_X	6.8488	0.1033	-0.4508
188	28	EQ_Y	-0.977	0.2332	1.5005
188	25	EQ_Y	1.0519	-1.1811	1.1328
188	223	EQ_Y	-1.3646	0.2634	0.7817
188	224	EQ_Y	-1.0001	-0.1103	1.1494
189	224	DEAD	-1.111E-13	2.496E-14	5.735E-14
189	223	DEAD	3.709E-14	-1.432E-13	1.185E-14
189	225	DEAD	-6.704E-14	1.089E-13	3.460E-14
189	226	DEAD	2.035E-13	6.102E-15	8.010E-14
189	224	G1_power station	0.	0.	0.
189	223	G1_power station	0.	0.	0.
189	225	G1_power station	0.	0.	0.
189	226	G1_power station	0.	0.	0.
189	224	G2_power station	-10.9375	-0.0282	1.0934
189	223	G2_power station	-10.3598	0.0707	1.1934
189	225	G2_power station	-9.8119	-0.084	1.0999
189	226	G2_power station	-9.7266	0.0461	0.9999
189	224	Q_power station	-0.4047	-0.001	0.0405
189	223	Q_power station	-0.3833	0.0026	0.0442
189	225	Q_power station	-0.363	-0.0031	0.0407
189	226	Q_power station	-0.3599	0.0017	0.037
189	224	Q_neve	-0.9869	-0.0021	0.0943
189	223	Q_neve	-0.9125	0.0145	0.1124
189	225	Q_neve	-0.797	-0.0095	0.0998
189	226	Q_neve	-0.79	0.0059	0.0817
189	224	Q_manutenzione	-0.4047	-0.001	0.0405
189	223	Q_manutenzione	-0.3833	0.0026	0.0442
189	225	Q_manutenzione	-0.363	-0.0031	0.0407
189	226	Q_manutenzione	-0.3599	0.0017	0.037
189	224	EQ_X	6.2379	-0.0189	-0.3699
189	223	EQ_X	5.68	-0.0197	-0.6687
189	225	EQ_X	2.8956	0.0293	-0.5807
189	226	EQ_X	2.797	-0.022	-0.2819

Table 20: Element Forces - Area Shells, Part 2 of 3

Area	Joint	OutputCase	M11	M22	M12
			KN-m/m	KN-m/m	KN-m/m
189	224	EQ_Y	-1.1599	-0.1423	0.9812
189	223	EQ_Y	-1.2048	0.2953	0.9771
189	225	EQ_Y	-1.7458	-0.1384	0.9811
189	226	EQ_Y	-1.8153	0.07	0.9852
190	226	DEAD	1.391E-13	-2.158E-14	7.577E-14
190	225	DEAD	-7.404E-14	9.497E-14	1.213E-13
190	227	DEAD	4.809E-14	-6.708E-14	1.213E-13
190	228	DEAD	-1.821E-13	-3.586E-14	7.577E-14
190	226	G1_power station	0.	0.	0.
190	225	G1_power station	0.	0.	0.
190	227	G1_power station	0.	0.	0.
190	228	G1_power station	0.	0.	0.
190	226	G2_power station	-9.7383	0.0438	1.0416
190	225	G2_power station	-9.8001	-0.0816	1.0287
190	227	G2_power station	-8.9883	0.3232	0.9613
190	228	G2_power station	-9.4667	-0.0887	0.9742
190	226	Q_power station	-0.3603	0.0016	0.0385
190	225	Q_power station	-0.3626	-0.003	0.0381
190	227	Q_power station	-0.3326	0.012	0.0356
190	228	Q_power station	-0.3503	-0.0033	0.036
190	226	Q_neve	-0.7913	0.0057	0.0911
190	225	Q_neve	-0.7957	-0.0092	0.0843
190	227	Q_neve	-0.7531	0.0366	0.0746
190	228	Q_neve	-0.8154	-0.0074	0.0813
190	226	Q_manutenzione	-0.3603	0.0016	0.0385
190	225	Q_manutenzione	-0.3626	-0.003	0.0381
190	227	Q_manutenzione	-0.3326	0.012	0.0356
190	228	Q_manutenzione	-0.3503	-0.0033	0.036
190	226	EQ_X	2.85	-0.0114	-0.3245
190	225	EQ_X	2.8425	0.0187	-0.5374
190	227	EQ_X	0.3841	-0.124	-0.5674
190	228	EQ_X	0.243	0.0378	-0.3545
190	226	EQ_Y	-1.807	0.0717	0.9918
190	225	EQ_Y	-1.7541	-0.14	0.9194
190	227	EQ_Y	-1.8702	0.2994	0.9049
190	228	EQ_Y	-1.9329	-0.1033	0.9773
191	228	DEAD	-3.845E-14	-7.587E-15	5.975E-14
191	227	DEAD	1.043E-14	-9.105E-14	7.113E-14
191	29	DEAD	2.445E-13	-2.607E-14	2.563E-14
191	36	DEAD	2.323E-14	-9.531E-14	1.425E-14
191	228	G1_power station	0.	0.	0.
191	227	G1_power station	0.	0.	0.
191	29	G1_power station	0.	0.	0.

Table 20: Element Forces - Area Shells, Part 2 of 3

Area	Joint	OutputCase	M11	M22	M12
			KN-m/m	KN-m/m	KN-m/m
191	36	G1_power station	0.	0.	0.
191	228	G2_power station	-9.9003	-0.1755	0.7302
191	227	G2_power station	-8.5547	0.41	1.0755
191	29	G2_power station	-12.5211	-1.5838	1.9717
191	36	G2_power station	-6.1387	0.2857	1.6265
191	228	Q_power station	-0.3663	-0.0065	0.027
191	227	Q_power station	-0.3165	0.0152	0.0398
191	29	Q_power station	-0.4633	-0.0586	0.073
191	36	Q_power station	-0.2271	0.0106	0.0602
191	228	Q_neve	-0.8691	-0.0181	0.0556
191	227	Q_neve	-0.6994	0.0474	0.081
191	29	Q_neve	-1.3479	-0.1767	0.1906
191	36	Q_neve	-0.5658	0.0274	0.1653
191	228	Q_manutenzione	-0.3663	-0.0065	0.027
191	227	Q_manutenzione	-0.3165	0.0152	0.0398
191	29	Q_manutenzione	-0.4633	-0.0586	0.073
191	36	Q_manutenzione	-0.2271	0.0106	0.0602
191	228	EQ_X	0.055	2.194E-04	-0.3247
191	227	EQ_X	0.5721	-0.0864	-0.655
191	29	EQ_X	-3.1233	0.4672	-0.2673
191	36	EQ_X	-0.6145	5.332E-04	0.063
191	228	EQ_Y	-1.9232	-0.1013	0.7679
191	227	EQ_Y	-1.8799	0.2974	1.1109
191	29	EQ_Y	-1.6567	-1.2843	1.0747
191	36	EQ_Y	-1.6077	0.1068	0.7318
192	9	DEAD	-2.209E-13	-2.741E-13	2.890E-13
192	8	DEAD	-7.606E-14	-4.957E-13	3.345E-13
192	229	DEAD	-2.323E-13	2.150E-13	2.890E-13
192	173	DEAD	-3.377E-13	-1.258E-12	2.435E-13
192	9	G1_power station	0.	0.	0.
192	8	G1_power station	0.	0.	0.
192	229	G1_power station	0.	0.	0.
192	173	G1_power station	0.	0.	0.
192	9	G2_power station	9.4093	9.1224	-0.581
192	8	G2_power station	2.8439	-0.3026	0.1818
192	229	G2_power station	-2.7517	0.0971	0.5302
192	173	G2_power station	-5.0026	1.7921	-0.2326
192	9	Q_power station	0.3481	0.3375	-0.0215
192	8	Q_power station	0.1052	-0.0112	0.0067
192	229	Q_power station	-0.1018	0.0036	0.0196
192	173	Q_power station	-0.1851	0.0663	-0.0086
192	9	Q_neve	0.7969	0.7195	-0.0051
192	8	Q_neve	0.1892	-0.0274	0.061

Table 20: Element Forces - Area Shells, Part 2 of 3

Area	Joint	OutputCase	M11	M22	M12
			KN-m/m	KN-m/m	KN-m/m
192	229	Q_neve	-0.3668	0.0067	0.1021
192	173	Q_neve	-0.5702	0.0468	0.036
192	9	Q_manutenzione	0.3481	0.3375	-0.0215
192	8	Q_manutenzione	0.1052	-0.0112	0.0067
192	229	Q_manutenzione	-0.1018	0.0036	0.0196
192	173	Q_manutenzione	-0.1851	0.0663	-0.0086
192	9	EQ_X	30.9825	4.6726	-2.692
192	8	EQ_X	-8.4677	-2.4363	-3.3951
192	229	EQ_X	14.0458	0.6846	1.4221
192	173	EQ_X	5.516	3.6612	2.1253
192	9	EQ_Y	-6.3504	-23.7141	5.8262
192	8	EQ_Y	-5.8601	3.027	-0.4889
192	229	EQ_Y	-1.0485	-2.1248	0.2659
192	173	EQ_Y	0.6575	8.0515	6.581
193	173	DEAD	-8.058E-13	-1.046E-12	1.365E-13
193	229	DEAD	6.027E-13	2.988E-14	4.550E-14
193	230	DEAD	-1.005E-13	2.968E-13	-1.365E-13
193	174	DEAD	-1.159E-14	-8.574E-13	-4.550E-14
193	173	G1_power station	0.	0.	0.
193	229	G1_power station	0.	0.	0.
193	230	G1_power station	0.	0.	0.
193	174	G1_power station	0.	0.	0.
193	173	G2_power station	-4.734	1.8458	-0.2476
193	229	G2_power station	-2.9103	0.0654	-0.323
193	230	G2_power station	-13.3084	0.5014	-0.0963
193	174	G2_power station	-10.1622	-1.4658	-0.0209
193	173	Q_power station	-0.1752	0.0683	-0.0092
193	229	Q_power station	-0.1077	0.0024	-0.012
193	230	Q_power station	-0.4924	0.0186	-0.0036
193	174	Q_power station	-0.376	-0.0542	-7.738E-04
193	173	Q_neve	-0.5453	0.0518	0.044
193	229	Q_neve	-0.3811	0.0038	0.0328
193	230	Q_neve	-1.3755	0.0545	0.0645
193	174	Q_neve	-1.0745	-0.2607	0.0757
193	173	Q_manutenzione	-0.1752	0.0683	-0.0092
193	229	Q_manutenzione	-0.1077	0.0024	-0.012
193	230	Q_manutenzione	-0.4924	0.0186	-0.0036
193	174	Q_manutenzione	-0.376	-0.0542	-7.738E-04
193	173	EQ_X	7.4361	4.0452	0.406
193	229	EQ_X	11.8704	0.2495	1.1454
193	230	EQ_X	10.0222	-0.3334	-0.1139
193	174	EQ_X	8.0344	1.5388	-0.8533
193	173	EQ_Y	0.6845	8.0569	2.8495

Table 20: Element Forces - Area Shells, Part 2 of 3

Area	Joint	OutputCase	M11	M22	M12
			KN-m/m	KN-m/m	KN-m/m
193	229	EQ_Y	-1.2449	-2.1641	4.0972
193	230	EQ_Y	0.4147	0.8239	3.9378
193	174	EQ_Y	-0.5181	0.369	2.69
194	174	DEAD	1.437E-13	-5.733E-13	-4.387E-14
194	230	DEAD	7.324E-14	2.000E-14	-1.637E-13
194	37	DEAD	-1.634E-13	-4.710E-13	-2.714E-13
194	33	DEAD	-2.112E-13	2.361E-13	-7.272E-14
194	174	G1_power station	0.	0.	0.
194	230	G1_power station	0.	0.	0.
194	37	G1_power station	0.	0.	0.
194	33	G1_power station	0.	0.	0.
194	174	G2_power station	-9.9581	-1.425	2.0124
194	230	G2_power station	-12.9911	0.5649	0.2693
194	37	G2_power station	-29.8755	-1.1557	2.5925
194	33	G2_power station	-18.7663	1.8504	4.3356
194	174	Q_power station	-0.3685	-0.0527	0.0745
194	230	Q_power station	-0.4807	0.0209	0.01
194	37	Q_power station	-1.1054	-0.0428	0.0959
194	33	Q_power station	-0.6944	0.0685	0.1604
194	174	Q_neve	-1.0479	-0.2554	0.288
194	230	Q_neve	-1.3501	0.0596	0.0998
194	37	Q_neve	-2.9664	-0.1215	0.3249
194	33	Q_neve	-1.927	0.1493	0.5131
194	174	Q_manutenzione	-0.3685	-0.0527	0.0745
194	230	Q_manutenzione	-0.4807	0.0209	0.01
194	37	Q_manutenzione	-1.1054	-0.0428	0.0959
194	33	Q_manutenzione	-0.6944	0.0685	0.1604
194	174	EQ_X	7.5595	1.4438	-1.9833
194	230	EQ_X	10.3043	-0.2769	-0.9604
194	37	EQ_X	14.578	0.794	-1.9968
194	33	EQ_X	10.8831	-2.0352	-3.0196
194	174	EQ_Y	-0.422	0.3882	3.048
194	230	EQ_Y	0.3284	0.8067	3.0745
194	37	EQ_Y	-0.1251	-0.3339	2.7238
194	33	EQ_Y	-1.2625	1.1681	2.6972
195	31	DEAD	-3.020E-12	2.626E-13	-4.682E-13
195	24	DEAD	-6.370E-12	-4.766E-13	-4.198E-14
195	231	DEAD	-2.963E-12	-5.450E-13	4.419E-13
195	232	DEAD	-3.515E-12	-3.969E-13	9.453E-14
195	31	G1_power station	0.	0.	0.
195	24	G1_power station	0.	0.	0.
195	231	G1_power station	0.	0.	0.
195	232	G1_power station	0.	0.	0.

Table 20: Element Forces - Area Shells, Part 2 of 3

Area	Joint	OutputCase	M11	M22	M12
			KN-m/m	KN-m/m	KN-m/m
195	31	G2_power station	-27.5365	1.0822	-4.5479
195	24	G2_power station	-61.1578	-2.8858	-4.7654
195	231	G2_power station	-37.9649	0.9243	0.1538
195	232	G2_power station	-44.8646	-0.615	0.3713
195	31	Q_power station	-1.0189	0.04	-0.1683
195	24	Q_power station	-2.2628	-0.1068	-0.1763
195	231	Q_power station	-1.4047	0.0342	0.0057
195	232	Q_power station	-1.66	-0.0228	0.0137
195	31	Q_neve	-2.7159	0.1078	-0.4671
195	24	Q_neve	-6.2914	-0.3151	-0.4766
195	231	Q_neve	-3.6246	0.1015	0.0463
195	232	Q_neve	-4.3595	-0.0629	0.0559
195	31	Q_manutenzione	-1.0189	0.04	-0.1683
195	24	Q_manutenzione	-2.2628	-0.1068	-0.1763
195	231	Q_manutenzione	-1.4047	0.0342	0.0057
195	232	Q_manutenzione	-1.66	-0.0228	0.0137
195	31	EQ_X	-0.4072	-0.0257	-0.0952
195	24	EQ_X	-4.4185	0.8433	0.5414
195	231	EQ_X	2.4852	-0.1551	1.163
195	232	EQ_X	1.6495	0.0146	0.5264
195	31	EQ_Y	2.7072	-0.1697	1.2749
195	24	EQ_Y	3.4688	1.9329	1.7506
195	231	EQ_Y	3.0044	-0.4405	1.6991
195	232	EQ_Y	3.1896	0.1523	1.2235
196	232	DEAD	-2.981E-12	-2.640E-13	3.214E-13
196	231	DEAD	-3.272E-12	-7.006E-13	1.682E-13
196	233	DEAD	-1.400E-12	2.706E-13	2.303E-13
196	234	DEAD	-1.463E-12	-1.204E-13	3.047E-13
196	232	G1_power station	0.	0.	0.
196	231	G1_power station	0.	0.	0.
196	233	G1_power station	0.	0.	0.
196	234	G1_power station	0.	0.	0.
196	232	G2_power station	-42.5139	-0.1449	-0.2457
196	231	G2_power station	-40.3156	0.4541	0.1414
196	233	G2_power station	-38.5286	-0.207	-0.1633
196	234	G2_power station	-38.0135	0.1017	-0.5504
196	232	Q_power station	-1.573	-0.0054	-0.0091
196	231	Q_power station	-1.4917	0.0168	0.0052
196	233	Q_power station	-1.4256	-0.0077	-0.006
196	234	Q_power station	-1.4065	0.0038	-0.0204
196	232	Q_neve	-4.1094	-0.0129	-0.0065
196	231	Q_neve	-3.8746	0.0515	0.0411
196	233	Q_neve	-3.6277	-0.0226	0.0083

Table 20: Element Forces - Area Shells, Part 2 of 3

Area	Joint	OutputCase	M11	M22	M12
			KN-m/m	KN-m/m	KN-m/m
196	234	Q_neve	-3.5735	0.0122	-0.0393
196	232	Q_manutenzione	-1.573	-0.0054	-0.0091
196	231	Q_manutenzione	-1.4917	0.0168	0.0052
196	233	Q_manutenzione	-1.4256	-0.0077	-0.006
196	234	Q_manutenzione	-1.4065	0.0038	-0.0204
196	232	EQ_X	1.9526	0.0753	0.6027
196	231	EQ_X	2.1822	-0.2157	0.9873
196	233	EQ_X	6.6324	0.0383	0.9355
196	234	EQ_X	6.6336	-0.0141	0.5509
196	232	EQ_Y	3.1579	0.146	1.5386
196	231	EQ_Y	3.0361	-0.4341	1.3914
196	233	EQ_Y	2.4074	0.1623	1.4104
196	234	EQ_Y	2.4544	-0.0809	1.5576
197	234	DEAD	-1.496E-12	-9.765E-14	8.585E-14
197	233	DEAD	-1.173E-12	2.068E-13	3.134E-13
197	235	DEAD	-1.348E-12	-7.233E-13	1.769E-13
197	236	DEAD	-2.026E-12	3.619E-14	-5.066E-14
197	234	G1_power station	0.	0.	0.
197	233	G1_power station	0.	0.	0.
197	235	G1_power station	0.	0.	0.
197	236	G1_power station	0.	0.	0.
197	234	G2_power station	-38.0772	0.089	-0.4599
197	233	G2_power station	-38.465	-0.1942	-0.2136
197	235	G2_power station	-34.0181	0.4264	-0.3768
197	236	G2_power station	-35.3368	-0.1584	-0.6232
197	234	Q_power station	-1.4089	0.0033	-0.017
197	233	Q_power station	-1.4232	-0.0072	-0.0079
197	235	Q_power station	-1.2587	0.0158	-0.0139
197	236	Q_power station	-1.3075	-0.0059	-0.0231
197	234	Q_neve	-3.5801	0.0108	-0.0219
197	233	Q_neve	-3.621	-0.0213	-0.0055
197	235	Q_neve	-3.2306	0.0537	-0.0235
197	236	Q_neve	-3.3748	-0.0157	-0.0398
197	234	Q_manutenzione	-1.4089	0.0033	-0.017
197	233	Q_manutenzione	-1.4232	-0.0072	-0.0079
197	235	Q_manutenzione	-1.2587	0.0158	-0.0139
197	236	Q_manutenzione	-1.3075	-0.0059	-0.0231
197	234	EQ_X	6.5497	-0.0309	0.5185
197	233	EQ_X	6.7163	0.055	0.9611
197	235	EQ_X	10.8699	-0.0031	1.0957
197	236	EQ_X	11.7344	-0.0174	0.6531
197	234	EQ_Y	2.4698	-0.0778	1.5537
197	233	EQ_Y	2.392	0.1593	1.4708

Table 20: Element Forces - Area Shells, Part 2 of 3

Area	Joint	OutputCase	M11	M22	M12
			KN-m/m	KN-m/m	KN-m/m
197	235	EQ_Y	1.1242	-0.2448	1.4555
197	236	EQ_Y	0.9935	0.1356	1.5384
198	236	DEAD	-1.282E-12	-1.418E-13	-2.172E-13
198	235	DEAD	-4.290E-13	-2.803E-13	-2.172E-13
198	33	DEAD	-5.310E-13	6.298E-14	-3.082E-13
198	37	DEAD	-2.015E-13	-5.078E-13	-3.082E-13
198	236	G1_power station	0.	0.	0.
198	235	G1_power station	0.	0.	0.
198	33	G1_power station	0.	0.	0.
198	37	G1_power station	0.	0.	0.
198	236	G2_power station	-36.6919	-0.4294	-1.1083
198	235	G2_power station	-32.6629	0.6974	-0.2481
198	33	G2_power station	-39.9904	-2.3945	2.6
198	37	G2_power station	-20.3689	0.7457	1.7398
198	236	Q_power station	-1.3576	-0.0159	-0.041
198	235	Q_power station	-1.2085	0.0258	-0.0092
198	33	Q_power station	-1.4796	-0.0886	0.0962
198	37	Q_power station	-0.7536	0.0276	0.0644
198	236	Q_neve	-3.5217	-0.0451	-0.0919
198	235	Q_neve	-3.0837	0.0831	-0.0103
198	33	Q_neve	-4.1163	-0.2886	0.2982
198	37	Q_neve	-1.9862	0.0745	0.2165
198	236	Q_manutenzione	-1.3576	-0.0159	-0.041
198	235	Q_manutenzione	-1.2085	0.0258	-0.0092
198	33	Q_manutenzione	-1.4796	-0.0886	0.0962
198	37	Q_manutenzione	-0.7536	0.0276	0.0644
198	236	EQ_X	12.7026	0.1763	0.8025
198	235	EQ_X	9.9017	-0.1968	1.2173
198	33	EQ_X	22.8601	0.3602	-0.7996
198	37	EQ_X	9.2506	-0.2715	-1.2145
198	236	EQ_Y	0.7563	0.0881	1.6614
198	235	EQ_Y	1.3614	-0.1974	1.2808
198	33	EQ_Y	-2.6497	0.8907	1.7926
198	37	EQ_Y	0.5235	-0.2042	2.1733
199	18	DEAD	8.714E-13	-4.759E-13	-2.018E-14
199	17	DEAD	-4.712E-13	-6.220E-13	-1.067E-13
199	237	DEAD	4.619E-13	2.066E-13	-1.112E-13
199	203	DEAD	-6.191E-13	-1.361E-12	2.118E-13
199	18	G1_power station	0.	0.	0.
199	17	G1_power station	0.	0.	0.
199	237	G1_power station	0.	0.	0.
199	203	G1_power station	0.	0.	0.
199	18	G2_power station	9.1549	9.6171	-1.197

Table 20: Element Forces - Area Shells, Part 2 of 3

Area	Joint	OutputCase	M11	M22	M12
			KN-m/m	KN-m/m	KN-m/m
199	17	G2_power station	3.3006	-0.312	-0.4619
199	237	G2_power station	-2.445	0.1947	-0.4287
199	203	G2_power station	-5.7899	1.8976	-1.1638
199	18	Q_power station	0.3387	0.3558	-0.0443
199	17	Q_power station	0.1221	-0.0115	-0.0171
199	237	Q_power station	-0.0905	0.0072	-0.0159
199	203	Q_power station	-0.2142	0.0702	-0.0431
199	18	Q_neve	0.7604	0.7895	-0.0791
199	17	Q_neve	0.2308	-0.0285	-0.0176
199	237	Q_neve	-0.3669	0.0176	-0.0118
199	203	Q_neve	-0.6897	0.0762	-0.0734
199	18	Q_manutenzione	0.3387	0.3558	-0.0443
199	17	Q_manutenzione	0.1221	-0.0115	-0.0171
199	237	Q_manutenzione	-0.0905	0.0072	-0.0159
199	203	Q_manutenzione	-0.2142	0.0702	-0.0431
199	18	EQ_X	-30.4394	-4.4223	2.3232
199	17	EQ_X	8.2158	2.3441	2.9298
199	237	EQ_X	-13.54	-0.6824	-2.1409
199	203	EQ_X	-4.6577	-3.1281	-2.7475
199	18	EQ_Y	5.9981	22.7949	-5.4842
199	17	EQ_Y	5.6894	-2.728	0.1822
199	237	EQ_Y	0.1798	1.8273	-0.5684
199	203	EQ_Y	-1.1219	-7.9882	-6.2348
200	203	DEAD	2.628E-13	-1.233E-12	4.463E-15
200	237	DEAD	-7.734E-14	1.692E-13	4.997E-14
200	238	DEAD	-3.295E-14	1.815E-14	2.320E-13
200	204	DEAD	3.663E-13	-6.158E-13	1.865E-13
200	203	G1_power station	0.	0.	0.
200	237	G1_power station	0.	0.	0.
200	238	G1_power station	0.	0.	0.
200	204	G1_power station	0.	0.	0.
200	203	G2_power station	-5.5034	1.9549	-1.766
200	237	G2_power station	-2.7005	0.1436	-1.6344
200	238	G2_power station	-10.1714	-0.0182	-2.1164
200	204	G2_power station	-9.816	-0.7906	-2.248
200	203	Q_power station	-0.2036	0.0723	-0.0653
200	237	Q_power station	-0.0999	0.0053	-0.0605
200	238	Q_power station	-0.3763	-6.750E-04	-0.0783
200	204	Q_power station	-0.3632	-0.0293	-0.0832
200	203	Q_neve	-0.6637	0.0814	-0.1282
200	237	Q_neve	-0.3905	0.0129	-0.1199
200	238	Q_neve	-1.1351	-0.0019	-0.1631
200	204	Q_neve	-1.1214	-0.1791	-0.1714

Table 20: Element Forces - Area Shells, Part 2 of 3

Area	Joint	OutputCase	M11	M22	M12
			KN-m/m	KN-m/m	KN-m/m
200	203	Q_manutenzione	-0.2036	0.0723	-0.0653
200	237	Q_manutenzione	-0.0999	0.0053	-0.0605
200	238	Q_manutenzione	-0.3763	-6.750E-04	-0.0783
200	204	Q_manutenzione	-0.3632	-0.0293	-0.0832
200	203	EQ_X	-6.8354	-3.5636	-1.1726
200	237	EQ_X	-11.1309	-0.2006	-1.6051
200	238	EQ_X	-7.0899	0.0182	-0.6156
200	204	EQ_X	-6.8449	-1.1674	-0.1831
200	203	EQ_Y	-1.1716	-7.9981	-2.7245
200	237	EQ_Y	0.4341	1.8782	-3.9784
200	238	EQ_Y	-1.6849	-0.7124	-3.6754
200	204	EQ_Y	-0.3268	-0.4176	-2.4215
201	204	DEAD	3.214E-13	-8.077E-13	2.627E-13
201	238	DEAD	8.687E-13	3.692E-14	3.082E-13
201	239	DEAD	-7.024E-13	-4.664E-13	2.627E-13
201	205	DEAD	-3.827E-13	-7.594E-13	2.172E-13
201	204	G1_power station	0.	0.	0.
201	238	G1_power station	0.	0.	0.
201	239	G1_power station	0.	0.	0.
201	205	G1_power station	0.	0.	0.
201	204	G2_power station	-9.9868	-0.8247	-2.0943
201	238	G2_power station	-9.9361	0.0288	-2.2098
201	239	G2_power station	-13.4809	-0.0229	-2.004
201	205	G2_power station	-12.7743	-1.5564	-1.8886
201	204	Q_power station	-0.3695	-0.0305	-0.0775
201	238	Q_power station	-0.3676	0.0011	-0.0818
201	239	Q_power station	-0.4988	-8.489E-04	-0.0741
201	205	Q_power station	-0.4726	-0.0576	-0.0699
201	204	Q_neve	-1.137	-0.1823	-0.1575
201	238	Q_neve	-1.1134	0.0025	-0.1693
201	239	Q_neve	-1.4754	-0.0025	-0.1486
201	205	Q_neve	-1.426	-0.2584	-0.1368
201	204	Q_manutenzione	-0.3695	-0.0305	-0.0775
201	238	Q_manutenzione	-0.3676	0.0011	-0.0818
201	239	Q_manutenzione	-0.4988	-8.489E-04	-0.0741
201	205	Q_manutenzione	-0.4726	-0.0576	-0.0699
201	204	EQ_X	-6.6088	-1.1202	-0.0074
201	238	EQ_X	-7.3703	-0.0378	-0.0266
201	239	EQ_X	-5.7446	0.0027	0.2177
201	205	EQ_X	-5.4835	-0.5301	0.2369
201	204	EQ_Y	-0.3658	-0.4254	-2.6421
201	238	EQ_Y	-1.641	-0.7036	-2.6058
201	239	EQ_Y	-1.7911	0.2135	-2.1907

Table 20: Element Forces - Area Shells, Part 2 of 3

Area	Joint	OutputCase	M11	M22	M12
			KN-m/m	KN-m/m	KN-m/m
201	205	EQ_Y	-1.1013	-1.6714	-2.227
202	205	DEAD	-4.514E-13	-9.116E-13	3.214E-13
202	239	DEAD	-2.194E-13	-1.514E-13	2.470E-13
202	240	DEAD	-4.287E-13	2.942E-13	2.303E-13
202	206	DEAD	-4.242E-13	-1.175E-12	3.835E-13
202	205	G1_power station	0.	0.	0.
202	239	G1_power station	0.	0.	0.
202	240	G1_power station	0.	0.	0.
202	206	G1_power station	0.	0.	0.
202	205	G2_power station	-12.8075	-1.5631	-1.5527
202	239	G2_power station	-13.4157	-0.0099	-1.6607
202	240	G2_power station	-15.41	0.0326	-1.2318
202	206	G2_power station	-14.3451	-1.8603	-1.1238
202	205	Q_power station	-0.4739	-0.0578	-0.0575
202	239	Q_power station	-0.4964	-3.663E-04	-0.0614
202	240	Q_power station	-0.5702	0.0012	-0.0456
202	206	Q_power station	-0.5308	-0.0688	-0.0416
202	205	Q_neve	-1.4291	-0.259	-0.1042
202	239	Q_neve	-1.469	-0.0012	-0.1133
202	240	Q_neve	-1.6654	0.0034	-0.07
202	206	Q_neve	-1.578	-0.2947	-0.0609
202	205	Q_manutenzione	-0.4739	-0.0578	-0.0575
202	239	Q_manutenzione	-0.4964	-3.663E-04	-0.0614
202	240	Q_manutenzione	-0.5702	0.0012	-0.0456
202	206	Q_manutenzione	-0.5308	-0.0688	-0.0416
202	205	EQ_X	-5.4596	-0.5253	0.3563
202	239	EQ_X	-5.7851	-0.0054	0.4104
202	240	EQ_X	-4.4945	0.0013	0.5237
202	206	EQ_X	-4.3562	-0.2797	0.4696
202	205	EQ_Y	-1.0993	-1.671	-1.7659
202	239	EQ_Y	-1.8035	0.2111	-1.8726
202	240	EQ_Y	-2.001	-0.0636	-1.5093
202	206	EQ_Y	-1.2729	-1.0246	-1.4027
203	206	DEAD	-1.447E-14	-1.087E-12	4.694E-13
203	240	DEAD	-8.706E-13	2.334E-13	4.072E-13
203	241	DEAD	5.202E-13	-3.250E-13	4.239E-13
203	207	DEAD	-7.910E-13	-1.875E-13	4.072E-13
203	206	G1_power station	0.	0.	0.
203	240	G1_power station	0.	0.	0.
203	241	G1_power station	0.	0.	0.
203	207	G1_power station	0.	0.	0.
203	206	G2_power station	-14.3603	-1.8633	-0.6203
203	240	G2_power station	-15.3516	0.0443	-0.69

Table 20: Element Forces - Area Shells, Part 2 of 3

Area	Joint	OutputCase	M11	M22	M12
			KN-m/m	KN-m/m	KN-m/m
203	241	G2_power station	-17.406	-0.1657	-0.0283
203	207	G2_power station	-15.5008	-2.0007	0.0414
203	206	Q_power station	-0.5313	-0.0689	-0.023
203	240	Q_power station	-0.568	0.0016	-0.0255
203	241	Q_power station	-0.644	-0.0061	-0.001
203	207	Q_power station	-0.5735	-0.074	0.0015
203	206	Q_neve	-1.5793	-0.295	-0.0101
203	240	Q_neve	-1.6595	0.0046	-0.0144
203	241	Q_neve	-1.8469	-0.0176	0.0533
203	207	Q_neve	-1.6728	-0.311	0.0576
203	206	Q_manutenzione	-0.5313	-0.0689	-0.023
203	240	Q_manutenzione	-0.568	0.0016	-0.0255
203	241	Q_manutenzione	-0.644	-0.0061	-0.001
203	207	Q_manutenzione	-0.5735	-0.074	0.0015
203	206	EQ_X	-4.345	-0.2775	0.5387
203	240	EQ_X	-4.5119	-0.0022	0.613
203	241	EQ_X	-3.3545	-0.0043	0.6725
203	207	EQ_X	-3.2761	-0.1407	0.5982
203	206	EQ_Y	-1.2703	-1.0241	-1.1079
203	240	EQ_Y	-2.0062	-0.0646	-1.1206
203	241	EQ_Y	-2.1497	-0.0085	-0.7755
203	207	EQ_Y	-1.3906	-1.0795	-0.7627
204	207	DEAD	1.646E-13	-4.155E-13	3.073E-13
204	241	DEAD	-2.528E-13	-2.113E-13	9.641E-14
204	242	DEAD	-5.521E-13	3.695E-13	3.425E-14
204	208	DEAD	-1.356E-12	-2.682E-13	3.239E-13
204	207	G1_power station	0.	0.	0.
204	241	G1_power station	0.	0.	0.
204	242	G1_power station	0.	0.	0.
204	208	G1_power station	0.	0.	0.
204	207	G2_power station	-15.5161	-2.0038	1.076
204	241	G2_power station	-17.2516	-0.1348	0.6634
204	242	G2_power station	-22.5321	0.7535	1.9986
204	208	G2_power station	-17.9809	-2.7156	2.4111
204	207	Q_power station	-0.5741	-0.0741	0.0398
204	241	Q_power station	-0.6383	-0.005	0.0245
204	242	Q_power station	-0.8337	0.0279	0.0739
204	208	Q_power station	-0.6653	-0.1005	0.0892
204	207	Q_neve	-1.6735	-0.3112	0.1644
204	241	Q_neve	-1.8319	-0.0146	0.1232
204	242	Q_neve	-2.3244	0.0809	0.2583
204	208	Q_neve	-1.8897	-0.3764	0.2994
204	207	Q_manutenzione	-0.5741	-0.0741	0.0398

Table 20: Element Forces - Area Shells, Part 2 of 3

Area	Joint	OutputCase	M11	M22	M12
			KN-m/m	KN-m/m	KN-m/m
204	241	Q_manutenzione	-0.6383	-0.005	0.0245
204	242	Q_manutenzione	-0.8337	0.0279	0.0739
204	208	Q_manutenzione	-0.6653	-0.1005	0.0892
204	207	EQ_X	-3.2582	-0.1371	0.6913
204	241	EQ_X	-3.3711	-0.0076	0.6666
204	242	EQ_X	-2.3373	0.0829	0.6912
204	208	EQ_X	-2.3029	0.2732	0.7158
204	207	EQ_Y	-1.4058	-1.0825	-0.465
204	241	EQ_Y	-2.1267	-0.0039	-0.3573
204	242	EQ_Y	-2.4509	0.0204	0.0586
204	208	EQ_Y	-1.4264	-1.6262	-0.0491
205	208	DEAD	-4.366E-13	2.926E-13	8.843E-14
205	242	DEAD	-1.035E-12	-8.260E-14	8.843E-14
205	38	DEAD	-1.199E-12	-1.061E-12	4.293E-14
205	34	DEAD	-1.979E-12	9.298E-13	4.293E-14
205	208	G1_power station	0.	0.	0.
205	242	G1_power station	0.	0.	0.
205	38	G1_power station	0.	0.	0.
205	34	G1_power station	0.	0.	0.
205	208	G2_power station	-17.2346	-2.5664	5.4924
205	242	G2_power station	-22.4861	0.7627	3.1507
205	38	G2_power station	-41.902	-1.7909	6.4096
205	34	G2_power station	-28.7932	3.5871	8.7512
205	208	Q_power station	-0.6377	-0.095	0.2032
205	242	Q_power station	-0.832	0.0282	0.1166
205	38	Q_power station	-1.5504	-0.0663	0.2372
205	34	Q_power station	-1.0653	0.1327	0.3238
205	208	Q_neve	-1.808	-0.36	0.616
205	242	Q_neve	-2.326	0.0805	0.3658
205	38	Q_neve	-4.1962	-0.1882	0.6809
205	34	Q_neve	-2.9582	0.3515	0.9312
205	208	Q_manutenzione	-0.6377	-0.095	0.2032
205	242	Q_manutenzione	-0.832	0.0282	0.1166
205	38	Q_manutenzione	-1.5504	-0.0663	0.2372
205	34	Q_manutenzione	-1.0653	0.1327	0.3238
205	208	EQ_X	-2.1776	0.2982	0.7673
205	242	EQ_X	-2.4383	0.0627	0.6481
205	38	EQ_X	-1.4248	-0.2292	0.4964
205	34	EQ_X	-2.1697	1.2931	0.6156
205	208	EQ_Y	-1.4294	-1.6268	0.5416
205	242	EQ_Y	-2.3955	0.0315	0.4693
205	38	EQ_Y	-3.5391	0.0033	1.1324
205	34	EQ_Y	-1.493	-1.5377	1.2047

Table 20: Element Forces - Area Shells, Part 2 of 3

Area	Joint	OutputCase	M11	M22	M12
			KN-m/m	KN-m/m	KN-m/m
206	32	DEAD	-1.032E-12	-1.771E-13	-8.529E-13
206	23	DEAD	-3.996E-12	-3.701E-13	-8.984E-13
206	243	DEAD	-1.805E-12	-7.687E-13	-6.709E-13
206	244	DEAD	-3.177E-12	4.489E-13	-6.254E-13
206	32	G1_power station	0.	0.	0.
206	23	G1_power station	0.	0.	0.
206	243	G1_power station	0.	0.	0.
206	244	G1_power station	0.	0.	0.
206	32	G2_power station	-20.3689	0.7457	-1.7398
206	23	G2_power station	-39.9904	-2.3945	-2.6
206	243	G2_power station	-32.6629	0.6974	0.2481
206	244	G2_power station	-36.6919	-0.4294	1.1083
206	32	Q_power station	-0.7536	0.0276	-0.0644
206	23	Q_power station	-1.4796	-0.0886	-0.0962
206	243	Q_power station	-1.2085	0.0258	0.0092
206	244	Q_power station	-1.3576	-0.0159	0.041
206	32	Q_neve	-1.9862	0.0745	-0.2165
206	23	Q_neve	-4.1163	-0.2886	-0.2982
206	243	Q_neve	-3.0837	0.0831	0.0103
206	244	Q_neve	-3.5217	-0.0451	0.0919
206	32	Q_manutenzione	-0.7536	0.0276	-0.0644
206	23	Q_manutenzione	-1.4796	-0.0886	-0.0962
206	243	Q_manutenzione	-1.2085	0.0258	0.0092
206	244	Q_manutenzione	-1.3576	-0.0159	0.041
206	32	EQ_X	9.2506	-0.2715	1.2145
206	23	EQ_X	22.8601	0.3602	0.7996
206	243	EQ_X	9.9017	-0.1968	-1.2173
206	244	EQ_X	12.7026	0.1763	-0.8025
206	32	EQ_Y	-0.5235	0.2042	2.1733
206	23	EQ_Y	2.6497	-0.8907	1.7926
206	243	EQ_Y	-1.3614	0.1974	1.2808
206	244	EQ_Y	-0.7563	-0.0881	1.6614
207	244	DEAD	-2.102E-12	7.375E-13	-8.538E-13
207	243	DEAD	-1.757E-12	-8.451E-13	-8.827E-13
207	245	DEAD	-2.068E-12	6.351E-13	-8.538E-13
207	246	DEAD	-1.586E-12	-2.649E-13	-7.462E-13
207	244	G1_power station	0.	0.	0.
207	243	G1_power station	0.	0.	0.
207	245	G1_power station	0.	0.	0.
207	246	G1_power station	0.	0.	0.
207	244	G2_power station	-35.3368	-0.1584	0.6232
207	243	G2_power station	-34.0181	0.4264	0.3768
207	245	G2_power station	-38.465	-0.1942	0.2136

Table 20: Element Forces - Area Shells, Part 2 of 3

Area	Joint	OutputCase	M11	M22	M12
			KN-m/m	KN-m/m	KN-m/m
207	246	G2_power station	-38.0772	0.089	0.4599
207	244	Q_power station	-1.3075	-0.0059	0.0231
207	243	Q_power station	-1.2587	0.0158	0.0139
207	245	Q_power station	-1.4232	-0.0072	0.0079
207	246	Q_power station	-1.4089	0.0033	0.017
207	244	Q_neve	-3.3748	-0.0157	0.0398
207	243	Q_neve	-3.2306	0.0537	0.0235
207	245	Q_neve	-3.621	-0.0213	0.0055
207	246	Q_neve	-3.5801	0.0108	0.0219
207	244	Q_manutenzione	-1.3075	-0.0059	0.0231
207	243	Q_manutenzione	-1.2587	0.0158	0.0139
207	245	Q_manutenzione	-1.4232	-0.0072	0.0079
207	246	Q_manutenzione	-1.4089	0.0033	0.017
207	244	EQ_X	11.7344	-0.0174	-0.6531
207	243	EQ_X	10.8699	-0.0031	-1.0957
207	245	EQ_X	6.7163	0.055	-0.9611
207	246	EQ_X	6.5497	-0.0309	-0.5185
207	244	EQ_Y	-0.9935	-0.1356	1.5384
207	243	EQ_Y	-1.1242	0.2448	1.4555
207	245	EQ_Y	-2.392	-0.1593	1.4708
207	246	EQ_Y	-2.4698	0.0778	1.5537
208	246	DEAD	-1.543E-12	-4.853E-13	-8.477E-13
208	245	DEAD	-1.923E-12	8.135E-13	-6.657E-13
208	247	DEAD	-7.692E-13	-9.859E-13	-9.387E-13
208	248	DEAD	-2.833E-12	6.315E-13	-1.121E-12
208	246	G1_power station	0.	0.	0.
208	245	G1_power station	0.	0.	0.
208	247	G1_power station	0.	0.	0.
208	248	G1_power station	0.	0.	0.
208	246	G2_power station	-38.0135	0.1017	0.5504
208	245	G2_power station	-38.5286	-0.207	0.1633
208	247	G2_power station	-40.3156	0.4541	-0.1414
208	248	G2_power station	-42.5139	-0.1449	0.2457
208	246	Q_power station	-1.4065	0.0038	0.0204
208	245	Q_power station	-1.4256	-0.0077	0.006
208	247	Q_power station	-1.4917	0.0168	-0.0052
208	248	Q_power station	-1.573	-0.0054	0.0091
208	246	Q_neve	-3.5735	0.0122	0.0393
208	245	Q_neve	-3.6277	-0.0226	-0.0083
208	247	Q_neve	-3.8746	0.0515	-0.0411
208	248	Q_neve	-4.1094	-0.0129	0.0065
208	246	Q_manutenzione	-1.4065	0.0038	0.0204
208	245	Q_manutenzione	-1.4256	-0.0077	0.006

Table 20: Element Forces - Area Shells, Part 2 of 3

Area	Joint	OutputCase	M11	M22	M12
			KN-m/m	KN-m/m	KN-m/m
208	247	Q_manutenzione	-1.4917	0.0168	-0.0052
208	248	Q_manutenzione	-1.573	-0.0054	0.0091
208	246	EQ_X	6.6336	-0.0141	-0.5509
208	245	EQ_X	6.6324	0.0383	-0.9355
208	247	EQ_X	2.1822	-0.2157	-0.9873
208	248	EQ_X	1.9526	0.0753	-0.6027
208	246	EQ_Y	-2.4544	0.0809	1.5576
208	245	EQ_Y	-2.4074	-0.1623	1.4104
208	247	EQ_Y	-3.0361	0.4341	1.3914
208	248	EQ_Y	-3.1579	-0.146	1.5386
209	248	DEAD	-1.680E-12	4.943E-13	-1.343E-12
209	247	DEAD	-1.356E-12	-8.955E-13	-1.389E-12
209	34	DEAD	-4.297E-12	5.171E-13	-7.061E-13
209	38	DEAD	-2.863E-13	-1.009E-12	-6.606E-13
209	248	G1_power station	0.	0.	0.
209	247	G1_power station	0.	0.	0.
209	34	G1_power station	0.	0.	0.
209	38	G1_power station	0.	0.	0.
209	248	G2_power station	-44.8646	-0.615	-0.3713
209	247	G2_power station	-37.9649	0.9243	-0.1538
209	34	G2_power station	-61.1578	-2.8858	4.7654
209	38	G2_power station	-27.5365	1.0822	4.5479
209	248	Q_power station	-1.66	-0.0228	-0.0137
209	247	Q_power station	-1.4047	0.0342	-0.0057
209	34	Q_power station	-2.2628	-0.1068	0.1763
209	38	Q_power station	-1.0189	0.04	0.1683
209	248	Q_neve	-4.3595	-0.0629	-0.0559
209	247	Q_neve	-3.6246	0.1015	-0.0463
209	34	Q_neve	-6.2914	-0.3151	0.4766
209	38	Q_neve	-2.7159	0.1078	0.4671
209	248	Q_manutenzione	-1.66	-0.0228	-0.0137
209	247	Q_manutenzione	-1.4047	0.0342	-0.0057
209	34	Q_manutenzione	-2.2628	-0.1068	0.1763
209	38	Q_manutenzione	-1.0189	0.04	0.1683
209	248	EQ_X	1.6495	0.0146	-0.5264
209	247	EQ_X	2.4852	-0.1551	-1.163
209	34	EQ_X	-4.4185	0.8433	-0.5414
209	38	EQ_X	-0.4072	-0.0257	0.0952
209	248	EQ_Y	-3.1896	-0.1523	1.2235
209	247	EQ_Y	-3.0044	0.4405	1.6991
209	34	EQ_Y	-3.4688	-1.9329	1.7506
209	38	EQ_Y	-2.7072	0.1697	1.2749

Table 20: Element Forces - Area Shells, Part 3 of 3

Table 20: Element Forces - Area Shells, Part 3 of 3

Area	Joint	OutputCase	V13	V23
			KN/m	KN/m
1	7	DEAD	1.210E-12	3.404E-12
1	8	DEAD	1.210E-12	-1.082E-12
1	9	DEAD	1.526E-12	2.444E-13
1	10	DEAD	1.526E-12	1.446E-12
1	7	G1_power station	0.	0.
1	8	G1_power station	0.	0.
1	9	G1_power station	0.	0.
1	10	G1_power station	0.	0.
1	7	G2_power station	-6.56	-7.51
1	8	G2_power station	-6.56	-19.99
1	9	G2_power station	-20.18	-19.99
1	10	G2_power station	-20.18	-7.51
1	7	Q_power station	-0.24	-0.28
1	8	Q_power station	-0.24	-0.74
1	9	Q_power station	-0.75	-0.74
1	10	Q_power station	-0.75	-0.28
1	7	Q_neve	-0.46	-0.5
1	8	Q_neve	-0.46	-1.62
1	9	Q_neve	-1.73	-1.62
1	10	Q_neve	-1.73	-0.5
1	7	Q_manutenzione	-0.24	-0.28
1	8	Q_manutenzione	-0.24	-0.74
1	9	Q_manutenzione	-0.75	-0.74
1	10	Q_manutenzione	-0.75	-0.28
1	7	EQ_X	-35.13	18.67
1	8	EQ_X	-35.13	26.19
1	9	EQ_X	41.95	26.19
1	10	EQ_X	41.95	18.67
1	7	EQ_Y	21.74	-36.54
1	8	EQ_Y	21.74	51.61
1	9	EQ_Y	29.73	51.61
1	10	EQ_Y	29.73	-36.54
2	11	DEAD	1.210E-12	1.134E-14
2	12	DEAD	1.210E-12	-1.306E-12
2	13	DEAD	1.526E-12	-2.201E-12
2	14	DEAD	1.526E-12	1.854E-12
2	11	G1_power station	0.	0.
2	12	G1_power station	0.	0.
2	13	G1_power station	0.	0.
2	14	G1_power station	0.	0.

Table 20: Element Forces - Area Shells, Part 3 of 3

Area	Joint	OutputCase	V13	V23
			KN/m	KN/m
2	11	G2_power station	7.59	-20.67
2	12	G2_power station	7.59	-8.14
2	13	G2_power station	19.64	-8.14
2	14	G2_power station	19.64	-20.67
2	11	Q_power station	0.28	-0.76
2	12	Q_power station	0.28	-0.3
2	13	Q_power station	0.73	-0.3
2	14	Q_power station	0.73	-0.76
2	11	Q_neve	0.56	-1.72
2	12	Q_neve	0.56	-0.6
2	13	Q_neve	1.65	-0.6
2	14	Q_neve	1.65	-1.72
2	11	Q_manutenzione	0.28	-0.76
2	12	Q_manutenzione	0.28	-0.3
2	13	Q_manutenzione	0.73	-0.3
2	14	Q_manutenzione	0.73	-0.76
2	11	EQ_X	-35.23	-26.73
2	12	EQ_X	-35.23	-19.31
2	13	EQ_X	42.55	-19.31
2	14	EQ_X	42.55	-26.73
2	11	EQ_Y	-21.22	49.19
2	12	EQ_Y	-21.22	-35.36
2	13	EQ_Y	-28.55	-35.36
2	14	EQ_Y	-28.55	49.19
3	15	DEAD	-1.065E-12	-3.970E-12
3	16	DEAD	-7.411E-13	-3.970E-12
3	17	DEAD	-4.225E-12	1.383E-13
3	18	DEAD	1.471E-12	1.383E-13
3	15	G1_power station	0.	0.
3	16	G1_power station	0.	0.
3	17	G1_power station	0.	0.
3	18	G1_power station	0.	0.
3	15	G2_power station	19.64	8.14
3	16	G2_power station	7.59	8.14
3	17	G2_power station	7.59	20.67
3	18	G2_power station	19.64	20.67
3	15	Q_power station	0.73	0.3
3	16	Q_power station	0.28	0.3
3	17	Q_power station	0.28	0.76
3	18	Q_power station	0.73	0.76
3	15	Q_neve	1.65	0.6
3	16	Q_neve	0.56	0.6
3	17	Q_neve	0.56	1.72

Table 20: Element Forces - Area Shells, Part 3 of 3

Area	Joint	OutputCase	V13	V23
			KN/m	KN/m
3	18	Q_neve	1.65	1.72
3	15	Q_manutenzione	0.73	0.3
3	16	Q_manutenzione	0.28	0.3
3	17	Q_manutenzione	0.28	0.76
3	18	Q_manutenzione	0.73	0.76
3	15	EQ_X	42.55	19.31
3	16	EQ_X	-35.23	19.31
3	17	EQ_X	-35.23	26.73
3	18	EQ_X	42.55	26.73
3	15	EQ_Y	28.55	-35.36
3	16	EQ_Y	21.22	-35.36
3	17	EQ_Y	21.22	49.19
3	18	EQ_Y	28.55	49.19
4	19	DEAD	9.790E-13	1.824E-13
4	20	DEAD	9.790E-13	2.772E-12
4	21	DEAD	6.630E-13	1.824E-13
4	22	DEAD	6.630E-13	8.764E-13
4	19	G1_power station	0.	0.
4	20	G1_power station	0.	0.
4	21	G1_power station	0.	0.
4	22	G1_power station	0.	0.
4	19	G2_power station	-6.56	19.99
4	20	G2_power station	-6.56	7.51
4	21	G2_power station	-20.18	7.51
4	22	G2_power station	-20.18	19.99
4	19	Q_power station	-0.24	0.74
4	20	Q_power station	-0.24	0.28
4	21	Q_power station	-0.75	0.28
4	22	Q_power station	-0.75	0.74
4	19	Q_neve	-0.46	1.62
4	20	Q_neve	-0.46	0.5
4	21	Q_neve	-1.73	0.5
4	22	Q_neve	-1.73	1.62
4	19	Q_manutenzione	-0.24	0.74
4	20	Q_manutenzione	-0.24	0.28
4	21	Q_manutenzione	-0.75	0.28
4	22	Q_manutenzione	-0.75	0.74
4	19	EQ_X	-35.13	-26.19
4	20	EQ_X	-35.13	-18.67
4	21	EQ_X	41.95	-18.67
4	22	EQ_X	41.95	-26.19
4	19	EQ_Y	-21.74	51.61
4	20	EQ_Y	-21.74	-36.54

Table 20: Element Forces - Area Shells, Part 3 of 3

Area	Joint	OutputCase	V13	V23
			KN/m	KN/m
4	21	EQ_Y	-29.73	-36.54
4	22	EQ_Y	-29.73	51.61
29	61	DEAD	2.798E-13	1.148E-13
29	39	DEAD	-1.808E-13	1.611E-13
29	40	DEAD	3.588E-13	2.728E-13
29	6	DEAD	1.352E-13	-1.154E-13
29	61	G1_power station	0.	0.
29	39	G1_power station	0.	0.
29	40	G1_power station	0.	0.
29	6	G1_power station	0.	0.
29	61	G2_power station	20.81	14.38
29	39	G2_power station	2.2	14.38
29	40	G2_power station	2.2	32.02
29	6	G2_power station	20.81	32.02
29	61	Q_power station	0.77	0.53
29	39	Q_power station	8.152E-02	0.53
29	40	Q_power station	8.152E-02	1.18
29	6	Q_power station	0.77	1.18
29	61	Q_neve	1.78	1.43
29	39	Q_neve	7.909E-02	1.43
29	40	Q_neve	7.909E-02	3.08
29	6	Q_neve	1.78	3.08
29	61	Q_manutenzione	0.77	0.53
29	39	Q_manutenzione	8.152E-02	0.53
29	40	Q_manutenzione	8.152E-02	1.18
29	6	Q_manutenzione	0.77	1.18
29	61	EQ_X	43.88	21.93
29	39	EQ_X	-20.81	21.93
29	40	EQ_X	-20.81	24.3
29	6	EQ_X	43.88	24.3
29	61	EQ_Y	25.01	-42.94
29	39	EQ_Y	14.58	-42.94
29	40	EQ_Y	14.58	59.04
29	6	EQ_Y	25.01	59.04
30	39	DEAD	4.870E-13	-3.257E-14
30	41	DEAD	-3.647E-13	3.529E-13
30	42	DEAD	-1.450E-13	2.834E-13
30	40	DEAD	2.278E-13	7.874E-13
30	39	G1_power station	0.	0.
30	41	G1_power station	0.	0.
30	42	G1_power station	0.	0.
30	40	G1_power station	0.	0.
30	39	G2_power station	1.69	12.69

Table 20: Element Forces - Area Shells, Part 3 of 3

Area	Joint	OutputCase	V13	V23
			KN/m	KN/m
30	41	G2_power station	-2.93	12.69
30	42	G2_power station	-2.93	5.77
30	40	G2_power station	1.69	5.77
30	39	Q_power station	6.241E-02	0.47
30	41	Q_power station	-0.11	0.47
30	42	Q_power station	-0.11	0.21
30	40	Q_power station	6.241E-02	0.21
30	39	Q_neve	2.361E-02	1.23
30	41	Q_neve	-0.4	1.23
30	42	Q_neve	-0.4	0.61
30	40	Q_neve	2.361E-02	0.61
30	39	Q_manutenzione	6.241E-02	0.47
30	41	Q_manutenzione	-0.11	0.47
30	42	Q_manutenzione	-0.11	0.21
30	40	Q_manutenzione	6.241E-02	0.21
30	39	EQ_X	-18.56	1.52
30	41	EQ_X	-1.72	1.52
30	42	EQ_X	-1.72	-4.08
30	40	EQ_X	-18.56	-4.08
30	39	EQ_Y	3.79	13.85
30	41	EQ_Y	-1.	13.85
30	42	EQ_Y	-1.	3.12
30	40	EQ_Y	3.79	3.12
31	41	DEAD	-1.669E-14	2.892E-14
31	43	DEAD	6.230E-14	2.892E-14
31	44	DEAD	6.230E-14	1.079E-13
31	42	DEAD	-1.669E-14	1.079E-13
31	41	G1_power station	0.	0.
31	43	G1_power station	0.	0.
31	44	G1_power station	0.	0.
31	42	G1_power station	0.	0.
31	41	G2_power station	-1.86	-6.764E-13
31	43	G2_power station	-1.86	-6.764E-13
31	44	G2_power station	-1.86	-2.814E-13
31	42	G2_power station	-1.86	-2.814E-13
31	41	Q_power station	-6.866E-02	-8.068E-15
31	43	Q_power station	-6.866E-02	-8.068E-15
31	44	Q_power station	-6.866E-02	1.662E-14
31	42	Q_power station	-6.866E-02	1.662E-14
31	41	Q_neve	-0.3	-1.558E-14
31	43	Q_neve	-0.3	-1.558E-14
31	44	Q_neve	-0.3	4.174E-15
31	42	Q_neve	-0.3	4.174E-15

Table 20: Element Forces - Area Shells, Part 3 of 3

Area	Joint	OutputCase	V13	V23
			KN/m	KN/m
31	41	Q_manutenzione	-6.866E-02	-8.068E-15
31	43	Q_manutenzione	-6.866E-02	-8.068E-15
31	44	Q_manutenzione	-6.866E-02	1.662E-14
31	42	Q_manutenzione	-6.866E-02	1.662E-14
31	41	EQ_X	-1.46	-6.342E-14
31	43	EQ_X	-1.46	-6.342E-14
31	44	EQ_X	-1.46	7.483E-14
31	42	EQ_X	-1.46	7.483E-14
31	41	EQ_Y	0.79	7.61
31	43	EQ_Y	-0.79	7.61
31	44	EQ_Y	-0.79	6.05
31	42	EQ_Y	0.79	6.05
32	43	DEAD	-1.321E-13	1.800E-13
32	45	DEAD	2.928E-13	-3.557E-13
32	46	DEAD	2.234E-13	-2.940E-13
32	44	DEAD	6.878E-13	-2.372E-13
32	43	G1_power station	0.	0.
32	45	G1_power station	0.	0.
32	46	G1_power station	0.	0.
32	44	G1_power station	0.	0.
32	43	G2_power station	-2.93	-12.69
32	45	G2_power station	1.69	-12.69
32	46	G2_power station	1.69	-5.77
32	44	G2_power station	-2.93	-5.77
32	43	Q_power station	-0.11	-0.47
32	45	Q_power station	6.241E-02	-0.47
32	46	Q_power station	6.241E-02	-0.21
32	44	Q_power station	-0.11	-0.21
32	43	Q_neve	-0.4	-1.23
32	45	Q_neve	2.361E-02	-1.23
32	46	Q_neve	2.361E-02	-0.61
32	44	Q_neve	-0.4	-0.61
32	43	Q_manutenzione	-0.11	-0.47
32	45	Q_manutenzione	6.241E-02	-0.47
32	46	Q_manutenzione	6.241E-02	-0.21
32	44	Q_manutenzione	-0.11	-0.21
32	43	EQ_X	-1.72	-1.52
32	45	EQ_X	-18.56	-1.52
32	46	EQ_X	-18.56	4.08
32	44	EQ_X	-1.72	4.08
32	43	EQ_Y	1.	13.85
32	45	EQ_Y	-3.79	13.85
32	46	EQ_Y	-3.79	3.12

Table 20: Element Forces - Area Shells, Part 3 of 3

Area	Joint	OutputCase	V13	V23
			KN/m	KN/m
32	44	EQ_Y	1.	3.12
33	45	DEAD	5.373E-13	-4.233E-13
33	62	DEAD	-2.364E-13	1.163E-13
33	63	DEAD	2.608E-13	-1.468E-13
33	46	DEAD	-1.969E-13	-2.237E-15
33	45	G1_power station	0.	0.
33	62	G1_power station	0.	0.
33	63	G1_power station	0.	0.
33	46	G1_power station	0.	0.
33	45	G2_power station	2.2	-14.38
33	62	G2_power station	20.81	-14.38
33	63	G2_power station	20.81	-32.02
33	46	G2_power station	2.2	-32.02
33	45	Q_power station	8.152E-02	-0.53
33	62	Q_power station	0.77	-0.53
33	63	Q_power station	0.77	-1.18
33	46	Q_power station	8.152E-02	-1.18
33	45	Q_neve	7.909E-02	-1.43
33	62	Q_neve	1.78	-1.43
33	63	Q_neve	1.78	-3.08
33	46	Q_neve	7.909E-02	-3.08
33	45	Q_manutenzione	8.152E-02	-0.53
33	62	Q_manutenzione	0.77	-0.53
33	63	Q_manutenzione	0.77	-1.18
33	46	Q_manutenzione	8.152E-02	-1.18
33	45	EQ_X	-20.81	-21.93
33	62	EQ_X	43.88	-21.93
33	63	EQ_X	43.88	-24.3
33	46	EQ_X	-20.81	-24.3
33	45	EQ_Y	-14.58	-42.94
33	62	EQ_Y	-25.01	-42.94
33	63	EQ_Y	-25.01	59.04
33	46	EQ_Y	-14.58	59.04
34	66	DEAD	-6.678E-14	-6.976E-13
34	47	DEAD	2.492E-13	-7.554E-13
34	48	DEAD	2.492E-13	1.342E-14
34	5	DEAD	-6.678E-14	-2.024E-13
34	66	G1_power station	0.	0.
34	47	G1_power station	0.	0.
34	48	G1_power station	0.	0.
34	5	G1_power station	0.	0.
34	66	G2_power station	-21.54	-14.54
34	47	G2_power station	-3.1	-14.54

Table 20: Element Forces - Area Shells, Part 3 of 3

Area	Joint	OutputCase	V13	V23
			KN/m	KN/m
34	48	G2_power station	-3.1	-32.43
34	5	G2_power station	-21.54	-32.43
34	66	Q_power station	-0.8	-0.54
34	47	Q_power station	-0.11	-0.54
34	48	Q_power station	-0.11	-1.2
34	5	Q_power station	-0.8	-1.2
34	66	Q_neve	-1.85	-1.45
34	47	Q_neve	-0.18	-1.45
34	48	Q_neve	-0.18	-3.13
34	5	Q_neve	-1.85	-3.13
34	66	Q_manutenzione	-0.8	-0.54
34	47	Q_manutenzione	-0.11	-0.54
34	48	Q_manutenzione	-0.11	-1.2
34	5	Q_manutenzione	-0.8	-1.2
34	66	EQ_X	43.52	21.54
34	47	EQ_X	-19.8	21.54
34	48	EQ_X	-19.8	24.44
34	5	EQ_X	43.52	24.44
34	66	EQ_Y	25.81	-44.35
34	47	EQ_Y	14.64	-44.35
34	48	EQ_Y	14.64	61.81
34	5	EQ_Y	25.81	61.81
35	47	DEAD	6.636E-13	-3.905E-13
35	49	DEAD	4.294E-13	-3.327E-13
35	50	DEAD	5.451E-13	1.625E-13
35	48	DEAD	2.319E-13	3.783E-13
35	47	G1_power station	0.	0.
35	49	G1_power station	0.	0.
35	50	G1_power station	0.	0.
35	48	G1_power station	0.	0.
35	47	G2_power station	-2.5	-12.59
35	49	G2_power station	1.55	-12.59
35	50	G2_power station	1.55	-5.83
35	48	G2_power station	-2.5	-5.83
35	47	Q_power station	-9.249E-02	-0.47
35	49	Q_power station	5.724E-02	-0.47
35	50	Q_power station	5.724E-02	-0.22
35	48	Q_power station	-9.249E-02	-0.22
35	47	Q_neve	-0.12	-1.22
35	49	Q_neve	0.24	-1.22
35	50	Q_neve	0.24	-0.62
35	48	Q_neve	-0.12	-0.62
35	47	Q_manutenzione	-9.249E-02	-0.47

Table 20: Element Forces - Area Shells, Part 3 of 3

Area	Joint	OutputCase	V13	V23
			KN/m	KN/m
35	49	Q_manutenzione	5.724E-02	-0.47
35	50	Q_manutenzione	5.724E-02	-0.22
35	48	Q_manutenzione	-9.249E-02	-0.22
35	47	EQ_X	-17.63	1.47
35	49	EQ_X	-0.9	1.47
35	50	EQ_X	-0.9	-4.25
35	48	EQ_X	-17.63	-4.25
35	47	EQ_Y	3.7	14.12
35	49	EQ_Y	-1.09	14.12
35	50	EQ_Y	-1.09	2.98
35	48	EQ_Y	3.7	2.98
36	49	DEAD	5.646E-13	1.468E-13
36	51	DEAD	5.112E-14	1.468E-13
36	52	DEAD	5.112E-14	4.233E-13
36	50	DEAD	5.646E-13	4.233E-13
36	49	G1_power station	0.	0.
36	51	G1_power station	0.	0.
36	52	G1_power station	0.	0.
36	50	G1_power station	0.	0.
36	49	G2_power station	0.53	4.361E-13
36	51	G2_power station	0.53	4.361E-13
36	52	G2_power station	0.53	-1.169E-13
36	50	G2_power station	0.53	-1.169E-13
36	49	Q_power station	1.963E-02	-7.788E-15
36	51	Q_power station	1.963E-02	-7.788E-15
36	52	Q_power station	1.963E-02	2.087E-15
36	50	Q_power station	1.963E-02	2.087E-15
36	49	Q_neve	0.15	6.786E-14
36	51	Q_neve	0.15	6.786E-14
36	52	Q_neve	0.15	9.748E-14
36	50	Q_neve	0.15	9.748E-14
36	49	Q_manutenzione	1.963E-02	-7.788E-15
36	51	Q_manutenzione	1.963E-02	-7.788E-15
36	52	Q_manutenzione	1.963E-02	2.087E-15
36	50	Q_manutenzione	1.963E-02	2.087E-15
36	49	EQ_X	-0.66	-9.010E-14
36	51	EQ_X	-0.66	-9.010E-14
36	52	EQ_X	-0.66	-1.494E-13
36	50	EQ_X	-0.66	-1.494E-13
36	49	EQ_Y	0.67	7.73
36	51	EQ_Y	-0.67	7.73
36	52	EQ_Y	-0.67	6.32
36	50	EQ_Y	0.67	6.32

Table 20: Element Forces - Area Shells, Part 3 of 3

Area	Joint	OutputCase	V13	V23
			KN/m	KN/m
37	51	DEAD	-2.504E-14	3.716E-13
37	53	DEAD	9.346E-14	3.716E-13
37	54	DEAD	9.346E-14	1.610E-14
37	52	DEAD	-2.504E-14	1.610E-14
37	51	G1_power station	0.	0.
37	53	G1_power station	0.	0.
37	54	G1_power station	0.	0.
37	52	G1_power station	0.	0.
37	51	G2_power station	1.55	12.59
37	53	G2_power station	-2.5	12.59
37	54	G2_power station	-2.5	5.83
37	52	G2_power station	1.55	5.83
37	51	Q_power station	5.724E-02	0.47
37	53	Q_power station	-9.249E-02	0.47
37	54	Q_power station	-9.249E-02	0.22
37	52	Q_power station	5.724E-02	0.22
37	51	Q_neve	0.24	1.22
37	53	Q_neve	-0.12	1.22
37	54	Q_neve	-0.12	0.62
37	52	Q_neve	0.24	0.62
37	51	Q_manutenzione	5.724E-02	0.47
37	53	Q_manutenzione	-9.249E-02	0.47
37	54	Q_manutenzione	-9.249E-02	0.22
37	52	Q_manutenzione	5.724E-02	0.22
37	51	EQ_X	-0.9	-1.47
37	53	EQ_X	-17.63	-1.47
37	54	EQ_X	-17.63	4.25
37	52	EQ_X	-0.9	4.25
37	51	EQ_Y	1.09	14.12
37	53	EQ_Y	-3.7	14.12
37	54	EQ_Y	-3.7	2.98
37	52	EQ_Y	1.09	2.98
38	53	DEAD	2.842E-13	4.501E-14
38	59	DEAD	2.342E-13	9.509E-14
38	58	DEAD	1.262E-13	4.795E-13
38	54	DEAD	3.132E-13	2.926E-13
38	53	G1_power station	0.	0.
38	59	G1_power station	0.	0.
38	58	G1_power station	0.	0.
38	54	G1_power station	0.	0.
38	53	G2_power station	-3.1	14.54
38	59	G2_power station	-21.54	14.54
38	58	G2_power station	-21.54	32.43

Table 20: Element Forces - Area Shells, Part 3 of 3

Area	Joint	OutputCase	V13	V23
			KN/m	KN/m
38	54	G2_power station	-3.1	32.43
38	53	Q_power station	-0.11	0.54
38	59	Q_power station	-0.8	0.54
38	58	Q_power station	-0.8	1.2
38	54	Q_power station	-0.11	1.2
38	53	Q_neve	-0.18	1.45
38	59	Q_neve	-1.85	1.45
38	58	Q_neve	-1.85	3.13
38	54	Q_neve	-0.18	3.13
38	53	Q_manutenzione	-0.11	0.54
38	59	Q_manutenzione	-0.8	0.54
38	58	Q_manutenzione	-0.8	1.2
38	54	Q_manutenzione	-0.11	1.2
38	53	EQ_X	-19.8	-21.54
38	59	EQ_X	43.52	-21.54
38	58	EQ_X	43.52	-24.44
38	54	EQ_X	-19.8	-24.44
38	53	EQ_Y	-14.64	-44.35
38	59	EQ_Y	-25.81	-44.35
38	58	EQ_Y	-25.81	61.81
38	54	EQ_Y	-14.64	61.81
39	13	DEAD	-3.088E-12	1.849E-12
39	55	DEAD	4.281E-12	2.280E-12
39	56	DEAD	-5.604E-13	2.165E-12
39	14	DEAD	3.017E-12	2.280E-12
39	13	G1_power station	0.	0.
39	55	G1_power station	0.	0.
39	56	G1_power station	0.	0.
39	14	G1_power station	0.	0.
39	13	G2_power station	19.28	14.9
39	55	G2_power station	0.41	14.9
39	56	G2_power station	0.41	32.37
39	14	G2_power station	19.28	32.37
39	13	Q_power station	0.71	0.55
39	55	Q_power station	1.526E-02	0.55
39	56	Q_power station	1.526E-02	1.2
39	14	Q_power station	0.71	1.2
39	13	Q_neve	1.61	1.52
39	55	Q_neve	-0.12	1.52
39	56	Q_neve	-0.12	3.15
39	14	Q_neve	1.61	3.15
39	13	Q_manutenzione	0.71	0.55
39	55	Q_manutenzione	1.526E-02	0.55

Table 20: Element Forces - Area Shells, Part 3 of 3

Area	Joint	OutputCase	V13	V23
			KN/m	KN/m
39	56	Q_manutenzione	1.526E-02	1.2
39	14	Q_manutenzione	0.71	1.2
39	13	EQ_X	42.97	21.95
39	55	EQ_X	-21.68	21.95
39	56	EQ_X	-21.68	24.28
39	14	EQ_X	42.97	24.28
39	13	EQ_Y	24.84	-43.2
39	55	EQ_Y	14.56	-43.2
39	56	EQ_Y	14.56	58.9
39	14	EQ_Y	24.84	58.9
40	55	DEAD	-6.988E-13	2.596E-12
40	67	DEAD	7.988E-14	-4.251E-13
40	68	DEAD	8.812E-13	1.965E-12
40	56	DEAD	2.292E-12	1.155E-12
40	55	G1_power station	0.	0.
40	67	G1_power station	0.	0.
40	68	G1_power station	0.	0.
40	56	G1_power station	0.	0.
40	55	G2_power station	-4.631E-02	13.23
40	67	G2_power station	-4.84	13.23
40	68	G2_power station	-4.84	6.19
40	56	G2_power station	-4.631E-02	6.19
40	55	Q_power station	-1.714E-03	0.49
40	67	Q_power station	-0.18	0.49
40	68	Q_power station	-0.18	0.23
40	56	Q_power station	-1.714E-03	0.23
40	55	Q_neve	-0.17	1.31
40	67	Q_neve	-0.61	1.31
40	68	Q_neve	-0.61	0.68
40	56	Q_neve	-0.17	0.68
40	55	Q_manutenzione	-1.714E-03	0.49
40	67	Q_manutenzione	-0.18	0.49
40	68	Q_manutenzione	-0.18	0.23
40	56	Q_manutenzione	-1.714E-03	0.23
40	55	EQ_X	-19.42	1.57
40	67	EQ_X	-2.56	1.57
40	68	EQ_X	-2.56	-4.07
40	56	EQ_X	-19.42	-4.07
40	55	EQ_Y	3.72	13.73
40	67	EQ_Y	-0.99	13.73
40	68	EQ_Y	-0.99	3.1
40	56	EQ_Y	3.72	3.1
41	67	DEAD	5.539E-13	-1.380E-12

Table 20: Element Forces - Area Shells, Part 3 of 3

Area	Joint	OutputCase	V13	V23
			KN/m	KN/m
41	69	DEAD	-8.031E-13	-9.170E-13
41	70	DEAD	1.818E-12	8.323E-13
41	68	DEAD	-1.751E-12	2.559E-12
41	67	G1_power station	0.	0.
41	69	G1_power station	0.	0.
41	70	G1_power station	0.	0.
41	68	G1_power station	0.	0.
41	67	G2_power station	-3.74	7.298E-13
41	69	G2_power station	-3.74	1.655E-12
41	70	G2_power station	-3.74	7.298E-13
41	68	G2_power station	-3.74	4.183E-12
41	67	Q_power station	-0.14	-7.177E-14
41	69	Q_power station	-0.14	-4.285E-14
41	70	Q_power station	-0.14	1.060E-13
41	68	Q_power station	-0.14	2.139E-13
41	67	Q_neve	-0.51	-1.201E-13
41	69	Q_neve	-0.51	1.112E-13
41	70	Q_neve	-0.51	-1.991E-13
41	68	Q_neve	-0.51	6.642E-13
41	67	Q_manutenzione	-0.14	-7.177E-14
41	69	Q_manutenzione	-0.14	-4.285E-14
41	70	Q_manutenzione	-0.14	1.060E-13
41	68	Q_manutenzione	-0.14	2.139E-13
41	67	EQ_X	-2.29	-1.201E-13
41	69	EQ_X	-2.29	1.112E-13
41	70	EQ_X	-2.29	-1.991E-13
41	68	EQ_X	-2.29	6.642E-13
41	67	EQ_Y	0.77	7.59
41	69	EQ_Y	-0.77	7.59
41	70	EQ_Y	-0.77	6.1
41	68	EQ_Y	0.77	6.1
42	1	DEAD	6.007E-14	1.018E-13
42	57	DEAD	6.007E-14	-3.799E-13
42	58	DEAD	9.957E-14	-5.619E-14
42	59	DEAD	9.957E-14	1.506E-14
42	1	G1_power station	0.	0.
42	57	G1_power station	0.	0.
42	58	G1_power station	0.	0.
42	59	G1_power station	0.	0.
42	1	G2_power station	-8.14	-6.66
42	57	G2_power station	-8.14	-19.68
42	58	G2_power station	-21.93	-19.68
42	59	G2_power station	-21.93	-6.66

Table 20: Element Forces - Area Shells, Part 3 of 3

Area	Joint	OutputCase	V13	V23
			KN/m	KN/m
42	1	Q_power station	-0.3	-0.25
42	57	Q_power station	-0.3	-0.73
42	58	Q_power station	-0.81	-0.73
42	59	Q_power station	-0.81	-0.25
42	1	Q_neve	-0.62	-0.45
42	57	Q_neve	-0.62	-1.62
42	58	Q_neve	-1.9	-1.62
42	59	Q_neve	-1.9	-0.45
42	1	Q_manutenzione	-0.3	-0.25
42	57	Q_manutenzione	-0.3	-0.73
42	58	Q_manutenzione	-0.81	-0.73
42	59	Q_manutenzione	-0.81	-0.25
42	1	EQ_X	-33.87	18.38
42	57	EQ_X	-33.87	26.13
42	58	EQ_X	43.12	26.13
42	59	EQ_X	43.12	18.38
42	1	EQ_Y	20.85	-37.06
42	57	EQ_Y	20.85	51.39
42	58	EQ_Y	29.35	51.39
42	59	EQ_Y	29.35	-37.06
43	69	DEAD	-4.936E-13	3.762E-13
43	71	DEAD	-2.875E-12	3.398E-12
43	72	DEAD	-3.338E-12	-1.836E-12
43	70	DEAD	1.233E-12	-1.026E-12
43	69	G1_power station	0.	0.
43	71	G1_power station	0.	0.
43	72	G1_power station	0.	0.
43	70	G1_power station	0.	0.
43	69	G2_power station	-4.84	-13.23
43	71	G2_power station	-4.631E-02	-13.23
43	72	G2_power station	-4.631E-02	-6.19
43	70	G2_power station	-4.84	-6.19
43	69	Q_power station	-0.18	-0.49
43	71	Q_power station	-1.714E-03	-0.49
43	72	Q_power station	-1.714E-03	-0.23
43	70	Q_power station	-0.18	-0.23
43	69	Q_neve	-0.61	-1.31
43	71	Q_neve	-0.17	-1.31
43	72	Q_neve	-0.17	-0.68
43	70	Q_neve	-0.61	-0.68
43	69	Q_manutenzione	-0.18	-0.49
43	71	Q_manutenzione	-1.714E-03	-0.49
43	72	Q_manutenzione	-1.714E-03	-0.23

Table 20: Element Forces - Area Shells, Part 3 of 3

Area	Joint	OutputCase	V13	V23
			KN/m	KN/m
43	70	Q_manutenzione	-0.18	-0.23
43	69	EQ_X	-2.56	-1.57
43	71	EQ_X	-19.42	-1.57
43	72	EQ_X	-19.42	4.07
43	70	EQ_X	-2.56	4.07
43	69	EQ_Y	0.99	13.73
43	71	EQ_Y	-3.72	13.73
43	72	EQ_Y	-3.72	3.1
43	70	EQ_Y	0.99	3.1
44	60	DEAD	-2.559E-13	-3.632E-13
44	2	DEAD	-2.559E-13	-2.553E-13
44	61	DEAD	4.156E-13	-4.725E-14
44	6	DEAD	4.156E-13	-1.833E-14
44	60	G1_power station	0.	0.
44	2	G1_power station	0.	0.
44	61	G1_power station	0.	0.
44	6	G1_power station	0.	0.
44	60	G2_power station	8.5	-20.22
44	2	G2_power station	8.5	-7.39
44	61	G2_power station	21.16	-7.39
44	6	G2_power station	21.16	-20.22
44	60	Q_power station	0.31	-0.75
44	2	Q_power station	0.31	-0.27
44	61	Q_power station	0.78	-0.27
44	6	Q_power station	0.78	-0.75
44	60	Q_neve	0.67	-1.7
44	2	Q_neve	0.67	-0.54
44	61	Q_neve	1.82	-0.54
44	6	Q_neve	1.82	-1.7
44	60	Q_manutenzione	0.31	-0.75
44	2	Q_manutenzione	0.31	-0.27
44	61	Q_manutenzione	0.78	-0.27
44	6	Q_manutenzione	0.78	-0.75
44	60	EQ_X	-34.39	-26.64
44	2	EQ_X	-34.39	-19.03
44	61	EQ_X	43.43	-19.03
44	6	EQ_X	43.43	-26.64
44	60	EQ_Y	-20.72	49.16
44	2	EQ_Y	-20.72	-35.64
44	61	EQ_Y	-28.37	-35.64
44	6	EQ_Y	-28.37	49.16
45	71	DEAD	-2.165E-12	-5.587E-13
45	15	DEAD	-9.122E-14	-2.717E-12

Table 20: Element Forces - Area Shells, Part 3 of 3

Area	Joint	OutputCase	V13	V23
			KN/m	KN/m
45	18	DEAD	-1.849E-12	1.653E-12
45	72	DEAD	-9.122E-14	1.075E-12
45	71	G1_power station	0.	0.
45	15	G1_power station	0.	0.
45	18	G1_power station	0.	0.
45	72	G1_power station	0.	0.
45	71	G2_power station	0.41	-14.9
45	15	G2_power station	19.28	-14.9
45	18	G2_power station	19.28	-32.37
45	72	G2_power station	0.41	-32.37
45	71	Q_power station	1.526E-02	-0.55
45	15	Q_power station	0.71	-0.55
45	18	Q_power station	0.71	-1.2
45	72	Q_power station	1.526E-02	-1.2
45	71	Q_neve	-0.12	-1.52
45	15	Q_neve	1.61	-1.52
45	18	Q_neve	1.61	-3.15
45	72	Q_neve	-0.12	-3.15
45	71	Q_manutenzione	1.526E-02	-0.55
45	15	Q_manutenzione	0.71	-0.55
45	18	Q_manutenzione	0.71	-1.2
45	72	Q_manutenzione	1.526E-02	-1.2
45	71	EQ_X	-21.68	-21.95
45	15	EQ_X	42.97	-21.95
45	18	EQ_X	42.97	-24.28
45	72	EQ_X	-21.68	-24.28
45	71	EQ_Y	-14.56	-43.2
45	15	EQ_Y	-24.84	-43.2
45	18	EQ_Y	-24.84	58.9
45	72	EQ_Y	-14.56	58.9
46	62	DEAD	7.289E-14	-2.237E-15
46	3	DEAD	1.596E-13	-2.237E-15
46	64	DEAD	-1.641E-13	1.163E-13
46	63	DEAD	1.596E-13	1.163E-13
46	62	G1_power station	0.	0.
46	3	G1_power station	0.	0.
46	64	G1_power station	0.	0.
46	63	G1_power station	0.	0.
46	62	G2_power station	21.16	7.39
46	3	G2_power station	8.5	7.39
46	64	G2_power station	8.5	20.22
46	63	G2_power station	21.16	20.22
46	62	Q_power station	0.78	0.27

Table 20: Element Forces - Area Shells, Part 3 of 3

Area	Joint	OutputCase	V13	V23
			KN/m	KN/m
46	3	Q_power station	0.31	0.27
46	64	Q_power station	0.31	0.75
46	63	Q_power station	0.78	0.75
46	62	Q_neve	1.82	0.54
46	3	Q_neve	0.67	0.54
46	64	Q_neve	0.67	1.7
46	63	Q_neve	1.82	1.7
46	62	Q_manutenzione	0.78	0.27
46	3	Q_manutenzione	0.31	0.27
46	64	Q_manutenzione	0.31	0.75
46	63	Q_manutenzione	0.78	0.75
46	62	EQ_X	43.43	19.03
46	3	EQ_X	-34.39	19.03
46	64	EQ_X	-34.39	26.64
46	63	EQ_X	43.43	26.64
46	62	EQ_Y	28.37	-35.64
46	3	EQ_Y	20.72	-35.64
46	64	EQ_Y	20.72	49.16
46	63	EQ_Y	28.37	49.16
48	65	DEAD	4.473E-15	2.181E-13
48	4	DEAD	4.473E-15	2.075E-13
48	66	DEAD	-2.325E-13	-5.843E-14
48	5	DEAD	-2.325E-13	8.898E-14
48	65	G1_power station	0.	0.
48	4	G1_power station	0.	0.
48	66	G1_power station	0.	0.
48	5	G1_power station	0.	0.
48	65	G2_power station	-8.14	19.68
48	4	G2_power station	-8.14	6.66
48	66	G2_power station	-21.93	6.66
48	5	G2_power station	-21.93	19.68
48	65	Q_power station	-0.3	0.73
48	4	Q_power station	-0.3	0.25
48	66	Q_power station	-0.81	0.25
48	5	Q_power station	-0.81	0.73
48	65	Q_neve	-0.62	1.62
48	4	Q_neve	-0.62	0.45
48	66	Q_neve	-1.9	0.45
48	5	Q_neve	-1.9	1.62
48	65	Q_manutenzione	-0.3	0.73
48	4	Q_manutenzione	-0.3	0.25
48	66	Q_manutenzione	-0.81	0.25
48	5	Q_manutenzione	-0.81	0.73

Table 20: Element Forces - Area Shells, Part 3 of 3

Area	Joint	OutputCase	V13	V23
			KN/m	KN/m
48	65	EQ_X	-33.87	-26.13
48	4	EQ_X	-33.87	-18.38
48	66	EQ_X	43.12	-18.38
48	5	EQ_X	43.12	-26.13
48	65	EQ_Y	-20.85	51.39
48	4	EQ_Y	-20.85	-37.06
48	66	EQ_Y	-29.35	-37.06
48	5	EQ_Y	-29.35	51.39
49	21	DEAD	2.504E-12	-1.950E-12
49	73	DEAD	-2.475E-13	-2.412E-12
49	74	DEAD	-2.868E-12	4.686E-12
49	22	DEAD	4.808E-12	2.960E-12
49	21	G1_power station	0.	0.
49	73	G1_power station	0.	0.
49	74	G1_power station	0.	0.
49	22	G1_power station	0.	0.
49	21	G2_power station	-19.76	-14.45
49	73	G2_power station	-1.46	-14.45
49	74	G2_power station	-1.46	-32.06
49	22	G2_power station	-19.76	-32.06
49	21	Q_power station	-0.73	-0.53
49	73	Q_power station	-5.387E-02	-0.53
49	74	Q_power station	-5.387E-02	-1.19
49	22	Q_power station	-0.73	-1.19
49	21	Q_neve	-1.68	-1.49
49	73	Q_neve	-1.836E-02	-1.49
49	74	Q_neve	-1.836E-02	-3.14
49	22	Q_neve	-1.68	-3.14
49	21	Q_manutenzione	-0.73	-0.53
49	73	Q_manutenzione	-5.387E-02	-0.53
49	74	Q_manutenzione	-5.387E-02	-1.19
49	22	Q_manutenzione	-0.73	-1.19
49	21	EQ_X	42.3	21.44
49	73	EQ_X	-20.81	21.44
49	74	EQ_X	-20.81	24.29
49	22	EQ_X	42.3	24.29
49	21	EQ_Y	25.43	-44.68
49	73	EQ_Y	14.5	-44.68
49	74	EQ_Y	14.5	61.66
49	22	EQ_Y	25.43	61.66
50	73	DEAD	5.604E-13	-9.790E-13
50	75	DEAD	4.365E-13	-9.790E-13
50	76	DEAD	3.088E-12	-6.630E-13

Table 20: Element Forces - Area Shells, Part 3 of 3

Area	Joint	OutputCase	V13	V23
			KN/m	KN/m
50	74	DEAD	-3.355E-12	-6.630E-13
50	73	G1_power station	0.	0.
50	75	G1_power station	0.	0.
50	76	G1_power station	0.	0.
50	74	G1_power station	0.	0.
50	73	G2_power station	-0.92	-12.55
50	75	G2_power station	2.96	-12.55
50	76	G2_power station	2.96	-5.57
50	74	G2_power station	-0.92	-5.57
50	73	Q_power station	-3.419E-02	-0.46
50	75	Q_power station	0.11	-0.46
50	76	Q_power station	0.11	-0.21
50	74	Q_power station	-3.419E-02	-0.21
50	73	Q_neve	4.115E-02	-1.25
50	75	Q_neve	0.39	-1.25
50	76	Q_neve	0.39	-0.62
50	74	Q_neve	4.115E-02	-0.62
50	73	Q_manutenzione	-3.419E-02	-0.46
50	75	Q_manutenzione	0.11	-0.46
50	76	Q_manutenzione	0.11	-0.21
50	74	Q_manutenzione	-3.419E-02	-0.21
50	73	EQ_X	-18.66	1.39
50	75	EQ_X	-1.74	1.39
50	76	EQ_X	-1.74	-4.32
50	74	EQ_X	-18.66	-4.32
50	73	EQ_Y	3.51	13.83
50	75	EQ_Y	-1.12	13.83
50	76	EQ_Y	-1.12	2.8
50	74	EQ_Y	3.51	2.8
51	75	DEAD	1.762E-12	-2.839E-12
51	77	DEAD	3.291E-13	-3.302E-12
51	78	DEAD	-1.398E-12	-6.272E-13
51	76	DEAD	2.225E-12	-2.354E-12
51	75	G1_power station	0.	0.
51	77	G1_power station	0.	0.
51	78	G1_power station	0.	0.
51	76	G1_power station	0.	0.
51	75	G2_power station	1.91	-5.910E-12
51	77	G2_power station	1.91	-5.910E-12
51	78	G2_power station	1.91	-2.118E-12
51	76	G2_power station	1.91	-2.118E-12
51	75	Q_power station	7.069E-02	-2.781E-13
51	77	Q_power station	7.069E-02	-2.781E-13

Table 20: Element Forces - Area Shells, Part 3 of 3

Area	Joint	OutputCase	V13	V23
			KN/m	KN/m
51	78	Q_power station	7.069E-02	-4.114E-14
51	76	Q_power station	7.069E-02	-4.114E-14
51	75	Q_neve	0.29	-1.175E-12
51	77	Q_neve	0.29	-1.175E-12
51	78	Q_neve	0.29	-1.479E-13
51	76	Q_neve	0.29	-1.479E-13
51	75	Q_manutenzione	7.069E-02	-2.781E-13
51	77	Q_manutenzione	7.069E-02	-2.781E-13
51	78	Q_manutenzione	7.069E-02	-4.114E-14
51	76	Q_manutenzione	7.069E-02	-4.114E-14
51	75	EQ_X	-1.5	1.113E-12
51	77	EQ_X	-1.5	1.113E-12
51	78	EQ_X	-1.5	1.645E-13
51	76	EQ_X	-1.5	1.645E-13
51	75	EQ_Y	0.61	7.49
51	77	EQ_Y	-0.61	7.49
51	78	EQ_Y	-0.61	6.17
51	76	EQ_Y	0.61	6.17
52	77	DEAD	3.382E-12	-2.723E-12
52	79	DEAD	1.531E-12	-2.723E-12
52	80	DEAD	4.646E-12	-1.955E-13
52	78	DEAD	-2.261E-12	-1.955E-13
52	77	G1_power station	0.	0.
52	79	G1_power station	0.	0.
52	80	G1_power station	0.	0.
52	78	G1_power station	0.	0.
52	77	G2_power station	2.96	12.55
52	79	G2_power station	-0.92	12.55
52	80	G2_power station	-0.92	5.57
52	78	G2_power station	2.96	5.57
52	77	Q_power station	0.11	0.46
52	79	Q_power station	-3.419E-02	0.46
52	80	Q_power station	-3.419E-02	0.21
52	78	Q_power station	0.11	0.21
52	77	Q_neve	0.39	1.25
52	79	Q_neve	4.115E-02	1.25
52	80	Q_neve	4.115E-02	0.62
52	78	Q_neve	0.39	0.62
52	77	Q_manutenzione	0.11	0.46
52	79	Q_manutenzione	-3.419E-02	0.46
52	80	Q_manutenzione	-3.419E-02	0.21
52	78	Q_manutenzione	0.11	0.21
52	77	EQ_X	-1.74	-1.39

Table 20: Element Forces - Area Shells, Part 3 of 3

Area	Joint	OutputCase	V13	V23
			KN/m	KN/m
52	79	EQ_X	-18.66	-1.39
52	80	EQ_X	-18.66	4.32
52	78	EQ_X	-1.74	4.32
52	77	EQ_Y	1.12	13.83
52	79	EQ_Y	-3.51	13.83
52	80	EQ_Y	-3.51	2.8
52	78	EQ_Y	1.12	2.8
53	79	DEAD	1.070E-12	8.096E-13
53	10	DEAD	1.649E-12	3.470E-13
53	9	DEAD	7.542E-13	3.022E-12
53	80	DEAD	2.912E-12	1.295E-12
53	79	G1_power station	0.	0.
53	10	G1_power station	0.	0.
53	9	G1_power station	0.	0.
53	80	G1_power station	0.	0.
53	79	G2_power station	-1.46	14.45
53	10	G2_power station	-19.76	14.45
53	9	G2_power station	-19.76	32.06
53	80	G2_power station	-1.46	32.06
53	79	Q_power station	-5.387E-02	0.53
53	10	Q_power station	-0.73	0.53
53	9	Q_power station	-0.73	1.19
53	80	Q_power station	-5.387E-02	1.19
53	79	Q_neve	-1.836E-02	1.49
53	10	Q_neve	-1.68	1.49
53	9	Q_neve	-1.68	3.14
53	80	Q_neve	-1.836E-02	3.14
53	79	Q_manutenzione	-5.387E-02	0.53
53	10	Q_manutenzione	-0.73	0.53
53	9	Q_manutenzione	-0.73	1.19
53	80	Q_manutenzione	-5.387E-02	1.19
53	79	EQ_X	-20.81	-21.44
53	10	EQ_X	42.3	-21.44
53	9	EQ_X	42.3	-24.29
53	80	EQ_X	-20.81	-24.29
53	79	EQ_Y	-14.5	-44.68
53	10	EQ_Y	-25.43	-44.68
53	9	EQ_Y	-25.43	61.66
53	80	EQ_Y	-14.5	61.66
54	60	DEAD	-1.669E-14	-1.938E-13
54	6	DEAD	6.230E-14	1.811E-14
54	81	DEAD	6.230E-14	-1.938E-13
54	82	DEAD	-1.669E-14	-3.374E-13

Table 20: Element Forces - Area Shells, Part 3 of 3

Area	Joint	OutputCase	V13	V23
			KN/m	KN/m
54	60	G1_power station	0.	0.
54	6	G1_power station	0.	0.
54	81	G1_power station	0.	0.
54	82	G1_power station	0.	0.
54	60	G2_power station	-10.86	-19.55
54	6	G2_power station	-32.23	-19.55
54	81	G2_power station	-32.23	-3.45
54	82	G2_power station	-10.86	-3.45
54	60	Q_power station	-0.4	-0.72
54	6	Q_power station	-1.19	-0.72
54	81	Q_power station	-1.19	-0.13
54	82	Q_power station	-0.4	-0.13
54	60	Q_neve	-1.08	-1.63
54	6	Q_neve	-3.07	-1.63
54	81	Q_neve	-3.07	-0.16
54	82	Q_neve	-1.08	-0.16
54	60	Q_manutenzione	-0.4	-0.72
54	6	Q_manutenzione	-1.19	-0.72
54	81	Q_manutenzione	-1.19	-0.13
54	82	Q_manutenzione	-0.4	-0.13
54	60	EQ_X	-49.65	25.29
54	6	EQ_X	59.33	25.29
54	81	EQ_X	59.33	16.44
54	82	EQ_X	-49.65	16.44
54	60	EQ_Y	23.72	49.32
54	6	EQ_Y	27.59	49.32
54	81	EQ_Y	27.59	-21.26
54	82	EQ_Y	23.72	-21.26
55	82	DEAD	3.510E-13	-4.650E-13
55	81	DEAD	1.006E-13	-4.650E-13
55	83	DEAD	-1.230E-13	8.946E-15
55	84	DEAD	8.116E-13	8.946E-15
55	82	G1_power station	0.	0.
55	81	G1_power station	0.	0.
55	83	G1_power station	0.	0.
55	84	G1_power station	0.	0.
55	82	G2_power station	-12.48	-2.37
55	81	G2_power station	-5.58	-2.37
55	83	G2_power station	-5.58	2.35
55	84	G2_power station	-12.48	2.35
55	82	Q_power station	-0.46	-8.780E-02
55	81	Q_power station	-0.21	-8.780E-02
55	83	Q_power station	-0.21	8.683E-02

Table 20: Element Forces - Area Shells, Part 3 of 3

Area	Joint	OutputCase	V13	V23
			KN/m	KN/m
55	84	Q_power station	-0.46	8.683E-02
55	82	Q_neve	-1.2	-5.148E-02
55	81	Q_neve	-0.58	-5.148E-02
55	83	Q_neve	-0.58	0.39
55	84	Q_neve	-1.2	0.39
55	82	Q_manutenzione	-0.46	-8.780E-02
55	81	Q_manutenzione	-0.21	-8.780E-02
55	83	Q_manutenzione	-0.21	8.683E-02
55	84	Q_manutenzione	-0.46	8.683E-02
55	82	EQ_X	11.39	4.41
55	81	EQ_X	1.98	4.41
55	83	EQ_X	1.98	-9.735E-02
55	84	EQ_X	11.39	-9.735E-02
55	82	EQ_Y	1.87	-19.02
55	81	EQ_Y	-4.74	-19.02
55	83	EQ_Y	-4.74	1.43
55	84	EQ_Y	1.87	1.43
56	84	DEAD	6.137E-13	1.482E-13
56	83	DEAD	-1.111E-12	-1.216E-13
56	85	DEAD	-8.873E-13	1.482E-13
56	86	DEAD	1.531E-13	7.594E-14
56	84	G1_power station	0.	0.
56	83	G1_power station	0.	0.
56	85	G1_power station	0.	0.
56	86	G1_power station	0.	0.
56	84	G2_power station	-2.66	1.09
56	83	G2_power station	-1.42	1.09
56	85	G2_power station	-1.42	1.98
56	86	G2_power station	-2.66	1.98
56	84	Q_power station	-9.849E-02	4.032E-02
56	83	Q_power station	-5.263E-02	4.032E-02
56	85	Q_power station	-5.263E-02	7.335E-02
56	86	Q_power station	-9.849E-02	7.335E-02
56	84	Q_neve	-0.26	0.28
56	83	Q_neve	-0.15	0.28
56	85	Q_neve	-0.15	0.37
56	86	Q_neve	-0.26	0.37
56	84	Q_manutenzione	-9.849E-02	4.032E-02
56	83	Q_manutenzione	-5.263E-02	4.032E-02
56	85	Q_manutenzione	-5.263E-02	7.335E-02
56	86	Q_manutenzione	-9.849E-02	7.335E-02
56	84	EQ_X	4.39	1.44
56	83	EQ_X	3.19	1.44

Table 20: Element Forces - Area Shells, Part 3 of 3

Area	Joint	OutputCase	V13	V23
			KN/m	KN/m
56	85	EQ_X	3.19	0.25
56	86	EQ_X	4.39	0.25
56	84	EQ_Y	-0.14	1.59
56	83	EQ_Y	1.38	1.59
56	85	EQ_Y	1.38	-2.62
56	86	EQ_Y	-0.14	-2.62
57	86	DEAD	-6.153E-13	-8.816E-14
57	85	DEAD	5.697E-13	1.816E-13
57	87	DEAD	5.697E-13	-4.867E-14
57	88	DEAD	-6.153E-13	2.362E-14
57	86	G1_power station	0.	0.
57	85	G1_power station	0.	0.
57	87	G1_power station	0.	0.
57	88	G1_power station	0.	0.
57	86	G2_power station	0.86	1.74
57	85	G2_power station	1.14	1.74
57	87	G2_power station	1.14	1.78
57	88	G2_power station	0.86	1.78
57	86	Q_power station	3.184E-02	6.450E-02
57	85	Q_power station	4.217E-02	6.450E-02
57	87	Q_power station	4.217E-02	6.578E-02
57	88	Q_power station	3.184E-02	6.578E-02
57	86	Q_neve	9.417E-02	0.34
57	85	Q_neve	0.13	0.34
57	87	Q_neve	0.13	0.35
57	88	Q_neve	9.417E-02	0.35
57	86	Q_manutenzione	3.184E-02	6.450E-02
57	85	Q_manutenzione	4.217E-02	6.450E-02
57	87	Q_manutenzione	4.217E-02	6.578E-02
57	88	Q_manutenzione	3.184E-02	6.578E-02
57	86	EQ_X	2.74	0.53
57	85	EQ_X	2.31	0.53
57	87	EQ_X	2.31	4.418E-02
57	88	EQ_X	2.74	4.418E-02
57	86	EQ_Y	-0.31	-2.79
57	85	EQ_Y	-0.19	-2.79
57	87	EQ_Y	-0.19	-0.79
57	88	EQ_Y	-0.31	-0.79
58	88	DEAD	-2.052E-13	-2.698E-13
58	87	DEAD	-9.733E-14	-1.619E-13
58	89	DEAD	-2.052E-13	-7.229E-14
58	90	DEAD	-1.763E-13	-4.337E-14
58	88	G1_power station	0.	0.

Table 20: Element Forces - Area Shells, Part 3 of 3

Area	Joint	OutputCase	V13	V23
			KN/m	KN/m
58	87	G1_power station	0.	0.
58	89	G1_power station	0.	0.
58	90	G1_power station	0.	0.
58	88	G2_power station	1.56	1.7
58	87	G2_power station	1.92	1.7
58	89	G2_power station	1.92	1.36
58	90	G2_power station	1.56	1.36
58	88	Q_power station	5.758E-02	6.277E-02
58	87	Q_power station	7.109E-02	6.277E-02
58	89	Q_power station	7.109E-02	5.017E-02
58	90	Q_power station	5.758E-02	5.017E-02
58	88	Q_neve	0.18	0.34
58	87	Q_neve	0.22	0.34
58	89	Q_neve	0.22	0.31
58	90	Q_neve	0.18	0.31
58	88	Q_manutenzione	5.758E-02	6.277E-02
58	87	Q_manutenzione	7.109E-02	6.277E-02
58	89	Q_manutenzione	7.109E-02	5.017E-02
58	90	Q_manutenzione	5.758E-02	5.017E-02
58	88	EQ_X	1.73	0.15
58	87	EQ_X	1.6	0.15
58	89	EQ_X	1.6	-6.886E-02
58	90	EQ_X	1.73	-6.886E-02
58	88	EQ_Y	-0.23	-0.9
58	87	EQ_Y	-6.278E-02	-0.9
58	89	EQ_Y	-6.278E-02	-1.
58	90	EQ_Y	-0.23	-1.
59	90	DEAD	-7.453E-14	-3.419E-13
59	89	DEAD	2.781E-13	8.593E-14
59	91	DEAD	-1.535E-13	2.506E-13
59	92	DEAD	4.114E-14	1.649E-13
59	90	G1_power station	0.	0.
59	89	G1_power station	0.	0.
59	91	G1_power station	0.	0.
59	92	G1_power station	0.	0.
59	90	G2_power station	-0.48	1.06
59	89	G2_power station	0.95	1.06
59	91	G2_power station	0.95	2.09
59	92	G2_power station	-0.48	2.09
59	90	Q_power station	-1.766E-02	3.909E-02
59	89	Q_power station	3.532E-02	3.909E-02
59	91	Q_power station	3.532E-02	7.725E-02
59	92	Q_power station	-1.766E-02	7.725E-02

Table 20: Element Forces - Area Shells, Part 3 of 3

Area	Joint	OutputCase	V13	V23
			KN/m	KN/m
59	90	Q_neve	1.519E-02	0.28
59	89	Q_neve	0.14	0.28
59	91	Q_neve	0.14	0.38
59	92	Q_neve	1.519E-02	0.38
59	90	Q_manutenzione	-1.766E-02	3.909E-02
59	89	Q_manutenzione	3.532E-02	3.909E-02
59	91	Q_manutenzione	3.532E-02	7.725E-02
59	92	Q_manutenzione	-1.766E-02	7.725E-02
59	90	EQ_X	1.05	-4.819E-02
59	89	EQ_X	1.07	-4.819E-02
59	91	EQ_X	1.07	-0.35
59	92	EQ_X	1.05	-0.35
59	90	EQ_Y	0.27	-0.97
59	89	EQ_Y	-4.236E-02	-0.97
59	91	EQ_Y	-4.236E-02	-1.56
59	92	EQ_Y	0.27	-1.56
60	92	DEAD	-1.307E-13	3.115E-14
60	91	DEAD	1.719E-13	3.115E-14
60	26	DEAD	-5.172E-14	-8.347E-15
60	27	DEAD	3.299E-13	-8.347E-15
60	92	G1_power station	0.	0.
60	91	G1_power station	0.	0.
60	26	G1_power station	0.	0.
60	27	G1_power station	0.	0.
60	92	G2_power station	-7.52	1.02
60	91	G2_power station	-3.23	1.02
60	26	G2_power station	-3.23	-2.21
60	27	G2_power station	-7.52	-2.21
60	92	Q_power station	-0.28	3.788E-02
60	91	Q_power station	-0.12	3.788E-02
60	26	Q_power station	-0.12	-8.186E-02
60	27	Q_power station	-0.28	-8.186E-02
60	92	Q_neve	-0.58	0.3
60	91	Q_neve	-0.27	0.3
60	26	Q_neve	-0.27	-0.19
60	27	Q_neve	-0.58	-0.19
60	92	Q_manutenzione	-0.28	3.788E-02
60	91	Q_manutenzione	-0.12	3.788E-02
60	26	Q_manutenzione	-0.12	-8.186E-02
60	27	Q_manutenzione	-0.28	-8.186E-02
60	92	EQ_X	0.38	-0.29
60	91	EQ_X	-0.4	-0.29
60	26	EQ_X	-0.4	-1.76

Table 20: Element Forces - Area Shells, Part 3 of 3

Area	Joint	OutputCase	V13	V23
			KN/m	KN/m
60	27	EQ_X	0.38	-1.76
60	92	EQ_Y	1.28	-1.24
60	91	EQ_Y	-0.37	-1.24
60	26	EQ_Y	-0.37	-1.24
60	27	EQ_Y	1.28	-1.24
61	65	DEAD	-2.836E-15	2.804E-13
61	5	DEAD	5.579E-13	2.804E-13
61	93	DEAD	5.502E-13	-7.512E-14
61	94	DEAD	3.999E-13	-7.512E-14
61	65	G1_power station	0.	0.
61	5	G1_power station	0.	0.
61	93	G1_power station	0.	0.
61	94	G1_power station	0.	0.
61	65	G2_power station	9.74	19.2
61	5	G2_power station	33.28	19.2
61	93	G2_power station	33.28	4.16
61	94	G2_power station	9.74	4.16
61	65	Q_power station	0.36	0.71
61	5	Q_power station	1.23	0.71
61	93	Q_power station	1.23	0.15
61	94	Q_power station	0.36	0.15
61	65	Q_neve	0.95	1.58
61	5	Q_neve	3.13	1.58
61	93	Q_neve	3.13	0.21
61	94	Q_neve	0.95	0.21
61	65	Q_manutenzione	0.36	0.71
61	5	Q_manutenzione	1.23	0.71
61	93	Q_manutenzione	1.23	0.15
61	94	Q_manutenzione	0.36	0.15
61	65	EQ_X	-55.32	26.42
61	5	EQ_X	64.2	26.42
61	93	EQ_X	64.2	17.97
61	94	EQ_X	-55.32	17.97
61	65	EQ_Y	24.8	51.45
61	5	EQ_Y	30.36	51.45
61	93	EQ_Y	30.36	-22.33
61	94	EQ_Y	24.8	-22.33
62	94	DEAD	-2.993E-13	2.225E-13
62	93	DEAD	2.537E-13	2.225E-13
62	95	DEAD	2.537E-13	-2.910E-13
62	96	DEAD	-2.993E-13	-2.910E-13
62	94	G1_power station	0.	0.
62	93	G1_power station	0.	0.

Table 20: Element Forces - Area Shells, Part 3 of 3

Area	Joint	OutputCase	V13	V23
			KN/m	KN/m
62	95	G1_power station	0.	0.
62	96	G1_power station	0.	0.
62	94	G2_power station	14.74	3.08
62	93	G2_power station	6.58	3.08
62	95	G2_power station	6.58	-2.02
62	96	G2_power station	14.74	-2.02
62	94	Q_power station	0.55	0.11
62	93	Q_power station	0.24	0.11
62	95	Q_power station	0.24	-7.472E-02
62	96	Q_power station	0.55	-7.472E-02
62	94	Q_neve	1.37	0.11
62	93	Q_neve	0.63	0.11
62	95	Q_neve	0.63	-0.37
62	96	Q_neve	1.37	-0.37
62	94	Q_manutenzione	0.55	0.11
62	93	Q_manutenzione	0.24	0.11
62	95	Q_manutenzione	0.24	-7.472E-02
62	96	Q_manutenzione	0.55	-7.472E-02
62	94	EQ_X	9.27	4.67
62	93	EQ_X	2.09	4.67
62	95	EQ_X	2.09	0.49
62	96	EQ_X	9.27	0.49
62	94	EQ_Y	1.92	-20.12
62	93	EQ_Y	-5.38	-20.12
62	95	EQ_Y	-5.38	1.01
62	96	EQ_Y	1.92	1.01
63	96	DEAD	4.634E-13	-5.296E-13
63	95	DEAD	-3.188E-13	-5.296E-13
63	25	DEAD	-3.266E-13	1.419E-13
63	28	DEAD	8.661E-13	1.419E-13
63	96	G1_power station	0.	0.
63	95	G1_power station	0.	0.
63	25	G1_power station	0.	0.
63	28	G1_power station	0.	0.
63	96	G2_power station	12.55	0.36
63	95	G2_power station	5.31	0.36
63	25	G2_power station	5.31	5.11
63	28	G2_power station	12.55	5.11
63	96	Q_power station	0.46	1.337E-02
63	95	Q_power station	0.2	1.337E-02
63	25	Q_power station	0.2	0.19
63	28	Q_power station	0.46	0.19
63	96	Q_neve	1.11	-0.16

Table 20: Element Forces - Area Shells, Part 3 of 3

Area	Joint	OutputCase	V13	V23
			KN/m	KN/m
63	95	Q_neve	0.53	-0.16
63	25	Q_neve	0.53	0.48
63	28	Q_neve	1.11	0.48
63	96	Q_manutenzione	0.46	1.337E-02
63	95	Q_manutenzione	0.2	1.337E-02
63	25	Q_manutenzione	0.2	0.19
63	28	Q_manutenzione	0.46	0.19
63	96	EQ_X	-2.38	1.34
63	95	EQ_X	-2.31	1.34
63	25	EQ_X	-2.31	-5.05
63	28	EQ_X	-2.38	-5.05
63	96	EQ_Y	-0.85	1.4
63	95	EQ_Y	-1.31	1.4
63	25	EQ_Y	-1.31	-2.09
63	28	EQ_Y	-0.85	-2.09
64	6	DEAD	8.210E-13	4.127E-13
64	40	DEAD	-7.333E-14	-2.348E-13
64	97	DEAD	8.210E-13	2.942E-13
64	81	DEAD	-1.021E-12	1.207E-13
64	6	G1_power station	0.	0.
64	40	G1_power station	0.	0.
64	97	G1_power station	0.	0.
64	81	G1_power station	0.	0.
64	6	G2_power station	-31.6	31.94
64	40	G2_power station	-7.26	31.94
64	97	G2_power station	-7.26	10.94
64	81	G2_power station	-31.6	10.94
64	6	Q_power station	-1.17	1.18
64	40	Q_power station	-0.27	1.18
64	97	Q_power station	-0.27	0.4
64	81	Q_power station	-1.17	0.4
64	6	Q_neve	-3.02	3.08
64	40	Q_neve	-0.87	3.08
64	97	Q_neve	-0.87	1.23
64	81	Q_neve	-3.02	1.23
64	6	Q_manutenzione	-1.17	1.18
64	40	Q_manutenzione	-0.27	1.18
64	97	Q_manutenzione	-0.27	0.4
64	81	Q_manutenzione	-1.17	0.4
64	6	EQ_X	59.63	-21.79
64	40	EQ_X	-27.77	-21.79
64	97	EQ_X	-27.77	-18.17
64	81	EQ_X	59.63	-18.17

Table 20: Element Forces - Area Shells, Part 3 of 3

Area	Joint	OutputCase	V13	V23
			KN/m	KN/m
64	6	EQ_Y	-25.36	59.04
64	40	EQ_Y	-17.75	59.04
64	97	EQ_Y	-17.75	-23.96
64	81	EQ_Y	-25.36	-23.96
65	81	DEAD	3.339E-14	2.875E-13
65	97	DEAD	-1.246E-13	6.394E-14
65	98	DEAD	-1.246E-13	7.615E-13
65	83	DEAD	3.339E-14	3.009E-13
65	81	G1_power station	0.	0.
65	97	G1_power station	0.	0.
65	98	G1_power station	0.	0.
65	83	G1_power station	0.	0.
65	81	G2_power station	-5.5	8.42
65	97	G2_power station	-7.41	8.42
65	98	G2_power station	-7.41	3.04
65	83	G2_power station	-5.5	3.04
65	81	Q_power station	-0.2	0.31
65	97	Q_power station	-0.27	0.31
65	98	Q_power station	-0.27	0.11
65	83	Q_power station	-0.2	0.11
65	81	Q_neve	-0.58	1.01
65	97	Q_neve	-0.76	1.01
65	98	Q_neve	-0.76	0.55
65	83	Q_neve	-0.58	0.55
65	81	Q_manutenzione	-0.2	0.31
65	97	Q_manutenzione	-0.27	0.31
65	98	Q_manutenzione	-0.27	0.11
65	83	Q_manutenzione	-0.2	0.11
65	81	EQ_X	1.68	-7.58
65	97	EQ_X	6.29	-7.58
65	98	EQ_X	6.29	-0.14
65	83	EQ_X	1.68	-0.14
65	81	EQ_Y	5.17	-22.1
65	97	EQ_Y	-0.39	-22.1
65	98	EQ_Y	-0.39	4.06
65	83	EQ_Y	5.17	4.06
66	83	DEAD	-1.129E-12	6.868E-13
66	98	DEAD	1.077E-12	5.326E-13
66	99	DEAD	-1.022E-13	-4.587E-13
66	85	DEAD	-1.214E-12	-9.935E-14
66	83	G1_power station	0.	0.
66	98	G1_power station	0.	0.
66	99	G1_power station	0.	0.

Table 20: Element Forces - Area Shells, Part 3 of 3

Area	Joint	OutputCase	V13	V23
			KN/m	KN/m
66	85	G1_power station	0.	0.
66	83	G2_power station	-1.36	3.37
66	98	G2_power station	-1.29	3.37
66	99	G2_power station	-1.29	1.8
66	85	G2_power station	-1.36	1.8
66	83	Q_power station	-5.032E-02	0.12
66	98	Q_power station	-4.778E-02	0.12
66	99	Q_power station	-4.778E-02	6.651E-02
66	85	Q_power station	-5.032E-02	6.651E-02
66	83	Q_neve	-0.15	0.57
66	98	Q_neve	-0.13	0.57
66	99	Q_neve	-0.13	0.45
66	85	Q_neve	-0.15	0.45
66	83	Q_manutenzione	-5.032E-02	0.12
66	98	Q_manutenzione	-4.778E-02	0.12
66	99	Q_manutenzione	-4.778E-02	6.651E-02
66	85	Q_manutenzione	-5.032E-02	6.651E-02
66	83	EQ_X	3.34	-0.76
66	98	EQ_X	3.1	-0.76
66	99	EQ_X	3.1	-0.39
66	85	EQ_X	3.34	-0.39
66	83	EQ_Y	-1.45	4.02
66	98	EQ_Y	0.2	4.02
66	99	EQ_Y	0.2	-0.91
66	85	EQ_Y	-1.45	-0.91
67	85	DEAD	2.892E-14	-5.314E-14
67	99	DEAD	7.554E-13	8.567E-15
67	100	DEAD	1.079E-13	1.444E-13
67	87	DEAD	2.024E-13	5.616E-13
67	85	G1_power station	0.	0.
67	99	G1_power station	0.	0.
67	100	G1_power station	0.	0.
67	87	G1_power station	0.	0.
67	85	G2_power station	1.34	1.86
67	99	G2_power station	1.32	1.86
67	100	G2_power station	1.32	1.04
67	87	G2_power station	1.34	1.04
67	85	Q_power station	4.943E-02	6.879E-02
67	99	Q_power station	4.879E-02	6.879E-02
67	100	Q_power station	4.879E-02	3.850E-02
67	87	Q_power station	4.943E-02	3.850E-02
67	85	Q_neve	0.14	0.45
67	99	Q_neve	0.15	0.45

Table 20: Element Forces - Area Shells, Part 3 of 3

Area	Joint	OutputCase	V13	V23
			KN/m	KN/m
67	100	Q_neve	0.15	0.39
67	87	Q_neve	0.14	0.39
67	85	Q_manutenzione	4.943E-02	6.879E-02
67	99	Q_manutenzione	4.879E-02	6.879E-02
67	100	Q_manutenzione	4.879E-02	3.850E-02
67	87	Q_manutenzione	4.943E-02	3.850E-02
67	85	EQ_X	2.42	-0.32
67	99	EQ_X	2.31	-0.32
67	100	EQ_X	2.31	-9.624E-02
67	87	EQ_X	2.42	-9.624E-02
67	85	EQ_Y	0.11	-1.03
67	99	EQ_Y	-9.746E-02	-1.03
67	100	EQ_Y	-9.746E-02	0.55
67	87	EQ_Y	0.11	0.55
68	87	DEAD	5.500E-14	-7.229E-14
68	100	DEAD	6.581E-13	4.595E-13
68	101	DEAD	7.660E-13	-2.698E-13
68	89	DEAD	2.608E-14	-5.279E-13
68	87	G1_power station	0.	0.
68	100	G1_power station	0.	0.
68	101	G1_power station	0.	0.
68	89	G1_power station	0.	0.
68	87	G2_power station	2.02	1.03
68	100	G2_power station	2.38	1.03
68	101	G2_power station	2.38	0.32
68	89	G2_power station	2.02	0.32
68	87	Q_power station	7.488E-02	3.825E-02
68	100	Q_power station	8.796E-02	3.825E-02
68	101	Q_power station	8.796E-02	1.186E-02
68	89	Q_power station	7.488E-02	1.186E-02
68	87	Q_neve	0.23	0.38
68	100	Q_neve	0.28	0.38
68	101	Q_neve	0.28	0.32
68	89	Q_neve	0.23	0.32
68	87	Q_manutenzione	7.488E-02	3.825E-02
68	100	Q_manutenzione	8.796E-02	3.825E-02
68	101	Q_manutenzione	8.796E-02	1.186E-02
68	89	Q_manutenzione	7.488E-02	1.186E-02
68	87	EQ_X	1.66	-0.1
68	100	EQ_X	1.77	-0.1
68	101	EQ_X	1.77	6.304E-02
68	89	EQ_X	1.66	6.304E-02
68	87	EQ_Y	-0.21	0.49

Table 20: Element Forces - Area Shells, Part 3 of 3

Area	Joint	OutputCase	V13	V23
			KN/m	KN/m
68	100	EQ_Y	-4.336E-02	0.49
68	101	EQ_Y	-4.336E-02	0.4
68	89	EQ_Y	-0.21	0.4
69	89	DEAD	-4.284E-13	-3.632E-13
69	101	DEAD	-4.439E-13	-3.710E-13
69	102	DEAD	5.196E-13	-4.725E-14
69	91	DEAD	-2.859E-13	-4.500E-13
69	89	G1_power station	0.	0.
69	101	G1_power station	0.	0.
69	102	G1_power station	0.	0.
69	91	G1_power station	0.	0.
69	89	G2_power station	1.16	8.072E-03
69	101	G2_power station	2.69	8.072E-03
69	102	G2_power station	2.69	-0.61
69	91	G2_power station	1.16	-0.61
69	89	Q_power station	4.279E-02	2.987E-04
69	101	Q_power station	9.937E-02	2.987E-04
69	102	Q_power station	9.937E-02	-2.258E-02
69	91	Q_power station	4.279E-02	-2.258E-02
69	89	Q_neve	0.16	0.28
69	101	Q_neve	0.35	0.28
69	102	Q_neve	0.35	0.25
69	91	Q_neve	0.16	0.25
69	89	Q_manutenzione	4.279E-02	2.987E-04
69	101	Q_manutenzione	9.937E-02	2.987E-04
69	102	Q_manutenzione	9.937E-02	-2.258E-02
69	91	Q_manutenzione	4.279E-02	-2.258E-02
69	89	EQ_X	0.91	-6.508E-02
69	101	EQ_X	1.58	-6.508E-02
69	102	EQ_X	1.58	-0.31
69	91	EQ_X	0.91	-0.31
69	89	EQ_Y	-0.25	0.35
69	101	EQ_Y	-2.651E-02	0.35
69	102	EQ_Y	-2.651E-02	0.12
69	91	EQ_Y	-0.25	0.12
70	91	DEAD	1.201E-13	-1.997E-13
70	102	DEAD	9.897E-14	-5.390E-13
70	103	DEAD	1.991E-13	3.138E-13
70	26	DEAD	4.940E-13	-5.785E-13
70	91	G1_power station	0.	0.
70	102	G1_power station	0.	0.
70	103	G1_power station	0.	0.
70	26	G1_power station	0.	0.

Table 20: Element Forces - Area Shells, Part 3 of 3

Area	Joint	OutputCase	V13	V23
			KN/m	KN/m
70	91	G2_power station	-5.72	-3.21
70	102	G2_power station	9.05	-3.21
70	103	G2_power station	9.05	-2.29
70	26	G2_power station	-5.72	-2.29
70	91	Q_power station	-0.21	-0.12
70	102	Q_power station	0.33	-0.12
70	103	Q_power station	0.33	-8.484E-02
70	26	Q_power station	-0.21	-8.484E-02
70	91	Q_neve	-0.55	-4.732E-02
70	102	Q_neve	1.08	-4.732E-02
70	103	Q_neve	1.08	0.25
70	26	Q_neve	-0.55	0.25
70	91	Q_manutenzione	-0.21	-0.12
70	102	Q_manutenzione	0.33	-0.12
70	103	Q_manutenzione	0.33	-8.484E-02
70	26	Q_manutenzione	-0.21	-8.484E-02
70	91	EQ_X	-4.327E-02	-1.04
70	102	EQ_X	3.37	-1.04
70	103	EQ_X	3.37	2.95
70	26	EQ_X	-4.327E-02	2.95
70	91	EQ_Y	1.16	0.29
70	102	EQ_Y	-0.75	0.29
70	103	EQ_Y	-0.75	3.6
70	26	EQ_Y	1.16	3.6
71	40	DEAD	2.081E-13	2.659E-13
71	42	DEAD	-2.292E-13	1.657E-13
71	104	DEAD	-3.449E-13	-1.291E-13
71	97	DEAD	6.397E-13	2.447E-13
71	40	G1_power station	0.	0.
71	42	G1_power station	0.	0.
71	104	G1_power station	0.	0.
71	97	G1_power station	0.	0.
71	40	G2_power station	-4.59	6.18
71	42	G2_power station	-1.28	6.18
71	104	G2_power station	-1.28	8.15
71	97	G2_power station	-4.59	8.15
71	40	Q_power station	-0.17	0.23
71	42	Q_power station	-4.723E-02	0.23
71	104	Q_power station	-4.723E-02	0.3
71	97	Q_power station	-0.17	0.3
71	40	Q_neve	-0.64	0.65
71	42	Q_neve	-0.35	0.65
71	104	Q_neve	-0.35	0.84

Table 20: Element Forces - Area Shells, Part 3 of 3

Area	Joint	OutputCase	V13	V23
			KN/m	KN/m
71	97	Q_neve	-0.64	0.84
71	40	Q_manutenzione	-0.17	0.23
71	42	Q_manutenzione	-4.723E-02	0.23
71	104	Q_manutenzione	-4.723E-02	0.3
71	97	Q_manutenzione	-0.17	0.3
71	40	EQ_X	-25.57	4.68
71	42	EQ_X	2.09	4.68
71	104	EQ_X	2.09	1.21
71	97	EQ_X	-25.57	1.21
71	40	EQ_Y	-7.05	3.02
71	42	EQ_Y	0.8	3.02
71	104	EQ_Y	0.8	8.93
71	97	EQ_Y	-7.05	8.93
72	97	DEAD	-9.362E-13	6.302E-13
72	104	DEAD	-4.397E-14	9.062E-14
72	105	DEAD	-6.722E-14	6.697E-13
72	98	DEAD	2.720E-13	5.251E-13
72	97	G1_power station	0.	0.
72	104	G1_power station	0.	0.
72	105	G1_power station	0.	0.
72	98	G1_power station	0.	0.
72	97	G2_power station	-5.35	6.82
72	104	G2_power station	-1.98	6.82
72	105	G2_power station	-1.98	3.68
72	98	G2_power station	-5.35	3.68
72	97	Q_power station	-0.2	0.25
72	104	Q_power station	-7.308E-02	0.25
72	105	Q_power station	-7.308E-02	0.14
72	98	Q_power station	-0.2	0.14
72	97	Q_neve	-0.58	0.72
72	104	Q_neve	-0.28	0.72
72	105	Q_neve	-0.28	0.45
72	98	Q_neve	-0.58	0.45
72	97	Q_manutenzione	-0.2	0.25
72	104	Q_manutenzione	-7.308E-02	0.25
72	105	Q_manutenzione	-7.308E-02	0.14
72	98	Q_manutenzione	-0.2	0.14
72	97	EQ_X	5.62	-0.34
72	104	EQ_X	-1.28	-0.34
72	105	EQ_X	-1.28	-2.69
72	98	EQ_X	5.62	-2.69
72	97	EQ_Y	-1.1	8.01
72	104	EQ_Y	-2.27	8.01

Table 20: Element Forces - Area Shells, Part 3 of 3

Area	Joint	OutputCase	V13	V23
			KN/m	KN/m
72	105	EQ_Y	-2.27	1.56
72	98	EQ_Y	-1.1	1.56
73	98	DEAD	5.734E-13	1.040E-12
73	105	DEAD	2.187E-13	6.467E-13
73	106	DEAD	1.205E-12	9.214E-13
73	99	DEAD	-4.923E-13	1.468E-14
73	98	G1_power station	0.	0.
73	105	G1_power station	0.	0.
73	106	G1_power station	0.	0.
73	99	G1_power station	0.	0.
73	98	G2_power station	-0.39	3.45
73	105	G2_power station	-0.59	3.45
73	106	G2_power station	-0.59	1.29
73	99	G2_power station	-0.39	1.29
73	98	Q_power station	-1.427E-02	0.13
73	105	Q_power station	-2.193E-02	0.13
73	106	Q_power station	-2.193E-02	4.773E-02
73	99	Q_power station	-1.427E-02	4.773E-02
73	98	Q_neve	-5.940E-02	0.43
73	105	Q_neve	-7.515E-02	0.43
73	106	Q_neve	-7.515E-02	0.24
73	99	Q_neve	-5.940E-02	0.24
73	98	Q_manutenzione	-1.427E-02	0.13
73	105	Q_manutenzione	-2.193E-02	0.13
73	106	Q_manutenzione	-2.193E-02	4.773E-02
73	99	Q_manutenzione	-1.427E-02	4.773E-02
73	98	EQ_X	2.7	-1.55
73	105	EQ_X	2.03	-1.55
73	106	EQ_X	2.03	-0.6
73	99	EQ_X	2.7	-0.6
73	98	EQ_Y	0.2	2.08
73	105	EQ_Y	-0.64	2.08
73	106	EQ_Y	-0.64	1.47
73	99	EQ_Y	0.2	1.47
74	99	DEAD	3.661E-13	1.771E-13
74	106	DEAD	3.604E-13	-9.264E-14
74	107	DEAD	-5.029E-13	2.561E-13
74	100	DEAD	5.974E-13	1.839E-13
74	99	G1_power station	0.	0.
74	106	G1_power station	0.	0.
74	107	G1_power station	0.	0.
74	100	G1_power station	0.	0.
74	99	G2_power station	1.77	1.48

Table 20: Element Forces - Area Shells, Part 3 of 3

Area	Joint	OutputCase	V13	V23
			KN/m	KN/m
74	106	G2_power station	1.57	1.48
74	107	G2_power station	1.57	0.5
74	100	G2_power station	1.77	0.5
74	99	Q_power station	6.552E-02	5.492E-02
74	106	Q_power station	5.804E-02	5.492E-02
74	107	Q_power station	5.804E-02	1.855E-02
74	100	Q_power station	6.552E-02	1.855E-02
74	99	Q_neve	0.18	0.26
74	106	Q_neve	0.17	0.26
74	107	Q_neve	0.17	0.18
74	100	Q_neve	0.18	0.18
74	99	Q_manutenzione	6.552E-02	5.492E-02
74	106	Q_manutenzione	5.804E-02	5.492E-02
74	107	Q_manutenzione	5.804E-02	1.855E-02
74	100	Q_manutenzione	6.552E-02	1.855E-02
74	99	EQ_X	2.18	-0.56
74	106	EQ_X	2.24	-0.56
74	107	EQ_X	2.24	-0.13
74	100	EQ_X	2.18	-0.13
74	99	EQ_Y	6.667E-03	1.66
74	106	EQ_Y	-7.281E-02	1.66
74	107	EQ_Y	-7.281E-02	1.31
74	100	EQ_Y	6.667E-03	1.31
75	100	DEAD	7.566E-13	3.148E-13
75	107	DEAD	-7.810E-13	-3.327E-13
75	108	DEAD	-6.654E-13	5.518E-13
75	101	DEAD	3.249E-13	3.783E-13
75	100	G1_power station	0.	0.
75	107	G1_power station	0.	0.
75	108	G1_power station	0.	0.
75	101	G1_power station	0.	0.
75	100	G2_power station	2.6	0.53
75	107	G2_power station	2.96	0.53
75	108	G2_power station	2.96	6.664E-02
75	101	G2_power station	2.6	6.664E-02
75	100	Q_power station	9.635E-02	1.966E-02
75	107	Q_power station	0.11	1.966E-02
75	108	Q_power station	0.11	2.466E-03
75	101	Q_power station	9.635E-02	2.466E-03
75	100	Q_neve	0.29	0.18
75	107	Q_neve	0.34	0.18
75	108	Q_neve	0.34	0.15
75	101	Q_neve	0.29	0.15

Table 20: Element Forces - Area Shells, Part 3 of 3

Area	Joint	OutputCase	V13	V23
			KN/m	KN/m
75	100	Q_manutenzione	9.635E-02	1.966E-02
75	107	Q_manutenzione	0.11	1.966E-02
75	108	Q_manutenzione	0.11	2.466E-03
75	101	Q_manutenzione	9.635E-02	2.466E-03
75	100	EQ_X	1.67	-0.21
75	107	EQ_X	1.9	-0.21
75	108	EQ_X	1.9	7.262E-02
75	101	EQ_X	1.67	7.262E-02
75	100	EQ_Y	-6.694E-02	1.36
75	107	EQ_Y	-6.798E-02	1.36
75	108	EQ_Y	-6.798E-02	1.19
75	101	EQ_Y	-6.694E-02	1.19
76	101	DEAD	-2.036E-13	8.413E-13
76	108	DEAD	1.279E-13	-1.916E-13
76	109	DEAD	1.124E-13	3.673E-13
76	102	DEAD	6.019E-13	-3.101E-13
76	101	G1_power station	0.	0.
76	108	G1_power station	0.	0.
76	109	G1_power station	0.	0.
76	102	G1_power station	0.	0.
76	101	G2_power station	2.6	-0.22
76	108	G2_power station	3.86	-0.22
76	109	G2_power station	3.86	0.34
76	102	G2_power station	2.6	0.34
76	101	Q_power station	9.609E-02	-8.003E-03
76	108	Q_power station	0.14	-8.003E-03
76	109	Q_power station	0.14	1.272E-02
76	102	Q_power station	9.609E-02	1.272E-02
76	101	Q_neve	0.32	0.11
76	108	Q_neve	0.47	0.11
76	109	Q_neve	0.47	0.19
76	102	Q_neve	0.32	0.19
76	101	Q_manutenzione	9.609E-02	-8.003E-03
76	108	Q_manutenzione	0.14	-8.003E-03
76	109	Q_manutenzione	0.14	1.272E-02
76	102	Q_manutenzione	9.609E-02	1.272E-02
76	101	EQ_X	1.35	-6.279E-02
76	108	EQ_X	1.69	-6.279E-02
76	109	EQ_X	1.69	0.48
76	102	EQ_X	1.35	0.48
76	101	EQ_Y	-0.11	1.18
76	108	EQ_Y	-9.194E-02	1.18
76	109	EQ_Y	-9.194E-02	1.3

Table 20: Element Forces - Area Shells, Part 3 of 3

Area	Joint	OutputCase	V13	V23
			KN/m	KN/m
76	102	EQ_Y	-0.11	1.3
77	102	DEAD	7.232E-13	-2.665E-13
77	109	DEAD	-8.878E-13	-5.843E-14
77	110	DEAD	-5.408E-13	5.630E-13
77	103	DEAD	-5.718E-13	2.181E-13
77	102	G1_power station	0.	0.
77	109	G1_power station	0.	0.
77	110	G1_power station	0.	0.
77	103	G1_power station	0.	0.
77	102	G2_power station	8.88	1.07
77	109	G2_power station	1.86	1.07
77	110	G2_power station	1.86	-0.28
77	103	G2_power station	8.88	-0.28
77	102	Q_power station	0.33	3.965E-02
77	109	Q_power station	6.868E-02	3.965E-02
77	110	Q_power station	6.868E-02	-1.049E-02
77	103	Q_power station	0.33	-1.049E-02
77	102	Q_neve	1.03	0.27
77	109	Q_neve	0.29	0.27
77	110	Q_neve	0.29	0.13
77	103	Q_neve	1.03	0.13
77	102	Q_manutenzione	0.33	3.965E-02
77	109	Q_manutenzione	6.868E-02	3.965E-02
77	110	Q_manutenzione	6.868E-02	-1.049E-02
77	103	Q_manutenzione	0.33	-1.049E-02
77	102	EQ_X	2.75	0.61
77	109	EQ_X	1.07	0.61
77	110	EQ_X	1.07	0.23
77	103	EQ_X	2.75	0.23
77	102	EQ_Y	-1.28	1.07
77	109	EQ_Y	0.12	1.07
77	110	EQ_Y	0.12	1.26
77	103	EQ_Y	-1.28	1.26
78	42	DEAD	4.150E-13	1.163E-13
78	44	DEAD	-3.694E-13	-2.230E-13
78	111	DEAD	1.780E-13	-2.237E-15
78	104	DEAD	-1.324E-13	-8.945E-13
78	42	G1_power station	0.	0.
78	44	G1_power station	0.	0.
78	111	G1_power station	0.	0.
78	104	G1_power station	0.	0.
78	42	G2_power station	-1.46	-3.404E-13
78	44	G2_power station	-1.46	1.759E-13

Table 20: Element Forces - Area Shells, Part 3 of 3

Area	Joint	OutputCase	V13	V23
			KN/m	KN/m
78	111	G2_power station	-1.46	-2.444E-14
78	104	G2_power station	-1.46	-1.088E-12
78	42	Q_power station	-5.414E-02	-2.569E-14
78	44	Q_power station	-5.414E-02	1.429E-14
78	111	Q_power station	-5.414E-02	1.463E-15
78	104	Q_power station	-5.414E-02	-1.287E-14
78	42	Q_neve	-0.37	-6.307E-14
78	44	Q_neve	-0.37	-1.202E-14
78	111	Q_neve	-0.37	6.056E-15
78	104	Q_neve	-0.37	-1.305E-13
78	42	Q_manutenzione	-5.414E-02	-2.569E-14
78	44	Q_manutenzione	-5.414E-02	1.429E-14
78	111	Q_manutenzione	-5.414E-02	1.463E-15
78	104	Q_manutenzione	-5.414E-02	-1.287E-14
78	42	EQ_X	1.98	7.304E-15
78	44	EQ_X	1.98	1.123E-13
78	111	EQ_X	1.98	-2.726E-14
78	104	EQ_X	1.98	-1.494E-13
78	42	EQ_Y	0.2	6.4
78	44	EQ_Y	-0.2	6.4
78	111	EQ_Y	-0.2	5.56
78	104	EQ_Y	0.2	5.56
79	104	DEAD	6.736E-13	-4.308E-13
79	111	DEAD	-4.712E-13	-1.611E-13
79	112	DEAD	8.316E-13	4.315E-14
79	105	DEAD	-7.616E-14	1.154E-13
79	104	G1_power station	0.	0.
79	111	G1_power station	0.	0.
79	112	G1_power station	0.	0.
79	105	G1_power station	0.	0.
79	104	G2_power station	-1.56	-3.905E-13
79	111	G2_power station	-1.56	2.570E-13
79	112	G2_power station	-1.56	1.625E-13
79	105	G2_power station	-1.56	3.360E-13
79	104	Q_power station	-5.762E-02	1.519E-14
79	111	Q_power station	-5.762E-02	3.543E-14
79	112	Q_power station	-5.762E-02	-9.493E-15
79	105	Q_power station	-5.762E-02	-4.071E-15
79	104	Q_neve	-0.25	-7.134E-14
79	111	Q_neve	-0.25	2.405E-14
79	112	Q_neve	-0.25	-1.703E-14
79	105	Q_neve	-0.25	5.861E-14
79	104	Q_manutenzione	-5.762E-02	1.519E-14

Table 20: Element Forces - Area Shells, Part 3 of 3

Area	Joint	OutputCase	V13	V23
			KN/m	KN/m
79	111	Q_manutenzione	-5.762E-02	3.543E-14
79	112	Q_manutenzione	-5.762E-02	-9.493E-15
79	105	Q_manutenzione	-5.762E-02	-4.071E-15
79	104	EQ_X	-0.69	-3.516E-14
79	111	EQ_X	-0.69	2.723E-14
79	112	EQ_X	-0.69	2.162E-14
79	105	EQ_X	-0.69	3.834E-14
79	104	EQ_Y	-1.13	5.07
79	111	EQ_Y	1.13	5.07
79	112	EQ_Y	1.13	4.17
79	105	EQ_Y	-1.13	4.17
80	105	DEAD	5.835E-13	-1.735E-13
80	112	DEAD	-4.512E-13	-1.735E-13
80	113	DEAD	-1.274E-13	-6.475E-13
80	106	DEAD	4.968E-13	-6.475E-13
80	105	G1_power station	0.	0.
80	112	G1_power station	0.	0.
80	113	G1_power station	0.	0.
80	106	G1_power station	0.	0.
80	105	G2_power station	-6.821E-02	1.169E-13
80	112	G2_power station	-6.821E-02	1.747E-13
80	113	G2_power station	-6.821E-02	-4.361E-13
80	106	G2_power station	-6.821E-02	-2.203E-13
80	105	Q_power station	-2.524E-03	-4.136E-15
80	112	Q_power station	-2.524E-03	-2.329E-15
80	113	Q_power station	-2.524E-03	-1.154E-14
80	106	Q_power station	-2.524E-03	-4.798E-15
80	105	Q_neve	-3.030E-02	-3.991E-14
80	112	Q_neve	-3.030E-02	-3.268E-14
80	113	Q_neve	-3.030E-02	-3.991E-14
80	106	Q_neve	-3.030E-02	-1.293E-14
80	105	Q_manutenzione	-2.524E-03	-4.136E-15
80	112	Q_manutenzione	-2.524E-03	-2.329E-15
80	113	Q_manutenzione	-2.524E-03	-1.154E-14
80	106	Q_manutenzione	-2.524E-03	-4.798E-15
80	105	EQ_X	1.98	5.589E-14
80	112	EQ_X	1.98	4.144E-14
80	113	EQ_X	1.98	1.151E-13
80	106	EQ_X	1.98	6.119E-14
80	105	EQ_Y	0.13	4.08
80	112	EQ_Y	-0.13	4.08
80	113	EQ_Y	-0.13	2.28
80	106	EQ_Y	0.13	2.28

Table 20: Element Forces - Area Shells, Part 3 of 3

Area	Joint	OutputCase	V13	V23
			KN/m	KN/m
81	106	DEAD	-2.626E-13	-4.909E-13
81	113	DEAD	6.642E-13	-3.368E-13
81	114	DEAD	7.643E-13	-5.641E-14
81	107	DEAD	1.112E-13	-4.158E-13
81	106	G1_power station	0.	0.
81	113	G1_power station	0.	0.
81	114	G1_power station	0.	0.
81	107	G1_power station	0.	0.
81	106	G2_power station	1.82	-3.397E-13
81	113	G2_power station	1.82	-2.221E-13
81	114	G2_power station	1.82	-1.380E-14
81	107	G2_power station	1.82	-1.826E-13
81	106	Q_power station	6.743E-02	-9.220E-15
81	113	Q_power station	6.743E-02	-6.390E-15
81	114	Q_power station	6.743E-02	-5.793E-16
81	107	Q_power station	6.743E-02	-6.081E-15
81	106	Q_neve	0.19	-5.349E-14
81	113	Q_neve	0.19	1.010E-14
81	114	Q_neve	0.19	-2.633E-14
81	107	Q_neve	0.19	-3.433E-14
81	106	Q_manutenzione	6.743E-02	-9.220E-15
81	113	Q_manutenzione	6.743E-02	-6.390E-15
81	114	Q_manutenzione	6.743E-02	-5.793E-16
81	107	Q_manutenzione	6.743E-02	-6.081E-15
81	106	EQ_X	2.11	2.433E-14
81	113	EQ_X	2.11	1.181E-14
81	114	EQ_X	2.11	4.408E-14
81	107	EQ_X	2.11	9.081E-14
81	106	EQ_Y	0.23	2.53
81	113	EQ_Y	-0.23	2.53
81	114	EQ_Y	-0.23	1.59
81	107	EQ_Y	0.23	1.59
82	107	DEAD	1.580E-13	-8.958E-14
82	114	DEAD	-4.234E-14	-2.977E-13
82	115	DEAD	-1.580E-13	2.264E-13
82	108	DEAD	5.897E-13	5.713E-13
82	107	G1_power station	0.	0.
82	114	G1_power station	0.	0.
82	115	G1_power station	0.	0.
82	108	G1_power station	0.	0.
82	107	G2_power station	3.02	-6.087E-14
82	114	G2_power station	3.02	2.970E-14
82	115	G2_power station	3.02	5.516E-14

Table 20: Element Forces - Area Shells, Part 3 of 3

Area	Joint	OutputCase	V13	V23
			KN/m	KN/m
82	108	G2_power station	3.02	5.439E-14
82	107	Q_power station	0.11	3.174E-15
82	114	Q_power station	0.11	2.180E-15
82	115	Q_power station	0.11	2.171E-15
82	108	Q_power station	0.11	-4.430E-16
82	107	Q_neve	0.34	-4.816E-15
82	114	Q_neve	0.34	-2.481E-14
82	115	Q_neve	0.34	1.123E-14
82	108	Q_neve	0.34	1.839E-14
82	107	Q_manutenzione	0.11	3.174E-15
82	114	Q_manutenzione	0.11	2.180E-15
82	115	Q_manutenzione	0.11	2.171E-15
82	108	Q_manutenzione	0.11	-4.430E-16
82	107	EQ_X	1.81	8.831E-15
82	114	EQ_X	1.81	4.207E-14
82	115	EQ_X	1.81	-5.981E-15
82	108	EQ_X	1.81	-2.212E-14
82	107	EQ_Y	5.567E-02	1.73
82	114	EQ_Y	-5.567E-02	1.73
82	115	EQ_Y	-5.567E-02	1.44
82	108	EQ_Y	5.567E-02	1.44
83	108	DEAD	-4.455E-13	1.549E-13
83	115	DEAD	7.994E-13	-1.148E-13
83	116	DEAD	-6.035E-13	-2.006E-13
83	109	DEAD	-6.961E-14	-2.728E-13
83	108	G1_power station	0.	0.
83	115	G1_power station	0.	0.
83	116	G1_power station	0.	0.
83	109	G1_power station	0.	0.
83	108	G2_power station	3.81	4.617E-14
83	115	G2_power station	3.81	1.725E-14
83	116	G2_power station	3.81	1.654E-14
83	109	G2_power station	3.81	-9.137E-14
83	108	Q_power station	0.14	8.780E-16
83	115	Q_power station	0.14	3.468E-15
83	116	Q_power station	0.14	-1.591E-15
83	109	Q_power station	0.14	2.233E-15
83	108	Q_neve	0.45	7.400E-15
83	115	Q_neve	0.45	7.099E-15
83	116	Q_neve	0.45	-8.647E-15
83	109	Q_neve	0.45	-2.467E-15
83	108	Q_manutenzione	0.14	8.780E-16
83	115	Q_manutenzione	0.14	3.468E-15

Table 20: Element Forces - Area Shells, Part 3 of 3

Area	Joint	OutputCase	V13	V23
			KN/m	KN/m
83	116	Q_manutenzione	0.14	-1.591E-15
83	109	Q_manutenzione	0.14	2.233E-15
83	108	EQ_X	1.6	-1.404E-14
83	115	EQ_X	1.6	2.475E-14
83	116	EQ_X	1.6	-6.630E-15
83	109	EQ_X	1.6	3.761E-15
83	108	EQ_Y	-0.12	1.44
83	115	EQ_Y	0.12	1.44
83	116	EQ_Y	0.12	1.35
83	109	EQ_Y	-0.12	1.35
84	109	DEAD	-1.111E-12	1.891E-13
84	116	DEAD	6.067E-14	-2.425E-13
84	117	DEAD	1.531E-13	-1.663E-13
84	110	DEAD	-3.343E-13	-2.820E-13
84	109	G1_power station	0.	0.
84	116	G1_power station	0.	0.
84	117	G1_power station	0.	0.
84	110	G1_power station	0.	0.
84	109	G2_power station	2.24	-2.249E-13
84	116	G2_power station	2.24	-1.401E-13
84	117	G2_power station	2.24	1.109E-13
84	110	G2_power station	2.24	3.339E-13
84	109	Q_power station	8.275E-02	-7.979E-15
84	116	Q_power station	8.275E-02	-2.799E-15
84	117	Q_power station	8.275E-02	-5.729E-16
84	110	Q_power station	8.275E-02	7.075E-15
84	109	Q_neve	0.33	-9.595E-15
84	116	Q_neve	0.33	-9.595E-15
84	117	Q_neve	0.33	-4.658E-15
84	110	Q_neve	0.33	-4.658E-15
84	109	Q_manutenzione	8.275E-02	-7.979E-15
84	116	Q_manutenzione	8.275E-02	-2.799E-15
84	117	Q_manutenzione	8.275E-02	-5.729E-16
84	110	Q_manutenzione	8.275E-02	7.075E-15
84	109	EQ_X	1.16	1.652E-14
84	116	EQ_X	1.16	1.797E-14
84	117	EQ_X	1.16	-9.397E-15
84	110	EQ_X	1.16	-2.153E-14
84	109	EQ_Y	6.362E-03	1.26
84	116	EQ_Y	-6.362E-03	1.26
84	117	EQ_Y	-6.362E-03	1.49
84	110	EQ_Y	6.362E-03	1.49
85	44	DEAD	-1.157E-13	1.346E-13

Table 20: Element Forces - Area Shells, Part 3 of 3

Area	Joint	OutputCase	V13	V23
			KN/m	KN/m
85	46	DEAD	-7.477E-13	-8.124E-14
85	118	DEAD	-4.317E-13	2.531E-13
85	111	DEAD	2.003E-13	1.953E-13
85	44	G1_power station	0.	0.
85	46	G1_power station	0.	0.
85	118	G1_power station	0.	0.
85	111	G1_power station	0.	0.
85	44	G2_power station	-1.28	-6.18
85	46	G2_power station	-4.59	-6.18
85	118	G2_power station	-4.59	-8.15
85	111	G2_power station	-1.28	-8.15
85	44	Q_power station	-4.723E-02	-0.23
85	46	Q_power station	-0.17	-0.23
85	118	Q_power station	-0.17	-0.3
85	111	Q_power station	-4.723E-02	-0.3
85	44	Q_neve	-0.35	-0.65
85	46	Q_neve	-0.64	-0.65
85	118	Q_neve	-0.64	-0.84
85	111	Q_neve	-0.35	-0.84
85	44	Q_manutenzione	-4.723E-02	-0.23
85	46	Q_manutenzione	-0.17	-0.23
85	118	Q_manutenzione	-0.17	-0.3
85	111	Q_manutenzione	-4.723E-02	-0.3
85	44	EQ_X	2.09	-4.68
85	46	EQ_X	-25.57	-4.68
85	118	EQ_X	-25.57	-1.21
85	111	EQ_X	2.09	-1.21
85	44	EQ_Y	-0.8	3.02
85	46	EQ_Y	7.05	3.02
85	118	EQ_Y	7.05	8.93
85	111	EQ_Y	-0.8	8.93
86	111	DEAD	9.056E-13	-2.779E-13
86	118	DEAD	-3.893E-13	-1.588E-14
86	119	DEAD	-3.583E-13	5.516E-13
86	112	DEAD	-7.053E-13	2.211E-13
86	111	G1_power station	0.	0.
86	118	G1_power station	0.	0.
86	119	G1_power station	0.	0.
86	112	G1_power station	0.	0.
86	111	G2_power station	-1.98	-6.82
86	118	G2_power station	-5.35	-6.82
86	119	G2_power station	-5.35	-3.68
86	112	G2_power station	-1.98	-3.68

Table 20: Element Forces - Area Shells, Part 3 of 3

Area	Joint	OutputCase	V13	V23
			KN/m	KN/m
86	111	Q_power station	-7.308E-02	-0.25
86	118	Q_power station	-0.2	-0.25
86	119	Q_power station	-0.2	-0.14
86	112	Q_power station	-7.308E-02	-0.14
86	111	Q_neve	-0.28	-0.72
86	118	Q_neve	-0.58	-0.72
86	119	Q_neve	-0.58	-0.45
86	112	Q_neve	-0.28	-0.45
86	111	Q_manutenzione	-7.308E-02	-0.25
86	118	Q_manutenzione	-0.2	-0.25
86	119	Q_manutenzione	-0.2	-0.14
86	112	Q_manutenzione	-7.308E-02	-0.14
86	111	EQ_X	-1.28	0.34
86	118	EQ_X	5.62	0.34
86	119	EQ_X	5.62	2.69
86	112	EQ_X	-1.28	2.69
86	111	EQ_Y	2.27	8.01
86	118	EQ_Y	1.1	8.01
86	119	EQ_Y	1.1	1.56
86	112	EQ_Y	2.27	1.56
87	112	DEAD	1.173E-13	6.962E-13
87	119	DEAD	4.255E-13	2.028E-13
87	120	DEAD	7.493E-13	2.617E-13
87	113	DEAD	3.055E-14	-2.712E-13
87	112	G1_power station	0.	0.
87	119	G1_power station	0.	0.
87	120	G1_power station	0.	0.
87	113	G1_power station	0.	0.
87	112	G2_power station	-0.59	-3.45
87	119	G2_power station	-0.39	-3.45
87	120	G2_power station	-0.39	-1.29
87	113	G2_power station	-0.59	-1.29
87	112	Q_power station	-2.193E-02	-0.13
87	119	Q_power station	-1.427E-02	-0.13
87	120	Q_power station	-1.427E-02	-4.773E-02
87	113	Q_power station	-2.193E-02	-4.773E-02
87	112	Q_neve	-7.515E-02	-0.43
87	119	Q_neve	-5.940E-02	-0.43
87	120	Q_neve	-5.940E-02	-0.24
87	113	Q_neve	-7.515E-02	-0.24
87	112	Q_manutenzione	-2.193E-02	-0.13
87	119	Q_manutenzione	-1.427E-02	-0.13
87	120	Q_manutenzione	-1.427E-02	-4.773E-02

Table 20: Element Forces - Area Shells, Part 3 of 3

Area	Joint	OutputCase	V13	V23
			KN/m	KN/m
87	113	Q_manutenzione	-2.193E-02	-4.773E-02
87	112	EQ_X	2.03	1.55
87	119	EQ_X	2.7	1.55
87	120	EQ_X	2.7	0.6
87	113	EQ_X	2.03	0.6
87	112	EQ_Y	0.64	2.08
87	119	EQ_Y	-0.2	2.08
87	120	EQ_Y	-0.2	1.47
87	113	EQ_Y	0.64	1.47
88	113	DEAD	5.029E-13	-5.418E-13
88	120	DEAD	-1.502E-13	4.217E-13
88	121	DEAD	-3.661E-13	-2.832E-14
88	114	DEAD	5.607E-13	-1.708E-13
88	113	G1_power station	0.	0.
88	120	G1_power station	0.	0.
88	121	G1_power station	0.	0.
88	114	G1_power station	0.	0.
88	113	G2_power station	1.57	-1.48
88	120	G2_power station	1.77	-1.48
88	121	G2_power station	1.77	-0.5
88	114	G2_power station	1.57	-0.5
88	113	Q_power station	5.804E-02	-5.492E-02
88	120	Q_power station	6.552E-02	-5.492E-02
88	121	Q_power station	6.552E-02	-1.855E-02
88	114	Q_power station	5.804E-02	-1.855E-02
88	113	Q_neve	0.17	-0.26
88	120	Q_neve	0.18	-0.26
88	121	Q_neve	0.18	-0.18
88	114	Q_neve	0.17	-0.18
88	113	Q_manutenzione	5.804E-02	-5.492E-02
88	120	Q_manutenzione	6.552E-02	-5.492E-02
88	121	Q_manutenzione	6.552E-02	-1.855E-02
88	114	Q_manutenzione	5.804E-02	-1.855E-02
88	113	EQ_X	2.24	0.56
88	120	EQ_X	2.18	0.56
88	121	EQ_X	2.18	0.13
88	114	EQ_X	2.24	0.13
88	113	EQ_Y	7.281E-02	1.66
88	120	EQ_Y	-6.667E-03	1.66
88	121	EQ_Y	-6.667E-03	1.31
88	114	EQ_Y	7.281E-02	1.31
89	114	DEAD	1.041E-12	-2.973E-14
89	121	DEAD	1.991E-13	-1.839E-13

Table 20: Element Forces - Area Shells, Part 3 of 3

Area	Joint	OutputCase	V13	V23
			KN/m	KN/m
89	122	DEAD	6.463E-13	-2.667E-13
89	115	DEAD	1.201E-13	9.264E-14
89	114	G1_power station	0.	0.
89	121	G1_power station	0.	0.
89	122	G1_power station	0.	0.
89	115	G1_power station	0.	0.
89	114	G2_power station	2.96	-0.53
89	121	G2_power station	2.6	-0.53
89	122	G2_power station	2.6	-6.664E-02
89	115	G2_power station	2.96	-6.664E-02
89	114	Q_power station	0.11	-1.966E-02
89	121	Q_power station	9.635E-02	-1.966E-02
89	122	Q_power station	9.635E-02	-2.466E-03
89	115	Q_power station	0.11	-2.466E-03
89	114	Q_neve	0.34	-0.18
89	121	Q_neve	0.29	-0.18
89	122	Q_neve	0.29	-0.15
89	115	Q_neve	0.34	-0.15
89	114	Q_manutenzione	0.11	-1.966E-02
89	121	Q_manutenzione	9.635E-02	-1.966E-02
89	122	Q_manutenzione	9.635E-02	-2.466E-03
89	115	Q_manutenzione	0.11	-2.466E-03
89	114	EQ_X	1.9	0.21
89	121	EQ_X	1.67	0.21
89	122	EQ_X	1.67	-7.262E-02
89	115	EQ_X	1.9	-7.262E-02
89	114	EQ_Y	6.798E-02	1.36
89	121	EQ_Y	6.694E-02	1.36
89	122	EQ_Y	6.694E-02	1.19
89	115	EQ_Y	6.798E-02	1.19
90	115	DEAD	1.674E-13	-2.775E-13
90	122	DEAD	-8.560E-13	-2.698E-13
90	123	DEAD	5.624E-13	-4.750E-13
90	116	DEAD	-1.014E-12	-7.229E-14
90	115	G1_power station	0.	0.
90	122	G1_power station	0.	0.
90	123	G1_power station	0.	0.
90	116	G1_power station	0.	0.
90	115	G2_power station	3.86	0.22
90	122	G2_power station	2.6	0.22
90	123	G2_power station	2.6	-0.34
90	116	G2_power station	3.86	-0.34
90	115	Q_power station	0.14	8.003E-03

Table 20: Element Forces - Area Shells, Part 3 of 3

Area	Joint	OutputCase	V13	V23
			KN/m	KN/m
90	122	Q_power station	9.609E-02	8.003E-03
90	123	Q_power station	9.609E-02	-1.272E-02
90	116	Q_power station	0.14	-1.272E-02
90	115	Q_neve	0.47	-0.11
90	122	Q_neve	0.32	-0.11
90	123	Q_neve	0.32	-0.19
90	116	Q_neve	0.47	-0.19
90	115	Q_manutenzione	0.14	8.003E-03
90	122	Q_manutenzione	9.609E-02	8.003E-03
90	123	Q_manutenzione	9.609E-02	-1.272E-02
90	116	Q_manutenzione	0.14	-1.272E-02
90	115	EQ_X	1.69	6.279E-02
90	122	EQ_X	1.35	6.279E-02
90	123	EQ_X	1.35	-0.48
90	116	EQ_X	1.69	-0.48
90	115	EQ_Y	9.194E-02	1.18
90	122	EQ_Y	0.11	1.18
90	123	EQ_Y	0.11	1.3
90	116	EQ_Y	9.194E-02	1.3
91	116	DEAD	-4.728E-13	-5.150E-14
91	123	DEAD	-5.941E-13	-5.449E-13
91	124	DEAD	-3.938E-13	4.620E-13
91	117	DEAD	2.749E-13	-7.087E-14
91	116	G1_power station	0.	0.
91	123	G1_power station	0.	0.
91	124	G1_power station	0.	0.
91	117	G1_power station	0.	0.
91	116	G2_power station	1.86	-1.07
91	123	G2_power station	8.88	-1.07
91	124	G2_power station	8.88	0.28
91	117	G2_power station	1.86	0.28
91	116	Q_power station	6.868E-02	-3.965E-02
91	123	Q_power station	0.33	-3.965E-02
91	124	Q_power station	0.33	1.049E-02
91	117	Q_power station	6.868E-02	1.049E-02
91	116	Q_neve	0.29	-0.27
91	123	Q_neve	1.03	-0.27
91	124	Q_neve	1.03	-0.13
91	117	Q_neve	0.29	-0.13
91	116	Q_manutenzione	6.868E-02	-3.965E-02
91	123	Q_manutenzione	0.33	-3.965E-02
91	124	Q_manutenzione	0.33	1.049E-02
91	117	Q_manutenzione	6.868E-02	1.049E-02

Table 20: Element Forces - Area Shells, Part 3 of 3

Area	Joint	OutputCase	V13	V23
			KN/m	KN/m
91	116	EQ_X	1.07	-0.61
91	123	EQ_X	2.75	-0.61
91	124	EQ_X	2.75	-0.23
91	117	EQ_X	1.07	-0.23
91	116	EQ_Y	-0.12	1.07
91	123	EQ_Y	1.28	1.07
91	124	EQ_Y	1.28	1.26
91	117	EQ_Y	-0.12	1.26
92	46	DEAD	-3.677E-13	-2.364E-13
92	63	DEAD	1.930E-13	1.875E-13
92	125	DEAD	1.853E-13	-1.969E-13
92	118	DEAD	3.503E-14	-4.840E-13
92	46	G1_power station	0.	0.
92	63	G1_power station	0.	0.
92	125	G1_power station	0.	0.
92	118	G1_power station	0.	0.
92	46	G2_power station	-7.26	-31.94
92	63	G2_power station	-31.6	-31.94
92	125	G2_power station	-31.6	-10.94
92	118	G2_power station	-7.26	-10.94
92	46	Q_power station	-0.27	-1.18
92	63	Q_power station	-1.17	-1.18
92	125	Q_power station	-1.17	-0.4
92	118	Q_power station	-0.27	-0.4
92	46	Q_neve	-0.87	-3.08
92	63	Q_neve	-3.02	-3.08
92	125	Q_neve	-3.02	-1.23
92	118	Q_neve	-0.87	-1.23
92	46	Q_manutenzione	-0.27	-1.18
92	63	Q_manutenzione	-1.17	-1.18
92	125	Q_manutenzione	-1.17	-0.4
92	118	Q_manutenzione	-0.27	-0.4
92	46	EQ_X	-27.77	21.79
92	63	EQ_X	59.63	21.79
92	125	EQ_X	59.63	18.17
92	118	EQ_X	-27.77	18.17
92	46	EQ_Y	17.75	59.04
92	63	EQ_Y	25.36	59.04
92	125	EQ_Y	25.36	-23.96
92	118	EQ_Y	17.75	-23.96
93	118	DEAD	-5.624E-13	-6.841E-14
93	125	DEAD	-4.911E-13	-2.920E-13
93	126	DEAD	-1.674E-13	-6.841E-14

Table 20: Element Forces - Area Shells, Part 3 of 3

Area	Joint	OutputCase	V13	V23
			KN/m	KN/m
93	119	DEAD	-6.491E-13	-5.290E-13
93	118	G1_power station	0.	0.
93	125	G1_power station	0.	0.
93	126	G1_power station	0.	0.
93	119	G1_power station	0.	0.
93	118	G2_power station	-7.41	-8.42
93	125	G2_power station	-5.5	-8.42
93	126	G2_power station	-5.5	-3.04
93	119	G2_power station	-7.41	-3.04
93	118	Q_power station	-0.27	-0.31
93	125	Q_power station	-0.2	-0.31
93	126	Q_power station	-0.2	-0.11
93	119	Q_power station	-0.27	-0.11
93	118	Q_neve	-0.76	-1.01
93	125	Q_neve	-0.58	-1.01
93	126	Q_neve	-0.58	-0.55
93	119	Q_neve	-0.76	-0.55
93	118	Q_manutenzione	-0.27	-0.31
93	125	Q_manutenzione	-0.2	-0.31
93	126	Q_manutenzione	-0.2	-0.11
93	119	Q_manutenzione	-0.27	-0.11
93	118	EQ_X	6.29	7.58
93	125	EQ_X	1.68	7.58
93	126	EQ_X	1.68	0.14
93	119	EQ_X	6.29	0.14
93	118	EQ_Y	0.39	-22.1
93	125	EQ_Y	-5.17	-22.1
93	126	EQ_Y	-5.17	4.06
93	119	EQ_Y	0.39	4.06
94	119	DEAD	1.657E-13	-8.544E-13
94	126	DEAD	7.921E-13	-3.070E-13
94	127	DEAD	2.447E-13	-6.964E-13
94	120	DEAD	7.131E-13	-1.491E-13
94	119	G1_power station	0.	0.
94	126	G1_power station	0.	0.
94	127	G1_power station	0.	0.
94	120	G1_power station	0.	0.
94	119	G2_power station	-1.29	-3.37
94	126	G2_power station	-1.36	-3.37
94	127	G2_power station	-1.36	-1.8
94	120	G2_power station	-1.29	-1.8
94	119	Q_power station	-4.778E-02	-0.12
94	126	Q_power station	-5.032E-02	-0.12

Table 20: Element Forces - Area Shells, Part 3 of 3

Area	Joint	OutputCase	V13	V23
			KN/m	KN/m
94	127	Q_power station	-5.032E-02	-6.651E-02
94	120	Q_power station	-4.778E-02	-6.651E-02
94	119	Q_neve	-0.13	-0.57
94	126	Q_neve	-0.15	-0.57
94	127	Q_neve	-0.15	-0.45
94	120	Q_neve	-0.13	-0.45
94	119	Q_manutenzione	-4.778E-02	-0.12
94	126	Q_manutenzione	-5.032E-02	-0.12
94	127	Q_manutenzione	-5.032E-02	-6.651E-02
94	120	Q_manutenzione	-4.778E-02	-6.651E-02
94	119	EQ_X	3.1	0.76
94	126	EQ_X	3.34	0.76
94	127	EQ_X	3.34	0.39
94	120	EQ_X	3.1	0.39
94	119	EQ_Y	-0.2	4.02
94	126	EQ_Y	1.45	4.02
94	127	EQ_Y	1.45	-0.91
94	120	EQ_Y	-0.2	-0.91
95	120	DEAD	-5.913E-13	-6.049E-13
95	127	DEAD	-1.519E-13	-2.272E-13
95	128	DEAD	-2.753E-13	-1.704E-13
95	121	DEAD	2.431E-13	-6.923E-14
95	120	G1_power station	0.	0.
95	127	G1_power station	0.	0.
95	128	G1_power station	0.	0.
95	121	G1_power station	0.	0.
95	120	G2_power station	1.32	-1.86
95	127	G2_power station	1.34	-1.86
95	128	G2_power station	1.34	-1.04
95	121	G2_power station	1.32	-1.04
95	120	Q_power station	4.879E-02	-6.879E-02
95	127	Q_power station	4.943E-02	-6.879E-02
95	128	Q_power station	4.943E-02	-3.850E-02
95	121	Q_power station	4.879E-02	-3.850E-02
95	120	Q_neve	0.15	-0.45
95	127	Q_neve	0.14	-0.45
95	128	Q_neve	0.14	-0.39
95	121	Q_neve	0.15	-0.39
95	120	Q_manutenzione	4.879E-02	-6.879E-02
95	127	Q_manutenzione	4.943E-02	-6.879E-02
95	128	Q_manutenzione	4.943E-02	-3.850E-02
95	121	Q_manutenzione	4.879E-02	-3.850E-02
95	120	EQ_X	2.31	0.32

Table 20: Element Forces - Area Shells, Part 3 of 3

Area	Joint	OutputCase	V13	V23
			KN/m	KN/m
95	127	EQ_X	2.42	0.32
95	128	EQ_X	2.42	9.624E-02
95	121	EQ_X	2.31	9.624E-02
95	120	EQ_Y	9.746E-02	-1.03
95	127	EQ_Y	-0.11	-1.03
95	128	EQ_Y	-0.11	0.55
95	121	EQ_Y	9.746E-02	0.55
96	121	DEAD	1.201E-13	2.240E-13
96	128	DEAD	9.897E-14	6.172E-13
96	129	DEAD	1.991E-13	-5.660E-13
96	122	DEAD	4.940E-13	3.407E-13
96	121	G1_power station	0.	0.
96	128	G1_power station	0.	0.
96	129	G1_power station	0.	0.
96	122	G1_power station	0.	0.
96	121	G2_power station	2.38	-1.03
96	128	G2_power station	2.02	-1.03
96	129	G2_power station	2.02	-0.32
96	122	G2_power station	2.38	-0.32
96	121	Q_power station	8.796E-02	-3.825E-02
96	128	Q_power station	7.488E-02	-3.825E-02
96	129	Q_power station	7.488E-02	-1.186E-02
96	122	Q_power station	8.796E-02	-1.186E-02
96	121	Q_neve	0.28	-0.38
96	128	Q_neve	0.23	-0.38
96	129	Q_neve	0.23	-0.32
96	122	Q_neve	0.28	-0.32
96	121	Q_manutenzione	8.796E-02	-3.825E-02
96	128	Q_manutenzione	7.488E-02	-3.825E-02
96	129	Q_manutenzione	7.488E-02	-1.186E-02
96	122	Q_manutenzione	8.796E-02	-1.186E-02
96	121	EQ_X	1.77	0.1
96	128	EQ_X	1.66	0.1
96	129	EQ_X	1.66	-6.304E-02
96	122	EQ_X	1.77	-6.304E-02
96	121	EQ_Y	4.336E-02	0.49
96	128	EQ_Y	0.21	0.49
96	129	EQ_Y	0.21	0.4
96	122	EQ_Y	4.336E-02	0.4
97	122	DEAD	1.930E-13	2.339E-13
97	129	DEAD	4.589E-13	-1.360E-13
97	130	DEAD	3.503E-14	-2.796E-13
97	123	DEAD	-9.406E-14	2.199E-14

Table 20: Element Forces - Area Shells, Part 3 of 3

Area	Joint	OutputCase	V13	V23
			KN/m	KN/m
97	122	G1_power station	0.	0.
97	129	G1_power station	0.	0.
97	130	G1_power station	0.	0.
97	123	G1_power station	0.	0.
97	122	G2_power station	2.69	-8.072E-03
97	129	G2_power station	1.16	-8.072E-03
97	130	G2_power station	1.16	0.61
97	123	G2_power station	2.69	0.61
97	122	Q_power station	9.937E-02	-2.987E-04
97	129	Q_power station	4.279E-02	-2.987E-04
97	130	Q_power station	4.279E-02	2.258E-02
97	123	Q_power station	9.937E-02	2.258E-02
97	122	Q_neve	0.35	-0.28
97	129	Q_neve	0.16	-0.28
97	130	Q_neve	0.16	-0.25
97	123	Q_neve	0.35	-0.25
97	122	Q_manutenzione	9.937E-02	-2.987E-04
97	129	Q_manutenzione	4.279E-02	-2.987E-04
97	130	Q_manutenzione	4.279E-02	2.258E-02
97	123	Q_manutenzione	9.937E-02	2.258E-02
97	122	EQ_X	1.58	6.508E-02
97	129	EQ_X	0.91	6.508E-02
97	130	EQ_X	0.91	0.31
97	123	EQ_X	1.58	0.31
97	122	EQ_Y	2.651E-02	0.35
97	129	EQ_Y	0.25	0.35
97	130	EQ_Y	0.25	0.12
97	123	EQ_Y	2.651E-02	0.12
98	123	DEAD	-4.895E-13	-1.374E-13
98	130	DEAD	-2.158E-13	3.020E-13
98	29	DEAD	-3.315E-13	2.971E-13
98	124	DEAD	-5.783E-14	8.155E-13
98	123	G1_power station	0.	0.
98	130	G1_power station	0.	0.
98	29	G1_power station	0.	0.
98	124	G1_power station	0.	0.
98	123	G2_power station	9.05	3.21
98	130	G2_power station	-5.72	3.21
98	29	G2_power station	-5.72	2.29
98	124	G2_power station	9.05	2.29
98	123	Q_power station	0.33	0.12
98	130	Q_power station	-0.21	0.12
98	29	Q_power station	-0.21	8.484E-02

Table 20: Element Forces - Area Shells, Part 3 of 3

Area	Joint	OutputCase	V13	V23
			KN/m	KN/m
98	124	Q_power station	0.33	8.484E-02
98	123	Q_neve	1.08	4.732E-02
98	130	Q_neve	-0.55	4.732E-02
98	29	Q_neve	-0.55	-0.25
98	124	Q_neve	1.08	-0.25
98	123	Q_manutenzione	0.33	0.12
98	130	Q_manutenzione	-0.21	0.12
98	29	Q_manutenzione	-0.21	8.484E-02
98	124	Q_manutenzione	0.33	8.484E-02
98	123	EQ_X	3.37	1.04
98	130	EQ_X	-4.327E-02	1.04
98	29	EQ_X	-4.327E-02	-2.95
98	124	EQ_X	3.37	-2.95
98	123	EQ_Y	0.75	0.29
98	130	EQ_Y	-1.16	0.29
98	29	EQ_Y	-1.16	3.6
98	124	EQ_Y	0.75	3.6
99	5	DEAD	-2.492E-13	-6.416E-14
99	48	DEAD	2.981E-13	4.292E-13
99	131	DEAD	6.678E-14	-8.936E-13
99	93	DEAD	6.141E-13	-3.608E-13
99	5	G1_power station	0.	0.
99	48	G1_power station	0.	0.
99	131	G1_power station	0.	0.
99	93	G1_power station	0.	0.
99	5	G2_power station	32.65	-32.13
99	48	G2_power station	5.13	-32.13
99	131	G2_power station	5.13	-12.14
99	93	G2_power station	32.65	-12.14
99	5	Q_power station	1.21	-1.19
99	48	Q_power station	0.19	-1.19
99	131	Q_power station	0.19	-0.45
99	93	Q_power station	1.21	-0.45
99	5	Q_neve	3.09	-3.1
99	48	Q_neve	0.62	-3.1
99	131	Q_neve	0.62	-1.34
99	93	Q_neve	3.09	-1.34
99	5	Q_manutenzione	1.21	-1.19
99	48	Q_manutenzione	0.19	-1.19
99	131	Q_manutenzione	0.19	-0.45
99	93	Q_manutenzione	1.21	-0.45
99	5	EQ_X	64.57	-22.54
99	48	EQ_X	-29.71	-22.54

Table 20: Element Forces - Area Shells, Part 3 of 3

Area	Joint	OutputCase	V13	V23
			KN/m	KN/m
99	131	EQ_X	-29.71	-20.05
99	93	EQ_X	64.57	-20.05
99	5	EQ_Y	-28.56	61.75
99	48	EQ_Y	-19.11	61.75
99	131	EQ_Y	-19.11	-25.16
99	93	EQ_Y	-28.56	-25.16
100	93	DEAD	1.307E-13	-4.750E-13
100	131	DEAD	-2.565E-13	-4.595E-13
100	132	DEAD	5.172E-14	-2.775E-13
100	95	DEAD	8.495E-13	5.279E-13
100	93	G1_power station	0.	0.
100	131	G1_power station	0.	0.
100	132	G1_power station	0.	0.
100	95	G1_power station	0.	0.
100	93	G2_power station	6.68	-8.8
100	131	G2_power station	5.14	-8.8
100	132	G2_power station	5.14	-2.79
100	95	G2_power station	6.68	-2.79
100	93	Q_power station	0.25	-0.33
100	131	Q_power station	0.19	-0.33
100	132	Q_power station	0.19	-0.1
100	95	Q_power station	0.25	-0.1
100	93	Q_neve	0.65	-1.03
100	131	Q_neve	0.44	-1.03
100	132	Q_neve	0.44	-0.52
100	95	Q_neve	0.65	-0.52
100	93	Q_manutenzione	0.25	-0.33
100	131	Q_manutenzione	0.19	-0.33
100	132	Q_manutenzione	0.19	-0.1
100	95	Q_manutenzione	0.25	-0.1
100	93	EQ_X	1.4	-9.36
100	131	EQ_X	8.11	-9.36
100	132	EQ_X	8.11	-1.98
100	95	EQ_X	1.4	-1.98
100	93	EQ_Y	5.22	-23.25
100	131	EQ_Y	-1.44	-23.25
100	132	EQ_Y	-1.44	2.81
100	95	EQ_Y	5.22	2.81
101	95	DEAD	-7.310E-13	2.370E-13
101	132	DEAD	6.853E-13	2.117E-14
101	133	DEAD	1.380E-13	-2.370E-13
101	25	DEAD	-1.836E-13	-2.948E-13
101	95	G1_power station	0.	0.

Table 20: Element Forces - Area Shells, Part 3 of 3

Area	Joint	OutputCase	V13	V23
			KN/m	KN/m
101	132	G1_power station	0.	0.
101	133	G1_power station	0.	0.
101	25	G1_power station	0.	0.
101	95	G2_power station	6.94	0.14
101	132	G2_power station	-10.05	0.14
101	133	G2_power station	-10.05	-6.2
101	25	G2_power station	6.94	-6.2
101	95	Q_power station	0.26	5.026E-03
101	132	Q_power station	-0.37	5.026E-03
101	133	Q_power station	-0.37	-0.23
101	25	Q_power station	0.26	-0.23
101	95	Q_neve	0.74	-0.18
101	132	Q_neve	-1.23	-0.18
101	133	Q_neve	-1.23	-0.98
101	25	Q_neve	0.74	-0.98
101	95	Q_manutenzione	0.26	5.026E-03
101	132	Q_manutenzione	-0.37	5.026E-03
101	133	Q_manutenzione	-0.37	-0.23
101	25	Q_manutenzione	0.26	-0.23
101	95	EQ_X	-3.46	-5.71
101	132	EQ_X	13.29	-5.71
101	133	EQ_X	13.29	3.1
101	25	EQ_X	-3.46	3.1
101	95	EQ_Y	-3.29	2.43
101	132	EQ_Y	1.49	2.43
101	133	EQ_Y	1.49	-2.73
101	25	EQ_Y	-3.29	-2.73
102	48	DEAD	-2.965E-13	9.018E-14
102	50	DEAD	1.178E-14	4.217E-13
102	134	DEAD	-2.965E-13	-6.603E-13
102	131	DEAD	-1.015E-12	-1.708E-13
102	48	G1_power station	0.	0.
102	50	G1_power station	0.	0.
102	134	G1_power station	0.	0.
102	131	G1_power station	0.	0.
102	48	G2_power station	2.72	-6.
102	50	G2_power station	-1.37	-6.
102	134	G2_power station	-1.37	-8.61
102	131	G2_power station	2.72	-8.61
102	48	Q_power station	0.1	-0.22
102	50	Q_power station	-5.060E-02	-0.22
102	134	Q_power station	-5.060E-02	-0.32
102	131	Q_power station	0.1	-0.32

Table 20: Element Forces - Area Shells, Part 3 of 3

Area	Joint	OutputCase	V13	V23
			KN/m	KN/m
102	48	Q_neve	0.42	-0.63
102	50	Q_neve	4.152E-02	-0.63
102	134	Q_neve	4.152E-02	-0.89
102	131	Q_neve	0.42	-0.89
102	48	Q_manutenzione	0.1	-0.22
102	50	Q_manutenzione	-5.060E-02	-0.22
102	134	Q_manutenzione	-5.060E-02	-0.32
102	131	Q_manutenzione	0.1	-0.32
102	48	EQ_X	-27.43	4.44
102	50	EQ_X	4.47	4.44
102	134	EQ_X	4.47	1.75
102	131	EQ_X	-27.43	1.75
102	48	EQ_Y	-7.58	2.87
102	50	EQ_Y	1.07	2.87
102	134	EQ_Y	1.07	9.5
102	131	EQ_Y	-7.58	9.5
103	131	DEAD	9.853E-14	-3.708E-13
103	134	DEAD	4.956E-13	-8.486E-13
103	135	DEAD	-6.915E-13	1.427E-13
103	132	DEAD	4.166E-13	4.153E-13
103	131	G1_power station	0.	0.
103	134	G1_power station	0.	0.
103	135	G1_power station	0.	0.
103	132	G1_power station	0.	0.
103	131	G2_power station	3.72	-6.81
103	134	G2_power station	-1.62	-6.81
103	135	G2_power station	-1.62	-5.96
103	132	G2_power station	3.72	-5.96
103	131	Q_power station	0.14	-0.25
103	134	Q_power station	-6.000E-02	-0.25
103	135	Q_power station	-6.000E-02	-0.22
103	132	Q_power station	0.14	-0.22
103	131	Q_neve	0.35	-0.71
103	134	Q_neve	-0.17	-0.71
103	135	Q_neve	-0.17	-0.68
103	132	Q_neve	0.35	-0.68
103	131	Q_manutenzione	0.14	-0.25
103	134	Q_manutenzione	-6.000E-02	-0.25
103	135	Q_manutenzione	-6.000E-02	-0.22
103	132	Q_manutenzione	0.14	-0.22
103	131	EQ_X	6.92	-0.63
103	134	EQ_X	0.88	-0.63
103	135	EQ_X	0.88	-2.22

Table 20: Element Forces - Area Shells, Part 3 of 3

Area	Joint	OutputCase	V13	V23
			KN/m	KN/m
103	132	EQ_X	6.92	-2.22
103	131	EQ_Y	-1.73	8.37
103	134	EQ_Y	-2.23	8.37
103	135	EQ_Y	-2.23	2.41
103	132	EQ_Y	-1.73	2.41
104	132	DEAD	4.744E-13	2.175E-13
104	135	DEAD	2.720E-13	9.406E-14
104	136	DEAD	7.114E-13	3.755E-13
104	133	DEAD	-4.397E-14	-4.589E-13
104	132	G1_power station	0.	0.
104	135	G1_power station	0.	0.
104	136	G1_power station	0.	0.
104	133	G1_power station	0.	0.
104	132	G2_power station	-9.59	-6.67
104	135	G2_power station	0.53	-6.67
104	136	G2_power station	0.53	-3.04
104	133	G2_power station	-9.59	-3.04
104	132	Q_power station	-0.35	-0.25
104	135	Q_power station	1.964E-02	-0.25
104	136	Q_power station	1.964E-02	-0.11
104	133	Q_power station	-0.35	-0.11
104	132	Q_neve	-1.14	-0.76
104	135	Q_neve	-6.099E-02	-0.76
104	136	Q_neve	-6.099E-02	-0.41
104	133	Q_neve	-1.14	-0.41
104	132	Q_manutenzione	-0.35	-0.25
104	135	Q_manutenzione	1.964E-02	-0.25
104	136	Q_manutenzione	1.964E-02	-0.11
104	133	Q_manutenzione	-0.35	-0.11
104	132	EQ_X	11.61	-0.17
104	135	EQ_X	2.39	-0.17
104	136	EQ_X	2.39	-1.54
104	133	EQ_X	11.61	-1.54
104	132	EQ_Y	1.03	2.85
104	135	EQ_Y	-0.41	2.85
104	136	EQ_Y	-0.41	2.02
104	133	EQ_Y	1.03	2.02
105	50	DEAD	2.570E-13	6.424E-13
105	52	DEAD	2.203E-13	8.735E-14
105	137	DEAD	3.360E-13	8.399E-13
105	134	DEAD	-1.747E-13	-1.102E-13
105	50	G1_power station	0.	0.
105	52	G1_power station	0.	0.

Table 20: Element Forces - Area Shells, Part 3 of 3

Area	Joint	OutputCase	V13	V23
			KN/m	KN/m
105	137	G1_power station	0.	0.
105	134	G1_power station	0.	0.
105	50	G2_power station	-0.93	1.354E-12
105	52	G2_power station	-0.93	-6.113E-13
105	137	G2_power station	-0.93	8.804E-13
105	134	G2_power station	-0.93	-8.483E-13
105	50	Q_power station	-3.450E-02	1.677E-14
105	52	Q_power station	-3.450E-02	-7.318E-15
105	137	Q_power station	-3.450E-02	2.171E-14
105	134	Q_power station	-3.450E-02	-9.786E-15
105	50	Q_neve	8.678E-02	1.450E-13
105	52	Q_neve	8.678E-02	4.861E-14
105	137	Q_neve	8.678E-02	6.597E-14
105	134	Q_neve	8.678E-02	-6.001E-14
105	50	Q_manutenzione	-3.450E-02	1.677E-14
105	52	Q_manutenzione	-3.450E-02	-7.318E-15
105	137	Q_manutenzione	-3.450E-02	2.171E-14
105	134	Q_manutenzione	-3.450E-02	-9.786E-15
105	50	EQ_X	4.12	-3.646E-13
105	52	EQ_X	4.12	-1.844E-13
105	137	EQ_X	4.12	-3.875E-14
105	134	EQ_X	4.12	8.466E-14
105	50	EQ_Y	0.26	6.62
105	52	EQ_Y	-0.26	6.62
105	137	EQ_Y	-0.26	6.
105	134	EQ_Y	0.26	6.
106	134	DEAD	-1.324E-13	-2.272E-13
106	137	DEAD	-2.847E-13	2.584E-13
106	138	DEAD	-3.694E-13	-6.923E-14
106	135	DEAD	-1.312E-12	6.089E-14
106	134	G1_power station	0.	0.
106	137	G1_power station	0.	0.
106	138	G1_power station	0.	0.
106	135	G1_power station	0.	0.
106	134	G2_power station	-1.68	-7.304E-13
106	137	G2_power station	-1.68	2.409E-13
106	138	G2_power station	-1.68	-2.959E-13
106	135	G2_power station	-1.68	-3.563E-14
106	134	Q_power station	-6.209E-02	-1.225E-14
106	137	Q_power station	-6.209E-02	1.810E-14
106	138	Q_power station	-6.209E-02	-4.849E-15
106	135	Q_power station	-6.209E-02	3.284E-15
106	134	Q_neve	-0.16	-1.113E-13

Table 20: Element Forces - Area Shells, Part 3 of 3

Area	Joint	OutputCase	V13	V23
			KN/m	KN/m
106	137	Q_neve	-0.16	1.008E-14
106	138	Q_neve	-0.16	-2.701E-15
106	135	Q_neve	-0.16	2.983E-14
106	134	Q_manutenzione	-6.209E-02	-1.225E-14
106	137	Q_manutenzione	-6.209E-02	1.810E-14
106	138	Q_manutenzione	-6.209E-02	-4.849E-15
106	135	Q_manutenzione	-6.209E-02	3.284E-15
106	134	EQ_X	1.4	4.902E-14
106	137	EQ_X	1.4	3.553E-14
106	138	EQ_X	1.4	1.940E-14
106	135	EQ_X	1.4	1.578E-14
106	134	EQ_Y	-1.35	5.45
106	137	EQ_Y	1.35	5.45
106	138	EQ_Y	1.35	5.29
106	135	EQ_Y	-1.35	5.29
107	135	DEAD	-3.755E-13	-4.308E-13
107	138	DEAD	7.693E-13	-1.611E-13
107	139	DEAD	-2.175E-13	4.315E-14
107	136	DEAD	6.903E-13	1.154E-13
107	135	G1_power station	0.	0.
107	138	G1_power station	0.	0.
107	139	G1_power station	0.	0.
107	136	G1_power station	0.	0.
107	135	G2_power station	-0.34	-3.479E-13
107	138	G2_power station	-0.34	-1.494E-13
107	139	G2_power station	-0.34	3.137E-13
107	136	G2_power station	-0.34	1.665E-13
107	135	Q_power station	-1.254E-02	-4.675E-15
107	138	Q_power station	-1.254E-02	-1.590E-16
107	139	Q_power station	-1.254E-02	8.594E-15
107	136	Q_power station	-1.254E-02	3.544E-15
107	135	Q_neve	-0.15	-1.214E-13
107	138	Q_neve	-0.15	2.936E-14
107	139	Q_neve	-0.15	3.163E-14
107	136	Q_neve	-0.15	2.195E-14
107	135	Q_manutenzione	-1.254E-02	-4.675E-15
107	138	Q_manutenzione	-1.254E-02	-1.590E-16
107	139	Q_manutenzione	-1.254E-02	8.594E-15
107	136	Q_manutenzione	-1.254E-02	3.544E-15
107	135	EQ_X	2.97	-4.896E-14
107	138	EQ_X	2.97	-1.646E-13
107	139	EQ_X	2.97	1.288E-13
107	136	EQ_X	2.97	-3.029E-13

Table 20: Element Forces - Area Shells, Part 3 of 3

Area	Joint	OutputCase	V13	V23
			KN/m	KN/m
107	135	EQ_Y	0.24	5.11
107	138	EQ_Y	-0.24	5.11
107	139	EQ_Y	-0.24	4.06
107	136	EQ_Y	0.24	4.06
108	52	DEAD	1.576E-13	5.139E-13
108	54	DEAD	-4.070E-14	8.227E-14
108	140	DEAD	-1.343E-12	6.719E-13
108	137	DEAD	9.073E-13	5.563E-13
108	52	G1_power station	0.	0.
108	54	G1_power station	0.	0.
108	140	G1_power station	0.	0.
108	137	G1_power station	0.	0.
108	52	G2_power station	-1.37	6.
108	54	G2_power station	2.72	6.
108	140	G2_power station	2.72	8.61
108	137	G2_power station	-1.37	8.61
108	52	Q_power station	-5.060E-02	0.22
108	54	Q_power station	0.1	0.22
108	140	Q_power station	0.1	0.32
108	137	Q_power station	-5.060E-02	0.32
108	52	Q_neve	4.152E-02	0.63
108	54	Q_neve	0.42	0.63
108	140	Q_neve	0.42	0.89
108	137	Q_neve	4.152E-02	0.89
108	52	Q_manutenzione	-5.060E-02	0.22
108	54	Q_manutenzione	0.1	0.22
108	140	Q_manutenzione	0.1	0.32
108	137	Q_manutenzione	-5.060E-02	0.32
108	52	EQ_X	4.47	-4.44
108	54	EQ_X	-27.43	-4.44
108	140	EQ_X	-27.43	-1.75
108	137	EQ_X	4.47	-1.75
108	52	EQ_Y	-1.07	2.87
108	54	EQ_Y	7.58	2.87
108	140	EQ_Y	7.58	9.5
108	137	EQ_Y	-1.07	9.5
109	137	DEAD	2.036E-13	4.620E-13
109	140	DEAD	-3.592E-13	7.395E-13
109	141	DEAD	-1.124E-13	-5.150E-14
109	138	DEAD	-1.465E-12	4.235E-13
109	137	G1_power station	0.	0.
109	140	G1_power station	0.	0.
109	141	G1_power station	0.	0.

Table 20: Element Forces - Area Shells, Part 3 of 3

Area	Joint	OutputCase	V13	V23
			KN/m	KN/m
109	138	G1_power station	0.	0.
109	137	G2_power station	-1.62	6.81
109	140	G2_power station	3.72	6.81
109	141	G2_power station	3.72	5.96
109	138	G2_power station	-1.62	5.96
109	137	Q_power station	-6.000E-02	0.25
109	140	Q_power station	0.14	0.25
109	141	Q_power station	0.14	0.22
109	138	Q_power station	-6.000E-02	0.22
109	137	Q_neve	-0.17	0.71
109	140	Q_neve	0.35	0.71
109	141	Q_neve	0.35	0.68
109	138	Q_neve	-0.17	0.68
109	137	Q_manutenzione	-6.000E-02	0.25
109	140	Q_manutenzione	0.14	0.25
109	141	Q_manutenzione	0.14	0.22
109	138	Q_manutenzione	-6.000E-02	0.22
109	137	EQ_X	0.88	0.63
109	140	EQ_X	6.92	0.63
109	141	EQ_X	6.92	2.22
109	138	EQ_X	0.88	2.22
109	137	EQ_Y	2.23	8.37
109	140	EQ_Y	1.73	8.37
109	141	EQ_Y	1.73	2.41
109	138	EQ_Y	2.23	2.41
110	138	DEAD	4.817E-13	-6.820E-14
110	141	DEAD	-7.125E-14	8.593E-14
110	142	DEAD	-7.125E-14	5.243E-13
110	139	DEAD	4.817E-13	1.649E-13
110	138	G1_power station	0.	0.
110	141	G1_power station	0.	0.
110	142	G1_power station	0.	0.
110	139	G1_power station	0.	0.
110	138	G2_power station	0.53	6.67
110	141	G2_power station	-9.59	6.67
110	142	G2_power station	-9.59	3.04
110	139	G2_power station	0.53	3.04
110	138	Q_power station	1.964E-02	0.25
110	141	Q_power station	-0.35	0.25
110	142	Q_power station	-0.35	0.11
110	139	Q_power station	1.964E-02	0.11
110	138	Q_neve	-6.099E-02	0.76
110	141	Q_neve	-1.14	0.76

Table 20: Element Forces - Area Shells, Part 3 of 3

Area	Joint	OutputCase	V13	V23
			KN/m	KN/m
110	142	Q_neve	-1.14	0.41
110	139	Q_neve	-6.099E-02	0.41
110	138	Q_manutenzione	1.964E-02	0.25
110	141	Q_manutenzione	-0.35	0.25
110	142	Q_manutenzione	-0.35	0.11
110	139	Q_manutenzione	1.964E-02	0.11
110	138	EQ_X	2.39	0.17
110	141	EQ_X	11.61	0.17
110	142	EQ_X	11.61	1.54
110	139	EQ_X	2.39	1.54
110	138	EQ_Y	0.41	2.85
110	141	EQ_Y	-1.03	2.85
110	142	EQ_Y	-1.03	2.02
110	139	EQ_Y	0.41	2.02
111	54	DEAD	-7.387E-13	5.783E-13
111	58	DEAD	3.983E-13	5.165E-13
111	143	DEAD	-2.647E-13	-5.374E-14
111	140	DEAD	2.403E-13	-4.709E-13
111	54	G1_power station	0.	0.
111	58	G1_power station	0.	0.
111	143	G1_power station	0.	0.
111	140	G1_power station	0.	0.
111	54	G2_power station	5.13	32.13
111	58	G2_power station	32.65	32.13
111	143	G2_power station	32.65	12.14
111	140	G2_power station	5.13	12.14
111	54	Q_power station	0.19	1.19
111	58	Q_power station	1.21	1.19
111	143	Q_power station	1.21	0.45
111	140	Q_power station	0.19	0.45
111	54	Q_neve	0.62	3.1
111	58	Q_neve	3.09	3.1
111	143	Q_neve	3.09	1.34
111	140	Q_neve	0.62	1.34
111	54	Q_manutenzione	0.19	1.19
111	58	Q_manutenzione	1.21	1.19
111	143	Q_manutenzione	1.21	0.45
111	140	Q_manutenzione	0.19	0.45
111	54	EQ_X	-29.71	22.54
111	58	EQ_X	64.57	22.54
111	143	EQ_X	64.57	20.05
111	140	EQ_X	-29.71	20.05
111	54	EQ_Y	19.11	61.75

Table 20: Element Forces - Area Shells, Part 3 of 3

Area	Joint	OutputCase	V13	V23
			KN/m	KN/m
111	58	EQ_Y	28.56	61.75
111	143	EQ_Y	28.56	-25.16
111	140	EQ_Y	19.11	-25.16
112	140	DEAD	1.413E-13	-1.254E-13
112	143	DEAD	-2.114E-13	-7.922E-14
112	144	DEAD	-9.569E-14	-1.254E-13
112	141	DEAD	-2.904E-13	-5.137E-13
112	140	G1_power station	0.	0.
112	143	G1_power station	0.	0.
112	144	G1_power station	0.	0.
112	141	G1_power station	0.	0.
112	140	G2_power station	5.14	8.8
112	143	G2_power station	6.68	8.8
112	144	G2_power station	6.68	2.79
112	141	G2_power station	5.14	2.79
112	140	Q_power station	0.19	0.33
112	143	Q_power station	0.25	0.33
112	144	Q_power station	0.25	0.1
112	141	Q_power station	0.19	0.1
112	140	Q_neve	0.44	1.03
112	143	Q_neve	0.65	1.03
112	144	Q_neve	0.65	0.52
112	141	Q_neve	0.44	0.52
112	140	Q_manutenzione	0.19	0.33
112	143	Q_manutenzione	0.25	0.33
112	144	Q_manutenzione	0.25	0.1
112	141	Q_manutenzione	0.19	0.1
112	140	EQ_X	8.11	9.36
112	143	EQ_X	1.4	9.36
112	144	EQ_X	1.4	1.98
112	141	EQ_X	8.11	1.98
112	140	EQ_Y	1.44	-23.25
112	143	EQ_Y	-5.22	-23.25
112	144	EQ_Y	-5.22	2.81
112	141	EQ_Y	1.44	2.81
113	141	DEAD	-1.997E-14	-6.851E-13
113	144	DEAD	-2.415E-13	-8.547E-13
113	30	DEAD	-5.730E-13	7.763E-13
113	142	DEAD	4.695E-13	3.302E-13
113	141	G1_power station	0.	0.
113	144	G1_power station	0.	0.
113	30	G1_power station	0.	0.
113	142	G1_power station	0.	0.

Table 20: Element Forces - Area Shells, Part 3 of 3

Area	Joint	OutputCase	V13	V23
			KN/m	KN/m
113	141	G2_power station	-10.05	-0.14
113	144	G2_power station	6.94	-0.14
113	30	G2_power station	6.94	6.2
113	142	G2_power station	-10.05	6.2
113	141	Q_power station	-0.37	-5.026E-03
113	144	Q_power station	0.26	-5.026E-03
113	30	Q_power station	0.26	0.23
113	142	Q_power station	-0.37	0.23
113	141	Q_neve	-1.23	0.18
113	144	Q_neve	0.74	0.18
113	30	Q_neve	0.74	0.98
113	142	Q_neve	-1.23	0.98
113	141	Q_manutenzione	-0.37	-5.026E-03
113	144	Q_manutenzione	0.26	-5.026E-03
113	30	Q_manutenzione	0.26	0.23
113	142	Q_manutenzione	-0.37	0.23
113	141	EQ_X	13.29	5.71
113	144	EQ_X	-3.46	5.71
113	30	EQ_X	-3.46	-3.1
113	142	EQ_X	13.29	-3.1
113	141	EQ_Y	-1.49	2.43
113	144	EQ_Y	3.29	2.43
113	30	EQ_Y	3.29	-2.73
113	142	EQ_Y	-1.49	-2.73
114	11	DEAD	-4.049E-12	1.043E-13
114	14	DEAD	1.300E-12	1.800E-12
114	145	DEAD	-2.153E-12	2.632E-12
114	146	DEAD	-3.124E-12	1.484E-12
114	11	G1_power station	0.	0.
114	14	G1_power station	0.	0.
114	145	G1_power station	0.	0.
114	146	G1_power station	0.	0.
114	11	G2_power station	-14.66	-19.93
114	14	G2_power station	-35.77	-19.93
114	145	G2_power station	-35.77	-3.48
114	146	G2_power station	-14.66	-3.48
114	11	Q_power station	-0.54	-0.74
114	14	Q_power station	-1.32	-0.74
114	145	Q_power station	-1.32	-0.13
114	146	Q_power station	-0.54	-0.13
114	11	Q_neve	-1.49	-1.65
114	14	Q_neve	-3.45	-1.65
114	145	Q_neve	-3.45	-0.13

Table 20: Element Forces - Area Shells, Part 3 of 3

Area	Joint	OutputCase	V13	V23
			KN/m	KN/m
114	146	Q_neve	-1.49	-0.13
114	11	Q_manutenzione	-0.54	-0.74
114	14	Q_manutenzione	-1.32	-0.74
114	145	Q_manutenzione	-1.32	-0.13
114	146	Q_manutenzione	-0.54	-0.13
114	11	EQ_X	-51.14	25.17
114	14	EQ_X	57.96	25.17
114	145	EQ_X	57.96	16.53
114	146	EQ_X	-51.14	16.53
114	11	EQ_Y	23.98	49.32
114	14	EQ_Y	27.67	49.32
114	145	EQ_Y	27.67	-21.35
114	146	EQ_Y	23.98	-21.35
115	146	DEAD	-1.580E-13	2.566E-13
115	145	DEAD	5.897E-13	4.725E-13
115	147	DEAD	1.580E-13	3.575E-12
115	148	DEAD	-4.234E-14	3.632E-12
115	146	G1_power station	0.	0.
115	145	G1_power station	0.	0.
115	147	G1_power station	0.	0.
115	148	G1_power station	0.	0.
115	146	G2_power station	-17.41	-2.52
115	145	G2_power station	-10.16	-2.52
115	147	G2_power station	-10.16	2.65
115	148	G2_power station	-17.41	2.65
115	146	Q_power station	-0.64	-9.310E-02
115	145	Q_power station	-0.38	-9.310E-02
115	147	Q_power station	-0.38	9.809E-02
115	148	Q_power station	-0.64	9.809E-02
115	146	Q_neve	-1.73	-3.812E-02
115	145	Q_neve	-1.07	-3.812E-02
115	147	Q_neve	-1.07	0.45
115	148	Q_neve	-1.73	0.45
115	146	Q_manutenzione	-0.64	-9.310E-02
115	145	Q_manutenzione	-0.38	-9.310E-02
115	147	Q_manutenzione	-0.38	9.809E-02
115	148	Q_manutenzione	-0.64	9.809E-02
115	146	EQ_X	10.14	4.46
115	145	EQ_X	0.84	4.46
115	147	EQ_X	0.84	0.1
115	148	EQ_X	10.14	0.1
115	146	EQ_Y	2.36	-19.06
115	145	EQ_Y	-4.45	-19.06

Table 20: Element Forces - Area Shells, Part 3 of 3

Area	Joint	OutputCase	V13	V23
			KN/m	KN/m
115	147	EQ_Y	-4.45	1.28
115	148	EQ_Y	2.36	1.28
116	148	DEAD	-4.092E-12	3.874E-12
116	147	DEAD	-1.070E-12	1.715E-12
116	149	DEAD	-1.564E-12	3.242E-12
116	150	DEAD	-7.542E-13	2.663E-12
116	148	G1_power station	0.	0.
116	147	G1_power station	0.	0.
116	149	G1_power station	0.	0.
116	150	G1_power station	0.	0.
116	148	G2_power station	-7.9	1.23
116	147	G2_power station	-6.17	1.23
116	149	G2_power station	-6.17	2.59
116	150	G2_power station	-7.9	2.59
116	148	Q_power station	-0.29	4.569E-02
116	147	Q_power station	-0.23	4.569E-02
116	149	Q_power station	-0.23	9.601E-02
116	150	Q_power station	-0.29	9.601E-02
116	148	Q_neve	-0.81	0.32
116	147	Q_neve	-0.64	0.32
116	149	Q_neve	-0.64	0.46
116	150	Q_neve	-0.81	0.46
116	148	Q_manutenzione	-0.29	4.569E-02
116	147	Q_manutenzione	-0.23	4.569E-02
116	149	Q_manutenzione	-0.23	9.601E-02
116	150	Q_manutenzione	-0.29	9.601E-02
116	148	EQ_X	3.77	1.6
116	147	EQ_X	2.62	1.6
116	149	EQ_X	2.62	0.5
116	150	EQ_X	3.77	0.5
116	148	EQ_Y	0.42	1.51
116	147	EQ_Y	1.76	1.51
116	149	EQ_Y	1.76	-2.82
116	150	EQ_Y	0.42	-2.82
117	150	DEAD	-3.253E-12	2.205E-12
117	149	DEAD	-1.673E-12	2.636E-12
117	151	DEAD	-1.673E-12	2.995E-12
117	152	DEAD	-3.253E-12	3.110E-12
117	150	G1_power station	0.	0.
117	149	G1_power station	0.	0.
117	151	G1_power station	0.	0.
117	152	G1_power station	0.	0.
117	150	G2_power station	-4.36	2.12

Table 20: Element Forces - Area Shells, Part 3 of 3

Area	Joint	OutputCase	V13	V23
			KN/m	KN/m
117	149	G2_power station	-3.31	2.12
117	151	G2_power station	-3.31	2.8
117	152	G2_power station	-4.36	2.8
117	150	Q_power station	-0.16	7.851E-02
117	149	Q_power station	-0.12	7.851E-02
117	151	Q_power station	-0.12	0.1
117	152	Q_power station	-0.16	0.1
117	150	Q_neve	-0.43	0.42
117	149	Q_neve	-0.32	0.42
117	151	Q_neve	-0.32	0.5
117	152	Q_neve	-0.43	0.5
117	150	Q_manutenzione	-0.16	7.851E-02
117	149	Q_manutenzione	-0.12	7.851E-02
117	151	Q_manutenzione	-0.12	0.1
117	152	Q_manutenzione	-0.16	0.1
117	150	EQ_X	2.85	0.78
117	149	EQ_X	2.42	0.78
117	151	EQ_X	2.42	0.3
117	152	EQ_X	2.85	0.3
117	150	EQ_Y	0.24	-2.93
117	149	EQ_Y	0.19	-2.93
117	151	EQ_Y	0.19	-1.09
117	152	EQ_Y	0.24	-1.09
118	152	DEAD	-7.556E-12	2.176E-12
118	151	DEAD	5.748E-13	1.313E-12
118	153	DEAD	-2.885E-13	-3.518E-13
118	154	DEAD	-7.325E-12	-5.831E-13
118	152	G1_power station	0.	0.
118	151	G1_power station	0.	0.
118	153	G1_power station	0.	0.
118	154	G1_power station	0.	0.
118	152	G2_power station	-4.58	2.3
118	151	G2_power station	-2.48	2.3
118	153	G2_power station	-2.48	2.15
118	154	G2_power station	-4.58	2.15
118	152	Q_power station	-0.17	8.496E-02
118	151	Q_power station	-9.169E-02	8.496E-02
118	153	Q_power station	-9.169E-02	7.960E-02
118	154	Q_power station	-0.17	7.960E-02
118	152	Q_neve	-0.42	0.44
118	151	Q_neve	-0.21	0.44
118	153	Q_neve	-0.21	0.43
118	154	Q_neve	-0.42	0.43

Table 20: Element Forces - Area Shells, Part 3 of 3

Area	Joint	OutputCase	V13	V23
			KN/m	KN/m
118	152	Q_manutenzione	-0.17	8.496E-02
118	151	Q_manutenzione	-9.169E-02	8.496E-02
118	153	Q_manutenzione	-9.169E-02	7.960E-02
118	154	Q_manutenzione	-0.17	7.960E-02
118	152	EQ_X	2.51	0.41
118	151	EQ_X	2.3	0.41
118	153	EQ_X	2.3	0.14
118	154	EQ_X	2.51	0.14
118	152	EQ_Y	0.3	-1.13
118	151	EQ_Y	0.25	-1.13
118	153	EQ_Y	0.25	-1.35
118	154	EQ_Y	0.3	-1.35
119	154	DEAD	-6.310E-12	6.484E-13
119	153	DEAD	3.029E-13	2.128E-12
119	155	DEAD	-6.224E-13	2.544E-12
119	156	DEAD	-2.857E-12	1.338E-12
119	154	G1_power station	0.	0.
119	153	G1_power station	0.	0.
119	155	G1_power station	0.	0.
119	156	G1_power station	0.	0.
119	154	G2_power station	-11.29	0.67
119	153	G2_power station	-4.83	0.67
119	155	G2_power station	-4.83	3.87
119	156	G2_power station	-11.29	3.87
119	154	Q_power station	-0.42	2.492E-02
119	153	Q_power station	-0.18	2.492E-02
119	155	Q_power station	-0.18	0.14
119	156	Q_power station	-0.42	0.14
119	154	Q_neve	-1.05	0.28
119	153	Q_neve	-0.41	0.28
119	155	Q_neve	-0.41	0.6
119	156	Q_neve	-1.05	0.6
119	154	Q_manutenzione	-0.42	2.492E-02
119	153	Q_manutenzione	-0.18	2.492E-02
119	155	Q_manutenzione	-0.18	0.14
119	156	Q_manutenzione	-0.42	0.14
119	154	EQ_X	2.42	0.2
119	153	EQ_X	2.24	0.2
119	155	EQ_X	2.24	-0.44
119	156	EQ_X	2.42	-0.44
119	154	EQ_Y	0.96	-1.2
119	153	EQ_Y	0.26	-1.2
119	155	EQ_Y	0.26	-2.34

Table 20: Element Forces - Area Shells, Part 3 of 3

Area	Joint	OutputCase	V13	V23
			KN/m	KN/m
119	156	EQ_Y	0.96	-2.34
120	156	DEAD	-2.085E-12	7.745E-13
120	155	DEAD	8.747E-13	1.237E-12
120	24	DEAD	4.430E-13	-1.595E-12
120	31	DEAD	-1.969E-12	1.312E-13
120	156	G1_power station	0.	0.
120	155	G1_power station	0.	0.
120	24	G1_power station	0.	0.
120	31	G1_power station	0.	0.
120	156	G2_power station	-39.88	-0.82
120	155	G2_power station	-21.84	-0.82
120	24	G2_power station	-21.84	-18.24
120	31	G2_power station	-39.88	-18.24
120	156	Q_power station	-1.48	-3.038E-02
120	155	Q_power station	-0.81	-3.038E-02
120	24	Q_power station	-0.81	-0.67
120	31	Q_power station	-1.48	-0.67
120	156	Q_neve	-3.79	0.16
120	155	Q_neve	-2.14	0.16
120	24	Q_neve	-2.14	-1.8
120	31	Q_neve	-3.79	-1.8
120	156	Q_manutenzione	-1.48	-3.038E-02
120	155	Q_manutenzione	-0.81	-3.038E-02
120	24	Q_manutenzione	-0.81	-0.67
120	31	Q_manutenzione	-1.48	-0.67
120	156	EQ_X	2.56	-0.12
120	155	EQ_X	0.26	-0.12
120	24	EQ_X	0.26	-2.7
120	31	EQ_X	2.56	-2.7
120	156	EQ_Y	2.48	-1.79
120	155	EQ_Y	1.320E-03	-1.79
120	24	EQ_Y	1.320E-03	-1.56
120	31	EQ_Y	2.48	-1.56
121	19	DEAD	6.451E-13	2.891E-12
121	22	DEAD	1.971E-12	3.107E-12
121	157	DEAD	1.909E-12	1.943E-12
121	158	DEAD	3.867E-12	2.001E-12
121	19	G1_power station	0.	0.
121	22	G1_power station	0.	0.
121	157	G1_power station	0.	0.
121	158	G1_power station	0.	0.
121	19	G2_power station	15.51	19.72
121	22	G2_power station	37.56	19.72

Table 20: Element Forces - Area Shells, Part 3 of 3

Area	Joint	OutputCase	V13	V23
			KN/m	KN/m
121	157	G2_power station	37.56	4.26
121	158	G2_power station	15.51	4.26
121	19	Q_power station	0.57	0.73
121	22	Q_power station	1.39	0.73
121	157	Q_power station	1.39	0.16
121	158	Q_power station	0.57	0.16
121	19	Q_neve	1.52	1.6
121	22	Q_neve	3.55	1.6
121	157	Q_neve	3.55	0.18
121	158	Q_neve	1.52	0.18
121	19	Q_manutenzione	0.57	0.73
121	22	Q_manutenzione	1.39	0.73
121	157	Q_manutenzione	1.39	0.16
121	158	Q_manutenzione	0.57	0.16
121	19	EQ_X	-57.69	26.26
121	22	EQ_X	62.26	26.26
121	157	EQ_X	62.26	18.
121	158	EQ_X	-57.69	18.
121	19	EQ_Y	24.66	51.6
121	22	EQ_Y	30.15	51.6
121	157	EQ_Y	30.15	-22.24
121	158	EQ_Y	24.66	-22.24
122	158	DEAD	4.626E-13	1.727E-12
122	157	DEAD	2.652E-12	1.727E-12
122	159	DEAD	1.727E-12	4.626E-13
122	160	DEAD	3.916E-12	4.626E-13
122	158	G1_power station	0.	0.
122	157	G1_power station	0.	0.
122	159	G1_power station	0.	0.
122	160	G1_power station	0.	0.
122	158	G2_power station	25.84	4.13
122	157	G2_power station	13.42	4.13
122	159	G2_power station	13.42	-3.37
122	160	G2_power station	25.84	-3.37
122	158	Q_power station	0.96	0.15
122	157	Q_power station	0.5	0.15
122	159	Q_power station	0.5	-0.12
122	160	Q_power station	0.96	-0.12
122	158	Q_neve	2.46	0.18
122	157	Q_neve	1.3	0.18
122	159	Q_neve	1.3	-0.55
122	160	Q_neve	2.46	-0.55
122	158	Q_manutenzione	0.96	0.15

Table 20: Element Forces - Area Shells, Part 3 of 3

Area	Joint	OutputCase	V13	V23
			KN/m	KN/m
122	157	Q_manutenzione	0.5	0.15
122	159	Q_manutenzione	0.5	-0.12
122	160	Q_manutenzione	0.96	-0.12
122	158	EQ_X	6.1	4.44
122	157	EQ_X	-1.710E-02	4.44
122	159	EQ_X	-1.710E-02	0.6
122	160	EQ_X	6.1	0.6
122	158	EQ_Y	1.65	-20.04
122	157	EQ_Y	-5.5	-20.04
122	159	EQ_Y	-5.5	1.31
122	160	EQ_Y	1.65	1.31
123	160	DEAD	-2.016E-12	3.380E-13
123	159	DEAD	4.997E-12	1.602E-12
123	23	DEAD	4.935E-12	1.760E-12
123	32	DEAD	1.206E-12	4.960E-13
123	160	G1_power station	0.	0.
123	159	G1_power station	0.	0.
123	23	G1_power station	0.	0.
123	32	G1_power station	0.	0.
123	160	G2_power station	38.72	1.83
123	159	G2_power station	18.53	1.83
123	23	G2_power station	18.53	11.82
123	32	G2_power station	38.72	11.82
123	160	Q_power station	1.43	6.764E-02
123	159	Q_power station	0.69	6.764E-02
123	23	Q_power station	0.69	0.44
123	32	Q_power station	1.43	0.44
123	160	Q_neve	3.66	-6.739E-02
123	159	Q_neve	1.82	-6.739E-02
123	23	Q_neve	1.82	1.1
123	32	Q_neve	3.66	1.1
123	160	Q_manutenzione	1.43	6.764E-02
123	159	Q_manutenzione	0.69	6.764E-02
123	23	Q_manutenzione	0.69	0.44
123	32	Q_manutenzione	1.43	0.44
123	160	EQ_X	-8.64	0.85
123	159	EQ_X	-6.26	0.85
123	23	EQ_X	-6.26	-8.25
123	32	EQ_X	-8.64	-8.25
123	160	EQ_Y	-1.19	1.71
123	159	EQ_Y	-2.15	1.71
123	23	EQ_Y	-2.15	-2.13
123	32	EQ_Y	-1.19	-2.13

Table 20: Element Forces - Area Shells, Part 3 of 3

Area	Joint	OutputCase	V13	V23
			KN/m	KN/m
124	22	DEAD	-1.290E-12	4.352E-12
124	74	DEAD	-2.092E-12	1.362E-12
124	161	DEAD	-3.818E-12	-7.036E-13
124	157	DEAD	-8.275E-13	9.777E-14
124	22	G1_power station	0.	0.
124	74	G1_power station	0.	0.
124	161	G1_power station	0.	0.
124	157	G1_power station	0.	0.
124	22	G2_power station	37.14	-31.51
124	74	G2_power station	8.18	-31.51
124	161	G2_power station	8.18	-10.97
124	157	G2_power station	37.14	-10.97
124	22	Q_power station	1.37	-1.17
124	74	Q_power station	0.3	-1.17
124	161	Q_power station	0.3	-0.41
124	157	Q_power station	1.37	-0.41
124	22	Q_neve	3.53	-3.08
124	74	Q_neve	0.93	-3.08
124	161	Q_neve	0.93	-1.27
124	157	Q_neve	3.53	-1.27
124	22	Q_manutenzione	1.37	-1.17
124	74	Q_manutenzione	0.3	-1.17
124	161	Q_manutenzione	0.3	-0.41
124	157	Q_manutenzione	1.37	-0.41
124	22	EQ_X	62.56	-22.83
124	74	EQ_X	-31.17	-22.83
124	161	EQ_X	-31.17	-20.31
124	157	EQ_X	62.56	-20.31
124	22	EQ_Y	-28.78	61.53
124	74	EQ_Y	-19.22	61.53
124	161	EQ_Y	-19.22	-25.44
124	157	EQ_Y	-28.78	-25.44
125	157	DEAD	6.724E-12	-1.717E-12
125	161	DEAD	-3.698E-12	2.566E-13
125	162	DEAD	1.668E-12	1.443E-12
125	159	DEAD	-4.330E-12	3.575E-12
125	157	G1_power station	0.	0.
125	161	G1_power station	0.	0.
125	162	G1_power station	0.	0.
125	159	G1_power station	0.	0.
125	157	G2_power station	13.74	-6.6
125	161	G2_power station	7.26	-6.6
125	162	G2_power station	7.26	0.76

Table 20: Element Forces - Area Shells, Part 3 of 3

Area	Joint	OutputCase	V13	V23
			KN/m	KN/m
125	159	G2_power station	13.74	0.76
125	157	Q_power station	0.51	-0.24
125	161	Q_power station	0.27	-0.24
125	162	Q_power station	0.27	2.802E-02
125	159	Q_power station	0.51	2.802E-02
125	157	Q_neve	1.34	-0.86
125	161	Q_neve	0.65	-0.86
125	162	Q_neve	0.65	-0.23
125	159	Q_neve	1.34	-0.23
125	157	Q_manutenzione	0.51	-0.24
125	161	Q_manutenzione	0.27	-0.24
125	162	Q_manutenzione	0.27	2.802E-02
125	159	Q_manutenzione	0.51	2.802E-02
125	157	EQ_X	-0.95	-10.01
125	161	EQ_X	7.63	-10.01
125	162	EQ_X	7.63	-3.03
125	159	EQ_X	-0.95	-3.03
125	157	EQ_Y	5.14	-23.54
125	161	EQ_Y	-1.5	-23.54
125	162	EQ_Y	-1.5	2.48
125	159	EQ_Y	5.14	2.48
126	159	DEAD	7.779E-12	5.434E-12
126	162	DEAD	1.121E-12	3.892E-12
126	163	DEAD	-4.860E-12	6.698E-12
126	23	DEAD	6.177E-12	4.682E-12
126	159	G1_power station	0.	0.
126	162	G1_power station	0.	0.
126	163	G1_power station	0.	0.
126	23	G1_power station	0.	0.
126	159	G2_power station	24.42	9.32
126	162	G2_power station	-24.35	9.32
126	163	G2_power station	-24.35	-0.29
126	23	G2_power station	24.42	-0.29
126	159	Q_power station	0.9	0.34
126	162	Q_power station	-0.9	0.34
126	163	Q_power station	-0.9	-1.064E-02
126	23	Q_power station	0.9	-1.064E-02
126	159	Q_neve	2.48	0.67
126	162	Q_neve	-2.63	0.67
126	163	Q_neve	-2.63	-0.42
126	23	Q_neve	2.48	-0.42
126	159	Q_manutenzione	0.9	0.34
126	162	Q_manutenzione	-0.9	0.34

Table 20: Element Forces - Area Shells, Part 3 of 3

Area	Joint	OutputCase	V13	V23
			KN/m	KN/m
126	163	Q_manutenzione	-0.9	-1.064E-02
126	23	Q_manutenzione	0.9	-1.064E-02
126	159	EQ_X	-8.09	-8.77
126	162	EQ_X	19.36	-8.77
126	163	EQ_X	19.36	4.64
126	23	EQ_X	-8.09	4.64
126	159	EQ_Y	-4.52	1.82
126	162	EQ_Y	2.41	1.82
126	163	EQ_Y	2.41	-3.69
126	23	EQ_Y	-4.52	-3.69
127	74	DEAD	-1.616E-12	4.218E-13
127	76	DEAD	8.558E-12	-2.257E-13
127	164	DEAD	3.440E-12	-1.790E-12
127	161	DEAD	-3.450E-12	-1.964E-12
127	74	G1_power station	0.	0.
127	76	G1_power station	0.	0.
127	164	G1_power station	0.	0.
127	161	G1_power station	0.	0.
127	74	G2_power station	5.76	-5.48
127	76	G2_power station	0.16	-5.48
127	164	G2_power station	0.16	-8.
127	161	G2_power station	5.76	-8.
127	74	Q_power station	0.21	-0.2
127	76	Q_power station	5.892E-03	-0.2
127	164	Q_power station	5.892E-03	-0.3
127	161	Q_power station	0.21	-0.3
127	74	Q_neve	0.72	-0.61
127	76	Q_neve	0.2	-0.61
127	164	Q_neve	0.2	-0.86
127	161	Q_neve	0.72	-0.86
127	74	Q_manutenzione	0.21	-0.2
127	76	Q_manutenzione	5.892E-03	-0.2
127	164	Q_manutenzione	5.892E-03	-0.3
127	161	Q_manutenzione	0.21	-0.3
127	74	EQ_X	-28.97	4.22
127	76	EQ_X	3.53	4.22
127	164	EQ_X	3.53	1.67
127	161	EQ_X	-28.97	1.67
127	74	EQ_Y	-7.71	2.63
127	76	EQ_Y	1.06	2.63
127	164	EQ_Y	1.06	9.27
127	161	EQ_Y	-7.71	9.27
128	161	DEAD	1.864E-12	3.011E-14

Table 20: Element Forces - Area Shells, Part 3 of 3

Area	Joint	OutputCase	V13	V23
			KN/m	KN/m
128	164	DEAD	-2.577E-12	-3.145E-12
128	165	DEAD	9.448E-12	-7.599E-13
128	162	DEAD	1.847E-12	1.595E-12
128	161	G1_power station	0.	0.
128	164	G1_power station	0.	0.
128	165	G1_power station	0.	0.
128	162	G1_power station	0.	0.
128	161	G2_power station	6.27	-5.4
128	164	G2_power station	-2.07	-5.4
128	165	G2_power station	-2.07	-6.1
128	162	G2_power station	6.27	-6.1
128	161	Q_power station	0.23	-0.2
128	164	Q_power station	-7.674E-02	-0.2
128	165	Q_power station	-7.674E-02	-0.23
128	162	Q_power station	0.23	-0.23
128	161	Q_neve	0.6	-0.61
128	164	Q_neve	-0.21	-0.61
128	165	Q_neve	-0.21	-0.72
128	162	Q_neve	0.6	-0.72
128	161	Q_manutenzione	0.23	-0.2
128	164	Q_manutenzione	-7.674E-02	-0.2
128	165	Q_manutenzione	-7.674E-02	-0.23
128	162	Q_manutenzione	0.23	-0.23
128	161	EQ_X	6.08	-1.
128	164	EQ_X	0.96	-1.
128	165	EQ_X	0.96	-1.77
128	162	EQ_X	6.08	-1.77
128	161	EQ_Y	-1.78	8.11
128	164	EQ_Y	-2.16	8.11
128	165	EQ_Y	-2.16	2.2
128	162	EQ_Y	-1.78	2.2
129	162	DEAD	-2.991E-12	-1.310E-12
129	165	DEAD	-2.652E-12	3.037E-12
129	166	DEAD	8.013E-13	-1.152E-12
129	163	DEAD	-3.916E-12	1.615E-12
129	162	G1_power station	0.	0.
129	165	G1_power station	0.	0.
129	166	G1_power station	0.	0.
129	163	G1_power station	0.	0.
129	162	G2_power station	-23.26	-8.15
129	165	G2_power station	1.12	-8.15
129	166	G2_power station	1.12	-1.93
129	163	G2_power station	-23.26	-1.93

Table 20: Element Forces - Area Shells, Part 3 of 3

Area	Joint	OutputCase	V13	V23
			KN/m	KN/m
129	162	Q_power station	-0.86	-0.3
129	165	Q_power station	4.129E-02	-0.3
129	166	Q_power station	4.129E-02	-7.147E-02
129	163	Q_power station	-0.86	-7.147E-02
129	162	Q_neve	-2.49	-0.93
129	165	Q_neve	-1.201E-02	-0.93
129	166	Q_neve	-1.201E-02	-0.33
129	163	Q_neve	-2.49	-0.33
129	162	Q_manutenzione	-0.86	-0.3
129	165	Q_manutenzione	4.129E-02	-0.3
129	166	Q_manutenzione	4.129E-02	-7.147E-02
129	163	Q_manutenzione	-0.86	-7.147E-02
129	162	EQ_X	16.94	0.78
129	165	EQ_X	2.57	0.78
129	166	EQ_X	2.57	-1.62
129	163	EQ_X	16.94	-1.62
129	162	EQ_Y	2.	2.77
129	165	EQ_Y	-0.6	2.77
129	166	EQ_Y	-0.6	1.78
129	163	EQ_Y	2.	1.78
130	76	DEAD	6.818E-12	-1.112E-12
130	78	DEAD	-2.199E-12	-3.517E-12
130	167	DEAD	-6.453E-12	2.206E-12
130	164	DEAD	4.753E-12	-4.082E-14
130	76	G1_power station	0.	0.
130	78	G1_power station	0.	0.
130	167	G1_power station	0.	0.
130	164	G1_power station	0.	0.
130	76	G2_power station	0.72	-8.585E-13
130	78	G2_power station	0.72	-6.902E-12
130	167	G2_power station	0.72	-3.702E-12
130	164	G2_power station	0.72	-5.322E-12
130	76	Q_power station	2.664E-02	7.015E-14
130	78	Q_power station	2.664E-02	-4.039E-13
130	167	Q_power station	2.664E-02	1.294E-13
130	164	Q_power station	2.664E-02	-9.779E-14
130	76	Q_neve	0.26	-1.771E-13
130	78	Q_neve	0.26	-1.387E-13
130	167	Q_neve	0.26	-2.561E-13
130	164	Q_neve	0.26	-1.047E-12
130	76	Q_manutenzione	2.664E-02	7.015E-14
130	78	Q_manutenzione	2.664E-02	-4.039E-13
130	167	Q_manutenzione	2.664E-02	1.294E-13

Table 20: Element Forces - Area Shells, Part 3 of 3

Area	Joint	OutputCase	V13	V23
			KN/m	KN/m
130	164	Q_manutenzione	2.664E-02	-9.779E-14
130	76	EQ_X	3.09	-9.765E-15
130	78	EQ_X	3.09	8.998E-13
130	167	EQ_X	3.09	3.062E-13
130	164	EQ_X	3.09	1.493E-13
130	76	EQ_Y	0.22	6.41
130	78	EQ_Y	-0.22	6.41
130	167	EQ_Y	-0.22	5.84
130	164	EQ_Y	0.22	5.84
131	164	DEAD	1.166E-12	-1.040E-12
131	167	DEAD	-6.880E-12	-1.256E-12
131	168	DEAD	-2.626E-12	-1.514E-12
131	165	DEAD	3.232E-12	-1.572E-12
131	164	G1_power station	0.	0.
131	167	G1_power station	0.	0.
131	168	G1_power station	0.	0.
131	165	G1_power station	0.	0.
131	164	G2_power station	-1.93	-2.427E-12
131	167	G2_power station	-1.93	-1.149E-11
131	168	G2_power station	-1.93	-4.323E-12
131	165	G2_power station	-1.93	-6.752E-12
131	164	Q_power station	-7.138E-02	-3.579E-14
131	167	Q_power station	-7.138E-02	-1.822E-13
131	168	Q_power station	-7.138E-02	-2.037E-13
131	165	Q_power station	-7.138E-02	-1.427E-13
131	164	Q_neve	-0.18	-5.123E-13
131	167	Q_neve	-0.18	-1.268E-12
131	168	Q_neve	-0.18	-3.543E-13
131	165	Q_neve	-0.18	-5.567E-13
131	164	Q_manutenzione	-7.138E-02	-3.579E-14
131	167	Q_manutenzione	-7.138E-02	-1.822E-13
131	168	Q_manutenzione	-7.138E-02	-2.037E-13
131	165	Q_manutenzione	-7.138E-02	-1.427E-13
131	164	EQ_X	1.36	-1.529E-13
131	167	EQ_X	1.36	3.597E-13
131	168	EQ_X	1.36	5.976E-13
131	165	EQ_X	1.36	7.349E-13
131	164	EQ_Y	-1.28	5.29
131	167	EQ_Y	1.28	5.29
131	168	EQ_Y	1.28	5.14
131	165	EQ_Y	-1.28	5.14
132	165	DEAD	-3.369E-12	-1.995E-12
132	168	DEAD	-1.241E-12	-9.775E-13

Table 20: Element Forces - Area Shells, Part 3 of 3

Area	Joint	OutputCase	V13	V23
			KN/m	KN/m
132	169	DEAD	-2.105E-12	-1.837E-12
132	166	DEAD	-3.137E-12	-4.769E-12
132	165	G1_power station	0.	0.
132	168	G1_power station	0.	0.
132	169	G1_power station	0.	0.
132	166	G1_power station	0.	0.
132	165	G2_power station	-0.46	-6.233E-12
132	168	G2_power station	-0.46	-3.859E-12
132	169	G2_power station	-0.46	-5.443E-12
132	166	G2_power station	-0.46	-4.807E-12
132	165	Q_power station	-1.687E-02	-1.914E-13
132	168	Q_power station	-1.687E-02	-1.307E-13
132	169	Q_power station	-1.687E-02	-1.963E-13
132	166	Q_power station	-1.687E-02	-1.800E-13
132	165	Q_neve	-0.16	-1.041E-12
132	168	Q_neve	-0.16	-4.516E-13
132	169	Q_neve	-0.16	-6.463E-13
132	166	Q_neve	-0.16	-6.886E-13
132	165	Q_manutenzione	-1.687E-02	-1.914E-13
132	168	Q_manutenzione	-1.687E-02	-1.307E-13
132	169	Q_manutenzione	-1.687E-02	-1.963E-13
132	166	Q_manutenzione	-1.687E-02	-1.800E-13
132	165	EQ_X	3.42	6.967E-13
132	168	EQ_X	3.42	3.980E-13
132	169	EQ_X	3.42	2.326E-13
132	166	EQ_X	3.42	5.239E-14
132	165	EQ_Y	0.11	4.99
132	168	EQ_Y	-0.11	4.99
132	169	EQ_Y	-0.11	3.83
132	166	EQ_Y	0.11	3.83
133	78	DEAD	1.109E-13	1.067E-12
133	80	DEAD	-4.138E-13	-1.052E-13
133	170	DEAD	3.903E-12	1.189E-13
133	167	DEAD	-1.046E-12	-5.003E-12
133	78	G1_power station	0.	0.
133	80	G1_power station	0.	0.
133	170	G1_power station	0.	0.
133	167	G1_power station	0.	0.
133	78	G2_power station	0.16	5.48
133	80	G2_power station	5.76	5.48
133	170	G2_power station	5.76	8.
133	167	G2_power station	0.16	8.
133	78	Q_power station	5.892E-03	0.2

Table 20: Element Forces - Area Shells, Part 3 of 3

Area	Joint	OutputCase	V13	V23
			KN/m	KN/m
133	80	Q_power station	0.21	0.2
133	170	Q_power station	0.21	0.3
133	167	Q_power station	5.892E-03	0.3
133	78	Q_neve	0.2	0.61
133	80	Q_neve	0.72	0.61
133	170	Q_neve	0.72	0.86
133	167	Q_neve	0.2	0.86
133	78	Q_manutenzione	5.892E-03	0.2
133	80	Q_manutenzione	0.21	0.2
133	170	Q_manutenzione	0.21	0.3
133	167	Q_manutenzione	5.892E-03	0.3
133	78	EQ_X	3.53	-4.22
133	80	EQ_X	-28.97	-4.22
133	170	EQ_X	-28.97	-1.67
133	167	EQ_X	3.53	-1.67
133	78	EQ_Y	-1.06	2.63
133	80	EQ_Y	7.71	2.63
133	170	EQ_Y	7.71	9.27
133	167	EQ_Y	-1.06	9.27
134	167	DEAD	-6.871E-12	-1.143E-12
134	170	DEAD	-1.336E-13	-9.578E-13
134	171	DEAD	-3.711E-12	5.953E-13
134	168	DEAD	4.984E-13	-9.578E-13
134	167	G1_power station	0.	0.
134	170	G1_power station	0.	0.
134	171	G1_power station	0.	0.
134	168	G1_power station	0.	0.
134	167	G2_power station	-2.07	5.4
134	170	G2_power station	6.27	5.4
134	171	G2_power station	6.27	6.1
134	168	G2_power station	-2.07	6.1
134	167	Q_power station	-7.674E-02	0.2
134	170	Q_power station	0.23	0.2
134	171	Q_power station	0.23	0.23
134	168	Q_power station	-7.674E-02	0.23
134	167	Q_neve	-0.21	0.61
134	170	Q_neve	0.6	0.61
134	171	Q_neve	0.6	0.72
134	168	Q_neve	-0.21	0.72
134	167	Q_manutenzione	-7.674E-02	0.2
134	170	Q_manutenzione	0.23	0.2
134	171	Q_manutenzione	0.23	0.23
134	168	Q_manutenzione	-7.674E-02	0.23

Table 20: Element Forces - Area Shells, Part 3 of 3

Area	Joint	OutputCase	V13	V23
			KN/m	KN/m
134	167	EQ_X	0.96	1.
134	170	EQ_X	6.08	1.
134	171	EQ_X	6.08	1.77
134	168	EQ_X	0.96	1.77
134	167	EQ_Y	2.16	8.11
134	170	EQ_Y	1.78	8.11
134	171	EQ_Y	1.78	2.2
134	168	EQ_Y	2.16	2.2
135	168	DEAD	-1.847E-12	-1.839E-12
135	171	DEAD	-1.310E-14	9.668E-13
135	172	DEAD	2.577E-12	-2.590E-13
135	169	DEAD	-2.541E-12	4.928E-13
135	168	G1_power station	0.	0.
135	171	G1_power station	0.	0.
135	172	G1_power station	0.	0.
135	169	G1_power station	0.	0.
135	168	G2_power station	1.12	8.15
135	171	G2_power station	-23.26	8.15
135	172	G2_power station	-23.26	1.93
135	169	G2_power station	1.12	1.93
135	168	Q_power station	4.129E-02	0.3
135	171	Q_power station	-0.86	0.3
135	172	Q_power station	-0.86	7.147E-02
135	169	Q_power station	4.129E-02	7.147E-02
135	168	Q_neve	-1.201E-02	0.93
135	171	Q_neve	-2.49	0.93
135	172	Q_neve	-2.49	0.33
135	169	Q_neve	-1.201E-02	0.33
135	168	Q_manutenzione	4.129E-02	0.3
135	171	Q_manutenzione	-0.86	0.3
135	172	Q_manutenzione	-0.86	7.147E-02
135	169	Q_manutenzione	4.129E-02	7.147E-02
135	168	EQ_X	2.57	-0.78
135	171	EQ_X	16.94	-0.78
135	172	EQ_X	16.94	1.62
135	169	EQ_X	2.57	1.62
135	168	EQ_Y	0.6	2.77
135	171	EQ_Y	-2.	2.77
135	172	EQ_Y	-2.	1.78
135	169	EQ_Y	0.6	1.78
136	80	DEAD	6.662E-12	2.262E-12
136	9	DEAD	9.122E-13	3.193E-13
136	173	DEAD	-1.554E-12	8.397E-13

Table 20: Element Forces - Area Shells, Part 3 of 3

Area	Joint	OutputCase	V13	V23
			KN/m	KN/m
136	170	DEAD	9.122E-13	3.193E-13
136	80	G1_power station	0.	0.
136	9	G1_power station	0.	0.
136	173	G1_power station	0.	0.
136	170	G1_power station	0.	0.
136	80	G2_power station	8.18	31.51
136	9	G2_power station	37.14	31.51
136	173	G2_power station	37.14	10.97
136	170	G2_power station	8.18	10.97
136	80	Q_power station	0.3	1.17
136	9	Q_power station	1.37	1.17
136	173	Q_power station	1.37	0.41
136	170	Q_power station	0.3	0.41
136	80	Q_neve	0.93	3.08
136	9	Q_neve	3.53	3.08
136	173	Q_neve	3.53	1.27
136	170	Q_neve	0.93	1.27
136	80	Q_manutenzione	0.3	1.17
136	9	Q_manutenzione	1.37	1.17
136	173	Q_manutenzione	1.37	0.41
136	170	Q_manutenzione	0.3	0.41
136	80	EQ_X	-31.17	22.83
136	9	EQ_X	62.56	22.83
136	173	EQ_X	62.56	20.31
136	170	EQ_X	-31.17	20.31
136	80	EQ_Y	19.22	61.53
136	9	EQ_Y	28.78	61.53
136	173	EQ_Y	28.78	-25.44
136	170	EQ_Y	19.22	-25.44
137	170	DEAD	-1.192E-12	-1.157E-13
137	173	DEAD	-2.456E-12	3.470E-13
137	174	DEAD	-2.456E-12	-4.317E-13
137	171	DEAD	-1.192E-12	1.295E-12
137	170	G1_power station	0.	0.
137	173	G1_power station	0.	0.
137	174	G1_power station	0.	0.
137	171	G1_power station	0.	0.
137	170	G2_power station	7.26	6.6
137	173	G2_power station	13.74	6.6
137	174	G2_power station	13.74	-0.76
137	171	G2_power station	7.26	-0.76
137	170	Q_power station	0.27	0.24
137	173	Q_power station	0.51	0.24

Table 20: Element Forces - Area Shells, Part 3 of 3

Area	Joint	OutputCase	V13	V23
			KN/m	KN/m
137	174	Q_power station	0.51	-2.802E-02
137	171	Q_power station	0.27	-2.802E-02
137	170	Q_neve	0.65	0.86
137	173	Q_neve	1.34	0.86
137	174	Q_neve	1.34	0.23
137	171	Q_neve	0.65	0.23
137	170	Q_manutenzione	0.27	0.24
137	173	Q_manutenzione	0.51	0.24
137	174	Q_manutenzione	0.51	-2.802E-02
137	171	Q_manutenzione	0.27	-2.802E-02
137	170	EQ_X	7.63	10.01
137	173	EQ_X	-0.95	10.01
137	174	EQ_X	-0.95	3.03
137	171	EQ_X	7.63	3.03
137	170	EQ_Y	1.5	-23.54
137	173	EQ_Y	-5.14	-23.54
137	174	EQ_Y	-5.14	2.48
137	171	EQ_Y	1.5	2.48
138	171	DEAD	1.873E-12	-3.578E-12
138	174	DEAD	-8.467E-14	8.007E-13
138	33	DEAD	2.505E-12	-8.919E-13
138	172	DEAD	1.179E-12	3.487E-12
138	171	G1_power station	0.	0.
138	174	G1_power station	0.	0.
138	33	G1_power station	0.	0.
138	172	G1_power station	0.	0.
138	171	G2_power station	-24.35	-9.32
138	174	G2_power station	24.42	-9.32
138	33	G2_power station	24.42	0.29
138	172	G2_power station	-24.35	0.29
138	171	Q_power station	-0.9	-0.34
138	174	Q_power station	0.9	-0.34
138	33	Q_power station	0.9	1.064E-02
138	172	Q_power station	-0.9	1.064E-02
138	171	Q_neve	-2.63	-0.67
138	174	Q_neve	2.48	-0.67
138	33	Q_neve	2.48	0.42
138	172	Q_neve	-2.63	0.42
138	171	Q_manutenzione	-0.9	-0.34
138	174	Q_manutenzione	0.9	-0.34
138	33	Q_manutenzione	0.9	1.064E-02
138	172	Q_manutenzione	-0.9	1.064E-02
138	171	EQ_X	19.36	8.77

Table 20: Element Forces - Area Shells, Part 3 of 3

Area	Joint	OutputCase	V13	V23
			KN/m	KN/m
138	174	EQ_X	-8.09	8.77
138	33	EQ_X	-8.09	-4.64
138	172	EQ_X	19.36	-4.64
138	171	EQ_Y	-2.41	1.82
138	174	EQ_Y	4.52	1.82
138	33	EQ_Y	4.52	-3.69
138	172	EQ_Y	-2.41	-3.69
139	14	DEAD	-3.035E-12	1.556E-12
139	56	DEAD	4.058E-14	1.772E-12
139	175	DEAD	-3.351E-12	4.504E-13
139	145	DEAD	-5.331E-12	5.083E-13
139	14	G1_power station	0.	0.
139	56	G1_power station	0.	0.
139	175	G1_power station	0.	0.
139	145	G1_power station	0.	0.
139	14	G2_power station	-35.24	32.35
139	56	G2_power station	-10.91	32.35
139	175	G2_power station	-10.91	11.39
139	145	G2_power station	-35.24	11.39
139	14	Q_power station	-1.3	1.2
139	56	Q_power station	-0.4	1.2
139	175	Q_power station	-0.4	0.42
139	145	Q_power station	-1.3	0.42
139	14	Q_neve	-3.42	3.15
139	56	Q_neve	-1.27	3.15
139	175	Q_neve	-1.27	1.31
139	145	Q_neve	-3.42	1.31
139	14	Q_manutenzione	-1.3	1.2
139	56	Q_manutenzione	-0.4	1.2
139	175	Q_manutenzione	-0.4	0.42
139	145	Q_manutenzione	-1.3	0.42
139	14	EQ_X	58.2	-21.82
139	56	EQ_X	-29.14	-21.82
139	175	EQ_X	-29.14	-18.19
139	145	EQ_X	58.2	-18.19
139	14	EQ_Y	-25.25	58.87
139	56	EQ_Y	-17.67	58.87
139	175	EQ_Y	-17.67	-24.11
139	145	EQ_Y	-25.25	-24.11
140	145	DEAD	1.357E-12	2.559E-12
140	175	DEAD	1.842E-12	-1.295E-12
140	176	DEAD	3.569E-12	-9.170E-13
140	147	DEAD	8.943E-13	-3.470E-13

Table 20: Element Forces - Area Shells, Part 3 of 3

Area	Joint	OutputCase	V13	V23
			KN/m	KN/m
140	145	G1_power station	0.	0.
140	175	G1_power station	0.	0.
140	176	G1_power station	0.	0.
140	147	G1_power station	0.	0.
140	145	G2_power station	-10.21	8.82
140	175	G2_power station	-11.94	8.82
140	176	G2_power station	-11.94	3.46
140	147	G2_power station	-10.21	3.46
140	145	Q_power station	-0.38	0.33
140	175	Q_power station	-0.44	0.33
140	176	Q_power station	-0.44	0.13
140	147	Q_power station	-0.38	0.13
140	145	Q_neve	-1.08	1.08
140	175	Q_neve	-1.25	1.08
140	176	Q_neve	-1.25	0.63
140	147	Q_neve	-1.08	0.63
140	145	Q_manutenzione	-0.38	0.33
140	175	Q_manutenzione	-0.44	0.33
140	176	Q_manutenzione	-0.44	0.13
140	147	Q_manutenzione	-0.38	0.13
140	145	EQ_X	0.49	-7.61
140	175	EQ_X	5.12	-7.61
140	176	EQ_X	5.12	-0.11
140	147	EQ_X	0.49	-0.11
140	145	EQ_Y	5.5	-22.22
140	175	EQ_Y	-0.2	-22.22
140	176	EQ_Y	-0.2	3.98
140	147	EQ_Y	5.5	3.98
141	147	DEAD	-1.077E-11	5.100E-12
141	176	DEAD	4.997E-12	-1.005E-12
141	177	DEAD	-3.822E-12	-9.039E-13
141	149	DEAD	1.206E-12	-5.745E-12
141	147	G1_power station	0.	0.
141	176	G1_power station	0.	0.
141	177	G1_power station	0.	0.
141	149	G1_power station	0.	0.
141	147	G2_power station	-6.25	3.68
141	176	G2_power station	-5.83	3.68
141	177	G2_power station	-5.83	2.1
141	149	G2_power station	-6.25	2.1
141	147	Q_power station	-0.23	0.14
141	176	Q_power station	-0.22	0.14
141	177	Q_power station	-0.22	7.785E-02

Table 20: Element Forces - Area Shells, Part 3 of 3

Area	Joint	OutputCase	V13	V23
			KN/m	KN/m
141	149	Q_power station	-0.23	7.785E-02
141	147	Q_neve	-0.66	0.65
141	176	Q_neve	-0.61	0.65
141	177	Q_neve	-0.61	0.53
141	149	Q_neve	-0.66	0.53
141	147	Q_manutenzione	-0.23	0.14
141	176	Q_manutenzione	-0.22	0.14
141	177	Q_manutenzione	-0.22	7.785E-02
141	149	Q_manutenzione	-0.23	7.785E-02
141	147	EQ_X	2.73	-0.75
141	176	EQ_X	2.52	-0.75
141	177	EQ_X	2.52	-0.3
141	149	EQ_X	2.73	-0.3
141	147	EQ_Y	-1.04	3.99
141	176	EQ_Y	0.46	3.99
141	177	EQ_Y	0.46	-0.91
141	149	EQ_Y	-1.04	-0.91
142	149	DEAD	-1.404E-12	-1.365E-12
142	177	DEAD	3.390E-12	-1.982E-12
142	178	DEAD	4.919E-13	-7.330E-13
142	151	DEAD	-7.038E-12	7.044E-13
142	149	G1_power station	0.	0.
142	177	G1_power station	0.	0.
142	178	G1_power station	0.	0.
142	151	G1_power station	0.	0.
142	149	G2_power station	-3.3	1.93
142	177	G2_power station	-2.44	1.93
142	178	G2_power station	-2.44	0.93
142	151	G2_power station	-3.3	0.93
142	149	Q_power station	-0.12	7.156E-02
142	177	Q_power station	-9.021E-02	7.156E-02
142	178	Q_power station	-9.021E-02	3.450E-02
142	151	Q_power station	-0.12	3.450E-02
142	149	Q_neve	-0.33	0.51
142	177	Q_neve	-0.23	0.51
142	178	Q_neve	-0.23	0.43
142	151	Q_neve	-0.33	0.43
142	149	Q_manutenzione	-0.12	7.156E-02
142	177	Q_manutenzione	-9.021E-02	7.156E-02
142	178	Q_manutenzione	-9.021E-02	3.450E-02
142	151	Q_manutenzione	-0.12	3.450E-02
142	149	EQ_X	2.5	-0.25
142	177	EQ_X	2.43	-0.25

Table 20: Element Forces - Area Shells, Part 3 of 3

Area	Joint	OutputCase	V13	V23
			KN/m	KN/m
142	178	EQ_X	2.43	2.581E-02
142	151	EQ_X	2.5	2.581E-02
142	149	EQ_Y	0.53	-0.97
142	177	EQ_Y	0.17	-0.97
142	178	EQ_Y	0.17	0.61
142	151	EQ_Y	0.53	0.61
143	151	DEAD	-1.660E-12	7.786E-13
143	178	DEAD	1.816E-12	-1.811E-12
143	179	DEAD	-7.119E-13	1.411E-12
143	153	DEAD	-4.188E-12	7.167E-13
143	151	G1_power station	0.	0.
143	178	G1_power station	0.	0.
143	179	G1_power station	0.	0.
143	153	G1_power station	0.	0.
143	151	G2_power station	-2.52	0.35
143	178	G2_power station	2.483E-02	0.35
143	179	G2_power station	2.483E-02	-0.52
143	153	G2_power station	-2.52	-0.52
143	151	Q_power station	-9.318E-02	1.293E-02
143	178	Q_power station	9.186E-04	1.293E-02
143	179	Q_power station	9.186E-04	-1.919E-02
143	153	Q_power station	-9.318E-02	-1.919E-02
143	151	Q_neve	-0.22	0.36
143	178	Q_neve	5.435E-02	0.36
143	179	Q_neve	5.435E-02	0.3
143	153	Q_neve	-0.22	0.3
143	151	Q_manutenzione	-9.318E-02	1.293E-02
143	178	Q_manutenzione	9.186E-04	1.293E-02
143	179	Q_manutenzione	9.186E-04	-1.919E-02
143	153	Q_manutenzione	-9.318E-02	-1.919E-02
143	151	EQ_X	2.39	-1.288E-03
143	178	EQ_X	2.53	-1.288E-03
143	179	EQ_X	2.53	0.33
143	153	EQ_X	2.39	0.33
143	151	EQ_Y	0.18	0.61
143	178	EQ_Y	0.2	0.61
143	179	EQ_Y	0.2	0.62
143	153	EQ_Y	0.18	0.62
144	153	DEAD	5.587E-13	9.777E-14
144	179	DEAD	-2.085E-12	-1.629E-12
144	180	DEAD	-1.653E-12	1.362E-12
144	155	DEAD	4.430E-13	8.991E-13
144	153	G1_power station	0.	0.

Table 20: Element Forces - Area Shells, Part 3 of 3

Area	Joint	OutputCase	V13	V23
			KN/m	KN/m
144	179	G1_power station	0.	0.
144	180	G1_power station	0.	0.
144	155	G1_power station	0.	0.
144	153	G2_power station	-5.34	-2.65
144	179	G2_power station	4.38	-2.65
144	180	G2_power station	4.38	-6.15
144	155	G2_power station	-5.34	-6.15
144	153	Q_power station	-0.2	-9.787E-02
144	179	Q_power station	0.16	-9.787E-02
144	180	Q_power station	0.16	-0.23
144	155	Q_power station	-0.2	-0.23
144	153	Q_neve	-0.47	7.146E-02
144	179	Q_neve	0.55	7.146E-02
144	180	Q_neve	0.55	-0.25
144	155	Q_neve	-0.47	-0.25
144	153	Q_manutenzione	-0.2	-9.787E-02
144	179	Q_manutenzione	0.16	-9.787E-02
144	180	Q_manutenzione	0.16	-0.23
144	155	Q_manutenzione	-0.2	-0.23
144	153	EQ_X	1.98	0.15
144	179	EQ_X	2.94	0.15
144	180	EQ_X	2.94	-0.14
144	155	EQ_X	1.98	-0.14
144	153	EQ_Y	-7.903E-03	0.63
144	179	EQ_Y	0.13	0.63
144	180	EQ_Y	0.13	0.32
144	155	EQ_Y	-7.903E-03	0.32
145	155	DEAD	1.170E-12	-3.685E-12
145	180	DEAD	6.920E-12	-2.320E-13
145	181	DEAD	6.858E-12	4.689E-12
145	24	DEAD	4.392E-12	5.614E-12
145	155	G1_power station	0.	0.
145	180	G1_power station	0.	0.
145	181	G1_power station	0.	0.
145	24	G1_power station	0.	0.
145	155	G2_power station	-28.89	-19.65
145	180	G2_power station	42.73	-19.65
145	181	G2_power station	42.73	2.08
145	24	G2_power station	-28.89	2.08
145	155	Q_power station	-1.07	-0.73
145	180	Q_power station	1.58	-0.73
145	181	Q_power station	1.58	7.698E-02
145	24	Q_power station	-1.07	7.698E-02

Table 20: Element Forces - Area Shells, Part 3 of 3

Area	Joint	OutputCase	V13	V23
			KN/m	KN/m
145	155	Q_neve	-2.88	-1.65
145	180	Q_neve	4.54	-1.65
145	181	Q_neve	4.54	0.79
145	24	Q_neve	-2.88	0.79
145	155	Q_manutenzione	-1.07	-0.73
145	180	Q_manutenzione	1.58	-0.73
145	181	Q_manutenzione	1.58	7.698E-02
145	24	Q_manutenzione	-1.07	7.698E-02
145	155	EQ_X	1.01	-1.18
145	180	EQ_X	5.66	-1.18
145	181	EQ_X	5.66	5.81
145	24	EQ_X	1.01	5.81
145	155	EQ_Y	2.36	0.81
145	180	EQ_Y	-1.72	0.81
145	181	EQ_Y	-1.72	5.36
145	24	EQ_Y	2.36	5.36
146	56	DEAD	-7.841E-12	2.708E-12
146	68	DEAD	6.017E-12	8.707E-14
146	182	DEAD	1.638E-12	-6.099E-13
146	175	DEAD	-3.463E-12	-2.915E-12
146	56	G1_power station	0.	0.
146	68	G1_power station	0.	0.
146	182	G1_power station	0.	0.
146	175	G1_power station	0.	0.
146	56	G2_power station	-8.23	6.64
146	68	G2_power station	-4.91	6.64
146	182	G2_power station	-4.91	8.54
146	175	G2_power station	-8.23	8.54
146	56	Q_power station	-0.3	0.25
146	68	Q_power station	-0.18	0.25
146	182	Q_power station	-0.18	0.32
146	175	Q_power station	-0.3	0.32
146	56	Q_neve	-1.04	0.72
146	68	Q_neve	-0.76	0.72
146	182	Q_neve	-0.76	0.9
146	175	Q_neve	-1.04	0.9
146	56	Q_manutenzione	-0.3	0.25
146	68	Q_manutenzione	-0.18	0.25
146	182	Q_manutenzione	-0.18	0.32
146	175	Q_manutenzione	-0.3	0.32
146	56	EQ_X	-26.95	4.68
146	68	EQ_X	0.75	4.68
146	182	EQ_X	0.75	1.2

Table 20: Element Forces - Area Shells, Part 3 of 3

Area	Joint	OutputCase	V13	V23
			KN/m	KN/m
146	175	EQ_X	-26.95	1.2
146	56	EQ_Y	-6.99	2.97
146	68	EQ_Y	0.84	2.97
146	182	EQ_Y	0.84	8.94
146	175	EQ_Y	-6.99	8.94
147	175	DEAD	5.247E-12	-4.129E-13
147	182	DEAD	3.667E-12	-1.492E-12
147	183	DEAD	1.139E-12	1.325E-12
147	176	DEAD	2.719E-12	1.036E-12
147	175	G1_power station	0.	0.
147	182	G1_power station	0.	0.
147	183	G1_power station	0.	0.
147	176	G1_power station	0.	0.
147	175	G2_power station	-9.87	7.2
147	182	G2_power station	-6.39	7.2
147	183	G2_power station	-6.39	3.95
147	176	G2_power station	-9.87	3.95
147	175	Q_power station	-0.37	0.27
147	182	Q_power station	-0.24	0.27
147	183	Q_power station	-0.24	0.15
147	176	Q_power station	-0.37	0.15
147	175	Q_neve	-1.07	0.78
147	182	Q_neve	-0.76	0.78
147	183	Q_neve	-0.76	0.51
147	176	Q_neve	-1.07	0.51
147	175	Q_manutenzione	-0.37	0.27
147	182	Q_manutenzione	-0.24	0.27
147	183	Q_manutenzione	-0.24	0.15
147	176	Q_manutenzione	-0.37	0.15
147	175	EQ_X	4.44	-0.36
147	182	EQ_X	-2.44	-0.36
147	183	EQ_X	-2.44	-2.7
147	176	EQ_X	4.44	-2.7
147	175	EQ_Y	-0.93	8.04
147	182	EQ_Y	-2.21	8.04
147	183	EQ_Y	-2.21	1.65
147	176	EQ_Y	-0.93	1.65
148	176	DEAD	-1.306E-12	3.820E-12
148	183	DEAD	-4.559E-12	-3.981E-12
148	184	DEAD	1.854E-12	6.032E-12
148	177	DEAD	1.807E-13	2.339E-12
148	176	G1_power station	0.	0.
148	183	G1_power station	0.	0.

Table 20: Element Forces - Area Shells, Part 3 of 3

Area	Joint	OutputCase	V13	V23
			KN/m	KN/m
148	184	G1_power station	0.	0.
148	177	G1_power station	0.	0.
148	176	G2_power station	-4.9	3.67
148	183	G2_power station	-4.85	3.67
148	184	G2_power station	-4.85	1.35
148	177	G2_power station	-4.9	1.35
148	176	Q_power station	-0.18	0.14
148	183	Q_power station	-0.18	0.14
148	184	Q_power station	-0.18	5.010E-02
148	177	Q_power station	-0.18	5.010E-02
148	176	Q_neve	-0.54	0.48
148	183	Q_neve	-0.53	0.48
148	184	Q_neve	-0.53	0.28
148	177	Q_neve	-0.54	0.28
148	176	Q_manutenzione	-0.18	0.14
148	183	Q_manutenzione	-0.18	0.14
148	184	Q_manutenzione	-0.18	5.010E-02
148	177	Q_manutenzione	-0.18	5.010E-02
148	176	EQ_X	2.09	-1.57
148	183	EQ_X	1.44	-1.57
148	184	EQ_X	1.44	-0.58
148	177	EQ_X	2.09	-0.58
148	176	EQ_Y	0.45	2.21
148	183	EQ_Y	-0.55	2.21
148	184	EQ_Y	-0.55	1.67
148	177	EQ_Y	0.45	1.67
149	177	DEAD	5.123E-12	1.235E-12
149	184	DEAD	-2.777E-12	-6.023E-14
149	185	DEAD	-5.305E-12	1.867E-12
149	178	DEAD	2.595E-12	1.520E-12
149	177	G1_power station	0.	0.
149	184	G1_power station	0.	0.
149	185	G1_power station	0.	0.
149	178	G1_power station	0.	0.
149	177	G2_power station	-2.01	1.38
149	184	G2_power station	-1.46	1.38
149	185	G2_power station	-1.46	0.24
149	178	G2_power station	-2.01	0.24
149	177	Q_power station	-7.419E-02	5.122E-02
149	184	Q_power station	-5.387E-02	5.122E-02
149	185	Q_power station	-5.387E-02	9.038E-03
149	178	Q_power station	-7.419E-02	9.038E-03
149	177	Q_neve	-0.2	0.28

Table 20: Element Forces - Area Shells, Part 3 of 3

Area	Joint	OutputCase	V13	V23
			KN/m	KN/m
149	184	Q_neve	-0.14	0.28
149	185	Q_neve	-0.14	0.19
149	178	Q_neve	-0.2	0.19
149	177	Q_manutenzione	-7.419E-02	5.122E-02
149	184	Q_manutenzione	-5.387E-02	5.122E-02
149	185	Q_manutenzione	-5.387E-02	9.038E-03
149	178	Q_manutenzione	-7.419E-02	9.038E-03
149	177	EQ_X	2.26	-0.55
149	184	EQ_X	2.35	-0.55
149	185	EQ_X	2.35	-5.397E-02
149	178	EQ_X	2.26	-5.397E-02
149	177	EQ_Y	0.26	1.91
149	184	EQ_Y	3.109E-02	1.91
149	185	EQ_Y	3.109E-02	1.65
149	178	EQ_Y	0.26	1.65
150	178	DEAD	-1.738E-12	-8.699E-13
150	185	DEAD	-4.203E-13	8.878E-13
150	186	DEAD	1.738E-12	-1.502E-12
150	179	DEAD	-2.316E-12	5.718E-13
150	178	G1_power station	0.	0.
150	185	G1_power station	0.	0.
150	186	G1_power station	0.	0.
150	179	G1_power station	0.	0.
150	178	G2_power station	7.883E-02	-0.31
150	185	G2_power station	3.03	-0.31
150	186	G2_power station	3.03	-0.48
150	179	G2_power station	7.883E-02	-0.48
150	178	Q_power station	2.917E-03	-1.145E-02
150	185	Q_power station	0.11	-1.145E-02
150	186	Q_power station	0.11	-1.771E-02
150	179	Q_power station	2.917E-03	-1.771E-02
150	178	Q_neve	4.838E-02	0.13
150	185	Q_neve	0.36	0.13
150	186	Q_neve	0.36	0.13
150	179	Q_neve	4.838E-02	0.13
150	178	Q_manutenzione	2.917E-03	-1.145E-02
150	185	Q_manutenzione	0.11	-1.145E-02
150	186	Q_manutenzione	0.11	-1.771E-02
150	179	Q_manutenzione	2.917E-03	-1.771E-02
150	178	EQ_X	2.37	-0.16
150	185	EQ_X	2.69	-0.16
150	186	EQ_X	2.69	0.27
150	179	EQ_X	2.37	0.27

Table 20: Element Forces - Area Shells, Part 3 of 3

Area	Joint	OutputCase	V13	V23
			KN/m	KN/m
150	178	EQ_Y	0.15	1.73
150	185	EQ_Y	2.560E-02	1.73
150	186	EQ_Y	2.560E-02	1.67
150	179	EQ_Y	0.15	1.67
151	179	DEAD	3.342E-12	2.060E-13
151	186	DEAD	-3.039E-12	2.179E-12
151	187	DEAD	-2.978E-12	-1.848E-12
151	180	DEAD	1.205E-13	2.835E-13
151	179	G1_power station	0.	0.
151	186	G1_power station	0.	0.
151	187	G1_power station	0.	0.
151	180	G1_power station	0.	0.
151	179	G2_power station	2.85	-2.38
151	186	G2_power station	9.7	-2.38
151	187	G2_power station	9.7	2.48
151	180	G2_power station	2.85	2.48
151	179	Q_power station	0.11	-8.795E-02
151	186	Q_power station	0.36	-8.795E-02
151	187	Q_power station	0.36	9.175E-02
151	180	Q_power station	0.11	9.175E-02
151	179	Q_neve	0.37	-6.738E-02
151	186	Q_neve	1.08	-6.738E-02
151	187	Q_neve	1.08	0.46
151	180	Q_neve	0.37	0.46
151	179	Q_manutenzione	0.11	-8.795E-02
151	186	Q_manutenzione	0.36	-8.795E-02
151	187	Q_manutenzione	0.36	9.175E-02
151	180	Q_manutenzione	0.11	9.175E-02
151	179	EQ_X	2.53	8.654E-02
151	186	EQ_X	2.94	8.654E-02
151	187	EQ_X	2.94	0.97
151	180	EQ_X	2.53	0.97
151	179	EQ_Y	7.135E-03	1.7
151	186	EQ_Y	-0.11	1.7
151	187	EQ_Y	-0.11	1.9
151	180	EQ_Y	7.135E-03	1.9
152	180	DEAD	5.151E-12	-4.082E-12
152	187	DEAD	5.876E-12	9.131E-13
152	188	DEAD	4.519E-12	3.420E-13
152	181	DEAD	8.720E-12	3.283E-12
152	180	G1_power station	0.	0.
152	187	G1_power station	0.	0.
152	188	G1_power station	0.	0.

Table 20: Element Forces - Area Shells, Part 3 of 3

Area	Joint	OutputCase	V13	V23
			KN/m	KN/m
152	181	G1_power station	0.	0.
152	180	G2_power station	39.12	5.58
152	187	G2_power station	5.81	5.58
152	188	G2_power station	5.81	-0.88
152	181	G2_power station	39.12	-0.88
152	180	Q_power station	1.45	0.21
152	187	Q_power station	0.21	0.21
152	188	Q_power station	0.21	-3.247E-02
152	181	Q_power station	1.45	-3.247E-02
152	180	Q_neve	4.13	0.77
152	187	Q_neve	0.72	0.77
152	188	Q_neve	0.72	0.12
152	181	Q_neve	4.13	0.12
152	180	Q_manutenzione	1.45	0.21
152	187	Q_manutenzione	0.21	0.21
152	188	Q_manutenzione	0.21	-3.247E-02
152	181	Q_manutenzione	1.45	-3.247E-02
152	180	EQ_X	4.57	1.17
152	187	EQ_X	2.15	1.17
152	188	EQ_X	2.15	0.61
152	181	EQ_X	4.57	0.61
152	180	EQ_Y	-2.47	1.5
152	187	EQ_Y	0.29	1.5
152	188	EQ_Y	0.29	1.97
152	181	EQ_Y	-2.47	1.97
153	68	DEAD	7.250E-13	-5.822E-13
153	70	DEAD	1.673E-12	3.519E-12
153	189	DEAD	4.201E-12	3.684E-12
153	182	DEAD	3.253E-12	4.782E-12
153	68	G1_power station	0.	0.
153	70	G1_power station	0.	0.
153	189	G1_power station	0.	0.
153	182	G1_power station	0.	0.
153	68	G2_power station	-5.08	-1.122E-13
153	70	G2_power station	-5.08	5.807E-12
153	189	G2_power station	-5.08	9.052E-12
153	182	G2_power station	-5.08	4.227E-12
153	68	Q_power station	-0.19	3.426E-14
153	70	Q_power station	-0.19	1.826E-13
153	189	Q_power station	-0.19	1.824E-13
153	182	Q_power station	-0.19	2.221E-13
153	68	Q_neve	-0.77	-3.235E-13
153	70	Q_neve	-0.77	7.017E-13

Table 20: Element Forces - Area Shells, Part 3 of 3

Area	Joint	OutputCase	V13	V23
			KN/m	KN/m
153	189	Q_neve	-0.77	5.060E-13
153	182	Q_neve	-0.77	7.807E-13
153	68	Q_manutenzione	-0.19	3.426E-14
153	70	Q_manutenzione	-0.19	1.826E-13
153	189	Q_manutenzione	-0.19	1.824E-13
153	182	Q_manutenzione	-0.19	2.221E-13
153	68	EQ_X	0.65	-8.265E-14
153	70	EQ_X	0.65	8.346E-13
153	189	EQ_X	0.65	4.703E-13
153	182	EQ_X	0.65	7.161E-13
153	68	EQ_Y	0.21	6.44
153	70	EQ_Y	-0.21	6.44
153	189	EQ_Y	-0.21	5.66
153	182	EQ_Y	0.21	5.66
154	182	DEAD	5.278E-12	2.275E-12
154	189	DEAD	1.023E-12	8.576E-13
154	190	DEAD	2.750E-12	-3.096E-12
154	183	DEAD	4.815E-12	1.332E-12
154	182	G1_power station	0.	0.
154	189	G1_power station	0.	0.
154	190	G1_power station	0.	0.
154	183	G1_power station	0.	0.
154	182	G2_power station	-5.95	2.437E-12
154	189	G2_power station	-5.95	3.404E-13
154	190	G2_power station	-5.95	-2.619E-12
154	183	G2_power station	-5.95	2.444E-14
154	182	Q_power station	-0.22	5.716E-14
154	189	Q_power station	-0.22	-1.028E-13
154	190	Q_power station	-0.22	-5.146E-14
154	183	Q_power station	-0.22	5.851E-15
154	182	Q_neve	-0.73	5.363E-13
154	189	Q_neve	-0.73	-2.114E-13
154	190	Q_neve	-0.73	-4.907E-13
154	183	Q_neve	-0.73	-2.904E-13
154	182	Q_manutenzione	-0.22	5.716E-14
154	189	Q_manutenzione	-0.22	-1.028E-13
154	190	Q_manutenzione	-0.22	-5.146E-14
154	183	Q_manutenzione	-0.22	5.851E-15
154	182	EQ_X	-1.86	4.099E-13
154	189	EQ_X	-1.86	-2.029E-13
154	190	EQ_X	-1.86	-2.616E-13
154	183	EQ_X	-1.86	-2.515E-14
154	182	EQ_Y	-1.08	5.19

Table 20: Element Forces - Area Shells, Part 3 of 3

Area	Joint	OutputCase	V13	V23
			KN/m	KN/m
154	189	EQ_Y	1.08	5.19
154	190	EQ_Y	1.08	4.35
154	183	EQ_Y	-1.08	4.35
155	183	DEAD	-1.544E-12	3.128E-12
155	190	DEAD	-1.144E-12	5.384E-13
155	191	DEAD	-2.802E-13	1.706E-12
155	184	DEAD	-1.776E-12	1.012E-12
155	183	G1_power station	0.	0.
155	190	G1_power station	0.	0.
155	191	G1_power station	0.	0.
155	184	G1_power station	0.	0.
155	183	G2_power station	-4.31	2.012E-13
155	190	G2_power station	-4.31	3.038E-12
155	191	G2_power station	-4.31	1.623E-12
155	184	G2_power station	-4.31	3.986E-12
155	183	Q_power station	-0.16	1.585E-13
155	190	Q_power station	-0.16	2.454E-14
155	191	Q_power station	-0.16	6.959E-14
155	184	Q_power station	-0.16	8.379E-14
155	183	Q_neve	-0.48	-9.793E-14
155	190	Q_neve	-0.48	1.757E-13
155	191	Q_neve	-0.48	2.576E-13
155	184	Q_neve	-0.48	5.312E-13
155	183	Q_manutenzione	-0.16	1.585E-13
155	190	Q_manutenzione	-0.16	2.454E-14
155	191	Q_manutenzione	-0.16	6.959E-14
155	184	Q_manutenzione	-0.16	8.379E-14
155	183	EQ_X	1.37	3.488E-13
155	190	EQ_X	1.37	-9.631E-14
155	191	EQ_X	1.37	1.415E-13
155	184	EQ_X	1.37	2.219E-14
155	183	EQ_Y	0.2	4.29
155	190	EQ_Y	-0.2	4.29
155	191	EQ_Y	-0.2	2.57
155	184	EQ_Y	0.2	2.57
156	184	DEAD	2.530E-12	1.144E-12
156	191	DEAD	-6.236E-12	1.544E-12
156	192	DEAD	2.214E-12	1.776E-12
156	185	DEAD	-1.256E-11	2.802E-13
156	184	G1_power station	0.	0.
156	191	G1_power station	0.	0.
156	192	G1_power station	0.	0.
156	185	G1_power station	0.	0.

Table 20: Element Forces - Area Shells, Part 3 of 3

Area	Joint	OutputCase	V13	V23
			KN/m	KN/m
156	184	G2_power station	-1.18	4.027E-12
156	191	G2_power station	-1.18	3.164E-12
156	192	G2_power station	-1.18	7.748E-14
156	185	G2_power station	-1.18	-1.538E-13
156	184	Q_power station	-4.370E-02	8.190E-14
156	191	Q_power station	-4.370E-02	9.442E-14
156	192	Q_power station	-4.370E-02	7.203E-14
156	185	Q_power station	-4.370E-02	2.530E-14
156	184	Q_neve	-0.11	3.899E-13
156	191	Q_neve	-0.11	4.400E-13
156	192	Q_neve	-0.11	2.714E-13
156	185	Q_neve	-0.11	8.451E-14
156	184	Q_manutenzione	-4.370E-02	8.190E-14
156	191	Q_manutenzione	-4.370E-02	9.442E-14
156	192	Q_manutenzione	-4.370E-02	7.203E-14
156	185	Q_manutenzione	-4.370E-02	2.530E-14
156	184	EQ_X	2.2	1.138E-13
156	191	EQ_X	2.2	1.254E-13
156	192	EQ_X	2.2	7.432E-14
156	185	EQ_X	2.2	-2.275E-14
156	184	EQ_Y	0.31	2.87
156	191	EQ_Y	-0.31	2.87
156	192	EQ_Y	-0.31	2.01
156	185	EQ_Y	0.31	2.01
157	185	DEAD	2.134E-12	-2.280E-13
157	192	DEAD	-1.057E-12	8.511E-13
157	193	DEAD	2.379E-13	-2.280E-13
157	186	DEAD	1.787E-12	6.111E-14
157	185	G1_power station	0.	0.
157	192	G1_power station	0.	0.
157	193	G1_power station	0.	0.
157	186	G1_power station	0.	0.
157	185	G2_power station	2.74	1.564E-12
157	192	G2_power station	2.74	2.692E-13
157	193	G2_power station	2.74	8.532E-13
157	186	G2_power station	2.74	5.062E-13
157	185	Q_power station	0.1	4.332E-14
157	192	Q_power station	0.1	5.681E-14
157	193	Q_power station	0.1	1.369E-14
157	186	Q_power station	0.1	1.731E-14
157	185	Q_neve	0.33	2.409E-13
157	192	Q_neve	0.33	1.330E-13
157	193	Q_neve	0.33	-3.563E-14

Table 20: Element Forces - Area Shells, Part 3 of 3

Area	Joint	OutputCase	V13	V23
			KN/m	KN/m
157	186	Q_neve	0.33	-6.454E-14
157	185	Q_manutenzione	0.1	4.332E-14
157	192	Q_manutenzione	0.1	5.681E-14
157	193	Q_manutenzione	0.1	1.369E-14
157	186	Q_manutenzione	0.1	1.731E-14
157	185	EQ_X	2.56	5.381E-14
157	192	EQ_X	2.56	1.237E-14
157	193	EQ_X	2.56	1.229E-13
157	186	EQ_X	2.56	6.175E-14
157	185	EQ_Y	0.12	2.19
157	192	EQ_Y	-0.12	2.19
157	193	EQ_Y	-0.12	2.
157	186	EQ_Y	0.12	2.
158	186	DEAD	7.363E-13	-1.911E-12
158	193	DEAD	-4.599E-12	-1.294E-12
158	194	DEAD	2.000E-12	3.461E-12
158	187	DEAD	-7.442E-12	2.024E-12
158	186	G1_power station	0.	0.
158	193	G1_power station	0.	0.
158	194	G1_power station	0.	0.
158	187	G1_power station	0.	0.
158	186	G2_power station	8.98	-2.329E-13
158	193	G2_power station	8.98	-7.878E-14
158	194	G2_power station	8.98	1.031E-12
158	187	G2_power station	8.98	6.717E-13
158	186	Q_power station	0.33	-8.589E-15
158	193	Q_power station	0.33	-5.459E-15
158	194	Q_power station	0.33	1.857E-14
158	187	Q_power station	0.33	6.884E-15
158	186	Q_neve	1.	-1.184E-13
158	193	Q_neve	1.	-9.528E-14
158	194	Q_neve	1.	4.149E-13
158	187	Q_neve	1.	2.207E-13
158	186	Q_manutenzione	0.33	-8.589E-15
158	193	Q_manutenzione	0.33	-5.459E-15
158	194	Q_manutenzione	0.33	1.857E-14
158	187	Q_manutenzione	0.33	6.884E-15
158	186	EQ_X	2.78	9.265E-14
158	193	EQ_X	2.78	5.169E-14
158	194	EQ_X	2.78	9.265E-14
158	187	EQ_X	2.78	5.663E-14
158	186	EQ_Y	-0.2	1.99
158	193	EQ_Y	0.2	1.99

Table 20: Element Forces - Area Shells, Part 3 of 3

Area	Joint	OutputCase	V13	V23
			KN/m	KN/m
158	194	EQ_Y	0.2	2.
158	187	EQ_Y	-0.2	2.
159	187	DEAD	3.149E-12	3.231E-12
159	194	DEAD	2.062E-12	1.504E-12
159	195	DEAD	-9.593E-13	-4.031E-13
159	188	DEAD	3.958E-12	-8.657E-13
159	187	G1_power station	0.	0.
159	194	G1_power station	0.	0.
159	195	G1_power station	0.	0.
159	188	G1_power station	0.	0.
159	187	G2_power station	7.54	1.098E-12
159	194	G2_power station	7.54	1.112E-12
159	195	G2_power station	7.54	-8.869E-13
159	188	G2_power station	7.54	-8.330E-13
159	187	Q_power station	0.28	3.053E-14
159	194	Q_power station	0.28	1.704E-14
159	195	Q_power station	0.28	-3.890E-14
159	188	Q_power station	0.28	-4.252E-14
159	187	Q_neve	0.9	3.438E-13
159	194	Q_neve	0.9	1.280E-13
159	195	Q_neve	0.9	-1.499E-13
159	188	Q_neve	0.9	-2.078E-13
159	187	Q_manutenzione	0.28	3.053E-14
159	194	Q_manutenzione	0.28	1.704E-14
159	195	Q_manutenzione	0.28	-3.890E-14
159	188	Q_manutenzione	0.28	-4.252E-14
159	187	EQ_X	2.28	1.016E-13
159	194	EQ_X	2.28	8.139E-14
159	195	EQ_X	2.28	-2.181E-14
159	188	EQ_X	2.28	-2.723E-14
159	187	EQ_Y	4.888E-02	1.83
159	194	EQ_Y	-4.888E-02	1.83
159	195	EQ_Y	-4.888E-02	2.34
159	188	EQ_Y	4.888E-02	2.34
160	70	DEAD	-1.222E-12	1.754E-12
160	72	DEAD	6.410E-12	-1.915E-12
160	196	DEAD	6.743E-13	1.438E-12
160	189	DEAD	6.726E-12	4.552E-13
160	70	G1_power station	0.	0.
160	72	G1_power station	0.	0.
160	196	G1_power station	0.	0.
160	189	G1_power station	0.	0.
160	70	G2_power station	-4.91	-6.64

Table 20: Element Forces - Area Shells, Part 3 of 3

Area	Joint	OutputCase	V13	V23
			KN/m	KN/m
160	72	G2_power station	-8.23	-6.64
160	196	G2_power station	-8.23	-8.54
160	189	G2_power station	-4.91	-8.54
160	70	Q_power station	-0.18	-0.25
160	72	Q_power station	-0.3	-0.25
160	196	Q_power station	-0.3	-0.32
160	189	Q_power station	-0.18	-0.32
160	70	Q_neve	-0.76	-0.72
160	72	Q_neve	-1.04	-0.72
160	196	Q_neve	-1.04	-0.9
160	189	Q_neve	-0.76	-0.9
160	70	Q_manutenzione	-0.18	-0.25
160	72	Q_manutenzione	-0.3	-0.25
160	196	Q_manutenzione	-0.3	-0.32
160	189	Q_manutenzione	-0.18	-0.32
160	70	EQ_X	0.75	-4.68
160	72	EQ_X	-26.95	-4.68
160	196	EQ_X	-26.95	-1.2
160	189	EQ_X	0.75	-1.2
160	70	EQ_Y	-0.84	2.97
160	72	EQ_Y	6.99	2.97
160	196	EQ_Y	6.99	8.94
160	189	EQ_Y	-0.84	8.94
161	189	DEAD	-2.603E-12	-9.362E-14
161	196	DEAD	2.808E-12	-2.684E-12
161	197	DEAD	-3.235E-12	1.644E-12
161	190	DEAD	-9.838E-13	9.504E-13
161	189	G1_power station	0.	0.
161	196	G1_power station	0.	0.
161	197	G1_power station	0.	0.
161	190	G1_power station	0.	0.
161	189	G2_power station	-6.39	-7.2
161	196	G2_power station	-9.87	-7.2
161	197	G2_power station	-9.87	-3.95
161	190	G2_power station	-6.39	-3.95
161	189	Q_power station	-0.24	-0.27
161	196	Q_power station	-0.37	-0.27
161	197	Q_power station	-0.37	-0.15
161	190	Q_power station	-0.24	-0.15
161	189	Q_neve	-0.76	-0.78
161	196	Q_neve	-1.07	-0.78
161	197	Q_neve	-1.07	-0.51
161	190	Q_neve	-0.76	-0.51

Table 20: Element Forces - Area Shells, Part 3 of 3

Area	Joint	OutputCase	V13	V23
			KN/m	KN/m
161	189	Q_manutenzione	-0.24	-0.27
161	196	Q_manutenzione	-0.37	-0.27
161	197	Q_manutenzione	-0.37	-0.15
161	190	Q_manutenzione	-0.24	-0.15
161	189	EQ_X	-2.44	0.36
161	196	EQ_X	4.44	0.36
161	197	EQ_X	4.44	2.7
161	190	EQ_X	-2.44	2.7
161	189	EQ_Y	2.21	8.04
161	196	EQ_Y	0.93	8.04
161	197	EQ_Y	0.93	1.65
161	190	EQ_Y	2.21	1.65
162	190	DEAD	-2.492E-13	9.089E-13
162	197	DEAD	9.301E-13	-1.034E-12
162	198	DEAD	6.678E-14	2.769E-13
162	191	DEAD	-1.789E-14	-2.435E-13
162	190	G1_power station	0.	0.
162	197	G1_power station	0.	0.
162	198	G1_power station	0.	0.
162	191	G1_power station	0.	0.
162	190	G2_power station	-4.85	-3.67
162	197	G2_power station	-4.9	-3.67
162	198	G2_power station	-4.9	-1.35
162	191	G2_power station	-4.85	-1.35
162	190	Q_power station	-0.18	-0.14
162	197	Q_power station	-0.18	-0.14
162	198	Q_power station	-0.18	-5.010E-02
162	191	Q_power station	-0.18	-5.010E-02
162	190	Q_neve	-0.53	-0.48
162	197	Q_neve	-0.54	-0.48
162	198	Q_neve	-0.54	-0.28
162	191	Q_neve	-0.53	-0.28
162	190	Q_manutenzione	-0.18	-0.14
162	197	Q_manutenzione	-0.18	-0.14
162	198	Q_manutenzione	-0.18	-5.010E-02
162	191	Q_manutenzione	-0.18	-5.010E-02
162	190	EQ_X	1.44	1.57
162	197	EQ_X	2.09	1.57
162	198	EQ_X	2.09	0.58
162	191	EQ_X	1.44	0.58
162	190	EQ_Y	0.55	2.21
162	197	EQ_Y	-0.45	2.21
162	198	EQ_Y	-0.45	1.67

Table 20: Element Forces - Area Shells, Part 3 of 3

Area	Joint	OutputCase	V13	V23
			KN/m	KN/m
162	191	EQ_Y	0.55	1.67
163	191	DEAD	-4.036E-12	6.350E-14
163	198	DEAD	1.251E-12	1.112E-12
163	199	DEAD	3.876E-13	-8.845E-13
163	192	DEAD	-3.805E-12	-2.206E-12
163	191	G1_power station	0.	0.
163	198	G1_power station	0.	0.
163	199	G1_power station	0.	0.
163	192	G1_power station	0.	0.
163	191	G2_power station	-1.46	-1.38
163	198	G2_power station	-2.01	-1.38
163	199	G2_power station	-2.01	-0.24
163	192	G2_power station	-1.46	-0.24
163	191	Q_power station	-5.387E-02	-5.122E-02
163	198	Q_power station	-7.419E-02	-5.122E-02
163	199	Q_power station	-7.419E-02	-9.038E-03
163	192	Q_power station	-5.387E-02	-9.038E-03
163	191	Q_neve	-0.14	-0.28
163	198	Q_neve	-0.2	-0.28
163	199	Q_neve	-0.2	-0.19
163	192	Q_neve	-0.14	-0.19
163	191	Q_manutenzione	-5.387E-02	-5.122E-02
163	198	Q_manutenzione	-7.419E-02	-5.122E-02
163	199	Q_manutenzione	-7.419E-02	-9.038E-03
163	192	Q_manutenzione	-5.387E-02	-9.038E-03
163	191	EQ_X	2.35	0.55
163	198	EQ_X	2.26	0.55
163	199	EQ_X	2.26	5.397E-02
163	192	EQ_X	2.35	5.397E-02
163	191	EQ_Y	-3.109E-02	1.91
163	198	EQ_Y	-0.26	1.91
163	199	EQ_Y	-0.26	1.65
163	192	EQ_Y	-3.109E-02	1.65
164	192	DEAD	-1.922E-12	-6.898E-13
164	199	DEAD	5.323E-12	-2.478E-12
164	200	DEAD	-3.186E-12	4.162E-13
164	193	DEAD	-6.053E-12	-3.268E-12
164	192	G1_power station	0.	0.
164	199	G1_power station	0.	0.
164	200	G1_power station	0.	0.
164	193	G1_power station	0.	0.
164	192	G2_power station	3.03	0.31
164	199	G2_power station	7.883E-02	0.31

Table 20: Element Forces - Area Shells, Part 3 of 3

Area	Joint	OutputCase	V13	V23
			KN/m	KN/m
164	200	G2_power station	7.883E-02	0.48
164	193	G2_power station	3.03	0.48
164	192	Q_power station	0.11	1.145E-02
164	199	Q_power station	2.917E-03	1.145E-02
164	200	Q_power station	2.917E-03	1.771E-02
164	193	Q_power station	0.11	1.771E-02
164	192	Q_neve	0.36	-0.13
164	199	Q_neve	4.838E-02	-0.13
164	200	Q_neve	4.838E-02	-0.13
164	193	Q_neve	0.36	-0.13
164	192	Q_manutenzione	0.11	1.145E-02
164	199	Q_manutenzione	2.917E-03	1.145E-02
164	200	Q_manutenzione	2.917E-03	1.771E-02
164	193	Q_manutenzione	0.11	1.771E-02
164	192	EQ_X	2.69	0.16
164	199	EQ_X	2.37	0.16
164	200	EQ_X	2.37	-0.27
164	193	EQ_X	2.69	-0.27
164	192	EQ_Y	-2.560E-02	1.73
164	199	EQ_Y	-0.15	1.73
164	200	EQ_Y	-0.15	1.67
164	193	EQ_Y	-2.560E-02	1.67
165	193	DEAD	-3.258E-12	-1.657E-12
165	200	DEAD	2.723E-12	-3.167E-12
165	201	DEAD	1.798E-12	-7.660E-14
165	194	DEAD	1.955E-13	-4.814E-13
165	193	G1_power station	0.	0.
165	200	G1_power station	0.	0.
165	201	G1_power station	0.	0.
165	194	G1_power station	0.	0.
165	193	G2_power station	9.7	2.38
165	200	G2_power station	2.85	2.38
165	201	G2_power station	2.85	-2.48
165	194	G2_power station	9.7	-2.48
165	193	Q_power station	0.36	8.795E-02
165	200	Q_power station	0.11	8.795E-02
165	201	Q_power station	0.11	-9.175E-02
165	194	Q_power station	0.36	-9.175E-02
165	193	Q_neve	1.08	6.738E-02
165	200	Q_neve	0.37	6.738E-02
165	201	Q_neve	0.37	-0.46
165	194	Q_neve	1.08	-0.46
165	193	Q_manutenzione	0.36	8.795E-02

Table 20: Element Forces - Area Shells, Part 3 of 3

Area	Joint	OutputCase	V13	V23
			KN/m	KN/m
165	200	Q_manutenzione	0.11	8.795E-02
165	201	Q_manutenzione	0.11	-9.175E-02
165	194	Q_manutenzione	0.36	-9.175E-02
165	193	EQ_X	2.94	-8.654E-02
165	200	EQ_X	2.53	-8.654E-02
165	201	EQ_X	2.53	-0.97
165	194	EQ_X	2.94	-0.97
165	193	EQ_Y	0.11	1.7
165	200	EQ_Y	-7.135E-03	1.7
165	201	EQ_Y	-7.135E-03	1.9
165	194	EQ_Y	0.11	1.9
166	194	DEAD	2.676E-12	-1.829E-12
166	201	DEAD	1.974E-12	-2.693E-12
166	202	DEAD	4.256E-12	1.647E-12
166	195	DEAD	-4.346E-12	1.415E-12
166	194	G1_power station	0.	0.
166	201	G1_power station	0.	0.
166	202	G1_power station	0.	0.
166	195	G1_power station	0.	0.
166	194	G2_power station	5.81	-5.58
166	201	G2_power station	39.12	-5.58
166	202	G2_power station	39.12	0.88
166	195	G2_power station	5.81	0.88
166	194	Q_power station	0.21	-0.21
166	201	Q_power station	1.45	-0.21
166	202	Q_power station	1.45	3.247E-02
166	195	Q_power station	0.21	3.247E-02
166	194	Q_neve	0.72	-0.77
166	201	Q_neve	4.13	-0.77
166	202	Q_neve	4.13	-0.12
166	195	Q_neve	0.72	-0.12
166	194	Q_manutenzione	0.21	-0.21
166	201	Q_manutenzione	1.45	-0.21
166	202	Q_manutenzione	1.45	3.247E-02
166	195	Q_manutenzione	0.21	3.247E-02
166	194	EQ_X	2.15	-1.17
166	201	EQ_X	4.57	-1.17
166	202	EQ_X	4.57	-0.61
166	195	EQ_X	2.15	-0.61
166	194	EQ_Y	-0.29	1.5
166	201	EQ_Y	2.47	1.5
166	202	EQ_Y	2.47	1.97
166	195	EQ_Y	-0.29	1.97

Table 20: Element Forces - Area Shells, Part 3 of 3

Area	Joint	OutputCase	V13	V23
			KN/m	KN/m
167	72	DEAD	5.447E-12	-2.037E-12
167	18	DEAD	-1.460E-12	-6.350E-14
167	203	DEAD	3.911E-13	-1.247E-12
167	196	DEAD	-1.460E-12	8.845E-13
167	72	G1_power station	0.	0.
167	18	G1_power station	0.	0.
167	203	G1_power station	0.	0.
167	196	G1_power station	0.	0.
167	72	G2_power station	-10.91	-32.35
167	18	G2_power station	-35.24	-32.35
167	203	G2_power station	-35.24	-11.39
167	196	G2_power station	-10.91	-11.39
167	72	Q_power station	-0.4	-1.2
167	18	Q_power station	-1.3	-1.2
167	203	Q_power station	-1.3	-0.42
167	196	Q_power station	-0.4	-0.42
167	72	Q_neve	-1.27	-3.15
167	18	Q_neve	-3.42	-3.15
167	203	Q_neve	-3.42	-1.31
167	196	Q_neve	-1.27	-1.31
167	72	Q_manutenzione	-0.4	-1.2
167	18	Q_manutenzione	-1.3	-1.2
167	203	Q_manutenzione	-1.3	-0.42
167	196	Q_manutenzione	-0.4	-0.42
167	72	EQ_X	-29.14	21.82
167	18	EQ_X	58.2	21.82
167	203	EQ_X	58.2	18.19
167	196	EQ_X	-29.14	18.19
167	72	EQ_Y	17.67	58.87
167	18	EQ_Y	25.25	58.87
167	203	EQ_Y	25.25	-24.11
167	196	EQ_Y	17.67	-24.11
168	196	DEAD	2.243E-12	9.578E-13
168	203	DEAD	1.064E-12	-1.213E-13
168	204	DEAD	-6.010E-13	9.578E-13
168	197	DEAD	-5.163E-13	6.687E-13
168	196	G1_power station	0.	0.
168	203	G1_power station	0.	0.
168	204	G1_power station	0.	0.
168	197	G1_power station	0.	0.
168	196	G2_power station	-11.94	-8.82
168	203	G2_power station	-10.21	-8.82
168	204	G2_power station	-10.21	-3.46

Table 20: Element Forces - Area Shells, Part 3 of 3

Area	Joint	OutputCase	V13	V23
			KN/m	KN/m
168	197	G2_power station	-11.94	-3.46
168	196	Q_power station	-0.44	-0.33
168	203	Q_power station	-0.38	-0.33
168	204	Q_power station	-0.38	-0.13
168	197	Q_power station	-0.44	-0.13
168	196	Q_neve	-1.25	-1.08
168	203	Q_neve	-1.08	-1.08
168	204	Q_neve	-1.08	-0.63
168	197	Q_neve	-1.25	-0.63
168	196	Q_manutenzione	-0.44	-0.33
168	203	Q_manutenzione	-0.38	-0.33
168	204	Q_manutenzione	-0.38	-0.13
168	197	Q_manutenzione	-0.44	-0.13
168	196	EQ_X	5.12	7.61
168	203	EQ_X	0.49	7.61
168	204	EQ_X	0.49	0.11
168	197	EQ_X	5.12	0.11
168	196	EQ_Y	0.2	-22.22
168	203	EQ_Y	-5.5	-22.22
168	204	EQ_Y	-5.5	3.98
168	197	EQ_Y	0.2	3.98
169	197	DEAD	-5.521E-13	-1.375E-12
169	204	DEAD	-4.846E-12	2.603E-12
169	205	DEAD	2.924E-12	-2.639E-12
169	198	DEAD	-2.634E-12	3.235E-12
169	197	G1_power station	0.	0.
169	204	G1_power station	0.	0.
169	205	G1_power station	0.	0.
169	198	G1_power station	0.	0.
169	197	G2_power station	-5.83	-3.68
169	204	G2_power station	-6.25	-3.68
169	205	G2_power station	-6.25	-2.1
169	198	G2_power station	-5.83	-2.1
169	197	Q_power station	-0.22	-0.14
169	204	Q_power station	-0.23	-0.14
169	205	Q_power station	-0.23	-7.785E-02
169	198	Q_power station	-0.22	-7.785E-02
169	197	Q_neve	-0.61	-0.65
169	204	Q_neve	-0.66	-0.65
169	205	Q_neve	-0.66	-0.53
169	198	Q_neve	-0.61	-0.53
169	197	Q_manutenzione	-0.22	-0.14
169	204	Q_manutenzione	-0.23	-0.14

Table 20: Element Forces - Area Shells, Part 3 of 3

Area	Joint	OutputCase	V13	V23
			KN/m	KN/m
169	205	Q_manutenzione	-0.23	-7.785E-02
169	198	Q_manutenzione	-0.22	-7.785E-02
169	197	EQ_X	2.52	0.75
169	204	EQ_X	2.73	0.75
169	205	EQ_X	2.73	0.3
169	198	EQ_X	2.52	0.3
169	197	EQ_Y	-0.46	3.99
169	204	EQ_Y	1.04	3.99
169	205	EQ_Y	1.04	-0.91
169	198	EQ_Y	-0.46	-0.91
170	198	DEAD	2.176E-12	1.807E-12
170	205	DEAD	-1.215E-12	1.344E-12
170	206	DEAD	-3.518E-13	2.754E-12
170	199	DEAD	1.945E-12	1.028E-12
170	198	G1_power station	0.	0.
170	205	G1_power station	0.	0.
170	206	G1_power station	0.	0.
170	199	G1_power station	0.	0.
170	198	G2_power station	-2.44	-1.93
170	205	G2_power station	-3.3	-1.93
170	206	G2_power station	-3.3	-0.93
170	199	G2_power station	-2.44	-0.93
170	198	Q_power station	-9.021E-02	-7.156E-02
170	205	Q_power station	-0.12	-7.156E-02
170	206	Q_power station	-0.12	-3.450E-02
170	199	Q_power station	-9.021E-02	-3.450E-02
170	198	Q_neve	-0.23	-0.51
170	205	Q_neve	-0.33	-0.51
170	206	Q_neve	-0.33	-0.43
170	199	Q_neve	-0.23	-0.43
170	198	Q_manutenzione	-9.021E-02	-7.156E-02
170	205	Q_manutenzione	-0.12	-7.156E-02
170	206	Q_manutenzione	-0.12	-3.450E-02
170	199	Q_manutenzione	-9.021E-02	-3.450E-02
170	198	EQ_X	2.43	0.25
170	205	EQ_X	2.5	0.25
170	206	EQ_X	2.5	-2.581E-02
170	199	EQ_X	2.43	-2.581E-02
170	198	EQ_Y	-0.17	-0.97
170	205	EQ_Y	-0.53	-0.97
170	206	EQ_Y	-0.53	0.61
170	199	EQ_Y	-0.17	0.61
171	199	DEAD	1.720E-12	-5.216E-14

Table 20: Element Forces - Area Shells, Part 3 of 3

Area	Joint	OutputCase	V13	V23
			KN/m	KN/m
171	206	DEAD	-3.891E-12	2.384E-12
171	207	DEAD	-8.079E-13	-1.316E-12
171	200	DEAD	-2.311E-12	2.542E-12
171	199	G1_power station	0.	0.
171	206	G1_power station	0.	0.
171	207	G1_power station	0.	0.
171	200	G1_power station	0.	0.
171	199	G2_power station	2.483E-02	-0.35
171	206	G2_power station	-2.52	-0.35
171	207	G2_power station	-2.52	0.52
171	200	G2_power station	2.483E-02	0.52
171	199	Q_power station	9.186E-04	-1.293E-02
171	206	Q_power station	-9.318E-02	-1.293E-02
171	207	Q_power station	-9.318E-02	1.919E-02
171	200	Q_power station	9.186E-04	1.919E-02
171	199	Q_neve	5.435E-02	-0.36
171	206	Q_neve	-0.22	-0.36
171	207	Q_neve	-0.22	-0.3
171	200	Q_neve	5.435E-02	-0.3
171	199	Q_manutenzione	9.186E-04	-1.293E-02
171	206	Q_manutenzione	-9.318E-02	-1.293E-02
171	207	Q_manutenzione	-9.318E-02	1.919E-02
171	200	Q_manutenzione	9.186E-04	1.919E-02
171	199	EQ_X	2.53	1.288E-03
171	206	EQ_X	2.39	1.288E-03
171	207	EQ_X	2.39	-0.33
171	200	EQ_X	2.53	-0.33
171	199	EQ_Y	-0.2	0.61
171	206	EQ_Y	-0.18	0.61
171	207	EQ_Y	-0.18	0.62
171	200	EQ_Y	-0.2	0.62
172	200	DEAD	5.561E-12	-2.322E-13
172	207	DEAD	-4.413E-12	2.636E-12
172	208	DEAD	-3.919E-12	-3.234E-12
172	201	DEAD	2.223E-12	7.396E-13
172	200	G1_power station	0.	0.
172	207	G1_power station	0.	0.
172	208	G1_power station	0.	0.
172	201	G1_power station	0.	0.
172	200	G2_power station	4.38	2.65
172	207	G2_power station	-5.34	2.65
172	208	G2_power station	-5.34	6.15
172	201	G2_power station	4.38	6.15

Table 20: Element Forces - Area Shells, Part 3 of 3

Area	Joint	OutputCase	V13	V23
			KN/m	KN/m
172	200	Q_power station	0.16	9.787E-02
172	207	Q_power station	-0.2	9.787E-02
172	208	Q_power station	-0.2	0.23
172	201	Q_power station	0.16	0.23
172	200	Q_neve	0.55	-7.146E-02
172	207	Q_neve	-0.47	-7.146E-02
172	208	Q_neve	-0.47	0.25
172	201	Q_neve	0.55	0.25
172	200	Q_manutenzione	0.16	9.787E-02
172	207	Q_manutenzione	-0.2	9.787E-02
172	208	Q_manutenzione	-0.2	0.23
172	201	Q_manutenzione	0.16	0.23
172	200	EQ_X	2.94	-0.15
172	207	EQ_X	1.98	-0.15
172	208	EQ_X	1.98	0.14
172	201	EQ_X	2.94	0.14
172	200	EQ_Y	-0.13	0.63
172	207	EQ_Y	7.903E-03	0.63
172	208	EQ_Y	7.903E-03	0.32
172	201	EQ_Y	-0.13	0.32
173	201	DEAD	-1.837E-12	-1.492E-12
173	208	DEAD	1.802E-12	2.654E-13
173	34	DEAD	-4.365E-12	-7.812E-12
173	202	DEAD	6.226E-12	-5.739E-12
173	201	G1_power station	0.	0.
173	208	G1_power station	0.	0.
173	34	G1_power station	0.	0.
173	202	G1_power station	0.	0.
173	201	G2_power station	42.73	19.65
173	208	G2_power station	-28.89	19.65
173	34	G2_power station	-28.89	-2.08
173	202	G2_power station	42.73	-2.08
173	201	Q_power station	1.58	0.73
173	208	Q_power station	-1.07	0.73
173	34	Q_power station	-1.07	-7.698E-02
173	202	Q_power station	1.58	-7.698E-02
173	201	Q_neve	4.54	1.65
173	208	Q_neve	-2.88	1.65
173	34	Q_neve	-2.88	-0.79
173	202	Q_neve	4.54	-0.79
173	201	Q_manutenzione	1.58	0.73
173	208	Q_manutenzione	-1.07	0.73
173	34	Q_manutenzione	-1.07	-7.698E-02

Table 20: Element Forces - Area Shells, Part 3 of 3

Area	Joint	OutputCase	V13	V23
			KN/m	KN/m
173	202	Q_manutenzione	1.58	-7.698E-02
173	201	EQ_X	5.66	1.18
173	208	EQ_X	1.01	1.18
173	34	EQ_X	1.01	-5.81
173	202	EQ_X	5.66	-5.81
173	201	EQ_Y	1.72	0.81
173	208	EQ_Y	-2.36	0.81
173	34	EQ_Y	-2.36	5.36
173	202	EQ_Y	1.72	5.36
174	58	DEAD	6.394E-14	-3.571E-13
174	57	DEAD	3.087E-13	-2.993E-13
174	209	DEAD	3.009E-13	3.786E-14
174	143	DEAD	4.667E-13	2.537E-13
174	58	G1_power station	0.	0.
174	57	G1_power station	0.	0.
174	209	G1_power station	0.	0.
174	143	G1_power station	0.	0.
174	58	G2_power station	33.28	-19.2
174	57	G2_power station	9.74	-19.2
174	209	G2_power station	9.74	-4.16
174	143	G2_power station	33.28	-4.16
174	58	Q_power station	1.23	-0.71
174	57	Q_power station	0.36	-0.71
174	209	Q_power station	0.36	-0.15
174	143	Q_power station	1.23	-0.15
174	58	Q_neve	3.13	-1.58
174	57	Q_neve	0.95	-1.58
174	209	Q_neve	0.95	-0.21
174	143	Q_neve	3.13	-0.21
174	58	Q_manutenzione	1.23	-0.71
174	57	Q_manutenzione	0.36	-0.71
174	209	Q_manutenzione	0.36	-0.15
174	143	Q_manutenzione	1.23	-0.15
174	58	EQ_X	64.2	-26.42
174	57	EQ_X	-55.32	-26.42
174	209	EQ_X	-55.32	-17.97
174	143	EQ_X	64.2	-17.97
174	58	EQ_Y	-30.36	51.45
174	57	EQ_Y	-24.8	51.45
174	209	EQ_Y	-24.8	-22.33
174	143	EQ_Y	-30.36	-22.33
175	143	DEAD	-4.166E-13	1.747E-13
175	209	DEAD	-4.879E-13	2.325E-13

Table 20: Element Forces - Area Shells, Part 3 of 3

Area	Joint	OutputCase	V13	V23
			KN/m	KN/m
175	210	DEAD	-4.956E-13	-2.203E-13
175	144	DEAD	-1.386E-14	-4.473E-15
175	143	G1_power station	0.	0.
175	209	G1_power station	0.	0.
175	210	G1_power station	0.	0.
175	144	G1_power station	0.	0.
175	143	G2_power station	6.58	-3.08
175	209	G2_power station	14.74	-3.08
175	210	G2_power station	14.74	2.02
175	144	G2_power station	6.58	2.02
175	143	Q_power station	0.24	-0.11
175	209	Q_power station	0.55	-0.11
175	210	Q_power station	0.55	7.472E-02
175	144	Q_power station	0.24	7.472E-02
175	143	Q_neve	0.63	-0.11
175	209	Q_neve	1.37	-0.11
175	210	Q_neve	1.37	0.37
175	144	Q_neve	0.63	0.37
175	143	Q_manutenzione	0.24	-0.11
175	209	Q_manutenzione	0.55	-0.11
175	210	Q_manutenzione	0.55	7.472E-02
175	144	Q_manutenzione	0.24	7.472E-02
175	143	EQ_X	2.09	-4.67
175	209	EQ_X	9.27	-4.67
175	210	EQ_X	9.27	-0.49
175	144	EQ_X	2.09	-0.49
175	143	EQ_Y	5.38	-20.12
175	209	EQ_Y	-1.92	-20.12
175	210	EQ_Y	-1.92	1.01
175	144	EQ_Y	5.38	1.01
176	144	DEAD	5.730E-13	-1.914E-13
176	210	DEAD	-9.590E-13	-1.914E-13
176	35	DEAD	1.997E-14	2.826E-13
176	30	DEAD	-9.002E-14	2.826E-13
176	144	G1_power station	0.	0.
176	210	G1_power station	0.	0.
176	35	G1_power station	0.	0.
176	30	G1_power station	0.	0.
176	144	G2_power station	5.31	-0.36
176	210	G2_power station	12.55	-0.36
176	35	G2_power station	12.55	-5.11
176	30	G2_power station	5.31	-5.11
176	144	Q_power station	0.2	-1.337E-02

Table 20: Element Forces - Area Shells, Part 3 of 3

Area	Joint	OutputCase	V13	V23
			KN/m	KN/m
176	210	Q_power station	0.46	-1.337E-02
176	35	Q_power station	0.46	-0.19
176	30	Q_power station	0.2	-0.19
176	144	Q_neve	0.53	0.16
176	210	Q_neve	1.11	0.16
176	35	Q_neve	1.11	-0.48
176	30	Q_neve	0.53	-0.48
176	144	Q_manutenzione	0.2	-1.337E-02
176	210	Q_manutenzione	0.46	-1.337E-02
176	35	Q_manutenzione	0.46	-0.19
176	30	Q_manutenzione	0.2	-0.19
176	144	EQ_X	-2.31	-1.34
176	210	EQ_X	-2.38	-1.34
176	35	EQ_X	-2.38	5.05
176	30	EQ_X	-2.31	5.05
176	144	EQ_Y	1.31	1.4
176	210	EQ_Y	0.85	1.4
176	35	EQ_Y	0.85	-2.09
176	30	EQ_Y	1.31	-2.09
177	27	DEAD	1.038E-13	-1.177E-13
177	26	DEAD	-7.035E-13	-1.716E-13
177	211	DEAD	-7.652E-13	2.773E-13
177	212	DEAD	5.210E-13	2.629E-13
177	27	G1_power station	0.	0.
177	26	G1_power station	0.	0.
177	211	G1_power station	0.	0.
177	212	G1_power station	0.	0.
177	27	G2_power station	-7.67	5.73
177	26	G2_power station	9.5	5.73
177	211	G2_power station	9.5	0.82
177	212	G2_power station	-7.67	0.82
177	27	Q_power station	-0.28	0.21
177	26	Q_power station	0.35	0.21
177	211	Q_power station	0.35	3.037E-02
177	212	Q_power station	-0.28	3.037E-02
177	27	Q_neve	-0.62	0.65
177	26	Q_neve	1.49	0.65
177	211	Q_neve	1.49	0.11
177	212	Q_neve	-0.62	0.11
177	27	Q_manutenzione	-0.28	0.21
177	26	Q_manutenzione	0.35	0.21
177	211	Q_manutenzione	0.35	3.037E-02
177	212	Q_manutenzione	-0.28	3.037E-02

Table 20: Element Forces - Area Shells, Part 3 of 3

Area	Joint	OutputCase	V13	V23
			KN/m	KN/m
177	27	EQ_X	0.83	-7.182E-02
177	26	EQ_X	7.55	-7.182E-02
177	211	EQ_X	7.55	1.03
177	212	EQ_X	0.83	1.03
177	27	EQ_Y	1.530E-02	-2.7
177	26	EQ_Y	-0.19	-2.7
177	211	EQ_Y	-0.19	0.88
177	212	EQ_Y	1.530E-02	0.88
178	212	DEAD	1.694E-13	3.518E-13
178	211	DEAD	-8.489E-14	2.979E-13
178	213	DEAD	-1.466E-13	3.584E-14
178	214	DEAD	5.866E-13	2.139E-14
178	212	G1_power station	0.	0.
178	211	G1_power station	0.	0.
178	213	G1_power station	0.	0.
178	214	G1_power station	0.	0.
178	212	G2_power station	-0.63	-0.97
178	211	G2_power station	-1.83	-0.97
178	213	G2_power station	-1.83	0.1
178	214	G2_power station	-0.63	0.1
178	212	Q_power station	-2.329E-02	-3.603E-02
178	211	Q_power station	-6.770E-02	-3.603E-02
178	213	Q_power station	-6.770E-02	3.740E-03
178	214	Q_power station	-2.329E-02	3.740E-03
178	212	Q_neve	4.018E-02	-0.11
178	211	Q_neve	-0.11	-0.11
178	213	Q_neve	-0.11	8.113E-03
178	214	Q_neve	4.018E-02	8.113E-03
178	212	Q_manutenzione	-2.329E-02	-3.603E-02
178	211	Q_manutenzione	-6.770E-02	-3.603E-02
178	213	Q_manutenzione	-6.770E-02	3.740E-03
178	214	Q_manutenzione	-2.329E-02	3.740E-03
178	212	EQ_X	5.37	0.26
178	211	EQ_X	5.04	0.26
178	213	EQ_X	5.04	-0.13
178	214	EQ_X	5.37	-0.13
178	212	EQ_Y	-0.14	0.84
178	211	EQ_Y	-0.11	0.84
178	213	EQ_Y	-0.11	-0.39
178	214	EQ_Y	-0.14	-0.39
179	214	DEAD	-8.425E-13	-3.055E-15
179	213	DEAD	5.544E-13	-1.148E-13
179	215	DEAD	5.005E-13	-4.255E-14

Table 20: Element Forces - Area Shells, Part 3 of 3

Area	Joint	OutputCase	V13	V23
			KN/m	KN/m
179	216	DEAD	-8.281E-13	-2.728E-13
179	214	G1_power station	0.	0.
179	213	G1_power station	0.	0.
179	215	G1_power station	0.	0.
179	216	G1_power station	0.	0.
179	214	G2_power station	-2.49	5.243E-02
179	213	G2_power station	-1.02	5.243E-02
179	215	G2_power station	-1.02	-0.41
179	216	G2_power station	-2.49	-0.41
179	214	Q_power station	-9.216E-02	1.940E-03
179	213	Q_power station	-3.765E-02	1.940E-03
179	215	Q_power station	-3.765E-02	-1.501E-02
179	216	Q_power station	-9.216E-02	-1.501E-02
179	214	Q_neve	-0.4	2.824E-03
179	213	Q_neve	-0.22	2.824E-03
179	215	Q_neve	-0.22	-6.124E-02
179	216	Q_neve	-0.4	-6.124E-02
179	214	Q_manutenzione	-9.216E-02	1.940E-03
179	213	Q_manutenzione	-3.765E-02	1.940E-03
179	215	Q_manutenzione	-3.765E-02	-1.501E-02
179	216	Q_manutenzione	-9.216E-02	-1.501E-02
179	214	EQ_X	7.05	9.302E-02
179	213	EQ_X	5.59	9.302E-02
179	215	EQ_X	5.59	0.2
179	216	EQ_X	7.05	0.2
179	214	EQ_Y	-1.45	-0.43
179	213	EQ_Y	-1.19	-0.43
179	215	EQ_Y	-1.19	0.87
179	216	EQ_Y	-1.45	0.87
180	216	DEAD	5.516E-13	-1.132E-13
180	215	DEAD	-3.319E-13	-1.672E-13
180	30	DEAD	-2.779E-13	4.479E-14
180	35	DEAD	5.371E-13	3.033E-14
180	216	G1_power station	0.	0.
180	215	G1_power station	0.	0.
180	30	G1_power station	0.	0.
180	35	G1_power station	0.	0.
180	216	G2_power station	9.3	1.9
180	215	G2_power station	-11.93	1.9
180	30	G2_power station	-11.93	3.96
180	35	G2_power station	9.3	3.96
180	216	Q_power station	0.34	7.018E-02
180	215	Q_power station	-0.44	7.018E-02

Table 20: Element Forces - Area Shells, Part 3 of 3

Area	Joint	OutputCase	V13	V23
			KN/m	KN/m
180	30	Q_power station	-0.44	0.15
180	35	Q_power station	0.34	0.15
180	216	Q_neve	0.79	0.22
180	215	Q_neve	-1.83	0.22
180	30	Q_neve	-1.83	0.52
180	35	Q_neve	0.79	0.52
180	216	Q_manutenzione	0.34	7.018E-02
180	215	Q_manutenzione	-0.44	7.018E-02
180	30	Q_manutenzione	-0.44	0.15
180	35	Q_manutenzione	0.34	0.15
180	216	EQ_X	-3.66	-2.33
180	215	EQ_X	19.39	-2.33
180	30	EQ_X	19.39	-3.7
180	35	EQ_X	-3.66	-3.7
180	216	EQ_Y	0.68	1.53
180	215	EQ_Y	-4.63	1.53
180	30	EQ_Y	-4.63	-2.05
180	35	EQ_Y	0.68	-2.05
181	63	DEAD	9.122E-14	-2.317E-13
181	64	DEAD	2.069E-13	-1.975E-14
181	217	DEAD	9.122E-14	1.633E-13
181	125	DEAD	5.229E-13	1.975E-14
181	63	G1_power station	0.	0.
181	64	G1_power station	0.	0.
181	217	G1_power station	0.	0.
181	125	G1_power station	0.	0.
181	63	G2_power station	-32.23	19.55
181	64	G2_power station	-10.86	19.55
181	217	G2_power station	-10.86	3.45
181	125	G2_power station	-32.23	3.45
181	63	Q_power station	-1.19	0.72
181	64	Q_power station	-0.4	0.72
181	217	Q_power station	-0.4	0.13
181	125	Q_power station	-1.19	0.13
181	63	Q_neve	-3.07	1.63
181	64	Q_neve	-1.08	1.63
181	217	Q_neve	-1.08	0.16
181	125	Q_neve	-3.07	0.16
181	63	Q_manutenzione	-1.19	0.72
181	64	Q_manutenzione	-0.4	0.72
181	217	Q_manutenzione	-0.4	0.13
181	125	Q_manutenzione	-1.19	0.13
181	63	EQ_X	59.33	-25.29

Table 20: Element Forces - Area Shells, Part 3 of 3

Area	Joint	OutputCase	V13	V23
			KN/m	KN/m
181	64	EQ_X	-49.65	-25.29
181	217	EQ_X	-49.65	-16.44
181	125	EQ_X	59.33	-16.44
181	63	EQ_Y	-27.59	49.32
181	64	EQ_Y	-23.72	49.32
181	217	EQ_Y	-23.72	-21.26
181	125	EQ_Y	-27.59	-21.26
182	125	DEAD	-6.369E-13	-8.347E-14
182	217	DEAD	-2.130E-13	-2.564E-14
182	218	DEAD	-3.209E-13	3.115E-13
182	126	DEAD	-6.080E-13	5.273E-13
182	125	G1_power station	0.	0.
182	217	G1_power station	0.	0.
182	218	G1_power station	0.	0.
182	126	G1_power station	0.	0.
182	125	G2_power station	-5.58	2.37
182	217	G2_power station	-12.48	2.37
182	218	G2_power station	-12.48	-2.35
182	126	G2_power station	-5.58	-2.35
182	125	Q_power station	-0.21	8.780E-02
182	217	Q_power station	-0.46	8.780E-02
182	218	Q_power station	-0.46	-8.683E-02
182	126	Q_power station	-0.21	-8.683E-02
182	125	Q_neve	-0.58	5.148E-02
182	217	Q_neve	-1.2	5.148E-02
182	218	Q_neve	-1.2	-0.39
182	126	Q_neve	-0.58	-0.39
182	125	Q_manutenzione	-0.21	8.780E-02
182	217	Q_manutenzione	-0.46	8.780E-02
182	218	Q_manutenzione	-0.46	-8.683E-02
182	126	Q_manutenzione	-0.21	-8.683E-02
182	125	EQ_X	1.98	-4.41
182	217	EQ_X	11.39	-4.41
182	218	EQ_X	11.39	9.735E-02
182	126	EQ_X	1.98	9.735E-02
182	125	EQ_Y	4.74	-19.02
182	217	EQ_Y	-1.87	-19.02
182	218	EQ_Y	-1.87	1.43
182	126	EQ_Y	4.74	1.43
183	126	DEAD	-1.108E-13	6.823E-13
183	218	DEAD	4.133E-13	4.125E-13
183	219	DEAD	5.212E-13	-2.262E-13
183	127	DEAD	-1.397E-13	-2.985E-13

Table 20: Element Forces - Area Shells, Part 3 of 3

Area	Joint	OutputCase	V13	V23
			KN/m	KN/m
183	126	G1_power station	0.	0.
183	218	G1_power station	0.	0.
183	219	G1_power station	0.	0.
183	127	G1_power station	0.	0.
183	126	G2_power station	-1.42	-1.09
183	218	G2_power station	-2.66	-1.09
183	219	G2_power station	-2.66	-1.98
183	127	G2_power station	-1.42	-1.98
183	126	Q_power station	-5.263E-02	-4.032E-02
183	218	Q_power station	-9.849E-02	-4.032E-02
183	219	Q_power station	-9.849E-02	-7.335E-02
183	127	Q_power station	-5.263E-02	-7.335E-02
183	126	Q_neve	-0.15	-0.28
183	218	Q_neve	-0.26	-0.28
183	219	Q_neve	-0.26	-0.37
183	127	Q_neve	-0.15	-0.37
183	126	Q_manutenzione	-5.263E-02	-4.032E-02
183	218	Q_manutenzione	-9.849E-02	-4.032E-02
183	219	Q_manutenzione	-9.849E-02	-7.335E-02
183	127	Q_manutenzione	-5.263E-02	-7.335E-02
183	126	EQ_X	3.19	-1.44
183	218	EQ_X	4.39	-1.44
183	219	EQ_X	4.39	-0.25
183	127	EQ_X	3.19	-0.25
183	126	EQ_Y	-1.38	1.59
183	218	EQ_Y	0.14	1.59
183	219	EQ_Y	0.14	-2.62
183	127	EQ_Y	-1.38	-2.62
184	127	DEAD	-3.649E-13	-8.489E-14
184	219	DEAD	-3.649E-13	1.271E-13
184	220	DEAD	-3.649E-13	5.866E-13
184	128	DEAD	-3.649E-13	4.431E-13
184	127	G1_power station	0.	0.
184	219	G1_power station	0.	0.
184	220	G1_power station	0.	0.
184	128	G1_power station	0.	0.
184	127	G2_power station	1.14	-1.74
184	219	G2_power station	0.86	-1.74
184	220	G2_power station	0.86	-1.78
184	128	G2_power station	1.14	-1.78
184	127	Q_power station	4.217E-02	-6.450E-02
184	219	Q_power station	3.184E-02	-6.450E-02
184	220	Q_power station	3.184E-02	-6.578E-02

Table 20: Element Forces - Area Shells, Part 3 of 3

Area	Joint	OutputCase	V13	V23
			KN/m	KN/m
184	128	Q_power station	4.217E-02	-6.578E-02
184	127	Q_neve	0.13	-0.34
184	219	Q_neve	9.417E-02	-0.34
184	220	Q_neve	9.417E-02	-0.35
184	128	Q_neve	0.13	-0.35
184	127	Q_manutenzione	4.217E-02	-6.450E-02
184	219	Q_manutenzione	3.184E-02	-6.450E-02
184	220	Q_manutenzione	3.184E-02	-6.578E-02
184	128	Q_manutenzione	4.217E-02	-6.578E-02
184	127	EQ_X	2.31	-0.53
184	219	EQ_X	2.74	-0.53
184	220	EQ_X	2.74	-4.418E-02
184	128	EQ_X	2.31	-4.418E-02
184	127	EQ_Y	0.19	-2.79
184	219	EQ_Y	0.31	-2.79
184	220	EQ_Y	0.31	-0.79
184	128	EQ_Y	0.19	-0.79
185	128	DEAD	-1.897E-13	1.619E-13
185	220	DEAD	7.082E-13	2.698E-13
185	221	DEAD	6.002E-13	4.337E-14
185	129	DEAD	-1.608E-13	7.229E-14
185	128	G1_power station	0.	0.
185	220	G1_power station	0.	0.
185	221	G1_power station	0.	0.
185	129	G1_power station	0.	0.
185	128	G2_power station	1.92	-1.7
185	220	G2_power station	1.56	-1.7
185	221	G2_power station	1.56	-1.36
185	129	G2_power station	1.92	-1.36
185	128	Q_power station	7.109E-02	-6.277E-02
185	220	Q_power station	5.758E-02	-6.277E-02
185	221	Q_power station	5.758E-02	-5.017E-02
185	129	Q_power station	7.109E-02	-5.017E-02
185	128	Q_neve	0.22	-0.34
185	220	Q_neve	0.18	-0.34
185	221	Q_neve	0.18	-0.31
185	129	Q_neve	0.22	-0.31
185	128	Q_manutenzione	7.109E-02	-6.277E-02
185	220	Q_manutenzione	5.758E-02	-6.277E-02
185	221	Q_manutenzione	5.758E-02	-5.017E-02
185	129	Q_manutenzione	7.109E-02	-5.017E-02
185	128	EQ_X	1.6	-0.15
185	220	EQ_X	1.73	-0.15

Table 20: Element Forces - Area Shells, Part 3 of 3

Area	Joint	OutputCase	V13	V23
			KN/m	KN/m
185	221	EQ_X	1.73	6.886E-02
185	129	EQ_X	1.6	6.886E-02
185	128	EQ_Y	6.278E-02	-0.9
185	220	EQ_Y	0.23	-0.9
185	221	EQ_Y	0.23	-1.
185	129	EQ_Y	6.278E-02	-1.
186	129	DEAD	3.339E-14	2.578E-13
186	221	DEAD	-1.246E-13	4.697E-13
186	222	DEAD	-1.246E-13	4.948E-13
186	130	DEAD	3.339E-14	3.512E-13
186	129	G1_power station	0.	0.
186	221	G1_power station	0.	0.
186	222	G1_power station	0.	0.
186	130	G1_power station	0.	0.
186	129	G2_power station	0.95	-1.06
186	221	G2_power station	-0.48	-1.06
186	222	G2_power station	-0.48	-2.09
186	130	G2_power station	0.95	-2.09
186	129	Q_power station	3.532E-02	-3.909E-02
186	221	Q_power station	-1.766E-02	-3.909E-02
186	222	Q_power station	-1.766E-02	-7.725E-02
186	130	Q_power station	3.532E-02	-7.725E-02
186	129	Q_neve	0.14	-0.28
186	221	Q_neve	1.519E-02	-0.28
186	222	Q_neve	1.519E-02	-0.38
186	130	Q_neve	0.14	-0.38
186	129	Q_manutenzione	3.532E-02	-3.909E-02
186	221	Q_manutenzione	-1.766E-02	-3.909E-02
186	222	Q_manutenzione	-1.766E-02	-7.725E-02
186	130	Q_manutenzione	3.532E-02	-7.725E-02
186	129	EQ_X	1.07	4.819E-02
186	221	EQ_X	1.05	4.819E-02
186	222	EQ_X	1.05	0.35
186	130	EQ_X	1.07	0.35
186	129	EQ_Y	4.236E-02	-0.97
186	221	EQ_Y	-0.27	-0.97
186	222	EQ_Y	-0.27	-1.56
186	130	EQ_Y	4.236E-02	-1.56
187	130	DEAD	-4.545E-13	7.900E-14
187	222	DEAD	-3.055E-14	1.368E-13
187	36	DEAD	-1.385E-13	-7.900E-14
187	29	DEAD	-4.255E-13	1.368E-13
187	130	G1_power station	0.	0.

Table 20: Element Forces - Area Shells, Part 3 of 3

Area	Joint	OutputCase	V13	V23
			KN/m	KN/m
187	222	G1_power station	0.	0.
187	36	G1_power station	0.	0.
187	29	G1_power station	0.	0.
187	130	G2_power station	-3.23	-1.02
187	222	G2_power station	-7.52	-1.02
187	36	G2_power station	-7.52	2.21
187	29	G2_power station	-3.23	2.21
187	130	Q_power station	-0.12	-3.788E-02
187	222	Q_power station	-0.28	-3.788E-02
187	36	Q_power station	-0.28	8.186E-02
187	29	Q_power station	-0.12	8.186E-02
187	130	Q_neve	-0.27	-0.3
187	222	Q_neve	-0.58	-0.3
187	36	Q_neve	-0.58	0.19
187	29	Q_neve	-0.27	0.19
187	130	Q_manutenzione	-0.12	-3.788E-02
187	222	Q_manutenzione	-0.28	-3.788E-02
187	36	Q_manutenzione	-0.28	8.186E-02
187	29	Q_manutenzione	-0.12	8.186E-02
187	130	EQ_X	-0.4	0.29
187	222	EQ_X	0.38	0.29
187	36	EQ_X	0.38	1.76
187	29	EQ_X	-0.4	1.76
187	130	EQ_Y	0.37	-1.24
187	222	EQ_Y	-1.28	-1.24
187	36	EQ_Y	-1.28	-1.24
187	29	EQ_Y	0.37	-1.24
188	28	DEAD	3.685E-13	1.413E-13
188	25	DEAD	3.512E-13	8.347E-14
188	223	DEAD	-2.646E-14	-9.569E-14
188	224	DEAD	4.697E-13	-3.115E-13
188	28	G1_power station	0.	0.
188	25	G1_power station	0.	0.
188	223	G1_power station	0.	0.
188	224	G1_power station	0.	0.
188	28	G2_power station	9.3	-3.96
188	25	G2_power station	-11.93	-3.96
188	223	G2_power station	-11.93	-1.9
188	224	G2_power station	9.3	-1.9
188	28	Q_power station	0.34	-0.15
188	25	Q_power station	-0.44	-0.15
188	223	Q_power station	-0.44	-7.018E-02
188	224	Q_power station	0.34	-7.018E-02

Table 20: Element Forces - Area Shells, Part 3 of 3

Area	Joint	OutputCase	V13	V23
			KN/m	KN/m
188	28	Q_neve	0.79	-0.52
188	25	Q_neve	-1.83	-0.52
188	223	Q_neve	-1.83	-0.22
188	224	Q_neve	0.79	-0.22
188	28	Q_manutenzione	0.34	-0.15
188	25	Q_manutenzione	-0.44	-0.15
188	223	Q_manutenzione	-0.44	-7.018E-02
188	224	Q_manutenzione	0.34	-7.018E-02
188	28	EQ_X	-3.66	3.7
188	25	EQ_X	19.39	3.7
188	223	EQ_X	19.39	2.33
188	224	EQ_X	-3.66	2.33
188	28	EQ_Y	-0.68	-2.05
188	25	EQ_Y	4.63	-2.05
188	223	EQ_Y	4.63	1.53
188	224	EQ_Y	-0.68	1.53
189	224	DEAD	-1.032E-13	-5.554E-13
189	223	DEAD	1.539E-13	-2.857E-13
189	225	DEAD	3.313E-13	7.654E-14
189	226	DEAD	-9.521E-13	1.488E-13
189	224	G1_power station	0.	0.
189	223	G1_power station	0.	0.
189	225	G1_power station	0.	0.
189	226	G1_power station	0.	0.
189	224	G2_power station	-2.49	0.41
189	223	G2_power station	-1.02	0.41
189	225	G2_power station	-1.02	-5.243E-02
189	226	G2_power station	-2.49	-5.243E-02
189	224	Q_power station	-9.216E-02	1.501E-02
189	223	Q_power station	-3.765E-02	1.501E-02
189	225	Q_power station	-3.765E-02	-1.940E-03
189	226	Q_power station	-9.216E-02	-1.940E-03
189	224	Q_neve	-0.4	6.124E-02
189	223	Q_neve	-0.22	6.124E-02
189	225	Q_neve	-0.22	-2.824E-03
189	226	Q_neve	-0.4	-2.824E-03
189	224	Q_manutenzione	-9.216E-02	1.501E-02
189	223	Q_manutenzione	-3.765E-02	1.501E-02
189	225	Q_manutenzione	-3.765E-02	-1.940E-03
189	226	Q_manutenzione	-9.216E-02	-1.940E-03
189	224	EQ_X	7.05	-0.2
189	223	EQ_X	5.59	-0.2
189	225	EQ_X	5.59	-9.302E-02

Table 20: Element Forces - Area Shells, Part 3 of 3

Area	Joint	OutputCase	V13	V23
			KN/m	KN/m
189	226	EQ_X	7.05	-9.302E-02
189	224	EQ_Y	1.45	0.87
189	223	EQ_Y	1.19	0.87
189	225	EQ_Y	1.19	-0.43
189	226	EQ_Y	1.45	-0.43
190	226	DEAD	6.583E-13	2.203E-13
190	225	DEAD	-1.828E-13	2.203E-13
190	227	DEAD	6.188E-13	-1.747E-13
190	228	DEAD	8.442E-13	-1.747E-13
190	226	G1_power station	0.	0.
190	225	G1_power station	0.	0.
190	227	G1_power station	0.	0.
190	228	G1_power station	0.	0.
190	226	G2_power station	-0.63	-0.1
190	225	G2_power station	-1.83	-0.1
190	227	G2_power station	-1.83	0.97
190	228	G2_power station	-0.63	0.97
190	226	Q_power station	-2.329E-02	-3.740E-03
190	225	Q_power station	-6.770E-02	-3.740E-03
190	227	Q_power station	-6.770E-02	3.603E-02
190	228	Q_power station	-2.329E-02	3.603E-02
190	226	Q_neve	4.018E-02	-8.113E-03
190	225	Q_neve	-0.11	-8.113E-03
190	227	Q_neve	-0.11	0.11
190	228	Q_neve	4.018E-02	0.11
190	226	Q_manutenzione	-2.329E-02	-3.740E-03
190	225	Q_manutenzione	-6.770E-02	-3.740E-03
190	227	Q_manutenzione	-6.770E-02	3.603E-02
190	228	Q_manutenzione	-2.329E-02	3.603E-02
190	226	EQ_X	5.37	0.13
190	225	EQ_X	5.04	0.13
190	227	EQ_X	5.04	-0.26
190	228	EQ_X	5.37	-0.26
190	226	EQ_Y	0.14	-0.39
190	225	EQ_Y	0.11	-0.39
190	227	EQ_Y	0.11	0.84
190	228	EQ_Y	0.14	0.84
191	228	DEAD	5.043E-13	-2.028E-13
191	227	DEAD	-7.029E-13	-1.488E-13
191	29	DEAD	-6.412E-13	2.712E-13
191	36	DEAD	8.713E-14	2.857E-13
191	228	G1_power station	0.	0.
191	227	G1_power station	0.	0.

Table 20: Element Forces - Area Shells, Part 3 of 3

Area	Joint	OutputCase	V13	V23
			KN/m	KN/m
191	29	G1_power station	0.	0.
191	36	G1_power station	0.	0.
191	228	G2_power station	-7.67	-0.82
191	227	G2_power station	9.5	-0.82
191	29	G2_power station	9.5	-5.73
191	36	G2_power station	-7.67	-5.73
191	228	Q_power station	-0.28	-3.037E-02
191	227	Q_power station	0.35	-3.037E-02
191	29	Q_power station	0.35	-0.21
191	36	Q_power station	-0.28	-0.21
191	228	Q_neve	-0.62	-0.11
191	227	Q_neve	1.49	-0.11
191	29	Q_neve	1.49	-0.65
191	36	Q_neve	-0.62	-0.65
191	228	Q_manutenzione	-0.28	-3.037E-02
191	227	Q_manutenzione	0.35	-3.037E-02
191	29	Q_manutenzione	0.35	-0.21
191	36	Q_manutenzione	-0.28	-0.21
191	228	EQ_X	0.83	-1.03
191	227	EQ_X	7.55	-1.03
191	29	EQ_X	7.55	7.182E-02
191	36	EQ_X	0.83	7.182E-02
191	228	EQ_Y	-1.530E-02	0.88
191	227	EQ_Y	0.19	0.88
191	29	EQ_Y	0.19	-2.7
191	36	EQ_Y	-1.530E-02	-2.7
192	9	DEAD	3.320E-12	-5.253E-13
192	8	DEAD	1.424E-12	1.201E-12
192	229	DEAD	1.424E-12	1.529E-12
192	173	DEAD	3.320E-12	1.991E-12
192	9	G1_power station	0.	0.
192	8	G1_power station	0.	0.
192	229	G1_power station	0.	0.
192	173	G1_power station	0.	0.
192	9	G2_power station	37.56	-19.72
192	8	G2_power station	15.51	-19.72
192	229	G2_power station	15.51	-4.26
192	173	G2_power station	37.56	-4.26
192	9	Q_power station	1.39	-0.73
192	8	Q_power station	0.57	-0.73
192	229	Q_power station	0.57	-0.16
192	173	Q_power station	1.39	-0.16
192	9	Q_neve	3.55	-1.6

Table 20: Element Forces - Area Shells, Part 3 of 3

Area	Joint	OutputCase	V13	V23
			KN/m	KN/m
192	8	Q_neve	1.52	-1.6
192	229	Q_neve	1.52	-0.18
192	173	Q_neve	3.55	-0.18
192	9	Q_manutenzione	1.39	-0.73
192	8	Q_manutenzione	0.57	-0.73
192	229	Q_manutenzione	0.57	-0.16
192	173	Q_manutenzione	1.39	-0.16
192	9	EQ_X	62.26	-26.26
192	8	EQ_X	-57.69	-26.26
192	229	EQ_X	-57.69	-18.
192	173	EQ_X	62.26	-18.
192	9	EQ_Y	-30.15	51.6
192	8	EQ_Y	-24.66	51.6
192	229	EQ_Y	-24.66	-22.24
192	173	EQ_Y	-30.15	-22.24
193	173	DEAD	-4.473E-12	2.323E-12
193	229	DEAD	2.880E-12	4.049E-12
193	230	DEAD	3.743E-12	1.691E-12
193	174	DEAD	-4.704E-12	2.153E-12
193	173	G1_power station	0.	0.
193	229	G1_power station	0.	0.
193	230	G1_power station	0.	0.
193	174	G1_power station	0.	0.
193	173	G2_power station	13.42	-4.13
193	229	G2_power station	25.84	-4.13
193	230	G2_power station	25.84	3.37
193	174	G2_power station	13.42	3.37
193	173	Q_power station	0.5	-0.15
193	229	Q_power station	0.96	-0.15
193	230	Q_power station	0.96	0.12
193	174	Q_power station	0.5	0.12
193	173	Q_neve	1.3	-0.18
193	229	Q_neve	2.46	-0.18
193	230	Q_neve	2.46	0.55
193	174	Q_neve	1.3	0.55
193	173	Q_manutenzione	0.5	-0.15
193	229	Q_manutenzione	0.96	-0.15
193	230	Q_manutenzione	0.96	0.12
193	174	Q_manutenzione	0.5	0.12
193	173	EQ_X	-1.710E-02	-4.44
193	229	EQ_X	6.1	-4.44
193	230	EQ_X	6.1	-0.6
193	174	EQ_X	-1.710E-02	-0.6

Table 20: Element Forces - Area Shells, Part 3 of 3

Area	Joint	OutputCase	V13	V23
			KN/m	KN/m
193	173	EQ_Y	5.5	-20.04
193	229	EQ_Y	-1.65	-20.04
193	230	EQ_Y	-1.65	1.31
193	174	EQ_Y	5.5	1.31
194	174	DEAD	1.727E-12	1.674E-12
194	230	DEAD	4.626E-13	3.185E-12
194	37	DEAD	4.626E-13	-8.535E-13
194	33	DEAD	1.727E-12	-4.487E-13
194	174	G1_power station	0.	0.
194	230	G1_power station	0.	0.
194	37	G1_power station	0.	0.
194	33	G1_power station	0.	0.
194	174	G2_power station	18.53	-1.83
194	230	G2_power station	38.72	-1.83
194	37	G2_power station	38.72	-11.82
194	33	G2_power station	18.53	-11.82
194	174	Q_power station	0.69	-6.764E-02
194	230	Q_power station	1.43	-6.764E-02
194	37	Q_power station	1.43	-0.44
194	33	Q_power station	0.69	-0.44
194	174	Q_neve	1.82	6.739E-02
194	230	Q_neve	3.66	6.739E-02
194	37	Q_neve	3.66	-1.1
194	33	Q_neve	1.82	-1.1
194	174	Q_manutenzione	0.69	-6.764E-02
194	230	Q_manutenzione	1.43	-6.764E-02
194	37	Q_manutenzione	1.43	-0.44
194	33	Q_manutenzione	0.69	-0.44
194	174	EQ_X	-6.26	-0.85
194	230	EQ_X	-8.64	-0.85
194	37	EQ_X	-8.64	8.25
194	33	EQ_X	-6.26	8.25
194	174	EQ_Y	2.15	1.71
194	230	EQ_Y	1.19	1.71
194	37	EQ_Y	1.19	-2.13
194	33	EQ_Y	2.15	-2.13
195	31	DEAD	-3.706E-12	2.672E-12
195	24	DEAD	6.923E-12	2.241E-12
195	231	DEAD	7.354E-12	1.250E-12
195	232	DEAD	-3.821E-12	1.135E-12
195	31	G1_power station	0.	0.
195	24	G1_power station	0.	0.
195	231	G1_power station	0.	0.

Table 20: Element Forces - Area Shells, Part 3 of 3

Area	Joint	OutputCase	V13	V23
			KN/m	KN/m
195	232	G1_power station	0.	0.
195	31	G2_power station	-38.07	18.87
195	24	G2_power station	51.97	18.87
195	231	G2_power station	51.97	7.85
195	232	G2_power station	-38.07	7.85
195	31	Q_power station	-1.41	0.7
195	24	Q_power station	1.92	0.7
195	231	Q_power station	1.92	0.29
195	232	Q_power station	-1.41	0.29
195	31	Q_neve	-3.63	2.01
195	24	Q_neve	5.95	2.01
195	231	Q_neve	5.95	0.83
195	232	Q_neve	-3.63	0.83
195	31	Q_manutenzione	-1.41	0.7
195	24	Q_manutenzione	1.92	0.7
195	231	Q_manutenzione	1.92	0.29
195	232	Q_manutenzione	-1.41	0.29
195	31	EQ_X	3.3	-0.36
195	24	EQ_X	14.07	-0.36
195	231	EQ_X	14.07	1.72
195	232	EQ_X	3.3	1.72
195	31	EQ_Y	0.12	-4.32
195	24	EQ_Y	-1.98	-4.32
195	231	EQ_Y	-1.98	1.07
195	232	EQ_Y	0.12	1.07
196	232	DEAD	-1.244E-12	8.389E-13
196	231	DEAD	6.494E-12	4.072E-13
196	233	DEAD	5.076E-12	-1.091E-13
196	234	DEAD	5.547E-12	-2.248E-13
196	232	G1_power station	0.	0.
196	231	G1_power station	0.	0.
196	233	G1_power station	0.	0.
196	234	G1_power station	0.	0.
196	232	G2_power station	9.23	-1.88
196	231	G2_power station	3.2	-1.88
196	233	G2_power station	3.2	-5.971E-02
196	234	G2_power station	9.23	-5.971E-02
196	232	Q_power station	0.34	-6.938E-02
196	231	Q_power station	0.12	-6.938E-02
196	233	Q_power station	0.12	-2.209E-03
196	234	Q_power station	0.34	-2.209E-03
196	232	Q_neve	1.1	-0.2
196	231	Q_neve	0.45	-0.2

Table 20: Element Forces - Area Shells, Part 3 of 3

Area	Joint	OutputCase	V13	V23
			KN/m	KN/m
196	233	Q_neve	0.45	-3.183E-03
196	234	Q_neve	1.1	-3.183E-03
196	232	Q_manutenzione	0.34	-6.938E-02
196	231	Q_manutenzione	0.12	-6.938E-02
196	233	Q_manutenzione	0.12	-2.209E-03
196	234	Q_manutenzione	0.34	-2.209E-03
196	232	EQ_X	9.63	0.47
196	231	EQ_X	9.12	0.47
196	233	EQ_X	9.12	-0.22
196	234	EQ_X	9.63	-0.22
196	232	EQ_Y	-1.27	1.2
196	231	EQ_Y	-1.1	1.2
196	233	EQ_Y	-1.1	-0.44
196	234	EQ_Y	-1.27	-0.44
197	234	DEAD	-3.583E-13	1.434E-13
197	233	DEAD	-2.116E-12	-5.351E-13
197	235	DEAD	9.056E-13	1.407E-12
197	236	DEAD	-1.168E-12	-3.771E-13
197	234	G1_power station	0.	0.
197	233	G1_power station	0.	0.
197	235	G1_power station	0.	0.
197	236	G1_power station	0.	0.
197	234	G2_power station	5.6	0.2
197	233	G2_power station	9.39	0.2
197	235	G2_power station	9.39	-1.53
197	236	G2_power station	5.6	-1.53
197	234	Q_power station	0.21	7.537E-03
197	233	Q_power station	0.35	7.537E-03
197	235	Q_power station	0.35	-5.670E-02
197	236	Q_power station	0.21	-5.670E-02
197	234	Q_neve	0.42	2.432E-02
197	233	Q_neve	0.84	2.432E-02
197	235	Q_neve	0.84	-0.18
197	236	Q_neve	0.42	-0.18
197	234	Q_manutenzione	0.21	7.537E-03
197	233	Q_manutenzione	0.35	7.537E-03
197	235	Q_manutenzione	0.35	-5.670E-02
197	236	Q_manutenzione	0.21	-5.670E-02
197	234	EQ_X	10.64	0.13
197	233	EQ_X	8.34	0.13
197	235	EQ_X	8.34	0.27
197	236	EQ_X	10.64	0.27
197	234	EQ_Y	-3.11	-0.51

Table 20: Element Forces - Area Shells, Part 3 of 3

Area	Joint	OutputCase	V13	V23
			KN/m	KN/m
197	233	EQ_Y	-2.65	-0.51
197	235	EQ_Y	-2.65	0.73
197	236	EQ_Y	-3.11	0.73
198	236	DEAD	-1.168E-12	7.322E-13
198	235	DEAD	-6.970E-13	3.005E-13
198	33	DEAD	-2.116E-12	-1.006E-12
198	37	DEAD	5.623E-12	-1.121E-12
198	236	G1_power station	0.	0.
198	235	G1_power station	0.	0.
198	33	G1_power station	0.	0.
198	37	G1_power station	0.	0.
198	236	G2_power station	34.55	4.08
198	235	G2_power station	-18.	4.08
198	33	G2_power station	-18.	12.61
198	37	G2_power station	34.55	12.61
198	236	Q_power station	1.28	0.15
198	235	Q_power station	-0.67	0.15
198	33	Q_power station	-0.67	0.47
198	37	Q_power station	1.28	0.47
198	236	Q_neve	3.25	0.43
198	235	Q_neve	-2.46	0.43
198	33	Q_neve	-2.46	1.41
198	37	Q_neve	3.25	1.41
198	236	Q_manutenzione	1.28	0.15
198	235	Q_manutenzione	-0.67	0.15
198	33	Q_manutenzione	-0.67	0.47
198	37	Q_manutenzione	1.28	0.47
198	236	EQ_X	-8.5	-3.74
198	235	EQ_X	27.97	-3.74
198	33	EQ_X	27.97	-5.75
198	37	EQ_X	-8.5	-5.75
198	236	EQ_Y	0.24	1.71
198	235	EQ_Y	-8.15	1.71
198	33	EQ_Y	-8.15	-1.05
198	37	EQ_Y	0.24	-1.05
199	18	DEAD	-5.203E-12	3.306E-13
199	17	DEAD	3.075E-12	1.148E-13
199	237	DEAD	3.013E-12	-1.881E-12
199	203	DEAD	-1.981E-12	-1.939E-12
199	18	G1_power station	0.	0.
199	17	G1_power station	0.	0.
199	237	G1_power station	0.	0.
199	203	G1_power station	0.	0.

Table 20: Element Forces - Area Shells, Part 3 of 3

Area	Joint	OutputCase	V13	V23
			KN/m	KN/m
199	18	G2_power station	-35.77	19.93
199	17	G2_power station	-14.66	19.93
199	237	G2_power station	-14.66	3.48
199	203	G2_power station	-35.77	3.48
199	18	Q_power station	-1.32	0.74
199	17	Q_power station	-0.54	0.74
199	237	Q_power station	-0.54	0.13
199	203	Q_power station	-1.32	0.13
199	18	Q_neve	-3.45	1.65
199	17	Q_neve	-1.49	1.65
199	237	Q_neve	-1.49	0.13
199	203	Q_neve	-3.45	0.13
199	18	Q_manutenzione	-1.32	0.74
199	17	Q_manutenzione	-0.54	0.74
199	237	Q_manutenzione	-0.54	0.13
199	203	Q_manutenzione	-1.32	0.13
199	18	EQ_X	57.96	-25.17
199	17	EQ_X	-51.14	-25.17
199	237	EQ_X	-51.14	-16.53
199	203	EQ_X	57.96	-16.53
199	18	EQ_Y	-27.67	49.32
199	17	EQ_Y	-23.98	49.32
199	237	EQ_Y	-23.98	-21.35
199	203	EQ_Y	-27.67	-21.35
200	203	DEAD	-2.846E-12	-1.781E-12
200	237	DEAD	-3.870E-12	-3.292E-12
200	238	DEAD	-1.898E-12	-4.321E-14
200	204	DEAD	6.242E-12	-4.480E-13
200	203	G1_power station	0.	0.
200	237	G1_power station	0.	0.
200	238	G1_power station	0.	0.
200	204	G1_power station	0.	0.
200	203	G2_power station	-10.16	2.52
200	237	G2_power station	-17.41	2.52
200	238	G2_power station	-17.41	-2.65
200	204	G2_power station	-10.16	-2.65
200	203	Q_power station	-0.38	9.310E-02
200	237	Q_power station	-0.64	9.310E-02
200	238	Q_power station	-0.64	-9.809E-02
200	204	Q_power station	-0.38	-9.809E-02
200	203	Q_neve	-1.07	3.812E-02
200	237	Q_neve	-1.73	3.812E-02
200	238	Q_neve	-1.73	-0.45

Table 20: Element Forces - Area Shells, Part 3 of 3

Area	Joint	OutputCase	V13	V23
			KN/m	KN/m
200	204	Q_neve	-1.07	-0.45
200	203	Q_manutenzione	-0.38	9.310E-02
200	237	Q_manutenzione	-0.64	9.310E-02
200	238	Q_manutenzione	-0.64	-9.809E-02
200	204	Q_manutenzione	-0.38	-9.809E-02
200	203	EQ_X	0.84	-4.46
200	237	EQ_X	10.14	-4.46
200	238	EQ_X	10.14	-0.1
200	204	EQ_X	0.84	-0.1
200	203	EQ_Y	4.45	-19.06
200	237	EQ_Y	-2.36	-19.06
200	238	EQ_Y	-2.36	1.28
200	204	EQ_Y	4.45	1.28
201	204	DEAD	-1.873E-12	-1.183E-12
201	238	DEAD	-4.294E-12	-7.208E-13
201	239	DEAD	-2.505E-12	-2.921E-12
201	205	DEAD	-5.558E-12	-1.195E-12
201	204	G1_power station	0.	0.
201	238	G1_power station	0.	0.
201	239	G1_power station	0.	0.
201	205	G1_power station	0.	0.
201	204	G2_power station	-6.17	-1.23
201	238	G2_power station	-7.9	-1.23
201	239	G2_power station	-7.9	-2.59
201	205	G2_power station	-6.17	-2.59
201	204	Q_power station	-0.23	-4.569E-02
201	238	Q_power station	-0.29	-4.569E-02
201	239	Q_power station	-0.29	-9.601E-02
201	205	Q_power station	-0.23	-9.601E-02
201	204	Q_neve	-0.64	-0.32
201	238	Q_neve	-0.81	-0.32
201	239	Q_neve	-0.81	-0.46
201	205	Q_neve	-0.64	-0.46
201	204	Q_manutenzione	-0.23	-4.569E-02
201	238	Q_manutenzione	-0.29	-4.569E-02
201	239	Q_manutenzione	-0.29	-9.601E-02
201	205	Q_manutenzione	-0.23	-9.601E-02
201	204	EQ_X	2.62	-1.6
201	238	EQ_X	3.77	-1.6
201	239	EQ_X	3.77	-0.5
201	205	EQ_X	2.62	-0.5
201	204	EQ_Y	-1.76	1.51
201	238	EQ_Y	-0.42	1.51

Table 20: Element Forces - Area Shells, Part 3 of 3

Area	Joint	OutputCase	V13	V23
			KN/m	KN/m
201	239	EQ_Y	-0.42	-2.82
201	205	EQ_Y	-1.76	-2.82
202	205	DEAD	-1.793E-12	-8.120E-13
202	239	DEAD	-2.134E-13	-8.430E-13
202	240	DEAD	-2.134E-13	-1.286E-12
202	206	DEAD	-1.793E-12	-2.897E-12
202	205	G1_power station	0.	0.
202	239	G1_power station	0.	0.
202	240	G1_power station	0.	0.
202	206	G1_power station	0.	0.
202	205	G2_power station	-3.31	-2.12
202	239	G2_power station	-4.36	-2.12
202	240	G2_power station	-4.36	-2.8
202	206	G2_power station	-3.31	-2.8
202	205	Q_power station	-0.12	-7.851E-02
202	239	Q_power station	-0.16	-7.851E-02
202	240	Q_power station	-0.16	-0.1
202	206	Q_power station	-0.12	-0.1
202	205	Q_neve	-0.32	-0.42
202	239	Q_neve	-0.43	-0.42
202	240	Q_neve	-0.43	-0.5
202	206	Q_neve	-0.32	-0.5
202	205	Q_manutenzione	-0.12	-7.851E-02
202	239	Q_manutenzione	-0.16	-7.851E-02
202	240	Q_manutenzione	-0.16	-0.1
202	206	Q_manutenzione	-0.12	-0.1
202	205	EQ_X	2.42	-0.78
202	239	EQ_X	2.85	-0.78
202	240	EQ_X	2.85	-0.3
202	206	EQ_X	2.42	-0.3
202	205	EQ_Y	-0.19	-2.93
202	239	EQ_Y	-0.24	-2.93
202	240	EQ_Y	-0.24	-1.09
202	206	EQ_Y	-0.19	-1.09
203	206	DEAD	-2.552E-12	-4.517E-12
203	240	DEAD	2.619E-12	-1.927E-12
203	241	DEAD	2.188E-12	-4.090E-13
203	207	DEAD	-2.437E-12	2.850E-13
203	206	G1_power station	0.	0.
203	240	G1_power station	0.	0.
203	241	G1_power station	0.	0.
203	207	G1_power station	0.	0.
203	206	G2_power station	-2.48	-2.3

Table 20: Element Forces - Area Shells, Part 3 of 3

Area	Joint	OutputCase	V13	V23
			KN/m	KN/m
203	240	G2_power station	-4.58	-2.3
203	241	G2_power station	-4.58	-2.15
203	207	G2_power station	-2.48	-2.15
203	206	Q_power station	-9.169E-02	-8.496E-02
203	240	Q_power station	-0.17	-8.496E-02
203	241	Q_power station	-0.17	-7.960E-02
203	207	Q_power station	-9.169E-02	-7.960E-02
203	206	Q_neve	-0.21	-0.44
203	240	Q_neve	-0.42	-0.44
203	241	Q_neve	-0.42	-0.43
203	207	Q_neve	-0.21	-0.43
203	206	Q_manutenzione	-9.169E-02	-8.496E-02
203	240	Q_manutenzione	-0.17	-8.496E-02
203	241	Q_manutenzione	-0.17	-7.960E-02
203	207	Q_manutenzione	-9.169E-02	-7.960E-02
203	206	EQ_X	2.3	-0.41
203	240	EQ_X	2.51	-0.41
203	241	EQ_X	2.51	-0.14
203	207	EQ_X	2.3	-0.14
203	206	EQ_Y	-0.25	-1.13
203	240	EQ_Y	-0.3	-1.13
203	241	EQ_Y	-0.3	-1.35
203	207	EQ_Y	-0.25	-1.35
204	207	DEAD	-3.582E-12	-8.568E-13
204	241	DEAD	-4.448E-13	8.389E-13
204	242	DEAD	-3.898E-12	1.039E-12
204	208	DEAD	-2.657E-12	-1.091E-13
204	207	G1_power station	0.	0.
204	241	G1_power station	0.	0.
204	242	G1_power station	0.	0.
204	208	G1_power station	0.	0.
204	207	G2_power station	-4.83	-0.67
204	241	G2_power station	-11.29	-0.67
204	242	G2_power station	-11.29	-3.87
204	208	G2_power station	-4.83	-3.87
204	207	Q_power station	-0.18	-2.492E-02
204	241	Q_power station	-0.42	-2.492E-02
204	242	Q_power station	-0.42	-0.14
204	208	Q_power station	-0.18	-0.14
204	207	Q_neve	-0.41	-0.28
204	241	Q_neve	-1.05	-0.28
204	242	Q_neve	-1.05	-0.6
204	208	Q_neve	-0.41	-0.6

Table 20: Element Forces - Area Shells, Part 3 of 3

Area	Joint	OutputCase	V13	V23
			KN/m	KN/m
204	207	Q_manutenzione	-0.18	-2.492E-02
204	241	Q_manutenzione	-0.42	-2.492E-02
204	242	Q_manutenzione	-0.42	-0.14
204	208	Q_manutenzione	-0.18	-0.14
204	207	EQ_X	2.24	-0.2
204	241	EQ_X	2.42	-0.2
204	242	EQ_X	2.42	0.44
204	208	EQ_X	2.24	0.44
204	207	EQ_Y	-0.26	-1.2
204	241	EQ_Y	-0.96	-1.2
204	242	EQ_Y	-0.96	-2.34
204	208	EQ_Y	-0.26	-2.34
205	208	DEAD	-6.206E-13	-2.208E-12
205	242	DEAD	-2.062E-12	-2.208E-12
205	38	DEAD	-1.569E-12	5.218E-12
205	34	DEAD	-3.958E-12	5.218E-12
205	208	G1_power station	0.	0.
205	242	G1_power station	0.	0.
205	38	G1_power station	0.	0.
205	34	G1_power station	0.	0.
205	208	G2_power station	-21.84	0.82
205	242	G2_power station	-39.88	0.82
205	38	G2_power station	-39.88	18.24
205	34	G2_power station	-21.84	18.24
205	208	Q_power station	-0.81	3.038E-02
205	242	Q_power station	-1.48	3.038E-02
205	38	Q_power station	-1.48	0.67
205	34	Q_power station	-0.81	0.67
205	208	Q_neve	-2.14	-0.16
205	242	Q_neve	-3.79	-0.16
205	38	Q_neve	-3.79	1.8
205	34	Q_neve	-2.14	1.8
205	208	Q_manutenzione	-0.81	3.038E-02
205	242	Q_manutenzione	-1.48	3.038E-02
205	38	Q_manutenzione	-1.48	0.67
205	34	Q_manutenzione	-0.81	0.67
205	208	EQ_X	0.26	0.12
205	242	EQ_X	2.56	0.12
205	38	EQ_X	2.56	2.7
205	34	EQ_X	0.26	2.7
205	208	EQ_Y	-1.320E-03	-1.79
205	242	EQ_Y	-2.48	-1.79
205	38	EQ_Y	-2.48	-1.56

Table 20: Element Forces - Area Shells, Part 3 of 3

Area	Joint	OutputCase	V13	V23
			KN/m	KN/m
205	34	EQ_Y	-1.320E-03	-1.56
206	32	DEAD	4.326E-12	-1.265E-12
206	23	DEAD	-1.068E-12	-1.512E-12
206	243	DEAD	-5.786E-12	-1.107E-12
206	244	DEAD	3.987E-12	-2.776E-12
206	32	G1_power station	0.	0.
206	23	G1_power station	0.	0.
206	243	G1_power station	0.	0.
206	244	G1_power station	0.	0.
206	32	G2_power station	34.55	-12.61
206	23	G2_power station	-18.	-12.61
206	243	G2_power station	-18.	-4.08
206	244	G2_power station	34.55	-4.08
206	32	Q_power station	1.28	-0.47
206	23	Q_power station	-0.67	-0.47
206	243	Q_power station	-0.67	-0.15
206	244	Q_power station	1.28	-0.15
206	32	Q_neve	3.25	-1.41
206	23	Q_neve	-2.46	-1.41
206	243	Q_neve	-2.46	-0.43
206	244	Q_neve	3.25	-0.43
206	32	Q_manutenzione	1.28	-0.47
206	23	Q_manutenzione	-0.67	-0.47
206	243	Q_manutenzione	-0.67	-0.15
206	244	Q_manutenzione	1.28	-0.15
206	32	EQ_X	-8.5	5.75
206	23	EQ_X	27.97	5.75
206	243	EQ_X	27.97	3.74
206	244	EQ_X	-8.5	3.74
206	32	EQ_Y	-0.24	-1.05
206	23	EQ_Y	8.15	-1.05
206	243	EQ_Y	8.15	1.71
206	244	EQ_Y	-0.24	1.71
207	244	DEAD	9.056E-13	-2.735E-12
207	243	DEAD	7.333E-14	-4.030E-12
207	245	DEAD	-3.583E-13	2.005E-12
207	246	DEAD	1.021E-12	1.658E-12
207	244	G1_power station	0.	0.
207	243	G1_power station	0.	0.
207	245	G1_power station	0.	0.
207	246	G1_power station	0.	0.
207	244	G2_power station	5.6	1.53
207	243	G2_power station	9.39	1.53

Table 20: Element Forces - Area Shells, Part 3 of 3

Area	Joint	OutputCase	V13	V23
			KN/m	KN/m
207	245	G2_power station	9.39	-0.2
207	246	G2_power station	5.6	-0.2
207	244	Q_power station	0.21	5.670E-02
207	243	Q_power station	0.35	5.670E-02
207	245	Q_power station	0.35	-7.537E-03
207	246	Q_power station	0.21	-7.537E-03
207	244	Q_neve	0.42	0.18
207	243	Q_neve	0.84	0.18
207	245	Q_neve	0.84	-2.432E-02
207	246	Q_neve	0.42	-2.432E-02
207	244	Q_manutenzione	0.21	5.670E-02
207	243	Q_manutenzione	0.35	5.670E-02
207	245	Q_manutenzione	0.35	-7.537E-03
207	246	Q_manutenzione	0.21	-7.537E-03
207	244	EQ_X	10.64	-0.27
207	243	EQ_X	8.34	-0.27
207	245	EQ_X	8.34	-0.13
207	246	EQ_X	10.64	-0.13
207	244	EQ_Y	3.11	0.73
207	243	EQ_Y	2.65	0.73
207	245	EQ_Y	2.65	-0.51
207	246	EQ_Y	3.11	-0.51
208	246	DEAD	3.914E-12	1.966E-12
208	245	DEAD	-5.512E-12	2.182E-12
208	247	DEAD	-2.090E-12	-1.510E-12
208	248	DEAD	4.600E-12	-1.452E-12
208	246	G1_power station	0.	0.
208	245	G1_power station	0.	0.
208	247	G1_power station	0.	0.
208	248	G1_power station	0.	0.
208	246	G2_power station	9.23	5.971E-02
208	245	G2_power station	3.2	5.971E-02
208	247	G2_power station	3.2	1.88
208	248	G2_power station	9.23	1.88
208	246	Q_power station	0.34	2.209E-03
208	245	Q_power station	0.12	2.209E-03
208	247	Q_power station	0.12	6.938E-02
208	248	Q_power station	0.34	6.938E-02
208	246	Q_neve	1.1	3.183E-03
208	245	Q_neve	0.45	3.183E-03
208	247	Q_neve	0.45	0.2
208	248	Q_neve	1.1	0.2
208	246	Q_manutenzione	0.34	2.209E-03

Table 20: Element Forces - Area Shells, Part 3 of 3

Area	Joint	OutputCase	V13	V23
			KN/m	KN/m
208	245	Q_manutenzione	0.12	2.209E-03
208	247	Q_manutenzione	0.12	6.938E-02
208	248	Q_manutenzione	0.34	6.938E-02
208	246	EQ_X	9.63	0.22
208	245	EQ_X	9.12	0.22
208	247	EQ_X	9.12	-0.47
208	248	EQ_X	9.63	-0.47
208	246	EQ_Y	1.27	-0.44
208	245	EQ_Y	1.1	-0.44
208	247	EQ_Y	1.1	1.2
208	248	EQ_Y	1.27	1.2
209	248	DEAD	-1.494E-12	-4.826E-12
209	247	DEAD	5.574E-12	-4.395E-12
209	34	DEAD	5.142E-12	1.178E-12
209	38	DEAD	-1.378E-12	1.293E-12
209	248	G1_power station	0.	0.
209	247	G1_power station	0.	0.
209	34	G1_power station	0.	0.
209	38	G1_power station	0.	0.
209	248	G2_power station	-38.07	-7.85
209	247	G2_power station	51.97	-7.85
209	34	G2_power station	51.97	-18.87
209	38	G2_power station	-38.07	-18.87
209	248	Q_power station	-1.41	-0.29
209	247	Q_power station	1.92	-0.29
209	34	Q_power station	1.92	-0.7
209	38	Q_power station	-1.41	-0.7
209	248	Q_neve	-3.63	-0.83
209	247	Q_neve	5.95	-0.83
209	34	Q_neve	5.95	-2.01
209	38	Q_neve	-3.63	-2.01
209	248	Q_manutenzione	-1.41	-0.29
209	247	Q_manutenzione	1.92	-0.29
209	34	Q_manutenzione	1.92	-0.7
209	38	Q_manutenzione	-1.41	-0.7
209	248	EQ_X	3.3	-1.72
209	247	EQ_X	14.07	-1.72
209	34	EQ_X	14.07	0.36
209	38	EQ_X	3.3	0.36
209	248	EQ_Y	-0.12	1.07
209	247	EQ_Y	1.98	1.07
209	34	EQ_Y	1.98	-4.32
209	38	EQ_Y	-0.12	-4.32

Table 21: Element Stresses - Area Shells, Part 1 of 3

Table 21: Element Stresses - Area Shells, Part 1 of 3

Area	AreaElem	Joint	OutputCase	S11Top	S22Top	S12Top
				KN/m2	KN/m2	KN/m2
1	1	7	DEAD	-2.080E-11	-2.733E-11	-1.576E-11
1	1	8	DEAD	5.133E-11	3.851E-11	-1.880E-11
1	1	9	DEAD	2.167E-11	2.120E-11	-1.576E-11
1	1	10	DEAD	7.343E-12	5.519E-11	-1.273E-11
1	1	7	G1_power station	0.	0.	0.
1	1	8	G1_power station	0.	0.	0.
1	1	9	G1_power station	0.	0.	0.
1	1	10	G1_power station	0.	0.	0.
1	1	7	G2_power station	-20.73	-18.29	160.95
1	1	8	G2_power station	-201.81	17.73	117.94
1	1	9	G2_power station	-615.07	-605.72	80.25
1	1	10	G2_power station	19.95	-225.59	123.26
1	1	7	Q_power station	-0.77	-0.68	5.96
1	1	8	Q_power station	-7.47	0.66	4.36
1	1	9	Q_power station	-22.76	-22.41	2.97
1	1	10	Q_power station	0.74	-8.35	4.56
1	1	7	Q_neve	-2.07	-1.71	13.12
1	1	8	Q_neve	-13.77	1.59	8.53
1	1	9	Q_neve	-52.02	-47.74	4.87
1	1	10	Q_neve	1.85	-13.76	9.46
1	1	7	Q_manutenzione	-0.77	-0.68	5.96
1	1	8	Q_manutenzione	-7.47	0.66	4.36
1	1	9	Q_manutenzione	-22.76	-22.41	2.97
1	1	10	Q_manutenzione	0.74	-8.35	4.56
1	1	7	EQ_X	161.88	43.55	-164.82
1	1	8	EQ_X	-960.47	-141.05	211.29
1	1	9	EQ_X	1336.38	370.39	161.55
1	1	10	EQ_X	-110.59	304.21	-214.56
1	1	7	EQ_Y	42.08	179.38	-210.46
1	1	8	EQ_Y	373.08	-169.35	-277.63
1	1	9	EQ_Y	437.07	1619.65	133.38
1	1	10	EQ_Y	-160.21	-969.96	200.55
2	2	11	DEAD	-1.760E-11	1.749E-13	-1.448E-11
2	2	12	DEAD	6.273E-12	2.724E-11	-1.448E-11
2	2	13	DEAD	1.804E-11	-4.002E-11	-2.055E-11
2	2	14	DEAD	-3.999E-11	1.435E-11	-2.055E-11
2	2	11	G1_power station	0.	0.	0.
2	2	12	G1_power station	0.	0.	0.

Table 21: Element Stresses - Area Shells, Part 1 of 3

Area	AreaElem	Joint	OutputCase	S11Top	S22Top	S12Top
				KN/m2	KN/m2	KN/m2
2	2	13	G1_power station	0.	0.	0.
2	2	14	G1_power station	0.	0.	0.
2	2	11	G2_power station	-232.93	18.22	-143.33
2	2	12	G2_power station	-16.98	-18.37	-175.
2	2	13	G2_power station	18.12	-257.89	-137.97
2	2	14	G2_power station	-599.42	-638.96	-106.29
2	2	11	Q_power station	-8.62	0.67	-5.3
2	2	12	Q_power station	-0.63	-0.68	-6.48
2	2	13	Q_power station	0.67	-9.54	-5.1
2	2	14	Q_power station	-22.18	-23.64	-3.93
2	2	11	Q_neve	-16.61	1.65	-11.68
2	2	12	Q_neve	-1.64	-1.73	-14.94
2	2	13	Q_neve	1.65	-18.44	-11.33
2	2	14	Q_neve	-49.7	-52.43	-8.07
2	2	11	Q_manutenzione	-8.62	0.67	-5.3
2	2	12	Q_manutenzione	-0.63	-0.68	-6.48
2	2	13	Q_manutenzione	0.67	-9.54	-5.1
2	2	14	Q_manutenzione	-22.18	-23.64	-3.93
2	2	11	EQ_X	940.3	140.37	210.59
2	2	12	EQ_X	-180.77	-37.54	-166.61
2	2	13	EQ_X	113.97	-314.06	-220.99
2	2	14	EQ_X	-1357.82	-383.56	156.21
2	2	11	EQ_Y	365.74	-146.34	271.6
2	2	12	EQ_Y	43.68	176.69	203.85
2	2	13	EQ_Y	-153.6	-934.84	-196.51
2	2	14	EQ_Y	412.79	1560.48	-128.76
3	3	15	DEAD	7.226E-11	9.473E-11	-3.034E-12
3	3	16	DEAD	-7.176E-11	-3.353E-11	-9.101E-12
3	3	17	DEAD	6.392E-11	7.122E-11	3.034E-12
3	3	18	DEAD	1.090E-11	3.397E-11	9.101E-12
3	3	15	G1_power station	0.	0.	0.
3	3	16	G1_power station	0.	0.	0.
3	3	17	G1_power station	0.	0.	0.
3	3	18	G1_power station	0.	0.	0.
3	3	15	G2_power station	18.12	-257.89	137.97
3	3	16	G2_power station	-16.98	-18.37	175.
3	3	17	G2_power station	-232.93	18.22	143.33
3	3	18	G2_power station	-599.42	-638.96	106.29
3	3	15	Q_power station	0.67	-9.54	5.1
3	3	16	Q_power station	-0.63	-0.68	6.48
3	3	17	Q_power station	-8.62	0.67	5.3
3	3	18	Q_power station	-22.18	-23.64	3.93
3	3	15	Q_neve	1.65	-18.44	11.33

Table 21: Element Stresses - Area Shells, Part 1 of 3

Area	AreaElem	Joint	OutputCase	S11Top	S22Top	S12Top
				KN/m2	KN/m2	KN/m2
3	3	16	Q_neve	-1.64	-1.73	14.94
3	3	17	Q_neve	-16.61	1.65	11.68
3	3	18	Q_neve	-49.7	-52.43	8.07
3	3	15	Q_manutenzione	0.67	-9.54	5.1
3	3	16	Q_manutenzione	-0.63	-0.68	6.48
3	3	17	Q_manutenzione	-8.62	0.67	5.3
3	3	18	Q_manutenzione	-22.18	-23.64	3.93
3	3	15	EQ_X	112.88	-322.21	225.27
3	3	16	EQ_X	-163.18	-41.94	172.8
3	3	17	EQ_X	959.73	145.18	-205.16
3	3	18	EQ_X	-1357.07	-382.49	-152.69
3	3	15	EQ_Y	153.48	940.7	-196.4
3	3	16	EQ_Y	-43.61	-170.8	203.96
3	3	17	EQ_Y	-365.63	152.42	271.74
3	3	18	EQ_Y	-412.87	-1554.44	-128.62
4	4	19	DEAD	1.407E-11	-6.307E-12	-8.288E-12
4	4	20	DEAD	3.824E-11	3.103E-11	-5.254E-12
4	4	21	DEAD	-2.764E-11	-5.105E-11	-2.221E-12
4	4	22	DEAD	7.692E-11	-1.220E-11	-5.254E-12
4	4	19	G1_power station	0.	0.	0.
4	4	20	G1_power station	0.	0.	0.
4	4	21	G1_power station	0.	0.	0.
4	4	22	G1_power station	0.	0.	0.
4	4	19	G2_power station	-201.81	17.73	-117.94
4	4	20	G2_power station	-20.73	-18.29	-160.95
4	4	21	G2_power station	19.95	-225.59	-123.26
4	4	22	G2_power station	-615.07	-605.72	-80.25
4	4	19	Q_power station	-7.47	0.66	-4.36
4	4	20	Q_power station	-0.77	-0.68	-5.96
4	4	21	Q_power station	0.74	-8.35	-4.56
4	4	22	Q_power station	-22.76	-22.41	-2.97
4	4	19	Q_neve	-13.77	1.59	-8.53
4	4	20	Q_neve	-2.07	-1.71	-13.12
4	4	21	Q_neve	1.85	-13.76	-9.46
4	4	22	Q_neve	-52.02	-47.74	-4.87
4	4	19	Q_manutenzione	-7.47	0.66	-4.36
4	4	20	Q_manutenzione	-0.77	-0.68	-5.96
4	4	21	Q_manutenzione	0.74	-8.35	-4.56
4	4	22	Q_manutenzione	-22.76	-22.41	-2.97
4	4	19	EQ_X	-960.38	-142.74	-211.73
4	4	20	EQ_X	161.99	41.97	164.61
4	4	21	EQ_X	-110.1	302.71	214.26
4	4	22	EQ_X	1336.85	368.78	-162.09

Table 21: Element Stresses - Area Shells, Part 1 of 3

Area	AreaElem	Joint	OutputCase	S11Top	S22Top	S12Top
				KN/m2	KN/m2	KN/m2
4	4	19	EQ_Y	-373.34	172.38	-278.2
4	4	20	EQ_Y	-43.46	-181.99	-210.84
4	4	21	EQ_Y	159.49	967.49	199.87
4	4	22	EQ_Y	-436.67	-1616.49	132.5
29	29	61	DEAD	4.136E-14	-3.721E-12	6.138E-13
29	29	39	DEAD	2.097E-12	-2.156E-12	3.363E-13
29	29	40	DEAD	-6.500E-12	-2.299E-12	2.889E-12
29	29	6	DEAD	-5.107E-12	-6.327E-12	1.853E-12
29	29	61	G1_power station	0.	0.	0.
29	29	39	G1_power station	0.	0.	0.
29	29	40	G1_power station	0.	0.	0.
29	29	6	G1_power station	0.	0.	0.
29	29	61	G2_power station	20.83	-218.94	4.74
29	29	39	G2_power station	-13.2	194.27	24.22
29	29	40	G2_power station	-66.77	362.	-33.5
29	29	6	G2_power station	-652.9	-627.55	-52.99
29	29	61	Q_power station	0.77	-8.1	0.18
29	29	39	Q_power station	-0.49	7.19	0.9
29	29	40	Q_power station	-2.47	13.39	-1.24
29	29	6	Q_power station	-24.16	-23.22	-1.96
29	29	61	Q_neve	1.92	-15.28	1.81
29	29	39	Q_neve	-1.2	26.72	3.46
29	29	40	Q_neve	-2.15	43.74	-1.39
29	29	6	Q_neve	-55.66	-52.07	-3.04
29	29	61	Q_manutenzione	0.77	-8.1	0.18
29	29	39	Q_manutenzione	-0.49	7.19	0.9
29	29	40	Q_manutenzione	-2.47	13.39	-1.24
29	29	6	Q_manutenzione	-24.16	-23.22	-1.96
29	29	61	EQ_X	112.97	-309.98	27.79
29	29	39	EQ_X	-92.39	103.94	-8.31
29	29	40	EQ_X	562.38	109.19	-330.15
29	29	6	EQ_X	-1388.44	-382.12	-294.05
29	29	61	EQ_Y	162.27	636.12	-189.34
29	29	39	EQ_Y	-40.31	-724.39	179.89
29	29	40	EQ_Y	-167.33	-53.86	231.47
29	29	6	EQ_Y	-312.37	-2024.68	-137.77
30	30	39	DEAD	-1.140E-12	-1.581E-12	2.291E-12
30	30	41	DEAD	3.547E-12	9.034E-12	1.255E-12
30	30	42	DEAD	7.564E-13	1.017E-11	7.741E-13
30	30	40	DEAD	-5.080E-12	-2.247E-12	4.965E-13
30	30	39	G1_power station	0.	0.	0.
30	30	41	G1_power station	0.	0.	0.
30	30	42	G1_power station	0.	0.	0.

Table 21: Element Stresses - Area Shells, Part 1 of 3

Area	AreaElem	Joint	OutputCase	S11Top	S22Top	S12Top
				KN/m2	KN/m2	KN/m2
30	30	40	G1_power station	0.	0.	0.
30	30	39	G2_power station	-9.78	211.36	-38.96
30	30	41	G2_power station	2.55	612.55	-44.04
30	30	42	G2_power station	95.14	515.18	-57.51
30	30	40	G2_power station	-71.19	339.86	-52.43
30	30	39	Q_power station	-0.36	7.82	-1.44
30	30	41	Q_power station	9.453E-02	22.66	-1.63
30	30	42	Q_power station	3.52	19.06	-2.13
30	30	40	Q_power station	-2.63	12.57	-1.94
30	30	39	Q_neve	-0.87	28.35	-2.54
30	30	41	Q_neve	0.25	67.57	-3.42
30	30	42	Q_neve	12.71	60.68	-4.43
30	30	40	Q_neve	-2.56	41.72	-3.55
30	30	39	Q_manutenzione	-0.36	7.82	-1.44
30	30	41	Q_manutenzione	9.453E-02	22.66	-1.63
30	30	42	Q_manutenzione	3.52	19.06	-2.13
30	30	40	Q_manutenzione	-2.63	12.57	-1.94
30	30	39	EQ_X	-102.89	51.43	-170.
30	30	41	EQ_X	7.99	166.47	-121.33
30	30	42	EQ_X	113.4	48.86	-51.01
30	30	40	EQ_X	563.88	116.7	-99.68
30	30	39	EQ_Y	-3.4	-539.83	116.72
30	30	41	EQ_Y	-0.27	-107.22	50.42
30	30	42	EQ_Y	-36.79	-132.58	32.
30	30	40	EQ_Y	-199.53	-214.84	98.3
31	31	41	DEAD	4.168E-12	8.856E-12	0.
31	31	43	DEAD	6.675E-13	5.003E-12	-7.584E-13
31	31	44	DEAD	-2.088E-12	9.425E-12	0.
31	31	42	DEAD	9.873E-14	6.709E-12	7.584E-13
31	31	41	G1_power station	0.	0.	0.
31	31	43	G1_power station	0.	0.	0.
31	31	44	G1_power station	0.	0.	0.
31	31	42	G1_power station	0.	0.	0.
31	31	41	G2_power station	-0.73	596.11	-17.92
31	31	43	G2_power station	-0.73	596.11	17.92
31	31	44	G2_power station	97.7	528.	17.92
31	31	42	G2_power station	97.7	528.	-17.92
31	31	41	Q_power station	-2.713E-02	22.06	-0.66
31	31	43	Q_power station	-2.713E-02	22.06	0.66
31	31	44	Q_power station	3.62	19.54	0.66
31	31	42	Q_power station	3.62	19.54	-0.66
31	31	41	Q_neve	-4.747E-02	66.09	-1.4
31	31	43	Q_neve	-4.747E-02	66.09	1.4

Table 21: Element Stresses - Area Shells, Part 1 of 3

Area	AreaElem	Joint	OutputCase	S11Top	S22Top	S12Top
				KN/m2	KN/m2	KN/m2
31	31	44	Q_neve	12.94	61.83	1.4
31	31	42	Q_neve	12.94	61.83	-1.4
31	31	41	Q_manutenzione	-2.713E-02	22.06	-0.66
31	31	43	Q_manutenzione	-2.713E-02	22.06	0.66
31	31	44	Q_manutenzione	3.62	19.54	0.66
31	31	42	Q_manutenzione	3.62	19.54	-0.66
31	31	41	EQ_X	5.68	154.93	-29.42
31	31	43	EQ_X	5.88	154.96	27.83
31	31	44	EQ_X	114.87	55.28	27.81
31	31	42	EQ_X	114.68	55.24	-29.44
31	31	41	EQ_Y	-3.65	-124.1	24.87
31	31	43	EQ_Y	3.7	129.17	24.9
31	31	44	EQ_Y	30.08	103.8	33.74
31	31	42	EQ_Y	-29.97	-98.5	33.71
32	32	43	DEAD	3.139E-12	9.794E-12	3.949E-13
32	32	45	DEAD	2.364E-12	6.532E-12	5.981E-13
32	32	46	DEAD	-5.109E-12	2.684E-12	2.670E-12
32	32	44	DEAD	-3.513E-12	2.171E-12	-1.603E-13
32	32	43	G1_power station	0.	0.	0.
32	32	45	G1_power station	0.	0.	0.
32	32	46	G1_power station	0.	0.	0.
32	32	44	G1_power station	0.	0.	0.
32	32	43	G2_power station	2.55	612.55	44.04
32	32	45	G2_power station	-9.78	211.36	38.96
32	32	46	G2_power station	-71.19	339.86	52.43
32	32	44	G2_power station	95.14	515.18	57.51
32	32	43	Q_power station	9.453E-02	22.66	1.63
32	32	45	Q_power station	-0.36	7.82	1.44
32	32	46	Q_power station	-2.63	12.57	1.94
32	32	44	Q_power station	3.52	19.06	2.13
32	32	43	Q_neve	0.25	67.57	3.42
32	32	45	Q_neve	-0.87	28.35	2.54
32	32	46	Q_neve	-2.56	41.72	3.55
32	32	44	Q_neve	12.71	60.68	4.43
32	32	43	Q_manutenzione	9.453E-02	22.66	1.63
32	32	45	Q_manutenzione	-0.36	7.82	1.44
32	32	46	Q_manutenzione	-2.63	12.57	1.94
32	32	44	Q_manutenzione	3.52	19.06	2.13
32	32	43	EQ_X	7.2	161.56	120.06
32	32	45	EQ_X	-103.48	46.56	168.43
32	32	46	EQ_X	564.28	116.79	97.59
32	32	44	EQ_X	113.6	48.91	49.23
32	32	43	EQ_Y	0.36	112.47	50.53

Table 21: Element Stresses - Area Shells, Part 1 of 3

Area	AreaElem	Joint	OutputCase	S11Top	S22Top	S12Top
				KN/m2	KN/m2	KN/m2
32	32	45	EQ_Y	3.35	545.05	116.9
32	32	46	EQ_Y	199.52	220.3	98.55
32	32	44	EQ_Y	36.93	138.07	32.18
33	33	45	DEAD	1.556E-12	5.153E-12	2.729E-12
33	33	62	DEAD	4.025E-12	2.628E-12	2.451E-12
33	33	63	DEAD	7.975E-13	1.361E-12	1.212E-12
33	33	46	DEAD	-4.791E-12	4.050E-12	1.760E-13
33	33	45	G1_power station	0.	0.	0.
33	33	62	G1_power station	0.	0.	0.
33	33	63	G1_power station	0.	0.	0.
33	33	46	G1_power station	0.	0.	0.
33	33	45	G2_power station	-13.2	194.27	-24.22
33	33	62	G2_power station	20.83	-218.94	-4.74
33	33	63	G2_power station	-652.9	-627.55	52.99
33	33	46	G2_power station	-66.77	362.	33.5
33	33	45	Q_power station	-0.49	7.19	-0.9
33	33	62	Q_power station	0.77	-8.1	-0.18
33	33	63	Q_power station	-24.16	-23.22	1.96
33	33	46	Q_power station	-2.47	13.39	1.24
33	33	45	Q_neve	-1.2	26.72	-3.46
33	33	62	Q_neve	1.92	-15.28	-1.81
33	33	63	Q_neve	-55.66	-52.07	3.04
33	33	46	Q_neve	-2.15	43.74	1.39
33	33	45	Q_manutenzione	-0.49	7.19	-0.9
33	33	62	Q_manutenzione	0.77	-8.1	-0.18
33	33	63	Q_manutenzione	-24.16	-23.22	1.96
33	33	46	Q_manutenzione	-2.47	13.39	1.24
33	33	45	EQ_X	-94.25	92.7	5.54
33	33	62	EQ_X	111.25	-321.19	-29.13
33	33	63	EQ_X	-1387.32	-379.17	293.88
33	33	46	EQ_X	563.34	112.11	328.56
33	33	45	EQ_Y	40.36	730.08	180.07
33	33	62	EQ_Y	-162.43	-630.47	-189.2
33	33	63	EQ_Y	312.22	2030.41	-137.52
33	33	46	EQ_Y	167.39	59.62	231.75
34	34	66	DEAD	1.164E-12	-7.189E-12	-6.130E-12
34	34	47	DEAD	5.595E-13	1.738E-11	-6.130E-12
34	34	48	DEAD	5.240E-12	6.368E-12	-6.130E-12
34	34	5	DEAD	-1.052E-12	2.492E-12	-6.130E-12
34	34	66	G1_power station	0.	0.	0.
34	34	47	G1_power station	0.	0.	0.
34	34	48	G1_power station	0.	0.	0.
34	34	5	G1_power station	0.	0.	0.

Table 21: Element Stresses - Area Shells, Part 1 of 3

Area	AreaElem	Joint	OutputCase	S11Top	S22Top	S12Top
				KN/m2	KN/m2	KN/m2
34	34	66	G2_power station	22.48	-185.63	19.47
34	34	47	G2_power station	-13.91	236.05	37.98
34	34	48	G2_power station	-98.5	404.58	-16.48
34	34	5	G2_power station	-676.64	-601.55	-34.99
34	34	66	Q_power station	0.83	-6.87	0.72
34	34	47	Q_power station	-0.51	8.73	1.41
34	34	48	Q_power station	-3.64	14.97	-0.61
34	34	5	Q_power station	-25.04	-22.26	-1.29
34	34	66	Q_neve	2.1	-11.	3.63
34	34	47	Q_neve	-1.26	32.11	5.15
34	34	48	Q_neve	-5.88	49.29	0.76
34	34	5	Q_neve	-58.11	-48.57	-0.76
34	34	66	Q_manutenzione	0.83	-6.87	0.72
34	34	47	Q_manutenzione	-0.51	8.73	1.41
34	34	48	Q_manutenzione	-3.64	14.97	-0.61
34	34	5	Q_manutenzione	-25.04	-22.26	-1.29
34	34	66	EQ_X	-108.32	302.47	-36.36
34	34	47	EQ_X	92.95	-107.05	-1.23
34	34	48	EQ_X	-531.15	-135.23	313.77
34	34	5	EQ_X	1378.13	369.	278.64
34	34	66	EQ_Y	-167.41	-649.87	198.42
34	34	47	EQ_Y	39.88	756.13	-183.27
34	34	48	EQ_Y	157.84	47.03	-234.95
34	34	5	EQ_Y	322.94	2109.11	146.73
35	35	47	DEAD	-9.341E-13	6.740E-12	-6.451E-12
35	35	49	DEAD	-4.882E-12	1.914E-11	-5.692E-12
35	35	50	DEAD	8.925E-12	8.257E-12	-4.934E-12
35	35	48	DEAD	6.305E-12	1.819E-11	-5.692E-12
35	35	47	G1_power station	0.	0.	0.
35	35	49	G1_power station	0.	0.	0.
35	35	50	G1_power station	0.	0.	0.
35	35	48	G1_power station	0.	0.	0.
35	35	47	G2_power station	-10.3	254.11	-28.1
35	35	49	G2_power station	3.03	656.	-37.3
35	35	50	G2_power station	45.21	563.02	-46.86
35	35	48	G2_power station	-103.01	382.04	-37.66
35	35	47	Q_power station	-0.38	9.4	-1.04
35	35	49	Q_power station	0.11	24.27	-1.38
35	35	50	Q_power station	1.67	20.83	-1.73
35	35	48	Q_power station	-3.81	14.14	-1.39
35	35	47	Q_neve	-0.92	33.86	-1.18
35	35	49	Q_neve	0.3	73.23	-2.58
35	35	50	Q_neve	6.93	66.96	-3.14

Table 21: Element Stresses - Area Shells, Part 1 of 3

Area	AreaElem	Joint	OutputCase	S11Top	S22Top	S12Top
				KN/m2	KN/m2	KN/m2
35	35	48	Q_neve	-6.29	47.24	-1.74
35	35	47	Q_manutenzione	-0.38	9.4	-1.04
35	35	49	Q_manutenzione	0.11	24.27	-1.38
35	35	50	Q_manutenzione	1.67	20.83	-1.73
35	35	48	Q_manutenzione	-3.81	14.14	-1.39
35	35	47	EQ_X	102.58	-58.92	161.59
35	35	49	EQ_X	-6.91	-172.25	116.69
35	35	50	EQ_X	-83.41	-63.73	46.25
35	35	48	EQ_X	-531.49	-136.96	91.15
35	35	47	EQ_Y	6.145E-02	557.05	-118.73
35	35	49	EQ_Y	0.37	115.81	-53.34
35	35	50	EQ_Y	34.07	148.99	-34.21
35	35	48	EQ_Y	193.7	226.33	-99.6
36	36	49	DEAD	-3.265E-12	1.956E-11	-3.620E-12
36	36	51	DEAD	-1.997E-12	1.014E-11	-5.137E-12
36	36	52	DEAD	4.414E-12	1.245E-11	-5.137E-12
36	36	50	DEAD	1.004E-11	2.483E-11	-3.620E-12
36	36	49	G1_power station	0.	0.	0.
36	36	51	G1_power station	0.	0.	0.
36	36	52	G1_power station	0.	0.	0.
36	36	50	G1_power station	0.	0.	0.
36	36	49	G2_power station	-0.21	639.76	-14.9
36	36	51	G2_power station	-0.21	639.76	14.9
36	36	52	G2_power station	47.88	576.38	14.9
36	36	50	G2_power station	47.88	576.38	-14.9
36	36	49	Q_power station	-7.944E-03	23.67	-0.55
36	36	51	Q_power station	-7.944E-03	23.67	0.55
36	36	52	Q_power station	1.77	21.33	0.55
36	36	50	Q_power station	1.77	21.33	-0.55
36	36	49	Q_neve	1.013E-02	71.78	-1.03
36	36	51	Q_neve	1.013E-02	71.78	1.03
36	36	52	Q_neve	7.18	68.17	1.03
36	36	50	Q_neve	7.18	68.17	-1.03
36	36	49	Q_manutenzione	-7.944E-03	23.67	-0.55
36	36	51	Q_manutenzione	-7.944E-03	23.67	0.55
36	36	52	Q_manutenzione	1.77	21.33	0.55
36	36	50	Q_manutenzione	1.77	21.33	-0.55
36	36	49	EQ_X	-4.63	-160.87	27.39
36	36	51	EQ_X	-5.13	-160.97	-26.75
36	36	52	EQ_X	-85.23	-70.47	-26.21
36	36	50	EQ_X	-84.74	-70.37	27.93
36	36	49	EQ_Y	2.23	125.14	-27.47
36	36	51	EQ_Y	-2.82	-133.4	-27.32

Table 21: Element Stresses - Area Shells, Part 1 of 3

Area	AreaElem	Joint	OutputCase	S11Top	S22Top	S12Top
				KN/m2	KN/m2	KN/m2
36	36	52	EQ_Y	-24.33	-105.63	-41.64
36	36	50	EQ_Y	25.68	107.04	-41.79
37	37	51	DEAD	-8.335E-13	1.762E-11	-3.386E-12
37	37	53	DEAD	-2.096E-12	1.009E-11	-1.110E-12
37	37	54	DEAD	4.665E-12	4.161E-12	-1.869E-12
37	37	52	DEAD	2.644E-12	1.104E-11	-4.144E-12
37	37	51	G1_power station	0.	0.	0.
37	37	53	G1_power station	0.	0.	0.
37	37	54	G1_power station	0.	0.	0.
37	37	52	G1_power station	0.	0.	0.
37	37	51	G2_power station	3.03	656.	37.3
37	37	53	G2_power station	-10.3	254.11	28.1
37	37	54	G2_power station	-103.01	382.04	37.66
37	37	52	G2_power station	45.21	563.02	46.86
37	37	51	Q_power station	0.11	24.27	1.38
37	37	53	Q_power station	-0.38	9.4	1.04
37	37	54	Q_power station	-3.81	14.14	1.39
37	37	52	Q_power station	1.67	20.83	1.73
37	37	51	Q_neve	0.3	73.23	2.58
37	37	53	Q_neve	-0.92	33.86	1.18
37	37	54	Q_neve	-6.29	47.24	1.74
37	37	52	Q_neve	6.93	66.96	3.14
37	37	51	Q_manutenzione	0.11	24.27	1.38
37	37	53	Q_manutenzione	-0.38	9.4	1.04
37	37	54	Q_manutenzione	-3.81	14.14	1.39
37	37	52	Q_manutenzione	1.67	20.83	1.73
37	37	51	EQ_X	-6.99	-170.27	-115.79
37	37	53	EQ_X	101.54	-57.13	-160.95
37	37	54	EQ_X	-532.6	-135.51	-90.72
37	37	52	EQ_X	-83.56	-62.08	-45.56
37	37	51	EQ_Y	-0.75	-123.06	-52.8
37	37	53	EQ_Y	-0.7	-564.34	-117.88
37	37	54	EQ_Y	-192.57	-224.79	-98.7
37	37	52	EQ_Y	-32.68	-147.4	-33.62
38	38	53	DEAD	-5.055E-12	3.436E-12	-9.930E-13
38	38	59	DEAD	-2.113E-12	2.383E-12	-2.510E-12
38	38	58	DEAD	1.771E-12	1.161E-12	-2.510E-12
38	38	54	DEAD	7.367E-12	1.338E-11	-9.930E-13
38	38	53	G1_power station	0.	0.	0.
38	38	59	G1_power station	0.	0.	0.
38	38	58	G1_power station	0.	0.	0.
38	38	54	G1_power station	0.	0.	0.
38	38	53	G2_power station	-13.91	236.05	-37.98

Table 21: Element Stresses - Area Shells, Part 1 of 3

Area	AreaElem	Joint	OutputCase	S11Top	S22Top	S12Top
				KN/m2	KN/m2	KN/m2
38	38	59	G2_power station	22.48	-185.63	-19.47
38	38	58	G2_power station	-676.64	-601.55	34.99
38	38	54	G2_power station	-98.5	404.58	16.48
38	38	53	Q_power station	-0.51	8.73	-1.41
38	38	59	Q_power station	0.83	-6.87	-0.72
38	38	58	Q_power station	-25.04	-22.26	1.29
38	38	54	Q_power station	-3.64	14.97	0.61
38	38	53	Q_neve	-1.26	32.11	-5.15
38	38	59	Q_neve	2.1	-11.	-3.63
38	38	58	Q_neve	-58.11	-48.57	0.76
38	38	54	Q_neve	-5.88	49.29	-0.76
38	38	53	Q_manutenzione	-0.51	8.73	-1.41
38	38	59	Q_manutenzione	0.83	-6.87	-0.72
38	38	58	Q_manutenzione	-25.04	-22.26	1.29
38	38	54	Q_manutenzione	-3.64	14.97	0.61
38	38	53	EQ_X	92.01	-104.8	1.04
38	38	59	EQ_X	-108.64	304.85	35.86
38	38	58	EQ_X	1377.74	371.02	-278.93
38	38	54	EQ_X	-532.17	-133.34	-313.74
38	38	53	EQ_Y	-39.94	-760.52	-182.23
38	38	59	EQ_Y	166.26	645.26	199.39
38	38	58	EQ_Y	-322.85	-2107.48	148.08
38	38	54	EQ_Y	-156.65	-45.18	-233.54
39	39	13	DEAD	1.735E-11	-5.247E-11	-4.554E-11
39	39	55	DEAD	5.583E-13	3.226E-11	-6.070E-11
39	39	56	DEAD	-6.683E-11	3.627E-11	-4.554E-11
39	39	14	DEAD	-2.902E-11	-6.422E-12	-3.037E-11
39	39	13	G1_power station	0.	0.	0.
39	39	55	G1_power station	0.	0.	0.
39	39	56	G1_power station	0.	0.	0.
39	39	14	G1_power station	0.	0.	0.
39	39	13	G2_power station	19.82	-249.37	-9.85
39	39	55	G2_power station	-13.05	179.6	11.29
39	39	56	G2_power station	-5.23	351.9	-47.67
39	39	14	G2_power station	-601.2	-647.84	-68.81
39	39	13	Q_power station	0.73	-9.23	-0.36
39	39	55	Q_power station	-0.48	6.65	0.42
39	39	56	Q_power station	-0.19	13.02	-1.76
39	39	14	Q_power station	-22.24	-23.97	-2.55
39	39	13	Q_neve	1.82	-17.58	0.39
39	39	55	Q_neve	-1.18	27.12	2.2
39	39	56	Q_neve	4.68	44.77	-2.69
39	39	14	Q_neve	-49.87	-53.24	-4.5

Table 21: Element Stresses - Area Shells, Part 1 of 3

Area	AreaElem	Joint	OutputCase	S11Top	S22Top	S12Top
				KN/m2	KN/m2	KN/m2
39	39	13	Q_manutenzione	0.73	-9.23	-0.36
39	39	55	Q_manutenzione	-0.48	6.65	0.42
39	39	56	Q_manutenzione	-0.19	13.02	-1.76
39	39	14	Q_manutenzione	-22.24	-23.97	-2.55
39	39	13	EQ_X	112.83	-319.78	25.97
39	39	55	EQ_X	-92.35	94.89	-10.01
39	39	56	EQ_X	591.5	105.21	-331.65
39	39	14	EQ_X	-1358.25	-385.71	-295.66
39	39	13	EQ_Y	162.72	646.75	-173.41
39	39	55	EQ_Y	-40.41	-721.77	198.42
39	39	56	EQ_Y	-163.84	-54.26	250.73
39	39	14	EQ_Y	-303.53	-2021.13	-121.1
40	40	55	DEAD	3.354E-12	4.727E-11	-4.904E-11
40	40	67	DEAD	6.105E-12	9.611E-11	-3.994E-11
40	40	68	DEAD	-4.230E-12	6.395E-11	-4.904E-11
40	40	56	DEAD	-6.215E-11	-8.543E-12	-5.814E-11
40	40	55	G1_power station	0.	0.	0.
40	40	67	G1_power station	0.	0.	0.
40	40	68	G1_power station	0.	0.	0.
40	40	56	G1_power station	0.	0.	0.
40	40	55	G2_power station	-9.78	195.96	-49.7
40	40	67	G2_power station	2.6	615.03	-51.01
40	40	68	G2_power station	162.62	519.29	-64.39
40	40	56	G2_power station	-9.58	330.18	-63.08
40	40	55	Q_power station	-0.36	7.25	-1.84
40	40	67	Q_power station	9.612E-02	22.76	-1.89
40	40	68	Q_power station	6.02	19.21	-2.38
40	40	56	Q_power station	-0.35	12.22	-2.33
40	40	55	Q_neve	-0.87	28.68	-3.59
40	40	67	Q_neve	0.26	70.46	-4.11
40	40	68	Q_neve	20.18	63.93	-5.06
40	40	56	Q_neve	4.29	42.8	-4.53
40	40	55	Q_manutenzione	-0.36	7.25	-1.84
40	40	67	Q_manutenzione	9.612E-02	22.76	-1.89
40	40	68	Q_manutenzione	6.02	19.21	-2.38
40	40	56	Q_manutenzione	-0.35	12.22	-2.33
40	40	55	EQ_X	-102.88	42.25	-171.46
40	40	67	EQ_X	8.02	159.16	-122.36
40	40	68	EQ_X	141.8	45.63	-51.79
40	40	56	EQ_X	593.02	112.82	-100.89
40	40	55	EQ_Y	-3.39	-536.66	137.17
40	40	67	EQ_Y	-0.31	-107.59	71.96
40	40	68	EQ_Y	-35.91	-133.56	53.93

Table 21: Element Stresses - Area Shells, Part 1 of 3

Area	AreaElem	Joint	OutputCase	S11Top	S22Top	S12Top
				KN/m2	KN/m2	KN/m2
40	40	56	EQ_Y	-196.09	-215.48	119.14
41	41	67	DEAD	-1.846E-11	1.056E-10	-2.802E-11
41	41	69	DEAD	1.449E-11	7.631E-11	-2.196E-11
41	41	70	DEAD	5.038E-13	1.094E-10	-2.802E-11
41	41	68	DEAD	1.222E-11	4.673E-11	-3.409E-11
41	41	67	G1_power station	0.	0.	0.
41	41	69	G1_power station	0.	0.	0.
41	41	70	G1_power station	0.	0.	0.
41	41	68	G1_power station	0.	0.	0.
41	41	67	G2_power station	-0.75	598.3	-20.27
41	41	69	G2_power station	-0.75	598.3	20.27
41	41	70	G2_power station	165.21	532.23	20.27
41	41	68	G2_power station	165.21	532.23	-20.27
41	41	67	Q_power station	-2.763E-02	22.14	-0.75
41	41	69	Q_power station	-2.763E-02	22.14	0.75
41	41	70	Q_power station	6.11	19.69	0.75
41	41	68	Q_power station	6.11	19.69	-0.75
41	41	67	Q_neve	-4.342E-02	68.95	-1.62
41	41	69	Q_neve	-4.342E-02	68.95	1.62
41	41	70	Q_neve	20.41	65.1	1.62
41	41	68	Q_neve	20.41	65.1	-1.62
41	41	67	Q_manutenzione	-2.763E-02	22.14	-0.75
41	41	69	Q_manutenzione	-2.763E-02	22.14	0.75
41	41	70	Q_manutenzione	6.11	19.69	0.75
41	41	68	Q_manutenzione	6.11	19.69	-0.75
41	41	67	EQ_X	5.7	147.55	-29.73
41	41	69	EQ_X	5.9	147.59	28.13
41	41	70	EQ_X	143.28	52.08	28.11
41	41	68	EQ_X	143.08	52.04	-29.75
41	41	67	EQ_Y	-3.61	-124.09	46.85
41	41	69	EQ_Y	3.65	129.07	46.88
41	41	70	EQ_Y	29.21	104.83	56.18
41	41	68	EQ_Y	-29.11	-99.57	56.15
42	42	1	DEAD	-6.464E-13	1.576E-12	7.584E-13
42	42	57	DEAD	-2.717E-12	1.218E-12	1.517E-12
42	42	58	DEAD	2.672E-12	-4.586E-12	-7.584E-13
42	42	59	DEAD	-2.811E-12	5.295E-12	-1.517E-12
42	42	1	G1_power station	0.	0.	0.
42	42	57	G1_power station	0.	0.	0.
42	42	58	G1_power station	0.	0.	0.
42	42	59	G1_power station	0.	0.	0.
42	42	1	G2_power station	-21.63	-18.68	148.57
42	42	57	G2_power station	-257.03	19.46	103.17

Table 21: Element Stresses - Area Shells, Part 1 of 3

Area	AreaElem	Joint	OutputCase	S11Top	S22Top	S12Top
				KN/m2	KN/m2	KN/m2
42	42	58	G2_power station	-674.58	-591.22	67.39
42	42	59	G2_power station	20.57	-195.2	112.78
42	42	1	Q_power station	-0.8	-0.69	5.5
42	42	57	Q_power station	-9.51	0.72	3.82
42	42	58	Q_power station	-24.96	-21.88	2.49
42	42	59	Q_power station	0.76	-7.22	4.17
42	42	1	Q_neve	-2.13	-1.75	11.99
42	42	57	Q_neve	-19.31	1.77	7.28
42	42	58	Q_neve	-57.92	-47.6	3.8
42	42	59	Q_neve	1.9	-11.98	8.52
42	42	1	Q_manutenzione	-0.8	-0.69	5.5
42	42	57	Q_manutenzione	-9.51	0.72	3.82
42	42	58	Q_manutenzione	-24.96	-21.88	2.49
42	42	59	Q_manutenzione	0.76	-7.22	4.17
42	42	1	EQ_X	161.92	43.27	-162.82
42	42	57	EQ_X	-916.73	-141.47	213.11
42	42	58	EQ_X	1377.16	368.13	161.42
42	42	59	EQ_X	-110.76	294.26	-214.51
42	42	1	EQ_Y	43.48	180.56	-196.55
42	42	57	EQ_Y	341.33	-169.81	-259.66
42	42	58	EQ_Y	420.17	1607.6	154.79
42	42	59	EQ_Y	-160.88	-990.39	217.91
43	43	69	DEAD	2.275E-11	1.081E-10	-3.392E-11
43	43	71	DEAD	-3.113E-11	1.371E-10	-2.341E-11
43	43	72	DEAD	3.943E-11	1.187E-10	-3.088E-11
43	43	70	DEAD	2.500E-11	1.265E-10	-2.038E-11
43	43	69	G1_power station	0.	0.	0.
43	43	71	G1_power station	0.	0.	0.
43	43	72	G1_power station	0.	0.	0.
43	43	70	G1_power station	0.	0.	0.
43	43	69	G2_power station	2.6	615.03	51.01
43	43	71	G2_power station	-9.78	195.96	49.7
43	43	72	G2_power station	-9.58	330.18	63.08
43	43	70	G2_power station	162.62	519.29	64.39
43	43	69	Q_power station	9.612E-02	22.76	1.89
43	43	71	Q_power station	-0.36	7.25	1.84
43	43	72	Q_power station	-0.35	12.22	2.33
43	43	70	Q_power station	6.02	19.21	2.38
43	43	69	Q_neve	0.26	70.46	4.11
43	43	71	Q_neve	-0.87	28.68	3.59
43	43	72	Q_neve	4.29	42.8	4.53
43	43	70	Q_neve	20.18	63.93	5.06
43	43	69	Q_manutenzione	9.612E-02	22.76	1.89

Table 21: Element Stresses - Area Shells, Part 1 of 3

Area	AreaElem	Joint	OutputCase	S11Top	S22Top	S12Top
				KN/m2	KN/m2	KN/m2
43	43	71	Q_manutenzione	-0.36	7.25	1.84
43	43	72	Q_manutenzione	-0.35	12.22	2.33
43	43	70	Q_manutenzione	6.02	19.21	2.38
43	43	69	EQ_X	7.23	154.24	121.09
43	43	71	EQ_X	-103.47	37.37	169.89
43	43	72	EQ_X	593.43	112.9	98.79
43	43	70	EQ_X	142.	45.67	49.99
43	43	69	EQ_Y	0.39	112.76	72.07
43	43	71	EQ_Y	3.32	541.8	137.35
43	43	72	EQ_Y	196.08	220.89	119.39
43	43	70	EQ_Y	36.05	139.	54.12
44	44	60	DEAD	4.237E-12	-2.716E-12	-1.196E-12
44	44	2	DEAD	-1.960E-13	3.313E-12	-1.955E-12
44	44	61	DEAD	2.057E-12	3.365E-14	3.205E-13
44	44	6	DEAD	-2.376E-12	-3.039E-12	1.079E-12
44	44	60	G1_power station	0.	0.	0.
44	44	2	G1_power station	0.	0.	0.
44	44	61	G1_power station	0.	0.	0.
44	44	6	G1_power station	0.	0.	0.
44	44	60	G2_power station	-266.85	18.98	-123.03
44	44	2	G2_power station	-18.76	-18.32	-159.91
44	44	61	G2_power station	19.08	-227.69	-124.59
44	44	6	G2_power station	-651.02	-618.17	-87.71
44	44	60	Q_power station	-9.87	0.7	-4.55
44	44	2	Q_power station	-0.69	-0.68	-5.92
44	44	61	Q_power station	0.71	-8.42	-4.61
44	44	6	Q_power station	-24.09	-22.87	-3.25
44	44	60	Q_neve	-20.6	1.73	-9.73
44	44	2	Q_neve	-1.8	-1.72	-13.45
44	44	61	Q_neve	1.75	-16.16	-10.03
44	44	6	Q_neve	-55.49	-51.21	-6.31
44	44	60	Q_manutenzione	-9.87	0.7	-4.55
44	44	2	Q_manutenzione	-0.69	-0.68	-5.92
44	44	61	Q_manutenzione	0.71	-8.42	-4.61
44	44	6	Q_manutenzione	-24.09	-22.87	-3.25
44	44	60	EQ_X	910.69	140.47	213.87
44	44	2	EQ_X	-180.99	-37.33	-163.91
44	44	61	EQ_X	114.16	-304.06	-219.42
44	44	6	EQ_X	-1387.99	-379.88	158.35
44	44	60	EQ_Y	347.45	-146.75	259.75
44	44	2	EQ_Y	44.37	177.65	194.32
44	44	61	EQ_Y	-154.05	-945.47	-208.39
44	44	6	EQ_Y	403.94	1556.86	-142.96

Table 21: Element Stresses - Area Shells, Part 1 of 3

Area	AreaElem	Joint	OutputCase	S11Top	S22Top	S12Top
				KN/m2	KN/m2	KN/m2
45	45	71	DEAD	-2.757E-11	1.436E-10	-1.051E-11
45	45	15	DEAD	5.375E-11	1.062E-10	1.435E-11
45	45	18	DEAD	4.903E-11	8.977E-11	-1.051E-11
45	45	72	DEAD	4.389E-11	1.298E-10	-3.846E-12
45	45	71	G1_power station	0.	0.	0.
45	45	15	G1_power station	0.	0.	0.
45	45	18	G1_power station	0.	0.	0.
45	45	72	G1_power station	0.	0.	0.
45	45	71	G2_power station	-13.05	179.6	-11.29
45	45	15	G2_power station	19.82	-249.37	9.85
45	45	18	G2_power station	-601.2	-647.84	68.81
45	45	72	G2_power station	-5.23	351.9	47.67
45	45	71	Q_power station	-0.48	6.65	-0.42
45	45	15	Q_power station	0.73	-9.23	0.36
45	45	18	Q_power station	-22.24	-23.97	2.55
45	45	72	Q_power station	-0.19	13.02	1.76
45	45	71	Q_neve	-1.18	27.12	-2.2
45	45	15	Q_neve	1.82	-17.58	-0.39
45	45	18	Q_neve	-49.87	-53.24	4.5
45	45	72	Q_neve	4.68	44.77	2.69
45	45	71	Q_manutenzione	-0.48	6.65	-0.42
45	45	15	Q_manutenzione	0.73	-9.23	0.36
45	45	18	Q_manutenzione	-22.24	-23.97	2.55
45	45	72	Q_manutenzione	-0.19	13.02	1.76
45	45	71	EQ_X	-94.22	83.62	7.24
45	45	15	EQ_X	111.12	-331.02	-27.32
45	45	18	EQ_X	-1357.12	-382.77	295.49
45	45	72	EQ_X	592.47	108.13	330.04
45	45	71	EQ_Y	40.43	727.36	198.59
45	45	15	EQ_Y	-162.9	-641.2	-173.27
45	45	18	EQ_Y	303.38	2026.82	-120.85
45	45	72	EQ_Y	163.9	59.99	251.01
46	46	62	DEAD	9.280E-13	-2.538E-12	1.314E-12
46	46	3	DEAD	5.128E-12	2.698E-12	1.314E-12
46	46	64	DEAD	-8.732E-13	-2.443E-12	1.314E-12
46	46	63	DEAD	3.137E-12	1.845E-12	1.314E-12
46	46	62	G1_power station	0.	0.	0.
46	46	3	G1_power station	0.	0.	0.
46	46	64	G1_power station	0.	0.	0.
46	46	63	G1_power station	0.	0.	0.
46	46	62	G2_power station	19.08	-227.69	124.59
46	46	3	G2_power station	-18.76	-18.32	159.91
46	46	64	G2_power station	-266.85	18.98	123.03

Table 21: Element Stresses - Area Shells, Part 1 of 3

Area	AreaElem	Joint	OutputCase	S11Top	S22Top	S12Top
				KN/m2	KN/m2	KN/m2
46	46	63	G2_power station	-651.02	-618.17	87.71
46	46	62	Q_power station	0.71	-8.42	4.61
46	46	3	Q_power station	-0.69	-0.68	5.92
46	46	64	Q_power station	-9.87	0.7	4.55
46	46	63	Q_power station	-24.09	-22.87	3.25
46	46	62	Q_neve	1.75	-16.16	10.03
46	46	3	Q_neve	-1.8	-1.72	13.45
46	46	64	Q_neve	-20.6	1.73	9.73
46	46	63	Q_neve	-55.49	-51.21	6.31
46	46	62	Q_manutenzione	0.71	-8.42	4.61
46	46	3	Q_manutenzione	-0.69	-0.68	5.92
46	46	64	Q_manutenzione	-9.87	0.7	4.55
46	46	63	Q_manutenzione	-24.09	-22.87	3.25
46	46	62	EQ_X	113.06	-312.16	223.71
46	46	3	EQ_X	-163.43	-41.7	170.1
46	46	64	EQ_X	930.08	145.28	-208.44
46	46	63	EQ_X	-1387.25	-378.8	-154.83
46	46	62	EQ_Y	153.95	951.41	-208.29
46	46	3	EQ_Y	-44.34	-171.68	194.42
46	46	64	EQ_Y	-347.39	152.86	259.89
46	46	63	EQ_Y	-404.02	-1550.78	-142.83
48	48	65	DEAD	-1.820E-12	5.737E-12	-4.816E-12
48	48	4	DEAD	-2.229E-12	8.042E-13	-4.058E-12
48	48	66	DEAD	8.346E-13	-1.468E-12	-4.816E-12
48	48	5	DEAD	-2.040E-12	-5.073E-12	-5.575E-12
48	48	65	G1_power station	0.	0.	0.
48	48	4	G1_power station	0.	0.	0.
48	48	66	G1_power station	0.	0.	0.
48	48	5	G1_power station	0.	0.	0.
48	48	65	G2_power station	-257.03	19.46	-103.17
48	48	4	G2_power station	-21.63	-18.68	-148.57
48	48	66	G2_power station	20.57	-195.2	-112.78
48	48	5	G2_power station	-674.58	-591.22	-67.39
48	48	65	Q_power station	-9.51	0.72	-3.82
48	48	4	Q_power station	-0.8	-0.69	-5.5
48	48	66	Q_power station	0.76	-7.22	-4.17
48	48	5	Q_power station	-24.96	-21.88	-2.49
48	48	65	Q_neve	-19.31	1.77	-7.28
48	48	4	Q_neve	-2.13	-1.75	-11.99
48	48	66	Q_neve	1.9	-11.98	-8.52
48	48	5	Q_neve	-57.92	-47.6	-3.8
48	48	65	Q_manutenzione	-9.51	0.72	-3.82
48	48	4	Q_manutenzione	-0.8	-0.69	-5.5

Table 21: Element Stresses - Area Shells, Part 1 of 3

Area	AreaElem	Joint	OutputCase	S11Top	S22Top	S12Top
				KN/m2	KN/m2	KN/m2
48	48	66	Q_manutenzione	0.76	-7.22	-4.17
48	48	5	Q_manutenzione	-24.96	-21.88	-2.49
48	48	65	EQ_X	-916.62	-143.14	-213.55
48	48	4	EQ_X	162.05	41.69	162.61
48	48	66	EQ_X	-110.26	292.76	214.21
48	48	5	EQ_X	1377.64	366.53	-161.95
48	48	65	EQ_Y	-341.59	172.86	-260.23
48	48	4	EQ_Y	-44.87	-183.16	-196.92
48	48	66	EQ_Y	160.15	987.92	217.24
48	48	5	EQ_Y	-419.77	-1604.42	153.93
49	49	21	DEAD	-4.739E-11	-6.673E-11	-1.482E-11
49	49	73	DEAD	2.762E-11	-6.025E-11	-1.179E-11
49	49	74	DEAD	-3.449E-11	-1.115E-10	-2.690E-12
49	49	22	DEAD	8.753E-11	-1.550E-11	-5.724E-12
49	49	21	G1_power station	0.	0.	0.
49	49	73	G1_power station	0.	0.	0.
49	49	74	G1_power station	0.	0.	0.
49	49	22	G1_power station	0.	0.	0.
49	49	21	G2_power station	21.99	-215.37	7.3
49	49	73	G2_power station	-13.83	203.46	26.43
49	49	74	G2_power station	-42.84	377.43	-28.
49	49	22	G2_power station	-617.26	-616.68	-47.12
49	49	21	Q_power station	0.81	-7.97	0.27
49	49	73	Q_power station	-0.51	7.53	0.98
49	49	74	Q_power station	-1.59	13.96	-1.04
49	49	22	Q_power station	-22.84	-22.82	-1.74
49	49	21	Q_neve	2.06	-12.7	2.5
49	49	73	Q_neve	-1.25	31.62	4.06
49	49	74	Q_neve	-0.28	49.43	-0.22
49	49	22	Q_neve	-52.23	-48.8	-1.77
49	49	21	Q_manutenzione	0.81	-7.97	0.27
49	49	73	Q_manutenzione	-0.51	7.53	0.98
49	49	74	Q_manutenzione	-1.59	13.96	-1.04
49	49	22	Q_manutenzione	-22.84	-22.82	-1.74
49	49	21	EQ_X	-108.22	312.1	-36.32
49	49	73	EQ_X	92.95	-95.17	-1.42
49	49	74	EQ_X	-565.08	-129.56	312.39
49	49	22	EQ_X	1337.3	371.02	277.49
49	49	21	EQ_Y	-168.1	-670.43	175.39
49	49	73	EQ_Y	39.98	744.55	-209.76
49	49	74	EQ_Y	149.85	38.7	-262.98
49	49	22	EQ_Y	306.1	2097.35	122.17
50	50	73	DEAD	2.092E-11	-7.225E-11	-1.751E-12

Table 21: Element Stresses - Area Shells, Part 1 of 3

Area	AreaElem	Joint	OutputCase	S11Top	S22Top	S12Top
				KN/m2	KN/m2	KN/m2
50	50	75	DEAD	4.402E-12	-6.028E-11	-4.785E-12
50	50	76	DEAD	2.721E-12	-7.225E-11	-1.751E-12
50	50	74	DEAD	-1.228E-11	-5.269E-11	1.282E-12
50	50	73	G1_power station	0.	0.	0.
50	50	75	G1_power station	0.	0.	0.
50	50	76	G1_power station	0.	0.	0.
50	50	74	G1_power station	0.	0.	0.
50	50	73	G2_power station	-10.36	220.82	-37.92
50	50	75	G2_power station	3.14	621.96	-43.96
50	50	76	G2_power station	95.74	528.45	-52.81
50	50	74	G2_power station	-47.32	355.03	-46.77
50	50	73	Q_power station	-0.38	8.17	-1.4
50	50	75	Q_power station	0.12	23.01	-1.63
50	50	76	Q_power station	3.54	19.55	-1.95
50	50	74	Q_power station	-1.75	13.14	-1.73
50	50	73	Q_neve	-0.92	33.29	-2.11
50	50	75	Q_neve	0.32	73.57	-3.23
50	50	76	Q_neve	12.1	67.36	-3.65
50	50	74	Q_neve	-0.69	47.39	-2.53
50	50	73	Q_manutenzione	-0.38	8.17	-1.4
50	50	75	Q_manutenzione	0.12	23.01	-1.63
50	50	76	Q_manutenzione	3.54	19.55	-1.95
50	50	74	Q_manutenzione	-1.75	13.14	-1.73
50	50	73	EQ_X	102.59	-46.95	161.3
50	50	75	EQ_X	-7.02	-158.92	116.62
50	50	76	EQ_X	-111.23	-57.14	45.
50	50	74	EQ_X	-565.51	-131.68	89.68
50	50	73	EQ_Y	1.806E-02	544.73	-148.04
50	50	75	EQ_Y	0.4	112.68	-84.13
50	50	76	EQ_Y	31.72	146.59	-65.57
50	50	74	EQ_Y	185.8	218.45	-129.47
51	51	75	DEAD	-1.794E-11	-6.101E-11	-5.724E-12
51	51	77	DEAD	3.360E-11	7.544E-12	-1.179E-11
51	51	78	DEAD	4.808E-12	1.635E-11	-1.179E-11
51	51	76	DEAD	3.208E-11	-3.644E-11	-5.724E-12
51	51	75	G1_power station	0.	0.	0.
51	51	77	G1_power station	0.	0.	0.
51	51	78	G1_power station	0.	0.	0.
51	51	76	G1_power station	0.	0.	0.
51	51	75	G2_power station	-0.15	605.53	-17.07
51	51	77	G2_power station	-0.15	605.53	17.07
51	51	78	G2_power station	98.38	541.63	17.07
51	51	76	G2_power station	98.38	541.63	-17.07

Table 21: Element Stresses - Area Shells, Part 1 of 3

Area	AreaElem	Joint	OutputCase	S11Top	S22Top	S12Top
				KN/m2	KN/m2	KN/m2
51	51	75	Q_power station	-5.416E-03	22.4	-0.63
51	51	77	Q_power station	-5.416E-03	22.4	0.63
51	51	78	Q_power station	3.64	20.04	0.63
51	51	76	Q_power station	3.64	20.04	-0.63
51	51	75	Q_neve	2.319E-02	72.1	-1.23
51	51	77	Q_neve	2.319E-02	72.1	1.23
51	51	78	Q_neve	12.34	68.55	1.23
51	51	76	Q_neve	12.34	68.55	-1.23
51	51	75	Q_manutenzione	-5.416E-03	22.4	-0.63
51	51	77	Q_manutenzione	-5.416E-03	22.4	0.63
51	51	78	Q_manutenzione	3.64	20.04	0.63
51	51	76	Q_manutenzione	3.64	20.04	-0.63
51	51	75	EQ_X	-4.76	-147.59	27.17
51	51	77	EQ_X	-5.26	-147.69	-26.51
51	51	78	EQ_X	-113.05	-63.86	-25.97
51	51	76	EQ_X	-112.55	-63.76	27.71
51	51	75	EQ_Y	2.16	121.45	-58.96
51	51	77	EQ_Y	-2.74	-129.74	-58.81
51	51	78	EQ_Y	-22.01	-103.41	-73.67
51	51	76	EQ_Y	23.36	104.81	-73.82
52	52	77	DEAD	1.976E-11	1.266E-11	-2.486E-11
52	52	79	DEAD	-1.269E-11	5.909E-11	-2.183E-11
52	52	80	DEAD	9.141E-12	6.878E-11	-6.662E-12
52	52	78	DEAD	1.006E-11	-9.170E-12	-9.696E-12
52	52	77	G1_power station	0.	0.	0.
52	52	79	G1_power station	0.	0.	0.
52	52	80	G1_power station	0.	0.	0.
52	52	78	G1_power station	0.	0.	0.
52	52	77	G2_power station	3.14	621.96	43.96
52	52	79	G2_power station	-10.36	220.82	37.92
52	52	80	G2_power station	-47.32	355.03	46.77
52	52	78	G2_power station	95.74	528.45	52.81
52	52	77	Q_power station	0.12	23.01	1.63
52	52	79	Q_power station	-0.38	8.17	1.4
52	52	80	Q_power station	-1.75	13.14	1.73
52	52	78	Q_power station	3.54	19.55	1.95
52	52	77	Q_neve	0.32	73.57	3.23
52	52	79	Q_neve	-0.92	33.29	2.11
52	52	80	Q_neve	-0.69	47.39	2.53
52	52	78	Q_neve	12.1	67.36	3.65
52	52	77	Q_manutenzione	0.12	23.01	1.63
52	52	79	Q_manutenzione	-0.38	8.17	1.4
52	52	80	Q_manutenzione	-1.75	13.14	1.73

Table 21: Element Stresses - Area Shells, Part 1 of 3

Area	AreaElem	Joint	OutputCase	S11Top	S22Top	S12Top
				KN/m2	KN/m2	KN/m2
52	52	78	Q_manutenzione	3.54	19.55	1.95
52	52	77	EQ_X	-7.1	-156.92	-115.72
52	52	79	EQ_X	101.55	-45.14	-160.66
52	52	80	EQ_X	-566.62	-130.21	-89.25
52	52	78	EQ_X	-111.38	-55.48	-44.3
52	52	77	EQ_Y	-0.78	-119.95	-83.59
52	52	79	EQ_Y	-0.65	-552.06	-147.18
52	52	80	EQ_Y	-184.66	-216.93	-128.56
52	52	78	EQ_Y	-30.33	-145.02	-64.97
53	53	79	DEAD	-6.133E-12	8.520E-11	-7.944E-12
53	53	10	DEAD	-3.194E-12	2.222E-11	-1.098E-11
53	53	9	DEAD	2.496E-11	4.046E-11	-2.008E-11
53	53	80	DEAD	3.632E-12	7.455E-11	-1.704E-11
53	53	79	G1_power station	0.	0.	0.
53	53	10	G1_power station	0.	0.	0.
53	53	9	G1_power station	0.	0.	0.
53	53	80	G1_power station	0.	0.	0.
53	53	79	G2_power station	-13.83	203.46	-26.43
53	53	10	G2_power station	21.99	-215.37	-7.3
53	53	9	G2_power station	-617.26	-616.68	47.12
53	53	80	G2_power station	-42.84	377.43	28.
53	53	79	Q_power station	-0.51	7.53	-0.98
53	53	10	Q_power station	0.81	-7.97	-0.27
53	53	9	Q_power station	-22.84	-22.82	1.74
53	53	80	Q_power station	-1.59	13.96	1.04
53	53	79	Q_neve	-1.25	31.62	-4.06
53	53	10	Q_neve	2.06	-12.7	-2.5
53	53	9	Q_neve	-52.23	-48.8	1.77
53	53	80	Q_neve	-0.28	49.43	0.22
53	53	79	Q_manutenzione	-0.51	7.53	-0.98
53	53	10	Q_manutenzione	0.81	-7.97	-0.27
53	53	9	Q_manutenzione	-22.84	-22.82	1.74
53	53	80	Q_manutenzione	-1.59	13.96	1.04
53	53	79	EQ_X	91.99	-92.9	1.23
53	53	10	EQ_X	-108.53	314.5	35.81
53	53	9	EQ_X	1336.92	373.05	-277.79
53	53	80	EQ_X	-566.11	-127.65	-312.37
53	53	79	EQ_Y	-40.03	-748.95	-208.71
53	53	10	EQ_Y	166.95	665.81	176.37
53	53	9	EQ_Y	-306.01	-2095.75	123.52
53	53	80	EQ_Y	-148.65	-36.88	-261.56
54	54	60	DEAD	-4.553E-12	-3.095E-12	9.930E-13
54	54	6	DEAD	3.627E-13	-3.664E-12	1.751E-12

Table 21: Element Stresses - Area Shells, Part 1 of 3

Area	AreaElem	Joint	OutputCase	S11Top	S22Top	S12Top
				KN/m2	KN/m2	KN/m2
54	54	81	DEAD	-1.176E-11	-1.409E-11	2.510E-12
54	54	82	DEAD	4.344E-12	4.868E-12	1.751E-12
54	54	60	G1_power station	0.	0.	0.
54	54	6	G1_power station	0.	0.	0.
54	54	81	G1_power station	0.	0.	0.
54	54	82	G1_power station	0.	0.	0.
54	54	60	G2_power station	-253.92	21.56	1.281E-02
54	54	6	G2_power station	-662.09	-620.38	-56.64
54	54	81	G2_power station	224.66	-118.44	-48.27
54	54	82	G2_power station	12.04	-12.89	8.37
54	54	60	Q_power station	-9.39	0.8	4.739E-04
54	54	6	Q_power station	-24.5	-22.95	-2.1
54	54	81	Q_power station	8.31	-4.38	-1.79
54	54	82	Q_power station	0.45	-0.48	0.31
54	54	60	Q_neve	-19.38	1.98	1.79
54	54	6	Q_neve	-56.49	-51.41	-3.13
54	54	81	Q_neve	28.26	-5.28	-2.2
54	54	82	Q_neve	7.79	-1.16	2.73
54	54	60	Q_manutenzione	-9.39	0.8	4.739E-04
54	54	6	Q_manutenzione	-24.5	-22.95	-2.1
54	54	81	Q_manutenzione	8.31	-4.38	-1.79
54	54	82	Q_manutenzione	0.45	-0.48	0.31
54	54	60	EQ_X	-621.45	-165.96	219.71
54	54	6	EQ_X	2033.87	304.5	167.03
54	54	81	EQ_X	271.81	203.67	-178.93
54	54	82	EQ_X	781.87	28.22	-126.25
54	54	60	EQ_Y	357.59	-144.72	-20.69
54	54	6	EQ_Y	406.48	1557.37	364.25
54	54	81	EQ_Y	-74.56	-532.75	415.47
54	54	82	EQ_Y	-10.96	117.78	30.53
55	55	82	DEAD	-1.273E-12	1.706E-12	4.582E-12
55	55	81	DEAD	-5.352E-12	-1.203E-11	2.307E-12
55	55	83	DEAD	-9.236E-12	-1.706E-12	1.548E-12
55	55	84	DEAD	-1.369E-11	8.636E-13	3.823E-12
55	55	82	G1_power station	0.	0.	0.
55	55	81	G1_power station	0.	0.	0.
55	55	83	G1_power station	0.	0.	0.
55	55	84	G1_power station	0.	0.	0.
55	55	82	G2_power station	30.14	-9.27	-66.12
55	55	81	G2_power station	205.01	-122.37	-85.26
55	55	83	G2_power station	350.5	45.43	-114.89
55	55	84	G2_power station	375.9	1.21	-95.76
55	55	82	Q_power station	1.12	-0.34	-2.45

Table 21: Element Stresses - Area Shells, Part 1 of 3

Area	AreaElem	Joint	OutputCase	S11Top	S22Top	S12Top
				KN/m2	KN/m2	KN/m2
55	55	81	Q_power station	7.59	-4.53	-3.15
55	55	83	Q_power station	12.97	1.68	-4.25
55	55	84	Q_power station	13.91	4.493E-02	-3.54
55	55	82	Q_neve	9.48	-0.83	-3.96
55	55	81	Q_neve	26.47	-5.64	-5.6
55	55	83	Q_neve	41.86	10.04	-8.3
55	55	84	Q_neve	42.95	0.12	-6.66
55	55	82	Q_manutenzione	1.12	-0.34	-2.45
55	55	81	Q_manutenzione	7.59	-4.53	-3.15
55	55	83	Q_manutenzione	12.97	1.68	-4.25
55	55	84	Q_manutenzione	13.91	4.493E-02	-3.54
55	55	82	EQ_X	657.87	3.43	-99.95
55	55	81	EQ_X	383.46	226.	-73.28
55	55	83	EQ_X	350.92	69.01	-12.92
55	55	84	EQ_X	351.98	-3.29	-39.59
55	55	82	EQ_Y	35.78	127.13	252.93
55	55	81	EQ_Y	-76.11	-533.06	168.51
55	55	83	EQ_Y	-8.76	-12.5	144.73
55	55	84	EQ_Y	-89.11	-34.22	229.16
56	56	84	DEAD	-1.105E-11	1.327E-12	1.837E-12
56	56	83	DEAD	-1.957E-11	-4.017E-12	3.205E-13
56	56	85	DEAD	4.211E-12	2.559E-12	-2.713E-12
56	56	86	DEAD	-2.175E-11	1.007E-12	-1.196E-12
56	56	84	G1_power station	0.	0.	0.
56	56	83	G1_power station	0.	0.	0.
56	56	85	G1_power station	0.	0.	0.
56	56	86	G1_power station	0.	0.	0.
56	56	84	G2_power station	361.56	-1.65	-101.6
56	56	83	G2_power station	361.35	47.6	-104.45
56	56	85	G2_power station	400.18	79.81	-93.18
56	56	86	G2_power station	436.4	0.8	-90.33
56	56	84	Q_power station	13.38	-6.118E-02	-3.76
56	56	83	Q_power station	13.37	1.76	-3.86
56	56	85	Q_power station	14.81	2.95	-3.45
56	56	86	Q_power station	16.15	2.965E-02	-3.34
56	56	84	Q_neve	41.64	-0.14	-7.13
56	56	83	Q_neve	42.84	10.24	-7.43
56	56	85	Q_neve	46.8	13.51	-6.38
56	56	86	Q_neve	49.02	8.823E-02	-6.08
56	56	84	Q_manutenzione	13.38	-6.118E-02	-3.76
56	56	83	Q_manutenzione	13.37	1.76	-3.86
56	56	85	Q_manutenzione	14.81	2.95	-3.45
56	56	86	Q_manutenzione	16.15	2.965E-02	-3.34

Table 21: Element Stresses - Area Shells, Part 1 of 3

Area	AreaElem	Joint	OutputCase	S11Top	S22Top	S12Top
				KN/m2	KN/m2	KN/m2
56	56	84	EQ_X	375.05	1.33	-4.19
56	56	83	EQ_X	329.24	64.67	-4.39
56	56	85	EQ_X	236.96	22.61	8.85
56	56	86	EQ_X	248.02	-1.01	9.05
56	56	84	EQ_Y	-76.72	-31.74	154.9
56	56	83	EQ_Y	-6.62	-12.07	161.02
56	56	85	EQ_Y	-44.87	-93.14	133.78
56	56	86	EQ_Y	-70.6	27.46	127.66
57	57	86	DEAD	-2.023E-11	6.003E-13	-7.764E-12
57	57	85	DEAD	-4.172E-12	2.081E-12	-5.489E-12
57	57	87	DEAD	-2.033E-11	-8.974E-12	-6.247E-12
57	57	88	DEAD	-2.560E-12	1.038E-12	-8.522E-12
57	57	86	G1_power station	0.	0.	0.
57	57	85	G1_power station	0.	0.	0.
57	57	87	G1_power station	0.	0.	0.
57	57	88	G1_power station	0.	0.	0.
57	57	86	G2_power station	433.89	0.3	-73.16
57	57	85	G2_power station	401.86	80.15	-76.07
57	57	87	G2_power station	366.22	80.48	-57.12
57	57	88	G2_power station	406.36	-0.52	-54.22
57	57	86	Q_power station	16.05	1.108E-02	-2.71
57	57	85	Q_power station	14.87	2.97	-2.81
57	57	87	Q_power station	13.55	2.98	-2.11
57	57	88	Q_power station	15.04	-1.915E-02	-2.01
57	57	86	Q_neve	48.78	3.917E-02	-4.41
57	57	85	Q_neve	46.96	13.54	-4.8
57	57	87	Q_neve	42.95	13.86	-2.98
57	57	88	Q_neve	45.7	-5.990E-02	-2.59
57	57	86	Q_manutenzione	16.05	1.108E-02	-2.71
57	57	85	Q_manutenzione	14.87	2.97	-2.81
57	57	87	Q_manutenzione	13.55	2.98	-2.11
57	57	88	Q_manutenzione	15.04	-1.915E-02	-2.01
57	57	86	EQ_X	249.04	-0.81	17.72
57	57	85	EQ_X	234.7	22.16	14.38
57	57	87	EQ_X	164.88	6.02	18.5
57	57	88	EQ_X	166.77	-0.64	21.84
57	57	86	EQ_Y	-64.94	28.59	109.73
57	57	85	EQ_Y	-38.21	-91.81	104.03
57	57	87	EQ_Y	-38.67	-43.48	83.98
57	57	88	EQ_Y	-61.93	10.27	89.69
58	58	88	DEAD	-9.373E-12	2.861E-12	-6.130E-12
58	58	87	DEAD	-1.056E-11	-9.718E-12	-6.888E-12
58	58	89	DEAD	-2.832E-12	-8.360E-13	-6.130E-12

Table 21: Element Stresses - Area Shells, Part 1 of 3

Area	AreaElem	Joint	OutputCase	S11Top	S22Top	S12Top
				KN/m2	KN/m2	KN/m2
58	58	90	DEAD	2.620E-12	1.563E-12	-5.372E-12
58	58	88	G1_power station	0.	0.	0.
58	58	87	G1_power station	0.	0.	0.
58	58	89	G1_power station	0.	0.	0.
58	58	90	G1_power station	0.	0.	0.
58	58	88	G2_power station	405.56	-0.68	-33.37
58	58	87	G2_power station	366.69	80.58	-37.49
58	58	89	G2_power station	307.29	72.69	-15.96
58	58	90	G2_power station	356.77	2.78	-11.84
58	58	88	Q_power station	15.01	-2.506E-02	-1.23
58	58	87	Q_power station	13.57	2.98	-1.39
58	58	89	Q_power station	11.37	2.69	-0.59
58	58	90	Q_power station	13.2	0.1	-0.44
58	58	88	Q_neve	45.61	-7.766E-02	-0.52
58	58	87	Q_neve	42.99	13.87	-1.07
58	58	89	Q_neve	36.03	13.19	1.08
58	58	90	Q_neve	39.86	0.32	1.62
58	58	88	Q_manutenzione	15.01	-2.506E-02	-1.23
58	58	87	Q_manutenzione	13.57	2.98	-1.39
58	58	89	Q_manutenzione	11.37	2.69	-0.59
58	58	90	Q_manutenzione	13.2	0.1	-0.44
58	58	88	EQ_X	164.73	-1.05	23.78
58	58	87	EQ_X	164.36	5.91	20.58
58	58	89	EQ_X	115.2	-0.99	21.49
58	58	90	EQ_X	111.76	-0.79	24.69
58	58	88	EQ_Y	-51.69	12.32	69.37
58	58	87	EQ_Y	-35.76	-42.9	68.54
58	58	89	EQ_Y	-35.02	-42.3	51.75
58	58	90	EQ_Y	-46.15	16.38	52.58
59	59	90	DEAD	-1.990E-12	1.134E-12	-4.801E-12
59	59	89	DEAD	-5.613E-12	-1.500E-12	-4.320E-12
59	59	91	DEAD	-5.782E-12	-1.900E-12	-1.767E-12
59	59	92	DEAD	1.782E-12	-3.207E-12	-3.562E-12
59	59	90	G1_power station	0.	0.	0.
59	59	89	G1_power station	0.	0.	0.
59	59	91	G1_power station	0.	0.	0.
59	59	92	G1_power station	0.	0.	0.
59	59	90	G2_power station	354.4	2.31	11.45
59	59	89	G2_power station	308.01	72.83	8.18
59	59	91	G2_power station	277.43	94.91	38.95
59	59	92	G2_power station	365.42	-9.99	42.22
59	59	90	Q_power station	13.11	8.545E-02	0.42
59	59	89	Q_power station	11.4	2.69	0.3

Table 21: Element Stresses - Area Shells, Part 1 of 3

Area	AreaElem	Joint	OutputCase	S11Top	S22Top	S12Top
				KN/m2	KN/m2	KN/m2
59	59	91	Q_power station	10.26	3.51	1.44
59	59	92	Q_power station	13.52	-0.37	1.56
59	59	90	Q_neve	39.66	0.28	3.9
59	59	89	Q_neve	36.05	13.2	3.59
59	59	91	Q_neve	31.57	15.02	6.64
59	59	92	Q_neve	38.94	-1.26	6.96
59	59	90	Q_manutenzione	13.11	8.545E-02	0.42
59	59	89	Q_manutenzione	11.4	2.69	0.3
59	59	91	Q_manutenzione	10.26	3.51	1.44
59	59	92	Q_manutenzione	13.52	-0.37	1.56
59	59	90	EQ_X	106.88	-1.77	22.47
59	59	89	EQ_X	116.37	-0.76	23.89
59	59	91	EQ_X	86.53	-14.58	23.54
59	59	92	EQ_X	77.69	-5.41	22.12
59	59	90	EQ_Y	-21.66	21.28	33.84
59	59	89	EQ_Y	-41.35	-43.56	40.38
59	59	91	EQ_Y	-34.84	-58.22	27.22
59	59	92	EQ_Y	-24.34	26.44	20.67
60	60	92	DEAD	8.661E-13	-4.710E-12	-1.173E-13
60	60	91	DEAD	4.343E-13	-4.901E-13	-2.392E-12
60	60	26	DEAD	-1.023E-11	1.262E-12	-1.634E-12
60	60	27	DEAD	-4.211E-12	1.311E-12	6.411E-13
60	60	92	G1_power station	0.	0.	0.
60	60	91	G1_power station	0.	0.	0.
60	60	26	G1_power station	0.	0.	0.
60	60	27	G1_power station	0.	0.	0.
60	60	92	G2_power station	363.27	-10.42	68.76
60	60	91	G2_power station	268.76	93.17	97.11
60	60	26	G2_power station	387.28	16.09	157.65
60	60	27	G2_power station	606.34	20.37	129.29
60	60	92	Q_power station	13.44	-0.39	2.54
60	60	91	Q_power station	9.94	3.45	3.59
60	60	26	Q_power station	14.33	0.6	5.83
60	60	27	Q_power station	22.43	0.75	4.78
60	60	92	Q_neve	39.04	-1.24	9.1
60	60	91	Q_neve	30.36	14.78	12.74
60	60	26	Q_neve	41.52	2.11	18.07
60	60	27	Q_neve	59.08	2.44	14.43
60	60	92	Q_manutenzione	13.44	-0.39	2.54
60	60	91	Q_manutenzione	9.94	3.45	3.59
60	60	26	Q_manutenzione	14.33	0.6	5.83
60	60	27	Q_manutenzione	22.43	0.75	4.78
60	60	92	EQ_X	72.09	-6.53	19.26

Table 21: Element Stresses - Area Shells, Part 1 of 3

Area	AreaElem	Joint	OutputCase	S11Top	S22Top	S12Top
				KN/m2	KN/m2	KN/m2
60	60	91	EQ_X	86.56	-14.57	27.43
60	60	26	EQ_X	104.9	-45.77	25.61
60	60	27	EQ_X	67.56	11.33	17.44
60	60	92	EQ_Y	33.77	38.06	13.16
60	60	91	EQ_Y	-65.23	-64.3	-0.76
60	60	26	EQ_Y	-61.68	-90.26	-34.03
60	60	27	EQ_Y	-10.37	12.09	-20.12
61	61	65	DEAD	-8.311E-12	4.842E-12	-7.123E-12
61	61	5	DEAD	-3.427E-12	-4.703E-12	-7.123E-12
61	61	93	DEAD	-6.326E-14	5.763E-13	-8.640E-12
61	61	94	DEAD	-6.779E-13	-5.828E-14	-8.640E-12
61	61	65	G1_power station	0.	0.	0.
61	61	5	G1_power station	0.	0.	0.
61	61	93	G1_power station	0.	0.	0.
61	61	94	G1_power station	0.	0.	0.
61	61	65	G2_power station	-243.1	22.24	31.37
61	61	5	G2_power station	-687.36	-593.78	-27.03
61	61	93	G2_power station	153.48	-125.61	-7.95
61	61	94	G2_power station	-30.14	-10.93	50.45
61	61	65	Q_power station	-8.99	0.82	1.16
61	61	5	Q_power station	-25.43	-21.97	-1.
61	61	93	Q_power station	5.68	-4.65	-0.29
61	61	94	Q_power station	-1.12	-0.4	1.87
61	61	65	Q_neve	-17.99	2.03	5.64
61	61	5	Q_neve	-59.09	-47.83	0.5
61	61	93	Q_neve	20.24	-5.04	2.73
61	61	94	Q_neve	3.33	-0.9	7.87
61	61	65	Q_manutenzione	-8.99	0.82	1.16
61	61	5	Q_manutenzione	-25.43	-21.97	-1.
61	61	93	Q_manutenzione	5.68	-4.65	-0.29
61	61	94	Q_manutenzione	-1.12	-0.4	1.87
61	61	65	EQ_X	624.37	165.05	-241.99
61	61	5	EQ_X	-2063.13	-321.62	-182.08
61	61	93	EQ_X	-309.12	-238.5	147.34
61	61	94	EQ_X	-808.74	-33.32	87.43
61	61	65	EQ_Y	-342.61	172.66	53.98
61	61	5	EQ_Y	-425.65	-1605.59	-375.1
61	61	93	EQ_Y	57.12	555.1	-422.03
61	61	94	EQ_Y	-8.17	-125.97	7.04
62	62	94	DEAD	3.177E-13	1.588E-12	-7.326E-12
62	62	93	DEAD	-1.425E-11	-3.324E-12	-8.085E-12
62	62	95	DEAD	8.864E-13	4.432E-12	-5.809E-12
62	62	96	DEAD	3.485E-13	-3.134E-12	-5.051E-12

Table 21: Element Stresses - Area Shells, Part 1 of 3

Area	AreaElem	Joint	OutputCase	S11Top	S22Top	S12Top
				KN/m2	KN/m2	KN/m2
62	62	94	G1_power station	0.	0.	0.
62	62	93	G1_power station	0.	0.	0.
62	62	95	G1_power station	0.	0.	0.
62	62	96	G1_power station	0.	0.	0.
62	62	94	G2_power station	-13.56	-7.61	-14.
62	62	93	G2_power station	134.11	-129.49	-26.39
62	62	95	G2_power station	299.57	34.15	-41.78
62	62	96	G2_power station	369.65	-13.93	-29.39
62	62	94	Q_power station	-0.5	-0.28	-0.52
62	62	93	Q_power station	4.96	-4.79	-0.98
62	62	95	Q_power station	11.08	1.26	-1.55
62	62	96	Q_power station	13.68	-0.52	-1.09
62	62	94	Q_neve	4.88	-0.59	2.37
62	62	93	Q_neve	18.44	-5.4	1.48
62	62	95	Q_neve	34.47	9.51	0.49
62	62	96	Q_neve	40.79	-1.69	1.38
62	62	94	Q_manutenzione	-0.5	-0.28	-0.52
62	62	93	Q_manutenzione	4.96	-4.79	-0.98
62	62	95	Q_manutenzione	11.08	1.26	-1.55
62	62	96	Q_manutenzione	13.68	-0.52	-1.09
62	62	94	EQ_X	-692.76	-10.12	76.1
62	62	93	EQ_X	-405.3	-257.73	38.21
62	62	95	EQ_X	-383.05	-97.55	-34.83
62	62	96	EQ_X	-478.91	10.83	3.06
62	62	94	EQ_Y	-22.64	-128.87	-236.4
62	62	93	EQ_Y	39.42	551.56	-155.22
62	62	95	EQ_Y	-39.39	36.69	-129.61
62	62	96	EQ_Y	93.26	60.43	-210.79
63	63	96	DEAD	-1.164E-11	-7.346E-12	-7.444E-12
63	63	95	DEAD	2.319E-12	7.301E-12	-6.685E-12
63	63	25	DEAD	-1.041E-11	-5.735E-12	-7.444E-12
63	63	28	DEAD	2.224E-12	2.277E-12	-8.202E-12
63	63	96	G1_power station	0.	0.	0.
63	63	95	G1_power station	0.	0.	0.
63	63	25	G1_power station	0.	0.	0.
63	63	28	G1_power station	0.	0.	0.
63	63	96	G2_power station	357.23	-16.41	-35.24
63	63	95	G2_power station	298.3	33.9	8.59
63	63	25	G2_power station	475.1	-74.68	58.48
63	63	28	G2_power station	726.97	33.16	14.65
63	63	96	Q_power station	13.22	-0.61	-1.3
63	63	95	Q_power station	11.04	1.25	0.32
63	63	25	Q_power station	17.58	-2.76	2.16

Table 21: Element Stresses - Area Shells, Part 1 of 3

Area	AreaElem	Joint	OutputCase	S11Top	S22Top	S12Top
				KN/m2	KN/m2	KN/m2
63	63	28	Q_power station	26.9	1.23	0.54
63	63	96	Q_neve	39.94	-1.86	0.74
63	63	95	Q_neve	33.92	9.4	6.07
63	63	25	Q_neve	52.26	-6.32	10.7
63	63	28	Q_neve	73.77	3.82	5.36
63	63	96	Q_manutenzione	13.22	-0.61	-1.3
63	63	95	Q_manutenzione	11.04	1.25	0.32
63	63	25	Q_manutenzione	17.58	-2.76	2.16
63	63	28	Q_manutenzione	26.9	1.23	0.54
63	63	96	EQ_X	-509.66	4.68	-46.69
63	63	95	EQ_X	-342.64	-89.47	-85.86
63	63	25	EQ_X	-436.85	87.09	-128.99
63	63	28	EQ_X	-605.68	-31.82	-89.81
63	63	96	EQ_Y	134.92	68.76	-136.69
63	63	95	EQ_Y	-81.76	28.22	-150.19
63	63	25	EQ_Y	-121.4	31.84	-133.98
63	63	28	EQ_Y	107.74	-43.67	-120.48
64	64	6	DEAD	-9.646E-13	-5.961E-12	4.144E-12
64	64	40	DEAD	1.076E-12	-1.912E-12	0.
64	64	97	DEAD	3.626E-13	2.950E-12	1.110E-12
64	64	81	DEAD	-9.067E-12	-2.576E-12	0.
64	64	6	G1_power station	0.	0.	0.
64	64	40	G1_power station	0.	0.	0.
64	64	97	G1_power station	0.	0.	0.
64	64	81	G1_power station	0.	0.	0.
64	64	6	G2_power station	-663.97	-629.77	-149.61
64	64	40	G2_power station	-59.96	363.36	-181.17
64	64	97	G2_power station	122.85	195.05	-225.79
64	64	81	G2_power station	225.9	-112.24	-194.23
64	64	6	Q_power station	-24.57	-23.3	-5.54
64	64	40	Q_power station	-2.22	13.44	-6.7
64	64	97	Q_power station	4.55	7.22	-8.35
64	64	81	Q_power station	8.36	-4.15	-7.19
64	64	6	Q_neve	-56.66	-52.27	-11.45
64	64	40	Q_neve	-1.55	43.86	-14.52
64	64	97	Q_neve	20.92	30.93	-18.46
64	64	81	Q_neve	28.37	-4.73	-15.39
64	64	6	Q_manutenzione	-24.57	-23.3	-5.54
64	64	40	Q_manutenzione	-2.22	13.44	-6.7
64	64	97	Q_manutenzione	4.55	7.22	-8.35
64	64	81	Q_manutenzione	8.36	-4.15	-7.19
64	64	6	EQ_X	2033.43	302.25	-285.32
64	64	40	EQ_X	-228.35	-48.96	-322.11

Table 21: Element Stresses - Area Shells, Part 1 of 3

Area	AreaElem	Joint	OutputCase	S11Top	S22Top	S12Top
				KN/m2	KN/m2	KN/m2
64	64	97	EQ_X	549.36	-25.86	14.85
64	64	81	EQ_X	272.54	207.33	51.64
64	64	6	EQ_Y	-309.83	-2024.17	343.13
64	64	40	EQ_Y	-170.77	-54.55	-55.55
64	64	97	EQ_Y	4.79	-467.87	-14.13
64	64	81	EQ_Y	86.79	274.	384.54
65	65	81	DEAD	-9.289E-12	-4.729E-12	-2.619E-13
65	65	97	DEAD	-7.077E-12	1.174E-12	9.773E-13
65	65	98	DEAD	-2.369E-12	2.955E-13	2.013E-12
65	65	83	DEAD	-6.223E-12	-5.936E-12	-5.395E-13
65	65	81	G1_power station	0.	0.	0.
65	65	97	G1_power station	0.	0.	0.
65	65	98	G1_power station	0.	0.	0.
65	65	83	G1_power station	0.	0.	0.
65	65	81	G2_power station	206.25	-116.17	-165.74
65	65	97	G2_power station	131.97	196.88	-183.41
65	65	98	G2_power station	331.57	181.07	-149.52
65	65	83	G2_power station	350.16	43.75	-131.85
65	65	81	Q_power station	7.63	-4.3	-6.13
65	65	97	Q_power station	4.88	7.28	-6.79
65	65	98	Q_power station	12.27	6.7	-5.53
65	65	83	Q_power station	12.96	1.62	-4.88
65	65	81	Q_neve	26.58	-5.09	-12.88
65	65	97	Q_neve	21.74	31.09	-14.71
65	65	98	Q_neve	42.15	31.06	-11.75
65	65	83	Q_neve	41.82	9.88	-9.92
65	65	81	Q_manutenzione	7.63	-4.3	-6.13
65	65	97	Q_manutenzione	4.88	7.28	-6.79
65	65	98	Q_manutenzione	12.27	6.7	-5.53
65	65	83	Q_manutenzione	12.96	1.62	-4.88
65	65	81	EQ_X	384.19	229.66	18.22
65	65	97	EQ_X	472.68	-41.2	30.26
65	65	98	EQ_X	304.48	35.45	15.04
65	65	83	EQ_X	349.76	63.2	3.01
65	65	81	EQ_Y	85.23	273.68	154.3
65	65	97	EQ_Y	-12.64	-471.36	179.36
65	65	98	EQ_Y	16.15	-96.76	155.05
65	65	83	EQ_Y	-47.56	-206.52	130.
66	66	83	DEAD	-2.454E-11	-9.241E-12	-7.741E-13
66	66	98	DEAD	-2.011E-12	-1.094E-12	-1.052E-12
66	66	99	DEAD	-1.032E-11	4.288E-13	-2.291E-12
66	66	85	DEAD	7.374E-12	3.279E-13	-3.327E-12
66	66	83	G1_power station	0.	0.	0.

Table 21: Element Stresses - Area Shells, Part 1 of 3

Area	AreaElem	Joint	OutputCase	S11Top	S22Top	S12Top
				KN/m2	KN/m2	KN/m2
66	66	98	G1_power station	0.	0.	0.
66	66	99	G1_power station	0.	0.	0.
66	66	85	G1_power station	0.	0.	0.
66	66	83	G2_power station	361.02	45.92	-118.
66	66	98	G2_power station	326.12	179.98	-118.34
66	66	99	G2_power station	363.32	162.67	-97.01
66	66	85	G2_power station	400.21	79.96	-96.67
66	66	83	Q_power station	13.36	1.7	-4.37
66	66	98	Q_power station	12.07	6.66	-4.38
66	66	99	Q_power station	13.44	6.02	-3.59
66	66	85	Q_power station	14.81	2.96	-3.58
66	66	83	Q_neve	42.81	10.07	-8.75
66	66	98	Q_neve	41.67	30.96	-9.03
66	66	99	Q_neve	45.33	30.26	-7.15
66	66	85	Q_neve	46.81	13.53	-6.87
66	66	83	Q_manutenzione	13.36	1.7	-4.37
66	66	98	Q_manutenzione	12.07	6.66	-4.38
66	66	99	Q_manutenzione	13.44	6.02	-3.59
66	66	85	Q_manutenzione	14.81	2.96	-3.58
66	66	83	EQ_X	328.08	58.86	8.77
66	66	98	EQ_X	314.18	37.39	14.94
66	66	99	EQ_X	230.2	14.6	16.89
66	66	85	EQ_X	237.23	23.98	10.72
66	66	83	EQ_Y	-45.43	-206.1	141.11
66	66	98	EQ_Y	23.45	-95.3	105.94
66	66	99	EQ_Y	-14.75	-96.24	89.72
66	66	85	EQ_Y	-35.44	-46.01	124.89
67	67	85	DEAD	-6.540E-12	-4.233E-12	-2.744E-12
67	67	99	DEAD	2.984E-12	3.266E-12	-2.744E-12
67	67	100	DEAD	-9.004E-12	-5.181E-12	-4.261E-12
67	67	87	DEAD	-1.787E-11	-5.455E-12	-4.261E-12
67	67	85	G1_power station	0.	0.	0.
67	67	99	G1_power station	0.	0.	0.
67	67	100	G1_power station	0.	0.	0.
67	67	87	G1_power station	0.	0.	0.
67	67	85	G2_power station	401.89	80.3	-78.35
67	67	99	G2_power station	363.45	162.7	-75.04
67	67	100	G2_power station	328.08	135.15	-55.78
67	67	87	G2_power station	366.02	79.5	-59.08
67	67	85	Q_power station	14.87	2.97	-2.9
67	67	99	Q_power station	13.45	6.02	-2.78
67	67	100	Q_power station	12.14	5.	-2.06
67	67	87	Q_power station	13.54	2.94	-2.19

Table 21: Element Stresses - Area Shells, Part 1 of 3

Area	AreaElem	Joint	OutputCase	S11Top	S22Top	S12Top
				KN/m2	KN/m2	KN/m2
67	67	85	Q_neve	46.96	13.56	-5.19
67	67	99	Q_neve	45.34	30.26	-5.18
67	67	100	Q_neve	41.06	28.37	-3.38
67	67	87	Q_neve	42.93	13.75	-3.39
67	67	85	Q_manutenzione	14.87	2.97	-2.9
67	67	99	Q_manutenzione	13.45	6.02	-2.78
67	67	100	Q_manutenzione	12.14	5.	-2.06
67	67	87	Q_manutenzione	13.54	2.94	-2.19
67	67	85	EQ_X	234.97	23.53	15.71
67	67	99	EQ_X	230.58	14.68	16.09
67	67	100	EQ_X	163.45	4.3	17.56
67	67	87	EQ_X	164.87	5.97	17.17
67	67	85	EQ_Y	-28.79	-44.68	95.48
67	67	99	EQ_Y	-14.06	-96.1	87.87
67	67	100	EQ_Y	-19.24	-50.5	72.48
67	67	87	EQ_Y	-40.09	-50.59	80.08
68	68	87	DEAD	-5.588E-12	-3.581E-12	-7.647E-12
68	68	100	DEAD	-5.548E-12	-3.439E-12	-5.372E-12
68	68	101	DEAD	-1.592E-11	-1.202E-11	-4.613E-12
68	68	89	DEAD	-5.453E-12	-2.965E-12	-6.888E-12
68	68	87	G1_power station	0.	0.	0.
68	68	100	G1_power station	0.	0.	0.
68	68	101	G1_power station	0.	0.	0.
68	68	89	G1_power station	0.	0.	0.
68	68	87	G2_power station	366.49	79.59	-39.11
68	68	100	G2_power station	328.1	135.16	-38.53
68	68	101	G2_power station	259.56	109.59	-19.15
68	68	89	G2_power station	308.22	77.32	-19.72
68	68	87	Q_power station	13.56	2.94	-1.45
68	68	100	Q_power station	12.14	5.	-1.43
68	68	101	Q_power station	9.6	4.05	-0.71
68	68	89	Q_power station	11.4	2.86	-0.73
68	68	87	Q_neve	42.96	13.76	-1.44
68	68	100	Q_neve	41.06	28.37	-1.69
68	68	101	Q_neve	32.78	26.5	0.3
68	68	89	Q_neve	36.13	13.69	0.55
68	68	87	Q_manutenzione	13.56	2.94	-1.45
68	68	100	Q_manutenzione	12.14	5.	-1.43
68	68	101	Q_manutenzione	9.6	4.05	-0.71
68	68	89	Q_manutenzione	11.4	2.86	-0.73
68	68	87	EQ_X	164.34	5.86	18.94
68	68	100	EQ_X	165.03	4.62	17.65
68	68	101	EQ_X	112.07	-0.25	18.94

Table 21: Element Stresses - Area Shells, Part 1 of 3

Area	AreaElem	Joint	OutputCase	S11Top	S22Top	S12Top
				KN/m2	KN/m2	KN/m2
68	68	89	EQ_X	114.5	-4.48	20.23
68	68	87	EQ_Y	-37.18	-50.01	64.99
68	68	100	EQ_Y	-21.53	-50.95	61.73
68	68	101	EQ_Y	-22.78	-38.79	51.95
68	68	89	EQ_Y	-33.51	-34.79	55.21
69	69	89	DEAD	-4.608E-12	-3.420E-12	-3.065E-12
69	69	101	DEAD	-7.362E-12	-1.058E-11	-5.895E-12
69	69	102	DEAD	-9.348E-12	-1.119E-11	-3.065E-12
69	69	91	DEAD	-3.475E-12	-2.519E-13	-2.862E-12
69	69	89	G1_power station	0.	0.	0.
69	69	101	G1_power station	0.	0.	0.
69	69	102	G1_power station	0.	0.	0.
69	69	91	G1_power station	0.	0.	0.
69	69	89	G2_power station	308.93	77.47	2.88
69	69	101	G2_power station	259.22	109.53	1.62
69	69	102	G2_power station	180.09	90.73	29.89
69	69	91	G2_power station	274.22	78.87	31.15
69	69	89	Q_power station	11.43	2.87	0.11
69	69	101	Q_power station	9.59	4.05	5.979E-02
69	69	102	Q_power station	6.66	3.36	1.11
69	69	91	Q_power station	10.15	2.92	1.15
69	69	89	Q_neve	36.15	13.69	2.89
69	69	101	Q_neve	32.76	26.5	2.61
69	69	102	Q_neve	22.31	24.99	5.8
69	69	91	Q_neve	31.22	13.31	6.08
69	69	89	Q_manutenzione	11.43	2.87	0.11
69	69	101	Q_manutenzione	9.59	4.05	5.979E-02
69	69	102	Q_manutenzione	6.66	3.36	1.11
69	69	91	Q_manutenzione	10.15	2.92	1.15
69	69	89	EQ_X	115.67	-4.24	22.02
69	69	101	EQ_X	114.43	0.22	22.5
69	69	102	EQ_X	67.51	-9.29	28.89
69	69	91	EQ_X	88.27	-5.88	28.4
69	69	89	EQ_Y	-39.85	-36.06	43.9
69	69	101	EQ_Y	-31.23	-40.47	40.59
69	69	102	EQ_Y	-27.35	-43.07	24.14
69	69	91	EQ_Y	-29.43	-31.16	27.44
70	70	91	DEAD	-1.389E-14	2.480E-13	-1.314E-12
70	70	102	DEAD	-7.675E-12	-1.047E-11	-5.552E-13
70	70	103	DEAD	-7.977E-12	-9.990E-12	-1.314E-12
70	70	26	DEAD	-1.279E-11	-6.493E-12	-2.072E-12
70	70	91	G1_power station	0.	0.	0.
70	70	102	G1_power station	0.	0.	0.

Table 21: Element Stresses - Area Shells, Part 1 of 3

Area	AreaElem	Joint	OutputCase	S11Top	S22Top	S12Top
				KN/m2	KN/m2	KN/m2
70	70	103	G1_power station	0.	0.	0.
70	70	26	G1_power station	0.	0.	0.
70	70	91	G2_power station	265.55	77.14	88.75
70	70	102	G2_power station	195.16	93.74	59.72
70	70	103	G2_power station	-93.41	155.77	167.6
70	70	26	G2_power station	405.93	109.35	196.63
70	70	91	Q_power station	9.83	2.85	3.28
70	70	102	Q_power station	7.22	3.47	2.21
70	70	103	Q_power station	-3.46	5.76	6.2
70	70	26	Q_power station	15.02	4.05	7.28
70	70	91	Q_neve	30.02	13.07	12.35
70	70	102	Q_neve	24.03	25.33	9.55
70	70	103	Q_neve	-9.93	34.08	21.83
70	70	26	Q_neve	43.53	12.15	24.63
70	70	91	Q_manutenzione	9.83	2.85	3.28
70	70	102	Q_manutenzione	7.22	3.47	2.21
70	70	103	Q_manutenzione	-3.46	5.76	6.2
70	70	26	Q_manutenzione	15.02	4.05	7.28
70	70	91	EQ_X	88.3	-5.87	35.79
70	70	102	EQ_X	70.56	-8.68	43.29
70	70	103	EQ_X	-19.02	47.27	74.01
70	70	26	EQ_X	97.99	-80.31	66.51
70	70	91	EQ_Y	-59.82	-37.24	3.17
70	70	102	EQ_Y	-21.87	-41.98	21.55
70	70	103	EQ_Y	13.33	-78.37	-1.84
70	70	26	EQ_Y	-79.97	-181.74	-20.23
71	71	40	DEAD	1.887E-12	-1.807E-13	7.741E-13
71	71	42	DEAD	3.673E-12	1.119E-11	-8.170E-13
71	71	104	DEAD	-6.266E-12	4.559E-12	2.291E-12
71	71	97	DEAD	-4.983E-13	-5.685E-13	-5.866E-14
71	71	40	G1_power station	0.	0.	0.
71	71	42	G1_power station	0.	0.	0.
71	71	104	G1_power station	0.	0.	0.
71	71	97	G1_power station	0.	0.	0.
71	71	40	G2_power station	-64.39	341.23	-126.38
71	71	42	G2_power station	92.91	514.73	-63.93
71	71	104	G2_power station	185.52	441.88	-89.11
71	71	97	G2_power station	124.61	203.86	-151.56
71	71	40	Q_power station	-2.38	12.63	-4.68
71	71	42	Q_power station	3.44	19.05	-2.37
71	71	104	Q_power station	6.86	16.35	-3.3
71	71	97	Q_power station	4.61	7.54	-5.61
71	71	40	Q_neve	-1.95	41.84	-10.02

Table 21: Element Stresses - Area Shells, Part 1 of 3

Area	AreaElem	Joint	OutputCase	S11Top	S22Top	S12Top
				KN/m2	KN/m2	KN/m2
71	71	42	Q_neve	12.49	60.63	-4.93
71	71	104	Q_neve	27.32	56.59	-7.15
71	71	97	Q_neve	21.07	31.72	-12.24
71	71	40	Q_manutenzione	-2.38	12.63	-4.68
71	71	42	Q_manutenzione	3.44	19.05	-2.37
71	71	104	Q_manutenzione	6.86	16.35	-3.3
71	71	97	Q_manutenzione	4.61	7.54	-5.61
71	71	40	EQ_X	-226.85	-41.44	-91.53
71	71	42	EQ_X	264.89	79.16	-43.07
71	71	104	EQ_X	243.18	9.01	-73.88
71	71	97	EQ_X	554.88	1.7	-122.34
71	71	40	EQ_Y	-202.97	-215.53	11.18
71	71	42	EQ_Y	-29.62	-131.15	37.82
71	71	104	EQ_Y	-26.27	-71.63	31.63
71	71	97	EQ_Y	28.54	-349.12	5.
72	72	97	DEAD	-9.332E-12	-5.072E-12	1.853E-12
72	72	104	DEAD	-6.285E-12	5.613E-12	5.866E-14
72	72	105	DEAD	-1.366E-13	1.815E-11	3.363E-13
72	72	98	DEAD	-5.811E-12	-5.668E-12	8.170E-13
72	72	97	G1_power station	0.	0.	0.
72	72	104	G1_power station	0.	0.	0.
72	72	105	G1_power station	0.	0.	0.
72	72	98	G1_power station	0.	0.	0.
72	72	97	G2_power station	133.73	205.68	-149.08
72	72	104	G2_power station	187.02	442.18	-100.71
72	72	105	G2_power station	287.4	317.46	-88.58
72	72	98	G2_power station	332.1	183.7	-136.95
72	72	97	Q_power station	4.95	7.61	-5.52
72	72	104	Q_power station	6.92	16.36	-3.73
72	72	105	Q_power station	10.63	11.75	-3.28
72	72	98	Q_power station	12.29	6.8	-5.07
72	72	97	Q_neve	21.9	31.89	-12.05
72	72	104	Q_neve	27.44	56.61	-8.19
72	72	105	Q_neve	39.12	47.15	-7.14
72	72	98	Q_neve	42.2	31.29	-11.
72	72	97	Q_manutenzione	4.95	7.61	-5.52
72	72	104	Q_manutenzione	6.92	16.36	-3.73
72	72	105	Q_manutenzione	10.63	11.75	-3.28
72	72	98	Q_manutenzione	12.29	6.8	-5.07
72	72	97	EQ_X	478.2	-13.63	-25.04
72	72	104	EQ_X	269.29	14.23	-37.26
72	72	105	EQ_X	295.26	-17.47	-0.22
72	72	98	EQ_X	303.67	31.39	12.

Table 21: Element Stresses - Area Shells, Part 1 of 3

Area	AreaElem	Joint	OutputCase	S11Top	S22Top	S12Top
				KN/m2	KN/m2	KN/m2
72	72	97	EQ_Y	11.11	-352.61	65.2
72	72	104	EQ_Y	-19.68	-70.31	22.64
72	72	105	EQ_Y	9.89	-71.94	42.32
72	72	98	EQ_Y	6.75	-143.78	84.88
73	73	98	DEAD	-7.129E-12	-7.229E-12	-2.787E-12
73	73	105	DEAD	1.226E-11	2.071E-11	2.462E-13
73	73	106	DEAD	-5.897E-12	1.208E-12	-2.029E-12
73	73	99	DEAD	-4.429E-12	-1.282E-12	-5.063E-12
73	73	98	G1_power station	0.	0.	0.
73	73	105	G1_power station	0.	0.	0.
73	73	106	G1_power station	0.	0.	0.
73	73	99	G1_power station	0.	0.	0.
73	73	98	G2_power station	326.64	182.61	-105.07
73	73	105	G2_power station	289.21	317.82	-76.12
73	73	106	G2_power station	332.17	228.83	-55.95
73	73	99	G2_power station	363.59	164.01	-84.9
73	73	98	Q_power station	12.09	6.76	-3.89
73	73	105	Q_power station	10.7	11.76	-2.82
73	73	106	Q_power station	12.29	8.47	-2.07
73	73	99	Q_power station	13.45	6.07	-3.14
73	73	98	Q_neve	41.71	31.19	-8.21
73	73	105	Q_neve	39.28	47.19	-6.05
73	73	106	Q_neve	43.38	40.35	-4.27
73	73	99	Q_neve	45.35	30.38	-6.43
73	73	98	Q_manutenzione	12.09	6.76	-3.89
73	73	105	Q_manutenzione	10.7	11.76	-2.82
73	73	106	Q_manutenzione	12.29	8.47	-2.07
73	73	99	Q_manutenzione	13.45	6.07	-3.14
73	73	98	EQ_X	313.37	33.33	15.62
73	73	105	EQ_X	294.22	-17.68	10.98
73	73	106	EQ_X	230.56	-3.88	13.48
73	73	99	EQ_X	230.48	16.02	18.11
73	73	98	EQ_Y	14.04	-142.33	80.04
73	73	105	EQ_Y	3.12	-73.29	58.2
73	73	106	EQ_Y	1.2	-34.94	56.11
73	73	99	EQ_Y	-12.31	-84.	77.96
74	74	99	DEAD	8.667E-13	8.043E-13	-3.284E-12
74	74	106	DEAD	-1.337E-12	4.049E-12	-3.562E-12
74	74	107	DEAD	-8.803E-12	2.356E-13	-3.284E-12
74	74	100	DEAD	-4.465E-12	-2.173E-13	-4.320E-12
74	74	99	G1_power station	0.	0.	0.
74	74	106	G1_power station	0.	0.	0.
74	74	107	G1_power station	0.	0.	0.

Table 21: Element Stresses - Area Shells, Part 1 of 3

Area	AreaElem	Joint	OutputCase	S11Top	S22Top	S12Top
				KN/m2	KN/m2	KN/m2
74	74	100	G1_power station	0.	0.	0.
74	74	99	G2_power station	363.72	164.03	-62.54
74	74	106	G2_power station	331.63	228.72	-44.7
74	74	107	G2_power station	301.93	168.05	-30.29
74	74	100	G2_power station	328.14	135.48	-48.14
74	74	99	Q_power station	13.46	6.07	-2.31
74	74	106	Q_power station	12.27	8.46	-1.65
74	74	107	Q_power station	11.17	6.22	-1.12
74	74	100	Q_power station	12.14	5.01	-1.78
74	74	99	Q_neve	45.37	30.38	-4.42
74	74	106	Q_neve	43.34	40.34	-3.27
74	74	107	Q_neve	39.32	35.73	-1.93
74	74	100	Q_neve	41.07	28.41	-3.08
74	74	99	Q_manutenzione	13.46	6.07	-2.31
74	74	106	Q_manutenzione	12.27	8.46	-1.65
74	74	107	Q_manutenzione	11.17	6.22	-1.12
74	74	100	Q_manutenzione	12.14	5.01	-1.78
74	74	99	EQ_X	230.86	16.09	16.51
74	74	106	EQ_X	232.64	-3.46	12.58
74	74	107	EQ_X	163.42	-1.26	11.5
74	74	100	EQ_X	163.45	4.31	15.43
74	74	99	EQ_Y	-11.61	-83.86	67.64
74	74	106	EQ_Y	2.36	-34.7	57.87
74	74	107	EQ_Y	-3.82	-16.92	53.91
74	74	100	EQ_Y	-20.1	-54.78	63.68
75	75	100	DEAD	-3.067E-12	9.560E-13	-7.154E-13
75	75	107	DEAD	-9.901E-12	2.474E-12	-2.029E-12
75	75	108	DEAD	-3.446E-12	5.886E-12	-1.474E-12
75	75	101	DEAD	-1.549E-11	-7.290E-12	-2.787E-12
75	75	100	G1_power station	0.	0.	0.
75	75	107	G1_power station	0.	0.	0.
75	75	108	G1_power station	0.	0.	0.
75	75	101	G1_power station	0.	0.	0.
75	75	100	G2_power station	328.16	135.48	-30.57
75	75	107	G2_power station	301.85	168.04	-22.37
75	75	108	G2_power station	223.15	128.24	-8.85
75	75	101	G2_power station	259.81	110.87	-17.05
75	75	100	Q_power station	12.14	5.01	-1.13
75	75	107	Q_power station	11.17	6.22	-0.83
75	75	108	Q_power station	8.26	4.74	-0.33
75	75	101	Q_power station	9.61	4.1	-0.63
75	75	100	Q_neve	41.07	28.41	-1.36
75	75	107	Q_neve	39.33	35.73	-1.14

Table 21: Element Stresses - Area Shells, Part 1 of 3

Area	AreaElem	Joint	OutputCase	S11Top	S22Top	S12Top
				KN/m2	KN/m2	KN/m2
75	75	108	Q_neve	29.6	33.02	0.28
75	75	101	Q_neve	32.8	26.61	6.417E-02
75	75	100	Q_manutenzione	12.14	5.01	-1.13
75	75	107	Q_manutenzione	11.17	6.22	-0.83
75	75	108	Q_manutenzione	8.26	4.74	-0.33
75	75	101	Q_manutenzione	9.61	4.1	-0.63
75	75	100	EQ_X	165.03	4.63	15.45
75	75	107	EQ_X	165.64	-0.82	11.58
75	75	108	EQ_X	105.79	2.94	13.5
75	75	101	EQ_X	111.98	-0.74	17.37
75	75	100	EQ_Y	-22.39	-55.24	55.12
75	75	107	EQ_Y	-6.89	-17.53	48.46
75	75	108	EQ_Y	-7.6	-8.41	37.6
75	75	101	EQ_Y	-23.14	-40.55	44.26
76	76	101	DEAD	-4.089E-12	-2.526E-12	-4.406E-12
76	76	108	DEAD	-6.365E-12	7.408E-12	-1.650E-12
76	76	109	DEAD	-1.167E-11	-4.042E-12	9.029E-13
76	76	102	DEAD	-9.398E-12	-1.004E-11	-3.167E-12
76	76	101	G1_power station	0.	0.	0.
76	76	108	G1_power station	0.	0.	0.
76	76	109	G1_power station	0.	0.	0.
76	76	102	G1_power station	0.	0.	0.
76	76	101	G2_power station	259.48	110.8	4.89
76	76	108	G2_power station	223.97	128.4	0.58
76	76	109	G2_power station	108.	127.23	22.51
76	76	102	G2_power station	180.21	91.32	26.82
76	76	101	Q_power station	9.6	4.1	0.18
76	76	108	Q_power station	8.29	4.75	2.135E-02
76	76	109	Q_power station	4.	4.71	0.83
76	76	102	Q_power station	6.67	3.38	0.99
76	76	101	Q_neve	32.78	26.61	2.51
76	76	108	Q_neve	29.7	33.04	1.32
76	76	109	Q_neve	15.13	34.42	3.81
76	76	102	Q_neve	22.37	25.29	5.
76	76	101	Q_manutenzione	9.6	4.1	0.18
76	76	108	Q_manutenzione	8.29	4.75	2.135E-02
76	76	109	Q_manutenzione	4.	4.71	0.83
76	76	102	Q_manutenzione	6.67	3.38	0.99
76	76	101	EQ_X	114.34	-0.27	21.95
76	76	108	EQ_X	106.68	3.12	15.5
76	76	109	EQ_X	51.61	19.96	20.92
76	76	102	EQ_X	69.14	-1.15	27.37
76	76	101	EQ_Y	-31.58	-42.24	33.38

Table 21: Element Stresses - Area Shells, Part 1 of 3

Area	AreaElem	Joint	OutputCase	S11Top	S22Top	S12Top
				KN/m2	KN/m2	KN/m2
76	76	108	EQ_Y	-6.64	-8.21	31.52
76	76	109	EQ_Y	-4.59	-13.93	25.29
76	76	102	EQ_Y	-29.1	-51.86	27.15
77	77	102	DEAD	-6.005E-12	-7.802E-12	-1.153E-12
77	77	109	DEAD	-1.645E-11	-6.917E-12	-1.357E-12
77	77	110	DEAD	6.224E-12	1.015E-12	-1.912E-12
77	77	103	DEAD	-9.437E-12	-8.244E-12	9.187E-13
77	77	102	G1_power station	0.	0.	0.
77	77	109	G1_power station	0.	0.	0.
77	77	110	G1_power station	0.	0.	0.
77	77	103	G1_power station	0.	0.	0.
77	77	102	G2_power station	195.28	94.34	67.38
77	77	109	G2_power station	102.79	126.18	32.36
77	77	110	G2_power station	17.73	141.36	29.55
77	77	103	G2_power station	-93.81	153.78	64.57
77	77	102	Q_power station	7.23	3.49	2.49
77	77	109	Q_power station	3.8	4.67	1.2
77	77	110	Q_power station	0.66	5.23	1.09
77	77	103	Q_power station	-3.47	5.69	2.39
77	77	102	Q_neve	24.09	25.63	9.72
77	77	109	Q_neve	14.56	34.31	4.95
77	77	110	Q_neve	1.93	37.59	4.96
77	77	103	Q_neve	-10.07	33.37	9.74
77	77	102	Q_manutenzione	7.23	3.49	2.49
77	77	109	Q_manutenzione	3.8	4.67	1.2
77	77	110	Q_manutenzione	0.66	5.23	1.09
77	77	103	Q_manutenzione	-3.47	5.69	2.39
77	77	102	EQ_X	72.19	-0.54	39.43
77	77	109	EQ_X	50.41	19.72	21.82
77	77	110	EQ_X	4.7	39.56	20.77
77	77	103	EQ_X	-22.14	31.69	38.38
77	77	102	EQ_Y	-23.63	-50.77	18.49
77	77	109	EQ_Y	-4.5	-13.91	24.22
77	77	110	EQ_Y	-6.1	-24.86	28.98
77	77	103	EQ_Y	15.41	-67.97	23.25
78	78	42	DEAD	1.992E-12	1.071E-11	1.760E-13
78	78	44	DEAD	-4.020E-12	8.621E-12	1.212E-12
78	78	111	DEAD	-4.455E-12	-3.321E-12	2.451E-12
78	78	104	DEAD	-2.219E-12	1.535E-11	2.729E-12
78	78	42	G1_power station	0.	0.	0.
78	78	44	G1_power station	0.	0.	0.
78	78	111	G1_power station	0.	0.	0.
78	78	104	G1_power station	0.	0.	0.

Table 21: Element Stresses - Area Shells, Part 1 of 3

Area	AreaElem	Joint	OutputCase	S11Top	S22Top	S12Top
				KN/m2	KN/m2	KN/m2
78	78	42	G2_power station	95.48	527.56	-25.92
78	78	44	G2_power station	95.48	527.56	25.92
78	78	111	G2_power station	184.08	434.64	25.92
78	78	104	G2_power station	184.08	434.64	-25.92
78	78	42	Q_power station	3.53	19.52	-0.96
78	78	44	Q_power station	3.53	19.52	0.96
78	78	111	Q_power station	6.81	16.08	0.96
78	78	104	Q_power station	6.81	16.08	-0.96
78	78	42	Q_neve	12.73	61.79	-2.05
78	78	44	Q_neve	12.73	61.79	2.05
78	78	111	Q_neve	27.19	55.94	2.05
78	78	104	Q_neve	27.19	55.94	-2.05
78	78	42	Q_manutenzione	3.53	19.52	-0.96
78	78	44	Q_manutenzione	3.53	19.52	0.96
78	78	111	Q_manutenzione	6.81	16.08	0.96
78	78	104	Q_manutenzione	6.81	16.08	-0.96
78	78	42	EQ_X	266.17	85.54	-20.24
78	78	44	EQ_X	266.08	85.52	17.96
78	78	111	EQ_X	241.76	2.3	17.95
78	78	104	EQ_X	241.85	2.32	-20.25
78	78	42	EQ_Y	-22.8	-97.06	32.81
78	78	44	EQ_Y	23.22	102.43	32.96
78	78	111	EQ_Y	29.03	88.68	27.07
78	78	104	EQ_Y	-28.63	-83.4	26.92
79	79	104	DEAD	-4.691E-12	1.642E-11	3.205E-13
79	79	111	DEAD	2.977E-12	-5.139E-13	1.837E-12
79	79	112	DEAD	-2.352E-13	2.297E-12	-1.196E-12
79	79	105	DEAD	-3.469E-12	5.932E-12	-2.713E-12
79	79	104	G1_power station	0.	0.	0.
79	79	111	G1_power station	0.	0.	0.
79	79	112	G1_power station	0.	0.	0.
79	79	105	G1_power station	0.	0.	0.
79	79	104	G2_power station	185.57	434.94	-31.98
79	79	111	G2_power station	185.57	434.94	31.98
79	79	112	G2_power station	287.68	318.86	31.98
79	79	105	G2_power station	287.68	318.86	-31.98
79	79	104	Q_power station	6.87	16.09	-1.18
79	79	111	Q_power station	6.87	16.09	1.18
79	79	112	Q_power station	10.64	11.8	1.18
79	79	105	Q_power station	10.64	11.8	-1.18
79	79	104	Q_neve	27.31	55.97	-2.59
79	79	111	Q_neve	27.31	55.97	2.59
79	79	112	Q_neve	39.14	47.28	2.59

Table 21: Element Stresses - Area Shells, Part 1 of 3

Area	AreaElem	Joint	OutputCase	S11Top	S22Top	S12Top
				KN/m2	KN/m2	KN/m2
79	79	105	Q_neve	39.14	47.28	-2.59
79	79	104	Q_manutenzione	6.87	16.09	-1.18
79	79	111	Q_manutenzione	6.87	16.09	1.18
79	79	112	Q_manutenzione	10.64	11.8	1.18
79	79	105	Q_manutenzione	10.64	11.8	-1.18
79	79	104	EQ_X	267.96	7.54	-7.98
79	79	111	EQ_X	268.08	7.56	6.61
79	79	112	EQ_X	297.47	-7.06	7.11
79	79	105	EQ_X	297.34	-7.08	-7.48
79	79	104	EQ_Y	-22.03	-82.08	23.3
79	79	111	EQ_Y	23.01	87.48	23.41
79	79	112	EQ_Y	-9.84	72.69	28.21
79	79	105	EQ_Y	10.75	-67.66	28.1
80	80	105	DEAD	1.382E-11	1.108E-11	-4.379E-13
80	80	112	DEAD	-3.670E-12	9.694E-13	-1.955E-12
80	80	113	DEAD	1.017E-12	3.971E-12	-4.379E-13
80	80	106	DEAD	-5.471E-12	1.244E-11	1.079E-12
80	80	105	G1_power station	0.	0.	0.
80	80	112	G1_power station	0.	0.	0.
80	80	113	G1_power station	0.	0.	0.
80	80	106	G1_power station	0.	0.	0.
80	80	105	G2_power station	289.49	319.22	-22.98
80	80	112	G2_power station	289.49	319.22	22.98
80	80	113	G2_power station	332.34	229.69	22.98
80	80	106	G2_power station	332.34	229.69	-22.98
80	80	105	Q_power station	10.71	11.81	-0.85
80	80	112	Q_power station	10.71	11.81	0.85
80	80	113	Q_power station	12.3	8.5	0.85
80	80	106	Q_power station	12.3	8.5	-0.85
80	80	105	Q_neve	39.3	47.31	-1.8
80	80	112	Q_neve	39.3	47.31	1.8
80	80	113	Q_neve	43.39	40.43	1.8
80	80	106	Q_neve	43.39	40.43	-1.8
80	80	105	Q_manutenzione	10.71	11.81	-0.85
80	80	112	Q_manutenzione	10.71	11.81	0.85
80	80	113	Q_manutenzione	12.3	8.5	0.85
80	80	106	Q_manutenzione	12.3	8.5	-0.85
80	80	105	EQ_X	296.3	-7.29	4.35
80	80	112	EQ_X	296.85	-7.18	-3.68
80	80	113	EQ_X	230.98	-4.48	-3.23
80	80	106	EQ_X	230.42	-4.59	4.8
80	80	105	EQ_Y	3.97	-69.01	38.65
80	80	112	EQ_Y	-2.27	74.2	38.98

Table 21: Element Stresses - Area Shells, Part 1 of 3

Area	AreaElem	Joint	OutputCase	S11Top	S22Top	S12Top
				KN/m2	KN/m2	KN/m2
80	80	113	EQ_Y	1.47	44.93	48.29
80	80	106	EQ_Y	0.27	-39.57	47.95
81	81	106	DEAD	1.044E-12	1.446E-11	-1.357E-12
81	81	113	DEAD	-2.250E-12	1.549E-12	1.677E-12
81	81	114	DEAD	-3.507E-12	8.096E-13	9.187E-13
81	81	107	DEAD	-7.274E-12	6.004E-12	-2.115E-12
81	81	106	G1_power station	0.	0.	0.
81	81	113	G1_power station	0.	0.	0.
81	81	114	G1_power station	0.	0.	0.
81	81	107	G1_power station	0.	0.	0.
81	81	106	G2_power station	331.8	229.59	-12.99
81	81	113	G2_power station	331.8	229.59	12.99
81	81	114	G2_power station	301.96	168.19	12.99
81	81	107	G2_power station	301.96	168.19	-12.99
81	81	106	Q_power station	12.28	8.49	-0.48
81	81	113	Q_power station	12.28	8.49	0.48
81	81	114	Q_power station	11.17	6.22	0.48
81	81	107	Q_power station	11.17	6.22	-0.48
81	81	106	Q_neve	43.35	40.42	-0.91
81	81	113	Q_neve	43.35	40.42	0.91
81	81	114	Q_neve	39.33	35.75	0.91
81	81	107	Q_neve	39.33	35.75	-0.91
81	81	106	Q_manutenzione	12.28	8.49	-0.48
81	81	113	Q_manutenzione	12.28	8.49	0.48
81	81	114	Q_manutenzione	11.17	6.22	0.48
81	81	107	Q_manutenzione	11.17	6.22	-0.48
81	81	106	EQ_X	232.5	-4.18	4.96
81	81	113	EQ_X	233.	-4.08	-2.68
81	81	114	EQ_X	164.17	7.475E-02	-1.92
81	81	107	EQ_X	163.67	-2.643E-02	5.72
81	81	106	EQ_Y	1.43	-39.34	50.99
81	81	113	EQ_Y	1.08	44.85	51.13
81	81	114	EQ_Y	7.81	29.81	46.72
81	81	107	EQ_Y	-5.16	-23.62	46.58
82	82	107	DEAD	-1.239E-11	5.490E-12	-2.072E-12
82	82	114	DEAD	-6.750E-12	-3.979E-13	-1.314E-12
82	82	115	DEAD	-1.760E-11	2.172E-12	-5.552E-13
82	82	108	DEAD	-2.390E-12	-5.896E-12	-1.314E-12
82	82	107	G1_power station	0.	0.	0.
82	82	114	G1_power station	0.	0.	0.
82	82	115	G1_power station	0.	0.	0.
82	82	108	G1_power station	0.	0.	0.
82	82	107	G2_power station	301.88	168.17	-5.24

Table 21: Element Stresses - Area Shells, Part 1 of 3

Area	AreaElem	Joint	OutputCase	S11Top	S22Top	S12Top
				KN/m2	KN/m2	KN/m2
82	82	114	G2_power station	301.88	168.17	5.24
82	82	115	G2_power station	223.53	130.12	5.24
82	82	108	G2_power station	223.53	130.12	-5.24
82	82	107	Q_power station	11.17	6.22	-0.19
82	82	114	Q_power station	11.17	6.22	0.19
82	82	115	Q_power station	8.27	4.81	0.19
82	82	108	Q_power station	8.27	4.81	-0.19
82	82	107	Q_neve	39.34	35.75	-0.14
82	82	114	Q_neve	39.34	35.75	0.14
82	82	115	Q_neve	29.64	33.22	0.14
82	82	108	Q_neve	29.64	33.22	-0.14
82	82	107	Q_manutenzione	11.17	6.22	-0.19
82	82	114	Q_manutenzione	11.17	6.22	0.19
82	82	115	Q_manutenzione	8.27	4.81	0.19
82	82	108	Q_manutenzione	8.27	4.81	-0.19
82	82	107	EQ_X	165.89	0.42	6.07
82	82	114	EQ_X	165.09	0.26	-1.23
82	82	115	EQ_X	105.31	4.35	-1.04
82	82	108	EQ_X	106.11	4.51	6.26
82	82	107	EQ_Y	-8.23	-24.23	41.47
82	82	114	EQ_Y	10.76	30.4	41.73
82	82	115	EQ_Y	12.83	28.04	37.6
82	82	108	EQ_Y	-9.39	-17.33	37.34
83	83	108	DEAD	-6.492E-12	-5.213E-12	1.110E-12
83	83	115	DEAD	-1.367E-11	1.565E-12	2.072E-12
83	83	116	DEAD	-1.294E-11	-7.868E-12	4.144E-12
83	83	109	DEAD	-1.282E-11	1.281E-12	5.552E-13
83	83	108	G1_power station	0.	0.	0.
83	83	115	G1_power station	0.	0.	0.
83	83	116	G1_power station	0.	0.	0.
83	83	109	G1_power station	0.	0.	0.
83	83	108	G2_power station	224.34	130.28	3.69
83	83	115	G2_power station	224.34	130.28	-3.69
83	83	116	G2_power station	107.08	122.6	-3.69
83	83	109	G2_power station	107.08	122.6	3.69
83	83	108	Q_power station	8.3	4.82	0.14
83	83	115	Q_power station	8.3	4.82	-0.14
83	83	116	Q_power station	3.96	4.54	-0.14
83	83	109	Q_power station	3.96	4.54	0.14
83	83	108	Q_neve	29.74	33.24	0.85
83	83	115	Q_neve	29.74	33.24	-0.85
83	83	116	Q_neve	15.03	33.92	-0.85
83	83	109	Q_neve	15.03	33.92	0.85

Table 21: Element Stresses - Area Shells, Part 1 of 3

Area	AreaElem	Joint	OutputCase	S11Top	S22Top	S12Top
				KN/m2	KN/m2	KN/m2
83	83	108	Q_manutenzione	8.3	4.82	0.14
83	83	115	Q_manutenzione	8.3	4.82	-0.14
83	83	116	Q_manutenzione	3.96	4.54	-0.14
83	83	109	Q_manutenzione	3.96	4.54	0.14
83	83	108	EQ_X	106.99	4.68	8.05
83	83	115	EQ_X	107.29	4.74	-2.18
83	83	116	EQ_X	51.35	17.27	-2.99
83	83	109	EQ_X	51.06	17.21	7.24
83	83	108	EQ_Y	-8.42	-17.14	30.94
83	83	115	EQ_Y	9.47	27.37	29.86
83	83	116	EQ_Y	6.43	28.12	26.47
83	83	109	EQ_Y	-4.48	-13.38	27.55
84	84	109	DEAD	-1.546E-11	-9.574E-13	8.328E-13
84	84	116	DEAD	-7.732E-12	-8.781E-12	3.866E-12
84	84	117	DEAD	-3.040E-12	-4.844E-12	3.108E-12
84	84	110	DEAD	5.160E-12	-8.022E-12	7.438E-14
84	84	109	G1_power station	0.	0.	0.
84	84	116	G1_power station	0.	0.	0.
84	84	117	G1_power station	0.	0.	0.
84	84	110	G1_power station	0.	0.	0.
84	84	109	G2_power station	101.86	121.55	10.05
84	84	116	G2_power station	101.86	121.55	-10.05
84	84	117	G2_power station	19.03	147.87	-10.05
84	84	110	G2_power station	19.03	147.87	10.05
84	84	109	Q_power station	3.77	4.5	0.37
84	84	116	Q_power station	3.77	4.5	-0.37
84	84	117	Q_power station	0.7	5.47	-0.37
84	84	110	Q_power station	0.7	5.47	0.37
84	84	109	Q_neve	14.46	33.81	1.63
84	84	116	Q_neve	14.46	33.81	-1.63
84	84	117	Q_neve	2.07	38.27	-1.63
84	84	110	Q_neve	2.07	38.27	1.63
84	84	109	Q_manutenzione	3.77	4.5	0.37
84	84	116	Q_manutenzione	3.77	4.5	-0.37
84	84	117	Q_manutenzione	0.7	5.47	-0.37
84	84	110	Q_manutenzione	0.7	5.47	0.37
84	84	109	EQ_X	49.86	16.97	7.78
84	84	116	EQ_X	50.23	17.04	-5.79
84	84	117	EQ_X	4.75	38.04	-5.34
84	84	110	EQ_X	4.38	37.96	8.23
84	84	109	EQ_Y	-4.39	-13.36	27.85
84	84	116	EQ_Y	4.49	27.73	27.92
84	84	117	EQ_Y	5.03	33.36	26.77

Table 21: Element Stresses - Area Shells, Part 1 of 3

Area	AreaElem	Joint	OutputCase	S11Top	S22Top	S12Top
				KN/m2	KN/m2	KN/m2
84	84	110	EQ_Y	-4.21	-15.43	26.7
85	85	44	DEAD	-1.389E-12	-1.181E-13	2.291E-12
85	85	46	DEAD	-7.249E-12	3.772E-12	-2.619E-13
85	85	118	DEAD	2.593E-12	6.139E-12	7.741E-13
85	85	111	DEAD	-4.026E-12	1.079E-11	2.013E-12
85	85	44	G1_power station	0.	0.	0.
85	85	46	G1_power station	0.	0.	0.
85	85	118	G1_power station	0.	0.	0.
85	85	111	G1_power station	0.	0.	0.
85	85	44	G2_power station	92.91	514.73	63.93
85	85	46	G2_power station	-64.39	341.23	126.38
85	85	118	G2_power station	124.61	203.86	151.56
85	85	111	G2_power station	185.52	441.88	89.11
85	85	44	Q_power station	3.44	19.05	2.37
85	85	46	Q_power station	-2.38	12.63	4.68
85	85	118	Q_power station	4.61	7.54	5.61
85	85	111	Q_power station	6.86	16.35	3.3
85	85	44	Q_neve	12.49	60.63	4.93
85	85	46	Q_neve	-1.95	41.84	10.02
85	85	118	Q_neve	21.07	31.72	12.24
85	85	111	Q_neve	27.32	56.59	7.15
85	85	44	Q_manutenzione	3.44	19.05	2.37
85	85	46	Q_manutenzione	-2.38	12.63	4.68
85	85	118	Q_manutenzione	4.61	7.54	5.61
85	85	111	Q_manutenzione	6.86	16.35	3.3
85	85	44	EQ_X	264.81	79.15	40.63
85	85	46	EQ_X	-227.03	-41.47	89.88
85	85	118	EQ_X	555.13	3.86	121.07
85	85	111	EQ_X	243.53	11.18	71.83
85	85	44	EQ_Y	30.07	136.7	38.13
85	85	46	EQ_Y	203.05	221.	11.58
85	85	118	EQ_Y	-28.49	354.44	5.53
85	85	111	EQ_Y	26.69	77.02	32.09
86	86	111	DEAD	1.977E-12	1.128E-11	4.379E-13
86	86	118	DEAD	-1.392E-12	6.034E-12	1.751E-12
86	86	119	DEAD	5.959E-12	1.526E-11	4.379E-13
86	86	112	DEAD	3.253E-12	1.957E-12	1.751E-12
86	86	111	G1_power station	0.	0.	0.
86	86	118	G1_power station	0.	0.	0.
86	86	119	G1_power station	0.	0.	0.
86	86	112	G1_power station	0.	0.	0.
86	86	111	G2_power station	187.02	442.18	100.71
86	86	118	G2_power station	133.73	205.68	149.08

Table 21: Element Stresses - Area Shells, Part 1 of 3

Area	AreaElem	Joint	OutputCase	S11Top	S22Top	S12Top
				KN/m2	KN/m2	KN/m2
86	86	119	G2_power station	332.1	183.7	136.95
86	86	112	G2_power station	287.4	317.46	88.58
86	86	111	Q_power station	6.92	16.36	3.73
86	86	118	Q_power station	4.95	7.61	5.52
86	86	119	Q_power station	12.29	6.8	5.07
86	86	112	Q_power station	10.63	11.75	3.28
86	86	111	Q_neve	27.44	56.61	8.19
86	86	118	Q_neve	21.9	31.89	12.05
86	86	119	Q_neve	42.2	31.29	11.
86	86	112	Q_neve	39.12	47.15	7.14
86	86	111	Q_manutenzione	6.92	16.36	3.73
86	86	118	Q_manutenzione	4.95	7.61	5.52
86	86	119	Q_manutenzione	12.29	6.8	5.07
86	86	112	Q_manutenzione	10.63	11.75	3.28
86	86	111	EQ_X	269.86	16.44	36.13
86	86	118	EQ_X	480.38	-11.1	24.96
86	86	119	EQ_X	305.76	33.48	-11.07
86	86	112	EQ_X	295.74	-15.71	0.1
86	86	111	EQ_Y	20.68	75.81	23.04
86	86	118	EQ_Y	-10.82	357.97	65.99
86	86	119	EQ_Y	-6.48	149.05	85.81
86	86	112	EQ_Y	-8.91	77.35	42.86
87	87	112	DEAD	-2.904E-12	4.701E-13	-1.196E-12
87	87	119	DEAD	9.423E-12	1.603E-11	3.205E-13
87	87	120	DEAD	-1.144E-11	-1.236E-12	3.205E-13
87	87	113	DEAD	3.166E-12	7.501E-12	-1.196E-12
87	87	112	G1_power station	0.	0.	0.
87	87	119	G1_power station	0.	0.	0.
87	87	120	G1_power station	0.	0.	0.
87	87	113	G1_power station	0.	0.	0.
87	87	112	G2_power station	289.21	317.82	76.12
87	87	119	G2_power station	326.64	182.61	105.07
87	87	120	G2_power station	363.59	164.01	84.9
87	87	113	G2_power station	332.17	228.83	55.95
87	87	112	Q_power station	10.7	11.76	2.82
87	87	119	Q_power station	12.09	6.76	3.89
87	87	120	Q_power station	13.45	6.07	3.14
87	87	113	Q_power station	12.29	8.47	2.07
87	87	112	Q_neve	39.28	47.19	6.05
87	87	119	Q_neve	41.71	31.19	8.21
87	87	120	Q_neve	45.35	30.38	6.43
87	87	113	Q_neve	43.38	40.35	4.27
87	87	112	Q_manutenzione	10.7	11.76	2.82

Table 21: Element Stresses - Area Shells, Part 1 of 3

Area	AreaElem	Joint	OutputCase	S11Top	S22Top	S12Top
				KN/m2	KN/m2	KN/m2
87	87	119	Q_manutenzione	12.09	6.76	3.89
87	87	120	Q_manutenzione	13.45	6.07	3.14
87	87	113	Q_manutenzione	12.29	8.47	2.07
87	87	112	EQ_X	295.12	-15.83	-10.06
87	87	119	EQ_X	317.25	35.77	-14.63
87	87	120	EQ_X	234.22	17.76	-16.28
87	87	113	EQ_X	231.33	-2.73	-11.71
87	87	112	EQ_Y	-1.34	78.86	58.96
87	87	119	EQ_Y	-13.36	147.67	81.
87	87	120	EQ_Y	12.94	89.11	78.99
87	87	113	EQ_Y	0.53	40.27	56.95
88	88	113	DEAD	-4.059E-12	4.135E-12	1.153E-12
88	88	120	DEAD	-8.806E-12	-1.787E-12	3.225E-12
88	88	121	DEAD	-3.111E-12	2.050E-12	1.912E-12
88	88	114	DEAD	-3.782E-12	5.829E-13	2.467E-12
88	88	113	G1_power station	0.	0.	0.
88	88	120	G1_power station	0.	0.	0.
88	88	121	G1_power station	0.	0.	0.
88	88	114	G1_power station	0.	0.	0.
88	88	113	G2_power station	331.63	228.72	44.7
88	88	120	G2_power station	363.72	164.03	62.54
88	88	121	G2_power station	328.14	135.48	48.14
88	88	114	G2_power station	301.93	168.05	30.29
88	88	113	Q_power station	12.27	8.46	1.65
88	88	120	Q_power station	13.46	6.07	2.31
88	88	121	Q_power station	12.14	5.01	1.78
88	88	114	Q_power station	11.17	6.22	1.12
88	88	113	Q_neve	43.34	40.34	3.27
88	88	120	Q_neve	45.37	30.38	4.42
88	88	121	Q_neve	41.07	28.41	3.08
88	88	114	Q_neve	39.32	35.73	1.93
88	88	113	Q_manutenzione	12.27	8.46	1.65
88	88	120	Q_manutenzione	13.46	6.07	2.31
88	88	121	Q_manutenzione	12.14	5.01	1.78
88	88	114	Q_manutenzione	11.17	6.22	1.12
88	88	113	EQ_X	233.35	-2.33	-10.11
88	88	120	EQ_X	234.01	17.71	-14.4
88	88	121	EQ_X	166.73	6.61	-13.1
88	88	114	EQ_X	164.27	0.55	-8.81
88	88	113	EQ_Y	0.15	40.19	58.51
88	88	120	EQ_Y	12.88	89.1	68.98
88	88	121	EQ_Y	21.56	60.95	64.93
88	88	114	EQ_Y	6.51	23.33	54.45

Table 21: Element Stresses - Area Shells, Part 1 of 3

Area	AreaElem	Joint	OutputCase	S11Top	S22Top	S12Top
				KN/m2	KN/m2	KN/m2
89	89	114	DEAD	-5.077E-12	-3.206E-12	1.490E-12
89	89	121	DEAD	-3.128E-12	2.822E-12	3.487E-12
89	89	122	DEAD	-1.977E-11	-1.070E-11	3.765E-12
89	89	115	DEAD	-2.057E-11	-7.037E-12	4.536E-13
89	89	114	G1_power station	0.	0.	0.
89	89	121	G1_power station	0.	0.	0.
89	89	122	G1_power station	0.	0.	0.
89	89	115	G1_power station	0.	0.	0.
89	89	114	G2_power station	301.85	168.04	22.37
89	89	121	G2_power station	328.16	135.48	30.57
89	89	122	G2_power station	259.81	110.87	17.05
89	89	115	G2_power station	223.15	128.24	8.85
89	89	114	Q_power station	11.17	6.22	0.83
89	89	121	Q_power station	12.14	5.01	1.13
89	89	122	Q_power station	9.61	4.1	0.63
89	89	115	Q_power station	8.26	4.74	0.33
89	89	114	Q_neve	39.33	35.73	1.14
89	89	121	Q_neve	41.07	28.41	1.36
89	89	122	Q_neve	32.8	26.61	-6.417E-02
89	89	115	Q_neve	29.6	33.02	-0.28
89	89	114	Q_manutenzione	11.17	6.22	0.83
89	89	121	Q_manutenzione	12.14	5.01	1.13
89	89	122	Q_manutenzione	9.61	4.1	0.63
89	89	115	Q_manutenzione	8.26	4.74	0.33
89	89	114	EQ_X	165.19	0.74	-7.84
89	89	121	EQ_X	165.79	6.43	-13.37
89	89	122	EQ_X	112.87	1.77	-13.83
89	89	115	EQ_X	105.48	5.21	-8.3
89	89	114	EQ_Y	9.46	23.92	49.13
89	89	121	EQ_Y	24.96	61.63	55.94
89	89	122	EQ_Y	26.04	48.59	43.84
89	89	115	EQ_Y	10.51	16.45	37.03
90	90	115	DEAD	-1.659E-11	-8.067E-12	3.663E-12
90	90	122	DEAD	-1.600E-11	-9.011E-12	2.146E-12
90	90	123	DEAD	-1.214E-11	-1.082E-11	2.905E-12
90	90	116	DEAD	-9.455E-12	-1.333E-12	4.421E-12
90	90	115	G1_power station	0.	0.	0.
90	90	122	G1_power station	0.	0.	0.
90	90	123	G1_power station	0.	0.	0.
90	90	116	G1_power station	0.	0.	0.
90	90	115	G2_power station	223.97	128.4	-0.58
90	90	122	G2_power station	259.48	110.8	-4.89
90	90	123	G2_power station	180.21	91.32	-26.82

Table 21: Element Stresses - Area Shells, Part 1 of 3

Area	AreaElem	Joint	OutputCase	S11Top	S22Top	S12Top
				KN/m2	KN/m2	KN/m2
90	90	116	G2_power station	108.	127.23	-22.51
90	90	115	Q_power station	8.29	4.75	-2.135E-02
90	90	122	Q_power station	9.6	4.1	-0.18
90	90	123	Q_power station	6.67	3.38	-0.99
90	90	116	Q_power station	4.	4.71	-0.83
90	90	115	Q_neve	29.7	33.04	-1.32
90	90	122	Q_neve	32.78	26.61	-2.51
90	90	123	Q_neve	22.37	25.29	-5.
90	90	116	Q_neve	15.13	34.42	-3.81
90	90	115	Q_manutenzione	8.29	4.75	-2.135E-02
90	90	122	Q_manutenzione	9.6	4.1	-0.18
90	90	123	Q_manutenzione	6.67	3.38	-0.99
90	90	116	Q_manutenzione	4.	4.71	-0.83
90	90	115	EQ_X	107.46	5.61	-9.66
90	90	122	EQ_X	111.42	1.48	-17.05
90	90	123	EQ_X	65.01	-5.43	-22.32
90	90	116	EQ_X	51.18	16.41	-14.92
90	90	115	EQ_Y	7.15	15.78	29.62
90	90	122	EQ_Y	35.48	50.48	31.83
90	90	123	EQ_Y	34.64	68.28	25.18
90	90	116	EQ_Y	6.74	29.67	22.98
91	91	116	DEAD	-6.053E-12	-5.117E-13	4.160E-12
91	91	123	DEAD	-1.668E-11	-8.853E-12	5.196E-12
91	91	124	DEAD	4.849E-12	-2.882E-12	4.160E-12
91	91	117	DEAD	-3.407E-12	-6.198E-12	4.437E-12
91	91	116	G1_power station	0.	0.	0.
91	91	123	G1_power station	0.	0.	0.
91	91	124	G1_power station	0.	0.	0.
91	91	117	G1_power station	0.	0.	0.
91	91	116	G2_power station	102.79	126.18	-32.36
91	91	123	G2_power station	195.28	94.34	-67.38
91	91	124	G2_power station	-93.81	153.78	-64.57
91	91	117	G2_power station	17.73	141.36	-29.55
91	91	116	Q_power station	3.8	4.67	-1.2
91	91	123	Q_power station	7.23	3.49	-2.49
91	91	124	Q_power station	-3.47	5.69	-2.39
91	91	117	Q_power station	0.66	5.23	-1.09
91	91	116	Q_neve	14.56	34.31	-4.95
91	91	123	Q_neve	24.09	25.63	-9.72
91	91	124	Q_neve	-10.07	33.37	-9.74
91	91	117	Q_neve	1.93	37.59	-4.96
91	91	116	Q_manutenzione	3.8	4.67	-1.2
91	91	123	Q_manutenzione	7.23	3.49	-2.49

Table 21: Element Stresses - Area Shells, Part 1 of 3

Area	AreaElem	Joint	OutputCase	S11Top	S22Top	S12Top
				KN/m2	KN/m2	KN/m2
91	91	124	Q_manutenzione	-3.47	5.69	-2.39
91	91	117	Q_manutenzione	0.66	5.23	-1.09
91	91	116	EQ_X	50.06	16.19	-18.08
91	91	123	EQ_X	73.87	-3.66	-34.06
91	91	124	EQ_X	-21.16	25.02	-36.52
91	91	117	EQ_X	3.64	32.48	-20.55
91	91	116	EQ_Y	4.8	29.28	23.05
91	91	123	EQ_Y	23.43	66.04	15.42
91	91	124	EQ_Y	-14.8	87.3	21.8
91	91	117	EQ_Y	7.22	44.29	29.43
92	92	46	DEAD	-5.431E-12	3.797E-12	-4.379E-13
92	92	63	DEAD	-1.510E-13	1.391E-12	-4.379E-13
92	92	125	DEAD	-3.819E-12	-4.071E-12	-4.379E-13
92	92	118	DEAD	1.081E-12	9.829E-12	-4.379E-13
92	92	46	G1_power station	0.	0.	0.
92	92	63	G1_power station	0.	0.	0.
92	92	125	G1_power station	0.	0.	0.
92	92	118	G1_power station	0.	0.	0.
92	92	46	G2_power station	-59.96	363.36	181.17
92	92	63	G2_power station	-663.97	-629.77	149.61
92	92	125	G2_power station	225.9	-112.24	194.23
92	92	118	G2_power station	122.85	195.05	225.79
92	92	46	Q_power station	-2.22	13.44	6.7
92	92	63	Q_power station	-24.57	-23.3	5.54
92	92	125	Q_power station	8.36	-4.15	7.19
92	92	118	Q_power station	4.55	7.22	8.35
92	92	46	Q_neve	-1.55	43.86	14.52
92	92	63	Q_neve	-56.66	-52.27	11.45
92	92	125	Q_neve	28.37	-4.73	15.39
92	92	118	Q_neve	20.92	30.93	18.46
92	92	46	Q_manutenzione	-2.22	13.44	6.7
92	92	63	Q_manutenzione	-24.57	-23.3	5.54
92	92	125	Q_manutenzione	8.36	-4.15	7.19
92	92	118	Q_manutenzione	4.55	7.22	8.35
92	92	46	EQ_X	-227.96	-46.15	320.95
92	92	63	EQ_X	2037.91	305.88	286.35
92	92	125	EQ_X	277.12	211.45	-48.94
92	92	118	EQ_X	549.85	-22.56	-14.34
92	92	46	EQ_Y	170.91	60.33	-55.11
92	92	63	EQ_Y	309.46	2029.85	343.6
92	92	125	EQ_Y	-87.14	-268.23	385.25
92	92	118	EQ_Y	-4.63	473.74	-13.46
93	93	118	DEAD	-1.432E-12	9.025E-12	1.173E-13

Table 21: Element Stresses - Area Shells, Part 1 of 3

Area	AreaElem	Joint	OutputCase	S11Top	S22Top	S12Top
				KN/m2	KN/m2	KN/m2
93	93	125	DEAD	-1.341E-11	-7.354E-12	8.757E-13
93	93	126	DEAD	4.825E-12	-5.194E-12	1.634E-12
93	93	119	DEAD	4.981E-12	7.245E-12	8.757E-13
93	93	118	G1_power station	0.	0.	0.
93	93	125	G1_power station	0.	0.	0.
93	93	126	G1_power station	0.	0.	0.
93	93	119	G1_power station	0.	0.	0.
93	93	118	G2_power station	131.97	196.88	183.41
93	93	125	G2_power station	206.25	-116.17	165.74
93	93	126	G2_power station	350.16	43.75	131.85
93	93	119	G2_power station	331.57	181.07	149.52
93	93	118	Q_power station	4.88	7.28	6.79
93	93	125	Q_power station	7.63	-4.3	6.13
93	93	126	Q_power station	12.96	1.62	4.88
93	93	119	Q_power station	12.27	6.7	5.53
93	93	118	Q_neve	21.74	31.09	14.71
93	93	125	Q_neve	26.58	-5.09	12.88
93	93	126	Q_neve	41.82	9.88	9.92
93	93	119	Q_neve	42.15	31.06	11.75
93	93	118	Q_manutenzione	4.88	7.28	6.79
93	93	125	Q_manutenzione	7.63	-4.3	6.13
93	93	126	Q_manutenzione	12.96	1.62	4.88
93	93	119	Q_manutenzione	12.27	6.7	5.53
93	93	118	EQ_X	475.09	-37.51	-28.56
93	93	125	EQ_X	393.9	234.81	-16.11
93	93	126	EQ_X	359.02	66.08	-0.74
93	93	119	EQ_X	306.44	36.86	-13.2
93	93	118	EQ_Y	13.04	477.27	180.28
93	93	125	EQ_Y	-85.88	-267.98	155.04
93	93	126	EQ_Y	46.88	212.06	130.95
93	93	119	EQ_Y	-15.79	102.51	156.18
94	94	119	DEAD	8.670E-12	8.297E-12	2.467E-12
94	94	126	DEAD	-3.015E-12	-6.781E-12	3.225E-12
94	94	127	DEAD	-4.128E-12	-7.914E-12	3.225E-12
94	94	120	DEAD	-1.050E-11	3.552E-12	2.467E-12
94	94	119	G1_power station	0.	0.	0.
94	94	126	G1_power station	0.	0.	0.
94	94	127	G1_power station	0.	0.	0.
94	94	120	G1_power station	0.	0.	0.
94	94	119	G2_power station	326.12	179.98	118.34
94	94	126	G2_power station	361.02	45.92	118.
94	94	127	G2_power station	400.21	79.96	96.67
94	94	120	G2_power station	363.32	162.67	97.01

Table 21: Element Stresses - Area Shells, Part 1 of 3

Area	AreaElem	Joint	OutputCase	S11Top	S22Top	S12Top
				KN/m2	KN/m2	KN/m2
94	94	119	Q_power station	12.07	6.66	4.38
94	94	126	Q_power station	13.36	1.7	4.37
94	94	127	Q_power station	14.81	2.96	3.58
94	94	120	Q_power station	13.44	6.02	3.59
94	94	119	Q_neve	41.67	30.96	9.03
94	94	126	Q_neve	42.81	10.07	8.75
94	94	127	Q_neve	46.81	13.53	6.87
94	94	120	Q_neve	45.33	30.26	7.15
94	94	119	Q_manutenzione	12.07	6.66	4.38
94	94	126	Q_manutenzione	13.36	1.7	4.37
94	94	127	Q_manutenzione	14.81	2.96	3.58
94	94	120	Q_manutenzione	13.44	6.02	3.59
94	94	119	EQ_X	317.92	39.16	-13.05
94	94	126	EQ_X	337.53	61.78	-6.89
94	94	127	EQ_X	246.59	26.43	-9.4
94	94	120	EQ_X	233.85	15.91	-15.56
94	94	119	EQ_Y	-22.67	101.13	107.1
94	94	126	EQ_Y	44.31	211.55	142.37
94	94	127	EQ_Y	34.35	51.6	126.39
94	94	120	EQ_Y	15.56	102.21	91.12
95	95	120	DEAD	-7.923E-12	2.677E-12	3.620E-12
95	95	127	DEAD	-1.731E-11	-9.055E-12	3.620E-12
95	95	128	DEAD	-6.691E-12	-4.812E-12	5.137E-12
95	95	121	DEAD	-2.233E-12	-1.946E-12	5.137E-12
95	95	120	G1_power station	0.	0.	0.
95	95	127	G1_power station	0.	0.	0.
95	95	128	G1_power station	0.	0.	0.
95	95	121	G1_power station	0.	0.	0.
95	95	120	G2_power station	363.45	162.7	75.04
95	95	127	G2_power station	401.89	80.3	78.35
95	95	128	G2_power station	366.02	79.5	59.08
95	95	121	G2_power station	328.08	135.15	55.78
95	95	120	Q_power station	13.45	6.02	2.78
95	95	127	Q_power station	14.87	2.97	2.9
95	95	128	Q_power station	13.54	2.94	2.19
95	95	121	Q_power station	12.14	5.	2.06
95	95	120	Q_neve	45.34	30.26	5.18
95	95	127	Q_neve	46.96	13.56	5.19
95	95	128	Q_neve	42.93	13.75	3.39
95	95	121	Q_neve	41.06	28.37	3.38
95	95	120	Q_manutenzione	13.45	6.02	2.78
95	95	127	Q_manutenzione	14.87	2.97	2.9
95	95	128	Q_manutenzione	13.54	2.94	2.19

Table 21: Element Stresses - Area Shells, Part 1 of 3

Area	AreaElem	Joint	OutputCase	S11Top	S22Top	S12Top
				KN/m2	KN/m2	KN/m2
95	95	121	Q_manutenzione	12.14	5.	2.06
95	95	120	EQ_X	233.64	15.87	-14.48
95	95	127	EQ_X	243.67	25.85	-14.93
95	95	128	EQ_X	173.64	8.64	-16.63
95	95	121	EQ_X	166.58	5.85	-16.17
95	95	120	EQ_Y	15.5	102.2	89.58
95	95	127	EQ_Y	27.28	50.19	96.98
95	95	128	EQ_Y	38.54	55.94	81.63
95	95	121	EQ_Y	20.65	56.43	74.23
96	96	121	DEAD	-6.466E-12	-2.283E-12	5.676E-12
96	96	128	DEAD	-4.011E-12	-3.657E-12	7.268E-12
96	96	129	DEAD	-1.329E-11	-4.558E-12	2.643E-12
96	96	122	DEAD	-1.624E-11	-5.648E-12	4.992E-12
96	96	121	G1_power station	0.	0.	0.
96	96	128	G1_power station	0.	0.	0.
96	96	129	G1_power station	0.	0.	0.
96	96	122	G1_power station	0.	0.	0.
96	96	121	G2_power station	328.1	135.16	38.53
96	96	128	G2_power station	366.49	79.59	39.11
96	96	129	G2_power station	308.22	77.32	19.72
96	96	122	G2_power station	259.56	109.59	19.15
96	96	121	Q_power station	12.14	5.	1.43
96	96	128	Q_power station	13.56	2.94	1.45
96	96	129	Q_power station	11.4	2.86	0.73
96	96	122	Q_power station	9.6	4.05	0.71
96	96	121	Q_neve	41.06	28.37	1.69
96	96	128	Q_neve	42.96	13.76	1.44
96	96	129	Q_neve	36.13	13.69	-0.55
96	96	122	Q_neve	32.78	26.5	-0.3
96	96	121	Q_manutenzione	12.14	5.	1.43
96	96	128	Q_manutenzione	13.56	2.94	1.45
96	96	129	Q_manutenzione	11.4	2.86	0.73
96	96	122	Q_manutenzione	9.6	4.05	0.71
96	96	121	EQ_X	165.64	5.66	-16.52
96	96	128	EQ_X	171.61	8.24	-18.57
96	96	129	EQ_X	122.09	-0.48	-20.4
96	96	122	EQ_X	113.	2.41	-18.35
96	96	121	EQ_Y	24.06	57.11	63.06
96	96	128	EQ_Y	35.82	55.39	66.85
96	96	129	EQ_Y	32.29	40.9	56.78
96	96	122	EQ_Y	25.46	45.68	52.99
97	97	122	DEAD	-1.875E-11	-6.088E-12	2.526E-12
97	97	129	DEAD	-1.736E-11	-4.567E-12	3.562E-12

Table 21: Element Stresses - Area Shells, Part 1 of 3

Area	AreaElem	Joint	OutputCase	S11Top	S22Top	S12Top
				KN/m2	KN/m2	KN/m2
97	97	130	DEAD	-1.809E-11	-7.321E-12	4.042E-12
97	97	123	DEAD	-9.298E-12	-5.230E-12	4.320E-12
97	97	122	G1_power station	0.	0.	0.
97	97	129	G1_power station	0.	0.	0.
97	97	130	G1_power station	0.	0.	0.
97	97	123	G1_power station	0.	0.	0.
97	97	122	G2_power station	259.22	109.53	-1.62
97	97	129	G2_power station	308.93	77.47	-2.88
97	97	130	G2_power station	274.22	78.87	-31.15
97	97	123	G2_power station	180.09	90.73	-29.89
97	97	122	Q_power station	9.59	4.05	-5.979E-02
97	97	129	Q_power station	11.43	2.87	-0.11
97	97	130	Q_power station	10.15	2.92	-1.15
97	97	123	Q_power station	6.66	3.36	-1.11
97	97	122	Q_neve	32.76	26.5	-2.61
97	97	129	Q_neve	36.15	13.69	-2.89
97	97	130	Q_neve	31.22	13.31	-6.08
97	97	123	Q_neve	22.31	24.99	-5.8
97	97	122	Q_manutenzione	9.59	4.05	-5.979E-02
97	97	129	Q_manutenzione	11.43	2.87	-0.11
97	97	130	Q_manutenzione	10.15	2.92	-1.15
97	97	123	Q_manutenzione	6.66	3.36	-1.11
97	97	122	EQ_X	111.54	2.12	-20.54
97	97	129	EQ_X	117.86	-1.32	-23.39
97	97	130	EQ_X	90.68	-1.88	-27.56
97	97	123	EQ_X	64.84	-6.3	-24.72
97	97	122	EQ_Y	34.9	47.56	40.49
97	97	129	EQ_Y	41.45	42.73	45.2
97	97	130	EQ_Y	31.3	39.16	26.44
97	97	123	EQ_Y	31.28	51.49	21.73
98	98	123	DEAD	-1.278E-11	-5.864E-12	4.175E-12
98	98	130	DEAD	-1.362E-11	-6.388E-12	4.934E-12
98	98	29	DEAD	-8.233E-12	3.237E-12	7.209E-12
98	98	124	DEAD	-1.486E-12	-1.397E-11	6.451E-12
98	98	123	G1_power station	0.	0.	0.
98	98	130	G1_power station	0.	0.	0.
98	98	29	G1_power station	0.	0.	0.
98	98	124	G1_power station	0.	0.	0.
98	98	123	G2_power station	195.16	93.74	-59.72
98	98	130	G2_power station	265.55	77.14	-88.75
98	98	29	G2_power station	405.93	109.35	-196.63
98	98	124	G2_power station	-93.41	155.77	-167.6
98	98	123	Q_power station	7.22	3.47	-2.21

Table 21: Element Stresses - Area Shells, Part 1 of 3

Area	AreaElem	Joint	OutputCase	S11Top	S22Top	S12Top
				KN/m2	KN/m2	KN/m2
98	98	130	Q_power station	9.83	2.85	-3.28
98	98	29	Q_power station	15.02	4.05	-7.28
98	98	124	Q_power station	-3.46	5.76	-6.2
98	98	123	Q_neve	24.03	25.33	-9.55
98	98	130	Q_neve	30.02	13.07	-12.35
98	98	29	Q_neve	43.53	12.15	-24.63
98	98	124	Q_neve	-9.93	34.08	-21.83
98	98	123	Q_manutenzione	7.22	3.47	-2.21
98	98	130	Q_manutenzione	9.83	2.85	-3.28
98	98	29	Q_manutenzione	15.02	4.05	-7.28
98	98	124	Q_manutenzione	-3.46	5.76	-6.2
98	98	123	EQ_X	73.7	-4.53	-38.8
98	98	130	EQ_X	77.25	-4.56	-33.47
98	98	29	EQ_X	81.25	-107.49	-58.67
98	98	124	EQ_X	-21.58	22.92	-64.
98	98	123	EQ_Y	20.07	49.25	18.05
98	98	130	EQ_Y	66.69	46.24	-5.020E-02
98	98	29	EQ_Y	92.2	217.51	-27.49
98	98	124	EQ_Y	-9.78	112.41	-9.39
99	99	5	DEAD	-9.270E-13	2.989E-12	-7.064E-12
99	99	48	DEAD	6.921E-12	6.155E-12	-8.859E-12
99	99	131	DEAD	-1.591E-12	1.332E-11	-7.823E-12
99	99	93	DEAD	1.234E-12	4.673E-13	-7.342E-12
99	99	5	G1_power station	0.	0.	0.
99	99	48	G1_power station	0.	0.	0.
99	99	131	G1_power station	0.	0.	0.
99	99	93	G1_power station	0.	0.	0.
99	99	5	G2_power station	-689.43	-604.1	-122.4
99	99	48	G2_power station	-91.06	406.07	-154.68
99	99	131	G2_power station	19.34	238.24	-186.89
99	99	93	G2_power station	154.83	-118.88	-154.62
99	99	5	Q_power station	-25.51	-22.35	-4.53
99	99	48	Q_power station	-3.37	15.02	-5.72
99	99	131	Q_power station	0.72	8.81	-6.91
99	99	93	Q_power station	5.73	-4.4	-5.72
99	99	5	Q_neve	-59.28	-48.81	-8.07
99	99	48	Q_neve	-5.22	49.42	-11.29
99	99	131	Q_neve	8.68	36.32	-13.77
99	99	93	Q_neve	20.38	-4.35	-10.54
99	99	5	Q_manutenzione	-25.51	-22.35	-4.53
99	99	48	Q_manutenzione	-3.37	15.02	-5.72
99	99	131	Q_manutenzione	0.72	8.81	-6.91
99	99	93	Q_manutenzione	5.73	-4.4	-5.72

Table 21: Element Stresses - Area Shells, Part 1 of 3

Area	AreaElem	Joint	OutputCase	S11Top	S22Top	S12Top
				KN/m2	KN/m2	KN/m2
99	99	5	EQ_X	-2062.64	-319.15	275.56
99	99	48	EQ_X	272.04	25.41	315.43
99	99	131	EQ_X	-490.55	14.38	-18.56
99	99	93	EQ_X	-311.18	-248.78	-58.42
99	99	5	EQ_Y	317.06	2107.93	-354.2
99	99	48	EQ_Y	155.54	46.57	77.58
99	99	131	EQ_Y	-13.53	527.11	36.78
99	99	93	EQ_Y	-104.05	-250.75	-395.01
100	100	93	DEAD	-1.119E-11	-3.866E-12	-8.480E-12
100	100	131	DEAD	-5.610E-12	1.283E-11	-6.963E-12
100	100	132	DEAD	-5.884E-12	-7.438E-14	-7.721E-12
100	100	95	DEAD	-3.012E-13	7.526E-12	-9.238E-12
100	100	93	G1_power station	0.	0.	0.
100	100	131	G1_power station	0.	0.	0.
100	100	132	G1_power station	0.	0.	0.
100	100	95	G1_power station	0.	0.	0.
100	100	93	G2_power station	135.45	-122.76	-113.8
100	100	131	G2_power station	28.43	240.06	-130.34
100	100	132	G2_power station	151.91	203.04	-68.94
100	100	95	G2_power station	300.07	36.68	-52.4
100	100	93	Q_power station	5.01	-4.54	-4.21
100	100	131	Q_power station	1.05	8.88	-4.82
100	100	132	Q_power station	5.62	7.51	-2.55
100	100	95	Q_power station	11.1	1.36	-1.94
100	100	93	Q_neve	18.57	-4.71	-6.47
100	100	131	Q_neve	9.51	36.49	-8.16
100	100	132	Q_neve	19.92	34.2	-1.9
100	100	95	Q_neve	34.46	9.44	-0.22
100	100	93	Q_manutenzione	5.01	-4.54	-4.21
100	100	131	Q_manutenzione	1.05	8.88	-4.82
100	100	132	Q_manutenzione	5.62	7.51	-2.55
100	100	95	Q_manutenzione	11.1	1.36	-1.94
100	100	93	EQ_X	-407.35	-268.02	-50.11
100	100	131	EQ_X	-423.95	27.7	-61.09
100	100	132	EQ_X	-221.56	-47.39	-75.23
100	100	95	EQ_X	-383.97	-102.13	-64.25
100	100	93	EQ_Y	-121.75	-254.29	-146.48
100	100	131	EQ_Y	-1.15	529.59	-184.18
100	100	132	EQ_Y	-58.45	158.96	-168.52
100	100	95	EQ_Y	-1.47	226.28	-130.82
101	101	95	DEAD	-5.051E-13	3.948E-12	-5.254E-12
101	101	132	DEAD	-7.814E-12	-1.789E-13	-6.771E-12
101	101	133	DEAD	4.993E-12	1.324E-11	-5.254E-12

Table 21: Element Stresses - Area Shells, Part 1 of 3

Area	AreaElem	Joint	OutputCase	S11Top	S22Top	S12Top
				KN/m2	KN/m2	KN/m2
101	101	25	DEAD	-1.331E-11	-3.685E-13	-3.737E-12
101	101	95	G1_power station	0.	0.	0.
101	101	132	G1_power station	0.	0.	0.
101	101	133	G1_power station	0.	0.	0.
101	101	25	G1_power station	0.	0.	0.
101	101	95	G2_power station	298.81	36.43	16.63
101	101	132	G2_power station	163.62	205.38	9.14
101	101	133	G2_power station	-110.46	314.06	150.68
101	101	25	G2_power station	477.65	-61.94	158.17
101	101	95	Q_power station	11.06	1.35	0.62
101	101	132	Q_power station	6.05	7.6	0.34
101	101	133	Q_power station	-4.09	11.62	5.58
101	101	25	Q_power station	17.67	-2.29	5.85
101	101	95	Q_neve	33.91	9.33	7.34
101	101	132	Q_neve	21.39	34.5	6.28
101	101	133	Q_neve	-12.17	48.27	22.08
101	101	25	Q_neve	52.88	-3.21	23.14
101	101	95	Q_manutenzione	11.06	1.35	0.62
101	101	132	Q_manutenzione	6.05	7.6	0.34
101	101	133	Q_manutenzione	-4.09	11.62	5.58
101	101	25	Q_manutenzione	17.67	-2.29	5.85
101	101	95	EQ_X	-343.56	-94.05	-118.18
101	101	132	EQ_X	-251.24	-53.33	-119.42
101	101	133	EQ_X	103.01	-155.74	-233.96
101	101	25	EQ_X	-435.99	91.41	-232.73
101	101	95	EQ_Y	-43.85	217.8	-142.28
101	101	132	EQ_Y	-33.61	163.92	-122.16
101	101	133	EQ_Y	6.87	99.03	-141.06
101	101	25	EQ_Y	-130.91	-15.69	-161.17
102	102	48	DEAD	1.071E-11	2.054E-11	-5.692E-12
102	102	50	DEAD	8.279E-12	1.051E-11	-5.489E-12
102	102	134	DEAD	3.030E-12	1.400E-11	-5.692E-12
102	102	131	DEAD	-6.035E-12	-1.913E-12	-8.522E-12
102	102	48	G1_power station	0.	0.	0.
102	102	50	G1_power station	0.	0.	0.
102	102	134	G1_power station	0.	0.	0.
102	102	131	G1_power station	0.	0.	0.
102	102	48	G2_power station	-95.57	383.53	-100.8
102	102	50	G2_power station	43.58	562.69	-46.66
102	102	134	G2_power station	51.32	511.76	-60.36
102	102	131	G2_power station	21.13	247.18	-114.51
102	102	48	Q_power station	-3.54	14.19	-3.73
102	102	50	Q_power station	1.61	20.82	-1.73

Table 21: Element Stresses - Area Shells, Part 1 of 3

Area	AreaElem	Joint	OutputCase	S11Top	S22Top	S12Top
				KN/m2	KN/m2	KN/m2
102	102	134	Q_power station	1.9	18.94	-2.23
102	102	131	Q_power station	0.78	9.15	-4.24
102	102	48	Q_neve	-5.63	47.37	-7.
102	102	50	Q_neve	6.79	66.93	-2.92
102	102	134	Q_neve	11.22	64.99	-3.83
102	102	131	Q_neve	8.84	37.13	-7.9
102	102	48	Q_manutenzione	-3.54	14.19	-3.73
102	102	50	Q_manutenzione	1.61	20.82	-1.73
102	102	134	Q_manutenzione	1.9	18.94	-2.23
102	102	131	Q_manutenzione	0.78	9.15	-4.24
102	102	48	EQ_X	271.69	23.67	81.85
102	102	50	EQ_X	-236.76	-94.4	33.57
102	102	134	EQ_X	-153.93	-43.86	59.71
102	102	131	EQ_X	-496.18	-13.78	107.99
102	102	48	EQ_Y	191.4	225.87	-9.46
102	102	50	EQ_Y	22.93	146.76	-49.25
102	102	134	EQ_Y	20.56	89.87	-49.04
102	102	131	EQ_Y	-41.83	385.61	-9.26
103	103	131	DEAD	-2.962E-12	-2.662E-13	-6.028E-12
103	103	134	DEAD	-2.943E-12	1.226E-11	-8.581E-12
103	103	135	DEAD	-5.521E-12	5.137E-12	-7.545E-12
103	103	132	DEAD	-4.555E-12	1.330E-11	-6.306E-12
103	103	131	G1_power station	0.	0.	0.
103	103	134	G1_power station	0.	0.	0.
103	103	135	G1_power station	0.	0.	0.
103	103	132	G1_power station	0.	0.	0.
103	103	131	G2_power station	30.22	249.	-93.36
103	103	134	G2_power station	53.34	512.16	-63.12
103	103	135	G2_power station	34.78	449.61	-29.79
103	103	132	G2_power station	154.12	214.1	-60.04
103	103	131	Q_power station	1.12	9.21	-3.45
103	103	134	Q_power station	1.97	18.95	-2.34
103	103	135	Q_power station	1.29	16.64	-1.1
103	103	132	Q_power station	5.7	7.92	-2.22
103	103	131	Q_neve	9.68	37.3	-5.42
103	103	134	Q_neve	11.42	65.02	-3.83
103	103	135	Q_neve	8.31	62.1	-0.26
103	103	132	Q_neve	20.18	35.47	-1.85
103	103	131	Q_manutenzione	1.12	9.21	-3.45
103	103	134	Q_manutenzione	1.97	18.95	-2.34
103	103	135	Q_manutenzione	1.29	16.64	-1.1
103	103	132	Q_manutenzione	5.7	7.92	-2.22
103	103	131	EQ_X	-429.58	-0.46	-3.48

Table 21: Element Stresses - Area Shells, Part 1 of 3

Area	AreaElem	Joint	OutputCase	S11Top	S22Top	S12Top
				KN/m2	KN/m2	KN/m2
103	103	134	EQ_X	-180.13	-49.1	22.12
103	103	135	EQ_X	-133.88	-47.4	-35.48
103	103	132	EQ_X	-222.26	-50.86	-61.08
103	103	131	EQ_Y	-29.45	388.08	-75.32
103	103	134	EQ_Y	21.41	90.04	-38.59
103	103	135	EQ_Y	-15.47	82.85	-61.78
103	103	132	EQ_Y	-53.03	186.06	-98.52
104	104	132	DEAD	-6.944E-12	1.229E-11	-7.486E-12
104	104	135	DEAD	-1.507E-11	2.713E-12	-5.970E-12
104	104	136	DEAD	2.346E-12	4.133E-12	-5.211E-12
104	104	133	DEAD	1.610E-12	8.780E-12	-6.728E-12
104	104	132	G1_power station	0.	0.	0.
104	104	135	G1_power station	0.	0.	0.
104	104	136	G1_power station	0.	0.	0.
104	104	133	G1_power station	0.	0.	0.
104	104	132	G2_power station	165.83	216.44	16.15
104	104	135	G2_power station	30.69	448.79	-12.
104	104	136	G2_power station	21.86	415.87	-0.16
104	104	133	G2_power station	-112.83	302.2	28.
104	104	132	Q_power station	6.14	8.01	0.6
104	104	135	Q_power station	1.14	16.61	-0.44
104	104	136	Q_power station	0.81	15.39	-5.759E-03
104	104	133	Q_power station	-4.17	11.18	1.04
104	104	132	Q_neve	21.65	35.77	6.15
104	104	135	Q_neve	7.82	62.	1.55
104	104	136	Q_neve	2.43	61.37	2.76
104	104	133	Q_neve	-12.51	46.54	7.36
104	104	132	Q_manutenzione	6.14	8.01	0.6
104	104	135	Q_manutenzione	1.14	16.61	-0.44
104	104	136	Q_manutenzione	0.81	15.39	-5.759E-03
104	104	133	Q_manutenzione	-4.17	11.18	1.04
104	104	132	EQ_X	-251.93	-56.8	-110.8
104	104	135	EQ_X	-127.69	-46.17	-54.68
104	104	136	EQ_X	-18.26	-98.55	-55.63
104	104	133	EQ_X	103.36	-153.96	-111.75
104	104	132	EQ_Y	-28.19	191.03	-102.49
104	104	135	EQ_Y	-10.26	83.89	-75.34
104	104	136	EQ_Y	-3.4	69.64	-63.52
104	104	133	EQ_Y	16.99	149.66	-90.67
105	105	50	DEAD	4.208E-12	2.322E-11	-3.386E-12
105	105	52	DEAD	4.055E-12	1.214E-11	-1.869E-12
105	105	137	DEAD	6.957E-12	1.422E-11	-1.869E-12
105	105	134	DEAD	2.349E-12	1.726E-11	-3.386E-12

Table 21: Element Stresses - Area Shells, Part 1 of 3

Area	AreaElem	Joint	OutputCase	S11Top	S22Top	S12Top
				KN/m2	KN/m2	KN/m2
105	105	50	G1_power station	0.	0.	0.
105	105	52	G1_power station	0.	0.	0.
105	105	137	G1_power station	0.	0.	0.
105	105	134	G1_power station	0.	0.	0.
105	105	50	G2_power station	46.25	576.05	-17.78
105	105	52	G2_power station	46.25	576.05	17.78
105	105	137	G2_power station	50.41	507.23	17.78
105	105	134	G2_power station	50.41	507.23	-17.78
105	105	50	Q_power station	1.71	21.31	-0.66
105	105	52	Q_power station	1.71	21.31	0.66
105	105	137	Q_power station	1.87	18.77	0.66
105	105	134	Q_power station	1.87	18.77	-0.66
105	105	50	Q_neve	7.03	68.14	-1.11
105	105	52	Q_neve	7.03	68.14	1.11
105	105	137	Q_neve	11.15	64.63	1.11
105	105	134	Q_neve	11.15	64.63	-1.11
105	105	50	Q_manutenzione	1.71	21.31	-0.66
105	105	52	Q_manutenzione	1.71	21.31	0.66
105	105	137	Q_manutenzione	1.87	18.77	0.66
105	105	134	Q_manutenzione	1.87	18.77	-0.66
105	105	50	EQ_X	-238.09	-101.04	16.12
105	105	52	EQ_X	-239.4	-101.3	-13.4
105	105	137	EQ_X	-153.2	-33.96	-13.53
105	105	134	EQ_X	-151.9	-33.69	15.99
105	105	50	EQ_Y	14.55	104.82	-47.68
105	105	52	EQ_Y	-14.45	-103.65	-47.38
105	105	137	EQ_Y	-20.58	-89.24	-43.94
105	105	134	EQ_Y	22.41	99.11	-44.24
106	106	134	DEAD	-9.361E-13	1.592E-11	-3.823E-12
106	106	137	DEAD	5.317E-12	1.277E-11	-2.862E-12
106	106	138	DEAD	-1.127E-11	9.754E-12	-2.307E-12
106	106	135	DEAD	-7.670E-12	6.988E-12	-5.895E-12
106	106	134	G1_power station	0.	0.	0.
106	106	137	G1_power station	0.	0.	0.
106	106	138	G1_power station	0.	0.	0.
106	106	135	G1_power station	0.	0.	0.
106	106	134	G2_power station	52.43	507.63	-15.7
106	106	137	G2_power station	52.43	507.63	15.7
106	106	138	G2_power station	33.32	442.28	15.7
106	106	135	G2_power station	33.32	442.28	-15.7
106	106	134	Q_power station	1.94	18.78	-0.58
106	106	137	Q_power station	1.94	18.78	0.58
106	106	138	Q_power station	1.23	16.36	0.58

Table 21: Element Stresses - Area Shells, Part 1 of 3

Area	AreaElem	Joint	OutputCase	S11Top	S22Top	S12Top
				KN/m2	KN/m2	KN/m2
106	106	135	Q_power station	1.23	16.36	-0.58
106	106	134	Q_neve	11.35	64.67	-0.7
106	106	137	Q_neve	11.35	64.67	0.7
106	106	138	Q_neve	8.15	61.3	0.7
106	106	135	Q_neve	8.15	61.3	-0.7
106	106	134	Q_manutenzione	1.94	18.78	-0.58
106	106	137	Q_manutenzione	1.94	18.78	0.58
106	106	138	Q_manutenzione	1.23	16.36	0.58
106	106	135	Q_manutenzione	1.23	16.36	-0.58
106	106	134	EQ_X	-178.09	-38.93	-0.21
106	106	137	EQ_X	-177.61	-38.84	2.69
106	106	138	EQ_X	-134.61	-53.35	2.15
106	106	135	EQ_X	-135.09	-53.45	-0.75
106	106	134	EQ_Y	23.26	99.27	-42.95
106	106	137	EQ_Y	-23.69	-89.86	-43.61
106	106	138	EQ_Y	13.02	-83.51	-43.55
106	106	135	EQ_Y	-11.96	100.42	-42.89
107	107	135	DEAD	-1.819E-11	3.333E-12	-4.597E-12
107	107	138	DEAD	-8.728E-12	1.202E-11	-4.875E-12
107	107	139	DEAD	-6.437E-12	7.504E-12	-4.597E-12
107	107	136	DEAD	1.004E-11	1.031E-11	-5.633E-12
107	107	135	G1_power station	0.	0.	0.
107	107	138	G1_power station	0.	0.	0.
107	107	139	G1_power station	0.	0.	0.
107	107	136	G1_power station	0.	0.	0.
107	107	135	G2_power station	29.22	441.46	-2.74
107	107	138	G2_power station	29.22	441.46	2.74
107	107	139	G2_power station	24.65	429.83	2.74
107	107	136	G2_power station	24.65	429.83	-2.74
107	107	135	Q_power station	1.08	16.33	-0.1
107	107	138	Q_power station	1.08	16.33	0.1
107	107	139	Q_power station	0.91	15.9	0.1
107	107	136	Q_power station	0.91	15.9	-0.1
107	107	135	Q_neve	7.66	61.2	0.65
107	107	138	Q_neve	7.66	61.2	-0.65
107	107	139	Q_neve	2.71	62.78	-0.65
107	107	136	Q_neve	2.71	62.78	0.65
107	107	135	Q_manutenzione	1.08	16.33	-0.1
107	107	138	Q_manutenzione	1.08	16.33	0.1
107	107	139	Q_manutenzione	0.91	15.9	0.1
107	107	136	Q_manutenzione	0.91	15.9	-0.1
107	107	135	EQ_X	-128.9	-52.21	-18.
107	107	138	EQ_X	-129.05	-52.24	18.12

Table 21: Element Stresses - Area Shells, Part 1 of 3

Area	AreaElem	Joint	OutputCase	S11Top	S22Top	S12Top
				KN/m2	KN/m2	KN/m2
107	107	139	EQ_X	-20.73	-110.13	18.78
107	107	136	EQ_X	-20.57	-110.1	-17.34
107	107	135	EQ_Y	-6.75	101.46	-50.37
107	107	138	EQ_Y	6.12	-84.89	-50.22
107	107	139	EQ_Y	0.6	-63.89	-74.44
107	107	136	EQ_Y	0.3	88.12	-74.6
108	108	52	DEAD	1.719E-12	1.359E-11	-3.823E-12
108	108	54	DEAD	4.628E-12	4.494E-12	-4.582E-12
108	108	140	DEAD	-3.306E-12	2.119E-12	-2.307E-12
108	108	137	DEAD	3.965E-12	1.483E-11	-1.548E-12
108	108	52	G1_power station	0.	0.	0.
108	108	54	G1_power station	0.	0.	0.
108	108	140	G1_power station	0.	0.	0.
108	108	137	G1_power station	0.	0.	0.
108	108	52	G2_power station	43.58	562.69	46.66
108	108	54	G2_power station	-95.57	383.53	100.8
108	108	140	G2_power station	21.13	247.18	114.51
108	108	137	G2_power station	51.32	511.76	60.36
108	108	52	Q_power station	1.61	20.82	1.73
108	108	54	Q_power station	-3.54	14.19	3.73
108	108	140	Q_power station	0.78	9.15	4.24
108	108	137	Q_power station	1.9	18.94	2.23
108	108	52	Q_neve	6.79	66.93	2.92
108	108	54	Q_neve	-5.63	47.37	7.
108	108	140	Q_neve	8.84	37.13	7.9
108	108	137	Q_neve	11.22	64.99	3.83
108	108	52	Q_manutenzione	1.61	20.82	1.73
108	108	54	Q_manutenzione	-3.54	14.19	3.73
108	108	140	Q_manutenzione	0.78	9.15	4.24
108	108	137	Q_manutenzione	1.9	18.94	2.23
108	108	52	EQ_X	-237.72	-92.92	-31.88
108	108	54	EQ_X	269.07	24.83	-81.37
108	108	140	EQ_X	-498.82	-12.7	-105.97
108	108	137	EQ_X	-154.9	-42.45	-56.48
108	108	52	EQ_Y	-22.81	-145.42	-48.5
108	108	54	EQ_Y	-190.3	-224.33	-8.19
108	108	140	EQ_Y	44.17	-377.91	-8.81
108	108	137	EQ_Y	-19.21	-82.37	-49.12
109	109	137	DEAD	6.392E-12	1.709E-11	-2.174E-12
109	109	140	DEAD	-5.856E-12	3.140E-12	-1.760E-13
109	109	141	DEAD	-6.501E-12	-1.872E-12	8.600E-13
109	109	138	DEAD	-1.363E-11	9.776E-12	-2.451E-12
109	109	137	G1_power station	0.	0.	0.

Table 21: Element Stresses - Area Shells, Part 1 of 3

Area	AreaElem	Joint	OutputCase	S11Top	S22Top	S12Top
				KN/m2	KN/m2	KN/m2
109	109	140	G1_power station	0.	0.	0.
109	109	141	G1_power station	0.	0.	0.
109	109	138	G1_power station	0.	0.	0.
109	109	137	G2_power station	53.34	512.16	63.12
109	109	140	G2_power station	30.22	249.	93.36
109	109	141	G2_power station	154.12	214.1	60.04
109	109	138	G2_power station	34.78	449.61	29.79
109	109	137	Q_power station	1.97	18.95	2.34
109	109	140	Q_power station	1.12	9.21	3.45
109	109	141	Q_power station	5.7	7.92	2.22
109	109	138	Q_power station	1.29	16.64	1.1
109	109	137	Q_neve	11.42	65.02	3.83
109	109	140	Q_neve	9.68	37.3	5.42
109	109	141	Q_neve	20.18	35.47	1.85
109	109	138	Q_neve	8.31	62.1	0.26
109	109	137	Q_manutenzione	1.97	18.95	2.34
109	109	140	Q_manutenzione	1.12	9.21	3.45
109	109	141	Q_manutenzione	5.7	7.92	2.22
109	109	138	Q_manutenzione	1.29	16.64	1.1
109	109	137	EQ_X	-179.31	-47.34	-18.86
109	109	140	EQ_X	-433.88	0.28	6.95
109	109	141	EQ_X	-227.54	-55.04	64.29
109	109	138	EQ_X	-134.05	-50.56	38.48
109	109	137	EQ_Y	-22.32	-82.99	-39.61
109	109	140	EQ_Y	31.92	-380.36	-75.89
109	109	141	EQ_Y	57.67	-167.47	-99.44
109	109	138	EQ_Y	16.74	-64.94	-63.16
110	110	138	DEAD	-5.652E-12	1.140E-11	-1.794E-12
110	110	141	DEAD	-4.352E-12	-2.409E-12	-7.438E-14
110	110	142	DEAD	-5.842E-12	-3.195E-12	4.808E-13
110	110	139	DEAD	-1.887E-12	5.364E-12	-3.866E-12
110	110	138	G1_power station	0.	0.	0.
110	110	141	G1_power station	0.	0.	0.
110	110	142	G1_power station	0.	0.	0.
110	110	139	G1_power station	0.	0.	0.
110	110	138	G2_power station	30.69	448.79	12.
110	110	141	G2_power station	165.83	216.44	-16.15
110	110	142	G2_power station	-112.83	302.2	-28.
110	110	139	G2_power station	21.86	415.87	0.16
110	110	138	Q_power station	1.14	16.61	0.44
110	110	141	Q_power station	6.14	8.01	-0.6
110	110	142	Q_power station	-4.17	11.18	-1.04
110	110	139	Q_power station	0.81	15.39	5.759E-03

Table 21: Element Stresses - Area Shells, Part 1 of 3

Area	AreaElem	Joint	OutputCase	S11Top	S22Top	S12Top
				KN/m2	KN/m2	KN/m2
110	110	138	Q_neve	7.82	62.	-1.55
110	110	141	Q_neve	21.65	35.77	-6.15
110	110	142	Q_neve	-12.51	46.54	-7.36
110	110	139	Q_neve	2.43	61.37	-2.76
110	110	138	Q_manutenzione	1.14	16.61	0.44
110	110	141	Q_manutenzione	6.14	8.01	-0.6
110	110	142	Q_manutenzione	-4.17	11.18	-1.04
110	110	139	Q_manutenzione	0.81	15.39	5.759E-03
110	110	138	EQ_X	-128.5	-49.45	56.4
110	110	141	EQ_X	-250.12	-59.55	114.18
110	110	142	EQ_X	105.5	-155.13	112.01
110	110	139	EQ_X	-18.75	-100.24	54.23
110	110	138	EQ_Y	9.83	-66.32	-75.91
110	110	141	EQ_Y	27.57	-173.49	-104.45
110	110	142	EQ_Y	-16.22	-125.19	-91.23
110	110	139	EQ_Y	4.35	-45.14	-62.69
111	111	54	DEAD	2.369E-12	1.063E-11	-1.517E-12
111	111	58	DEAD	-7.324E-12	-5.454E-13	1.517E-12
111	111	143	DEAD	-3.792E-12	-1.980E-12	1.517E-12
111	111	140	DEAD	-5.428E-12	-1.662E-13	-1.517E-12
111	111	54	G1_power station	0.	0.	0.
111	111	58	G1_power station	0.	0.	0.
111	111	143	G1_power station	0.	0.	0.
111	111	140	G1_power station	0.	0.	0.
111	111	54	G2_power station	-91.06	406.07	154.68
111	111	58	G2_power station	-689.43	-604.1	122.4
111	111	143	G2_power station	154.83	-118.88	154.62
111	111	140	G2_power station	19.34	238.24	186.89
111	111	54	Q_power station	-3.37	15.02	5.72
111	111	58	Q_power station	-25.51	-22.35	4.53
111	111	143	Q_power station	5.73	-4.4	5.72
111	111	140	Q_power station	0.72	8.81	6.91
111	111	54	Q_neve	-5.22	49.42	11.29
111	111	58	Q_neve	-59.28	-48.81	8.07
111	111	143	Q_neve	20.38	-4.35	10.54
111	111	140	Q_neve	8.68	36.32	13.77
111	111	54	Q_manutenzione	-3.37	15.02	5.72
111	111	58	Q_manutenzione	-25.51	-22.35	4.53
111	111	143	Q_manutenzione	5.73	-4.4	5.72
111	111	140	Q_manutenzione	0.72	8.81	6.91
111	111	54	EQ_X	269.5	27.	-315.35
111	111	58	EQ_X	-2063.97	-317.32	-275.95
111	111	143	EQ_X	-312.28	-245.8	57.88

Table 21: Element Stresses - Area Shells, Part 1 of 3

Area	AreaElem	Joint	OutputCase	S11Top	S22Top	S12Top
				KN/m2	KN/m2	KN/m2
111	111	140	EQ_X	-492.85	17.12	18.48
111	111	54	EQ_Y	-154.38	-44.73	79.37
111	111	58	EQ_Y	-318.16	-2106.54	-352.04
111	111	143	EQ_Y	103.89	256.85	-392.67
111	111	140	EQ_Y	15.64	-520.56	38.74
112	112	140	DEAD	-2.627E-12	-5.134E-13	1.591E-12
112	112	143	DEAD	-3.635E-12	-2.226E-12	-4.808E-13
112	112	144	DEAD	-6.513E-12	7.355E-12	2.350E-12
112	112	141	DEAD	-1.207E-11	-8.009E-12	1.794E-12
112	112	140	G1_power station	0.	0.	0.
112	112	143	G1_power station	0.	0.	0.
112	112	144	G1_power station	0.	0.	0.
112	112	141	G1_power station	0.	0.	0.
112	112	140	G2_power station	28.43	240.06	130.34
112	112	143	G2_power station	135.45	-122.76	113.8
112	112	144	G2_power station	300.07	36.68	52.4
112	112	141	G2_power station	151.91	203.04	68.94
112	112	140	Q_power station	1.05	8.88	4.82
112	112	143	Q_power station	5.01	-4.54	4.21
112	112	144	Q_power station	11.1	1.36	1.94
112	112	141	Q_power station	5.62	7.51	2.55
112	112	140	Q_neve	9.51	36.49	8.16
112	112	143	Q_neve	18.57	-4.71	6.47
112	112	144	Q_neve	34.46	9.44	0.22
112	112	141	Q_neve	19.92	34.2	1.9
112	112	140	Q_manutenzione	1.05	8.88	4.82
112	112	143	Q_manutenzione	5.01	-4.54	4.21
112	112	144	Q_manutenzione	11.1	1.36	1.94
112	112	141	Q_manutenzione	5.62	7.51	2.55
112	112	140	EQ_X	-427.91	30.11	62.46
112	112	143	EQ_X	-413.05	-265.96	49.05
112	112	144	EQ_X	-389.52	-99.39	65.73
112	112	141	EQ_X	-225.39	-44.31	79.14
112	112	140	EQ_Y	3.39	-523.01	-183.24
112	112	143	EQ_Y	123.45	260.76	-144.18
112	112	144	EQ_Y	4.06	-215.39	-130.6
112	112	141	EQ_Y	61.57	-147.97	-169.66
113	113	141	DEAD	-3.917E-12	-6.967E-12	2.088E-12
113	113	144	DEAD	-8.930E-12	7.704E-12	4.965E-13
113	113	30	DEAD	-9.984E-12	-1.000E-11	3.604E-12
113	113	142	DEAD	-2.673E-12	2.585E-12	1.255E-12
113	113	141	G1_power station	0.	0.	0.
113	113	144	G1_power station	0.	0.	0.

Table 21: Element Stresses - Area Shells, Part 1 of 3

Area	AreaElem	Joint	OutputCase	S11Top	S22Top	S12Top
				KN/m2	KN/m2	KN/m2
113	113	30	G1_power station	0.	0.	0.
113	113	142	G1_power station	0.	0.	0.
113	113	141	G2_power station	163.62	205.38	-9.14
113	113	144	G2_power station	298.81	36.43	-16.63
113	113	30	G2_power station	477.65	-61.94	-158.17
113	113	142	G2_power station	-110.46	314.06	-150.68
113	113	141	Q_power station	6.05	7.6	-0.34
113	113	144	Q_power station	11.06	1.35	-0.62
113	113	30	Q_power station	17.67	-2.29	-5.85
113	113	142	Q_power station	-4.09	11.62	-5.58
113	113	141	Q_neve	21.39	34.5	-6.28
113	113	144	Q_neve	33.91	9.33	-7.34
113	113	30	Q_neve	52.88	-3.21	-23.14
113	113	142	Q_neve	-12.17	48.27	-22.08
113	113	141	Q_manutenzione	6.05	7.6	-0.34
113	113	144	Q_manutenzione	11.06	1.35	-0.62
113	113	30	Q_manutenzione	17.67	-2.29	-5.85
113	113	142	Q_manutenzione	-4.09	11.62	-5.58
113	113	141	EQ_X	-247.97	-48.83	123.49
113	113	144	EQ_X	-361.22	-93.73	120.82
113	113	30	EQ_X	-457.62	71.87	240.47
113	113	142	EQ_X	102.3	-171.1	243.15
113	113	141	EQ_Y	31.47	-153.99	-124.35
113	113	144	EQ_Y	49.48	-206.31	-144.53
113	113	30	EQ_Y	141.78	53.4	-167.09
113	113	142	EQ_Y	-3.76	-62.88	-146.91
114	114	11	DEAD	-7.032E-11	-4.530E-12	-2.236E-11
114	114	14	DEAD	-3.859E-11	-3.514E-12	-1.822E-11
114	114	145	DEAD	-2.557E-11	1.898E-11	-2.843E-11
114	114	146	DEAD	3.123E-12	4.828E-12	-2.732E-11
114	114	11	G1_power station	0.	0.	0.
114	114	14	G1_power station	0.	0.	0.
114	114	145	G1_power station	0.	0.	0.
114	114	146	G1_power station	0.	0.	0.
114	114	11	G2_power station	-220.04	20.8	-30.8
114	114	14	G2_power station	-610.33	-641.14	-79.8
114	114	145	G2_power station	385.99	-126.5	-77.58
114	114	146	G2_power station	163.	-12.98	-28.58
114	114	11	Q_power station	-8.14	0.77	-1.14
114	114	14	Q_power station	-22.58	-23.72	-2.95
114	114	145	Q_power station	14.28	-4.68	-2.87
114	114	146	Q_power station	6.03	-0.48	-1.06
114	114	11	Q_neve	-15.38	1.9	-1.17

Table 21: Element Stresses - Area Shells, Part 1 of 3

Area	AreaElem	Joint	OutputCase	S11Top	S22Top	S12Top
				KN/m2	KN/m2	KN/m2
114	114	14	Q_neve	-50.69	-52.63	-5.28
114	114	145	Q_neve	45.98	-5.08	-4.89
114	114	146	Q_neve	24.46	-1.17	-0.79
114	114	11	Q_manutenzione	-8.14	0.77	-1.14
114	114	14	Q_manutenzione	-22.58	-23.72	-2.95
114	114	145	Q_manutenzione	14.28	-4.68	-2.87
114	114	146	Q_manutenzione	6.03	-0.48	-1.06
114	114	11	EQ_X	-592.13	-166.11	215.38
114	114	14	EQ_X	2064.17	300.84	165.11
114	114	145	EQ_X	343.92	207.2	-180.52
114	114	146	EQ_X	856.79	28.3	-130.25
114	114	11	EQ_Y	375.96	-144.29	-4.53
114	114	14	EQ_Y	415.25	1560.98	381.02
114	114	145	EQ_Y	-67.75	-532.93	434.88
114	114	146	EQ_Y	0.32	117.7	49.33
115	115	146	DEAD	-4.513E-11	-2.216E-11	-2.529E-11
115	115	145	DEAD	-1.145E-11	3.216E-11	-4.045E-11
115	115	147	DEAD	-2.011E-11	8.477E-11	-4.652E-11
115	115	148	DEAD	-7.743E-11	-2.472E-11	-3.135E-11
115	115	146	G1_power station	0.	0.	0.
115	115	145	G1_power station	0.	0.	0.
115	115	147	G1_power station	0.	0.	0.
115	115	148	G1_power station	0.	0.	0.
115	115	146	G2_power station	180.03	-9.57	-108.96
115	115	145	G2_power station	366.89	-130.32	-117.73
115	115	147	G2_power station	654.4	52.7	-149.87
115	115	148	G2_power station	678.09	1.22	-141.09
115	115	146	Q_power station	6.66	-0.35	-4.03
115	115	145	Q_power station	13.58	-4.82	-4.36
115	115	147	Q_power station	24.21	1.95	-5.55
115	115	148	Q_power station	25.09	4.500E-02	-5.22
115	115	146	Q_neve	26.04	-0.86	-7.99
115	115	145	Q_neve	44.25	-5.43	-8.55
115	115	147	Q_neve	74.76	11.94	-11.43
115	115	148	Q_neve	75.67	0.13	-10.87
115	115	146	Q_manutenzione	6.66	-0.35	-4.03
115	115	145	Q_manutenzione	13.58	-4.82	-4.36
115	115	147	Q_manutenzione	24.21	1.95	-5.55
115	115	148	Q_manutenzione	25.09	4.500E-02	-5.22
115	115	146	EQ_X	732.36	3.41	-102.69
115	115	145	EQ_X	455.77	229.57	-73.84
115	115	147	EQ_X	458.01	77.87	-11.64
115	115	148	EQ_X	464.57	-3.12	-40.48

Table 21: Element Stresses - Area Shells, Part 1 of 3

Area	AreaElem	Joint	OutputCase	S11Top	S22Top	S12Top
				KN/m2	KN/m2	KN/m2
115	115	146	EQ_Y	47.57	127.15	273.82
115	115	145	EQ_Y	-69.52	-533.28	189.26
115	115	147	EQ_Y	-10.93	-16.58	166.23
115	115	148	EQ_Y	-91.43	-34.23	250.8
116	116	148	DEAD	-3.583E-11	-1.148E-11	-4.729E-11
116	116	147	DEAD	-4.843E-11	7.337E-11	-4.425E-11
116	116	149	DEAD	5.290E-11	8.635E-11	-4.729E-11
116	116	150	DEAD	-2.644E-11	-1.688E-11	-5.032E-11
116	116	148	G1_power station	0.	0.	0.
116	116	147	G1_power station	0.	0.	0.
116	116	149	G1_power station	0.	0.	0.
116	116	150	G1_power station	0.	0.	0.
116	116	148	G2_power station	662.41	-1.92	-147.32
116	116	147	G2_power station	665.79	54.98	-139.62
116	116	149	G2_power station	851.62	103.76	-125.9
116	116	150	G2_power station	898.73	1.53	-133.6
116	116	148	Q_power station	24.51	-7.107E-02	-5.45
116	116	147	Q_power station	24.63	2.03	-5.17
116	116	149	Q_power station	31.51	3.84	-4.66
116	116	150	Q_power station	33.25	5.660E-02	-4.94
116	116	148	Q_neve	74.23	-0.16	-11.28
116	116	147	Q_neve	75.8	12.15	-10.5
116	116	149	Q_neve	95.06	17.23	-9.12
116	116	150	Q_neve	98.36	0.17	-9.9
116	116	148	Q_manutenzione	24.51	-7.107E-02	-5.45
116	116	147	Q_manutenzione	24.63	2.03	-5.17
116	116	149	Q_manutenzione	31.51	3.84	-4.66
116	116	150	Q_manutenzione	33.25	5.660E-02	-4.94
116	116	148	EQ_X	487.36	1.44	-1.99
116	116	147	EQ_X	436.46	73.56	-1.22
116	116	149	EQ_X	361.51	34.63	14.87
116	116	150	EQ_X	379.06	-0.86	14.1
116	116	148	EQ_Y	-78.51	-31.64	176.37
116	116	147	EQ_Y	-8.96	-16.19	182.21
116	116	149	EQ_Y	-58.43	-101.39	153.73
116	116	150	EQ_Y	-88.94	27.36	147.9
117	117	150	DEAD	-2.256E-11	3.070E-12	-6.380E-11
117	117	149	DEAD	2.168E-11	5.950E-11	-4.449E-11
117	117	151	DEAD	2.825E-11	5.692E-11	-3.953E-11
117	117	152	DEAD	1.180E-10	-2.316E-11	-5.359E-11
117	117	150	G1_power station	0.	0.	0.
117	117	149	G1_power station	0.	0.	0.
117	117	151	G1_power station	0.	0.	0.

Table 21: Element Stresses - Area Shells, Part 1 of 3

Area	AreaElem	Joint	OutputCase	S11Top	S22Top	S12Top
				KN/m2	KN/m2	KN/m2
117	117	152	G1_power station	0.	0.	0.
117	117	150	G2_power station	894.38	0.66	-110.71
117	117	149	G2_power station	853.83	104.2	-103.51
117	117	151	G2_power station	956.34	124.02	-74.92
117	117	152	G2_power station	1027.33	-2.17	-82.12
117	117	150	Q_power station	33.09	2.442E-02	-4.1
117	117	149	Q_power station	31.59	3.86	-3.83
117	117	151	Q_power station	35.38	4.59	-2.77
117	117	152	Q_power station	38.01	-8.036E-02	-3.04
117	117	150	Q_neve	97.93	8.015E-02	-7.55
117	117	149	Q_neve	95.27	17.27	-6.95
117	117	151	Q_neve	105.2	19.65	-4.06
117	117	152	Q_neve	111.03	-0.23	-4.67
117	117	150	Q_manutenzione	33.09	2.442E-02	-4.1
117	117	149	Q_manutenzione	31.59	3.86	-3.83
117	117	151	Q_manutenzione	35.38	4.59	-2.77
117	117	152	Q_manutenzione	38.01	-8.036E-02	-3.04
117	117	150	EQ_X	380.	-0.67	26.62
117	117	149	EQ_X	359.27	34.18	22.85
117	117	151	EQ_X	285.82	18.38	30.17
117	117	152	EQ_X	294.08	-0.55	33.93
117	117	150	EQ_Y	-82.72	28.61	127.65
117	117	149	EQ_Y	-51.93	-100.09	121.86
117	117	151	EQ_Y	-63.48	-56.88	98.61
117	117	152	EQ_Y	-95.86	10.42	104.39
118	118	152	DEAD	4.654E-11	-2.514E-11	-3.035E-11
118	118	151	DEAD	9.976E-11	5.440E-11	-3.146E-11
118	118	153	DEAD	7.081E-11	2.339E-11	-1.518E-11
118	118	154	DEAD	2.120E-10	3.317E-11	-1.933E-11
118	118	152	G1_power station	0.	0.	0.
118	118	151	G1_power station	0.	0.	0.
118	118	153	G1_power station	0.	0.	0.
118	118	154	G1_power station	0.	0.	0.
118	118	152	G2_power station	1023.44	-2.95	-46.
118	118	151	G2_power station	957.36	124.22	-41.35
118	118	153	G2_power station	1033.39	133.38	2.76
118	118	154	G2_power station	1160.4	11.05	-1.89
118	118	152	Q_power station	37.87	-0.11	-1.7
118	118	151	Q_power station	35.42	4.6	-1.53
118	118	153	Q_power station	38.24	4.94	0.1
118	118	154	Q_power station	42.93	0.41	-6.976E-02
118	118	152	Q_neve	110.63	-0.31	-0.96
118	118	151	Q_neve	105.29	19.67	-0.67

Table 21: Element Stresses - Area Shells, Part 1 of 3

Area	AreaElem	Joint	OutputCase	S11Top	S22Top	S12Top
				KN/m2	KN/m2	KN/m2
118	118	153	Q_neve	111.52	20.73	3.84
118	118	154	Q_neve	123.13	1.17	3.56
118	118	152	Q_manutenzione	37.87	-0.11	-1.7
118	118	151	Q_manutenzione	35.42	4.6	-1.53
118	118	153	Q_manutenzione	38.24	4.94	0.1
118	118	154	Q_manutenzione	42.93	0.41	-6.976E-02
118	118	152	EQ_X	292.17	-0.93	39.69
118	118	151	EQ_X	285.17	18.25	34.78
118	118	153	EQ_X	213.93	9.24	38.54
118	118	154	EQ_X	215.04	-0.67	43.45
118	118	152	EQ_Y	-84.97	12.6	79.71
118	118	151	EQ_Y	-60.8	-56.34	79.12
118	118	153	EQ_Y	-68.94	-60.62	57.
118	118	154	EQ_Y	-94.65	15.75	57.59
119	119	154	DEAD	8.121E-11	-1.016E-11	-1.389E-11
119	119	153	DEAD	1.923E-10	6.036E-11	1.282E-12
119	119	155	DEAD	1.320E-10	2.548E-11	1.038E-11
119	119	156	DEAD	2.810E-10	-5.624E-12	-4.785E-12
119	119	154	G1_power station	0.	0.	0.
119	119	153	G1_power station	0.	0.	0.
119	119	155	G1_power station	0.	0.	0.
119	119	156	G1_power station	0.	0.	0.
119	119	154	G2_power station	1150.11	8.99	44.23
119	119	153	G2_power station	1034.41	133.59	71.73
119	119	155	G2_power station	1198.73	181.04	160.74
119	119	156	G2_power station	1502.14	-50.24	133.24
119	119	154	Q_power station	42.55	0.33	1.64
119	119	153	Q_power station	38.27	4.94	2.65
119	119	155	Q_power station	44.35	6.7	5.95
119	119	156	Q_power station	55.58	-1.86	4.93
119	119	154	Q_neve	122.13	0.97	8.22
119	119	153	Q_neve	111.57	20.74	10.96
119	119	155	Q_neve	125.98	25.09	19.96
119	119	156	Q_neve	154.96	-5.39	17.22
119	119	154	Q_manutenzione	42.55	0.33	1.64
119	119	153	Q_manutenzione	38.27	4.94	2.65
119	119	155	Q_manutenzione	44.35	6.7	5.95
119	119	156	Q_manutenzione	55.58	-1.86	4.93
119	119	154	EQ_X	210.73	-1.54	42.67
119	119	153	EQ_X	214.58	9.37	44.34
119	119	155	EQ_X	150.91	-17.9	45.3
119	119	156	EQ_X	141.82	-7.49	43.63
119	119	154	EQ_Y	-68.94	20.9	31.22

Table 21: Element Stresses - Area Shells, Part 1 of 3

Area	AreaElem	Joint	OutputCase	S11Top	S22Top	S12Top
				KN/m2	KN/m2	KN/m2
119	119	153	EQ_Y	-75.89	-62.01	40.09
119	119	155	EQ_Y	-76.19	-92.93	18.21
119	119	156	EQ_Y	-89.49	27.84	9.33
120	120	156	DEAD	2.119E-10	-1.150E-11	1.963E-11
120	120	155	DEAD	1.822E-10	2.696E-11	3.065E-11
120	120	24	DEAD	2.225E-10	-1.302E-11	4.693E-11
120	120	31	DEAD	2.732E-10	-9.444E-12	3.065E-11
120	120	156	G1_power station	0.	0.	0.
120	120	155	G1_power station	0.	0.	0.
120	120	24	G1_power station	0.	0.	0.
120	120	31	G1_power station	0.	0.	0.
120	120	156	G2_power station	1499.08	-50.85	210.05
120	120	155	G2_power station	1148.97	171.09	366.16
120	120	24	G2_power station	1919.55	-239.14	583.42
120	120	31	G2_power station	2793.47	119.39	427.31
120	120	156	Q_power station	55.47	-1.88	7.77
120	120	155	Q_power station	42.51	6.33	13.55
120	120	24	Q_power station	71.02	-8.85	21.59
120	120	31	Q_power station	103.36	4.42	15.81
120	120	156	Q_neve	155.06	-5.37	24.38
120	120	155	Q_neve	120.53	24.	41.07
120	120	24	Q_neve	197.21	-23.43	62.08
120	120	31	Q_neve	279.74	12.55	45.4
120	120	156	Q_manutenzione	55.47	-1.88	7.77
120	120	155	Q_manutenzione	42.51	6.33	13.55
120	120	24	Q_manutenzione	71.02	-8.85	21.59
120	120	31	Q_manutenzione	103.36	4.42	15.81
120	120	156	EQ_X	139.71	-7.91	39.83
120	120	155	EQ_X	147.52	-18.57	49.65
120	120	24	EQ_X	148.08	-79.44	40.79
120	120	31	EQ_X	73.23	17.01	30.98
120	120	156	EQ_Y	-29.68	39.8	-7.06
120	120	155	EQ_Y	-106.34	-98.96	-24.
120	120	24	EQ_Y	-116.05	-120.37	-72.72
120	120	31	EQ_Y	-111.39	10.58	-55.79
121	121	19	DEAD	3.102E-11	-6.350E-12	-9.742E-12
121	121	22	DEAD	1.659E-11	-1.776E-11	-9.742E-12
121	121	157	DEAD	1.889E-11	-4.882E-11	1.149E-11
121	121	158	DEAD	1.121E-10	4.140E-11	1.149E-11
121	121	19	G1_power station	0.	0.	0.
121	121	22	G1_power station	0.	0.	0.
121	121	157	G1_power station	0.	0.	0.
121	121	158	G1_power station	0.	0.	0.

Table 21: Element Stresses - Area Shells, Part 1 of 3

Area	AreaElem	Joint	OutputCase	S11Top	S22Top	S12Top
				KN/m2	KN/m2	KN/m2
121	121	19	G2_power station	-189.59	20.17	12.12
121	121	22	G2_power station	-627.29	-608.16	-38.73
121	121	157	G2_power station	333.5	-119.47	-15.5
121	121	158	G2_power station	183.45	-6.48	35.35
121	121	19	Q_power station	-7.01	0.75	0.45
121	121	22	Q_power station	-23.21	-22.5	-1.43
121	121	157	Q_power station	12.34	-4.42	-0.57
121	121	158	Q_power station	6.79	-0.24	1.31
121	121	19	Q_neve	-12.62	1.82	4.07
121	121	22	Q_neve	-53.13	-47.97	-0.34
121	121	157	Q_neve	38.01	-3.12	2.4
121	121	158	Q_neve	24.45	-0.45	6.81
121	121	19	Q_manutenzione	-7.01	0.75	0.45
121	121	22	Q_manutenzione	-23.21	-22.5	-1.43
121	121	157	Q_manutenzione	12.34	-4.42	-0.57
121	121	158	Q_manutenzione	6.79	-0.24	1.31
121	121	19	EQ_X	581.17	165.57	-240.32
121	121	22	EQ_X	-2104.01	-319.4	-184.22
121	121	157	EQ_X	-404.66	-244.05	142.43
121	121	158	EQ_X	-918.15	-34.58	86.32
121	121	19	EQ_Y	-374.27	172.19	28.96
121	121	22	EQ_Y	-442.48	-1617.65	-401.22
121	121	157	EQ_Y	33.69	544.93	-453.52
121	121	158	EQ_Y	-44.53	-126.39	-23.34
122	122	158	DEAD	5.684E-11	1.865E-11	2.307E-11
122	122	157	DEAD	1.507E-11	-3.482E-11	2.307E-11
122	122	159	DEAD	6.139E-11	4.997E-12	3.823E-11
122	122	160	DEAD	1.137E-10	-1.510E-11	3.823E-11
122	122	158	G1_power station	0.	0.	0.
122	122	157	G1_power station	0.	0.	0.
122	122	159	G1_power station	0.	0.	0.
122	122	160	G1_power station	0.	0.	0.
122	122	158	G2_power station	194.02	-4.36	-21.53
122	122	157	G2_power station	315.6	-123.05	-16.5
122	122	159	G2_power station	677.48	97.72	-1.39
122	122	160	G2_power station	887.23	-33.43	-6.42
122	122	158	Q_power station	7.18	-0.16	-0.8
122	122	157	Q_power station	11.68	-4.55	-0.61
122	122	159	Q_power station	25.07	3.62	-5.159E-02
122	122	160	Q_power station	32.83	-1.24	-0.24
122	122	158	Q_neve	25.41	-0.26	2.19
122	122	157	Q_neve	36.36	-3.45	2.93
122	122	159	Q_neve	71.64	17.38	5.04

Table 21: Element Stresses - Area Shells, Part 1 of 3

Area	AreaElem	Joint	OutputCase	S11Top	S22Top	S12Top
				KN/m2	KN/m2	KN/m2
122	122	160	Q_neve	91.7	-3.64	4.3
122	122	158	Q_manutenzione	7.18	-0.16	-0.8
122	122	157	Q_manutenzione	11.68	-4.55	-0.61
122	122	159	Q_manutenzione	25.07	3.62	-5.159E-02
122	122	160	Q_manutenzione	32.83	-1.24	-0.24
122	122	158	EQ_X	-800.87	-11.12	72.79
122	122	157	EQ_X	-500.75	-263.27	25.09
122	122	159	EQ_X	-542.49	-105.41	-57.57
122	122	160	EQ_X	-679.51	18.5	-9.87
122	122	158	EQ_Y	-58.64	-129.21	-272.72
122	122	157	EQ_Y	15.78	541.35	-191.11
122	122	159	EQ_Y	-65.98	20.91	-171.3
122	122	160	EQ_Y	50.42	62.09	-252.91
123	123	160	DEAD	1.483E-10	2.905E-12	5.745E-11
123	123	159	DEAD	3.471E-11	7.438E-14	5.745E-11
123	123	23	DEAD	1.157E-10	3.663E-12	7.565E-11
123	123	32	DEAD	9.008E-11	3.866E-12	7.565E-11
123	123	160	G1_power station	0.	0.	0.
123	123	159	G1_power station	0.	0.	0.
123	123	23	G1_power station	0.	0.	0.
123	123	32	G1_power station	0.	0.	0.
123	123	160	G2_power station	866.07	-37.66	17.96
123	123	159	G2_power station	663.88	95.	134.16
123	123	23	G2_power station	1251.08	-123.36	289.04
123	123	32	G2_power station	1991.7	77.04	172.83
123	123	160	Q_power station	32.04	-1.39	0.66
123	123	159	Q_power station	24.56	3.52	4.96
123	123	23	Q_power station	46.29	-4.56	10.69
123	123	32	Q_power station	73.69	2.85	6.39
123	123	160	Q_neve	90.01	-3.97	6.65
123	123	159	Q_neve	69.86	17.03	19.2
123	123	23	Q_neve	128.47	-9.95	34.2
123	123	32	Q_neve	197.76	8.1	21.66
123	123	160	Q_manutenzione	32.04	-1.39	0.66
123	123	159	Q_manutenzione	24.56	3.52	4.96
123	123	23	Q_manutenzione	46.29	-4.56	10.69
123	123	32	Q_manutenzione	73.69	2.85	6.39
123	123	160	EQ_X	-710.77	12.25	-67.99
123	123	159	EQ_X	-495.29	-95.97	-132.7
123	123	23	EQ_X	-715.36	143.51	-200.08
123	123	32	EQ_X	-994.17	-51.6	-135.37
123	123	160	EQ_Y	91.58	70.32	-183.74
123	123	159	EQ_Y	-107.1	12.69	-200.08

Table 21: Element Stresses - Area Shells, Part 1 of 3

Area	AreaElem	Joint	OutputCase	S11Top	S22Top	S12Top
				KN/m2	KN/m2	KN/m2
123	123	23	EQ_Y	-171.36	23.56	-188.95
123	123	32	EQ_Y	53.12	-46.85	-172.61
124	124	22	DEAD	5.187E-12	-1.572E-11	1.110E-12
124	124	74	DEAD	2.532E-11	-1.158E-10	-1.923E-12
124	124	161	DEAD	-1.832E-11	-6.047E-11	4.144E-12
124	124	157	DEAD	1.015E-11	-6.419E-11	7.177E-12
124	124	22	G1_power station	0.	0.	0.
124	124	74	G1_power station	0.	0.	0.
124	124	161	G1_power station	0.	0.	0.
124	124	157	G1_power station	0.	0.	0.
124	124	22	G2_power station	-629.48	-619.12	-133.52
124	124	74	G2_power station	-35.72	378.86	-164.11
124	124	161	G2_power station	157.54	219.1	-189.7
124	124	157	G2_power station	335.84	-107.8	-159.11
124	124	22	Q_power station	-23.29	-22.91	-4.94
124	124	74	Q_power station	-1.32	14.02	-6.07
124	124	161	Q_power station	5.83	8.11	-7.02
124	124	157	Q_power station	12.43	-3.99	-5.89
124	124	22	Q_neve	-53.34	-49.02	-8.87
124	124	74	Q_neve	0.35	49.56	-11.99
124	124	161	Q_neve	22.47	37.38	-13.75
124	124	157	Q_neve	38.26	-1.88	-10.63
124	124	22	Q_manutenzione	-23.29	-22.91	-4.94
124	124	74	Q_manutenzione	-1.32	14.02	-6.07
124	124	161	Q_manutenzione	5.83	8.11	-7.02
124	124	157	Q_manutenzione	12.43	-3.99	-5.89
124	124	22	EQ_X	-2103.57	-317.16	272.3
124	124	74	EQ_X	238.22	31.1	311.03
124	124	161	EQ_X	-564.29	12.4	-27.62
124	124	157	EQ_X	-406.56	-253.54	-66.35
124	124	22	EQ_Y	300.29	2096.18	-382.72
124	124	74	EQ_Y	147.48	38.22	47.77
124	124	161	EQ_Y	-25.52	521.03	3.77
124	124	157	EQ_Y	-127.66	-261.82	-426.71
125	125	157	DEAD	2.667E-11	-6.802E-11	1.051E-11
125	125	161	DEAD	7.399E-12	-6.050E-11	4.441E-12
125	125	162	DEAD	-1.353E-11	-8.698E-11	1.051E-11
125	125	159	DEAD	8.324E-11	9.271E-12	1.658E-11
125	125	157	G1_power station	0.	0.	0.
125	125	161	G1_power station	0.	0.	0.
125	125	162	G1_power station	0.	0.	0.
125	125	159	G1_power station	0.	0.	0.
125	125	157	G2_power station	317.93	-111.38	-104.74

Table 21: Element Stresses - Area Shells, Part 1 of 3

Area	AreaElem	Joint	OutputCase	S11Top	S22Top	S12Top
				KN/m2	KN/m2	KN/m2
125	125	161	G2_power station	166.41	220.87	-116.14
125	125	162	G2_power station	350.71	177.24	-20.79
125	125	159	G2_power station	674.97	85.18	-9.39
125	125	157	Q_power station	11.76	-4.12	-3.88
125	125	161	Q_power station	6.16	8.17	-4.3
125	125	162	Q_power station	12.98	6.56	-0.77
125	125	159	Q_power station	24.97	3.15	-0.35
125	125	157	Q_neve	36.61	-2.21	-5.15
125	125	161	Q_neve	23.29	37.54	-6.4
125	125	162	Q_neve	39.67	34.91	3.24
125	125	159	Q_neve	71.27	15.54	4.5
125	125	157	Q_manutenzione	11.76	-4.12	-3.88
125	125	161	Q_manutenzione	6.16	8.17	-4.3
125	125	162	Q_manutenzione	12.98	6.56	-0.77
125	125	159	Q_manutenzione	24.97	3.15	-0.35
125	125	157	EQ_X	-502.65	-272.76	-65.16
125	125	161	EQ_X	-497.81	25.7	-79.16
125	125	162	EQ_X	-310.74	-44.94	-108.43
125	125	159	EQ_X	-544.52	-115.58	-94.43
125	125	157	EQ_Y	-145.57	-265.4	-182.41
125	125	161	EQ_Y	-13.1	523.51	-220.18
125	125	162	EQ_Y	-71.8	153.14	-208.35
125	125	159	EQ_Y	-27.32	214.22	-170.57
126	126	159	DEAD	3.114E-11	-7.453E-12	3.567E-11
126	126	162	DEAD	4.018E-12	-7.431E-11	8.368E-12
126	126	163	DEAD	-2.195E-11	-7.267E-11	3.264E-11
126	126	23	DEAD	1.352E-10	1.085E-10	5.994E-11
126	126	159	G1_power station	0.	0.	0.
126	126	162	G1_power station	0.	0.	0.
126	126	163	G1_power station	0.	0.	0.
126	126	23	G1_power station	0.	0.	0.
126	126	159	G2_power station	661.37	82.46	150.22
126	126	162	G2_power station	387.77	184.65	106.37
126	126	163	G2_power station	-297.44	420.44	438.22
126	126	23	G2_power station	1276.66	4.52	482.08
126	126	159	Q_power station	24.47	3.05	5.56
126	126	162	Q_power station	14.35	6.83	3.94
126	126	163	Q_power station	-11.01	15.56	16.21
126	126	23	Q_power station	47.24	0.17	17.84
126	126	159	Q_neve	69.49	15.19	21.11
126	126	162	Q_neve	43.64	35.7	16.21
126	126	163	Q_neve	-30.6	61.9	50.8
126	126	23	Q_neve	131.62	5.78	55.7

Table 21: Element Stresses - Area Shells, Part 1 of 3

Area	AreaElem	Joint	OutputCase	S11Top	S22Top	S12Top
				KN/m2	KN/m2	KN/m2
126	126	159	Q_manutenzione	24.47	3.05	5.56
126	126	162	Q_manutenzione	14.35	6.83	3.94
126	126	163	Q_manutenzione	-11.01	15.56	16.21
126	126	23	Q_manutenzione	47.24	0.17	17.84
126	126	159	EQ_X	-497.32	-106.14	-178.28
126	126	162	EQ_X	-350.21	-52.83	-178.9
126	126	163	EQ_X	166.55	-227.49	-364.88
126	126	23	EQ_X	-712.6	157.3	-364.26
126	126	159	EQ_Y	-68.44	206.	-189.15
126	126	162	EQ_Y	-48.67	157.77	-164.46
126	126	163	EQ_Y	19.85	88.61	-195.53
126	126	23	EQ_Y	-184.65	-42.92	-220.21
127	127	74	DEAD	3.412E-11	-5.223E-11	-1.751E-12
127	127	76	DEAD	-6.347E-11	-8.241E-11	1.282E-12
127	127	164	DEAD	7.052E-11	-3.403E-11	-1.751E-12
127	127	161	DEAD	-6.589E-12	-8.923E-11	-4.785E-12
127	127	74	G1_power station	0.	0.	0.
127	127	76	G1_power station	0.	0.	0.
127	127	164	G1_power station	0.	0.	0.
127	127	161	G1_power station	0.	0.	0.
127	127	74	G2_power station	-40.2	356.45	-107.37
127	127	76	G2_power station	94.73	528.25	-50.7
127	127	164	G2_power station	145.23	483.39	-56.72
127	127	161	G2_power station	159.59	229.35	-113.39
127	127	74	Q_power station	-1.49	13.19	-3.97
127	127	76	Q_power station	3.5	19.55	-1.88
127	127	164	Q_power station	5.37	17.89	-2.1
127	127	161	Q_power station	5.9	8.49	-4.2
127	127	74	Q_neve	-6.278E-02	47.51	-7.47
127	127	76	Q_neve	12.01	67.34	-3.22
127	127	164	Q_neve	20.79	66.18	-3.33
127	127	161	Q_neve	22.66	38.34	-7.58
127	127	74	Q_manutenzione	-1.49	13.19	-3.97
127	127	76	Q_manutenzione	3.5	19.55	-1.88
127	127	164	Q_manutenzione	5.37	17.89	-2.1
127	127	161	Q_manutenzione	5.9	8.49	-4.2
127	127	74	EQ_X	237.79	28.98	77.32
127	127	76	EQ_X	-264.87	-87.87	30.47
127	127	164	EQ_X	-205.82	-48.73	51.87
127	127	161	EQ_X	-569.85	-15.39	98.71
127	127	74	EQ_Y	183.43	217.98	-41.17
127	127	76	EQ_Y	20.53	144.35	-81.93
127	127	164	EQ_Y	17.	88.54	-83.79

Table 21: Element Stresses - Area Shells, Part 1 of 3

Area	AreaElem	Joint	OutputCase	S11Top	S22Top	S12Top
				KN/m2	KN/m2	KN/m2
127	127	161	EQ_Y	-53.88	379.28	-43.03
128	128	161	DEAD	2.432E-11	-7.142E-11	-2.346E-13
128	128	164	DEAD	-8.265E-12	-6.337E-11	-8.225E-12
128	128	165	DEAD	2.735E-11	-3.805E-11	-3.268E-12
128	128	162	DEAD	-1.888E-11	-6.185E-11	9.976E-12
128	128	161	G1_power station	0.	0.	0.
128	128	164	G1_power station	0.	0.	0.
128	128	165	G1_power station	0.	0.	0.
128	128	162	G1_power station	0.	0.	0.
128	128	161	G2_power station	168.46	231.12	-71.25
128	128	164	G2_power station	149.05	484.15	-49.4
128	128	165	G2_power station	111.57	467.47	13.05
128	128	162	G2_power station	353.61	191.72	-8.8
128	128	161	Q_power station	6.23	8.55	-2.64
128	128	164	Q_power station	5.51	17.91	-1.83
128	128	165	Q_power station	4.13	17.3	0.48
128	128	162	Q_power station	13.08	7.09	-0.33
128	128	161	Q_neve	23.48	38.5	-2.99
128	128	164	Q_neve	21.17	66.25	-2.34
128	128	165	Q_neve	16.18	68.03	4.12
128	128	162	Q_neve	39.98	36.46	3.46
128	128	161	Q_manutenzione	6.23	8.55	-2.64
128	128	164	Q_manutenzione	5.51	17.91	-1.83
128	128	165	Q_manutenzione	4.13	17.3	0.48
128	128	162	Q_manutenzione	13.08	7.09	-0.33
128	128	161	EQ_X	-503.37	-2.1	-23.64
128	128	164	EQ_X	-232.64	-54.09	9.31
128	128	165	EQ_X	-178.22	-81.12	-60.89
128	128	162	EQ_X	-312.59	-54.21	-93.84
128	128	161	EQ_Y	-41.46	381.76	-112.08
128	128	164	EQ_Y	17.73	88.68	-75.39
128	128	165	EQ_Y	-17.46	80.64	-101.59
128	128	162	EQ_Y	-66.31	180.59	-138.28
129	129	162	DEAD	5.182E-12	-5.486E-11	2.061E-11
129	129	165	DEAD	2.849E-13	-4.164E-11	8.179E-12
129	129	166	DEAD	-7.217E-11	-5.942E-11	2.668E-11
129	129	163	DEAD	-1.867E-11	-8.183E-11	2.335E-11
129	129	162	G1_power station	0.	0.	0.
129	129	165	G1_power station	0.	0.	0.
129	129	166	G1_power station	0.	0.	0.
129	129	163	G1_power station	0.	0.	0.
129	129	162	G2_power station	390.67	199.14	129.31
129	129	165	G2_power station	99.05	464.97	41.27

Table 21: Element Stresses - Area Shells, Part 1 of 3

Area	AreaElem	Joint	OutputCase	S11Top	S22Top	S12Top
				KN/m2	KN/m2	KN/m2
129	129	166	G2_power station	56.94	462.52	41.07
129	129	163	G2_power station	-301.59	399.67	129.11
129	129	162	Q_power station	14.45	7.37	4.78
129	129	165	Q_power station	3.66	17.2	1.53
129	129	166	Q_power station	2.11	17.11	1.52
129	129	163	Q_power station	-11.16	14.79	4.78
129	129	162	Q_neve	43.95	37.26	17.58
129	129	165	Q_neve	14.87	67.77	6.98
129	129	166	Q_neve	5.89	70.38	7.05
129	129	163	Q_neve	-31.11	59.38	17.65
129	129	162	Q_manutenzione	14.45	7.37	4.78
129	129	165	Q_manutenzione	3.66	17.2	1.53
129	129	166	Q_manutenzione	2.11	17.11	1.52
129	129	163	Q_manutenzione	-11.16	14.79	4.78
129	129	162	EQ_X	-352.07	-62.11	-169.47
129	129	165	EQ_X	-168.84	-79.25	-83.99
129	129	166	EQ_X	-30.58	-152.98	-82.43
129	129	163	EQ_X	169.24	-214.06	-167.91
129	129	162	EQ_Y	-43.18	185.21	-146.63
129	129	165	EQ_Y	-11.14	81.91	-116.86
129	129	166	EQ_Y	-7.31	67.69	-104.06
129	129	163	EQ_Y	29.89	138.8	-133.83
130	130	76	DEAD	-5.361E-11	-5.722E-11	-8.522E-12
130	130	78	DEAD	3.407E-11	1.927E-11	-1.570E-11
130	130	167	DEAD	-1.645E-11	1.175E-12	-5.489E-12
130	130	164	DEAD	8.109E-11	-4.451E-13	-3.566E-12
130	130	76	G1_power station	0.	0.	0.
130	130	78	G1_power station	0.	0.	0.
130	130	167	G1_power station	0.	0.	0.
130	130	164	G1_power station	0.	0.	0.
130	130	76	G2_power station	97.36	541.43	-17.46
130	130	78	G2_power station	97.36	541.43	17.46
130	130	167	G2_power station	145.07	482.55	17.46
130	130	164	G2_power station	145.07	482.55	-17.46
130	130	76	Q_power station	3.6	20.03	-0.65
130	130	78	Q_power station	3.6	20.03	0.65
130	130	167	Q_power station	5.37	17.85	0.65
130	130	164	Q_power station	5.37	17.85	-0.65
130	130	76	Q_neve	12.25	68.53	-1.04
130	130	78	Q_neve	12.25	68.53	1.04
130	130	167	Q_neve	20.8	66.18	1.04
130	130	164	Q_neve	20.8	66.18	-1.04
130	130	76	Q_manutenzione	3.6	20.03	-0.65

Table 21: Element Stresses - Area Shells, Part 1 of 3

Area	AreaElem	Joint	OutputCase	S11Top	S22Top	S12Top
				KN/m2	KN/m2	KN/m2
130	130	78	Q_manutenzione	3.6	20.03	0.65
130	130	167	Q_manutenzione	5.37	17.85	0.65
130	130	164	Q_manutenzione	5.37	17.85	-0.65
130	130	76	EQ_X	-266.19	-94.49	14.07
130	130	78	EQ_X	-267.51	-94.75	-11.33
130	130	167	EQ_X	-205.4	-40.29	-11.46
130	130	164	EQ_X	-204.08	-40.02	13.94
130	130	76	EQ_Y	12.17	102.57	-81.07
130	130	78	EQ_Y	-12.08	-101.43	-80.78
130	130	167	EQ_Y	-16.98	-87.76	-79.09
130	130	164	EQ_Y	18.82	97.61	-79.39
131	131	164	DEAD	-1.498E-11	-2.084E-11	-3.096E-12
131	131	167	DEAD	7.552E-11	3.028E-11	-8.053E-12
131	131	168	DEAD	-6.427E-11	2.390E-11	-9.164E-12
131	131	165	DEAD	-2.079E-11	-5.086E-11	1.047E-12
131	131	164	G1_power station	0.	0.	0.
131	131	167	G1_power station	0.	0.	0.
131	131	168	G1_power station	0.	0.	0.
131	131	165	G1_power station	0.	0.	0.
131	131	164	G2_power station	148.88	483.32	-6.49
131	131	167	G2_power station	148.88	483.32	6.49
131	131	168	G2_power station	108.03	449.73	6.49
131	131	165	G2_power station	108.03	449.73	-6.49
131	131	164	Q_power station	5.51	17.88	-0.24
131	131	167	Q_power station	5.51	17.88	0.24
131	131	168	Q_power station	4.	16.64	0.24
131	131	165	Q_power station	4.	16.64	-0.24
131	131	164	Q_neve	21.17	66.26	0.26
131	131	167	Q_neve	21.17	66.26	-0.26
131	131	168	Q_neve	15.82	66.22	-0.26
131	131	165	Q_neve	15.82	66.22	0.26
131	131	164	Q_manutenzione	5.51	17.88	-0.24
131	131	167	Q_manutenzione	5.51	17.88	0.24
131	131	168	Q_manutenzione	4.	16.64	0.24
131	131	165	Q_manutenzione	4.	16.64	-0.24
131	131	164	EQ_X	-230.9	-45.38	-6.56
131	131	167	EQ_X	-230.41	-45.29	9.07
131	131	168	EQ_X	-178.11	-82.89	8.53
131	131	165	EQ_X	-178.59	-82.98	-7.11
131	131	164	EQ_Y	19.54	97.76	-80.19
131	131	167	EQ_Y	-19.98	-88.36	-80.85
131	131	168	EQ_Y	14.85	-82.14	-82.44
131	131	165	EQ_Y	-13.79	99.04	-81.78

Table 21: Element Stresses - Area Shells, Part 1 of 3

Area	AreaElem	Joint	OutputCase	S11Top	S22Top	S12Top
				KN/m2	KN/m2	KN/m2
132	132	165	DEAD	-1.434E-11	-5.727E-11	-1.814E-12
132	132	168	DEAD	2.646E-11	5.887E-11	-4.550E-12
132	132	169	DEAD	-4.696E-11	3.450E-11	-1.395E-11
132	132	166	DEAD	-4.179E-11	-9.389E-12	4.550E-12
132	132	165	G1_power station	0.	0.	0.
132	132	168	G1_power station	0.	0.	0.
132	132	169	G1_power station	0.	0.	0.
132	132	166	G1_power station	0.	0.	0.
132	132	165	G2_power station	95.5	447.23	12.74
132	132	168	G2_power station	95.5	447.23	-12.74
132	132	169	G2_power station	62.54	490.55	-12.74
132	132	166	G2_power station	62.54	490.55	12.74
132	132	165	Q_power station	3.53	16.55	0.47
132	132	168	Q_power station	3.53	16.55	-0.47
132	132	169	Q_power station	2.31	18.15	-0.47
132	132	166	Q_power station	2.31	18.15	0.47
132	132	165	Q_neve	14.51	65.96	2.25
132	132	168	Q_neve	14.51	65.96	-2.25
132	132	169	Q_neve	6.45	73.16	-2.25
132	132	166	Q_neve	6.45	73.16	2.25
132	132	165	Q_manutenzione	3.53	16.55	0.47
132	132	168	Q_manutenzione	3.53	16.55	-0.47
132	132	169	Q_manutenzione	2.31	18.15	-0.47
132	132	166	Q_manutenzione	2.31	18.15	0.47
132	132	165	EQ_X	-169.22	-81.11	-27.27
132	132	168	EQ_X	-169.37	-81.14	27.39
132	132	169	EQ_X	-34.13	-169.98	28.06
132	132	166	EQ_X	-33.98	-169.95	-26.6
132	132	165	EQ_Y	-7.46	100.3	-90.19
132	132	168	EQ_Y	6.83	-83.74	-90.04
132	132	169	EQ_Y	4.73	-60.88	-115.67
132	132	166	EQ_Y	-3.83	85.1	-115.83
133	133	78	DEAD	2.993E-11	5.237E-12	-1.877E-12
133	133	80	DEAD	1.506E-11	7.081E-11	-5.724E-12
133	133	170	DEAD	9.136E-11	7.577E-11	-2.615E-11
133	133	167	DEAD	-2.513E-11	1.545E-11	-1.179E-11
133	133	78	G1_power station	0.	0.	0.
133	133	80	G1_power station	0.	0.	0.
133	133	170	G1_power station	0.	0.	0.
133	133	167	G1_power station	0.	0.	0.
133	133	78	G2_power station	94.73	528.25	50.7
133	133	80	G2_power station	-40.2	356.45	107.37
133	133	170	G2_power station	159.59	229.35	113.39

Table 21: Element Stresses - Area Shells, Part 1 of 3

Area	AreaElem	Joint	OutputCase	S11Top	S22Top	S12Top
				KN/m2	KN/m2	KN/m2
133	133	167	G2_power station	145.23	483.39	56.72
133	133	78	Q_power station	3.5	19.55	1.88
133	133	80	Q_power station	-1.49	13.19	3.97
133	133	170	Q_power station	5.9	8.49	4.2
133	133	167	Q_power station	5.37	17.89	2.1
133	133	78	Q_neve	12.01	67.34	3.22
133	133	80	Q_neve	-6.278E-02	47.51	7.47
133	133	170	Q_neve	22.66	38.34	7.58
133	133	167	Q_neve	20.79	66.18	3.33
133	133	78	Q_manutenzione	3.5	19.55	1.88
133	133	80	Q_manutenzione	-1.49	13.19	3.97
133	133	170	Q_manutenzione	5.9	8.49	4.2
133	133	167	Q_manutenzione	5.37	17.89	2.1
133	133	78	EQ_X	-265.83	-86.37	-28.77
133	133	80	EQ_X	235.15	30.14	-76.83
133	133	170	EQ_X	-572.51	-14.31	-96.67
133	133	167	EQ_X	-206.8	-47.31	-48.6
133	133	78	EQ_Y	-20.4	-143.03	-81.18
133	133	80	EQ_Y	-182.31	-216.46	-39.89
133	133	170	EQ_Y	56.23	-371.6	-42.58
133	133	167	EQ_Y	-15.64	-81.06	-83.87
134	134	167	DEAD	8.068E-11	3.226E-11	-2.277E-11
134	134	170	DEAD	1.327E-11	7.347E-11	-1.448E-11
134	134	171	DEAD	8.638E-12	3.605E-11	-2.277E-11
134	134	168	DEAD	-6.712E-11	3.555E-11	-2.055E-11
134	134	167	G1_power station	0.	0.	0.
134	134	170	G1_power station	0.	0.	0.
134	134	171	G1_power station	0.	0.	0.
134	134	168	G1_power station	0.	0.	0.
134	134	167	G2_power station	149.05	484.15	49.4
134	134	170	G2_power station	168.46	231.12	71.25
134	134	171	G2_power station	353.61	191.72	8.8
134	134	168	G2_power station	111.57	467.47	-13.05
134	134	167	Q_power station	5.51	17.91	1.83
134	134	170	Q_power station	6.23	8.55	2.64
134	134	171	Q_power station	13.08	7.09	0.33
134	134	168	Q_power station	4.13	17.3	-0.48
134	134	167	Q_neve	21.17	66.25	2.34
134	134	170	Q_neve	23.48	38.5	2.99
134	134	171	Q_neve	39.98	36.46	-3.46
134	134	168	Q_neve	16.18	68.03	-4.12
134	134	167	Q_manutenzione	5.51	17.91	1.83
134	134	170	Q_manutenzione	6.23	8.55	2.64

Table 21: Element Stresses - Area Shells, Part 1 of 3

Area	AreaElem	Joint	OutputCase	S11Top	S22Top	S12Top
				KN/m2	KN/m2	KN/m2
134	134	171	Q_manutenzione	13.08	7.09	0.33
134	134	168	Q_manutenzione	4.13	17.3	-0.48
134	134	167	EQ_X	-231.82	-52.31	-6.02
134	134	170	EQ_X	-507.71	-1.35	27.14
134	134	171	EQ_X	-317.92	-58.43	97.08
134	134	168	EQ_X	-178.39	-84.31	63.92
134	134	167	EQ_Y	-18.64	-81.66	-76.43
134	134	170	EQ_Y	43.94	-374.06	-112.64
134	134	171	EQ_Y	70.98	-161.99	-139.2
134	134	168	EQ_Y	18.73	-62.73	-102.98
135	135	168	DEAD	6.225E-11	7.004E-11	-2.388E-11
135	135	171	DEAD	-2.105E-11	3.313E-11	-1.640E-11
135	135	172	DEAD	-7.520E-12	6.701E-11	-2.691E-11
135	135	169	DEAD	-3.850E-11	3.692E-11	-1.337E-11
135	135	168	G1_power station	0.	0.	0.
135	135	171	G1_power station	0.	0.	0.
135	135	172	G1_power station	0.	0.	0.
135	135	169	G1_power station	0.	0.	0.
135	135	168	G2_power station	99.05	464.97	-41.27
135	135	171	G2_power station	390.67	199.14	-129.31
135	135	172	G2_power station	-301.59	399.67	-129.11
135	135	169	G2_power station	56.94	462.52	-41.07
135	135	168	Q_power station	3.66	17.2	-1.53
135	135	171	Q_power station	14.45	7.37	-4.78
135	135	172	Q_power station	-11.16	14.79	-4.78
135	135	169	Q_power station	2.11	17.11	-1.52
135	135	168	Q_neve	14.87	67.77	-6.98
135	135	171	Q_neve	43.95	37.26	-17.58
135	135	172	Q_neve	-31.11	59.38	-17.65
135	135	169	Q_neve	5.89	70.38	-7.05
135	135	168	Q_manutenzione	3.66	17.2	-1.53
135	135	171	Q_manutenzione	14.45	7.37	-4.78
135	135	172	Q_manutenzione	-11.16	14.79	-4.78
135	135	169	Q_manutenzione	2.11	17.11	-1.52
135	135	168	EQ_X	-169.66	-82.56	85.72
135	135	171	EQ_X	-350.24	-64.89	172.89
135	135	172	EQ_X	171.39	-215.24	168.18
135	135	169	EQ_X	-31.07	-154.69	81.01
135	135	168	EQ_Y	10.72	-64.33	-117.43
135	135	171	EQ_Y	42.56	-167.67	-148.6
135	135	172	EQ_Y	-29.13	-114.34	-134.39
135	135	169	EQ_Y	8.27	-43.18	-103.22
136	136	80	DEAD	2.465E-11	7.316E-11	-1.371E-11

Table 21: Element Stresses - Area Shells, Part 1 of 3

Area	AreaElem	Joint	OutputCase	S11Top	S22Top	S12Top
				KN/m2	KN/m2	KN/m2
136	136	9	DEAD	6.417E-12	3.968E-11	-1.593E-11
136	136	173	DEAD	2.920E-11	5.951E-11	1.454E-12
136	136	170	DEAD	7.240E-11	6.015E-11	-6.834E-12
136	136	80	G1_power station	0.	0.	0.
136	136	9	G1_power station	0.	0.	0.
136	136	173	G1_power station	0.	0.	0.
136	136	170	G1_power station	0.	0.	0.
136	136	80	G2_power station	-35.72	378.86	164.11
136	136	9	G2_power station	-629.48	-619.12	133.52
136	136	173	G2_power station	335.84	-107.8	159.11
136	136	170	G2_power station	157.54	219.1	189.7
136	136	80	Q_power station	-1.32	14.02	6.07
136	136	9	Q_power station	-23.29	-22.91	4.94
136	136	173	Q_power station	12.43	-3.99	5.89
136	136	170	Q_power station	5.83	8.11	7.02
136	136	80	Q_neve	0.35	49.56	11.99
136	136	9	Q_neve	-53.34	-49.02	8.87
136	136	173	Q_neve	38.26	-1.88	10.63
136	136	170	Q_neve	22.47	37.38	13.75
136	136	80	Q_manutenzione	-1.32	14.02	6.07
136	136	9	Q_manutenzione	-23.29	-22.91	4.94
136	136	173	Q_manutenzione	12.43	-3.99	5.89
136	136	170	Q_manutenzione	5.83	8.11	7.02
136	136	80	EQ_X	235.66	32.7	-310.96
136	136	9	EQ_X	-2104.9	-315.31	-272.7
136	136	173	EQ_X	-407.66	-250.54	65.8
136	136	170	EQ_X	-566.61	15.17	27.54
136	136	80	EQ_Y	-146.3	-36.41	49.57
136	136	9	EQ_Y	-301.38	-2094.82	-380.54
136	136	173	EQ_Y	127.51	267.89	-424.36
136	136	170	EQ_Y	27.64	-514.51	5.74
137	137	170	DEAD	1.891E-11	4.658E-11	-9.867E-12
137	137	173	DEAD	7.176E-11	6.710E-11	-6.834E-12
137	137	174	DEAD	-8.397E-12	3.748E-11	-1.290E-11
137	137	171	DEAD	2.019E-11	4.587E-11	-1.593E-11
137	137	170	G1_power station	0.	0.	0.
137	137	173	G1_power station	0.	0.	0.
137	137	174	G1_power station	0.	0.	0.
137	137	171	G1_power station	0.	0.	0.
137	137	170	G2_power station	166.41	220.87	116.14
137	137	173	G2_power station	317.93	-111.38	104.74
137	137	174	G2_power station	674.97	85.18	9.39
137	137	171	G2_power station	350.71	177.24	20.79

Table 21: Element Stresses - Area Shells, Part 1 of 3

Area	AreaElem	Joint	OutputCase	S11Top	S22Top	S12Top
				KN/m2	KN/m2	KN/m2
137	137	170	Q_power station	6.16	8.17	4.3
137	137	173	Q_power station	11.76	-4.12	3.88
137	137	174	Q_power station	24.97	3.15	0.35
137	137	171	Q_power station	12.98	6.56	0.77
137	137	170	Q_neve	23.29	37.54	6.4
137	137	173	Q_neve	36.61	-2.21	5.15
137	137	174	Q_neve	71.27	15.54	-4.5
137	137	171	Q_neve	39.67	34.91	-3.24
137	137	170	Q_manutenzione	6.16	8.17	4.3
137	137	173	Q_manutenzione	11.76	-4.12	3.88
137	137	174	Q_manutenzione	24.97	3.15	0.35
137	137	171	Q_manutenzione	12.98	6.56	0.77
137	137	170	EQ_X	-501.81	28.13	80.54
137	137	173	EQ_X	-508.39	-270.68	64.09
137	137	174	EQ_X	-550.12	-112.81	95.92
137	137	171	EQ_X	-314.6	-41.83	112.38
137	137	170	EQ_Y	15.36	-516.97	-219.24
137	137	173	EQ_Y	147.3	271.85	-180.1
137	137	174	EQ_Y	29.93	-203.37	-170.36
137	137	171	EQ_Y	74.94	-142.18	-209.5
138	138	171	DEAD	-3.011E-11	3.886E-11	-1.536E-11
138	138	174	DEAD	1.737E-11	4.943E-11	-7.366E-12
138	138	33	DEAD	-5.364E-13	-1.347E-11	-2.142E-11
138	138	172	DEAD	-9.929E-12	4.033E-11	-3.467E-11
138	138	171	G1_power station	0.	0.	0.
138	138	174	G1_power station	0.	0.	0.
138	138	33	G1_power station	0.	0.	0.
138	138	172	G1_power station	0.	0.	0.
138	138	171	G2_power station	387.77	184.65	-106.37
138	138	174	G2_power station	661.37	82.46	-150.22
138	138	33	G2_power station	1276.66	4.52	-482.08
138	138	172	G2_power station	-297.44	420.44	-438.22
138	138	171	Q_power station	14.35	6.83	-3.94
138	138	174	Q_power station	24.47	3.05	-5.56
138	138	33	Q_power station	47.24	0.17	-17.84
138	138	172	Q_power station	-11.01	15.56	-16.21
138	138	171	Q_neve	43.64	35.7	-16.21
138	138	174	Q_neve	69.49	15.19	-21.11
138	138	33	Q_neve	131.62	5.78	-55.7
138	138	172	Q_neve	-30.6	61.9	-50.8
138	138	171	Q_manutenzione	14.35	6.83	-3.94
138	138	174	Q_manutenzione	24.47	3.05	-5.56
138	138	33	Q_manutenzione	47.24	0.17	-17.84

Table 21: Element Stresses - Area Shells, Part 1 of 3

Area	AreaElem	Joint	OutputCase	S11Top	S22Top	S12Top
				KN/m2	KN/m2	KN/m2
138	138	172	Q_manutenzione	-11.01	15.56	-16.21
138	138	171	EQ_X	-346.92	-48.29	183.02
138	138	174	EQ_X	-515.14	-105.81	180.94
138	138	33	EQ_X	-734.43	137.57	372.07
138	138	172	EQ_X	165.84	-243.	374.15
138	138	171	EQ_Y	46.52	-147.87	-166.66
138	138	174	EQ_Y	74.13	-194.53	-191.41
138	138	33	EQ_Y	195.61	80.7	-226.16
138	138	172	EQ_Y	-16.74	-52.39	-201.42
139	139	14	DEAD	-6.084E-11	-8.377E-12	-4.122E-11
139	139	56	DEAD	-2.767E-11	4.337E-11	-3.678E-11
139	139	175	DEAD	3.851E-11	3.333E-11	-5.336E-11
139	139	145	DEAD	7.970E-12	5.778E-11	-3.678E-11
139	139	14	G1_power station	0.	0.	0.
139	139	56	G1_power station	0.	0.	0.
139	139	175	G1_power station	0.	0.	0.
139	139	145	G1_power station	0.	0.	0.
139	139	14	G2_power station	-612.11	-650.03	-169.46
139	139	56	G2_power station	1.55	353.26	-196.75
139	139	175	G2_power station	294.27	198.39	-244.23
139	139	145	G2_power station	387.24	-120.26	-216.94
139	139	14	Q_power station	-22.65	-24.05	-6.27
139	139	56	Q_power station	5.730E-02	13.07	-7.28
139	139	175	Q_power station	10.89	7.34	-9.04
139	139	145	Q_power station	14.33	-4.45	-8.03
139	139	14	Q_neve	-50.85	-53.44	-13.24
139	139	56	Q_neve	5.28	44.89	-15.89
139	139	175	Q_neve	39.76	33.6	-20.06
139	139	145	Q_neve	46.09	-4.52	-17.41
139	139	14	Q_manutenzione	-22.65	-24.05	-6.27
139	139	56	Q_manutenzione	5.730E-02	13.07	-7.28
139	139	175	Q_manutenzione	10.89	7.34	-9.04
139	139	145	Q_manutenzione	14.33	-4.45	-8.03
139	139	14	EQ_X	2063.74	298.68	-286.6
139	139	56	EQ_X	-199.24	-52.94	-323.06
139	139	175	EQ_X	618.71	-21.94	14.64
139	139	145	EQ_X	344.64	210.82	51.09
139	139	14	EQ_Y	-301.07	-2020.63	361.91
139	139	56	EQ_Y	-167.25	-54.94	-35.28
139	139	175	EQ_Y	7.37	-471.36	7.61
139	139	145	EQ_Y	93.6	273.82	404.8
140	140	145	DEAD	2.575E-11	7.282E-11	-5.318E-11
140	140	175	DEAD	-1.843E-11	2.420E-11	-5.318E-11

Table 21: Element Stresses - Area Shells, Part 1 of 3

Area	AreaElem	Joint	OutputCase	S11Top	S22Top	S12Top
				KN/m2	KN/m2	KN/m2
140	140	176	DEAD	-5.464E-11	3.490E-11	-5.015E-11
140	140	147	DEAD	-4.725E-11	2.572E-11	-5.015E-11
140	140	145	G1_power station	0.	0.	0.
140	140	175	G1_power station	0.	0.	0.
140	140	176	G1_power station	0.	0.	0.
140	140	147	G1_power station	0.	0.	0.
140	140	145	G2_power station	368.14	-124.07	-191.8
140	140	175	G2_power station	303.34	200.2	-203.72
140	140	176	G2_power station	639.54	200.42	-171.48
140	140	147	G2_power station	654.06	51.03	-159.55
140	140	145	Q_power station	13.62	-4.59	-7.1
140	140	175	Q_power station	11.22	7.41	-7.54
140	140	176	Q_power station	23.66	7.42	-6.34
140	140	147	Q_power station	24.2	1.89	-5.9
140	140	145	Q_neve	44.36	-4.87	-15.17
140	140	175	Q_neve	40.57	33.76	-16.45
140	140	176	Q_neve	75.62	35.67	-13.6
140	140	147	Q_neve	74.73	11.78	-12.32
140	140	145	Q_manutenzione	13.62	-4.59	-7.1
140	140	175	Q_manutenzione	11.22	7.41	-7.54
140	140	176	Q_manutenzione	23.66	7.42	-6.34
140	140	147	Q_manutenzione	24.2	1.89	-5.9
140	140	145	EQ_X	456.49	233.19	18.82
140	140	175	EQ_X	542.	-37.28	31.07
140	140	176	EQ_X	407.77	46.85	17.23
140	140	147	EQ_X	456.84	72.02	4.97
140	140	145	EQ_Y	91.83	273.47	175.99
140	140	175	EQ_Y	-10.04	-474.84	202.01
140	140	176	EQ_Y	14.14	-103.09	178.19
140	140	147	EQ_Y	-49.73	-210.58	152.18
141	141	147	DEAD	-7.191E-11	2.183E-11	-4.554E-11
141	141	176	DEAD	-9.208E-12	3.473E-11	-4.554E-11
141	141	177	DEAD	-3.930E-11	2.108E-11	-4.554E-11
141	141	149	DEAD	7.270E-11	6.203E-11	-4.554E-11
141	141	147	G1_power station	0.	0.	0.
141	141	176	G1_power station	0.	0.	0.
141	141	177	G1_power station	0.	0.	0.
141	141	149	G1_power station	0.	0.	0.
141	141	147	G2_power station	665.46	53.31	-145.98
141	141	176	G2_power station	634.09	199.33	-140.77
141	141	177	G2_power station	807.92	198.41	-117.95
141	141	149	G2_power station	851.67	104.02	-123.15
141	141	147	Q_power station	24.62	1.97	-5.4

Table 21: Element Stresses - Area Shells, Part 1 of 3

Area	AreaElem	Joint	OutputCase	S11Top	S22Top	S12Top
				KN/m2	KN/m2	KN/m2
141	141	176	Q_power station	23.46	7.38	-5.21
141	141	177	Q_power station	29.89	7.34	-4.36
141	141	149	Q_power station	31.51	3.85	-4.56
141	141	147	Q_neve	75.77	11.99	-11.1
141	141	176	Q_neve	75.13	35.57	-10.88
141	141	177	Q_neve	93.08	36.83	-8.8
141	141	149	Q_neve	95.07	17.25	-9.02
141	141	147	Q_manutenzione	24.62	1.97	-5.4
141	141	176	Q_manutenzione	23.46	7.38	-5.21
141	141	177	Q_manutenzione	29.89	7.34	-4.36
141	141	149	Q_manutenzione	31.51	3.85	-4.56
141	141	147	EQ_X	435.29	67.71	12.65
141	141	176	EQ_X	417.46	48.79	18.45
141	141	177	EQ_X	350.1	31.37	22.27
141	141	149	EQ_X	361.75	35.83	16.47
141	141	147	EQ_Y	-47.76	-210.19	162.99
141	141	176	EQ_Y	21.45	-101.63	128.8
141	141	177	EQ_Y	-23.37	-105.9	111.45
141	141	149	EQ_Y	-49.02	-54.38	145.65
142	142	149	DEAD	-1.857E-11	5.631E-11	-3.941E-11
142	142	177	DEAD	1.714E-11	1.906E-11	-3.304E-11
142	142	178	DEAD	-1.130E-12	3.432E-11	-3.941E-11
142	142	151	DEAD	6.036E-11	5.319E-11	-3.001E-11
142	142	149	G1_power station	0.	0.	0.
142	142	177	G1_power station	0.	0.	0.
142	142	178	G1_power station	0.	0.	0.
142	142	151	G1_power station	0.	0.	0.
142	142	149	G2_power station	853.89	104.46	-100.11
142	142	177	G2_power station	808.	198.43	-92.81
142	142	178	G2_power station	885.32	184.45	-65.44
142	142	151	G2_power station	956.17	123.2	-72.74
142	142	149	Q_power station	31.59	3.86	-3.7
142	142	177	Q_power station	29.9	7.34	-3.43
142	142	178	Q_power station	32.76	6.82	-2.42
142	142	151	Q_power station	35.38	4.56	-2.69
142	142	149	Q_neve	95.28	17.29	-6.8
142	142	177	Q_neve	93.09	36.83	-6.47
142	142	178	Q_neve	100.19	36.56	-3.78
142	142	151	Q_neve	105.18	19.55	-4.11
142	142	149	Q_manutenzione	31.59	3.86	-3.7
142	142	177	Q_manutenzione	29.9	7.34	-3.43
142	142	178	Q_manutenzione	32.76	6.82	-2.42
142	142	151	Q_manutenzione	35.38	4.56	-2.69

Table 21: Element Stresses - Area Shells, Part 1 of 3

Area	AreaElem	Joint	OutputCase	S11Top	S22Top	S12Top
				KN/m2	KN/m2	KN/m2
142	142	149	EQ_X	359.51	35.38	23.94
142	142	177	EQ_X	350.48	31.45	23.16
142	142	178	EQ_X	278.9	23.59	26.95
142	142	151	EQ_X	285.88	18.66	27.73
142	142	149	EQ_Y	-42.53	-53.08	114.13
142	142	177	EQ_Y	-22.67	-105.76	107.75
142	142	178	EQ_Y	-34.63	-64.44	89.56
142	142	151	EQ_Y	-64.8	-63.46	95.94
143	143	151	DEAD	6.637E-11	5.720E-11	-2.358E-11
143	143	178	DEAD	4.419E-11	7.194E-11	-1.833E-11
143	143	179	DEAD	7.243E-11	6.934E-11	-1.145E-11
143	143	153	DEAD	1.117E-10	4.540E-11	-6.193E-12
143	143	151	G1_power station	0.	0.	0.
143	143	178	G1_power station	0.	0.	0.
143	143	179	G1_power station	0.	0.	0.
143	143	153	G1_power station	0.	0.	0.
143	143	151	G2_power station	957.19	123.41	-38.54
143	143	178	G2_power station	884.68	184.32	-34.38
143	143	179	G2_power station	887.66	169.24	9.63
143	143	153	G2_power station	1034.05	136.68	5.47
143	143	151	Q_power station	35.42	4.57	-1.43
143	143	178	Q_power station	32.73	6.82	-1.27
143	143	179	Q_power station	32.84	6.26	0.36
143	143	153	Q_power station	38.26	5.06	0.2
143	143	151	Q_neve	105.27	19.57	-0.65
143	143	178	Q_neve	100.12	36.55	-0.65
143	143	179	Q_neve	98.55	35.95	3.9
143	143	153	Q_neve	111.59	21.11	3.89
143	143	151	Q_manutenzione	35.42	4.57	-1.43
143	143	178	Q_manutenzione	32.73	6.82	-1.27
143	143	179	Q_manutenzione	32.84	6.26	0.36
143	143	153	Q_manutenzione	38.26	5.06	0.2
143	143	151	EQ_X	285.22	18.53	32.18
143	143	178	EQ_X	280.47	23.91	29.46
143	143	179	EQ_X	204.02	20.15	33.65
143	143	153	EQ_X	212.88	3.97	36.37
143	143	151	EQ_Y	-62.12	-62.92	76.84
143	143	178	EQ_Y	-36.95	-64.91	75.65
143	143	179	EQ_Y	-43.31	-56.86	61.56
143	143	153	EQ_Y	-67.85	-55.19	62.75
144	144	153	DEAD	1.988E-10	6.497E-11	6.427E-12
144	144	179	DEAD	1.242E-10	8.984E-11	8.351E-12
144	144	180	DEAD	1.533E-10	5.587E-11	2.160E-11

Table 21: Element Stresses - Area Shells, Part 1 of 3

Area	AreaElem	Joint	OutputCase	S11Top	S22Top	S12Top
				KN/m2	KN/m2	KN/m2
144	144	155	DEAD	1.333E-10	6.254E-11	1.442E-11
144	144	153	G1_power station	0.	0.	0.
144	144	179	G1_power station	0.	0.	0.
144	144	180	G1_power station	0.	0.	0.
144	144	155	G1_power station	0.	0.	0.
144	144	153	G2_power station	1035.07	136.89	65.85
144	144	179	G2_power station	886.68	169.05	75.07
144	144	180	G2_power station	767.53	96.49	180.5
144	144	155	G2_power station	1198.3	178.91	171.28
144	144	153	Q_power station	38.3	5.06	2.44
144	144	179	Q_power station	32.81	6.25	2.78
144	144	180	Q_power station	28.4	3.57	6.68
144	144	155	Q_power station	44.34	6.62	6.34
144	144	153	Q_neve	111.64	21.12	10.13
144	144	179	Q_neve	98.47	35.93	10.82
144	144	180	Q_neve	83.01	29.14	21.92
144	144	155	Q_neve	125.91	24.72	21.23
144	144	153	Q_manutenzione	38.3	5.06	2.44
144	144	179	Q_manutenzione	32.81	6.25	2.78
144	144	180	Q_manutenzione	28.4	3.57	6.68
144	144	155	Q_manutenzione	44.34	6.62	6.34
144	144	153	EQ_X	213.53	4.1	41.37
144	144	179	EQ_X	206.53	20.65	40.68
144	144	180	EQ_X	119.19	5.66	51.63
144	144	155	EQ_X	154.19	-1.48	52.32
144	144	153	EQ_Y	-74.8	-56.58	46.03
144	144	179	EQ_Y	-51.7	-58.54	45.43
144	144	180	EQ_Y	-49.93	-68.98	23.12
144	144	155	EQ_Y	-68.98	-56.88	23.73
145	145	155	DEAD	1.954E-10	7.549E-11	3.587E-11
145	145	180	DEAD	1.647E-10	6.399E-11	4.801E-11
145	145	181	DEAD	-8.067E-11	1.513E-10	1.147E-10
145	145	24	DEAD	1.996E-10	-7.100E-11	1.026E-10
145	145	155	G1_power station	0.	0.	0.
145	145	180	G1_power station	0.	0.	0.
145	145	181	G1_power station	0.	0.	0.
145	145	24	G1_power station	0.	0.	0.
145	145	155	G2_power station	1148.55	168.96	393.05
145	145	180	G2_power station	844.33	111.85	341.91
145	145	181	G2_power station	-442.25	526.71	862.05
145	145	24	G2_power station	1942.13	-126.2	913.19
145	145	155	Q_power station	42.5	6.25	14.54
145	145	180	Q_power station	31.24	4.14	12.65

Table 21: Element Stresses - Area Shells, Part 1 of 3

Area	AreaElem	Joint	OutputCase	S11Top	S22Top	S12Top
				KN/m2	KN/m2	KN/m2
145	145	181	Q_power station	-16.36	19.49	31.9
145	145	24	Q_power station	71.86	-4.67	33.79
145	145	155	Q_neve	120.46	23.63	44.24
145	145	180	Q_neve	91.04	30.74	39.15
145	145	181	Q_neve	-45.38	75.77	93.48
145	145	24	Q_neve	199.68	-11.09	98.57
145	145	155	Q_manutenzione	42.5	6.25	14.54
145	145	180	Q_manutenzione	31.24	4.14	12.65
145	145	181	Q_manutenzione	-16.36	19.49	31.9
145	145	24	Q_manutenzione	71.86	-4.67	33.79
145	145	155	EQ_X	150.8	-2.15	62.81
145	145	180	EQ_X	124.6	6.75	75.89
145	145	181	EQ_X	-26.52	91.15	120.88
145	145	24	EQ_X	134.75	-146.1	107.8
145	145	155	EQ_Y	-99.13	-62.91	-13.12
145	145	180	EQ_Y	-46.53	-68.3	18.15
145	145	181	EQ_Y	28.47	-110.87	-20.94
145	145	24	EQ_Y	-142.83	-254.27	-52.21
146	146	56	DEAD	-2.485E-11	-3.693E-12	-6.515E-11
146	146	68	DEAD	-4.698E-12	6.996E-11	-5.989E-11
146	146	182	DEAD	-5.746E-11	3.347E-11	-4.694E-11
146	146	175	DEAD	3.929E-11	7.147E-11	-4.169E-11
146	146	56	G1_power station	0.	0.	0.
146	146	68	G1_power station	0.	0.	0.
146	146	182	G1_power station	0.	0.	0.
146	146	175	G1_power station	0.	0.	0.
146	146	56	G2_power station	-2.8	331.53	-138.54
146	146	68	G2_power station	160.28	518.82	-71.31
146	146	182	G2_power station	362.81	456.54	-97.71
146	146	175	G2_power station	296.02	207.14	-164.94
146	146	56	Q_power station	-0.1	12.27	-5.13
146	146	68	Q_power station	5.93	19.2	-2.64
146	146	182	Q_power station	13.42	16.89	-3.62
146	146	175	Q_power station	10.95	7.66	-6.1
146	146	56	Q_neve	4.88	42.92	-11.09
146	146	68	Q_neve	19.95	63.88	-5.58
146	146	182	Q_neve	46.83	61.28	-7.87
146	146	175	Q_neve	39.91	34.39	-13.38
146	146	56	Q_manutenzione	-0.1	12.27	-5.13
146	146	68	Q_manutenzione	5.93	19.2	-2.64
146	146	182	Q_manutenzione	13.42	16.89	-3.62
146	146	175	Q_manutenzione	10.95	7.66	-6.1
146	146	56	EQ_X	-197.72	-45.33	-92.24

Table 21: Element Stresses - Area Shells, Part 1 of 3

Area	AreaElem	Joint	OutputCase	S11Top	S22Top	S12Top
				KN/m2	KN/m2	KN/m2
146	146	68	EQ_X	293.32	75.93	-43.63
146	146	182	EQ_X	310.57	13.15	-73.92
146	146	175	EQ_X	624.23	5.66	-122.52
146	146	56	EQ_Y	-199.49	-216.16	33.01
146	146	68	EQ_Y	-28.72	-132.12	60.53
146	146	182	EQ_Y	-25.73	-73.68	55.23
146	146	175	EQ_Y	31.12	-352.58	27.72
147	147	175	DEAD	7.062E-12	7.154E-11	-4.769E-11
147	147	182	DEAD	5.453E-11	4.515E-11	-3.223E-11
147	147	183	DEAD	-7.712E-11	5.106E-11	-4.163E-11
147	147	176	DEAD	-4.709E-11	-7.935E-12	-4.133E-11
147	147	175	G1_power station	0.	0.	0.
147	147	182	G1_power station	0.	0.	0.
147	147	183	G1_power station	0.	0.	0.
147	147	176	G1_power station	0.	0.	0.
147	147	175	G2_power station	305.09	208.95	-164.29
147	147	182	G2_power station	364.34	456.85	-110.
147	147	183	G2_power station	598.28	344.82	-98.8
147	147	176	G2_power station	640.07	203.06	-153.09
147	147	175	Q_power station	11.29	7.73	-6.08
147	147	182	Q_power station	13.48	16.9	-4.07
147	147	183	Q_power station	22.14	12.76	-3.66
147	147	176	Q_power station	23.68	7.51	-5.66
147	147	175	Q_neve	40.73	34.55	-13.32
147	147	182	Q_neve	46.96	61.3	-8.97
147	147	183	Q_neve	73.	53.56	-7.98
147	147	176	Q_neve	75.67	35.9	-12.34
147	147	175	Q_manutenzione	11.29	7.73	-6.08
147	147	182	Q_manutenzione	13.48	16.9	-4.07
147	147	183	Q_manutenzione	22.14	12.76	-3.66
147	147	176	Q_manutenzione	23.68	7.51	-5.66
147	147	175	EQ_X	547.52	-9.68	-24.22
147	147	182	EQ_X	336.72	18.38	-36.87
147	147	183	EQ_X	396.1	-5.47	1.01
147	147	176	EQ_X	406.96	42.83	13.66
147	147	175	EQ_Y	13.72	-356.06	88.81
147	147	182	EQ_Y	-19.14	-72.37	46.89
147	147	183	EQ_Y	9.07	-74.98	66.9
147	147	176	EQ_Y	4.74	-150.1	108.82
148	148	176	DEAD	-3.038E-11	1.096E-11	-4.554E-11
148	148	183	DEAD	-2.750E-11	5.025E-11	-4.110E-11
148	148	184	DEAD	-2.128E-11	5.647E-11	-4.554E-11
148	148	177	DEAD	-3.205E-11	9.298E-12	-2.896E-11

Table 21: Element Stresses - Area Shells, Part 1 of 3

Area	AreaElem	Joint	OutputCase	S11Top	S22Top	S12Top
				KN/m2	KN/m2	KN/m2
148	148	176	G1_power station	0.	0.	0.
148	148	183	G1_power station	0.	0.	0.
148	148	184	G1_power station	0.	0.	0.
148	148	177	G1_power station	0.	0.	0.
148	148	176	G2_power station	634.62	201.97	-121.68
148	148	183	G2_power station	600.23	345.21	-86.64
148	148	184	G2_power station	772.38	267.18	-65.82
148	148	177	G2_power station	808.15	199.54	-100.87
148	148	176	Q_power station	23.48	7.47	-4.5
148	148	183	Q_power station	22.21	12.77	-3.21
148	148	184	Q_power station	28.58	9.89	-2.44
148	148	177	Q_power station	29.9	7.38	-3.73
148	148	176	Q_neve	75.18	35.8	-9.55
148	148	183	Q_neve	73.18	53.59	-6.91
148	148	184	Q_neve	90.83	48.29	-5.04
148	148	177	Q_neve	93.1	36.92	-7.68
148	148	176	Q_manutenzione	23.48	7.47	-4.5
148	148	183	Q_manutenzione	22.21	12.77	-3.21
148	148	184	Q_manutenzione	28.58	9.89	-2.44
148	148	177	Q_manutenzione	29.9	7.38	-3.73
148	148	176	EQ_X	416.65	44.77	18.63
148	148	183	EQ_X	395.08	-5.67	12.75
148	148	184	EQ_X	347.64	14.73	16.31
148	148	177	EQ_X	350.37	32.74	22.19
148	148	176	EQ_Y	12.05	-148.64	103.73
148	148	183	EQ_Y	2.27	-76.34	82.55
148	148	184	EQ_Y	-1.75	-39.13	79.5
148	148	177	EQ_Y	-20.93	-93.71	100.68
149	149	177	DEAD	1.462E-11	1.210E-11	-4.086E-11
149	149	184	DEAD	-3.515E-11	5.187E-11	-2.458E-11
149	149	185	DEAD	3.661E-11	1.286E-11	-2.569E-11
149	149	178	DEAD	-5.572E-12	1.775E-11	-3.672E-11
149	149	177	G1_power station	0.	0.	0.
149	149	184	G1_power station	0.	0.	0.
149	149	185	G1_power station	0.	0.	0.
149	149	178	G1_power station	0.	0.	0.
149	149	177	G2_power station	808.23	199.56	-75.14
149	149	184	G2_power station	772.28	267.16	-53.59
149	149	185	G2_power station	833.74	216.43	-33.69
149	149	178	G2_power station	885.64	186.07	-55.24
149	149	177	Q_power station	29.9	7.38	-2.78
149	149	184	Q_power station	28.57	9.88	-1.98
149	149	185	Q_power station	30.85	8.01	-1.25

Table 21: Element Stresses - Area Shells, Part 1 of 3

Area	AreaElem	Joint	OutputCase	S11Top	S22Top	S12Top
				KN/m2	KN/m2	KN/m2
149	149	178	Q_power station	32.77	6.88	-2.04
149	149	177	Q_neve	93.11	36.93	-5.29
149	149	184	Q_neve	90.84	48.29	-3.92
149	149	185	Q_neve	96.03	45.07	-1.99
149	149	178	Q_neve	100.22	36.74	-3.36
149	149	177	Q_manutenzione	29.9	7.38	-2.78
149	149	184	Q_manutenzione	28.57	9.88	-1.98
149	149	185	Q_manutenzione	30.85	8.01	-1.25
149	149	178	Q_manutenzione	32.77	6.88	-2.04
149	149	177	EQ_X	350.75	32.82	22.33
149	149	184	EQ_X	349.75	15.15	16.08
149	149	185	EQ_X	275.19	22.4	16.43
149	149	178	EQ_X	278.96	23.91	22.68
149	149	177	EQ_Y	-20.24	-93.57	88.57
149	149	184	EQ_Y	-0.62	-38.9	79.66
149	149	185	EQ_Y	-9.03	-22.51	73.27
149	149	178	EQ_Y	-35.44	-68.49	82.18
150	150	178	DEAD	2.913E-11	1.530E-11	-2.482E-11
150	150	185	DEAD	3.703E-11	2.150E-11	-4.605E-11
150	150	186	DEAD	5.188E-11	7.446E-11	-3.999E-11
150	150	179	DEAD	7.419E-11	6.169E-11	-1.875E-11
150	150	178	G1_power station	0.	0.	0.
150	150	185	G1_power station	0.	0.	0.
150	150	186	G1_power station	0.	0.	0.
150	150	179	G1_power station	0.	0.	0.
150	150	178	G2_power station	885.01	185.94	-23.77
150	150	185	G2_power station	835.34	216.75	-18.28
150	150	186	G2_power station	752.07	194.2	18.11
150	150	179	G2_power station	887.6	168.92	12.62
150	150	178	Q_power station	32.75	6.88	-0.88
150	150	185	Q_power station	30.91	8.02	-0.68
150	150	186	Q_power station	27.83	7.19	0.67
150	150	179	Q_power station	32.84	6.25	0.47
150	150	178	Q_neve	100.16	36.72	-0.18
150	150	185	Q_neve	96.21	45.1	-0.43
150	150	186	Q_neve	85.46	44.5	3.36
150	150	179	Q_neve	98.54	35.89	3.6
150	150	178	Q_manutenzione	32.75	6.88	-0.88
150	150	185	Q_manutenzione	30.91	8.02	-0.68
150	150	186	Q_manutenzione	27.83	7.19	0.67
150	150	179	Q_manutenzione	32.84	6.25	0.47
150	150	178	EQ_X	280.54	24.23	25.06
150	150	185	EQ_X	277.5	22.86	17.62

Table 21: Element Stresses - Area Shells, Part 1 of 3

Area	AreaElem	Joint	OutputCase	S11Top	S22Top	S12Top
				KN/m2	KN/m2	KN/m2
150	150	186	EQ_X	191.57	31.74	21.82
150	150	179	EQ_X	203.79	19.03	29.26
150	150	178	EQ_Y	-37.76	-68.95	70.36
150	150	185	EQ_Y	-12.14	-23.14	64.82
150	150	186	EQ_Y	-14.54	-15.28	50.23
150	150	179	EQ_Y	-43.78	-59.21	55.77
151	151	179	DEAD	1.357E-10	4.840E-11	-2.392E-12
151	151	186	DEAD	6.142E-11	7.261E-11	-1.534E-11
151	151	187	DEAD	8.412E-11	1.364E-10	6.411E-13
151	151	180	DEAD	1.479E-10	1.227E-10	2.410E-11
151	151	179	G1_power station	0.	0.	0.
151	151	186	G1_power station	0.	0.	0.
151	151	187	G1_power station	0.	0.	0.
151	151	180	G1_power station	0.	0.	0.
151	151	179	G2_power station	886.62	168.72	88.49
151	151	186	G2_power station	757.27	195.24	53.23
151	151	187	G2_power station	444.27	307.11	145.86
151	151	180	G2_power station	772.62	121.93	181.12
151	151	179	Q_power station	32.8	6.24	3.27
151	151	186	Q_power station	28.02	7.22	1.97
151	151	187	Q_power station	16.44	11.36	5.4
151	151	180	Q_power station	28.59	4.51	6.7
151	151	179	Q_neve	98.46	35.88	11.59
151	151	186	Q_neve	86.	44.6	7.03
151	151	187	Q_neve	50.5	57.85	16.75
151	151	180	Q_neve	83.59	32.	21.31
151	151	179	Q_manutenzione	32.8	6.24	3.27
151	151	186	Q_manutenzione	28.02	7.22	1.97
151	151	187	Q_manutenzione	16.44	11.36	5.4
151	151	180	Q_manutenzione	28.59	4.51	6.7
151	151	179	EQ_X	206.3	19.54	37.94
151	151	186	EQ_X	192.55	31.93	25.61
151	151	187	EQ_X	96.11	58.89	34.71
151	151	180	EQ_X	121.55	17.49	47.04
151	151	179	EQ_Y	-52.17	-60.89	40.33
151	151	186	EQ_Y	-13.79	-15.13	40.36
151	151	187	EQ_Y	-9.55	-23.61	29.44
151	151	180	EQ_Y	-51.32	-75.96	29.41
152	152	180	DEAD	1.698E-10	1.134E-10	4.268E-11
152	152	187	DEAD	9.053E-11	1.167E-10	3.135E-11
152	152	188	DEAD	-2.967E-11	1.353E-10	3.964E-11
152	152	181	DEAD	-7.783E-11	9.393E-11	4.045E-11
152	152	180	G1_power station	0.	0.	0.

Table 21: Element Stresses - Area Shells, Part 1 of 3

Area	AreaElem	Joint	OutputCase	S11Top	S22Top	S12Top
				KN/m2	KN/m2	KN/m2
152	152	187	G1_power station	0.	0.	0.
152	152	188	G1_power station	0.	0.	0.
152	152	181	G1_power station	0.	0.	0.
152	152	180	G2_power station	849.42	137.29	371.65
152	152	187	G2_power station	419.3	302.11	185.67
152	152	188	G2_power station	85.28	429.95	170.15
152	152	181	G2_power station	-452.38	476.08	356.13
152	152	180	Q_power station	31.43	5.08	13.75
152	152	187	Q_power station	15.51	11.18	6.87
152	152	188	Q_power station	3.16	15.91	6.3
152	152	181	Q_power station	-16.74	17.61	13.18
152	152	180	Q_neve	91.61	33.6	41.36
152	152	187	Q_neve	47.92	57.33	20.96
152	152	188	Q_neve	8.81	72.51	19.77
152	152	181	Q_neve	-46.53	70.04	40.17
152	152	180	Q_manutenzione	31.43	5.08	13.75
152	152	187	Q_manutenzione	15.51	11.18	6.87
152	152	188	Q_manutenzione	3.16	15.91	6.3
152	152	181	Q_manutenzione	-16.74	17.61	13.18
152	152	180	EQ_X	126.96	18.57	66.29
152	152	187	EQ_X	94.23	58.51	36.7
152	152	188	EQ_X	6.48	90.36	36.94
152	152	181	EQ_X	-31.	68.76	66.53
152	152	180	EQ_Y	-47.92	-75.28	14.74
152	152	187	EQ_Y	-8.15	-23.33	25.29
152	152	188	EQ_Y	-10.46	-36.12	31.23
152	152	181	EQ_Y	29.95	-103.46	20.69
153	153	68	DEAD	1.843E-11	5.407E-11	-4.314E-11
153	153	70	DEAD	4.162E-11	1.123E-10	-3.404E-11
153	153	189	DEAD	-2.631E-11	8.517E-11	-4.618E-11
153	153	182	DEAD	-7.972E-11	3.347E-11	-5.528E-11
153	153	68	G1_power station	0.	0.	0.
153	153	70	G1_power station	0.	0.	0.
153	153	189	G1_power station	0.	0.	0.
153	153	182	G1_power station	0.	0.	0.
153	153	68	G2_power station	162.87	531.77	-28.63
153	153	70	G2_power station	162.87	531.77	28.63
153	153	189	G2_power station	361.36	449.28	28.63
153	153	182	G2_power station	361.36	449.28	-28.63
153	153	68	Q_power station	6.03	19.68	-1.06
153	153	70	Q_power station	6.03	19.68	1.06
153	153	189	Q_power station	13.37	16.62	1.06
153	153	182	Q_power station	13.37	16.62	-1.06

Table 21: Element Stresses - Area Shells, Part 1 of 3

Area	AreaElem	Joint	OutputCase	S11Top	S22Top	S12Top
				KN/m2	KN/m2	KN/m2
153	153	68	Q_neve	20.19	65.05	-2.28
153	153	70	Q_neve	20.19	65.05	2.28
153	153	189	Q_neve	46.7	60.63	2.28
153	153	182	Q_neve	46.7	60.63	-2.28
153	153	68	Q_manutenzione	6.03	19.68	-1.06
153	153	70	Q_manutenzione	6.03	19.68	1.06
153	153	189	Q_manutenzione	13.37	16.62	1.06
153	153	182	Q_manutenzione	13.37	16.62	-1.06
153	153	68	EQ_X	294.6	82.34	-20.34
153	153	70	EQ_X	294.52	82.32	18.05
153	153	189	EQ_X	309.15	6.45	18.04
153	153	182	EQ_X	309.24	6.47	-20.36
153	153	68	EQ_Y	-21.92	-98.13	56.03
153	153	70	EQ_Y	22.33	103.45	56.19
153	153	189	EQ_Y	28.47	90.71	51.06
153	153	182	EQ_Y	-28.08	-85.45	50.91
154	154	182	DEAD	6.655E-11	4.745E-11	-4.827E-11
154	154	189	DEAD	-4.173E-11	7.480E-11	-4.443E-11
154	154	190	DEAD	-1.839E-11	7.778E-11	-2.704E-11
154	154	183	DEAD	-8.875E-11	3.992E-11	-4.139E-11
154	154	182	G1_power station	0.	0.	0.
154	154	189	G1_power station	0.	0.	0.
154	154	190	G1_power station	0.	0.	0.
154	154	183	G1_power station	0.	0.	0.
154	154	182	G2_power station	362.89	449.59	-35.27
154	154	189	G2_power station	362.89	449.59	35.27
154	154	190	G2_power station	598.55	346.16	35.27
154	154	183	G2_power station	598.55	346.16	-35.27
154	154	182	Q_power station	13.43	16.63	-1.31
154	154	189	Q_power station	13.43	16.63	1.31
154	154	190	Q_power station	22.15	12.81	1.31
154	154	183	Q_power station	22.15	12.81	-1.31
154	154	182	Q_neve	46.83	60.65	-2.86
154	154	189	Q_neve	46.83	60.65	2.86
154	154	190	Q_neve	73.02	53.67	2.86
154	154	183	Q_neve	73.02	53.67	-2.86
154	154	182	Q_manutenzione	13.43	16.63	-1.31
154	154	189	Q_manutenzione	13.43	16.63	1.31
154	154	190	Q_manutenzione	22.15	12.81	1.31
154	154	183	Q_manutenzione	22.15	12.81	-1.31
154	154	182	EQ_X	335.38	11.7	-7.71
154	154	189	EQ_X	335.51	11.73	6.33
154	154	190	EQ_X	398.32	4.97	6.83

Table 21: Element Stresses - Area Shells, Part 1 of 3

Area	AreaElem	Joint	OutputCase	S11Top	S22Top	S12Top
				KN/m2	KN/m2	KN/m2
154	154	183	EQ_X	398.18	4.95	-7.21
154	154	182	EQ_Y	-21.5	-84.13	47.92
154	154	189	EQ_Y	22.47	89.51	48.04
154	154	190	EQ_Y	-9.02	75.73	53.09
154	154	183	EQ_Y	9.92	-70.7	52.98
155	155	183	DEAD	-3.700E-11	5.734E-11	-4.332E-11
155	155	190	DEAD	-4.102E-11	3.060E-11	-3.199E-11
155	155	191	DEAD	-5.908E-12	8.540E-11	-3.725E-11
155	155	184	DEAD	-1.371E-11	2.150E-11	-3.806E-11
155	155	183	G1_power station	0.	0.	0.
155	155	190	G1_power station	0.	0.	0.
155	155	191	G1_power station	0.	0.	0.
155	155	184	G1_power station	0.	0.	0.
155	155	183	G2_power station	600.5	346.55	-26.41
155	155	190	G2_power station	600.5	346.55	26.41
155	155	191	G2_power station	772.59	268.24	26.41
155	155	184	G2_power station	772.59	268.24	-26.41
155	155	183	Q_power station	22.22	12.82	-0.98
155	155	190	Q_power station	22.22	12.82	0.98
155	155	191	Q_power station	28.59	9.92	0.98
155	155	184	Q_power station	28.59	9.92	-0.98
155	155	183	Q_neve	73.2	53.71	-2.08
155	155	190	Q_neve	73.2	53.71	2.08
155	155	191	Q_neve	90.85	48.38	2.08
155	155	184	Q_neve	90.85	48.38	-2.08
155	155	183	Q_manutenzione	22.22	12.82	-0.98
155	155	190	Q_manutenzione	22.22	12.82	0.98
155	155	191	Q_manutenzione	28.59	9.92	0.98
155	155	184	Q_manutenzione	28.59	9.92	-0.98
155	155	183	EQ_X	397.16	4.74	5.13
155	155	190	EQ_X	397.72	4.85	-4.47
155	155	191	EQ_X	348.06	14.15	-4.02
155	155	184	EQ_X	347.5	14.04	5.59
155	155	183	EQ_Y	3.13	-72.06	63.31
155	155	190	EQ_Y	-1.42	77.25	63.64
155	155	191	EQ_Y	4.42	49.14	72.07
155	155	184	EQ_Y	-2.68	-43.77	71.73
156	156	184	DEAD	-4.312E-11	1.613E-11	-2.768E-11
156	156	191	DEAD	-1.659E-11	8.572E-11	-4.588E-11
156	156	192	DEAD	5.319E-11	9.728E-11	-4.588E-11
156	156	185	DEAD	6.607E-11	9.861E-11	-2.768E-11
156	156	184	G1_power station	0.	0.	0.
156	156	191	G1_power station	0.	0.	0.

Table 21: Element Stresses - Area Shells, Part 1 of 3

Area	AreaElem	Joint	OutputCase	S11Top	S22Top	S12Top
				KN/m2	KN/m2	KN/m2
156	156	192	G1_power station	0.	0.	0.
156	156	185	G1_power station	0.	0.	0.
156	156	184	G2_power station	772.49	268.22	-15.1
156	156	191	G2_power station	772.49	268.22	15.1
156	156	192	G2_power station	833.66	216.	15.1
156	156	185	G2_power station	833.66	216.	-15.1
156	156	184	Q_power station	28.58	9.92	-0.56
156	156	191	Q_power station	28.58	9.92	0.56
156	156	192	Q_power station	30.85	7.99	0.56
156	156	185	Q_power station	30.85	7.99	-0.56
156	156	184	Q_neve	90.86	48.38	-1.03
156	156	191	Q_neve	90.86	48.38	1.03
156	156	192	Q_neve	96.02	45.02	1.03
156	156	185	Q_neve	96.02	45.02	-1.03
156	156	184	Q_manutenzione	28.58	9.92	-0.56
156	156	191	Q_manutenzione	28.58	9.92	0.56
156	156	192	Q_manutenzione	30.85	7.99	0.56
156	156	185	Q_manutenzione	30.85	7.99	-0.56
156	156	184	EQ_X	349.61	14.46	6.39
156	156	191	EQ_X	350.12	14.56	-4.12
156	156	192	EQ_X	275.95	23.78	-3.35
156	156	185	EQ_X	275.44	23.68	7.16
156	156	184	EQ_Y	-1.55	-43.54	73.18
156	156	191	EQ_Y	4.07	49.07	73.31
156	156	192	EQ_Y	13.03	35.42	66.55
156	156	185	EQ_Y	-10.37	-29.2	66.42
157	157	185	DEAD	3.873E-11	8.500E-11	-4.308E-11
157	157	192	DEAD	4.506E-11	1.069E-10	-2.377E-11
157	157	193	DEAD	6.679E-11	4.329E-11	-3.398E-11
157	157	186	DEAD	4.733E-11	8.184E-11	-4.804E-11
157	157	185	G1_power station	0.	0.	0.
157	157	192	G1_power station	0.	0.	0.
157	157	193	G1_power station	0.	0.	0.
157	157	186	G1_power station	0.	0.	0.
157	157	185	G2_power station	835.25	216.32	0.87
157	157	192	G2_power station	835.25	216.32	-0.87
157	157	193	G2_power station	753.99	203.8	-0.87
157	157	186	G2_power station	753.99	203.8	0.87
157	157	185	Q_power station	30.9	8.	3.233E-02
157	157	192	Q_power station	30.9	8.	-3.233E-02
157	157	193	Q_power station	27.9	7.54	-3.233E-02
157	157	186	Q_power station	27.9	7.54	3.233E-02
157	157	185	Q_neve	96.2	45.06	0.59

Table 21: Element Stresses - Area Shells, Part 1 of 3

Area	AreaElem	Joint	OutputCase	S11Top	S22Top	S12Top
				KN/m2	KN/m2	KN/m2
157	157	192	Q_neve	96.2	45.06	-0.59
157	157	193	Q_neve	85.66	45.48	-0.59
157	157	186	Q_neve	85.66	45.48	0.59
157	157	185	Q_manutenzione	30.9	8.	3.233E-02
157	157	192	Q_manutenzione	30.9	8.	-3.233E-02
157	157	193	Q_manutenzione	27.9	7.54	-3.233E-02
157	157	186	Q_manutenzione	27.9	7.54	3.233E-02
157	157	185	EQ_X	277.75	24.14	8.57
157	157	192	EQ_X	276.95	23.98	-3.71
157	157	193	EQ_X	191.14	33.47	-3.52
157	157	186	EQ_X	191.95	33.63	8.75
157	157	185	EQ_Y	-13.48	-29.82	58.28
157	157	192	EQ_Y	16.02	36.01	58.54
157	157	193	EQ_Y	19.83	35.2	50.82
157	157	186	EQ_Y	-16.37	-24.42	50.56
158	158	186	DEAD	6.568E-11	6.542E-11	-2.580E-11
158	158	193	DEAD	1.442E-11	5.907E-11	-3.490E-11
158	158	194	DEAD	3.459E-11	1.102E-10	-1.973E-11
158	158	187	DEAD	6.220E-11	6.134E-11	-1.063E-11
158	158	186	G1_power station	0.	0.	0.
158	158	193	G1_power station	0.	0.	0.
158	158	194	G1_power station	0.	0.	0.
158	158	187	G1_power station	0.	0.	0.
158	158	186	G2_power station	759.18	204.84	33.21
158	158	193	G2_power station	759.18	204.84	-33.21
158	158	194	G2_power station	439.38	282.62	-33.21
158	158	187	G2_power station	439.38	282.62	33.21
158	158	186	Q_power station	28.09	7.58	1.23
158	158	193	Q_power station	28.09	7.58	-1.23
158	158	194	Q_power station	16.26	10.46	-1.23
158	158	187	Q_power station	16.26	10.46	1.23
158	158	186	Q_neve	86.2	45.59	3.98
158	158	193	Q_neve	86.2	45.59	-3.98
158	158	194	Q_neve	49.99	55.32	-3.98
158	158	187	Q_neve	49.99	55.32	3.98
158	158	186	Q_manutenzione	28.09	7.58	1.23
158	158	193	Q_manutenzione	28.09	7.58	-1.23
158	158	194	Q_manutenzione	16.26	10.46	-1.23
158	158	187	Q_manutenzione	16.26	10.46	1.23
158	158	186	EQ_X	192.93	33.82	12.11
158	158	193	EQ_X	193.22	33.88	-6.22
158	158	194	EQ_X	95.69	55.34	-7.03
158	158	187	EQ_X	95.39	55.28	11.3

Table 21: Element Stresses - Area Shells, Part 1 of 3

Area	AreaElem	Joint	OutputCase	S11Top	S22Top	S12Top
				KN/m2	KN/m2	KN/m2
158	158	186	EQ_Y	-15.62	-24.26	40.2
158	158	193	EQ_Y	16.67	34.56	39.12
158	158	194	EQ_Y	11.22	36.98	32.5
158	158	187	EQ_Y	-9.26	-22.13	33.58
159	159	187	DEAD	6.750E-11	6.578E-11	4.659E-12
159	159	194	DEAD	6.690E-11	1.161E-10	-2.264E-11
159	159	195	DEAD	1.745E-11	1.067E-10	-2.568E-11
159	159	188	DEAD	-1.349E-11	1.510E-10	1.626E-12
159	159	187	G1_power station	0.	0.	0.
159	159	194	G1_power station	0.	0.	0.
159	159	195	G1_power station	0.	0.	0.
159	159	188	G1_power station	0.	0.	0.
159	159	187	G2_power station	414.4	277.63	58.26
159	159	194	G2_power station	414.4	277.63	-58.26
159	159	195	G2_power station	91.64	461.73	-58.26
159	159	188	G2_power station	91.64	461.73	58.26
159	159	187	Q_power station	15.33	10.27	2.16
159	159	194	Q_power station	15.33	10.27	-2.16
159	159	195	Q_power station	3.39	17.08	-2.16
159	159	188	Q_power station	3.39	17.08	2.16
159	159	187	Q_neve	47.42	54.81	6.69
159	159	194	Q_neve	47.42	54.81	-6.69
159	159	195	Q_neve	9.46	75.75	-6.69
159	159	188	Q_neve	9.46	75.75	6.69
159	159	187	Q_manutenzione	15.33	10.27	2.16
159	159	194	Q_manutenzione	15.33	10.27	-2.16
159	159	195	Q_manutenzione	3.39	17.08	-2.16
159	159	188	Q_manutenzione	3.39	17.08	2.16
159	159	187	EQ_X	93.51	54.91	12.95
159	159	194	EQ_X	93.88	54.98	-10.96
159	159	195	EQ_X	6.71	89.7	-10.51
159	159	188	EQ_X	6.33	89.63	13.4
159	159	187	EQ_Y	-7.85	-21.85	31.95
159	159	194	EQ_Y	7.96	36.33	32.01
159	159	195	EQ_Y	9.74	46.46	29.41
159	159	188	EQ_Y	-8.91	-28.39	29.34
160	160	70	DEAD	6.139E-11	1.130E-10	-3.146E-11
160	160	72	DEAD	3.514E-11	1.376E-10	-2.044E-11
160	160	196	DEAD	-1.673E-11	6.826E-11	-1.933E-11
160	160	189	DEAD	-2.857E-11	7.389E-11	-3.561E-11
160	160	70	G1_power station	0.	0.	0.
160	160	72	G1_power station	0.	0.	0.
160	160	196	G1_power station	0.	0.	0.

Table 21: Element Stresses - Area Shells, Part 1 of 3

Area	AreaElem	Joint	OutputCase	S11Top	S22Top	S12Top
				KN/m2	KN/m2	KN/m2
160	160	189	G1_power station	0.	0.	0.
160	160	70	G2_power station	160.28	518.82	71.31
160	160	72	G2_power station	-2.8	331.53	138.54
160	160	196	G2_power station	296.02	207.14	164.94
160	160	189	G2_power station	362.81	456.54	97.71
160	160	70	Q_power station	5.93	19.2	2.64
160	160	72	Q_power station	-0.1	12.27	5.13
160	160	196	Q_power station	10.95	7.66	6.1
160	160	189	Q_power station	13.42	16.89	3.62
160	160	70	Q_neve	19.95	63.88	5.58
160	160	72	Q_neve	4.88	42.92	11.09
160	160	196	Q_neve	39.91	34.39	13.38
160	160	189	Q_neve	46.83	61.28	7.87
160	160	70	Q_manutenzione	5.93	19.2	2.64
160	160	72	Q_manutenzione	-0.1	12.27	5.13
160	160	196	Q_manutenzione	10.95	7.66	6.1
160	160	189	Q_manutenzione	13.42	16.89	3.62
160	160	70	EQ_X	293.23	75.92	41.19
160	160	72	EQ_X	-197.89	-45.36	90.58
160	160	196	EQ_X	624.5	7.81	121.24
160	160	189	EQ_X	310.92	15.32	71.85
160	160	70	EQ_Y	29.16	137.63	60.84
160	160	72	EQ_Y	199.55	221.58	33.41
160	160	196	EQ_Y	-31.09	357.87	28.26
160	160	189	EQ_Y	26.14	79.05	55.69
161	161	189	DEAD	-2.932E-11	6.636E-11	-2.563E-11
161	161	196	DEAD	-3.550E-11	9.496E-11	-2.866E-11
161	161	197	DEAD	-3.767E-11	6.105E-11	-2.866E-11
161	161	190	DEAD	-1.047E-11	7.449E-11	-2.563E-11
161	161	189	G1_power station	0.	0.	0.
161	161	196	G1_power station	0.	0.	0.
161	161	197	G1_power station	0.	0.	0.
161	161	190	G1_power station	0.	0.	0.
161	161	189	G2_power station	364.34	456.85	110.
161	161	196	G2_power station	305.09	208.95	164.29
161	161	197	G2_power station	640.07	203.06	153.09
161	161	190	G2_power station	598.28	344.82	98.8
161	161	189	Q_power station	13.48	16.9	4.07
161	161	196	Q_power station	11.29	7.73	6.08
161	161	197	Q_power station	23.68	7.51	5.66
161	161	190	Q_power station	22.14	12.76	3.66
161	161	189	Q_neve	46.96	61.3	8.97
161	161	196	Q_neve	40.73	34.55	13.32

Table 21: Element Stresses - Area Shells, Part 1 of 3

Area	AreaElem	Joint	OutputCase	S11Top	S22Top	S12Top
				KN/m2	KN/m2	KN/m2
161	161	197	Q_neve	75.67	35.9	12.34
161	161	190	Q_neve	73.	53.56	7.98
161	161	189	Q_manutenzione	13.48	16.9	4.07
161	161	196	Q_manutenzione	11.29	7.73	6.08
161	161	197	Q_manutenzione	23.68	7.51	5.66
161	161	190	Q_manutenzione	22.14	12.76	3.66
161	161	189	EQ_X	337.29	20.59	35.73
161	161	196	EQ_X	549.72	-7.14	24.12
161	161	197	EQ_X	409.06	44.92	-12.74
161	161	190	EQ_X	396.58	-3.7	-1.13
161	161	189	EQ_Y	20.14	77.85	47.3
161	161	196	EQ_Y	-13.44	361.4	89.61
161	161	197	EQ_Y	-4.48	155.36	109.76
161	161	190	EQ_Y	-8.09	80.39	67.45
162	162	190	DEAD	-4.735E-11	6.471E-11	-3.001E-11
162	162	197	DEAD	-2.484E-11	8.981E-11	-2.505E-11
162	162	198	DEAD	2.546E-11	4.651E-11	-3.304E-11
162	162	191	DEAD	-2.332E-11	7.920E-11	-4.325E-11
162	162	190	G1_power station	0.	0.	0.
162	162	197	G1_power station	0.	0.	0.
162	162	198	G1_power station	0.	0.	0.
162	162	191	G1_power station	0.	0.	0.
162	162	190	G2_power station	600.23	345.21	86.64
162	162	197	G2_power station	634.62	201.97	121.68
162	162	198	G2_power station	808.15	199.54	100.87
162	162	191	G2_power station	772.38	267.18	65.82
162	162	190	Q_power station	22.21	12.77	3.21
162	162	197	Q_power station	23.48	7.47	4.5
162	162	198	Q_power station	29.9	7.38	3.73
162	162	191	Q_power station	28.58	9.89	2.44
162	162	190	Q_neve	73.18	53.59	6.91
162	162	197	Q_neve	75.18	35.8	9.55
162	162	198	Q_neve	93.1	36.92	7.68
162	162	191	Q_neve	90.83	48.29	5.04
162	162	190	Q_manutenzione	22.21	12.77	3.21
162	162	197	Q_manutenzione	23.48	7.47	4.5
162	162	198	Q_manutenzione	29.9	7.38	3.73
162	162	191	Q_manutenzione	28.58	9.89	2.44
162	162	190	EQ_X	395.99	-3.82	-11.83
162	162	197	EQ_X	420.54	47.22	-17.66
162	162	198	EQ_X	354.12	34.49	-20.37
162	162	191	EQ_X	348.4	15.88	-14.55
162	162	190	EQ_Y	-0.49	81.91	83.33

Table 21: Element Stresses - Area Shells, Part 1 of 3

Area	AreaElem	Joint	OutputCase	S11Top	S22Top	S12Top
				KN/m2	KN/m2	KN/m2
162	162	197	EQ_Y	-11.37	153.99	104.7
162	162	198	EQ_Y	21.57	98.83	101.73
162	162	191	EQ_Y	3.49	44.47	80.35
163	163	191	DEAD	-2.000E-11	9.119E-11	-4.857E-11
163	163	198	DEAD	1.459E-11	4.839E-11	-4.250E-11
163	163	199	DEAD	-4.078E-12	6.162E-11	-4.250E-11
163	163	192	DEAD	5.327E-11	5.976E-11	-4.857E-11
163	163	191	G1_power station	0.	0.	0.
163	163	198	G1_power station	0.	0.	0.
163	163	199	G1_power station	0.	0.	0.
163	163	192	G1_power station	0.	0.	0.
163	163	191	G2_power station	772.28	267.16	53.59
163	163	198	G2_power station	808.23	199.56	75.14
163	163	199	G2_power station	885.64	186.07	55.24
163	163	192	G2_power station	833.74	216.43	33.69
163	163	191	Q_power station	28.57	9.88	1.98
163	163	198	Q_power station	29.9	7.38	2.78
163	163	199	Q_power station	32.77	6.88	2.04
163	163	192	Q_power station	30.85	8.01	1.25
163	163	191	Q_neve	90.84	48.29	3.92
163	163	198	Q_neve	93.11	36.93	5.29
163	163	199	Q_neve	100.22	36.74	3.36
163	163	192	Q_neve	96.03	45.07	1.99
163	163	191	Q_manutenzione	28.57	9.88	1.98
163	163	198	Q_manutenzione	29.9	7.38	2.78
163	163	199	Q_manutenzione	32.77	6.88	2.04
163	163	192	Q_manutenzione	30.85	8.01	1.25
163	163	191	EQ_X	350.46	16.29	-13.62
163	163	198	EQ_X	353.91	34.44	-20.23
163	163	199	EQ_X	282.26	26.23	-20.35
163	163	192	EQ_X	276.04	24.23	-13.74
163	163	191	EQ_Y	3.13	44.4	80.3
163	163	198	EQ_Y	21.52	98.82	89.92
163	163	199	EQ_Y	36.91	74.69	83.43
163	163	192	EQ_Y	11.74	28.96	73.82
164	164	192	DEAD	5.237E-11	5.279E-11	-3.368E-11
164	164	199	DEAD	1.338E-11	5.139E-11	-4.086E-11
164	164	200	DEAD	7.621E-12	4.748E-11	-2.762E-11
164	164	193	DEAD	7.025E-11	1.356E-10	-2.569E-11
164	164	192	G1_power station	0.	0.	0.
164	164	199	G1_power station	0.	0.	0.
164	164	200	G1_power station	0.	0.	0.
164	164	193	G1_power station	0.	0.	0.

Table 21: Element Stresses - Area Shells, Part 1 of 3

Area	AreaElem	Joint	OutputCase	S11Top	S22Top	S12Top
				KN/m2	KN/m2	KN/m2
164	164	192	G2_power station	835.34	216.75	18.28
164	164	199	G2_power station	885.01	185.94	23.77
164	164	200	G2_power station	887.6	168.92	-12.62
164	164	193	G2_power station	752.07	194.2	-18.11
164	164	192	Q_power station	30.91	8.02	0.68
164	164	199	Q_power station	32.75	6.88	0.88
164	164	200	Q_power station	32.84	6.25	-0.47
164	164	193	Q_power station	27.83	7.19	-0.67
164	164	192	Q_neve	96.21	45.1	0.43
164	164	199	Q_neve	100.16	36.72	0.18
164	164	200	Q_neve	98.54	35.89	-3.6
164	164	193	Q_neve	85.46	44.5	-3.36
164	164	192	Q_manutenzione	30.91	8.02	0.68
164	164	199	Q_manutenzione	32.75	6.88	0.88
164	164	200	Q_manutenzione	32.84	6.25	-0.47
164	164	193	Q_manutenzione	27.83	7.19	-0.67
164	164	192	EQ_X	277.04	24.43	-13.88
164	164	199	EQ_X	281.28	26.04	-22.99
164	164	200	EQ_X	204.68	21.56	-25.72
164	164	193	EQ_X	191.26	34.03	-16.61
164	164	192	EQ_Y	14.73	29.56	65.49
164	164	199	EQ_Y	40.35	75.38	71.18
164	164	200	EQ_Y	46.7	67.31	55.36
164	164	193	EQ_Y	17.47	23.38	49.66
165	165	193	DEAD	-1.518E-13	1.074E-10	-2.984E-11
165	165	200	DEAD	1.002E-10	4.403E-11	-3.398E-11
165	165	201	DEAD	2.336E-11	6.116E-11	-4.197E-11
165	165	194	DEAD	5.698E-11	1.009E-10	-4.308E-11
165	165	193	G1_power station	0.	0.	0.
165	165	200	G1_power station	0.	0.	0.
165	165	201	G1_power station	0.	0.	0.
165	165	194	G1_power station	0.	0.	0.
165	165	193	G2_power station	757.27	195.24	-53.23
165	165	200	G2_power station	886.62	168.72	-88.49
165	165	201	G2_power station	772.62	121.93	-181.12
165	165	194	G2_power station	444.27	307.11	-145.86
165	165	193	Q_power station	28.02	7.22	-1.97
165	165	200	Q_power station	32.8	6.24	-3.27
165	165	201	Q_power station	28.59	4.51	-6.7
165	165	194	Q_power station	16.44	11.36	-5.4
165	165	193	Q_neve	86.	44.6	-7.03
165	165	200	Q_neve	98.46	35.88	-11.59
165	165	201	Q_neve	83.59	32.	-21.31

Table 21: Element Stresses - Area Shells, Part 1 of 3

Area	AreaElem	Joint	OutputCase	S11Top	S22Top	S12Top
				KN/m2	KN/m2	KN/m2
165	165	194	Q_neve	50.5	57.85	-16.75
165	165	193	Q_manutenzione	28.02	7.22	-1.97
165	165	200	Q_manutenzione	32.8	6.24	-3.27
165	165	201	Q_manutenzione	28.59	4.51	-6.7
165	165	194	Q_manutenzione	16.44	11.36	-5.4
165	165	193	EQ_X	193.34	34.44	-19.74
165	165	200	EQ_X	203.35	21.3	-33.02
165	165	201	EQ_X	117.39	13.18	-41.96
165	165	194	EQ_X	95.68	55.32	-28.68
165	165	193	EQ_Y	14.3	22.75	38.45
165	165	200	EQ_Y	56.09	69.19	38.77
165	165	201	EQ_Y	56.89	92.5	27.43
165	165	194	EQ_Y	11.72	39.47	27.11
166	166	194	DEAD	5.537E-11	1.064E-10	-3.533E-11
166	166	201	DEAD	4.566E-11	4.937E-11	-5.353E-11
166	166	202	DEAD	-1.511E-12	1.314E-10	-5.049E-11
166	166	195	DEAD	1.608E-11	1.017E-10	-3.229E-11
166	166	194	G1_power station	0.	0.	0.
166	166	201	G1_power station	0.	0.	0.
166	166	202	G1_power station	0.	0.	0.
166	166	195	G1_power station	0.	0.	0.
166	166	194	G2_power station	419.3	302.11	-185.67
166	166	201	G2_power station	849.42	137.29	-371.65
166	166	202	G2_power station	-452.38	476.08	-356.13
166	166	195	G2_power station	85.28	429.95	-170.15
166	166	194	Q_power station	15.51	11.18	-6.87
166	166	201	Q_power station	31.43	5.08	-13.75
166	166	202	Q_power station	-16.74	17.61	-13.18
166	166	195	Q_power station	3.16	15.91	-6.3
166	166	194	Q_neve	47.92	57.33	-20.96
166	166	201	Q_neve	91.61	33.6	-41.36
166	166	202	Q_neve	-46.53	70.04	-40.17
166	166	195	Q_neve	8.81	72.51	-19.77
166	166	194	Q_manutenzione	15.51	11.18	-6.87
166	166	201	Q_manutenzione	31.43	5.08	-13.75
166	166	202	Q_manutenzione	-16.74	17.61	-13.18
166	166	195	Q_manutenzione	3.16	15.91	-6.3
166	166	194	EQ_X	93.87	54.96	-32.95
166	166	201	EQ_X	128.66	15.43	-60.89
166	166	202	EQ_X	-30.01	62.06	-64.66
166	166	195	EQ_X	5.41	83.25	-36.72
166	166	194	EQ_Y	8.45	38.81	24.12
166	166	201	EQ_Y	47.72	90.66	11.66

Table 21: Element Stresses - Area Shells, Part 1 of 3

Area	AreaElem	Joint	OutputCase	S11Top	S22Top	S12Top
				KN/m2	KN/m2	KN/m2
166	166	202	EQ_Y	-29.34	122.93	19.24
166	166	195	EQ_Y	11.58	55.7	31.69
167	167	72	DEAD	2.414E-11	1.207E-10	-8.288E-12
167	167	18	DEAD	-8.202E-12	8.509E-11	-2.221E-12
167	167	203	DEAD	1.352E-11	6.760E-11	-2.221E-12
167	167	196	DEAD	-6.685E-12	9.268E-11	-8.288E-12
167	167	72	G1_power station	0.	0.	0.
167	167	18	G1_power station	0.	0.	0.
167	167	203	G1_power station	0.	0.	0.
167	167	196	G1_power station	0.	0.	0.
167	167	72	G2_power station	1.55	353.26	196.75
167	167	18	G2_power station	-612.11	-650.03	169.46
167	167	203	G2_power station	387.24	-120.26	216.94
167	167	196	G2_power station	294.27	198.39	244.23
167	167	72	Q_power station	5.730E-02	13.07	7.28
167	167	18	Q_power station	-22.65	-24.05	6.27
167	167	203	Q_power station	14.33	-4.45	8.03
167	167	196	Q_power station	10.89	7.34	9.04
167	167	72	Q_neve	5.28	44.89	15.89
167	167	18	Q_neve	-50.85	-53.44	13.24
167	167	203	Q_neve	46.09	-4.52	17.41
167	167	196	Q_neve	39.76	33.6	20.06
167	167	72	Q_manutenzione	5.730E-02	13.07	7.28
167	167	18	Q_manutenzione	-22.65	-24.05	6.27
167	167	203	Q_manutenzione	14.33	-4.45	8.03
167	167	196	Q_manutenzione	10.89	7.34	9.04
167	167	72	EQ_X	-198.84	-50.14	321.89
167	167	18	EQ_X	2068.24	302.3	287.63
167	167	203	EQ_X	349.24	214.94	-48.4
167	167	196	EQ_X	619.21	-18.64	-14.14
167	167	72	EQ_Y	167.37	60.68	-34.84
167	167	18	EQ_Y	300.7	2026.28	362.38
167	167	203	EQ_Y	-93.95	-268.07	405.52
167	167	196	EQ_Y	-7.22	477.21	8.29
168	168	196	DEAD	-4.161E-11	8.723E-11	-2.055E-11
168	168	203	DEAD	-1.957E-11	6.642E-11	-1.145E-11
168	168	204	DEAD	-3.327E-11	7.434E-11	-1.448E-11
168	168	197	DEAD	-2.640E-11	5.049E-11	-2.358E-11
168	168	196	G1_power station	0.	0.	0.
168	168	203	G1_power station	0.	0.	0.
168	168	204	G1_power station	0.	0.	0.
168	168	197	G1_power station	0.	0.	0.
168	168	196	G2_power station	303.34	200.2	203.72

Table 21: Element Stresses - Area Shells, Part 1 of 3

Area	AreaElem	Joint	OutputCase	S11Top	S22Top	S12Top
				KN/m2	KN/m2	KN/m2
168	168	203	G2_power station	368.14	-124.07	191.8
168	168	204	G2_power station	654.06	51.03	159.55
168	168	197	G2_power station	639.54	200.42	171.48
168	168	196	Q_power station	11.22	7.41	7.54
168	168	203	Q_power station	13.62	-4.59	7.1
168	168	204	Q_power station	24.2	1.89	5.9
168	168	197	Q_power station	23.66	7.42	6.34
168	168	196	Q_neve	40.57	33.76	16.45
168	168	203	Q_neve	44.36	-4.87	15.17
168	168	204	Q_neve	74.73	11.78	12.32
168	168	197	Q_neve	75.62	35.67	13.6
168	168	196	Q_manutenzione	11.22	7.41	7.54
168	168	203	Q_manutenzione	13.62	-4.59	7.1
168	168	204	Q_manutenzione	24.2	1.89	5.9
168	168	197	Q_manutenzione	23.66	7.42	6.34
168	168	196	EQ_X	544.43	-33.6	-29.39
168	168	203	EQ_X	466.23	238.34	-16.71
168	168	204	EQ_X	466.13	74.91	-2.71
168	168	197	EQ_X	409.73	48.27	-15.39
168	168	196	EQ_Y	10.43	480.74	202.94
168	168	203	EQ_Y	-92.47	-267.78	176.75
168	168	204	EQ_Y	49.06	216.12	153.14
168	168	197	EQ_Y	-13.78	108.84	179.33
169	169	197	DEAD	-4.942E-11	5.296E-11	-2.294E-11
169	169	204	DEAD	-1.149E-11	5.522E-11	-2.213E-11
169	169	205	DEAD	3.628E-11	8.102E-11	-1.384E-11
169	169	198	DEAD	5.221E-11	6.432E-11	-2.516E-11
169	169	197	G1_power station	0.	0.	0.
169	169	204	G1_power station	0.	0.	0.
169	169	205	G1_power station	0.	0.	0.
169	169	198	G1_power station	0.	0.	0.
169	169	197	G2_power station	634.09	199.33	140.77
169	169	204	G2_power station	665.46	53.31	145.98
169	169	205	G2_power station	851.67	104.02	123.15
169	169	198	G2_power station	807.92	198.41	117.95
169	169	197	Q_power station	23.46	7.38	5.21
169	169	204	Q_power station	24.62	1.97	5.4
169	169	205	Q_power station	31.51	3.85	4.56
169	169	198	Q_power station	29.89	7.34	4.36
169	169	197	Q_neve	75.13	35.57	10.88
169	169	204	Q_neve	75.77	11.99	11.1
169	169	205	Q_neve	95.07	17.25	9.02
169	169	198	Q_neve	93.08	36.83	8.8

Table 21: Element Stresses - Area Shells, Part 1 of 3

Area	AreaElem	Joint	OutputCase	S11Top	S22Top	S12Top
				KN/m2	KN/m2	KN/m2
169	169	197	Q_manutenzione	23.46	7.38	5.21
169	169	204	Q_manutenzione	24.62	1.97	5.4
169	169	205	Q_manutenzione	31.51	3.85	4.56
169	169	198	Q_manutenzione	29.89	7.34	4.36
169	169	197	EQ_X	421.21	50.57	-16.57
169	169	204	EQ_X	444.78	70.64	-10.78
169	169	205	EQ_X	371.15	38.3	-15.15
169	169	198	EQ_X	353.76	32.69	-20.94
169	169	197	EQ_Y	-20.67	107.46	129.97
169	169	204	EQ_Y	46.65	215.64	164.27
169	169	205	EQ_Y	47.94	59.99	147.16
169	169	198	EQ_Y	24.18	111.89	112.86
170	170	198	DEAD	-1.510E-11	2.599E-11	-2.977E-11
170	170	205	DEAD	2.341E-11	8.271E-11	-2.371E-11
170	170	206	DEAD	2.736E-11	5.633E-11	-2.977E-11
170	170	199	DEAD	2.038E-11	3.114E-11	-3.584E-11
170	170	198	G1_power station	0.	0.	0.
170	170	205	G1_power station	0.	0.	0.
170	170	206	G1_power station	0.	0.	0.
170	170	199	G1_power station	0.	0.	0.
170	170	198	G2_power station	808.	198.43	92.81
170	170	205	G2_power station	853.89	104.46	100.11
170	170	206	G2_power station	956.17	123.2	72.74
170	170	199	G2_power station	885.32	184.45	65.44
170	170	198	Q_power station	29.9	7.34	3.43
170	170	205	Q_power station	31.59	3.86	3.7
170	170	206	Q_power station	35.38	4.56	2.69
170	170	199	Q_power station	32.76	6.82	2.42
170	170	198	Q_neve	93.09	36.83	6.47
170	170	205	Q_neve	95.28	17.29	6.8
170	170	206	Q_neve	105.18	19.55	4.11
170	170	199	Q_neve	100.19	36.56	3.78
170	170	198	Q_manutenzione	29.9	7.34	3.43
170	170	205	Q_manutenzione	31.59	3.86	3.7
170	170	206	Q_manutenzione	35.38	4.56	2.69
170	170	199	Q_manutenzione	32.76	6.82	2.42
170	170	198	EQ_X	353.55	32.65	-21.56
170	170	205	EQ_X	368.24	37.71	-23.18
170	170	206	EQ_X	294.68	21.36	-27.19
170	170	199	EQ_X	282.04	25.16	-25.57
170	170	198	EQ_Y	24.13	111.87	109.47
170	170	205	EQ_Y	41.02	58.6	115.64
170	170	206	EQ_Y	63.26	68.83	97.5

Table 21: Element Stresses - Area Shells, Part 1 of 3

Area	AreaElem	Joint	OutputCase	S11Top	S22Top	S12Top
				KN/m2	KN/m2	KN/m2
170	170	199	EQ_Y	36.05	70.41	91.33
171	171	199	DEAD	-3.489E-12	-7.530E-13	-3.766E-11
171	171	206	DEAD	-3.975E-12	6.344E-11	-3.573E-11
171	171	207	DEAD	7.311E-11	5.461E-11	-3.766E-11
171	171	200	DEAD	2.105E-11	4.296E-11	-4.483E-11
171	171	199	G1_power station	0.	0.	0.
171	171	206	G1_power station	0.	0.	0.
171	171	207	G1_power station	0.	0.	0.
171	171	200	G1_power station	0.	0.	0.
171	171	199	G2_power station	884.68	184.32	34.38
171	171	206	G2_power station	957.19	123.41	38.54
171	171	207	G2_power station	1034.05	136.68	-5.47
171	171	200	G2_power station	887.66	169.24	-9.63
171	171	199	Q_power station	32.73	6.82	1.27
171	171	206	Q_power station	35.42	4.57	1.43
171	171	207	Q_power station	38.26	5.06	-0.2
171	171	200	Q_power station	32.84	6.26	-0.36
171	171	199	Q_neve	100.12	36.55	0.65
171	171	206	Q_neve	105.27	19.57	0.65
171	171	207	Q_neve	111.59	21.11	-3.89
171	171	200	Q_neve	98.55	35.95	-3.9
171	171	199	Q_manutenzione	32.73	6.82	1.27
171	171	206	Q_manutenzione	35.42	4.57	1.43
171	171	207	Q_manutenzione	38.26	5.06	-0.2
171	171	200	Q_manutenzione	32.84	6.26	-0.36
171	171	199	EQ_X	281.07	24.97	-28.34
171	171	206	EQ_X	292.52	20.93	-31.82
171	171	207	EQ_X	220.5	8.01	-36.55
171	171	200	EQ_X	204.94	22.84	-33.06
171	171	199	EQ_Y	39.49	71.09	76.99
171	171	206	EQ_Y	60.75	68.32	78.7
171	171	207	EQ_Y	66.63	61.35	64.32
171	171	200	EQ_Y	46.	63.8	62.61
172	172	200	DEAD	1.023E-10	3.384E-11	-4.197E-11
172	172	207	DEAD	-9.496E-12	5.198E-11	-3.176E-11
172	172	208	DEAD	8.639E-11	2.702E-11	-2.984E-11
172	172	201	DEAD	6.431E-12	5.880E-11	-3.479E-11
172	172	200	G1_power station	0.	0.	0.
172	172	207	G1_power station	0.	0.	0.
172	172	208	G1_power station	0.	0.	0.
172	172	201	G1_power station	0.	0.	0.
172	172	200	G2_power station	886.68	169.05	-75.07
172	172	207	G2_power station	1035.07	136.89	-65.85

Table 21: Element Stresses - Area Shells, Part 1 of 3

Area	AreaElem	Joint	OutputCase	S11Top	S22Top	S12Top
				KN/m2	KN/m2	KN/m2
172	172	208	G2_power station	1198.3	178.91	-171.28
172	172	201	G2_power station	767.53	96.49	-180.5
172	172	200	Q_power station	32.81	6.25	-2.78
172	172	207	Q_power station	38.3	5.06	-2.44
172	172	208	Q_power station	44.34	6.62	-6.34
172	172	201	Q_power station	28.4	3.57	-6.68
172	172	200	Q_neve	98.47	35.93	-10.82
172	172	207	Q_neve	111.64	21.12	-10.13
172	172	208	Q_neve	125.91	24.72	-21.23
172	172	201	Q_neve	83.01	29.14	-21.92
172	172	200	Q_manutenzione	32.81	6.25	-2.78
172	172	207	Q_manutenzione	38.3	5.06	-2.44
172	172	208	Q_manutenzione	44.34	6.62	-6.34
172	172	201	Q_manutenzione	28.4	3.57	-6.68
172	172	200	EQ_X	203.61	22.58	-38.72
172	172	207	EQ_X	215.72	7.05	-42.76
172	172	208	EQ_X	156.6	2.57	-51.48
172	172	201	EQ_X	116.49	8.69	-47.43
172	172	200	EQ_Y	55.39	65.68	45.32
172	172	207	EQ_Y	76.41	63.31	47.34
172	172	208	EQ_Y	70.87	64.96	22.72
172	172	201	EQ_Y	53.89	77.46	20.7
173	173	201	DEAD	5.003E-11	3.530E-11	-5.745E-11
173	173	208	DEAD	5.161E-11	4.594E-11	-2.874E-11
173	173	34	DEAD	9.402E-11	-1.452E-10	-7.565E-11
173	173	202	DEAD	-1.133E-11	1.134E-10	-8.335E-11
173	173	201	G1_power station	0.	0.	0.
173	173	208	G1_power station	0.	0.	0.
173	173	34	G1_power station	0.	0.	0.
173	173	202	G1_power station	0.	0.	0.
173	173	201	G2_power station	844.33	111.85	-341.91
173	173	208	G2_power station	1148.55	168.96	-393.05
173	173	34	G2_power station	1942.13	-126.2	-913.19
173	173	202	G2_power station	-442.25	526.71	-862.05
173	173	201	Q_power station	31.24	4.14	-12.65
173	173	208	Q_power station	42.5	6.25	-14.54
173	173	34	Q_power station	71.86	-4.67	-33.79
173	173	202	Q_power station	-16.36	19.49	-31.9
173	173	201	Q_neve	91.04	30.74	-39.15
173	173	208	Q_neve	120.46	23.63	-44.24
173	173	34	Q_neve	199.68	-11.09	-98.57
173	173	202	Q_neve	-45.38	75.77	-93.48
173	173	201	Q_manutenzione	31.24	4.14	-12.65

Table 21: Element Stresses - Area Shells, Part 1 of 3

Area	AreaElem	Joint	OutputCase	S11Top	S22Top	S12Top
				KN/m2	KN/m2	KN/m2
173	173	208	Q_manutenzione	42.5	6.25	-14.54
173	173	34	Q_manutenzione	71.86	-4.67	-33.79
173	173	202	Q_manutenzione	-16.36	19.49	-31.9
173	173	201	EQ_X	127.76	10.95	-71.37
173	173	208	EQ_X	139.65	-0.82	-60.48
173	173	34	EQ_X	117.86	-173.46	-99.9
173	173	202	EQ_X	-29.09	66.66	-110.79
173	173	201	EQ_Y	44.71	75.63	14.63
173	173	208	EQ_Y	106.03	71.99	-16.36
173	173	34	EQ_Y	155.11	290.28	-59.52
173	173	202	EQ_Y	-24.9	145.14	-28.52
174	174	58	DEAD	-8.162E-12	-5.695E-12	1.196E-12
174	174	57	DEAD	-6.964E-12	1.516E-12	-3.205E-13
174	174	209	DEAD	-6.835E-12	-3.609E-12	-3.205E-13
174	174	143	DEAD	-1.465E-12	6.256E-12	1.196E-12
174	174	58	G1_power station	0.	0.	0.
174	174	57	G1_power station	0.	0.	0.
174	174	209	G1_power station	0.	0.	0.
174	174	143	G1_power station	0.	0.	0.
174	174	58	G2_power station	-687.36	-593.78	27.03
174	174	57	G2_power station	-243.1	22.24	-31.37
174	174	209	G2_power station	-30.14	-10.93	-50.45
174	174	143	G2_power station	153.48	-125.61	7.95
174	174	58	Q_power station	-25.43	-21.97	1.
174	174	57	Q_power station	-8.99	0.82	-1.16
174	174	209	Q_power station	-1.12	-0.4	-1.87
174	174	143	Q_power station	5.68	-4.65	0.29
174	174	58	Q_neve	-59.09	-47.83	-0.5
174	174	57	Q_neve	-17.99	2.03	-5.64
174	174	209	Q_neve	3.33	-0.9	-7.87
174	174	143	Q_neve	20.24	-5.04	-2.73
174	174	58	Q_manutenzione	-25.43	-21.97	1.
174	174	57	Q_manutenzione	-8.99	0.82	-1.16
174	174	209	Q_manutenzione	-1.12	-0.4	-1.87
174	174	143	Q_manutenzione	5.68	-4.65	0.29
174	174	58	EQ_X	-2064.55	-320.21	181.45
174	174	57	EQ_X	626.6	167.2	240.89
174	174	209	EQ_X	-806.46	-30.96	-88.96
174	174	143	EQ_X	-310.49	-236.86	-148.41
174	174	58	EQ_Y	424.86	1608.54	-373.42
174	174	57	EQ_Y	338.43	-170.39	55.11
174	174	209	EQ_Y	4.77	132.17	8.93
174	174	143	EQ_Y	-57.13	-548.23	-419.6

Table 21: Element Stresses - Area Shells, Part 1 of 3

Area	AreaElem	Joint	OutputCase	S11Top	S22Top	S12Top
				KN/m2	KN/m2	KN/m2
175	175	143	DEAD	-2.400E-12	4.396E-12	-3.205E-13
175	175	209	DEAD	-2.861E-13	4.236E-13	4.379E-13
175	175	210	DEAD	-1.539E-11	-1.386E-12	1.196E-12
175	175	144	DEAD	-9.292E-12	-3.653E-12	4.379E-13
175	175	143	G1_power station	0.	0.	0.
175	175	209	G1_power station	0.	0.	0.
175	175	210	G1_power station	0.	0.	0.
175	175	144	G1_power station	0.	0.	0.
175	175	143	G2_power station	134.11	-129.49	26.39
175	175	209	G2_power station	-13.56	-7.61	14.
175	175	210	G2_power station	369.65	-13.93	29.39
175	175	144	G2_power station	299.57	34.15	41.78
175	175	143	Q_power station	4.96	-4.79	0.98
175	175	209	Q_power station	-0.5	-0.28	0.52
175	175	210	Q_power station	13.68	-0.52	1.09
175	175	144	Q_power station	11.08	1.26	1.55
175	175	143	Q_neve	18.44	-5.4	-1.48
175	175	209	Q_neve	4.88	-0.59	-2.37
175	175	210	Q_neve	40.79	-1.69	-1.38
175	175	144	Q_neve	34.47	9.51	-0.49
175	175	143	Q_manutenzione	4.96	-4.79	0.98
175	175	209	Q_manutenzione	-0.5	-0.28	0.52
175	175	210	Q_manutenzione	13.68	-0.52	1.09
175	175	144	Q_manutenzione	11.08	1.26	1.55
175	175	143	EQ_X	-411.26	-257.02	-39.78
175	175	209	EQ_X	-683.75	-6.42	-78.1
175	175	210	EQ_X	-469.6	16.03	-6.86
175	175	144	EQ_X	-388.71	-95.34	31.45
175	175	143	EQ_Y	-37.56	-544.32	-152.82
175	175	209	EQ_Y	11.63	133.54	-233.15
175	175	210	EQ_Y	-103.66	-52.76	-207.68
175	175	144	EQ_Y	41.85	-26.44	-127.35
176	176	144	DEAD	-1.068E-11	-5.488E-12	3.065E-12
176	176	210	DEAD	-3.443E-12	2.842E-12	1.548E-12
176	176	35	DEAD	-2.177E-11	-1.791E-12	3.065E-12
176	176	30	DEAD	-3.727E-12	5.970E-12	4.582E-12
176	176	144	G1_power station	0.	0.	0.
176	176	210	G1_power station	0.	0.	0.
176	176	35	G1_power station	0.	0.	0.
176	176	30	G1_power station	0.	0.	0.
176	176	144	G2_power station	298.3	33.9	-8.59
176	176	210	G2_power station	357.23	-16.41	35.24
176	176	35	G2_power station	726.97	33.16	-14.65

Table 21: Element Stresses - Area Shells, Part 1 of 3

Area	AreaElem	Joint	OutputCase	S11Top	S22Top	S12Top
				KN/m2	KN/m2	KN/m2
176	176	30	G2_power station	475.1	-74.68	-58.48
176	176	144	Q_power station	11.04	1.25	-0.32
176	176	210	Q_power station	13.22	-0.61	1.3
176	176	35	Q_power station	26.9	1.23	-0.54
176	176	30	Q_power station	17.58	-2.76	-2.16
176	176	144	Q_neve	33.92	9.4	-6.07
176	176	210	Q_neve	39.94	-1.86	-0.74
176	176	35	Q_neve	73.77	3.82	-5.36
176	176	30	Q_neve	52.26	-6.32	-10.7
176	176	144	Q_manutenzione	11.04	1.25	-0.32
176	176	210	Q_manutenzione	13.22	-0.61	1.3
176	176	35	Q_manutenzione	26.9	1.23	-0.54
176	176	30	Q_manutenzione	17.58	-2.76	-2.16
176	176	144	EQ_X	-360.41	-89.68	83.63
176	176	210	EQ_X	-485.25	12.9	39.92
176	176	35	EQ_X	-583.41	-34.32	86.11
176	176	30	EQ_X	-456.76	76.16	129.82
176	176	144	EQ_Y	87.27	-17.36	-150.4
176	176	210	EQ_Y	-150.34	-62.09	-135.74
176	176	35	EQ_Y	-122.12	55.53	-122.63
176	176	30	EQ_Y	127.94	-15.8	-137.29
177	177	27	DEAD	5.080E-12	3.866E-12	6.290E-12
177	177	26	DEAD	-1.898E-11	-1.213E-12	4.015E-12
177	177	211	DEAD	1.762E-12	1.458E-11	5.532E-12
177	177	212	DEAD	-9.974E-12	-1.687E-12	7.807E-12
177	177	27	G1_power station	0.	0.	0.
177	177	26	G1_power station	0.	0.	0.
177	177	211	G1_power station	0.	0.	0.
177	177	212	G1_power station	0.	0.	0.
177	177	27	G2_power station	409.24	-19.05	108.43
177	177	26	G2_power station	834.74	105.58	131.45
177	177	211	G2_power station	570.31	-27.33	71.7
177	177	212	G2_power station	660.02	11.7	48.68
177	177	27	Q_power station	15.14	-0.7	4.01
177	177	26	Q_power station	30.89	3.91	4.86
177	177	211	Q_power station	21.1	-1.01	2.65
177	177	212	Q_power station	24.42	0.43	1.8
177	177	27	Q_neve	37.72	-1.83	11.02
177	177	26	Q_neve	89.86	11.78	12.71
177	177	211	Q_neve	46.62	-3.16	5.4
177	177	212	Q_neve	57.94	1.21	3.71
177	177	27	Q_manutenzione	15.14	-0.7	4.01
177	177	26	Q_manutenzione	30.89	3.91	4.86

Table 21: Element Stresses - Area Shells, Part 1 of 3

Area	AreaElem	Joint	OutputCase	S11Top	S22Top	S12Top
				KN/m2	KN/m2	KN/m2
177	177	211	Q_manutenzione	21.1	-1.01	2.65
177	177	212	Q_manutenzione	24.42	0.43	1.8
177	177	27	EQ_X	16.05	1.03	5.54
177	177	26	EQ_X	218.93	-22.96	-15.74
177	177	211	EQ_X	-28.57	8.23	-40.54
177	177	212	EQ_X	-29.73	-4.67	-19.27
177	177	27	EQ_Y	77.83	29.73	-46.37
177	177	26	EQ_Y	-197.69	-117.46	-66.79
177	177	211	EQ_Y	-209.72	2.23	-75.6
177	177	212	EQ_Y	59.64	30.1	-55.18
178	178	212	DEAD	-7.811E-12	7.387E-13	4.015E-12
178	178	211	DEAD	-9.077E-12	1.167E-11	8.565E-12
178	178	213	DEAD	-4.777E-12	-4.570E-12	7.807E-12
178	178	214	DEAD	-1.533E-11	-3.683E-12	3.257E-12
178	178	212	G1_power station	0.	0.	0.
178	178	211	G1_power station	0.	0.	0.
178	178	213	G1_power station	0.	0.	0.
178	178	214	G1_power station	0.	0.	0.
178	178	212	G2_power station	631.11	5.92	64.95
178	178	211	G2_power station	599.22	-21.55	64.09
178	178	213	G2_power station	653.34	5.44	68.58
178	178	214	G2_power station	649.22	-2.92	69.44
178	178	212	Q_power station	23.35	0.22	2.4
178	178	211	Q_power station	22.17	-0.8	2.37
178	178	213	Q_power station	24.17	0.2	2.54
178	178	214	Q_power station	24.02	-0.11	2.57
178	178	212	Q_neve	54.36	0.49	5.42
178	178	211	Q_neve	50.21	-2.44	4.97
178	178	213	Q_neve	53.05	0.61	5.62
178	178	214	Q_neve	52.75	-0.38	6.07
178	178	212	Q_manutenzione	23.35	0.22	2.4
178	178	211	Q_manutenzione	22.17	-0.8	2.37
178	178	213	Q_manutenzione	24.17	0.2	2.54
178	178	214	Q_manutenzione	24.02	-0.11	2.57
178	178	212	EQ_X	-29.25	-4.58	-21.21
178	178	211	EQ_X	-28.16	8.31	-35.74
178	178	213	EQ_X	-191.8	4.505E-02	-33.97
178	178	214	EQ_X	-202.81	-5.413E-02	-19.44
178	178	212	EQ_Y	27.19	23.61	-72.39
178	178	211	EQ_Y	-179.91	8.19	-71.53
178	178	213	EQ_Y	-172.38	-22.12	-76.15
178	178	214	EQ_Y	35.38	34.26	-77.01
179	179	214	DEAD	-1.416E-11	-3.845E-12	3.268E-12

Table 21: Element Stresses - Area Shells, Part 1 of 3

Area	AreaElem	Joint	OutputCase	S11Top	S22Top	S12Top
				KN/m2	KN/m2	KN/m2
179	179	213	DEAD	-4.260E-12	-4.351E-12	2.346E-13
179	179	215	DEAD	-1.786E-11	2.696E-12	2.346E-13
179	179	216	DEAD	-3.786E-12	4.844E-12	3.268E-12
179	179	214	G1_power station	0.	0.	0.
179	179	213	G1_power station	0.	0.	0.
179	179	215	G1_power station	0.	0.	0.
179	179	216	G1_power station	0.	0.	0.
179	179	214	G2_power station	648.44	-3.07	66.66
179	179	213	G2_power station	654.12	5.6	73.33
179	179	215	G2_power station	690.66	-4.71	79.56
179	179	216	G2_power station	729.16	1.88	72.89
179	179	214	Q_power station	23.99	-0.11	2.47
179	179	213	Q_power station	24.2	0.21	2.71
179	179	215	Q_power station	25.55	-0.17	2.94
179	179	216	Q_power station	26.98	6.968E-02	2.7
179	179	214	Q_neve	52.67	-0.4	5.44
179	179	213	Q_neve	53.13	0.63	6.66
179	179	215	Q_neve	60.83	-0.97	7.5
179	179	216	Q_neve	65.79	0.14	6.28
179	179	214	Q_manutenzione	23.99	-0.11	2.47
179	179	213	Q_manutenzione	24.2	0.21	2.71
179	179	215	Q_manutenzione	25.55	-0.17	2.94
179	179	216	Q_manutenzione	26.98	6.968E-02	2.7
179	179	214	EQ_X	-188.17	2.87	-16.97
179	179	213	EQ_X	-206.85	-2.97	-36.79
179	179	215	EQ_X	-392.31	1.13	-42.74
179	179	216	EQ_X	-417.39	3.5	-22.92
179	179	214	EQ_Y	-59.26	15.33	-88.51
179	179	213	EQ_Y	-74.41	-2.52	-82.43
179	179	215	EQ_Y	-41.47	10.77	-87.43
179	179	216	EQ_Y	-18.69	-14.45	-93.52
180	180	216	DEAD	-3.458E-12	5.710E-12	5.809E-12
180	180	215	DEAD	-1.781E-11	9.294E-13	6.568E-12
180	180	30	DEAD	-1.066E-11	3.814E-12	7.326E-12
180	180	35	DEAD	-2.521E-11	-1.915E-12	6.568E-12
180	180	216	G1_power station	0.	0.	0.
180	180	215	G1_power station	0.	0.	0.
180	180	30	G1_power station	0.	0.	0.
180	180	35	G1_power station	0.	0.	0.
180	180	216	G2_power station	766.25	9.3	83.33
180	180	215	G2_power station	653.57	-12.13	82.2
180	180	30	G2_power station	1010.57	32.41	6.02
180	180	35	G2_power station	486.35	-14.97	7.14

Table 21: Element Stresses - Area Shells, Part 1 of 3

Area	AreaElem	Joint	OutputCase	S11Top	S22Top	S12Top
				KN/m2	KN/m2	KN/m2
180	180	216	Q_power station	28.35	0.34	3.08
180	180	215	Q_power station	24.18	-0.45	3.04
180	180	30	Q_power station	37.39	1.2	0.22
180	180	35	Q_power station	18.	-0.55	0.26
180	180	216	Q_neve	70.35	1.05	7.58
180	180	215	Q_neve	56.27	-1.88	7.94
180	180	30	Q_neve	111.59	5.54	-1.35
180	180	35	Q_neve	47.12	-1.51	-1.71
180	180	216	Q_manutenzione	28.35	0.34	3.08
180	180	215	Q_manutenzione	24.18	-0.45	3.04
180	180	30	Q_manutenzione	37.39	1.2	0.22
180	180	35	Q_manutenzione	18.	-0.55	0.26
180	180	216	EQ_X	-448.63	-2.75	-28.55
180	180	215	EQ_X	-360.46	7.5	-49.37
180	180	30	EQ_X	-961.74	-24.83	34.84
180	180	35	EQ_X	-358.59	10.65	55.65
180	180	216	EQ_Y	-174.23	-45.56	-107.23
180	180	215	EQ_Y	103.02	39.67	-93.07
180	180	30	EQ_Y	278.3	14.27	-111.87
180	180	35	EQ_Y	-158.51	48.25	-126.03
181	181	63	DEAD	1.293E-12	1.272E-12	1.173E-13
181	181	64	DEAD	3.137E-12	-1.334E-12	1.634E-12
181	181	217	DEAD	-9.229E-12	-8.113E-12	1.634E-12
181	181	125	DEAD	-5.490E-12	-1.239E-12	1.173E-13
181	181	63	G1_power station	0.	0.	0.
181	181	64	G1_power station	0.	0.	0.
181	181	217	G1_power station	0.	0.	0.
181	181	125	G1_power station	0.	0.	0.
181	181	63	G2_power station	-662.09	-620.38	56.64
181	181	64	G2_power station	-253.92	21.56	-1.281E-02
181	181	217	G2_power station	12.04	-12.89	-8.37
181	181	125	G2_power station	224.66	-118.44	48.27
181	181	63	Q_power station	-24.5	-22.95	2.1
181	181	64	Q_power station	-9.39	0.8	-4.739E-04
181	181	217	Q_power station	0.45	-0.48	-0.31
181	181	125	Q_power station	8.31	-4.38	1.79
181	181	63	Q_neve	-56.49	-51.41	3.13
181	181	64	Q_neve	-19.38	1.98	-1.79
181	181	217	Q_neve	7.79	-1.16	-2.73
181	181	125	Q_neve	28.26	-5.28	2.2
181	181	63	Q_manutenzione	-24.5	-22.95	2.1
181	181	64	Q_manutenzione	-9.39	0.8	-4.739E-04
181	181	217	Q_manutenzione	0.45	-0.48	-0.31

Table 21: Element Stresses - Area Shells, Part 1 of 3

Area	AreaElem	Joint	OutputCase	S11Top	S22Top	S12Top
				KN/m2	KN/m2	KN/m2
181	181	125	Q_manutenzione	8.31	-4.38	1.79
181	181	63	EQ_X	2037.98	306.25	-162.31
181	181	64	EQ_X	-591.71	-159.08	-213.9
181	181	217	EQ_X	811.33	33.7	130.49
181	181	125	EQ_X	275.64	204.02	182.08
181	181	63	EQ_Y	-406.78	-1551.33	364.61
181	181	64	EQ_Y	-357.83	150.77	-20.49
181	181	217	EQ_Y	10.73	-111.69	30.81
181	181	125	EQ_Y	74.27	538.83	415.91
182	182	125	DEAD	-1.037E-11	-3.189E-12	2.392E-12
182	182	217	DEAD	-5.844E-12	-6.948E-12	-1.399E-12
182	182	218	DEAD	-2.497E-12	1.113E-11	-6.411E-13
182	182	126	DEAD	3.162E-12	-5.147E-12	3.151E-12
182	182	125	G1_power station	0.	0.	0.
182	182	217	G1_power station	0.	0.	0.
182	182	218	G1_power station	0.	0.	0.
182	182	126	G1_power station	0.	0.	0.
182	182	125	G2_power station	205.01	-122.37	85.26
182	182	217	G2_power station	30.14	-9.27	66.12
182	182	218	G2_power station	375.9	1.21	95.76
182	182	126	G2_power station	350.5	45.43	114.89
182	182	125	Q_power station	7.59	-4.53	3.15
182	182	217	Q_power station	1.12	-0.34	2.45
182	182	218	Q_power station	13.91	4.493E-02	3.54
182	182	126	Q_power station	12.97	1.68	4.25
182	182	125	Q_neve	26.47	-5.64	5.6
182	182	217	Q_neve	9.48	-0.83	3.96
182	182	218	Q_neve	42.95	0.12	6.66
182	182	126	Q_neve	41.86	10.04	8.3
182	182	125	Q_manutenzione	7.59	-4.53	3.15
182	182	217	Q_manutenzione	1.12	-0.34	2.45
182	182	218	Q_manutenzione	13.91	4.493E-02	3.54
182	182	126	Q_manutenzione	12.97	1.68	4.25
182	182	125	EQ_X	392.41	227.38	75.84
182	182	217	EQ_X	676.32	6.7	102.36
182	182	218	EQ_X	370.33	-0.48	41.02
182	182	126	EQ_X	359.79	69.91	14.51
182	182	125	EQ_Y	75.53	539.08	168.99
182	182	217	EQ_Y	-36.99	-121.23	253.39
182	182	218	EQ_Y	87.96	40.38	229.7
182	182	126	EQ_Y	8.23	18.78	145.3
183	183	126	DEAD	-2.446E-12	-6.083E-12	2.103E-12
183	183	218	DEAD	-4.665E-12	1.012E-11	5.137E-12

Table 21: Element Stresses - Area Shells, Part 1 of 3

Area	AreaElem	Joint	OutputCase	S11Top	S22Top	S12Top
				KN/m2	KN/m2	KN/m2
183	183	219	DEAD	-1.107E-11	-3.714E-12	6.654E-12
183	183	127	DEAD	-5.898E-12	-5.141E-12	3.620E-12
183	183	126	G1_power station	0.	0.	0.
183	183	218	G1_power station	0.	0.	0.
183	183	219	G1_power station	0.	0.	0.
183	183	127	G1_power station	0.	0.	0.
183	183	126	G2_power station	361.35	47.6	104.45
183	183	218	G2_power station	361.56	-1.65	101.6
183	183	219	G2_power station	436.4	0.8	90.33
183	183	127	G2_power station	400.18	79.81	93.18
183	183	126	Q_power station	13.37	1.76	3.86
183	183	218	Q_power station	13.38	-6.118E-02	3.76
183	183	219	Q_power station	16.15	2.965E-02	3.34
183	183	127	Q_power station	14.81	2.95	3.45
183	183	126	Q_neve	42.84	10.24	7.43
183	183	218	Q_neve	41.64	-0.14	7.13
183	183	219	Q_neve	49.02	8.823E-02	6.08
183	183	127	Q_neve	46.8	13.51	6.38
183	183	126	Q_manutenzione	13.37	1.76	3.86
183	183	218	Q_manutenzione	13.38	-6.118E-02	3.76
183	183	219	Q_manutenzione	16.15	2.965E-02	3.34
183	183	127	Q_manutenzione	14.81	2.95	3.45
183	183	126	EQ_X	338.3	65.62	5.6
183	183	218	EQ_X	389.68	3.39	5.02
183	183	219	EQ_X	262.59	0.74	-8.5
183	183	127	EQ_X	245.96	23.25	-7.93
183	183	126	EQ_Y	5.66	18.27	161.91
183	183	218	EQ_Y	74.08	37.6	155.43
183	183	219	EQ_Y	67.98	-21.52	128.3
183	183	127	EQ_Y	43.92	99.42	134.78
184	184	127	DEAD	-1.334E-11	-4.532E-12	6.013E-12
184	184	219	DEAD	-1.198E-11	-6.836E-12	6.013E-12
184	184	220	DEAD	-3.574E-12	-1.214E-12	4.496E-12
184	184	128	DEAD	-6.575E-12	-7.121E-12	4.496E-12
184	184	127	G1_power station	0.	0.	0.
184	184	219	G1_power station	0.	0.	0.
184	184	220	G1_power station	0.	0.	0.
184	184	128	G1_power station	0.	0.	0.
184	184	127	G2_power station	401.86	80.15	76.07
184	184	219	G2_power station	433.89	0.3	73.16
184	184	220	G2_power station	406.36	-0.52	54.22
184	184	128	G2_power station	366.22	80.48	57.12
184	184	127	Q_power station	14.87	2.97	2.81

Table 21: Element Stresses - Area Shells, Part 1 of 3

Area	AreaElem	Joint	OutputCase	S11Top	S22Top	S12Top
				KN/m2	KN/m2	KN/m2
184	184	219	Q_power station	16.05	1.108E-02	2.71
184	184	220	Q_power station	15.04	-1.915E-02	2.01
184	184	128	Q_power station	13.55	2.98	2.11
184	184	127	Q_neve	46.96	13.54	4.8
184	184	219	Q_neve	48.78	3.917E-02	4.41
184	184	220	Q_neve	45.7	-5.990E-02	2.59
184	184	128	Q_neve	42.95	13.86	2.98
184	184	127	Q_manutenzione	14.87	2.97	2.81
184	184	219	Q_manutenzione	16.05	1.108E-02	2.71
184	184	220	Q_manutenzione	15.04	-1.915E-02	2.01
184	184	128	Q_manutenzione	13.55	2.98	2.11
184	184	127	EQ_X	243.04	22.67	-14.01
184	184	219	EQ_X	262.6	0.75	-17.33
184	184	220	EQ_X	180.38	1.13	-21.86
184	184	128	EQ_X	173.26	6.75	-18.54
184	184	127	EQ_Y	36.84	98.	105.03
184	184	219	EQ_Y	60.05	-23.1	110.7
184	184	220	EQ_Y	57.15	-4.27	90.83
184	184	128	EQ_Y	37.39	50.19	85.16
185	185	128	DEAD	-6.611E-12	-8.647E-12	3.503E-12
185	185	220	DEAD	-4.407E-12	-3.491E-13	1.986E-12
185	185	221	DEAD	-1.495E-11	1.970E-12	3.503E-12
185	185	129	DEAD	-1.256E-11	-6.985E-12	5.020E-12
185	185	128	G1_power station	0.	0.	0.
185	185	220	G1_power station	0.	0.	0.
185	185	221	G1_power station	0.	0.	0.
185	185	129	G1_power station	0.	0.	0.
185	185	128	G2_power station	366.69	80.58	37.49
185	185	220	G2_power station	405.56	-0.68	33.37
185	185	221	G2_power station	356.77	2.78	11.84
185	185	129	G2_power station	307.29	72.69	15.96
185	185	128	Q_power station	13.57	2.98	1.39
185	185	220	Q_power station	15.01	-2.506E-02	1.23
185	185	221	Q_power station	13.2	0.1	0.44
185	185	129	Q_power station	11.37	2.69	0.59
185	185	128	Q_neve	42.99	13.87	1.07
185	185	220	Q_neve	45.61	-7.766E-02	0.52
185	185	221	Q_neve	39.86	0.32	-1.62
185	185	129	Q_neve	36.03	13.19	-1.08
185	185	128	Q_manutenzione	13.57	2.98	1.39
185	185	220	Q_manutenzione	15.01	-2.506E-02	1.23
185	185	221	Q_manutenzione	13.2	0.1	0.44
185	185	129	Q_manutenzione	11.37	2.69	0.59

Table 21: Element Stresses - Area Shells, Part 1 of 3

Area	AreaElem	Joint	OutputCase	S11Top	S22Top	S12Top
				KN/m2	KN/m2	KN/m2
185	185	128	EQ_X	171.23	6.34	-20.8
185	185	220	EQ_X	180.04	1.07	-24.63
185	185	221	EQ_X	127.1	1.46	-26.23
185	185	129	EQ_X	122.1	-0.42	-22.4
185	185	128	EQ_Y	34.67	49.64	70.02
185	185	220	EQ_Y	43.39	-7.02	70.56
185	185	221	EQ_Y	37.81	-11.28	54.1
185	185	129	EQ_Y	33.88	48.83	53.56
186	186	129	DEAD	-1.790E-11	-7.695E-12	4.699E-12
186	186	221	DEAD	-8.098E-12	2.213E-12	5.457E-12
186	186	222	DEAD	-1.269E-11	-2.102E-12	3.182E-12
186	186	130	DEAD	-1.691E-11	-7.741E-12	2.424E-12
186	186	129	G1_power station	0.	0.	0.
186	186	221	G1_power station	0.	0.	0.
186	186	222	G1_power station	0.	0.	0.
186	186	130	G1_power station	0.	0.	0.
186	186	129	G2_power station	308.01	72.83	-8.18
186	186	221	G2_power station	354.4	2.31	-11.45
186	186	222	G2_power station	365.42	-9.99	-42.22
186	186	130	G2_power station	277.43	94.91	-38.95
186	186	129	Q_power station	11.4	2.69	-0.3
186	186	221	Q_power station	13.11	8.545E-02	-0.42
186	186	222	Q_power station	13.52	-0.37	-1.56
186	186	130	Q_power station	10.26	3.51	-1.44
186	186	129	Q_neve	36.05	13.2	-3.59
186	186	221	Q_neve	39.66	0.28	-3.9
186	186	222	Q_neve	38.94	-1.26	-6.96
186	186	130	Q_neve	31.57	15.02	-6.64
186	186	129	Q_manutenzione	11.4	2.69	-0.3
186	186	221	Q_manutenzione	13.11	8.545E-02	-0.42
186	186	222	Q_manutenzione	13.52	-0.37	-1.56
186	186	130	Q_manutenzione	10.26	3.51	-1.44
186	186	129	EQ_X	117.87	-1.26	-26.
186	186	221	EQ_X	130.38	2.12	-25.
186	186	222	EQ_X	101.41	-0.42	-26.56
186	186	130	EQ_X	88.26	-13.98	-27.56
186	186	129	EQ_Y	43.04	50.66	41.92
186	186	221	EQ_Y	6.97	-17.45	36.18
186	186	222	EQ_Y	9.98	-20.92	23.09
186	186	130	EQ_Y	36.87	67.02	28.84
187	187	130	DEAD	-1.209E-11	-7.064E-12	4.027E-12
187	187	222	DEAD	-9.972E-12	-4.250E-13	2.346E-13
187	187	36	DEAD	-1.057E-11	2.795E-12	-5.237E-13

Table 21: Element Stresses - Area Shells, Part 1 of 3

Area	AreaElem	Joint	OutputCase	S11Top	S22Top	S12Top
				KN/m2	KN/m2	KN/m2
187	187	29	DEAD	-9.403E-12	4.694E-12	3.268E-12
187	187	130	G1_power station	0.	0.	0.
187	187	222	G1_power station	0.	0.	0.
187	187	36	G1_power station	0.	0.	0.
187	187	29	G1_power station	0.	0.	0.
187	187	130	G2_power station	268.76	93.17	-97.11
187	187	222	G2_power station	363.27	-10.42	-68.76
187	187	36	G2_power station	606.34	20.37	-129.29
187	187	29	G2_power station	387.28	16.09	-157.65
187	187	130	Q_power station	9.94	3.45	-3.59
187	187	222	Q_power station	13.44	-0.39	-2.54
187	187	36	Q_power station	22.43	0.75	-4.78
187	187	29	Q_power station	14.33	0.6	-5.83
187	187	130	Q_neve	30.36	14.78	-12.74
187	187	222	Q_neve	39.04	-1.24	-9.1
187	187	36	Q_neve	59.08	2.44	-14.43
187	187	29	Q_neve	41.52	2.11	-18.07
187	187	130	Q_manutenzione	9.94	3.45	-3.59
187	187	222	Q_manutenzione	13.44	-0.39	-2.54
187	187	36	Q_manutenzione	22.43	0.75	-4.78
187	187	29	Q_manutenzione	14.33	0.6	-5.83
187	187	130	EQ_X	74.83	-16.66	-29.98
187	187	222	EQ_X	114.24	2.15	-26.62
187	187	36	EQ_X	107.15	7.16	-21.89
187	187	29	EQ_X	90.61	-60.71	-25.25
187	187	130	EQ_Y	72.26	74.1	-1.35
187	187	222	EQ_Y	-53.63	-33.64	14.41
187	187	36	EQ_Y	-8.07	-0.63	-21.69
187	187	29	EQ_Y	70.11	107.1	-37.45
188	188	28	DEAD	-4.310E-12	5.598E-13	-5.692E-12
188	188	25	DEAD	1.623E-12	-1.585E-12	-7.209E-12
188	188	223	DEAD	-2.332E-13	9.566E-12	-5.692E-12
188	188	224	DEAD	1.518E-11	2.164E-13	-4.175E-12
188	188	28	G1_power station	0.	0.	0.
188	188	25	G1_power station	0.	0.	0.
188	188	223	G1_power station	0.	0.	0.
188	188	224	G1_power station	0.	0.	0.
188	188	28	G2_power station	486.35	-14.97	-7.14
188	188	25	G2_power station	1010.57	32.41	-6.02
188	188	223	G2_power station	653.57	-12.13	-82.2
188	188	224	G2_power station	766.25	9.3	-83.33
188	188	28	Q_power station	18.	-0.55	-0.26
188	188	25	Q_power station	37.39	1.2	-0.22

Table 21: Element Stresses - Area Shells, Part 1 of 3

Area	AreaElem	Joint	OutputCase	S11Top	S22Top	S12Top
				KN/m2	KN/m2	KN/m2
188	188	223	Q_power station	24.18	-0.45	-3.04
188	188	224	Q_power station	28.35	0.34	-3.08
188	188	28	Q_neve	47.12	-1.51	1.71
188	188	25	Q_neve	111.59	5.54	1.35
188	188	223	Q_neve	56.27	-1.88	-7.94
188	188	224	Q_neve	70.35	1.05	-7.58
188	188	28	Q_manutenzione	18.	-0.55	-0.26
188	188	25	Q_manutenzione	37.39	1.2	-0.22
188	188	223	Q_manutenzione	24.18	-0.45	-3.04
188	188	224	Q_manutenzione	28.35	0.34	-3.08
188	188	28	EQ_X	-395.72	10.17	-52.32
188	188	25	EQ_X	-909.38	-7.41	-30.74
188	188	223	EQ_X	-310.35	13.67	54.82
188	188	224	EQ_X	-488.01	-14.48	33.24
188	188	28	EQ_Y	161.08	-33.	-119.3
188	188	25	EQ_Y	-277.74	0.58	-102.5
188	188	223	EQ_Y	-105.44	-39.72	-83.53
188	188	224	EQ_Y	173.82	45.9	-100.33
189	189	224	DEAD	7.408E-12	-1.664E-12	-3.823E-12
189	189	223	DEAD	-2.473E-12	9.547E-12	-7.898E-13
189	189	225	DEAD	4.469E-12	-7.257E-12	-2.307E-12
189	189	226	DEAD	-1.356E-11	-4.068E-13	-5.340E-12
189	189	224	G1_power station	0.	0.	0.
189	189	223	G1_power station	0.	0.	0.
189	189	225	G1_power station	0.	0.	0.
189	189	226	G1_power station	0.	0.	0.
189	189	224	G2_power station	729.16	1.88	-72.89
189	189	223	G2_power station	690.66	-4.71	-79.56
189	189	225	G2_power station	654.12	5.6	-73.33
189	189	226	G2_power station	648.44	-3.07	-66.66
189	189	224	Q_power station	26.98	6.968E-02	-2.7
189	189	223	Q_power station	25.55	-0.17	-2.94
189	189	225	Q_power station	24.2	0.21	-2.71
189	189	226	Q_power station	23.99	-0.11	-2.47
189	189	224	Q_neve	65.79	0.14	-6.28
189	189	223	Q_neve	60.83	-0.97	-7.5
189	189	225	Q_neve	53.13	0.63	-6.66
189	189	226	Q_neve	52.67	-0.4	-5.44
189	189	224	Q_manutenzione	26.98	6.968E-02	-2.7
189	189	223	Q_manutenzione	25.55	-0.17	-2.94
189	189	225	Q_manutenzione	24.2	0.21	-2.71
189	189	226	Q_manutenzione	23.99	-0.11	-2.47
189	189	224	EQ_X	-428.68	-2.61	27.98

Table 21: Element Stresses - Area Shells, Part 1 of 3

Area	AreaElem	Joint	OutputCase	S11Top	S22Top	S12Top
				KN/m2	KN/m2	KN/m2
189	189	223	EQ_X	-368.52	2.03	47.88
189	189	225	EQ_X	-182.59	0.29	41.95
189	189	226	EQ_X	-198.98	-0.88	22.06
189	189	224	EQ_Y	49.96	21.13	-88.88
189	189	223	EQ_Y	9.51	-16.73	-84.71
189	189	225	EQ_Y	43.28	0.73	-82.01
189	189	226	EQ_Y	91.37	-4.48	-86.19
190	190	226	DEAD	-9.273E-12	1.439E-12	-5.051E-12
190	190	225	DEAD	4.936E-12	-6.331E-12	-8.085E-12
190	190	227	DEAD	-3.206E-12	4.472E-12	-8.085E-12
190	190	228	DEAD	1.214E-11	2.390E-12	-5.051E-12
190	190	226	G1_power station	0.	0.	0.
190	190	225	G1_power station	0.	0.	0.
190	190	227	G1_power station	0.	0.	0.
190	190	228	G1_power station	0.	0.	0.
190	190	226	G2_power station	649.22	-2.92	-69.44
190	190	225	G2_power station	653.34	5.44	-68.58
190	190	227	G2_power station	599.22	-21.55	-64.09
190	190	228	G2_power station	631.11	5.92	-64.95
190	190	226	Q_power station	24.02	-0.11	-2.57
190	190	225	Q_power station	24.17	0.2	-2.54
190	190	227	Q_power station	22.17	-0.8	-2.37
190	190	228	Q_power station	23.35	0.22	-2.4
190	190	226	Q_neve	52.75	-0.38	-6.07
190	190	225	Q_neve	53.05	0.61	-5.62
190	190	227	Q_neve	50.21	-2.44	-4.97
190	190	228	Q_neve	54.36	0.49	-5.42
190	190	226	Q_manutenzione	24.02	-0.11	-2.57
190	190	225	Q_manutenzione	24.17	0.2	-2.54
190	190	227	Q_manutenzione	22.17	-0.8	-2.37
190	190	228	Q_manutenzione	23.35	0.22	-2.4
190	190	226	EQ_X	-183.68	2.18	25.13
190	190	225	EQ_X	-198.51	-2.89	39.
190	190	227	EQ_X	-34.3	8.23	41.2
190	190	228	EQ_X	-9.56	0.51	27.33
190	190	226	EQ_Y	-5.28	-23.81	-80.06
190	190	225	EQ_Y	143.3	20.73	-77.25
190	190	227	EQ_Y	149.96	-13.97	-74.95
190	190	228	EQ_Y	2.04	-17.55	-77.76
191	191	228	DEAD	2.564E-12	5.058E-13	-3.984E-12
191	191	227	DEAD	-6.954E-13	6.070E-12	-4.742E-12
191	191	29	DEAD	-1.630E-11	1.738E-12	-1.708E-12
191	191	36	DEAD	-1.549E-12	6.354E-12	-9.501E-13

Table 21: Element Stresses - Area Shells, Part 1 of 3

Area	AreaElem	Joint	OutputCase	S11Top	S22Top	S12Top
				KN/m2	KN/m2	KN/m2
191	191	228	G1_power station	0.	0.	0.
191	191	227	G1_power station	0.	0.	0.
191	191	29	G1_power station	0.	0.	0.
191	191	36	G1_power station	0.	0.	0.
191	191	228	G2_power station	660.02	11.7	-48.68
191	191	227	G2_power station	570.31	-27.33	-71.7
191	191	29	G2_power station	834.74	105.58	-131.45
191	191	36	G2_power station	409.24	-19.05	-108.43
191	191	228	Q_power station	24.42	0.43	-1.8
191	191	227	Q_power station	21.1	-1.01	-2.65
191	191	29	Q_power station	30.89	3.91	-4.86
191	191	36	Q_power station	15.14	-0.7	-4.01
191	191	228	Q_neve	57.94	1.21	-3.71
191	191	227	Q_neve	46.62	-3.16	-5.4
191	191	29	Q_neve	89.86	11.78	-12.71
191	191	36	Q_neve	37.72	-1.83	-11.02
191	191	228	Q_manutenzione	24.42	0.43	-1.8
191	191	227	Q_manutenzione	21.1	-1.01	-2.65
191	191	29	Q_manutenzione	30.89	3.91	-4.86
191	191	36	Q_manutenzione	15.14	-0.7	-4.01
191	191	228	EQ_X	23.32	7.09	25.2
191	191	227	EQ_X	-65.89	1.91	48.13
191	191	29	EQ_X	178.86	-43.06	21.13
191	191	36	EQ_X	66.34	-1.	-1.8
191	191	228	EQ_Y	-65.74	-31.11	-62.74
191	191	227	EQ_Y	212.85	-1.4	-85.94
191	191	29	EQ_Y	203.93	133.86	-76.57
191	191	36	EQ_Y	-80.81	-15.18	-53.36
192	192	9	DEAD	1.473E-11	1.828E-11	-1.927E-11
192	192	8	DEAD	5.071E-12	3.305E-11	-2.230E-11
192	192	229	DEAD	1.549E-11	-1.433E-11	-1.927E-11
192	192	173	DEAD	2.251E-11	8.386E-11	-1.623E-11
192	192	9	G1_power station	0.	0.	0.
192	192	8	G1_power station	0.	0.	0.
192	192	229	G1_power station	0.	0.	0.
192	192	173	G1_power station	0.	0.	0.
192	192	9	G2_power station	-627.29	-608.16	38.73
192	192	8	G2_power station	-189.59	20.17	-12.12
192	192	229	G2_power station	183.45	-6.48	-35.35
192	192	173	G2_power station	333.5	-119.47	15.5
192	192	9	Q_power station	-23.21	-22.5	1.43
192	192	8	Q_power station	-7.01	0.75	-0.45
192	192	229	Q_power station	6.79	-0.24	-1.31

Table 21: Element Stresses - Area Shells, Part 1 of 3

Area	AreaElem	Joint	OutputCase	S11Top	S22Top	S12Top
				KN/m2	KN/m2	KN/m2
192	192	173	Q_power station	12.34	-4.42	0.57
192	192	9	Q_neve	-53.13	-47.97	0.34
192	192	8	Q_neve	-12.62	1.82	-4.07
192	192	229	Q_neve	24.45	-0.45	-6.81
192	192	173	Q_neve	38.01	-3.12	-2.4
192	192	9	Q_manutenzione	-23.21	-22.5	1.43
192	192	8	Q_manutenzione	-7.01	0.75	-0.45
192	192	229	Q_manutenzione	6.79	-0.24	-1.31
192	192	173	Q_manutenzione	12.34	-4.42	0.57
192	192	9	EQ_X	-2105.43	-317.97	183.58
192	192	8	EQ_X	583.44	167.73	239.21
192	192	229	EQ_X	-915.83	-32.19	-87.87
192	192	173	EQ_X	-406.04	-242.4	-143.5
192	192	9	EQ_Y	441.7	1620.58	-399.53
192	192	8	EQ_Y	370.07	-169.95	30.1
192	192	229	EQ_Y	41.1	132.54	-21.45
192	192	173	EQ_Y	-33.68	-538.09	-451.08
193	193	173	DEAD	5.372E-11	6.970E-11	-9.101E-12
193	193	229	DEAD	-4.018E-11	-1.992E-12	-3.034E-12
193	193	230	DEAD	6.702E-12	-1.979E-11	9.101E-12
193	193	174	DEAD	7.730E-13	5.716E-11	3.034E-12
193	193	173	G1_power station	0.	0.	0.
193	193	229	G1_power station	0.	0.	0.
193	193	230	G1_power station	0.	0.	0.
193	193	174	G1_power station	0.	0.	0.
193	193	173	G2_power station	315.6	-123.05	16.5
193	193	229	G2_power station	194.02	-4.36	21.53
193	193	230	G2_power station	887.23	-33.43	6.42
193	193	174	G2_power station	677.48	97.72	1.39
193	193	173	Q_power station	11.68	-4.55	0.61
193	193	229	Q_power station	7.18	-0.16	0.8
193	193	230	Q_power station	32.83	-1.24	0.24
193	193	174	Q_power station	25.07	3.62	5.159E-02
193	193	173	Q_neve	36.36	-3.45	-2.93
193	193	229	Q_neve	25.41	-0.26	-2.19
193	193	230	Q_neve	91.7	-3.64	-4.3
193	193	174	Q_neve	71.64	17.38	-5.04
193	193	173	Q_manutenzione	11.68	-4.55	0.61
193	193	229	Q_manutenzione	7.18	-0.16	0.8
193	193	230	Q_manutenzione	32.83	-1.24	0.24
193	193	174	Q_manutenzione	25.07	3.62	5.159E-02
193	193	173	EQ_X	-506.76	-262.55	-26.69
193	193	229	EQ_X	-791.75	-7.38	-74.81

Table 21: Element Stresses - Area Shells, Part 1 of 3

Area	AreaElem	Joint	OutputCase	S11Top	S22Top	S12Top
				KN/m2	KN/m2	KN/m2
193	193	230	EQ_X	-670.08	23.76	6.03
193	193	174	EQ_X	-548.2	-103.18	54.15
193	193	173	EQ_Y	-13.9	-534.14	-188.71
193	193	229	EQ_Y	47.58	133.83	-269.46
193	193	230	EQ_Y	-60.88	-54.46	-249.78
193	193	174	EQ_Y	68.46	-10.7	-169.03
194	194	174	DEAD	-9.581E-12	3.822E-11	2.925E-12
194	194	230	DEAD	-4.882E-12	-1.333E-12	1.091E-11
194	194	37	DEAD	1.090E-11	3.140E-11	1.809E-11
194	194	33	DEAD	1.408E-11	-1.574E-11	4.848E-12
194	194	174	G1_power station	0.	0.	0.
194	194	230	G1_power station	0.	0.	0.
194	194	37	G1_power station	0.	0.	0.
194	194	33	G1_power station	0.	0.	0.
194	194	174	G2_power station	663.88	95.	-134.16
194	194	230	G2_power station	866.07	-37.66	-17.96
194	194	37	G2_power station	1991.7	77.04	-172.83
194	194	33	G2_power station	1251.08	-123.36	-289.04
194	194	174	Q_power station	24.56	3.52	-4.96
194	194	230	Q_power station	32.04	-1.39	-0.66
194	194	37	Q_power station	73.69	2.85	-6.39
194	194	33	Q_power station	46.29	-4.56	-10.69
194	194	174	Q_neve	69.86	17.03	-19.2
194	194	230	Q_neve	90.01	-3.97	-6.65
194	194	37	Q_neve	197.76	8.1	-21.66
194	194	33	Q_neve	128.47	-9.95	-34.2
194	194	174	Q_manutenzione	24.56	3.52	-4.96
194	194	230	Q_manutenzione	32.04	-1.39	-0.66
194	194	37	Q_manutenzione	73.69	2.85	-6.39
194	194	33	Q_manutenzione	46.29	-4.56	-10.69
194	194	174	EQ_X	-513.21	-96.19	130.45
194	194	230	EQ_X	-686.09	20.56	61.16
194	194	37	EQ_X	-971.66	-54.11	131.64
194	194	33	EQ_X	-735.45	132.48	200.92
194	194	174	EQ_Y	112.66	-1.86	-200.28
194	194	230	EQ_Y	-107.11	-63.71	-182.77
194	194	37	EQ_Y	-67.6	58.7	-174.75
194	194	33	EQ_Y	177.97	-7.48	-192.27
195	195	31	DEAD	2.013E-10	-1.751E-11	3.121E-11
195	195	24	DEAD	4.247E-10	3.177E-11	2.799E-12
195	195	231	DEAD	1.975E-10	3.634E-11	-2.946E-11
195	195	232	DEAD	2.343E-10	2.646E-11	-6.302E-12
195	195	31	G1_power station	0.	0.	0.

Table 21: Element Stresses - Area Shells, Part 1 of 3

Area	AreaElem	Joint	OutputCase	S11Top	S22Top	S12Top
				KN/m2	KN/m2	KN/m2
195	195	24	G1_power station	0.	0.	0.
195	195	231	G1_power station	0.	0.	0.
195	195	232	G1_power station	0.	0.	0.
195	195	31	G2_power station	1835.77	-72.15	303.19
195	195	24	G2_power station	4077.18	192.39	317.69
195	195	231	G2_power station	2530.99	-61.62	-10.25
195	195	232	G2_power station	2990.98	41.	-24.76
195	195	31	Q_power station	67.92	-2.67	11.22
195	195	24	Q_power station	150.86	7.12	11.75
195	195	231	Q_power station	93.65	-2.28	-0.38
195	195	232	Q_power station	110.67	1.52	-0.92
195	195	31	Q_neve	181.06	-7.19	31.14
195	195	24	Q_neve	419.43	21.01	31.77
195	195	231	Q_neve	241.64	-6.77	-3.09
195	195	232	Q_neve	290.63	4.2	-3.72
195	195	31	Q_manutenzione	67.92	-2.67	11.22
195	195	24	Q_manutenzione	150.86	7.12	11.75
195	195	231	Q_manutenzione	93.65	-2.28	-0.38
195	195	232	Q_manutenzione	110.67	1.52	-0.92
195	195	31	EQ_X	2.	2.76	7.7
195	195	24	EQ_X	305.47	-47.96	-34.
195	195	231	EQ_X	-155.93	12.84	-74.39
195	195	232	EQ_X	-136.27	-5.69	-32.69
195	195	31	EQ_Y	6.14	34.08	-82.62
195	195	24	EQ_Y	-319.81	-161.13	-111.9
195	195	231	EQ_Y	-285.95	11.58	-114.93
195	195	232	EQ_Y	-23.12	27.1	-85.65
196	196	232	DEAD	1.987E-10	1.760E-11	-2.142E-11
196	196	231	DEAD	2.181E-10	4.670E-11	-1.121E-11
196	196	233	DEAD	9.332E-11	-1.804E-11	-1.536E-11
196	196	234	DEAD	9.755E-11	8.027E-12	-2.031E-11
196	196	232	G1_power station	0.	0.	0.
196	196	231	G1_power station	0.	0.	0.
196	196	233	G1_power station	0.	0.	0.
196	196	234	G1_power station	0.	0.	0.
196	196	232	G2_power station	2834.26	9.66	16.38
196	196	231	G2_power station	2687.71	-30.28	-9.42
196	196	233	G2_power station	2568.58	13.8	10.89
196	196	234	G2_power station	2534.23	-6.78	36.69
196	196	232	Q_power station	104.87	0.36	0.61
196	196	231	Q_power station	99.45	-1.12	-0.35
196	196	233	Q_power station	95.04	0.51	0.4
196	196	234	Q_power station	93.77	-0.25	1.36

Table 21: Element Stresses - Area Shells, Part 1 of 3

Area	AreaElem	Joint	OutputCase	S11Top	S22Top	S12Top
				KN/m2	KN/m2	KN/m2
196	196	232	Q_neve	273.96	0.86	0.43
196	196	231	Q_neve	258.31	-3.43	-2.74
196	196	233	Q_neve	241.85	1.51	-0.56
196	196	234	Q_neve	238.23	-0.81	2.62
196	196	232	Q_manutenzione	104.87	0.36	0.61
196	196	231	Q_manutenzione	99.45	-1.12	-0.35
196	196	233	Q_manutenzione	95.04	0.51	0.4
196	196	234	Q_manutenzione	93.77	-0.25	1.36
196	196	232	EQ_X	-143.34	-7.1	-37.73
196	196	231	EQ_X	-147.96	14.43	-63.71
196	196	233	EQ_X	-444.39	-1.25	-60.48
196	196	234	EQ_X	-455.15	0.11	-34.5
196	196	232	EQ_Y	-53.55	21.01	-109.96
196	196	231	EQ_Y	-258.21	17.13	-104.13
196	196	233	EQ_Y	-216.51	-23.72	-109.07
196	196	234	EQ_Y	-6.86	35.05	-114.9
197	197	234	DEAD	9.973E-11	6.510E-12	-5.724E-12
197	197	233	DEAD	7.818E-11	-1.379E-11	-2.089E-11
197	197	235	DEAD	8.987E-11	4.822E-11	-1.179E-11
197	197	236	DEAD	1.351E-10	-2.412E-12	3.377E-12
197	197	234	G1_power station	0.	0.	0.
197	197	233	G1_power station	0.	0.	0.
197	197	235	G1_power station	0.	0.	0.
197	197	236	G1_power station	0.	0.	0.
197	197	234	G2_power station	2538.48	-5.93	30.66
197	197	233	G2_power station	2564.33	12.95	14.24
197	197	235	G2_power station	2267.87	-28.43	25.12
197	197	236	G2_power station	2355.79	10.56	41.55
197	197	234	Q_power station	93.92	-0.22	1.13
197	197	233	Q_power station	94.88	0.48	0.53
197	197	235	Q_power station	83.91	-1.05	0.93
197	197	236	Q_power station	87.16	0.39	1.54
197	197	234	Q_neve	238.67	-0.72	1.46
197	197	233	Q_neve	241.4	1.42	0.37
197	197	235	Q_neve	215.37	-3.58	1.57
197	197	236	Q_neve	224.99	1.05	2.66
197	197	234	Q_manutenzione	93.92	-0.22	1.13
197	197	233	Q_manutenzione	94.88	0.48	0.53
197	197	235	Q_manutenzione	83.91	-1.05	0.93
197	197	236	Q_manutenzione	87.16	0.39	1.54
197	197	234	EQ_X	-438.31	3.48	-32.72
197	197	233	EQ_X	-461.66	-4.7	-62.13
197	197	235	EQ_X	-738.39	3.018E-02	-71.18

Table 21: Element Stresses - Area Shells, Part 1 of 3

Area	AreaElem	Joint	OutputCase	S11Top	S22Top	S12Top
				KN/m2	KN/m2	KN/m2
197	197	236	EQ_X	-783.78	3.43	-41.77
197	197	234	EQ_Y	-103.06	15.81	-126.63
197	197	233	EQ_Y	-116.95	-3.81	-115.27
197	197	235	EQ_Y	-35.58	7.38	-119.54
197	197	236	EQ_Y	-7.78	-14.16	-130.9
198	198	236	DEAD	8.545E-11	9.453E-12	1.448E-11
198	198	235	DEAD	2.860E-11	1.869E-11	1.448E-11
198	198	33	DEAD	3.540E-11	-4.198E-12	2.055E-11
198	198	37	DEAD	1.343E-11	3.386E-11	2.055E-11
198	198	236	G1_power station	0.	0.	0.
198	198	235	G1_power station	0.	0.	0.
198	198	33	G1_power station	0.	0.	0.
198	198	37	G1_power station	0.	0.	0.
198	198	236	G2_power station	2446.13	28.63	73.89
198	198	235	G2_power station	2177.53	-46.5	16.54
198	198	33	G2_power station	2666.03	159.63	-173.33
198	198	37	G2_power station	1357.93	-49.71	-115.99
198	198	236	Q_power station	90.51	1.06	2.73
198	198	235	Q_power station	80.57	-1.72	0.61
198	198	33	Q_power station	98.64	5.91	-6.41
198	198	37	Q_power station	50.24	-1.84	-4.29
198	198	236	Q_neve	234.78	3.01	6.13
198	198	235	Q_neve	205.58	-5.54	0.69
198	198	33	Q_neve	274.42	19.24	-19.88
198	198	37	Q_neve	132.41	-4.97	-14.44
198	198	236	Q_manutenzione	90.51	1.06	2.73
198	198	235	Q_manutenzione	80.57	-1.72	0.61
198	198	33	Q_manutenzione	98.64	5.91	-6.41
198	198	37	Q_manutenzione	50.24	-1.84	-4.29
198	198	236	EQ_X	-838.68	-7.55	-51.97
198	198	235	EQ_X	-682.87	11.13	-79.42
198	198	33	EQ_X	-1547.56	-29.95	54.59
198	198	37	EQ_X	-609.35	18.35	82.04
198	198	236	EQ_Y	-159.38	-44.48	-141.57
198	198	235	EQ_Y	104.9	35.48	-126.6
198	198	33	EQ_Y	386.57	34.24	-156.06
198	198	37	EQ_Y	-129.6	46.3	-171.02
199	199	18	DEAD	-5.809E-11	3.173E-11	1.345E-12
199	199	17	DEAD	3.141E-11	4.147E-11	7.115E-12
199	199	237	DEAD	-3.079E-11	-1.378E-11	7.412E-12
199	199	203	DEAD	4.127E-11	9.076E-11	-1.412E-11
199	199	18	G1_power station	0.	0.	0.
199	199	17	G1_power station	0.	0.	0.

Table 21: Element Stresses - Area Shells, Part 1 of 3

Area	AreaElem	Joint	OutputCase	S11Top	S22Top	S12Top
				KN/m2	KN/m2	KN/m2
199	199	237	G1_power station	0.	0.	0.
199	199	203	G1_power station	0.	0.	0.
199	199	18	G2_power station	-610.33	-641.14	79.8
199	199	17	G2_power station	-220.04	20.8	30.8
199	199	237	G2_power station	163.	-12.98	28.58
199	199	203	G2_power station	385.99	-126.5	77.58
199	199	18	Q_power station	-22.58	-23.72	2.95
199	199	17	Q_power station	-8.14	0.77	1.14
199	199	237	Q_power station	6.03	-0.48	1.06
199	199	203	Q_power station	14.28	-4.68	2.87
199	199	18	Q_neve	-50.69	-52.63	5.28
199	199	17	Q_neve	-15.38	1.9	1.17
199	199	237	Q_neve	24.46	-1.17	0.79
199	199	203	Q_neve	45.98	-5.08	4.89
199	199	18	Q_manutenzione	-22.58	-23.72	2.95
199	199	17	Q_manutenzione	-8.14	0.77	1.14
199	199	237	Q_manutenzione	6.03	-0.48	1.06
199	199	203	Q_manutenzione	14.28	-4.68	2.87
199	199	18	EQ_X	2068.3	302.58	-160.38
199	199	17	EQ_X	-562.34	-159.24	-209.56
199	199	237	EQ_X	886.29	33.77	134.48
199	199	203	EQ_X	347.76	207.54	183.66
199	199	18	EQ_Y	-415.55	-1554.97	381.4
199	199	17	EQ_Y	-376.14	150.32	-4.31
199	199	237	EQ_Y	-0.48	-111.61	49.62
199	199	203	EQ_Y	67.46	538.99	435.34
200	200	203	DEAD	-1.752E-11	8.221E-11	-2.975E-13
200	200	237	DEAD	5.156E-12	-1.128E-11	-3.331E-12
200	200	238	DEAD	2.197E-12	-1.210E-12	-1.547E-11
200	200	204	DEAD	-2.442E-11	4.105E-11	-1.243E-11
200	200	203	G1_power station	0.	0.	0.
200	200	237	G1_power station	0.	0.	0.
200	200	238	G1_power station	0.	0.	0.
200	200	204	G1_power station	0.	0.	0.
200	200	203	G2_power station	366.89	-130.32	117.73
200	200	237	G2_power station	180.03	-9.57	108.96
200	200	238	G2_power station	678.09	1.22	141.09
200	200	204	G2_power station	654.4	52.7	149.87
200	200	203	Q_power station	13.58	-4.82	4.36
200	200	237	Q_power station	6.66	-0.35	4.03
200	200	238	Q_power station	25.09	4.500E-02	5.22
200	200	204	Q_power station	24.21	1.95	5.55
200	200	203	Q_neve	44.25	-5.43	8.55

Table 21: Element Stresses - Area Shells, Part 1 of 3

Area	AreaElem	Joint	OutputCase	S11Top	S22Top	S12Top
				KN/m2	KN/m2	KN/m2
200	200	237	Q_neve	26.04	-0.86	7.99
200	200	238	Q_neve	75.67	0.13	10.87
200	200	204	Q_neve	74.76	11.94	11.43
200	200	203	Q_manutenzione	13.58	-4.82	4.36
200	200	237	Q_manutenzione	6.66	-0.35	4.03
200	200	238	Q_manutenzione	25.09	4.500E-02	5.22
200	200	204	Q_manutenzione	24.21	1.95	5.55
200	200	203	EQ_X	464.75	230.94	76.41
200	200	237	EQ_X	750.85	6.69	105.1
200	200	238	EQ_X	482.97	-0.31	41.92
200	200	204	EQ_X	466.91	78.78	13.22
200	200	203	EQ_Y	68.94	539.29	189.75
200	200	237	EQ_Y	-48.75	-121.26	274.29
200	200	238	EQ_Y	90.31	40.39	251.35
200	200	204	EQ_Y	10.41	22.87	166.81
201	201	204	DEAD	-2.143E-11	5.385E-11	-1.751E-11
201	201	238	DEAD	-5.791E-11	-2.462E-12	-2.055E-11
201	201	239	DEAD	4.683E-11	3.110E-11	-1.751E-11
201	201	205	DEAD	2.551E-11	5.063E-11	-1.448E-11
201	201	204	G1_power station	0.	0.	0.
201	201	238	G1_power station	0.	0.	0.
201	201	239	G1_power station	0.	0.	0.
201	201	205	G1_power station	0.	0.	0.
201	201	204	G2_power station	665.79	54.98	139.62
201	201	238	G2_power station	662.41	-1.92	147.32
201	201	239	G2_power station	898.73	1.53	133.6
201	201	205	G2_power station	851.62	103.76	125.9
201	201	204	Q_power station	24.63	2.03	5.17
201	201	238	Q_power station	24.51	-7.107E-02	5.45
201	201	239	Q_power station	33.25	5.660E-02	4.94
201	201	205	Q_power station	31.51	3.84	4.66
201	201	204	Q_neve	75.8	12.15	10.5
201	201	238	Q_neve	74.23	-0.16	11.28
201	201	239	Q_neve	98.36	0.17	9.9
201	201	205	Q_neve	95.06	17.23	9.12
201	201	204	Q_manutenzione	24.63	2.03	5.17
201	201	238	Q_manutenzione	24.51	-7.107E-02	5.45
201	201	239	Q_manutenzione	33.25	5.660E-02	4.94
201	201	205	Q_manutenzione	31.51	3.84	4.66
201	201	204	EQ_X	445.55	74.51	2.43
201	201	238	EQ_X	502.04	3.5	2.82
201	201	239	EQ_X	393.68	0.9	-13.56
201	201	205	EQ_X	370.55	35.27	-13.95

Table 21: Element Stresses - Area Shells, Part 1 of 3

Area	AreaElem	Joint	OutputCase	S11Top	S22Top	S12Top
				KN/m2	KN/m2	KN/m2
201	201	204	EQ_Y	8.	22.39	183.1
201	201	238	EQ_Y	75.87	37.5	176.91
201	201	239	EQ_Y	86.32	-21.41	148.54
201	201	205	EQ_Y	57.48	107.68	154.74
202	202	205	DEAD	3.009E-11	6.077E-11	-2.142E-11
202	202	239	DEAD	1.463E-11	1.010E-11	-1.647E-11
202	202	240	DEAD	2.858E-11	-1.962E-11	-1.536E-11
202	202	206	DEAD	2.828E-11	7.835E-11	-2.557E-11
202	202	205	G1_power station	0.	0.	0.
202	202	239	G1_power station	0.	0.	0.
202	202	240	G1_power station	0.	0.	0.
202	202	206	G1_power station	0.	0.	0.
202	202	205	G2_power station	853.83	104.2	103.51
202	202	239	G2_power station	894.38	0.66	110.71
202	202	240	G2_power station	1027.33	-2.17	82.12
202	202	206	G2_power station	956.34	124.02	74.92
202	202	205	Q_power station	31.59	3.86	3.83
202	202	239	Q_power station	33.09	2.442E-02	4.1
202	202	240	Q_power station	38.01	-8.036E-02	3.04
202	202	206	Q_power station	35.38	4.59	2.77
202	202	205	Q_neve	95.27	17.27	6.95
202	202	239	Q_neve	97.93	8.015E-02	7.55
202	202	240	Q_neve	111.03	-0.23	4.67
202	202	206	Q_neve	105.2	19.65	4.06
202	202	205	Q_manutenzione	31.59	3.86	3.83
202	202	239	Q_manutenzione	33.09	2.442E-02	4.1
202	202	240	Q_manutenzione	38.01	-8.036E-02	3.04
202	202	206	Q_manutenzione	35.38	4.59	2.77
202	202	205	EQ_X	367.63	34.69	-22.49
202	202	239	EQ_X	393.63	0.89	-26.23
202	202	240	EQ_X	307.75	1.24	-33.95
202	202	206	EQ_X	294.23	19.12	-30.22
202	202	205	EQ_Y	50.56	106.3	122.86
202	202	239	EQ_Y	77.82	-23.11	128.62
202	202	240	EQ_Y	91.07	-4.39	105.55
202	202	206	EQ_Y	62.21	63.62	99.79
203	203	206	DEAD	9.647E-13	7.248E-11	-3.129E-11
203	203	240	DEAD	5.804E-11	-1.556E-11	-2.715E-11
203	203	241	DEAD	-3.468E-11	2.166E-11	-2.826E-11
203	203	207	DEAD	5.273E-11	1.250E-11	-2.715E-11
203	203	206	G1_power station	0.	0.	0.
203	203	240	G1_power station	0.	0.	0.
203	203	241	G1_power station	0.	0.	0.

Table 21: Element Stresses - Area Shells, Part 1 of 3

Area	AreaElem	Joint	OutputCase	S11Top	S22Top	S12Top
				KN/m2	KN/m2	KN/m2
203	203	207	G1_power station	0.	0.	0.
203	203	206	G2_power station	957.36	124.22	41.35
203	203	240	G2_power station	1023.44	-2.95	46.
203	203	241	G2_power station	1160.4	11.05	1.89
203	203	207	G2_power station	1033.39	133.38	-2.76
203	203	206	Q_power station	35.42	4.6	1.53
203	203	240	Q_power station	37.87	-0.11	1.7
203	203	241	Q_power station	42.93	0.41	6.976E-02
203	203	207	Q_power station	38.24	4.94	-0.1
203	203	206	Q_neve	105.29	19.67	0.67
203	203	240	Q_neve	110.63	-0.31	0.96
203	203	241	Q_neve	123.13	1.17	-3.56
203	203	207	Q_neve	111.52	20.73	-3.84
203	203	206	Q_manutenzione	35.42	4.6	1.53
203	203	240	Q_manutenzione	37.87	-0.11	1.7
203	203	241	Q_manutenzione	42.93	0.41	6.976E-02
203	203	207	Q_manutenzione	38.24	4.94	-0.1
203	203	206	EQ_X	292.07	18.69	-35.01
203	203	240	EQ_X	307.57	1.21	-40.55
203	203	241	EQ_X	230.46	1.61	-45.01
203	203	207	EQ_X	220.87	9.83	-39.47
203	203	206	EQ_Y	59.71	63.11	80.6
203	203	240	EQ_Y	76.63	-7.28	80.91
203	203	241	EQ_Y	86.28	-10.62	59.11
203	203	207	EQ_Y	67.81	67.2	58.81
204	204	207	DEAD	-1.097E-11	2.770E-11	-2.048E-11
204	204	241	DEAD	1.686E-11	1.409E-11	-6.427E-12
204	204	242	DEAD	3.681E-11	-2.463E-11	-2.284E-12
204	204	208	DEAD	9.042E-11	1.788E-11	-2.160E-11
204	204	207	G1_power station	0.	0.	0.
204	204	241	G1_power station	0.	0.	0.
204	204	242	G1_power station	0.	0.	0.
204	204	208	G1_power station	0.	0.	0.
204	204	207	G2_power station	1034.41	133.59	-71.73
204	204	241	G2_power station	1150.11	8.99	-44.23
204	204	242	G2_power station	1502.14	-50.24	-133.24
204	204	208	G2_power station	1198.73	181.04	-160.74
204	204	207	Q_power station	38.27	4.94	-2.65
204	204	241	Q_power station	42.55	0.33	-1.64
204	204	242	Q_power station	55.58	-1.86	-4.93
204	204	208	Q_power station	44.35	6.7	-5.95
204	204	207	Q_neve	111.57	20.74	-10.96
204	204	241	Q_neve	122.13	0.97	-8.22

Table 21: Element Stresses - Area Shells, Part 1 of 3

Area	AreaElem	Joint	OutputCase	S11Top	S22Top	S12Top
				KN/m2	KN/m2	KN/m2
204	204	242	Q_neve	154.96	-5.39	-17.22
204	204	208	Q_neve	125.98	25.09	-19.96
204	204	207	Q_manutenzione	38.27	4.94	-2.65
204	204	241	Q_manutenzione	42.55	0.33	-1.64
204	204	242	Q_manutenzione	55.58	-1.86	-4.93
204	204	208	Q_manutenzione	44.35	6.7	-5.95
204	204	207	EQ_X	216.09	8.87	-46.47
204	204	241	EQ_X	234.39	2.4	-45.23
204	204	242	EQ_X	165.71	-2.42	-48.12
204	204	208	EQ_X	152.64	-17.27	-49.36
204	204	207	EQ_Y	77.58	69.16	41.64
204	204	241	EQ_Y	54.18	-17.04	33.57
204	204	242	EQ_Y	75.07	-22.27	11.76
204	204	208	EQ_Y	78.24	101.8	19.83
205	205	208	DEAD	2.911E-11	-1.951E-11	-5.895E-12
205	205	242	DEAD	6.901E-11	5.507E-12	-5.895E-12
205	205	38	DEAD	7.992E-11	7.074E-11	-2.862E-12
205	205	34	DEAD	1.320E-10	-6.199E-11	-2.862E-12
205	205	208	G1_power station	0.	0.	0.
205	205	242	G1_power station	0.	0.	0.
205	205	38	G1_power station	0.	0.	0.
205	205	34	G1_power station	0.	0.	0.
205	205	208	G2_power station	1148.97	171.09	-366.16
205	205	242	G2_power station	1499.08	-50.85	-210.05
205	205	38	G2_power station	2793.47	119.39	-427.31
205	205	34	G2_power station	1919.55	-239.14	-583.42
205	205	208	Q_power station	42.51	6.33	-13.55
205	205	242	Q_power station	55.47	-1.88	-7.77
205	205	38	Q_power station	103.36	4.42	-15.81
205	205	34	Q_power station	71.02	-8.85	-21.59
205	205	208	Q_neve	120.53	24.	-41.07
205	205	242	Q_neve	155.06	-5.37	-24.38
205	205	38	Q_neve	279.74	12.55	-45.4
205	205	34	Q_neve	197.21	-23.43	-62.08
205	205	208	Q_manutenzione	42.51	6.33	-13.55
205	205	242	Q_manutenzione	55.47	-1.88	-7.77
205	205	38	Q_manutenzione	103.36	4.42	-15.81
205	205	34	Q_manutenzione	71.02	-8.85	-21.59
205	205	208	EQ_X	135.68	-20.66	-52.22
205	205	242	EQ_X	182.19	0.87	-47.26
205	205	38	EQ_X	113.12	12.83	-35.47
205	205	34	EQ_X	133.65	-94.48	-40.43
205	205	208	EQ_Y	113.4	108.84	-24.61

Table 21: Element Stresses - Area Shells, Part 1 of 3

Area	AreaElem	Joint	OutputCase	S11Top	S22Top	S12Top
				KN/m2	KN/m2	KN/m2
205	205	242	EQ_Y	9.76	-35.33	-5.81
205	205	38	EQ_Y	92.89	0.98	-57.38
205	205	34	EQ_Y	124.52	137.32	-76.18
206	206	32	DEAD	6.879E-11	1.181E-11	5.686E-11
206	206	23	DEAD	2.664E-10	2.467E-11	5.989E-11
206	206	243	DEAD	1.204E-10	5.124E-11	4.472E-11
206	206	244	DEAD	2.118E-10	-2.993E-11	4.169E-11
206	206	32	G1_power station	0.	0.	0.
206	206	23	G1_power station	0.	0.	0.
206	206	243	G1_power station	0.	0.	0.
206	206	244	G1_power station	0.	0.	0.
206	206	32	G2_power station	1357.93	-49.71	115.99
206	206	23	G2_power station	2666.03	159.63	173.33
206	206	243	G2_power station	2177.53	-46.5	-16.54
206	206	244	G2_power station	2446.13	28.63	-73.89
206	206	32	Q_power station	50.24	-1.84	4.29
206	206	23	Q_power station	98.64	5.91	6.41
206	206	243	Q_power station	80.57	-1.72	-0.61
206	206	244	Q_power station	90.51	1.06	-2.73
206	206	32	Q_neve	132.41	-4.97	14.44
206	206	23	Q_neve	274.42	19.24	19.88
206	206	243	Q_neve	205.58	-5.54	-0.69
206	206	244	Q_neve	234.78	3.01	-6.13
206	206	32	Q_manutenzione	50.24	-1.84	4.29
206	206	23	Q_manutenzione	98.64	5.91	6.41
206	206	243	Q_manutenzione	80.57	-1.72	-0.61
206	206	244	Q_manutenzione	90.51	1.06	-2.73
206	206	32	EQ_X	-646.85	17.86	-78.68
206	206	23	EQ_X	-1494.72	-12.36	-50.46
206	206	243	EQ_X	-632.31	17.36	84.93
206	206	244	EQ_X	-878.47	-19.4	56.7
206	206	32	EQ_Y	132.08	-31.06	-164.26
206	206	23	EQ_Y	-385.89	-19.35	-146.65
206	206	243	EQ_Y	-107.21	-35.52	-117.02
206	206	244	EQ_Y	158.88	44.8	-134.63
207	207	244	DEAD	1.402E-10	-4.917E-11	5.692E-11
207	207	243	DEAD	1.171E-10	5.634E-11	5.884E-11
207	207	245	DEAD	1.379E-10	-4.234E-11	5.692E-11
207	207	246	DEAD	1.057E-10	1.766E-11	4.974E-11
207	207	244	G1_power station	0.	0.	0.
207	207	243	G1_power station	0.	0.	0.
207	207	245	G1_power station	0.	0.	0.
207	207	246	G1_power station	0.	0.	0.

Table 21: Element Stresses - Area Shells, Part 1 of 3

Area	AreaElem	Joint	OutputCase	S11Top	S22Top	S12Top
				KN/m2	KN/m2	KN/m2
207	207	244	G2_power station	2355.79	10.56	-41.55
207	207	243	G2_power station	2267.87	-28.43	-25.12
207	207	245	G2_power station	2564.33	12.95	-14.24
207	207	246	G2_power station	2538.48	-5.93	-30.66
207	207	244	Q_power station	87.16	0.39	-1.54
207	207	243	Q_power station	83.91	-1.05	-0.93
207	207	245	Q_power station	94.88	0.48	-0.53
207	207	246	Q_power station	93.92	-0.22	-1.13
207	207	244	Q_neve	224.99	1.05	-2.66
207	207	243	Q_neve	215.37	-3.58	-1.57
207	207	245	Q_neve	241.4	1.42	-0.37
207	207	246	Q_neve	238.67	-0.72	-1.46
207	207	244	Q_manutenzione	87.16	0.39	-1.54
207	207	243	Q_manutenzione	83.91	-1.05	-0.93
207	207	245	Q_manutenzione	94.88	0.48	-0.53
207	207	246	Q_manutenzione	93.92	-0.22	-1.13
207	207	244	EQ_X	-795.17	-2.74	46.89
207	207	243	EQ_X	-714.43	0.93	76.37
207	207	245	EQ_X	-437.21	-1.41	67.34
207	207	246	EQ_X	-449.22	-0.3	37.86
207	207	244	EQ_Y	39.17	20.86	-126.22
207	207	243	EQ_Y	3.53	-13.37	-116.78
207	207	245	EQ_Y	85.74	2.02	-114.83
207	207	246	EQ_Y	135.29	-4.91	-124.27
208	208	246	DEAD	1.028E-10	3.236E-11	5.651E-11
208	208	245	DEAD	1.282E-10	-5.423E-11	4.438E-11
208	208	247	DEAD	5.128E-11	6.572E-11	6.258E-11
208	208	248	DEAD	1.888E-10	-4.210E-11	7.472E-11
208	208	246	G1_power station	0.	0.	0.
208	208	245	G1_power station	0.	0.	0.
208	208	247	G1_power station	0.	0.	0.
208	208	248	G1_power station	0.	0.	0.
208	208	246	G2_power station	2534.23	-6.78	-36.69
208	208	245	G2_power station	2568.58	13.8	-10.89
208	208	247	G2_power station	2687.71	-30.28	9.42
208	208	248	G2_power station	2834.26	9.66	-16.38
208	208	246	Q_power station	93.77	-0.25	-1.36
208	208	245	Q_power station	95.04	0.51	-0.4
208	208	247	Q_power station	99.45	-1.12	0.35
208	208	248	Q_power station	104.87	0.36	-0.61
208	208	246	Q_neve	238.23	-0.81	-2.62
208	208	245	Q_neve	241.85	1.51	0.56
208	208	247	Q_neve	258.31	-3.43	2.74

Table 21: Element Stresses - Area Shells, Part 1 of 3

Area	AreaElem	Joint	OutputCase	S11Top	S22Top	S12Top
				KN/m2	KN/m2	KN/m2
208	208	248	Q_neve	273.96	0.86	-0.43
208	208	246	Q_manutenzione	93.77	-0.25	-1.36
208	208	245	Q_manutenzione	95.04	0.51	-0.4
208	208	247	Q_manutenzione	99.45	-1.12	0.35
208	208	248	Q_manutenzione	104.87	0.36	-0.61
208	208	246	EQ_X	-435.83	2.38	40.25
208	208	245	EQ_X	-451.24	-4.21	65.57
208	208	247	EQ_X	-154.23	14.34	69.22
208	208	248	EQ_X	-123.44	-1.96	43.9
208	208	246	EQ_Y	37.18	-24.53	-117.95
208	208	245	EQ_Y	187.25	22.32	-110.15
208	208	247	EQ_Y	228.06	-22.94	-107.55
208	208	248	EQ_Y	82.99	-14.9	-115.35
209	209	248	DEAD	1.120E-10	-3.296E-11	8.954E-11
209	209	247	DEAD	9.038E-11	5.970E-11	9.257E-11
209	209	34	DEAD	2.864E-10	-3.447E-11	4.707E-11
209	209	38	DEAD	1.909E-11	6.728E-11	4.404E-11
209	209	248	G1_power station	0.	0.	0.
209	209	247	G1_power station	0.	0.	0.
209	209	34	G1_power station	0.	0.	0.
209	209	38	G1_power station	0.	0.	0.
209	209	248	G2_power station	2990.98	41.	24.76
209	209	247	G2_power station	2530.99	-61.62	10.25
209	209	34	G2_power station	4077.18	192.39	-317.69
209	209	38	G2_power station	1835.77	-72.15	-303.19
209	209	248	Q_power station	110.67	1.52	0.92
209	209	247	Q_power station	93.65	-2.28	0.38
209	209	34	Q_power station	150.86	7.12	-11.75
209	209	38	Q_power station	67.92	-2.67	-11.22
209	209	248	Q_neve	290.63	4.2	3.72
209	209	247	Q_neve	241.64	-6.77	3.09
209	209	34	Q_neve	419.43	21.01	-31.77
209	209	38	Q_neve	181.06	-7.19	-31.14
209	209	248	Q_manutenzione	110.67	1.52	0.92
209	209	247	Q_manutenzione	93.65	-2.28	0.38
209	209	34	Q_manutenzione	150.86	7.12	-11.75
209	209	38	Q_manutenzione	67.92	-2.67	-11.22
209	209	248	EQ_X	-82.75	6.18	38.67
209	209	247	EQ_X	-193.62	6.47	82.02
209	209	34	EQ_X	265.	-68.21	39.42
209	209	38	EQ_X	52.74	0.76	-3.93
209	209	248	EQ_Y	17.09	-28.08	-93.26
209	209	247	EQ_Y	289.03	-10.74	-125.34

Table 21: Element Stresses - Area Shells, Part 1 of 3

Area	AreaElem	Joint	OutputCase	S11Top	S22Top	S12Top
				KN/m2	KN/m2	KN/m2
209	209	34	EQ_Y	326.03	177.62	-121.73
209	209	38	EQ_Y	-9.04	-19.41	-89.66

Table 21: Element Stresses - Area Shells, Part 2 of 3

Table 21: Element Stresses - Area Shells, Part 2 of 3

Area	AreaElem	Joint	OutputCase	S11Bot	S22Bot	S12Bot
				KN/m2	KN/m2	KN/m2
1	1	7	DEAD	2.080E-11	2.733E-11	1.576E-11
1	1	8	DEAD	-5.133E-11	-3.851E-11	1.880E-11
1	1	9	DEAD	-2.167E-11	-2.120E-11	1.576E-11
1	1	10	DEAD	-7.343E-12	-5.519E-11	1.273E-11
1	1	7	G1_power station	0.	0.	0.
1	1	8	G1_power station	0.	0.	0.
1	1	9	G1_power station	0.	0.	0.
1	1	10	G1_power station	0.	0.	0.
1	1	7	G2_power station	20.73	18.29	-160.95
1	1	8	G2_power station	201.81	-17.73	-117.94
1	1	9	G2_power station	615.07	605.72	-80.25
1	1	10	G2_power station	-19.95	225.59	-123.26
1	1	7	Q_power station	0.77	0.68	-5.96
1	1	8	Q_power station	7.47	-0.66	-4.36
1	1	9	Q_power station	22.76	22.41	-2.97
1	1	10	Q_power station	-0.74	8.35	-4.56
1	1	7	Q_neve	2.07	1.71	-13.12
1	1	8	Q_neve	13.77	-1.59	-8.53
1	1	9	Q_neve	52.02	47.74	-4.87
1	1	10	Q_neve	-1.85	13.76	-9.46
1	1	7	Q_manutenzione	0.77	0.68	-5.96
1	1	8	Q_manutenzione	7.47	-0.66	-4.36
1	1	9	Q_manutenzione	22.76	22.41	-2.97
1	1	10	Q_manutenzione	-0.74	8.35	-4.56
1	1	7	EQ_X	-174.39	-75.93	176.77
1	1	8	EQ_X	954.82	142.97	-189.12
1	1	9	EQ_X	-1249.16	-349.9	-148.75
1	1	10	EQ_X	190.96	-318.01	217.14
1	1	7	EQ_Y	-85.94	-226.45	224.59
1	1	8	EQ_Y	-393.97	237.11	285.82
1	1	9	EQ_Y	-414.29	-1543.16	-113.59
1	1	10	EQ_Y	160.02	931.63	-174.81
2	2	11	DEAD	1.760E-11	-1.749E-13	1.448E-11
2	2	12	DEAD	-6.273E-12	-2.724E-11	1.448E-11

Table 21: Element Stresses - Area Shells, Part 2 of 3

Area	AreaElem	Joint	OutputCase	S11Bot	S22Bot	S12Bot
				KN/m2	KN/m2	KN/m2
2	2	13	DEAD	-1.804E-11	4.002E-11	2.055E-11
2	2	14	DEAD	3.999E-11	-1.435E-11	2.055E-11
2	2	11	G1_power station	0.	0.	0.
2	2	12	G1_power station	0.	0.	0.
2	2	13	G1_power station	0.	0.	0.
2	2	14	G1_power station	0.	0.	0.
2	2	11	G2_power station	232.93	-18.22	143.33
2	2	12	G2_power station	16.98	18.37	175.
2	2	13	G2_power station	-18.12	257.89	137.97
2	2	14	G2_power station	599.42	638.96	106.29
2	2	11	Q_power station	8.62	-0.67	5.3
2	2	12	Q_power station	0.63	0.68	6.48
2	2	13	Q_power station	-0.67	9.54	5.1
2	2	14	Q_power station	22.18	23.64	3.93
2	2	11	Q_neve	16.61	-1.65	11.68
2	2	12	Q_neve	1.64	1.73	14.94
2	2	13	Q_neve	-1.65	18.44	11.33
2	2	14	Q_neve	49.7	52.43	8.07
2	2	11	Q_manutenzione	8.62	-0.67	5.3
2	2	12	Q_manutenzione	0.63	0.68	6.48
2	2	13	Q_manutenzione	-0.67	9.54	5.1
2	2	14	Q_manutenzione	22.18	23.64	3.93
2	2	11	EQ_X	-973.15	-148.86	-176.24
2	2	12	EQ_X	158.72	83.08	192.1
2	2	13	EQ_X	-192.25	348.36	233.73
2	2	14	EQ_X	1268.73	363.82	-134.61
2	2	11	EQ_Y	-380.81	219.8	-275.38
2	2	12	EQ_Y	-78.92	-204.06	-216.25
2	2	13	EQ_Y	155.05	914.81	174.14
2	2	14	EQ_Y	-391.18	-1479.68	115.01
3	3	15	DEAD	-7.226E-11	-9.473E-11	3.034E-12
3	3	16	DEAD	7.176E-11	3.353E-11	9.101E-12
3	3	17	DEAD	-6.392E-11	-7.122E-11	-3.034E-12
3	3	18	DEAD	-1.090E-11	-3.397E-11	-9.101E-12
3	3	15	G1_power station	0.	0.	0.
3	3	16	G1_power station	0.	0.	0.
3	3	17	G1_power station	0.	0.	0.
3	3	18	G1_power station	0.	0.	0.
3	3	15	G2_power station	-18.12	257.89	-137.97
3	3	16	G2_power station	16.98	18.37	-175.
3	3	17	G2_power station	232.93	-18.22	-143.33
3	3	18	G2_power station	599.42	638.96	-106.29
3	3	15	Q_power station	-0.67	9.54	-5.1

Table 21: Element Stresses - Area Shells, Part 2 of 3

Area	AreaElem	Joint	OutputCase	S11Bot	S22Bot	S12Bot
				KN/m2	KN/m2	KN/m2
3	3	16	Q_power station	0.63	0.68	-6.48
3	3	17	Q_power station	8.62	-0.67	-5.3
3	3	18	Q_power station	22.18	23.64	-3.93
3	3	15	Q_neve	-1.65	18.44	-11.33
3	3	16	Q_neve	1.64	1.73	-14.94
3	3	17	Q_neve	16.61	-1.65	-11.68
3	3	18	Q_neve	49.7	52.43	-8.07
3	3	15	Q_manutenzione	-0.67	9.54	-5.1
3	3	16	Q_manutenzione	0.63	0.68	-6.48
3	3	17	Q_manutenzione	8.62	-0.67	-5.3
3	3	18	Q_manutenzione	22.18	23.64	-3.93
3	3	15	EQ_X	-193.34	340.21	-229.44
3	3	16	EQ_X	176.31	78.67	-185.91
3	3	17	EQ_X	-953.72	-144.06	181.67
3	3	18	EQ_X	1269.48	364.89	138.14
3	3	15	EQ_Y	-155.17	-908.95	174.25
3	3	16	EQ_Y	78.99	209.96	-216.14
3	3	17	EQ_Y	380.92	-213.72	-275.24
3	3	18	EQ_Y	391.1	1485.73	115.15
4	4	19	DEAD	-1.407E-11	6.307E-12	8.288E-12
4	4	20	DEAD	-3.824E-11	-3.103E-11	5.254E-12
4	4	21	DEAD	2.764E-11	5.105E-11	2.221E-12
4	4	22	DEAD	-7.692E-11	1.220E-11	5.254E-12
4	4	19	G1_power station	0.	0.	0.
4	4	20	G1_power station	0.	0.	0.
4	4	21	G1_power station	0.	0.	0.
4	4	22	G1_power station	0.	0.	0.
4	4	19	G2_power station	201.81	-17.73	117.94
4	4	20	G2_power station	20.73	18.29	160.95
4	4	21	G2_power station	-19.95	225.59	123.26
4	4	22	G2_power station	615.07	605.72	80.25
4	4	19	Q_power station	7.47	-0.66	4.36
4	4	20	Q_power station	0.77	0.68	5.96
4	4	21	Q_power station	-0.74	8.35	4.56
4	4	22	Q_power station	22.76	22.41	2.97
4	4	19	Q_neve	13.77	-1.59	8.53
4	4	20	Q_neve	2.07	1.71	13.12
4	4	21	Q_neve	-1.85	13.76	9.46
4	4	22	Q_neve	52.02	47.74	4.87
4	4	19	Q_manutenzione	7.47	-0.66	4.36
4	4	20	Q_manutenzione	0.77	0.68	5.96
4	4	21	Q_manutenzione	-0.74	8.35	4.56
4	4	22	Q_manutenzione	22.76	22.41	2.97

Table 21: Element Stresses - Area Shells, Part 2 of 3

Area	AreaElem	Joint	OutputCase	S11Bot	S22Bot	S12Bot
				KN/m2	KN/m2	KN/m2
4	4	19	EQ_X	954.91	141.27	188.68
4	4	20	EQ_X	-174.28	-77.51	-176.98
4	4	21	EQ_X	191.45	-319.52	-217.45
4	4	22	EQ_X	-1248.69	-351.52	148.21
4	4	19	EQ_Y	393.72	-234.08	285.25
4	4	20	EQ_Y	84.55	223.85	224.22
4	4	21	EQ_Y	-160.75	-934.1	-175.49
4	4	22	EQ_Y	414.7	1546.32	-114.46
29	29	61	DEAD	-4.136E-14	3.721E-12	-6.138E-13
29	29	39	DEAD	-2.097E-12	2.156E-12	-3.363E-13
29	29	40	DEAD	6.500E-12	2.299E-12	-2.889E-12
29	29	6	DEAD	5.107E-12	6.327E-12	-1.853E-12
29	29	61	G1_power station	0.	0.	0.
29	29	39	G1_power station	0.	0.	0.
29	29	40	G1_power station	0.	0.	0.
29	29	6	G1_power station	0.	0.	0.
29	29	61	G2_power station	-20.83	218.94	-4.74
29	29	39	G2_power station	13.2	-194.27	-24.22
29	29	40	G2_power station	66.77	-362.	33.5
29	29	6	G2_power station	652.9	627.55	52.99
29	29	61	Q_power station	-0.77	8.1	-0.18
29	29	39	Q_power station	0.49	-7.19	-0.9
29	29	40	Q_power station	2.47	-13.39	1.24
29	29	6	Q_power station	24.16	23.22	1.96
29	29	61	Q_neve	-1.92	15.28	-1.81
29	29	39	Q_neve	1.2	-26.72	-3.46
29	29	40	Q_neve	2.15	-43.74	1.39
29	29	6	Q_neve	55.66	52.07	3.04
29	29	61	Q_manutenzione	-0.77	8.1	-0.18
29	29	39	Q_manutenzione	0.49	-7.19	-0.9
29	29	40	Q_manutenzione	2.47	-13.39	1.24
29	29	6	Q_manutenzione	24.16	23.22	1.96
29	29	61	EQ_X	-191.68	342.1	-44.15
29	29	39	EQ_X	91.63	-56.23	-15.53
29	29	40	EQ_X	-574.82	-119.87	295.96
29	29	6	EQ_X	1298.05	355.84	267.34
29	29	61	EQ_Y	-153.02	-616.59	162.72
29	29	39	EQ_Y	65.19	747.04	-191.83
29	29	40	EQ_Y	171.92	-24.96	-223.
29	29	6	EQ_Y	301.32	1942.74	131.55
30	30	39	DEAD	1.140E-12	1.581E-12	-2.291E-12
30	30	41	DEAD	-3.547E-12	-9.034E-12	-1.255E-12
30	30	42	DEAD	-7.564E-13	-1.017E-11	-7.741E-13

Table 21: Element Stresses - Area Shells, Part 2 of 3

Area	AreaElem	Joint	OutputCase	S11Bot	S22Bot	S12Bot
				KN/m2	KN/m2	KN/m2
30	30	40	DEAD	5.080E-12	2.247E-12	-4.965E-13
30	30	39	G1_power station	0.	0.	0.
30	30	41	G1_power station	0.	0.	0.
30	30	42	G1_power station	0.	0.	0.
30	30	40	G1_power station	0.	0.	0.
30	30	39	G2_power station	9.78	-211.36	38.96
30	30	41	G2_power station	-2.55	-612.55	44.04
30	30	42	G2_power station	-95.14	-515.18	57.51
30	30	40	G2_power station	71.19	-339.86	52.43
30	30	39	Q_power station	0.36	-7.82	1.44
30	30	41	Q_power station	-9.453E-02	-22.66	1.63
30	30	42	Q_power station	-3.52	-19.06	2.13
30	30	40	Q_power station	2.63	-12.57	1.94
30	30	39	Q_neve	0.87	-28.35	2.54
30	30	41	Q_neve	-0.25	-67.57	3.42
30	30	42	Q_neve	-12.71	-60.68	4.43
30	30	40	Q_neve	2.56	-41.72	3.55
30	30	39	Q_manutenzione	0.36	-7.82	1.44
30	30	41	Q_manutenzione	-9.453E-02	-22.66	1.63
30	30	42	Q_manutenzione	-3.52	-19.06	2.13
30	30	40	Q_manutenzione	2.63	-12.57	1.94
30	30	39	EQ_X	89.22	-68.28	157.08
30	30	41	EQ_X	-45.78	-188.14	114.84
30	30	42	EQ_X	-147.89	-54.01	46.6
30	30	40	EQ_X	-574.25	-117.02	88.84
30	30	39	EQ_Y	20.61	524.12	-110.89
30	30	41	EQ_Y	-4.46	87.12	-38.75
30	30	42	EQ_Y	33.55	119.89	-21.47
30	30	40	EQ_Y	218.22	206.53	-93.61
31	31	41	DEAD	-4.168E-12	-8.856E-12	0.
31	31	43	DEAD	-6.675E-13	-5.003E-12	7.584E-13
31	31	44	DEAD	2.088E-12	-9.425E-12	0.
31	31	42	DEAD	-9.873E-14	-6.709E-12	-7.584E-13
31	31	41	G1_power station	0.	0.	0.
31	31	43	G1_power station	0.	0.	0.
31	31	44	G1_power station	0.	0.	0.
31	31	42	G1_power station	0.	0.	0.
31	31	41	G2_power station	0.73	-596.11	17.92
31	31	43	G2_power station	0.73	-596.11	-17.92
31	31	44	G2_power station	-97.7	-528.	-17.92
31	31	42	G2_power station	-97.7	-528.	17.92
31	31	41	Q_power station	2.713E-02	-22.06	0.66
31	31	43	Q_power station	2.713E-02	-22.06	-0.66

Table 21: Element Stresses - Area Shells, Part 2 of 3

Area	AreaElem	Joint	OutputCase	S11Bot	S22Bot	S12Bot
				KN/m2	KN/m2	KN/m2
31	31	44	Q_power station	-3.62	-19.54	-0.66
31	31	42	Q_power station	-3.62	-19.54	0.66
31	31	41	Q_neve	4.747E-02	-66.09	1.4
31	31	43	Q_neve	4.747E-02	-66.09	-1.4
31	31	44	Q_neve	-12.94	-61.83	-1.4
31	31	42	Q_neve	-12.94	-61.83	1.4
31	31	41	Q_manutenzione	2.713E-02	-22.06	0.66
31	31	43	Q_manutenzione	2.713E-02	-22.06	-0.66
31	31	44	Q_manutenzione	-3.62	-19.54	-0.66
31	31	42	Q_manutenzione	-3.62	-19.54	0.66
31	31	41	EQ_X	-46.06	-189.53	26.49
31	31	43	EQ_X	-45.87	-189.5	-28.09
31	31	44	EQ_X	-148.42	-57.63	-28.11
31	31	42	EQ_X	-148.62	-57.67	26.47
31	31	41	EQ_Y	3.96	129.22	-15.95
31	31	43	EQ_Y	-3.9	-124.15	-15.92
31	31	44	EQ_Y	-30.23	-98.55	-16.96
31	31	42	EQ_Y	30.34	103.86	-16.98
32	32	43	DEAD	-3.139E-12	-9.794E-12	-3.949E-13
32	32	45	DEAD	-2.364E-12	-6.532E-12	-5.981E-13
32	32	46	DEAD	5.109E-12	-2.684E-12	-2.670E-12
32	32	44	DEAD	3.513E-12	-2.171E-12	1.603E-13
32	32	43	G1_power station	0.	0.	0.
32	32	45	G1_power station	0.	0.	0.
32	32	46	G1_power station	0.	0.	0.
32	32	44	G1_power station	0.	0.	0.
32	32	43	G2_power station	-2.55	-612.55	-44.04
32	32	45	G2_power station	9.78	-211.36	-38.96
32	32	46	G2_power station	71.19	-339.86	-52.43
32	32	44	G2_power station	-95.14	-515.18	-57.51
32	32	43	Q_power station	-9.453E-02	-22.66	-1.63
32	32	45	Q_power station	0.36	-7.82	-1.44
32	32	46	Q_power station	2.63	-12.57	-1.94
32	32	44	Q_power station	-3.52	-19.06	-2.13
32	32	43	Q_neve	-0.25	-67.57	-3.42
32	32	45	Q_neve	0.87	-28.35	-2.54
32	32	46	Q_neve	2.56	-41.72	-3.55
32	32	44	Q_neve	-12.71	-60.68	-4.43
32	32	43	Q_manutenzione	-9.453E-02	-22.66	-1.63
32	32	45	Q_manutenzione	0.36	-7.82	-1.44
32	32	46	Q_manutenzione	2.63	-12.57	-1.94
32	32	44	Q_manutenzione	-3.52	-19.06	-2.13
32	32	43	EQ_X	-46.58	-193.04	-116.11

Table 21: Element Stresses - Area Shells, Part 2 of 3

Area	AreaElem	Joint	OutputCase	S11Bot	S22Bot	S12Bot
				KN/m2	KN/m2	KN/m2
32	32	45	EQ_X	88.63	-73.14	-158.65
32	32	46	EQ_X	-573.85	-116.93	-90.93
32	32	44	EQ_X	-147.69	-53.96	-48.39
32	32	43	EQ_Y	4.55	-81.87	-38.64
32	32	45	EQ_Y	-20.66	-518.9	-110.71
32	32	46	EQ_Y	-218.22	-201.08	-93.37
32	32	44	EQ_Y	-33.4	-114.41	-21.29
33	33	45	DEAD	-1.556E-12	-5.153E-12	-2.729E-12
33	33	62	DEAD	-4.025E-12	-2.628E-12	-2.451E-12
33	33	63	DEAD	-7.975E-13	-1.361E-12	-1.212E-12
33	33	46	DEAD	4.791E-12	-4.050E-12	-1.760E-13
33	33	45	G1_power station	0.	0.	0.
33	33	62	G1_power station	0.	0.	0.
33	33	63	G1_power station	0.	0.	0.
33	33	46	G1_power station	0.	0.	0.
33	33	45	G2_power station	13.2	-194.27	24.22
33	33	62	G2_power station	-20.83	218.94	4.74
33	33	63	G2_power station	652.9	627.55	-52.99
33	33	46	G2_power station	66.77	-362.	-33.5
33	33	45	Q_power station	0.49	-7.19	0.9
33	33	62	Q_power station	-0.77	8.1	0.18
33	33	63	Q_power station	24.16	23.22	-1.96
33	33	46	Q_power station	2.47	-13.39	-1.24
33	33	45	Q_neve	1.2	-26.72	3.46
33	33	62	Q_neve	-1.92	15.28	1.81
33	33	63	Q_neve	55.66	52.07	-3.04
33	33	46	Q_neve	2.15	-43.74	-1.39
33	33	45	Q_manutenzione	0.49	-7.19	0.9
33	33	62	Q_manutenzione	-0.77	8.1	0.18
33	33	63	Q_manutenzione	24.16	23.22	-1.96
33	33	46	Q_manutenzione	2.47	-13.39	-1.24
33	33	45	EQ_X	89.76	-67.47	12.76
33	33	62	EQ_X	-193.4	330.89	42.8
33	33	63	EQ_X	1299.17	358.8	-267.51
33	33	46	EQ_X	-573.85	-116.95	-297.56
33	33	45	EQ_Y	-65.15	-741.35	-191.65
33	33	62	EQ_Y	152.86	622.24	162.86
33	33	63	EQ_Y	-301.47	-1937.01	131.79
33	33	46	EQ_Y	-171.86	30.73	-222.71
34	34	66	DEAD	-1.164E-12	7.189E-12	6.130E-12
34	34	47	DEAD	-5.595E-13	-1.738E-11	6.130E-12
34	34	48	DEAD	-5.240E-12	-6.368E-12	6.130E-12
34	34	5	DEAD	1.052E-12	-2.492E-12	6.130E-12

Table 21: Element Stresses - Area Shells, Part 2 of 3

Area	AreaElem	Joint	OutputCase	S11Bot	S22Bot	S12Bot
				KN/m2	KN/m2	KN/m2
34	34	66	G1_power station	0.	0.	0.
34	34	47	G1_power station	0.	0.	0.
34	34	48	G1_power station	0.	0.	0.
34	34	5	G1_power station	0.	0.	0.
34	34	66	G2_power station	-22.48	185.63	-19.47
34	34	47	G2_power station	13.91	-236.05	-37.98
34	34	48	G2_power station	98.5	-404.58	16.48
34	34	5	G2_power station	676.64	601.55	34.99
34	34	66	Q_power station	-0.83	6.87	-0.72
34	34	47	Q_power station	0.51	-8.73	-1.41
34	34	48	Q_power station	3.64	-14.97	0.61
34	34	5	Q_power station	25.04	22.26	1.29
34	34	66	Q_neve	-2.1	11.	-3.63
34	34	47	Q_neve	1.26	-32.11	-5.15
34	34	48	Q_neve	5.88	-49.29	-0.76
34	34	5	Q_neve	58.11	48.57	0.76
34	34	66	Q_manutenzione	-0.83	6.87	-0.72
34	34	47	Q_manutenzione	0.51	-8.73	-1.41
34	34	48	Q_manutenzione	3.64	-14.97	0.61
34	34	5	Q_manutenzione	25.04	22.26	1.29
34	34	66	EQ_X	192.12	-307.09	51.57
34	34	47	EQ_X	-87.95	86.67	21.67
34	34	48	EQ_X	541.38	141.02	-279.66
34	34	5	EQ_X	-1289.1	-347.45	-249.76
34	34	66	EQ_Y	158.96	647.34	-168.45
34	34	47	EQ_Y	-70.91	-763.18	195.79
34	34	48	EQ_Y	-167.73	51.61	227.04
34	34	5	EQ_Y	-310.26	-2005.95	-137.19
35	35	47	DEAD	9.341E-13	-6.740E-12	6.451E-12
35	35	49	DEAD	4.882E-12	-1.914E-11	5.692E-12
35	35	50	DEAD	-8.925E-12	-8.257E-12	4.934E-12
35	35	48	DEAD	-6.305E-12	-1.819E-11	5.692E-12
35	35	47	G1_power station	0.	0.	0.
35	35	49	G1_power station	0.	0.	0.
35	35	50	G1_power station	0.	0.	0.
35	35	48	G1_power station	0.	0.	0.
35	35	47	G2_power station	10.3	-254.11	28.1
35	35	49	G2_power station	-3.03	-656.	37.3
35	35	50	G2_power station	-45.21	-563.02	46.86
35	35	48	G2_power station	103.01	-382.04	37.66
35	35	47	Q_power station	0.38	-9.4	1.04
35	35	49	Q_power station	-0.11	-24.27	1.38
35	35	50	Q_power station	-1.67	-20.83	1.73

Table 21: Element Stresses - Area Shells, Part 2 of 3

Area	AreaElem	Joint	OutputCase	S11Bot	S22Bot	S12Bot
				KN/m2	KN/m2	KN/m2
35	35	48	Q_power station	3.81	-14.14	1.39
35	35	47	Q_neve	0.92	-33.86	1.18
35	35	49	Q_neve	-0.3	-73.23	2.58
35	35	50	Q_neve	-6.93	-66.96	3.14
35	35	48	Q_neve	6.29	-47.24	1.74
35	35	47	Q_manutenzione	0.38	-9.4	1.04
35	35	49	Q_manutenzione	-0.11	-24.27	1.38
35	35	50	Q_manutenzione	-1.67	-20.83	1.73
35	35	48	Q_manutenzione	3.81	-14.14	1.39
35	35	47	EQ_X	-85.79	97.49	-148.88
35	35	49	EQ_X	46.26	215.33	-109.71
35	35	50	EQ_X	115.82	72.13	-41.99
35	35	48	EQ_X	541.35	140.85	-81.16
35	35	47	EQ_Y	-24.06	-528.92	107.41
35	35	49	EQ_Y	4.15	-81.99	34.4
35	35	50	EQ_Y	-30.4	-119.4	18.24
35	35	48	EQ_Y	-218.55	-202.45	91.25
36	36	49	DEAD	3.265E-12	-1.956E-11	3.620E-12
36	36	51	DEAD	1.997E-12	-1.014E-11	5.137E-12
36	36	52	DEAD	-4.414E-12	-1.245E-11	5.137E-12
36	36	50	DEAD	-1.004E-11	-2.483E-11	3.620E-12
36	36	49	G1_power station	0.	0.	0.
36	36	51	G1_power station	0.	0.	0.
36	36	52	G1_power station	0.	0.	0.
36	36	50	G1_power station	0.	0.	0.
36	36	49	G2_power station	0.21	-639.76	14.9
36	36	51	G2_power station	0.21	-639.76	-14.9
36	36	52	G2_power station	-47.88	-576.38	-14.9
36	36	50	G2_power station	-47.88	-576.38	14.9
36	36	49	Q_power station	7.944E-03	-23.67	0.55
36	36	51	Q_power station	7.944E-03	-23.67	-0.55
36	36	52	Q_power station	-1.77	-21.33	-0.55
36	36	50	Q_power station	-1.77	-21.33	0.55
36	36	49	Q_neve	-1.013E-02	-71.78	1.03
36	36	51	Q_neve	-1.013E-02	-71.78	-1.03
36	36	52	Q_neve	-7.18	-68.17	-1.03
36	36	50	Q_neve	-7.18	-68.17	1.03
36	36	49	Q_manutenzione	7.944E-03	-23.67	0.55
36	36	51	Q_manutenzione	7.944E-03	-23.67	-0.55
36	36	52	Q_manutenzione	-1.77	-21.33	-0.55
36	36	50	Q_manutenzione	-1.77	-21.33	0.55
36	36	49	EQ_X	46.21	215.08	-25.14
36	36	51	EQ_X	45.71	214.98	25.79

Table 21: Element Stresses - Area Shells, Part 2 of 3

Area	AreaElem	Joint	OutputCase	S11Bot	S22Bot	S12Bot
				KN/m2	KN/m2	KN/m2
36	36	52	EQ_X	116.59	78.38	26.32
36	36	50	EQ_X	117.09	78.48	-24.6
36	36	49	EQ_Y	-6.27	-134.09	12.92
36	36	51	EQ_Y	5.69	125.83	13.07
36	36	52	EQ_Y	29.13	107.73	12.59
36	36	50	EQ_Y	-27.79	-106.32	12.44
37	37	51	DEAD	8.335E-13	-1.762E-11	3.386E-12
37	37	53	DEAD	2.096E-12	-1.009E-11	1.110E-12
37	37	54	DEAD	-4.665E-12	-4.161E-12	1.869E-12
37	37	52	DEAD	-2.644E-12	-1.104E-11	4.144E-12
37	37	51	G1_power station	0.	0.	0.
37	37	53	G1_power station	0.	0.	0.
37	37	54	G1_power station	0.	0.	0.
37	37	52	G1_power station	0.	0.	0.
37	37	51	G2_power station	-3.03	-656.	-37.3
37	37	53	G2_power station	10.3	-254.11	-28.1
37	37	54	G2_power station	103.01	-382.04	-37.66
37	37	52	G2_power station	-45.21	-563.02	-46.86
37	37	51	Q_power station	-0.11	-24.27	-1.38
37	37	53	Q_power station	0.38	-9.4	-1.04
37	37	54	Q_power station	3.81	-14.14	-1.39
37	37	52	Q_power station	-1.67	-20.83	-1.73
37	37	51	Q_neve	-0.3	-73.23	-2.58
37	37	53	Q_neve	0.92	-33.86	-1.18
37	37	54	Q_neve	6.29	-47.24	-1.74
37	37	52	Q_neve	-6.93	-66.96	-3.14
37	37	51	Q_manutenzione	-0.11	-24.27	-1.38
37	37	53	Q_manutenzione	0.38	-9.4	-1.04
37	37	54	Q_manutenzione	3.81	-14.14	-1.39
37	37	52	Q_manutenzione	-1.67	-20.83	-1.73
37	37	51	EQ_X	46.18	217.32	110.6
37	37	53	EQ_X	-86.83	99.28	149.51
37	37	54	EQ_X	540.24	142.31	81.59
37	37	52	EQ_X	115.67	73.78	42.68
37	37	51	EQ_Y	-4.53	74.75	34.94
37	37	53	EQ_Y	23.42	521.63	108.26
37	37	54	EQ_Y	219.67	203.99	92.16
37	37	52	EQ_Y	31.78	121.	18.84
38	38	53	DEAD	5.055E-12	-3.436E-12	9.930E-13
38	38	59	DEAD	2.113E-12	-2.383E-12	2.510E-12
38	38	58	DEAD	-1.771E-12	-1.161E-12	2.510E-12
38	38	54	DEAD	-7.367E-12	-1.338E-11	9.930E-13
38	38	53	G1_power station	0.	0.	0.

Table 21: Element Stresses - Area Shells, Part 2 of 3

Area	AreaElem	Joint	OutputCase	S11Bot	S22Bot	S12Bot
				KN/m2	KN/m2	KN/m2
38	38	59	G1_power station	0.	0.	0.
38	38	58	G1_power station	0.	0.	0.
38	38	54	G1_power station	0.	0.	0.
38	38	53	G2_power station	13.91	-236.05	37.98
38	38	59	G2_power station	-22.48	185.63	19.47
38	38	58	G2_power station	676.64	601.55	-34.99
38	38	54	G2_power station	98.5	-404.58	-16.48
38	38	53	Q_power station	0.51	-8.73	1.41
38	38	59	Q_power station	-0.83	6.87	0.72
38	38	58	Q_power station	25.04	22.26	-1.29
38	38	54	Q_power station	3.64	-14.97	-0.61
38	38	53	Q_neve	1.26	-32.11	5.15
38	38	59	Q_neve	-2.1	11.	3.63
38	38	58	Q_neve	58.11	48.57	-0.76
38	38	54	Q_neve	5.88	-49.29	0.76
38	38	53	Q_manutenzione	0.51	-8.73	1.41
38	38	59	Q_manutenzione	-0.83	6.87	0.72
38	38	58	Q_manutenzione	25.04	22.26	-1.29
38	38	54	Q_manutenzione	3.64	-14.97	-0.61
38	38	53	EQ_X	-88.9	88.93	-21.86
38	38	59	EQ_X	191.8	-304.71	-52.07
38	38	58	EQ_X	-1289.49	-345.43	249.47
38	38	54	EQ_X	540.36	142.91	279.68
38	38	53	EQ_Y	70.86	758.79	196.83
38	38	59	EQ_Y	-160.11	-651.95	-167.48
38	38	58	EQ_Y	310.35	2007.58	-135.84
38	38	54	EQ_Y	168.92	-49.77	228.46
39	39	13	DEAD	-1.735E-11	5.247E-11	4.554E-11
39	39	55	DEAD	-5.583E-13	-3.226E-11	6.070E-11
39	39	56	DEAD	6.683E-11	-3.627E-11	4.554E-11
39	39	14	DEAD	2.902E-11	6.422E-12	3.037E-11
39	39	13	G1_power station	0.	0.	0.
39	39	55	G1_power station	0.	0.	0.
39	39	56	G1_power station	0.	0.	0.
39	39	14	G1_power station	0.	0.	0.
39	39	13	G2_power station	-19.82	249.37	9.85
39	39	55	G2_power station	13.05	-179.6	-11.29
39	39	56	G2_power station	5.23	-351.9	47.67
39	39	14	G2_power station	601.2	647.84	68.81
39	39	13	Q_power station	-0.73	9.23	0.36
39	39	55	Q_power station	0.48	-6.65	-0.42
39	39	56	Q_power station	0.19	-13.02	1.76
39	39	14	Q_power station	22.24	23.97	2.55

Table 21: Element Stresses - Area Shells, Part 2 of 3

Area	AreaElem	Joint	OutputCase	S11Bot	S22Bot	S12Bot
				KN/m2	KN/m2	KN/m2
39	39	13	Q_neve	-1.82	17.58	-0.39
39	39	55	Q_neve	1.18	-27.12	-2.2
39	39	56	Q_neve	-4.68	-44.77	2.69
39	39	14	Q_neve	49.87	53.24	4.5
39	39	13	Q_manutenzione	-0.73	9.23	0.36
39	39	55	Q_manutenzione	0.48	-6.65	-0.42
39	39	56	Q_manutenzione	0.19	-13.02	1.76
39	39	14	Q_manutenzione	22.24	23.97	2.55
39	39	13	EQ_X	-191.54	351.95	-42.34
39	39	55	EQ_X	91.59	-47.13	-13.84
39	39	56	EQ_X	-603.95	-115.89	297.44
39	39	14	EQ_X	1267.85	359.45	268.94
39	39	13	EQ_Y	-153.41	-627.5	146.81
39	39	55	EQ_Y	65.3	744.13	-210.32
39	39	56	EQ_Y	168.48	-24.67	-242.22
39	39	14	EQ_Y	292.58	1939.08	114.9
40	40	55	DEAD	-3.354E-12	-4.727E-11	4.904E-11
40	40	67	DEAD	-6.105E-12	-9.611E-11	3.994E-11
40	40	68	DEAD	4.230E-12	-6.395E-11	4.904E-11
40	40	56	DEAD	6.215E-11	8.543E-12	5.814E-11
40	40	55	G1_power station	0.	0.	0.
40	40	67	G1_power station	0.	0.	0.
40	40	68	G1_power station	0.	0.	0.
40	40	56	G1_power station	0.	0.	0.
40	40	55	G2_power station	9.78	-195.96	49.7
40	40	67	G2_power station	-2.6	-615.03	51.01
40	40	68	G2_power station	-162.62	-519.29	64.39
40	40	56	G2_power station	9.58	-330.18	63.08
40	40	55	Q_power station	0.36	-7.25	1.84
40	40	67	Q_power station	-9.612E-02	-22.76	1.89
40	40	68	Q_power station	-6.02	-19.21	2.38
40	40	56	Q_power station	0.35	-12.22	2.33
40	40	55	Q_neve	0.87	-28.68	3.59
40	40	67	Q_neve	-0.26	-70.46	4.11
40	40	68	Q_neve	-20.18	-63.93	5.06
40	40	56	Q_neve	-4.29	-42.8	4.53
40	40	55	Q_manutenzione	0.36	-7.25	1.84
40	40	67	Q_manutenzione	-9.612E-02	-22.76	1.89
40	40	68	Q_manutenzione	-6.02	-19.21	2.38
40	40	56	Q_manutenzione	0.35	-12.22	2.33
40	40	55	EQ_X	89.21	-59.07	158.54
40	40	67	EQ_X	-45.82	-180.8	115.87
40	40	68	EQ_X	-176.3	-50.76	47.37

Table 21: Element Stresses - Area Shells, Part 2 of 3

Area	AreaElem	Joint	OutputCase	S11Bot	S22Bot	S12Bot
				KN/m2	KN/m2	KN/m2
40	40	56	EQ_X	-603.39	-113.13	90.04
40	40	55	EQ_Y	20.63	520.77	-131.31
40	40	67	EQ_Y	-4.43	87.3	-60.27
40	40	68	EQ_Y	32.68	120.78	-43.36
40	40	56	EQ_Y	214.83	207.09	-114.4
41	41	67	DEAD	1.846E-11	-1.056E-10	2.802E-11
41	41	69	DEAD	-1.449E-11	-7.631E-11	2.196E-11
41	41	70	DEAD	-5.038E-13	-1.094E-10	2.802E-11
41	41	68	DEAD	-1.222E-11	-4.673E-11	3.409E-11
41	41	67	G1_power station	0.	0.	0.
41	41	69	G1_power station	0.	0.	0.
41	41	70	G1_power station	0.	0.	0.
41	41	68	G1_power station	0.	0.	0.
41	41	67	G2_power station	0.75	-598.3	20.27
41	41	69	G2_power station	0.75	-598.3	-20.27
41	41	70	G2_power station	-165.21	-532.23	-20.27
41	41	68	G2_power station	-165.21	-532.23	20.27
41	41	67	Q_power station	2.763E-02	-22.14	0.75
41	41	69	Q_power station	2.763E-02	-22.14	-0.75
41	41	70	Q_power station	-6.11	-19.69	-0.75
41	41	68	Q_power station	-6.11	-19.69	0.75
41	41	67	Q_neve	4.342E-02	-68.95	1.62
41	41	69	Q_neve	4.342E-02	-68.95	-1.62
41	41	70	Q_neve	-20.41	-65.1	-1.62
41	41	68	Q_neve	-20.41	-65.1	1.62
41	41	67	Q_manutenzione	2.763E-02	-22.14	0.75
41	41	69	Q_manutenzione	2.763E-02	-22.14	-0.75
41	41	70	Q_manutenzione	-6.11	-19.69	-0.75
41	41	68	Q_manutenzione	-6.11	-19.69	0.75
41	41	67	EQ_X	-46.09	-182.15	26.8
41	41	69	EQ_X	-45.89	-182.11	-28.4
41	41	70	EQ_X	-176.83	-54.42	-28.42
41	41	68	EQ_X	-177.03	-54.46	26.78
41	41	67	EQ_Y	3.94	129.13	-37.89
41	41	69	EQ_Y	-3.89	-124.15	-37.86
41	41	70	EQ_Y	-29.4	-99.62	-39.35
41	41	68	EQ_Y	29.5	104.88	-39.38
42	42	1	DEAD	6.464E-13	-1.576E-12	-7.584E-13
42	42	57	DEAD	2.717E-12	-1.218E-12	-1.517E-12
42	42	58	DEAD	-2.672E-12	4.586E-12	7.584E-13
42	42	59	DEAD	2.811E-12	-5.295E-12	1.517E-12
42	42	1	G1_power station	0.	0.	0.
42	42	57	G1_power station	0.	0.	0.

Table 21: Element Stresses - Area Shells, Part 2 of 3

Area	AreaElem	Joint	OutputCase	S11Bot	S22Bot	S12Bot
				KN/m2	KN/m2	KN/m2
42	42	58	G1_power station	0.	0.	0.
42	42	59	G1_power station	0.	0.	0.
42	42	1	G2_power station	21.63	18.68	-148.57
42	42	57	G2_power station	257.03	-19.46	-103.17
42	42	58	G2_power station	674.58	591.22	-67.39
42	42	59	G2_power station	-20.57	195.2	-112.78
42	42	1	Q_power station	0.8	0.69	-5.5
42	42	57	Q_power station	9.51	-0.72	-3.82
42	42	58	Q_power station	24.96	21.88	-2.49
42	42	59	Q_power station	-0.76	7.22	-4.17
42	42	1	Q_neve	2.13	1.75	-11.99
42	42	57	Q_neve	19.31	-1.77	-7.28
42	42	58	Q_neve	57.92	47.6	-3.8
42	42	59	Q_neve	-1.9	11.98	-8.52
42	42	1	Q_manutenzione	0.8	0.69	-5.5
42	42	57	Q_manutenzione	9.51	-0.72	-3.82
42	42	58	Q_manutenzione	24.96	21.88	-2.49
42	42	59	Q_manutenzione	-0.76	7.22	-4.17
42	42	1	EQ_X	-174.43	-75.65	174.77
42	42	57	EQ_X	911.07	143.36	-190.93
42	42	58	EQ_X	-1289.93	-347.66	-148.61
42	42	59	EQ_X	191.13	-308.06	217.09
42	42	1	EQ_Y	-87.24	-227.54	210.65
42	42	57	EQ_Y	-362.12	237.72	267.8
42	42	58	EQ_Y	-397.36	-1530.98	-135.05
42	42	59	EQ_Y	160.7	952.13	-192.21
43	43	69	DEAD	-2.275E-11	-1.081E-10	3.392E-11
43	43	71	DEAD	3.113E-11	-1.371E-10	2.341E-11
43	43	72	DEAD	-3.943E-11	-1.187E-10	3.088E-11
43	43	70	DEAD	-2.500E-11	-1.265E-10	2.038E-11
43	43	69	G1_power station	0.	0.	0.
43	43	71	G1_power station	0.	0.	0.
43	43	72	G1_power station	0.	0.	0.
43	43	70	G1_power station	0.	0.	0.
43	43	69	G2_power station	-2.6	-615.03	-51.01
43	43	71	G2_power station	9.78	-195.96	-49.7
43	43	72	G2_power station	9.58	-330.18	-63.08
43	43	70	G2_power station	-162.62	-519.29	-64.39
43	43	69	Q_power station	-9.612E-02	-22.76	-1.89
43	43	71	Q_power station	0.36	-7.25	-1.84
43	43	72	Q_power station	0.35	-12.22	-2.33
43	43	70	Q_power station	-6.02	-19.21	-2.38
43	43	69	Q_neve	-0.26	-70.46	-4.11

Table 21: Element Stresses - Area Shells, Part 2 of 3

Area	AreaElem	Joint	OutputCase	S11Bot	S22Bot	S12Bot
				KN/m2	KN/m2	KN/m2
43	43	71	Q_neve	0.87	-28.68	-3.59
43	43	72	Q_neve	-4.29	-42.8	-4.53
43	43	70	Q_neve	-20.18	-63.93	-5.06
43	43	69	Q_manutenzione	-9.612E-02	-22.76	-1.89
43	43	71	Q_manutenzione	0.36	-7.25	-1.84
43	43	72	Q_manutenzione	0.35	-12.22	-2.33
43	43	70	Q_manutenzione	-6.02	-19.21	-2.38
43	43	69	EQ_X	-46.61	-185.72	-117.15
43	43	71	EQ_X	88.62	-63.95	-160.12
43	43	72	EQ_X	-602.98	-113.04	-92.14
43	43	70	EQ_X	-176.1	-50.72	-49.16
43	43	69	EQ_Y	4.51	-82.14	-60.15
43	43	71	EQ_Y	-20.7	-515.64	-131.13
43	43	72	EQ_Y	-214.85	-201.68	-114.16
43	43	70	EQ_Y	-32.54	-115.34	-43.18
44	44	60	DEAD	-4.237E-12	2.716E-12	1.196E-12
44	44	2	DEAD	1.960E-13	-3.313E-12	1.955E-12
44	44	61	DEAD	-2.057E-12	-3.365E-14	-3.205E-13
44	44	6	DEAD	2.376E-12	3.039E-12	-1.079E-12
44	44	60	G1_power station	0.	0.	0.
44	44	2	G1_power station	0.	0.	0.
44	44	61	G1_power station	0.	0.	0.
44	44	6	G1_power station	0.	0.	0.
44	44	60	G2_power station	266.85	-18.98	123.03
44	44	2	G2_power station	18.76	18.32	159.91
44	44	61	G2_power station	-19.08	227.69	124.59
44	44	6	G2_power station	651.02	618.17	87.71
44	44	60	Q_power station	9.87	-0.7	4.55
44	44	2	Q_power station	0.69	0.68	5.92
44	44	61	Q_power station	-0.71	8.42	4.61
44	44	6	Q_power station	24.09	22.87	3.25
44	44	60	Q_neve	20.6	-1.73	9.73
44	44	2	Q_neve	1.8	1.72	13.45
44	44	61	Q_neve	-1.75	16.16	10.03
44	44	6	Q_neve	55.49	51.21	6.31
44	44	60	Q_manutenzione	9.87	-0.7	4.55
44	44	2	Q_manutenzione	0.69	0.68	5.92
44	44	61	Q_manutenzione	-0.71	8.42	4.61
44	44	6	Q_manutenzione	24.09	22.87	3.25
44	44	60	EQ_X	-943.49	-148.96	-179.53
44	44	2	EQ_X	158.99	82.81	189.39
44	44	61	EQ_X	-192.44	338.29	232.16
44	44	6	EQ_X	1298.91	360.13	-136.76

Table 21: Element Stresses - Area Shells, Part 2 of 3

Area	AreaElem	Joint	OutputCase	S11Bot	S22Bot	S12Bot
				KN/m2	KN/m2	KN/m2
44	44	60	EQ_Y	-362.76	220.31	-263.52
44	44	2	EQ_Y	-79.82	-204.75	-206.7
44	44	61	EQ_Y	155.45	925.73	186.03
44	44	6	EQ_Y	-382.41	-1475.93	129.22
45	45	71	DEAD	2.757E-11	-1.436E-10	1.051E-11
45	45	15	DEAD	-5.375E-11	-1.062E-10	-1.435E-11
45	45	18	DEAD	-4.903E-11	-8.977E-11	1.051E-11
45	45	72	DEAD	-4.389E-11	-1.298E-10	3.846E-12
45	45	71	G1_power station	0.	0.	0.
45	45	15	G1_power station	0.	0.	0.
45	45	18	G1_power station	0.	0.	0.
45	45	72	G1_power station	0.	0.	0.
45	45	71	G2_power station	13.05	-179.6	11.29
45	45	15	G2_power station	-19.82	249.37	-9.85
45	45	18	G2_power station	601.2	647.84	-68.81
45	45	72	G2_power station	5.23	-351.9	-47.67
45	45	71	Q_power station	0.48	-6.65	0.42
45	45	15	Q_power station	-0.73	9.23	-0.36
45	45	18	Q_power station	22.24	23.97	-2.55
45	45	72	Q_power station	0.19	-13.02	-1.76
45	45	71	Q_neve	1.18	-27.12	2.2
45	45	15	Q_neve	-1.82	17.58	0.39
45	45	18	Q_neve	49.87	53.24	-4.5
45	45	72	Q_neve	-4.68	-44.77	-2.69
45	45	71	Q_manutenzione	0.48	-6.65	0.42
45	45	15	Q_manutenzione	-0.73	9.23	-0.36
45	45	18	Q_manutenzione	22.24	23.97	-2.55
45	45	72	Q_manutenzione	0.19	-13.02	-1.76
45	45	71	EQ_X	89.73	-58.4	11.06
45	45	15	EQ_X	-193.24	340.71	40.99
45	45	18	EQ_X	1268.98	362.39	-269.12
45	45	72	EQ_X	-602.97	-112.97	-299.05
45	45	71	EQ_Y	-65.28	-738.54	-210.14
45	45	15	EQ_Y	153.23	633.06	146.94
45	45	18	EQ_Y	-292.73	-1933.39	115.15
45	45	72	EQ_Y	-168.43	30.4	-241.94
46	46	62	DEAD	-9.280E-13	2.538E-12	-1.314E-12
46	46	3	DEAD	-5.128E-12	-2.698E-12	-1.314E-12
46	46	64	DEAD	8.732E-13	2.443E-12	-1.314E-12
46	46	63	DEAD	-3.137E-12	-1.845E-12	-1.314E-12
46	46	62	G1_power station	0.	0.	0.
46	46	3	G1_power station	0.	0.	0.
46	46	64	G1_power station	0.	0.	0.

Table 21: Element Stresses - Area Shells, Part 2 of 3

Area	AreaElem	Joint	OutputCase	S11Bot	S22Bot	S12Bot
				KN/m2	KN/m2	KN/m2
46	46	63	G1_power station	0.	0.	0.
46	46	62	G2_power station	-19.08	227.69	-124.59
46	46	3	G2_power station	18.76	18.32	-159.91
46	46	64	G2_power station	266.85	-18.98	-123.03
46	46	63	G2_power station	651.02	618.17	-87.71
46	46	62	Q_power station	-0.71	8.42	-4.61
46	46	3	Q_power station	0.69	0.68	-5.92
46	46	64	Q_power station	9.87	-0.7	-4.55
46	46	63	Q_power station	24.09	22.87	-3.25
46	46	62	Q_neve	-1.75	16.16	-10.03
46	46	3	Q_neve	1.8	1.72	-13.45
46	46	64	Q_neve	20.6	-1.73	-9.73
46	46	63	Q_neve	55.49	51.21	-6.31
46	46	62	Q_manutenzione	-0.71	8.42	-4.61
46	46	3	Q_manutenzione	0.69	0.68	-5.92
46	46	64	Q_manutenzione	9.87	-0.7	-4.55
46	46	63	Q_manutenzione	24.09	22.87	-3.25
46	46	62	EQ_X	-193.54	330.18	-227.88
46	46	3	EQ_X	176.54	78.44	-183.2
46	46	64	EQ_X	-924.1	-144.15	184.96
46	46	63	EQ_X	1299.65	361.21	140.28
46	46	62	EQ_Y	-155.55	-919.79	186.13
46	46	3	EQ_Y	79.85	210.72	-206.6
46	46	64	EQ_Y	362.82	-214.2	-263.39
46	46	63	EQ_Y	382.34	1482.01	129.35
48	48	65	DEAD	1.820E-12	-5.737E-12	4.816E-12
48	48	4	DEAD	2.229E-12	-8.042E-13	4.058E-12
48	48	66	DEAD	-8.346E-13	1.468E-12	4.816E-12
48	48	5	DEAD	2.040E-12	5.073E-12	5.575E-12
48	48	65	G1_power station	0.	0.	0.
48	48	4	G1_power station	0.	0.	0.
48	48	66	G1_power station	0.	0.	0.
48	48	5	G1_power station	0.	0.	0.
48	48	65	G2_power station	257.03	-19.46	103.17
48	48	4	G2_power station	21.63	18.68	148.57
48	48	66	G2_power station	-20.57	195.2	112.78
48	48	5	G2_power station	674.58	591.22	67.39
48	48	65	Q_power station	9.51	-0.72	3.82
48	48	4	Q_power station	0.8	0.69	5.5
48	48	66	Q_power station	-0.76	7.22	4.17
48	48	5	Q_power station	24.96	21.88	2.49
48	48	65	Q_neve	19.31	-1.77	7.28
48	48	4	Q_neve	2.13	1.75	11.99

Table 21: Element Stresses - Area Shells, Part 2 of 3

Area	AreaElem	Joint	OutputCase	S11Bot	S22Bot	S12Bot
				KN/m2	KN/m2	KN/m2
48	48	66	Q_neve	-1.9	11.98	8.52
48	48	5	Q_neve	57.92	47.6	3.8
48	48	65	Q_manutenzione	9.51	-0.72	3.82
48	48	4	Q_manutenzione	0.8	0.69	5.5
48	48	66	Q_manutenzione	-0.76	7.22	4.17
48	48	5	Q_manutenzione	24.96	21.88	2.49
48	48	65	EQ_X	911.18	141.69	190.5
48	48	4	EQ_X	-174.3	-77.22	-174.98
48	48	66	EQ_X	191.62	-309.57	-217.39
48	48	5	EQ_X	-1289.46	-349.26	148.08
48	48	65	EQ_Y	361.86	-234.67	267.24
48	48	4	EQ_Y	85.86	224.93	210.28
48	48	66	EQ_Y	-161.43	-954.6	-192.88
48	48	5	EQ_Y	397.76	1534.16	-135.92
49	49	21	DEAD	4.739E-11	6.673E-11	1.482E-11
49	49	73	DEAD	-2.762E-11	6.025E-11	1.179E-11
49	49	74	DEAD	3.449E-11	1.115E-10	2.690E-12
49	49	22	DEAD	-8.753E-11	1.550E-11	5.724E-12
49	49	21	G1_power station	0.	0.	0.
49	49	73	G1_power station	0.	0.	0.
49	49	74	G1_power station	0.	0.	0.
49	49	22	G1_power station	0.	0.	0.
49	49	21	G2_power station	-21.99	215.37	-7.3
49	49	73	G2_power station	13.83	-203.46	-26.43
49	49	74	G2_power station	42.84	-377.43	28.
49	49	22	G2_power station	617.26	616.68	47.12
49	49	21	Q_power station	-0.81	7.97	-0.27
49	49	73	Q_power station	0.51	-7.53	-0.98
49	49	74	Q_power station	1.59	-13.96	1.04
49	49	22	Q_power station	22.84	22.82	1.74
49	49	21	Q_neve	-2.06	12.7	-2.5
49	49	73	Q_neve	1.25	-31.62	-4.06
49	49	74	Q_neve	0.28	-49.43	0.22
49	49	22	Q_neve	52.23	48.8	1.77
49	49	21	Q_manutenzione	-0.81	7.97	-0.27
49	49	73	Q_manutenzione	0.51	-7.53	-0.98
49	49	74	Q_manutenzione	1.59	-13.96	1.04
49	49	22	Q_manutenzione	22.84	22.82	1.74
49	49	21	EQ_X	192.	-316.73	51.52
49	49	73	EQ_X	-87.94	74.78	21.86
49	49	74	EQ_X	575.32	135.33	-278.28
49	49	22	EQ_X	-1248.28	-349.49	-248.62
49	49	21	EQ_Y	159.68	668.04	-145.39

Table 21: Element Stresses - Area Shells, Part 2 of 3

Area	AreaElem	Joint	OutputCase	S11Bot	S22Bot	S12Bot
				KN/m2	KN/m2	KN/m2
49	49	73	EQ_Y	-71.04	-751.47	222.29
49	49	74	EQ_Y	-159.77	60.06	255.08
49	49	22	EQ_Y	-293.38	-1994.06	-112.6
50	50	73	DEAD	-2.092E-11	7.225E-11	1.751E-12
50	50	75	DEAD	-4.402E-12	6.028E-11	4.785E-12
50	50	76	DEAD	-2.721E-12	7.225E-11	1.751E-12
50	50	74	DEAD	1.228E-11	5.269E-11	-1.282E-12
50	50	73	G1_power station	0.	0.	0.
50	50	75	G1_power station	0.	0.	0.
50	50	76	G1_power station	0.	0.	0.
50	50	74	G1_power station	0.	0.	0.
50	50	73	G2_power station	10.36	-220.82	37.92
50	50	75	G2_power station	-3.14	-621.96	43.96
50	50	76	G2_power station	-95.74	-528.45	52.81
50	50	74	G2_power station	47.32	-355.03	46.77
50	50	73	Q_power station	0.38	-8.17	1.4
50	50	75	Q_power station	-0.12	-23.01	1.63
50	50	76	Q_power station	-3.54	-19.55	1.95
50	50	74	Q_power station	1.75	-13.14	1.73
50	50	73	Q_neve	0.92	-33.29	2.11
50	50	75	Q_neve	-0.32	-73.57	3.23
50	50	76	Q_neve	-12.1	-67.36	3.65
50	50	74	Q_neve	0.69	-47.39	2.53
50	50	73	Q_manutenzione	0.38	-8.17	1.4
50	50	75	Q_manutenzione	-0.12	-23.01	1.63
50	50	76	Q_manutenzione	-3.54	-19.55	1.95
50	50	74	Q_manutenzione	1.75	-13.14	1.73
50	50	73	EQ_X	-85.8	85.51	-148.58
50	50	75	EQ_X	46.37	201.99	-109.63
50	50	76	EQ_X	143.64	65.53	-40.74
50	50	74	EQ_X	575.36	135.56	-79.69
50	50	73	EQ_Y	-24.05	-516.51	136.67
50	50	75	EQ_Y	4.12	-78.74	65.13
50	50	76	EQ_Y	-28.05	-116.91	49.54
50	50	74	EQ_Y	-210.68	-194.48	121.09
51	51	75	DEAD	1.794E-11	6.101E-11	5.724E-12
51	51	77	DEAD	-3.360E-11	-7.544E-12	1.179E-11
51	51	78	DEAD	-4.808E-12	-1.635E-11	1.179E-11
51	51	76	DEAD	-3.208E-11	3.644E-11	5.724E-12
51	51	75	G1_power station	0.	0.	0.
51	51	77	G1_power station	0.	0.	0.
51	51	78	G1_power station	0.	0.	0.
51	51	76	G1_power station	0.	0.	0.

Table 21: Element Stresses - Area Shells, Part 2 of 3

Area	AreaElem	Joint	OutputCase	S11Bot	S22Bot	S12Bot
				KN/m2	KN/m2	KN/m2
51	51	75	G2_power station	0.15	-605.53	17.07
51	51	77	G2_power station	0.15	-605.53	-17.07
51	51	78	G2_power station	-98.38	-541.63	-17.07
51	51	76	G2_power station	-98.38	-541.63	17.07
51	51	75	Q_power station	5.416E-03	-22.4	0.63
51	51	77	Q_power station	5.416E-03	-22.4	-0.63
51	51	78	Q_power station	-3.64	-20.04	-0.63
51	51	76	Q_power station	-3.64	-20.04	0.63
51	51	75	Q_neve	-2.319E-02	-72.1	1.23
51	51	77	Q_neve	-2.319E-02	-72.1	-1.23
51	51	78	Q_neve	-12.34	-68.55	-1.23
51	51	76	Q_neve	-12.34	-68.55	1.23
51	51	75	Q_manutenzione	5.416E-03	-22.4	0.63
51	51	77	Q_manutenzione	5.416E-03	-22.4	-0.63
51	51	78	Q_manutenzione	-3.64	-20.04	-0.63
51	51	76	Q_manutenzione	-3.64	-20.04	0.63
51	51	75	EQ_X	46.34	201.82	-24.91
51	51	77	EQ_X	45.84	201.72	25.56
51	51	78	EQ_X	144.41	71.77	26.1
51	51	76	EQ_X	144.91	71.88	-24.37
51	51	75	EQ_Y	-6.22	-130.44	44.36
51	51	77	EQ_Y	5.64	122.15	44.51
51	51	78	EQ_Y	26.84	105.5	44.5
51	51	76	EQ_Y	-25.49	-104.11	44.35
52	52	77	DEAD	-1.976E-11	-1.266E-11	2.486E-11
52	52	79	DEAD	1.269E-11	-5.909E-11	2.183E-11
52	52	80	DEAD	-9.141E-12	-6.878E-11	6.662E-12
52	52	78	DEAD	-1.006E-11	9.170E-12	9.696E-12
52	52	77	G1_power station	0.	0.	0.
52	52	79	G1_power station	0.	0.	0.
52	52	80	G1_power station	0.	0.	0.
52	52	78	G1_power station	0.	0.	0.
52	52	77	G2_power station	-3.14	-621.96	-43.96
52	52	79	G2_power station	10.36	-220.82	-37.92
52	52	80	G2_power station	47.32	-355.03	-46.77
52	52	78	G2_power station	-95.74	-528.45	-52.81
52	52	77	Q_power station	-0.12	-23.01	-1.63
52	52	79	Q_power station	0.38	-8.17	-1.4
52	52	80	Q_power station	1.75	-13.14	-1.73
52	52	78	Q_power station	-3.54	-19.55	-1.95
52	52	77	Q_neve	-0.32	-73.57	-3.23
52	52	79	Q_neve	0.92	-33.29	-2.11
52	52	80	Q_neve	0.69	-47.39	-2.53

Table 21: Element Stresses - Area Shells, Part 2 of 3

Area	AreaElem	Joint	OutputCase	S11Bot	S22Bot	S12Bot
				KN/m2	KN/m2	KN/m2
52	52	78	Q_neve	-12.1	-67.36	-3.65
52	52	77	Q_manutenzione	-0.12	-23.01	-1.63
52	52	79	Q_manutenzione	0.38	-8.17	-1.4
52	52	80	Q_manutenzione	1.75	-13.14	-1.73
52	52	78	Q_manutenzione	-3.54	-19.55	-1.95
52	52	77	EQ_X	46.29	204.	110.53
52	52	79	EQ_X	-86.84	87.32	149.22
52	52	80	EQ_X	574.25	137.03	80.12
52	52	78	EQ_X	143.5	67.19	41.43
52	52	77	EQ_Y	-4.5	71.47	65.67
52	52	79	EQ_Y	23.42	509.19	137.53
52	52	80	EQ_Y	211.82	196.	122.
52	52	78	EQ_Y	29.43	118.47	50.14
53	53	79	DEAD	6.133E-12	-8.520E-11	7.944E-12
53	53	10	DEAD	3.194E-12	-2.222E-11	1.098E-11
53	53	9	DEAD	-2.496E-11	-4.046E-11	2.008E-11
53	53	80	DEAD	-3.632E-12	-7.455E-11	1.704E-11
53	53	79	G1_power station	0.	0.	0.
53	53	10	G1_power station	0.	0.	0.
53	53	9	G1_power station	0.	0.	0.
53	53	80	G1_power station	0.	0.	0.
53	53	79	G2_power station	13.83	-203.46	26.43
53	53	10	G2_power station	-21.99	215.37	7.3
53	53	9	G2_power station	617.26	616.68	-47.12
53	53	80	G2_power station	42.84	-377.43	-28.
53	53	79	Q_power station	0.51	-7.53	0.98
53	53	10	Q_power station	-0.81	7.97	0.27
53	53	9	Q_power station	22.84	22.82	-1.74
53	53	80	Q_power station	1.59	-13.96	-1.04
53	53	79	Q_neve	1.25	-31.62	4.06
53	53	10	Q_neve	-2.06	12.7	2.5
53	53	9	Q_neve	52.23	48.8	-1.77
53	53	80	Q_neve	0.28	-49.43	-0.22
53	53	79	Q_manutenzione	0.51	-7.53	0.98
53	53	10	Q_manutenzione	-0.81	7.97	0.27
53	53	9	Q_manutenzione	22.84	22.82	-1.74
53	53	80	Q_manutenzione	1.59	-13.96	-1.04
53	53	79	EQ_X	-88.9	77.05	-22.05
53	53	10	EQ_X	191.69	-314.34	-52.03
53	53	9	EQ_X	-1248.67	-347.45	248.32
53	53	80	EQ_X	574.29	137.24	278.3
53	53	79	EQ_Y	71.	747.07	223.34
53	53	10	EQ_Y	-160.83	-672.67	-144.41

Table 21: Element Stresses - Area Shells, Part 2 of 3

Area	AreaElem	Joint	OutputCase	S11Bot	S22Bot	S12Bot
				KN/m2	KN/m2	KN/m2
53	53	9	EQ_Y	293.47	1995.66	-111.25
53	53	80	EQ_Y	160.97	-58.24	256.5
54	54	60	DEAD	4.553E-12	3.095E-12	-9.930E-13
54	54	6	DEAD	-3.627E-13	3.664E-12	-1.751E-12
54	54	81	DEAD	1.176E-11	1.409E-11	-2.510E-12
54	54	82	DEAD	-4.344E-12	-4.868E-12	-1.751E-12
54	54	60	G1_power station	0.	0.	0.
54	54	6	G1_power station	0.	0.	0.
54	54	81	G1_power station	0.	0.	0.
54	54	82	G1_power station	0.	0.	0.
54	54	60	G2_power station	253.92	-21.56	-1.281E-02
54	54	6	G2_power station	662.09	620.38	56.64
54	54	81	G2_power station	-224.66	118.44	48.27
54	54	82	G2_power station	-12.04	12.89	-8.37
54	54	60	Q_power station	9.39	-0.8	-4.739E-04
54	54	6	Q_power station	24.5	22.95	2.1
54	54	81	Q_power station	-8.31	4.38	1.79
54	54	82	Q_power station	-0.45	0.48	-0.31
54	54	60	Q_neve	19.38	-1.98	-1.79
54	54	6	Q_neve	56.49	51.41	3.13
54	54	81	Q_neve	-28.26	5.28	2.2
54	54	82	Q_neve	-7.79	1.16	-2.73
54	54	60	Q_manutenzione	9.39	-0.8	-4.739E-04
54	54	6	Q_manutenzione	24.5	22.95	2.1
54	54	81	Q_manutenzione	-8.31	4.38	1.79
54	54	82	Q_manutenzione	-0.45	0.48	-0.31
54	54	60	EQ_X	532.69	146.28	-179.6
54	54	6	EQ_X	-1964.1	-292.47	-146.58
54	54	81	EQ_X	-204.98	-206.36	184.23
54	54	82	EQ_X	-873.57	-62.62	151.21
54	54	60	EQ_Y	-364.54	219.96	35.95
54	54	6	EQ_Y	-375.83	-1474.61	-333.43
54	54	81	EQ_Y	88.52	532.07	-377.02
54	54	82	EQ_Y	-12.68	-125.98	-7.64
55	55	82	DEAD	1.273E-12	-1.706E-12	-4.582E-12
55	55	81	DEAD	5.352E-12	1.203E-11	-2.307E-12
55	55	83	DEAD	9.236E-12	1.706E-12	-1.548E-12
55	55	84	DEAD	1.369E-11	-8.636E-13	-3.823E-12
55	55	82	G1_power station	0.	0.	0.
55	55	81	G1_power station	0.	0.	0.
55	55	83	G1_power station	0.	0.	0.
55	55	84	G1_power station	0.	0.	0.
55	55	82	G2_power station	-30.14	9.27	66.12

Table 21: Element Stresses - Area Shells, Part 2 of 3

Area	AreaElem	Joint	OutputCase	S11Bot	S22Bot	S12Bot
				KN/m2	KN/m2	KN/m2
55	55	81	G2_power station	-205.01	122.37	85.26
55	55	83	G2_power station	-350.5	-45.43	114.89
55	55	84	G2_power station	-375.9	-1.21	95.76
55	55	82	Q_power station	-1.12	0.34	2.45
55	55	81	Q_power station	-7.59	4.53	3.15
55	55	83	Q_power station	-12.97	-1.68	4.25
55	55	84	Q_power station	-13.91	-4.493E-02	3.54
55	55	82	Q_neve	-9.48	0.83	3.96
55	55	81	Q_neve	-26.47	5.64	5.6
55	55	83	Q_neve	-41.86	-10.04	8.3
55	55	84	Q_neve	-42.95	-0.12	6.66
55	55	82	Q_manutenzione	-1.12	0.34	2.45
55	55	81	Q_manutenzione	-7.59	4.53	3.15
55	55	83	Q_manutenzione	-12.97	-1.68	4.25
55	55	84	Q_manutenzione	-13.91	-4.493E-02	3.54
55	55	82	EQ_X	-677.22	-23.35	108.58
55	55	81	EQ_X	-383.27	-242.02	81.94
55	55	83	EQ_X	-347.51	-68.9	14.06
55	55	84	EQ_X	-368.1	-0.52	40.7
55	55	82	EQ_Y	1.21	-123.2	-235.74
55	55	81	EQ_Y	93.12	532.99	-153.28
55	55	83	EQ_Y	30.28	35.03	-135.17
55	55	84	EQ_Y	130.62	60.74	-217.63
56	56	84	DEAD	1.105E-11	-1.327E-12	-1.837E-12
56	56	83	DEAD	1.957E-11	4.017E-12	-3.205E-13
56	56	85	DEAD	-4.211E-12	-2.559E-12	2.713E-12
56	56	86	DEAD	2.175E-11	-1.007E-12	1.196E-12
56	56	84	G1_power station	0.	0.	0.
56	56	83	G1_power station	0.	0.	0.
56	56	85	G1_power station	0.	0.	0.
56	56	86	G1_power station	0.	0.	0.
56	56	84	G2_power station	-361.56	1.65	101.6
56	56	83	G2_power station	-361.35	-47.6	104.45
56	56	85	G2_power station	-400.18	-79.81	93.18
56	56	86	G2_power station	-436.4	-0.8	90.33
56	56	84	Q_power station	-13.38	6.118E-02	3.76
56	56	83	Q_power station	-13.37	-1.76	3.86
56	56	85	Q_power station	-14.81	-2.95	3.45
56	56	86	Q_power station	-16.15	-2.965E-02	3.34
56	56	84	Q_neve	-41.64	0.14	7.13
56	56	83	Q_neve	-42.84	-10.24	7.43
56	56	85	Q_neve	-46.8	-13.51	6.38
56	56	86	Q_neve	-49.02	-8.823E-02	6.08

Table 21: Element Stresses - Area Shells, Part 2 of 3

Area	AreaElem	Joint	OutputCase	S11Bot	S22Bot	S12Bot
				KN/m2	KN/m2	KN/m2
56	56	84	Q_manutenzione	-13.38	6.118E-02	3.76
56	56	83	Q_manutenzione	-13.37	-1.76	3.86
56	56	85	Q_manutenzione	-14.81	-2.95	3.45
56	56	86	Q_manutenzione	-16.15	-2.965E-02	3.34
56	56	84	EQ_X	-382.98	-3.5	3.76
56	56	83	EQ_X	-337.46	-66.89	2.93
56	56	85	EQ_X	-245.02	-24.03	-10.69
56	56	86	EQ_X	-255.79	-0.35	-9.86
56	56	84	EQ_Y	138.19	62.26	-149.63
56	56	83	EQ_Y	37.27	36.42	-148.91
56	56	85	EQ_Y	74.65	113.18	-123.28
56	56	86	EQ_Y	131.21	-1.25	-123.99
57	57	86	DEAD	2.023E-11	-6.003E-13	7.764E-12
57	57	85	DEAD	4.172E-12	-2.081E-12	5.489E-12
57	57	87	DEAD	2.033E-11	8.974E-12	6.247E-12
57	57	88	DEAD	2.560E-12	-1.038E-12	8.522E-12
57	57	86	G1_power station	0.	0.	0.
57	57	85	G1_power station	0.	0.	0.
57	57	87	G1_power station	0.	0.	0.
57	57	88	G1_power station	0.	0.	0.
57	57	86	G2_power station	-433.89	-0.3	73.16
57	57	85	G2_power station	-401.86	-80.15	76.07
57	57	87	G2_power station	-366.22	-80.48	57.12
57	57	88	G2_power station	-406.36	0.52	54.22
57	57	86	Q_power station	-16.05	-1.108E-02	2.71
57	57	85	Q_power station	-14.87	-2.97	2.81
57	57	87	Q_power station	-13.55	-2.98	2.11
57	57	88	Q_power station	-15.04	1.915E-02	2.01
57	57	86	Q_neve	-48.78	-3.917E-02	4.41
57	57	85	Q_neve	-46.96	-13.54	4.8
57	57	87	Q_neve	-42.95	-13.86	2.98
57	57	88	Q_neve	-45.7	5.990E-02	2.59
57	57	86	Q_manutenzione	-16.05	-1.108E-02	2.71
57	57	85	Q_manutenzione	-14.87	-2.97	2.81
57	57	87	Q_manutenzione	-13.55	-2.98	2.11
57	57	88	Q_manutenzione	-15.04	1.915E-02	2.01
57	57	86	EQ_X	-260.32	-1.25	-19.21
57	57	85	EQ_X	-244.08	-23.84	-16.18
57	57	87	EQ_X	-174.03	-6.54	-20.77
57	57	88	EQ_X	-177.81	-0.26	-23.8
57	57	86	EQ_Y	139.56	0.41	-104.14
57	57	85	EQ_Y	80.68	114.39	-95.82
57	57	87	EQ_Y	81.17	66.23	-73.86

Table 21: Element Stresses - Area Shells, Part 2 of 3

Area	AreaElem	Joint	OutputCase	S11Bot	S22Bot	S12Bot
				KN/m2	KN/m2	KN/m2
57	57	88	EQ_Y	136.59	18.91	-82.18
58	58	88	DEAD	9.373E-12	-2.861E-12	6.130E-12
58	58	87	DEAD	1.056E-11	9.718E-12	6.888E-12
58	58	89	DEAD	2.832E-12	8.360E-13	6.130E-12
58	58	90	DEAD	-2.620E-12	-1.563E-12	5.372E-12
58	58	88	G1_power station	0.	0.	0.
58	58	87	G1_power station	0.	0.	0.
58	58	89	G1_power station	0.	0.	0.
58	58	90	G1_power station	0.	0.	0.
58	58	88	G2_power station	-405.56	0.68	33.37
58	58	87	G2_power station	-366.69	-80.58	37.49
58	58	89	G2_power station	-307.29	-72.69	15.96
58	58	90	G2_power station	-356.77	-2.78	11.84
58	58	88	Q_power station	-15.01	2.506E-02	1.23
58	58	87	Q_power station	-13.57	-2.98	1.39
58	58	89	Q_power station	-11.37	-2.69	0.59
58	58	90	Q_power station	-13.2	-0.1	0.44
58	58	88	Q_neve	-45.61	7.766E-02	0.52
58	58	87	Q_neve	-42.99	-13.87	1.07
58	58	89	Q_neve	-36.03	-13.19	-1.08
58	58	90	Q_neve	-39.86	-0.32	-1.62
58	58	88	Q_manutenzione	-15.01	2.506E-02	1.23
58	58	87	Q_manutenzione	-13.57	-2.98	1.39
58	58	89	Q_manutenzione	-11.37	-2.69	0.59
58	58	90	Q_manutenzione	-13.2	-0.1	0.44
58	58	88	EQ_X	-181.88	-1.08	-26.12
58	58	87	EQ_X	-173.32	-6.4	-22.83
58	58	89	EQ_X	-124.11	0.73	-24.15
58	58	90	EQ_X	-128.86	-1.1	-27.44
58	58	88	EQ_Y	148.67	21.33	-59.45
58	58	87	EQ_Y	83.3	66.66	-58.09
58	58	89	EQ_Y	82.31	64.83	-39.55
58	58	90	EQ_Y	142.88	16.04	-40.92
59	59	90	DEAD	1.990E-12	-1.134E-12	4.801E-12
59	59	89	DEAD	5.613E-12	1.500E-12	4.320E-12
59	59	91	DEAD	5.782E-12	1.900E-12	1.767E-12
59	59	92	DEAD	-1.782E-12	3.207E-12	3.562E-12
59	59	90	G1_power station	0.	0.	0.
59	59	89	G1_power station	0.	0.	0.
59	59	91	G1_power station	0.	0.	0.
59	59	92	G1_power station	0.	0.	0.
59	59	90	G2_power station	-354.4	-2.31	-11.45
59	59	89	G2_power station	-308.01	-72.83	-8.18

Table 21: Element Stresses - Area Shells, Part 2 of 3

Area	AreaElem	Joint	OutputCase	S11Bot	S22Bot	S12Bot
				KN/m2	KN/m2	KN/m2
59	59	91	G2_power station	-277.43	-94.91	-38.95
59	59	92	G2_power station	-365.42	9.99	-42.22
59	59	90	Q_power station	-13.11	-8.545E-02	-0.42
59	59	89	Q_power station	-11.4	-2.69	-0.3
59	59	91	Q_power station	-10.26	-3.51	-1.44
59	59	92	Q_power station	-13.52	0.37	-1.56
59	59	90	Q_neve	-39.66	-0.28	-3.9
59	59	89	Q_neve	-36.05	-13.2	-3.59
59	59	91	Q_neve	-31.57	-15.02	-6.64
59	59	92	Q_neve	-38.94	1.26	-6.96
59	59	90	Q_manutenzione	-13.11	-8.545E-02	-0.42
59	59	89	Q_manutenzione	-11.4	-2.69	-0.3
59	59	91	Q_manutenzione	-10.26	-3.51	-1.44
59	59	92	Q_manutenzione	-13.52	0.37	-1.56
59	59	90	EQ_X	-134.74	-2.28	-25.99
59	59	89	EQ_X	-121.63	1.23	-27.36
59	59	91	EQ_X	-91.76	15.25	-28.34
59	59	92	EQ_X	-105.51	1.56	-26.97
59	59	90	EQ_Y	166.3	20.73	-19.18
59	59	89	EQ_Y	76.99	63.77	-22.35
59	59	91	EQ_Y	72.57	88.9	2.37
59	59	92	EQ_Y	171.07	26.03	5.54
60	60	92	DEAD	-8.661E-13	4.710E-12	1.173E-13
60	60	91	DEAD	-4.343E-13	4.901E-13	2.392E-12
60	60	26	DEAD	1.023E-11	-1.262E-12	1.634E-12
60	60	27	DEAD	4.211E-12	-1.311E-12	-6.411E-13
60	60	92	G1_power station	0.	0.	0.
60	60	91	G1_power station	0.	0.	0.
60	60	26	G1_power station	0.	0.	0.
60	60	27	G1_power station	0.	0.	0.
60	60	92	G2_power station	-363.27	10.42	-68.76
60	60	91	G2_power station	-268.76	-93.17	-97.11
60	60	26	G2_power station	-387.28	-16.09	-157.65
60	60	27	G2_power station	-606.34	-20.37	-129.29
60	60	92	Q_power station	-13.44	0.39	-2.54
60	60	91	Q_power station	-9.94	-3.45	-3.59
60	60	26	Q_power station	-14.33	-0.6	-5.83
60	60	27	Q_power station	-22.43	-0.75	-4.78
60	60	92	Q_neve	-39.04	1.24	-9.1
60	60	91	Q_neve	-30.36	-14.78	-12.74
60	60	26	Q_neve	-41.52	-2.11	-18.07
60	60	27	Q_neve	-59.08	-2.44	-14.43
60	60	92	Q_manutenzione	-13.44	0.39	-2.54

Table 21: Element Stresses - Area Shells, Part 2 of 3

Area	AreaElem	Joint	OutputCase	S11Bot	S22Bot	S12Bot
				KN/m2	KN/m2	KN/m2
60	60	91	Q_manutenzione	-9.94	-3.45	-3.59
60	60	26	Q_manutenzione	-14.33	-0.6	-5.83
60	60	27	Q_manutenzione	-22.43	-0.75	-4.78
60	60	92	EQ_X	-117.45	-0.82	-25.93
60	60	91	EQ_X	-81.97	17.2	-30.42
60	60	26	EQ_X	-98.15	59.21	-26.1
60	60	27	EQ_X	-110.76	-7.88	-21.62
60	60	92	EQ_Y	224.07	36.63	34.81
60	60	91	EQ_Y	43.82	83.15	24.77
60	60	26	EQ_Y	29.45	55.03	49.13
60	60	27	EQ_Y	257.4	8.53	59.17
61	61	65	DEAD	8.311E-12	-4.842E-12	7.123E-12
61	61	5	DEAD	3.427E-12	4.703E-12	7.123E-12
61	61	93	DEAD	6.326E-14	-5.763E-13	8.640E-12
61	61	94	DEAD	6.779E-13	5.828E-14	8.640E-12
61	61	65	G1_power station	0.	0.	0.
61	61	5	G1_power station	0.	0.	0.
61	61	93	G1_power station	0.	0.	0.
61	61	94	G1_power station	0.	0.	0.
61	61	65	G2_power station	243.1	-22.24	-31.37
61	61	5	G2_power station	687.36	593.78	27.03
61	61	93	G2_power station	-153.48	125.61	7.95
61	61	94	G2_power station	30.14	10.93	-50.45
61	61	65	Q_power station	8.99	-0.82	-1.16
61	61	5	Q_power station	25.43	21.97	1.
61	61	93	Q_power station	-5.68	4.65	0.29
61	61	94	Q_power station	1.12	0.4	-1.87
61	61	65	Q_neve	17.99	-2.03	-5.64
61	61	5	Q_neve	59.09	47.83	-0.5
61	61	93	Q_neve	-20.24	5.04	-2.73
61	61	94	Q_neve	-3.33	0.9	-7.87
61	61	65	Q_manutenzione	8.99	-0.82	-1.16
61	61	5	Q_manutenzione	25.43	21.97	1.
61	61	93	Q_manutenzione	-5.68	4.65	0.29
61	61	94	Q_manutenzione	1.12	0.4	-1.87
61	61	65	EQ_X	-591.02	-158.75	214.04
61	61	5	EQ_X	1986.11	305.85	172.58
61	61	93	EQ_X	235.26	238.56	-145.84
61	61	94	EQ_X	845.26	55.46	-104.39
61	61	65	EQ_Y	375.15	-232.01	-61.31
61	61	5	EQ_Y	387.44	1532.09	349.44
61	61	93	EQ_Y	-77.39	-538.87	392.38
61	61	94	EQ_Y	58.65	156.35	-18.38

Table 21: Element Stresses - Area Shells, Part 2 of 3

Area	AreaElem	Joint	OutputCase	S11Bot	S22Bot	S12Bot
				KN/m2	KN/m2	KN/m2
62	62	94	DEAD	-3.177E-13	-1.588E-12	7.326E-12
62	62	93	DEAD	1.425E-11	3.324E-12	8.085E-12
62	62	95	DEAD	-8.864E-13	-4.432E-12	5.809E-12
62	62	96	DEAD	-3.485E-13	3.134E-12	5.051E-12
62	62	94	G1_power station	0.	0.	0.
62	62	93	G1_power station	0.	0.	0.
62	62	95	G1_power station	0.	0.	0.
62	62	96	G1_power station	0.	0.	0.
62	62	94	G2_power station	13.56	7.61	14.
62	62	93	G2_power station	-134.11	129.49	26.39
62	62	95	G2_power station	-299.57	-34.15	41.78
62	62	96	G2_power station	-369.65	13.93	29.39
62	62	94	Q_power station	0.5	0.28	0.52
62	62	93	Q_power station	-4.96	4.79	0.98
62	62	95	Q_power station	-11.08	-1.26	1.55
62	62	96	Q_power station	-13.68	0.52	1.09
62	62	94	Q_neve	-4.88	0.59	-2.37
62	62	93	Q_neve	-18.44	5.4	-1.48
62	62	95	Q_neve	-34.47	-9.51	-0.49
62	62	96	Q_neve	-40.79	1.69	-1.38
62	62	94	Q_manutenzione	0.5	0.28	0.52
62	62	93	Q_manutenzione	-4.96	4.79	0.98
62	62	95	Q_manutenzione	-11.08	-1.26	1.55
62	62	96	Q_manutenzione	-13.68	0.52	1.09
62	62	94	EQ_X	673.85	21.17	-83.22
62	62	93	EQ_X	395.23	270.55	-42.15
62	62	95	EQ_X	369.29	91.92	33.49
62	62	96	EQ_X	456.31	-18.23	-7.58
62	62	94	EQ_Y	70.6	158.74	237.1
62	62	93	EQ_Y	-98.79	-543.15	152.81
62	62	95	EQ_Y	-23.15	-44.19	145.45
62	62	96	EQ_Y	-48.47	-46.46	229.74
63	63	96	DEAD	1.164E-11	7.346E-12	7.444E-12
63	63	95	DEAD	-2.319E-12	-7.301E-12	6.685E-12
63	63	25	DEAD	1.041E-11	5.735E-12	7.444E-12
63	63	28	DEAD	-2.224E-12	-2.277E-12	8.202E-12
63	63	96	G1_power station	0.	0.	0.
63	63	95	G1_power station	0.	0.	0.
63	63	25	G1_power station	0.	0.	0.
63	63	28	G1_power station	0.	0.	0.
63	63	96	G2_power station	-357.23	16.41	35.24
63	63	95	G2_power station	-298.3	-33.9	-8.59
63	63	25	G2_power station	-475.1	74.68	-58.48

Table 21: Element Stresses - Area Shells, Part 2 of 3

Area	AreaElem	Joint	OutputCase	S11Bot	S22Bot	S12Bot
				KN/m2	KN/m2	KN/m2
63	63	28	G2_power station	-726.97	-33.16	-14.65
63	63	96	Q_power station	-13.22	0.61	1.3
63	63	95	Q_power station	-11.04	-1.25	-0.32
63	63	25	Q_power station	-17.58	2.76	-2.16
63	63	28	Q_power station	-26.9	-1.23	-0.54
63	63	96	Q_neve	-39.94	1.86	-0.74
63	63	95	Q_neve	-33.92	-9.4	-6.07
63	63	25	Q_neve	-52.26	6.32	-10.7
63	63	28	Q_neve	-73.77	-3.82	-5.36
63	63	96	Q_manutenzione	-13.22	0.61	1.3
63	63	95	Q_manutenzione	-11.04	-1.25	-0.32
63	63	25	Q_manutenzione	-17.58	2.76	-2.16
63	63	28	Q_manutenzione	-26.9	-1.23	-0.54
63	63	96	EQ_X	462.3	-17.03	38.83
63	63	95	EQ_X	359.84	90.03	84.92
63	63	25	EQ_X	457.05	-71.54	131.43
63	63	28	EQ_X	561.31	34.47	85.34
63	63	96	EQ_Y	2.7	-36.23	178.71
63	63	95	EQ_Y	-75.04	-54.57	156.28
63	63	25	EQ_Y	-51.72	-139.75	115.76
63	63	28	EQ_Y	13.57	-5.35	138.2
64	64	6	DEAD	9.646E-13	5.961E-12	-4.144E-12
64	64	40	DEAD	-1.076E-12	1.912E-12	0.
64	64	97	DEAD	-3.626E-13	-2.950E-12	-1.110E-12
64	64	81	DEAD	9.067E-12	2.576E-12	0.
64	64	6	G1_power station	0.	0.	0.
64	64	40	G1_power station	0.	0.	0.
64	64	97	G1_power station	0.	0.	0.
64	64	81	G1_power station	0.	0.	0.
64	64	6	G2_power station	663.97	629.77	149.61
64	64	40	G2_power station	59.96	-363.36	181.17
64	64	97	G2_power station	-122.85	-195.05	225.79
64	64	81	G2_power station	-225.9	112.24	194.23
64	64	6	Q_power station	24.57	23.3	5.54
64	64	40	Q_power station	2.22	-13.44	6.7
64	64	97	Q_power station	-4.55	-7.22	8.35
64	64	81	Q_power station	-8.36	4.15	7.19
64	64	6	Q_neve	56.66	52.27	11.45
64	64	40	Q_neve	1.55	-43.86	14.52
64	64	97	Q_neve	-20.92	-30.93	18.46
64	64	81	Q_neve	-28.37	4.73	15.39
64	64	6	Q_manutenzione	24.57	23.3	5.54
64	64	40	Q_manutenzione	2.22	-13.44	6.7

Table 21: Element Stresses - Area Shells, Part 2 of 3

Area	AreaElem	Joint	OutputCase	S11Bot	S22Bot	S12Bot
				KN/m2	KN/m2	KN/m2
64	64	97	Q_manutenzione	-4.55	-7.22	8.35
64	64	81	Q_manutenzione	-8.36	4.15	7.19
64	64	6	EQ_X	-1964.96	-296.76	257.46
64	64	40	EQ_X	201.21	35.33	283.37
64	64	97	EQ_X	-578.38	2.86	-37.79
64	64	81	EQ_X	-205.95	-211.21	-63.7
64	64	6	EQ_Y	307.9	1944.05	-304.77
64	64	40	EQ_Y	174.25	-24.5	83.02
64	64	97	EQ_Y	17.85	484.67	52.68
64	64	81	EQ_Y	-69.55	-258.28	-335.11
65	65	81	DEAD	9.289E-12	4.729E-12	2.619E-13
65	65	97	DEAD	7.077E-12	-1.174E-12	-9.773E-13
65	65	98	DEAD	2.369E-12	-2.955E-13	-2.013E-12
65	65	83	DEAD	6.223E-12	5.936E-12	5.395E-13
65	65	81	G1_power station	0.	0.	0.
65	65	97	G1_power station	0.	0.	0.
65	65	98	G1_power station	0.	0.	0.
65	65	83	G1_power station	0.	0.	0.
65	65	81	G2_power station	-206.25	116.17	165.74
65	65	97	G2_power station	-131.97	-196.88	183.41
65	65	98	G2_power station	-331.57	-181.07	149.52
65	65	83	G2_power station	-350.16	-43.75	131.85
65	65	81	Q_power station	-7.63	4.3	6.13
65	65	97	Q_power station	-4.88	-7.28	6.79
65	65	98	Q_power station	-12.27	-6.7	5.53
65	65	83	Q_power station	-12.96	-1.62	4.88
65	65	81	Q_neve	-26.58	5.09	12.88
65	65	97	Q_neve	-21.74	-31.09	14.71
65	65	98	Q_neve	-42.15	-31.06	11.75
65	65	83	Q_neve	-41.82	-9.88	9.92
65	65	81	Q_manutenzione	-7.63	4.3	6.13
65	65	97	Q_manutenzione	-4.88	-7.28	6.79
65	65	98	Q_manutenzione	-12.27	-6.7	5.53
65	65	83	Q_manutenzione	-12.96	-1.62	4.88
65	65	81	EQ_X	-384.24	-246.87	-26.92
65	65	97	EQ_X	-478.8	22.78	-44.14
65	65	98	EQ_X	-307.85	-40.18	-19.06
65	65	83	EQ_X	-347.08	-66.72	-1.84
65	65	81	EQ_Y	-64.95	-257.36	-128.09
65	65	97	EQ_Y	20.73	485.24	-142.44
65	65	98	EQ_Y	-8.21	109.9	-127.99
65	65	83	EQ_Y	67.69	222.11	-113.64
66	66	83	DEAD	2.454E-11	9.241E-12	7.741E-13

Table 21: Element Stresses - Area Shells, Part 2 of 3

Area	AreaElem	Joint	OutputCase	S11Bot	S22Bot	S12Bot
				KN/m2	KN/m2	KN/m2
66	66	98	DEAD	2.011E-12	1.094E-12	1.052E-12
66	66	99	DEAD	1.032E-11	-4.288E-13	2.291E-12
66	66	85	DEAD	-7.374E-12	-3.279E-13	3.327E-12
66	66	83	G1_power station	0.	0.	0.
66	66	98	G1_power station	0.	0.	0.
66	66	99	G1_power station	0.	0.	0.
66	66	85	G1_power station	0.	0.	0.
66	66	83	G2_power station	-361.02	-45.92	118.
66	66	98	G2_power station	-326.12	-179.98	118.34
66	66	99	G2_power station	-363.32	-162.67	97.01
66	66	85	G2_power station	-400.21	-79.96	96.67
66	66	83	Q_power station	-13.36	-1.7	4.37
66	66	98	Q_power station	-12.07	-6.66	4.38
66	66	99	Q_power station	-13.44	-6.02	3.59
66	66	85	Q_power station	-14.81	-2.96	3.58
66	66	83	Q_neve	-42.81	-10.07	8.75
66	66	98	Q_neve	-41.67	-30.96	9.03
66	66	99	Q_neve	-45.33	-30.26	7.15
66	66	85	Q_neve	-46.81	-13.53	6.87
66	66	83	Q_manutenzione	-13.36	-1.7	4.37
66	66	98	Q_manutenzione	-12.07	-6.66	4.38
66	66	99	Q_manutenzione	-13.44	-6.02	3.59
66	66	85	Q_manutenzione	-14.81	-2.96	3.58
66	66	83	EQ_X	-337.03	-64.71	-10.2
66	66	98	EQ_X	-322.06	-43.02	-16.75
66	66	99	EQ_X	-237.15	-15.6	-20.65
66	66	85	EQ_X	-245.25	-25.2	-14.1
66	66	83	EQ_Y	74.68	223.51	-122.21
66	66	98	EQ_Y	-8.52	109.84	-83.24
66	66	99	EQ_Y	31.05	117.63	-65.67
66	66	85	EQ_Y	66.07	70.26	-104.64
67	67	85	DEAD	6.540E-12	4.233E-12	2.744E-12
67	67	99	DEAD	-2.984E-12	-3.266E-12	2.744E-12
67	67	100	DEAD	9.004E-12	5.181E-12	4.261E-12
67	67	87	DEAD	1.787E-11	5.455E-12	4.261E-12
67	67	85	G1_power station	0.	0.	0.
67	67	99	G1_power station	0.	0.	0.
67	67	100	G1_power station	0.	0.	0.
67	67	87	G1_power station	0.	0.	0.
67	67	85	G2_power station	-401.89	-80.3	78.35
67	67	99	G2_power station	-363.45	-162.7	75.04
67	67	100	G2_power station	-328.08	-135.15	55.78
67	67	87	G2_power station	-366.02	-79.5	59.08

Table 21: Element Stresses - Area Shells, Part 2 of 3

Area	AreaElem	Joint	OutputCase	S11Bot	S22Bot	S12Bot
				KN/m2	KN/m2	KN/m2
67	67	85	Q_power station	-14.87	-2.97	2.9
67	67	99	Q_power station	-13.45	-6.02	2.78
67	67	100	Q_power station	-12.14	-5.	2.06
67	67	87	Q_power station	-13.54	-2.94	2.19
67	67	85	Q_neve	-46.96	-13.56	5.19
67	67	99	Q_neve	-45.34	-30.26	5.18
67	67	100	Q_neve	-41.06	-28.37	3.38
67	67	87	Q_neve	-42.93	-13.75	3.39
67	67	85	Q_manutenzione	-14.87	-2.97	2.9
67	67	99	Q_manutenzione	-13.45	-6.02	2.78
67	67	100	Q_manutenzione	-12.14	-5.	2.06
67	67	87	Q_manutenzione	-13.54	-2.94	2.19
67	67	85	EQ_X	-244.31	-25.01	-19.04
67	67	99	EQ_X	-237.56	-15.69	-18.87
67	67	100	EQ_X	-170.44	-5.35	-19.62
67	67	87	EQ_X	-174.21	-7.48	-19.79
67	67	85	EQ_Y	72.1	71.47	-77.52
67	67	99	EQ_Y	29.8	117.38	-66.39
67	67	100	EQ_Y	35.61	74.91	-55.
67	67	87	EQ_Y	84.03	80.53	-66.12
68	68	87	DEAD	5.588E-12	3.581E-12	7.647E-12
68	68	100	DEAD	5.548E-12	3.439E-12	5.372E-12
68	68	101	DEAD	1.592E-11	1.202E-11	4.613E-12
68	68	89	DEAD	5.453E-12	2.965E-12	6.888E-12
68	68	87	G1_power station	0.	0.	0.
68	68	100	G1_power station	0.	0.	0.
68	68	101	G1_power station	0.	0.	0.
68	68	89	G1_power station	0.	0.	0.
68	68	87	G2_power station	-366.49	-79.59	39.11
68	68	100	G2_power station	-328.1	-135.16	38.53
68	68	101	G2_power station	-259.56	-109.59	19.15
68	68	89	G2_power station	-308.22	-77.32	19.72
68	68	87	Q_power station	-13.56	-2.94	1.45
68	68	100	Q_power station	-12.14	-5.	1.43
68	68	101	Q_power station	-9.6	-4.05	0.71
68	68	89	Q_power station	-11.4	-2.86	0.73
68	68	87	Q_neve	-42.96	-13.76	1.44
68	68	100	Q_neve	-41.06	-28.37	1.69
68	68	101	Q_neve	-32.78	-26.5	-0.3
68	68	89	Q_neve	-36.13	-13.69	-0.55
68	68	87	Q_manutenzione	-13.56	-2.94	1.45
68	68	100	Q_manutenzione	-12.14	-5.	1.43
68	68	101	Q_manutenzione	-9.6	-4.05	0.71

Table 21: Element Stresses - Area Shells, Part 2 of 3

Area	AreaElem	Joint	OutputCase	S11Bot	S22Bot	S12Bot
				KN/m2	KN/m2	KN/m2
68	68	89	Q_manutenzione	-11.4	-2.86	0.73
68	68	87	EQ_X	-173.51	-7.34	-21.54
68	68	100	EQ_X	-168.6	-4.98	-19.65
68	68	101	EQ_X	-115.94	-1.61	-21.21
68	68	89	EQ_X	-123.96	1.49	-23.11
68	68	87	EQ_Y	86.16	80.95	-50.69
68	68	100	EQ_Y	33.09	74.41	-45.98
68	68	101	EQ_Y	36.41	72.56	-32.32
68	68	89	EQ_Y	84.55	76.04	-37.03
69	69	89	DEAD	4.608E-12	3.420E-12	3.065E-12
69	69	101	DEAD	7.362E-12	1.058E-11	5.895E-12
69	69	102	DEAD	9.348E-12	1.119E-11	3.065E-12
69	69	91	DEAD	3.475E-12	2.519E-13	2.862E-12
69	69	89	G1_power station	0.	0.	0.
69	69	101	G1_power station	0.	0.	0.
69	69	102	G1_power station	0.	0.	0.
69	69	91	G1_power station	0.	0.	0.
69	69	89	G2_power station	-308.93	-77.47	-2.88
69	69	101	G2_power station	-259.22	-109.53	-1.62
69	69	102	G2_power station	-180.09	-90.73	-29.89
69	69	91	G2_power station	-274.22	-78.87	-31.15
69	69	89	Q_power station	-11.43	-2.87	-0.11
69	69	101	Q_power station	-9.59	-4.05	-5.979E-02
69	69	102	Q_power station	-6.66	-3.36	-1.11
69	69	91	Q_power station	-10.15	-2.92	-1.15
69	69	89	Q_neve	-36.15	-13.69	-2.89
69	69	101	Q_neve	-32.76	-26.5	-2.61
69	69	102	Q_neve	-22.31	-24.99	-5.8
69	69	91	Q_neve	-31.22	-13.31	-6.08
69	69	89	Q_manutenzione	-11.43	-2.87	-0.11
69	69	101	Q_manutenzione	-9.59	-4.05	-5.979E-02
69	69	102	Q_manutenzione	-6.66	-3.36	-1.11
69	69	91	Q_manutenzione	-10.15	-2.92	-1.15
69	69	89	EQ_X	-121.48	1.99	-25.69
69	69	101	EQ_X	-113.71	-1.16	-23.29
69	69	102	EQ_X	-66.87	7.96	-27.46
69	69	91	EQ_X	-94.16	3.24	-29.86
69	69	89	EQ_Y	79.23	74.98	-19.88
69	69	101	EQ_Y	27.37	70.75	-27.94
69	69	102	EQ_Y	25.49	83.32	-23.84
69	69	91	EQ_Y	70.81	80.06	-15.78
70	70	91	DEAD	1.389E-14	-2.480E-13	1.314E-12
70	70	102	DEAD	7.675E-12	1.047E-11	5.552E-13

Table 21: Element Stresses - Area Shells, Part 2 of 3

Area	AreaElem	Joint	OutputCase	S11Bot	S22Bot	S12Bot
				KN/m2	KN/m2	KN/m2
70	70	103	DEAD	7.977E-12	9.990E-12	1.314E-12
70	70	26	DEAD	1.279E-11	6.493E-12	2.072E-12
70	70	91	G1_power station	0.	0.	0.
70	70	102	G1_power station	0.	0.	0.
70	70	103	G1_power station	0.	0.	0.
70	70	26	G1_power station	0.	0.	0.
70	70	91	G2_power station	-265.55	-77.14	-88.75
70	70	102	G2_power station	-195.16	-93.74	-59.72
70	70	103	G2_power station	93.41	-155.77	-167.6
70	70	26	G2_power station	-405.93	-109.35	-196.63
70	70	91	Q_power station	-9.83	-2.85	-3.28
70	70	102	Q_power station	-7.22	-3.47	-2.21
70	70	103	Q_power station	3.46	-5.76	-6.2
70	70	26	Q_power station	-15.02	-4.05	-7.28
70	70	91	Q_neve	-30.02	-13.07	-12.35
70	70	102	Q_neve	-24.03	-25.33	-9.55
70	70	103	Q_neve	9.93	-34.08	-21.83
70	70	26	Q_neve	-43.53	-12.15	-24.63
70	70	91	Q_manutenzione	-9.83	-2.85	-3.28
70	70	102	Q_manutenzione	-7.22	-3.47	-2.21
70	70	103	Q_manutenzione	3.46	-5.76	-6.2
70	70	26	Q_manutenzione	-15.02	-4.05	-7.28
70	70	91	EQ_X	-84.37	5.19	-35.43
70	70	102	EQ_X	-73.15	6.7	-40.97
70	70	103	EQ_X	21.71	-22.87	-67.1
70	70	26	EQ_X	-88.79	106.01	-61.56
70	70	91	EQ_Y	42.05	74.3	2.91
70	70	102	EQ_Y	33.85	84.99	-27.68
70	70	103	EQ_Y	-17.89	38.7	-20.33
70	70	26	EQ_Y	45.67	136.12	10.26
71	71	40	DEAD	-1.887E-12	1.807E-13	-7.741E-13
71	71	42	DEAD	-3.673E-12	-1.119E-11	8.170E-13
71	71	104	DEAD	6.266E-12	-4.559E-12	-2.291E-12
71	71	97	DEAD	4.983E-13	5.685E-13	5.866E-14
71	71	40	G1_power station	0.	0.	0.
71	71	42	G1_power station	0.	0.	0.
71	71	104	G1_power station	0.	0.	0.
71	71	97	G1_power station	0.	0.	0.
71	71	40	G2_power station	64.39	-341.23	126.38
71	71	42	G2_power station	-92.91	-514.73	63.93
71	71	104	G2_power station	-185.52	-441.88	89.11
71	71	97	G2_power station	-124.61	-203.86	151.56
71	71	40	Q_power station	2.38	-12.63	4.68

Table 21: Element Stresses - Area Shells, Part 2 of 3

Area	AreaElem	Joint	OutputCase	S11Bot	S22Bot	S12Bot
				KN/m2	KN/m2	KN/m2
71	71	42	Q_power station	-3.44	-19.05	2.37
71	71	104	Q_power station	-6.86	-16.35	3.3
71	71	97	Q_power station	-4.61	-7.54	5.61
71	71	40	Q_neve	1.95	-41.84	10.02
71	71	42	Q_neve	-12.49	-60.63	4.93
71	71	104	Q_neve	-27.32	-56.59	7.15
71	71	97	Q_neve	-21.07	-31.72	12.24
71	71	40	Q_manutenzione	2.38	-12.63	4.68
71	71	42	Q_manutenzione	-3.44	-19.05	2.37
71	71	104	Q_manutenzione	-6.86	-16.35	3.3
71	71	97	Q_manutenzione	-4.61	-7.54	5.61
71	71	40	EQ_X	201.78	38.18	76.14
71	71	42	EQ_X	-290.5	-82.53	38.37
71	71	104	EQ_X	-267.74	-7.15	64.98
71	71	97	EQ_X	-578.9	0.27	102.75
71	71	40	EQ_Y	220.55	207.	12.52
71	71	42	EQ_Y	32.16	119.62	-19.76
71	71	104	EQ_Y	29.79	64.97	-3.49
71	71	97	EQ_Y	-9.99	345.47	28.78
72	72	97	DEAD	9.332E-12	5.072E-12	-1.853E-12
72	72	104	DEAD	6.285E-12	-5.613E-12	-5.866E-14
72	72	105	DEAD	1.366E-13	-1.815E-11	-3.363E-13
72	72	98	DEAD	5.811E-12	5.668E-12	-8.170E-13
72	72	97	G1_power station	0.	0.	0.
72	72	104	G1_power station	0.	0.	0.
72	72	105	G1_power station	0.	0.	0.
72	72	98	G1_power station	0.	0.	0.
72	72	97	G2_power station	-133.73	-205.68	149.08
72	72	104	G2_power station	-187.02	-442.18	100.71
72	72	105	G2_power station	-287.4	-317.46	88.58
72	72	98	G2_power station	-332.1	-183.7	136.95
72	72	97	Q_power station	-4.95	-7.61	5.52
72	72	104	Q_power station	-6.92	-16.36	3.73
72	72	105	Q_power station	-10.63	-11.75	3.28
72	72	98	Q_power station	-12.29	-6.8	5.07
72	72	97	Q_neve	-21.9	-31.89	12.05
72	72	104	Q_neve	-27.44	-56.61	8.19
72	72	105	Q_neve	-39.12	-47.15	7.14
72	72	98	Q_neve	-42.2	-31.29	11.
72	72	97	Q_manutenzione	-4.95	-7.61	5.52
72	72	104	Q_manutenzione	-6.92	-16.36	3.73
72	72	105	Q_manutenzione	-10.63	-11.75	3.28
72	72	98	Q_manutenzione	-12.29	-6.8	5.07

Table 21: Element Stresses - Area Shells, Part 2 of 3

Area	AreaElem	Joint	OutputCase	S11Bot	S22Bot	S12Bot
				KN/m2	KN/m2	KN/m2
72	72	97	EQ_X	-479.32	20.18	14.52
72	72	104	EQ_X	-288.44	-11.29	25.84
72	72	105	EQ_X	-315.91	12.91	-9.66
72	72	98	EQ_X	-306.29	-32.34	-20.98
72	72	97	EQ_Y	-7.11	346.05	-33.05
72	72	104	EQ_Y	24.44	63.9	10.58
72	72	105	EQ_Y	-1.33	84.5	-6.5
72	72	98	EQ_Y	1.05	156.2	-50.13
73	73	98	DEAD	7.129E-12	7.229E-12	2.787E-12
73	73	105	DEAD	-1.226E-11	-2.071E-11	-2.462E-13
73	73	106	DEAD	5.897E-12	-1.208E-12	2.029E-12
73	73	99	DEAD	4.429E-12	1.282E-12	5.063E-12
73	73	98	G1_power station	0.	0.	0.
73	73	105	G1_power station	0.	0.	0.
73	73	106	G1_power station	0.	0.	0.
73	73	99	G1_power station	0.	0.	0.
73	73	98	G2_power station	-326.64	-182.61	105.07
73	73	105	G2_power station	-289.21	-317.82	76.12
73	73	106	G2_power station	-332.17	-228.83	55.95
73	73	99	G2_power station	-363.59	-164.01	84.9
73	73	98	Q_power station	-12.09	-6.76	3.89
73	73	105	Q_power station	-10.7	-11.76	2.82
73	73	106	Q_power station	-12.29	-8.47	2.07
73	73	99	Q_power station	-13.45	-6.07	3.14
73	73	98	Q_neve	-41.71	-31.19	8.21
73	73	105	Q_neve	-39.28	-47.19	6.05
73	73	106	Q_neve	-43.38	-40.35	4.27
73	73	99	Q_neve	-45.35	-30.38	6.43
73	73	98	Q_manutenzione	-12.09	-6.76	3.89
73	73	105	Q_manutenzione	-10.7	-11.76	2.82
73	73	106	Q_manutenzione	-12.29	-8.47	2.07
73	73	99	Q_manutenzione	-13.45	-6.07	3.14
73	73	98	EQ_X	-320.49	-35.18	-22.38
73	73	105	EQ_X	-305.75	14.95	-16.14
73	73	106	EQ_X	-241.56	3.83	-13.88
73	73	99	EQ_X	-237.06	-15.18	-20.13
73	73	98	EQ_Y	0.74	156.14	-49.65
73	73	105	EQ_Y	0.62	84.89	-24.8
73	73	106	EQ_Y	3.09	49.31	-30.75
73	73	99	EQ_Y	27.64	100.58	-55.61
74	74	99	DEAD	-8.667E-13	-8.043E-13	3.284E-12
74	74	106	DEAD	1.337E-12	-4.049E-12	3.562E-12
74	74	107	DEAD	8.803E-12	-2.356E-13	3.284E-12

Table 21: Element Stresses - Area Shells, Part 2 of 3

Area	AreaElem	Joint	OutputCase	S11Bot	S22Bot	S12Bot
				KN/m2	KN/m2	KN/m2
74	74	100	DEAD	4.465E-12	2.173E-13	4.320E-12
74	74	99	G1_power station	0.	0.	0.
74	74	106	G1_power station	0.	0.	0.
74	74	107	G1_power station	0.	0.	0.
74	74	100	G1_power station	0.	0.	0.
74	74	99	G2_power station	-363.72	-164.03	62.54
74	74	106	G2_power station	-331.63	-228.72	44.7
74	74	107	G2_power station	-301.93	-168.05	30.29
74	74	100	G2_power station	-328.14	-135.48	48.14
74	74	99	Q_power station	-13.46	-6.07	2.31
74	74	106	Q_power station	-12.27	-8.46	1.65
74	74	107	Q_power station	-11.17	-6.22	1.12
74	74	100	Q_power station	-12.14	-5.01	1.78
74	74	99	Q_neve	-45.37	-30.38	4.42
74	74	106	Q_neve	-43.34	-40.34	3.27
74	74	107	Q_neve	-39.32	-35.73	1.93
74	74	100	Q_neve	-41.07	-28.41	3.08
74	74	99	Q_manutenzione	-13.46	-6.07	2.31
74	74	106	Q_manutenzione	-12.27	-8.46	1.65
74	74	107	Q_manutenzione	-11.17	-6.22	1.12
74	74	100	Q_manutenzione	-12.14	-5.01	1.78
74	74	99	EQ_X	-237.48	-15.27	-17.55
74	74	106	EQ_X	-239.08	4.32	-12.4
74	74	107	EQ_X	-170.2	0.42	-11.03
74	74	100	EQ_X	-170.41	-5.19	-16.19
74	74	99	EQ_Y	26.39	100.33	-47.86
74	74	106	EQ_Y	4.45	49.58	-37.42
74	74	107	EQ_Y	12.02	38.73	-33.79
74	74	100	EQ_Y	36.26	78.19	-44.23
75	75	100	DEAD	3.067E-12	-9.560E-13	7.154E-13
75	75	107	DEAD	9.901E-12	-2.474E-12	2.029E-12
75	75	108	DEAD	3.446E-12	-5.886E-12	1.474E-12
75	75	101	DEAD	1.549E-11	7.290E-12	2.787E-12
75	75	100	G1_power station	0.	0.	0.
75	75	107	G1_power station	0.	0.	0.
75	75	108	G1_power station	0.	0.	0.
75	75	101	G1_power station	0.	0.	0.
75	75	100	G2_power station	-328.16	-135.48	30.57
75	75	107	G2_power station	-301.85	-168.04	22.37
75	75	108	G2_power station	-223.15	-128.24	8.85
75	75	101	G2_power station	-259.81	-110.87	17.05
75	75	100	Q_power station	-12.14	-5.01	1.13
75	75	107	Q_power station	-11.17	-6.22	0.83

Table 21: Element Stresses - Area Shells, Part 2 of 3

Area	AreaElem	Joint	OutputCase	S11Bot	S22Bot	S12Bot
				KN/m2	KN/m2	KN/m2
75	75	108	Q_power station	-8.26	-4.74	0.33
75	75	101	Q_power station	-9.61	-4.1	0.63
75	75	100	Q_neve	-41.07	-28.41	1.36
75	75	107	Q_neve	-39.33	-35.73	1.14
75	75	108	Q_neve	-29.6	-33.02	-0.28
75	75	101	Q_neve	-32.8	-26.61	-6.417E-02
75	75	100	Q_manutenzione	-12.14	-5.01	1.13
75	75	107	Q_manutenzione	-11.17	-6.22	0.83
75	75	108	Q_manutenzione	-8.26	-4.74	0.33
75	75	101	Q_manutenzione	-9.61	-4.1	0.63
75	75	100	EQ_X	-168.57	-4.83	-16.14
75	75	107	EQ_X	-168.44	0.77	-9.74
75	75	108	EQ_X	-108.78	-3.97	-10.03
75	75	101	EQ_X	-115.71	-0.43	-16.42
75	75	100	EQ_Y	33.75	77.69	-37.4
75	75	107	EQ_Y	8.11	37.95	-36.26
75	75	108	EQ_Y	10.38	36.59	-37.2
75	75	101	EQ_Y	36.05	70.76	-38.34
76	76	101	DEAD	4.089E-12	2.526E-12	4.406E-12
76	76	108	DEAD	6.365E-12	-7.408E-12	1.650E-12
76	76	109	DEAD	1.167E-11	4.042E-12	-9.029E-13
76	76	102	DEAD	9.398E-12	1.004E-11	3.167E-12
76	76	101	G1_power station	0.	0.	0.
76	76	108	G1_power station	0.	0.	0.
76	76	109	G1_power station	0.	0.	0.
76	76	102	G1_power station	0.	0.	0.
76	76	101	G2_power station	-259.48	-110.8	-4.89
76	76	108	G2_power station	-223.97	-128.4	-0.58
76	76	109	G2_power station	-108.	-127.23	-22.51
76	76	102	G2_power station	-180.21	-91.32	-26.82
76	76	101	Q_power station	-9.6	-4.1	-0.18
76	76	108	Q_power station	-8.29	-4.75	-2.135E-02
76	76	109	Q_power station	-4.	-4.71	-0.83
76	76	102	Q_power station	-6.67	-3.38	-0.99
76	76	101	Q_neve	-32.78	-26.61	-2.51
76	76	108	Q_neve	-29.7	-33.04	-1.32
76	76	109	Q_neve	-15.13	-34.42	-3.81
76	76	102	Q_neve	-22.37	-25.29	-5.
76	76	101	Q_manutenzione	-9.6	-4.1	-0.18
76	76	108	Q_manutenzione	-8.29	-4.75	-2.135E-02
76	76	109	Q_manutenzione	-4.	-4.71	-0.83
76	76	102	Q_manutenzione	-6.67	-3.38	-0.99
76	76	101	EQ_X	-113.48	1.197E-02	-19.53

Table 21: Element Stresses - Area Shells, Part 2 of 3

Area	AreaElem	Joint	OutputCase	S11Bot	S22Bot	S12Bot
				KN/m2	KN/m2	KN/m2
76	76	108	EQ_X	-108.58	-3.93	-11.5
76	76	109	EQ_X	-52.45	-15.44	-16.25
76	76	102	EQ_X	-67.21	6.22	-24.27
76	76	101	EQ_Y	27.01	68.96	-34.45
76	76	108	EQ_Y	11.55	36.83	-37.91
76	76	109	EQ_Y	6.83	29.19	-34.52
76	76	102	EQ_Y	21.87	65.22	-31.06
77	77	102	DEAD	6.005E-12	7.802E-12	1.153E-12
77	77	109	DEAD	1.645E-11	6.917E-12	1.357E-12
77	77	110	DEAD	-6.224E-12	-1.015E-12	1.912E-12
77	77	103	DEAD	9.437E-12	8.244E-12	-9.187E-13
77	77	102	G1_power station	0.	0.	0.
77	77	109	G1_power station	0.	0.	0.
77	77	110	G1_power station	0.	0.	0.
77	77	103	G1_power station	0.	0.	0.
77	77	102	G2_power station	-195.28	-94.34	-67.38
77	77	109	G2_power station	-102.79	-126.18	-32.36
77	77	110	G2_power station	-17.73	-141.36	-29.55
77	77	103	G2_power station	93.81	-153.78	-64.57
77	77	102	Q_power station	-7.23	-3.49	-2.49
77	77	109	Q_power station	-3.8	-4.67	-1.2
77	77	110	Q_power station	-0.66	-5.23	-1.09
77	77	103	Q_power station	3.47	-5.69	-2.39
77	77	102	Q_neve	-24.09	-25.63	-9.72
77	77	109	Q_neve	-14.56	-34.31	-4.95
77	77	110	Q_neve	-1.93	-37.59	-4.96
77	77	103	Q_neve	10.07	-33.37	-9.74
77	77	102	Q_manutenzione	-7.23	-3.49	-2.49
77	77	109	Q_manutenzione	-3.8	-4.67	-1.2
77	77	110	Q_manutenzione	-0.66	-5.23	-1.09
77	77	103	Q_manutenzione	3.47	-5.69	-2.39
77	77	102	EQ_X	-73.5	4.96	-35.44
77	77	109	EQ_X	-50.92	-15.13	-18.72
77	77	110	EQ_X	-3.79	-27.89	-20.27
77	77	103	EQ_X	22.24	-20.19	-36.99
77	77	102	EQ_Y	30.23	66.89	-28.82
77	77	109	EQ_Y	4.54	28.73	-31.3
77	77	110	EQ_Y	2.37	20.8	-31.02
77	77	103	EQ_Y	-12.59	65.22	-28.54
78	78	42	DEAD	-1.992E-12	-1.071E-11	-1.760E-13
78	78	44	DEAD	4.020E-12	-8.621E-12	-1.212E-12
78	78	111	DEAD	4.455E-12	3.321E-12	-2.451E-12
78	78	104	DEAD	2.219E-12	-1.535E-11	-2.729E-12

Table 21: Element Stresses - Area Shells, Part 2 of 3

Area	AreaElem	Joint	OutputCase	S11Bot	S22Bot	S12Bot
				KN/m2	KN/m2	KN/m2
78	78	42	G1_power station	0.	0.	0.
78	78	44	G1_power station	0.	0.	0.
78	78	111	G1_power station	0.	0.	0.
78	78	104	G1_power station	0.	0.	0.
78	78	42	G2_power station	-95.48	-527.56	25.92
78	78	44	G2_power station	-95.48	-527.56	-25.92
78	78	111	G2_power station	-184.08	-434.64	-25.92
78	78	104	G2_power station	-184.08	-434.64	25.92
78	78	42	Q_power station	-3.53	-19.52	0.96
78	78	44	Q_power station	-3.53	-19.52	-0.96
78	78	111	Q_power station	-6.81	-16.08	-0.96
78	78	104	Q_power station	-6.81	-16.08	0.96
78	78	42	Q_neve	-12.73	-61.79	2.05
78	78	44	Q_neve	-12.73	-61.79	-2.05
78	78	111	Q_neve	-27.19	-55.94	-2.05
78	78	104	Q_neve	-27.19	-55.94	2.05
78	78	42	Q_manutenzione	-3.53	-19.52	0.96
78	78	44	Q_manutenzione	-3.53	-19.52	-0.96
78	78	111	Q_manutenzione	-6.81	-16.08	-0.96
78	78	104	Q_manutenzione	-6.81	-16.08	0.96
78	78	42	EQ_X	-291.23	-86.19	16.98
78	78	44	EQ_X	-291.32	-86.21	-19.26
78	78	111	EQ_X	-266.55	-0.76	-19.27
78	78	104	EQ_X	-266.46	-0.74	16.97
78	78	42	EQ_Y	28.95	103.58	-8.54
78	78	44	EQ_Y	-28.54	-98.21	-8.38
78	78	111	EQ_Y	-34.36	-84.55	0.68
78	78	104	EQ_Y	34.76	89.83	0.52
79	79	104	DEAD	4.691E-12	-1.642E-11	-3.205E-13
79	79	111	DEAD	-2.977E-12	5.139E-13	-1.837E-12
79	79	112	DEAD	2.352E-13	-2.297E-12	1.196E-12
79	79	105	DEAD	3.469E-12	-5.932E-12	2.713E-12
79	79	104	G1_power station	0.	0.	0.
79	79	111	G1_power station	0.	0.	0.
79	79	112	G1_power station	0.	0.	0.
79	79	105	G1_power station	0.	0.	0.
79	79	104	G2_power station	-185.57	-434.94	31.98
79	79	111	G2_power station	-185.57	-434.94	-31.98
79	79	112	G2_power station	-287.68	-318.86	-31.98
79	79	105	G2_power station	-287.68	-318.86	31.98
79	79	104	Q_power station	-6.87	-16.09	1.18
79	79	111	Q_power station	-6.87	-16.09	-1.18
79	79	112	Q_power station	-10.64	-11.8	-1.18

Table 21: Element Stresses - Area Shells, Part 2 of 3

Area	AreaElem	Joint	OutputCase	S11Bot	S22Bot	S12Bot
				KN/m2	KN/m2	KN/m2
79	79	105	Q_power station	-10.64	-11.8	1.18
79	79	104	Q_neve	-27.31	-55.97	2.59
79	79	111	Q_neve	-27.31	-55.97	-2.59
79	79	112	Q_neve	-39.14	-47.28	-2.59
79	79	105	Q_neve	-39.14	-47.28	2.59
79	79	104	Q_manutenzione	-6.87	-16.09	1.18
79	79	111	Q_manutenzione	-6.87	-16.09	-1.18
79	79	112	Q_manutenzione	-10.64	-11.8	-1.18
79	79	105	Q_manutenzione	-10.64	-11.8	1.18
79	79	104	EQ_X	-287.16	-4.88	2.19
79	79	111	EQ_X	-287.03	-4.85	-3.57
79	79	112	EQ_X	-315.91	12.3	-3.06
79	79	105	EQ_X	-316.04	12.28	2.69
79	79	104	EQ_Y	29.42	88.76	9.21
79	79	111	EQ_Y	-28.43	-83.36	9.32
79	79	112	EQ_Y	4.34	-68.94	4.77
79	79	105	EQ_Y	-3.44	73.97	4.66
80	80	105	DEAD	-1.382E-11	-1.108E-11	4.379E-13
80	80	112	DEAD	3.670E-12	-9.694E-13	1.955E-12
80	80	113	DEAD	-1.017E-12	-3.971E-12	4.379E-13
80	80	106	DEAD	5.471E-12	-1.244E-11	-1.079E-12
80	80	105	G1_power station	0.	0.	0.
80	80	112	G1_power station	0.	0.	0.
80	80	113	G1_power station	0.	0.	0.
80	80	106	G1_power station	0.	0.	0.
80	80	105	G2_power station	-289.49	-319.22	22.98
80	80	112	G2_power station	-289.49	-319.22	-22.98
80	80	113	G2_power station	-332.34	-229.69	-22.98
80	80	106	G2_power station	-332.34	-229.69	22.98
80	80	105	Q_power station	-10.71	-11.81	0.85
80	80	112	Q_power station	-10.71	-11.81	-0.85
80	80	113	Q_power station	-12.3	-8.5	-0.85
80	80	106	Q_power station	-12.3	-8.5	0.85
80	80	105	Q_neve	-39.3	-47.31	1.8
80	80	112	Q_neve	-39.3	-47.31	-1.8
80	80	113	Q_neve	-43.39	-40.43	-1.8
80	80	106	Q_neve	-43.39	-40.43	1.8
80	80	105	Q_manutenzione	-10.71	-11.81	0.85
80	80	112	Q_manutenzione	-10.71	-11.81	-0.85
80	80	113	Q_manutenzione	-12.3	-8.5	-0.85
80	80	106	Q_manutenzione	-12.3	-8.5	0.85
80	80	105	EQ_X	-305.88	14.31	-4.42
80	80	112	EQ_X	-305.32	14.42	5.08

Table 21: Element Stresses - Area Shells, Part 2 of 3

Area	AreaElem	Joint	OutputCase	S11Bot	S22Bot	S12Bot
				KN/m2	KN/m2	KN/m2
80	80	113	EQ_X	-240.63	5.81	5.54
80	80	106	EQ_X	-241.18	5.7	-3.96
80	80	105	EQ_Y	-1.49	74.36	-8.31
80	80	112	EQ_Y	3.19	-69.17	-7.97
80	80	113	EQ_Y	-0.51	-39.73	-16.86
80	80	106	EQ_Y	2.25	45.09	-17.19
81	81	106	DEAD	-1.044E-12	-1.446E-11	1.357E-12
81	81	113	DEAD	2.250E-12	-1.549E-12	-1.677E-12
81	81	114	DEAD	3.507E-12	-8.096E-13	-9.187E-13
81	81	107	DEAD	7.274E-12	-6.004E-12	2.115E-12
81	81	106	G1_power station	0.	0.	0.
81	81	113	G1_power station	0.	0.	0.
81	81	114	G1_power station	0.	0.	0.
81	81	107	G1_power station	0.	0.	0.
81	81	106	G2_power station	-331.8	-229.59	12.99
81	81	113	G2_power station	-331.8	-229.59	-12.99
81	81	114	G2_power station	-301.96	-168.19	-12.99
81	81	107	G2_power station	-301.96	-168.19	12.99
81	81	106	Q_power station	-12.28	-8.49	0.48
81	81	113	Q_power station	-12.28	-8.49	-0.48
81	81	114	Q_power station	-11.17	-6.22	-0.48
81	81	107	Q_power station	-11.17	-6.22	0.48
81	81	106	Q_neve	-43.35	-40.42	0.91
81	81	113	Q_neve	-43.35	-40.42	-0.91
81	81	114	Q_neve	-39.33	-35.75	-0.91
81	81	107	Q_neve	-39.33	-35.75	0.91
81	81	106	Q_manutenzione	-12.28	-8.49	0.48
81	81	113	Q_manutenzione	-12.28	-8.49	-0.48
81	81	114	Q_manutenzione	-11.17	-6.22	-0.48
81	81	107	Q_manutenzione	-11.17	-6.22	0.48
81	81	106	EQ_X	-238.7	6.19	-3.53
81	81	113	EQ_X	-238.2	6.29	5.81
81	81	114	EQ_X	-169.45	1.73	6.57
81	81	107	EQ_X	-169.96	1.63	-2.77
81	81	106	EQ_Y	3.61	45.36	-25.15
81	81	113	EQ_Y	-1.1	-39.84	-25.01
81	81	114	EQ_Y	-7.69	-24.13	-33.15
81	81	107	EQ_Y	10.33	30.31	-33.28
82	82	107	DEAD	1.239E-11	-5.490E-12	2.072E-12
82	82	114	DEAD	6.750E-12	3.979E-13	1.314E-12
82	82	115	DEAD	1.760E-11	-2.172E-12	5.552E-13
82	82	108	DEAD	2.390E-12	5.896E-12	1.314E-12
82	82	107	G1_power station	0.	0.	0.

Table 21: Element Stresses - Area Shells, Part 2 of 3

Area	AreaElem	Joint	OutputCase	S11Bot	S22Bot	S12Bot
				KN/m2	KN/m2	KN/m2
82	82	114	G1_power station	0.	0.	0.
82	82	115	G1_power station	0.	0.	0.
82	82	108	G1_power station	0.	0.	0.
82	82	107	G2_power station	-301.88	-168.17	5.24
82	82	114	G2_power station	-301.88	-168.17	-5.24
82	82	115	G2_power station	-223.53	-130.12	-5.24
82	82	108	G2_power station	-223.53	-130.12	5.24
82	82	107	Q_power station	-11.17	-6.22	0.19
82	82	114	Q_power station	-11.17	-6.22	-0.19
82	82	115	Q_power station	-8.27	-4.81	-0.19
82	82	108	Q_power station	-8.27	-4.81	0.19
82	82	107	Q_neve	-39.34	-35.75	0.14
82	82	114	Q_neve	-39.34	-35.75	-0.14
82	82	115	Q_neve	-29.64	-33.22	-0.14
82	82	108	Q_neve	-29.64	-33.22	0.14
82	82	107	Q_manutenzione	-11.17	-6.22	0.19
82	82	114	Q_manutenzione	-11.17	-6.22	-0.19
82	82	115	Q_manutenzione	-8.27	-4.81	-0.19
82	82	108	Q_manutenzione	-8.27	-4.81	0.19
82	82	107	EQ_X	-168.2	1.98	-1.75
82	82	114	EQ_X	-168.99	1.82	6.6
82	82	115	EQ_X	-109.48	-3.63	6.78
82	82	108	EQ_X	-108.68	-3.47	-1.57
82	82	107	EQ_Y	6.43	29.53	-36.09
82	82	114	EQ_Y	-3.89	-23.37	-35.83
82	82	115	EQ_Y	-5.06	-16.46	-35.19
82	82	108	EQ_Y	8.5	27.17	-35.45
83	83	108	DEAD	6.492E-12	5.213E-12	-1.110E-12
83	83	115	DEAD	1.367E-11	-1.565E-12	-2.072E-12
83	83	116	DEAD	1.294E-11	7.868E-12	-4.144E-12
83	83	109	DEAD	1.282E-11	-1.281E-12	-5.552E-13
83	83	108	G1_power station	0.	0.	0.
83	83	115	G1_power station	0.	0.	0.
83	83	116	G1_power station	0.	0.	0.
83	83	109	G1_power station	0.	0.	0.
83	83	108	G2_power station	-224.34	-130.28	-3.69
83	83	115	G2_power station	-224.34	-130.28	3.69
83	83	116	G2_power station	-107.08	-122.6	3.69
83	83	109	G2_power station	-107.08	-122.6	-3.69
83	83	108	Q_power station	-8.3	-4.82	-0.14
83	83	115	Q_power station	-8.3	-4.82	0.14
83	83	116	Q_power station	-3.96	-4.54	0.14
83	83	109	Q_power station	-3.96	-4.54	-0.14

Table 21: Element Stresses - Area Shells, Part 2 of 3

Area	AreaElem	Joint	OutputCase	S11Bot	S22Bot	S12Bot
				KN/m2	KN/m2	KN/m2
83	83	108	Q_neve	-29.74	-33.24	-0.85
83	83	115	Q_neve	-29.74	-33.24	0.85
83	83	116	Q_neve	-15.03	-33.92	0.85
83	83	109	Q_neve	-15.03	-33.92	-0.85
83	83	108	Q_manutenzione	-8.3	-4.82	-0.14
83	83	115	Q_manutenzione	-8.3	-4.82	0.14
83	83	116	Q_manutenzione	-3.96	-4.54	0.14
83	83	109	Q_manutenzione	-3.96	-4.54	-0.14
83	83	108	EQ_X	-108.48	-3.43	-2.83
83	83	115	EQ_X	-108.19	-3.37	8.7
83	83	116	EQ_X	-52.05	-14.91	7.89
83	83	109	EQ_X	-52.35	-14.96	-3.64
83	83	108	EQ_Y	9.67	27.41	-35.83
83	83	115	EQ_Y	-8.62	-17.18	-36.91
83	83	116	EQ_Y	-4.68	-13.42	-35.86
83	83	109	EQ_Y	6.63	28.16	-34.78
84	84	109	DEAD	1.546E-11	9.574E-13	-8.328E-13
84	84	116	DEAD	7.732E-12	8.781E-12	-3.866E-12
84	84	117	DEAD	3.040E-12	4.844E-12	-3.108E-12
84	84	110	DEAD	-5.160E-12	8.022E-12	-7.438E-14
84	84	109	G1_power station	0.	0.	0.
84	84	116	G1_power station	0.	0.	0.
84	84	117	G1_power station	0.	0.	0.
84	84	110	G1_power station	0.	0.	0.
84	84	109	G2_power station	-101.86	-121.55	-10.05
84	84	116	G2_power station	-101.86	-121.55	10.05
84	84	117	G2_power station	-19.03	-147.87	10.05
84	84	110	G2_power station	-19.03	-147.87	-10.05
84	84	109	Q_power station	-3.77	-4.5	-0.37
84	84	116	Q_power station	-3.77	-4.5	0.37
84	84	117	Q_power station	-0.7	-5.47	0.37
84	84	110	Q_power station	-0.7	-5.47	-0.37
84	84	109	Q_neve	-14.46	-33.81	-1.63
84	84	116	Q_neve	-14.46	-33.81	1.63
84	84	117	Q_neve	-2.07	-38.27	1.63
84	84	110	Q_neve	-2.07	-38.27	-1.63
84	84	109	Q_manutenzione	-3.77	-4.5	-0.37
84	84	116	Q_manutenzione	-3.77	-4.5	0.37
84	84	117	Q_manutenzione	-0.7	-5.47	0.37
84	84	110	Q_manutenzione	-0.7	-5.47	-0.37
84	84	109	EQ_X	-50.82	-14.66	-5.76
84	84	116	EQ_X	-50.45	-14.58	7.74
84	84	117	EQ_X	-4.46	-33.07	8.19

Table 21: Element Stresses - Area Shells, Part 2 of 3

Area	AreaElem	Joint	OutputCase	S11Bot	S22Bot	S12Bot
				KN/m2	KN/m2	KN/m2
84	84	110	EQ_X	-4.84	-33.14	-5.31
84	84	109	EQ_Y	4.34	27.7	-32.93
84	84	116	EQ_Y	-4.23	-13.33	-32.86
84	84	117	EQ_Y	-4.06	-15.4	-34.07
84	84	110	EQ_Y	4.88	33.33	-34.13
85	85	44	DEAD	1.389E-12	1.181E-13	-2.291E-12
85	85	46	DEAD	7.249E-12	-3.772E-12	2.619E-13
85	85	118	DEAD	-2.593E-12	-6.139E-12	-7.741E-13
85	85	111	DEAD	4.026E-12	-1.079E-11	-2.013E-12
85	85	44	G1_power station	0.	0.	0.
85	85	46	G1_power station	0.	0.	0.
85	85	118	G1_power station	0.	0.	0.
85	85	111	G1_power station	0.	0.	0.
85	85	44	G2_power station	-92.91	-514.73	-63.93
85	85	46	G2_power station	64.39	-341.23	-126.38
85	85	118	G2_power station	-124.61	-203.86	-151.56
85	85	111	G2_power station	-185.52	-441.88	-89.11
85	85	44	Q_power station	-3.44	-19.05	-2.37
85	85	46	Q_power station	2.38	-12.63	-4.68
85	85	118	Q_power station	-4.61	-7.54	-5.61
85	85	111	Q_power station	-6.86	-16.35	-3.3
85	85	44	Q_neve	-12.49	-60.63	-4.93
85	85	46	Q_neve	1.95	-41.84	-10.02
85	85	118	Q_neve	-21.07	-31.72	-12.24
85	85	111	Q_neve	-27.32	-56.59	-7.15
85	85	44	Q_manutenzione	-3.44	-19.05	-2.37
85	85	46	Q_manutenzione	2.38	-12.63	-4.68
85	85	118	Q_manutenzione	-4.61	-7.54	-5.61
85	85	111	Q_manutenzione	-6.86	-16.35	-3.3
85	85	44	EQ_X	-290.59	-82.54	-40.8
85	85	46	EQ_X	201.6	38.16	-77.79
85	85	118	EQ_X	-578.64	2.42	-104.02
85	85	111	EQ_X	-267.39	-4.97	-67.03
85	85	44	EQ_Y	-31.71	-114.07	-19.45
85	85	46	EQ_Y	-220.47	-201.53	12.91
85	85	118	EQ_Y	10.03	-340.16	29.32
85	85	111	EQ_Y	-29.37	-59.58	-3.04
86	86	111	DEAD	-1.977E-12	-1.128E-11	-4.379E-13
86	86	118	DEAD	1.392E-12	-6.034E-12	-1.751E-12
86	86	119	DEAD	-5.959E-12	-1.526E-11	-4.379E-13
86	86	112	DEAD	-3.253E-12	-1.957E-12	-1.751E-12
86	86	111	G1_power station	0.	0.	0.
86	86	118	G1_power station	0.	0.	0.

Table 21: Element Stresses - Area Shells, Part 2 of 3

Area	AreaElem	Joint	OutputCase	S11Bot	S22Bot	S12Bot
				KN/m2	KN/m2	KN/m2
86	86	119	G1_power station	0.	0.	0.
86	86	112	G1_power station	0.	0.	0.
86	86	111	G2_power station	-187.02	-442.18	-100.71
86	86	118	G2_power station	-133.73	-205.68	-149.08
86	86	119	G2_power station	-332.1	-183.7	-136.95
86	86	112	G2_power station	-287.4	-317.46	-88.58
86	86	111	Q_power station	-6.92	-16.36	-3.73
86	86	118	Q_power station	-4.95	-7.61	-5.52
86	86	119	Q_power station	-12.29	-6.8	-5.07
86	86	112	Q_power station	-10.63	-11.75	-3.28
86	86	111	Q_neve	-27.44	-56.61	-8.19
86	86	118	Q_neve	-21.9	-31.89	-12.05
86	86	119	Q_neve	-42.2	-31.29	-11.
86	86	112	Q_neve	-39.12	-47.15	-7.14
86	86	111	Q_manutenzione	-6.92	-16.36	-3.73
86	86	118	Q_manutenzione	-4.95	-7.61	-5.52
86	86	119	Q_manutenzione	-12.29	-6.8	-5.07
86	86	112	Q_manutenzione	-10.63	-11.75	-3.28
86	86	111	EQ_X	-287.88	-9.07	-26.97
86	86	118	EQ_X	-477.14	22.72	-14.6
86	86	119	EQ_X	-304.2	-30.25	21.92
86	86	112	EQ_X	-315.44	14.68	9.55
86	86	111	EQ_Y	-23.44	-58.4	10.98
86	86	118	EQ_Y	7.39	-340.69	-32.26
86	86	119	EQ_Y	-0.78	-150.93	-49.2
86	86	112	EQ_Y	2.31	-79.09	-5.95
87	87	112	DEAD	2.904E-12	-4.701E-13	1.196E-12
87	87	119	DEAD	-9.423E-12	-1.603E-11	-3.205E-13
87	87	120	DEAD	1.144E-11	1.236E-12	-3.205E-13
87	87	113	DEAD	-3.166E-12	-7.501E-12	1.196E-12
87	87	112	G1_power station	0.	0.	0.
87	87	119	G1_power station	0.	0.	0.
87	87	120	G1_power station	0.	0.	0.
87	87	113	G1_power station	0.	0.	0.
87	87	112	G2_power station	-289.21	-317.82	-76.12
87	87	119	G2_power station	-326.64	-182.61	-105.07
87	87	120	G2_power station	-363.59	-164.01	-84.9
87	87	113	G2_power station	-332.17	-228.83	-55.95
87	87	112	Q_power station	-10.7	-11.76	-2.82
87	87	119	Q_power station	-12.09	-6.76	-3.89
87	87	120	Q_power station	-13.45	-6.07	-3.14
87	87	113	Q_power station	-12.29	-8.47	-2.07
87	87	112	Q_neve	-39.28	-47.19	-6.05

Table 21: Element Stresses - Area Shells, Part 2 of 3

Area	AreaElem	Joint	OutputCase	S11Bot	S22Bot	S12Bot
				KN/m2	KN/m2	KN/m2
87	87	119	Q_neve	-41.71	-31.19	-8.21
87	87	120	Q_neve	-45.35	-30.38	-6.43
87	87	113	Q_neve	-43.38	-40.35	-4.27
87	87	112	Q_manutenzione	-10.7	-11.76	-2.82
87	87	119	Q_manutenzione	-12.09	-6.76	-3.89
87	87	120	Q_manutenzione	-13.45	-6.07	-3.14
87	87	113	Q_manutenzione	-12.29	-8.47	-2.07
87	87	112	EQ_X	-304.84	16.8	17.06
87	87	119	EQ_X	-316.61	-32.74	23.37
87	87	120	EQ_X	-233.33	-13.45	21.96
87	87	113	EQ_X	-240.79	4.97	15.65
87	87	112	EQ_Y	1.16	-79.32	-24.03
87	87	119	EQ_Y	-6.260E-02	-150.79	-48.7
87	87	120	EQ_Y	-27.01	-95.47	-54.57
87	87	113	EQ_Y	-1.36	-43.98	-29.91
88	88	113	DEAD	4.059E-12	-4.135E-12	-1.153E-12
88	88	120	DEAD	8.806E-12	1.787E-12	-3.225E-12
88	88	121	DEAD	3.111E-12	-2.050E-12	-1.912E-12
88	88	114	DEAD	3.782E-12	-5.829E-13	-2.467E-12
88	88	113	G1_power station	0.	0.	0.
88	88	120	G1_power station	0.	0.	0.
88	88	121	G1_power station	0.	0.	0.
88	88	114	G1_power station	0.	0.	0.
88	88	113	G2_power station	-331.63	-228.72	-44.7
88	88	120	G2_power station	-363.72	-164.03	-62.54
88	88	121	G2_power station	-328.14	-135.48	-48.14
88	88	114	G2_power station	-301.93	-168.05	-30.29
88	88	113	Q_power station	-12.27	-8.46	-1.65
88	88	120	Q_power station	-13.46	-6.07	-2.31
88	88	121	Q_power station	-12.14	-5.01	-1.78
88	88	114	Q_power station	-11.17	-6.22	-1.12
88	88	113	Q_neve	-43.34	-40.34	-3.27
88	88	120	Q_neve	-45.37	-30.38	-4.42
88	88	121	Q_neve	-41.07	-28.41	-3.08
88	88	114	Q_neve	-39.32	-35.73	-1.93
88	88	113	Q_manutenzione	-12.27	-8.46	-1.65
88	88	120	Q_manutenzione	-13.46	-6.07	-2.31
88	88	121	Q_manutenzione	-12.14	-5.01	-1.78
88	88	114	Q_manutenzione	-11.17	-6.22	-1.12
88	88	113	EQ_X	-238.37	5.45	14.87
88	88	120	EQ_X	-234.33	-13.65	19.66
88	88	121	EQ_X	-167.12	-2.89	18.52
88	88	114	EQ_X	-169.35	2.23	13.73

Table 21: Element Stresses - Area Shells, Part 2 of 3

Area	AreaElem	Joint	OutputCase	S11Bot	S22Bot	S12Bot
				KN/m2	KN/m2	KN/m2
88	88	113	EQ_Y	-1.95	-44.09	-36.78
88	88	120	EQ_Y	-25.12	-95.09	-46.52
88	88	121	EQ_Y	-34.81	-72.02	-42.98
88	88	114	EQ_Y	-9.33	-32.32	-33.25
89	89	114	DEAD	5.077E-12	3.206E-12	-1.490E-12
89	89	121	DEAD	3.128E-12	-2.822E-12	-3.487E-12
89	89	122	DEAD	1.977E-11	1.070E-11	-3.765E-12
89	89	115	DEAD	2.057E-11	7.037E-12	-4.536E-13
89	89	114	G1_power station	0.	0.	0.
89	89	121	G1_power station	0.	0.	0.
89	89	122	G1_power station	0.	0.	0.
89	89	115	G1_power station	0.	0.	0.
89	89	114	G2_power station	-301.85	-168.04	-22.37
89	89	121	G2_power station	-328.16	-135.48	-30.57
89	89	122	G2_power station	-259.81	-110.87	-17.05
89	89	115	G2_power station	-223.15	-128.24	-8.85
89	89	114	Q_power station	-11.17	-6.22	-0.83
89	89	121	Q_power station	-12.14	-5.01	-1.13
89	89	122	Q_power station	-9.61	-4.1	-0.63
89	89	115	Q_power station	-8.26	-4.74	-0.33
89	89	114	Q_neve	-39.33	-35.73	-1.14
89	89	121	Q_neve	-41.07	-28.41	-1.36
89	89	122	Q_neve	-32.8	-26.61	6.417E-02
89	89	115	Q_neve	-29.6	-33.02	0.28
89	89	114	Q_manutenzione	-11.17	-6.22	-0.83
89	89	121	Q_manutenzione	-12.14	-5.01	-1.13
89	89	122	Q_manutenzione	-9.61	-4.1	-0.63
89	89	115	Q_manutenzione	-8.26	-4.74	-0.33
89	89	114	EQ_X	-168.89	2.32	13.48
89	89	121	EQ_X	-167.82	-3.03	18.22
89	89	122	EQ_X	-114.81	2.07	19.95
89	89	115	EQ_X	-109.09	-1.7	15.22
89	89	114	EQ_Y	-5.53	-31.56	-35.59
89	89	121	EQ_Y	-31.17	-71.3	-36.58
89	89	122	EQ_Y	-33.14	-62.72	-38.76
89	89	115	EQ_Y	-7.47	-28.55	-37.76
90	90	115	DEAD	1.659E-11	8.067E-12	-3.663E-12
90	90	122	DEAD	1.600E-11	9.011E-12	-2.146E-12
90	90	123	DEAD	1.214E-11	1.082E-11	-2.905E-12
90	90	116	DEAD	9.455E-12	1.333E-12	-4.421E-12
90	90	115	G1_power station	0.	0.	0.
90	90	122	G1_power station	0.	0.	0.
90	90	123	G1_power station	0.	0.	0.

Table 21: Element Stresses - Area Shells, Part 2 of 3

Area	AreaElem	Joint	OutputCase	S11Bot	S22Bot	S12Bot
				KN/m2	KN/m2	KN/m2
90	90	116	G1_power station	0.	0.	0.
90	90	115	G2_power station	-223.97	-128.4	0.58
90	90	122	G2_power station	-259.48	-110.8	4.89
90	90	123	G2_power station	-180.21	-91.32	26.82
90	90	116	G2_power station	-108.	-127.23	22.51
90	90	115	Q_power station	-8.29	-4.75	2.135E-02
90	90	122	Q_power station	-9.6	-4.1	0.18
90	90	123	Q_power station	-6.67	-3.38	0.99
90	90	116	Q_power station	-4.	-4.71	0.83
90	90	115	Q_neve	-29.7	-33.04	1.32
90	90	122	Q_neve	-32.78	-26.61	2.51
90	90	123	Q_neve	-22.37	-25.29	5.
90	90	116	Q_neve	-15.13	-34.42	3.81
90	90	115	Q_manutenzione	-8.29	-4.75	2.135E-02
90	90	122	Q_manutenzione	-9.6	-4.1	0.18
90	90	123	Q_manutenzione	-6.67	-3.38	0.99
90	90	116	Q_manutenzione	-4.	-4.71	0.83
90	90	115	EQ_X	-107.8	-1.44	17.35
90	90	122	EQ_X	-116.4	1.76	24.43
90	90	123	EQ_X	-71.34	1.93	29.33
90	90	116	EQ_X	-52.87	-18.99	22.25
90	90	115	EQ_Y	-11.04	-29.27	-39.81
90	90	122	EQ_Y	-23.11	-60.72	-36.01
90	90	123	EQ_Y	-16.33	-48.8	-33.03
90	90	116	EQ_Y	-4.68	-13.45	-36.83
91	91	116	DEAD	6.053E-12	5.117E-13	-4.160E-12
91	91	123	DEAD	1.668E-11	8.853E-12	-5.196E-12
91	91	124	DEAD	-4.849E-12	2.882E-12	-4.160E-12
91	91	117	DEAD	3.407E-12	6.198E-12	-4.437E-12
91	91	116	G1_power station	0.	0.	0.
91	91	123	G1_power station	0.	0.	0.
91	91	124	G1_power station	0.	0.	0.
91	91	117	G1_power station	0.	0.	0.
91	91	116	G2_power station	-102.79	-126.18	32.36
91	91	123	G2_power station	-195.28	-94.34	67.38
91	91	124	G2_power station	93.81	-153.78	64.57
91	91	117	G2_power station	-17.73	-141.36	29.55
91	91	116	Q_power station	-3.8	-4.67	1.2
91	91	123	Q_power station	-7.23	-3.49	2.49
91	91	124	Q_power station	3.47	-5.69	2.39
91	91	117	Q_power station	-0.66	-5.23	1.09
91	91	116	Q_neve	-14.56	-34.31	4.95
91	91	123	Q_neve	-24.09	-25.63	9.72

Table 21: Element Stresses - Area Shells, Part 2 of 3

Area	AreaElem	Joint	OutputCase	S11Bot	S22Bot	S12Bot
				KN/m2	KN/m2	KN/m2
91	91	124	Q_neve	10.07	-33.37	9.74
91	91	117	Q_neve	-1.93	-37.59	4.96
91	91	116	Q_manutenzione	-3.8	-4.67	1.2
91	91	123	Q_manutenzione	-7.23	-3.49	2.49
91	91	124	Q_manutenzione	3.47	-5.69	2.39
91	91	117	Q_manutenzione	-0.66	-5.23	1.09
91	91	116	EQ_X	-51.26	-18.66	22.45
91	91	123	EQ_X	-71.82	1.84	40.82
91	91	124	EQ_X	23.21	-26.86	38.85
91	91	117	EQ_X	-4.84	-34.97	20.49
91	91	116	EQ_Y	-4.23	-13.36	-32.47
91	91	123	EQ_Y	-30.43	-51.62	-31.89
91	91	124	EQ_Y	13.2	-45.89	-29.99
91	91	117	EQ_Y	-1.25	-1.37	-30.56
92	92	46	DEAD	5.431E-12	-3.797E-12	4.379E-13
92	92	63	DEAD	1.510E-13	-1.391E-12	4.379E-13
92	92	125	DEAD	3.819E-12	4.071E-12	4.379E-13
92	92	118	DEAD	-1.081E-12	-9.829E-12	4.379E-13
92	92	46	G1_power station	0.	0.	0.
92	92	63	G1_power station	0.	0.	0.
92	92	125	G1_power station	0.	0.	0.
92	92	118	G1_power station	0.	0.	0.
92	92	46	G2_power station	59.96	-363.36	-181.17
92	92	63	G2_power station	663.97	629.77	-149.61
92	92	125	G2_power station	-225.9	112.24	-194.23
92	92	118	G2_power station	-122.85	-195.05	-225.79
92	92	46	Q_power station	2.22	-13.44	-6.7
92	92	63	Q_power station	24.57	23.3	-5.54
92	92	125	Q_power station	-8.36	4.15	-7.19
92	92	118	Q_power station	-4.55	-7.22	-8.35
92	92	46	Q_neve	1.55	-43.86	-14.52
92	92	63	Q_neve	56.66	52.27	-11.45
92	92	125	Q_neve	-28.37	4.73	-15.39
92	92	118	Q_neve	-20.92	-30.93	-18.46
92	92	46	Q_manutenzione	2.22	-13.44	-6.7
92	92	63	Q_manutenzione	24.57	23.3	-5.54
92	92	125	Q_manutenzione	-8.36	4.15	-7.19
92	92	118	Q_manutenzione	-4.55	-7.22	-8.35
92	92	46	EQ_X	201.6	38.14	-284.53
92	92	63	EQ_X	-1960.48	-293.13	-256.44
92	92	125	EQ_X	-201.37	-207.09	66.4
92	92	118	EQ_X	-577.89	6.17	38.3
92	92	46	EQ_Y	-174.11	30.28	83.46

Table 21: Element Stresses - Area Shells, Part 2 of 3

Area	AreaElem	Joint	OutputCase	S11Bot	S22Bot	S12Bot
				KN/m2	KN/m2	KN/m2
92	92	63	EQ_Y	-308.27	-1938.37	-304.3
92	92	125	EQ_Y	69.2	264.05	-334.41
92	92	118	EQ_Y	-17.69	-478.8	53.35
93	93	118	DEAD	1.432E-12	-9.025E-12	-1.173E-13
93	93	125	DEAD	1.341E-11	7.354E-12	-8.757E-13
93	93	126	DEAD	-4.825E-12	5.194E-12	-1.634E-12
93	93	119	DEAD	-4.981E-12	-7.245E-12	-8.757E-13
93	93	118	G1_power station	0.	0.	0.
93	93	125	G1_power station	0.	0.	0.
93	93	126	G1_power station	0.	0.	0.
93	93	119	G1_power station	0.	0.	0.
93	93	118	G2_power station	-131.97	-196.88	-183.41
93	93	125	G2_power station	-206.25	116.17	-165.74
93	93	126	G2_power station	-350.16	-43.75	-131.85
93	93	119	G2_power station	-331.57	-181.07	-149.52
93	93	118	Q_power station	-4.88	-7.28	-6.79
93	93	125	Q_power station	-7.63	4.3	-6.13
93	93	126	Q_power station	-12.96	-1.62	-4.88
93	93	119	Q_power station	-12.27	-6.7	-5.53
93	93	118	Q_neve	-21.74	-31.09	-14.71
93	93	125	Q_neve	-26.58	5.09	-12.88
93	93	126	Q_neve	-41.82	-9.88	-9.92
93	93	119	Q_neve	-42.15	-31.06	-11.75
93	93	118	Q_manutenzione	-4.88	-7.28	-6.79
93	93	125	Q_manutenzione	-7.63	4.3	-6.13
93	93	126	Q_manutenzione	-12.96	-1.62	-4.88
93	93	119	Q_manutenzione	-12.27	-6.7	-5.53
93	93	118	EQ_X	-476.39	26.47	45.84
93	93	125	EQ_X	-374.53	-241.72	29.04
93	93	126	EQ_X	-337.82	-63.84	4.11
93	93	119	EQ_X	-305.9	-38.76	20.9
93	93	118	EQ_Y	-20.34	-479.33	-141.52
93	93	125	EQ_Y	64.31	263.07	-127.35
93	93	126	EQ_Y	-68.38	-216.57	-112.69
93	93	119	EQ_Y	8.57	-104.15	-126.87
94	94	119	DEAD	-8.670E-12	-8.297E-12	-2.467E-12
94	94	126	DEAD	3.015E-12	6.781E-12	-3.225E-12
94	94	127	DEAD	4.128E-12	7.914E-12	-3.225E-12
94	94	120	DEAD	1.050E-11	-3.552E-12	-2.467E-12
94	94	119	G1_power station	0.	0.	0.
94	94	126	G1_power station	0.	0.	0.
94	94	127	G1_power station	0.	0.	0.
94	94	120	G1_power station	0.	0.	0.

Table 21: Element Stresses - Area Shells, Part 2 of 3

Area	AreaElem	Joint	OutputCase	S11Bot	S22Bot	S12Bot
				KN/m2	KN/m2	KN/m2
94	94	119	G2_power station	-326.12	-179.98	-118.34
94	94	126	G2_power station	-361.02	-45.92	-118.
94	94	127	G2_power station	-400.21	-79.96	-96.67
94	94	120	G2_power station	-363.32	-162.67	-97.01
94	94	119	Q_power station	-12.07	-6.66	-4.38
94	94	126	Q_power station	-13.36	-1.7	-4.37
94	94	127	Q_power station	-14.81	-2.96	-3.58
94	94	120	Q_power station	-13.44	-6.02	-3.59
94	94	119	Q_neve	-41.67	-30.96	-9.03
94	94	126	Q_neve	-42.81	-10.07	-8.75
94	94	127	Q_neve	-46.81	-13.53	-6.87
94	94	120	Q_neve	-45.33	-30.26	-7.15
94	94	119	Q_manutenzione	-12.07	-6.66	-4.38
94	94	126	Q_manutenzione	-13.36	-1.7	-4.37
94	94	127	Q_manutenzione	-14.81	-2.96	-3.58
94	94	120	Q_manutenzione	-13.44	-6.02	-3.59
94	94	119	EQ_X	-318.31	-41.24	18.64
94	94	126	EQ_X	-327.57	-61.79	12.08
94	94	127	EQ_X	-235.89	-22.74	15.43
94	94	120	EQ_X	-233.5	-14.29	21.99
94	94	119	EQ_Y	9.29	-104.01	-82.09
94	94	126	EQ_Y	-75.8	-218.05	-120.95
94	94	127	EQ_Y	-67.15	-64.67	-103.14
94	94	120	EQ_Y	-30.25	-111.65	-64.28
95	95	120	DEAD	7.923E-12	-2.677E-12	-3.620E-12
95	95	127	DEAD	1.731E-11	9.055E-12	-3.620E-12
95	95	128	DEAD	6.691E-12	4.812E-12	-5.137E-12
95	95	121	DEAD	2.233E-12	1.946E-12	-5.137E-12
95	95	120	G1_power station	0.	0.	0.
95	95	127	G1_power station	0.	0.	0.
95	95	128	G1_power station	0.	0.	0.
95	95	121	G1_power station	0.	0.	0.
95	95	120	G2_power station	-363.45	-162.7	-75.04
95	95	127	G2_power station	-401.89	-80.3	-78.35
95	95	128	G2_power station	-366.02	-79.5	-59.08
95	95	121	G2_power station	-328.08	-135.15	-55.78
95	95	120	Q_power station	-13.45	-6.02	-2.78
95	95	127	Q_power station	-14.87	-2.97	-2.9
95	95	128	Q_power station	-13.54	-2.94	-2.19
95	95	121	Q_power station	-12.14	-5.	-2.06
95	95	120	Q_neve	-45.34	-30.26	-5.18
95	95	127	Q_neve	-46.96	-13.56	-5.19
95	95	128	Q_neve	-42.93	-13.75	-3.39

Table 21: Element Stresses - Area Shells, Part 2 of 3

Area	AreaElem	Joint	OutputCase	S11Bot	S22Bot	S12Bot
				KN/m2	KN/m2	KN/m2
95	95	121	Q_neve	-41.06	-28.37	-3.38
95	95	120	Q_manutenzione	-13.45	-6.02	-2.78
95	95	127	Q_manutenzione	-14.87	-2.97	-2.9
95	95	128	Q_manutenzione	-13.54	-2.94	-2.19
95	95	121	Q_manutenzione	-12.14	-5.	-2.06
95	95	120	EQ_X	-234.5	-14.49	20.48
95	95	127	EQ_X	-235.62	-22.68	19.81
95	95	128	EQ_X	-165.45	-4.81	20.33
95	95	121	EQ_X	-167.3	-3.8	21.
95	95	120	EQ_Y	-28.35	-111.27	-64.69
95	95	127	EQ_Y	-73.61	-65.96	-76.02
95	95	128	EQ_Y	-85.58	-75.18	-64.57
95	95	121	EQ_Y	-34.2	-68.98	-53.24
96	96	121	DEAD	6.466E-12	2.283E-12	-5.676E-12
96	96	128	DEAD	4.011E-12	3.657E-12	-7.268E-12
96	96	129	DEAD	1.329E-11	4.558E-12	-2.643E-12
96	96	122	DEAD	1.624E-11	5.648E-12	-4.992E-12
96	96	121	G1_power station	0.	0.	0.
96	96	128	G1_power station	0.	0.	0.
96	96	129	G1_power station	0.	0.	0.
96	96	122	G1_power station	0.	0.	0.
96	96	121	G2_power station	-328.1	-135.16	-38.53
96	96	128	G2_power station	-366.49	-79.59	-39.11
96	96	129	G2_power station	-308.22	-77.32	-19.72
96	96	122	G2_power station	-259.56	-109.59	-19.15
96	96	121	Q_power station	-12.14	-5.	-1.43
96	96	128	Q_power station	-13.56	-2.94	-1.45
96	96	129	Q_power station	-11.4	-2.86	-0.73
96	96	122	Q_power station	-9.6	-4.05	-0.71
96	96	121	Q_neve	-41.06	-28.37	-1.69
96	96	128	Q_neve	-42.96	-13.76	-1.44
96	96	129	Q_neve	-36.13	-13.69	0.55
96	96	122	Q_neve	-32.78	-26.5	0.3
96	96	121	Q_manutenzione	-12.14	-5.	-1.43
96	96	128	Q_manutenzione	-13.56	-2.94	-1.45
96	96	129	Q_manutenzione	-11.4	-2.86	-0.73
96	96	122	Q_manutenzione	-9.6	-4.05	-0.71
96	96	121	EQ_X	-168.	-3.94	20.78
96	96	128	EQ_X	-166.24	-4.97	21.91
96	96	129	EQ_X	-116.37	5.49	22.94
96	96	122	EQ_X	-115.02	1.05	21.81
96	96	121	EQ_Y	-30.56	-68.25	-44.66
96	96	128	EQ_Y	-87.53	-75.57	-48.84

Table 21: Element Stresses - Area Shells, Part 2 of 3

Area	AreaElem	Joint	OutputCase	S11Bot	S22Bot	S12Bot
				KN/m2	KN/m2	KN/m2
96	96	129	EQ_Y	-85.77	-69.93	-35.46
96	96	122	EQ_Y	-33.73	-65.67	-31.28
97	97	122	DEAD	1.875E-11	6.088E-12	-2.526E-12
97	97	129	DEAD	1.736E-11	4.567E-12	-3.562E-12
97	97	130	DEAD	1.809E-11	7.321E-12	-4.042E-12
97	97	123	DEAD	9.298E-12	5.230E-12	-4.320E-12
97	97	122	G1_power station	0.	0.	0.
97	97	129	G1_power station	0.	0.	0.
97	97	130	G1_power station	0.	0.	0.
97	97	123	G1_power station	0.	0.	0.
97	97	122	G2_power station	-259.22	-109.53	1.62
97	97	129	G2_power station	-308.93	-77.47	2.88
97	97	130	G2_power station	-274.22	-78.87	31.15
97	97	123	G2_power station	-180.09	-90.73	29.89
97	97	122	Q_power station	-9.59	-4.05	5.979E-02
97	97	129	Q_power station	-11.43	-2.87	0.11
97	97	130	Q_power station	-10.15	-2.92	1.15
97	97	123	Q_power station	-6.66	-3.36	1.11
97	97	122	Q_neve	-32.76	-26.5	2.61
97	97	129	Q_neve	-36.15	-13.69	2.89
97	97	130	Q_neve	-31.22	-13.31	6.08
97	97	123	Q_neve	-22.31	-24.99	5.8
97	97	122	Q_manutenzione	-9.59	-4.05	5.979E-02
97	97	129	Q_manutenzione	-11.43	-2.87	0.11
97	97	130	Q_manutenzione	-10.15	-2.92	1.15
97	97	123	Q_manutenzione	-6.66	-3.36	1.11
97	97	122	EQ_X	-116.6	0.74	25.25
97	97	129	EQ_X	-119.29	4.91	24.32
97	97	130	EQ_X	-91.75	7.24	30.7
97	97	123	EQ_X	-69.54	10.94	31.63
97	97	122	EQ_Y	-23.7	-63.66	-28.05
97	97	129	EQ_Y	-77.63	-68.3	-18.59
97	97	130	EQ_Y	-68.94	-72.06	-16.78
97	97	123	EQ_Y	-21.55	-74.9	-26.25
98	98	123	DEAD	1.278E-11	5.864E-12	-4.175E-12
98	98	130	DEAD	1.362E-11	6.388E-12	-4.934E-12
98	98	29	DEAD	8.233E-12	-3.237E-12	-7.209E-12
98	98	124	DEAD	1.486E-12	1.397E-11	-6.451E-12
98	98	123	G1_power station	0.	0.	0.
98	98	130	G1_power station	0.	0.	0.
98	98	29	G1_power station	0.	0.	0.
98	98	124	G1_power station	0.	0.	0.
98	98	123	G2_power station	-195.16	-93.74	59.72

Table 21: Element Stresses - Area Shells, Part 2 of 3

Area	AreaElem	Joint	OutputCase	S11Bot	S22Bot	S12Bot
				KN/m2	KN/m2	KN/m2
98	98	130	G2_power station	-265.55	-77.14	88.75
98	98	29	G2_power station	-405.93	-109.35	196.63
98	98	124	G2_power station	93.41	-155.77	167.6
98	98	123	Q_power station	-7.22	-3.47	2.21
98	98	130	Q_power station	-9.83	-2.85	3.28
98	98	29	Q_power station	-15.02	-4.05	7.28
98	98	124	Q_power station	3.46	-5.76	6.2
98	98	123	Q_neve	-24.03	-25.33	9.55
98	98	130	Q_neve	-30.02	-13.07	12.35
98	98	29	Q_neve	-43.53	-12.15	24.63
98	98	124	Q_neve	9.93	-34.08	21.83
98	98	123	Q_manutenzione	-7.22	-3.47	2.21
98	98	130	Q_manutenzione	-9.83	-2.85	3.28
98	98	29	Q_manutenzione	-15.02	-4.05	7.28
98	98	124	Q_manutenzione	3.46	-5.76	6.2
98	98	123	EQ_X	-70.02	10.85	45.47
98	98	130	EQ_X	-95.42	6.51	37.75
98	98	29	EQ_X	-105.54	78.83	69.4
98	98	124	EQ_X	19.14	-47.21	77.12
98	98	123	EQ_Y	-35.65	-77.72	-31.18
98	98	130	EQ_Y	-35.18	-65.3	-0.31
98	98	29	EQ_Y	-33.44	-100.35	2.99
98	98	124	EQ_Y	21.44	-4.66	-27.88
99	99	5	DEAD	9.270E-13	-2.989E-12	7.064E-12
99	99	48	DEAD	-6.921E-12	-6.155E-12	8.859E-12
99	99	131	DEAD	1.591E-12	-1.332E-11	7.823E-12
99	99	93	DEAD	-1.234E-12	-4.673E-13	7.342E-12
99	99	5	G1_power station	0.	0.	0.
99	99	48	G1_power station	0.	0.	0.
99	99	131	G1_power station	0.	0.	0.
99	99	93	G1_power station	0.	0.	0.
99	99	5	G2_power station	689.43	604.1	122.4
99	99	48	G2_power station	91.06	-406.07	154.68
99	99	131	G2_power station	-19.34	-238.24	186.89
99	99	93	G2_power station	-154.83	118.88	154.62
99	99	5	Q_power station	25.51	22.35	4.53
99	99	48	Q_power station	3.37	-15.02	5.72
99	99	131	Q_power station	-0.72	-8.81	6.91
99	99	93	Q_power station	-5.73	4.4	5.72
99	99	5	Q_neve	59.28	48.81	8.07
99	99	48	Q_neve	5.22	-49.42	11.29
99	99	131	Q_neve	-8.68	-36.32	13.77
99	99	93	Q_neve	-20.38	4.35	10.54

Table 21: Element Stresses - Area Shells, Part 2 of 3

Area	AreaElem	Joint	OutputCase	S11Bot	S22Bot	S12Bot
				KN/m2	KN/m2	KN/m2
99	99	5	Q_manutenzione	25.51	22.35	4.53
99	99	48	Q_manutenzione	3.37	-15.02	5.72
99	99	131	Q_manutenzione	-0.72	-8.81	6.91
99	99	93	Q_manutenzione	-5.73	4.4	5.72
99	99	5	EQ_X	1986.47	307.66	-242.32
99	99	48	EQ_X	-241.54	-15.57	-274.4
99	99	131	EQ_X	521.57	-1.89	48.54
99	99	93	EQ_X	235.54	239.94	80.63
99	99	5	EQ_Y	-320.59	-2008.02	320.08
99	99	48	EQ_Y	-177.24	49.71	-103.92
99	99	131	EQ_Y	-25.55	-517.77	-75.63
99	99	93	EQ_Y	83.13	263.72	348.37
100	100	93	DEAD	1.119E-11	3.866E-12	8.480E-12
100	100	131	DEAD	5.610E-12	-1.283E-11	6.963E-12
100	100	132	DEAD	5.884E-12	7.438E-14	7.721E-12
100	100	95	DEAD	3.012E-13	-7.526E-12	9.238E-12
100	100	93	G1_power station	0.	0.	0.
100	100	131	G1_power station	0.	0.	0.
100	100	132	G1_power station	0.	0.	0.
100	100	95	G1_power station	0.	0.	0.
100	100	93	G2_power station	-135.45	122.76	113.8
100	100	131	G2_power station	-28.43	-240.06	130.34
100	100	132	G2_power station	-151.91	-203.04	68.94
100	100	95	G2_power station	-300.07	-36.68	52.4
100	100	93	Q_power station	-5.01	4.54	4.21
100	100	131	Q_power station	-1.05	-8.88	4.82
100	100	132	Q_power station	-5.62	-7.51	2.55
100	100	95	Q_power station	-11.1	-1.36	1.94
100	100	93	Q_neve	-18.57	4.71	6.47
100	100	131	Q_neve	-9.51	-36.49	8.16
100	100	132	Q_neve	-19.92	-34.2	1.9
100	100	95	Q_neve	-34.46	-9.44	0.22
100	100	93	Q_manutenzione	-5.01	4.54	4.21
100	100	131	Q_manutenzione	-1.05	-8.88	4.82
100	100	132	Q_manutenzione	-5.62	-7.51	2.55
100	100	95	Q_manutenzione	-11.1	-1.36	1.94
100	100	93	EQ_X	395.51	271.93	66.88
100	100	131	EQ_X	431.72	-19.86	86.44
100	100	132	EQ_X	226.38	40.44	91.65
100	100	95	EQ_X	369.16	91.25	72.09
100	100	93	EQ_Y	61.73	259.44	127.09
100	100	131	EQ_Y	-32.56	-519.17	136.66
100	100	132	EQ_Y	25.72	-143.62	116.63

Table 21: Element Stresses - Area Shells, Part 2 of 3

Area	AreaElem	Joint	OutputCase	S11Bot	S22Bot	S12Bot
				KN/m2	KN/m2	KN/m2
100	100	95	EQ_Y	-57.56	-216.2	107.06
101	101	95	DEAD	5.051E-13	-3.948E-12	5.254E-12
101	101	132	DEAD	7.814E-12	1.789E-13	6.771E-12
101	101	133	DEAD	-4.993E-12	-1.324E-11	5.254E-12
101	101	25	DEAD	1.331E-11	3.685E-13	3.737E-12
101	101	95	G1_power station	0.	0.	0.
101	101	132	G1_power station	0.	0.	0.
101	101	133	G1_power station	0.	0.	0.
101	101	25	G1_power station	0.	0.	0.
101	101	95	G2_power station	-298.81	-36.43	-16.63
101	101	132	G2_power station	-163.62	-205.38	-9.14
101	101	133	G2_power station	110.46	-314.06	-150.68
101	101	25	G2_power station	-477.65	61.94	-158.17
101	101	95	Q_power station	-11.06	-1.35	-0.62
101	101	132	Q_power station	-6.05	-7.6	-0.34
101	101	133	Q_power station	4.09	-11.62	-5.58
101	101	25	Q_power station	-17.67	2.29	-5.85
101	101	95	Q_neve	-33.91	-9.33	-7.34
101	101	132	Q_neve	-21.39	-34.5	-6.28
101	101	133	Q_neve	12.17	-48.27	-22.08
101	101	25	Q_neve	-52.88	3.21	-23.14
101	101	95	Q_manutenzione	-11.06	-1.35	-0.62
101	101	132	Q_manutenzione	-6.05	-7.6	-0.34
101	101	133	Q_manutenzione	4.09	-11.62	-5.58
101	101	25	Q_manutenzione	-17.67	2.29	-5.85
101	101	95	EQ_X	359.7	89.36	126.42
101	101	132	EQ_X	248.63	44.89	130.62
101	101	133	EQ_X	-101.44	168.18	250.97
101	101	25	EQ_X	456.31	-75.22	246.77
101	101	95	EQ_Y	-109.45	-226.58	108.76
101	101	132	EQ_Y	60.15	-136.74	78.69
101	101	133	EQ_Y	-20.07	-270.55	47.28
101	101	25	EQ_Y	-62.12	-191.79	77.35
102	102	48	DEAD	-1.071E-11	-2.054E-11	5.692E-12
102	102	50	DEAD	-8.279E-12	-1.051E-11	5.489E-12
102	102	134	DEAD	-3.030E-12	-1.400E-11	5.692E-12
102	102	131	DEAD	6.035E-12	1.913E-12	8.522E-12
102	102	48	G1_power station	0.	0.	0.
102	102	50	G1_power station	0.	0.	0.
102	102	134	G1_power station	0.	0.	0.
102	102	131	G1_power station	0.	0.	0.
102	102	48	G2_power station	95.57	-383.53	100.8
102	102	50	G2_power station	-43.58	-562.69	46.66

Table 21: Element Stresses - Area Shells, Part 2 of 3

Area	AreaElem	Joint	OutputCase	S11Bot	S22Bot	S12Bot
				KN/m2	KN/m2	KN/m2
102	102	134	G2_power station	-51.32	-511.76	60.36
102	102	131	G2_power station	-21.13	-247.18	114.51
102	102	48	Q_power station	3.54	-14.19	3.73
102	102	50	Q_power station	-1.61	-20.82	1.73
102	102	134	Q_power station	-1.9	-18.94	2.23
102	102	131	Q_power station	-0.78	-9.15	4.24
102	102	48	Q_neve	5.63	-47.37	7.
102	102	50	Q_neve	-6.79	-66.93	2.92
102	102	134	Q_neve	-11.22	-64.99	3.83
102	102	131	Q_neve	-8.84	-37.13	7.9
102	102	48	Q_manutenzione	3.54	-14.19	3.73
102	102	50	Q_manutenzione	-1.61	-20.82	1.73
102	102	134	Q_manutenzione	-1.9	-18.94	2.23
102	102	131	Q_manutenzione	-0.78	-9.15	4.24
102	102	48	EQ_X	-241.58	-15.73	-64.94
102	102	50	EQ_X	261.93	101.35	-28.31
102	102	134	EQ_X	175.71	33.87	-47.
102	102	131	EQ_X	522.9	4.77	-83.64
102	102	48	EQ_Y	-228.05	-204.35	-17.32
102	102	50	EQ_Y	-32.4	-119.8	19.04
102	102	134	EQ_Y	-29.87	-62.08	-0.21
102	102	131	EQ_Y	5.35	-363.26	-36.57
103	103	131	DEAD	2.962E-12	2.662E-13	6.028E-12
103	103	134	DEAD	2.943E-12	-1.226E-11	8.581E-12
103	103	135	DEAD	5.521E-12	-5.137E-12	7.545E-12
103	103	132	DEAD	4.555E-12	-1.330E-11	6.306E-12
103	103	131	G1_power station	0.	0.	0.
103	103	134	G1_power station	0.	0.	0.
103	103	135	G1_power station	0.	0.	0.
103	103	132	G1_power station	0.	0.	0.
103	103	131	G2_power station	-30.22	-249.	93.36
103	103	134	G2_power station	-53.34	-512.16	63.12
103	103	135	G2_power station	-34.78	-449.61	29.79
103	103	132	G2_power station	-154.12	-214.1	60.04
103	103	131	Q_power station	-1.12	-9.21	3.45
103	103	134	Q_power station	-1.97	-18.95	2.34
103	103	135	Q_power station	-1.29	-16.64	1.1
103	103	132	Q_power station	-5.7	-7.92	2.22
103	103	131	Q_neve	-9.68	-37.3	5.42
103	103	134	Q_neve	-11.42	-65.02	3.83
103	103	135	Q_neve	-8.31	-62.1	0.26
103	103	132	Q_neve	-20.18	-35.47	1.85
103	103	131	Q_manutenzione	-1.12	-9.21	3.45

Table 21: Element Stresses - Area Shells, Part 2 of 3

Area	AreaElem	Joint	OutputCase	S11Bot	S22Bot	S12Bot
				KN/m2	KN/m2	KN/m2
103	103	134	Q_manutenzione	-1.97	-18.95	2.34
103	103	135	Q_manutenzione	-1.29	-16.64	1.1
103	103	132	Q_manutenzione	-5.7	-7.92	2.22
103	103	131	EQ_X	433.06	-13.2	23.2
103	103	134	EQ_X	193.83	37.49	-5.29
103	103	135	EQ_X	148.94	42.61	51.75
103	103	132	EQ_X	227.1	44.02	80.24
103	103	131	EQ_Y	-1.66	-364.66	20.83
103	103	134	EQ_Y	-17.17	-59.55	-12.82
103	103	135	EQ_Y	7.37	-114.04	9.81
103	103	132	EQ_Y	9.58	-224.32	43.46
104	104	132	DEAD	6.944E-12	-1.229E-11	7.486E-12
104	104	135	DEAD	1.507E-11	-2.713E-12	5.970E-12
104	104	136	DEAD	-2.346E-12	-4.133E-12	5.211E-12
104	104	133	DEAD	-1.610E-12	-8.780E-12	6.728E-12
104	104	132	G1_power station	0.	0.	0.
104	104	135	G1_power station	0.	0.	0.
104	104	136	G1_power station	0.	0.	0.
104	104	133	G1_power station	0.	0.	0.
104	104	132	G2_power station	-165.83	-216.44	-16.15
104	104	135	G2_power station	-30.69	-448.79	12.
104	104	136	G2_power station	-21.86	-415.87	0.16
104	104	133	G2_power station	112.83	-302.2	-28.
104	104	132	Q_power station	-6.14	-8.01	-0.6
104	104	135	Q_power station	-1.14	-16.61	0.44
104	104	136	Q_power station	-0.81	-15.39	5.759E-03
104	104	133	Q_power station	4.17	-11.18	-1.04
104	104	132	Q_neve	-21.65	-35.77	-6.15
104	104	135	Q_neve	-7.82	-62.	-1.55
104	104	136	Q_neve	-2.43	-61.37	-2.76
104	104	133	Q_neve	12.51	-46.54	-7.36
104	104	132	Q_manutenzione	-6.14	-8.01	-0.6
104	104	135	Q_manutenzione	-1.14	-16.61	0.44
104	104	136	Q_manutenzione	-0.81	-15.39	5.759E-03
104	104	133	Q_manutenzione	4.17	-11.18	-1.04
104	104	132	EQ_X	249.35	48.47	124.74
104	104	135	EQ_X	134.84	39.79	65.09
104	104	136	EQ_X	22.14	75.85	57.36
104	104	133	EQ_X	-109.22	129.31	117.02
104	104	132	EQ_Y	44.01	-217.44	55.84
104	104	135	EQ_Y	4.12	-114.69	42.85
104	104	136	EQ_Y	-0.12	-87.31	73.74
104	104	133	EQ_Y	1.45	-162.94	86.73

Table 21: Element Stresses - Area Shells, Part 2 of 3

Area	AreaElem	Joint	OutputCase	S11Bot	S22Bot	S12Bot
				KN/m2	KN/m2	KN/m2
105	105	50	DEAD	-4.208E-12	-2.322E-11	3.386E-12
105	105	52	DEAD	-4.055E-12	-1.214E-11	1.869E-12
105	105	137	DEAD	-6.957E-12	-1.422E-11	1.869E-12
105	105	134	DEAD	-2.349E-12	-1.726E-11	3.386E-12
105	105	50	G1_power station	0.	0.	0.
105	105	52	G1_power station	0.	0.	0.
105	105	137	G1_power station	0.	0.	0.
105	105	134	G1_power station	0.	0.	0.
105	105	50	G2_power station	-46.25	-576.05	17.78
105	105	52	G2_power station	-46.25	-576.05	-17.78
105	105	137	G2_power station	-50.41	-507.23	-17.78
105	105	134	G2_power station	-50.41	-507.23	17.78
105	105	50	Q_power station	-1.71	-21.31	0.66
105	105	52	Q_power station	-1.71	-21.31	-0.66
105	105	137	Q_power station	-1.87	-18.77	-0.66
105	105	134	Q_power station	-1.87	-18.77	0.66
105	105	50	Q_neve	-7.03	-68.14	1.11
105	105	52	Q_neve	-7.03	-68.14	-1.11
105	105	137	Q_neve	-11.15	-64.63	-1.11
105	105	134	Q_neve	-11.15	-64.63	1.11
105	105	50	Q_manutenzione	-1.71	-21.31	0.66
105	105	52	Q_manutenzione	-1.71	-21.31	-0.66
105	105	137	Q_manutenzione	-1.87	-18.77	-0.66
105	105	134	Q_manutenzione	-1.87	-18.77	0.66
105	105	50	EQ_X	263.2	107.7	-11.79
105	105	52	EQ_X	261.89	107.44	14.51
105	105	137	EQ_X	173.8	30.58	14.38
105	105	134	EQ_X	175.11	30.84	-11.92
105	105	50	EQ_Y	-29.78	-106.72	4.09
105	105	52	EQ_Y	29.88	107.88	4.39
105	105	137	EQ_Y	37.74	102.17	0.32
105	105	134	EQ_Y	-35.91	-92.31	2.531E-02
106	106	134	DEAD	9.361E-13	-1.592E-11	3.823E-12
106	106	137	DEAD	-5.317E-12	-1.277E-11	2.862E-12
106	106	138	DEAD	1.127E-11	-9.754E-12	2.307E-12
106	106	135	DEAD	7.670E-12	-6.988E-12	5.895E-12
106	106	134	G1_power station	0.	0.	0.
106	106	137	G1_power station	0.	0.	0.
106	106	138	G1_power station	0.	0.	0.
106	106	135	G1_power station	0.	0.	0.
106	106	134	G2_power station	-52.43	-507.63	15.7
106	106	137	G2_power station	-52.43	-507.63	-15.7
106	106	138	G2_power station	-33.32	-442.28	-15.7

Table 21: Element Stresses - Area Shells, Part 2 of 3

Area	AreaElem	Joint	OutputCase	S11Bot	S22Bot	S12Bot
				KN/m2	KN/m2	KN/m2
106	106	135	G2_power station	-33.32	-442.28	15.7
106	106	134	Q_power station	-1.94	-18.78	0.58
106	106	137	Q_power station	-1.94	-18.78	-0.58
106	106	138	Q_power station	-1.23	-16.36	-0.58
106	106	135	Q_power station	-1.23	-16.36	0.58
106	106	134	Q_neve	-11.35	-64.67	0.7
106	106	137	Q_neve	-11.35	-64.67	-0.7
106	106	138	Q_neve	-8.15	-61.3	-0.7
106	106	135	Q_neve	-8.15	-61.3	0.7
106	106	134	Q_manutenzione	-1.94	-18.78	0.58
106	106	137	Q_manutenzione	-1.94	-18.78	-0.58
106	106	138	Q_manutenzione	-1.23	-16.36	-0.58
106	106	135	Q_manutenzione	-1.23	-16.36	0.58
106	106	134	EQ_X	193.22	34.46	8.4
106	106	137	EQ_X	193.7	34.56	-5.91
106	106	138	EQ_X	148.09	36.04	-6.45
106	106	135	EQ_X	147.61	35.94	7.86
106	106	134	EQ_Y	-23.22	-89.77	-3.41
106	106	137	EQ_Y	22.78	99.18	-4.07
106	106	138	EQ_Y	-12.44	100.33	14.21
106	106	135	EQ_Y	13.5	-83.42	14.87
107	107	135	DEAD	1.819E-11	-3.333E-12	4.597E-12
107	107	138	DEAD	8.728E-12	-1.202E-11	4.875E-12
107	107	139	DEAD	6.437E-12	-7.504E-12	4.597E-12
107	107	136	DEAD	-1.004E-11	-1.031E-11	5.633E-12
107	107	135	G1_power station	0.	0.	0.
107	107	138	G1_power station	0.	0.	0.
107	107	139	G1_power station	0.	0.	0.
107	107	136	G1_power station	0.	0.	0.
107	107	135	G2_power station	-29.22	-441.46	2.74
107	107	138	G2_power station	-29.22	-441.46	-2.74
107	107	139	G2_power station	-24.65	-429.83	-2.74
107	107	136	G2_power station	-24.65	-429.83	2.74
107	107	135	Q_power station	-1.08	-16.33	0.1
107	107	138	Q_power station	-1.08	-16.33	-0.1
107	107	139	Q_power station	-0.91	-15.9	-0.1
107	107	136	Q_power station	-0.91	-15.9	0.1
107	107	135	Q_neve	-7.66	-61.2	-0.65
107	107	138	Q_neve	-7.66	-61.2	0.65
107	107	139	Q_neve	-2.71	-62.78	0.65
107	107	136	Q_neve	-2.71	-62.78	-0.65
107	107	135	Q_manutenzione	-1.08	-16.33	0.1
107	107	138	Q_manutenzione	-1.08	-16.33	-0.1

Table 21: Element Stresses - Area Shells, Part 2 of 3

Area	AreaElem	Joint	OutputCase	S11Bot	S22Bot	S12Bot
				KN/m2	KN/m2	KN/m2
107	107	139	Q_manutenzione	-0.91	-15.9	-0.1
107	107	136	Q_manutenzione	-0.91	-15.9	0.1
107	107	135	EQ_X	133.5	33.12	19.24
107	107	138	EQ_X	133.35	33.09	-19.12
107	107	139	EQ_X	22.27	77.23	-18.46
107	107	136	EQ_X	22.43	77.26	19.9
107	107	135	EQ_Y	10.25	-84.07	41.83
107	107	138	EQ_Y	-10.88	100.64	41.99
107	107	139	EQ_Y	-3.83	87.29	47.96
107	107	136	EQ_Y	4.73	-63.07	47.81
108	108	52	DEAD	-1.719E-12	-1.359E-11	3.823E-12
108	108	54	DEAD	-4.628E-12	-4.494E-12	4.582E-12
108	108	140	DEAD	3.306E-12	-2.119E-12	2.307E-12
108	108	137	DEAD	-3.965E-12	-1.483E-11	1.548E-12
108	108	52	G1_power station	0.	0.	0.
108	108	54	G1_power station	0.	0.	0.
108	108	140	G1_power station	0.	0.	0.
108	108	137	G1_power station	0.	0.	0.
108	108	52	G2_power station	-43.58	-562.69	-46.66
108	108	54	G2_power station	95.57	-383.53	-100.8
108	108	140	G2_power station	-21.13	-247.18	-114.51
108	108	137	G2_power station	-51.32	-511.76	-60.36
108	108	52	Q_power station	-1.61	-20.82	-1.73
108	108	54	Q_power station	3.54	-14.19	-3.73
108	108	140	Q_power station	-0.78	-9.15	-4.24
108	108	137	Q_power station	-1.9	-18.94	-2.23
108	108	52	Q_neve	-6.79	-66.93	-2.92
108	108	54	Q_neve	5.63	-47.37	-7.
108	108	140	Q_neve	-8.84	-37.13	-7.9
108	108	137	Q_neve	-11.22	-64.99	-3.83
108	108	52	Q_manutenzione	-1.61	-20.82	-1.73
108	108	54	Q_manutenzione	3.54	-14.19	-3.73
108	108	140	Q_manutenzione	-0.78	-9.15	-4.24
108	108	137	Q_manutenzione	-1.9	-18.94	-2.23
108	108	52	EQ_X	260.97	102.84	30.
108	108	54	EQ_X	-244.2	-14.58	65.42
108	108	140	EQ_X	520.27	5.84	85.66
108	108	137	EQ_X	174.74	35.27	50.23
108	108	52	EQ_Y	32.53	121.14	19.79
108	108	54	EQ_Y	229.16	205.88	-16.04
108	108	140	EQ_Y	-3.01	370.96	-36.12
108	108	137	EQ_Y	31.22	69.58	-0.29
109	109	137	DEAD	-6.392E-12	-1.709E-11	2.174E-12

Table 21: Element Stresses - Area Shells, Part 2 of 3

Area	AreaElem	Joint	OutputCase	S11Bot	S22Bot	S12Bot
				KN/m2	KN/m2	KN/m2
109	109	140	DEAD	5.856E-12	-3.140E-12	1.760E-13
109	109	141	DEAD	6.501E-12	1.872E-12	-8.600E-13
109	109	138	DEAD	1.363E-11	-9.776E-12	2.451E-12
109	109	137	G1_power station	0.	0.	0.
109	109	140	G1_power station	0.	0.	0.
109	109	141	G1_power station	0.	0.	0.
109	109	138	G1_power station	0.	0.	0.
109	109	137	G2_power station	-53.34	-512.16	-63.12
109	109	140	G2_power station	-30.22	-249.	-93.36
109	109	141	G2_power station	-154.12	-214.1	-60.04
109	109	138	G2_power station	-34.78	-449.61	-29.79
109	109	137	Q_power station	-1.97	-18.95	-2.34
109	109	140	Q_power station	-1.12	-9.21	-3.45
109	109	141	Q_power station	-5.7	-7.92	-2.22
109	109	138	Q_power station	-1.29	-16.64	-1.1
109	109	137	Q_neve	-11.42	-65.02	-3.83
109	109	140	Q_neve	-9.68	-37.3	-5.42
109	109	141	Q_neve	-20.18	-35.47	-1.85
109	109	138	Q_neve	-8.31	-62.1	-0.26
109	109	137	Q_manutenzione	-1.97	-18.95	-2.34
109	109	140	Q_manutenzione	-1.12	-9.21	-3.45
109	109	141	Q_manutenzione	-5.7	-7.92	-2.22
109	109	138	Q_manutenzione	-1.29	-16.64	-1.1
109	109	137	EQ_X	194.64	39.25	8.55
109	109	140	EQ_X	428.76	-12.46	-19.73
109	109	141	EQ_X	221.82	39.85	-77.03
109	109	138	EQ_X	148.77	39.45	-48.75
109	109	137	EQ_Y	16.26	66.59	-13.85
109	109	140	EQ_Y	4.13	372.38	20.26
109	109	141	EQ_Y	-4.94	242.91	42.54
109	109	138	EQ_Y	-6.11	131.96	8.43
110	110	138	DEAD	5.652E-12	-1.140E-11	1.794E-12
110	110	141	DEAD	4.352E-12	2.409E-12	7.438E-14
110	110	142	DEAD	5.842E-12	3.195E-12	-4.808E-13
110	110	139	DEAD	1.887E-12	-5.364E-12	3.866E-12
110	110	138	G1_power station	0.	0.	0.
110	110	141	G1_power station	0.	0.	0.
110	110	142	G1_power station	0.	0.	0.
110	110	139	G1_power station	0.	0.	0.
110	110	138	G2_power station	-30.69	-448.79	-12.
110	110	141	G2_power station	-165.83	-216.44	16.15
110	110	142	G2_power station	112.83	-302.2	28.
110	110	139	G2_power station	-21.86	-415.87	-0.16

Table 21: Element Stresses - Area Shells, Part 2 of 3

Area	AreaElem	Joint	OutputCase	S11Bot	S22Bot	S12Bot
				KN/m2	KN/m2	KN/m2
110	110	138	Q_power station	-1.14	-16.61	-0.44
110	110	141	Q_power station	-6.14	-8.01	0.6
110	110	142	Q_power station	4.17	-11.18	1.04
110	110	139	Q_power station	-0.81	-15.39	-5.759E-03
110	110	138	Q_neve	-7.82	-62.	1.55
110	110	141	Q_neve	-21.65	-35.77	6.15
110	110	142	Q_neve	12.51	-46.54	7.36
110	110	139	Q_neve	-2.43	-61.37	2.76
110	110	138	Q_manutenzione	-1.14	-16.61	-0.44
110	110	141	Q_manutenzione	-6.14	-8.01	0.6
110	110	142	Q_manutenzione	4.17	-11.18	1.04
110	110	139	Q_manutenzione	-0.81	-15.39	-5.759E-03
110	110	138	EQ_X	134.03	36.5	-63.37
110	110	141	EQ_X	251.16	45.71	-121.36
110	110	142	EQ_X	-107.08	128.14	-116.75
110	110	139	EQ_X	21.66	74.16	-58.76
110	110	138	EQ_Y	-4.55	132.27	42.29
110	110	141	EQ_Y	-44.63	234.98	53.89
110	110	142	EQ_Y	-0.68	187.41	86.17
110	110	139	EQ_Y	1.07	111.81	74.57
111	111	54	DEAD	-2.369E-12	-1.063E-11	1.517E-12
111	111	58	DEAD	7.324E-12	5.454E-13	-1.517E-12
111	111	143	DEAD	3.792E-12	1.980E-12	-1.517E-12
111	111	140	DEAD	5.428E-12	1.662E-13	1.517E-12
111	111	54	G1_power station	0.	0.	0.
111	111	58	G1_power station	0.	0.	0.
111	111	143	G1_power station	0.	0.	0.
111	111	140	G1_power station	0.	0.	0.
111	111	54	G2_power station	91.06	-406.07	-154.68
111	111	58	G2_power station	689.43	604.1	-122.4
111	111	143	G2_power station	-154.83	118.88	-154.62
111	111	140	G2_power station	-19.34	-238.24	-186.89
111	111	54	Q_power station	3.37	-15.02	-5.72
111	111	58	Q_power station	25.51	22.35	-4.53
111	111	143	Q_power station	-5.73	4.4	-5.72
111	111	140	Q_power station	-0.72	-8.81	-6.91
111	111	54	Q_neve	5.22	-49.42	-11.29
111	111	58	Q_neve	59.28	48.81	-8.07
111	111	143	Q_neve	-20.38	4.35	-10.54
111	111	140	Q_neve	-8.68	-36.32	-13.77
111	111	54	Q_manutenzione	3.37	-15.02	-5.72
111	111	58	Q_manutenzione	25.51	22.35	-4.53
111	111	143	Q_manutenzione	-5.73	4.4	-5.72

Table 21: Element Stresses - Area Shells, Part 2 of 3

Area	AreaElem	Joint	OutputCase	S11Bot	S22Bot	S12Bot
				KN/m2	KN/m2	KN/m2
111	111	140	Q_manutenzione	-0.72	-8.81	-6.91
111	111	54	EQ_X	-244.08	-13.98	274.48
111	111	58	EQ_X	1985.14	309.49	241.92
111	111	143	EQ_X	234.44	242.92	-81.17
111	111	140	EQ_X	519.27	0.84	-48.62
111	111	54	EQ_Y	178.41	-47.87	-102.14
111	111	58	EQ_Y	319.48	2009.41	322.24
111	111	143	EQ_Y	-83.29	-257.63	350.71
111	111	140	EQ_Y	27.66	524.32	-73.67
112	112	140	DEAD	2.627E-12	5.134E-13	-1.591E-12
112	112	143	DEAD	3.635E-12	2.226E-12	4.808E-13
112	112	144	DEAD	6.513E-12	-7.355E-12	-2.350E-12
112	112	141	DEAD	1.207E-11	8.009E-12	-1.794E-12
112	112	140	G1_power station	0.	0.	0.
112	112	143	G1_power station	0.	0.	0.
112	112	144	G1_power station	0.	0.	0.
112	112	141	G1_power station	0.	0.	0.
112	112	140	G2_power station	-28.43	-240.06	-130.34
112	112	143	G2_power station	-135.45	122.76	-113.8
112	112	144	G2_power station	-300.07	-36.68	-52.4
112	112	141	G2_power station	-151.91	-203.04	-68.94
112	112	140	Q_power station	-1.05	-8.88	-4.82
112	112	143	Q_power station	-5.01	4.54	-4.21
112	112	144	Q_power station	-11.1	-1.36	-1.94
112	112	141	Q_power station	-5.62	-7.51	-2.55
112	112	140	Q_neve	-9.51	-36.49	-8.16
112	112	143	Q_neve	-18.57	4.71	-6.47
112	112	144	Q_neve	-34.46	-9.44	-0.22
112	112	141	Q_neve	-19.92	-34.2	-1.9
112	112	140	Q_manutenzione	-1.05	-8.88	-4.82
112	112	143	Q_manutenzione	-5.01	4.54	-4.21
112	112	144	Q_manutenzione	-11.1	-1.36	-1.94
112	112	141	Q_manutenzione	-5.62	-7.51	-2.55
112	112	140	EQ_X	427.76	-17.46	-85.07
112	112	143	EQ_X	389.82	273.99	-67.93
112	112	144	EQ_X	363.6	93.98	-70.61
112	112	141	EQ_X	222.55	43.52	-87.74
112	112	140	EQ_Y	34.8	525.75	137.61
112	112	143	EQ_Y	-60.03	-252.97	129.39
112	112	144	EQ_Y	60.15	227.09	107.28
112	112	141	EQ_Y	-22.6	154.61	115.5
113	113	141	DEAD	3.917E-12	6.967E-12	-2.088E-12
113	113	144	DEAD	8.930E-12	-7.704E-12	-4.965E-13

Table 21: Element Stresses - Area Shells, Part 2 of 3

Area	AreaElem	Joint	OutputCase	S11Bot	S22Bot	S12Bot
				KN/m2	KN/m2	KN/m2
113	113	30	DEAD	9.984E-12	1.000E-11	-3.604E-12
113	113	142	DEAD	2.673E-12	-2.585E-12	-1.255E-12
113	113	141	G1_power station	0.	0.	0.
113	113	144	G1_power station	0.	0.	0.
113	113	30	G1_power station	0.	0.	0.
113	113	142	G1_power station	0.	0.	0.
113	113	141	G2_power station	-163.62	-205.38	9.14
113	113	144	G2_power station	-298.81	-36.43	16.63
113	113	30	G2_power station	-477.65	61.94	158.17
113	113	142	G2_power station	110.46	-314.06	150.68
113	113	141	Q_power station	-6.05	-7.6	0.34
113	113	144	Q_power station	-11.06	-1.35	0.62
113	113	30	Q_power station	-17.67	2.29	5.85
113	113	142	Q_power station	4.09	-11.62	5.58
113	113	141	Q_neve	-21.39	-34.5	6.28
113	113	144	Q_neve	-33.91	-9.33	7.34
113	113	30	Q_neve	-52.88	3.21	23.14
113	113	142	Q_neve	12.17	-48.27	22.08
113	113	141	Q_manutenzione	-6.05	-7.6	0.34
113	113	144	Q_manutenzione	-11.06	-1.35	0.62
113	113	30	Q_manutenzione	-17.67	2.29	5.85
113	113	142	Q_manutenzione	4.09	-11.62	5.58
113	113	141	EQ_X	251.9	49.39	-126.54
113	113	144	EQ_X	342.05	89.67	-123.79
113	113	30	EQ_X	434.68	-94.76	-239.03
113	113	142	EQ_X	-102.15	152.82	-241.79
113	113	141	EQ_Y	-62.29	146.68	76.51
113	113	144	EQ_Y	115.08	238.07	106.51
113	113	30	EQ_Y	73.	229.49	71.44
113	113	142	EQ_Y	23.18	306.7	41.43
114	114	11	DEAD	7.032E-11	4.530E-12	2.236E-11
114	114	14	DEAD	3.859E-11	3.514E-12	1.822E-11
114	114	145	DEAD	2.557E-11	-1.898E-11	2.843E-11
114	114	146	DEAD	-3.123E-12	-4.828E-12	2.732E-11
114	114	11	G1_power station	0.	0.	0.
114	114	14	G1_power station	0.	0.	0.
114	114	145	G1_power station	0.	0.	0.
114	114	146	G1_power station	0.	0.	0.
114	114	11	G2_power station	220.04	-20.8	30.8
114	114	14	G2_power station	610.33	641.14	79.8
114	114	145	G2_power station	-385.99	126.5	77.58
114	114	146	G2_power station	-163.	12.98	28.58
114	114	11	Q_power station	8.14	-0.77	1.14

Table 21: Element Stresses - Area Shells, Part 2 of 3

Area	AreaElem	Joint	OutputCase	S11Bot	S22Bot	S12Bot
				KN/m2	KN/m2	KN/m2
114	114	14	Q_power station	22.58	23.72	2.95
114	114	145	Q_power station	-14.28	4.68	2.87
114	114	146	Q_power station	-6.03	0.48	1.06
114	114	11	Q_neve	15.38	-1.9	1.17
114	114	14	Q_neve	50.69	52.63	5.28
114	114	145	Q_neve	-45.98	5.08	4.89
114	114	146	Q_neve	-24.46	1.17	0.79
114	114	11	Q_manutenzione	8.14	-0.77	1.14
114	114	14	Q_manutenzione	22.58	23.72	2.95
114	114	145	Q_manutenzione	-14.28	4.68	2.87
114	114	146	Q_manutenzione	-6.03	0.48	1.06
114	114	11	EQ_X	503.31	146.43	-175.27
114	114	14	EQ_X	-1994.41	-288.8	-144.65
114	114	145	EQ_X	-277.1	-209.88	185.82
114	114	146	EQ_X	-948.55	-62.7	155.2
114	114	11	EQ_Y	-382.62	219.44	19.76
114	114	14	EQ_Y	-384.49	-1478.34	-350.21
114	114	145	EQ_Y	81.83	532.16	-396.43
114	114	146	EQ_Y	-23.65	-125.95	-26.46
115	115	146	DEAD	4.513E-11	2.216E-11	2.529E-11
115	115	145	DEAD	1.145E-11	-3.216E-11	4.045E-11
115	115	147	DEAD	2.011E-11	-8.477E-11	4.652E-11
115	115	148	DEAD	7.743E-11	2.472E-11	3.135E-11
115	115	146	G1_power station	0.	0.	0.
115	115	145	G1_power station	0.	0.	0.
115	115	147	G1_power station	0.	0.	0.
115	115	148	G1_power station	0.	0.	0.
115	115	146	G2_power station	-180.03	9.57	108.96
115	115	145	G2_power station	-366.89	130.32	117.73
115	115	147	G2_power station	-654.4	-52.7	149.87
115	115	148	G2_power station	-678.09	-1.22	141.09
115	115	146	Q_power station	-6.66	0.35	4.03
115	115	145	Q_power station	-13.58	4.82	4.36
115	115	147	Q_power station	-24.21	-1.95	5.55
115	115	148	Q_power station	-25.09	-4.500E-02	5.22
115	115	146	Q_neve	-26.04	0.86	7.99
115	115	145	Q_neve	-44.25	5.43	8.55
115	115	147	Q_neve	-74.76	-11.94	11.43
115	115	148	Q_neve	-75.67	-0.13	10.87
115	115	146	Q_manutenzione	-6.66	0.35	4.03
115	115	145	Q_manutenzione	-13.58	4.82	4.36
115	115	147	Q_manutenzione	-24.21	-1.95	5.55
115	115	148	Q_manutenzione	-25.09	-4.500E-02	5.22

Table 21: Element Stresses - Area Shells, Part 2 of 3

Area	AreaElem	Joint	OutputCase	S11Bot	S22Bot	S12Bot
				KN/m2	KN/m2	KN/m2
115	115	146	EQ_X	-751.76	-23.34	111.32
115	115	145	EQ_X	-455.61	-245.58	82.51
115	115	147	EQ_X	-454.64	-77.77	12.78
115	115	148	EQ_X	-480.75	-0.69	41.59
115	115	146	EQ_Y	-10.31	-123.28	-256.63
115	115	145	EQ_Y	86.69	533.13	-174.01
115	115	147	EQ_Y	32.64	39.1	-156.64
115	115	148	EQ_Y	133.22	60.76	-239.26
116	116	148	DEAD	3.583E-11	1.148E-11	4.729E-11
116	116	147	DEAD	4.843E-11	-7.337E-11	4.425E-11
116	116	149	DEAD	-5.290E-11	-8.635E-11	4.729E-11
116	116	150	DEAD	2.644E-11	1.688E-11	5.032E-11
116	116	148	G1_power station	0.	0.	0.
116	116	147	G1_power station	0.	0.	0.
116	116	149	G1_power station	0.	0.	0.
116	116	150	G1_power station	0.	0.	0.
116	116	148	G2_power station	-662.41	1.92	147.32
116	116	147	G2_power station	-665.79	-54.98	139.62
116	116	149	G2_power station	-851.62	-103.76	125.9
116	116	150	G2_power station	-898.73	-1.53	133.6
116	116	148	Q_power station	-24.51	7.107E-02	5.45
116	116	147	Q_power station	-24.63	-2.03	5.17
116	116	149	Q_power station	-31.51	-3.84	4.66
116	116	150	Q_power station	-33.25	-5.660E-02	4.94
116	116	148	Q_neve	-74.23	0.16	11.28
116	116	147	Q_neve	-75.8	-12.15	10.5
116	116	149	Q_neve	-95.06	-17.23	9.12
116	116	150	Q_neve	-98.36	-0.17	9.9
116	116	148	Q_manutenzione	-24.51	7.107E-02	5.45
116	116	147	Q_manutenzione	-24.63	-2.03	5.17
116	116	149	Q_manutenzione	-31.51	-3.84	4.66
116	116	150	Q_manutenzione	-33.25	-5.660E-02	4.94
116	116	148	EQ_X	-495.35	-3.61	1.56
116	116	147	EQ_X	-444.72	-75.79	-0.24
116	116	149	EQ_X	-369.61	-36.05	-16.72
116	116	150	EQ_X	-386.89	-0.51	-14.92
116	116	148	EQ_Y	140.3	62.17	-171.07
116	116	147	EQ_Y	39.81	40.53	-170.07
116	116	149	EQ_Y	88.42	121.46	-143.2
116	116	150	EQ_Y	149.88	-1.11	-144.2
117	117	150	DEAD	2.256E-11	-3.070E-12	6.380E-11
117	117	149	DEAD	-2.168E-11	-5.950E-11	4.449E-11
117	117	151	DEAD	-2.825E-11	-5.692E-11	3.953E-11

Table 21: Element Stresses - Area Shells, Part 2 of 3

Area	AreaElem	Joint	OutputCase	S11Bot	S22Bot	S12Bot
				KN/m2	KN/m2	KN/m2
117	117	152	DEAD	-1.180E-10	2.316E-11	5.359E-11
117	117	150	G1_power station	0.	0.	0.
117	117	149	G1_power station	0.	0.	0.
117	117	151	G1_power station	0.	0.	0.
117	117	152	G1_power station	0.	0.	0.
117	117	150	G2_power station	-894.38	-0.66	110.71
117	117	149	G2_power station	-853.83	-104.2	103.51
117	117	151	G2_power station	-956.34	-124.02	74.92
117	117	152	G2_power station	-1027.33	2.17	82.12
117	117	150	Q_power station	-33.09	-2.442E-02	4.1
117	117	149	Q_power station	-31.59	-3.86	3.83
117	117	151	Q_power station	-35.38	-4.59	2.77
117	117	152	Q_power station	-38.01	8.036E-02	3.04
117	117	150	Q_neve	-97.93	-8.015E-02	7.55
117	117	149	Q_neve	-95.27	-17.27	6.95
117	117	151	Q_neve	-105.2	-19.65	4.06
117	117	152	Q_neve	-111.03	0.23	4.67
117	117	150	Q_manutenzione	-33.09	-2.442E-02	4.1
117	117	149	Q_manutenzione	-31.59	-3.86	3.83
117	117	151	Q_manutenzione	-35.38	-4.59	2.77
117	117	152	Q_manutenzione	-38.01	8.036E-02	3.04
117	117	150	EQ_X	-391.34	-1.4	-28.11
117	117	149	EQ_X	-368.68	-35.87	-24.65
117	117	151	EQ_X	-295.01	-18.92	-32.44
117	117	152	EQ_X	-305.19	-0.38	-35.9
117	117	150	EQ_Y	157.74	0.47	-122.03
117	117	149	EQ_Y	94.64	122.71	-113.6
117	117	151	EQ_Y	106.24	79.74	-88.42
117	117	152	EQ_Y	170.93	18.9	-96.85
118	118	152	DEAD	-4.654E-11	2.514E-11	3.035E-11
118	118	151	DEAD	-9.976E-11	-5.440E-11	3.146E-11
118	118	153	DEAD	-7.081E-11	-2.339E-11	1.518E-11
118	118	154	DEAD	-2.120E-10	-3.317E-11	1.933E-11
118	118	152	G1_power station	0.	0.	0.
118	118	151	G1_power station	0.	0.	0.
118	118	153	G1_power station	0.	0.	0.
118	118	154	G1_power station	0.	0.	0.
118	118	152	G2_power station	-1023.44	2.95	46.
118	118	151	G2_power station	-957.36	-124.22	41.35
118	118	153	G2_power station	-1033.39	-133.38	-2.76
118	118	154	G2_power station	-1160.4	-11.05	1.89
118	118	152	Q_power station	-37.87	0.11	1.7
118	118	151	Q_power station	-35.42	-4.6	1.53

Table 21: Element Stresses - Area Shells, Part 2 of 3

Area	AreaElem	Joint	OutputCase	S11Bot	S22Bot	S12Bot
				KN/m2	KN/m2	KN/m2
118	118	153	Q_power station	-38.24	-4.94	-0.1
118	118	154	Q_power station	-42.93	-0.41	6.976E-02
118	118	152	Q_neve	-110.63	0.31	0.96
118	118	151	Q_neve	-105.29	-19.67	0.67
118	118	153	Q_neve	-111.52	-20.73	-3.84
118	118	154	Q_neve	-123.13	-1.17	-3.56
118	118	152	Q_manutenzione	-37.87	0.11	1.7
118	118	151	Q_manutenzione	-35.42	-4.6	1.53
118	118	153	Q_manutenzione	-38.24	-4.94	-0.1
118	118	154	Q_manutenzione	-42.93	-0.41	6.976E-02
118	118	152	EQ_X	-309.41	-1.22	-42.04
118	118	151	EQ_X	-294.16	-18.75	-37.05
118	118	153	EQ_X	-222.88	-9.52	-41.22
118	118	154	EQ_X	-232.23	-1.25	-46.22
118	118	152	EQ_Y	182.52	21.22	-69.71
118	118	151	EQ_Y	108.58	80.2	-68.6
118	118	153	EQ_Y	116.48	83.31	-44.7
118	118	154	EQ_Y	191.97	16.89	-45.82
119	119	154	DEAD	-8.121E-11	1.016E-11	1.389E-11
119	119	153	DEAD	-1.923E-10	-6.036E-11	-1.282E-12
119	119	155	DEAD	-1.320E-10	-2.548E-11	-1.038E-11
119	119	156	DEAD	-2.810E-10	5.624E-12	4.785E-12
119	119	154	G1_power station	0.	0.	0.
119	119	153	G1_power station	0.	0.	0.
119	119	155	G1_power station	0.	0.	0.
119	119	156	G1_power station	0.	0.	0.
119	119	154	G2_power station	-1150.11	-8.99	-44.23
119	119	153	G2_power station	-1034.41	-133.59	-71.73
119	119	155	G2_power station	-1198.73	-181.04	-160.74
119	119	156	G2_power station	-1502.14	50.24	-133.24
119	119	154	Q_power station	-42.55	-0.33	-1.64
119	119	153	Q_power station	-38.27	-4.94	-2.65
119	119	155	Q_power station	-44.35	-6.7	-5.95
119	119	156	Q_power station	-55.58	1.86	-4.93
119	119	154	Q_neve	-122.13	-0.97	-8.22
119	119	153	Q_neve	-111.57	-20.74	-10.96
119	119	155	Q_neve	-125.98	-25.09	-19.96
119	119	156	Q_neve	-154.96	5.39	-17.22
119	119	154	Q_manutenzione	-42.55	-0.33	-1.64
119	119	153	Q_manutenzione	-38.27	-4.94	-2.65
119	119	155	Q_manutenzione	-44.35	-6.7	-5.95
119	119	156	Q_manutenzione	-55.58	1.86	-4.93
119	119	154	EQ_X	-238.75	-2.56	-46.21

Table 21: Element Stresses - Area Shells, Part 2 of 3

Area	AreaElem	Joint	OutputCase	S11Bot	S22Bot	S12Bot
				KN/m2	KN/m2	KN/m2
119	119	153	EQ_X	-219.85	-8.91	-47.83
119	119	155	EQ_X	-156.14	18.53	-50.13
119	119	156	EQ_X	-169.82	3.57	-48.52
119	119	154	EQ_Y	214.62	21.42	-16.42
119	119	153	EQ_Y	111.55	82.32	-21.9
119	119	155	EQ_Y	113.99	123.89	11.66
119	119	156	EQ_Y	237.3	25.12	17.14
120	120	156	DEAD	-2.119E-10	1.150E-11	-1.963E-11
120	120	155	DEAD	-1.822E-10	-2.696E-11	-3.065E-11
120	120	24	DEAD	-2.225E-10	1.302E-11	-4.693E-11
120	120	31	DEAD	-2.732E-10	9.444E-12	-3.065E-11
120	120	156	G1_power station	0.	0.	0.
120	120	155	G1_power station	0.	0.	0.
120	120	24	G1_power station	0.	0.	0.
120	120	31	G1_power station	0.	0.	0.
120	120	156	G2_power station	-1499.08	50.85	-210.05
120	120	155	G2_power station	-1148.97	-171.09	-366.16
120	120	24	G2_power station	-1919.55	239.14	-583.42
120	120	31	G2_power station	-2793.47	-119.39	-427.31
120	120	156	Q_power station	-55.47	1.88	-7.77
120	120	155	Q_power station	-42.51	-6.33	-13.55
120	120	24	Q_power station	-71.02	8.85	-21.59
120	120	31	Q_power station	-103.36	-4.42	-15.81
120	120	156	Q_neve	-155.06	5.37	-24.38
120	120	155	Q_neve	-120.53	-24.	-41.07
120	120	24	Q_neve	-197.21	23.43	-62.08
120	120	31	Q_neve	-279.74	-12.55	-45.4
120	120	156	Q_manutenzione	-55.47	1.88	-7.77
120	120	155	Q_manutenzione	-42.51	-6.33	-13.55
120	120	24	Q_manutenzione	-71.02	8.85	-21.59
120	120	31	Q_manutenzione	-103.36	-4.42	-15.81
120	120	156	EQ_X	-185.4	0.45	-46.58
120	120	155	EQ_X	-142.82	21.19	-52.66
120	120	24	EQ_X	-141.21	92.97	-41.29
120	120	31	EQ_X	-116.74	-13.55	-35.21
120	120	156	EQ_Y	289.73	35.6	55.51
120	120	155	EQ_Y	84.25	117.94	48.22
120	120	24	EQ_Y	83.02	84.65	87.9
120	120	31	EQ_Y	360.5	10.13	95.19
121	121	19	DEAD	-3.102E-11	6.350E-12	9.742E-12
121	121	22	DEAD	-1.659E-11	1.776E-11	9.742E-12
121	121	157	DEAD	-1.889E-11	4.882E-11	-1.149E-11
121	121	158	DEAD	-1.121E-10	-4.140E-11	-1.149E-11

Table 21: Element Stresses - Area Shells, Part 2 of 3

Area	AreaElem	Joint	OutputCase	S11Bot	S22Bot	S12Bot
				KN/m2	KN/m2	KN/m2
121	121	19	G1_power station	0.	0.	0.
121	121	22	G1_power station	0.	0.	0.
121	121	157	G1_power station	0.	0.	0.
121	121	158	G1_power station	0.	0.	0.
121	121	19	G2_power station	189.59	-20.17	-12.12
121	121	22	G2_power station	627.29	608.16	38.73
121	121	157	G2_power station	-333.5	119.47	15.5
121	121	158	G2_power station	-183.45	6.48	-35.35
121	121	19	Q_power station	7.01	-0.75	-0.45
121	121	22	Q_power station	23.21	22.5	1.43
121	121	157	Q_power station	-12.34	4.42	0.57
121	121	158	Q_power station	-6.79	0.24	-1.31
121	121	19	Q_neve	12.62	-1.82	-4.07
121	121	22	Q_neve	53.13	47.97	0.34
121	121	157	Q_neve	-38.01	3.12	-2.4
121	121	158	Q_neve	-24.45	0.45	-6.81
121	121	19	Q_manutenzione	7.01	-0.75	-0.45
121	121	22	Q_manutenzione	23.21	22.5	1.43
121	121	157	Q_manutenzione	-12.34	4.42	0.57
121	121	158	Q_manutenzione	-6.79	0.24	-1.31
121	121	19	EQ_X	-547.86	-159.28	212.36
121	121	22	EQ_X	2026.99	303.62	174.71
121	121	157	EQ_X	330.8	244.1	-140.94
121	121	158	EQ_X	954.62	56.7	-103.29
121	121	19	EQ_Y	407.07	-231.41	-36.22
121	121	22	EQ_Y	404.24	1544.23	375.61
121	121	157	EQ_Y	-53.98	-528.6	423.94
121	121	158	EQ_Y	95.28	156.92	12.11
122	122	158	DEAD	-5.684E-11	-1.865E-11	-2.307E-11
122	122	157	DEAD	-1.507E-11	3.482E-11	-2.307E-11
122	122	159	DEAD	-6.139E-11	-4.997E-12	-3.823E-11
122	122	160	DEAD	-1.137E-10	1.510E-11	-3.823E-11
122	122	158	G1_power station	0.	0.	0.
122	122	157	G1_power station	0.	0.	0.
122	122	159	G1_power station	0.	0.	0.
122	122	160	G1_power station	0.	0.	0.
122	122	158	G2_power station	-194.02	4.36	21.53
122	122	157	G2_power station	-315.6	123.05	16.5
122	122	159	G2_power station	-677.48	-97.72	1.39
122	122	160	G2_power station	-887.23	33.43	6.42
122	122	158	Q_power station	-7.18	0.16	0.8
122	122	157	Q_power station	-11.68	4.55	0.61
122	122	159	Q_power station	-25.07	-3.62	5.159E-02

Table 21: Element Stresses - Area Shells, Part 2 of 3

Area	AreaElem	Joint	OutputCase	S11Bot	S22Bot	S12Bot
				KN/m2	KN/m2	KN/m2
122	122	160	Q_power station	-32.83	1.24	0.24
122	122	158	Q_neve	-25.41	0.26	-2.19
122	122	157	Q_neve	-36.36	3.45	-2.93
122	122	159	Q_neve	-71.64	-17.38	-5.04
122	122	160	Q_neve	-91.7	3.64	-4.3
122	122	158	Q_manutenzione	-7.18	0.16	0.8
122	122	157	Q_manutenzione	-11.68	4.55	0.61
122	122	159	Q_manutenzione	-25.07	-3.62	5.159E-02
122	122	160	Q_manutenzione	-32.83	1.24	0.24
122	122	158	EQ_X	781.85	22.14	-79.93
122	122	157	EQ_X	490.73	276.09	-29.05
122	122	159	EQ_X	528.77	99.76	56.2
122	122	160	EQ_X	656.79	-25.95	5.31
122	122	158	EQ_Y	107.34	159.33	273.57
122	122	157	EQ_Y	-75.49	-532.91	188.82
122	122	159	EQ_Y	3.11	-28.28	187.37
122	122	160	EQ_Y	-4.88	-47.77	272.13
123	123	160	DEAD	-1.483E-10	-2.905E-12	-5.745E-11
123	123	159	DEAD	-3.471E-11	-7.438E-14	-5.745E-11
123	123	23	DEAD	-1.157E-10	-3.663E-12	-7.565E-11
123	123	32	DEAD	-9.008E-11	-3.866E-12	-7.565E-11
123	123	160	G1_power station	0.	0.	0.
123	123	159	G1_power station	0.	0.	0.
123	123	23	G1_power station	0.	0.	0.
123	123	32	G1_power station	0.	0.	0.
123	123	160	G2_power station	-866.07	37.66	-17.96
123	123	159	G2_power station	-663.88	-95.	-134.16
123	123	23	G2_power station	-1251.08	123.36	-289.04
123	123	32	G2_power station	-1991.7	-77.04	-172.83
123	123	160	Q_power station	-32.04	1.39	-0.66
123	123	159	Q_power station	-24.56	-3.52	-4.96
123	123	23	Q_power station	-46.29	4.56	-10.69
123	123	32	Q_power station	-73.69	-2.85	-6.39
123	123	160	Q_neve	-90.01	3.97	-6.65
123	123	159	Q_neve	-69.86	-17.03	-19.2
123	123	23	Q_neve	-128.47	9.95	-34.2
123	123	32	Q_neve	-197.76	-8.1	-21.66
123	123	160	Q_manutenzione	-32.04	1.39	-0.66
123	123	159	Q_manutenzione	-24.56	-3.52	-4.96
123	123	23	Q_manutenzione	-46.29	4.56	-10.69
123	123	32	Q_manutenzione	-73.69	-2.85	-6.39
123	123	160	EQ_X	663.14	-24.68	60.07
123	123	159	EQ_X	512.64	96.54	131.74

Table 21: Element Stresses - Area Shells, Part 2 of 3

Area	AreaElem	Joint	OutputCase	S11Bot	S22Bot	S12Bot
				KN/m2	KN/m2	KN/m2
123	123	23	EQ_X	735.72	-127.85	202.53
123	123	32	EQ_X	949.56	54.26	130.87
123	123	160	EQ_Y	47.79	-37.24	226.2
123	123	159	EQ_Y	-50.83	-39.07	206.32
123	123	23	EQ_Y	-3.02	-132.19	170.68
123	123	32	EQ_Y	69.8	-2.33	190.56
124	124	22	DEAD	-5.187E-12	1.572E-11	-1.110E-12
124	124	74	DEAD	-2.532E-11	1.158E-10	1.923E-12
124	124	161	DEAD	1.832E-11	6.047E-11	-4.144E-12
124	124	157	DEAD	-1.015E-11	6.419E-11	-7.177E-12
124	124	22	G1_power station	0.	0.	0.
124	124	74	G1_power station	0.	0.	0.
124	124	161	G1_power station	0.	0.	0.
124	124	157	G1_power station	0.	0.	0.
124	124	22	G2_power station	629.48	619.12	133.52
124	124	74	G2_power station	35.72	-378.86	164.11
124	124	161	G2_power station	-157.54	-219.1	189.7
124	124	157	G2_power station	-335.84	107.8	159.11
124	124	22	Q_power station	23.29	22.91	4.94
124	124	74	Q_power station	1.32	-14.02	6.07
124	124	161	Q_power station	-5.83	-8.11	7.02
124	124	157	Q_power station	-12.43	3.99	5.89
124	124	22	Q_neve	53.34	49.02	8.87
124	124	74	Q_neve	-0.35	-49.56	11.99
124	124	161	Q_neve	-22.47	-37.38	13.75
124	124	157	Q_neve	-38.26	1.88	10.63
124	124	22	Q_manutenzione	23.29	22.91	4.94
124	124	74	Q_manutenzione	1.32	-14.02	6.07
124	124	161	Q_manutenzione	-5.83	-8.11	7.02
124	124	157	Q_manutenzione	-12.43	3.99	5.89
124	124	22	EQ_X	2027.39	305.65	-239.06
124	124	74	EQ_X	-207.71	-21.27	-270.01
124	124	161	EQ_X	595.33	6.666E-02	57.6
124	124	157	EQ_X	330.91	244.67	88.55
124	124	22	EQ_Y	-303.84	-1996.15	348.63
124	124	74	EQ_Y	-169.32	58.15	-74.11
124	124	161	EQ_Y	-13.69	-511.51	-42.63
124	124	157	EQ_Y	106.74	275.	380.11
125	125	157	DEAD	-2.667E-11	6.802E-11	-1.051E-11
125	125	161	DEAD	-7.399E-12	6.050E-11	-4.441E-12
125	125	162	DEAD	1.353E-11	8.698E-11	-1.051E-11
125	125	159	DEAD	-8.324E-11	-9.271E-12	-1.658E-11
125	125	157	G1_power station	0.	0.	0.

Table 21: Element Stresses - Area Shells, Part 2 of 3

Area	AreaElem	Joint	OutputCase	S11Bot	S22Bot	S12Bot
				KN/m2	KN/m2	KN/m2
125	125	161	G1_power station	0.	0.	0.
125	125	162	G1_power station	0.	0.	0.
125	125	159	G1_power station	0.	0.	0.
125	125	157	G2_power station	-317.93	111.38	104.74
125	125	161	G2_power station	-166.41	-220.87	116.14
125	125	162	G2_power station	-350.71	-177.24	20.79
125	125	159	G2_power station	-674.97	-85.18	9.39
125	125	157	Q_power station	-11.76	4.12	3.88
125	125	161	Q_power station	-6.16	-8.17	4.3
125	125	162	Q_power station	-12.98	-6.56	0.77
125	125	159	Q_power station	-24.97	-3.15	0.35
125	125	157	Q_neve	-36.61	2.21	5.15
125	125	161	Q_neve	-23.29	-37.54	6.4
125	125	162	Q_neve	-39.67	-34.91	-3.24
125	125	159	Q_neve	-71.27	-15.54	-4.5
125	125	157	Q_manutenzione	-11.76	4.12	3.88
125	125	161	Q_manutenzione	-6.16	-8.17	4.3
125	125	162	Q_manutenzione	-12.98	-6.56	0.77
125	125	159	Q_manutenzione	-24.97	-3.15	0.35
125	125	157	EQ_X	490.84	276.66	81.91
125	125	161	EQ_X	505.62	-17.87	104.52
125	125	162	EQ_X	315.59	37.95	124.89
125	125	159	EQ_X	529.75	104.67	102.28
125	125	157	EQ_Y	85.23	270.7	163.09
125	125	161	EQ_Y	-20.86	-512.95	172.57
125	125	162	EQ_Y	38.83	-137.61	156.21
125	125	159	EQ_Y	-32.03	-203.97	146.73
126	126	159	DEAD	-3.114E-11	7.453E-12	-3.567E-11
126	126	162	DEAD	-4.018E-12	7.431E-11	-8.368E-12
126	126	163	DEAD	2.195E-11	7.267E-11	-3.264E-11
126	126	23	DEAD	-1.352E-10	-1.085E-10	-5.994E-11
126	126	159	G1_power station	0.	0.	0.
126	126	162	G1_power station	0.	0.	0.
126	126	163	G1_power station	0.	0.	0.
126	126	23	G1_power station	0.	0.	0.
126	126	159	G2_power station	-661.37	-82.46	-150.22
126	126	162	G2_power station	-387.77	-184.65	-106.37
126	126	163	G2_power station	297.44	-420.44	-438.22
126	126	23	G2_power station	-1276.66	-4.52	-482.08
126	126	159	Q_power station	-24.47	-3.05	-5.56
126	126	162	Q_power station	-14.35	-6.83	-3.94
126	126	163	Q_power station	11.01	-15.56	-16.21
126	126	23	Q_power station	-47.24	-0.17	-17.84

Table 21: Element Stresses - Area Shells, Part 2 of 3

Area	AreaElem	Joint	OutputCase	S11Bot	S22Bot	S12Bot
				KN/m2	KN/m2	KN/m2
126	126	159	Q_neve	-69.49	-15.19	-21.11
126	126	162	Q_neve	-43.64	-35.7	-16.21
126	126	163	Q_neve	30.6	-61.9	-50.8
126	126	23	Q_neve	-131.62	-5.78	-55.7
126	126	159	Q_manutenzione	-24.47	-3.05	-5.56
126	126	162	Q_manutenzione	-14.35	-6.83	-3.94
126	126	163	Q_manutenzione	11.01	-15.56	-16.21
126	126	23	Q_manutenzione	-47.24	-0.17	-17.84
126	126	159	EQ_X	513.62	101.44	186.54
126	126	162	EQ_X	347.57	44.35	190.14
126	126	163	EQ_X	-164.97	240.08	381.97
126	126	23	EQ_X	733.11	-140.93	378.37
126	126	159	EQ_Y	-85.97	-214.75	155.47
126	126	162	EQ_Y	75.42	-130.29	120.72
126	126	163	EQ_Y	-33.12	-261.22	101.12
126	126	23	EQ_Y	-9.77	-165.93	135.87
127	127	74	DEAD	-3.412E-11	5.223E-11	1.751E-12
127	127	76	DEAD	6.347E-11	8.241E-11	-1.282E-12
127	127	164	DEAD	-7.052E-11	3.403E-11	1.751E-12
127	127	161	DEAD	6.589E-12	8.923E-11	4.785E-12
127	127	74	G1_power station	0.	0.	0.
127	127	76	G1_power station	0.	0.	0.
127	127	164	G1_power station	0.	0.	0.
127	127	161	G1_power station	0.	0.	0.
127	127	74	G2_power station	40.2	-356.45	107.37
127	127	76	G2_power station	-94.73	-528.25	50.7
127	127	164	G2_power station	-145.23	-483.39	56.72
127	127	161	G2_power station	-159.59	-229.35	113.39
127	127	74	Q_power station	1.49	-13.19	3.97
127	127	76	Q_power station	-3.5	-19.55	1.88
127	127	164	Q_power station	-5.37	-17.89	2.1
127	127	161	Q_power station	-5.9	-8.49	4.2
127	127	74	Q_neve	6.278E-02	-47.51	7.47
127	127	76	Q_neve	-12.01	-67.34	3.22
127	127	164	Q_neve	-20.79	-66.18	3.33
127	127	161	Q_neve	-22.66	-38.34	7.58
127	127	74	Q_manutenzione	1.49	-13.19	3.97
127	127	76	Q_manutenzione	-3.5	-19.55	1.88
127	127	164	Q_manutenzione	-5.37	-17.89	2.1
127	127	161	Q_manutenzione	-5.9	-8.49	4.2
127	127	74	EQ_X	-207.66	-21.04	-60.41
127	127	76	EQ_X	290.05	94.81	-25.2
127	127	164	EQ_X	227.61	38.72	-39.12

Table 21: Element Stresses - Area Shells, Part 2 of 3

Area	AreaElem	Joint	OutputCase	S11Bot	S22Bot	S12Bot
				KN/m2	KN/m2	KN/m2
127	127	161	EQ_X	596.59	6.38	-74.33
127	127	74	EQ_Y	-220.23	-196.39	14.34
127	127	76	EQ_Y	-30.05	-117.31	51.6
127	127	164	EQ_Y	-26.36	-60.66	34.32
127	127	161	EQ_Y	17.24	-356.86	-2.94
128	128	161	DEAD	-2.432E-11	7.142E-11	2.346E-13
128	128	164	DEAD	8.265E-12	6.337E-11	8.225E-12
128	128	165	DEAD	-2.735E-11	3.805E-11	3.268E-12
128	128	162	DEAD	1.888E-11	6.185E-11	-9.976E-12
128	128	161	G1_power station	0.	0.	0.
128	128	164	G1_power station	0.	0.	0.
128	128	165	G1_power station	0.	0.	0.
128	128	162	G1_power station	0.	0.	0.
128	128	161	G2_power station	-168.46	-231.12	71.25
128	128	164	G2_power station	-149.05	-484.15	49.4
128	128	165	G2_power station	-111.57	-467.47	-13.05
128	128	162	G2_power station	-353.61	-191.72	8.8
128	128	161	Q_power station	-6.23	-8.55	2.64
128	128	164	Q_power station	-5.51	-17.91	1.83
128	128	165	Q_power station	-4.13	-17.3	-0.48
128	128	162	Q_power station	-13.08	-7.09	0.33
128	128	161	Q_neve	-23.48	-38.5	2.99
128	128	164	Q_neve	-21.17	-66.25	2.34
128	128	165	Q_neve	-16.18	-68.03	-4.12
128	128	162	Q_neve	-39.98	-36.46	-3.46
128	128	161	Q_manutenzione	-6.23	-8.55	2.64
128	128	164	Q_manutenzione	-5.51	-17.91	1.83
128	128	165	Q_manutenzione	-4.13	-17.3	-0.48
128	128	162	Q_manutenzione	-13.08	-7.09	0.33
128	128	161	EQ_X	506.89	-11.57	43.39
128	128	164	EQ_X	246.33	42.47	7.55
128	128	165	EQ_X	193.29	76.36	77.19
128	128	162	EQ_X	317.48	47.41	113.03
128	128	161	EQ_Y	10.07	-358.29	57.35
128	128	164	EQ_Y	-13.44	-58.08	23.76
128	128	165	EQ_Y	9.35	-112.06	49.39
128	128	162	EQ_Y	22.52	-219.13	82.98
129	129	162	DEAD	-5.182E-12	5.486E-11	-2.061E-11
129	129	165	DEAD	-2.849E-13	4.164E-11	-8.179E-12
129	129	166	DEAD	7.217E-11	5.942E-11	-2.668E-11
129	129	163	DEAD	1.867E-11	8.183E-11	-2.335E-11
129	129	162	G1_power station	0.	0.	0.
129	129	165	G1_power station	0.	0.	0.

Table 21: Element Stresses - Area Shells, Part 2 of 3

Area	AreaElem	Joint	OutputCase	S11Bot	S22Bot	S12Bot
				KN/m2	KN/m2	KN/m2
129	129	166	G1_power station	0.	0.	0.
129	129	163	G1_power station	0.	0.	0.
129	129	162	G2_power station	-390.67	-199.14	-129.31
129	129	165	G2_power station	-99.05	-464.97	-41.27
129	129	166	G2_power station	-56.94	-462.52	-41.07
129	129	163	G2_power station	301.59	-399.67	-129.11
129	129	162	Q_power station	-14.45	-7.37	-4.78
129	129	165	Q_power station	-3.66	-17.2	-1.53
129	129	166	Q_power station	-2.11	-17.11	-1.52
129	129	163	Q_power station	11.16	-14.79	-4.78
129	129	162	Q_neve	-43.95	-37.26	-17.58
129	129	165	Q_neve	-14.87	-67.77	-6.98
129	129	166	Q_neve	-5.89	-70.38	-7.05
129	129	163	Q_neve	31.11	-59.38	-17.65
129	129	162	Q_manutenzione	-14.45	-7.37	-4.78
129	129	165	Q_manutenzione	-3.66	-17.2	-1.53
129	129	166	Q_manutenzione	-2.11	-17.11	-1.52
129	129	163	Q_manutenzione	11.16	-14.79	-4.78
129	129	162	EQ_X	349.47	53.81	183.44
129	129	165	EQ_X	176.	72.9	94.41
129	129	166	EQ_X	34.47	130.29	84.15
129	129	163	EQ_X	-175.11	189.42	173.18
129	129	162	EQ_Y	59.11	-211.82	99.73
129	129	165	EQ_Y	4.96	-112.94	84.24
129	129	166	EQ_Y	3.77	-85.51	114.37
129	129	163	EQ_Y	-11.32	-152.2	129.87
130	130	76	DEAD	5.361E-11	5.722E-11	8.522E-12
130	130	78	DEAD	-3.407E-11	-1.927E-11	1.570E-11
130	130	167	DEAD	1.645E-11	-1.175E-12	5.489E-12
130	130	164	DEAD	-8.109E-11	4.451E-13	3.566E-12
130	130	76	G1_power station	0.	0.	0.
130	130	78	G1_power station	0.	0.	0.
130	130	167	G1_power station	0.	0.	0.
130	130	164	G1_power station	0.	0.	0.
130	130	76	G2_power station	-97.36	-541.43	17.46
130	130	78	G2_power station	-97.36	-541.43	-17.46
130	130	167	G2_power station	-145.07	-482.55	-17.46
130	130	164	G2_power station	-145.07	-482.55	17.46
130	130	76	Q_power station	-3.6	-20.03	0.65
130	130	78	Q_power station	-3.6	-20.03	-0.65
130	130	167	Q_power station	-5.37	-17.85	-0.65
130	130	164	Q_power station	-5.37	-17.85	0.65
130	130	76	Q_neve	-12.25	-68.53	1.04

Table 21: Element Stresses - Area Shells, Part 2 of 3

Area	AreaElem	Joint	OutputCase	S11Bot	S22Bot	S12Bot
				KN/m2	KN/m2	KN/m2
130	130	78	Q_neve	-12.25	-68.53	-1.04
130	130	167	Q_neve	-20.8	-66.18	-1.04
130	130	164	Q_neve	-20.8	-66.18	1.04
130	130	76	Q_manutenzione	-3.6	-20.03	0.65
130	130	78	Q_manutenzione	-3.6	-20.03	-0.65
130	130	167	Q_manutenzione	-5.37	-17.85	-0.65
130	130	164	Q_manutenzione	-5.37	-17.85	0.65
130	130	76	EQ_X	291.32	101.16	-9.72
130	130	78	EQ_X	290.	100.89	12.46
130	130	167	EQ_X	225.99	36.9	12.33
130	130	164	EQ_X	227.3	37.17	-9.85
130	130	76	EQ_Y	-27.5	-104.51	37.3
130	130	78	EQ_Y	27.59	105.65	37.6
130	130	167	EQ_Y	34.24	100.7	35.28
130	130	164	EQ_Y	-32.4	-90.84	34.98
131	131	164	DEAD	1.498E-11	2.084E-11	3.096E-12
131	131	167	DEAD	-7.552E-11	-3.028E-11	8.053E-12
131	131	168	DEAD	6.427E-11	-2.390E-11	9.164E-12
131	131	165	DEAD	2.079E-11	5.086E-11	-1.047E-12
131	131	164	G1_power station	0.	0.	0.
131	131	167	G1_power station	0.	0.	0.
131	131	168	G1_power station	0.	0.	0.
131	131	165	G1_power station	0.	0.	0.
131	131	164	G2_power station	-148.88	-483.32	6.49
131	131	167	G2_power station	-148.88	-483.32	-6.49
131	131	168	G2_power station	-108.03	-449.73	-6.49
131	131	165	G2_power station	-108.03	-449.73	6.49
131	131	164	Q_power station	-5.51	-17.88	0.24
131	131	167	Q_power station	-5.51	-17.88	-0.24
131	131	168	Q_power station	-4.	-16.64	-0.24
131	131	165	Q_power station	-4.	-16.64	0.24
131	131	164	Q_neve	-21.17	-66.26	-0.26
131	131	167	Q_neve	-21.17	-66.26	0.26
131	131	168	Q_neve	-15.82	-66.22	0.26
131	131	165	Q_neve	-15.82	-66.22	-0.26
131	131	164	Q_manutenzione	-5.51	-17.88	0.24
131	131	167	Q_manutenzione	-5.51	-17.88	-0.24
131	131	168	Q_manutenzione	-4.	-16.64	-0.24
131	131	165	Q_manutenzione	-4.	-16.64	0.24
131	131	164	EQ_X	246.02	40.91	14.77
131	131	167	EQ_X	246.51	41.01	-12.27
131	131	168	EQ_X	191.6	65.57	-12.81
131	131	165	EQ_X	191.11	65.48	14.23

Table 21: Element Stresses - Area Shells, Part 2 of 3

Area	AreaElem	Joint	OutputCase	S11Bot	S22Bot	S12Bot
				KN/m2	KN/m2	KN/m2
131	131	164	EQ_Y	-19.48	-88.26	33.63
131	131	167	EQ_Y	19.04	97.66	32.97
131	131	168	EQ_Y	-14.29	98.94	52.99
131	131	165	EQ_Y	15.35	-82.03	53.65
132	132	165	DEAD	1.434E-11	5.727E-11	1.814E-12
132	132	168	DEAD	-2.646E-11	-5.887E-11	4.550E-12
132	132	169	DEAD	4.696E-11	-3.450E-11	1.395E-11
132	132	166	DEAD	4.179E-11	9.389E-12	-4.550E-12
132	132	165	G1_power station	0.	0.	0.
132	132	168	G1_power station	0.	0.	0.
132	132	169	G1_power station	0.	0.	0.
132	132	166	G1_power station	0.	0.	0.
132	132	165	G2_power station	-95.5	-447.23	-12.74
132	132	168	G2_power station	-95.5	-447.23	12.74
132	132	169	G2_power station	-62.54	-490.55	12.74
132	132	166	G2_power station	-62.54	-490.55	-12.74
132	132	165	Q_power station	-3.53	-16.55	-0.47
132	132	168	Q_power station	-3.53	-16.55	0.47
132	132	169	Q_power station	-2.31	-18.15	0.47
132	132	166	Q_power station	-2.31	-18.15	-0.47
132	132	165	Q_neve	-14.51	-65.96	-2.25
132	132	168	Q_neve	-14.51	-65.96	2.25
132	132	169	Q_neve	-6.45	-73.16	2.25
132	132	166	Q_neve	-6.45	-73.16	-2.25
132	132	165	Q_manutenzione	-3.53	-16.55	-0.47
132	132	168	Q_manutenzione	-3.53	-16.55	0.47
132	132	169	Q_manutenzione	-2.31	-18.15	0.47
132	132	166	Q_manutenzione	-2.31	-18.15	-0.47
132	132	165	EQ_X	173.82	62.02	28.51
132	132	168	EQ_X	173.66	61.99	-28.39
132	132	169	EQ_X	35.67	137.08	-27.72
132	132	166	EQ_X	35.83	137.11	29.18
132	132	165	EQ_Y	10.96	-82.91	81.64
132	132	168	EQ_Y	-11.59	99.48	81.79
132	132	169	EQ_Y	-7.96	84.27	89.07
132	132	166	EQ_Y	8.86	-60.05	88.92
133	133	78	DEAD	-2.993E-11	-5.237E-12	1.877E-12
133	133	80	DEAD	-1.506E-11	-7.081E-11	5.724E-12
133	133	170	DEAD	-9.136E-11	-7.577E-11	2.615E-11
133	133	167	DEAD	2.513E-11	-1.545E-11	1.179E-11
133	133	78	G1_power station	0.	0.	0.
133	133	80	G1_power station	0.	0.	0.
133	133	170	G1_power station	0.	0.	0.

Table 21: Element Stresses - Area Shells, Part 2 of 3

Area	AreaElem	Joint	OutputCase	S11Bot	S22Bot	S12Bot
				KN/m2	KN/m2	KN/m2
133	133	167	G1_power station	0.	0.	0.
133	133	78	G2_power station	-94.73	-528.25	-50.7
133	133	80	G2_power station	40.2	-356.45	-107.37
133	133	170	G2_power station	-159.59	-229.35	-113.39
133	133	167	G2_power station	-145.23	-483.39	-56.72
133	133	78	Q_power station	-3.5	-19.55	-1.88
133	133	80	Q_power station	1.49	-13.19	-3.97
133	133	170	Q_power station	-5.9	-8.49	-4.2
133	133	167	Q_power station	-5.37	-17.89	-2.1
133	133	78	Q_neve	-12.01	-67.34	-3.22
133	133	80	Q_neve	6.278E-02	-47.51	-7.47
133	133	170	Q_neve	-22.66	-38.34	-7.58
133	133	167	Q_neve	-20.79	-66.18	-3.33
133	133	78	Q_manutenzione	-3.5	-19.55	-1.88
133	133	80	Q_manutenzione	1.49	-13.19	-3.97
133	133	170	Q_manutenzione	-5.9	-8.49	-4.2
133	133	167	Q_manutenzione	-5.37	-17.89	-2.1
133	133	78	EQ_X	289.08	96.31	26.9
133	133	80	EQ_X	-210.3	-19.88	60.89
133	133	170	EQ_X	593.93	7.46	76.38
133	133	167	EQ_X	226.63	40.14	42.39
133	133	78	EQ_Y	30.19	118.63	52.35
133	133	80	EQ_Y	221.35	197.91	15.63
133	133	170	EQ_Y	-14.89	364.53	-2.48
133	133	167	EQ_Y	27.72	68.14	34.24
134	134	167	DEAD	-8.068E-11	-3.226E-11	2.277E-11
134	134	170	DEAD	-1.327E-11	-7.347E-11	1.448E-11
134	134	171	DEAD	-8.638E-12	-3.605E-11	2.277E-11
134	134	168	DEAD	6.712E-11	-3.555E-11	2.055E-11
134	134	167	G1_power station	0.	0.	0.
134	134	170	G1_power station	0.	0.	0.
134	134	171	G1_power station	0.	0.	0.
134	134	168	G1_power station	0.	0.	0.
134	134	167	G2_power station	-149.05	-484.15	-49.4
134	134	170	G2_power station	-168.46	-231.12	-71.25
134	134	171	G2_power station	-353.61	-191.72	-8.8
134	134	168	G2_power station	-111.57	-467.47	13.05
134	134	167	Q_power station	-5.51	-17.91	-1.83
134	134	170	Q_power station	-6.23	-8.55	-2.64
134	134	171	Q_power station	-13.08	-7.09	-0.33
134	134	168	Q_power station	-4.13	-17.3	0.48
134	134	167	Q_neve	-21.17	-66.25	-2.34
134	134	170	Q_neve	-23.48	-38.5	-2.99

Table 21: Element Stresses - Area Shells, Part 2 of 3

Area	AreaElem	Joint	OutputCase	S11Bot	S22Bot	S12Bot
				KN/m2	KN/m2	KN/m2
134	134	171	Q_neve	-39.98	-36.46	3.46
134	134	168	Q_neve	-16.18	-68.03	4.12
134	134	167	Q_manutenzione	-5.51	-17.91	-1.83
134	134	170	Q_manutenzione	-6.23	-8.55	-2.64
134	134	171	Q_manutenzione	-13.08	-7.09	-0.33
134	134	168	Q_manutenzione	-4.13	-17.3	0.48
134	134	167	EQ_X	247.15	44.25	-4.26
134	134	170	EQ_X	502.55	-10.81	-39.89
134	134	171	EQ_X	312.15	43.19	-109.78
134	134	168	EQ_X	193.12	73.17	-74.16
134	134	167	EQ_Y	12.53	65.1	22.73
134	134	170	EQ_Y	-7.58	365.99	56.78
134	134	171	EQ_Y	-17.86	237.73	82.06
134	134	168	EQ_Y	-8.08	129.98	48.01
135	135	168	DEAD	-6.225E-11	-7.004E-11	2.388E-11
135	135	171	DEAD	2.105E-11	-3.313E-11	1.640E-11
135	135	172	DEAD	7.520E-12	-6.701E-11	2.691E-11
135	135	169	DEAD	3.850E-11	-3.692E-11	1.337E-11
135	135	168	G1_power station	0.	0.	0.
135	135	171	G1_power station	0.	0.	0.
135	135	172	G1_power station	0.	0.	0.
135	135	169	G1_power station	0.	0.	0.
135	135	168	G2_power station	-99.05	-464.97	41.27
135	135	171	G2_power station	-390.67	-199.14	129.31
135	135	172	G2_power station	301.59	-399.67	129.11
135	135	169	G2_power station	-56.94	-462.52	41.07
135	135	168	Q_power station	-3.66	-17.2	1.53
135	135	171	Q_power station	-14.45	-7.37	4.78
135	135	172	Q_power station	11.16	-14.79	4.78
135	135	169	Q_power station	-2.11	-17.11	1.52
135	135	168	Q_neve	-14.87	-67.77	6.98
135	135	171	Q_neve	-43.95	-37.26	17.58
135	135	172	Q_neve	31.11	-59.38	17.65
135	135	169	Q_neve	-5.89	-70.38	7.05
135	135	168	Q_manutenzione	-3.66	-17.2	1.53
135	135	171	Q_manutenzione	-14.45	-7.37	4.78
135	135	172	Q_manutenzione	11.16	-14.79	4.78
135	135	169	Q_manutenzione	-2.11	-17.11	1.52
135	135	168	EQ_X	175.18	69.59	-92.67
135	135	171	EQ_X	351.3	51.02	-180.03
135	135	172	EQ_X	-172.95	188.24	-172.91
135	135	169	EQ_X	33.97	128.58	-85.56
135	135	168	EQ_Y	-5.38	130.52	83.67

Table 21: Element Stresses - Area Shells, Part 2 of 3

Area	AreaElem	Joint	OutputCase	S11Bot	S22Bot	S12Bot
				KN/m2	KN/m2	KN/m2
135	135	171	EQ_Y	-59.73	229.36	97.77
135	135	172	EQ_Y	12.08	176.67	129.3
135	135	169	EQ_Y	-2.81	110.01	115.2
136	136	80	DEAD	-2.465E-11	-7.316E-11	1.371E-11
136	136	9	DEAD	-6.417E-12	-3.968E-11	1.593E-11
136	136	173	DEAD	-2.920E-11	-5.951E-11	-1.454E-12
136	136	170	DEAD	-7.240E-11	-6.015E-11	6.834E-12
136	136	80	G1_power station	0.	0.	0.
136	136	9	G1_power station	0.	0.	0.
136	136	173	G1_power station	0.	0.	0.
136	136	170	G1_power station	0.	0.	0.
136	136	80	G2_power station	35.72	-378.86	-164.11
136	136	9	G2_power station	629.48	619.12	-133.52
136	136	173	G2_power station	-335.84	107.8	-159.11
136	136	170	G2_power station	-157.54	-219.1	-189.7
136	136	80	Q_power station	1.32	-14.02	-6.07
136	136	9	Q_power station	23.29	22.91	-4.94
136	136	173	Q_power station	-12.43	3.99	-5.89
136	136	170	Q_power station	-5.83	-8.11	-7.02
136	136	80	Q_neve	-0.35	-49.56	-11.99
136	136	9	Q_neve	53.34	49.02	-8.87
136	136	173	Q_neve	-38.26	1.88	-10.63
136	136	170	Q_neve	-22.47	-37.38	-13.75
136	136	80	Q_manutenzione	1.32	-14.02	-6.07
136	136	9	Q_manutenzione	23.29	22.91	-4.94
136	136	173	Q_manutenzione	-12.43	3.99	-5.89
136	136	170	Q_manutenzione	-5.83	-8.11	-7.02
136	136	80	EQ_X	-210.26	-19.67	270.07
136	136	9	EQ_X	2026.06	307.5	238.66
136	136	173	EQ_X	329.81	247.68	-89.1
136	136	170	EQ_X	593.01	2.83	-57.68
136	136	80	EQ_Y	170.5	-56.33	-72.32
136	136	9	EQ_Y	302.75	1997.52	350.8
136	136	173	EQ_Y	-106.89	-268.93	382.46
136	136	170	EQ_Y	15.81	518.03	-40.66
137	137	170	DEAD	-1.891E-11	-4.658E-11	9.867E-12
137	137	173	DEAD	-7.176E-11	-6.710E-11	6.834E-12
137	137	174	DEAD	8.397E-12	-3.748E-11	1.290E-11
137	137	171	DEAD	-2.019E-11	-4.587E-11	1.593E-11
137	137	170	G1_power station	0.	0.	0.
137	137	173	G1_power station	0.	0.	0.
137	137	174	G1_power station	0.	0.	0.
137	137	171	G1_power station	0.	0.	0.

Table 21: Element Stresses - Area Shells, Part 2 of 3

Area	AreaElem	Joint	OutputCase	S11Bot	S22Bot	S12Bot
				KN/m2	KN/m2	KN/m2
137	137	170	G2_power station	-166.41	-220.87	-116.14
137	137	173	G2_power station	-317.93	111.38	-104.74
137	137	174	G2_power station	-674.97	-85.18	-9.39
137	137	171	G2_power station	-350.71	-177.24	-20.79
137	137	170	Q_power station	-6.16	-8.17	-4.3
137	137	173	Q_power station	-11.76	4.12	-3.88
137	137	174	Q_power station	-24.97	-3.15	-0.35
137	137	171	Q_power station	-12.98	-6.56	-0.77
137	137	170	Q_neve	-23.29	-37.54	-6.4
137	137	173	Q_neve	-36.61	2.21	-5.15
137	137	174	Q_neve	-71.27	-15.54	4.5
137	137	171	Q_neve	-39.67	-34.91	3.24
137	137	170	Q_manutenzione	-6.16	-8.17	-4.3
137	137	173	Q_manutenzione	-11.76	4.12	-3.88
137	137	174	Q_manutenzione	-24.97	-3.15	-0.35
137	137	171	Q_manutenzione	-12.98	-6.56	-0.77
137	137	170	EQ_X	501.62	-15.45	-103.14
137	137	173	EQ_X	485.1	278.74	-82.98
137	137	174	EQ_X	524.15	107.43	-100.79
137	137	171	EQ_X	311.73	41.07	-120.95
137	137	170	EQ_Y	23.12	519.49	173.51
137	137	173	EQ_Y	-83.5	-264.25	165.4
137	137	174	EQ_Y	34.64	214.82	146.94
137	137	171	EQ_Y	-35.69	148.56	155.06
138	138	171	DEAD	3.011E-11	-3.886E-11	1.536E-11
138	138	174	DEAD	-1.737E-11	-4.943E-11	7.366E-12
138	138	33	DEAD	5.364E-13	1.347E-11	2.142E-11
138	138	172	DEAD	9.929E-12	-4.033E-11	3.467E-11
138	138	171	G1_power station	0.	0.	0.
138	138	174	G1_power station	0.	0.	0.
138	138	33	G1_power station	0.	0.	0.
138	138	172	G1_power station	0.	0.	0.
138	138	171	G2_power station	-387.77	-184.65	106.37
138	138	174	G2_power station	-661.37	-82.46	150.22
138	138	33	G2_power station	-1276.66	-4.52	482.08
138	138	172	G2_power station	297.44	-420.44	438.22
138	138	171	Q_power station	-14.35	-6.83	3.94
138	138	174	Q_power station	-24.47	-3.05	5.56
138	138	33	Q_power station	-47.24	-0.17	17.84
138	138	172	Q_power station	11.01	-15.56	16.21
138	138	171	Q_neve	-43.64	-35.7	16.21
138	138	174	Q_neve	-69.49	-15.19	21.11
138	138	33	Q_neve	-131.62	-5.78	55.7

Table 21: Element Stresses - Area Shells, Part 2 of 3

Area	AreaElem	Joint	OutputCase	S11Bot	S22Bot	S12Bot
				KN/m2	KN/m2	KN/m2
138	138	172	Q_neve	30.6	-61.9	50.8
138	138	171	Q_manutenzione	-14.35	-6.83	3.94
138	138	174	Q_manutenzione	-24.47	-3.05	5.56
138	138	33	Q_manutenzione	-47.24	-0.17	17.84
138	138	172	Q_manutenzione	11.01	-15.56	16.21
138	138	171	EQ_X	350.87	48.9	-186.02
138	138	174	EQ_X	495.8	101.76	-183.89
138	138	33	EQ_X	711.28	-160.66	-370.56
138	138	172	EQ_X	-165.69	224.57	-372.69
138	138	171	EQ_Y	-77.56	140.19	118.53
138	138	174	EQ_Y	91.66	226.22	153.21
138	138	33	EQ_Y	20.72	203.71	129.92
138	138	172	EQ_Y	36.24	297.44	95.23
139	139	14	DEAD	6.084E-11	8.377E-12	4.122E-11
139	139	56	DEAD	2.767E-11	-4.337E-11	3.678E-11
139	139	175	DEAD	-3.851E-11	-3.333E-11	5.336E-11
139	139	145	DEAD	-7.970E-12	-5.778E-11	3.678E-11
139	139	14	G1_power station	0.	0.	0.
139	139	56	G1_power station	0.	0.	0.
139	139	175	G1_power station	0.	0.	0.
139	139	145	G1_power station	0.	0.	0.
139	139	14	G2_power station	612.11	650.03	169.46
139	139	56	G2_power station	-1.55	-353.26	196.75
139	139	175	G2_power station	-294.27	-198.39	244.23
139	139	145	G2_power station	-387.24	120.26	216.94
139	139	14	Q_power station	22.65	24.05	6.27
139	139	56	Q_power station	-5.730E-02	-13.07	7.28
139	139	175	Q_power station	-10.89	-7.34	9.04
139	139	145	Q_power station	-14.33	4.45	8.03
139	139	14	Q_neve	50.85	53.44	13.24
139	139	56	Q_neve	-5.28	-44.89	15.89
139	139	175	Q_neve	-39.76	-33.6	20.06
139	139	145	Q_neve	-46.09	4.52	17.41
139	139	14	Q_manutenzione	22.65	24.05	6.27
139	139	56	Q_manutenzione	-5.730E-02	-13.07	7.28
139	139	175	Q_manutenzione	-10.89	-7.34	9.04
139	139	145	Q_manutenzione	-14.33	4.45	8.03
139	139	14	EQ_X	-1995.29	-293.18	258.74
139	139	56	EQ_X	172.09	39.32	284.31
139	139	175	EQ_X	-647.74	-1.05	-37.59
139	139	145	EQ_X	-278.07	-214.7	-63.16
139	139	14	EQ_Y	299.26	1940.42	-323.53
139	139	56	EQ_Y	170.77	-24.22	62.8

Table 21: Element Stresses - Area Shells, Part 2 of 3

Area	AreaElem	Joint	OutputCase	S11Bot	S22Bot	S12Bot
				KN/m2	KN/m2	KN/m2
139	139	175	EQ_Y	15.33	488.1	30.99
139	139	145	EQ_Y	-76.23	-258.14	-355.34
140	140	145	DEAD	-2.575E-11	-7.282E-11	5.318E-11
140	140	175	DEAD	1.843E-11	-2.420E-11	5.318E-11
140	140	176	DEAD	5.464E-11	-3.490E-11	5.015E-11
140	140	147	DEAD	4.725E-11	-2.572E-11	5.015E-11
140	140	145	G1_power station	0.	0.	0.
140	140	175	G1_power station	0.	0.	0.
140	140	176	G1_power station	0.	0.	0.
140	140	147	G1_power station	0.	0.	0.
140	140	145	G2_power station	-368.14	124.07	191.8
140	140	175	G2_power station	-303.34	-200.2	203.72
140	140	176	G2_power station	-639.54	-200.42	171.48
140	140	147	G2_power station	-654.06	-51.03	159.55
140	140	145	Q_power station	-13.62	4.59	7.1
140	140	175	Q_power station	-11.22	-7.41	7.54
140	140	176	Q_power station	-23.66	-7.42	6.34
140	140	147	Q_power station	-24.2	-1.89	5.9
140	140	145	Q_neve	-44.36	4.87	15.17
140	140	175	Q_neve	-40.57	-33.76	16.45
140	140	176	Q_neve	-75.62	-35.67	13.6
140	140	147	Q_neve	-74.73	-11.78	12.32
140	140	145	Q_manutenzione	-13.62	4.59	7.1
140	140	175	Q_manutenzione	-11.22	-7.41	7.54
140	140	176	Q_manutenzione	-23.66	-7.42	6.34
140	140	147	Q_manutenzione	-24.2	-1.89	5.9
140	140	145	EQ_X	-456.58	-250.4	-27.52
140	140	175	EQ_X	-548.13	18.87	-44.97
140	140	176	EQ_X	-411.15	-51.59	-21.26
140	140	147	EQ_X	-454.19	-75.55	-3.81
140	140	145	EQ_Y	-71.37	-257.17	-149.74
140	140	175	EQ_Y	18.21	488.68	-165.04
140	140	176	EQ_Y	-6.11	116.23	-151.07
140	140	147	EQ_Y	70.06	226.17	-135.78
141	141	147	DEAD	7.191E-11	-2.183E-11	4.554E-11
141	141	176	DEAD	9.208E-12	-3.473E-11	4.554E-11
141	141	177	DEAD	3.930E-11	-2.108E-11	4.554E-11
141	141	149	DEAD	-7.270E-11	-6.203E-11	4.554E-11
141	141	147	G1_power station	0.	0.	0.
141	141	176	G1_power station	0.	0.	0.
141	141	177	G1_power station	0.	0.	0.
141	141	149	G1_power station	0.	0.	0.
141	141	147	G2_power station	-665.46	-53.31	145.98

Table 21: Element Stresses - Area Shells, Part 2 of 3

Area	AreaElem	Joint	OutputCase	S11Bot	S22Bot	S12Bot
				KN/m2	KN/m2	KN/m2
141	141	176	G2_power station	-634.09	-199.33	140.77
141	141	177	G2_power station	-807.92	-198.41	117.95
141	141	149	G2_power station	-851.67	-104.02	123.15
141	141	147	Q_power station	-24.62	-1.97	5.4
141	141	176	Q_power station	-23.46	-7.38	5.21
141	141	177	Q_power station	-29.89	-7.34	4.36
141	141	149	Q_power station	-31.51	-3.85	4.56
141	141	147	Q_neve	-75.77	-11.99	11.1
141	141	176	Q_neve	-75.13	-35.57	10.88
141	141	177	Q_neve	-93.08	-36.83	8.8
141	141	149	Q_neve	-95.07	-17.25	9.02
141	141	147	Q_manutenzione	-24.62	-1.97	5.4
141	141	176	Q_manutenzione	-23.46	-7.38	5.21
141	141	177	Q_manutenzione	-29.89	-7.34	4.36
141	141	149	Q_manutenzione	-31.51	-3.85	4.56
141	141	147	EQ_X	-444.27	-73.57	-14.09
141	141	176	EQ_X	-425.35	-54.43	-20.27
141	141	177	EQ_X	-357.06	-32.38	-26.03
141	141	149	EQ_X	-369.81	-37.06	-19.86
141	141	147	EQ_Y	77.23	227.61	-144.05
141	141	176	EQ_Y	-6.42	116.16	-106.03
141	141	177	EQ_Y	39.78	127.35	-87.32
141	141	149	EQ_Y	79.87	78.71	-125.34
142	142	149	DEAD	1.857E-11	-5.631E-11	3.941E-11
142	142	177	DEAD	-1.714E-11	-1.906E-11	3.304E-11
142	142	178	DEAD	1.130E-12	-3.432E-11	3.941E-11
142	142	151	DEAD	-6.036E-11	-5.319E-11	3.001E-11
142	142	149	G1_power station	0.	0.	0.
142	142	177	G1_power station	0.	0.	0.
142	142	178	G1_power station	0.	0.	0.
142	142	151	G1_power station	0.	0.	0.
142	142	149	G2_power station	-853.89	-104.46	100.11
142	142	177	G2_power station	-808.	-198.43	92.81
142	142	178	G2_power station	-885.32	-184.45	65.44
142	142	151	G2_power station	-956.17	-123.2	72.74
142	142	149	Q_power station	-31.59	-3.86	3.7
142	142	177	Q_power station	-29.9	-7.34	3.43
142	142	178	Q_power station	-32.76	-6.82	2.42
142	142	151	Q_power station	-35.38	-4.56	2.69
142	142	149	Q_neve	-95.28	-17.29	6.8
142	142	177	Q_neve	-93.09	-36.83	6.47
142	142	178	Q_neve	-100.19	-36.56	3.78
142	142	151	Q_neve	-105.18	-19.55	4.11

Table 21: Element Stresses - Area Shells, Part 2 of 3

Area	AreaElem	Joint	OutputCase	S11Bot	S22Bot	S12Bot
				KN/m2	KN/m2	KN/m2
142	142	149	Q_manutenzione	-31.59	-3.86	3.7
142	142	177	Q_manutenzione	-29.9	-7.34	3.43
142	142	178	Q_manutenzione	-32.76	-6.82	2.42
142	142	151	Q_manutenzione	-35.38	-4.56	2.69
142	142	149	EQ_X	-368.88	-36.87	-27.28
142	142	177	EQ_X	-357.47	-32.47	-25.95
142	142	178	EQ_X	-285.9	-24.66	-29.01
142	142	151	EQ_X	-295.26	-20.2	-30.35
142	142	149	EQ_Y	86.09	79.96	-96.08
142	142	177	EQ_Y	38.48	127.09	-86.2
142	142	178	EQ_Y	51.08	88.99	-72.01
142	142	151	EQ_Y	109.	93.55	-81.89
143	143	151	DEAD	-6.637E-11	-5.720E-11	2.358E-11
143	143	178	DEAD	-4.419E-11	-7.194E-11	1.833E-11
143	143	179	DEAD	-7.243E-11	-6.934E-11	1.145E-11
143	143	153	DEAD	-1.117E-10	-4.540E-11	6.193E-12
143	143	151	G1_power station	0.	0.	0.
143	143	178	G1_power station	0.	0.	0.
143	143	179	G1_power station	0.	0.	0.
143	143	153	G1_power station	0.	0.	0.
143	143	151	G2_power station	-957.19	-123.41	38.54
143	143	178	G2_power station	-884.68	-184.32	34.38
143	143	179	G2_power station	-887.66	-169.24	-9.63
143	143	153	G2_power station	-1034.05	-136.68	-5.47
143	143	151	Q_power station	-35.42	-4.57	1.43
143	143	178	Q_power station	-32.73	-6.82	1.27
143	143	179	Q_power station	-32.84	-6.26	-0.36
143	143	153	Q_power station	-38.26	-5.06	-0.2
143	143	151	Q_neve	-105.27	-19.57	0.65
143	143	178	Q_neve	-100.12	-36.55	0.65
143	143	179	Q_neve	-98.55	-35.95	-3.9
143	143	153	Q_neve	-111.59	-21.11	-3.89
143	143	151	Q_manutenzione	-35.42	-4.57	1.43
143	143	178	Q_manutenzione	-32.73	-6.82	1.27
143	143	179	Q_manutenzione	-32.84	-6.26	-0.36
143	143	153	Q_manutenzione	-38.26	-5.06	-0.2
143	143	151	EQ_X	-294.42	-20.03	-34.8
143	143	178	EQ_X	-284.04	-24.29	-31.47
143	143	179	EQ_X	-207.89	-22.05	-35.93
143	143	153	EQ_X	-222.38	-7.	-39.26
143	143	151	EQ_Y	111.34	94.02	-62.46
143	143	178	EQ_Y	48.49	88.47	-59.82
143	143	179	EQ_Y	56.94	90.89	-41.82

Table 21: Element Stresses - Area Shells, Part 2 of 3

Area	AreaElem	Joint	OutputCase	S11Bot	S22Bot	S12Bot
				KN/m2	KN/m2	KN/m2
143	143	153	EQ_Y	119.17	96.76	-44.45
144	144	153	DEAD	-1.988E-10	-6.497E-11	-6.427E-12
144	144	179	DEAD	-1.242E-10	-8.984E-11	-8.351E-12
144	144	180	DEAD	-1.533E-10	-5.587E-11	-2.160E-11
144	144	155	DEAD	-1.333E-10	-6.254E-11	-1.442E-11
144	144	153	G1_power station	0.	0.	0.
144	144	179	G1_power station	0.	0.	0.
144	144	180	G1_power station	0.	0.	0.
144	144	155	G1_power station	0.	0.	0.
144	144	153	G2_power station	-1035.07	-136.89	-65.85
144	144	179	G2_power station	-886.68	-169.05	-75.07
144	144	180	G2_power station	-767.53	-96.49	-180.5
144	144	155	G2_power station	-1198.3	-178.91	-171.28
144	144	153	Q_power station	-38.3	-5.06	-2.44
144	144	179	Q_power station	-32.81	-6.25	-2.78
144	144	180	Q_power station	-28.4	-3.57	-6.68
144	144	155	Q_power station	-44.34	-6.62	-6.34
144	144	153	Q_neve	-111.64	-21.12	-10.13
144	144	179	Q_neve	-98.47	-35.93	-10.82
144	144	180	Q_neve	-83.01	-29.14	-21.92
144	144	155	Q_neve	-125.91	-24.72	-21.23
144	144	153	Q_manutenzione	-38.3	-5.06	-2.44
144	144	179	Q_manutenzione	-32.81	-6.25	-2.78
144	144	180	Q_manutenzione	-28.4	-3.57	-6.68
144	144	155	Q_manutenzione	-44.34	-6.62	-6.34
144	144	153	EQ_X	-219.34	-6.39	-45.07
144	144	179	EQ_X	-205.78	-21.63	-41.47
144	144	180	EQ_X	-118.52	-7.05	-50.18
144	144	155	EQ_X	-160.09	-1.22	-53.78
144	144	153	EQ_Y	114.24	95.77	-21.85
144	144	179	EQ_Y	47.69	89.04	-32.74
144	144	180	EQ_Y	47.94	109.58	-22.93
144	144	155	EQ_Y	110.45	106.18	-12.03
145	145	155	DEAD	-1.954E-10	-7.549E-11	-3.587E-11
145	145	180	DEAD	-1.647E-10	-6.399E-11	-4.801E-11
145	145	181	DEAD	8.067E-11	-1.513E-10	-1.147E-10
145	145	24	DEAD	-1.996E-10	7.100E-11	-1.026E-10
145	145	155	G1_power station	0.	0.	0.
145	145	180	G1_power station	0.	0.	0.
145	145	181	G1_power station	0.	0.	0.
145	145	24	G1_power station	0.	0.	0.
145	145	155	G2_power station	-1148.55	-168.96	-393.05
145	145	180	G2_power station	-844.33	-111.85	-341.91

Table 21: Element Stresses - Area Shells, Part 2 of 3

Area	AreaElem	Joint	OutputCase	S11Bot	S22Bot	S12Bot
				KN/m2	KN/m2	KN/m2
145	145	181	G2_power station	442.25	-526.71	-862.05
145	145	24	G2_power station	-1942.13	126.2	-913.19
145	145	155	Q_power station	-42.5	-6.25	-14.54
145	145	180	Q_power station	-31.24	-4.14	-12.65
145	145	181	Q_power station	16.36	-19.49	-31.9
145	145	24	Q_power station	-71.86	4.67	-33.79
145	145	155	Q_neve	-120.46	-23.63	-44.24
145	145	180	Q_neve	-91.04	-30.74	-39.15
145	145	181	Q_neve	45.38	-75.77	-93.48
145	145	24	Q_neve	-199.68	11.09	-98.57
145	145	155	Q_manutenzione	-42.5	-6.25	-14.54
145	145	180	Q_manutenzione	-31.24	-4.14	-12.65
145	145	181	Q_manutenzione	16.36	-19.49	-31.9
145	145	24	Q_manutenzione	-71.86	4.67	-33.79
145	145	155	EQ_X	-146.77	1.44	-62.45
145	145	180	EQ_X	-127.21	-8.79	-73.55
145	145	181	EQ_X	29.22	-66.63	-113.9
145	145	24	EQ_X	-125.41	171.95	-102.8
145	145	155	EQ_Y	80.71	100.24	19.17
145	145	180	EQ_Y	58.66	111.73	-24.44
145	145	181	EQ_Y	-33.09	70.56	-1.67
145	145	24	EQ_Y	107.66	207.85	41.94
146	146	56	DEAD	2.485E-11	3.693E-12	6.515E-11
146	146	68	DEAD	4.698E-12	-6.996E-11	5.989E-11
146	146	182	DEAD	5.746E-11	-3.347E-11	4.694E-11
146	146	175	DEAD	-3.929E-11	-7.147E-11	4.169E-11
146	146	56	G1_power station	0.	0.	0.
146	146	68	G1_power station	0.	0.	0.
146	146	182	G1_power station	0.	0.	0.
146	146	175	G1_power station	0.	0.	0.
146	146	56	G2_power station	2.8	-331.53	138.54
146	146	68	G2_power station	-160.28	-518.82	71.31
146	146	182	G2_power station	-362.81	-456.54	97.71
146	146	175	G2_power station	-296.02	-207.14	164.94
146	146	56	Q_power station	0.1	-12.27	5.13
146	146	68	Q_power station	-5.93	-19.2	2.64
146	146	182	Q_power station	-13.42	-16.89	3.62
146	146	175	Q_power station	-10.95	-7.66	6.1
146	146	56	Q_neve	-4.88	-42.92	11.09
146	146	68	Q_neve	-19.95	-63.88	5.58
146	146	182	Q_neve	-46.83	-61.28	7.87
146	146	175	Q_neve	-39.91	-34.39	13.38
146	146	56	Q_manutenzione	0.1	-12.27	5.13

Table 21: Element Stresses - Area Shells, Part 2 of 3

Area	AreaElem	Joint	OutputCase	S11Bot	S22Bot	S12Bot
				KN/m2	KN/m2	KN/m2
146	146	68	Q_manutenzione	-5.93	-19.2	2.64
146	146	182	Q_manutenzione	-13.42	-16.89	3.62
146	146	175	Q_manutenzione	-10.95	-7.66	6.1
146	146	56	EQ_X	172.64	42.08	76.84
146	146	68	EQ_X	-318.93	-79.29	38.92
146	146	182	EQ_X	-335.14	-11.29	65.
146	146	175	EQ_X	-648.26	-3.69	102.92
146	146	56	EQ_Y	217.12	207.55	-9.25
146	146	68	EQ_Y	31.27	120.5	-42.39
146	146	182	EQ_Y	29.26	66.99	-27.
146	146	175	EQ_Y	-12.51	348.9	6.14
147	147	175	DEAD	-7.062E-12	-7.154E-11	4.769E-11
147	147	182	DEAD	-5.453E-11	-4.515E-11	3.223E-11
147	147	183	DEAD	7.712E-11	-5.106E-11	4.163E-11
147	147	176	DEAD	4.709E-11	7.935E-12	4.133E-11
147	147	175	G1_power station	0.	0.	0.
147	147	182	G1_power station	0.	0.	0.
147	147	183	G1_power station	0.	0.	0.
147	147	176	G1_power station	0.	0.	0.
147	147	175	G2_power station	-305.09	-208.95	164.29
147	147	182	G2_power station	-364.34	-456.85	110.
147	147	183	G2_power station	-598.28	-344.82	98.8
147	147	176	G2_power station	-640.07	-203.06	153.09
147	147	175	Q_power station	-11.29	-7.73	6.08
147	147	182	Q_power station	-13.48	-16.9	4.07
147	147	183	Q_power station	-22.14	-12.76	3.66
147	147	176	Q_power station	-23.68	-7.51	5.66
147	147	175	Q_neve	-40.73	-34.55	13.32
147	147	182	Q_neve	-46.96	-61.3	8.97
147	147	183	Q_neve	-73.	-53.56	7.98
147	147	176	Q_neve	-75.67	-35.9	12.34
147	147	175	Q_manutenzione	-11.29	-7.73	6.08
147	147	182	Q_manutenzione	-13.48	-16.9	4.07
147	147	183	Q_manutenzione	-22.14	-12.76	3.66
147	147	176	Q_manutenzione	-23.68	-7.51	5.66
147	147	175	EQ_X	-548.65	16.23	13.68
147	147	182	EQ_X	-355.87	-15.43	25.44
147	147	183	EQ_X	-416.76	0.91	-10.9
147	147	176	EQ_X	-409.59	-43.79	-22.66
147	147	175	EQ_Y	-9.63	349.47	-56.59
147	147	182	EQ_Y	23.93	65.92	-13.59
147	147	183	EQ_Y	-0.48	87.55	-30.98
147	147	176	EQ_Y	3.15	162.53	-73.99

Table 21: Element Stresses - Area Shells, Part 2 of 3

Area	AreaElem	Joint	OutputCase	S11Bot	S22Bot	S12Bot
				KN/m2	KN/m2	KN/m2
148	148	176	DEAD	3.038E-11	-1.096E-11	4.554E-11
148	148	183	DEAD	2.750E-11	-5.025E-11	4.110E-11
148	148	184	DEAD	2.128E-11	-5.647E-11	4.554E-11
148	148	177	DEAD	3.205E-11	-9.298E-12	2.896E-11
148	148	176	G1_power station	0.	0.	0.
148	148	183	G1_power station	0.	0.	0.
148	148	184	G1_power station	0.	0.	0.
148	148	177	G1_power station	0.	0.	0.
148	148	176	G2_power station	-634.62	-201.97	121.68
148	148	183	G2_power station	-600.23	-345.21	86.64
148	148	184	G2_power station	-772.38	-267.18	65.82
148	148	177	G2_power station	-808.15	-199.54	100.87
148	148	176	Q_power station	-23.48	-7.47	4.5
148	148	183	Q_power station	-22.21	-12.77	3.21
148	148	184	Q_power station	-28.58	-9.89	2.44
148	148	177	Q_power station	-29.9	-7.38	3.73
148	148	176	Q_neve	-75.18	-35.8	9.55
148	148	183	Q_neve	-73.18	-53.59	6.91
148	148	184	Q_neve	-90.83	-48.29	5.04
148	148	177	Q_neve	-93.1	-36.92	7.68
148	148	176	Q_manutenzione	-23.48	-7.47	4.5
148	148	183	Q_manutenzione	-22.21	-12.77	3.21
148	148	184	Q_manutenzione	-28.58	-9.89	2.44
148	148	177	Q_manutenzione	-29.9	-7.38	3.73
148	148	176	EQ_X	-423.79	-46.63	-25.41
148	148	183	EQ_X	-406.61	2.93	-17.92
148	148	184	EQ_X	-358.63	-14.79	-16.72
148	148	177	EQ_X	-356.97	-31.92	-24.22
148	148	176	EQ_Y	2.84	162.47	-73.26
148	148	183	EQ_Y	1.49	87.95	-49.06
148	148	184	EQ_Y	6.07	53.55	-54.07
148	148	177	EQ_Y	36.38	110.35	-78.27
149	149	177	DEAD	-1.462E-11	-1.210E-11	4.086E-11
149	149	184	DEAD	3.515E-11	-5.187E-11	2.458E-11
149	149	185	DEAD	-3.661E-11	-1.286E-11	2.569E-11
149	149	178	DEAD	5.572E-12	-1.775E-11	3.672E-11
149	149	177	G1_power station	0.	0.	0.
149	149	184	G1_power station	0.	0.	0.
149	149	185	G1_power station	0.	0.	0.
149	149	178	G1_power station	0.	0.	0.
149	149	177	G2_power station	-808.23	-199.56	75.14
149	149	184	G2_power station	-772.28	-267.16	53.59
149	149	185	G2_power station	-833.74	-216.43	33.69

Table 21: Element Stresses - Area Shells, Part 2 of 3

Area	AreaElem	Joint	OutputCase	S11Bot	S22Bot	S12Bot
				KN/m2	KN/m2	KN/m2
149	149	178	G2_power station	-885.64	-186.07	55.24
149	149	177	Q_power station	-29.9	-7.38	2.78
149	149	184	Q_power station	-28.57	-9.88	1.98
149	149	185	Q_power station	-30.85	-8.01	1.25
149	149	178	Q_power station	-32.77	-6.88	2.04
149	149	177	Q_neve	-93.11	-36.93	5.29
149	149	184	Q_neve	-90.84	-48.29	3.92
149	149	185	Q_neve	-96.03	-45.07	1.99
149	149	178	Q_neve	-100.22	-36.74	3.36
149	149	177	Q_manutenzione	-29.9	-7.38	2.78
149	149	184	Q_manutenzione	-28.57	-9.88	1.98
149	149	185	Q_manutenzione	-30.85	-8.01	1.25
149	149	178	Q_manutenzione	-32.77	-6.88	2.04
149	149	177	EQ_X	-357.38	-32.	-23.37
149	149	184	EQ_X	-356.19	-14.3	-15.9
149	149	185	EQ_X	-281.97	-23.27	-15.97
149	149	178	EQ_X	-285.93	-24.82	-23.44
149	149	177	EQ_Y	35.08	110.09	-68.73
149	149	184	EQ_Y	7.44	53.82	-59.16
149	149	185	EQ_Y	17.27	44.47	-53.1
149	149	178	EQ_Y	51.69	92.05	-62.67
150	150	178	DEAD	-2.913E-11	-1.530E-11	2.482E-11
150	150	185	DEAD	-3.703E-11	-2.150E-11	4.605E-11
150	150	186	DEAD	-5.188E-11	-7.446E-11	3.999E-11
150	150	179	DEAD	-7.419E-11	-6.169E-11	1.875E-11
150	150	178	G1_power station	0.	0.	0.
150	150	185	G1_power station	0.	0.	0.
150	150	186	G1_power station	0.	0.	0.
150	150	179	G1_power station	0.	0.	0.
150	150	178	G2_power station	-885.01	-185.94	23.77
150	150	185	G2_power station	-835.34	-216.75	18.28
150	150	186	G2_power station	-752.07	-194.2	-18.11
150	150	179	G2_power station	-887.6	-168.92	-12.62
150	150	178	Q_power station	-32.75	-6.88	0.88
150	150	185	Q_power station	-30.91	-8.02	0.68
150	150	186	Q_power station	-27.83	-7.19	-0.67
150	150	179	Q_power station	-32.84	-6.25	-0.47
150	150	178	Q_neve	-100.16	-36.72	0.18
150	150	185	Q_neve	-96.21	-45.1	0.43
150	150	186	Q_neve	-85.46	-44.5	-3.36
150	150	179	Q_neve	-98.54	-35.89	-3.6
150	150	178	Q_manutenzione	-32.75	-6.88	0.88
150	150	185	Q_manutenzione	-30.91	-8.02	0.68

Table 21: Element Stresses - Area Shells, Part 2 of 3

Area	AreaElem	Joint	OutputCase	S11Bot	S22Bot	S12Bot
				KN/m2	KN/m2	KN/m2
150	150	186	Q_manutenzione	-27.83	-7.19	-0.67
150	150	179	Q_manutenzione	-32.84	-6.25	-0.47
150	150	178	EQ_X	-284.07	-24.44	-25.76
150	150	185	EQ_X	-280.29	-22.93	-15.78
150	150	186	EQ_X	-194.56	-32.79	-18.33
150	150	179	EQ_X	-207.52	-20.24	-28.31
150	150	178	EQ_Y	49.1	91.53	-52.57
150	150	185	EQ_Y	13.34	43.68	-52.62
150	150	186	EQ_Y	17.31	43.68	-49.93
150	150	179	EQ_Y	56.69	89.64	-49.88
151	151	179	DEAD	-1.357E-10	-4.840E-11	2.392E-12
151	151	186	DEAD	-6.142E-11	-7.261E-11	1.534E-11
151	151	187	DEAD	-8.412E-11	-1.364E-10	-6.411E-13
151	151	180	DEAD	-1.479E-10	-1.227E-10	-2.410E-11
151	151	179	G1_power station	0.	0.	0.
151	151	186	G1_power station	0.	0.	0.
151	151	187	G1_power station	0.	0.	0.
151	151	180	G1_power station	0.	0.	0.
151	151	179	G2_power station	-886.62	-168.72	-88.49
151	151	186	G2_power station	-757.27	-195.24	-53.23
151	151	187	G2_power station	-444.27	-307.11	-145.86
151	151	180	G2_power station	-772.62	-121.93	-181.12
151	151	179	Q_power station	-32.8	-6.24	-3.27
151	151	186	Q_power station	-28.02	-7.22	-1.97
151	151	187	Q_power station	-16.44	-11.36	-5.4
151	151	180	Q_power station	-28.59	-4.51	-6.7
151	151	179	Q_neve	-98.46	-35.88	-11.59
151	151	186	Q_neve	-86.	-44.6	-7.03
151	151	187	Q_neve	-50.5	-57.85	-16.75
151	151	180	Q_neve	-83.59	-32.	-21.31
151	151	179	Q_manutenzione	-32.8	-6.24	-3.27
151	151	186	Q_manutenzione	-28.02	-7.22	-1.97
151	151	187	Q_manutenzione	-16.44	-11.36	-5.4
151	151	180	Q_manutenzione	-28.59	-4.51	-6.7
151	151	179	EQ_X	-205.42	-19.82	-35.5
151	151	186	EQ_X	-194.46	-32.77	-21.59
151	151	187	EQ_X	-96.95	-54.36	-30.01
151	151	180	EQ_X	-119.59	-12.4	-43.92
151	151	179	EQ_Y	47.44	87.79	-41.5
151	151	186	EQ_Y	18.75	43.97	-46.88
151	151	187	EQ_Y	11.8	38.89	-38.83
151	151	180	EQ_Y	43.88	89.3	-33.44
152	152	180	DEAD	-1.698E-10	-1.134E-10	-4.268E-11

Table 21: Element Stresses - Area Shells, Part 2 of 3

Area	AreaElem	Joint	OutputCase	S11Bot	S22Bot	S12Bot
				KN/m2	KN/m2	KN/m2
152	152	187	DEAD	-9.053E-11	-1.167E-10	-3.135E-11
152	152	188	DEAD	2.967E-11	-1.353E-10	-3.964E-11
152	152	181	DEAD	7.783E-11	-9.393E-11	-4.045E-11
152	152	180	G1_power station	0.	0.	0.
152	152	187	G1_power station	0.	0.	0.
152	152	188	G1_power station	0.	0.	0.
152	152	181	G1_power station	0.	0.	0.
152	152	180	G2_power station	-849.42	-137.29	-371.65
152	152	187	G2_power station	-419.3	-302.11	-185.67
152	152	188	G2_power station	-85.28	-429.95	-170.15
152	152	181	G2_power station	452.38	-476.08	-356.13
152	152	180	Q_power station	-31.43	-5.08	-13.75
152	152	187	Q_power station	-15.51	-11.18	-6.87
152	152	188	Q_power station	-3.16	-15.91	-6.3
152	152	181	Q_power station	16.74	-17.61	-13.18
152	152	180	Q_neve	-91.61	-33.6	-41.36
152	152	187	Q_neve	-47.92	-57.33	-20.96
152	152	188	Q_neve	-8.81	-72.51	-19.77
152	152	181	Q_neve	46.53	-70.04	-40.17
152	152	180	Q_manutenzione	-31.43	-5.08	-13.75
152	152	187	Q_manutenzione	-15.51	-11.18	-6.87
152	152	188	Q_manutenzione	-3.16	-15.91	-6.3
152	152	181	Q_manutenzione	16.74	-17.61	-13.18
152	152	180	EQ_X	-128.28	-14.14	-62.28
152	152	187	EQ_X	-94.73	-53.91	-33.59
152	152	188	EQ_X	-5.56	-78.68	-36.44
152	152	181	EQ_X	31.09	-57.25	-65.13
152	152	180	EQ_Y	54.6	91.45	-25.26
152	152	187	EQ_Y	8.17	38.16	-32.47
152	152	188	EQ_Y	6.7	32.02	-33.24
152	152	181	EQ_Y	-27.06	100.68	-26.02
153	153	68	DEAD	-1.843E-11	-5.407E-11	4.314E-11
153	153	70	DEAD	-4.162E-11	-1.123E-10	3.404E-11
153	153	189	DEAD	2.631E-11	-8.517E-11	4.618E-11
153	153	182	DEAD	7.972E-11	-3.347E-11	5.528E-11
153	153	68	G1_power station	0.	0.	0.
153	153	70	G1_power station	0.	0.	0.
153	153	189	G1_power station	0.	0.	0.
153	153	182	G1_power station	0.	0.	0.
153	153	68	G2_power station	-162.87	-531.77	28.63
153	153	70	G2_power station	-162.87	-531.77	-28.63
153	153	189	G2_power station	-361.36	-449.28	-28.63
153	153	182	G2_power station	-361.36	-449.28	28.63

Table 21: Element Stresses - Area Shells, Part 2 of 3

Area	AreaElem	Joint	OutputCase	S11Bot	S22Bot	S12Bot
				KN/m2	KN/m2	KN/m2
153	153	68	Q_power station	-6.03	-19.68	1.06
153	153	70	Q_power station	-6.03	-19.68	-1.06
153	153	189	Q_power station	-13.37	-16.62	-1.06
153	153	182	Q_power station	-13.37	-16.62	1.06
153	153	68	Q_neve	-20.19	-65.05	2.28
153	153	70	Q_neve	-20.19	-65.05	-2.28
153	153	189	Q_neve	-46.7	-60.63	-2.28
153	153	182	Q_neve	-46.7	-60.63	2.28
153	153	68	Q_manutenzione	-6.03	-19.68	1.06
153	153	70	Q_manutenzione	-6.03	-19.68	-1.06
153	153	189	Q_manutenzione	-13.37	-16.62	-1.06
153	153	182	Q_manutenzione	-13.37	-16.62	1.06
153	153	68	EQ_X	-319.67	-82.98	17.08
153	153	70	EQ_X	-319.75	-83.	-19.37
153	153	189	EQ_X	-333.94	-4.91	-19.38
153	153	182	EQ_X	-333.86	-4.89	17.07
153	153	68	EQ_Y	28.09	104.6	-31.69
153	153	70	EQ_Y	-27.68	-99.28	-31.54
153	153	189	EQ_Y	-33.84	-86.6	-23.21
153	153	182	EQ_Y	34.23	91.86	-23.37
154	154	182	DEAD	-6.655E-11	-4.745E-11	4.827E-11
154	154	189	DEAD	4.173E-11	-7.480E-11	4.443E-11
154	154	190	DEAD	1.839E-11	-7.778E-11	2.704E-11
154	154	183	DEAD	8.875E-11	-3.992E-11	4.139E-11
154	154	182	G1_power station	0.	0.	0.
154	154	189	G1_power station	0.	0.	0.
154	154	190	G1_power station	0.	0.	0.
154	154	183	G1_power station	0.	0.	0.
154	154	182	G2_power station	-362.89	-449.59	35.27
154	154	189	G2_power station	-362.89	-449.59	-35.27
154	154	190	G2_power station	-598.55	-346.16	-35.27
154	154	183	G2_power station	-598.55	-346.16	35.27
154	154	182	Q_power station	-13.43	-16.63	1.31
154	154	189	Q_power station	-13.43	-16.63	-1.31
154	154	190	Q_power station	-22.15	-12.81	-1.31
154	154	183	Q_power station	-22.15	-12.81	1.31
154	154	182	Q_neve	-46.83	-60.65	2.86
154	154	189	Q_neve	-46.83	-60.65	-2.86
154	154	190	Q_neve	-73.02	-53.67	-2.86
154	154	183	Q_neve	-73.02	-53.67	2.86
154	154	182	Q_manutenzione	-13.43	-16.63	1.31
154	154	189	Q_manutenzione	-13.43	-16.63	-1.31
154	154	190	Q_manutenzione	-22.15	-12.81	-1.31

Table 21: Element Stresses - Area Shells, Part 2 of 3

Area	AreaElem	Joint	OutputCase	S11Bot	S22Bot	S12Bot
				KN/m2	KN/m2	KN/m2
154	154	183	Q_manutenzione	-22.15	-12.81	1.31
154	154	182	EQ_X	-354.59	-9.04	1.91
154	154	189	EQ_X	-354.46	-9.01	-3.3
154	154	190	EQ_X	-416.75	0.28	-2.79
154	154	183	EQ_X	-416.89	0.25	2.41
154	154	182	EQ_Y	28.9	90.8	-15.31
154	154	189	EQ_Y	-27.93	-85.42	-15.2
154	154	190	EQ_Y	3.49	-71.99	-20.01
154	154	183	EQ_Y	-2.59	77.01	-20.13
155	155	183	DEAD	3.700E-11	-5.734E-11	4.332E-11
155	155	190	DEAD	4.102E-11	-3.060E-11	3.199E-11
155	155	191	DEAD	5.908E-12	-8.540E-11	3.725E-11
155	155	184	DEAD	1.371E-11	-2.150E-11	3.806E-11
155	155	183	G1_power station	0.	0.	0.
155	155	190	G1_power station	0.	0.	0.
155	155	191	G1_power station	0.	0.	0.
155	155	184	G1_power station	0.	0.	0.
155	155	183	G2_power station	-600.5	-346.55	26.41
155	155	190	G2_power station	-600.5	-346.55	-26.41
155	155	191	G2_power station	-772.59	-268.24	-26.41
155	155	184	G2_power station	-772.59	-268.24	26.41
155	155	183	Q_power station	-22.22	-12.82	0.98
155	155	190	Q_power station	-22.22	-12.82	-0.98
155	155	191	Q_power station	-28.59	-9.92	-0.98
155	155	184	Q_power station	-28.59	-9.92	0.98
155	155	183	Q_neve	-73.2	-53.71	2.08
155	155	190	Q_neve	-73.2	-53.71	-2.08
155	155	191	Q_neve	-90.85	-48.38	-2.08
155	155	184	Q_neve	-90.85	-48.38	2.08
155	155	183	Q_manutenzione	-22.22	-12.82	0.98
155	155	190	Q_manutenzione	-22.22	-12.82	-0.98
155	155	191	Q_manutenzione	-28.59	-9.92	-0.98
155	155	184	Q_manutenzione	-28.59	-9.92	0.98
155	155	183	EQ_X	-406.74	2.28	-5.21
155	155	190	EQ_X	-406.19	2.39	5.87
155	155	191	EQ_X	-357.71	-12.82	6.32
155	155	184	EQ_X	-358.26	-12.93	-4.75
155	155	183	EQ_Y	-0.62	77.41	-32.88
155	155	190	EQ_Y	2.33	-72.22	-32.54
155	155	191	EQ_Y	-3.48	-43.93	-40.55
155	155	184	EQ_Y	5.22	49.3	-40.89
156	156	184	DEAD	4.312E-11	-1.613E-11	2.768E-11
156	156	191	DEAD	1.659E-11	-8.572E-11	4.588E-11

Table 21: Element Stresses - Area Shells, Part 2 of 3

Area	AreaElem	Joint	OutputCase	S11Bot	S22Bot	S12Bot
				KN/m2	KN/m2	KN/m2
156	156	192	DEAD	-5.319E-11	-9.728E-11	4.588E-11
156	156	185	DEAD	-6.607E-11	-9.861E-11	2.768E-11
156	156	184	G1_power station	0.	0.	0.
156	156	191	G1_power station	0.	0.	0.
156	156	192	G1_power station	0.	0.	0.
156	156	185	G1_power station	0.	0.	0.
156	156	184	G2_power station	-772.49	-268.22	15.1
156	156	191	G2_power station	-772.49	-268.22	-15.1
156	156	192	G2_power station	-833.66	-216.	-15.1
156	156	185	G2_power station	-833.66	-216.	15.1
156	156	184	Q_power station	-28.58	-9.92	0.56
156	156	191	Q_power station	-28.58	-9.92	-0.56
156	156	192	Q_power station	-30.85	-7.99	-0.56
156	156	185	Q_power station	-30.85	-7.99	0.56
156	156	184	Q_neve	-90.86	-48.38	1.03
156	156	191	Q_neve	-90.86	-48.38	-1.03
156	156	192	Q_neve	-96.02	-45.02	-1.03
156	156	185	Q_neve	-96.02	-45.02	1.03
156	156	184	Q_manutenzione	-28.58	-9.92	0.56
156	156	191	Q_manutenzione	-28.58	-9.92	-0.56
156	156	192	Q_manutenzione	-30.85	-7.99	-0.56
156	156	185	Q_manutenzione	-30.85	-7.99	0.56
156	156	184	EQ_X	-355.82	-12.45	-4.97
156	156	191	EQ_X	-355.31	-12.34	7.24
156	156	192	EQ_X	-281.23	-21.98	8.01
156	156	185	EQ_X	-281.74	-22.08	-4.2
156	156	184	EQ_Y	6.59	49.58	-47.27
156	156	191	EQ_Y	-4.07	-44.04	-47.13
156	156	192	EQ_Y	-12.9	-29.7	-52.99
156	156	185	EQ_Y	15.56	35.92	-53.13
157	157	185	DEAD	-3.873E-11	-8.500E-11	4.308E-11
157	157	192	DEAD	-4.506E-11	-1.069E-10	2.377E-11
157	157	193	DEAD	-6.679E-11	-4.329E-11	3.398E-11
157	157	186	DEAD	-4.733E-11	-8.184E-11	4.804E-11
157	157	185	G1_power station	0.	0.	0.
157	157	192	G1_power station	0.	0.	0.
157	157	193	G1_power station	0.	0.	0.
157	157	186	G1_power station	0.	0.	0.
157	157	185	G2_power station	-835.25	-216.32	-0.87
157	157	192	G2_power station	-835.25	-216.32	0.87
157	157	193	G2_power station	-753.99	-203.8	0.87
157	157	186	G2_power station	-753.99	-203.8	-0.87
157	157	185	Q_power station	-30.9	-8.	-3.233E-02

Table 21: Element Stresses - Area Shells, Part 2 of 3

Area	AreaElem	Joint	OutputCase	S11Bot	S22Bot	S12Bot
				KN/m2	KN/m2	KN/m2
157	157	192	Q_power station	-30.9	-8.	3.233E-02
157	157	193	Q_power station	-27.9	-7.54	3.233E-02
157	157	186	Q_power station	-27.9	-7.54	-3.233E-02
157	157	185	Q_neve	-96.2	-45.06	-0.59
157	157	192	Q_neve	-96.2	-45.06	0.59
157	157	193	Q_neve	-85.66	-45.48	0.59
157	157	186	Q_neve	-85.66	-45.48	-0.59
157	157	185	Q_manutenzione	-30.9	-8.	-3.233E-02
157	157	192	Q_manutenzione	-30.9	-8.	3.233E-02
157	157	193	Q_manutenzione	-27.9	-7.54	3.233E-02
157	157	186	Q_manutenzione	-27.9	-7.54	-3.233E-02
157	157	185	EQ_X	-280.05	-21.75	-4.23
157	157	192	EQ_X	-280.85	-21.91	9.09
157	157	193	EQ_X	-195.32	-32.76	9.28
157	157	186	EQ_X	-194.52	-32.6	-4.04
157	157	185	EQ_Y	11.63	35.14	-52.96
157	157	192	EQ_Y	-9.08	-28.94	-52.7
157	157	193	EQ_Y	-11.98	-23.54	-48.49
157	157	186	EQ_Y	15.44	34.32	-48.75
158	158	186	DEAD	-6.568E-11	-6.542E-11	2.580E-11
158	158	193	DEAD	-1.442E-11	-5.907E-11	3.490E-11
158	158	194	DEAD	-3.459E-11	-1.102E-10	1.973E-11
158	158	187	DEAD	-6.220E-11	-6.134E-11	1.063E-11
158	158	186	G1_power station	0.	0.	0.
158	158	193	G1_power station	0.	0.	0.
158	158	194	G1_power station	0.	0.	0.
158	158	187	G1_power station	0.	0.	0.
158	158	186	G2_power station	-759.18	-204.84	-33.21
158	158	193	G2_power station	-759.18	-204.84	33.21
158	158	194	G2_power station	-439.38	-282.62	33.21
158	158	187	G2_power station	-439.38	-282.62	-33.21
158	158	186	Q_power station	-28.09	-7.58	-1.23
158	158	193	Q_power station	-28.09	-7.58	1.23
158	158	194	Q_power station	-16.26	-10.46	1.23
158	158	187	Q_power station	-16.26	-10.46	-1.23
158	158	186	Q_neve	-86.2	-45.59	-3.98
158	158	193	Q_neve	-86.2	-45.59	3.98
158	158	194	Q_neve	-49.99	-55.32	3.98
158	158	187	Q_neve	-49.99	-55.32	-3.98
158	158	186	Q_manutenzione	-28.09	-7.58	-1.23
158	158	193	Q_manutenzione	-28.09	-7.58	1.23
158	158	194	Q_manutenzione	-16.26	-10.46	1.23
158	158	187	Q_manutenzione	-16.26	-10.46	-1.23

Table 21: Element Stresses - Area Shells, Part 2 of 3

Area	AreaElem	Joint	OutputCase	S11Bot	S22Bot	S12Bot
				KN/m2	KN/m2	KN/m2
158	158	186	EQ_X	-194.42	-32.58	-6.87
158	158	193	EQ_X	-194.12	-32.52	12.76
158	158	194	EQ_X	-96.39	-52.99	11.95
158	158	187	EQ_X	-96.69	-53.05	-7.68
158	158	186	EQ_Y	16.87	34.61	-45.22
158	158	193	EQ_Y	-15.82	-24.31	-46.3
158	158	194	EQ_Y	-9.46	-22.17	-41.98
158	158	187	EQ_Y	11.43	37.02	-40.89
159	159	187	DEAD	-6.750E-11	-6.578E-11	-4.659E-12
159	159	194	DEAD	-6.690E-11	-1.161E-10	2.264E-11
159	159	195	DEAD	-1.745E-11	-1.067E-10	2.568E-11
159	159	188	DEAD	1.349E-11	-1.510E-10	-1.626E-12
159	159	187	G1_power station	0.	0.	0.
159	159	194	G1_power station	0.	0.	0.
159	159	195	G1_power station	0.	0.	0.
159	159	188	G1_power station	0.	0.	0.
159	159	187	G2_power station	-414.4	-277.63	-58.26
159	159	194	G2_power station	-414.4	-277.63	58.26
159	159	195	G2_power station	-91.64	-461.73	58.26
159	159	188	G2_power station	-91.64	-461.73	-58.26
159	159	187	Q_power station	-15.33	-10.27	-2.16
159	159	194	Q_power station	-15.33	-10.27	2.16
159	159	195	Q_power station	-3.39	-17.08	2.16
159	159	188	Q_power station	-3.39	-17.08	-2.16
159	159	187	Q_neve	-47.42	-54.81	-6.69
159	159	194	Q_neve	-47.42	-54.81	6.69
159	159	195	Q_neve	-9.46	-75.75	6.69
159	159	188	Q_neve	-9.46	-75.75	-6.69
159	159	187	Q_manutenzione	-15.33	-10.27	-2.16
159	159	194	Q_manutenzione	-15.33	-10.27	2.16
159	159	195	Q_manutenzione	-3.39	-17.08	2.16
159	159	188	Q_manutenzione	-3.39	-17.08	-2.16
159	159	187	EQ_X	-94.47	-52.61	-10.92
159	159	194	EQ_X	-94.1	-52.53	12.92
159	159	195	EQ_X	-6.42	-84.75	13.37
159	159	188	EQ_X	-6.79	-84.82	-10.47
159	159	187	EQ_Y	7.8	36.3	-37.06
159	159	194	EQ_Y	-7.69	-21.82	-36.99
159	159	195	EQ_Y	-8.75	-28.36	-36.8
159	159	188	EQ_Y	9.58	46.42	-36.86
160	160	70	DEAD	-6.139E-11	-1.130E-10	3.146E-11
160	160	72	DEAD	-3.514E-11	-1.376E-10	2.044E-11
160	160	196	DEAD	1.673E-11	-6.826E-11	1.933E-11

Table 21: Element Stresses - Area Shells, Part 2 of 3

Area	AreaElem	Joint	OutputCase	S11Bot	S22Bot	S12Bot
				KN/m2	KN/m2	KN/m2
160	160	189	DEAD	2.857E-11	-7.389E-11	3.561E-11
160	160	70	G1_power station	0.	0.	0.
160	160	72	G1_power station	0.	0.	0.
160	160	196	G1_power station	0.	0.	0.
160	160	189	G1_power station	0.	0.	0.
160	160	70	G2_power station	-160.28	-518.82	-71.31
160	160	72	G2_power station	2.8	-331.53	-138.54
160	160	196	G2_power station	-296.02	-207.14	-164.94
160	160	189	G2_power station	-362.81	-456.54	-97.71
160	160	70	Q_power station	-5.93	-19.2	-2.64
160	160	72	Q_power station	0.1	-12.27	-5.13
160	160	196	Q_power station	-10.95	-7.66	-6.1
160	160	189	Q_power station	-13.42	-16.89	-3.62
160	160	70	Q_neve	-19.95	-63.88	-5.58
160	160	72	Q_neve	-4.88	-42.92	-11.09
160	160	196	Q_neve	-39.91	-34.39	-13.38
160	160	189	Q_neve	-46.83	-61.28	-7.87
160	160	70	Q_manutenzione	-5.93	-19.2	-2.64
160	160	72	Q_manutenzione	0.1	-12.27	-5.13
160	160	196	Q_manutenzione	-10.95	-7.66	-6.1
160	160	189	Q_manutenzione	-13.42	-16.89	-3.62
160	160	70	EQ_X	-319.01	-79.3	-41.37
160	160	72	EQ_X	172.47	42.05	-78.5
160	160	196	EQ_X	-648.	-1.53	-104.2
160	160	189	EQ_X	-334.79	-9.12	-67.07
160	160	70	EQ_Y	-30.83	-114.99	-42.08
160	160	72	EQ_Y	-217.06	-202.12	-8.85
160	160	196	EQ_Y	12.54	-343.6	6.68
160	160	189	EQ_Y	-28.84	-61.62	-26.55
161	161	189	DEAD	2.932E-11	-6.636E-11	2.563E-11
161	161	196	DEAD	3.550E-11	-9.496E-11	2.866E-11
161	161	197	DEAD	3.767E-11	-6.105E-11	2.866E-11
161	161	190	DEAD	1.047E-11	-7.449E-11	2.563E-11
161	161	189	G1_power station	0.	0.	0.
161	161	196	G1_power station	0.	0.	0.
161	161	197	G1_power station	0.	0.	0.
161	161	190	G1_power station	0.	0.	0.
161	161	189	G2_power station	-364.34	-456.85	-110.
161	161	196	G2_power station	-305.09	-208.95	-164.29
161	161	197	G2_power station	-640.07	-203.06	-153.09
161	161	190	G2_power station	-598.28	-344.82	-98.8
161	161	189	Q_power station	-13.48	-16.9	-4.07
161	161	196	Q_power station	-11.29	-7.73	-6.08

Table 21: Element Stresses - Area Shells, Part 2 of 3

Area	AreaElem	Joint	OutputCase	S11Bot	S22Bot	S12Bot
				KN/m2	KN/m2	KN/m2
161	161	197	Q_power station	-23.68	-7.51	-5.66
161	161	190	Q_power station	-22.14	-12.76	-3.66
161	161	189	Q_neve	-46.96	-61.3	-8.97
161	161	196	Q_neve	-40.73	-34.55	-13.32
161	161	197	Q_neve	-75.67	-35.9	-12.34
161	161	190	Q_neve	-73.	-53.56	-7.98
161	161	189	Q_manutenzione	-13.48	-16.9	-4.07
161	161	196	Q_manutenzione	-11.29	-7.73	-6.08
161	161	197	Q_manutenzione	-23.68	-7.51	-5.66
161	161	190	Q_manutenzione	-22.14	-12.76	-3.66
161	161	189	EQ_X	-355.3	-13.22	-26.59
161	161	196	EQ_X	-546.46	18.77	-13.78
161	161	197	EQ_X	-407.49	-41.7	23.58
161	161	190	EQ_X	-416.28	2.67	10.77
161	161	189	EQ_Y	-22.93	-60.44	-13.18
161	161	196	EQ_Y	9.91	-344.13	-55.79
161	161	197	EQ_Y	-2.88	-157.26	-73.05
161	161	190	EQ_Y	1.46	-82.14	-30.43
162	162	190	DEAD	4.735E-11	-6.471E-11	3.001E-11
162	162	197	DEAD	2.484E-11	-8.981E-11	2.505E-11
162	162	198	DEAD	-2.546E-11	-4.651E-11	3.304E-11
162	162	191	DEAD	2.332E-11	-7.920E-11	4.325E-11
162	162	190	G1_power station	0.	0.	0.
162	162	197	G1_power station	0.	0.	0.
162	162	198	G1_power station	0.	0.	0.
162	162	191	G1_power station	0.	0.	0.
162	162	190	G2_power station	-600.23	-345.21	-86.64
162	162	197	G2_power station	-634.62	-201.97	-121.68
162	162	198	G2_power station	-808.15	-199.54	-100.87
162	162	191	G2_power station	-772.38	-267.18	-65.82
162	162	190	Q_power station	-22.21	-12.77	-3.21
162	162	197	Q_power station	-23.48	-7.47	-4.5
162	162	198	Q_power station	-29.9	-7.38	-3.73
162	162	191	Q_power station	-28.58	-9.89	-2.44
162	162	190	Q_neve	-73.18	-53.59	-6.91
162	162	197	Q_neve	-75.18	-35.8	-9.55
162	162	198	Q_neve	-93.1	-36.92	-7.68
162	162	191	Q_neve	-90.83	-48.29	-5.04
162	162	190	Q_manutenzione	-22.21	-12.77	-3.21
162	162	197	Q_manutenzione	-23.48	-7.47	-4.5
162	162	198	Q_manutenzione	-29.9	-7.38	-3.73
162	162	191	Q_manutenzione	-28.58	-9.89	-2.44
162	162	190	EQ_X	-405.71	4.79	18.83

Table 21: Element Stresses - Area Shells, Part 2 of 3

Area	AreaElem	Joint	OutputCase	S11Bot	S22Bot	S12Bot
				KN/m2	KN/m2	KN/m2
162	162	197	EQ_X	-419.9	-44.18	26.39
162	162	198	EQ_X	-353.22	-30.17	26.04
162	162	191	EQ_X	-357.87	-13.64	18.48
162	162	190	EQ_Y	0.29	-82.38	-48.29
162	162	197	EQ_Y	-2.15	-157.12	-72.29
162	162	198	EQ_Y	-35.75	-105.23	-77.22
162	162	191	EQ_Y	-4.34	-48.2	-53.23
163	163	191	DEAD	2.000E-11	-9.119E-11	4.857E-11
163	163	198	DEAD	-1.459E-11	-4.839E-11	4.250E-11
163	163	199	DEAD	4.078E-12	-6.162E-11	4.250E-11
163	163	192	DEAD	-5.327E-11	-5.976E-11	4.857E-11
163	163	191	G1_power station	0.	0.	0.
163	163	198	G1_power station	0.	0.	0.
163	163	199	G1_power station	0.	0.	0.
163	163	192	G1_power station	0.	0.	0.
163	163	191	G2_power station	-772.28	-267.16	-53.59
163	163	198	G2_power station	-808.23	-199.56	-75.14
163	163	199	G2_power station	-885.64	-186.07	-55.24
163	163	192	G2_power station	-833.74	-216.43	-33.69
163	163	191	Q_power station	-28.57	-9.88	-1.98
163	163	198	Q_power station	-29.9	-7.38	-2.78
163	163	199	Q_power station	-32.77	-6.88	-2.04
163	163	192	Q_power station	-30.85	-8.01	-1.25
163	163	191	Q_neve	-90.84	-48.29	-3.92
163	163	198	Q_neve	-93.11	-36.93	-5.29
163	163	199	Q_neve	-100.22	-36.74	-3.36
163	163	192	Q_neve	-96.03	-45.07	-1.99
163	163	191	Q_manutenzione	-28.57	-9.88	-1.98
163	163	198	Q_manutenzione	-29.9	-7.38	-2.78
163	163	199	Q_manutenzione	-32.77	-6.88	-2.04
163	163	192	Q_manutenzione	-30.85	-8.01	-1.25
163	163	191	EQ_X	-355.48	-13.16	18.37
163	163	198	EQ_X	-354.22	-30.37	25.47
163	163	199	EQ_X	-282.64	-22.5	25.76
163	163	192	EQ_X	-281.12	-21.44	18.66
163	163	191	EQ_Y	-4.93	-48.32	-58.52
163	163	198	EQ_Y	-33.8	-104.84	-67.38
163	163	199	EQ_Y	-50.22	-85.84	-61.42
163	163	192	EQ_Y	-14.56	-38.02	-52.55
164	164	192	DEAD	-5.237E-11	-5.279E-11	3.368E-11
164	164	199	DEAD	-1.338E-11	-5.139E-11	4.086E-11
164	164	200	DEAD	-7.621E-12	-4.748E-11	2.762E-11
164	164	193	DEAD	-7.025E-11	-1.356E-10	2.569E-11

Table 21: Element Stresses - Area Shells, Part 2 of 3

Area	AreaElem	Joint	OutputCase	S11Bot	S22Bot	S12Bot
				KN/m2	KN/m2	KN/m2
164	164	192	G1_power station	0.	0.	0.
164	164	199	G1_power station	0.	0.	0.
164	164	200	G1_power station	0.	0.	0.
164	164	193	G1_power station	0.	0.	0.
164	164	192	G2_power station	-835.34	-216.75	-18.28
164	164	199	G2_power station	-885.01	-185.94	-23.77
164	164	200	G2_power station	-887.6	-168.92	12.62
164	164	193	G2_power station	-752.07	-194.2	18.11
164	164	192	Q_power station	-30.91	-8.02	-0.68
164	164	199	Q_power station	-32.75	-6.88	-0.88
164	164	200	Q_power station	-32.84	-6.25	0.47
164	164	193	Q_power station	-27.83	-7.19	0.67
164	164	192	Q_neve	-96.21	-45.1	-0.43
164	164	199	Q_neve	-100.16	-36.72	-0.18
164	164	200	Q_neve	-98.54	-35.89	3.6
164	164	193	Q_neve	-85.46	-44.5	3.36
164	164	192	Q_manutenzione	-30.91	-8.02	-0.68
164	164	199	Q_manutenzione	-32.75	-6.88	-0.88
164	164	200	Q_manutenzione	-32.84	-6.25	0.47
164	164	193	Q_manutenzione	-27.83	-7.19	0.67
164	164	192	EQ_X	-280.74	-21.36	19.52
164	164	199	EQ_X	-283.32	-22.63	27.83
164	164	200	EQ_X	-206.63	-17.71	31.85
164	164	193	EQ_X	-194.87	-30.5	23.55
164	164	192	EQ_Y	-10.75	-37.26	-51.95
164	164	199	EQ_Y	-46.51	-85.1	-51.75
164	164	200	EQ_Y	-53.76	-81.54	-50.3
164	164	193	EQ_Y	-14.39	-35.58	-50.49
165	165	193	DEAD	1.518E-13	-1.074E-10	2.984E-11
165	165	200	DEAD	-1.002E-10	-4.403E-11	3.398E-11
165	165	201	DEAD	-2.336E-11	-6.116E-11	4.197E-11
165	165	194	DEAD	-5.698E-11	-1.009E-10	4.308E-11
165	165	193	G1_power station	0.	0.	0.
165	165	200	G1_power station	0.	0.	0.
165	165	201	G1_power station	0.	0.	0.
165	165	194	G1_power station	0.	0.	0.
165	165	193	G2_power station	-757.27	-195.24	53.23
165	165	200	G2_power station	-886.62	-168.72	88.49
165	165	201	G2_power station	-772.62	-121.93	181.12
165	165	194	G2_power station	-444.27	-307.11	145.86
165	165	193	Q_power station	-28.02	-7.22	1.97
165	165	200	Q_power station	-32.8	-6.24	3.27
165	165	201	Q_power station	-28.59	-4.51	6.7

Table 21: Element Stresses - Area Shells, Part 2 of 3

Area	AreaElem	Joint	OutputCase	S11Bot	S22Bot	S12Bot
				KN/m2	KN/m2	KN/m2
165	165	194	Q_power station	-16.44	-11.36	5.4
165	165	193	Q_neve	-86.	-44.6	7.03
165	165	200	Q_neve	-98.46	-35.88	11.59
165	165	201	Q_neve	-83.59	-32.	21.31
165	165	194	Q_neve	-50.5	-57.85	16.75
165	165	193	Q_manutenzione	-28.02	-7.22	1.97
165	165	200	Q_manutenzione	-32.8	-6.24	3.27
165	165	201	Q_manutenzione	-28.59	-4.51	6.7
165	165	194	Q_manutenzione	-16.44	-11.36	5.4
165	165	193	EQ_X	-193.67	-30.26	27.46
165	165	200	EQ_X	-208.37	-18.05	40.42
165	165	201	EQ_X	-123.76	-16.72	48.99
165	165	194	EQ_X	-97.37	-57.92	36.04
165	165	193	EQ_Y	-18.23	-36.35	-48.79
165	165	200	EQ_Y	-43.52	-79.49	-43.07
165	165	201	EQ_Y	-38.31	-72.77	-35.43
165	165	194	EQ_Y	-9.64	-23.04	-41.15
166	166	194	DEAD	-5.537E-11	-1.064E-10	3.533E-11
166	166	201	DEAD	-4.566E-11	-4.937E-11	5.353E-11
166	166	202	DEAD	1.511E-12	-1.314E-10	5.049E-11
166	166	195	DEAD	-1.608E-11	-1.017E-10	3.229E-11
166	166	194	G1_power station	0.	0.	0.
166	166	201	G1_power station	0.	0.	0.
166	166	202	G1_power station	0.	0.	0.
166	166	195	G1_power station	0.	0.	0.
166	166	194	G2_power station	-419.3	-302.11	185.67
166	166	201	G2_power station	-849.42	-137.29	371.65
166	166	202	G2_power station	452.38	-476.08	356.13
166	166	195	G2_power station	-85.28	-429.95	170.15
166	166	194	Q_power station	-15.51	-11.18	6.87
166	166	201	Q_power station	-31.43	-5.08	13.75
166	166	202	Q_power station	16.74	-17.61	13.18
166	166	195	Q_power station	-3.16	-15.91	6.3
166	166	194	Q_neve	-47.92	-57.33	20.96
166	166	201	Q_neve	-91.61	-33.6	41.36
166	166	202	Q_neve	46.53	-70.04	40.17
166	166	195	Q_neve	-8.81	-72.51	19.77
166	166	194	Q_manutenzione	-15.51	-11.18	6.87
166	166	201	Q_manutenzione	-31.43	-5.08	13.75
166	166	202	Q_manutenzione	16.74	-17.61	13.18
166	166	195	Q_manutenzione	-3.16	-15.91	6.3
166	166	194	EQ_X	-95.08	-57.46	37.34
166	166	201	EQ_X	-126.59	-17.28	67.68

Table 21: Element Stresses - Area Shells, Part 2 of 3

Area	AreaElem	Joint	OutputCase	S11Bot	S22Bot	S12Bot
				KN/m2	KN/m2	KN/m2
166	166	202	EQ_X	32.07	-63.94	67.
166	166	195	EQ_X	-6.63	-85.79	36.66
166	166	194	EQ_Y	-7.86	-22.68	-33.65
166	166	201	EQ_Y	-54.8	-76.07	-28.34
166	166	202	EQ_Y	27.68	-81.21	-27.47
166	166	195	EQ_Y	-5.57	-12.45	-32.78
167	167	72	DEAD	-2.414E-11	-1.207E-10	8.288E-12
167	167	18	DEAD	8.202E-12	-8.509E-11	2.221E-12
167	167	203	DEAD	-1.352E-11	-6.760E-11	2.221E-12
167	167	196	DEAD	6.685E-12	-9.268E-11	8.288E-12
167	167	72	G1_power station	0.	0.	0.
167	167	18	G1_power station	0.	0.	0.
167	167	203	G1_power station	0.	0.	0.
167	167	196	G1_power station	0.	0.	0.
167	167	72	G2_power station	-1.55	-353.26	-196.75
167	167	18	G2_power station	612.11	650.03	-169.46
167	167	203	G2_power station	-387.24	120.26	-216.94
167	167	196	G2_power station	-294.27	-198.39	-244.23
167	167	72	Q_power station	-5.730E-02	-13.07	-7.28
167	167	18	Q_power station	22.65	24.05	-6.27
167	167	203	Q_power station	-14.33	4.45	-8.03
167	167	196	Q_power station	-10.89	-7.34	-9.04
167	167	72	Q_neve	-5.28	-44.89	-15.89
167	167	18	Q_neve	50.85	53.44	-13.24
167	167	203	Q_neve	-46.09	4.52	-17.41
167	167	196	Q_neve	-39.76	-33.6	-20.06
167	167	72	Q_manutenzione	-5.730E-02	-13.07	-7.28
167	167	18	Q_manutenzione	22.65	24.05	-6.27
167	167	203	Q_manutenzione	-14.33	4.45	-8.03
167	167	196	Q_manutenzione	-10.89	-7.34	-9.04
167	167	72	EQ_X	172.49	42.12	-285.47
167	167	18	EQ_X	-1990.79	-289.56	-257.72
167	167	203	EQ_X	-273.47	-210.58	65.85
167	167	196	EQ_X	-647.24	2.25	38.09
167	167	72	EQ_Y	-170.64	29.96	63.25
167	167	18	EQ_Y	-299.63	-1934.77	-323.05
167	167	203	EQ_Y	75.88	263.9	-354.62
167	167	196	EQ_Y	-15.18	-482.25	31.67
168	168	196	DEAD	4.161E-11	-8.723E-11	2.055E-11
168	168	203	DEAD	1.957E-11	-6.642E-11	1.145E-11
168	168	204	DEAD	3.327E-11	-7.434E-11	1.448E-11
168	168	197	DEAD	2.640E-11	-5.049E-11	2.358E-11
168	168	196	G1_power station	0.	0.	0.

Table 21: Element Stresses - Area Shells, Part 2 of 3

Area	AreaElem	Joint	OutputCase	S11Bot	S22Bot	S12Bot
				KN/m2	KN/m2	KN/m2
168	168	203	G1_power station	0.	0.	0.
168	168	204	G1_power station	0.	0.	0.
168	168	197	G1_power station	0.	0.	0.
168	168	196	G2_power station	-303.34	-200.2	-203.72
168	168	203	G2_power station	-368.14	124.07	-191.8
168	168	204	G2_power station	-654.06	-51.03	-159.55
168	168	197	G2_power station	-639.54	-200.42	-171.48
168	168	196	Q_power station	-11.22	-7.41	-7.54
168	168	203	Q_power station	-13.62	4.59	-7.1
168	168	204	Q_power station	-24.2	-1.89	-5.9
168	168	197	Q_power station	-23.66	-7.42	-6.34
168	168	196	Q_neve	-40.57	-33.76	-16.45
168	168	203	Q_neve	-44.36	4.87	-15.17
168	168	204	Q_neve	-74.73	-11.78	-12.32
168	168	197	Q_neve	-75.62	-35.67	-13.6
168	168	196	Q_manutenzione	-11.22	-7.41	-7.54
168	168	203	Q_manutenzione	-13.62	4.59	-7.1
168	168	204	Q_manutenzione	-24.2	-1.89	-5.9
168	168	197	Q_manutenzione	-23.66	-7.42	-6.34
168	168	196	EQ_X	-545.71	22.55	46.65
168	168	203	EQ_X	-446.84	-245.25	29.63
168	168	204	EQ_X	-444.9	-72.67	6.07
168	168	197	EQ_X	-409.19	-50.17	23.09
168	168	196	EQ_Y	-17.82	-482.78	-164.1
168	168	203	EQ_Y	70.73	262.87	-148.99
168	168	204	EQ_Y	-70.73	-220.63	-134.81
168	168	197	EQ_Y	6.47	-110.48	-149.93
169	169	197	DEAD	4.942E-11	-5.296E-11	2.294E-11
169	169	204	DEAD	1.149E-11	-5.522E-11	2.213E-11
169	169	205	DEAD	-3.628E-11	-8.102E-11	1.384E-11
169	169	198	DEAD	-5.221E-11	-6.432E-11	2.516E-11
169	169	197	G1_power station	0.	0.	0.
169	169	204	G1_power station	0.	0.	0.
169	169	205	G1_power station	0.	0.	0.
169	169	198	G1_power station	0.	0.	0.
169	169	197	G2_power station	-634.09	-199.33	-140.77
169	169	204	G2_power station	-665.46	-53.31	-145.98
169	169	205	G2_power station	-851.67	-104.02	-123.15
169	169	198	G2_power station	-807.92	-198.41	-117.95
169	169	197	Q_power station	-23.46	-7.38	-5.21
169	169	204	Q_power station	-24.62	-1.97	-5.4
169	169	205	Q_power station	-31.51	-3.85	-4.56
169	169	198	Q_power station	-29.89	-7.34	-4.36

Table 21: Element Stresses - Area Shells, Part 2 of 3

Area	AreaElem	Joint	OutputCase	S11Bot	S22Bot	S12Bot
				KN/m2	KN/m2	KN/m2
169	169	197	Q_neve	-75.13	-35.57	-10.88
169	169	204	Q_neve	-75.77	-11.99	-11.1
169	169	205	Q_neve	-95.07	-17.25	-9.02
169	169	198	Q_neve	-93.08	-36.83	-8.8
169	169	197	Q_manutenzione	-23.46	-7.38	-5.21
169	169	204	Q_manutenzione	-24.62	-1.97	-5.4
169	169	205	Q_manutenzione	-31.51	-3.85	-4.56
169	169	198	Q_manutenzione	-29.89	-7.34	-4.36
169	169	197	EQ_X	-421.59	-52.65	22.15
169	169	204	EQ_X	-434.79	-70.64	15.97
169	169	205	EQ_X	-360.42	-34.59	21.17
169	169	198	EQ_X	-353.4	-31.06	27.36
169	169	197	EQ_Y	7.2	-110.33	-104.86
169	169	204	EQ_Y	-78.34	-222.16	-142.77
169	169	205	EQ_Y	-80.95	-73.1	-123.82
169	169	198	EQ_Y	-38.97	-121.36	-85.91
170	170	198	DEAD	1.510E-11	-2.599E-11	2.977E-11
170	170	205	DEAD	-2.341E-11	-8.271E-11	2.371E-11
170	170	206	DEAD	-2.736E-11	-5.633E-11	2.977E-11
170	170	199	DEAD	-2.038E-11	-3.114E-11	3.584E-11
170	170	198	G1_power station	0.	0.	0.
170	170	205	G1_power station	0.	0.	0.
170	170	206	G1_power station	0.	0.	0.
170	170	199	G1_power station	0.	0.	0.
170	170	198	G2_power station	-808.	-198.43	-92.81
170	170	205	G2_power station	-853.89	-104.46	-100.11
170	170	206	G2_power station	-956.17	-123.2	-72.74
170	170	199	G2_power station	-885.32	-184.45	-65.44
170	170	198	Q_power station	-29.9	-7.34	-3.43
170	170	205	Q_power station	-31.59	-3.86	-3.7
170	170	206	Q_power station	-35.38	-4.56	-2.69
170	170	199	Q_power station	-32.76	-6.82	-2.42
170	170	198	Q_neve	-93.09	-36.83	-6.47
170	170	205	Q_neve	-95.28	-17.29	-6.8
170	170	206	Q_neve	-105.18	-19.55	-4.11
170	170	199	Q_neve	-100.19	-36.56	-3.78
170	170	198	Q_manutenzione	-29.9	-7.34	-3.43
170	170	205	Q_manutenzione	-31.59	-3.86	-3.7
170	170	206	Q_manutenzione	-35.38	-4.56	-2.69
170	170	199	Q_manutenzione	-32.76	-6.82	-2.42
170	170	198	EQ_X	-354.4	-31.26	27.55
170	170	205	EQ_X	-360.15	-34.54	28.04
170	170	206	EQ_X	-286.46	-17.5	30.88

Table 21: Element Stresses - Area Shells, Part 2 of 3

Area	AreaElem	Joint	OutputCase	S11Bot	S22Bot	S12Bot
				KN/m2	KN/m2	KN/m2
170	170	199	EQ_X	-282.76	-23.09	30.39
170	170	198	EQ_Y	-37.03	-120.97	-84.48
170	170	205	EQ_Y	-87.6	-74.43	-94.57
170	170	206	EQ_Y	-110.54	-88.18	-80.33
170	170	199	EQ_Y	-49.66	-83.03	-70.24
171	171	199	DEAD	3.489E-12	7.530E-13	3.766E-11
171	171	206	DEAD	3.975E-12	-6.344E-11	3.573E-11
171	171	207	DEAD	-7.311E-11	-5.461E-11	3.766E-11
171	171	200	DEAD	-2.105E-11	-4.296E-11	4.483E-11
171	171	199	G1_power station	0.	0.	0.
171	171	206	G1_power station	0.	0.	0.
171	171	207	G1_power station	0.	0.	0.
171	171	200	G1_power station	0.	0.	0.
171	171	199	G2_power station	-884.68	-184.32	-34.38
171	171	206	G2_power station	-957.19	-123.41	-38.54
171	171	207	G2_power station	-1034.05	-136.68	5.47
171	171	200	G2_power station	-887.66	-169.24	9.63
171	171	199	Q_power station	-32.73	-6.82	-1.27
171	171	206	Q_power station	-35.42	-4.57	-1.43
171	171	207	Q_power station	-38.26	-5.06	0.2
171	171	200	Q_power station	-32.84	-6.26	0.36
171	171	199	Q_neve	-100.12	-36.55	-0.65
171	171	206	Q_neve	-105.27	-19.57	-0.65
171	171	207	Q_neve	-111.59	-21.11	3.89
171	171	200	Q_neve	-98.55	-35.95	3.9
171	171	199	Q_manutenzione	-32.73	-6.82	-1.27
171	171	206	Q_manutenzione	-35.42	-4.57	-1.43
171	171	207	Q_manutenzione	-38.26	-5.06	0.2
171	171	200	Q_manutenzione	-32.84	-6.26	0.36
171	171	199	EQ_X	-283.44	-23.23	32.59
171	171	206	EQ_X	-287.12	-17.64	35.15
171	171	207	EQ_X	-214.75	-2.96	39.07
171	171	200	EQ_X	-206.96	-19.35	36.51
171	171	199	EQ_Y	-45.95	-82.28	-58.49
171	171	206	EQ_Y	-112.71	-88.62	-60.59
171	171	207	EQ_Y	-120.38	-90.6	-42.88
171	171	200	EQ_Y	-54.25	-83.95	-40.78
172	172	200	DEAD	-1.023E-10	-3.384E-11	4.197E-11
172	172	207	DEAD	9.496E-12	-5.198E-11	3.176E-11
172	172	208	DEAD	-8.639E-11	-2.702E-11	2.984E-11
172	172	201	DEAD	-6.431E-12	-5.880E-11	3.479E-11
172	172	200	G1_power station	0.	0.	0.
172	172	207	G1_power station	0.	0.	0.

Table 21: Element Stresses - Area Shells, Part 2 of 3

Area	AreaElem	Joint	OutputCase	S11Bot	S22Bot	S12Bot
				KN/m2	KN/m2	KN/m2
172	172	208	G1_power station	0.	0.	0.
172	172	201	G1_power station	0.	0.	0.
172	172	200	G2_power station	-886.68	-169.05	75.07
172	172	207	G2_power station	-1035.07	-136.89	65.85
172	172	208	G2_power station	-1198.3	-178.91	171.28
172	172	201	G2_power station	-767.53	-96.49	180.5
172	172	200	Q_power station	-32.81	-6.25	2.78
172	172	207	Q_power station	-38.3	-5.06	2.44
172	172	208	Q_power station	-44.34	-6.62	6.34
172	172	201	Q_power station	-28.4	-3.57	6.68
172	172	200	Q_neve	-98.47	-35.93	10.82
172	172	207	Q_neve	-111.64	-21.12	10.13
172	172	208	Q_neve	-125.91	-24.72	21.23
172	172	201	Q_neve	-83.01	-29.14	21.92
172	172	200	Q_manutenzione	-32.81	-6.25	2.78
172	172	207	Q_manutenzione	-38.3	-5.06	2.44
172	172	208	Q_manutenzione	-44.34	-6.62	6.34
172	172	201	Q_manutenzione	-28.4	-3.57	6.68
172	172	200	EQ_X	-208.7	-19.7	43.43
172	172	207	EQ_X	-217.15	-3.44	43.68
172	172	208	EQ_X	-157.68	2.83	54.62
172	172	201	EQ_X	-121.22	-4.02	54.37
172	172	200	EQ_Y	-44.	-81.9	-32.85
172	172	207	EQ_Y	-112.63	-89.05	-20.54
172	172	208	EQ_Y	-108.56	-98.11	-13.04
172	172	201	EQ_Y	-43.98	-101.1	-25.35
173	173	201	DEAD	-5.003E-11	-3.530E-11	5.745E-11
173	173	208	DEAD	-5.161E-11	-4.594E-11	2.874E-11
173	173	34	DEAD	-9.402E-11	1.452E-10	7.565E-11
173	173	202	DEAD	1.133E-11	-1.134E-10	8.335E-11
173	173	201	G1_power station	0.	0.	0.
173	173	208	G1_power station	0.	0.	0.
173	173	34	G1_power station	0.	0.	0.
173	173	202	G1_power station	0.	0.	0.
173	173	201	G2_power station	-844.33	-111.85	341.91
173	173	208	G2_power station	-1148.55	-168.96	393.05
173	173	34	G2_power station	-1942.13	126.2	913.19
173	173	202	G2_power station	442.25	-526.71	862.05
173	173	201	Q_power station	-31.24	-4.14	12.65
173	173	208	Q_power station	-42.5	-6.25	14.54
173	173	34	Q_power station	-71.86	4.67	33.79
173	173	202	Q_power station	16.36	-19.49	31.9
173	173	201	Q_neve	-91.04	-30.74	39.15

Table 21: Element Stresses - Area Shells, Part 2 of 3

Area	AreaElem	Joint	OutputCase	S11Bot	S22Bot	S12Bot
				KN/m2	KN/m2	KN/m2
173	173	208	Q_neve	-120.46	-23.63	44.24
173	173	34	Q_neve	-199.68	11.09	98.57
173	173	202	Q_neve	45.38	-75.77	93.48
173	173	201	Q_manutenzione	-31.24	-4.14	12.65
173	173	208	Q_manutenzione	-42.5	-6.25	14.54
173	173	34	Q_manutenzione	-71.86	4.67	33.79
173	173	202	Q_manutenzione	16.36	-19.49	31.9
173	173	201	EQ_X	-124.05	-4.59	78.07
173	173	208	EQ_X	-157.93	2.78	64.78
173	173	34	EQ_X	-142.3	144.6	110.69
173	173	202	EQ_X	26.64	-91.12	123.99
173	173	201	EQ_Y	-60.47	-104.39	-27.96
173	173	208	EQ_Y	-73.81	-91.16	15.93
173	173	34	EQ_Y	-95.37	-171.84	34.63
173	173	202	EQ_Y	36.66	-36.29	-9.25
174	174	58	DEAD	8.162E-12	5.695E-12	-1.196E-12
174	174	57	DEAD	6.964E-12	-1.516E-12	3.205E-13
174	174	209	DEAD	6.835E-12	3.609E-12	3.205E-13
174	174	143	DEAD	1.465E-12	-6.256E-12	-1.196E-12
174	174	58	G1_power station	0.	0.	0.
174	174	57	G1_power station	0.	0.	0.
174	174	209	G1_power station	0.	0.	0.
174	174	143	G1_power station	0.	0.	0.
174	174	58	G2_power station	687.36	593.78	-27.03
174	174	57	G2_power station	243.1	-22.24	31.37
174	174	209	G2_power station	30.14	10.93	50.45
174	174	143	G2_power station	-153.48	125.61	-7.95
174	174	58	Q_power station	25.43	21.97	-1.
174	174	57	Q_power station	8.99	-0.82	1.16
174	174	209	Q_power station	1.12	0.4	1.87
174	174	143	Q_power station	-5.68	4.65	-0.29
174	174	58	Q_neve	59.09	47.83	0.5
174	174	57	Q_neve	17.99	-2.03	5.64
174	174	209	Q_neve	-3.33	0.9	7.87
174	174	143	Q_neve	-20.24	5.04	2.73
174	174	58	Q_manutenzione	25.43	21.97	-1.
174	174	57	Q_manutenzione	8.99	-0.82	1.16
174	174	209	Q_manutenzione	1.12	0.4	1.87
174	174	143	Q_manutenzione	-5.68	4.65	-0.29
174	174	58	EQ_X	1984.69	307.27	-173.21
174	174	57	EQ_X	-588.79	-156.61	-215.14
174	174	209	EQ_X	847.53	57.82	102.86
174	174	143	EQ_X	233.89	240.19	144.78

Table 21: Element Stresses - Area Shells, Part 2 of 3

Area	AreaElem	Joint	OutputCase	S11Bot	S22Bot	S12Bot
				KN/m2	KN/m2	KN/m2
174	174	58	EQ_Y	-388.23	-1529.15	351.12
174	174	57	EQ_Y	-379.34	234.27	-60.18
174	174	209	EQ_Y	-62.06	-150.16	-16.49
174	174	143	EQ_Y	77.39	545.75	394.81
175	175	143	DEAD	2.400E-12	-4.396E-12	3.205E-13
175	175	209	DEAD	2.861E-13	-4.236E-13	-4.379E-13
175	175	210	DEAD	1.539E-11	1.386E-12	-1.196E-12
175	175	144	DEAD	9.292E-12	3.653E-12	-4.379E-13
175	175	143	G1_power station	0.	0.	0.
175	175	209	G1_power station	0.	0.	0.
175	175	210	G1_power station	0.	0.	0.
175	175	144	G1_power station	0.	0.	0.
175	175	143	G2_power station	-134.11	129.49	-26.39
175	175	209	G2_power station	13.56	7.61	-14.
175	175	210	G2_power station	-369.65	13.93	-29.39
175	175	144	G2_power station	-299.57	-34.15	-41.78
175	175	143	Q_power station	-4.96	4.79	-0.98
175	175	209	Q_power station	0.5	0.28	-0.52
175	175	210	Q_power station	-13.68	0.52	-1.09
175	175	144	Q_power station	-11.08	-1.26	-1.55
175	175	143	Q_neve	-18.44	5.4	1.48
175	175	209	Q_neve	-4.88	0.59	2.37
175	175	210	Q_neve	-40.79	1.69	1.38
175	175	144	Q_neve	-34.47	-9.51	0.49
175	175	143	Q_manutenzione	-4.96	4.79	-0.98
175	175	209	Q_manutenzione	0.5	0.28	-0.52
175	175	210	Q_manutenzione	-13.68	0.52	-1.09
175	175	144	Q_manutenzione	-11.08	-1.26	-1.55
175	175	143	EQ_X	389.27	271.26	40.57
175	175	209	EQ_X	682.86	24.88	81.23
175	175	210	EQ_X	465.62	-13.02	3.78
175	175	144	EQ_X	363.63	94.13	-36.88
175	175	143	EQ_Y	100.65	550.4	155.2
175	175	209	EQ_Y	-81.61	-154.07	240.35
175	175	210	EQ_Y	38.07	54.14	232.86
175	175	144	EQ_Y	25.61	54.43	147.71
176	176	144	DEAD	1.068E-11	5.488E-12	-3.065E-12
176	176	210	DEAD	3.443E-12	-2.842E-12	-1.548E-12
176	176	35	DEAD	2.177E-11	1.791E-12	-3.065E-12
176	176	30	DEAD	3.727E-12	-5.970E-12	-4.582E-12
176	176	144	G1_power station	0.	0.	0.
176	176	210	G1_power station	0.	0.	0.
176	176	35	G1_power station	0.	0.	0.

Table 21: Element Stresses - Area Shells, Part 2 of 3

Area	AreaElem	Joint	OutputCase	S11Bot	S22Bot	S12Bot
				KN/m2	KN/m2	KN/m2
176	176	30	G1_power station	0.	0.	0.
176	176	144	G2_power station	-298.3	-33.9	8.59
176	176	210	G2_power station	-357.23	16.41	-35.24
176	176	35	G2_power station	-726.97	-33.16	14.65
176	176	30	G2_power station	-475.1	74.68	58.48
176	176	144	Q_power station	-11.04	-1.25	0.32
176	176	210	Q_power station	-13.22	0.61	-1.3
176	176	35	Q_power station	-26.9	-1.23	0.54
176	176	30	Q_power station	-17.58	2.76	2.16
176	176	144	Q_neve	-33.92	-9.4	6.07
176	176	210	Q_neve	-39.94	1.86	0.74
176	176	35	Q_neve	-73.77	-3.82	5.36
176	176	30	Q_neve	-52.26	6.32	10.7
176	176	144	Q_manutenzione	-11.04	-1.25	0.32
176	176	210	Q_manutenzione	-13.22	0.61	-1.3
176	176	35	Q_manutenzione	-26.9	-1.23	0.54
176	176	30	Q_manutenzione	-17.58	2.76	2.16
176	176	144	EQ_X	342.07	89.82	-87.15
176	176	210	EQ_X	486.71	-8.81	-45.59
176	176	35	EQ_X	583.58	31.97	-89.04
176	176	30	EQ_X	437.14	-82.47	-130.6
176	176	144	EQ_Y	80.54	65.42	156.06
176	176	210	EQ_Y	-18.12	42.9	179.66
176	176	35	EQ_Y	-27.95	17.21	136.05
176	176	30	EQ_Y	58.26	155.79	112.45
177	177	27	DEAD	-5.080E-12	-3.866E-12	-6.290E-12
177	177	26	DEAD	1.898E-11	1.213E-12	-4.015E-12
177	177	211	DEAD	-1.762E-12	-1.458E-11	-5.532E-12
177	177	212	DEAD	9.974E-12	1.687E-12	-7.807E-12
177	177	27	G1_power station	0.	0.	0.
177	177	26	G1_power station	0.	0.	0.
177	177	211	G1_power station	0.	0.	0.
177	177	212	G1_power station	0.	0.	0.
177	177	27	G2_power station	-409.24	19.05	-108.43
177	177	26	G2_power station	-834.74	-105.58	-131.45
177	177	211	G2_power station	-570.31	27.33	-71.7
177	177	212	G2_power station	-660.02	-11.7	-48.68
177	177	27	Q_power station	-15.14	0.7	-4.01
177	177	26	Q_power station	-30.89	-3.91	-4.86
177	177	211	Q_power station	-21.1	1.01	-2.65
177	177	212	Q_power station	-24.42	-0.43	-1.8
177	177	27	Q_neve	-37.72	1.83	-11.02
177	177	26	Q_neve	-89.86	-11.78	-12.71

Table 21: Element Stresses - Area Shells, Part 2 of 3

Area	AreaElem	Joint	OutputCase	S11Bot	S22Bot	S12Bot
				KN/m2	KN/m2	KN/m2
177	177	211	Q_neve	-46.62	3.16	-5.4
177	177	212	Q_neve	-57.94	-1.21	-3.71
177	177	27	Q_manutenzione	-15.14	0.7	-4.01
177	177	26	Q_manutenzione	-30.89	-3.91	-4.86
177	177	211	Q_manutenzione	-21.1	1.01	-2.65
177	177	212	Q_manutenzione	-24.42	-0.43	-1.8
177	177	27	EQ_X	-65.88	1.1	-2.87
177	177	26	EQ_X	-197.51	39.34	19.9
177	177	211	EQ_X	47.71	-3.29	46.79
177	177	212	EQ_X	-22.4	-4.64	24.02
177	177	27	EQ_Y	292.19	15.49	51.2
177	177	26	EQ_Y	23.2	53.78	76.5
177	177	211	EQ_Y	40.93	-37.43	72.52
177	177	212	EQ_Y	316.07	43.61	47.22
178	178	212	DEAD	7.811E-12	-7.387E-13	-4.015E-12
178	178	211	DEAD	9.077E-12	-1.167E-11	-8.565E-12
178	178	213	DEAD	4.777E-12	4.570E-12	-7.807E-12
178	178	214	DEAD	1.533E-11	3.683E-12	-3.257E-12
178	178	212	G1_power station	0.	0.	0.
178	178	211	G1_power station	0.	0.	0.
178	178	213	G1_power station	0.	0.	0.
178	178	214	G1_power station	0.	0.	0.
178	178	212	G2_power station	-631.11	-5.92	-64.95
178	178	211	G2_power station	-599.22	21.55	-64.09
178	178	213	G2_power station	-653.34	-5.44	-68.58
178	178	214	G2_power station	-649.22	2.92	-69.44
178	178	212	Q_power station	-23.35	-0.22	-2.4
178	178	211	Q_power station	-22.17	0.8	-2.37
178	178	213	Q_power station	-24.17	-0.2	-2.54
178	178	214	Q_power station	-24.02	0.11	-2.57
178	178	212	Q_neve	-54.36	-0.49	-5.42
178	178	211	Q_neve	-50.21	2.44	-4.97
178	178	213	Q_neve	-53.05	-0.61	-5.62
178	178	214	Q_neve	-52.75	0.38	-6.07
178	178	212	Q_manutenzione	-23.35	-0.22	-2.4
178	178	211	Q_manutenzione	-22.17	0.8	-2.37
178	178	213	Q_manutenzione	-24.17	-0.2	-2.54
178	178	214	Q_manutenzione	-24.02	0.11	-2.57
178	178	212	EQ_X	3.14	0.47	26.05
178	178	211	EQ_X	23.06	-8.22	39.91
178	178	213	EQ_X	187.2	2.53	37.69
178	178	214	EQ_X	177.2	-1.57	23.83
178	178	212	EQ_Y	284.91	37.38	57.92

Table 21: Element Stresses - Area Shells, Part 2 of 3

Area	AreaElem	Joint	OutputCase	S11Bot	S22Bot	S12Bot
				KN/m2	KN/m2	KN/m2
178	178	211	EQ_Y	69.45	-31.72	49.12
178	178	213	EQ_Y	61.5	-3.45	46.43
178	178	214	EQ_Y	276.31	24.69	55.23
179	179	214	DEAD	1.416E-11	3.845E-12	-3.268E-12
179	179	213	DEAD	4.260E-12	4.351E-12	-2.346E-13
179	179	215	DEAD	1.786E-11	-2.696E-12	-2.346E-13
179	179	216	DEAD	3.786E-12	-4.844E-12	-3.268E-12
179	179	214	G1_power station	0.	0.	0.
179	179	213	G1_power station	0.	0.	0.
179	179	215	G1_power station	0.	0.	0.
179	179	216	G1_power station	0.	0.	0.
179	179	214	G2_power station	-648.44	3.07	-66.66
179	179	213	G2_power station	-654.12	-5.6	-73.33
179	179	215	G2_power station	-690.66	4.71	-79.56
179	179	216	G2_power station	-729.16	-1.88	-72.89
179	179	214	Q_power station	-23.99	0.11	-2.47
179	179	213	Q_power station	-24.2	-0.21	-2.71
179	179	215	Q_power station	-25.55	0.17	-2.94
179	179	216	Q_power station	-26.98	-6.968E-02	-2.7
179	179	214	Q_neve	-52.67	0.4	-5.44
179	179	213	Q_neve	-53.13	-0.63	-6.66
179	179	215	Q_neve	-60.83	0.97	-7.5
179	179	216	Q_neve	-65.79	-0.14	-6.28
179	179	214	Q_manutenzione	-23.99	0.11	-2.47
179	179	213	Q_manutenzione	-24.2	-0.21	-2.71
179	179	215	Q_manutenzione	-25.55	0.17	-2.94
179	179	216	Q_manutenzione	-26.98	-6.968E-02	-2.7
179	179	214	EQ_X	184.76	-5.717E-02	20.61
179	179	213	EQ_X	179.22	0.94	40.63
179	179	215	EQ_X	365.02	-1.49	46.42
179	179	216	EQ_X	414.32	0.99	26.4
179	179	214	EQ_Y	182.78	5.99	42.85
179	179	213	EQ_Y	158.36	15.93	48.38
179	179	215	EQ_Y	119.18	-28.61	42.84
179	179	216	EQ_Y	135.96	4.53	37.32
180	180	216	DEAD	3.458E-12	-5.710E-12	-5.809E-12
180	180	215	DEAD	1.781E-11	-9.294E-13	-6.568E-12
180	180	30	DEAD	1.066E-11	-3.814E-12	-7.326E-12
180	180	35	DEAD	2.521E-11	1.915E-12	-6.568E-12
180	180	216	G1_power station	0.	0.	0.
180	180	215	G1_power station	0.	0.	0.
180	180	30	G1_power station	0.	0.	0.
180	180	35	G1_power station	0.	0.	0.

Table 21: Element Stresses - Area Shells, Part 2 of 3

Area	AreaElem	Joint	OutputCase	S11Bot	S22Bot	S12Bot
				KN/m2	KN/m2	KN/m2
180	180	216	G2_power station	-766.25	-9.3	-83.33
180	180	215	G2_power station	-653.57	12.13	-82.2
180	180	30	G2_power station	-1010.57	-32.41	-6.02
180	180	35	G2_power station	-486.35	14.97	-7.14
180	180	216	Q_power station	-28.35	-0.34	-3.08
180	180	215	Q_power station	-24.18	0.45	-3.04
180	180	30	Q_power station	-37.39	-1.2	-0.22
180	180	35	Q_power station	-18.	0.55	-0.26
180	180	216	Q_neve	-70.35	-1.05	-7.58
180	180	215	Q_neve	-56.27	1.88	-7.94
180	180	30	Q_neve	-111.59	-5.54	1.35
180	180	35	Q_neve	-47.12	1.51	1.71
180	180	216	Q_manutenzione	-28.35	-0.34	-3.08
180	180	215	Q_manutenzione	-24.18	0.45	-3.04
180	180	30	Q_manutenzione	-37.39	-1.2	-0.22
180	180	35	Q_manutenzione	-18.	0.55	-0.26
180	180	216	EQ_X	464.54	11.03	31.55
180	180	215	EQ_X	315.41	-11.41	52.77
180	180	30	EQ_X	915.13	13.13	-32.31
180	180	35	EQ_X	372.94	-10.16	-53.53
180	180	216	EQ_Y	-40.89	-30.84	46.02
180	180	215	EQ_Y	284.97	4.55	11.15
180	180	30	EQ_Y	138.05	171.75	39.17
180	180	35	EQ_Y	-28.25	17.15	74.04
181	181	63	DEAD	-1.293E-12	-1.272E-12	-1.173E-13
181	181	64	DEAD	-3.137E-12	1.334E-12	-1.634E-12
181	181	217	DEAD	9.229E-12	8.113E-12	-1.634E-12
181	181	125	DEAD	5.490E-12	1.239E-12	-1.173E-13
181	181	63	G1_power station	0.	0.	0.
181	181	64	G1_power station	0.	0.	0.
181	181	217	G1_power station	0.	0.	0.
181	181	125	G1_power station	0.	0.	0.
181	181	63	G2_power station	662.09	620.38	-56.64
181	181	64	G2_power station	253.92	-21.56	1.281E-02
181	181	217	G2_power station	-12.04	12.89	8.37
181	181	125	G2_power station	-224.66	118.44	-48.27
181	181	63	Q_power station	24.5	22.95	-2.1
181	181	64	Q_power station	9.39	-0.8	4.739E-04
181	181	217	Q_power station	-0.45	0.48	0.31
181	181	125	Q_power station	-8.31	4.38	-1.79
181	181	63	Q_neve	56.49	51.41	-3.13
181	181	64	Q_neve	19.38	-1.98	1.79
181	181	217	Q_neve	-7.79	1.16	2.73

Table 21: Element Stresses - Area Shells, Part 2 of 3

Area	AreaElem	Joint	OutputCase	S11Bot	S22Bot	S12Bot
				KN/m2	KN/m2	KN/m2
181	181	125	Q_neve	-28.26	5.28	-2.2
181	181	63	Q_manutenzione	24.5	22.95	-2.1
181	181	64	Q_manutenzione	9.39	-0.8	4.739E-04
181	181	217	Q_manutenzione	-0.45	0.48	0.31
181	181	125	Q_manutenzione	-8.31	4.38	-1.79
181	181	63	EQ_X	-1959.99	-290.72	151.3
181	181	64	EQ_X	562.43	153.15	185.41
181	181	217	EQ_X	-844.11	-57.14	-146.97
181	181	125	EQ_X	-201.15	-206.01	-181.08
181	181	63	EQ_Y	375.54	1480.65	-333.07
181	181	64	EQ_Y	364.3	-213.91	36.14
181	181	217	EQ_Y	12.44	132.08	-7.37
181	181	125	EQ_Y	-88.81	-525.98	-376.58
182	182	125	DEAD	1.037E-11	3.189E-12	-2.392E-12
182	182	217	DEAD	5.844E-12	6.948E-12	1.399E-12
182	182	218	DEAD	2.497E-12	-1.113E-11	6.411E-13
182	182	126	DEAD	-3.162E-12	5.147E-12	-3.151E-12
182	182	125	G1_power station	0.	0.	0.
182	182	217	G1_power station	0.	0.	0.
182	182	218	G1_power station	0.	0.	0.
182	182	126	G1_power station	0.	0.	0.
182	182	125	G2_power station	-205.01	122.37	-85.26
182	182	217	G2_power station	-30.14	9.27	-66.12
182	182	218	G2_power station	-375.9	-1.21	-95.76
182	182	126	G2_power station	-350.5	-45.43	-114.89
182	182	125	Q_power station	-7.59	4.53	-3.15
182	182	217	Q_power station	-1.12	0.34	-2.45
182	182	218	Q_power station	-13.91	-4.493E-02	-3.54
182	182	126	Q_power station	-12.97	-1.68	-4.25
182	182	125	Q_neve	-26.47	5.64	-5.6
182	182	217	Q_neve	-9.48	0.83	-3.96
182	182	218	Q_neve	-42.95	-0.12	-6.66
182	182	126	Q_neve	-41.86	-10.04	-8.3
182	182	125	Q_manutenzione	-7.59	4.53	-3.15
182	182	217	Q_manutenzione	-1.12	0.34	-2.45
182	182	218	Q_manutenzione	-13.91	-4.493E-02	-3.54
182	182	126	Q_manutenzione	-12.97	-1.68	-4.25
182	182	125	EQ_X	-374.31	-240.64	-79.38
182	182	217	EQ_X	-658.77	-20.07	-106.17
182	182	218	EQ_X	-349.74	2.29	-39.26
182	182	126	EQ_X	-338.65	-68.	-12.47
182	182	125	EQ_Y	-93.7	-526.96	-152.8
182	182	217	EQ_Y	-2.42	129.1	-235.28

Table 21: Element Stresses - Area Shells, Part 2 of 3

Area	AreaElem	Joint	OutputCase	S11Bot	S22Bot	S12Bot
				KN/m2	KN/m2	KN/m2
182	182	218	EQ_Y	-131.78	-54.58	-217.08
182	182	126	EQ_Y	-30.81	-28.74	-134.6
183	183	126	DEAD	2.446E-12	6.083E-12	-2.103E-12
183	183	218	DEAD	4.665E-12	-1.012E-11	-5.137E-12
183	183	219	DEAD	1.107E-11	3.714E-12	-6.654E-12
183	183	127	DEAD	5.898E-12	5.141E-12	-3.620E-12
183	183	126	G1_power station	0.	0.	0.
183	183	218	G1_power station	0.	0.	0.
183	183	219	G1_power station	0.	0.	0.
183	183	127	G1_power station	0.	0.	0.
183	183	126	G2_power station	-361.35	-47.6	-104.45
183	183	218	G2_power station	-361.56	1.65	-101.6
183	183	219	G2_power station	-436.4	-0.8	-90.33
183	183	127	G2_power station	-400.18	-79.81	-93.18
183	183	126	Q_power station	-13.37	-1.76	-3.86
183	183	218	Q_power station	-13.38	6.118E-02	-3.76
183	183	219	Q_power station	-16.15	-2.965E-02	-3.34
183	183	127	Q_power station	-14.81	-2.95	-3.45
183	183	126	Q_neve	-42.84	-10.24	-7.43
183	183	218	Q_neve	-41.64	0.14	-7.13
183	183	219	Q_neve	-49.02	-8.823E-02	-6.08
183	183	127	Q_neve	-46.8	-13.51	-6.38
183	183	126	Q_manutenzione	-13.37	-1.76	-3.86
183	183	218	Q_manutenzione	-13.38	6.118E-02	-3.76
183	183	219	Q_manutenzione	-16.15	-2.965E-02	-3.34
183	183	127	Q_manutenzione	-14.81	-2.95	-3.45
183	183	126	EQ_X	-328.4	-65.95	-1.73
183	183	218	EQ_X	-368.35	-1.43	-2.93
183	183	219	EQ_X	-241.22	1.41	10.41
183	183	127	EQ_X	-236.02	-23.39	11.61
183	183	126	EQ_Y	-38.23	-30.22	-148.03
183	183	218	EQ_Y	-140.84	-56.39	-149.1
183	183	219	EQ_Y	-133.84	7.2	-123.36
183	183	127	EQ_Y	-75.6	-106.9	-122.29
184	184	127	DEAD	1.334E-11	4.532E-12	-6.013E-12
184	184	219	DEAD	1.198E-11	6.836E-12	-6.013E-12
184	184	220	DEAD	3.574E-12	1.214E-12	-4.496E-12
184	184	128	DEAD	6.575E-12	7.121E-12	-4.496E-12
184	184	127	G1_power station	0.	0.	0.
184	184	219	G1_power station	0.	0.	0.
184	184	220	G1_power station	0.	0.	0.
184	184	128	G1_power station	0.	0.	0.
184	184	127	G2_power station	-401.86	-80.15	-76.07

Table 21: Element Stresses - Area Shells, Part 2 of 3

Area	AreaElem	Joint	OutputCase	S11Bot	S22Bot	S12Bot
				KN/m2	KN/m2	KN/m2
184	184	219	G2_power station	-433.89	-0.3	-73.16
184	184	220	G2_power station	-406.36	0.52	-54.22
184	184	128	G2_power station	-366.22	-80.48	-57.12
184	184	127	Q_power station	-14.87	-2.97	-2.81
184	184	219	Q_power station	-16.05	-1.108E-02	-2.71
184	184	220	Q_power station	-15.04	1.915E-02	-2.01
184	184	128	Q_power station	-13.55	-2.98	-2.11
184	184	127	Q_neve	-46.96	-13.54	-4.8
184	184	219	Q_neve	-48.78	-3.917E-02	-4.41
184	184	220	Q_neve	-45.7	5.990E-02	-2.59
184	184	128	Q_neve	-42.95	-13.86	-2.98
184	184	127	Q_manutenzione	-14.87	-2.97	-2.81
184	184	219	Q_manutenzione	-16.05	-1.108E-02	-2.71
184	184	220	Q_manutenzione	-15.04	1.915E-02	-2.01
184	184	128	Q_manutenzione	-13.55	-2.98	-2.11
184	184	127	EQ_X	-235.75	-23.34	16.55
184	184	219	EQ_X	-246.75	0.3	19.6
184	184	220	EQ_X	-164.21	1.51	23.78
184	184	128	EQ_X	-165.65	-5.81	20.73
184	184	127	EQ_Y	-82.06	-108.19	-94.83
184	184	219	EQ_Y	-144.44	5.08	-103.17
184	184	220	EQ_Y	-141.37	-12.91	-81.04
184	184	128	EQ_Y	-82.45	-59.53	-72.69
185	185	128	DEAD	6.611E-12	8.647E-12	-3.503E-12
185	185	220	DEAD	4.407E-12	3.491E-13	-1.986E-12
185	185	221	DEAD	1.495E-11	-1.970E-12	-3.503E-12
185	185	129	DEAD	1.256E-11	6.985E-12	-5.020E-12
185	185	128	G1_power station	0.	0.	0.
185	185	220	G1_power station	0.	0.	0.
185	185	221	G1_power station	0.	0.	0.
185	185	129	G1_power station	0.	0.	0.
185	185	128	G2_power station	-366.69	-80.58	-37.49
185	185	220	G2_power station	-405.56	0.68	-33.37
185	185	221	G2_power station	-356.77	-2.78	-11.84
185	185	129	G2_power station	-307.29	-72.69	-15.96
185	185	128	Q_power station	-13.57	-2.98	-1.39
185	185	220	Q_power station	-15.01	2.506E-02	-1.23
185	185	221	Q_power station	-13.2	-0.1	-0.44
185	185	129	Q_power station	-11.37	-2.69	-0.59
185	185	128	Q_neve	-42.99	-13.87	-1.07
185	185	220	Q_neve	-45.61	7.766E-02	-0.52
185	185	221	Q_neve	-39.86	-0.32	1.62
185	185	129	Q_neve	-36.03	-13.19	1.08

Table 21: Element Stresses - Area Shells, Part 2 of 3

Area	AreaElem	Joint	OutputCase	S11Bot	S22Bot	S12Bot
				KN/m2	KN/m2	KN/m2
185	185	128	Q_manutenzione	-13.57	-2.98	-1.39
185	185	220	Q_manutenzione	-15.01	2.506E-02	-1.23
185	185	221	Q_manutenzione	-13.2	-0.1	-0.44
185	185	129	Q_manutenzione	-11.37	-2.69	-0.59
185	185	128	EQ_X	-166.44	-5.97	22.62
185	185	220	EQ_X	-166.57	1.04	25.27
185	185	221	EQ_X	-113.53	1.16	25.89
185	185	129	EQ_X	-117.21	1.3	23.24
185	185	128	EQ_Y	-84.4	-59.92	-56.61
185	185	220	EQ_Y	-156.97	-16.03	-58.27
185	185	221	EQ_Y	-151.22	-10.95	-39.4
185	185	129	EQ_Y	-83.45	-58.29	-37.74
186	186	129	DEAD	1.790E-11	7.695E-12	-4.699E-12
186	186	221	DEAD	8.098E-12	-2.213E-12	-5.457E-12
186	186	222	DEAD	1.269E-11	2.102E-12	-3.182E-12
186	186	130	DEAD	1.691E-11	7.741E-12	-2.424E-12
186	186	129	G1_power station	0.	0.	0.
186	186	221	G1_power station	0.	0.	0.
186	186	222	G1_power station	0.	0.	0.
186	186	130	G1_power station	0.	0.	0.
186	186	129	G2_power station	-308.01	-72.83	8.18
186	186	221	G2_power station	-354.4	-2.31	11.45
186	186	222	G2_power station	-365.42	9.99	42.22
186	186	130	G2_power station	-277.43	-94.91	38.95
186	186	129	Q_power station	-11.4	-2.69	0.3
186	186	221	Q_power station	-13.11	-8.545E-02	0.42
186	186	222	Q_power station	-13.52	0.37	1.56
186	186	130	Q_power station	-10.26	-3.51	1.44
186	186	129	Q_neve	-36.05	-13.2	3.59
186	186	221	Q_neve	-39.66	-0.28	3.9
186	186	222	Q_neve	-38.94	1.26	6.96
186	186	130	Q_neve	-31.57	-15.02	6.64
186	186	129	Q_manutenzione	-11.4	-2.69	0.3
186	186	221	Q_manutenzione	-13.11	-8.545E-02	0.42
186	186	222	Q_manutenzione	-13.52	0.37	1.56
186	186	130	Q_manutenzione	-10.26	-3.51	1.44
186	186	129	EQ_X	-120.13	0.72	25.25
186	186	221	EQ_X	-111.24	1.61	23.45
186	186	222	EQ_X	-81.79	6.56	22.52
186	186	130	EQ_X	-90.03	15.85	24.31
186	186	129	EQ_Y	-75.3	-56.67	-20.81
186	186	221	EQ_Y	-181.	-16.9	-16.85
186	186	222	EQ_Y	-185.43	-20.51	7.96

Table 21: Element Stresses - Area Shells, Part 2 of 3

Area	AreaElem	Joint	OutputCase	S11Bot	S22Bot	S12Bot
				KN/m2	KN/m2	KN/m2
186	186	130	EQ_Y	-70.55	-80.1	4.
187	187	130	DEAD	1.209E-11	7.064E-12	-4.027E-12
187	187	222	DEAD	9.972E-12	4.250E-13	-2.346E-13
187	187	36	DEAD	1.057E-11	-2.795E-12	5.237E-13
187	187	29	DEAD	9.403E-12	-4.694E-12	-3.268E-12
187	187	130	G1_power station	0.	0.	0.
187	187	222	G1_power station	0.	0.	0.
187	187	36	G1_power station	0.	0.	0.
187	187	29	G1_power station	0.	0.	0.
187	187	130	G2_power station	-268.76	-93.17	97.11
187	187	222	G2_power station	-363.27	10.42	68.76
187	187	36	G2_power station	-606.34	-20.37	129.29
187	187	29	G2_power station	-387.28	-16.09	157.65
187	187	130	Q_power station	-9.94	-3.45	3.59
187	187	222	Q_power station	-13.44	0.39	2.54
187	187	36	Q_power station	-22.43	-0.75	4.78
187	187	29	Q_power station	-14.33	-0.6	5.83
187	187	130	Q_neve	-30.36	-14.78	12.74
187	187	222	Q_neve	-39.04	1.24	9.1
187	187	36	Q_neve	-59.08	-2.44	14.43
187	187	29	Q_neve	-41.52	-2.11	18.07
187	187	130	Q_manutenzione	-9.94	-3.45	3.59
187	187	222	Q_manutenzione	-13.44	0.39	2.54
187	187	36	Q_manutenzione	-22.43	-0.75	4.78
187	187	29	Q_manutenzione	-14.33	-0.6	5.83
187	187	130	EQ_X	-93.7	15.11	27.87
187	187	222	EQ_X	-75.3	7.86	18.57
187	187	36	EQ_X	-71.18	-12.04	17.17
187	187	29	EQ_X	-112.45	44.27	26.46
187	187	130	EQ_Y	-36.79	-73.35	24.17
187	187	222	EQ_Y	-243.92	-32.21	36.07
187	187	36	EQ_Y	-275.84	2.93	57.6
187	187	29	EQ_Y	-21.01	-38.19	45.7
188	188	28	DEAD	4.310E-12	-5.598E-13	5.692E-12
188	188	25	DEAD	-1.623E-12	1.585E-12	7.209E-12
188	188	223	DEAD	2.332E-13	-9.566E-12	5.692E-12
188	188	224	DEAD	-1.518E-11	-2.164E-13	4.175E-12
188	188	28	G1_power station	0.	0.	0.
188	188	25	G1_power station	0.	0.	0.
188	188	223	G1_power station	0.	0.	0.
188	188	224	G1_power station	0.	0.	0.
188	188	28	G2_power station	-486.35	14.97	7.14
188	188	25	G2_power station	-1010.57	-32.41	6.02

Table 21: Element Stresses - Area Shells, Part 2 of 3

Area	AreaElem	Joint	OutputCase	S11Bot	S22Bot	S12Bot
				KN/m2	KN/m2	KN/m2
188	188	223	G2_power station	-653.57	12.13	82.2
188	188	224	G2_power station	-766.25	-9.3	83.33
188	188	28	Q_power station	-18.	0.55	0.26
188	188	25	Q_power station	-37.39	-1.2	0.22
188	188	223	Q_power station	-24.18	0.45	3.04
188	188	224	Q_power station	-28.35	-0.34	3.08
188	188	28	Q_neve	-47.12	1.51	-1.71
188	188	25	Q_neve	-111.59	-5.54	-1.35
188	188	223	Q_neve	-56.27	1.88	7.94
188	188	224	Q_neve	-70.35	-1.05	7.58
188	188	28	Q_manutenzione	-18.	0.55	0.26
188	188	25	Q_manutenzione	-37.39	-1.2	0.22
188	188	223	Q_manutenzione	-24.18	0.45	3.04
188	188	224	Q_manutenzione	-28.35	-0.34	3.08
188	188	28	EQ_X	335.81	-10.63	56.86
188	188	25	EQ_X	967.49	30.55	36.41
188	188	223	EQ_X	365.52	-5.25	-47.32
188	188	224	EQ_X	425.16	-0.71	-26.87
188	188	28	EQ_Y	30.81	-1.9	80.77
188	188	25	EQ_Y	-137.48	-156.9	48.53
188	188	223	EQ_Y	-287.38	-4.6	20.69
188	188	224	EQ_Y	40.48	31.19	52.93
189	189	224	DEAD	-7.408E-12	1.664E-12	3.823E-12
189	189	223	DEAD	2.473E-12	-9.547E-12	7.898E-13
189	189	225	DEAD	-4.469E-12	7.257E-12	2.307E-12
189	189	226	DEAD	1.356E-11	4.068E-13	5.340E-12
189	189	224	G1_power station	0.	0.	0.
189	189	223	G1_power station	0.	0.	0.
189	189	225	G1_power station	0.	0.	0.
189	189	226	G1_power station	0.	0.	0.
189	189	224	G2_power station	-729.16	-1.88	72.89
189	189	223	G2_power station	-690.66	4.71	79.56
189	189	225	G2_power station	-654.12	-5.6	73.33
189	189	226	G2_power station	-648.44	3.07	66.66
189	189	224	Q_power station	-26.98	-6.968E-02	2.7
189	189	223	Q_power station	-25.55	0.17	2.94
189	189	225	Q_power station	-24.2	-0.21	2.71
189	189	226	Q_power station	-23.99	0.11	2.47
189	189	224	Q_neve	-65.79	-0.14	6.28
189	189	223	Q_neve	-60.83	0.97	7.5
189	189	225	Q_neve	-53.13	-0.63	6.66
189	189	226	Q_neve	-52.67	0.4	5.44
189	189	224	Q_manutenzione	-26.98	-6.968E-02	2.7

Table 21: Element Stresses - Area Shells, Part 2 of 3

Area	AreaElem	Joint	OutputCase	S11Bot	S22Bot	S12Bot
				KN/m2	KN/m2	KN/m2
189	189	223	Q_manutenzione	-25.55	0.17	2.94
189	189	225	Q_manutenzione	-24.2	-0.21	2.71
189	189	226	Q_manutenzione	-23.99	0.11	2.47
189	189	224	EQ_X	403.04	-5.13	-21.33
189	189	223	EQ_X	388.81	-0.59	-41.28
189	189	225	EQ_X	203.49	4.2	-35.47
189	189	226	EQ_X	173.95	-3.81	-15.52
189	189	224	EQ_Y	-104.69	2.16	41.95
189	189	223	EQ_Y	-151.13	22.65	45.57
189	189	225	EQ_Y	-189.49	-17.72	48.8
189	189	226	EQ_Y	-150.67	4.86	45.18
190	190	226	DEAD	9.273E-12	-1.439E-12	5.051E-12
190	190	225	DEAD	-4.936E-12	6.331E-12	8.085E-12
190	190	227	DEAD	3.206E-12	-4.472E-12	8.085E-12
190	190	228	DEAD	-1.214E-11	-2.390E-12	5.051E-12
190	190	226	G1_power station	0.	0.	0.
190	190	225	G1_power station	0.	0.	0.
190	190	227	G1_power station	0.	0.	0.
190	190	228	G1_power station	0.	0.	0.
190	190	226	G2_power station	-649.22	2.92	69.44
190	190	225	G2_power station	-653.34	-5.44	68.58
190	190	227	G2_power station	-599.22	21.55	64.09
190	190	228	G2_power station	-631.11	-5.92	64.95
190	190	226	Q_power station	-24.02	0.11	2.57
190	190	225	Q_power station	-24.17	-0.2	2.54
190	190	227	Q_power station	-22.17	0.8	2.37
190	190	228	Q_power station	-23.35	-0.22	2.4
190	190	226	Q_neve	-52.75	0.38	6.07
190	190	225	Q_neve	-53.05	-0.61	5.62
190	190	227	Q_neve	-50.21	2.44	4.97
190	190	228	Q_neve	-54.36	-0.49	5.42
190	190	226	Q_manutenzione	-24.02	0.11	2.57
190	190	225	Q_manutenzione	-24.17	-0.2	2.54
190	190	227	Q_manutenzione	-22.17	0.8	2.37
190	190	228	Q_manutenzione	-23.35	-0.22	2.4
190	190	226	EQ_X	196.32	0.66	-18.14
190	190	225	EQ_X	180.49	-0.4	-32.65
190	190	227	EQ_X	16.92	-8.3	-34.45
190	190	228	EQ_X	22.84	5.55	-19.94
190	190	226	EQ_Y	-246.21	-14.25	52.18
190	190	225	EQ_Y	-90.58	2.06	45.34
190	190	227	EQ_Y	-99.4	25.94	45.7
190	190	228	EQ_Y	-255.69	-31.32	52.54

Table 21: Element Stresses - Area Shells, Part 2 of 3

Area	AreaElem	Joint	OutputCase	S11Bot	S22Bot	S12Bot
				KN/m2	KN/m2	KN/m2
191	191	228	DEAD	-2.564E-12	-5.058E-13	3.984E-12
191	191	227	DEAD	6.954E-13	-6.070E-12	4.742E-12
191	191	29	DEAD	1.630E-11	-1.738E-12	1.708E-12
191	191	36	DEAD	1.549E-12	-6.354E-12	9.501E-13
191	191	228	G1_power station	0.	0.	0.
191	191	227	G1_power station	0.	0.	0.
191	191	29	G1_power station	0.	0.	0.
191	191	36	G1_power station	0.	0.	0.
191	191	228	G2_power station	-660.02	-11.7	48.68
191	191	227	G2_power station	-570.31	27.33	71.7
191	191	29	G2_power station	-834.74	-105.58	131.45
191	191	36	G2_power station	-409.24	19.05	108.43
191	191	228	Q_power station	-24.42	-0.43	1.8
191	191	227	Q_power station	-21.1	1.01	2.65
191	191	29	Q_power station	-30.89	-3.91	4.86
191	191	36	Q_power station	-15.14	0.7	4.01
191	191	228	Q_neve	-57.94	-1.21	3.71
191	191	227	Q_neve	-46.62	3.16	5.4
191	191	29	Q_neve	-89.86	-11.78	12.71
191	191	36	Q_neve	-37.72	1.83	11.02
191	191	228	Q_manutenzione	-24.42	-0.43	1.8
191	191	227	Q_manutenzione	-21.1	1.01	2.65
191	191	29	Q_manutenzione	-30.89	-3.91	4.86
191	191	36	Q_manutenzione	-15.14	0.7	4.01
191	191	228	EQ_X	30.66	7.12	-18.09
191	191	227	EQ_X	10.39	-9.6	-39.2
191	191	29	EQ_X	-237.58	19.24	-14.51
191	191	36	EQ_X	-15.59	-0.93	6.6
191	191	228	EQ_Y	-322.16	-44.62	39.65
191	191	227	EQ_Y	-37.8	38.26	62.17
191	191	29	EQ_Y	-16.96	-37.38	66.73
191	191	36	EQ_Y	-295.17	-0.93	44.21
192	192	9	DEAD	-1.473E-11	-1.828E-11	1.927E-11
192	192	8	DEAD	-5.071E-12	-3.305E-11	2.230E-11
192	192	229	DEAD	-1.549E-11	1.433E-11	1.927E-11
192	192	173	DEAD	-2.251E-11	-8.386E-11	1.623E-11
192	192	9	G1_power station	0.	0.	0.
192	192	8	G1_power station	0.	0.	0.
192	192	229	G1_power station	0.	0.	0.
192	192	173	G1_power station	0.	0.	0.
192	192	9	G2_power station	627.29	608.16	-38.73
192	192	8	G2_power station	189.59	-20.17	12.12
192	192	229	G2_power station	-183.45	6.48	35.35

Table 21: Element Stresses - Area Shells, Part 2 of 3

Area	AreaElem	Joint	OutputCase	S11Bot	S22Bot	S12Bot
				KN/m2	KN/m2	KN/m2
192	192	173	G2_power station	-333.5	119.47	-15.5
192	192	9	Q_power station	23.21	22.5	-1.43
192	192	8	Q_power station	7.01	-0.75	0.45
192	192	229	Q_power station	-6.79	0.24	1.31
192	192	173	Q_power station	-12.34	4.42	-0.57
192	192	9	Q_neve	53.13	47.97	-0.34
192	192	8	Q_neve	12.62	-1.82	4.07
192	192	229	Q_neve	-24.45	0.45	6.81
192	192	173	Q_neve	-38.01	3.12	2.4
192	192	9	Q_manutenzione	23.21	22.5	-1.43
192	192	8	Q_manutenzione	7.01	-0.75	0.45
192	192	229	Q_manutenzione	-6.79	0.24	1.31
192	192	173	Q_manutenzione	-12.34	4.42	-0.57
192	192	9	EQ_X	2025.57	305.04	-175.35
192	192	8	EQ_X	-545.59	-157.12	-213.47
192	192	229	EQ_X	956.94	59.08	101.74
192	192	173	EQ_X	329.43	245.75	139.86
192	192	9	EQ_Y	-405.02	-1541.3	377.3
192	192	8	EQ_Y	-411.28	233.65	-35.08
192	192	229	EQ_Y	-98.7	-150.77	14.01
192	192	173	EQ_Y	53.98	535.44	426.39
193	193	173	DEAD	-5.372E-11	-6.970E-11	9.101E-12
193	193	229	DEAD	4.018E-11	1.992E-12	3.034E-12
193	193	230	DEAD	-6.702E-12	1.979E-11	-9.101E-12
193	193	174	DEAD	-7.730E-13	-5.716E-11	-3.034E-12
193	193	173	G1_power station	0.	0.	0.
193	193	229	G1_power station	0.	0.	0.
193	193	230	G1_power station	0.	0.	0.
193	193	174	G1_power station	0.	0.	0.
193	193	173	G2_power station	-315.6	123.05	-16.5
193	193	229	G2_power station	-194.02	4.36	-21.53
193	193	230	G2_power station	-887.23	33.43	-6.42
193	193	174	G2_power station	-677.48	-97.72	-1.39
193	193	173	Q_power station	-11.68	4.55	-0.61
193	193	229	Q_power station	-7.18	0.16	-0.8
193	193	230	Q_power station	-32.83	1.24	-0.24
193	193	174	Q_power station	-25.07	-3.62	-5.159E-02
193	193	173	Q_neve	-36.36	3.45	2.93
193	193	229	Q_neve	-25.41	0.26	2.19
193	193	230	Q_neve	-91.7	3.64	4.3
193	193	174	Q_neve	-71.64	-17.38	5.04
193	193	173	Q_manutenzione	-11.68	4.55	-0.61
193	193	229	Q_manutenzione	-7.18	0.16	-0.8

Table 21: Element Stresses - Area Shells, Part 2 of 3

Area	AreaElem	Joint	OutputCase	S11Bot	S22Bot	S12Bot
				KN/m2	KN/m2	KN/m2
193	193	230	Q_manutenzione	-32.83	1.24	-0.24
193	193	174	Q_manutenzione	-25.07	-3.62	-5.159E-02
193	193	173	EQ_X	484.72	276.81	27.45
193	193	229	EQ_X	790.97	25.89	77.91
193	193	230	EQ_X	666.21	-20.69	-9.15
193	193	174	EQ_X	523.06	102.	-59.61
193	193	173	EQ_Y	77.37	540.12	191.22
193	193	229	EQ_Y	-118.41	-154.71	276.83
193	193	230	EQ_Y	-5.58	55.4	275.25
193	193	174	EQ_Y	-0.62	38.5	189.64
194	194	174	DEAD	9.581E-12	-3.822E-11	-2.925E-12
194	194	230	DEAD	4.882E-12	1.333E-12	-1.091E-11
194	194	37	DEAD	-1.090E-11	-3.140E-11	-1.809E-11
194	194	33	DEAD	-1.408E-11	1.574E-11	-4.848E-12
194	194	174	G1_power station	0.	0.	0.
194	194	230	G1_power station	0.	0.	0.
194	194	37	G1_power station	0.	0.	0.
194	194	33	G1_power station	0.	0.	0.
194	194	174	G2_power station	-663.88	-95.	134.16
194	194	230	G2_power station	-866.07	37.66	17.96
194	194	37	G2_power station	-1991.7	-77.04	172.83
194	194	33	G2_power station	-1251.08	123.36	289.04
194	194	174	Q_power station	-24.56	-3.52	4.96
194	194	230	Q_power station	-32.04	1.39	0.66
194	194	37	Q_power station	-73.69	-2.85	6.39
194	194	33	Q_power station	-46.29	4.56	10.69
194	194	174	Q_neve	-69.86	-17.03	19.2
194	194	230	Q_neve	-90.01	3.97	6.65
194	194	37	Q_neve	-197.76	-8.1	21.66
194	194	33	Q_neve	-128.47	9.95	34.2
194	194	174	Q_manutenzione	-24.56	-3.52	4.96
194	194	230	Q_manutenzione	-32.04	1.39	0.66
194	194	37	Q_manutenzione	-73.69	-2.85	6.39
194	194	33	Q_manutenzione	-46.29	4.56	10.69
194	194	174	EQ_X	494.71	96.33	-133.99
194	194	230	EQ_X	687.81	-16.37	-66.9
194	194	37	EQ_X	972.08	51.75	-134.6
194	194	33	EQ_X	715.64	-138.88	-201.69
194	194	174	EQ_Y	56.39	49.9	206.11
194	194	230	EQ_Y	-63.32	43.85	227.16
194	194	37	EQ_Y	-84.28	14.18	188.41
194	194	33	EQ_Y	9.63	148.27	167.36
195	195	31	DEAD	-2.013E-10	1.751E-11	-3.121E-11

Table 21: Element Stresses - Area Shells, Part 2 of 3

Area	AreaElem	Joint	OutputCase	S11Bot	S22Bot	S12Bot
				KN/m2	KN/m2	KN/m2
195	195	24	DEAD	-4.247E-10	-3.177E-11	-2.799E-12
195	195	231	DEAD	-1.975E-10	-3.634E-11	2.946E-11
195	195	232	DEAD	-2.343E-10	-2.646E-11	6.302E-12
195	195	31	G1_power station	0.	0.	0.
195	195	24	G1_power station	0.	0.	0.
195	195	231	G1_power station	0.	0.	0.
195	195	232	G1_power station	0.	0.	0.
195	195	31	G2_power station	-1835.77	72.15	-303.19
195	195	24	G2_power station	-4077.18	-192.39	-317.69
195	195	231	G2_power station	-2530.99	61.62	10.25
195	195	232	G2_power station	-2990.98	-41.	24.76
195	195	31	Q_power station	-67.92	2.67	-11.22
195	195	24	Q_power station	-150.86	-7.12	-11.75
195	195	231	Q_power station	-93.65	2.28	0.38
195	195	232	Q_power station	-110.67	-1.52	0.92
195	195	31	Q_neve	-181.06	7.19	-31.14
195	195	24	Q_neve	-419.43	-21.01	-31.77
195	195	231	Q_neve	-241.64	6.77	3.09
195	195	232	Q_neve	-290.63	-4.2	3.72
195	195	31	Q_manutenzione	-67.92	2.67	-11.22
195	195	24	Q_manutenzione	-150.86	-7.12	-11.75
195	195	231	Q_manutenzione	-93.65	2.28	0.38
195	195	232	Q_manutenzione	-110.67	-1.52	0.92
195	195	31	EQ_X	-52.3	-0.67	-5.
195	195	24	EQ_X	-283.66	64.48	38.18
195	195	231	EQ_X	175.43	-7.84	80.68
195	195	232	EQ_X	83.67	-3.74	37.49
195	195	31	EQ_Y	367.11	11.45	87.37
195	195	24	EQ_Y	142.7	96.59	121.51
195	195	231	EQ_Y	114.63	-47.15	111.62
195	195	232	EQ_Y	402.16	47.41	77.48
196	196	232	DEAD	-1.987E-10	-1.760E-11	2.142E-11
196	196	231	DEAD	-2.181E-10	-4.670E-11	1.121E-11
196	196	233	DEAD	-9.332E-11	1.804E-11	1.536E-11
196	196	234	DEAD	-9.755E-11	-8.027E-12	2.031E-11
196	196	232	G1_power station	0.	0.	0.
196	196	231	G1_power station	0.	0.	0.
196	196	233	G1_power station	0.	0.	0.
196	196	234	G1_power station	0.	0.	0.
196	196	232	G2_power station	-2834.26	-9.66	-16.38
196	196	231	G2_power station	-2687.71	30.28	9.42
196	196	233	G2_power station	-2568.58	-13.8	-10.89
196	196	234	G2_power station	-2534.23	6.78	-36.69

Table 21: Element Stresses - Area Shells, Part 2 of 3

Area	AreaElem	Joint	OutputCase	S11Bot	S22Bot	S12Bot
				KN/m2	KN/m2	KN/m2
196	196	232	Q_power station	-104.87	-0.36	-0.61
196	196	231	Q_power station	-99.45	1.12	0.35
196	196	233	Q_power station	-95.04	-0.51	-0.4
196	196	234	Q_power station	-93.77	0.25	-1.36
196	196	232	Q_neve	-273.96	-0.86	-0.43
196	196	231	Q_neve	-258.31	3.43	2.74
196	196	233	Q_neve	-241.85	-1.51	0.56
196	196	234	Q_neve	-238.23	0.81	-2.62
196	196	232	Q_manutenzione	-104.87	-0.36	-0.61
196	196	231	Q_manutenzione	-99.45	1.12	0.35
196	196	233	Q_manutenzione	-95.04	-0.51	-0.4
196	196	234	Q_manutenzione	-93.77	0.25	-1.36
196	196	232	EQ_X	117.01	2.93	42.62
196	196	231	EQ_X	143.	-14.33	67.93
196	196	233	EQ_X	439.93	3.86	64.25
196	196	234	EQ_X	429.32	-1.77	38.95
196	196	232	EQ_Y	367.51	40.48	95.18
196	196	231	EQ_Y	146.6	-40.75	81.38
196	196	233	EQ_Y	104.47	-2.08	78.98
196	196	234	EQ_Y	320.39	24.26	92.78
197	197	234	DEAD	-9.973E-11	-6.510E-12	5.724E-12
197	197	233	DEAD	-7.818E-11	1.379E-11	2.089E-11
197	197	235	DEAD	-8.987E-11	-4.822E-11	1.179E-11
197	197	236	DEAD	-1.351E-10	2.412E-12	-3.377E-12
197	197	234	G1_power station	0.	0.	0.
197	197	233	G1_power station	0.	0.	0.
197	197	235	G1_power station	0.	0.	0.
197	197	236	G1_power station	0.	0.	0.
197	197	234	G2_power station	-2538.48	5.93	-30.66
197	197	233	G2_power station	-2564.33	-12.95	-14.24
197	197	235	G2_power station	-2267.87	28.43	-25.12
197	197	236	G2_power station	-2355.79	-10.56	-41.55
197	197	234	Q_power station	-93.92	0.22	-1.13
197	197	233	Q_power station	-94.88	-0.48	-0.53
197	197	235	Q_power station	-83.91	1.05	-0.93
197	197	236	Q_power station	-87.16	-0.39	-1.54
197	197	234	Q_neve	-238.67	0.72	-1.46
197	197	233	Q_neve	-241.4	-1.42	-0.37
197	197	235	Q_neve	-215.37	3.58	-1.57
197	197	236	Q_neve	-224.99	-1.05	-2.66
197	197	234	Q_manutenzione	-93.92	0.22	-1.13
197	197	233	Q_manutenzione	-94.88	-0.48	-0.53
197	197	235	Q_manutenzione	-83.91	1.05	-0.93

Table 21: Element Stresses - Area Shells, Part 2 of 3

Area	AreaElem	Joint	OutputCase	S11Bot	S22Bot	S12Bot
				KN/m2	KN/m2	KN/m2
197	197	236	Q_manutenzione	-87.16	-0.39	-1.54
197	197	234	EQ_X	434.98	-0.64	36.41
197	197	233	EQ_X	433.85	2.64	66.02
197	197	235	EQ_X	710.93	-0.39	74.91
197	197	236	EQ_X	780.8	1.11	45.31
197	197	234	EQ_Y	226.25	5.44	80.53
197	197	233	EQ_Y	201.98	17.42	80.83
197	197	235	EQ_Y	114.31	-25.26	74.53
197	197	236	EQ_Y	124.68	3.92	74.23
198	198	236	DEAD	-8.545E-11	-9.453E-12	-1.448E-11
198	198	235	DEAD	-2.860E-11	-1.869E-11	-1.448E-11
198	198	33	DEAD	-3.540E-11	4.198E-12	-2.055E-11
198	198	37	DEAD	-1.343E-11	-3.386E-11	-2.055E-11
198	198	236	G1_power station	0.	0.	0.
198	198	235	G1_power station	0.	0.	0.
198	198	33	G1_power station	0.	0.	0.
198	198	37	G1_power station	0.	0.	0.
198	198	236	G2_power station	-2446.13	-28.63	-73.89
198	198	235	G2_power station	-2177.53	46.5	-16.54
198	198	33	G2_power station	-2666.03	-159.63	173.33
198	198	37	G2_power station	-1357.93	49.71	115.99
198	198	236	Q_power station	-90.51	-1.06	-2.73
198	198	235	Q_power station	-80.57	1.72	-0.61
198	198	33	Q_power station	-98.64	-5.91	6.41
198	198	37	Q_power station	-50.24	1.84	4.29
198	198	236	Q_neve	-234.78	-3.01	-6.13
198	198	235	Q_neve	-205.58	5.54	-0.69
198	198	33	Q_neve	-274.42	-19.24	19.88
198	198	37	Q_neve	-132.41	4.97	14.44
198	198	236	Q_manutenzione	-90.51	-1.06	-2.73
198	198	235	Q_manutenzione	-80.57	1.72	-0.61
198	198	33	Q_manutenzione	-98.64	-5.91	6.41
198	198	37	Q_manutenzione	-50.24	1.84	4.29
198	198	236	EQ_X	854.99	15.95	55.02
198	198	235	EQ_X	637.36	-15.1	82.88
198	198	33	EQ_X	1500.46	18.08	-52.02
198	198	37	EQ_X	624.07	-17.85	-79.89
198	198	236	EQ_Y	-58.54	-32.73	79.96
198	198	235	EQ_Y	286.42	9.16	44.17
198	198	33	EQ_Y	33.27	152.99	82.96
198	198	37	EQ_Y	-59.8	19.08	118.75
199	199	18	DEAD	5.809E-11	-3.173E-11	-1.345E-12
199	199	17	DEAD	-3.141E-11	-4.147E-11	-7.115E-12

Table 21: Element Stresses - Area Shells, Part 2 of 3

Area	AreaElem	Joint	OutputCase	S11Bot	S22Bot	S12Bot
				KN/m2	KN/m2	KN/m2
199	199	237	DEAD	3.079E-11	1.378E-11	-7.412E-12
199	199	203	DEAD	-4.127E-11	-9.076E-11	1.412E-11
199	199	18	G1_power station	0.	0.	0.
199	199	17	G1_power station	0.	0.	0.
199	199	237	G1_power station	0.	0.	0.
199	199	203	G1_power station	0.	0.	0.
199	199	18	G2_power station	610.33	641.14	-79.8
199	199	17	G2_power station	220.04	-20.8	-30.8
199	199	237	G2_power station	-163.	12.98	-28.58
199	199	203	G2_power station	-385.99	126.5	-77.58
199	199	18	Q_power station	22.58	23.72	-2.95
199	199	17	Q_power station	8.14	-0.77	-1.14
199	199	237	Q_power station	-6.03	0.48	-1.06
199	199	203	Q_power station	-14.28	4.68	-2.87
199	199	18	Q_neve	50.69	52.63	-5.28
199	199	17	Q_neve	15.38	-1.9	-1.17
199	199	237	Q_neve	-24.46	1.17	-0.79
199	199	203	Q_neve	-45.98	5.08	-4.89
199	199	18	Q_manutenzione	22.58	23.72	-2.95
199	199	17	Q_manutenzione	8.14	-0.77	-1.14
199	199	237	Q_manutenzione	-6.03	0.48	-1.06
199	199	203	Q_manutenzione	-14.28	4.68	-2.87
199	199	18	EQ_X	-1990.29	-287.06	149.37
199	199	17	EQ_X	533.1	153.31	181.08
199	199	237	EQ_X	-919.04	-57.22	-150.97
199	199	203	EQ_X	-273.26	-209.54	-182.67
199	199	18	EQ_Y	384.19	1484.35	-349.83
199	199	17	EQ_Y	382.44	-213.41	19.98
199	199	237	EQ_Y	23.49	132.04	-26.16
199	199	203	EQ_Y	-82.12	-526.1	-395.97
200	200	203	DEAD	1.752E-11	-8.221E-11	2.975E-13
200	200	237	DEAD	-5.156E-12	1.128E-11	3.331E-12
200	200	238	DEAD	-2.197E-12	1.210E-12	1.547E-11
200	200	204	DEAD	2.442E-11	-4.105E-11	1.243E-11
200	200	203	G1_power station	0.	0.	0.
200	200	237	G1_power station	0.	0.	0.
200	200	238	G1_power station	0.	0.	0.
200	200	204	G1_power station	0.	0.	0.
200	200	203	G2_power station	-366.89	130.32	-117.73
200	200	237	G2_power station	-180.03	9.57	-108.96
200	200	238	G2_power station	-678.09	-1.22	-141.09
200	200	204	G2_power station	-654.4	-52.7	-149.87
200	200	203	Q_power station	-13.58	4.82	-4.36

Table 21: Element Stresses - Area Shells, Part 2 of 3

Area	AreaElem	Joint	OutputCase	S11Bot	S22Bot	S12Bot
				KN/m2	KN/m2	KN/m2
200	200	237	Q_power station	-6.66	0.35	-4.03
200	200	238	Q_power station	-25.09	-4.500E-02	-5.22
200	200	204	Q_power station	-24.21	-1.95	-5.55
200	200	203	Q_neve	-44.25	5.43	-8.55
200	200	237	Q_neve	-26.04	0.86	-7.99
200	200	238	Q_neve	-75.67	-0.13	-10.87
200	200	204	Q_neve	-74.76	-11.94	-11.43
200	200	203	Q_manutenzione	-13.58	4.82	-4.36
200	200	237	Q_manutenzione	-6.66	0.35	-4.03
200	200	238	Q_manutenzione	-25.09	-4.500E-02	-5.22
200	200	204	Q_manutenzione	-24.21	-1.95	-5.55
200	200	203	EQ_X	-446.63	-244.21	-79.94
200	200	237	EQ_X	-733.27	-20.06	-108.91
200	200	238	EQ_X	-462.35	2.12	-40.16
200	200	204	EQ_X	-445.74	-76.87	-11.2
200	200	203	EQ_Y	-87.27	-527.13	-173.52
200	200	237	EQ_Y	9.13	129.16	-256.16
200	200	238	EQ_Y	-134.35	-54.59	-238.7
200	200	204	EQ_Y	-33.16	-32.81	-156.06
201	201	204	DEAD	2.143E-11	-5.385E-11	1.751E-11
201	201	238	DEAD	5.791E-11	2.462E-12	2.055E-11
201	201	239	DEAD	-4.683E-11	-3.110E-11	1.751E-11
201	201	205	DEAD	-2.551E-11	-5.063E-11	1.448E-11
201	201	204	G1_power station	0.	0.	0.
201	201	238	G1_power station	0.	0.	0.
201	201	239	G1_power station	0.	0.	0.
201	201	205	G1_power station	0.	0.	0.
201	201	204	G2_power station	-665.79	-54.98	-139.62
201	201	238	G2_power station	-662.41	1.92	-147.32
201	201	239	G2_power station	-898.73	-1.53	-133.6
201	201	205	G2_power station	-851.62	-103.76	-125.9
201	201	204	Q_power station	-24.63	-2.03	-5.17
201	201	238	Q_power station	-24.51	7.107E-02	-5.45
201	201	239	Q_power station	-33.25	-5.660E-02	-4.94
201	201	205	Q_power station	-31.51	-3.84	-4.66
201	201	204	Q_neve	-75.8	-12.15	-10.5
201	201	238	Q_neve	-74.23	0.16	-11.28
201	201	239	Q_neve	-98.36	-0.17	-9.9
201	201	205	Q_neve	-95.06	-17.23	-9.12
201	201	204	Q_manutenzione	-24.63	-2.03	-5.17
201	201	238	Q_manutenzione	-24.51	7.107E-02	-5.45
201	201	239	Q_manutenzione	-33.25	-5.660E-02	-4.94
201	201	205	Q_manutenzione	-31.51	-3.84	-4.66

Table 21: Element Stresses - Area Shells, Part 2 of 3

Area	AreaElem	Joint	OutputCase	S11Bot	S22Bot	S12Bot
				KN/m2	KN/m2	KN/m2
201	201	204	EQ_X	-435.63	-74.84	1.44
201	201	238	EQ_X	-480.66	-1.54	-0.73
201	201	239	EQ_X	-372.27	1.26	15.46
201	201	205	EQ_X	-360.58	-35.41	17.63
201	201	204	EQ_Y	-40.78	-34.33	-169.18
201	201	238	EQ_Y	-142.93	-56.31	-170.53
201	201	239	EQ_Y	-152.5	7.06	-143.56
201	201	205	EQ_Y	-89.36	-115.17	-142.2
202	202	205	DEAD	-3.009E-11	-6.077E-11	2.142E-11
202	202	239	DEAD	-1.463E-11	-1.010E-11	1.647E-11
202	202	240	DEAD	-2.858E-11	1.962E-11	1.536E-11
202	202	206	DEAD	-2.828E-11	-7.835E-11	2.557E-11
202	202	205	G1_power station	0.	0.	0.
202	202	239	G1_power station	0.	0.	0.
202	202	240	G1_power station	0.	0.	0.
202	202	206	G1_power station	0.	0.	0.
202	202	205	G2_power station	-853.83	-104.2	-103.51
202	202	239	G2_power station	-894.38	-0.66	-110.71
202	202	240	G2_power station	-1027.33	2.17	-82.12
202	202	206	G2_power station	-956.34	-124.02	-74.92
202	202	205	Q_power station	-31.59	-3.86	-3.83
202	202	239	Q_power station	-33.09	-2.442E-02	-4.1
202	202	240	Q_power station	-38.01	8.036E-02	-3.04
202	202	206	Q_power station	-35.38	-4.59	-2.77
202	202	205	Q_neve	-95.27	-17.27	-6.95
202	202	239	Q_neve	-97.93	-8.015E-02	-7.55
202	202	240	Q_neve	-111.03	0.23	-4.67
202	202	206	Q_neve	-105.2	-19.65	-4.06
202	202	205	Q_manutenzione	-31.59	-3.86	-3.83
202	202	239	Q_manutenzione	-33.09	-2.442E-02	-4.1
202	202	240	Q_manutenzione	-38.01	8.036E-02	-3.04
202	202	206	Q_manutenzione	-35.38	-4.59	-2.77
202	202	205	EQ_X	-360.31	-35.36	25.02
202	202	239	EQ_X	-377.72	0.16	28.5
202	202	240	EQ_X	-291.52	1.41	35.87
202	202	206	EQ_X	-286.59	-18.18	32.39
202	202	205	EQ_Y	-96.01	-116.5	-112.59
202	202	239	EQ_Y	-162.64	5.03	-121.05
202	202	240	EQ_Y	-175.73	-12.87	-95.69
202	202	206	EQ_Y	-107.51	-73.	-87.24
203	203	206	DEAD	-9.647E-13	-7.248E-11	3.129E-11
203	203	240	DEAD	-5.804E-11	1.556E-11	2.715E-11
203	203	241	DEAD	3.468E-11	-2.166E-11	2.826E-11

Table 21: Element Stresses - Area Shells, Part 2 of 3

Area	AreaElem	Joint	OutputCase	S11Bot	S22Bot	S12Bot
				KN/m2	KN/m2	KN/m2
203	203	207	DEAD	-5.273E-11	-1.250E-11	2.715E-11
203	203	206	G1_power station	0.	0.	0.
203	203	240	G1_power station	0.	0.	0.
203	203	241	G1_power station	0.	0.	0.
203	203	207	G1_power station	0.	0.	0.
203	203	206	G2_power station	-957.36	-124.22	-41.35
203	203	240	G2_power station	-1023.44	2.95	-46.
203	203	241	G2_power station	-1160.4	-11.05	-1.89
203	203	207	G2_power station	-1033.39	-133.38	2.76
203	203	206	Q_power station	-35.42	-4.6	-1.53
203	203	240	Q_power station	-37.87	0.11	-1.7
203	203	241	Q_power station	-42.93	-0.41	-6.976E-02
203	203	207	Q_power station	-38.24	-4.94	0.1
203	203	206	Q_neve	-105.29	-19.67	-0.67
203	203	240	Q_neve	-110.63	0.31	-0.96
203	203	241	Q_neve	-123.13	-1.17	3.56
203	203	207	Q_neve	-111.52	-20.73	3.84
203	203	206	Q_manutenzione	-35.42	-4.6	-1.53
203	203	240	Q_manutenzione	-37.87	0.11	-1.7
203	203	241	Q_manutenzione	-42.93	-0.41	-6.976E-02
203	203	207	Q_manutenzione	-38.24	-4.94	0.1
203	203	206	EQ_X	-287.25	-18.31	36.82
203	203	240	EQ_X	-294.01	0.92	41.18
203	203	241	EQ_X	-216.81	1.03	44.65
203	203	207	EQ_X	-215.94	-8.93	40.29
203	203	206	EQ_Y	-109.67	-73.44	-67.11
203	203	240	EQ_Y	-190.86	-15.89	-68.51
203	203	241	EQ_Y	-200.35	-11.76	-44.29
203	203	207	EQ_Y	-117.61	-76.73	-42.89
204	204	207	DEAD	1.097E-11	-2.770E-11	2.048E-11
204	204	241	DEAD	-1.686E-11	-1.409E-11	6.427E-12
204	204	242	DEAD	-3.681E-11	2.463E-11	2.284E-12
204	204	208	DEAD	-9.042E-11	-1.788E-11	2.160E-11
204	204	207	G1_power station	0.	0.	0.
204	204	241	G1_power station	0.	0.	0.
204	204	242	G1_power station	0.	0.	0.
204	204	208	G1_power station	0.	0.	0.
204	204	207	G2_power station	-1034.41	-133.59	71.73
204	204	241	G2_power station	-1150.11	-8.99	44.23
204	204	242	G2_power station	-1502.14	50.24	133.24
204	204	208	G2_power station	-1198.73	-181.04	160.74
204	204	207	Q_power station	-38.27	-4.94	2.65
204	204	241	Q_power station	-42.55	-0.33	1.64

Table 21: Element Stresses - Area Shells, Part 2 of 3

Area	AreaElem	Joint	OutputCase	S11Bot	S22Bot	S12Bot
				KN/m2	KN/m2	KN/m2
204	204	242	Q_power station	-55.58	1.86	4.93
204	204	208	Q_power station	-44.35	-6.7	5.95
204	204	207	Q_neve	-111.57	-20.74	10.96
204	204	241	Q_neve	-122.13	-0.97	8.22
204	204	242	Q_neve	-154.96	5.39	17.22
204	204	208	Q_neve	-125.98	-25.09	19.96
204	204	207	Q_manutenzione	-38.27	-4.94	2.65
204	204	241	Q_manutenzione	-42.55	-0.33	1.64
204	204	242	Q_manutenzione	-55.58	1.86	4.93
204	204	208	Q_manutenzione	-44.35	-6.7	5.95
204	204	207	EQ_X	-218.34	-9.41	45.69
204	204	241	EQ_X	-215.09	1.38	43.66
204	204	242	EQ_X	-145.93	8.63	44.04
204	204	208	EQ_X	-154.41	19.16	46.07
204	204	207	EQ_Y	-109.85	-75.18	-20.36
204	204	241	EQ_Y	-229.39	-17.57	-14.07
204	204	242	EQ_Y	-251.72	-19.54	19.57
204	204	208	EQ_Y	-111.94	-115.02	13.28
205	205	208	DEAD	-2.911E-11	1.951E-11	5.895E-12
205	205	242	DEAD	-6.901E-11	-5.507E-12	5.895E-12
205	205	38	DEAD	-7.992E-11	-7.074E-11	2.862E-12
205	205	34	DEAD	-1.320E-10	6.199E-11	2.862E-12
205	205	208	G1_power station	0.	0.	0.
205	205	242	G1_power station	0.	0.	0.
205	205	38	G1_power station	0.	0.	0.
205	205	34	G1_power station	0.	0.	0.
205	205	208	G2_power station	-1148.97	-171.09	366.16
205	205	242	G2_power station	-1499.08	50.85	210.05
205	205	38	G2_power station	-2793.47	-119.39	427.31
205	205	34	G2_power station	-1919.55	239.14	583.42
205	205	208	Q_power station	-42.51	-6.33	13.55
205	205	242	Q_power station	-55.47	1.88	7.77
205	205	38	Q_power station	-103.36	-4.42	15.81
205	205	34	Q_power station	-71.02	8.85	21.59
205	205	208	Q_neve	-120.53	-24.	41.07
205	205	242	Q_neve	-155.06	5.37	24.38
205	205	38	Q_neve	-279.74	-12.55	45.4
205	205	34	Q_neve	-197.21	23.43	62.08
205	205	208	Q_manutenzione	-42.51	-6.33	13.55
205	205	242	Q_manutenzione	-55.47	1.88	7.77
205	205	38	Q_manutenzione	-103.36	-4.42	15.81
205	205	34	Q_manutenzione	-71.02	8.85	21.59
205	205	208	EQ_X	-154.66	19.11	50.09

Table 21: Element Stresses - Area Shells, Part 2 of 3

Area	AreaElem	Joint	OutputCase	S11Bot	S22Bot	S12Bot
				KN/m2	KN/m2	KN/m2
205	205	242	EQ_X	-142.92	9.23	39.15
205	205	38	EQ_X	-76.85	-17.73	30.71
205	205	34	EQ_X	-155.64	77.93	41.64
205	205	208	EQ_Y	-77.19	-108.07	47.61
205	205	242	EQ_Y	-309.64	-31.13	56.76
205	205	38	EQ_Y	-379.	1.42	93.6
205	205	34	EQ_Y	-74.54	-67.7	84.44
206	206	32	DEAD	-6.879E-11	-1.181E-11	-5.686E-11
206	206	23	DEAD	-2.664E-10	-2.467E-11	-5.989E-11
206	206	243	DEAD	-1.204E-10	-5.124E-11	-4.472E-11
206	206	244	DEAD	-2.118E-10	2.993E-11	-4.169E-11
206	206	32	G1_power station	0.	0.	0.
206	206	23	G1_power station	0.	0.	0.
206	206	243	G1_power station	0.	0.	0.
206	206	244	G1_power station	0.	0.	0.
206	206	32	G2_power station	-1357.93	49.71	-115.99
206	206	23	G2_power station	-2666.03	-159.63	-173.33
206	206	243	G2_power station	-2177.53	46.5	16.54
206	206	244	G2_power station	-2446.13	-28.63	73.89
206	206	32	Q_power station	-50.24	1.84	-4.29
206	206	23	Q_power station	-98.64	-5.91	-6.41
206	206	243	Q_power station	-80.57	1.72	0.61
206	206	244	Q_power station	-90.51	-1.06	2.73
206	206	32	Q_neve	-132.41	4.97	-14.44
206	206	23	Q_neve	-274.42	-19.24	-19.88
206	206	243	Q_neve	-205.58	5.54	0.69
206	206	244	Q_neve	-234.78	-3.01	6.13
206	206	32	Q_manutenzione	-50.24	1.84	-4.29
206	206	23	Q_manutenzione	-98.64	-5.91	-6.41
206	206	243	Q_manutenzione	-80.57	1.72	0.61
206	206	244	Q_manutenzione	-90.51	-1.06	2.73
206	206	32	EQ_X	586.56	-18.34	83.25
206	206	23	EQ_X	1553.29	35.66	56.16
206	206	243	EQ_X	687.92	-8.88	-77.38
206	206	244	EQ_X	815.21	4.1	-50.29
206	206	32	EQ_Y	62.29	-3.83	125.51
206	206	23	EQ_Y	-32.6	-138.11	92.36
206	206	243	EQ_Y	-288.73	-9.2	53.75
206	206	244	EQ_Y	58.04	33.05	86.9
207	207	244	DEAD	-1.402E-10	4.917E-11	-5.692E-11
207	207	243	DEAD	-1.171E-10	-5.634E-11	-5.884E-11
207	207	245	DEAD	-1.379E-10	4.234E-11	-5.692E-11
207	207	246	DEAD	-1.057E-10	-1.766E-11	-4.974E-11

Table 21: Element Stresses - Area Shells, Part 2 of 3

Area	AreaElem	Joint	OutputCase	S11Bot	S22Bot	S12Bot
				KN/m2	KN/m2	KN/m2
207	207	244	G1_power station	0.	0.	0.
207	207	243	G1_power station	0.	0.	0.
207	207	245	G1_power station	0.	0.	0.
207	207	246	G1_power station	0.	0.	0.
207	207	244	G2_power station	-2355.79	-10.56	41.55
207	207	243	G2_power station	-2267.87	28.43	25.12
207	207	245	G2_power station	-2564.33	-12.95	14.24
207	207	246	G2_power station	-2538.48	5.93	30.66
207	207	244	Q_power station	-87.16	-0.39	1.54
207	207	243	Q_power station	-83.91	1.05	0.93
207	207	245	Q_power station	-94.88	-0.48	0.53
207	207	246	Q_power station	-93.92	0.22	1.13
207	207	244	Q_neve	-224.99	-1.05	2.66
207	207	243	Q_neve	-215.37	3.58	1.57
207	207	245	Q_neve	-241.4	-1.42	0.37
207	207	246	Q_neve	-238.67	0.72	1.46
207	207	244	Q_manutenzione	-87.16	-0.39	1.54
207	207	243	Q_manutenzione	-83.91	1.05	0.93
207	207	245	Q_manutenzione	-94.88	-0.48	0.53
207	207	246	Q_manutenzione	-93.92	0.22	1.13
207	207	244	EQ_X	769.41	-5.06	-40.19
207	207	243	EQ_X	734.89	0.51	-69.73
207	207	245	EQ_X	458.29	5.93	-60.81
207	207	246	EQ_X	424.07	-4.42	-31.27
207	207	244	EQ_Y	-93.29	2.78	78.9
207	207	243	EQ_Y	-146.36	19.27	77.29
207	207	245	EQ_Y	-233.19	-19.21	81.28
207	207	246	EQ_Y	-194.02	5.46	82.89
208	208	246	DEAD	-1.028E-10	-3.236E-11	-5.651E-11
208	208	245	DEAD	-1.282E-10	5.423E-11	-4.438E-11
208	208	247	DEAD	-5.128E-11	-6.572E-11	-6.258E-11
208	208	248	DEAD	-1.888E-10	4.210E-11	-7.472E-11
208	208	246	G1_power station	0.	0.	0.
208	208	245	G1_power station	0.	0.	0.
208	208	247	G1_power station	0.	0.	0.
208	208	248	G1_power station	0.	0.	0.
208	208	246	G2_power station	-2534.23	6.78	36.69
208	208	245	G2_power station	-2568.58	-13.8	10.89
208	208	247	G2_power station	-2687.71	30.28	-9.42
208	208	248	G2_power station	-2834.26	-9.66	16.38
208	208	246	Q_power station	-93.77	0.25	1.36
208	208	245	Q_power station	-95.04	-0.51	0.4
208	208	247	Q_power station	-99.45	1.12	-0.35

Table 21: Element Stresses - Area Shells, Part 2 of 3

Area	AreaElem	Joint	OutputCase	S11Bot	S22Bot	S12Bot
				KN/m2	KN/m2	KN/m2
208	208	248	Q_power station	-104.87	-0.36	0.61
208	208	246	Q_neve	-238.23	0.81	2.62
208	208	245	Q_neve	-241.85	-1.51	-0.56
208	208	247	Q_neve	-258.31	3.43	-2.74
208	208	248	Q_neve	-273.96	-0.86	0.43
208	208	246	Q_manutenzione	-93.77	0.25	1.36
208	208	245	Q_manutenzione	-95.04	-0.51	0.4
208	208	247	Q_manutenzione	-99.45	1.12	-0.35
208	208	248	Q_manutenzione	-104.87	-0.36	0.61
208	208	246	EQ_X	448.64	0.49	-33.2
208	208	245	EQ_X	433.09	0.89	-59.17
208	208	247	EQ_X	136.73	-14.42	-62.42
208	208	248	EQ_X	136.9	8.08	-36.45
208	208	246	EQ_Y	-290.07	-13.75	89.73
208	208	245	EQ_Y	-133.73	0.68	77.9
208	208	247	EQ_Y	-176.74	34.94	77.96
208	208	248	EQ_Y	-338.07	-34.37	89.79
209	209	248	DEAD	-1.120E-10	3.296E-11	-8.954E-11
209	209	247	DEAD	-9.038E-11	-5.970E-11	-9.257E-11
209	209	34	DEAD	-2.864E-10	3.447E-11	-4.707E-11
209	209	38	DEAD	-1.909E-11	-6.728E-11	-4.404E-11
209	209	248	G1_power station	0.	0.	0.
209	209	247	G1_power station	0.	0.	0.
209	209	34	G1_power station	0.	0.	0.
209	209	38	G1_power station	0.	0.	0.
209	209	248	G2_power station	-2990.98	-41.	-24.76
209	209	247	G2_power station	-2530.99	61.62	-10.25
209	209	34	G2_power station	-4077.18	-192.39	317.69
209	209	38	G2_power station	-1835.77	72.15	303.19
209	209	248	Q_power station	-110.67	-1.52	-0.92
209	209	247	Q_power station	-93.65	2.28	-0.38
209	209	34	Q_power station	-150.86	-7.12	11.75
209	209	38	Q_power station	-67.92	2.67	11.22
209	209	248	Q_neve	-290.63	-4.2	-3.72
209	209	247	Q_neve	-241.64	6.77	-3.09
209	209	34	Q_neve	-419.43	-21.01	31.77
209	209	38	Q_neve	-181.06	7.19	31.14
209	209	248	Q_manutenzione	-110.67	-1.52	-0.92
209	209	247	Q_manutenzione	-93.65	2.28	-0.38
209	209	34	Q_manutenzione	-150.86	-7.12	11.75
209	209	38	Q_manutenzione	-67.92	2.67	11.22
209	209	248	EQ_X	137.18	8.13	-31.52
209	209	247	EQ_X	137.74	-14.21	-73.04

Table 21: Element Stresses - Area Shells, Part 2 of 3

Area	AreaElem	Joint	OutputCase	S11Bot	S22Bot	S12Bot
				KN/m2	KN/m2	KN/m2
209	209	34	EQ_X	-324.12	44.23	-32.76
209	209	38	EQ_X	-1.55	-2.67	8.77
209	209	248	EQ_Y	-408.2	-48.39	69.87
209	209	247	EQ_Y	-111.55	47.98	101.21
209	209	34	EQ_Y	-136.48	-80.09	111.68
209	209	38	EQ_Y	-370.01	3.22	80.33

Table 21: Element Stresses - Area Shells, Part 3 of 3

Table 21: Element Stresses - Area Shells, Part 3 of 3

Area	AreaElem	Joint	OutputCase	S13Avg	S23Avg
				KN/m2	KN/m2
1	1	7	DEAD	4.034E-12	1.135E-11
1	1	8	DEAD	4.034E-12	-3.605E-12
1	1	9	DEAD	5.088E-12	8.147E-13
1	1	10	DEAD	5.088E-12	4.821E-12
1	1	7	G1_power station	0.	0.
1	1	8	G1_power station	0.	0.
1	1	9	G1_power station	0.	0.
1	1	10	G1_power station	0.	0.
1	1	7	G2_power station	-21.88	-25.03
1	1	8	G2_power station	-21.88	-66.65
1	1	9	G2_power station	-67.27	-66.65
1	1	10	G2_power station	-67.27	-25.03
1	1	7	Q_power station	-0.81	-0.93
1	1	8	Q_power station	-0.81	-2.47
1	1	9	Q_power station	-2.49	-2.47
1	1	10	Q_power station	-2.49	-0.93
1	1	7	Q_neve	-1.54	-1.66
1	1	8	Q_neve	-1.54	-5.39
1	1	9	Q_neve	-5.75	-5.39
1	1	10	Q_neve	-5.75	-1.66
1	1	7	Q_manutenzione	-0.81	-0.93
1	1	8	Q_manutenzione	-0.81	-2.47
1	1	9	Q_manutenzione	-2.49	-2.47
1	1	10	Q_manutenzione	-2.49	-0.93
1	1	7	EQ_X	-117.08	62.24
1	1	8	EQ_X	-117.08	87.32
1	1	9	EQ_X	139.85	87.32
1	1	10	EQ_X	139.85	62.24
1	1	7	EQ_Y	72.47	-121.79
1	1	8	EQ_Y	72.47	172.04

Table 21: Element Stresses - Area Shells, Part 3 of 3

Area	AreaElem	Joint	OutputCase	S13Avg	S23Avg
				KN/m2	KN/m2
1	1	9	EQ_Y	99.1	172.04
1	1	10	EQ_Y	99.1	-121.79
2	2	11	DEAD	4.034E-12	3.781E-14
2	2	12	DEAD	4.034E-12	-4.354E-12
2	2	13	DEAD	5.088E-12	-7.335E-12
2	2	14	DEAD	5.088E-12	6.179E-12
2	2	11	G1_power station	0.	0.
2	2	12	G1_power station	0.	0.
2	2	13	G1_power station	0.	0.
2	2	14	G1_power station	0.	0.
2	2	11	G2_power station	25.3	-68.89
2	2	12	G2_power station	25.3	-27.12
2	2	13	G2_power station	65.46	-27.12
2	2	14	G2_power station	65.46	-68.89
2	2	11	Q_power station	0.94	-2.55
2	2	12	Q_power station	0.94	-1.
2	2	13	Q_power station	2.42	-1.
2	2	14	Q_power station	2.42	-2.55
2	2	11	Q_neve	1.86	-5.73
2	2	12	Q_neve	1.86	-2.
2	2	13	Q_neve	5.5	-2.
2	2	14	Q_neve	5.5	-5.73
2	2	11	Q_manutenzione	0.94	-2.55
2	2	12	Q_manutenzione	0.94	-1.
2	2	13	Q_manutenzione	2.42	-1.
2	2	14	Q_manutenzione	2.42	-2.55
2	2	11	EQ_X	-117.45	-89.11
2	2	12	EQ_X	-117.45	-64.37
2	2	13	EQ_X	141.84	-64.37
2	2	14	EQ_X	141.84	-89.11
2	2	11	EQ_Y	-70.73	163.97
2	2	12	EQ_Y	-70.73	-117.86
2	2	13	EQ_Y	-95.17	-117.86
2	2	14	EQ_Y	-95.17	163.97
3	3	15	DEAD	-3.551E-12	-1.323E-11
3	3	16	DEAD	-2.470E-12	-1.323E-11
3	3	17	DEAD	-1.408E-11	4.612E-13
3	3	18	DEAD	4.903E-12	4.612E-13
3	3	15	G1_power station	0.	0.
3	3	16	G1_power station	0.	0.
3	3	17	G1_power station	0.	0.
3	3	18	G1_power station	0.	0.
3	3	15	G2_power station	65.46	27.12

Table 21: Element Stresses - Area Shells, Part 3 of 3

Area	AreaElem	Joint	OutputCase	S13Avg	S23Avg
				KN/m2	KN/m2
3	3	16	G2_power station	25.3	27.12
3	3	17	G2_power station	25.3	68.89
3	3	18	G2_power station	65.46	68.89
3	3	15	Q_power station	2.42	1.
3	3	16	Q_power station	0.94	1.
3	3	17	Q_power station	0.94	2.55
3	3	18	Q_power station	2.42	2.55
3	3	15	Q_neve	5.5	2.
3	3	16	Q_neve	1.86	2.
3	3	17	Q_neve	1.86	5.73
3	3	18	Q_neve	5.5	5.73
3	3	15	Q_manutenzione	2.42	1.
3	3	16	Q_manutenzione	0.94	1.
3	3	17	Q_manutenzione	0.94	2.55
3	3	18	Q_manutenzione	2.42	2.55
3	3	15	EQ_X	141.84	64.37
3	3	16	EQ_X	-117.45	64.37
3	3	17	EQ_X	-117.45	89.11
3	3	18	EQ_X	141.84	89.11
3	3	15	EQ_Y	95.17	-117.86
3	3	16	EQ_Y	70.73	-117.86
3	3	17	EQ_Y	70.73	163.97
3	3	18	EQ_Y	95.17	163.97
4	4	19	DEAD	3.263E-12	6.081E-13
4	4	20	DEAD	3.263E-12	9.241E-12
4	4	21	DEAD	2.210E-12	6.081E-13
4	4	22	DEAD	2.210E-12	2.921E-12
4	4	19	G1_power station	0.	0.
4	4	20	G1_power station	0.	0.
4	4	21	G1_power station	0.	0.
4	4	22	G1_power station	0.	0.
4	4	19	G2_power station	-21.88	66.65
4	4	20	G2_power station	-21.88	25.03
4	4	21	G2_power station	-67.27	25.03
4	4	22	G2_power station	-67.27	66.65
4	4	19	Q_power station	-0.81	2.47
4	4	20	Q_power station	-0.81	0.93
4	4	21	Q_power station	-2.49	0.93
4	4	22	Q_power station	-2.49	2.47
4	4	19	Q_neve	-1.54	5.39
4	4	20	Q_neve	-1.54	1.66
4	4	21	Q_neve	-5.75	1.66
4	4	22	Q_neve	-5.75	5.39

Table 21: Element Stresses - Area Shells, Part 3 of 3

Area	AreaElem	Joint	OutputCase	S13Avg	S23Avg
				KN/m2	KN/m2
4	4	19	Q_manutenzione	-0.81	2.47
4	4	20	Q_manutenzione	-0.81	0.93
4	4	21	Q_manutenzione	-2.49	0.93
4	4	22	Q_manutenzione	-2.49	2.47
4	4	19	EQ_X	-117.08	-87.32
4	4	20	EQ_X	-117.08	-62.24
4	4	21	EQ_X	139.85	-62.24
4	4	22	EQ_X	139.85	-87.32
4	4	19	EQ_Y	-72.47	172.04
4	4	20	EQ_Y	-72.47	-121.79
4	4	21	EQ_Y	-99.1	-121.79
4	4	22	EQ_Y	-99.1	172.04
29	29	61	DEAD	9.326E-13	3.828E-13
29	29	39	DEAD	-6.027E-13	5.368E-13
29	29	40	DEAD	1.196E-12	9.095E-13
29	29	6	DEAD	4.506E-13	-3.848E-13
29	29	61	G1_power station	0.	0.
29	29	39	G1_power station	0.	0.
29	29	40	G1_power station	0.	0.
29	29	6	G1_power station	0.	0.
29	29	61	G2_power station	69.36	47.94
29	29	39	G2_power station	7.34	47.94
29	29	40	G2_power station	7.34	106.75
29	29	6	G2_power station	69.36	106.75
29	29	61	Q_power station	2.57	1.77
29	29	39	Q_power station	0.27	1.77
29	29	40	Q_power station	0.27	3.95
29	29	6	Q_power station	2.57	3.95
29	29	61	Q_neve	5.93	4.77
29	29	39	Q_neve	0.26	4.77
29	29	40	Q_neve	0.26	10.26
29	29	6	Q_neve	5.93	10.26
29	29	61	Q_manutenzione	2.57	1.77
29	29	39	Q_manutenzione	0.27	1.77
29	29	40	Q_manutenzione	0.27	3.95
29	29	6	Q_manutenzione	2.57	3.95
29	29	61	EQ_X	146.26	73.11
29	29	39	EQ_X	-69.36	73.11
29	29	40	EQ_X	-69.36	81.
29	29	6	EQ_X	146.26	81.
29	29	61	EQ_Y	83.38	-143.12
29	29	39	EQ_Y	48.61	-143.12
29	29	40	EQ_Y	48.61	196.81

Table 21: Element Stresses - Area Shells, Part 3 of 3

Area	AreaElem	Joint	OutputCase	S13Avg	S23Avg
				KN/m2	KN/m2
29	29	6	EQ_Y	83.38	196.81
30	30	39	DEAD	1.623E-12	-1.086E-13
30	30	41	DEAD	-1.216E-12	1.176E-12
30	30	42	DEAD	-4.832E-13	9.447E-13
30	30	40	DEAD	7.594E-13	2.625E-12
30	30	39	G1_power station	0.	0.
30	30	41	G1_power station	0.	0.
30	30	42	G1_power station	0.	0.
30	30	40	G1_power station	0.	0.
30	30	39	G2_power station	5.62	42.28
30	30	41	G2_power station	-9.78	42.28
30	30	42	G2_power station	-9.78	19.24
30	30	40	G2_power station	5.62	19.24
30	30	39	Q_power station	0.21	1.56
30	30	41	Q_power station	-0.36	1.56
30	30	42	Q_power station	-0.36	0.71
30	30	40	Q_power station	0.21	0.71
30	30	39	Q_neve	7.869E-02	4.1
30	30	41	Q_neve	-1.34	4.1
30	30	42	Q_neve	-1.34	2.04
30	30	40	Q_neve	7.869E-02	2.04
30	30	39	Q_manutenzione	0.21	1.56
30	30	41	Q_manutenzione	-0.36	1.56
30	30	42	Q_manutenzione	-0.36	0.71
30	30	40	Q_manutenzione	0.21	0.71
30	30	39	EQ_X	-61.87	5.06
30	30	41	EQ_X	-5.74	5.06
30	30	42	EQ_X	-5.74	-13.6
30	30	40	EQ_X	-61.87	-13.6
30	30	39	EQ_Y	12.62	46.15
30	30	41	EQ_Y	-3.34	46.15
30	30	42	EQ_Y	-3.34	10.4
30	30	40	EQ_Y	12.62	10.4
31	31	41	DEAD	-5.565E-14	9.639E-14
31	31	43	DEAD	2.077E-13	9.639E-14
31	31	44	DEAD	2.077E-13	3.597E-13
31	31	42	DEAD	-5.565E-14	3.597E-13
31	31	41	G1_power station	0.	0.
31	31	43	G1_power station	0.	0.
31	31	44	G1_power station	0.	0.
31	31	42	G1_power station	0.	0.
31	31	41	G2_power station	-6.19	-2.255E-12
31	31	43	G2_power station	-6.19	-2.255E-12

Table 21: Element Stresses - Area Shells, Part 3 of 3

Area	AreaElem	Joint	OutputCase	S13Avg	S23Avg
				KN/m2	KN/m2
31	31	44	G2_power station	-6.19	-9.380E-13
31	31	42	G2_power station	-6.19	-9.380E-13
31	31	41	Q_power station	-0.23	-2.689E-14
31	31	43	Q_power station	-0.23	-2.689E-14
31	31	44	Q_power station	-0.23	5.540E-14
31	31	42	Q_power station	-0.23	5.540E-14
31	31	41	Q_neve	-1.01	-5.192E-14
31	31	43	Q_neve	-1.01	-5.192E-14
31	31	44	Q_neve	-1.01	1.391E-14
31	31	42	Q_neve	-1.01	1.391E-14
31	31	41	Q_manutenzione	-0.23	-2.689E-14
31	31	43	Q_manutenzione	-0.23	-2.689E-14
31	31	44	Q_manutenzione	-0.23	5.540E-14
31	31	42	Q_manutenzione	-0.23	5.540E-14
31	31	41	EQ_X	-4.87	-2.114E-13
31	31	43	EQ_X	-4.87	-2.114E-13
31	31	44	EQ_X	-4.87	2.494E-13
31	31	42	EQ_X	-4.87	2.494E-13
31	31	41	EQ_Y	2.64	25.36
31	31	43	EQ_Y	-2.64	25.36
31	31	44	EQ_Y	-2.64	20.15
31	31	42	EQ_Y	2.64	20.15
32	32	43	DEAD	-4.405E-13	5.999E-13
32	32	45	DEAD	9.760E-13	-1.186E-12
32	32	46	DEAD	7.445E-13	-9.800E-13
32	32	44	DEAD	2.293E-12	-7.907E-13
32	32	43	G1_power station	0.	0.
32	32	45	G1_power station	0.	0.
32	32	46	G1_power station	0.	0.
32	32	44	G1_power station	0.	0.
32	32	43	G2_power station	-9.78	-42.28
32	32	45	G2_power station	5.62	-42.28
32	32	46	G2_power station	5.62	-19.24
32	32	44	G2_power station	-9.78	-19.24
32	32	43	Q_power station	-0.36	-1.56
32	32	45	Q_power station	0.21	-1.56
32	32	46	Q_power station	0.21	-0.71
32	32	44	Q_power station	-0.36	-0.71
32	32	43	Q_neve	-1.34	-4.1
32	32	45	Q_neve	7.869E-02	-4.1
32	32	46	Q_neve	7.869E-02	-2.04
32	32	44	Q_neve	-1.34	-2.04
32	32	43	Q_manutenzione	-0.36	-1.56

Table 21: Element Stresses - Area Shells, Part 3 of 3

Area	AreaElem	Joint	OutputCase	S13Avg	S23Avg
				KN/m2	KN/m2
32	32	45	Q_manutenzione	0.21	-1.56
32	32	46	Q_manutenzione	0.21	-0.71
32	32	44	Q_manutenzione	-0.36	-0.71
32	32	43	EQ_X	-5.74	-5.06
32	32	45	EQ_X	-61.87	-5.06
32	32	46	EQ_X	-61.87	13.6
32	32	44	EQ_X	-5.74	13.6
32	32	43	EQ_Y	3.34	46.15
32	32	45	EQ_Y	-12.62	46.15
32	32	46	EQ_Y	-12.62	10.4
32	32	44	EQ_Y	3.34	10.4
33	33	45	DEAD	1.791E-12	-1.411E-12
33	33	62	DEAD	-7.880E-13	3.875E-13
33	33	63	DEAD	8.695E-13	-4.894E-13
33	33	46	DEAD	-6.563E-13	-7.455E-15
33	33	45	G1_power station	0.	0.
33	33	62	G1_power station	0.	0.
33	33	63	G1_power station	0.	0.
33	33	46	G1_power station	0.	0.
33	33	45	G2_power station	7.34	-47.94
33	33	62	G2_power station	69.36	-47.94
33	33	63	G2_power station	69.36	-106.75
33	33	46	G2_power station	7.34	-106.75
33	33	45	Q_power station	0.27	-1.77
33	33	62	Q_power station	2.57	-1.77
33	33	63	Q_power station	2.57	-3.95
33	33	46	Q_power station	0.27	-3.95
33	33	45	Q_neve	0.26	-4.77
33	33	62	Q_neve	5.93	-4.77
33	33	63	Q_neve	5.93	-10.26
33	33	46	Q_neve	0.26	-10.26
33	33	45	Q_manutenzione	0.27	-1.77
33	33	62	Q_manutenzione	2.57	-1.77
33	33	63	Q_manutenzione	2.57	-3.95
33	33	46	Q_manutenzione	0.27	-3.95
33	33	45	EQ_X	-69.36	-73.11
33	33	62	EQ_X	146.26	-73.11
33	33	63	EQ_X	146.26	-81.
33	33	46	EQ_X	-69.36	-81.
33	33	45	EQ_Y	-48.61	-143.12
33	33	62	EQ_Y	-83.38	-143.12
33	33	63	EQ_Y	-83.38	196.81
33	33	46	EQ_Y	-48.61	196.81

Table 21: Element Stresses - Area Shells, Part 3 of 3

Area	AreaElem	Joint	OutputCase	S13Avg	S23Avg
				KN/m2	KN/m2
34	34	66	DEAD	-2.226E-13	-2.325E-12
34	34	47	DEAD	8.307E-13	-2.518E-12
34	34	48	DEAD	8.307E-13	4.473E-14
34	34	5	DEAD	-2.226E-13	-6.747E-13
34	34	66	G1_power station	0.	0.
34	34	47	G1_power station	0.	0.
34	34	48	G1_power station	0.	0.
34	34	5	G1_power station	0.	0.
34	34	66	G2_power station	-71.8	-48.47
34	34	47	G2_power station	-10.35	-48.47
34	34	48	G2_power station	-10.35	-108.11
34	34	5	G2_power station	-71.8	-108.11
34	34	66	Q_power station	-2.66	-1.79
34	34	47	Q_power station	-0.38	-1.79
34	34	48	Q_power station	-0.38	-4.
34	34	5	Q_power station	-2.66	-4.
34	34	66	Q_neve	-6.18	-4.84
34	34	47	Q_neve	-0.62	-4.84
34	34	48	Q_neve	-0.62	-10.43
34	34	5	Q_neve	-6.18	-10.43
34	34	66	Q_manutenzione	-2.66	-1.79
34	34	47	Q_manutenzione	-0.38	-1.79
34	34	48	Q_manutenzione	-0.38	-4.
34	34	5	Q_manutenzione	-2.66	-4.
34	34	66	EQ_X	145.07	71.8
34	34	47	EQ_X	-65.99	71.8
34	34	48	EQ_X	-65.99	81.46
34	34	5	EQ_X	145.07	81.46
34	34	66	EQ_Y	86.04	-147.85
34	34	47	EQ_Y	48.8	-147.85
34	34	48	EQ_Y	48.8	206.04
34	34	5	EQ_Y	86.04	206.04
35	35	47	DEAD	2.212E-12	-1.302E-12
35	35	49	DEAD	1.431E-12	-1.109E-12
35	35	50	DEAD	1.817E-12	5.416E-13
35	35	48	DEAD	7.731E-13	1.261E-12
35	35	47	G1_power station	0.	0.
35	35	49	G1_power station	0.	0.
35	35	50	G1_power station	0.	0.
35	35	48	G1_power station	0.	0.
35	35	47	G2_power station	-8.33	-41.97
35	35	49	G2_power station	5.16	-41.97
35	35	50	G2_power station	5.16	-19.42

Table 21: Element Stresses - Area Shells, Part 3 of 3

Area	AreaElem	Joint	OutputCase	S13Avg	S23Avg
				KN/m2	KN/m2
35	35	48	G2_power station	-8.33	-19.42
35	35	47	Q_power station	-0.31	-1.55
35	35	49	Q_power station	0.19	-1.55
35	35	50	Q_power station	0.19	-0.72
35	35	48	Q_power station	-0.31	-0.72
35	35	47	Q_neve	-0.39	-4.07
35	35	49	Q_neve	0.81	-4.07
35	35	50	Q_neve	0.81	-2.07
35	35	48	Q_neve	-0.39	-2.07
35	35	47	Q_manutenzione	-0.31	-1.55
35	35	49	Q_manutenzione	0.19	-1.55
35	35	50	Q_manutenzione	0.19	-0.72
35	35	48	Q_manutenzione	-0.31	-0.72
35	35	47	EQ_X	-58.77	4.89
35	35	49	EQ_X	-3.01	4.89
35	35	50	EQ_X	-3.01	-14.15
35	35	48	EQ_X	-58.77	-14.15
35	35	47	EQ_Y	12.34	47.08
35	35	49	EQ_Y	-3.65	47.08
35	35	50	EQ_Y	-3.65	9.95
35	35	48	EQ_Y	12.34	9.95
36	36	49	DEAD	1.882E-12	4.894E-13
36	36	51	DEAD	1.704E-13	4.894E-13
36	36	52	DEAD	1.704E-13	1.411E-12
36	36	50	DEAD	1.882E-12	1.411E-12
36	36	49	G1_power station	0.	0.
36	36	51	G1_power station	0.	0.
36	36	52	G1_power station	0.	0.
36	36	50	G1_power station	0.	0.
36	36	49	G2_power station	1.77	1.454E-12
36	36	51	G2_power station	1.77	1.454E-12
36	36	52	G2_power station	1.77	-3.895E-13
36	36	50	G2_power station	1.77	-3.895E-13
36	36	49	Q_power station	6.542E-02	-2.596E-14
36	36	51	Q_power station	6.542E-02	-2.596E-14
36	36	52	Q_power station	6.542E-02	6.956E-15
36	36	50	Q_power station	6.542E-02	6.956E-15
36	36	49	Q_neve	0.51	2.262E-13
36	36	51	Q_neve	0.51	2.262E-13
36	36	52	Q_neve	0.51	3.249E-13
36	36	50	Q_neve	0.51	3.249E-13
36	36	49	Q_manutenzione	6.542E-02	-2.596E-14
36	36	51	Q_manutenzione	6.542E-02	-2.596E-14

Table 21: Element Stresses - Area Shells, Part 3 of 3

Area	AreaElem	Joint	OutputCase	S13Avg	S23Avg
				KN/m2	KN/m2
36	36	52	Q_manutenzione	6.542E-02	6.956E-15
36	36	50	Q_manutenzione	6.542E-02	6.956E-15
36	36	49	EQ_X	-2.19	-3.003E-13
36	36	51	EQ_X	-2.19	-3.003E-13
36	36	52	EQ_X	-2.19	-4.978E-13
36	36	50	EQ_X	-2.19	-4.978E-13
36	36	49	EQ_Y	2.25	25.76
36	36	51	EQ_Y	-2.25	25.76
36	36	52	EQ_Y	-2.25	21.08
36	36	50	EQ_Y	2.25	21.08
37	37	51	DEAD	-8.347E-14	1.239E-12
37	37	53	DEAD	3.115E-13	1.239E-12
37	37	54	DEAD	3.115E-13	5.365E-14
37	37	52	DEAD	-8.347E-14	5.365E-14
37	37	51	G1_power station	0.	0.
37	37	53	G1_power station	0.	0.
37	37	54	G1_power station	0.	0.
37	37	52	G1_power station	0.	0.
37	37	51	G2_power station	5.16	41.97
37	37	53	G2_power station	-8.33	41.97
37	37	54	G2_power station	-8.33	19.42
37	37	52	G2_power station	5.16	19.42
37	37	51	Q_power station	0.19	1.55
37	37	53	Q_power station	-0.31	1.55
37	37	54	Q_power station	-0.31	0.72
37	37	52	Q_power station	0.19	0.72
37	37	51	Q_neve	0.81	4.07
37	37	53	Q_neve	-0.39	4.07
37	37	54	Q_neve	-0.39	2.07
37	37	52	Q_neve	0.81	2.07
37	37	51	Q_manutenzione	0.19	1.55
37	37	53	Q_manutenzione	-0.31	1.55
37	37	54	Q_manutenzione	-0.31	0.72
37	37	52	Q_manutenzione	0.19	0.72
37	37	51	EQ_X	-3.01	-4.89
37	37	53	EQ_X	-58.77	-4.89
37	37	54	EQ_X	-58.77	14.15
37	37	52	EQ_X	-3.01	14.15
37	37	51	EQ_Y	3.65	47.08
37	37	53	EQ_Y	-12.34	47.08
37	37	54	EQ_Y	-12.34	9.95
37	37	52	EQ_Y	3.65	9.95
38	38	53	DEAD	9.475E-13	1.500E-13

Table 21: Element Stresses - Area Shells, Part 3 of 3

Area	AreaElem	Joint	OutputCase	S13Avg	S23Avg
				KN/m2	KN/m2
38	38	59	DEAD	7.805E-13	3.170E-13
38	38	58	DEAD	4.208E-13	1.598E-12
38	38	54	DEAD	1.044E-12	9.753E-13
38	38	53	G1_power station	0.	0.
38	38	59	G1_power station	0.	0.
38	38	58	G1_power station	0.	0.
38	38	54	G1_power station	0.	0.
38	38	53	G2_power station	-10.35	48.47
38	38	59	G2_power station	-71.8	48.47
38	38	58	G2_power station	-71.8	108.11
38	38	54	G2_power station	-10.35	108.11
38	38	53	Q_power station	-0.38	1.79
38	38	59	Q_power station	-2.66	1.79
38	38	58	Q_power station	-2.66	4.
38	38	54	Q_power station	-0.38	4.
38	38	53	Q_neve	-0.62	4.84
38	38	59	Q_neve	-6.18	4.84
38	38	58	Q_neve	-6.18	10.43
38	38	54	Q_neve	-0.62	10.43
38	38	53	Q_manutenzione	-0.38	1.79
38	38	59	Q_manutenzione	-2.66	1.79
38	38	58	Q_manutenzione	-2.66	4.
38	38	54	Q_manutenzione	-0.38	4.
38	38	53	EQ_X	-65.99	-71.8
38	38	59	EQ_X	145.07	-71.8
38	38	58	EQ_X	145.07	-81.46
38	38	54	EQ_X	-65.99	-81.46
38	38	53	EQ_Y	-48.8	-147.85
38	38	59	EQ_Y	-86.04	-147.85
38	38	58	EQ_Y	-86.04	206.04
38	38	54	EQ_Y	-48.8	206.04
39	39	13	DEAD	-1.029E-11	6.163E-12
39	39	55	DEAD	1.427E-11	7.602E-12
39	39	56	DEAD	-1.868E-12	7.216E-12
39	39	14	DEAD	1.006E-11	7.602E-12
39	39	13	G1_power station	0.	0.
39	39	55	G1_power station	0.	0.
39	39	56	G1_power station	0.	0.
39	39	14	G1_power station	0.	0.
39	39	13	G2_power station	64.26	49.67
39	39	55	G2_power station	1.37	49.67
39	39	56	G2_power station	1.37	107.91
39	39	14	G2_power station	64.26	107.91

Table 21: Element Stresses - Area Shells, Part 3 of 3

Area	AreaElem	Joint	OutputCase	S13Avg	S23Avg
				KN/m2	KN/m2
39	39	13	Q_power station	2.38	1.84
39	39	55	Q_power station	5.087E-02	1.84
39	39	56	Q_power station	5.087E-02	3.99
39	39	14	Q_power station	2.38	3.99
39	39	13	Q_neve	5.35	5.05
39	39	55	Q_neve	-0.4	5.05
39	39	56	Q_neve	-0.4	10.49
39	39	14	Q_neve	5.35	10.49
39	39	13	Q_manutenzione	2.38	1.84
39	39	55	Q_manutenzione	5.087E-02	1.84
39	39	56	Q_manutenzione	5.087E-02	3.99
39	39	14	Q_manutenzione	2.38	3.99
39	39	13	EQ_X	143.23	73.16
39	39	55	EQ_X	-72.26	73.16
39	39	56	EQ_X	-72.26	80.94
39	39	14	EQ_X	143.23	80.94
39	39	13	EQ_Y	82.8	-144.01
39	39	55	EQ_Y	48.52	-144.01
39	39	56	EQ_Y	48.52	196.33
39	39	14	EQ_Y	82.8	196.33
40	40	55	DEAD	-2.329E-12	8.655E-12
40	40	67	DEAD	2.663E-13	-1.417E-12
40	40	68	DEAD	2.937E-12	6.548E-12
40	40	56	DEAD	7.639E-12	3.850E-12
40	40	55	G1_power station	0.	0.
40	40	67	G1_power station	0.	0.
40	40	68	G1_power station	0.	0.
40	40	56	G1_power station	0.	0.
40	40	55	G2_power station	-0.15	44.1
40	40	67	G2_power station	-16.14	44.1
40	40	68	G2_power station	-16.14	20.64
40	40	56	G2_power station	-0.15	20.64
40	40	55	Q_power station	-5.712E-03	1.63
40	40	67	Q_power station	-0.6	1.63
40	40	68	Q_power station	-0.6	0.76
40	40	56	Q_power station	-5.712E-03	0.76
40	40	55	Q_neve	-0.57	4.36
40	40	67	Q_neve	-2.05	4.36
40	40	68	Q_neve	-2.05	2.25
40	40	56	Q_neve	-0.57	2.25
40	40	55	Q_manutenzione	-5.712E-03	1.63
40	40	67	Q_manutenzione	-0.6	1.63
40	40	68	Q_manutenzione	-0.6	0.76

Table 21: Element Stresses - Area Shells, Part 3 of 3

Area	AreaElem	Joint	OutputCase	S13Avg	S23Avg
				KN/m2	KN/m2
40	40	56	Q_manutenzione	-5.712E-03	0.76
40	40	55	EQ_X	-64.74	5.22
40	40	67	EQ_X	-8.53	5.22
40	40	68	EQ_X	-8.53	-13.56
40	40	56	EQ_X	-64.74	-13.56
40	40	55	EQ_Y	12.39	45.75
40	40	67	EQ_Y	-3.32	45.75
40	40	68	EQ_Y	-3.32	10.33
40	40	56	EQ_Y	12.39	10.33
41	41	67	DEAD	1.846E-12	-4.599E-12
41	41	69	DEAD	-2.677E-12	-3.057E-12
41	41	70	DEAD	6.059E-12	2.774E-12
41	41	68	DEAD	-5.837E-12	8.530E-12
41	41	67	G1_power station	0.	0.
41	41	69	G1_power station	0.	0.
41	41	70	G1_power station	0.	0.
41	41	68	G1_power station	0.	0.
41	41	67	G2_power station	-12.46	2.433E-12
41	41	69	G2_power station	-12.46	5.517E-12
41	41	70	G2_power station	-12.46	2.433E-12
41	41	68	G2_power station	-12.46	1.394E-11
41	41	67	Q_power station	-0.46	-2.392E-13
41	41	69	Q_power station	-0.46	-1.428E-13
41	41	70	Q_power station	-0.46	3.533E-13
41	41	68	Q_power station	-0.46	7.130E-13
41	41	67	Q_neve	-1.71	-4.005E-13
41	41	69	Q_neve	-1.71	3.706E-13
41	41	70	Q_neve	-1.71	-6.638E-13
41	41	68	Q_neve	-1.71	2.214E-12
41	41	67	Q_manutenzione	-0.46	-2.392E-13
41	41	69	Q_manutenzione	-0.46	-1.428E-13
41	41	70	Q_manutenzione	-0.46	3.533E-13
41	41	68	Q_manutenzione	-0.46	7.130E-13
41	41	67	EQ_X	-7.65	-4.005E-13
41	41	69	EQ_X	-7.65	3.706E-13
41	41	70	EQ_X	-7.65	-6.638E-13
41	41	68	EQ_X	-7.65	2.214E-12
41	41	67	EQ_Y	2.55	25.3
41	41	69	EQ_Y	-2.55	25.3
41	41	70	EQ_Y	-2.55	20.32
41	41	68	EQ_Y	2.55	20.32
42	42	1	DEAD	2.002E-13	3.393E-13
42	42	57	DEAD	2.002E-13	-1.266E-12

Table 21: Element Stresses - Area Shells, Part 3 of 3

Area	AreaElem	Joint	OutputCase	S13Avg	S23Avg
				KN/m2	KN/m2
42	42	58	DEAD	3.319E-13	-1.873E-13
42	42	59	DEAD	3.319E-13	5.019E-14
42	42	1	G1_power station	0.	0.
42	42	57	G1_power station	0.	0.
42	42	58	G1_power station	0.	0.
42	42	59	G1_power station	0.	0.
42	42	1	G2_power station	-27.12	-22.19
42	42	57	G2_power station	-27.12	-65.61
42	42	58	G2_power station	-73.09	-65.61
42	42	59	G2_power station	-73.09	-22.19
42	42	1	Q_power station	-1.	-0.82
42	42	57	Q_power station	-1.	-2.43
42	42	58	Q_power station	-2.7	-2.43
42	42	59	Q_power station	-2.7	-0.82
42	42	1	Q_neve	-2.07	-1.49
42	42	57	Q_neve	-2.07	-5.41
42	42	58	Q_neve	-6.33	-5.41
42	42	59	Q_neve	-6.33	-1.49
42	42	1	Q_manutenzione	-1.	-0.82
42	42	57	Q_manutenzione	-1.	-2.43
42	42	58	Q_manutenzione	-2.7	-2.43
42	42	59	Q_manutenzione	-2.7	-0.82
42	42	1	EQ_X	-112.91	61.25
42	42	57	EQ_X	-112.91	87.11
42	42	58	EQ_X	143.75	87.11
42	42	59	EQ_X	143.75	61.25
42	42	1	EQ_Y	69.5	-123.54
42	42	57	EQ_Y	69.5	171.29
42	42	58	EQ_Y	97.82	171.29
42	42	59	EQ_Y	97.82	-123.54
43	43	69	DEAD	-1.645E-12	1.254E-12
43	43	71	DEAD	-9.583E-12	1.133E-11
43	43	72	DEAD	-1.113E-11	-6.119E-12
43	43	70	DEAD	4.110E-12	-3.420E-12
43	43	69	G1_power station	0.	0.
43	43	71	G1_power station	0.	0.
43	43	72	G1_power station	0.	0.
43	43	70	G1_power station	0.	0.
43	43	69	G2_power station	-16.14	-44.1
43	43	71	G2_power station	-0.15	-44.1
43	43	72	G2_power station	-0.15	-20.64
43	43	70	G2_power station	-16.14	-20.64
43	43	69	Q_power station	-0.6	-1.63

Table 21: Element Stresses - Area Shells, Part 3 of 3

Area	AreaElem	Joint	OutputCase	S13Avg	S23Avg
				KN/m2	KN/m2
43	43	71	Q_power station	-5.712E-03	-1.63
43	43	72	Q_power station	-5.712E-03	-0.76
43	43	70	Q_power station	-0.6	-0.76
43	43	69	Q_neve	-2.05	-4.36
43	43	71	Q_neve	-0.57	-4.36
43	43	72	Q_neve	-0.57	-2.25
43	43	70	Q_neve	-2.05	-2.25
43	43	69	Q_manutenzione	-0.6	-1.63
43	43	71	Q_manutenzione	-5.712E-03	-1.63
43	43	72	Q_manutenzione	-5.712E-03	-0.76
43	43	70	Q_manutenzione	-0.6	-0.76
43	43	69	EQ_X	-8.53	-5.22
43	43	71	EQ_X	-64.74	-5.22
43	43	72	EQ_X	-64.74	13.56
43	43	70	EQ_X	-8.53	13.56
43	43	69	EQ_Y	3.32	45.75
43	43	71	EQ_Y	-12.39	45.75
43	43	72	EQ_Y	-12.39	10.33
43	43	70	EQ_Y	3.32	10.33
44	44	60	DEAD	-8.531E-13	-1.211E-12
44	44	2	DEAD	-8.531E-13	-8.511E-13
44	44	61	DEAD	1.385E-12	-1.575E-13
44	44	6	DEAD	1.385E-12	-6.111E-14
44	44	60	G1_power station	0.	0.
44	44	2	G1_power station	0.	0.
44	44	61	G1_power station	0.	0.
44	44	6	G1_power station	0.	0.
44	44	60	G2_power station	28.34	-67.4
44	44	2	G2_power station	28.34	-24.63
44	44	61	G2_power station	70.54	-24.63
44	44	6	G2_power station	70.54	-67.4
44	44	60	Q_power station	1.05	-2.49
44	44	2	Q_power station	1.05	-0.91
44	44	61	Q_power station	2.61	-0.91
44	44	6	Q_power station	2.61	-2.49
44	44	60	Q_neve	2.22	-5.67
44	44	2	Q_neve	2.22	-1.82
44	44	61	Q_neve	6.06	-1.82
44	44	6	Q_neve	6.06	-5.67
44	44	60	Q_manutenzione	1.05	-2.49
44	44	2	Q_manutenzione	1.05	-0.91
44	44	61	Q_manutenzione	2.61	-0.91
44	44	6	Q_manutenzione	2.61	-2.49

Table 21: Element Stresses - Area Shells, Part 3 of 3

Area	AreaElem	Joint	OutputCase	S13Avg	S23Avg
				KN/m2	KN/m2
44	44	60	EQ_X	-114.62	-88.81
44	44	2	EQ_X	-114.62	-63.45
44	44	61	EQ_X	144.76	-63.45
44	44	6	EQ_X	144.76	-88.81
44	44	60	EQ_Y	-69.07	163.88
44	44	2	EQ_Y	-69.07	-118.79
44	44	61	EQ_Y	-94.56	-118.79
44	44	6	EQ_Y	-94.56	163.88
45	45	71	DEAD	-7.216E-12	-1.862E-12
45	45	15	DEAD	-3.041E-13	-9.056E-12
45	45	18	DEAD	-6.163E-12	5.511E-12
45	45	72	DEAD	-3.041E-13	3.583E-12
45	45	71	G1_power station	0.	0.
45	45	15	G1_power station	0.	0.
45	45	18	G1_power station	0.	0.
45	45	72	G1_power station	0.	0.
45	45	71	G2_power station	1.37	-49.67
45	45	15	G2_power station	64.26	-49.67
45	45	18	G2_power station	64.26	-107.91
45	45	72	G2_power station	1.37	-107.91
45	45	71	Q_power station	5.087E-02	-1.84
45	45	15	Q_power station	2.38	-1.84
45	45	18	Q_power station	2.38	-3.99
45	45	72	Q_power station	5.087E-02	-3.99
45	45	71	Q_neve	-0.4	-5.05
45	45	15	Q_neve	5.35	-5.05
45	45	18	Q_neve	5.35	-10.49
45	45	72	Q_neve	-0.4	-10.49
45	45	71	Q_manutenzione	5.087E-02	-1.84
45	45	15	Q_manutenzione	2.38	-1.84
45	45	18	Q_manutenzione	2.38	-3.99
45	45	72	Q_manutenzione	5.087E-02	-3.99
45	45	71	EQ_X	-72.26	-73.16
45	45	15	EQ_X	143.23	-73.16
45	45	18	EQ_X	143.23	-80.94
45	45	72	EQ_X	-72.26	-80.94
45	45	71	EQ_Y	-48.52	-144.01
45	45	15	EQ_Y	-82.8	-144.01
45	45	18	EQ_Y	-82.8	196.33
45	45	72	EQ_Y	-48.52	196.33
46	46	62	DEAD	2.430E-13	-7.455E-15
46	46	3	DEAD	5.321E-13	-7.455E-15
46	46	64	DEAD	-5.470E-13	3.875E-13

Table 21: Element Stresses - Area Shells, Part 3 of 3

Area	AreaElem	Joint	OutputCase	S13Avg	S23Avg
				KN/m2	KN/m2
46	46	63	DEAD	5.321E-13	3.875E-13
46	46	62	G1_power station	0.	0.
46	46	3	G1_power station	0.	0.
46	46	64	G1_power station	0.	0.
46	46	63	G1_power station	0.	0.
46	46	62	G2_power station	70.54	24.63
46	46	3	G2_power station	28.34	24.63
46	46	64	G2_power station	28.34	67.4
46	46	63	G2_power station	70.54	67.4
46	46	62	Q_power station	2.61	0.91
46	46	3	Q_power station	1.05	0.91
46	46	64	Q_power station	1.05	2.49
46	46	63	Q_power station	2.61	2.49
46	46	62	Q_neve	6.06	1.82
46	46	3	Q_neve	2.22	1.82
46	46	64	Q_neve	2.22	5.67
46	46	63	Q_neve	6.06	5.67
46	46	62	Q_manutenzione	2.61	0.91
46	46	3	Q_manutenzione	1.05	0.91
46	46	64	Q_manutenzione	1.05	2.49
46	46	63	Q_manutenzione	2.61	2.49
46	46	62	EQ_X	144.76	63.45
46	46	3	EQ_X	-114.62	63.45
46	46	64	EQ_X	-114.62	88.81
46	46	63	EQ_X	144.76	88.81
46	46	62	EQ_Y	94.56	-118.79
46	46	3	EQ_Y	69.07	-118.79
46	46	64	EQ_Y	69.07	163.88
46	46	63	EQ_Y	94.56	163.88
48	48	65	DEAD	1.491E-14	7.269E-13
48	48	4	DEAD	1.491E-14	6.916E-13
48	48	66	DEAD	-7.751E-13	-1.948E-13
48	48	5	DEAD	-7.751E-13	2.966E-13
48	48	65	G1_power station	0.	0.
48	48	4	G1_power station	0.	0.
48	48	66	G1_power station	0.	0.
48	48	5	G1_power station	0.	0.
48	48	65	G2_power station	-27.12	65.61
48	48	4	G2_power station	-27.12	22.19
48	48	66	G2_power station	-73.09	22.19
48	48	5	G2_power station	-73.09	65.61
48	48	65	Q_power station	-1.	2.43
48	48	4	Q_power station	-1.	0.82

Table 21: Element Stresses - Area Shells, Part 3 of 3

Area	AreaElem	Joint	OutputCase	S13Avg	S23Avg
				KN/m2	KN/m2
48	48	66	Q_power station	-2.7	0.82
48	48	5	Q_power station	-2.7	2.43
48	48	65	Q_neve	-2.07	5.41
48	48	4	Q_neve	-2.07	1.49
48	48	66	Q_neve	-6.33	1.49
48	48	5	Q_neve	-6.33	5.41
48	48	65	Q_manutenzione	-1.	2.43
48	48	4	Q_manutenzione	-1.	0.82
48	48	66	Q_manutenzione	-2.7	0.82
48	48	5	Q_manutenzione	-2.7	2.43
48	48	65	EQ_X	-112.91	-87.11
48	48	4	EQ_X	-112.91	-61.25
48	48	66	EQ_X	143.75	-61.25
48	48	5	EQ_X	143.75	-87.11
48	48	65	EQ_Y	-69.5	171.29
48	48	4	EQ_Y	-69.5	-123.54
48	48	66	EQ_Y	-97.82	-123.54
48	48	5	EQ_Y	-97.82	171.29
49	49	21	DEAD	8.345E-12	-6.499E-12
49	49	73	DEAD	-8.249E-13	-8.041E-12
49	49	74	DEAD	-9.561E-12	1.562E-11
49	49	22	DEAD	1.603E-11	9.865E-12
49	49	21	G1_power station	0.	0.
49	49	73	G1_power station	0.	0.
49	49	74	G1_power station	0.	0.
49	49	22	G1_power station	0.	0.
49	49	21	G2_power station	-65.88	-48.18
49	49	73	G2_power station	-4.85	-48.18
49	49	74	G2_power station	-4.85	-106.88
49	49	22	G2_power station	-65.88	-106.88
49	49	21	Q_power station	-2.44	-1.78
49	49	73	Q_power station	-0.18	-1.78
49	49	74	Q_power station	-0.18	-3.95
49	49	22	Q_power station	-2.44	-3.95
49	49	21	Q_neve	-5.59	-4.95
49	49	73	Q_neve	-6.119E-02	-4.95
49	49	74	Q_neve	-6.119E-02	-10.45
49	49	22	Q_neve	-5.59	-10.45
49	49	21	Q_manutenzione	-2.44	-1.78
49	49	73	Q_manutenzione	-0.18	-1.78
49	49	74	Q_manutenzione	-0.18	-3.95
49	49	22	Q_manutenzione	-2.44	-3.95
49	49	21	EQ_X	141.	71.45

Table 21: Element Stresses - Area Shells, Part 3 of 3

Area	AreaElem	Joint	OutputCase	S13Avg	S23Avg
				KN/m2	KN/m2
49	49	73	EQ_X	-69.36	71.45
49	49	74	EQ_X	-69.36	80.97
49	49	22	EQ_X	141.	80.97
49	49	21	EQ_Y	84.77	-148.92
49	49	73	EQ_Y	48.34	-148.92
49	49	74	EQ_Y	48.34	205.53
49	49	22	EQ_Y	84.77	205.53
50	50	73	DEAD	1.868E-12	-3.263E-12
50	50	75	DEAD	1.455E-12	-3.263E-12
50	50	76	DEAD	1.029E-11	-2.210E-12
50	50	74	DEAD	-1.118E-11	-2.210E-12
50	50	73	G1_power station	0.	0.
50	50	75	G1_power station	0.	0.
50	50	76	G1_power station	0.	0.
50	50	74	G1_power station	0.	0.
50	50	73	G2_power station	-3.08	-41.82
50	50	75	G2_power station	9.88	-41.82
50	50	76	G2_power station	9.88	-18.58
50	50	74	G2_power station	-3.08	-18.58
50	50	73	Q_power station	-0.11	-1.55
50	50	75	Q_power station	0.37	-1.55
50	50	76	Q_power station	0.37	-0.69
50	50	74	Q_power station	-0.11	-0.69
50	50	73	Q_neve	0.14	-4.15
50	50	75	Q_neve	1.29	-4.15
50	50	76	Q_neve	1.29	-2.08
50	50	74	Q_neve	0.14	-2.08
50	50	73	Q_manutenzione	-0.11	-1.55
50	50	75	Q_manutenzione	0.37	-1.55
50	50	76	Q_manutenzione	0.37	-0.69
50	50	74	Q_manutenzione	-0.11	-0.69
50	50	73	EQ_X	-62.2	4.63
50	50	75	EQ_X	-5.81	4.63
50	50	76	EQ_X	-5.81	-14.4
50	50	74	EQ_X	-62.2	-14.4
50	50	73	EQ_Y	11.71	46.09
50	50	75	EQ_Y	-3.74	46.09
50	50	76	EQ_Y	-3.74	9.33
50	50	74	EQ_Y	11.71	9.33
51	51	75	DEAD	5.875E-12	-9.464E-12
51	51	77	DEAD	1.097E-12	-1.101E-11
51	51	78	DEAD	-4.658E-12	-2.091E-12
51	51	76	DEAD	7.417E-12	-7.846E-12

Table 21: Element Stresses - Area Shells, Part 3 of 3

Area	AreaElem	Joint	OutputCase	S13Avg	S23Avg
				KN/m2	KN/m2
51	51	75	G1_power station	0.	0.
51	51	77	G1_power station	0.	0.
51	51	78	G1_power station	0.	0.
51	51	76	G1_power station	0.	0.
51	51	75	G2_power station	6.37	-1.970E-11
51	51	77	G2_power station	6.37	-1.970E-11
51	51	78	G2_power station	6.37	-7.059E-12
51	51	76	G2_power station	6.37	-7.059E-12
51	51	75	Q_power station	0.24	-9.271E-13
51	51	77	Q_power station	0.24	-9.271E-13
51	51	78	Q_power station	0.24	-1.371E-13
51	51	76	Q_power station	0.24	-1.371E-13
51	51	75	Q_neve	0.98	-3.916E-12
51	51	77	Q_neve	0.98	-3.916E-12
51	51	78	Q_neve	0.98	-4.928E-13
51	51	76	Q_neve	0.98	-4.928E-13
51	51	75	Q_manutenzione	0.24	-9.271E-13
51	51	77	Q_manutenzione	0.24	-9.271E-13
51	51	78	Q_manutenzione	0.24	-1.371E-13
51	51	76	Q_manutenzione	0.24	-1.371E-13
51	51	75	EQ_X	-5.	3.708E-12
51	51	77	EQ_X	-5.	3.708E-12
51	51	78	EQ_X	-5.	5.485E-13
51	51	76	EQ_X	-5.	5.485E-13
51	51	75	EQ_Y	2.02	24.96
51	51	77	EQ_Y	-2.02	24.96
51	51	78	EQ_Y	-2.02	20.58
51	51	76	EQ_Y	2.02	20.58
52	52	77	DEAD	1.127E-11	-9.078E-12
52	52	79	DEAD	5.104E-12	-9.078E-12
52	52	80	DEAD	1.549E-11	-6.518E-13
52	52	78	DEAD	-7.536E-12	-6.518E-13
52	52	77	G1_power station	0.	0.
52	52	79	G1_power station	0.	0.
52	52	80	G1_power station	0.	0.
52	52	78	G1_power station	0.	0.
52	52	77	G2_power station	9.88	41.82
52	52	79	G2_power station	-3.08	41.82
52	52	80	G2_power station	-3.08	18.58
52	52	78	G2_power station	9.88	18.58
52	52	77	Q_power station	0.37	1.55
52	52	79	Q_power station	-0.11	1.55
52	52	80	Q_power station	-0.11	0.69

Table 21: Element Stresses - Area Shells, Part 3 of 3

Area	AreaElem	Joint	OutputCase	S13Avg	S23Avg
				KN/m2	KN/m2
52	52	78	Q_power station	0.37	0.69
52	52	77	Q_neve	1.29	4.15
52	52	79	Q_neve	0.14	4.15
52	52	80	Q_neve	0.14	2.08
52	52	78	Q_neve	1.29	2.08
52	52	77	Q_manutenzione	0.37	1.55
52	52	79	Q_manutenzione	-0.11	1.55
52	52	80	Q_manutenzione	-0.11	0.69
52	52	78	Q_manutenzione	0.37	0.69
52	52	77	EQ_X	-5.81	-4.63
52	52	79	EQ_X	-62.2	-4.63
52	52	80	EQ_X	-62.2	14.4
52	52	78	EQ_X	-5.81	14.4
52	52	77	EQ_Y	3.74	46.09
52	52	79	EQ_Y	-11.71	46.09
52	52	80	EQ_Y	-11.71	9.33
52	52	78	EQ_Y	3.74	9.33
53	53	79	DEAD	3.567E-12	2.699E-12
53	53	10	DEAD	5.495E-12	1.157E-12
53	53	9	DEAD	2.514E-12	1.007E-11
53	53	80	DEAD	9.708E-12	4.317E-12
53	53	79	G1_power station	0.	0.
53	53	10	G1_power station	0.	0.
53	53	9	G1_power station	0.	0.
53	53	80	G1_power station	0.	0.
53	53	79	G2_power station	-4.85	48.18
53	53	10	G2_power station	-65.88	48.18
53	53	9	G2_power station	-65.88	106.88
53	53	80	G2_power station	-4.85	106.88
53	53	79	Q_power station	-0.18	1.78
53	53	10	Q_power station	-2.44	1.78
53	53	9	Q_power station	-2.44	3.95
53	53	80	Q_power station	-0.18	3.95
53	53	79	Q_neve	-6.119E-02	4.95
53	53	10	Q_neve	-5.59	4.95
53	53	9	Q_neve	-5.59	10.45
53	53	80	Q_neve	-6.119E-02	10.45
53	53	79	Q_manutenzione	-0.18	1.78
53	53	10	Q_manutenzione	-2.44	1.78
53	53	9	Q_manutenzione	-2.44	3.95
53	53	80	Q_manutenzione	-0.18	3.95
53	53	79	EQ_X	-69.36	-71.45
53	53	10	EQ_X	141.	-71.45

Table 21: Element Stresses - Area Shells, Part 3 of 3

Area	AreaElem	Joint	OutputCase	S13Avg	S23Avg
				KN/m2	KN/m2
53	53	9	EQ_X	141.	-80.97
53	53	80	EQ_X	-69.36	-80.97
53	53	79	EQ_Y	-48.34	-148.92
53	53	10	EQ_Y	-84.77	-148.92
53	53	9	EQ_Y	-84.77	205.53
53	53	80	EQ_Y	-48.34	205.53
54	54	60	DEAD	-5.565E-14	-6.461E-13
54	54	6	DEAD	2.077E-13	6.037E-14
54	54	81	DEAD	2.077E-13	-6.461E-13
54	54	82	DEAD	-5.565E-14	-1.125E-12
54	54	60	G1_power station	0.	0.
54	54	6	G1_power station	0.	0.
54	54	81	G1_power station	0.	0.
54	54	82	G1_power station	0.	0.
54	54	60	G2_power station	-36.18	-65.15
54	54	6	G2_power station	-107.42	-65.15
54	54	81	G2_power station	-107.42	-11.52
54	54	82	G2_power station	-36.18	-11.52
54	54	60	Q_power station	-1.34	-2.41
54	54	6	Q_power station	-3.97	-2.41
54	54	81	Q_power station	-3.97	-0.43
54	54	82	Q_power station	-1.34	-0.43
54	54	60	Q_neve	-3.61	-5.45
54	54	6	Q_neve	-10.22	-5.45
54	54	81	Q_neve	-10.22	-0.52
54	54	82	Q_neve	-3.61	-0.52
54	54	60	Q_manutenzione	-1.34	-2.41
54	54	6	Q_manutenzione	-3.97	-2.41
54	54	81	Q_manutenzione	-3.97	-0.43
54	54	82	Q_manutenzione	-1.34	-0.43
54	54	60	EQ_X	-165.49	84.29
54	54	6	EQ_X	197.75	84.29
54	54	81	EQ_X	197.75	54.79
54	54	82	EQ_X	-165.49	54.79
54	54	60	EQ_Y	79.05	164.39
54	54	6	EQ_Y	91.96	164.39
54	54	81	EQ_Y	91.96	-70.87
54	54	82	EQ_Y	79.05	-70.87
55	55	82	DEAD	1.170E-12	-1.550E-12
55	55	81	DEAD	3.354E-13	-1.550E-12
55	55	83	DEAD	-4.099E-13	2.982E-14
55	55	84	DEAD	2.705E-12	2.982E-14
55	55	82	G1_power station	0.	0.

Table 21: Element Stresses - Area Shells, Part 3 of 3

Area	AreaElem	Joint	OutputCase	S13Avg	S23Avg
				KN/m2	KN/m2
55	55	81	G1_power station	0.	0.
55	55	83	G1_power station	0.	0.
55	55	84	G1_power station	0.	0.
55	55	82	G2_power station	-41.59	-7.91
55	55	81	G2_power station	-18.61	-7.91
55	55	83	G2_power station	-18.61	7.82
55	55	84	G2_power station	-41.59	7.82
55	55	82	Q_power station	-1.54	-0.29
55	55	81	Q_power station	-0.69	-0.29
55	55	83	Q_power station	-0.69	0.29
55	55	84	Q_power station	-1.54	0.29
55	55	82	Q_neve	-4.01	-0.17
55	55	81	Q_neve	-1.93	-0.17
55	55	83	Q_neve	-1.93	1.3
55	55	84	Q_neve	-4.01	1.3
55	55	82	Q_manutenzione	-1.54	-0.29
55	55	81	Q_manutenzione	-0.69	-0.29
55	55	83	Q_manutenzione	-0.69	0.29
55	55	84	Q_manutenzione	-1.54	0.29
55	55	82	EQ_X	37.95	14.7
55	55	81	EQ_X	6.58	14.7
55	55	83	EQ_X	6.58	-0.32
55	55	84	EQ_X	37.95	-0.32
55	55	82	EQ_Y	6.25	-63.42
55	55	81	EQ_Y	-15.81	-63.42
55	55	83	EQ_Y	-15.81	4.77
55	55	84	EQ_Y	6.25	4.77
56	56	84	DEAD	2.046E-12	4.941E-13
56	56	83	DEAD	-3.703E-12	-4.052E-13
56	56	85	DEAD	-2.958E-12	4.941E-13
56	56	86	DEAD	5.103E-13	2.531E-13
56	56	84	G1_power station	0.	0.
56	56	83	G1_power station	0.	0.
56	56	85	G1_power station	0.	0.
56	56	86	G1_power station	0.	0.
56	56	84	G2_power station	-8.87	3.63
56	56	83	G2_power station	-4.74	3.63
56	56	85	G2_power station	-4.74	6.61
56	56	86	G2_power station	-8.87	6.61
56	56	84	Q_power station	-0.33	0.13
56	56	83	Q_power station	-0.18	0.13
56	56	85	Q_power station	-0.18	0.24
56	56	86	Q_power station	-0.33	0.24

Table 21: Element Stresses - Area Shells, Part 3 of 3

Area	AreaElem	Joint	OutputCase	S13Avg	S23Avg
				KN/m2	KN/m2
56	56	84	Q_neve	-0.88	0.92
56	56	83	Q_neve	-0.48	0.92
56	56	85	Q_neve	-0.48	1.22
56	56	86	Q_neve	-0.88	1.22
56	56	84	Q_manutenzione	-0.33	0.13
56	56	83	Q_manutenzione	-0.18	0.13
56	56	85	Q_manutenzione	-0.18	0.24
56	56	86	Q_manutenzione	-0.33	0.24
56	56	84	EQ_X	14.62	4.8
56	56	83	EQ_X	10.63	4.8
56	56	85	EQ_X	10.63	0.82
56	56	86	EQ_X	14.62	0.82
56	56	84	EQ_Y	-0.48	5.31
56	56	83	EQ_Y	4.61	5.31
56	56	85	EQ_Y	4.61	-8.72
56	56	86	EQ_Y	-0.48	-8.72
57	57	86	DEAD	-2.051E-12	-2.939E-13
57	57	85	DEAD	1.899E-12	6.054E-13
57	57	87	DEAD	1.899E-12	-1.622E-13
57	57	88	DEAD	-2.051E-12	7.875E-14
57	57	86	G1_power station	0.	0.
57	57	85	G1_power station	0.	0.
57	57	87	G1_power station	0.	0.
57	57	88	G1_power station	0.	0.
57	57	86	G2_power station	2.87	5.81
57	57	85	G2_power station	3.8	5.81
57	57	87	G2_power station	3.8	5.93
57	57	88	G2_power station	2.87	5.93
57	57	86	Q_power station	0.11	0.22
57	57	85	Q_power station	0.14	0.22
57	57	87	Q_power station	0.14	0.22
57	57	88	Q_power station	0.11	0.22
57	57	86	Q_neve	0.31	1.14
57	57	85	Q_neve	0.42	1.14
57	57	87	Q_neve	0.42	1.18
57	57	88	Q_neve	0.31	1.18
57	57	86	Q_manutenzione	0.11	0.22
57	57	85	Q_manutenzione	0.14	0.22
57	57	87	Q_manutenzione	0.14	0.22
57	57	88	Q_manutenzione	0.11	0.22
57	57	86	EQ_X	9.14	1.78
57	57	85	EQ_X	7.71	1.78
57	57	87	EQ_X	7.71	0.15

Table 21: Element Stresses - Area Shells, Part 3 of 3

Area	AreaElem	Joint	OutputCase	S13Avg	S23Avg
				KN/m2	KN/m2
57	57	88	EQ_X	9.14	0.15
57	57	86	EQ_Y	-1.04	-9.31
57	57	85	EQ_Y	-0.65	-9.31
57	57	87	EQ_Y	-0.65	-2.64
57	57	88	EQ_Y	-1.04	-2.64
58	58	88	DEAD	-6.841E-13	-8.993E-13
58	58	87	DEAD	-3.244E-13	-5.396E-13
58	58	89	DEAD	-6.841E-13	-2.410E-13
58	58	90	DEAD	-5.878E-13	-1.446E-13
58	58	88	G1_power station	0.	0.
58	58	87	G1_power station	0.	0.
58	58	89	G1_power station	0.	0.
58	58	90	G1_power station	0.	0.
58	58	88	G2_power station	5.19	5.65
58	58	87	G2_power station	6.4	5.65
58	58	89	G2_power station	6.4	4.52
58	58	90	G2_power station	5.19	4.52
58	58	88	Q_power station	0.19	0.21
58	58	87	Q_power station	0.24	0.21
58	58	89	Q_power station	0.24	0.17
58	58	90	Q_power station	0.19	0.17
58	58	88	Q_neve	0.61	1.15
58	58	87	Q_neve	0.74	1.15
58	58	89	Q_neve	0.74	1.04
58	58	90	Q_neve	0.61	1.04
58	58	88	Q_manutenzione	0.19	0.21
58	58	87	Q_manutenzione	0.24	0.21
58	58	89	Q_manutenzione	0.24	0.17
58	58	90	Q_manutenzione	0.19	0.17
58	58	88	EQ_X	5.76	0.49
58	58	87	EQ_X	5.32	0.49
58	58	89	EQ_X	5.32	-0.23
58	58	90	EQ_X	5.76	-0.23
58	58	88	EQ_Y	-0.76	-3.
58	58	87	EQ_Y	-0.21	-3.
58	58	89	EQ_Y	-0.21	-3.35
58	58	90	EQ_Y	-0.76	-3.35
59	59	90	DEAD	-2.484E-13	-1.140E-12
59	59	89	DEAD	9.271E-13	2.864E-13
59	59	91	DEAD	-5.117E-13	8.355E-13
59	59	92	DEAD	1.371E-13	5.498E-13
59	59	90	G1_power station	0.	0.
59	59	89	G1_power station	0.	0.

Table 21: Element Stresses - Area Shells, Part 3 of 3

Area	AreaElem	Joint	OutputCase	S13Avg	S23Avg
				KN/m2	KN/m2
59	59	91	G1_power station	0.	0.
59	59	92	G1_power station	0.	0.
59	59	90	G2_power station	-1.59	3.52
59	59	89	G2_power station	3.18	3.52
59	59	91	G2_power station	3.18	6.96
59	59	92	G2_power station	-1.59	6.96
59	59	90	Q_power station	-5.887E-02	0.13
59	59	89	Q_power station	0.12	0.13
59	59	91	Q_power station	0.12	0.26
59	59	92	Q_power station	-5.887E-02	0.26
59	59	90	Q_neve	5.062E-02	0.94
59	59	89	Q_neve	0.48	0.94
59	59	91	Q_neve	0.48	1.28
59	59	92	Q_neve	5.062E-02	1.28
59	59	90	Q_manutenzione	-5.887E-02	0.13
59	59	89	Q_manutenzione	0.12	0.13
59	59	91	Q_manutenzione	0.12	0.26
59	59	92	Q_manutenzione	-5.887E-02	0.26
59	59	90	EQ_X	3.49	-0.16
59	59	89	EQ_X	3.57	-0.16
59	59	91	EQ_X	3.57	-1.18
59	59	92	EQ_X	3.49	-1.18
59	59	90	EQ_Y	0.91	-3.22
59	59	89	EQ_Y	-0.14	-3.22
59	59	91	EQ_Y	-0.14	-5.2
59	59	92	EQ_Y	0.91	-5.2
60	60	92	DEAD	-4.357E-13	1.038E-13
60	60	91	DEAD	5.729E-13	1.038E-13
60	60	26	DEAD	-1.724E-13	-2.782E-14
60	60	27	DEAD	1.100E-12	-2.782E-14
60	60	92	G1_power station	0.	0.
60	60	91	G1_power station	0.	0.
60	60	26	G1_power station	0.	0.
60	60	27	G1_power station	0.	0.
60	60	92	G2_power station	-25.06	3.41
60	60	91	G2_power station	-10.77	3.41
60	60	26	G2_power station	-10.77	-7.37
60	60	27	G2_power station	-25.06	-7.37
60	60	92	Q_power station	-0.93	0.13
60	60	91	Q_power station	-0.4	0.13
60	60	26	Q_power station	-0.4	-0.27
60	60	27	Q_power station	-0.93	-0.27
60	60	92	Q_neve	-1.94	0.99

Table 21: Element Stresses - Area Shells, Part 3 of 3

Area	AreaElem	Joint	OutputCase	S13Avg	S23Avg
				KN/m2	KN/m2
60	60	91	Q_neve	-0.92	0.99
60	60	26	Q_neve	-0.92	-0.65
60	60	27	Q_neve	-1.94	-0.65
60	60	92	Q_manutenzione	-0.93	0.13
60	60	91	Q_manutenzione	-0.4	0.13
60	60	26	Q_manutenzione	-0.4	-0.27
60	60	27	Q_manutenzione	-0.93	-0.27
60	60	92	EQ_X	1.28	-0.95
60	60	91	EQ_X	-1.35	-0.95
60	60	26	EQ_X	-1.35	-5.86
60	60	27	EQ_X	1.28	-5.86
60	60	92	EQ_Y	4.25	-4.14
60	60	91	EQ_Y	-1.22	-4.14
60	60	26	EQ_Y	-1.22	-4.14
60	60	27	EQ_Y	4.25	-4.14
61	61	65	DEAD	-9.453E-15	9.346E-13
61	61	5	DEAD	1.860E-12	9.346E-13
61	61	93	DEAD	1.834E-12	-2.504E-13
61	61	94	DEAD	1.333E-12	-2.504E-13
61	61	65	G1_power station	0.	0.
61	61	5	G1_power station	0.	0.
61	61	93	G1_power station	0.	0.
61	61	94	G1_power station	0.	0.
61	61	65	G2_power station	32.46	63.99
61	61	5	G2_power station	110.95	63.99
61	61	93	G2_power station	110.95	13.85
61	61	94	G2_power station	32.46	13.85
61	61	65	Q_power station	1.2	2.37
61	61	5	Q_power station	4.1	2.37
61	61	93	Q_power station	4.1	0.51
61	61	94	Q_power station	1.2	0.51
61	61	65	Q_neve	3.18	5.26
61	61	5	Q_neve	10.43	5.26
61	61	93	Q_neve	10.43	0.69
61	61	94	Q_neve	3.18	0.69
61	61	65	Q_manutenzione	1.2	2.37
61	61	5	Q_manutenzione	4.1	2.37
61	61	93	Q_manutenzione	4.1	0.51
61	61	94	Q_manutenzione	1.2	0.51
61	61	65	EQ_X	-184.4	88.05
61	61	5	EQ_X	213.98	88.05
61	61	93	EQ_X	213.98	59.9
61	61	94	EQ_X	-184.4	59.9

Table 21: Element Stresses - Area Shells, Part 3 of 3

Area	AreaElem	Joint	OutputCase	S13Avg	S23Avg
				KN/m2	KN/m2
61	61	65	EQ_Y	82.68	171.5
61	61	5	EQ_Y	101.22	171.5
61	61	93	EQ_Y	101.22	-74.43
61	61	94	EQ_Y	82.68	-74.43
62	62	94	DEAD	-9.977E-13	7.418E-13
62	62	93	DEAD	8.456E-13	7.418E-13
62	62	95	DEAD	8.456E-13	-9.698E-13
62	62	96	DEAD	-9.977E-13	-9.698E-13
62	62	94	G1_power station	0.	0.
62	62	93	G1_power station	0.	0.
62	62	95	G1_power station	0.	0.
62	62	96	G1_power station	0.	0.
62	62	94	G2_power station	49.14	10.26
62	62	93	G2_power station	21.92	10.26
62	62	95	G2_power station	21.92	-6.73
62	62	96	G2_power station	49.14	-6.73
62	62	94	Q_power station	1.82	0.38
62	62	93	Q_power station	0.81	0.38
62	62	95	Q_power station	0.81	-0.25
62	62	96	Q_power station	1.82	-0.25
62	62	94	Q_neve	4.58	0.36
62	62	93	Q_neve	2.09	0.36
62	62	95	Q_neve	2.09	-1.24
62	62	96	Q_neve	4.58	-1.24
62	62	94	Q_manutenzione	1.82	0.38
62	62	93	Q_manutenzione	0.81	0.38
62	62	95	Q_manutenzione	0.81	-0.25
62	62	96	Q_manutenzione	1.82	-0.25
62	62	94	EQ_X	30.91	15.56
62	62	93	EQ_X	6.96	15.56
62	62	95	EQ_X	6.96	1.63
62	62	96	EQ_X	30.91	1.63
62	62	94	EQ_Y	6.41	-67.06
62	62	93	EQ_Y	-17.93	-67.06
62	62	95	EQ_Y	-17.93	3.36
62	62	96	EQ_Y	6.41	3.36
63	63	96	DEAD	1.545E-12	-1.765E-12
63	63	95	DEAD	-1.063E-12	-1.765E-12
63	63	25	DEAD	-1.089E-12	4.730E-13
63	63	28	DEAD	2.887E-12	4.730E-13
63	63	96	G1_power station	0.	0.
63	63	95	G1_power station	0.	0.
63	63	25	G1_power station	0.	0.

Table 21: Element Stresses - Area Shells, Part 3 of 3

Area	AreaElem	Joint	OutputCase	S13Avg	S23Avg
				KN/m2	KN/m2
63	63	28	G1_power station	0.	0.
63	63	96	G2_power station	41.83	1.2
63	63	95	G2_power station	17.72	1.2
63	63	25	G2_power station	17.72	17.02
63	63	28	G2_power station	41.83	17.02
63	63	96	Q_power station	1.55	4.456E-02
63	63	95	Q_power station	0.66	4.456E-02
63	63	25	Q_power station	0.66	0.63
63	63	28	Q_power station	1.55	0.63
63	63	96	Q_neve	3.7	-0.55
63	63	95	Q_neve	1.76	-0.55
63	63	25	Q_neve	1.76	1.59
63	63	28	Q_neve	3.7	1.59
63	63	96	Q_manutenzione	1.55	4.456E-02
63	63	95	Q_manutenzione	0.66	4.456E-02
63	63	25	Q_manutenzione	0.66	0.63
63	63	28	Q_manutenzione	1.55	0.63
63	63	96	EQ_X	-7.93	4.46
63	63	95	EQ_X	-7.7	4.46
63	63	25	EQ_X	-7.7	-16.85
63	63	28	EQ_X	-7.93	-16.85
63	63	96	EQ_Y	-2.82	4.66
63	63	95	EQ_Y	-4.38	4.66
63	63	25	EQ_Y	-4.38	-6.95
63	63	28	EQ_Y	-2.82	-6.95
64	64	6	DEAD	2.737E-12	1.376E-12
64	64	40	DEAD	-2.444E-13	-7.825E-13
64	64	97	DEAD	2.737E-12	9.808E-13
64	64	81	DEAD	-3.404E-12	4.024E-13
64	64	6	G1_power station	0.	0.
64	64	40	G1_power station	0.	0.
64	64	97	G1_power station	0.	0.
64	64	81	G1_power station	0.	0.
64	64	6	G2_power station	-105.34	106.46
64	64	40	G2_power station	-24.2	106.46
64	64	97	G2_power station	-24.2	36.48
64	64	81	G2_power station	-105.34	36.48
64	64	6	Q_power station	-3.9	3.94
64	64	40	Q_power station	-0.9	3.94
64	64	97	Q_power station	-0.9	1.35
64	64	81	Q_power station	-3.9	1.35
64	64	6	Q_neve	-10.07	10.26
64	64	40	Q_neve	-2.89	10.26

Table 21: Element Stresses - Area Shells, Part 3 of 3

Area	AreaElem	Joint	OutputCase	S13Avg	S23Avg
				KN/m2	KN/m2
64	64	97	Q_neve	-2.89	4.09
64	64	81	Q_neve	-10.07	4.09
64	64	6	Q_manutenzione	-3.9	3.94
64	64	40	Q_manutenzione	-0.9	3.94
64	64	97	Q_manutenzione	-0.9	1.35
64	64	81	Q_manutenzione	-3.9	1.35
64	64	6	EQ_X	198.76	-72.62
64	64	40	EQ_X	-92.55	-72.62
64	64	97	EQ_X	-92.55	-60.58
64	64	81	EQ_X	198.76	-60.58
64	64	6	EQ_Y	-84.54	196.81
64	64	40	EQ_Y	-59.17	196.81
64	64	97	EQ_Y	-59.17	-79.87
64	64	81	EQ_Y	-84.54	-79.87
65	65	81	DEAD	1.113E-13	9.584E-13
65	65	97	DEAD	-4.154E-13	2.131E-13
65	65	98	DEAD	-4.154E-13	2.538E-12
65	65	83	DEAD	1.113E-13	1.003E-12
65	65	81	G1_power station	0.	0.
65	65	97	G1_power station	0.	0.
65	65	98	G1_power station	0.	0.
65	65	83	G1_power station	0.	0.
65	65	81	G2_power station	-18.32	28.05
65	65	97	G2_power station	-24.71	28.05
65	65	98	G2_power station	-24.71	10.12
65	65	83	G2_power station	-18.32	10.12
65	65	81	Q_power station	-0.68	1.04
65	65	97	Q_power station	-0.91	1.04
65	65	98	Q_power station	-0.91	0.37
65	65	83	Q_power station	-0.68	0.37
65	65	81	Q_neve	-1.94	3.35
65	65	97	Q_neve	-2.53	3.35
65	65	98	Q_neve	-2.53	1.82
65	65	83	Q_neve	-1.94	1.82
65	65	81	Q_manutenzione	-0.68	1.04
65	65	97	Q_manutenzione	-0.91	1.04
65	65	98	Q_manutenzione	-0.91	0.37
65	65	83	Q_manutenzione	-0.68	0.37
65	65	81	EQ_X	5.6	-25.26
65	65	97	EQ_X	20.95	-25.26
65	65	98	EQ_X	20.95	-0.46
65	65	83	EQ_X	5.6	-0.46
65	65	81	EQ_Y	17.24	-73.68

Table 21: Element Stresses - Area Shells, Part 3 of 3

Area	AreaElem	Joint	OutputCase	S13Avg	S23Avg
				KN/m2	KN/m2
65	65	97	EQ_Y	-1.3	-73.68
65	65	98	EQ_Y	-1.3	13.55
65	65	83	EQ_Y	17.24	13.55
66	66	83	DEAD	-3.764E-12	2.289E-12
66	66	98	DEAD	3.590E-12	1.775E-12
66	66	99	DEAD	-3.408E-13	-1.529E-12
66	66	85	DEAD	-4.046E-12	-3.312E-13
66	66	83	G1_power station	0.	0.
66	66	98	G1_power station	0.	0.
66	66	99	G1_power station	0.	0.
66	66	85	G1_power station	0.	0.
66	66	83	G2_power station	-4.53	11.23
66	66	98	G2_power station	-4.3	11.23
66	66	99	G2_power station	-4.3	5.99
66	66	85	G2_power station	-4.53	5.99
66	66	83	Q_power station	-0.17	0.42
66	66	98	Q_power station	-0.16	0.42
66	66	99	Q_power station	-0.16	0.22
66	66	85	Q_power station	-0.17	0.22
66	66	83	Q_neve	-0.49	1.92
66	66	98	Q_neve	-0.45	1.92
66	66	99	Q_neve	-0.45	1.49
66	66	85	Q_neve	-0.49	1.49
66	66	83	Q_manutenzione	-0.17	0.42
66	66	98	Q_manutenzione	-0.16	0.42
66	66	99	Q_manutenzione	-0.16	0.22
66	66	85	Q_manutenzione	-0.17	0.22
66	66	83	EQ_X	11.13	-2.54
66	66	98	EQ_X	10.34	-2.54
66	66	99	EQ_X	10.34	-1.3
66	66	85	EQ_X	11.13	-1.3
66	66	83	EQ_Y	-4.85	13.39
66	66	98	EQ_Y	0.68	13.39
66	66	99	EQ_Y	0.68	-3.04
66	66	85	EQ_Y	-4.85	-3.04
67	67	85	DEAD	9.639E-14	-1.771E-13
67	67	99	DEAD	2.518E-12	2.856E-14
67	67	100	DEAD	3.597E-13	4.812E-13
67	67	87	DEAD	6.747E-13	1.872E-12
67	67	85	G1_power station	0.	0.
67	67	99	G1_power station	0.	0.
67	67	100	G1_power station	0.	0.
67	67	87	G1_power station	0.	0.

Table 21: Element Stresses - Area Shells, Part 3 of 3

Area	AreaElem	Joint	OutputCase	S13Avg	S23Avg
				KN/m2	KN/m2
67	67	85	G2_power station	4.45	6.2
67	67	99	G2_power station	4.4	6.2
67	67	100	G2_power station	4.4	3.47
67	67	87	G2_power station	4.45	3.47
67	67	85	Q_power station	0.16	0.23
67	67	99	Q_power station	0.16	0.23
67	67	100	Q_power station	0.16	0.13
67	67	87	Q_power station	0.16	0.13
67	67	85	Q_neve	0.46	1.5
67	67	99	Q_neve	0.49	1.5
67	67	100	Q_neve	0.49	1.28
67	67	87	Q_neve	0.46	1.28
67	67	85	Q_manutenzione	0.16	0.23
67	67	99	Q_manutenzione	0.16	0.23
67	67	100	Q_manutenzione	0.16	0.13
67	67	87	Q_manutenzione	0.16	0.13
67	67	85	EQ_X	8.06	-1.05
67	67	99	EQ_X	7.71	-1.05
67	67	100	EQ_X	7.71	-0.32
67	67	87	EQ_X	8.06	-0.32
67	67	85	EQ_Y	0.38	-3.43
67	67	99	EQ_Y	-0.32	-3.43
67	67	100	EQ_Y	-0.32	1.83
67	67	87	EQ_Y	0.38	1.83
68	68	87	DEAD	1.833E-13	-2.410E-13
68	68	100	DEAD	2.194E-12	1.532E-12
68	68	101	DEAD	2.553E-12	-8.993E-13
68	68	89	DEAD	8.693E-14	-1.760E-12
68	68	87	G1_power station	0.	0.
68	68	100	G1_power station	0.	0.
68	68	101	G1_power station	0.	0.
68	68	89	G1_power station	0.	0.
68	68	87	G2_power station	6.75	3.45
68	68	100	G2_power station	7.92	3.45
68	68	101	G2_power station	7.92	1.07
68	68	89	G2_power station	6.75	1.07
68	68	87	Q_power station	0.25	0.13
68	68	100	Q_power station	0.29	0.13
68	68	101	Q_power station	0.29	3.955E-02
68	68	89	Q_power station	0.25	3.955E-02
68	68	87	Q_neve	0.76	1.26
68	68	100	Q_neve	0.93	1.26
68	68	101	Q_neve	0.93	1.08

Table 21: Element Stresses - Area Shells, Part 3 of 3

Area	AreaElem	Joint	OutputCase	S13Avg	S23Avg
				KN/m2	KN/m2
68	68	89	Q_neve	0.76	1.08
68	68	87	Q_manutenzione	0.25	0.13
68	68	100	Q_manutenzione	0.29	0.13
68	68	101	Q_manutenzione	0.29	3.955E-02
68	68	89	Q_manutenzione	0.25	3.955E-02
68	68	87	EQ_X	5.54	-0.35
68	68	100	EQ_X	5.9	-0.35
68	68	101	EQ_X	5.9	0.21
68	68	89	EQ_X	5.54	0.21
68	68	87	EQ_Y	-0.71	1.63
68	68	100	EQ_Y	-0.14	1.63
68	68	101	EQ_Y	-0.14	1.32
68	68	89	EQ_Y	-0.71	1.32
69	69	89	DEAD	-1.428E-12	-1.211E-12
69	69	101	DEAD	-1.480E-12	-1.237E-12
69	69	102	DEAD	1.732E-12	-1.575E-13
69	69	91	DEAD	-9.529E-13	-1.500E-12
69	69	89	G1_power station	0.	0.
69	69	101	G1_power station	0.	0.
69	69	102	G1_power station	0.	0.
69	69	91	G1_power station	0.	0.
69	69	89	G2_power station	3.85	2.691E-02
69	69	101	G2_power station	8.95	2.691E-02
69	69	102	G2_power station	8.95	-2.03
69	69	91	G2_power station	3.85	-2.03
69	69	89	Q_power station	0.14	9.956E-04
69	69	101	Q_power station	0.33	9.956E-04
69	69	102	Q_power station	0.33	-7.528E-02
69	69	91	Q_power station	0.14	-7.528E-02
69	69	89	Q_neve	0.54	0.94
69	69	101	Q_neve	1.17	0.94
69	69	102	Q_neve	1.17	0.83
69	69	91	Q_neve	0.54	0.83
69	69	89	Q_manutenzione	0.14	9.956E-04
69	69	101	Q_manutenzione	0.33	9.956E-04
69	69	102	Q_manutenzione	0.33	-7.528E-02
69	69	91	Q_manutenzione	0.14	-7.528E-02
69	69	89	EQ_X	3.04	-0.22
69	69	101	EQ_X	5.28	-0.22
69	69	102	EQ_X	5.28	-1.02
69	69	91	EQ_X	3.04	-1.02
69	69	89	EQ_Y	-0.84	1.17
69	69	101	EQ_Y	-8.838E-02	1.17

Table 21: Element Stresses - Area Shells, Part 3 of 3

Area	AreaElem	Joint	OutputCase	S13Avg	S23Avg
				KN/m2	KN/m2
69	69	102	EQ_Y	-8.838E-02	0.41
69	69	91	EQ_Y	-0.84	0.41
70	70	91	DEAD	4.005E-13	-6.658E-13
70	70	102	DEAD	3.299E-13	-1.797E-12
70	70	103	DEAD	6.638E-13	1.046E-12
70	70	26	DEAD	1.647E-12	-1.928E-12
70	70	91	G1_power station	0.	0.
70	70	102	G1_power station	0.	0.
70	70	103	G1_power station	0.	0.
70	70	26	G1_power station	0.	0.
70	70	91	G2_power station	-19.07	-10.69
70	70	102	G2_power station	30.15	-10.69
70	70	103	G2_power station	30.15	-7.64
70	70	26	G2_power station	-19.07	-7.64
70	70	91	Q_power station	-0.71	-0.4
70	70	102	Q_power station	1.12	-0.4
70	70	103	Q_power station	1.12	-0.28
70	70	26	Q_power station	-0.71	-0.28
70	70	91	Q_neve	-1.84	-0.16
70	70	102	Q_neve	3.61	-0.16
70	70	103	Q_neve	3.61	0.83
70	70	26	Q_neve	-1.84	0.83
70	70	91	Q_manutenzione	-0.71	-0.4
70	70	102	Q_manutenzione	1.12	-0.4
70	70	103	Q_manutenzione	1.12	-0.28
70	70	26	Q_manutenzione	-0.71	-0.28
70	70	91	EQ_X	-0.14	-3.48
70	70	102	EQ_X	11.25	-3.48
70	70	103	EQ_X	11.25	9.82
70	70	26	EQ_X	-0.14	9.82
70	70	91	EQ_Y	3.86	0.98
70	70	102	EQ_Y	-2.49	0.98
70	70	103	EQ_Y	-2.49	12.01
70	70	26	EQ_Y	3.86	12.01
71	71	40	DEAD	6.936E-13	8.864E-13
71	71	42	DEAD	-7.642E-13	5.525E-13
71	71	104	DEAD	-1.150E-12	-4.303E-13
71	71	97	DEAD	2.132E-12	8.158E-13
71	71	40	G1_power station	0.	0.
71	71	42	G1_power station	0.	0.
71	71	104	G1_power station	0.	0.
71	71	97	G1_power station	0.	0.
71	71	40	G2_power station	-15.32	20.59

Table 21: Element Stresses - Area Shells, Part 3 of 3

Area	AreaElem	Joint	OutputCase	S13Avg	S23Avg
				KN/m2	KN/m2
71	71	42	G2_power station	-4.26	20.59
71	71	104	G2_power station	-4.26	27.18
71	71	97	G2_power station	-15.32	27.18
71	71	40	Q_power station	-0.57	0.76
71	71	42	Q_power station	-0.16	0.76
71	71	104	Q_power station	-0.16	1.01
71	71	97	Q_power station	-0.57	1.01
71	71	40	Q_neve	-2.12	2.17
71	71	42	Q_neve	-1.18	2.17
71	71	104	Q_neve	-1.18	2.79
71	71	97	Q_neve	-2.12	2.79
71	71	40	Q_manutenzione	-0.57	0.76
71	71	42	Q_manutenzione	-0.16	0.76
71	71	104	Q_manutenzione	-0.16	1.01
71	71	97	Q_manutenzione	-0.57	1.01
71	71	40	EQ_X	-85.25	15.61
71	71	42	EQ_X	6.95	15.61
71	71	104	EQ_X	6.95	4.05
71	71	97	EQ_X	-85.25	4.05
71	71	40	EQ_Y	-23.5	10.05
71	71	42	EQ_Y	2.68	10.05
71	71	104	EQ_Y	2.68	29.76
71	71	97	EQ_Y	-23.5	29.76
72	72	97	DEAD	-3.121E-12	2.101E-12
72	72	104	DEAD	-1.466E-13	3.021E-13
72	72	105	DEAD	-2.241E-13	2.232E-12
72	72	98	DEAD	9.067E-13	1.750E-12
72	72	97	G1_power station	0.	0.
72	72	104	G1_power station	0.	0.
72	72	105	G1_power station	0.	0.
72	72	98	G1_power station	0.	0.
72	72	97	G2_power station	-17.83	22.74
72	72	104	G2_power station	-6.58	22.74
72	72	105	G2_power station	-6.58	12.26
72	72	98	G2_power station	-17.83	12.26
72	72	97	Q_power station	-0.66	0.84
72	72	104	Q_power station	-0.24	0.84
72	72	105	Q_power station	-0.24	0.45
72	72	98	Q_power station	-0.66	0.45
72	72	97	Q_neve	-1.94	2.4
72	72	104	Q_neve	-0.95	2.4
72	72	105	Q_neve	-0.95	1.5
72	72	98	Q_neve	-1.94	1.5

Table 21: Element Stresses - Area Shells, Part 3 of 3

Area	AreaElem	Joint	OutputCase	S13Avg	S23Avg
				KN/m2	KN/m2
72	72	97	Q_manutenzione	-0.66	0.84
72	72	104	Q_manutenzione	-0.24	0.84
72	72	105	Q_manutenzione	-0.24	0.45
72	72	98	Q_manutenzione	-0.66	0.45
72	72	97	EQ_X	18.74	-1.14
72	72	104	EQ_X	-4.27	-1.14
72	72	105	EQ_X	-4.27	-8.96
72	72	98	EQ_X	18.74	-8.96
72	72	97	EQ_Y	-3.68	26.69
72	72	104	EQ_Y	-7.57	26.69
72	72	105	EQ_Y	-7.57	5.21
72	72	98	EQ_Y	-3.68	5.21
73	73	98	DEAD	1.911E-12	3.466E-12
73	73	105	DEAD	7.289E-13	2.156E-12
73	73	106	DEAD	4.018E-12	3.071E-12
73	73	99	DEAD	-1.641E-12	4.892E-14
73	73	98	G1_power station	0.	0.
73	73	105	G1_power station	0.	0.
73	73	106	G1_power station	0.	0.
73	73	99	G1_power station	0.	0.
73	73	98	G2_power station	-1.29	11.48
73	73	105	G2_power station	-1.98	11.48
73	73	106	G2_power station	-1.98	4.3
73	73	99	G2_power station	-1.29	4.3
73	73	98	Q_power station	-4.755E-02	0.42
73	73	105	Q_power station	-7.309E-02	0.42
73	73	106	Q_power station	-7.309E-02	0.16
73	73	99	Q_power station	-4.755E-02	0.16
73	73	98	Q_neve	-0.2	1.43
73	73	105	Q_neve	-0.25	1.43
73	73	106	Q_neve	-0.25	0.81
73	73	99	Q_neve	-0.2	0.81
73	73	98	Q_manutenzione	-4.755E-02	0.42
73	73	105	Q_manutenzione	-7.309E-02	0.42
73	73	106	Q_manutenzione	-7.309E-02	0.16
73	73	99	Q_manutenzione	-4.755E-02	0.16
73	73	98	EQ_X	8.99	-5.17
73	73	105	EQ_X	6.78	-5.17
73	73	106	EQ_X	6.78	-2.
73	73	99	EQ_X	8.99	-2.
73	73	98	EQ_Y	0.67	6.94
73	73	105	EQ_Y	-2.13	6.94
73	73	106	EQ_Y	-2.13	4.9

Table 21: Element Stresses - Area Shells, Part 3 of 3

Area	AreaElem	Joint	OutputCase	S13Avg	S23Avg
				KN/m2	KN/m2
73	73	99	EQ_Y	0.67	4.9
74	74	99	DEAD	1.220E-12	5.905E-13
74	74	106	DEAD	1.201E-12	-3.088E-13
74	74	107	DEAD	-1.676E-12	8.538E-13
74	74	100	DEAD	1.991E-12	6.129E-13
74	74	99	G1_power station	0.	0.
74	74	106	G1_power station	0.	0.
74	74	107	G1_power station	0.	0.
74	74	100	G1_power station	0.	0.
74	74	99	G2_power station	5.9	4.95
74	74	106	G2_power station	5.23	4.95
74	74	107	G2_power station	5.23	1.67
74	74	100	G2_power station	5.9	1.67
74	74	99	Q_power station	0.22	0.18
74	74	106	Q_power station	0.19	0.18
74	74	107	Q_power station	0.19	6.184E-02
74	74	100	Q_power station	0.22	6.184E-02
74	74	99	Q_neve	0.61	0.86
74	74	106	Q_neve	0.58	0.86
74	74	107	Q_neve	0.58	0.59
74	74	100	Q_neve	0.61	0.59
74	74	99	Q_manutenzione	0.22	0.18
74	74	106	Q_manutenzione	0.19	0.18
74	74	107	Q_manutenzione	0.19	6.184E-02
74	74	100	Q_manutenzione	0.22	6.184E-02
74	74	99	EQ_X	7.25	-1.86
74	74	106	EQ_X	7.46	-1.86
74	74	107	EQ_X	7.46	-0.43
74	74	100	EQ_X	7.25	-0.43
74	74	99	EQ_Y	2.222E-02	5.53
74	74	106	EQ_Y	-0.24	5.53
74	74	107	EQ_Y	-0.24	4.38
74	74	100	EQ_Y	2.222E-02	4.38
75	75	100	DEAD	2.522E-12	1.049E-12
75	75	107	DEAD	-2.603E-12	-1.109E-12
75	75	108	DEAD	-2.218E-12	1.839E-12
75	75	101	DEAD	1.083E-12	1.261E-12
75	75	100	G1_power station	0.	0.
75	75	107	G1_power station	0.	0.
75	75	108	G1_power station	0.	0.
75	75	101	G1_power station	0.	0.
75	75	100	G2_power station	8.68	1.77
75	75	107	G2_power station	9.87	1.77

Table 21: Element Stresses - Area Shells, Part 3 of 3

Area	AreaElem	Joint	OutputCase	S13Avg	S23Avg
				KN/m2	KN/m2
75	75	108	G2_power station	9.87	0.22
75	75	101	G2_power station	8.68	0.22
75	75	100	Q_power station	0.32	6.554E-02
75	75	107	Q_power station	0.37	6.554E-02
75	75	108	Q_power station	0.37	8.218E-03
75	75	101	Q_power station	0.32	8.218E-03
75	75	100	Q_neve	0.97	0.58
75	75	107	Q_neve	1.14	0.58
75	75	108	Q_neve	1.14	0.49
75	75	101	Q_neve	0.97	0.49
75	75	100	Q_manutenzione	0.32	6.554E-02
75	75	107	Q_manutenzione	0.37	6.554E-02
75	75	108	Q_manutenzione	0.37	8.218E-03
75	75	101	Q_manutenzione	0.32	8.218E-03
75	75	100	EQ_X	5.55	-0.69
75	75	107	EQ_X	6.33	-0.69
75	75	108	EQ_X	6.33	0.24
75	75	101	EQ_X	5.55	0.24
75	75	100	EQ_Y	-0.22	4.52
75	75	107	EQ_Y	-0.23	4.52
75	75	108	EQ_Y	-0.23	3.95
75	75	101	EQ_Y	-0.22	3.95
76	76	101	DEAD	-6.787E-13	2.804E-12
76	76	108	DEAD	4.263E-13	-6.387E-13
76	76	109	DEAD	3.746E-13	1.224E-12
76	76	102	DEAD	2.006E-12	-1.034E-12
76	76	101	G1_power station	0.	0.
76	76	108	G1_power station	0.	0.
76	76	109	G1_power station	0.	0.
76	76	102	G1_power station	0.	0.
76	76	101	G2_power station	8.66	-0.72
76	76	108	G2_power station	12.87	-0.72
76	76	109	G2_power station	12.87	1.15
76	76	102	G2_power station	8.66	1.15
76	76	101	Q_power station	0.32	-2.668E-02
76	76	108	Q_power station	0.48	-2.668E-02
76	76	109	Q_power station	0.48	4.241E-02
76	76	102	Q_power station	0.32	4.241E-02
76	76	101	Q_neve	1.07	0.37
76	76	108	Q_neve	1.55	0.37
76	76	109	Q_neve	1.55	0.65
76	76	102	Q_neve	1.07	0.65
76	76	101	Q_manutenzione	0.32	-2.668E-02

Table 21: Element Stresses - Area Shells, Part 3 of 3

Area	AreaElem	Joint	OutputCase	S13Avg	S23Avg
				KN/m2	KN/m2
76	76	108	Q_manutenzione	0.48	-2.668E-02
76	76	109	Q_manutenzione	0.48	4.241E-02
76	76	102	Q_manutenzione	0.32	4.241E-02
76	76	101	EQ_X	4.51	-0.21
76	76	108	EQ_X	5.64	-0.21
76	76	109	EQ_X	5.64	1.6
76	76	102	EQ_X	4.51	1.6
76	76	101	EQ_Y	-0.36	3.93
76	76	108	EQ_Y	-0.31	3.93
76	76	109	EQ_Y	-0.31	4.33
76	76	102	EQ_Y	-0.36	4.33
77	77	102	DEAD	2.411E-12	-8.884E-13
77	77	109	DEAD	-2.959E-12	-1.948E-13
77	77	110	DEAD	-1.803E-12	1.877E-12
77	77	103	DEAD	-1.906E-12	7.269E-13
77	77	102	G1_power station	0.	0.
77	77	109	G1_power station	0.	0.
77	77	110	G1_power station	0.	0.
77	77	103	G1_power station	0.	0.
77	77	102	G2_power station	29.6	3.57
77	77	109	G2_power station	6.19	3.57
77	77	110	G2_power station	6.19	-0.95
77	77	103	G2_power station	29.6	-0.95
77	77	102	Q_power station	1.1	0.13
77	77	109	Q_power station	0.23	0.13
77	77	110	Q_power station	0.23	-3.498E-02
77	77	103	Q_power station	1.1	-3.498E-02
77	77	102	Q_neve	3.43	0.88
77	77	109	Q_neve	0.96	0.88
77	77	110	Q_neve	0.96	0.43
77	77	103	Q_neve	3.43	0.43
77	77	102	Q_manutenzione	1.1	0.13
77	77	109	Q_manutenzione	0.23	0.13
77	77	110	Q_manutenzione	0.23	-3.498E-02
77	77	103	Q_manutenzione	1.1	-3.498E-02
77	77	102	EQ_X	9.15	2.03
77	77	109	EQ_X	3.58	2.03
77	77	110	EQ_X	3.58	0.77
77	77	103	EQ_X	9.15	0.77
77	77	102	EQ_Y	-4.28	3.57
77	77	109	EQ_Y	0.39	3.57
77	77	110	EQ_Y	0.39	4.21
77	77	103	EQ_Y	-4.28	4.21

Table 21: Element Stresses - Area Shells, Part 3 of 3

Area	AreaElem	Joint	OutputCase	S13Avg	S23Avg
				KN/m2	KN/m2
78	78	42	DEAD	1.383E-12	3.875E-13
78	78	44	DEAD	-1.231E-12	-7.433E-13
78	78	111	DEAD	5.932E-13	-7.455E-15
78	78	104	DEAD	-4.412E-13	-2.982E-12
78	78	42	G1_power station	0.	0.
78	78	44	G1_power station	0.	0.
78	78	111	G1_power station	0.	0.
78	78	104	G1_power station	0.	0.
78	78	42	G2_power station	-4.88	-1.135E-12
78	78	44	G2_power station	-4.88	5.863E-13
78	78	111	G2_power station	-4.88	-8.147E-14
78	78	104	G2_power station	-4.88	-3.627E-12
78	78	42	Q_power station	-0.18	-8.564E-14
78	78	44	Q_power station	-0.18	4.764E-14
78	78	111	Q_power station	-0.18	4.876E-15
78	78	104	Q_power station	-0.18	-4.288E-14
78	78	42	Q_neve	-1.24	-2.102E-13
78	78	44	Q_neve	-1.24	-4.005E-14
78	78	111	Q_neve	-1.24	2.019E-14
78	78	104	Q_neve	-1.24	-4.350E-13
78	78	42	Q_manutenzione	-0.18	-8.564E-14
78	78	44	Q_manutenzione	-0.18	4.764E-14
78	78	111	Q_manutenzione	-0.18	4.876E-15
78	78	104	Q_manutenzione	-0.18	-4.288E-14
78	78	42	EQ_X	6.61	2.435E-14
78	78	44	EQ_X	6.61	3.744E-13
78	78	111	EQ_X	6.61	-9.086E-14
78	78	104	EQ_X	6.61	-4.979E-13
78	78	42	EQ_Y	0.67	21.33
78	78	44	EQ_Y	-0.67	21.33
78	78	111	EQ_Y	-0.67	18.54
78	78	104	EQ_Y	0.67	18.54
79	79	104	DEAD	2.245E-12	-1.436E-12
79	79	111	DEAD	-1.571E-12	-5.368E-13
79	79	112	DEAD	2.772E-12	1.438E-13
79	79	105	DEAD	-2.539E-13	3.848E-13
79	79	104	G1_power station	0.	0.
79	79	111	G1_power station	0.	0.
79	79	112	G1_power station	0.	0.
79	79	105	G1_power station	0.	0.
79	79	104	G2_power station	-5.19	-1.302E-12
79	79	111	G2_power station	-5.19	8.566E-13
79	79	112	G2_power station	-5.19	5.416E-13

Table 21: Element Stresses - Area Shells, Part 3 of 3

Area	AreaElem	Joint	OutputCase	S13Avg	S23Avg
				KN/m2	KN/m2
79	79	105	G2_power station	-5.19	1.120E-12
79	79	104	Q_power station	-0.19	5.065E-14
79	79	111	Q_power station	-0.19	1.181E-13
79	79	112	Q_power station	-0.19	-3.164E-14
79	79	105	Q_power station	-0.19	-1.357E-14
79	79	104	Q_neve	-0.83	-2.378E-13
79	79	111	Q_neve	-0.83	8.018E-14
79	79	112	Q_neve	-0.83	-5.676E-14
79	79	105	Q_neve	-0.83	1.954E-13
79	79	104	Q_manutenzione	-0.19	5.065E-14
79	79	111	Q_manutenzione	-0.19	1.181E-13
79	79	112	Q_manutenzione	-0.19	-3.164E-14
79	79	105	Q_manutenzione	-0.19	-1.357E-14
79	79	104	EQ_X	-2.3	-1.172E-13
79	79	111	EQ_X	-2.3	9.076E-14
79	79	112	EQ_X	-2.3	7.207E-14
79	79	105	EQ_X	-2.3	1.278E-13
79	79	104	EQ_Y	-3.77	16.9
79	79	111	EQ_Y	3.77	16.9
79	79	112	EQ_Y	3.77	13.92
79	79	105	EQ_Y	-3.77	13.92
80	80	105	DEAD	1.945E-12	-5.783E-13
80	80	112	DEAD	-1.504E-12	-5.783E-13
80	80	113	DEAD	-4.248E-13	-2.158E-12
80	80	106	DEAD	1.656E-12	-2.158E-12
80	80	105	G1_power station	0.	0.
80	80	112	G1_power station	0.	0.
80	80	113	G1_power station	0.	0.
80	80	106	G1_power station	0.	0.
80	80	105	G2_power station	-0.23	3.895E-13
80	80	112	G2_power station	-0.23	5.823E-13
80	80	113	G2_power station	-0.23	-1.454E-12
80	80	106	G2_power station	-0.23	-7.343E-13
80	80	105	Q_power station	-8.412E-03	-1.379E-14
80	80	112	Q_power station	-8.412E-03	-7.763E-15
80	80	113	Q_power station	-8.412E-03	-3.847E-14
80	80	106	Q_power station	-8.412E-03	-1.599E-14
80	80	105	Q_neve	-0.1	-1.330E-13
80	80	112	Q_neve	-0.1	-1.089E-13
80	80	113	Q_neve	-0.1	-1.330E-13
80	80	106	Q_neve	-0.1	-4.310E-14
80	80	105	Q_manutenzione	-8.412E-03	-1.379E-14
80	80	112	Q_manutenzione	-8.412E-03	-7.763E-15

Table 21: Element Stresses - Area Shells, Part 3 of 3

Area	AreaElem	Joint	OutputCase	S13Avg	S23Avg
				KN/m2	KN/m2
80	80	113	Q_manutenzione	-8.412E-03	-3.847E-14
80	80	106	Q_manutenzione	-8.412E-03	-1.599E-14
80	80	105	EQ_X	6.6	1.863E-13
80	80	112	EQ_X	6.6	1.381E-13
80	80	113	EQ_X	6.6	3.838E-13
80	80	106	EQ_X	6.6	2.040E-13
80	80	105	EQ_Y	0.43	13.59
80	80	112	EQ_Y	-0.43	13.59
80	80	113	EQ_Y	-0.43	7.59
80	80	106	EQ_Y	0.43	7.59
81	81	106	DEAD	-8.755E-13	-1.636E-12
81	81	113	DEAD	2.214E-12	-1.123E-12
81	81	114	DEAD	2.548E-12	-1.880E-13
81	81	107	DEAD	3.706E-13	-1.386E-12
81	81	106	G1_power station	0.	0.
81	81	113	G1_power station	0.	0.
81	81	114	G1_power station	0.	0.
81	81	107	G1_power station	0.	0.
81	81	106	G2_power station	6.07	-1.132E-12
81	81	113	G2_power station	6.07	-7.405E-13
81	81	114	G2_power station	6.07	-4.601E-14
81	81	107	G2_power station	6.07	-6.088E-13
81	81	106	Q_power station	0.22	-3.073E-14
81	81	113	Q_power station	0.22	-2.130E-14
81	81	114	Q_power station	0.22	-1.931E-15
81	81	107	Q_power station	0.22	-2.027E-14
81	81	106	Q_neve	0.65	-1.783E-13
81	81	113	Q_neve	0.65	3.368E-14
81	81	114	Q_neve	0.65	-8.777E-14
81	81	107	Q_neve	0.65	-1.144E-13
81	81	106	Q_manutenzione	0.22	-3.073E-14
81	81	113	Q_manutenzione	0.22	-2.130E-14
81	81	114	Q_manutenzione	0.22	-1.931E-15
81	81	107	Q_manutenzione	0.22	-2.027E-14
81	81	106	EQ_X	7.03	8.111E-14
81	81	113	EQ_X	7.03	3.937E-14
81	81	114	EQ_X	7.03	1.469E-13
81	81	107	EQ_X	7.03	3.027E-13
81	81	106	EQ_Y	0.76	8.43
81	81	113	EQ_Y	-0.76	8.43
81	81	114	EQ_Y	-0.76	5.29
81	81	107	EQ_Y	0.76	5.29
82	82	107	DEAD	5.267E-13	-2.986E-13

Table 21: Element Stresses - Area Shells, Part 3 of 3

Area	AreaElem	Joint	OutputCase	S13Avg	S23Avg
				KN/m2	KN/m2
82	82	114	DEAD	-1.411E-13	-9.922E-13
82	82	115	DEAD	-5.267E-13	7.547E-13
82	82	108	DEAD	1.966E-12	1.904E-12
82	82	107	G1_power station	0.	0.
82	82	114	G1_power station	0.	0.
82	82	115	G1_power station	0.	0.
82	82	108	G1_power station	0.	0.
82	82	107	G2_power station	10.06	-2.029E-13
82	82	114	G2_power station	10.06	9.901E-14
82	82	115	G2_power station	10.06	1.839E-13
82	82	108	G2_power station	10.06	1.813E-13
82	82	107	Q_power station	0.37	1.058E-14
82	82	114	Q_power station	0.37	7.267E-15
82	82	115	Q_power station	0.37	7.237E-15
82	82	108	Q_power station	0.37	-1.477E-15
82	82	107	Q_neve	1.14	-1.605E-14
82	82	114	Q_neve	1.14	-8.269E-14
82	82	115	Q_neve	1.14	3.743E-14
82	82	108	Q_neve	1.14	6.131E-14
82	82	107	Q_manutenzione	0.37	1.058E-14
82	82	114	Q_manutenzione	0.37	7.267E-15
82	82	115	Q_manutenzione	0.37	7.237E-15
82	82	108	Q_manutenzione	0.37	-1.477E-15
82	82	107	EQ_X	6.05	2.944E-14
82	82	114	EQ_X	6.05	1.402E-13
82	82	115	EQ_X	6.05	-1.994E-14
82	82	108	EQ_X	6.05	-7.372E-14
82	82	107	EQ_Y	0.19	5.76
82	82	114	EQ_Y	-0.19	5.76
82	82	115	EQ_Y	-0.19	4.82
82	82	108	EQ_Y	0.19	4.82
83	83	108	DEAD	-1.485E-12	5.165E-13
83	83	115	DEAD	2.665E-12	-3.828E-13
83	83	116	DEAD	-2.012E-12	-6.685E-13
83	83	109	DEAD	-2.320E-13	-9.095E-13
83	83	108	G1_power station	0.	0.
83	83	115	G1_power station	0.	0.
83	83	116	G1_power station	0.	0.
83	83	109	G1_power station	0.	0.
83	83	108	G2_power station	12.7	1.539E-13
83	83	115	G2_power station	12.7	5.751E-14
83	83	116	G2_power station	12.7	5.515E-14
83	83	109	G2_power station	12.7	-3.046E-13

Table 21: Element Stresses - Area Shells, Part 3 of 3

Area	AreaElem	Joint	OutputCase	S13Avg	S23Avg
				KN/m2	KN/m2
83	83	108	Q_power station	0.47	2.927E-15
83	83	115	Q_power station	0.47	1.156E-14
83	83	116	Q_power station	0.47	-5.302E-15
83	83	109	Q_power station	0.47	7.445E-15
83	83	108	Q_neve	1.51	2.467E-14
83	83	115	Q_neve	1.51	2.366E-14
83	83	116	Q_neve	1.51	-2.882E-14
83	83	109	Q_neve	1.51	-8.223E-15
83	83	108	Q_manutenzione	0.47	2.927E-15
83	83	115	Q_manutenzione	0.47	1.156E-14
83	83	116	Q_manutenzione	0.47	-5.302E-15
83	83	109	Q_manutenzione	0.47	7.445E-15
83	83	108	EQ_X	5.32	-4.679E-14
83	83	115	EQ_X	5.32	8.248E-14
83	83	116	EQ_X	5.32	-2.210E-14
83	83	109	EQ_X	5.32	1.254E-14
83	83	108	EQ_Y	-0.4	4.8
83	83	115	EQ_Y	0.4	4.8
83	83	116	EQ_Y	0.4	4.49
83	83	109	EQ_Y	-0.4	4.49
84	84	109	DEAD	-3.703E-12	6.305E-13
84	84	116	DEAD	2.022E-13	-8.084E-13
84	84	117	DEAD	5.103E-13	-5.545E-13
84	84	110	DEAD	-1.114E-12	-9.400E-13
84	84	109	G1_power station	0.	0.
84	84	116	G1_power station	0.	0.
84	84	117	G1_power station	0.	0.
84	84	110	G1_power station	0.	0.
84	84	109	G2_power station	7.45	-7.496E-13
84	84	116	G2_power station	7.45	-4.669E-13
84	84	117	G2_power station	7.45	3.695E-13
84	84	110	G2_power station	7.45	1.113E-12
84	84	109	Q_power station	0.28	-2.660E-14
84	84	116	Q_power station	0.28	-9.332E-15
84	84	117	Q_power station	0.28	-1.910E-15
84	84	110	Q_power station	0.28	2.358E-14
84	84	109	Q_neve	1.09	-3.198E-14
84	84	116	Q_neve	1.09	-3.198E-14
84	84	117	Q_neve	1.09	-1.553E-14
84	84	110	Q_neve	1.09	-1.553E-14
84	84	109	Q_manutenzione	0.28	-2.660E-14
84	84	116	Q_manutenzione	0.28	-9.332E-15
84	84	117	Q_manutenzione	0.28	-1.910E-15

Table 21: Element Stresses - Area Shells, Part 3 of 3

Area	AreaElem	Joint	OutputCase	S13Avg	S23Avg
				KN/m2	KN/m2
84	84	110	Q_manutenzione	0.28	2.358E-14
84	84	109	EQ_X	3.87	5.508E-14
84	84	116	EQ_X	3.87	5.989E-14
84	84	117	EQ_X	3.87	-3.132E-14
84	84	110	EQ_X	3.87	-7.177E-14
84	84	109	EQ_Y	2.121E-02	4.19
84	84	116	EQ_Y	-2.121E-02	4.19
84	84	117	EQ_Y	-2.121E-02	4.97
84	84	110	EQ_Y	2.121E-02	4.97
85	85	44	DEAD	-3.855E-13	4.486E-13
85	85	46	DEAD	-2.492E-12	-2.708E-13
85	85	118	DEAD	-1.439E-12	8.436E-13
85	85	111	DEAD	6.678E-13	6.509E-13
85	85	44	G1_power station	0.	0.
85	85	46	G1_power station	0.	0.
85	85	118	G1_power station	0.	0.
85	85	111	G1_power station	0.	0.
85	85	44	G2_power station	-4.26	-20.59
85	85	46	G2_power station	-15.32	-20.59
85	85	118	G2_power station	-15.32	-27.18
85	85	111	G2_power station	-4.26	-27.18
85	85	44	Q_power station	-0.16	-0.76
85	85	46	Q_power station	-0.57	-0.76
85	85	118	Q_power station	-0.57	-1.01
85	85	111	Q_power station	-0.16	-1.01
85	85	44	Q_neve	-1.18	-2.17
85	85	46	Q_neve	-2.12	-2.17
85	85	118	Q_neve	-2.12	-2.79
85	85	111	Q_neve	-1.18	-2.79
85	85	44	Q_manutenzione	-0.16	-0.76
85	85	46	Q_manutenzione	-0.57	-0.76
85	85	118	Q_manutenzione	-0.57	-1.01
85	85	111	Q_manutenzione	-0.16	-1.01
85	85	44	EQ_X	6.95	-15.61
85	85	46	EQ_X	-85.25	-15.61
85	85	118	EQ_X	-85.25	-4.05
85	85	111	EQ_X	6.95	-4.05
85	85	44	EQ_Y	-2.68	10.05
85	85	46	EQ_Y	23.5	10.05
85	85	118	EQ_Y	23.5	29.76
85	85	111	EQ_Y	-2.68	29.76
86	86	111	DEAD	3.019E-12	-9.264E-13
86	86	118	DEAD	-1.298E-12	-5.292E-14

Table 21: Element Stresses - Area Shells, Part 3 of 3

Area	AreaElem	Joint	OutputCase	S13Avg	S23Avg
				KN/m2	KN/m2
86	86	119	DEAD	-1.194E-12	1.839E-12
86	86	112	DEAD	-2.351E-12	7.371E-13
86	86	111	G1_power station	0.	0.
86	86	118	G1_power station	0.	0.
86	86	119	G1_power station	0.	0.
86	86	112	G1_power station	0.	0.
86	86	111	G2_power station	-6.58	-22.74
86	86	118	G2_power station	-17.83	-22.74
86	86	119	G2_power station	-17.83	-12.26
86	86	112	G2_power station	-6.58	-12.26
86	86	111	Q_power station	-0.24	-0.84
86	86	118	Q_power station	-0.66	-0.84
86	86	119	Q_power station	-0.66	-0.45
86	86	112	Q_power station	-0.24	-0.45
86	86	111	Q_neve	-0.95	-2.4
86	86	118	Q_neve	-1.94	-2.4
86	86	119	Q_neve	-1.94	-1.5
86	86	112	Q_neve	-0.95	-1.5
86	86	111	Q_manutenzione	-0.24	-0.84
86	86	118	Q_manutenzione	-0.66	-0.84
86	86	119	Q_manutenzione	-0.66	-0.45
86	86	112	Q_manutenzione	-0.24	-0.45
86	86	111	EQ_X	-4.27	1.14
86	86	118	EQ_X	18.74	1.14
86	86	119	EQ_X	18.74	8.96
86	86	112	EQ_X	-4.27	8.96
86	86	111	EQ_Y	7.57	26.69
86	86	118	EQ_Y	3.68	26.69
86	86	119	EQ_Y	3.68	5.21
86	86	112	EQ_Y	7.57	5.21
87	87	112	DEAD	3.910E-13	2.321E-12
87	87	119	DEAD	1.418E-12	6.760E-13
87	87	120	DEAD	2.498E-12	8.722E-13
87	87	113	DEAD	1.018E-13	-9.040E-13
87	87	112	G1_power station	0.	0.
87	87	119	G1_power station	0.	0.
87	87	120	G1_power station	0.	0.
87	87	113	G1_power station	0.	0.
87	87	112	G2_power station	-1.98	-11.48
87	87	119	G2_power station	-1.29	-11.48
87	87	120	G2_power station	-1.29	-4.3
87	87	113	G2_power station	-1.98	-4.3
87	87	112	Q_power station	-7.309E-02	-0.42

Table 21: Element Stresses - Area Shells, Part 3 of 3

Area	AreaElem	Joint	OutputCase	S13Avg	S23Avg
				KN/m2	KN/m2
87	87	119	Q_power station	-4.755E-02	-0.42
87	87	120	Q_power station	-4.755E-02	-0.16
87	87	113	Q_power station	-7.309E-02	-0.16
87	87	112	Q_neve	-0.25	-1.43
87	87	119	Q_neve	-0.2	-1.43
87	87	120	Q_neve	-0.2	-0.81
87	87	113	Q_neve	-0.25	-0.81
87	87	112	Q_manutenzione	-7.309E-02	-0.42
87	87	119	Q_manutenzione	-4.755E-02	-0.42
87	87	120	Q_manutenzione	-4.755E-02	-0.16
87	87	113	Q_manutenzione	-7.309E-02	-0.16
87	87	112	EQ_X	6.78	5.17
87	87	119	EQ_X	8.99	5.17
87	87	120	EQ_X	8.99	2.
87	87	113	EQ_X	6.78	2.
87	87	112	EQ_Y	2.13	6.94
87	87	119	EQ_Y	-0.67	6.94
87	87	120	EQ_Y	-0.67	4.9
87	87	113	EQ_Y	2.13	4.9
88	88	113	DEAD	1.676E-12	-1.806E-12
88	88	120	DEAD	-5.008E-13	1.406E-12
88	88	121	DEAD	-1.220E-12	-9.439E-14
88	88	114	DEAD	1.869E-12	-5.694E-13
88	88	113	G1_power station	0.	0.
88	88	120	G1_power station	0.	0.
88	88	121	G1_power station	0.	0.
88	88	114	G1_power station	0.	0.
88	88	113	G2_power station	5.23	-4.95
88	88	120	G2_power station	5.9	-4.95
88	88	121	G2_power station	5.9	-1.67
88	88	114	G2_power station	5.23	-1.67
88	88	113	Q_power station	0.19	-0.18
88	88	120	Q_power station	0.22	-0.18
88	88	121	Q_power station	0.22	-6.184E-02
88	88	114	Q_power station	0.19	-6.184E-02
88	88	113	Q_neve	0.58	-0.86
88	88	120	Q_neve	0.61	-0.86
88	88	121	Q_neve	0.61	-0.59
88	88	114	Q_neve	0.58	-0.59
88	88	113	Q_manutenzione	0.19	-0.18
88	88	120	Q_manutenzione	0.22	-0.18
88	88	121	Q_manutenzione	0.22	-6.184E-02
88	88	114	Q_manutenzione	0.19	-6.184E-02

Table 21: Element Stresses - Area Shells, Part 3 of 3

Area	AreaElem	Joint	OutputCase	S13Avg	S23Avg
				KN/m2	KN/m2
88	88	113	EQ_X	7.46	1.86
88	88	120	EQ_X	7.25	1.86
88	88	121	EQ_X	7.25	0.43
88	88	114	EQ_X	7.46	0.43
88	88	113	EQ_Y	0.24	5.53
88	88	120	EQ_Y	-2.222E-02	5.53
88	88	121	EQ_Y	-2.222E-02	4.38
88	88	114	EQ_Y	0.24	4.38
89	89	114	DEAD	3.471E-12	-9.911E-14
89	89	121	DEAD	6.638E-13	-6.129E-13
89	89	122	DEAD	2.154E-12	-8.891E-13
89	89	115	DEAD	4.005E-13	3.088E-13
89	89	114	G1_power station	0.	0.
89	89	121	G1_power station	0.	0.
89	89	122	G1_power station	0.	0.
89	89	115	G1_power station	0.	0.
89	89	114	G2_power station	9.87	-1.77
89	89	121	G2_power station	8.68	-1.77
89	89	122	G2_power station	8.68	-0.22
89	89	115	G2_power station	9.87	-0.22
89	89	114	Q_power station	0.37	-6.554E-02
89	89	121	Q_power station	0.32	-6.554E-02
89	89	122	Q_power station	0.32	-8.218E-03
89	89	115	Q_power station	0.37	-8.218E-03
89	89	114	Q_neve	1.14	-0.58
89	89	121	Q_neve	0.97	-0.58
89	89	122	Q_neve	0.97	-0.49
89	89	115	Q_neve	1.14	-0.49
89	89	114	Q_manutenzione	0.37	-6.554E-02
89	89	121	Q_manutenzione	0.32	-6.554E-02
89	89	122	Q_manutenzione	0.32	-8.218E-03
89	89	115	Q_manutenzione	0.37	-8.218E-03
89	89	114	EQ_X	6.33	0.69
89	89	121	EQ_X	5.55	0.69
89	89	122	EQ_X	5.55	-0.24
89	89	115	EQ_X	6.33	-0.24
89	89	114	EQ_Y	0.23	4.52
89	89	121	EQ_Y	0.22	4.52
89	89	122	EQ_Y	0.22	3.95
89	89	115	EQ_Y	0.23	3.95
90	90	115	DEAD	5.579E-13	-9.251E-13
90	90	122	DEAD	-2.853E-12	-8.993E-13
90	90	123	DEAD	1.875E-12	-1.583E-12

Table 21: Element Stresses - Area Shells, Part 3 of 3

Area	AreaElem	Joint	OutputCase	S13Avg	S23Avg
				KN/m2	KN/m2
90	90	116	DEAD	-3.380E-12	-2.410E-13
90	90	115	G1_power station	0.	0.
90	90	122	G1_power station	0.	0.
90	90	123	G1_power station	0.	0.
90	90	116	G1_power station	0.	0.
90	90	115	G2_power station	12.87	0.72
90	90	122	G2_power station	8.66	0.72
90	90	123	G2_power station	8.66	-1.15
90	90	116	G2_power station	12.87	-1.15
90	90	115	Q_power station	0.48	2.668E-02
90	90	122	Q_power station	0.32	2.668E-02
90	90	123	Q_power station	0.32	-4.241E-02
90	90	116	Q_power station	0.48	-4.241E-02
90	90	115	Q_neve	1.55	-0.37
90	90	122	Q_neve	1.07	-0.37
90	90	123	Q_neve	1.07	-0.65
90	90	116	Q_neve	1.55	-0.65
90	90	115	Q_manutenzione	0.48	2.668E-02
90	90	122	Q_manutenzione	0.32	2.668E-02
90	90	123	Q_manutenzione	0.32	-4.241E-02
90	90	116	Q_manutenzione	0.48	-4.241E-02
90	90	115	EQ_X	5.64	0.21
90	90	122	EQ_X	4.51	0.21
90	90	123	EQ_X	4.51	-1.6
90	90	116	EQ_X	5.64	-1.6
90	90	115	EQ_Y	0.31	3.93
90	90	122	EQ_Y	0.36	3.93
90	90	123	EQ_Y	0.36	4.33
90	90	116	EQ_Y	0.31	4.33
91	91	116	DEAD	-1.576E-12	-1.717E-13
91	91	123	DEAD	-1.980E-12	-1.816E-12
91	91	124	DEAD	-1.313E-12	1.540E-12
91	91	117	DEAD	9.162E-13	-2.362E-13
91	91	116	G1_power station	0.	0.
91	91	123	G1_power station	0.	0.
91	91	124	G1_power station	0.	0.
91	91	117	G1_power station	0.	0.
91	91	116	G2_power station	6.19	-3.57
91	91	123	G2_power station	29.6	-3.57
91	91	124	G2_power station	29.6	0.95
91	91	117	G2_power station	6.19	0.95
91	91	116	Q_power station	0.23	-0.13
91	91	123	Q_power station	1.1	-0.13

Table 21: Element Stresses - Area Shells, Part 3 of 3

Area	AreaElem	Joint	OutputCase	S13Avg	S23Avg
				KN/m2	KN/m2
91	91	124	Q_power station	1.1	3.498E-02
91	91	117	Q_power station	0.23	3.498E-02
91	91	116	Q_neve	0.96	-0.88
91	91	123	Q_neve	3.43	-0.88
91	91	124	Q_neve	3.43	-0.43
91	91	117	Q_neve	0.96	-0.43
91	91	116	Q_manutenzione	0.23	-0.13
91	91	123	Q_manutenzione	1.1	-0.13
91	91	124	Q_manutenzione	1.1	3.498E-02
91	91	117	Q_manutenzione	0.23	3.498E-02
91	91	116	EQ_X	3.58	-2.03
91	91	123	EQ_X	9.15	-2.03
91	91	124	EQ_X	9.15	-0.77
91	91	117	EQ_X	3.58	-0.77
91	91	116	EQ_Y	-0.39	3.57
91	91	123	EQ_Y	4.28	3.57
91	91	124	EQ_Y	4.28	4.21
91	91	117	EQ_Y	-0.39	4.21
92	92	46	DEAD	-1.226E-12	-7.880E-13
92	92	63	DEAD	6.434E-13	6.250E-13
92	92	125	DEAD	6.176E-13	-6.563E-13
92	92	118	DEAD	1.168E-13	-1.613E-12
92	92	46	G1_power station	0.	0.
92	92	63	G1_power station	0.	0.
92	92	125	G1_power station	0.	0.
92	92	118	G1_power station	0.	0.
92	92	46	G2_power station	-24.2	-106.46
92	92	63	G2_power station	-105.34	-106.46
92	92	125	G2_power station	-105.34	-36.48
92	92	118	G2_power station	-24.2	-36.48
92	92	46	Q_power station	-0.9	-3.94
92	92	63	Q_power station	-3.9	-3.94
92	92	125	Q_power station	-3.9	-1.35
92	92	118	Q_power station	-0.9	-1.35
92	92	46	Q_neve	-2.89	-10.26
92	92	63	Q_neve	-10.07	-10.26
92	92	125	Q_neve	-10.07	-4.09
92	92	118	Q_neve	-2.89	-4.09
92	92	46	Q_manutenzione	-0.9	-3.94
92	92	63	Q_manutenzione	-3.9	-3.94
92	92	125	Q_manutenzione	-3.9	-1.35
92	92	118	Q_manutenzione	-0.9	-1.35
92	92	46	EQ_X	-92.55	72.62

Table 21: Element Stresses - Area Shells, Part 3 of 3

Area	AreaElem	Joint	OutputCase	S13Avg	S23Avg
				KN/m2	KN/m2
92	92	63	EQ_X	198.76	72.62
92	92	125	EQ_X	198.76	60.58
92	92	118	EQ_X	-92.55	60.58
92	92	46	EQ_Y	59.17	196.81
92	92	63	EQ_Y	84.54	196.81
92	92	125	EQ_Y	84.54	-79.87
92	92	118	EQ_Y	59.17	-79.87
93	93	118	DEAD	-1.875E-12	-2.280E-13
93	93	125	DEAD	-1.637E-12	-9.733E-13
93	93	126	DEAD	-5.579E-13	-2.280E-13
93	93	119	DEAD	-2.164E-12	-1.763E-12
93	93	118	G1_power station	0.	0.
93	93	125	G1_power station	0.	0.
93	93	126	G1_power station	0.	0.
93	93	119	G1_power station	0.	0.
93	93	118	G2_power station	-24.71	-28.05
93	93	125	G2_power station	-18.32	-28.05
93	93	126	G2_power station	-18.32	-10.12
93	93	119	G2_power station	-24.71	-10.12
93	93	118	Q_power station	-0.91	-1.04
93	93	125	Q_power station	-0.68	-1.04
93	93	126	Q_power station	-0.68	-0.37
93	93	119	Q_power station	-0.91	-0.37
93	93	118	Q_neve	-2.53	-3.35
93	93	125	Q_neve	-1.94	-3.35
93	93	126	Q_neve	-1.94	-1.82
93	93	119	Q_neve	-2.53	-1.82
93	93	118	Q_manutenzione	-0.91	-1.04
93	93	125	Q_manutenzione	-0.68	-1.04
93	93	126	Q_manutenzione	-0.68	-0.37
93	93	119	Q_manutenzione	-0.91	-0.37
93	93	118	EQ_X	20.95	25.26
93	93	125	EQ_X	5.6	25.26
93	93	126	EQ_X	5.6	0.46
93	93	119	EQ_X	20.95	0.46
93	93	118	EQ_Y	1.3	-73.68
93	93	125	EQ_Y	-17.24	-73.68
93	93	126	EQ_Y	-17.24	13.55
93	93	119	EQ_Y	1.3	13.55
94	94	119	DEAD	5.525E-13	-2.848E-12
94	94	126	DEAD	2.640E-12	-1.023E-12
94	94	127	DEAD	8.158E-13	-2.321E-12
94	94	120	DEAD	2.377E-12	-4.968E-13

Table 21: Element Stresses - Area Shells, Part 3 of 3

Area	AreaElem	Joint	OutputCase	S13Avg	S23Avg
				KN/m2	KN/m2
94	94	119	G1_power station	0.	0.
94	94	126	G1_power station	0.	0.
94	94	127	G1_power station	0.	0.
94	94	120	G1_power station	0.	0.
94	94	119	G2_power station	-4.3	-11.23
94	94	126	G2_power station	-4.53	-11.23
94	94	127	G2_power station	-4.53	-5.99
94	94	120	G2_power station	-4.3	-5.99
94	94	119	Q_power station	-0.16	-0.42
94	94	126	Q_power station	-0.17	-0.42
94	94	127	Q_power station	-0.17	-0.22
94	94	120	Q_power station	-0.16	-0.22
94	94	119	Q_neve	-0.45	-1.92
94	94	126	Q_neve	-0.49	-1.92
94	94	127	Q_neve	-0.49	-1.49
94	94	120	Q_neve	-0.45	-1.49
94	94	119	Q_manutenzione	-0.16	-0.42
94	94	126	Q_manutenzione	-0.17	-0.42
94	94	127	Q_manutenzione	-0.17	-0.22
94	94	120	Q_manutenzione	-0.16	-0.22
94	94	119	EQ_X	10.34	2.54
94	94	126	EQ_X	11.13	2.54
94	94	127	EQ_X	11.13	1.3
94	94	120	EQ_X	10.34	1.3
94	94	119	EQ_Y	-0.68	13.39
94	94	126	EQ_Y	4.85	13.39
94	94	127	EQ_Y	4.85	-3.04
94	94	120	EQ_Y	-0.68	-3.04
95	95	120	DEAD	-1.971E-12	-2.016E-12
95	95	127	DEAD	-5.063E-13	-7.574E-13
95	95	128	DEAD	-9.177E-13	-5.681E-13
95	95	121	DEAD	8.104E-13	-2.308E-13
95	95	120	G1_power station	0.	0.
95	95	127	G1_power station	0.	0.
95	95	128	G1_power station	0.	0.
95	95	121	G1_power station	0.	0.
95	95	120	G2_power station	4.4	-6.2
95	95	127	G2_power station	4.45	-6.2
95	95	128	G2_power station	4.45	-3.47
95	95	121	G2_power station	4.4	-3.47
95	95	120	Q_power station	0.16	-0.23
95	95	127	Q_power station	0.16	-0.23
95	95	128	Q_power station	0.16	-0.13

Table 21: Element Stresses - Area Shells, Part 3 of 3

Area	AreaElem	Joint	OutputCase	S13Avg	S23Avg
				KN/m2	KN/m2
95	95	121	Q_power station	0.16	-0.13
95	95	120	Q_neve	0.49	-1.5
95	95	127	Q_neve	0.46	-1.5
95	95	128	Q_neve	0.46	-1.28
95	95	121	Q_neve	0.49	-1.28
95	95	120	Q_manutenzione	0.16	-0.23
95	95	127	Q_manutenzione	0.16	-0.23
95	95	128	Q_manutenzione	0.16	-0.13
95	95	121	Q_manutenzione	0.16	-0.13
95	95	120	EQ_X	7.71	1.05
95	95	127	EQ_X	8.06	1.05
95	95	128	EQ_X	8.06	0.32
95	95	121	EQ_X	7.71	0.32
95	95	120	EQ_Y	0.32	-3.43
95	95	127	EQ_Y	-0.38	-3.43
95	95	128	EQ_Y	-0.38	1.83
95	95	121	EQ_Y	0.32	1.83
96	96	121	DEAD	4.005E-13	7.465E-13
96	96	128	DEAD	3.299E-13	2.057E-12
96	96	129	DEAD	6.638E-13	-1.887E-12
96	96	122	DEAD	1.647E-12	1.136E-12
96	96	121	G1_power station	0.	0.
96	96	128	G1_power station	0.	0.
96	96	129	G1_power station	0.	0.
96	96	122	G1_power station	0.	0.
96	96	121	G2_power station	7.92	-3.45
96	96	128	G2_power station	6.75	-3.45
96	96	129	G2_power station	6.75	-1.07
96	96	122	G2_power station	7.92	-1.07
96	96	121	Q_power station	0.29	-0.13
96	96	128	Q_power station	0.25	-0.13
96	96	129	Q_power station	0.25	-3.955E-02
96	96	122	Q_power station	0.29	-3.955E-02
96	96	121	Q_neve	0.93	-1.26
96	96	128	Q_neve	0.76	-1.26
96	96	129	Q_neve	0.76	-1.08
96	96	122	Q_neve	0.93	-1.08
96	96	121	Q_manutenzione	0.29	-0.13
96	96	128	Q_manutenzione	0.25	-0.13
96	96	129	Q_manutenzione	0.25	-3.955E-02
96	96	122	Q_manutenzione	0.29	-3.955E-02
96	96	121	EQ_X	5.9	0.35
96	96	128	EQ_X	5.54	0.35

Table 21: Element Stresses - Area Shells, Part 3 of 3

Area	AreaElem	Joint	OutputCase	S13Avg	S23Avg
				KN/m2	KN/m2
96	96	129	EQ_X	5.54	-0.21
96	96	122	EQ_X	5.9	-0.21
96	96	121	EQ_Y	0.14	1.63
96	96	128	EQ_Y	0.71	1.63
96	96	129	EQ_Y	0.71	1.32
96	96	122	EQ_Y	0.14	1.32
97	97	122	DEAD	6.434E-13	7.798E-13
97	97	129	DEAD	1.530E-12	-4.534E-13
97	97	130	DEAD	1.168E-13	-9.318E-13
97	97	123	DEAD	-3.135E-13	7.329E-14
97	97	122	G1_power station	0.	0.
97	97	129	G1_power station	0.	0.
97	97	130	G1_power station	0.	0.
97	97	123	G1_power station	0.	0.
97	97	122	G2_power station	8.95	-2.691E-02
97	97	129	G2_power station	3.85	-2.691E-02
97	97	130	G2_power station	3.85	2.03
97	97	123	G2_power station	8.95	2.03
97	97	122	Q_power station	0.33	-9.956E-04
97	97	129	Q_power station	0.14	-9.956E-04
97	97	130	Q_power station	0.14	7.528E-02
97	97	123	Q_power station	0.33	7.528E-02
97	97	122	Q_neve	1.17	-0.94
97	97	129	Q_neve	0.54	-0.94
97	97	130	Q_neve	0.54	-0.83
97	97	123	Q_neve	1.17	-0.83
97	97	122	Q_manutenzione	0.33	-9.956E-04
97	97	129	Q_manutenzione	0.14	-9.956E-04
97	97	130	Q_manutenzione	0.14	7.528E-02
97	97	123	Q_manutenzione	0.33	7.528E-02
97	97	122	EQ_X	5.28	0.22
97	97	129	EQ_X	3.04	0.22
97	97	130	EQ_X	3.04	1.02
97	97	123	EQ_X	5.28	1.02
97	97	122	EQ_Y	8.838E-02	1.17
97	97	129	EQ_Y	0.84	1.17
97	97	130	EQ_Y	0.84	0.41
97	97	123	EQ_Y	8.838E-02	0.41
98	98	123	DEAD	-1.632E-12	-4.581E-13
98	98	130	DEAD	-7.194E-13	1.007E-12
98	98	29	DEAD	-1.105E-12	9.902E-13
98	98	124	DEAD	-1.928E-13	2.718E-12
98	98	123	G1_power station	0.	0.

Table 21: Element Stresses - Area Shells, Part 3 of 3

Area	AreaElem	Joint	OutputCase	S13Avg	S23Avg
				KN/m2	KN/m2
98	98	130	G1_power station	0.	0.
98	98	29	G1_power station	0.	0.
98	98	124	G1_power station	0.	0.
98	98	123	G2_power station	30.15	10.69
98	98	130	G2_power station	-19.07	10.69
98	98	29	G2_power station	-19.07	7.64
98	98	124	G2_power station	30.15	7.64
98	98	123	Q_power station	1.12	0.4
98	98	130	Q_power station	-0.71	0.4
98	98	29	Q_power station	-0.71	0.28
98	98	124	Q_power station	1.12	0.28
98	98	123	Q_neve	3.61	0.16
98	98	130	Q_neve	-1.84	0.16
98	98	29	Q_neve	-1.84	-0.83
98	98	124	Q_neve	3.61	-0.83
98	98	123	Q_manutenzione	1.12	0.4
98	98	130	Q_manutenzione	-0.71	0.4
98	98	29	Q_manutenzione	-0.71	0.28
98	98	124	Q_manutenzione	1.12	0.28
98	98	123	EQ_X	11.25	3.48
98	98	130	EQ_X	-0.14	3.48
98	98	29	EQ_X	-0.14	-9.82
98	98	124	EQ_X	11.25	-9.82
98	98	123	EQ_Y	2.49	0.98
98	98	130	EQ_Y	-3.86	0.98
98	98	29	EQ_Y	-3.86	12.01
98	98	124	EQ_Y	2.49	12.01
99	99	5	DEAD	-8.307E-13	-2.139E-13
99	99	48	DEAD	9.937E-13	1.431E-12
99	99	131	DEAD	2.226E-13	-2.979E-12
99	99	93	DEAD	2.047E-12	-1.203E-12
99	99	5	G1_power station	0.	0.
99	99	48	G1_power station	0.	0.
99	99	131	G1_power station	0.	0.
99	99	93	G1_power station	0.	0.
99	99	5	G2_power station	108.83	-107.11
99	99	48	G2_power station	17.09	-107.11
99	99	131	G2_power station	17.09	-40.47
99	99	93	G2_power station	108.83	-40.47
99	99	5	Q_power station	4.03	-3.96
99	99	48	Q_power station	0.63	-3.96
99	99	131	Q_power station	0.63	-1.5
99	99	93	Q_power station	4.03	-1.5

Table 21: Element Stresses - Area Shells, Part 3 of 3

Area	AreaElem	Joint	OutputCase	S13Avg	S23Avg
				KN/m2	KN/m2
99	99	5	Q_neve	10.29	-10.33
99	99	48	Q_neve	2.07	-10.33
99	99	131	Q_neve	2.07	-4.46
99	99	93	Q_neve	10.29	-4.46
99	99	5	Q_manutenzione	4.03	-3.96
99	99	48	Q_manutenzione	0.63	-3.96
99	99	131	Q_manutenzione	0.63	-1.5
99	99	93	Q_manutenzione	4.03	-1.5
99	99	5	EQ_X	215.23	-75.13
99	99	48	EQ_X	-99.03	-75.13
99	99	131	EQ_X	-99.03	-66.82
99	99	93	EQ_X	215.23	-66.82
99	99	5	EQ_Y	-95.21	205.84
99	99	48	EQ_Y	-63.71	205.84
99	99	131	EQ_Y	-63.71	-83.88
99	99	93	EQ_Y	-95.21	-83.88
100	100	93	DEAD	4.357E-13	-1.583E-12
100	100	131	DEAD	-8.551E-13	-1.532E-12
100	100	132	DEAD	1.724E-13	-9.251E-13
100	100	95	DEAD	2.832E-12	1.760E-12
100	100	93	G1_power station	0.	0.
100	100	131	G1_power station	0.	0.
100	100	132	G1_power station	0.	0.
100	100	95	G1_power station	0.	0.
100	100	93	G2_power station	22.27	-29.35
100	100	131	G2_power station	17.12	-29.35
100	100	132	G2_power station	17.12	-9.3
100	100	95	G2_power station	22.27	-9.3
100	100	93	Q_power station	0.82	-1.09
100	100	131	Q_power station	0.63	-1.09
100	100	132	Q_power station	0.63	-0.34
100	100	95	Q_power station	0.82	-0.34
100	100	93	Q_neve	2.16	-3.42
100	100	131	Q_neve	1.47	-3.42
100	100	132	Q_neve	1.47	-1.74
100	100	95	Q_neve	2.16	-1.74
100	100	93	Q_manutenzione	0.82	-1.09
100	100	131	Q_manutenzione	0.63	-1.09
100	100	132	Q_manutenzione	0.63	-0.34
100	100	95	Q_manutenzione	0.82	-0.34
100	100	93	EQ_X	4.67	-31.18
100	100	131	EQ_X	27.04	-31.18
100	100	132	EQ_X	27.04	-6.59

Table 21: Element Stresses - Area Shells, Part 3 of 3

Area	AreaElem	Joint	OutputCase	S13Avg	S23Avg
				KN/m2	KN/m2
100	100	95	EQ_X	4.67	-6.59
100	100	93	EQ_Y	17.38	-77.49
100	100	131	EQ_Y	-4.81	-77.49
100	100	132	EQ_Y	-4.81	9.37
100	100	95	EQ_Y	17.38	9.37
101	101	95	DEAD	-2.437E-12	7.900E-13
101	101	132	DEAD	2.284E-12	7.056E-14
101	101	133	DEAD	4.601E-13	-7.900E-13
101	101	25	DEAD	-6.121E-13	-9.828E-13
101	101	95	G1_power station	0.	0.
101	101	132	G1_power station	0.	0.
101	101	133	G1_power station	0.	0.
101	101	25	G1_power station	0.	0.
101	101	95	G2_power station	23.12	0.45
101	101	132	G2_power station	-33.49	0.45
101	101	133	G2_power station	-33.49	-20.67
101	101	25	G2_power station	23.12	-20.67
101	101	95	Q_power station	0.86	1.675E-02
101	101	132	Q_power station	-1.24	1.675E-02
101	101	133	Q_power station	-1.24	-0.76
101	101	25	Q_power station	0.86	-0.76
101	101	95	Q_neve	2.48	-0.59
101	101	132	Q_neve	-4.09	-0.59
101	101	133	Q_neve	-4.09	-3.28
101	101	25	Q_neve	2.48	-3.28
101	101	95	Q_manutenzione	0.86	1.675E-02
101	101	132	Q_manutenzione	-1.24	1.675E-02
101	101	133	Q_manutenzione	-1.24	-0.76
101	101	25	Q_manutenzione	0.86	-0.76
101	101	95	EQ_X	-11.54	-19.03
101	101	132	EQ_X	44.3	-19.03
101	101	133	EQ_X	44.3	10.35
101	101	25	EQ_X	-11.54	10.35
101	101	95	EQ_Y	-10.96	8.11
101	101	132	EQ_Y	4.98	8.11
101	101	133	EQ_Y	4.98	-9.09
101	101	25	EQ_Y	-10.96	-9.09
102	102	48	DEAD	-9.882E-13	3.006E-13
102	102	50	DEAD	3.927E-14	1.406E-12
102	102	134	DEAD	-9.882E-13	-2.201E-12
102	102	131	DEAD	-3.384E-12	-5.694E-13
102	102	48	G1_power station	0.	0.
102	102	50	G1_power station	0.	0.

Table 21: Element Stresses - Area Shells, Part 3 of 3

Area	AreaElem	Joint	OutputCase	S13Avg	S23Avg
				KN/m2	KN/m2
102	102	134	G1_power station	0.	0.
102	102	131	G1_power station	0.	0.
102	102	48	G2_power station	9.06	-20.
102	102	50	G2_power station	-4.56	-20.
102	102	134	G2_power station	-4.56	-28.71
102	102	131	G2_power station	9.06	-28.71
102	102	48	Q_power station	0.34	-0.74
102	102	50	Q_power station	-0.17	-0.74
102	102	134	Q_power station	-0.17	-1.06
102	102	131	Q_power station	0.34	-1.06
102	102	48	Q_neve	1.39	-2.11
102	102	50	Q_neve	0.14	-2.11
102	102	134	Q_neve	0.14	-2.96
102	102	131	Q_neve	1.39	-2.96
102	102	48	Q_manutenzione	0.34	-0.74
102	102	50	Q_manutenzione	-0.17	-0.74
102	102	134	Q_manutenzione	-0.17	-1.06
102	102	131	Q_manutenzione	0.34	-1.06
102	102	48	EQ_X	-91.44	14.8
102	102	50	EQ_X	14.9	14.8
102	102	134	EQ_X	14.9	5.82
102	102	131	EQ_X	-91.44	5.82
102	102	48	EQ_Y	-25.28	9.57
102	102	50	EQ_Y	3.58	9.57
102	102	134	EQ_Y	3.58	31.67
102	102	131	EQ_Y	-25.28	31.67
103	103	131	DEAD	3.284E-13	-1.236E-12
103	103	134	DEAD	1.652E-12	-2.829E-12
103	103	135	DEAD	-2.305E-12	4.757E-13
103	103	132	DEAD	1.389E-12	1.384E-12
103	103	131	G1_power station	0.	0.
103	103	134	G1_power station	0.	0.
103	103	135	G1_power station	0.	0.
103	103	132	G1_power station	0.	0.
103	103	131	G2_power station	12.4	-22.69
103	103	134	G2_power station	-5.41	-22.69
103	103	135	G2_power station	-5.41	-19.87
103	103	132	G2_power station	12.4	-19.87
103	103	131	Q_power station	0.46	-0.84
103	103	134	Q_power station	-0.2	-0.84
103	103	135	Q_power station	-0.2	-0.74
103	103	132	Q_power station	0.46	-0.74
103	103	131	Q_neve	1.15	-2.38

Table 21: Element Stresses - Area Shells, Part 3 of 3

Area	AreaElem	Joint	OutputCase	S13Avg	S23Avg
				KN/m2	KN/m2
103	103	134	Q_neve	-0.55	-2.38
103	103	135	Q_neve	-0.55	-2.27
103	103	132	Q_neve	1.15	-2.27
103	103	131	Q_manutenzione	0.46	-0.84
103	103	134	Q_manutenzione	-0.2	-0.84
103	103	135	Q_manutenzione	-0.2	-0.74
103	103	132	Q_manutenzione	0.46	-0.74
103	103	131	EQ_X	23.07	-2.1
103	103	134	EQ_X	2.94	-2.1
103	103	135	EQ_X	2.94	-7.41
103	103	132	EQ_X	23.07	-7.41
103	103	131	EQ_Y	-5.77	27.91
103	103	134	EQ_Y	-7.43	27.91
103	103	135	EQ_Y	-7.43	8.03
103	103	132	EQ_Y	-5.77	8.03
104	104	132	DEAD	1.581E-12	7.249E-13
104	104	135	DEAD	9.067E-13	3.135E-13
104	104	136	DEAD	2.371E-12	1.252E-12
104	104	133	DEAD	-1.466E-13	-1.530E-12
104	104	132	G1_power station	0.	0.
104	104	135	G1_power station	0.	0.
104	104	136	G1_power station	0.	0.
104	104	133	G1_power station	0.	0.
104	104	132	G2_power station	-31.96	-22.23
104	104	135	G2_power station	1.77	-22.23
104	104	136	G2_power station	1.77	-10.12
104	104	133	G2_power station	-31.96	-10.12
104	104	132	Q_power station	-1.18	-0.82
104	104	135	Q_power station	6.547E-02	-0.82
104	104	136	Q_power station	6.547E-02	-0.37
104	104	133	Q_power station	-1.18	-0.37
104	104	132	Q_neve	-3.8	-2.53
104	104	135	Q_neve	-0.2	-2.53
104	104	136	Q_neve	-0.2	-1.36
104	104	133	Q_neve	-3.8	-1.36
104	104	132	Q_manutenzione	-1.18	-0.82
104	104	135	Q_manutenzione	6.547E-02	-0.82
104	104	136	Q_manutenzione	6.547E-02	-0.37
104	104	133	Q_manutenzione	-1.18	-0.37
104	104	132	EQ_X	38.71	-0.56
104	104	135	EQ_X	7.98	-0.56
104	104	136	EQ_X	7.98	-5.13
104	104	133	EQ_X	38.71	-5.13

Table 21: Element Stresses - Area Shells, Part 3 of 3

Area	AreaElem	Joint	OutputCase	S13Avg	S23Avg
				KN/m2	KN/m2
104	104	132	EQ_Y	3.44	9.52
104	104	135	EQ_Y	-1.35	9.52
104	104	136	EQ_Y	-1.35	6.75
104	104	133	EQ_Y	3.44	6.75
105	105	50	DEAD	8.566E-13	2.141E-12
105	105	52	DEAD	7.343E-13	2.912E-13
105	105	137	DEAD	1.120E-12	2.800E-12
105	105	134	DEAD	-5.823E-13	-3.672E-13
105	105	50	G1_power station	0.	0.
105	105	52	G1_power station	0.	0.
105	105	137	G1_power station	0.	0.
105	105	134	G1_power station	0.	0.
105	105	50	G2_power station	-3.11	4.515E-12
105	105	52	G2_power station	-3.11	-2.038E-12
105	105	137	G2_power station	-3.11	2.935E-12
105	105	134	G2_power station	-3.11	-2.828E-12
105	105	50	Q_power station	-0.12	5.591E-14
105	105	52	Q_power station	-0.12	-2.439E-14
105	105	137	Q_power station	-0.12	7.237E-14
105	105	134	Q_power station	-0.12	-3.262E-14
105	105	50	Q_neve	0.29	4.832E-13
105	105	52	Q_neve	0.29	1.620E-13
105	105	137	Q_neve	0.29	2.199E-13
105	105	134	Q_neve	0.29	-2.000E-13
105	105	50	Q_manutenzione	-0.12	5.591E-14
105	105	52	Q_manutenzione	-0.12	-2.439E-14
105	105	137	Q_manutenzione	-0.12	7.237E-14
105	105	134	Q_manutenzione	-0.12	-3.262E-14
105	105	50	EQ_X	13.74	-1.215E-12
105	105	52	EQ_X	13.74	-6.148E-13
105	105	137	EQ_X	13.74	-1.292E-13
105	105	134	EQ_X	13.74	2.822E-13
105	105	50	EQ_Y	0.87	22.05
105	105	52	EQ_Y	-0.87	22.05
105	105	137	EQ_Y	-0.87	20.
105	105	134	EQ_Y	0.87	20.
106	106	134	DEAD	-4.412E-13	-7.574E-13
106	106	137	DEAD	-9.489E-13	8.613E-13
106	106	138	DEAD	-1.231E-12	-2.308E-13
106	106	135	DEAD	-4.372E-12	2.030E-13
106	106	134	G1_power station	0.	0.
106	106	137	G1_power station	0.	0.
106	106	138	G1_power station	0.	0.

Table 21: Element Stresses - Area Shells, Part 3 of 3

Area	AreaElem	Joint	OutputCase	S13Avg	S23Avg
				KN/m2	KN/m2
106	106	135	G1_power station	0.	0.
106	106	134	G2_power station	-5.59	-2.435E-12
106	106	137	G2_power station	-5.59	8.029E-13
106	106	138	G2_power station	-5.59	-9.862E-13
106	106	135	G2_power station	-5.59	-1.188E-13
106	106	134	Q_power station	-0.21	-4.085E-14
106	106	137	Q_power station	-0.21	6.032E-14
106	106	138	Q_power station	-0.21	-1.616E-14
106	106	135	Q_power station	-0.21	1.095E-14
106	106	134	Q_neve	-0.54	-3.711E-13
106	106	137	Q_neve	-0.54	3.360E-14
106	106	138	Q_neve	-0.54	-9.003E-15
106	106	135	Q_neve	-0.54	9.943E-14
106	106	134	Q_manutenzione	-0.21	-4.085E-14
106	106	137	Q_manutenzione	-0.21	6.032E-14
106	106	138	Q_manutenzione	-0.21	-1.616E-14
106	106	135	Q_manutenzione	-0.21	1.095E-14
106	106	134	EQ_X	4.66	1.634E-13
106	106	137	EQ_X	4.66	1.184E-13
106	106	138	EQ_X	4.66	6.465E-14
106	106	135	EQ_X	4.66	5.260E-14
106	106	134	EQ_Y	-4.5	18.15
106	106	137	EQ_Y	4.5	18.15
106	106	138	EQ_Y	4.5	17.62
106	106	135	EQ_Y	-4.5	17.62
107	107	135	DEAD	-1.252E-12	-1.436E-12
107	107	138	DEAD	2.564E-12	-5.368E-13
107	107	139	DEAD	-7.249E-13	1.438E-13
107	107	136	DEAD	2.301E-12	3.848E-13
107	107	135	G1_power station	0.	0.
107	107	138	G1_power station	0.	0.
107	107	139	G1_power station	0.	0.
107	107	136	G1_power station	0.	0.
107	107	135	G2_power station	-1.13	-1.160E-12
107	107	138	G2_power station	-1.13	-4.982E-13
107	107	139	G2_power station	-1.13	1.046E-12
107	107	136	G2_power station	-1.13	5.552E-13
107	107	135	Q_power station	-4.180E-02	-1.558E-14
107	107	138	Q_power station	-4.180E-02	-5.299E-16
107	107	139	Q_power station	-4.180E-02	2.865E-14
107	107	136	Q_power station	-4.180E-02	1.181E-14
107	107	135	Q_neve	-0.48	-4.048E-13
107	107	138	Q_neve	-0.48	9.786E-14

Table 21: Element Stresses - Area Shells, Part 3 of 3

Area	AreaElem	Joint	OutputCase	S13Avg	S23Avg
				KN/m2	KN/m2
107	107	139	Q_neve	-0.48	1.054E-13
107	107	136	Q_neve	-0.48	7.318E-14
107	107	135	Q_manutenzione	-4.180E-02	-1.558E-14
107	107	138	Q_manutenzione	-4.180E-02	-5.299E-16
107	107	139	Q_manutenzione	-4.180E-02	2.865E-14
107	107	136	Q_manutenzione	-4.180E-02	1.181E-14
107	107	135	EQ_X	9.91	-1.632E-13
107	107	138	EQ_X	9.91	-5.488E-13
107	107	139	EQ_X	9.91	4.293E-13
107	107	136	EQ_X	9.91	-1.010E-12
107	107	135	EQ_Y	0.78	17.04
107	107	138	EQ_Y	-0.78	17.04
107	107	139	EQ_Y	-0.78	13.54
107	107	136	EQ_Y	0.78	13.54
108	108	52	DEAD	5.252E-13	1.713E-12
108	108	54	DEAD	-1.357E-13	2.742E-13
108	108	140	DEAD	-4.478E-12	2.240E-12
108	108	137	DEAD	3.024E-12	1.854E-12
108	108	52	G1_power station	0.	0.
108	108	54	G1_power station	0.	0.
108	108	140	G1_power station	0.	0.
108	108	137	G1_power station	0.	0.
108	108	52	G2_power station	-4.56	20.
108	108	54	G2_power station	9.06	20.
108	108	140	G2_power station	9.06	28.71
108	108	137	G2_power station	-4.56	28.71
108	108	52	Q_power station	-0.17	0.74
108	108	54	Q_power station	0.34	0.74
108	108	140	Q_power station	0.34	1.06
108	108	137	Q_power station	-0.17	1.06
108	108	52	Q_neve	0.14	2.11
108	108	54	Q_neve	1.39	2.11
108	108	140	Q_neve	1.39	2.96
108	108	137	Q_neve	0.14	2.96
108	108	52	Q_manutenzione	-0.17	0.74
108	108	54	Q_manutenzione	0.34	0.74
108	108	140	Q_manutenzione	0.34	1.06
108	108	137	Q_manutenzione	-0.17	1.06
108	108	52	EQ_X	14.9	-14.8
108	108	54	EQ_X	-91.44	-14.8
108	108	140	EQ_X	-91.44	-5.82
108	108	137	EQ_X	14.9	-5.82
108	108	52	EQ_Y	-3.58	9.57

Table 21: Element Stresses - Area Shells, Part 3 of 3

Area	AreaElem	Joint	OutputCase	S13Avg	S23Avg
				KN/m2	KN/m2
108	108	54	EQ_Y	25.28	9.57
108	108	140	EQ_Y	25.28	31.67
108	108	137	EQ_Y	-3.58	31.67
109	109	137	DEAD	6.787E-13	1.540E-12
109	109	140	DEAD	-1.197E-12	2.465E-12
109	109	141	DEAD	-3.746E-13	-1.717E-13
109	109	138	DEAD	-4.884E-12	1.412E-12
109	109	137	G1_power station	0.	0.
109	109	140	G1_power station	0.	0.
109	109	141	G1_power station	0.	0.
109	109	138	G1_power station	0.	0.
109	109	137	G2_power station	-5.41	22.69
109	109	140	G2_power station	12.4	22.69
109	109	141	G2_power station	12.4	19.87
109	109	138	G2_power station	-5.41	19.87
109	109	137	Q_power station	-0.2	0.84
109	109	140	Q_power station	0.46	0.84
109	109	141	Q_power station	0.46	0.74
109	109	138	Q_power station	-0.2	0.74
109	109	137	Q_neve	-0.55	2.38
109	109	140	Q_neve	1.15	2.38
109	109	141	Q_neve	1.15	2.27
109	109	138	Q_neve	-0.55	2.27
109	109	137	Q_manutenzione	-0.2	0.84
109	109	140	Q_manutenzione	0.46	0.84
109	109	141	Q_manutenzione	0.46	0.74
109	109	138	Q_manutenzione	-0.2	0.74
109	109	137	EQ_X	2.94	2.1
109	109	140	EQ_X	23.07	2.1
109	109	141	EQ_X	23.07	7.41
109	109	138	EQ_X	2.94	7.41
109	109	137	EQ_Y	7.43	27.91
109	109	140	EQ_Y	5.77	27.91
109	109	141	EQ_Y	5.77	8.03
109	109	138	EQ_Y	7.43	8.03
110	110	138	DEAD	1.606E-12	-2.273E-13
110	110	141	DEAD	-2.375E-13	2.864E-13
110	110	142	DEAD	-2.375E-13	1.748E-12
110	110	139	DEAD	1.606E-12	5.498E-13
110	110	138	G1_power station	0.	0.
110	110	141	G1_power station	0.	0.
110	110	142	G1_power station	0.	0.
110	110	139	G1_power station	0.	0.

Table 21: Element Stresses - Area Shells, Part 3 of 3

Area	AreaElem	Joint	OutputCase	S13Avg	S23Avg
				KN/m2	KN/m2
110	110	138	G2_power station	1.77	22.23
110	110	141	G2_power station	-31.96	22.23
110	110	142	G2_power station	-31.96	10.12
110	110	139	G2_power station	1.77	10.12
110	110	138	Q_power station	6.547E-02	0.82
110	110	141	Q_power station	-1.18	0.82
110	110	142	Q_power station	-1.18	0.37
110	110	139	Q_power station	6.547E-02	0.37
110	110	138	Q_neve	-0.2	2.53
110	110	141	Q_neve	-3.8	2.53
110	110	142	Q_neve	-3.8	1.36
110	110	139	Q_neve	-0.2	1.36
110	110	138	Q_manutenzione	6.547E-02	0.82
110	110	141	Q_manutenzione	-1.18	0.82
110	110	142	Q_manutenzione	-1.18	0.37
110	110	139	Q_manutenzione	6.547E-02	0.37
110	110	138	EQ_X	7.98	0.56
110	110	141	EQ_X	38.71	0.56
110	110	142	EQ_X	38.71	5.13
110	110	139	EQ_X	7.98	5.13
110	110	138	EQ_Y	1.35	9.52
110	110	141	EQ_Y	-3.44	9.52
110	110	142	EQ_Y	-3.44	6.75
110	110	139	EQ_Y	1.35	6.75
111	111	54	DEAD	-2.462E-12	1.928E-12
111	111	58	DEAD	1.328E-12	1.722E-12
111	111	143	DEAD	-8.824E-13	-1.791E-13
111	111	140	DEAD	8.009E-13	-1.570E-12
111	111	54	G1_power station	0.	0.
111	111	58	G1_power station	0.	0.
111	111	143	G1_power station	0.	0.
111	111	140	G1_power station	0.	0.
111	111	54	G2_power station	17.09	107.11
111	111	58	G2_power station	108.83	107.11
111	111	143	G2_power station	108.83	40.47
111	111	140	G2_power station	17.09	40.47
111	111	54	Q_power station	0.63	3.96
111	111	58	Q_power station	4.03	3.96
111	111	143	Q_power station	4.03	1.5
111	111	140	Q_power station	0.63	1.5
111	111	54	Q_neve	2.07	10.33
111	111	58	Q_neve	10.29	10.33
111	111	143	Q_neve	10.29	4.46

Table 21: Element Stresses - Area Shells, Part 3 of 3

Area	AreaElem	Joint	OutputCase	S13Avg	S23Avg
				KN/m2	KN/m2
111	111	140	Q_neve	2.07	4.46
111	111	54	Q_manutenzione	0.63	3.96
111	111	58	Q_manutenzione	4.03	3.96
111	111	143	Q_manutenzione	4.03	1.5
111	111	140	Q_manutenzione	0.63	1.5
111	111	54	EQ_X	-99.03	75.13
111	111	58	EQ_X	215.23	75.13
111	111	143	EQ_X	215.23	66.82
111	111	140	EQ_X	-99.03	66.82
111	111	54	EQ_Y	63.71	205.84
111	111	58	EQ_Y	95.21	205.84
111	111	143	EQ_Y	95.21	-83.88
111	111	140	EQ_Y	63.71	-83.88
112	112	140	DEAD	4.710E-13	-4.181E-13
112	112	143	DEAD	-7.045E-13	-2.641E-13
112	112	144	DEAD	-3.190E-13	-4.181E-13
112	112	141	DEAD	-9.678E-13	-1.712E-12
112	112	140	G1_power station	0.	0.
112	112	143	G1_power station	0.	0.
112	112	144	G1_power station	0.	0.
112	112	141	G1_power station	0.	0.
112	112	140	G2_power station	17.12	29.35
112	112	143	G2_power station	22.27	29.35
112	112	144	G2_power station	22.27	9.3
112	112	141	G2_power station	17.12	9.3
112	112	140	Q_power station	0.63	1.09
112	112	143	Q_power station	0.82	1.09
112	112	144	Q_power station	0.82	0.34
112	112	141	Q_power station	0.63	0.34
112	112	140	Q_neve	1.47	3.42
112	112	143	Q_neve	2.16	3.42
112	112	144	Q_neve	2.16	1.74
112	112	141	Q_neve	1.47	1.74
112	112	140	Q_manutenzione	0.63	1.09
112	112	143	Q_manutenzione	0.82	1.09
112	112	144	Q_manutenzione	0.82	0.34
112	112	141	Q_manutenzione	0.63	0.34
112	112	140	EQ_X	27.04	31.18
112	112	143	EQ_X	4.67	31.18
112	112	144	EQ_X	4.67	6.59
112	112	141	EQ_X	27.04	6.59
112	112	140	EQ_Y	4.81	-77.49
112	112	143	EQ_Y	-17.38	-77.49

Table 21: Element Stresses - Area Shells, Part 3 of 3

Area	AreaElem	Joint	OutputCase	S13Avg	S23Avg
				KN/m2	KN/m2
112	112	144	EQ_Y	-17.38	9.37
112	112	141	EQ_Y	4.81	9.37
113	113	141	DEAD	-6.656E-14	-2.284E-12
113	113	144	DEAD	-8.049E-13	-2.849E-12
113	113	30	DEAD	-1.910E-12	2.588E-12
113	113	142	DEAD	1.565E-12	1.101E-12
113	113	141	G1_power station	0.	0.
113	113	144	G1_power station	0.	0.
113	113	30	G1_power station	0.	0.
113	113	142	G1_power station	0.	0.
113	113	141	G2_power station	-33.49	-0.45
113	113	144	G2_power station	23.12	-0.45
113	113	30	G2_power station	23.12	20.67
113	113	142	G2_power station	-33.49	20.67
113	113	141	Q_power station	-1.24	-1.675E-02
113	113	144	Q_power station	0.86	-1.675E-02
113	113	30	Q_power station	0.86	0.76
113	113	142	Q_power station	-1.24	0.76
113	113	141	Q_neve	-4.09	0.59
113	113	144	Q_neve	2.48	0.59
113	113	30	Q_neve	2.48	3.28
113	113	142	Q_neve	-4.09	3.28
113	113	141	Q_manutenzione	-1.24	-1.675E-02
113	113	144	Q_manutenzione	0.86	-1.675E-02
113	113	30	Q_manutenzione	0.86	0.76
113	113	142	Q_manutenzione	-1.24	0.76
113	113	141	EQ_X	44.3	19.03
113	113	144	EQ_X	-11.54	19.03
113	113	30	EQ_X	-11.54	-10.35
113	113	142	EQ_X	44.3	-10.35
113	113	141	EQ_Y	-4.98	8.11
113	113	144	EQ_Y	10.96	8.11
113	113	30	EQ_Y	10.96	-9.09
113	113	142	EQ_Y	-4.98	-9.09
114	114	11	DEAD	-1.350E-11	3.477E-13
114	114	14	DEAD	4.333E-12	6.000E-12
114	114	145	DEAD	-7.178E-12	8.774E-12
114	114	146	DEAD	-1.041E-11	4.947E-12
114	114	11	G1_power station	0.	0.
114	114	14	G1_power station	0.	0.
114	114	145	G1_power station	0.	0.
114	114	146	G1_power station	0.	0.
114	114	11	G2_power station	-48.86	-66.45

Table 21: Element Stresses - Area Shells, Part 3 of 3

Area	AreaElem	Joint	OutputCase	S13Avg	S23Avg
				KN/m2	KN/m2
114	114	14	G2_power station	-119.23	-66.45
114	114	145	G2_power station	-119.23	-11.61
114	114	146	G2_power station	-48.86	-11.61
114	114	11	Q_power station	-1.81	-2.46
114	114	14	Q_power station	-4.41	-2.46
114	114	145	Q_power station	-4.41	-0.43
114	114	146	Q_power station	-1.81	-0.43
114	114	11	Q_neve	-4.98	-5.5
114	114	14	Q_neve	-11.5	-5.5
114	114	145	Q_neve	-11.5	-0.43
114	114	146	Q_neve	-4.98	-0.43
114	114	11	Q_manutenzione	-1.81	-2.46
114	114	14	Q_manutenzione	-4.41	-2.46
114	114	145	Q_manutenzione	-4.41	-0.43
114	114	146	Q_manutenzione	-1.81	-0.43
114	114	11	EQ_X	-170.48	83.9
114	114	14	EQ_X	193.19	83.9
114	114	145	EQ_X	193.19	55.1
114	114	146	EQ_X	-170.48	55.1
114	114	11	EQ_Y	79.93	164.41
114	114	14	EQ_Y	92.25	164.41
114	114	145	EQ_Y	92.25	-71.18
114	114	146	EQ_Y	79.93	-71.18
115	115	146	DEAD	-5.267E-13	8.555E-13
115	115	145	DEAD	1.966E-12	1.575E-12
115	115	147	DEAD	5.267E-13	1.192E-11
115	115	148	DEAD	-1.411E-13	1.211E-11
115	115	146	G1_power station	0.	0.
115	115	145	G1_power station	0.	0.
115	115	147	G1_power station	0.	0.
115	115	148	G1_power station	0.	0.
115	115	146	G2_power station	-58.03	-8.39
115	115	145	G2_power station	-33.87	-8.39
115	115	147	G2_power station	-33.87	8.84
115	115	148	G2_power station	-58.03	8.84
115	115	146	Q_power station	-2.15	-0.31
115	115	145	Q_power station	-1.25	-0.31
115	115	147	Q_power station	-1.25	0.33
115	115	148	Q_power station	-2.15	0.33
115	115	146	Q_neve	-5.75	-0.13
115	115	145	Q_neve	-3.56	-0.13
115	115	147	Q_neve	-3.56	1.51
115	115	148	Q_neve	-5.75	1.51

Table 21: Element Stresses - Area Shells, Part 3 of 3

Area	AreaElem	Joint	OutputCase	S13Avg	S23Avg
				KN/m2	KN/m2
115	115	146	Q_manutenzione	-2.15	-0.31
115	115	145	Q_manutenzione	-1.25	-0.31
115	115	147	Q_manutenzione	-1.25	0.33
115	115	148	Q_manutenzione	-2.15	0.33
115	115	146	EQ_X	33.8	14.85
115	115	145	EQ_X	2.81	14.85
115	115	147	EQ_X	2.81	0.33
115	115	148	EQ_X	33.8	0.33
115	115	146	EQ_Y	7.85	-63.52
115	115	145	EQ_Y	-14.82	-63.52
115	115	147	EQ_Y	-14.82	4.28
115	115	148	EQ_Y	7.85	4.28
116	116	148	DEAD	-1.364E-11	1.291E-11
116	116	147	DEAD	-3.567E-12	5.718E-12
116	116	149	DEAD	-5.213E-12	1.081E-11
116	116	150	DEAD	-2.514E-12	8.878E-12
116	116	148	G1_power station	0.	0.
116	116	147	G1_power station	0.	0.
116	116	149	G1_power station	0.	0.
116	116	150	G1_power station	0.	0.
116	116	148	G2_power station	-26.35	4.12
116	116	147	G2_power station	-20.55	4.12
116	116	149	G2_power station	-20.55	8.65
116	116	150	G2_power station	-26.35	8.65
116	116	148	Q_power station	-0.97	0.15
116	116	147	Q_power station	-0.76	0.15
116	116	149	Q_power station	-0.76	0.32
116	116	150	Q_power station	-0.97	0.32
116	116	148	Q_neve	-2.69	1.07
116	116	147	Q_neve	-2.13	1.07
116	116	149	Q_neve	-2.13	1.55
116	116	150	Q_neve	-2.69	1.55
116	116	148	Q_manutenzione	-0.97	0.15
116	116	147	Q_manutenzione	-0.76	0.15
116	116	149	Q_manutenzione	-0.76	0.32
116	116	150	Q_manutenzione	-0.97	0.32
116	116	148	EQ_X	12.56	5.35
116	116	147	EQ_X	8.74	5.35
116	116	149	EQ_X	8.74	1.68
116	116	150	EQ_X	12.56	1.68
116	116	148	EQ_Y	1.39	5.03
116	116	147	EQ_Y	5.87	5.03
116	116	149	EQ_Y	5.87	-9.39

Table 21: Element Stresses - Area Shells, Part 3 of 3

Area	AreaElem	Joint	OutputCase	S13Avg	S23Avg
				KN/m2	KN/m2
116	116	150	EQ_Y	1.39	-9.39
117	117	150	DEAD	-1.084E-11	7.349E-12
117	117	149	DEAD	-5.576E-12	8.788E-12
117	117	151	DEAD	-5.576E-12	9.983E-12
117	117	152	DEAD	-1.084E-11	1.037E-11
117	117	150	G1_power station	0.	0.
117	117	149	G1_power station	0.	0.
117	117	151	G1_power station	0.	0.
117	117	152	G1_power station	0.	0.
117	117	150	G2_power station	-14.54	7.07
117	117	149	G2_power station	-11.04	7.07
117	117	151	G2_power station	-11.04	9.34
117	117	152	G2_power station	-14.54	9.34
117	117	150	Q_power station	-0.54	0.26
117	117	149	Q_power station	-0.41	0.26
117	117	151	Q_power station	-0.41	0.35
117	117	152	Q_power station	-0.54	0.35
117	117	150	Q_neve	-1.44	1.39
117	117	149	Q_neve	-1.08	1.39
117	117	151	Q_neve	-1.08	1.66
117	117	152	Q_neve	-1.44	1.66
117	117	150	Q_manutenzione	-0.54	0.26
117	117	149	Q_manutenzione	-0.41	0.26
117	117	151	Q_manutenzione	-0.41	0.35
117	117	152	Q_manutenzione	-0.54	0.35
117	117	150	EQ_X	9.51	2.6
117	117	149	EQ_X	8.08	2.6
117	117	151	EQ_X	8.08	1.01
117	117	152	EQ_X	9.51	1.01
117	117	150	EQ_Y	0.8	-9.77
117	117	149	EQ_Y	0.62	-9.77
117	117	151	EQ_Y	0.62	-3.63
117	117	152	EQ_Y	0.8	-3.63
118	118	152	DEAD	-2.519E-11	7.254E-12
118	118	151	DEAD	1.916E-12	4.376E-12
118	118	153	DEAD	-9.617E-13	-1.173E-12
118	118	154	DEAD	-2.442E-11	-1.944E-12
118	118	152	G1_power station	0.	0.
118	118	151	G1_power station	0.	0.
118	118	153	G1_power station	0.	0.
118	118	154	G1_power station	0.	0.
118	118	152	G2_power station	-15.25	7.65
118	118	151	G2_power station	-8.26	7.65

Table 21: Element Stresses - Area Shells, Part 3 of 3

Area	AreaElem	Joint	OutputCase	S13Avg	S23Avg
				KN/m2	KN/m2
118	118	153	G2_power station	-8.26	7.17
118	118	154	G2_power station	-15.25	7.17
118	118	152	Q_power station	-0.56	0.28
118	118	151	Q_power station	-0.31	0.28
118	118	153	Q_power station	-0.31	0.27
118	118	154	Q_power station	-0.56	0.27
118	118	152	Q_neve	-1.41	1.48
118	118	151	Q_neve	-0.69	1.48
118	118	153	Q_neve	-0.69	1.44
118	118	154	Q_neve	-1.41	1.44
118	118	152	Q_manutenzione	-0.56	0.28
118	118	151	Q_manutenzione	-0.31	0.28
118	118	153	Q_manutenzione	-0.31	0.27
118	118	154	Q_manutenzione	-0.56	0.27
118	118	152	EQ_X	8.36	1.38
118	118	151	EQ_X	7.68	1.38
118	118	153	EQ_X	7.68	0.45
118	118	154	EQ_X	8.36	0.45
118	118	152	EQ_Y	1.01	-3.76
118	118	151	EQ_Y	0.83	-3.76
118	118	153	EQ_Y	0.83	-4.5
118	118	154	EQ_Y	1.01	-4.5
119	119	154	DEAD	-2.103E-11	2.161E-12
119	119	153	DEAD	1.010E-12	7.094E-12
119	119	155	DEAD	-2.075E-12	8.481E-12
119	119	156	DEAD	-9.524E-12	4.461E-12
119	119	154	G1_power station	0.	0.
119	119	153	G1_power station	0.	0.
119	119	155	G1_power station	0.	0.
119	119	156	G1_power station	0.	0.
119	119	154	G2_power station	-37.65	2.25
119	119	153	G2_power station	-16.11	2.25
119	119	155	G2_power station	-16.11	12.91
119	119	156	G2_power station	-37.65	12.91
119	119	154	Q_power station	-1.39	8.308E-02
119	119	153	Q_power station	-0.6	8.308E-02
119	119	155	Q_power station	-0.6	0.48
119	119	156	Q_power station	-1.39	0.48
119	119	154	Q_neve	-3.49	0.94
119	119	153	Q_neve	-1.38	0.94
119	119	155	Q_neve	-1.38	2.02
119	119	156	Q_neve	-3.49	2.02
119	119	154	Q_manutenzione	-1.39	8.308E-02

Table 21: Element Stresses - Area Shells, Part 3 of 3

Area	AreaElem	Joint	OutputCase	S13Avg	S23Avg
				KN/m2	KN/m2
119	119	153	Q_manutenzione	-0.6	8.308E-02
119	119	155	Q_manutenzione	-0.6	0.48
119	119	156	Q_manutenzione	-1.39	0.48
119	119	154	EQ_X	8.07	0.68
119	119	153	EQ_X	7.47	0.68
119	119	155	EQ_X	7.47	-1.46
119	119	156	EQ_X	8.07	-1.46
119	119	154	EQ_Y	3.2	-4.01
119	119	153	EQ_Y	0.88	-4.01
119	119	155	EQ_Y	0.88	-7.8
119	119	156	EQ_Y	3.2	-7.8
120	120	156	DEAD	-6.950E-12	2.582E-12
120	120	155	DEAD	2.916E-12	4.124E-12
120	120	24	DEAD	1.477E-12	-5.318E-12
120	120	31	DEAD	-6.564E-12	4.372E-13
120	120	156	G1_power station	0.	0.
120	120	155	G1_power station	0.	0.
120	120	24	G1_power station	0.	0.
120	120	31	G1_power station	0.	0.
120	120	156	G2_power station	-132.93	-2.74
120	120	155	G2_power station	-72.82	-2.74
120	120	24	G2_power station	-72.82	-60.78
120	120	31	G2_power station	-132.93	-60.78
120	120	156	Q_power station	-4.92	-0.1
120	120	155	Q_power station	-2.69	-0.1
120	120	24	Q_power station	-2.69	-2.25
120	120	31	Q_power station	-4.92	-2.25
120	120	156	Q_neve	-12.64	0.53
120	120	155	Q_neve	-7.13	0.53
120	120	24	Q_neve	-7.13	-6.01
120	120	31	Q_neve	-12.64	-6.01
120	120	156	Q_manutenzione	-4.92	-0.1
120	120	155	Q_manutenzione	-2.69	-0.1
120	120	24	Q_manutenzione	-2.69	-2.25
120	120	31	Q_manutenzione	-4.92	-2.25
120	120	156	EQ_X	8.55	-0.41
120	120	155	EQ_X	0.86	-0.41
120	120	24	EQ_X	0.86	-8.99
120	120	31	EQ_X	8.55	-8.99
120	120	156	EQ_Y	8.27	-5.98
120	120	155	EQ_Y	4.402E-03	-5.98
120	120	24	EQ_Y	4.402E-03	-5.2
120	120	31	EQ_Y	8.27	-5.2

Table 21: Element Stresses - Area Shells, Part 3 of 3

Area	AreaElem	Joint	OutputCase	S13Avg	S23Avg
				KN/m2	KN/m2
121	121	19	DEAD	2.150E-12	9.638E-12
121	121	22	DEAD	6.570E-12	1.036E-11
121	121	157	DEAD	6.364E-12	6.478E-12
121	121	158	DEAD	1.289E-11	6.671E-12
121	121	19	G1_power station	0.	0.
121	121	22	G1_power station	0.	0.
121	121	157	G1_power station	0.	0.
121	121	158	G1_power station	0.	0.
121	121	19	G2_power station	51.71	65.74
121	121	22	G2_power station	125.18	65.74
121	121	157	G2_power station	125.18	14.2
121	121	158	G2_power station	51.71	14.2
121	121	19	Q_power station	1.91	2.43
121	121	22	Q_power station	4.63	2.43
121	121	157	Q_power station	4.63	0.53
121	121	158	Q_power station	1.91	0.53
121	121	19	Q_neve	5.07	5.32
121	121	22	Q_neve	11.83	5.32
121	121	157	Q_neve	11.83	0.61
121	121	158	Q_neve	5.07	0.61
121	121	19	Q_manutenzione	1.91	2.43
121	121	22	Q_manutenzione	4.63	2.43
121	121	157	Q_manutenzione	4.63	0.53
121	121	158	Q_manutenzione	1.91	0.53
121	121	19	EQ_X	-192.3	87.54
121	121	22	EQ_X	207.53	87.54
121	121	157	EQ_X	207.53	59.99
121	121	158	EQ_X	-192.3	59.99
121	121	19	EQ_Y	82.2	171.98
121	121	22	EQ_Y	100.5	171.98
121	121	157	EQ_Y	100.5	-74.13
121	121	158	EQ_Y	82.2	-74.13
122	122	158	DEAD	1.542E-12	5.755E-12
122	122	157	DEAD	8.840E-12	5.755E-12
122	122	159	DEAD	5.755E-12	1.542E-12
122	122	160	DEAD	1.305E-11	1.542E-12
122	122	158	G1_power station	0.	0.
122	122	157	G1_power station	0.	0.
122	122	159	G1_power station	0.	0.
122	122	160	G1_power station	0.	0.
122	122	158	G2_power station	86.15	13.76
122	122	157	G2_power station	44.73	13.76
122	122	159	G2_power station	44.73	-11.23

Table 21: Element Stresses - Area Shells, Part 3 of 3

Area	AreaElem	Joint	OutputCase	S13Avg	S23Avg
				KN/m2	KN/m2
122	122	160	G2_power station	86.15	-11.23
122	122	158	Q_power station	3.19	0.51
122	122	157	Q_power station	1.66	0.51
122	122	159	Q_power station	1.66	-0.42
122	122	160	Q_power station	3.19	-0.42
122	122	158	Q_neve	8.21	0.58
122	122	157	Q_neve	4.34	0.58
122	122	159	Q_neve	4.34	-1.84
122	122	160	Q_neve	8.21	-1.84
122	122	158	Q_manutenzione	3.19	0.51
122	122	157	Q_manutenzione	1.66	0.51
122	122	159	Q_manutenzione	1.66	-0.42
122	122	160	Q_manutenzione	3.19	-0.42
122	122	158	EQ_X	20.33	14.81
122	122	157	EQ_X	-5.701E-02	14.81
122	122	159	EQ_X	-5.701E-02	1.99
122	122	160	EQ_X	20.33	1.99
122	122	158	EQ_Y	5.51	-66.81
122	122	157	EQ_Y	-18.34	-66.81
122	122	159	EQ_Y	-18.34	4.36
122	122	160	EQ_Y	5.51	4.36
123	123	160	DEAD	-6.721E-12	1.127E-12
123	123	159	DEAD	1.666E-11	5.340E-12
123	123	23	DEAD	1.645E-11	5.867E-12
123	123	32	DEAD	4.018E-12	1.653E-12
123	123	160	G1_power station	0.	0.
123	123	159	G1_power station	0.	0.
123	123	23	G1_power station	0.	0.
123	123	32	G1_power station	0.	0.
123	123	160	G2_power station	129.08	6.09
123	123	159	G2_power station	61.78	6.09
123	123	23	G2_power station	61.78	39.4
123	123	32	G2_power station	129.08	39.4
123	123	160	Q_power station	4.78	0.23
123	123	159	Q_power station	2.29	0.23
123	123	23	Q_power station	2.29	1.46
123	123	32	Q_power station	4.78	1.46
123	123	160	Q_neve	12.22	-0.22
123	123	159	Q_neve	6.07	-0.22
123	123	23	Q_neve	6.07	3.68
123	123	32	Q_neve	12.22	3.68
123	123	160	Q_manutenzione	4.78	0.23
123	123	159	Q_manutenzione	2.29	0.23

Table 21: Element Stresses - Area Shells, Part 3 of 3

Area	AreaElem	Joint	OutputCase	S13Avg	S23Avg
				KN/m2	KN/m2
123	123	23	Q_manutenzione	2.29	1.46
123	123	32	Q_manutenzione	4.78	1.46
123	123	160	EQ_X	-28.8	2.84
123	123	159	EQ_X	-20.88	2.84
123	123	23	EQ_X	-20.88	-27.5
123	123	32	EQ_X	-28.8	-27.5
123	123	160	EQ_Y	-3.96	5.71
123	123	159	EQ_Y	-7.18	5.71
123	123	23	EQ_Y	-7.18	-7.09
123	123	32	EQ_Y	-3.96	-7.09
124	124	22	DEAD	-4.301E-12	1.451E-11
124	124	74	DEAD	-6.972E-12	4.539E-12
124	124	161	DEAD	-1.273E-11	-2.345E-12
124	124	157	DEAD	-2.758E-12	3.259E-13
124	124	22	G1_power station	0.	0.
124	124	74	G1_power station	0.	0.
124	124	161	G1_power station	0.	0.
124	124	157	G1_power station	0.	0.
124	124	22	G2_power station	123.79	-105.03
124	124	74	G2_power station	27.28	-105.03
124	124	161	G2_power station	27.28	-36.56
124	124	157	G2_power station	123.79	-36.56
124	124	22	Q_power station	4.58	-3.89
124	124	74	Q_power station	1.01	-3.89
124	124	161	Q_power station	1.01	-1.35
124	124	157	Q_power station	4.58	-1.35
124	124	22	Q_neve	11.77	-10.28
124	124	74	Q_neve	3.08	-10.28
124	124	161	Q_neve	3.08	-4.23
124	124	157	Q_neve	11.77	-4.23
124	124	22	Q_manutenzione	4.58	-3.89
124	124	74	Q_manutenzione	1.01	-3.89
124	124	161	Q_manutenzione	1.01	-1.35
124	124	157	Q_manutenzione	4.58	-1.35
124	124	22	EQ_X	208.54	-76.09
124	124	74	EQ_X	-103.9	-76.09
124	124	161	EQ_X	-103.9	-67.69
124	124	157	EQ_X	208.54	-67.69
124	124	22	EQ_Y	-95.94	205.09
124	124	74	EQ_Y	-64.07	205.09
124	124	161	EQ_Y	-64.07	-84.79
124	124	157	EQ_Y	-95.94	-84.79
125	125	157	DEAD	2.241E-11	-5.723E-12

Table 21: Element Stresses - Area Shells, Part 3 of 3

Area	AreaElem	Joint	OutputCase	S13Avg	S23Avg
				KN/m2	KN/m2
125	125	161	DEAD	-1.233E-11	8.555E-13
125	125	162	DEAD	5.561E-12	4.810E-12
125	125	159	DEAD	-1.443E-11	1.192E-11
125	125	157	G1_power station	0.	0.
125	125	161	G1_power station	0.	0.
125	125	162	G1_power station	0.	0.
125	125	159	G1_power station	0.	0.
125	125	157	G2_power station	45.79	-21.99
125	125	161	G2_power station	24.2	-21.99
125	125	162	G2_power station	24.2	2.52
125	125	159	G2_power station	45.79	2.52
125	125	157	Q_power station	1.69	-0.81
125	125	161	Q_power station	0.9	-0.81
125	125	162	Q_power station	0.9	9.341E-02
125	125	159	Q_power station	1.69	9.341E-02
125	125	157	Q_neve	4.46	-2.85
125	125	161	Q_neve	2.18	-2.85
125	125	162	Q_neve	2.18	-0.77
125	125	159	Q_neve	4.46	-0.77
125	125	157	Q_manutenzione	1.69	-0.81
125	125	161	Q_manutenzione	0.9	-0.81
125	125	162	Q_manutenzione	0.9	9.341E-02
125	125	159	Q_manutenzione	1.69	9.341E-02
125	125	157	EQ_X	-3.18	-33.36
125	125	161	EQ_X	25.44	-33.36
125	125	162	EQ_X	25.44	-10.11
125	125	159	EQ_X	-3.18	-10.11
125	125	157	EQ_Y	17.13	-78.47
125	125	161	EQ_Y	-4.99	-78.47
125	125	162	EQ_Y	-4.99	8.26
125	125	159	EQ_Y	17.13	8.26
126	126	159	DEAD	2.593E-11	1.811E-11
126	126	162	DEAD	3.736E-12	1.297E-11
126	126	163	DEAD	-1.620E-11	2.233E-11
126	126	23	DEAD	2.059E-11	1.561E-11
126	126	159	G1_power station	0.	0.
126	126	162	G1_power station	0.	0.
126	126	163	G1_power station	0.	0.
126	126	23	G1_power station	0.	0.
126	126	159	G2_power station	81.39	31.05
126	126	162	G2_power station	-81.18	31.05
126	126	163	G2_power station	-81.18	-0.96
126	126	23	G2_power station	81.39	-0.96

Table 21: Element Stresses - Area Shells, Part 3 of 3

Area	AreaElem	Joint	OutputCase	S13Avg	S23Avg
				KN/m2	KN/m2
126	126	159	Q_power station	3.01	1.15
126	126	162	Q_power station	-3.	1.15
126	126	163	Q_power station	-3.	-3.546E-02
126	126	23	Q_power station	3.01	-3.546E-02
126	126	159	Q_neve	8.27	2.23
126	126	162	Q_neve	-8.78	2.23
126	126	163	Q_neve	-8.78	-1.4
126	126	23	Q_neve	8.27	-1.4
126	126	159	Q_manutenzione	3.01	1.15
126	126	162	Q_manutenzione	-3.	1.15
126	126	163	Q_manutenzione	-3.	-3.546E-02
126	126	23	Q_manutenzione	3.01	-3.546E-02
126	126	159	EQ_X	-26.96	-29.24
126	126	162	EQ_X	64.55	-29.24
126	126	163	EQ_X	64.55	15.46
126	126	23	EQ_X	-26.96	15.46
126	126	159	EQ_Y	-15.06	6.05
126	126	162	EQ_Y	8.03	6.05
126	126	163	EQ_Y	8.03	-12.29
126	126	23	EQ_Y	-15.06	-12.29
127	127	74	DEAD	-5.386E-12	1.406E-12
127	127	76	DEAD	2.853E-11	-7.522E-13
127	127	164	DEAD	1.147E-11	-5.967E-12
127	127	161	DEAD	-1.150E-11	-6.545E-12
127	127	74	G1_power station	0.	0.
127	127	76	G1_power station	0.	0.
127	127	164	G1_power station	0.	0.
127	127	161	G1_power station	0.	0.
127	127	74	G2_power station	19.19	-18.28
127	127	76	G2_power station	0.53	-18.28
127	127	164	G2_power station	0.53	-26.68
127	127	161	G2_power station	19.19	-26.68
127	127	74	Q_power station	0.71	-0.68
127	127	76	Q_power station	1.964E-02	-0.68
127	127	164	Q_power station	1.964E-02	-0.99
127	127	161	Q_power station	0.71	-0.99
127	127	74	Q_neve	2.41	-2.04
127	127	76	Q_neve	0.66	-2.04
127	127	164	Q_neve	0.66	-2.85
127	127	161	Q_neve	2.41	-2.85
127	127	74	Q_manutenzione	0.71	-0.68
127	127	76	Q_manutenzione	1.964E-02	-0.68
127	127	164	Q_manutenzione	1.964E-02	-0.99

Table 21: Element Stresses - Area Shells, Part 3 of 3

Area	AreaElem	Joint	OutputCase	S13Avg	S23Avg
				KN/m2	KN/m2
127	127	161	Q_manutenzione	0.71	-0.99
127	127	74	EQ_X	-96.56	14.08
127	127	76	EQ_X	11.78	14.08
127	127	164	EQ_X	11.78	5.56
127	127	161	EQ_X	-96.56	5.56
127	127	74	EQ_Y	-25.69	8.76
127	127	76	EQ_Y	3.53	8.76
127	127	164	EQ_Y	3.53	30.91
127	127	161	EQ_Y	-25.69	30.91
128	128	161	DEAD	6.212E-12	1.004E-13
128	128	164	DEAD	-8.589E-12	-1.048E-11
128	128	165	DEAD	3.149E-11	-2.533E-12
128	128	162	DEAD	6.157E-12	5.315E-12
128	128	161	G1_power station	0.	0.
128	128	164	G1_power station	0.	0.
128	128	165	G1_power station	0.	0.
128	128	162	G1_power station	0.	0.
128	128	161	G2_power station	20.91	-18.01
128	128	164	G2_power station	-6.91	-18.01
128	128	165	G2_power station	-6.91	-20.33
128	128	162	G2_power station	20.91	-20.33
128	128	161	Q_power station	0.77	-0.67
128	128	164	Q_power station	-0.26	-0.67
128	128	165	Q_power station	-0.26	-0.75
128	128	162	Q_power station	0.77	-0.75
128	128	161	Q_neve	2.	-2.02
128	128	164	Q_neve	-0.69	-2.02
128	128	165	Q_neve	-0.69	-2.41
128	128	162	Q_neve	2.	-2.41
128	128	161	Q_manutenzione	0.77	-0.67
128	128	164	Q_manutenzione	-0.26	-0.67
128	128	165	Q_manutenzione	-0.26	-0.75
128	128	162	Q_manutenzione	0.77	-0.75
128	128	161	EQ_X	20.25	-3.33
128	128	164	EQ_X	3.21	-3.33
128	128	165	EQ_X	3.21	-5.89
128	128	162	EQ_X	20.25	-5.89
128	128	161	EQ_Y	-5.92	27.03
128	128	164	EQ_Y	-7.21	27.03
128	128	165	EQ_Y	-7.21	7.32
128	128	162	EQ_Y	-5.92	7.32
129	129	162	DEAD	-9.969E-12	-4.368E-12
129	129	165	DEAD	-8.840E-12	1.012E-11

Table 21: Element Stresses - Area Shells, Part 3 of 3

Area	AreaElem	Joint	OutputCase	S13Avg	S23Avg
				KN/m2	KN/m2
129	129	166	DEAD	2.671E-12	-3.842E-12
129	129	163	DEAD	-1.305E-11	5.384E-12
129	129	162	G1_power station	0.	0.
129	129	165	G1_power station	0.	0.
129	129	166	G1_power station	0.	0.
129	129	163	G1_power station	0.	0.
129	129	162	G2_power station	-77.55	-27.15
129	129	165	G2_power station	3.72	-27.15
129	129	166	G2_power station	3.72	-6.44
129	129	163	G2_power station	-77.55	-6.44
129	129	162	Q_power station	-2.87	-1.
129	129	165	Q_power station	0.14	-1.
129	129	166	Q_power station	0.14	-0.24
129	129	163	Q_power station	-2.87	-0.24
129	129	162	Q_neve	-8.3	-3.11
129	129	165	Q_neve	-4.004E-02	-3.11
129	129	166	Q_neve	-4.004E-02	-1.11
129	129	163	Q_neve	-8.3	-1.11
129	129	162	Q_manutenzione	-2.87	-1.
129	129	165	Q_manutenzione	0.14	-1.
129	129	166	Q_manutenzione	0.14	-0.24
129	129	163	Q_manutenzione	-2.87	-0.24
129	129	162	EQ_X	56.46	2.59
129	129	165	EQ_X	8.58	2.59
129	129	166	EQ_X	8.58	-5.39
129	129	163	EQ_X	56.46	-5.39
129	129	162	EQ_Y	6.66	9.23
129	129	165	EQ_Y	-2.	9.23
129	129	166	EQ_Y	-2.	5.95
129	129	163	EQ_Y	6.66	5.95
130	130	76	DEAD	2.273E-11	-3.706E-12
130	130	78	DEAD	-7.330E-12	-1.172E-11
130	130	167	DEAD	-2.151E-11	7.354E-12
130	130	164	DEAD	1.584E-11	-1.361E-13
130	130	76	G1_power station	0.	0.
130	130	78	G1_power station	0.	0.
130	130	167	G1_power station	0.	0.
130	130	164	G1_power station	0.	0.
130	130	76	G2_power station	2.4	-2.862E-12
130	130	78	G2_power station	2.4	-2.301E-11
130	130	167	G2_power station	2.4	-1.234E-11
130	130	164	G2_power station	2.4	-1.774E-11
130	130	76	Q_power station	8.878E-02	2.338E-13

Table 21: Element Stresses - Area Shells, Part 3 of 3

Area	AreaElem	Joint	OutputCase	S13Avg	S23Avg
				KN/m2	KN/m2
130	130	78	Q_power station	8.878E-02	-1.346E-12
130	130	167	Q_power station	8.878E-02	4.313E-13
130	130	164	Q_power station	8.878E-02	-3.260E-13
130	130	76	Q_neve	0.86	-5.905E-13
130	130	78	Q_neve	0.86	-4.623E-13
130	130	167	Q_neve	0.86	-8.538E-13
130	130	164	Q_neve	0.86	-3.491E-12
130	130	76	Q_manutenzione	8.878E-02	2.338E-13
130	130	78	Q_manutenzione	8.878E-02	-1.346E-12
130	130	167	Q_manutenzione	8.878E-02	4.313E-13
130	130	164	Q_manutenzione	8.878E-02	-3.260E-13
130	130	76	EQ_X	10.31	-3.255E-14
130	130	78	EQ_X	10.31	2.999E-12
130	130	167	EQ_X	10.31	1.021E-12
130	130	164	EQ_X	10.31	4.976E-13
130	130	76	EQ_Y	0.72	21.38
130	130	78	EQ_Y	-0.72	21.38
130	130	167	EQ_Y	-0.72	19.48
130	130	164	EQ_Y	0.72	19.48
131	131	164	DEAD	3.887E-12	-3.467E-12
131	131	167	DEAD	-2.293E-11	-4.186E-12
131	131	168	DEAD	-8.752E-12	-5.047E-12
131	131	165	DEAD	1.077E-11	-5.240E-12
131	131	164	G1_power station	0.	0.
131	131	167	G1_power station	0.	0.
131	131	168	G1_power station	0.	0.
131	131	165	G1_power station	0.	0.
131	131	164	G2_power station	-6.43	-8.090E-12
131	131	167	G2_power station	-6.43	-3.831E-11
131	131	168	G2_power station	-6.43	-1.441E-11
131	131	165	G2_power station	-6.43	-2.251E-11
131	131	164	Q_power station	-0.24	-1.193E-13
131	131	167	Q_power station	-0.24	-6.074E-13
131	131	168	Q_power station	-0.24	-6.789E-13
131	131	165	Q_power station	-0.24	-4.758E-13
131	131	164	Q_neve	-0.61	-1.708E-12
131	131	167	Q_neve	-0.61	-4.226E-12
131	131	168	Q_neve	-0.61	-1.181E-12
131	131	165	Q_neve	-0.61	-1.856E-12
131	131	164	Q_manutenzione	-0.24	-1.193E-13
131	131	167	Q_manutenzione	-0.24	-6.074E-13
131	131	168	Q_manutenzione	-0.24	-6.789E-13
131	131	165	Q_manutenzione	-0.24	-4.758E-13

Table 21: Element Stresses - Area Shells, Part 3 of 3

Area	AreaElem	Joint	OutputCase	S13Avg	S23Avg
				KN/m2	KN/m2
131	131	164	EQ_X	4.52	-5.097E-13
131	131	167	EQ_X	4.52	1.199E-12
131	131	168	EQ_X	4.52	1.992E-12
131	131	165	EQ_X	4.52	2.450E-12
131	131	164	EQ_Y	-4.26	17.63
131	131	167	EQ_Y	4.26	17.63
131	131	168	EQ_Y	4.26	17.13
131	131	165	EQ_Y	-4.26	17.13
132	132	165	DEAD	-1.123E-11	-6.649E-12
132	132	168	DEAD	-4.138E-12	-3.258E-12
132	132	169	DEAD	-7.015E-12	-6.122E-12
132	132	166	DEAD	-1.046E-11	-1.590E-11
132	132	165	G1_power station	0.	0.
132	132	168	G1_power station	0.	0.
132	132	169	G1_power station	0.	0.
132	132	166	G1_power station	0.	0.
132	132	165	G2_power station	-1.52	-2.078E-11
132	132	168	G2_power station	-1.52	-1.286E-11
132	132	169	G2_power station	-1.52	-1.814E-11
132	132	166	G2_power station	-1.52	-1.602E-11
132	132	165	Q_power station	-5.623E-02	-6.379E-13
132	132	168	Q_power station	-5.623E-02	-4.356E-13
132	132	169	Q_power station	-5.623E-02	-6.544E-13
132	132	166	Q_power station	-5.623E-02	-6.002E-13
132	132	165	Q_neve	-0.55	-3.471E-12
132	132	168	Q_neve	-0.55	-1.505E-12
132	132	169	Q_neve	-0.55	-2.154E-12
132	132	166	Q_neve	-0.55	-2.295E-12
132	132	165	Q_manutenzione	-5.623E-02	-6.379E-13
132	132	168	Q_manutenzione	-5.623E-02	-4.356E-13
132	132	169	Q_manutenzione	-5.623E-02	-6.544E-13
132	132	166	Q_manutenzione	-5.623E-02	-6.002E-13
132	132	165	EQ_X	11.38	2.322E-12
132	132	168	EQ_X	11.38	1.327E-12
132	132	169	EQ_X	11.38	7.753E-13
132	132	166	EQ_X	11.38	1.746E-13
132	132	165	EQ_Y	0.36	16.64
132	132	168	EQ_Y	-0.36	16.64
132	132	169	EQ_Y	-0.36	12.75
132	132	166	EQ_Y	0.36	12.75
133	133	78	DEAD	3.696E-13	3.556E-12
133	133	80	DEAD	-1.379E-12	-3.507E-13
133	133	170	DEAD	1.301E-11	3.965E-13

Table 21: Element Stresses - Area Shells, Part 3 of 3

Area	AreaElem	Joint	OutputCase	S13Avg	S23Avg
				KN/m2	KN/m2
133	133	167	DEAD	-3.486E-12	-1.668E-11
133	133	78	G1_power station	0.	0.
133	133	80	G1_power station	0.	0.
133	133	170	G1_power station	0.	0.
133	133	167	G1_power station	0.	0.
133	133	78	G2_power station	0.53	18.28
133	133	80	G2_power station	19.19	18.28
133	133	170	G2_power station	19.19	26.68
133	133	167	G2_power station	0.53	26.68
133	133	78	Q_power station	1.964E-02	0.68
133	133	80	Q_power station	0.71	0.68
133	133	170	Q_power station	0.71	0.99
133	133	167	Q_power station	1.964E-02	0.99
133	133	78	Q_neve	0.66	2.04
133	133	80	Q_neve	2.41	2.04
133	133	170	Q_neve	2.41	2.85
133	133	167	Q_neve	0.66	2.85
133	133	78	Q_manutenzione	1.964E-02	0.68
133	133	80	Q_manutenzione	0.71	0.68
133	133	170	Q_manutenzione	0.71	0.99
133	133	167	Q_manutenzione	1.964E-02	0.99
133	133	78	EQ_X	11.78	-14.08
133	133	80	EQ_X	-96.56	-14.08
133	133	170	EQ_X	-96.56	-5.56
133	133	167	EQ_X	11.78	-5.56
133	133	78	EQ_Y	-3.53	8.76
133	133	80	EQ_Y	25.69	8.76
133	133	170	EQ_Y	25.69	30.91
133	133	167	EQ_Y	-3.53	30.91
134	134	167	DEAD	-2.290E-11	-3.809E-12
134	134	170	DEAD	-4.452E-13	-3.193E-12
134	134	171	DEAD	-1.237E-11	1.984E-12
134	134	168	DEAD	1.661E-12	-3.193E-12
134	134	167	G1_power station	0.	0.
134	134	170	G1_power station	0.	0.
134	134	171	G1_power station	0.	0.
134	134	168	G1_power station	0.	0.
134	134	167	G2_power station	-6.91	18.01
134	134	170	G2_power station	20.91	18.01
134	134	171	G2_power station	20.91	20.33
134	134	168	G2_power station	-6.91	20.33
134	134	167	Q_power station	-0.26	0.67
134	134	170	Q_power station	0.77	0.67

Table 21: Element Stresses - Area Shells, Part 3 of 3

Area	AreaElem	Joint	OutputCase	S13Avg	S23Avg
				KN/m2	KN/m2
134	134	171	Q_power station	0.77	0.75
134	134	168	Q_power station	-0.26	0.75
134	134	167	Q_neve	-0.69	2.02
134	134	170	Q_neve	2.	2.02
134	134	171	Q_neve	2.	2.41
134	134	168	Q_neve	-0.69	2.41
134	134	167	Q_manutenzione	-0.26	0.67
134	134	170	Q_manutenzione	0.77	0.67
134	134	171	Q_manutenzione	0.77	0.75
134	134	168	Q_manutenzione	-0.26	0.75
134	134	167	EQ_X	3.21	3.33
134	134	170	EQ_X	20.25	3.33
134	134	171	EQ_X	20.25	5.89
134	134	168	EQ_X	3.21	5.89
134	134	167	EQ_Y	7.21	27.03
134	134	170	EQ_Y	5.92	27.03
134	134	171	EQ_Y	5.92	7.32
134	134	168	EQ_Y	7.21	7.32
135	135	168	DEAD	-6.157E-12	-6.130E-12
135	135	171	DEAD	-4.366E-14	3.223E-12
135	135	172	DEAD	8.589E-12	-8.635E-13
135	135	169	DEAD	-8.470E-12	1.643E-12
135	135	168	G1_power station	0.	0.
135	135	171	G1_power station	0.	0.
135	135	172	G1_power station	0.	0.
135	135	169	G1_power station	0.	0.
135	135	168	G2_power station	3.72	27.15
135	135	171	G2_power station	-77.55	27.15
135	135	172	G2_power station	-77.55	6.44
135	135	169	G2_power station	3.72	6.44
135	135	168	Q_power station	0.14	1.
135	135	171	Q_power station	-2.87	1.
135	135	172	Q_power station	-2.87	0.24
135	135	169	Q_power station	0.14	0.24
135	135	168	Q_neve	-4.004E-02	3.11
135	135	171	Q_neve	-8.3	3.11
135	135	172	Q_neve	-8.3	1.11
135	135	169	Q_neve	-4.004E-02	1.11
135	135	168	Q_manutenzione	0.14	1.
135	135	171	Q_manutenzione	-2.87	1.
135	135	172	Q_manutenzione	-2.87	0.24
135	135	169	Q_manutenzione	0.14	0.24
135	135	168	EQ_X	8.58	-2.59

Table 21: Element Stresses - Area Shells, Part 3 of 3

Area	AreaElem	Joint	OutputCase	S13Avg	S23Avg
				KN/m2	KN/m2
135	135	171	EQ_X	56.46	-2.59
135	135	172	EQ_X	56.46	5.39
135	135	169	EQ_X	8.58	5.39
135	135	168	EQ_Y	2.	9.23
135	135	171	EQ_Y	-6.66	9.23
135	135	172	EQ_Y	-6.66	5.95
135	135	169	EQ_Y	2.	5.95
136	136	80	DEAD	2.221E-11	7.539E-12
136	136	9	DEAD	3.041E-12	1.064E-12
136	136	173	DEAD	-5.179E-12	2.799E-12
136	136	170	DEAD	3.041E-12	1.064E-12
136	136	80	G1_power station	0.	0.
136	136	9	G1_power station	0.	0.
136	136	173	G1_power station	0.	0.
136	136	170	G1_power station	0.	0.
136	136	80	G2_power station	27.28	105.03
136	136	9	G2_power station	123.79	105.03
136	136	173	G2_power station	123.79	36.56
136	136	170	G2_power station	27.28	36.56
136	136	80	Q_power station	1.01	3.89
136	136	9	Q_power station	4.58	3.89
136	136	173	Q_power station	4.58	1.35
136	136	170	Q_power station	1.01	1.35
136	136	80	Q_neve	3.08	10.28
136	136	9	Q_neve	11.77	10.28
136	136	173	Q_neve	11.77	4.23
136	136	170	Q_neve	3.08	4.23
136	136	80	Q_manutenzione	1.01	3.89
136	136	9	Q_manutenzione	4.58	3.89
136	136	173	Q_manutenzione	4.58	1.35
136	136	170	Q_manutenzione	1.01	1.35
136	136	80	EQ_X	-103.9	76.09
136	136	9	EQ_X	208.54	76.09
136	136	173	EQ_X	208.54	67.69
136	136	170	EQ_X	-103.9	67.69
136	136	80	EQ_Y	64.07	205.09
136	136	9	EQ_Y	95.94	205.09
136	136	173	EQ_Y	95.94	-84.79
136	136	170	EQ_Y	64.07	-84.79
137	137	170	DEAD	-3.975E-12	-3.855E-13
137	137	173	DEAD	-8.188E-12	1.157E-12
137	137	174	DEAD	-8.188E-12	-1.439E-12
137	137	171	DEAD	-3.975E-12	4.317E-12

Table 21: Element Stresses - Area Shells, Part 3 of 3

Area	AreaElem	Joint	OutputCase	S13Avg	S23Avg
				KN/m2	KN/m2
137	137	170	G1_power station	0.	0.
137	137	173	G1_power station	0.	0.
137	137	174	G1_power station	0.	0.
137	137	171	G1_power station	0.	0.
137	137	170	G2_power station	24.2	21.99
137	137	173	G2_power station	45.79	21.99
137	137	174	G2_power station	45.79	-2.52
137	137	171	G2_power station	24.2	-2.52
137	137	170	Q_power station	0.9	0.81
137	137	173	Q_power station	1.69	0.81
137	137	174	Q_power station	1.69	-9.341E-02
137	137	171	Q_power station	0.9	-9.341E-02
137	137	170	Q_neve	2.18	2.85
137	137	173	Q_neve	4.46	2.85
137	137	174	Q_neve	4.46	0.77
137	137	171	Q_neve	2.18	0.77
137	137	170	Q_manutenzione	0.9	0.81
137	137	173	Q_manutenzione	1.69	0.81
137	137	174	Q_manutenzione	1.69	-9.341E-02
137	137	171	Q_manutenzione	0.9	-9.341E-02
137	137	170	EQ_X	25.44	33.36
137	137	173	EQ_X	-3.18	33.36
137	137	174	EQ_X	-3.18	10.11
137	137	171	EQ_X	25.44	10.11
137	137	170	EQ_Y	4.99	-78.47
137	137	173	EQ_Y	-17.13	-78.47
137	137	174	EQ_Y	-17.13	8.26
137	137	171	EQ_Y	4.99	8.26
138	138	171	DEAD	6.244E-12	-1.193E-11
138	138	174	DEAD	-2.822E-13	2.669E-12
138	138	33	DEAD	8.351E-12	-2.973E-12
138	138	172	DEAD	3.931E-12	1.162E-11
138	138	171	G1_power station	0.	0.
138	138	174	G1_power station	0.	0.
138	138	33	G1_power station	0.	0.
138	138	172	G1_power station	0.	0.
138	138	171	G2_power station	-81.18	-31.05
138	138	174	G2_power station	81.39	-31.05
138	138	33	G2_power station	81.39	0.96
138	138	172	G2_power station	-81.18	0.96
138	138	171	Q_power station	-3.	-1.15
138	138	174	Q_power station	3.01	-1.15
138	138	33	Q_power station	3.01	3.546E-02

Table 21: Element Stresses - Area Shells, Part 3 of 3

Area	AreaElem	Joint	OutputCase	S13Avg	S23Avg
				KN/m2	KN/m2
138	138	172	Q_power station	-3.	3.546E-02
138	138	171	Q_neve	-8.78	-2.23
138	138	174	Q_neve	8.27	-2.23
138	138	33	Q_neve	8.27	1.4
138	138	172	Q_neve	-8.78	1.4
138	138	171	Q_manutenzione	-3.	-1.15
138	138	174	Q_manutenzione	3.01	-1.15
138	138	33	Q_manutenzione	3.01	3.546E-02
138	138	172	Q_manutenzione	-3.	3.546E-02
138	138	171	EQ_X	64.55	29.24
138	138	174	EQ_X	-26.96	29.24
138	138	33	EQ_X	-26.96	-15.46
138	138	172	EQ_X	64.55	-15.46
138	138	171	EQ_Y	-8.03	6.05
138	138	174	EQ_Y	15.06	6.05
138	138	33	EQ_Y	15.06	-12.29
138	138	172	EQ_Y	-8.03	-12.29
139	139	14	DEAD	-1.012E-11	5.188E-12
139	139	56	DEAD	1.353E-13	5.907E-12
139	139	175	DEAD	-1.117E-11	1.501E-12
139	139	145	DEAD	-1.777E-11	1.694E-12
139	139	14	G1_power station	0.	0.
139	139	56	G1_power station	0.	0.
139	139	175	G1_power station	0.	0.
139	139	145	G1_power station	0.	0.
139	139	14	G2_power station	-117.46	107.82
139	139	56	G2_power station	-36.38	107.82
139	139	175	G2_power station	-36.38	37.96
139	139	145	G2_power station	-117.46	37.96
139	139	14	Q_power station	-4.35	3.99
139	139	56	Q_power station	-1.35	3.99
139	139	175	Q_power station	-1.35	1.4
139	139	145	Q_power station	-4.35	1.4
139	139	14	Q_neve	-11.4	10.51
139	139	56	Q_neve	-4.23	10.51
139	139	175	Q_neve	-4.23	4.37
139	139	145	Q_neve	-11.4	4.37
139	139	14	Q_manutenzione	-4.35	3.99
139	139	56	Q_manutenzione	-1.35	3.99
139	139	175	Q_manutenzione	-1.35	1.4
139	139	145	Q_manutenzione	-4.35	1.4
139	139	14	EQ_X	194.	-72.75
139	139	56	EQ_X	-97.14	-72.75

Table 21: Element Stresses - Area Shells, Part 3 of 3

Area	AreaElem	Joint	OutputCase	S13Avg	S23Avg
				KN/m2	KN/m2
139	139	175	EQ_X	-97.14	-60.62
139	139	145	EQ_X	194.	-60.62
139	139	14	EQ_Y	-84.16	196.24
139	139	56	EQ_Y	-58.91	196.24
139	139	175	EQ_Y	-58.91	-80.38
139	139	145	EQ_Y	-84.16	-80.38
140	140	145	DEAD	4.523E-12	8.530E-12
140	140	175	DEAD	6.141E-12	-4.317E-12
140	140	176	DEAD	1.190E-11	-3.057E-12
140	140	147	DEAD	2.981E-12	-1.157E-12
140	140	145	G1_power station	0.	0.
140	140	175	G1_power station	0.	0.
140	140	176	G1_power station	0.	0.
140	140	147	G1_power station	0.	0.
140	140	145	G2_power station	-34.03	29.39
140	140	175	G2_power station	-39.8	29.39
140	140	176	G2_power station	-39.8	11.54
140	140	147	G2_power station	-34.03	11.54
140	140	145	Q_power station	-1.26	1.09
140	140	175	Q_power station	-1.47	1.09
140	140	176	Q_power station	-1.47	0.43
140	140	147	Q_power station	-1.26	0.43
140	140	145	Q_neve	-3.62	3.61
140	140	175	Q_neve	-4.15	3.61
140	140	176	Q_neve	-4.15	2.11
140	140	147	Q_neve	-3.62	2.11
140	140	145	Q_manutenzione	-1.26	1.09
140	140	175	Q_manutenzione	-1.47	1.09
140	140	176	Q_manutenzione	-1.47	0.43
140	140	147	Q_manutenzione	-1.26	0.43
140	140	145	EQ_X	1.63	-25.38
140	140	175	EQ_X	17.08	-25.38
140	140	176	EQ_X	17.08	-0.35
140	140	147	EQ_X	1.63	-0.35
140	140	145	EQ_Y	18.34	-74.07
140	140	175	EQ_Y	-0.68	-74.07
140	140	176	EQ_Y	-0.68	13.26
140	140	147	EQ_Y	18.34	13.26
141	141	147	DEAD	-3.591E-11	1.700E-11
141	141	176	DEAD	1.666E-11	-3.351E-12
141	141	177	DEAD	-1.274E-11	-3.013E-12
141	141	149	DEAD	4.018E-12	-1.915E-11
141	141	147	G1_power station	0.	0.

Table 21: Element Stresses - Area Shells, Part 3 of 3

Area	AreaElem	Joint	OutputCase	S13Avg	S23Avg
				KN/m2	KN/m2
141	141	176	G1_power station	0.	0.
141	141	177	G1_power station	0.	0.
141	141	149	G1_power station	0.	0.
141	141	147	G2_power station	-20.84	12.28
141	141	176	G2_power station	-19.42	12.28
141	141	177	G2_power station	-19.42	7.01
141	141	149	G2_power station	-20.84	7.01
141	141	147	Q_power station	-0.77	0.45
141	141	176	Q_power station	-0.72	0.45
141	141	177	Q_power station	-0.72	0.26
141	141	149	Q_power station	-0.77	0.26
141	141	147	Q_neve	-2.19	2.17
141	141	176	Q_neve	-2.04	2.17
141	141	177	Q_neve	-2.04	1.76
141	141	149	Q_neve	-2.19	1.76
141	141	147	Q_manutenzione	-0.77	0.45
141	141	176	Q_manutenzione	-0.72	0.45
141	141	177	Q_manutenzione	-0.72	0.26
141	141	149	Q_manutenzione	-0.77	0.26
141	141	147	EQ_X	9.1	-2.49
141	141	176	EQ_X	8.39	-2.49
141	141	177	EQ_X	8.39	-1.02
141	141	149	EQ_X	9.1	-1.02
141	141	147	EQ_Y	-3.46	13.29
141	141	176	EQ_Y	1.54	13.29
141	141	177	EQ_Y	1.54	-3.04
141	141	149	EQ_Y	-3.46	-3.04
142	142	149	DEAD	-4.680E-12	-4.550E-12
142	142	177	DEAD	1.130E-11	-6.605E-12
142	142	178	DEAD	1.640E-12	-2.443E-12
142	142	151	DEAD	-2.346E-11	2.348E-12
142	142	149	G1_power station	0.	0.
142	142	177	G1_power station	0.	0.
142	142	178	G1_power station	0.	0.
142	142	151	G1_power station	0.	0.
142	142	149	G2_power station	-10.99	6.45
142	142	177	G2_power station	-8.13	6.45
142	142	178	G2_power station	-8.13	3.11
142	142	151	G2_power station	-10.99	3.11
142	142	149	Q_power station	-0.41	0.24
142	142	177	Q_power station	-0.3	0.24
142	142	178	Q_power station	-0.3	0.11
142	142	151	Q_power station	-0.41	0.11

Table 21: Element Stresses - Area Shells, Part 3 of 3

Area	AreaElem	Joint	OutputCase	S13Avg	S23Avg
				KN/m2	KN/m2
142	142	149	Q_neve	-1.1	1.69
142	142	177	Q_neve	-0.78	1.69
142	142	178	Q_neve	-0.78	1.43
142	142	151	Q_neve	-1.1	1.43
142	142	149	Q_manutenzione	-0.41	0.24
142	142	177	Q_manutenzione	-0.3	0.24
142	142	178	Q_manutenzione	-0.3	0.11
142	142	151	Q_manutenzione	-0.41	0.11
142	142	149	EQ_X	8.34	-0.82
142	142	177	EQ_X	8.11	-0.82
142	142	178	EQ_X	8.11	8.604E-02
142	142	151	EQ_X	8.34	8.604E-02
142	142	149	EQ_Y	1.76	-3.23
142	142	177	EQ_Y	0.58	-3.23
142	142	178	EQ_Y	0.58	2.04
142	142	151	EQ_Y	1.76	2.04
143	143	151	DEAD	-5.533E-12	2.595E-12
143	143	178	DEAD	6.054E-12	-6.038E-12
143	143	179	DEAD	-2.373E-12	4.702E-12
143	143	153	DEAD	-1.396E-11	2.389E-12
143	143	151	G1_power station	0.	0.
143	143	178	G1_power station	0.	0.
143	143	179	G1_power station	0.	0.
143	143	153	G1_power station	0.	0.
143	143	151	G2_power station	-8.39	1.17
143	143	178	G2_power station	8.275E-02	1.17
143	143	179	G2_power station	8.275E-02	-1.73
143	143	153	G2_power station	-8.39	-1.73
143	143	151	Q_power station	-0.31	4.311E-02
143	143	178	Q_power station	3.062E-03	4.311E-02
143	143	179	Q_power station	3.062E-03	-6.396E-02
143	143	153	Q_power station	-0.31	-6.396E-02
143	143	151	Q_neve	-0.73	1.21
143	143	178	Q_neve	0.18	1.21
143	143	179	Q_neve	0.18	0.99
143	143	153	Q_neve	-0.73	0.99
143	143	151	Q_manutenzione	-0.31	4.311E-02
143	143	178	Q_manutenzione	3.062E-03	4.311E-02
143	143	179	Q_manutenzione	3.062E-03	-6.396E-02
143	143	153	Q_manutenzione	-0.31	-6.396E-02
143	143	151	EQ_X	7.98	-4.295E-03
143	143	178	EQ_X	8.45	-4.295E-03
143	143	179	EQ_X	8.45	1.1

Table 21: Element Stresses - Area Shells, Part 3 of 3

Area	AreaElem	Joint	OutputCase	S13Avg	S23Avg
				KN/m2	KN/m2
143	143	153	EQ_X	7.98	1.1
143	143	151	EQ_Y	0.58	2.02
143	143	178	EQ_Y	0.65	2.02
143	143	179	EQ_Y	0.65	2.06
143	143	153	EQ_Y	0.58	2.06
144	144	153	DEAD	1.862E-12	3.259E-13
144	144	179	DEAD	-6.950E-12	-5.430E-12
144	144	180	DEAD	-5.511E-12	4.539E-12
144	144	155	DEAD	1.477E-12	2.997E-12
144	144	153	G1_power station	0.	0.
144	144	179	G1_power station	0.	0.
144	144	180	G1_power station	0.	0.
144	144	155	G1_power station	0.	0.
144	144	153	G2_power station	-17.79	-8.82
144	144	179	G2_power station	14.61	-8.82
144	144	180	G2_power station	14.61	-20.51
144	144	155	G2_power station	-17.79	-20.51
144	144	153	Q_power station	-0.66	-0.33
144	144	179	Q_power station	0.54	-0.33
144	144	180	Q_power station	0.54	-0.76
144	144	155	Q_power station	-0.66	-0.76
144	144	153	Q_neve	-1.57	0.24
144	144	179	Q_neve	1.84	0.24
144	144	180	Q_neve	1.84	-0.82
144	144	155	Q_neve	-1.57	-0.82
144	144	153	Q_manutenzione	-0.66	-0.33
144	144	179	Q_manutenzione	0.54	-0.33
144	144	180	Q_manutenzione	0.54	-0.76
144	144	155	Q_manutenzione	-0.66	-0.76
144	144	153	EQ_X	6.59	0.49
144	144	179	EQ_X	9.8	0.49
144	144	180	EQ_X	9.8	-0.47
144	144	155	EQ_X	6.59	-0.47
144	144	153	EQ_Y	-2.634E-02	2.09
144	144	179	EQ_Y	0.44	2.09
144	144	180	EQ_Y	0.44	1.05
144	144	155	EQ_Y	-2.634E-02	1.05
145	145	155	DEAD	3.899E-12	-1.228E-11
145	145	180	DEAD	2.307E-11	-7.732E-13
145	145	181	DEAD	2.286E-11	1.563E-11
145	145	24	DEAD	1.464E-11	1.871E-11
145	145	155	G1_power station	0.	0.
145	145	180	G1_power station	0.	0.

Table 21: Element Stresses - Area Shells, Part 3 of 3

Area	AreaElem	Joint	OutputCase	S13Avg	S23Avg
				KN/m2	KN/m2
145	145	181	G1_power station	0.	0.
145	145	24	G1_power station	0.	0.
145	145	155	G2_power station	-96.29	-65.52
145	145	180	G2_power station	142.42	-65.52
145	145	181	G2_power station	142.42	6.93
145	145	24	G2_power station	-96.29	6.93
145	145	155	Q_power station	-3.56	-2.42
145	145	180	Q_power station	5.27	-2.42
145	145	181	Q_power station	5.27	0.26
145	145	24	Q_power station	-3.56	0.26
145	145	155	Q_neve	-9.61	-5.51
145	145	180	Q_neve	15.13	-5.51
145	145	181	Q_neve	15.13	2.63
145	145	24	Q_neve	-9.61	2.63
145	145	155	Q_manutenzione	-3.56	-2.42
145	145	180	Q_manutenzione	5.27	-2.42
145	145	181	Q_manutenzione	5.27	0.26
145	145	24	Q_manutenzione	-3.56	0.26
145	145	155	EQ_X	3.38	-3.92
145	145	180	EQ_X	18.88	-3.92
145	145	181	EQ_X	18.88	19.38
145	145	24	EQ_X	3.38	19.38
145	145	155	EQ_Y	7.87	2.69
145	145	180	EQ_Y	-5.75	2.69
145	145	181	EQ_Y	-5.75	17.87
145	145	24	EQ_Y	7.87	17.87
146	146	56	DEAD	-2.614E-11	9.027E-12
146	146	68	DEAD	2.006E-11	2.902E-13
146	146	182	DEAD	5.461E-12	-2.033E-12
146	146	175	DEAD	-1.154E-11	-9.716E-12
146	146	56	G1_power station	0.	0.
146	146	68	G1_power station	0.	0.
146	146	182	G1_power station	0.	0.
146	146	175	G1_power station	0.	0.
146	146	56	G2_power station	-27.43	22.14
146	146	68	G2_power station	-16.38	22.14
146	146	182	G2_power station	-16.38	28.48
146	146	175	G2_power station	-27.43	28.48
146	146	56	Q_power station	-1.01	0.82
146	146	68	Q_power station	-0.61	0.82
146	146	182	Q_power station	-0.61	1.05
146	146	175	Q_power station	-1.01	1.05
146	146	56	Q_neve	-3.46	2.4

Table 21: Element Stresses - Area Shells, Part 3 of 3

Area	AreaElem	Joint	OutputCase	S13Avg	S23Avg
				KN/m2	KN/m2
146	146	68	Q_neve	-2.52	2.4
146	146	182	Q_neve	-2.52	3.01
146	146	175	Q_neve	-3.46	3.01
146	146	56	Q_manutenzione	-1.01	0.82
146	146	68	Q_manutenzione	-0.61	0.82
146	146	182	Q_manutenzione	-0.61	1.05
146	146	175	Q_manutenzione	-1.01	1.05
146	146	56	EQ_X	-89.85	15.61
146	146	68	EQ_X	2.49	15.61
146	146	182	EQ_X	2.49	4.
146	146	175	EQ_X	-89.85	4.
146	146	56	EQ_Y	-23.31	9.92
146	146	68	EQ_Y	2.81	9.92
146	146	182	EQ_Y	2.81	29.8
146	146	175	EQ_Y	-23.31	29.8
147	147	175	DEAD	1.749E-11	-1.376E-12
147	147	182	DEAD	1.222E-11	-4.973E-12
147	147	183	DEAD	3.796E-12	4.417E-12
147	147	176	DEAD	9.062E-12	3.453E-12
147	147	175	G1_power station	0.	0.
147	147	182	G1_power station	0.	0.
147	147	183	G1_power station	0.	0.
147	147	176	G1_power station	0.	0.
147	147	175	G2_power station	-32.9	24.01
147	147	182	G2_power station	-21.31	24.01
147	147	183	G2_power station	-21.31	13.18
147	147	176	G2_power station	-32.9	13.18
147	147	175	Q_power station	-1.22	0.89
147	147	182	Q_power station	-0.79	0.89
147	147	183	Q_power station	-0.79	0.49
147	147	176	Q_power station	-1.22	0.49
147	147	175	Q_neve	-3.56	2.62
147	147	182	Q_neve	-2.54	2.62
147	147	183	Q_neve	-2.54	1.69
147	147	176	Q_neve	-3.56	1.69
147	147	175	Q_manutenzione	-1.22	0.89
147	147	182	Q_manutenzione	-0.79	0.89
147	147	183	Q_manutenzione	-0.79	0.49
147	147	176	Q_manutenzione	-1.22	0.49
147	147	175	EQ_X	14.8	-1.21
147	147	182	EQ_X	-8.15	-1.21
147	147	183	EQ_X	-8.15	-9.
147	147	176	EQ_X	14.8	-9.

Table 21: Element Stresses - Area Shells, Part 3 of 3

Area	AreaElem	Joint	OutputCase	S13Avg	S23Avg
				KN/m2	KN/m2
147	147	175	EQ_Y	-3.08	26.79
147	147	182	EQ_Y	-7.35	26.79
147	147	183	EQ_Y	-7.35	5.51
147	147	176	EQ_Y	-3.08	5.51
148	148	176	DEAD	-4.354E-12	1.273E-11
148	148	183	DEAD	-1.520E-11	-1.327E-11
148	148	184	DEAD	6.179E-12	2.011E-11
148	148	177	DEAD	6.023E-13	7.797E-12
148	148	176	G1_power station	0.	0.
148	148	183	G1_power station	0.	0.
148	148	184	G1_power station	0.	0.
148	148	177	G1_power station	0.	0.
148	148	176	G2_power station	-16.34	12.23
148	148	183	G2_power station	-16.18	12.23
148	148	184	G2_power station	-16.18	4.51
148	148	177	G2_power station	-16.34	4.51
148	148	176	Q_power station	-0.6	0.45
148	148	183	Q_power station	-0.6	0.45
148	148	184	Q_power station	-0.6	0.17
148	148	177	Q_power station	-0.6	0.17
148	148	176	Q_neve	-1.79	1.6
148	148	183	Q_neve	-1.76	1.6
148	148	184	Q_neve	-1.76	0.94
148	148	177	Q_neve	-1.79	0.94
148	148	176	Q_manutenzione	-0.6	0.45
148	148	183	Q_manutenzione	-0.6	0.45
148	148	184	Q_manutenzione	-0.6	0.17
148	148	177	Q_manutenzione	-0.6	0.17
148	148	176	EQ_X	6.95	-5.24
148	148	183	EQ_X	4.79	-5.24
148	148	184	EQ_X	4.79	-1.93
148	148	177	EQ_X	6.95	-1.93
148	148	176	EQ_Y	1.5	7.38
148	148	183	EQ_Y	-1.82	7.38
148	148	184	EQ_Y	-1.82	5.57
148	148	177	EQ_Y	1.5	5.57
149	149	177	DEAD	1.708E-11	4.116E-12
149	149	184	DEAD	-9.257E-12	-2.008E-13
149	149	185	DEAD	-1.768E-11	6.222E-12
149	149	178	DEAD	8.649E-12	5.066E-12
149	149	177	G1_power station	0.	0.
149	149	184	G1_power station	0.	0.
149	149	185	G1_power station	0.	0.

Table 21: Element Stresses - Area Shells, Part 3 of 3

Area	AreaElem	Joint	OutputCase	S13Avg	S23Avg
				KN/m2	KN/m2
149	149	178	G1_power station	0.	0.
149	149	177	G2_power station	-6.68	4.61
149	149	184	G2_power station	-4.85	4.61
149	149	185	G2_power station	-4.85	0.81
149	149	178	G2_power station	-6.68	0.81
149	149	177	Q_power station	-0.25	0.17
149	149	184	Q_power station	-0.18	0.17
149	149	185	Q_power station	-0.18	3.013E-02
149	149	178	Q_power station	-0.25	3.013E-02
149	149	177	Q_neve	-0.68	0.94
149	149	184	Q_neve	-0.46	0.94
149	149	185	Q_neve	-0.46	0.63
149	149	178	Q_neve	-0.68	0.63
149	149	177	Q_manutenzione	-0.25	0.17
149	149	184	Q_manutenzione	-0.18	0.17
149	149	185	Q_manutenzione	-0.18	3.013E-02
149	149	178	Q_manutenzione	-0.25	3.013E-02
149	149	177	EQ_X	7.52	-1.83
149	149	184	EQ_X	7.84	-1.83
149	149	185	EQ_X	7.84	-0.18
149	149	178	EQ_X	7.52	-0.18
149	149	177	EQ_Y	0.88	6.37
149	149	184	EQ_Y	0.1	6.37
149	149	185	EQ_Y	0.1	5.49
149	149	178	EQ_Y	0.88	5.49
150	150	178	DEAD	-5.793E-12	-2.900E-12
150	150	185	DEAD	-1.401E-12	2.959E-12
150	150	186	DEAD	5.793E-12	-5.006E-12
150	150	179	DEAD	-7.721E-12	1.906E-12
150	150	178	G1_power station	0.	0.
150	150	185	G1_power station	0.	0.
150	150	186	G1_power station	0.	0.
150	150	179	G1_power station	0.	0.
150	150	178	G2_power station	0.26	-1.03
150	150	185	G2_power station	10.12	-1.03
150	150	186	G2_power station	10.12	-1.6
150	150	179	G2_power station	0.26	-1.6
150	150	178	Q_power station	9.723E-03	-3.818E-02
150	150	185	Q_power station	0.37	-3.818E-02
150	150	186	Q_power station	0.37	-5.902E-02
150	150	179	Q_power station	9.723E-03	-5.902E-02
150	150	178	Q_neve	0.16	0.42
150	150	185	Q_neve	1.21	0.42

Table 21: Element Stresses - Area Shells, Part 3 of 3

Area	AreaElem	Joint	OutputCase	S13Avg	S23Avg
				KN/m2	KN/m2
150	150	186	Q_neve	1.21	0.44
150	150	179	Q_neve	0.16	0.44
150	150	178	Q_manutenzione	9.723E-03	-3.818E-02
150	150	185	Q_manutenzione	0.37	-3.818E-02
150	150	186	Q_manutenzione	0.37	-5.902E-02
150	150	179	Q_manutenzione	9.723E-03	-5.902E-02
150	150	178	EQ_X	7.91	-0.53
150	150	185	EQ_X	8.96	-0.53
150	150	186	EQ_X	8.96	0.9
150	150	179	EQ_X	7.91	0.9
150	150	178	EQ_Y	0.5	5.77
150	150	185	EQ_Y	8.534E-02	5.77
150	150	186	EQ_Y	8.534E-02	5.58
150	150	179	EQ_Y	0.5	5.58
151	151	179	DEAD	1.114E-11	6.867E-13
151	151	186	DEAD	-1.013E-11	7.265E-12
151	151	187	DEAD	-9.925E-12	-6.160E-12
151	151	180	DEAD	4.015E-13	9.449E-13
151	151	179	G1_power station	0.	0.
151	151	186	G1_power station	0.	0.
151	151	187	G1_power station	0.	0.
151	151	180	G1_power station	0.	0.
151	151	179	G2_power station	9.48	-7.92
151	151	186	G2_power station	32.32	-7.92
151	151	187	G2_power station	32.32	8.27
151	151	180	G2_power station	9.48	8.27
151	151	179	Q_power station	0.35	-0.29
151	151	186	Q_power station	1.2	-0.29
151	151	187	Q_power station	1.2	0.31
151	151	180	Q_power station	0.35	0.31
151	151	179	Q_neve	1.24	-0.22
151	151	186	Q_neve	3.61	-0.22
151	151	187	Q_neve	3.61	1.52
151	151	180	Q_neve	1.24	1.52
151	151	179	Q_manutenzione	0.35	-0.29
151	151	186	Q_manutenzione	1.2	-0.29
151	151	187	Q_manutenzione	1.2	0.31
151	151	180	Q_manutenzione	0.35	0.31
151	151	179	EQ_X	8.45	0.29
151	151	186	EQ_X	9.79	0.29
151	151	187	EQ_X	9.79	3.25
151	151	180	EQ_X	8.45	3.25
151	151	179	EQ_Y	2.378E-02	5.66

Table 21: Element Stresses - Area Shells, Part 3 of 3

Area	AreaElem	Joint	OutputCase	S13Avg	S23Avg
				KN/m2	KN/m2
151	151	186	EQ_Y	-0.37	5.66
151	151	187	EQ_Y	-0.37	6.33
151	151	180	EQ_Y	2.378E-02	6.33
152	152	180	DEAD	1.717E-11	-1.361E-11
152	152	187	DEAD	1.959E-11	3.044E-12
152	152	188	DEAD	1.506E-11	1.140E-12
152	152	181	DEAD	2.907E-11	1.094E-11
152	152	180	G1_power station	0.	0.
152	152	187	G1_power station	0.	0.
152	152	188	G1_power station	0.	0.
152	152	181	G1_power station	0.	0.
152	152	180	G2_power station	130.41	18.6
152	152	187	G2_power station	19.35	18.6
152	152	188	G2_power station	19.35	-2.93
152	152	181	G2_power station	130.41	-2.93
152	152	180	Q_power station	4.83	0.69
152	152	187	Q_power station	0.72	0.69
152	152	188	Q_power station	0.72	-0.11
152	152	181	Q_power station	4.83	-0.11
152	152	180	Q_neve	13.77	2.56
152	152	187	Q_neve	2.41	2.56
152	152	188	Q_neve	2.41	0.39
152	152	181	Q_neve	13.77	0.39
152	152	180	Q_manutenzione	4.83	0.69
152	152	187	Q_manutenzione	0.72	0.69
152	152	188	Q_manutenzione	0.72	-0.11
152	152	181	Q_manutenzione	4.83	-0.11
152	152	180	EQ_X	15.23	3.89
152	152	187	EQ_X	7.18	3.89
152	152	188	EQ_X	7.18	2.02
152	152	181	EQ_X	15.23	2.02
152	152	180	EQ_Y	-8.25	4.98
152	152	187	EQ_Y	0.95	4.98
152	152	188	EQ_Y	0.95	6.55
152	152	181	EQ_Y	-8.25	6.55
153	153	68	DEAD	2.417E-12	-1.941E-12
153	153	70	DEAD	5.576E-12	1.173E-11
153	153	189	DEAD	1.400E-11	1.228E-11
153	153	182	DEAD	1.084E-11	1.594E-11
153	153	68	G1_power station	0.	0.
153	153	70	G1_power station	0.	0.
153	153	189	G1_power station	0.	0.
153	153	182	G1_power station	0.	0.

Table 21: Element Stresses - Area Shells, Part 3 of 3

Area	AreaElem	Joint	OutputCase	S13Avg	S23Avg
				KN/m2	KN/m2
153	153	68	G2_power station	-16.94	-3.738E-13
153	153	70	G2_power station	-16.94	1.936E-11
153	153	189	G2_power station	-16.94	3.017E-11
153	153	182	G2_power station	-16.94	1.409E-11
153	153	68	Q_power station	-0.63	1.142E-13
153	153	70	Q_power station	-0.63	6.088E-13
153	153	189	Q_power station	-0.63	6.079E-13
153	153	182	Q_power station	-0.63	7.405E-13
153	153	68	Q_neve	-2.58	-1.078E-12
153	153	70	Q_neve	-2.58	2.339E-12
153	153	189	Q_neve	-2.58	1.687E-12
153	153	182	Q_neve	-2.58	2.602E-12
153	153	68	Q_manutenzione	-0.63	1.142E-13
153	153	70	Q_manutenzione	-0.63	6.088E-13
153	153	189	Q_manutenzione	-0.63	6.079E-13
153	153	182	Q_manutenzione	-0.63	7.405E-13
153	153	68	EQ_X	2.16	-2.755E-13
153	153	70	EQ_X	2.16	2.782E-12
153	153	189	EQ_X	2.16	1.568E-12
153	153	182	EQ_X	2.16	2.387E-12
153	153	68	EQ_Y	0.71	21.46
153	153	70	EQ_Y	-0.71	21.46
153	153	189	EQ_Y	-0.71	18.86
153	153	182	EQ_Y	0.71	18.86
154	154	182	DEAD	1.759E-11	7.585E-12
154	154	189	DEAD	3.410E-12	2.859E-12
154	154	190	DEAD	9.166E-12	-1.032E-11
154	154	183	DEAD	1.605E-11	4.439E-12
154	154	182	G1_power station	0.	0.
154	154	189	G1_power station	0.	0.
154	154	190	G1_power station	0.	0.
154	154	183	G1_power station	0.	0.
154	154	182	G2_power station	-19.84	8.122E-12
154	154	189	G2_power station	-19.84	1.135E-12
154	154	190	G2_power station	-19.84	-8.731E-12
154	154	183	G2_power station	-19.84	8.147E-14
154	154	182	Q_power station	-0.73	1.905E-13
154	154	189	Q_power station	-0.73	-3.426E-13
154	154	190	Q_power station	-0.73	-1.715E-13
154	154	183	Q_power station	-0.73	1.950E-14
154	154	182	Q_neve	-2.42	1.788E-12
154	154	189	Q_neve	-2.42	-7.045E-13
154	154	190	Q_neve	-2.42	-1.636E-12

Table 21: Element Stresses - Area Shells, Part 3 of 3

Area	AreaElem	Joint	OutputCase	S13Avg	S23Avg
				KN/m2	KN/m2
154	154	183	Q_neve	-2.42	-9.678E-13
154	154	182	Q_manutenzione	-0.73	1.905E-13
154	154	189	Q_manutenzione	-0.73	-3.426E-13
154	154	190	Q_manutenzione	-0.73	-1.715E-13
154	154	183	Q_manutenzione	-0.73	1.950E-14
154	154	182	EQ_X	-6.2	1.366E-12
154	154	189	EQ_X	-6.2	-6.763E-13
154	154	190	EQ_X	-6.2	-8.721E-13
154	154	183	EQ_X	-6.2	-8.384E-14
154	154	182	EQ_Y	-3.61	17.28
154	154	189	EQ_Y	3.61	17.28
154	154	190	EQ_Y	3.61	14.51
154	154	183	EQ_Y	-3.61	14.51
155	155	183	DEAD	-5.147E-12	1.043E-11
155	155	190	DEAD	-3.812E-12	1.795E-12
155	155	191	DEAD	-9.340E-13	5.688E-12
155	155	184	DEAD	-5.918E-12	3.375E-12
155	155	183	G1_power station	0.	0.
155	155	190	G1_power station	0.	0.
155	155	191	G1_power station	0.	0.
155	155	184	G1_power station	0.	0.
155	155	183	G2_power station	-14.36	6.707E-13
155	155	190	G2_power station	-14.36	1.013E-11
155	155	191	G2_power station	-14.36	5.411E-12
155	155	184	G2_power station	-14.36	1.329E-11
155	155	183	Q_power station	-0.53	5.282E-13
155	155	190	Q_power station	-0.53	8.179E-14
155	155	191	Q_power station	-0.53	2.320E-13
155	155	184	Q_power station	-0.53	2.793E-13
155	155	183	Q_neve	-1.6	-3.264E-13
155	155	190	Q_neve	-1.6	5.858E-13
155	155	191	Q_neve	-1.6	8.585E-13
155	155	184	Q_neve	-1.6	1.771E-12
155	155	183	Q_manutenzione	-0.53	5.282E-13
155	155	190	Q_manutenzione	-0.53	8.179E-14
155	155	191	Q_manutenzione	-0.53	2.320E-13
155	155	184	Q_manutenzione	-0.53	2.793E-13
155	155	183	EQ_X	4.58	1.163E-12
155	155	190	EQ_X	4.58	-3.210E-13
155	155	191	EQ_X	4.58	4.716E-13
155	155	184	EQ_X	4.58	7.397E-14
155	155	183	EQ_Y	0.67	14.31
155	155	190	EQ_Y	-0.67	14.31

Table 21: Element Stresses - Area Shells, Part 3 of 3

Area	AreaElem	Joint	OutputCase	S13Avg	S23Avg
				KN/m2	KN/m2
155	155	191	EQ_Y	-0.67	8.55
155	155	184	EQ_Y	0.67	8.55
156	156	184	DEAD	8.432E-12	3.812E-12
156	156	191	DEAD	-2.079E-11	5.147E-12
156	156	192	DEAD	7.379E-12	5.918E-12
156	156	185	DEAD	-4.185E-11	9.340E-13
156	156	184	G1_power station	0.	0.
156	156	191	G1_power station	0.	0.
156	156	192	G1_power station	0.	0.
156	156	185	G1_power station	0.	0.
156	156	184	G2_power station	-3.94	1.342E-11
156	156	191	G2_power station	-3.94	1.055E-11
156	156	192	G2_power station	-3.94	2.583E-13
156	156	185	G2_power station	-3.94	-5.128E-13
156	156	184	Q_power station	-0.15	2.730E-13
156	156	191	Q_power station	-0.15	3.147E-13
156	156	192	Q_power station	-0.15	2.401E-13
156	156	185	Q_power station	-0.15	8.434E-14
156	156	184	Q_neve	-0.38	1.300E-12
156	156	191	Q_neve	-0.38	1.467E-12
156	156	192	Q_neve	-0.38	9.047E-13
156	156	185	Q_neve	-0.38	2.817E-13
156	156	184	Q_manutenzione	-0.15	2.730E-13
156	156	191	Q_manutenzione	-0.15	3.147E-13
156	156	192	Q_manutenzione	-0.15	2.401E-13
156	156	185	Q_manutenzione	-0.15	8.434E-14
156	156	184	EQ_X	7.35	3.794E-13
156	156	191	EQ_X	7.35	4.179E-13
156	156	192	EQ_X	7.35	2.477E-13
156	156	185	EQ_X	7.35	-7.583E-14
156	156	184	EQ_Y	1.02	9.55
156	156	191	EQ_Y	-1.02	9.55
156	156	192	EQ_Y	-1.02	6.7
156	156	185	EQ_Y	1.02	6.7
157	157	185	DEAD	7.113E-12	-7.602E-13
157	157	192	DEAD	-3.524E-12	2.837E-12
157	157	193	DEAD	7.929E-13	-7.602E-13
157	157	186	DEAD	5.956E-12	2.037E-13
157	157	185	G1_power station	0.	0.
157	157	192	G1_power station	0.	0.
157	157	193	G1_power station	0.	0.
157	157	186	G1_power station	0.	0.
157	157	185	G2_power station	9.15	5.214E-12

Table 21: Element Stresses - Area Shells, Part 3 of 3

Area	AreaElem	Joint	OutputCase	S13Avg	S23Avg
				KN/m2	KN/m2
157	157	192	G2_power station	9.15	8.973E-13
157	157	193	G2_power station	9.15	2.844E-12
157	157	186	G2_power station	9.15	1.687E-12
157	157	185	Q_power station	0.34	1.444E-13
157	157	192	Q_power station	0.34	1.894E-13
157	157	193	Q_power station	0.34	4.565E-14
157	157	186	Q_power station	0.34	5.769E-14
157	157	185	Q_neve	1.09	8.029E-13
157	157	192	Q_neve	1.09	4.432E-13
157	157	193	Q_neve	1.09	-1.188E-13
157	157	186	Q_neve	1.09	-2.151E-13
157	157	185	Q_manutenzione	0.34	1.444E-13
157	157	192	Q_manutenzione	0.34	1.894E-13
157	157	193	Q_manutenzione	0.34	4.565E-14
157	157	186	Q_manutenzione	0.34	5.769E-14
157	157	185	EQ_X	8.53	1.794E-13
157	157	192	EQ_X	8.53	4.124E-14
157	157	193	EQ_X	8.53	4.098E-13
157	157	186	EQ_X	8.53	2.058E-13
157	157	185	EQ_Y	0.38	7.31
157	157	192	EQ_Y	-0.38	7.31
157	157	193	EQ_Y	-0.38	6.68
157	157	186	EQ_Y	0.38	6.68
158	158	186	DEAD	2.454E-12	-6.369E-12
158	158	193	DEAD	-1.533E-11	-4.314E-12
158	158	194	DEAD	6.668E-12	1.154E-11
158	158	187	DEAD	-2.481E-11	6.746E-12
158	158	186	G1_power station	0.	0.
158	158	193	G1_power station	0.	0.
158	158	194	G1_power station	0.	0.
158	158	187	G1_power station	0.	0.
158	158	186	G2_power station	29.92	-7.763E-13
158	158	193	G2_power station	29.92	-2.626E-13
158	158	194	G2_power station	29.92	3.437E-12
158	158	187	G2_power station	29.92	2.239E-12
158	158	186	Q_power station	1.11	-2.863E-14
158	158	193	Q_power station	1.11	-1.820E-14
158	158	194	Q_power station	1.11	6.189E-14
158	158	187	Q_power station	1.11	2.295E-14
158	158	186	Q_neve	3.34	-3.946E-13
158	158	193	Q_neve	3.34	-3.176E-13
158	158	194	Q_neve	3.34	1.383E-12
158	158	187	Q_neve	3.34	7.357E-13

Table 21: Element Stresses - Area Shells, Part 3 of 3

Area	AreaElem	Joint	OutputCase	S13Avg	S23Avg
				KN/m2	KN/m2
158	158	186	Q_manutenzione	1.11	-2.863E-14
158	158	193	Q_manutenzione	1.11	-1.820E-14
158	158	194	Q_manutenzione	1.11	6.189E-14
158	158	187	Q_manutenzione	1.11	2.295E-14
158	158	186	EQ_X	9.27	3.088E-13
158	158	193	EQ_X	9.27	1.723E-13
158	158	194	EQ_X	9.27	3.088E-13
158	158	187	EQ_X	9.27	1.888E-13
158	158	186	EQ_Y	-0.68	6.64
158	158	193	EQ_Y	0.68	6.64
158	158	194	EQ_Y	0.68	6.66
158	158	187	EQ_Y	-0.68	6.66
159	159	187	DEAD	1.050E-11	1.077E-11
159	159	194	DEAD	6.874E-12	5.014E-12
159	159	195	DEAD	-3.198E-12	-1.344E-12
159	159	188	DEAD	1.319E-11	-2.886E-12
159	159	187	G1_power station	0.	0.
159	159	194	G1_power station	0.	0.
159	159	195	G1_power station	0.	0.
159	159	188	G1_power station	0.	0.
159	159	187	G2_power station	25.15	3.660E-12
159	159	194	G2_power station	25.15	3.708E-12
159	159	195	G2_power station	25.15	-2.956E-12
159	159	188	G2_power station	25.15	-2.777E-12
159	159	187	Q_power station	0.93	1.018E-13
159	159	194	Q_power station	0.93	5.680E-14
159	159	195	Q_power station	0.93	-1.297E-13
159	159	188	Q_power station	0.93	-1.417E-13
159	159	187	Q_neve	2.99	1.146E-12
159	159	194	Q_neve	2.99	4.265E-13
159	159	195	Q_neve	2.99	-4.998E-13
159	159	188	Q_neve	2.99	-6.926E-13
159	159	187	Q_manutenzione	0.93	1.018E-13
159	159	194	Q_manutenzione	0.93	5.680E-14
159	159	195	Q_manutenzione	0.93	-1.297E-13
159	159	188	Q_manutenzione	0.93	-1.417E-13
159	159	187	EQ_X	7.6	3.388E-13
159	159	194	EQ_X	7.6	2.713E-13
159	159	195	EQ_X	7.6	-7.270E-14
159	159	188	EQ_X	7.6	-9.077E-14
159	159	187	EQ_Y	0.16	6.09
159	159	194	EQ_Y	-0.16	6.09
159	159	195	EQ_Y	-0.16	7.79

Table 21: Element Stresses - Area Shells, Part 3 of 3

Area	AreaElem	Joint	OutputCase	S13Avg	S23Avg
				KN/m2	KN/m2
159	159	188	EQ_Y	0.16	7.79
160	160	70	DEAD	-4.072E-12	5.848E-12
160	160	72	DEAD	2.137E-11	-6.382E-12
160	160	196	DEAD	2.248E-12	4.794E-12
160	160	189	DEAD	2.242E-11	1.517E-12
160	160	70	G1_power station	0.	0.
160	160	72	G1_power station	0.	0.
160	160	196	G1_power station	0.	0.
160	160	189	G1_power station	0.	0.
160	160	70	G2_power station	-16.38	-22.14
160	160	72	G2_power station	-27.43	-22.14
160	160	196	G2_power station	-27.43	-28.48
160	160	189	G2_power station	-16.38	-28.48
160	160	70	Q_power station	-0.61	-0.82
160	160	72	Q_power station	-1.01	-0.82
160	160	196	Q_power station	-1.01	-1.05
160	160	189	Q_power station	-0.61	-1.05
160	160	70	Q_neve	-2.52	-2.4
160	160	72	Q_neve	-3.46	-2.4
160	160	196	Q_neve	-3.46	-3.01
160	160	189	Q_neve	-2.52	-3.01
160	160	70	Q_manutenzione	-0.61	-0.82
160	160	72	Q_manutenzione	-1.01	-0.82
160	160	196	Q_manutenzione	-1.01	-1.05
160	160	189	Q_manutenzione	-0.61	-1.05
160	160	70	EQ_X	2.49	-15.61
160	160	72	EQ_X	-89.85	-15.61
160	160	196	EQ_X	-89.85	-4.
160	160	189	EQ_X	2.49	-4.
160	160	70	EQ_Y	-2.81	9.92
160	160	72	EQ_Y	23.31	9.92
160	160	196	EQ_Y	23.31	29.8
160	160	189	EQ_Y	-2.81	29.8
161	161	189	DEAD	-8.677E-12	-3.121E-13
161	161	196	DEAD	9.361E-12	-8.945E-12
161	161	197	DEAD	-1.078E-11	5.481E-12
161	161	190	DEAD	-3.279E-12	3.168E-12
161	161	189	G1_power station	0.	0.
161	161	196	G1_power station	0.	0.
161	161	197	G1_power station	0.	0.
161	161	190	G1_power station	0.	0.
161	161	189	G2_power station	-21.31	-24.01
161	161	196	G2_power station	-32.9	-24.01

Table 21: Element Stresses - Area Shells, Part 3 of 3

Area	AreaElem	Joint	OutputCase	S13Avg	S23Avg
				KN/m2	KN/m2
161	161	197	G2_power station	-32.9	-13.18
161	161	190	G2_power station	-21.31	-13.18
161	161	189	Q_power station	-0.79	-0.89
161	161	196	Q_power station	-1.22	-0.89
161	161	197	Q_power station	-1.22	-0.49
161	161	190	Q_power station	-0.79	-0.49
161	161	189	Q_neve	-2.54	-2.62
161	161	196	Q_neve	-3.56	-2.62
161	161	197	Q_neve	-3.56	-1.69
161	161	190	Q_neve	-2.54	-1.69
161	161	189	Q_manutenzione	-0.79	-0.89
161	161	196	Q_manutenzione	-1.22	-0.89
161	161	197	Q_manutenzione	-1.22	-0.49
161	161	190	Q_manutenzione	-0.79	-0.49
161	161	189	EQ_X	-8.15	1.21
161	161	196	EQ_X	14.8	1.21
161	161	197	EQ_X	14.8	9.
161	161	190	EQ_X	-8.15	9.
161	161	189	EQ_Y	7.35	26.79
161	161	196	EQ_Y	3.08	26.79
161	161	197	EQ_Y	3.08	5.51
161	161	190	EQ_Y	7.35	5.51
162	162	190	DEAD	-8.307E-13	3.030E-12
162	162	197	DEAD	3.100E-12	-3.445E-12
162	162	198	DEAD	2.226E-13	9.231E-13
162	162	191	DEAD	-5.964E-14	-8.118E-13
162	162	190	G1_power station	0.	0.
162	162	197	G1_power station	0.	0.
162	162	198	G1_power station	0.	0.
162	162	191	G1_power station	0.	0.
162	162	190	G2_power station	-16.18	-12.23
162	162	197	G2_power station	-16.34	-12.23
162	162	198	G2_power station	-16.34	-4.51
162	162	191	G2_power station	-16.18	-4.51
162	162	190	Q_power station	-0.6	-0.45
162	162	197	Q_power station	-0.6	-0.45
162	162	198	Q_power station	-0.6	-0.17
162	162	191	Q_power station	-0.6	-0.17
162	162	190	Q_neve	-1.76	-1.6
162	162	197	Q_neve	-1.79	-1.6
162	162	198	Q_neve	-1.79	-0.94
162	162	191	Q_neve	-1.76	-0.94
162	162	190	Q_manutenzione	-0.6	-0.45

Table 21: Element Stresses - Area Shells, Part 3 of 3

Area	AreaElem	Joint	OutputCase	S13Avg	S23Avg
				KN/m2	KN/m2
162	162	197	Q_manutenzione	-0.6	-0.45
162	162	198	Q_manutenzione	-0.6	-0.17
162	162	191	Q_manutenzione	-0.6	-0.17
162	162	190	EQ_X	4.79	5.24
162	162	197	EQ_X	6.95	5.24
162	162	198	EQ_X	6.95	1.93
162	162	191	EQ_X	4.79	1.93
162	162	190	EQ_Y	1.82	7.38
162	162	197	EQ_Y	-1.5	7.38
162	162	198	EQ_Y	-1.5	5.57
162	162	191	EQ_Y	1.82	5.57
163	163	191	DEAD	-1.345E-11	2.117E-13
163	163	198	DEAD	4.170E-12	3.706E-12
163	163	199	DEAD	1.292E-12	-2.948E-12
163	163	192	DEAD	-1.268E-11	-7.354E-12
163	163	191	G1_power station	0.	0.
163	163	198	G1_power station	0.	0.
163	163	199	G1_power station	0.	0.
163	163	192	G1_power station	0.	0.
163	163	191	G2_power station	-4.85	-4.61
163	163	198	G2_power station	-6.68	-4.61
163	163	199	G2_power station	-6.68	-0.81
163	163	192	G2_power station	-4.85	-0.81
163	163	191	Q_power station	-0.18	-0.17
163	163	198	Q_power station	-0.25	-0.17
163	163	199	Q_power station	-0.25	-3.013E-02
163	163	192	Q_power station	-0.18	-3.013E-02
163	163	191	Q_neve	-0.46	-0.94
163	163	198	Q_neve	-0.68	-0.94
163	163	199	Q_neve	-0.68	-0.63
163	163	192	Q_neve	-0.46	-0.63
163	163	191	Q_manutenzione	-0.18	-0.17
163	163	198	Q_manutenzione	-0.25	-0.17
163	163	199	Q_manutenzione	-0.25	-3.013E-02
163	163	192	Q_manutenzione	-0.18	-3.013E-02
163	163	191	EQ_X	7.84	1.83
163	163	198	EQ_X	7.52	1.83
163	163	199	EQ_X	7.52	0.18
163	163	192	EQ_X	7.84	0.18
163	163	191	EQ_Y	-0.1	6.37
163	163	198	EQ_Y	-0.88	6.37
163	163	199	EQ_Y	-0.88	5.49
163	163	192	EQ_Y	-0.1	5.49

Table 21: Element Stresses - Area Shells, Part 3 of 3

Area	AreaElem	Joint	OutputCase	S13Avg	S23Avg
				KN/m2	KN/m2
164	164	192	DEAD	-6.407E-12	-2.299E-12
164	164	199	DEAD	1.774E-11	-8.261E-12
164	164	200	DEAD	-1.062E-11	1.387E-12
164	164	193	DEAD	-2.018E-11	-1.089E-11
164	164	192	G1_power station	0.	0.
164	164	199	G1_power station	0.	0.
164	164	200	G1_power station	0.	0.
164	164	193	G1_power station	0.	0.
164	164	192	G2_power station	10.12	1.03
164	164	199	G2_power station	0.26	1.03
164	164	200	G2_power station	0.26	1.6
164	164	193	G2_power station	10.12	1.6
164	164	192	Q_power station	0.37	3.818E-02
164	164	199	Q_power station	9.723E-03	3.818E-02
164	164	200	Q_power station	9.723E-03	5.902E-02
164	164	193	Q_power station	0.37	5.902E-02
164	164	192	Q_neve	1.21	-0.42
164	164	199	Q_neve	0.16	-0.42
164	164	200	Q_neve	0.16	-0.44
164	164	193	Q_neve	1.21	-0.44
164	164	192	Q_manutenzione	0.37	3.818E-02
164	164	199	Q_manutenzione	9.723E-03	3.818E-02
164	164	200	Q_manutenzione	9.723E-03	5.902E-02
164	164	193	Q_manutenzione	0.37	5.902E-02
164	164	192	EQ_X	8.96	0.53
164	164	199	EQ_X	7.91	0.53
164	164	200	EQ_X	7.91	-0.9
164	164	193	EQ_X	8.96	-0.9
164	164	192	EQ_Y	-8.534E-02	5.77
164	164	199	EQ_Y	-0.5	5.77
164	164	200	EQ_Y	-0.5	5.58
164	164	193	EQ_Y	-8.534E-02	5.58
165	165	193	DEAD	-1.086E-11	-5.522E-12
165	165	200	DEAD	9.078E-12	-1.056E-11
165	165	201	DEAD	5.994E-12	-2.553E-13
165	165	194	DEAD	6.518E-13	-1.605E-12
165	165	193	G1_power station	0.	0.
165	165	200	G1_power station	0.	0.
165	165	201	G1_power station	0.	0.
165	165	194	G1_power station	0.	0.
165	165	193	G2_power station	32.32	7.92
165	165	200	G2_power station	9.48	7.92
165	165	201	G2_power station	9.48	-8.27

Table 21: Element Stresses - Area Shells, Part 3 of 3

Area	AreaElem	Joint	OutputCase	S13Avg	S23Avg
				KN/m2	KN/m2
165	165	194	G2_power station	32.32	-8.27
165	165	193	Q_power station	1.2	0.29
165	165	200	Q_power station	0.35	0.29
165	165	201	Q_power station	0.35	-0.31
165	165	194	Q_power station	1.2	-0.31
165	165	193	Q_neve	3.61	0.22
165	165	200	Q_neve	1.24	0.22
165	165	201	Q_neve	1.24	-1.52
165	165	194	Q_neve	3.61	-1.52
165	165	193	Q_manutenzione	1.2	0.29
165	165	200	Q_manutenzione	0.35	0.29
165	165	201	Q_manutenzione	0.35	-0.31
165	165	194	Q_manutenzione	1.2	-0.31
165	165	193	EQ_X	9.79	-0.29
165	165	200	EQ_X	8.45	-0.29
165	165	201	EQ_X	8.45	-3.25
165	165	194	EQ_X	9.79	-3.25
165	165	193	EQ_Y	0.37	5.66
165	165	200	EQ_Y	-2.378E-02	5.66
165	165	201	EQ_Y	-2.378E-02	6.33
165	165	194	EQ_Y	0.37	6.33
166	166	194	DEAD	8.921E-12	-6.097E-12
166	166	201	DEAD	6.580E-12	-8.975E-12
166	166	202	DEAD	1.419E-11	5.489E-12
166	166	195	DEAD	-1.449E-11	4.718E-12
166	166	194	G1_power station	0.	0.
166	166	201	G1_power station	0.	0.
166	166	202	G1_power station	0.	0.
166	166	195	G1_power station	0.	0.
166	166	194	G2_power station	19.35	-18.6
166	166	201	G2_power station	130.41	-18.6
166	166	202	G2_power station	130.41	2.93
166	166	195	G2_power station	19.35	2.93
166	166	194	Q_power station	0.72	-0.69
166	166	201	Q_power station	4.83	-0.69
166	166	202	Q_power station	4.83	0.11
166	166	195	Q_power station	0.72	0.11
166	166	194	Q_neve	2.41	-2.56
166	166	201	Q_neve	13.77	-2.56
166	166	202	Q_neve	13.77	-0.39
166	166	195	Q_neve	2.41	-0.39
166	166	194	Q_manutenzione	0.72	-0.69
166	166	201	Q_manutenzione	4.83	-0.69

Table 21: Element Stresses - Area Shells, Part 3 of 3

Area	AreaElem	Joint	OutputCase	S13Avg	S23Avg
				KN/m2	KN/m2
166	166	202	Q_manutenzione	4.83	0.11
166	166	195	Q_manutenzione	0.72	0.11
166	166	194	EQ_X	7.18	-3.89
166	166	201	EQ_X	15.23	-3.89
166	166	202	EQ_X	15.23	-2.02
166	166	195	EQ_X	7.18	-2.02
166	166	194	EQ_Y	-0.95	4.98
166	166	201	EQ_Y	8.25	4.98
166	166	202	EQ_Y	8.25	6.55
166	166	195	EQ_Y	-0.95	6.55
167	167	72	DEAD	1.816E-11	-6.790E-12
167	167	18	DEAD	-4.865E-12	-2.117E-13
167	167	203	DEAD	1.304E-12	-4.157E-12
167	167	196	DEAD	-4.865E-12	2.948E-12
167	167	72	G1_power station	0.	0.
167	167	18	G1_power station	0.	0.
167	167	203	G1_power station	0.	0.
167	167	196	G1_power station	0.	0.
167	167	72	G2_power station	-36.38	-107.82
167	167	18	G2_power station	-117.46	-107.82
167	167	203	G2_power station	-117.46	-37.96
167	167	196	G2_power station	-36.38	-37.96
167	167	72	Q_power station	-1.35	-3.99
167	167	18	Q_power station	-4.35	-3.99
167	167	203	Q_power station	-4.35	-1.4
167	167	196	Q_power station	-1.35	-1.4
167	167	72	Q_neve	-4.23	-10.51
167	167	18	Q_neve	-11.4	-10.51
167	167	203	Q_neve	-11.4	-4.37
167	167	196	Q_neve	-4.23	-4.37
167	167	72	Q_manutenzione	-1.35	-3.99
167	167	18	Q_manutenzione	-4.35	-3.99
167	167	203	Q_manutenzione	-4.35	-1.4
167	167	196	Q_manutenzione	-1.35	-1.4
167	167	72	EQ_X	-97.14	72.75
167	167	18	EQ_X	194.	72.75
167	167	203	EQ_X	194.	60.62
167	167	196	EQ_X	-97.14	60.62
167	167	72	EQ_Y	58.91	196.24
167	167	18	EQ_Y	84.16	196.24
167	167	203	EQ_Y	84.16	-80.38
167	167	196	EQ_Y	58.91	-80.38
168	168	196	DEAD	7.477E-12	3.193E-12

Table 21: Element Stresses - Area Shells, Part 3 of 3

Area	AreaElem	Joint	OutputCase	S13Avg	S23Avg
				KN/m2	KN/m2
168	168	203	DEAD	3.545E-12	-4.044E-13
168	168	204	DEAD	-2.003E-12	3.193E-12
168	168	197	DEAD	-1.721E-12	2.229E-12
168	168	196	G1_power station	0.	0.
168	168	203	G1_power station	0.	0.
168	168	204	G1_power station	0.	0.
168	168	197	G1_power station	0.	0.
168	168	196	G2_power station	-39.8	-29.39
168	168	203	G2_power station	-34.03	-29.39
168	168	204	G2_power station	-34.03	-11.54
168	168	197	G2_power station	-39.8	-11.54
168	168	196	Q_power station	-1.47	-1.09
168	168	203	Q_power station	-1.26	-1.09
168	168	204	Q_power station	-1.26	-0.43
168	168	197	Q_power station	-1.47	-0.43
168	168	196	Q_neve	-4.15	-3.61
168	168	203	Q_neve	-3.62	-3.61
168	168	204	Q_neve	-3.62	-2.11
168	168	197	Q_neve	-4.15	-2.11
168	168	196	Q_manutenzione	-1.47	-1.09
168	168	203	Q_manutenzione	-1.26	-1.09
168	168	204	Q_manutenzione	-1.26	-0.43
168	168	197	Q_manutenzione	-1.47	-0.43
168	168	196	EQ_X	17.08	25.38
168	168	203	EQ_X	1.63	25.38
168	168	204	EQ_X	1.63	0.35
168	168	197	EQ_X	17.08	0.35
168	168	196	EQ_Y	0.68	-74.07
168	168	203	EQ_Y	-18.34	-74.07
168	168	204	EQ_Y	-18.34	13.26
168	168	197	EQ_Y	0.68	13.26
169	169	197	DEAD	-1.840E-12	-4.583E-12
169	169	204	DEAD	-1.615E-11	8.677E-12
169	169	205	DEAD	9.746E-12	-8.796E-12
169	169	198	DEAD	-8.780E-12	1.078E-11
169	169	197	G1_power station	0.	0.
169	169	204	G1_power station	0.	0.
169	169	205	G1_power station	0.	0.
169	169	198	G1_power station	0.	0.
169	169	197	G2_power station	-19.42	-12.28
169	169	204	G2_power station	-20.84	-12.28
169	169	205	G2_power station	-20.84	-7.01
169	169	198	G2_power station	-19.42	-7.01

Table 21: Element Stresses - Area Shells, Part 3 of 3

Area	AreaElem	Joint	OutputCase	S13Avg	S23Avg
				KN/m2	KN/m2
169	169	197	Q_power station	-0.72	-0.45
169	169	204	Q_power station	-0.77	-0.45
169	169	205	Q_power station	-0.77	-0.26
169	169	198	Q_power station	-0.72	-0.26
169	169	197	Q_neve	-2.04	-2.17
169	169	204	Q_neve	-2.19	-2.17
169	169	205	Q_neve	-2.19	-1.76
169	169	198	Q_neve	-2.04	-1.76
169	169	197	Q_manutenzione	-0.72	-0.45
169	169	204	Q_manutenzione	-0.77	-0.45
169	169	205	Q_manutenzione	-0.77	-0.26
169	169	198	Q_manutenzione	-0.72	-0.26
169	169	197	EQ_X	8.39	2.49
169	169	204	EQ_X	9.1	2.49
169	169	205	EQ_X	9.1	1.02
169	169	198	EQ_X	8.39	1.02
169	169	197	EQ_Y	-1.54	13.29
169	169	204	EQ_Y	3.46	13.29
169	169	205	EQ_Y	3.46	-3.04
169	169	198	EQ_Y	-1.54	-3.04
170	170	198	DEAD	7.254E-12	6.022E-12
170	170	205	DEAD	-4.050E-12	4.480E-12
170	170	206	DEAD	-1.173E-12	9.182E-12
170	170	199	DEAD	6.483E-12	3.426E-12
170	170	198	G1_power station	0.	0.
170	170	205	G1_power station	0.	0.
170	170	206	G1_power station	0.	0.
170	170	199	G1_power station	0.	0.
170	170	198	G2_power station	-8.13	-6.45
170	170	205	G2_power station	-10.99	-6.45
170	170	206	G2_power station	-10.99	-3.11
170	170	199	G2_power station	-8.13	-3.11
170	170	198	Q_power station	-0.3	-0.24
170	170	205	Q_power station	-0.41	-0.24
170	170	206	Q_power station	-0.41	-0.11
170	170	199	Q_power station	-0.3	-0.11
170	170	198	Q_neve	-0.78	-1.69
170	170	205	Q_neve	-1.1	-1.69
170	170	206	Q_neve	-1.1	-1.43
170	170	199	Q_neve	-0.78	-1.43
170	170	198	Q_manutenzione	-0.3	-0.24
170	170	205	Q_manutenzione	-0.41	-0.24
170	170	206	Q_manutenzione	-0.41	-0.11

Table 21: Element Stresses - Area Shells, Part 3 of 3

Area	AreaElem	Joint	OutputCase	S13Avg	S23Avg
				KN/m2	KN/m2
170	170	199	Q_manutenzione	-0.3	-0.11
170	170	198	EQ_X	8.11	0.82
170	170	205	EQ_X	8.34	0.82
170	170	206	EQ_X	8.34	-8.604E-02
170	170	199	EQ_X	8.11	-8.604E-02
170	170	198	EQ_Y	-0.58	-3.23
170	170	205	EQ_Y	-1.76	-3.23
170	170	206	EQ_Y	-1.76	2.04
170	170	199	EQ_Y	-0.58	2.04
171	171	199	DEAD	5.734E-12	-1.739E-13
171	171	206	DEAD	-1.297E-11	7.946E-12
171	171	207	DEAD	-2.693E-12	-4.387E-12
171	171	200	DEAD	-7.705E-12	8.473E-12
171	171	199	G1_power station	0.	0.
171	171	206	G1_power station	0.	0.
171	171	207	G1_power station	0.	0.
171	171	200	G1_power station	0.	0.
171	171	199	G2_power station	8.275E-02	-1.17
171	171	206	G2_power station	-8.39	-1.17
171	171	207	G2_power station	-8.39	1.73
171	171	200	G2_power station	8.275E-02	1.73
171	171	199	Q_power station	3.062E-03	-4.311E-02
171	171	206	Q_power station	-0.31	-4.311E-02
171	171	207	Q_power station	-0.31	6.396E-02
171	171	200	Q_power station	3.062E-03	6.396E-02
171	171	199	Q_neve	0.18	-1.21
171	171	206	Q_neve	-0.73	-1.21
171	171	207	Q_neve	-0.73	-0.99
171	171	200	Q_neve	0.18	-0.99
171	171	199	Q_manutenzione	3.062E-03	-4.311E-02
171	171	206	Q_manutenzione	-0.31	-4.311E-02
171	171	207	Q_manutenzione	-0.31	6.396E-02
171	171	200	Q_manutenzione	3.062E-03	6.396E-02
171	171	199	EQ_X	8.45	4.295E-03
171	171	206	EQ_X	7.98	4.295E-03
171	171	207	EQ_X	7.98	-1.1
171	171	200	EQ_X	8.45	-1.1
171	171	199	EQ_Y	-0.65	2.02
171	171	206	EQ_Y	-0.58	2.02
171	171	207	EQ_Y	-0.58	2.06
171	171	200	EQ_Y	-0.65	2.06
172	172	200	DEAD	1.854E-11	-7.740E-13
172	172	207	DEAD	-1.471E-11	8.785E-12

Table 21: Element Stresses - Area Shells, Part 3 of 3

Area	AreaElem	Joint	OutputCase	S13Avg	S23Avg
				KN/m2	KN/m2
172	172	208	DEAD	-1.306E-11	-1.078E-11
172	172	201	DEAD	7.411E-12	2.465E-12
172	172	200	G1_power station	0.	0.
172	172	207	G1_power station	0.	0.
172	172	208	G1_power station	0.	0.
172	172	201	G1_power station	0.	0.
172	172	200	G2_power station	14.61	8.82
172	172	207	G2_power station	-17.79	8.82
172	172	208	G2_power station	-17.79	20.51
172	172	201	G2_power station	14.61	20.51
172	172	200	Q_power station	0.54	0.33
172	172	207	Q_power station	-0.66	0.33
172	172	208	Q_power station	-0.66	0.76
172	172	201	Q_power station	0.54	0.76
172	172	200	Q_neve	1.84	-0.24
172	172	207	Q_neve	-1.57	-0.24
172	172	208	Q_neve	-1.57	0.82
172	172	201	Q_neve	1.84	0.82
172	172	200	Q_manutenzione	0.54	0.33
172	172	207	Q_manutenzione	-0.66	0.33
172	172	208	Q_manutenzione	-0.66	0.76
172	172	201	Q_manutenzione	0.54	0.76
172	172	200	EQ_X	9.8	-0.49
172	172	207	EQ_X	6.59	-0.49
172	172	208	EQ_X	6.59	0.47
172	172	201	EQ_X	9.8	0.47
172	172	200	EQ_Y	-0.44	2.09
172	172	207	EQ_Y	2.634E-02	2.09
172	172	208	EQ_Y	2.634E-02	1.05
172	172	201	EQ_Y	-0.44	1.05
173	173	201	DEAD	-6.125E-12	-4.974E-12
173	173	208	DEAD	6.006E-12	8.845E-13
173	173	34	DEAD	-1.455E-11	-2.604E-11
173	173	202	DEAD	2.075E-11	-1.913E-11
173	173	201	G1_power station	0.	0.
173	173	208	G1_power station	0.	0.
173	173	34	G1_power station	0.	0.
173	173	202	G1_power station	0.	0.
173	173	201	G2_power station	142.42	65.52
173	173	208	G2_power station	-96.29	65.52
173	173	34	G2_power station	-96.29	-6.93
173	173	202	G2_power station	142.42	-6.93
173	173	201	Q_power station	5.27	2.42

Table 21: Element Stresses - Area Shells, Part 3 of 3

Area	AreaElem	Joint	OutputCase	S13Avg	S23Avg
				KN/m2	KN/m2
173	173	208	Q_power station	-3.56	2.42
173	173	34	Q_power station	-3.56	-0.26
173	173	202	Q_power station	5.27	-0.26
173	173	201	Q_neve	15.13	5.51
173	173	208	Q_neve	-9.61	5.51
173	173	34	Q_neve	-9.61	-2.63
173	173	202	Q_neve	15.13	-2.63
173	173	201	Q_manutenzione	5.27	2.42
173	173	208	Q_manutenzione	-3.56	2.42
173	173	34	Q_manutenzione	-3.56	-0.26
173	173	202	Q_manutenzione	5.27	-0.26
173	173	201	EQ_X	18.88	3.92
173	173	208	EQ_X	3.38	3.92
173	173	34	EQ_X	3.38	-19.38
173	173	202	EQ_X	18.88	-19.38
173	173	201	EQ_Y	5.75	2.69
173	173	208	EQ_Y	-7.87	2.69
173	173	34	EQ_Y	-7.87	17.87
173	173	202	EQ_Y	5.75	17.87
174	174	58	DEAD	2.131E-13	-1.190E-12
174	174	57	DEAD	1.029E-12	-9.977E-13
174	174	209	DEAD	1.003E-12	1.262E-13
174	174	143	DEAD	1.556E-12	8.456E-13
174	174	58	G1_power station	0.	0.
174	174	57	G1_power station	0.	0.
174	174	209	G1_power station	0.	0.
174	174	143	G1_power station	0.	0.
174	174	58	G2_power station	110.95	-63.99
174	174	57	G2_power station	32.46	-63.99
174	174	209	G2_power station	32.46	-13.85
174	174	143	G2_power station	110.95	-13.85
174	174	58	Q_power station	4.1	-2.37
174	174	57	Q_power station	1.2	-2.37
174	174	209	Q_power station	1.2	-0.51
174	174	143	Q_power station	4.1	-0.51
174	174	58	Q_neve	10.43	-5.26
174	174	57	Q_neve	3.18	-5.26
174	174	209	Q_neve	3.18	-0.69
174	174	143	Q_neve	10.43	-0.69
174	174	58	Q_manutenzione	4.1	-2.37
174	174	57	Q_manutenzione	1.2	-2.37
174	174	209	Q_manutenzione	1.2	-0.51
174	174	143	Q_manutenzione	4.1	-0.51

Table 21: Element Stresses - Area Shells, Part 3 of 3

Area	AreaElem	Joint	OutputCase	S13Avg	S23Avg
				KN/m2	KN/m2
174	174	58	EQ_X	213.98	-88.05
174	174	57	EQ_X	-184.4	-88.05
174	174	209	EQ_X	-184.4	-59.9
174	174	143	EQ_X	213.98	-59.9
174	174	58	EQ_Y	-101.22	171.5
174	174	57	EQ_Y	-82.68	171.5
174	174	209	EQ_Y	-82.68	-74.43
174	174	143	EQ_Y	-101.22	-74.43
175	175	143	DEAD	-1.389E-12	5.823E-13
175	175	209	DEAD	-1.626E-12	7.751E-13
175	175	210	DEAD	-1.652E-12	-7.343E-13
175	175	144	DEAD	-4.619E-14	-1.491E-14
175	175	143	G1_power station	0.	0.
175	175	209	G1_power station	0.	0.
175	175	210	G1_power station	0.	0.
175	175	144	G1_power station	0.	0.
175	175	143	G2_power station	21.92	-10.26
175	175	209	G2_power station	49.14	-10.26
175	175	210	G2_power station	49.14	6.73
175	175	144	G2_power station	21.92	6.73
175	175	143	Q_power station	0.81	-0.38
175	175	209	Q_power station	1.82	-0.38
175	175	210	Q_power station	1.82	0.25
175	175	144	Q_power station	0.81	0.25
175	175	143	Q_neve	2.09	-0.36
175	175	209	Q_neve	4.58	-0.36
175	175	210	Q_neve	4.58	1.24
175	175	144	Q_neve	2.09	1.24
175	175	143	Q_manutenzione	0.81	-0.38
175	175	209	Q_manutenzione	1.82	-0.38
175	175	210	Q_manutenzione	1.82	0.25
175	175	144	Q_manutenzione	0.81	0.25
175	175	143	EQ_X	6.96	-15.56
175	175	209	EQ_X	30.91	-15.56
175	175	210	EQ_X	30.91	-1.63
175	175	144	EQ_X	6.96	-1.63
175	175	143	EQ_Y	17.93	-67.06
175	175	209	EQ_Y	-6.41	-67.06
175	175	210	EQ_Y	-6.41	3.36
175	175	144	EQ_Y	17.93	3.36
176	176	144	DEAD	1.910E-12	-6.380E-13
176	176	210	DEAD	-3.197E-12	-6.380E-13
176	176	35	DEAD	6.656E-14	9.420E-13

Table 21: Element Stresses - Area Shells, Part 3 of 3

Area	AreaElem	Joint	OutputCase	S13Avg	S23Avg
				KN/m2	KN/m2
176	176	30	DEAD	-3.001E-13	9.420E-13
176	176	144	G1_power station	0.	0.
176	176	210	G1_power station	0.	0.
176	176	35	G1_power station	0.	0.
176	176	30	G1_power station	0.	0.
176	176	144	G2_power station	17.72	-1.2
176	176	210	G2_power station	41.83	-1.2
176	176	35	G2_power station	41.83	-17.02
176	176	30	G2_power station	17.72	-17.02
176	176	144	Q_power station	0.66	-4.456E-02
176	176	210	Q_power station	1.55	-4.456E-02
176	176	35	Q_power station	1.55	-0.63
176	176	30	Q_power station	0.66	-0.63
176	176	144	Q_neve	1.76	0.55
176	176	210	Q_neve	3.7	0.55
176	176	35	Q_neve	3.7	-1.59
176	176	30	Q_neve	1.76	-1.59
176	176	144	Q_manutenzione	0.66	-4.456E-02
176	176	210	Q_manutenzione	1.55	-4.456E-02
176	176	35	Q_manutenzione	1.55	-0.63
176	176	30	Q_manutenzione	0.66	-0.63
176	176	144	EQ_X	-7.7	-4.46
176	176	210	EQ_X	-7.93	-4.46
176	176	35	EQ_X	-7.93	16.85
176	176	30	EQ_X	-7.7	16.85
176	176	144	EQ_Y	4.38	4.66
176	176	210	EQ_Y	2.82	4.66
176	176	35	EQ_Y	2.82	-6.95
176	176	30	EQ_Y	4.38	-6.95
177	177	27	DEAD	3.461E-13	-3.923E-13
177	177	26	DEAD	-2.345E-12	-5.721E-13
177	177	211	DEAD	-2.551E-12	9.244E-13
177	177	212	DEAD	1.737E-12	8.762E-13
177	177	27	G1_power station	0.	0.
177	177	26	G1_power station	0.	0.
177	177	211	G1_power station	0.	0.
177	177	212	G1_power station	0.	0.
177	177	27	G2_power station	-25.56	19.1
177	177	26	G2_power station	31.68	19.1
177	177	211	G2_power station	31.68	2.74
177	177	212	G2_power station	-25.56	2.74
177	177	27	Q_power station	-0.95	0.71
177	177	26	Q_power station	1.17	0.71

Table 21: Element Stresses - Area Shells, Part 3 of 3

Area	AreaElem	Joint	OutputCase	S13Avg	S23Avg
				KN/m2	KN/m2
177	177	211	Q_power station	1.17	0.1
177	177	212	Q_power station	-0.95	0.1
177	177	27	Q_neve	-2.08	2.17
177	177	26	Q_neve	4.97	2.17
177	177	211	Q_neve	4.97	0.38
177	177	212	Q_neve	-2.08	0.38
177	177	27	Q_manutenzione	-0.95	0.71
177	177	26	Q_manutenzione	1.17	0.71
177	177	211	Q_manutenzione	1.17	0.1
177	177	212	Q_manutenzione	-0.95	0.1
177	177	27	EQ_X	2.76	-0.24
177	177	26	EQ_X	25.17	-0.24
177	177	211	EQ_X	25.17	3.45
177	177	212	EQ_X	2.76	3.45
177	177	27	EQ_Y	5.100E-02	-9.01
177	177	26	EQ_Y	-0.63	-9.01
177	177	211	EQ_Y	-0.63	2.93
177	177	212	EQ_Y	5.100E-02	2.93
178	178	212	DEAD	5.647E-13	1.173E-12
178	178	211	DEAD	-2.830E-13	9.929E-13
178	178	213	DEAD	-4.886E-13	1.195E-13
178	178	214	DEAD	1.955E-12	7.129E-14
178	178	212	G1_power station	0.	0.
178	178	211	G1_power station	0.	0.
178	178	213	G1_power station	0.	0.
178	178	214	G1_power station	0.	0.
178	178	212	G2_power station	-2.1	-3.25
178	178	211	G2_power station	-6.1	-3.25
178	178	213	G2_power station	-6.1	0.34
178	178	214	G2_power station	-2.1	0.34
178	178	212	Q_power station	-7.762E-02	-0.12
178	178	211	Q_power station	-0.23	-0.12
178	178	213	Q_power station	-0.23	1.247E-02
178	178	214	Q_power station	-7.762E-02	1.247E-02
178	178	212	Q_neve	0.13	-0.37
178	178	211	Q_neve	-0.36	-0.37
178	178	213	Q_neve	-0.36	2.704E-02
178	178	214	Q_neve	0.13	2.704E-02
178	178	212	Q_manutenzione	-7.762E-02	-0.12
178	178	211	Q_manutenzione	-0.23	-0.12
178	178	213	Q_manutenzione	-0.23	1.247E-02
178	178	214	Q_manutenzione	-7.762E-02	1.247E-02
178	178	212	EQ_X	17.89	0.86

Table 21: Element Stresses - Area Shells, Part 3 of 3

Area	AreaElem	Joint	OutputCase	S13Avg	S23Avg
				KN/m2	KN/m2
178	178	211	EQ_X	16.79	0.86
178	178	213	EQ_X	16.79	-0.42
178	178	214	EQ_X	17.89	-0.42
178	178	212	EQ_Y	-0.45	2.79
178	178	211	EQ_Y	-0.38	2.79
178	178	213	EQ_Y	-0.38	-1.3
178	178	214	EQ_Y	-0.45	-1.3
179	179	214	DEAD	-2.808E-12	-1.018E-14
179	179	213	DEAD	1.848E-12	-3.828E-13
179	179	215	DEAD	1.668E-12	-1.418E-13
179	179	216	DEAD	-2.760E-12	-9.095E-13
179	179	214	G1_power station	0.	0.
179	179	213	G1_power station	0.	0.
179	179	215	G1_power station	0.	0.
179	179	216	G1_power station	0.	0.
179	179	214	G2_power station	-8.3	0.17
179	179	213	G2_power station	-3.39	0.17
179	179	215	G2_power station	-3.39	-1.35
179	179	216	G2_power station	-8.3	-1.35
179	179	214	Q_power station	-0.31	6.466E-03
179	179	213	Q_power station	-0.13	6.466E-03
179	179	215	Q_power station	-0.13	-5.002E-02
179	179	216	Q_power station	-0.31	-5.002E-02
179	179	214	Q_neve	-1.34	9.413E-03
179	179	213	Q_neve	-0.73	9.413E-03
179	179	215	Q_neve	-0.73	-0.2
179	179	216	Q_neve	-1.34	-0.2
179	179	214	Q_manutenzione	-0.31	6.466E-03
179	179	213	Q_manutenzione	-0.13	6.466E-03
179	179	215	Q_manutenzione	-0.13	-5.002E-02
179	179	216	Q_manutenzione	-0.31	-5.002E-02
179	179	214	EQ_X	23.5	0.31
179	179	213	EQ_X	18.63	0.31
179	179	215	EQ_X	18.63	0.66
179	179	216	EQ_X	23.5	0.66
179	179	214	EQ_Y	-4.83	-1.42
179	179	213	EQ_Y	-3.98	-1.42
179	179	215	EQ_Y	-3.98	2.89
179	179	216	EQ_Y	-4.83	2.89
180	180	216	DEAD	1.839E-12	-3.774E-13
180	180	215	DEAD	-1.106E-12	-5.572E-13
180	180	30	DEAD	-9.264E-13	1.493E-13
180	180	35	DEAD	1.790E-12	1.011E-13

Table 21: Element Stresses - Area Shells, Part 3 of 3

Area	AreaElem	Joint	OutputCase	S13Avg	S23Avg
				KN/m2	KN/m2
180	180	216	G1_power station	0.	0.
180	180	215	G1_power station	0.	0.
180	180	30	G1_power station	0.	0.
180	180	35	G1_power station	0.	0.
180	180	216	G2_power station	30.99	6.32
180	180	215	G2_power station	-39.78	6.32
180	180	30	G2_power station	-39.78	13.2
180	180	35	G2_power station	30.99	13.2
180	180	216	Q_power station	1.15	0.23
180	180	215	Q_power station	-1.47	0.23
180	180	30	Q_power station	-1.47	0.49
180	180	35	Q_power station	1.15	0.49
180	180	216	Q_neve	2.62	0.74
180	180	215	Q_neve	-6.11	0.74
180	180	30	Q_neve	-6.11	1.74
180	180	35	Q_neve	2.62	1.74
180	180	216	Q_manutenzione	1.15	0.23
180	180	215	Q_manutenzione	-1.47	0.23
180	180	30	Q_manutenzione	-1.47	0.49
180	180	35	Q_manutenzione	1.15	0.49
180	180	216	EQ_X	-12.19	-7.77
180	180	215	EQ_X	64.62	-7.77
180	180	30	EQ_X	64.62	-12.34
180	180	35	EQ_X	-12.19	-12.34
180	180	216	EQ_Y	2.28	5.09
180	180	215	EQ_Y	-15.45	5.09
180	180	30	EQ_Y	-15.45	-6.83
180	180	35	EQ_Y	2.28	-6.83
181	181	63	DEAD	3.041E-13	-7.723E-13
181	181	64	DEAD	6.896E-13	-6.583E-14
181	181	217	DEAD	3.041E-13	5.443E-13
181	181	125	DEAD	1.743E-12	6.583E-14
181	181	63	G1_power station	0.	0.
181	181	64	G1_power station	0.	0.
181	181	217	G1_power station	0.	0.
181	181	125	G1_power station	0.	0.
181	181	63	G2_power station	-107.42	65.15
181	181	64	G2_power station	-36.18	65.15
181	181	217	G2_power station	-36.18	11.52
181	181	125	G2_power station	-107.42	11.52
181	181	63	Q_power station	-3.97	2.41
181	181	64	Q_power station	-1.34	2.41
181	181	217	Q_power station	-1.34	0.43

Table 21: Element Stresses - Area Shells, Part 3 of 3

Area	AreaElem	Joint	OutputCase	S13Avg	S23Avg
				KN/m2	KN/m2
181	181	125	Q_power station	-3.97	0.43
181	181	63	Q_neve	-10.22	5.45
181	181	64	Q_neve	-3.61	5.45
181	181	217	Q_neve	-3.61	0.52
181	181	125	Q_neve	-10.22	0.52
181	181	63	Q_manutenzione	-3.97	2.41
181	181	64	Q_manutenzione	-1.34	2.41
181	181	217	Q_manutenzione	-1.34	0.43
181	181	125	Q_manutenzione	-3.97	0.43
181	181	63	EQ_X	197.75	-84.29
181	181	64	EQ_X	-165.49	-84.29
181	181	217	EQ_X	-165.49	-54.79
181	181	125	EQ_X	197.75	-54.79
181	181	63	EQ_Y	-91.96	164.39
181	181	64	EQ_Y	-79.05	164.39
181	181	217	EQ_Y	-79.05	-70.87
181	181	125	EQ_Y	-91.96	-70.87
182	182	125	DEAD	-2.123E-12	-2.782E-13
182	182	217	DEAD	-7.100E-13	-8.547E-14
182	182	218	DEAD	-1.070E-12	1.038E-12
182	182	126	DEAD	-2.027E-12	1.758E-12
182	182	125	G1_power station	0.	0.
182	182	217	G1_power station	0.	0.
182	182	218	G1_power station	0.	0.
182	182	126	G1_power station	0.	0.
182	182	125	G2_power station	-18.61	7.91
182	182	217	G2_power station	-41.59	7.91
182	182	218	G2_power station	-41.59	-7.82
182	182	126	G2_power station	-18.61	-7.82
182	182	125	Q_power station	-0.69	0.29
182	182	217	Q_power station	-1.54	0.29
182	182	218	Q_power station	-1.54	-0.29
182	182	126	Q_power station	-0.69	-0.29
182	182	125	Q_neve	-1.93	0.17
182	182	217	Q_neve	-4.01	0.17
182	182	218	Q_neve	-4.01	-1.3
182	182	126	Q_neve	-1.93	-1.3
182	182	125	Q_manutenzione	-0.69	0.29
182	182	217	Q_manutenzione	-1.54	0.29
182	182	218	Q_manutenzione	-1.54	-0.29
182	182	126	Q_manutenzione	-0.69	-0.29
182	182	125	EQ_X	6.58	-14.7
182	182	217	EQ_X	37.95	-14.7

Table 21: Element Stresses - Area Shells, Part 3 of 3

Area	AreaElem	Joint	OutputCase	S13Avg	S23Avg
				KN/m2	KN/m2
182	182	218	EQ_X	37.95	0.32
182	182	126	EQ_X	6.58	0.32
182	182	125	EQ_Y	15.81	-63.42
182	182	217	EQ_Y	-6.25	-63.42
182	182	218	EQ_Y	-6.25	4.77
182	182	126	EQ_Y	15.81	4.77
183	183	126	DEAD	-3.692E-13	2.274E-12
183	183	218	DEAD	1.378E-12	1.375E-12
183	183	219	DEAD	1.737E-12	-7.540E-13
183	183	127	DEAD	-4.656E-13	-9.949E-13
183	183	126	G1_power station	0.	0.
183	183	218	G1_power station	0.	0.
183	183	219	G1_power station	0.	0.
183	183	127	G1_power station	0.	0.
183	183	126	G2_power station	-4.74	-3.63
183	183	218	G2_power station	-8.87	-3.63
183	183	219	G2_power station	-8.87	-6.61
183	183	127	G2_power station	-4.74	-6.61
183	183	126	Q_power station	-0.18	-0.13
183	183	218	Q_power station	-0.33	-0.13
183	183	219	Q_power station	-0.33	-0.24
183	183	127	Q_power station	-0.18	-0.24
183	183	126	Q_neve	-0.48	-0.92
183	183	218	Q_neve	-0.88	-0.92
183	183	219	Q_neve	-0.88	-1.22
183	183	127	Q_neve	-0.48	-1.22
183	183	126	Q_manutenzione	-0.18	-0.13
183	183	218	Q_manutenzione	-0.33	-0.13
183	183	219	Q_manutenzione	-0.33	-0.24
183	183	127	Q_manutenzione	-0.18	-0.24
183	183	126	EQ_X	10.63	-4.8
183	183	218	EQ_X	14.62	-4.8
183	183	219	EQ_X	14.62	-0.82
183	183	127	EQ_X	10.63	-0.82
183	183	126	EQ_Y	-4.61	5.31
183	183	218	EQ_Y	0.48	5.31
183	183	219	EQ_Y	0.48	-8.72
183	183	127	EQ_Y	-4.61	-8.72
184	184	127	DEAD	-1.216E-12	-2.830E-13
184	184	219	DEAD	-1.216E-12	4.235E-13
184	184	220	DEAD	-1.216E-12	1.955E-12
184	184	128	DEAD	-1.216E-12	1.477E-12
184	184	127	G1_power station	0.	0.

Table 21: Element Stresses - Area Shells, Part 3 of 3

Area	AreaElem	Joint	OutputCase	S13Avg	S23Avg
				KN/m2	KN/m2
184	184	219	G1_power station	0.	0.
184	184	220	G1_power station	0.	0.
184	184	128	G1_power station	0.	0.
184	184	127	G2_power station	3.8	-5.81
184	184	219	G2_power station	2.87	-5.81
184	184	220	G2_power station	2.87	-5.93
184	184	128	G2_power station	3.8	-5.93
184	184	127	Q_power station	0.14	-0.22
184	184	219	Q_power station	0.11	-0.22
184	184	220	Q_power station	0.11	-0.22
184	184	128	Q_power station	0.14	-0.22
184	184	127	Q_neve	0.42	-1.14
184	184	219	Q_neve	0.31	-1.14
184	184	220	Q_neve	0.31	-1.18
184	184	128	Q_neve	0.42	-1.18
184	184	127	Q_manutenzione	0.14	-0.22
184	184	219	Q_manutenzione	0.11	-0.22
184	184	220	Q_manutenzione	0.11	-0.22
184	184	128	Q_manutenzione	0.14	-0.22
184	184	127	EQ_X	7.71	-1.78
184	184	219	EQ_X	9.14	-1.78
184	184	220	EQ_X	9.14	-0.15
184	184	128	EQ_X	7.71	-0.15
184	184	127	EQ_Y	0.65	-9.31
184	184	219	EQ_Y	1.04	-9.31
184	184	220	EQ_Y	1.04	-2.64
184	184	128	EQ_Y	0.65	-2.64
185	185	128	DEAD	-6.325E-13	5.396E-13
185	185	220	DEAD	2.361E-12	8.993E-13
185	185	221	DEAD	2.001E-12	1.446E-13
185	185	129	DEAD	-5.361E-13	2.410E-13
185	185	128	G1_power station	0.	0.
185	185	220	G1_power station	0.	0.
185	185	221	G1_power station	0.	0.
185	185	129	G1_power station	0.	0.
185	185	128	G2_power station	6.4	-5.65
185	185	220	G2_power station	5.19	-5.65
185	185	221	G2_power station	5.19	-4.52
185	185	129	G2_power station	6.4	-4.52
185	185	128	Q_power station	0.24	-0.21
185	185	220	Q_power station	0.19	-0.21
185	185	221	Q_power station	0.19	-0.17
185	185	129	Q_power station	0.24	-0.17

Table 21: Element Stresses - Area Shells, Part 3 of 3

Area	AreaElem	Joint	OutputCase	S13Avg	S23Avg
				KN/m2	KN/m2
185	185	128	Q_neve	0.74	-1.15
185	185	220	Q_neve	0.61	-1.15
185	185	221	Q_neve	0.61	-1.04
185	185	129	Q_neve	0.74	-1.04
185	185	128	Q_manutenzione	0.24	-0.21
185	185	220	Q_manutenzione	0.19	-0.21
185	185	221	Q_manutenzione	0.19	-0.17
185	185	129	Q_manutenzione	0.24	-0.17
185	185	128	EQ_X	5.32	-0.49
185	185	220	EQ_X	5.76	-0.49
185	185	221	EQ_X	5.76	0.23
185	185	129	EQ_X	5.32	0.23
185	185	128	EQ_Y	0.21	-3.
185	185	220	EQ_Y	0.76	-3.
185	185	221	EQ_Y	0.76	-3.35
185	185	129	EQ_Y	0.21	-3.35
186	186	129	DEAD	1.113E-13	8.593E-13
186	186	221	DEAD	-4.154E-13	1.566E-12
186	186	222	DEAD	-4.154E-13	1.649E-12
186	186	130	DEAD	1.113E-13	1.171E-12
186	186	129	G1_power station	0.	0.
186	186	221	G1_power station	0.	0.
186	186	222	G1_power station	0.	0.
186	186	130	G1_power station	0.	0.
186	186	129	G2_power station	3.18	-3.52
186	186	221	G2_power station	-1.59	-3.52
186	186	222	G2_power station	-1.59	-6.96
186	186	130	G2_power station	3.18	-6.96
186	186	129	Q_power station	0.12	-0.13
186	186	221	Q_power station	-5.887E-02	-0.13
186	186	222	Q_power station	-5.887E-02	-0.26
186	186	130	Q_power station	0.12	-0.26
186	186	129	Q_neve	0.48	-0.94
186	186	221	Q_neve	5.062E-02	-0.94
186	186	222	Q_neve	5.062E-02	-1.28
186	186	130	Q_neve	0.48	-1.28
186	186	129	Q_manutenzione	0.12	-0.13
186	186	221	Q_manutenzione	-5.887E-02	-0.13
186	186	222	Q_manutenzione	-5.887E-02	-0.26
186	186	130	Q_manutenzione	0.12	-0.26
186	186	129	EQ_X	3.57	0.16
186	186	221	EQ_X	3.49	0.16
186	186	222	EQ_X	3.49	1.18

Table 21: Element Stresses - Area Shells, Part 3 of 3

Area	AreaElem	Joint	OutputCase	S13Avg	S23Avg
				KN/m2	KN/m2
186	186	130	EQ_X	3.57	1.18
186	186	129	EQ_Y	0.14	-3.22
186	186	221	EQ_Y	-0.91	-3.22
186	186	222	EQ_Y	-0.91	-5.2
186	186	130	EQ_Y	0.14	-5.2
187	187	130	DEAD	-1.515E-12	2.633E-13
187	187	222	DEAD	-1.018E-13	4.561E-13
187	187	36	DEAD	-4.616E-13	-2.633E-13
187	187	29	DEAD	-1.418E-12	4.561E-13
187	187	130	G1_power station	0.	0.
187	187	222	G1_power station	0.	0.
187	187	36	G1_power station	0.	0.
187	187	29	G1_power station	0.	0.
187	187	130	G2_power station	-10.77	-3.41
187	187	222	G2_power station	-25.06	-3.41
187	187	36	G2_power station	-25.06	7.37
187	187	29	G2_power station	-10.77	7.37
187	187	130	Q_power station	-0.4	-0.13
187	187	222	Q_power station	-0.93	-0.13
187	187	36	Q_power station	-0.93	0.27
187	187	29	Q_power station	-0.4	0.27
187	187	130	Q_neve	-0.92	-0.99
187	187	222	Q_neve	-1.94	-0.99
187	187	36	Q_neve	-1.94	0.65
187	187	29	Q_neve	-0.92	0.65
187	187	130	Q_manutenzione	-0.4	-0.13
187	187	222	Q_manutenzione	-0.93	-0.13
187	187	36	Q_manutenzione	-0.93	0.27
187	187	29	Q_manutenzione	-0.4	0.27
187	187	130	EQ_X	-1.35	0.95
187	187	222	EQ_X	1.28	0.95
187	187	36	EQ_X	1.28	5.86
187	187	29	EQ_X	-1.35	5.86
187	187	130	EQ_Y	1.22	-4.14
187	187	222	EQ_Y	-4.25	-4.14
187	187	36	EQ_Y	-4.25	-4.14
187	187	29	EQ_Y	1.22	-4.14
188	188	28	DEAD	1.228E-12	4.710E-13
188	188	25	DEAD	1.171E-12	2.782E-13
188	188	223	DEAD	-8.820E-14	-3.190E-13
188	188	224	DEAD	1.566E-12	-1.038E-12
188	188	28	G1_power station	0.	0.
188	188	25	G1_power station	0.	0.

Table 21: Element Stresses - Area Shells, Part 3 of 3

Area	AreaElem	Joint	OutputCase	S13Avg	S23Avg
				KN/m2	KN/m2
188	188	223	G1_power station	0.	0.
188	188	224	G1_power station	0.	0.
188	188	28	G2_power station	30.99	-13.2
188	188	25	G2_power station	-39.78	-13.2
188	188	223	G2_power station	-39.78	-6.32
188	188	224	G2_power station	30.99	-6.32
188	188	28	Q_power station	1.15	-0.49
188	188	25	Q_power station	-1.47	-0.49
188	188	223	Q_power station	-1.47	-0.23
188	188	224	Q_power station	1.15	-0.23
188	188	28	Q_neve	2.62	-1.74
188	188	25	Q_neve	-6.11	-1.74
188	188	223	Q_neve	-6.11	-0.74
188	188	224	Q_neve	2.62	-0.74
188	188	28	Q_manutenzione	1.15	-0.49
188	188	25	Q_manutenzione	-1.47	-0.49
188	188	223	Q_manutenzione	-1.47	-0.23
188	188	224	Q_manutenzione	1.15	-0.23
188	188	28	EQ_X	-12.19	12.34
188	188	25	EQ_X	64.62	12.34
188	188	223	EQ_X	64.62	7.77
188	188	224	EQ_X	-12.19	7.77
188	188	28	EQ_Y	-2.28	-6.83
188	188	25	EQ_Y	15.45	-6.83
188	188	223	EQ_Y	15.45	5.09
188	188	224	EQ_Y	-2.28	5.09
189	189	224	DEAD	-3.441E-13	-1.851E-12
189	189	223	DEAD	5.130E-13	-9.522E-13
189	189	225	DEAD	1.104E-12	2.551E-13
189	189	226	DEAD	-3.174E-12	4.961E-13
189	189	224	G1_power station	0.	0.
189	189	223	G1_power station	0.	0.
189	189	225	G1_power station	0.	0.
189	189	226	G1_power station	0.	0.
189	189	224	G2_power station	-8.3	1.35
189	189	223	G2_power station	-3.39	1.35
189	189	225	G2_power station	-3.39	-0.17
189	189	226	G2_power station	-8.3	-0.17
189	189	224	Q_power station	-0.31	5.002E-02
189	189	223	Q_power station	-0.13	5.002E-02
189	189	225	Q_power station	-0.13	-6.466E-03
189	189	226	Q_power station	-0.31	-6.466E-03
189	189	224	Q_neve	-1.34	0.2

Table 21: Element Stresses - Area Shells, Part 3 of 3

Area	AreaElem	Joint	OutputCase	S13Avg	S23Avg
				KN/m2	KN/m2
189	189	223	Q_neve	-0.73	0.2
189	189	225	Q_neve	-0.73	-9.413E-03
189	189	226	Q_neve	-1.34	-9.413E-03
189	189	224	Q_manutenzione	-0.31	5.002E-02
189	189	223	Q_manutenzione	-0.13	5.002E-02
189	189	225	Q_manutenzione	-0.13	-6.466E-03
189	189	226	Q_manutenzione	-0.31	-6.466E-03
189	189	224	EQ_X	23.5	-0.66
189	189	223	EQ_X	18.63	-0.66
189	189	225	EQ_X	18.63	-0.31
189	189	226	EQ_X	23.5	-0.31
189	189	224	EQ_Y	4.83	2.89
189	189	223	EQ_Y	3.98	2.89
189	189	225	EQ_Y	3.98	-1.42
189	189	226	EQ_Y	4.83	-1.42
190	190	226	DEAD	2.194E-12	7.343E-13
190	190	225	DEAD	-6.094E-13	7.343E-13
190	190	227	DEAD	2.063E-12	-5.823E-13
190	190	228	DEAD	2.814E-12	-5.823E-13
190	190	226	G1_power station	0.	0.
190	190	225	G1_power station	0.	0.
190	190	227	G1_power station	0.	0.
190	190	228	G1_power station	0.	0.
190	190	226	G2_power station	-2.1	-0.34
190	190	225	G2_power station	-6.1	-0.34
190	190	227	G2_power station	-6.1	3.25
190	190	228	G2_power station	-2.1	3.25
190	190	226	Q_power station	-7.762E-02	-1.247E-02
190	190	225	Q_power station	-0.23	-1.247E-02
190	190	227	Q_power station	-0.23	0.12
190	190	228	Q_power station	-7.762E-02	0.12
190	190	226	Q_neve	0.13	-2.704E-02
190	190	225	Q_neve	-0.36	-2.704E-02
190	190	227	Q_neve	-0.36	0.37
190	190	228	Q_neve	0.13	0.37
190	190	226	Q_manutenzione	-7.762E-02	-1.247E-02
190	190	225	Q_manutenzione	-0.23	-1.247E-02
190	190	227	Q_manutenzione	-0.23	0.12
190	190	228	Q_manutenzione	-7.762E-02	0.12
190	190	226	EQ_X	17.89	0.42
190	190	225	EQ_X	16.79	0.42
190	190	227	EQ_X	16.79	-0.86
190	190	228	EQ_X	17.89	-0.86

Table 21: Element Stresses - Area Shells, Part 3 of 3

Area	AreaElem	Joint	OutputCase	S13Avg	S23Avg
				KN/m2	KN/m2
190	190	226	EQ_Y	0.45	-1.3
190	190	225	EQ_Y	0.38	-1.3
190	190	227	EQ_Y	0.38	2.79
190	190	228	EQ_Y	0.45	2.79
191	191	228	DEAD	1.681E-12	-6.760E-13
191	191	227	DEAD	-2.343E-12	-4.961E-13
191	191	29	DEAD	-2.137E-12	9.040E-13
191	191	36	DEAD	2.904E-13	9.522E-13
191	191	228	G1_power station	0.	0.
191	191	227	G1_power station	0.	0.
191	191	29	G1_power station	0.	0.
191	191	36	G1_power station	0.	0.
191	191	228	G2_power station	-25.56	-2.74
191	191	227	G2_power station	31.68	-2.74
191	191	29	G2_power station	31.68	-19.1
191	191	36	G2_power station	-25.56	-19.1
191	191	228	Q_power station	-0.95	-0.1
191	191	227	Q_power station	1.17	-0.1
191	191	29	Q_power station	1.17	-0.71
191	191	36	Q_power station	-0.95	-0.71
191	191	228	Q_neve	-2.08	-0.38
191	191	227	Q_neve	4.97	-0.38
191	191	29	Q_neve	4.97	-2.17
191	191	36	Q_neve	-2.08	-2.17
191	191	228	Q_manutenzione	-0.95	-0.1
191	191	227	Q_manutenzione	1.17	-0.1
191	191	29	Q_manutenzione	1.17	-0.71
191	191	36	Q_manutenzione	-0.95	-0.71
191	191	228	EQ_X	2.76	-3.45
191	191	227	EQ_X	25.17	-3.45
191	191	29	EQ_X	25.17	0.24
191	191	36	EQ_X	2.76	0.24
191	191	228	EQ_Y	-5.100E-02	2.93
191	191	227	EQ_Y	0.63	2.93
191	191	29	EQ_Y	0.63	-9.01
191	191	36	EQ_Y	-5.100E-02	-9.01
192	192	9	DEAD	1.107E-11	-1.751E-12
192	192	8	DEAD	4.746E-12	4.005E-12
192	192	229	DEAD	4.746E-12	5.096E-12
192	192	173	DEAD	1.107E-11	6.638E-12
192	192	9	G1_power station	0.	0.
192	192	8	G1_power station	0.	0.
192	192	229	G1_power station	0.	0.

Table 21: Element Stresses - Area Shells, Part 3 of 3

Area	AreaElem	Joint	OutputCase	S13Avg	S23Avg
				KN/m2	KN/m2
192	192	173	G1_power station	0.	0.
192	192	9	G2_power station	125.18	-65.74
192	192	8	G2_power station	51.71	-65.74
192	192	229	G2_power station	51.71	-14.2
192	192	173	G2_power station	125.18	-14.2
192	192	9	Q_power station	4.63	-2.43
192	192	8	Q_power station	1.91	-2.43
192	192	229	Q_power station	1.91	-0.53
192	192	173	Q_power station	4.63	-0.53
192	192	9	Q_neve	11.83	-5.32
192	192	8	Q_neve	5.07	-5.32
192	192	229	Q_neve	5.07	-0.61
192	192	173	Q_neve	11.83	-0.61
192	192	9	Q_manutenzione	4.63	-2.43
192	192	8	Q_manutenzione	1.91	-2.43
192	192	229	Q_manutenzione	1.91	-0.53
192	192	173	Q_manutenzione	4.63	-0.53
192	192	9	EQ_X	207.53	-87.54
192	192	8	EQ_X	-192.3	-87.54
192	192	229	EQ_X	-192.3	-59.99
192	192	173	EQ_X	207.53	-59.99
192	192	9	EQ_Y	-100.5	171.98
192	192	8	EQ_Y	-82.2	171.98
192	192	229	EQ_Y	-82.2	-74.13
192	192	173	EQ_Y	-100.5	-74.13
193	193	173	DEAD	-1.491E-11	7.743E-12
193	193	229	DEAD	9.599E-12	1.350E-11
193	193	230	DEAD	1.248E-11	5.636E-12
193	193	174	DEAD	-1.568E-11	7.178E-12
193	193	173	G1_power station	0.	0.
193	193	229	G1_power station	0.	0.
193	193	230	G1_power station	0.	0.
193	193	174	G1_power station	0.	0.
193	193	173	G2_power station	44.73	-13.76
193	193	229	G2_power station	86.15	-13.76
193	193	230	G2_power station	86.15	11.23
193	193	174	G2_power station	44.73	11.23
193	193	173	Q_power station	1.66	-0.51
193	193	229	Q_power station	3.19	-0.51
193	193	230	Q_power station	3.19	0.42
193	193	174	Q_power station	1.66	0.42
193	193	173	Q_neve	4.34	-0.58
193	193	229	Q_neve	8.21	-0.58

Table 21: Element Stresses - Area Shells, Part 3 of 3

Area	AreaElem	Joint	OutputCase	S13Avg	S23Avg
				KN/m2	KN/m2
193	193	230	Q_neve	8.21	1.84
193	193	174	Q_neve	4.34	1.84
193	193	173	Q_manutenzione	1.66	-0.51
193	193	229	Q_manutenzione	3.19	-0.51
193	193	230	Q_manutenzione	3.19	0.42
193	193	174	Q_manutenzione	1.66	0.42
193	193	173	EQ_X	-5.701E-02	-14.81
193	193	229	EQ_X	20.33	-14.81
193	193	230	EQ_X	20.33	-1.99
193	193	174	EQ_X	-5.701E-02	-1.99
193	193	173	EQ_Y	18.34	-66.81
193	193	229	EQ_Y	-5.51	-66.81
193	193	230	EQ_Y	-5.51	4.36
193	193	174	EQ_Y	18.34	4.36
194	194	174	DEAD	5.755E-12	5.582E-12
194	194	230	DEAD	1.542E-12	1.062E-11
194	194	37	DEAD	1.542E-12	-2.845E-12
194	194	33	DEAD	5.755E-12	-1.496E-12
194	194	174	G1_power station	0.	0.
194	194	230	G1_power station	0.	0.
194	194	37	G1_power station	0.	0.
194	194	33	G1_power station	0.	0.
194	194	174	G2_power station	61.78	-6.09
194	194	230	G2_power station	129.08	-6.09
194	194	37	G2_power station	129.08	-39.4
194	194	33	G2_power station	61.78	-39.4
194	194	174	Q_power station	2.29	-0.23
194	194	230	Q_power station	4.78	-0.23
194	194	37	Q_power station	4.78	-1.46
194	194	33	Q_power station	2.29	-1.46
194	194	174	Q_neve	6.07	0.22
194	194	230	Q_neve	12.22	0.22
194	194	37	Q_neve	12.22	-3.68
194	194	33	Q_neve	6.07	-3.68
194	194	174	Q_manutenzione	2.29	-0.23
194	194	230	Q_manutenzione	4.78	-0.23
194	194	37	Q_manutenzione	4.78	-1.46
194	194	33	Q_manutenzione	2.29	-1.46
194	194	174	EQ_X	-20.88	-2.84
194	194	230	EQ_X	-28.8	-2.84
194	194	37	EQ_X	-28.8	27.5
194	194	33	EQ_X	-20.88	27.5
194	194	174	EQ_Y	7.18	5.71

Table 21: Element Stresses - Area Shells, Part 3 of 3

Area	AreaElem	Joint	OutputCase	S13Avg	S23Avg
				KN/m2	KN/m2
194	194	230	EQ_Y	3.96	5.71
194	194	37	EQ_Y	3.96	-7.09
194	194	33	EQ_Y	7.18	-7.09
195	195	31	DEAD	-1.235E-11	8.907E-12
195	195	24	DEAD	2.308E-11	7.469E-12
195	195	231	DEAD	2.451E-11	4.167E-12
195	195	232	DEAD	-1.274E-11	3.782E-12
195	195	31	G1_power station	0.	0.
195	195	24	G1_power station	0.	0.
195	195	231	G1_power station	0.	0.
195	195	232	G1_power station	0.	0.
195	195	31	G2_power station	-126.91	62.89
195	195	24	G2_power station	173.25	62.89
195	195	231	G2_power station	173.25	26.18
195	195	232	G2_power station	-126.91	26.18
195	195	31	Q_power station	-4.7	2.33
195	195	24	Q_power station	6.41	2.33
195	195	231	Q_power station	6.41	0.97
195	195	232	Q_power station	-4.7	0.97
195	195	31	Q_neve	-12.11	6.69
195	195	24	Q_neve	19.82	6.69
195	195	231	Q_neve	19.82	2.78
195	195	232	Q_neve	-12.11	2.78
195	195	31	Q_manutenzione	-4.7	2.33
195	195	24	Q_manutenzione	6.41	2.33
195	195	231	Q_manutenzione	6.41	0.97
195	195	232	Q_manutenzione	-4.7	0.97
195	195	31	EQ_X	10.99	-1.19
195	195	24	EQ_X	46.89	-1.19
195	195	231	EQ_X	46.89	5.74
195	195	232	EQ_X	10.99	5.74
195	195	31	EQ_Y	0.4	-14.4
195	195	24	EQ_Y	-6.61	-14.4
195	195	231	EQ_Y	-6.61	3.57
195	195	232	EQ_Y	0.4	3.57
196	196	232	DEAD	-4.148E-12	2.796E-12
196	196	231	DEAD	2.165E-11	1.357E-12
196	196	233	DEAD	1.692E-11	-3.637E-13
196	196	234	DEAD	1.849E-11	-7.492E-13
196	196	232	G1_power station	0.	0.
196	196	231	G1_power station	0.	0.
196	196	233	G1_power station	0.	0.
196	196	234	G1_power station	0.	0.

Table 21: Element Stresses - Area Shells, Part 3 of 3

Area	AreaElem	Joint	OutputCase	S13Avg	S23Avg
				KN/m2	KN/m2
196	196	232	G2_power station	30.76	-6.25
196	196	231	G2_power station	10.66	-6.25
196	196	233	G2_power station	10.66	-0.2
196	196	234	G2_power station	30.76	-0.2
196	196	232	Q_power station	1.14	-0.23
196	196	231	Q_power station	0.39	-0.23
196	196	233	Q_power station	0.39	-7.365E-03
196	196	234	Q_power station	1.14	-7.365E-03
196	196	232	Q_neve	3.65	-0.67
196	196	231	Q_neve	1.51	-0.67
196	196	233	Q_neve	1.51	-1.061E-02
196	196	234	Q_neve	3.65	-1.061E-02
196	196	232	Q_manutenzione	1.14	-0.23
196	196	231	Q_manutenzione	0.39	-0.23
196	196	233	Q_manutenzione	0.39	-7.365E-03
196	196	234	Q_manutenzione	1.14	-7.365E-03
196	196	232	EQ_X	32.11	1.56
196	196	231	EQ_X	30.4	1.56
196	196	233	EQ_X	30.4	-0.73
196	196	234	EQ_X	32.11	-0.73
196	196	232	EQ_Y	-4.23	4.01
196	196	231	EQ_Y	-3.68	4.01
196	196	233	EQ_Y	-3.68	-1.48
196	196	234	EQ_Y	-4.23	-1.48
197	197	234	DEAD	-1.194E-12	4.779E-13
197	197	233	DEAD	-7.053E-12	-1.784E-12
197	197	235	DEAD	3.019E-12	4.691E-12
197	197	236	DEAD	-3.893E-12	-1.257E-12
197	197	234	G1_power station	0.	0.
197	197	233	G1_power station	0.	0.
197	197	235	G1_power station	0.	0.
197	197	236	G1_power station	0.	0.
197	197	234	G2_power station	18.66	0.68
197	197	233	G2_power station	31.3	0.68
197	197	235	G2_power station	31.3	-5.11
197	197	236	G2_power station	18.66	-5.11
197	197	234	Q_power station	0.69	2.512E-02
197	197	233	Q_power station	1.16	2.512E-02
197	197	235	Q_power station	1.16	-0.19
197	197	236	Q_power station	0.69	-0.19
197	197	234	Q_neve	1.41	8.108E-02
197	197	233	Q_neve	2.78	8.108E-02
197	197	235	Q_neve	2.78	-0.6

Table 21: Element Stresses - Area Shells, Part 3 of 3

Area	AreaElem	Joint	OutputCase	S13Avg	S23Avg
				KN/m2	KN/m2
197	197	236	Q_neve	1.41	-0.6
197	197	234	Q_manutenzione	0.69	2.512E-02
197	197	233	Q_manutenzione	1.16	2.512E-02
197	197	235	Q_manutenzione	1.16	-0.19
197	197	236	Q_manutenzione	0.69	-0.19
197	197	234	EQ_X	35.45	0.42
197	197	233	EQ_X	27.82	0.42
197	197	235	EQ_X	27.82	0.9
197	197	236	EQ_X	35.45	0.9
197	197	234	EQ_Y	-10.38	-1.69
197	197	233	EQ_Y	-8.84	-1.69
197	197	235	EQ_Y	-8.84	2.42
197	197	236	EQ_Y	-10.38	2.42
198	198	236	DEAD	-3.893E-12	2.441E-12
198	198	235	DEAD	-2.323E-12	1.002E-12
198	198	33	DEAD	-7.053E-12	-3.353E-12
198	198	37	DEAD	1.874E-11	-3.738E-12
198	198	236	G1_power station	0.	0.
198	198	235	G1_power station	0.	0.
198	198	33	G1_power station	0.	0.
198	198	37	G1_power station	0.	0.
198	198	236	G2_power station	115.18	13.58
198	198	235	G2_power station	-60.01	13.58
198	198	33	G2_power station	-60.01	42.03
198	198	37	G2_power station	115.18	42.03
198	198	236	Q_power station	4.26	0.5
198	198	235	Q_power station	-2.22	0.5
198	198	33	Q_power station	-2.22	1.56
198	198	37	Q_power station	4.26	1.56
198	198	236	Q_neve	10.83	1.43
198	198	235	Q_neve	-8.19	1.43
198	198	33	Q_neve	-8.19	4.71
198	198	37	Q_neve	10.83	4.71
198	198	236	Q_manutenzione	4.26	0.5
198	198	235	Q_manutenzione	-2.22	0.5
198	198	33	Q_manutenzione	-2.22	1.56
198	198	37	Q_manutenzione	4.26	1.56
198	198	236	EQ_X	-28.34	-12.45
198	198	235	EQ_X	93.22	-12.45
198	198	33	EQ_X	93.22	-19.15
198	198	37	EQ_X	-28.34	-19.15
198	198	236	EQ_Y	0.81	5.7
198	198	235	EQ_Y	-27.17	5.7

Table 21: Element Stresses - Area Shells, Part 3 of 3

Area	AreaElem	Joint	OutputCase	S13Avg	S23Avg
				KN/m2	KN/m2
198	198	33	EQ_Y	-27.17	-3.51
198	198	37	EQ_Y	0.81	-3.51
199	199	18	DEAD	-1.734E-11	1.102E-12
199	199	17	DEAD	1.025E-11	3.826E-13
199	199	237	DEAD	1.004E-11	-6.271E-12
199	199	203	DEAD	-6.602E-12	-6.464E-12
199	199	18	G1_power station	0.	0.
199	199	17	G1_power station	0.	0.
199	199	237	G1_power station	0.	0.
199	199	203	G1_power station	0.	0.
199	199	18	G2_power station	-119.23	66.45
199	199	17	G2_power station	-48.86	66.45
199	199	237	G2_power station	-48.86	11.61
199	199	203	G2_power station	-119.23	11.61
199	199	18	Q_power station	-4.41	2.46
199	199	17	Q_power station	-1.81	2.46
199	199	237	Q_power station	-1.81	0.43
199	199	203	Q_power station	-4.41	0.43
199	199	18	Q_neve	-11.5	5.5
199	199	17	Q_neve	-4.98	5.5
199	199	237	Q_neve	-4.98	0.43
199	199	203	Q_neve	-11.5	0.43
199	199	18	Q_manutenzione	-4.41	2.46
199	199	17	Q_manutenzione	-1.81	2.46
199	199	237	Q_manutenzione	-1.81	0.43
199	199	203	Q_manutenzione	-4.41	0.43
199	199	18	EQ_X	193.19	-83.9
199	199	17	EQ_X	-170.48	-83.9
199	199	237	EQ_X	-170.48	-55.1
199	199	203	EQ_X	193.19	-55.1
199	199	18	EQ_Y	-92.25	164.41
199	199	17	EQ_Y	-79.93	164.41
199	199	237	EQ_Y	-79.93	-71.18
199	199	203	EQ_Y	-92.25	-71.18
200	200	203	DEAD	-9.486E-12	-5.937E-12
200	200	237	DEAD	-1.290E-11	-1.097E-11
200	200	238	DEAD	-6.326E-12	-1.440E-13
200	200	204	DEAD	2.081E-11	-1.493E-12
200	200	203	G1_power station	0.	0.
200	200	237	G1_power station	0.	0.
200	200	238	G1_power station	0.	0.
200	200	204	G1_power station	0.	0.
200	200	203	G2_power station	-33.87	8.39

Table 21: Element Stresses - Area Shells, Part 3 of 3

Area	AreaElem	Joint	OutputCase	S13Avg	S23Avg
				KN/m2	KN/m2
200	200	237	G2_power station	-58.03	8.39
200	200	238	G2_power station	-58.03	-8.84
200	200	204	G2_power station	-33.87	-8.84
200	200	203	Q_power station	-1.25	0.31
200	200	237	Q_power station	-2.15	0.31
200	200	238	Q_power station	-2.15	-0.33
200	200	204	Q_power station	-1.25	-0.33
200	200	203	Q_neve	-3.56	0.13
200	200	237	Q_neve	-5.75	0.13
200	200	238	Q_neve	-5.75	-1.51
200	200	204	Q_neve	-3.56	-1.51
200	200	203	Q_manutenzione	-1.25	0.31
200	200	237	Q_manutenzione	-2.15	0.31
200	200	238	Q_manutenzione	-2.15	-0.33
200	200	204	Q_manutenzione	-1.25	-0.33
200	200	203	EQ_X	2.81	-14.85
200	200	237	EQ_X	33.8	-14.85
200	200	238	EQ_X	33.8	-0.33
200	200	204	EQ_X	2.81	-0.33
200	200	203	EQ_Y	14.82	-63.52
200	200	237	EQ_Y	-7.85	-63.52
200	200	238	EQ_Y	-7.85	4.28
200	200	204	EQ_Y	14.82	4.28
201	201	204	DEAD	-6.244E-12	-3.945E-12
201	201	238	DEAD	-1.431E-11	-2.403E-12
201	201	239	DEAD	-8.351E-12	-9.738E-12
201	201	205	DEAD	-1.853E-11	-3.983E-12
201	201	204	G1_power station	0.	0.
201	201	238	G1_power station	0.	0.
201	201	239	G1_power station	0.	0.
201	201	205	G1_power station	0.	0.
201	201	204	G2_power station	-20.55	-4.12
201	201	238	G2_power station	-26.35	-4.12
201	201	239	G2_power station	-26.35	-8.65
201	201	205	G2_power station	-20.55	-8.65
201	201	204	Q_power station	-0.76	-0.15
201	201	238	Q_power station	-0.97	-0.15
201	201	239	Q_power station	-0.97	-0.32
201	201	205	Q_power station	-0.76	-0.32
201	201	204	Q_neve	-2.13	-1.07
201	201	238	Q_neve	-2.69	-1.07
201	201	239	Q_neve	-2.69	-1.55
201	201	205	Q_neve	-2.13	-1.55

Table 21: Element Stresses - Area Shells, Part 3 of 3

Area	AreaElem	Joint	OutputCase	S13Avg	S23Avg
				KN/m2	KN/m2
201	201	204	Q_manutenzione	-0.76	-0.15
201	201	238	Q_manutenzione	-0.97	-0.15
201	201	239	Q_manutenzione	-0.97	-0.32
201	201	205	Q_manutenzione	-0.76	-0.32
201	201	204	EQ_X	8.74	-5.35
201	201	238	EQ_X	12.56	-5.35
201	201	239	EQ_X	12.56	-1.68
201	201	205	EQ_X	8.74	-1.68
201	201	204	EQ_Y	-5.87	5.03
201	201	238	EQ_Y	-1.39	5.03
201	201	239	EQ_Y	-1.39	-9.39
201	201	205	EQ_Y	-5.87	-9.39
202	202	205	DEAD	-5.978E-12	-2.707E-12
202	202	239	DEAD	-7.114E-13	-2.810E-12
202	202	240	DEAD	-7.114E-13	-4.287E-12
202	202	206	DEAD	-5.978E-12	-9.657E-12
202	202	205	G1_power station	0.	0.
202	202	239	G1_power station	0.	0.
202	202	240	G1_power station	0.	0.
202	202	206	G1_power station	0.	0.
202	202	205	G2_power station	-11.04	-7.07
202	202	239	G2_power station	-14.54	-7.07
202	202	240	G2_power station	-14.54	-9.34
202	202	206	G2_power station	-11.04	-9.34
202	202	205	Q_power station	-0.41	-0.26
202	202	239	Q_power station	-0.54	-0.26
202	202	240	Q_power station	-0.54	-0.35
202	202	206	Q_power station	-0.41	-0.35
202	202	205	Q_neve	-1.08	-1.39
202	202	239	Q_neve	-1.44	-1.39
202	202	240	Q_neve	-1.44	-1.66
202	202	206	Q_neve	-1.08	-1.66
202	202	205	Q_manutenzione	-0.41	-0.26
202	202	239	Q_manutenzione	-0.54	-0.26
202	202	240	Q_manutenzione	-0.54	-0.35
202	202	206	Q_manutenzione	-0.41	-0.35
202	202	205	EQ_X	8.08	-2.6
202	202	239	EQ_X	9.51	-2.6
202	202	240	EQ_X	9.51	-1.01
202	202	206	EQ_X	8.08	-1.01
202	202	205	EQ_Y	-0.62	-9.77
202	202	239	EQ_Y	-0.8	-9.77
202	202	240	EQ_Y	-0.8	-3.63

Table 21: Element Stresses - Area Shells, Part 3 of 3

Area	AreaElem	Joint	OutputCase	S13Avg	S23Avg
				KN/m2	KN/m2
202	202	206	EQ_Y	-0.62	-3.63
203	203	206	DEAD	-8.508E-12	-1.506E-11
203	203	240	DEAD	8.731E-12	-6.423E-12
203	203	241	DEAD	7.292E-12	-1.363E-12
203	203	207	DEAD	-8.122E-12	9.500E-13
203	203	206	G1_power station	0.	0.
203	203	240	G1_power station	0.	0.
203	203	241	G1_power station	0.	0.
203	203	207	G1_power station	0.	0.
203	203	206	G2_power station	-8.26	-7.65
203	203	240	G2_power station	-15.25	-7.65
203	203	241	G2_power station	-15.25	-7.17
203	203	207	G2_power station	-8.26	-7.17
203	203	206	Q_power station	-0.31	-0.28
203	203	240	Q_power station	-0.56	-0.28
203	203	241	Q_power station	-0.56	-0.27
203	203	207	Q_power station	-0.31	-0.27
203	203	206	Q_neve	-0.69	-1.48
203	203	240	Q_neve	-1.41	-1.48
203	203	241	Q_neve	-1.41	-1.44
203	203	207	Q_neve	-0.69	-1.44
203	203	206	Q_manutenzione	-0.31	-0.28
203	203	240	Q_manutenzione	-0.56	-0.28
203	203	241	Q_manutenzione	-0.56	-0.27
203	203	207	Q_manutenzione	-0.31	-0.27
203	203	206	EQ_X	7.68	-1.38
203	203	240	EQ_X	8.36	-1.38
203	203	241	EQ_X	8.36	-0.45
203	203	207	EQ_X	7.68	-0.45
203	203	206	EQ_Y	-0.83	-3.76
203	203	240	EQ_Y	-1.01	-3.76
203	203	241	EQ_Y	-1.01	-4.5
203	203	207	EQ_Y	-0.83	-4.5
204	204	207	DEAD	-1.194E-11	-2.856E-12
204	204	241	DEAD	-1.483E-12	2.796E-12
204	204	242	DEAD	-1.299E-11	3.464E-12
204	204	208	DEAD	-8.856E-12	-3.637E-13
204	204	207	G1_power station	0.	0.
204	204	241	G1_power station	0.	0.
204	204	242	G1_power station	0.	0.
204	204	208	G1_power station	0.	0.
204	204	207	G2_power station	-16.11	-2.25
204	204	241	G2_power station	-37.65	-2.25

Table 21: Element Stresses - Area Shells, Part 3 of 3

Area	AreaElem	Joint	OutputCase	S13Avg	S23Avg
				KN/m2	KN/m2
204	204	242	G2_power station	-37.65	-12.91
204	204	208	G2_power station	-16.11	-12.91
204	204	207	Q_power station	-0.6	-8.308E-02
204	204	241	Q_power station	-1.39	-8.308E-02
204	204	242	Q_power station	-1.39	-0.48
204	204	208	Q_power station	-0.6	-0.48
204	204	207	Q_neve	-1.38	-0.94
204	204	241	Q_neve	-3.49	-0.94
204	204	242	Q_neve	-3.49	-2.02
204	204	208	Q_neve	-1.38	-2.02
204	204	207	Q_manutenzione	-0.6	-8.308E-02
204	204	241	Q_manutenzione	-1.39	-8.308E-02
204	204	242	Q_manutenzione	-1.39	-0.48
204	204	208	Q_manutenzione	-0.6	-0.48
204	204	207	EQ_X	7.47	-0.68
204	204	241	EQ_X	8.07	-0.68
204	204	242	EQ_X	8.07	1.46
204	204	208	EQ_X	7.47	1.46
204	204	207	EQ_Y	-0.88	-4.01
204	204	241	EQ_Y	-3.2	-4.01
204	204	242	EQ_Y	-3.2	-7.8
204	204	208	EQ_Y	-0.88	-7.8
205	205	208	DEAD	-2.069E-12	-7.359E-12
205	205	242	DEAD	-6.874E-12	-7.359E-12
205	205	38	DEAD	-5.229E-12	1.739E-11
205	205	34	DEAD	-1.319E-11	1.739E-11
205	205	208	G1_power station	0.	0.
205	205	242	G1_power station	0.	0.
205	205	38	G1_power station	0.	0.
205	205	34	G1_power station	0.	0.
205	205	208	G2_power station	-72.82	2.74
205	205	242	G2_power station	-132.93	2.74
205	205	38	G2_power station	-132.93	60.78
205	205	34	G2_power station	-72.82	60.78
205	205	208	Q_power station	-2.69	0.1
205	205	242	Q_power station	-4.92	0.1
205	205	38	Q_power station	-4.92	2.25
205	205	34	Q_power station	-2.69	2.25
205	205	208	Q_neve	-7.13	-0.53
205	205	242	Q_neve	-12.64	-0.53
205	205	38	Q_neve	-12.64	6.01
205	205	34	Q_neve	-7.13	6.01
205	205	208	Q_manutenzione	-2.69	0.1

Table 21: Element Stresses - Area Shells, Part 3 of 3

Area	AreaElem	Joint	OutputCase	S13Avg	S23Avg
				KN/m2	KN/m2
205	205	242	Q_manutenzione	-4.92	0.1
205	205	38	Q_manutenzione	-4.92	2.25
205	205	34	Q_manutenzione	-2.69	2.25
205	205	208	EQ_X	0.86	0.41
205	205	242	EQ_X	8.55	0.41
205	205	38	EQ_X	8.55	8.99
205	205	34	EQ_X	0.86	8.99
205	205	208	EQ_Y	-4.402E-03	-5.98
205	205	242	EQ_Y	-8.27	-5.98
205	205	38	EQ_Y	-8.27	-5.2
205	205	34	EQ_Y	-4.402E-03	-5.2
206	206	32	DEAD	1.442E-11	-4.216E-12
206	206	23	DEAD	-3.561E-12	-5.039E-12
206	206	243	DEAD	-1.929E-11	-3.690E-12
206	206	244	DEAD	1.329E-11	-9.252E-12
206	206	32	G1_power station	0.	0.
206	206	23	G1_power station	0.	0.
206	206	243	G1_power station	0.	0.
206	206	244	G1_power station	0.	0.
206	206	32	G2_power station	115.18	-42.03
206	206	23	G2_power station	-60.01	-42.03
206	206	243	G2_power station	-60.01	-13.58
206	206	244	G2_power station	115.18	-13.58
206	206	32	Q_power station	4.26	-1.56
206	206	23	Q_power station	-2.22	-1.56
206	206	243	Q_power station	-2.22	-0.5
206	206	244	Q_power station	4.26	-0.5
206	206	32	Q_neve	10.83	-4.71
206	206	23	Q_neve	-8.19	-4.71
206	206	243	Q_neve	-8.19	-1.43
206	206	244	Q_neve	10.83	-1.43
206	206	32	Q_manutenzione	4.26	-1.56
206	206	23	Q_manutenzione	-2.22	-1.56
206	206	243	Q_manutenzione	-2.22	-0.5
206	206	244	Q_manutenzione	4.26	-0.5
206	206	32	EQ_X	-28.34	19.15
206	206	23	EQ_X	93.22	19.15
206	206	243	EQ_X	93.22	12.45
206	206	244	EQ_X	-28.34	12.45
206	206	32	EQ_Y	-0.81	-3.51
206	206	23	EQ_Y	27.17	-3.51
206	206	243	EQ_Y	27.17	5.7
206	206	244	EQ_Y	-0.81	5.7

Table 21: Element Stresses - Area Shells, Part 3 of 3

Area	AreaElem	Joint	OutputCase	S13Avg	S23Avg
				KN/m2	KN/m2
207	207	244	DEAD	3.019E-12	-9.116E-12
207	207	243	DEAD	2.444E-13	-1.343E-11
207	207	245	DEAD	-1.194E-12	6.684E-12
207	207	246	DEAD	3.404E-12	5.527E-12
207	207	244	G1_power station	0.	0.
207	207	243	G1_power station	0.	0.
207	207	245	G1_power station	0.	0.
207	207	246	G1_power station	0.	0.
207	207	244	G2_power station	18.66	5.11
207	207	243	G2_power station	31.3	5.11
207	207	245	G2_power station	31.3	-0.68
207	207	246	G2_power station	18.66	-0.68
207	207	244	Q_power station	0.69	0.19
207	207	243	Q_power station	1.16	0.19
207	207	245	Q_power station	1.16	-2.512E-02
207	207	246	Q_power station	0.69	-2.512E-02
207	207	244	Q_neve	1.41	0.6
207	207	243	Q_neve	2.78	0.6
207	207	245	Q_neve	2.78	-8.108E-02
207	207	246	Q_neve	1.41	-8.108E-02
207	207	244	Q_manutenzione	0.69	0.19
207	207	243	Q_manutenzione	1.16	0.19
207	207	245	Q_manutenzione	1.16	-2.512E-02
207	207	246	Q_manutenzione	0.69	-2.512E-02
207	207	244	EQ_X	35.45	-0.9
207	207	243	EQ_X	27.82	-0.9
207	207	245	EQ_X	27.82	-0.42
207	207	246	EQ_X	35.45	-0.42
207	207	244	EQ_Y	10.38	2.42
207	207	243	EQ_Y	8.84	2.42
207	207	245	EQ_Y	8.84	-1.69
207	207	246	EQ_Y	10.38	-1.69
208	208	246	DEAD	1.305E-11	6.553E-12
208	208	245	DEAD	-1.837E-11	7.273E-12
208	208	247	DEAD	-6.966E-12	-5.033E-12
208	208	248	DEAD	1.533E-11	-4.840E-12
208	208	246	G1_power station	0.	0.
208	208	245	G1_power station	0.	0.
208	208	247	G1_power station	0.	0.
208	208	248	G1_power station	0.	0.
208	208	246	G2_power station	30.76	0.2
208	208	245	G2_power station	10.66	0.2
208	208	247	G2_power station	10.66	6.25

Table 21: Element Stresses - Area Shells, Part 3 of 3

Area	AreaElem	Joint	OutputCase	S13Avg	S23Avg
				KN/m2	KN/m2
208	208	248	G2_power station	30.76	6.25
208	208	246	Q_power station	1.14	7.365E-03
208	208	245	Q_power station	0.39	7.365E-03
208	208	247	Q_power station	0.39	0.23
208	208	248	Q_power station	1.14	0.23
208	208	246	Q_neve	3.65	1.061E-02
208	208	245	Q_neve	1.51	1.061E-02
208	208	247	Q_neve	1.51	0.67
208	208	248	Q_neve	3.65	0.67
208	208	246	Q_manutenzione	1.14	7.365E-03
208	208	245	Q_manutenzione	0.39	7.365E-03
208	208	247	Q_manutenzione	0.39	0.23
208	208	248	Q_manutenzione	1.14	0.23
208	208	246	EQ_X	32.11	0.73
208	208	245	EQ_X	30.4	0.73
208	208	247	EQ_X	30.4	-1.56
208	208	248	EQ_X	32.11	-1.56
208	208	246	EQ_Y	4.23	-1.48
208	208	245	EQ_Y	3.68	-1.48
208	208	247	EQ_Y	3.68	4.01
208	208	248	EQ_Y	4.23	4.01
209	209	248	DEAD	-4.978E-12	-1.609E-11
209	209	247	DEAD	1.858E-11	-1.465E-11
209	209	34	DEAD	1.714E-11	3.925E-12
209	209	38	DEAD	-4.593E-12	4.311E-12
209	209	248	G1_power station	0.	0.
209	209	247	G1_power station	0.	0.
209	209	34	G1_power station	0.	0.
209	209	38	G1_power station	0.	0.
209	209	248	G2_power station	-126.91	-26.18
209	209	247	G2_power station	173.25	-26.18
209	209	34	G2_power station	173.25	-62.89
209	209	38	G2_power station	-126.91	-62.89
209	209	248	Q_power station	-4.7	-0.97
209	209	247	Q_power station	6.41	-0.97
209	209	34	Q_power station	6.41	-2.33
209	209	38	Q_power station	-4.7	-2.33
209	209	248	Q_neve	-12.11	-2.78
209	209	247	Q_neve	19.82	-2.78
209	209	34	Q_neve	19.82	-6.69
209	209	38	Q_neve	-12.11	-6.69
209	209	248	Q_manutenzione	-4.7	-0.97
209	209	247	Q_manutenzione	6.41	-0.97

Table 21: Element Stresses - Area Shells, Part 3 of 3

Area	AreaElem	Joint	OutputCase	S13Avg	S23Avg
				KN/m2	KN/m2
209	209	34	Q_manutenzione	6.41	-2.33
209	209	38	Q_manutenzione	-4.7	-2.33
209	209	248	EQ_X	10.99	-5.74
209	209	247	EQ_X	46.89	-5.74
209	209	34	EQ_X	46.89	1.19
209	209	38	EQ_X	10.99	1.19
209	209	248	EQ_Y	-0.4	3.57
209	209	247	EQ_Y	6.61	3.57
209	209	34	EQ_Y	6.61	-14.4
209	209	38	EQ_Y	-0.4	-14.4

9. Material take-off

This section provides a material take-off.

Table 22: Material List 2 - By Section Property

Table 22: Material List 2 - By Section Property

Section	ObjectType	NumPieces	TotalLength	TotalWeight
			m	KN
PLATEA_30	Area			298.599

10. Design preferences

This section provides the design preferences for each type of design, which typically include material reduction factors, framing type, stress ratio limit, deflection limits, and other code specific items.

10.1. Steel design

Table 23: Preferences - Steel Design - AISC 360-16, Part 1 of 3

Table 23: Preferences - Steel Design - AISC 360-16, Part 1 of 3

THDesign	FrameType	PatLLF	SRatioLimit	MaxIter	SDC	SeisCode	SeisLoad	ImpFactor	SystemRho	SystemSds	SystemR
Envelopes	SMF	0.75	0.95	1	D	No	No	1.	1.	0.5	8.

Table 23: Preferences - Steel Design - AISC 360-16, Part 2 of 3

Table 23: Preferences - Steel Design - AISC 360-16, Part 2 of 3

SystemCd	Omega0	Provision	AMethod	SOMethod	SRMethod	NLCoeff	PhiB	PhiC	PhiTY	PhiTF	PhiV
5.5	3.	LRFD	Direct Analysis	General 2nd Order	Tau-b Fixed	0.002	0.9	0.9	0.9	0.75	0.9

Table 23: Preferences - Steel Design - AISC 360-16, Part 3 of 3

Table 23: Preferences - Steel Design - AISC 360-16, Part 3 of 3

PhiVRolledI	PhiVT	PlugWeld	HSSWelding	HSSReduceT	CheckDefl	DLRat	SDLAndLLRat	LLRat	TotalRat	NetRat
1.	0.9	Yes	ERW	No	No	120.	120.	360.	240.	240.

10.2. Concrete design

Table 24: Preferences - Concrete Design - ACI 318-19, Part 1 of 2

Table 24: Preferences - Concrete Design - ACI 318-19, Part 1 of 2

THDesign	NumCurves	NumPoints	MinEccen	BCCDesign	IgnoreBPu	CTorsion	PatLLF	UFLimit	SeisCat	Rho	Sds
Envelopes	24	11	Yes	Yes	Yes	Yes	0.75	0.95	D	1.	0.5

Table 24: Preferences - Concrete Design - ACI 318-19, Part 2 of 2

Table 24: Preferences - Concrete Design - ACI 318-19, Part 2 of 2

PhiT	PhiCTied	PhiCSpiral	PhiV	PhiVSeismic	PhiVJoint	TanTheta
0.9	0.65	0.75	0.75	0.6	0.85	1.

Table 25: Preferences - Concrete Shell Design - Eurocode 2-2004

Table 25: Preferences - Concrete Shell Design - Eurocode 2-2004

Country	GammaS	GammaC	AlphaCC	AlphaCT	CrackCond	ShrDesMet	CotTheta
CEN Default	1.15	1.5	1.	1.	Program Determined	Method 1	1.

10.3. Aluminum design

Table 26: Preferences - Aluminum Design - AA 2015, Part 1 of 2

Table 26: Preferences - Aluminum Design - AA 2015, Part 1 of 2

THDesign	SRatioLimit	Provision	LatFact	UseLatFact	Bridge	PhiTy	PhiTr	PhiC	PhiBo	PhiBr	PhiVo
Envelopes	1.	LRFD	1.333333	No	No	0.9	0.75	0.9	0.9	0.75	0.9

Table 26: Preferences - Aluminum Design - AA 2015, Part 2 of 2

Table 26: Preferences - Aluminum Design - AA 2015, Part 2 of 2

PhiVr
0.75

10.4. Cold formed design

Table 27: Preferences - Cold Formed Design - AISI-16, Part 1 of 2

Table 27: Preferences - Cold Formed Design - AISI-16, Part 1 of 2

THDesign	FrameType	SRatioLimit	SOMethod	Provision	LatFact	UseLatFact	PhiTy	PhiTr	PhiC	PhiB	PhiBPipe
Envelopes	Braced Frame	1.	General 2nd Order	LRFD	1.333333	No	0.9	0.75	0.85	0.9	0.95

Table 27: Preferences - Cold Formed Design - AISI-16, Part 2 of 2

Table 27: Preferences - Cold Formed Design - AISI-16, Part 2 of 2
PhiV
0.95