Green Power	WE ENGINEERING	*EGP CODE* GRE.EEC.R.73.IT.W.15235.12.024.01
		PAGE 1 di/of 360

TITLE: **RELAZIONE DI CALCOLO PRELIMINARE DELLE FONDAZIONI** ***AVAILABLE LANGUAGE:*** **IT**

IMPIANTO EOLICO "ACQUAVIVA COLLECROCE"

Comuni di Acquaviva Collecroce (CB), San Felice del Molise (CB), Castelmauro (CB), Palata (CB), Tavenna (CB) e Montecilfone (CB)

RELAZIONE DI CALCOLO DI PREDIMENSIONAMENTO DELLE FONDAZIONI

Il Tecnico

Ing. Leonardo Sblendido

File:GRE.EEC.R.73.IT.W.15235.12.024.01_Relazione di calcolo di predimensionamento delle fondazioni.pdf

REV.	DATE	DESCRIPTION	PREPARED	VERIFIED	APPROVED
01	01/06/2021	EMISSIONE PER ITER AUTORIZZATIVO	G.Mattei	E.Speranza	L.Sblendido
00	18/03/2021	Prima Emissione	G.Mattei	E.Speranza	L.Sblendido

EGP VALIDATION

COLLABORATORS	VERIFIED BY	VALIDATED BY
	Paolo Operti	*Luciano Iaciofano*

PROJECT / PLANT	EGP CODE																		
ACQUAVIVA COLLECROCE EO	GROUP	FUNCION	TYPE	ISSUER		COUNTRY		TEC	PLANT					SYSTEM		PROGRESSIVE			REVISION
	GRE	EEC	R	7	3	I	T	W	1	5	2	3	5	1	2	0	2	4	0	1

0CLASSIFICATION	UTILIZATION SCOPE

INDICE

1. Premessa

La presente relazione preliminare di calcolo strutturale, in conformità al §10.1 del DM 17/01/18, è comprensiva di una descrizione generale dell'opera e dei criteri generali di analisi e verifica. Segue inoltre le indicazioni fornite al §10.2 del DM stesso per quanto concerne analisi e verifiche svolte con l'ausilio di codici di calcolo.

Nella presente parte sono riportati i principali elementi di inquadramento del progetto esecutivo riguardante le strutture ed alle prestazioni attese dalla struttura.

1.1. Descrizione generale dell'opera

La struttura in esame è stata progettata con l'obiettivo di fornire supporto in qualità di fondazione ad un aerogeneratore tipo fornito dalla committenza.

La fondazione di forma tronco-conica ha diametro 23.2 metri e altezza totale di 4.20 m. Maggiori informazioni sono riportate nell'immagine seguente e nell'elaborato "GRE.EEC.D.73.IT.W.15235.12.026.00_Tipico Fondazioni_plinto e armature".

Considerata l'assenza di indagini geotecniche sul terreno, e basandosi su di uno studio preliminare del terreno in sito si è optato preventivamente per una soluzione di fondazione su pali, non si esclude la possibilità di ridurre il numero o le caratteristiche geometriche degli stessi. Si rimanda tale verifica in fase esecutiva a valle di specifiche indagini geotecniche.

In questa prima fase si assume che una fondazione di plinto conico su pali sia sufficiente nei confronti delle azioni cui è soggetta e delle caratteristiche del terreno.

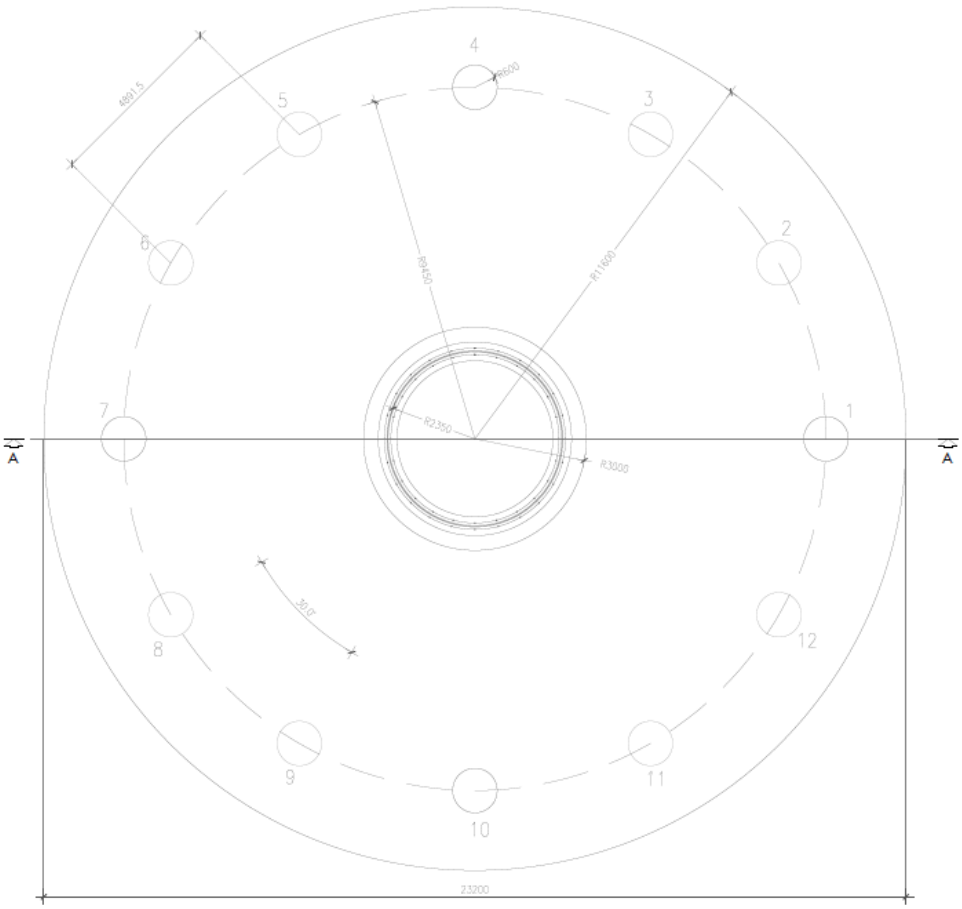

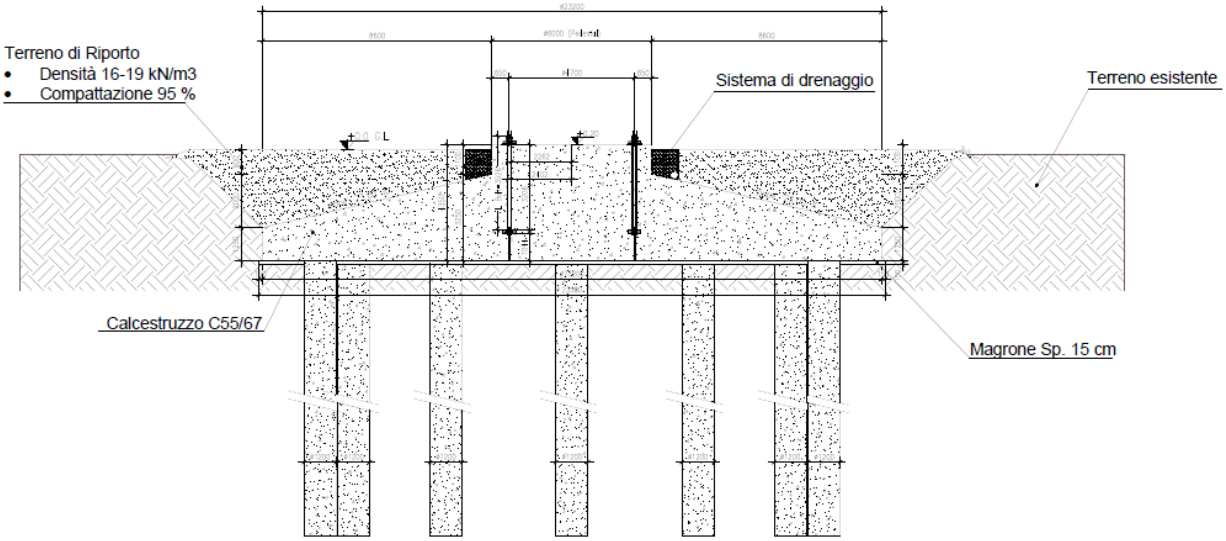

Figura 1:Pianta e sezione Fondazione aerogeneratore. Estratto elaborato
GRE.EEC.D.73.IT.W.15235.12.026.00_Tipico Fondazioni_plinto e armature.

Descrizione generale dell'opera	
Ubicazione	Comune di ACQUAVIVA COLLECROCE (CB) (Regione Molise)
Tipo di fondazione	Plinto su pali

Parametri della struttura			
Classe d'uso	Vita Vn [anni]	Coeff. Uso	Periodo Vr [anni]
II	50.0	1	50

Fattore di struttura/comportamento
Calcolo dei fattori di comportamento secondo il D.M. 17/01/2018 In accordo a quanto descritto al paragrafo 7.2.5 delle norme tecniche per le costruzioni 2018, il dimensionamento della struttura di fondazione e la verifica del complesso terreno-fondazione sono stati eseguiti assumendo come azioni in fondazione, trasmesse dagli elementi soprastanti, quella derivante dall'analisi strutturale eseguita ipotizzando comportamento strutturale non dissipativo.

1.2. Quadro normativo di riferimento adottato

Le norme ed i documenti assunti quale riferimento per la progettazione strutturale vengono indicati di seguito.

Nel capitolo "normativa di riferimento" è comunque presente l'elenco completo delle normative disponibili.

Progetto-verifica degli elementi	
Progetto cemento armato	D.M. 17-01-2018
Azione sismica	
Norma applicata per l'azione sismica	D.M. 17-01-2018

1.3. Azioni di progetto sulla costruzione

Nei capitoli "modellazione delle azioni" e "schematizzazione dei casi di carico" sono indicate le azioni sulle costruzioni.

Si precisa che, non avendo a disposizione i valori dei carichi trasmessi alla fondazione dalla sovrastruttura, gli stessi sono stati desunti considerando il doppio delle azioni derivanti da un aerogeneratore simile, di altezza all'hub pari a 115 m.

Nel prosieguo si indicano tipo di analisi strutturale condotta (statico, dinamico, lineare o non lineare) e il metodo adottato per la risoluzione del problema strutturale nonché le metodologie seguite per la verifica o per il progetto-verifica delle sezioni. Si riportano le combinazioni di carico adottate e, nel caso di calcoli non lineari, i percorsi di carico seguiti; le configurazioni studiate per la struttura in esame *sono risultate effettivamente esaustive per la progettazione-verifica.*

La verifica della sicurezza degli elementi strutturali avviene con i metodi della scienza delle costruzioni. L'analisi strutturale è condotta con il metodo degli spostamenti per la valutazione dello stato tensodeformativo indotto da carichi statici. L'analisi strutturale è condotta con il metodo dell'analisi modale e

dello spettro di risposta in termini di accelerazione per la valutazione dello stato tensodeformativo indotto da carichi dinamici (tra cui quelli di tipo sismico).

L'analisi strutturale viene effettuata con il metodo degli elementi finiti. Il metodo sopraindicato si basa sulla schematizzazione della struttura in elementi connessi solo in corrispondenza di un numero prefissato di punti denominati nodi. I nodi sono definiti dalle tre coordinate cartesiane in un sistema di riferimento globale. Le incognite del problema (nell'ambito del metodo degli spostamenti) sono le componenti di spostamento dei nodi riferite al sistema di riferimento globale (traslazioni secondo X, Y, Z, rotazioni attorno X, Y, Z). La soluzione del problema si ottiene con un sistema di equazioni algebriche lineari i cui termini noti sono costituiti dai carichi agenti sulla struttura opportunamente concentrati ai nodi:

K * u = F dove **K** = matrice di rigidezza

u = vettore spostamenti nodali

F = vettore forze nodali

Dagli spostamenti ottenuti con la risoluzione del sistema vengono quindi dedotte le sollecitazioni e/o le tensioni di ogni elemento, riferite generalmente ad una terna locale all'elemento stesso.

Il sistema di riferimento utilizzato è costituito da una terna cartesiana destrorsa XYZ. Si assume l'asse Z verticale ed orientato verso l'alto.

Gli elementi utilizzati per la modellazione dello schema statico della struttura sono i seguenti:

Elemento tipo ***TRUSS*** (biella-D2)
Elemento tipo ***BEAM*** (trave-D2)
Elemento tipo ***MEMBRANE*** (membrana-D3)
Elemento tipo ***PLATE*** (piastra-guscio-D3)
Elemento tipo ***BOUNDARY*** (molla)
Elemento tipo ***STIFFNESS*** (matrice di rigidezza)
Elemento tipo ***BRICK*** (elemento solido)
Elemento tipo ***SOLAIO*** (macro elemento composto da più membrane)

1.4. Modello numerico

In questa parte viene descritto il modello numerico utilizzato (o i modelli numerici utilizzati) per l'analisi della struttura. La presentazione delle informazioni deve essere, coerentemente con le prescrizioni del paragrafo 10.2 e relativi sotto paragrafi delle NTC-18, tale da garantirne la leggibilità, la corretta interpretazione e la riproducibilità

Tipo di analisi strutturale	
Carichi verticali	SI
Statica non lineare	NO
Sismica statica lineare	NO
Sismica dinamica lineare	NO
Sismica statica non lineare (prop. masse)	NO
Sismica statica non lineare (prop. modo)	NO

Sismica statica non lineare (triangolare)	NO
Non linearità geometriche (fattore P delta)	NO

Di seguito si indicano l'origine e le caratteristiche dei codici di calcolo utilizzati riportando titolo, produttore e distributore, versione, estremi della licenza d'uso:

Informazioni sul codice di calcolo	
Titolo:	PRO_SAP PROfessional Structural Analysis Program
Versione:	19.0.0
Produttore-Distributore:	2S.I. Software e Servizi per l'Ingegneria s.r.l., Ferrara

Un attento esame preliminare della documentazione a corredo del software ***ha consentito di valutarne l'affidabilità e soprattutto l'idoneità al caso specifico***. La documentazione, fornita dal produttore e distributore del software, contiene una esauriente descrizione delle basi teoriche e degli algoritmi impiegati, l'individuazione dei campi d'impiego, nonché casi prova interamente risolti e commentati, corredati dei file di input necessari a riprodurre l'elaborazione:

Affidabilità dei codici utilizzati
2S.I. ha verificato l'affidabilità e la robustezza del codice di calcolo attraverso un numero significativo di casi prova in cui i risultati dell'analisi numerica sono stati confrontati con soluzioni teoriche. E' possibile reperire la documentazione contenente alcuni dei più significativi casi trattati al seguente link: https://www.2si.it/it/prodotti/affidabilita/

Il modello della fondazione è stato realizzato mediante piastre (elementi D3) di vario spessore per simulare al meglio la forma della fondazione.

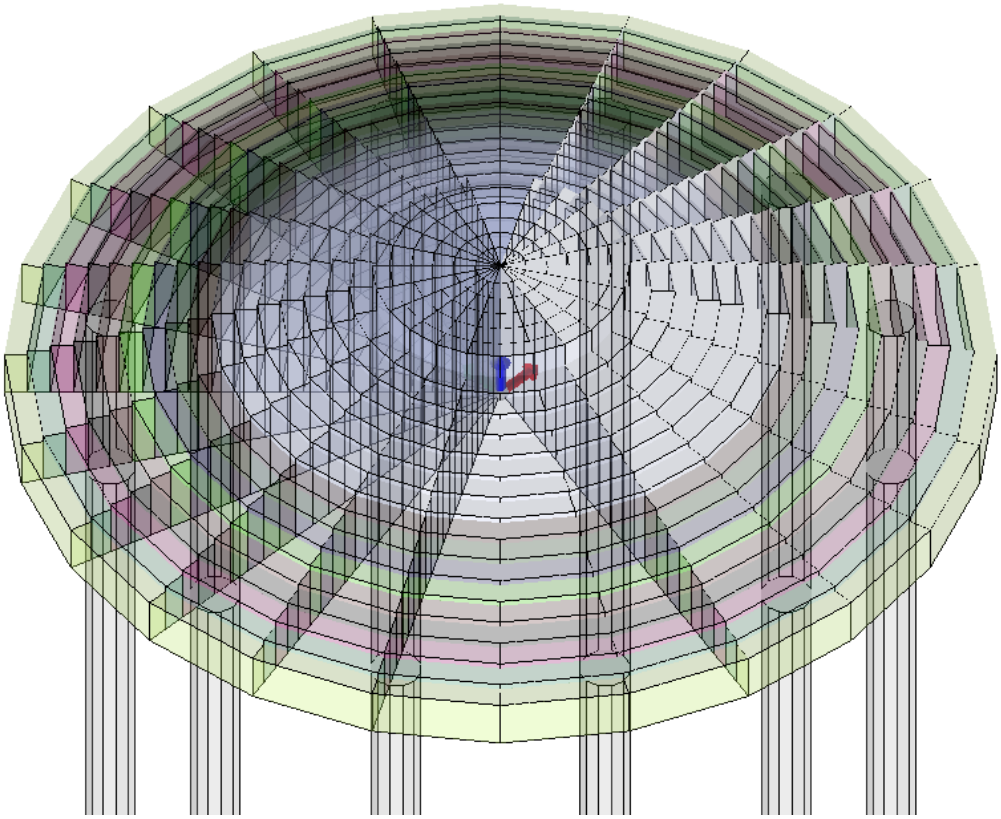

Modellazione della geometria e proprietà meccaniche:	
nodi	529
elementi D2 (per aste, travi, pilastri…)	0
elementi D3 (per pareti, platee, gusci…)	528
elementi solaio	0
elementi solidi	0
Dimensione del modello strutturale [cm]:	
X min =	-1160.00
Xmax =	1160.00
Ymin =	-1160.00
Ymax =	1160.00
Zmin =	0.00
Zmax =	0.00
Strutture verticali:	
Elementi di tipo asta	NO
Pilastri	NO

Pareti	NO
Setti (a comportamento membranale)	NO
Strutture non verticali:	
Elementi di tipo asta	NO
Travi	NO
Gusci	NO
Membrane	NO
Orizzontamenti:	
Solai con la proprietà piano rigido	NO
Solai senza la proprietà piano rigido	NO
Tipo di vincoli:	
Nodi vincolati rigidamente	NO
Nodi vincolati elasticamente	NO
Nodi con isolatori sismici	NO
Fondazioni puntuali (plinti/plinti su palo)	NO
Fondazioni di tipo trave	NO
Fondazioni di tipo platea	SI
Fondazioni con elementi solidi	NO

1.5. Modellazione delle azioni

Si veda il capitolo **"Schematizzazione dei casi di carico"** per le informazioni necessarie alla comprensione ed alla ricostruzione delle azioni applicate al modello numerico, coerentemente con quanto indicato nella parte "*2.6. Azioni di progetto sulla costruzione*".

1.6. Combinazioni e/o percorsi di carico

Si veda il capitolo **"Definizione delle combinazioni"** in cui sono indicate le combinazioni di carico adottate e, nel caso di calcoli non lineari, i percorsi di carico seguiti.

Combinazioni dei casi di carico	
APPROCCIO PROGETTUALE	Approccio 2
Tensioni ammissibili	NO
SLU	SI
SLV (SLU con sisma)	NO

SLC	NO
SLD	NO
SLO	NO
SLU GEO A2 (per approccio 1)	NO
SLU EQU	NO
Combinazione caratteristica (rara)	NO
Combinazione frequente	NO
Combinazione quasi permanente (SLE)	SI
SLA (accidentale quale incendio)	NO

Informazioni generali sull'elaborazione e giudizio motivato di accettabilità dei risultati.
Il programma prevede una serie di controlli automatici (check) che consentono l'individuazione di errori di modellazione. Al termine dell'analisi un controllo automatico identifica la presenza di spostamenti o rotazioni abnormi. Si può pertanto asserire che l' elaborazione sia corretta e completa. I risultati delle elaborazioni sono stati sottoposti a controlli che ne comprovano l'attendibilità. Tale valutazione ha compreso il confronto con i risultati di semplici calcoli, eseguiti con metodi tradizionali e adottati, anche in fase di primo proporzionamento della struttura. Inoltre, sulla base di considerazioni riguardanti gli stati tensionali e deformativi determinati, si è valutata la validità delle scelte operate in sede di schematizzazione e di modellazione della struttura e delle azioni. Si allega al termine della presente relazione elenco sintetico dei controlli svolti (verifiche di equilibrio tra reazioni vincolari e carichi applicati, comparazioni tra i risultati delle analisi e quelli di valutazioni semplificate, etc.) .

1.7. Azione del vento

L'azione del vento agente sul palo è stata calcolata in accordo al paragrafo 3.3 delle NTC2018 "Azioni del vento". La ventosità per la zona considerata è definita dalla normativa vigente per il Molise, Zona 3 per la quale si hanno i seguenti parametri di base:

- $v_{b,0} = 27\ m/s$
- $a_0 = 500\ m$
- $K_s = 0.37$

Tab. 3.3.I -*Valori dei parametri* $v_{b,0}$, a_0, k_s

Zona	Descrizione	$v_{b,0}$ [m/s]	a_0 [m]	k_s
1	Valle d'Aosta, Piemonte, Lombardia, Trentino Alto Adige, Veneto, Friuli Venezia Giulia (con l'eccezione della provincia di Trieste)	25	1000	0,40
2	Emilia Romagna	25	750	0,45
3	Toscana, Marche, Umbria, Lazio, Abruzzo, Molise, Puglia, Campania, Basilicata, Calabria (esclusa la provincia di Reggio Calabria)	27	500	0,37
4	Sicilia e provincia di Reggio Calabria	28	500	0,36
5	Sardegna (zona a oriente della retta congiungente Capo Teulada con l'Isola di Maddalena)	28	750	0,40
6	Sardegna (zona a occidente della retta congiungente Capo Teulada con l'Isola di Maddalena)	28	500	0,36
7	Liguria	28	1000	0,54
8	Provincia di Trieste	30	1500	0,50
9	Isole (con l'eccezione di Sicilia e Sardegna) e mare aperto	31	500	0,32

Cautelativamente, dopo aver analizzato la distanza dalla costa degli Aerogeneratori, della quota sul livello del mare e individuando la classe di rugosità del terreno come CLASSE C, la classe di esposizione del sito è individuata in CATEGORIA III, dove:

- $k_r = 0.20$
- $z_0 = 0.1\ m$
- $z_{min} = 5\ m$

1.7.1. Calcolo della pressione del Vento

In accordo al paragrafo 3.3.4 delle norme tecniche per le costruzioni la pressione del vento è data dalla seguente espressione:

$$p = q_r \cdot c_e \cdot c_p \cdot c_d$$

Dove:

- $q_r = \frac{1}{2} \cdot \rho \cdot v_r^2$ è la pressione cinetica di riferimento;
- v_r è la velocità di riferimento considerata su un valore medio di 10 minuti a 10 metri ddi altezza dal suolo;
- ρ è la densità dell'aria assunta convenzionalmente pari a $1{,}25\ kg/m^2$

$$q_r = \frac{1}{2} \cdot 1{,}25 \cdot (v_{b,0} \cdot c_r) = \frac{1}{2} \cdot 1{,}25 \cdot (27 \cdot 1) = 455.63\ N/m^2$$

- c_d è il coefficiente dinamico assunto pari ad 1;
- c_p è il coefficiente di forma assunto pari a 2.4 per torri con elementi a sezione circolare;
- c_e è il coefficiente di esposizione calcolato in accordo al par. 3.3.7 NTC18 secondo la formula:

$$c_e(z) = k_r^2 c_t \ln\left(\frac{z}{z_0}\right)\left[7 + c_t \ln\left(\frac{z}{z_0}\right)\right] \qquad per > z_{min}$$

Da cui si ricava il valore della pressione del vento pari a:

$$p = q_r \cdot c_e \cdot c_p \cdot c_d$$

Z [m]	ce	P [N/m2]
0	1,71	1869,92
10	2,14	2341,06
20	2,61	2854,30
30	2,90	3174,04
40	3,11	3409,63
50	3,28	3597,36
60	3,43	3753,99
70	3,55	3888,68
80	3,66	4007,05
90	3,76	4112,75
100	3,84	4208,33
110	3,92	4295,63
115	3,96	4336,62

1.8. Verifiche agli stati limite ultimi

Nel capitolo relativo alla progettazione degli elementi strutturali agli SLU vengono indicate, con riferimento alla normativa adottata, le modalità ed i criteri seguiti per valutare la sicurezza della struttura nei confronti delle possibili situazioni di crisi ed i risultati delle valutazioni svolte. In via generale, oltre alle verifiche di resistenza e di spostamento, devono essere prese in considerazione verifiche nei confronti dei fenomeni di instabilità, locale e globale, di fatica, di duttilità, di degrado.

1.9. Verifiche agli stati limite di esercizio

Nel capitolo relativo alla progettazione degli elementi strutturali agli SLU vengono indicate, con riferimento alla normativa adottata, le modalità seguite per valutare l'affidabilità della struttura nei confronti delle possibili situazioni di perdita di funzionalità (per eccessive deformazioni, fessurazioni, vibrazioni, etc.) ed i risultati delle valutazioni svolte.

2. NORMATIVA DI RIFERIMENTO

1. D.Min. Infrastrutture Min. Interni e Prot. Civile 17 Gennaio 2018 e allegate "Norme tecniche per le costruzioni".
2. Circolare 21/01/19, n. 7 C.S.LL.PP "Istruzioni per l'applicazione dell'aggiornamento delle Norme Tecniche delle Costruzioni di cui al decreto ministeriale 17 gennaio 2018"
3. D.Min. Infrastrutture e trasporti 14 Settembre 2005 e allegate "Norme tecniche per le costruzioni".
4. D.M. LL.PP. 9 Gennaio 1996 "Norme tecniche per il calcolo, l'esecuzione ed il collaudo delle strutture in cemento armato, normale e precompresso e per le strutture metalliche".
5. D.M. LL.PP. 16 Gennaio 1996 "Norme tecniche relative ai <<Criteri generali per la verifica di sicurezza delle costruzioni e dei carichi e sovraccarichi>>".
6. D.M. LL.PP. 16 Gennaio 1996 "Norme tecniche per le costruzioni in zone sismiche".
7. Circolare 4/07/96, n.156AA.GG./STC. istruzioni per l'applicazione delle "Norme tecniche relative ai <<Criteri generali per la verifica di sicurezza delle costruzioni e dei carichi e sovraccarichi>>" di cui al D.M. 16/01/96.
8. Circolare 10/04/97, n.65AA.GG. istruzioni per l'applicazione delle "Norme tecniche per le costruzioni in zone sismiche" di cui al D.M. 16/01/96.
9. D.M. LL.PP. 20 Novembre 1987 "Norme tecniche per la progettazione, esecuzione e collaudo degli edifici in muratura e per il loro consolidamento".
10. Circolare 4 Gennaio 1989 n. 30787 "Istruzioni in merito alle norme tecniche per la progettazione, esecuzione e collaudo degli edifici in muratura e per il loro consolidamento".
11. D.M. LL.PP. 11 Marzo 1988 "Norme tecniche riguardanti le indagini sui terreni e sulle rocce, la stabilità dei pendii naturali e delle scarpate, i criteri generali e le prescrizioni per la progettazione, l'esecuzione e il collaudo delle opere di sostegno delle terre e delle opere di fondazione".
12. D.M. LL.PP. 3 Dicembre 1987 "Norme tecniche per la progettazione, esecuzione e collaudo delle costruzioni prefabbricate".
13. UNI 9502 - Procedimento analitico per valutare la resistenza al fuoco degli elementi costruttivi di conglomerato cementizio armato, normale e precompresso - edizione maggio 2001
14. Ordinanza del Presidente del Consiglio dei Ministri n. 3274 del 20 marzo 2003 "Primi elementi in materia di criteri generali per la classificazione sismica del territorio nazionale e di normative tecniche per le costruzioni in zona sismica" e successive modificazioni e integrazioni.
15. UNI EN 1990:2006 13/04/2006 Eurocodice 0 - Criteri generali di progettazione strutturale.
16. UNI EN 1991-1-1:2004 01/08/2004 Eurocodice 1 - Azioni sulle strutture - Parte 1-1: Azioni in generale - Pesi per unità di volume, pesi propri e sovraccarichi per gli edifici.
17. UNI EN 1991-2:2005 01/03/2005 Eurocodice 1 - Azioni sulle strutture - Parte 2: Carichi da traffico sui ponti.
18. UNI EN 1991-1-3:2004 01/10/2004 Eurocodice 1 - Azioni sulle strutture - Parte 1-3: Azioni in generale - Carichi da neve.
19. UNI EN 1991-1-4:2005 01/07/2005 Eurocodice 1 - Azioni sulle strutture - Parte 1-4: Azioni in generale - Azioni del vento.
20. UNI EN 1991-1-5:2004 01/10/2004 Eurocodice 1 - Azioni sulle strutture - Parte 1-5: Azioni in generale - Azioni termiche.
21. UNI EN 1992-1-1:2005 24/11/2005 Eurocodice 2 - Progettazione delle strutture di calcestruzzo - Parte 1-1: Regole generali e regole per gli edifici.
22. UNI EN 1992-1-2:2005 01/04/2005 Eurocodice 2 - Progettazione delle strutture di calcestruzzo - Parte 1-2: Regole generali - Progettazione strutturale contro l'incendio.
23. UNI EN 1993-1-1:2005 01/08/2005 Eurocodice 3 - Progettazione delle strutture di acciaio - Parte 1-1: Regole generali e regole per gli edifici.
24. UNI EN 1993-1-8:2005 01/08/2005 Eurocodice 3 - Progettazione delle strutture di acciaio - Parte 1-8: Progettazione dei collegamenti.
25. UNI EN 1994-1-1:2005 01/03/2005 Eurocodice 4 - Progettazione delle strutture composte acciaio-calcestruzzo - Parte 1-1: Regole generali e regole per gli edifici.
26. UNI EN 1994-2:2006 12/01/2006 Eurocodice 4 - Progettazione delle strutture composte acciaio-calcestruzzo - Parte 2: Regole generali e regole per i ponti.
27. UNI EN 1995-1-1:2005 01/02/2005 Eurocodice 5 - Progettazione delle strutture di legno - Parte 1-1: Regole generali – Regole comuni e regole per gli edifici.
28. UNI EN 1995-2:2005 01/01/2005 Eurocodice 5 - Progettazione delle strutture di legno - Parte 2: Ponti.

29. UNI EN 1996-1-1:2006 26/01/2006 Eurocodice 6 - Progettazione delle strutture di muratura - Parte 1-1: Regole generali per strutture di muratura armata e non armata.
30. UNI EN 1996-3:2006 09/03/2006 Eurocodice 6 - Progettazione delle strutture di muratura - Parte 3: Metodi di calcolo semplificato per strutture di muratura non armata.
31. UNI EN 1997-1:2005 01/02/2005 Eurocodice 7 - Progettazione geotecnica - Parte 1: Regole generali.
32. UNI EN 1998-1:2005 01/03/2005 Eurocodice 8 - Progettazione delle strutture per la resistenza sismica - Parte 1: Regole generali, azioni sismiche e regole per gli edifici.
33. UNI EN 1998-3:2005 01/08/2005 Eurocodice 8 - Progettazione delle strutture per la resistenza sismica - Parte 3: Valutazione e adeguamento degli edifici.
34. UNI EN 1998-5:2005 01/01/2005 Eurocodice 8 - Progettazione delle strutture per la resistenza sismica - Parte 5: Fondazioni, strutture di contenimento ed aspetti geotecnici.

NOTA sul capitolo "normativa di riferimento": riporta l'elenco delle normative implementate nel software. Le norme utilizzate per la struttura oggetto della presente relazione sono indicate nel precedente capitolo "RELAZIONE DI CALCOLO STRUTTURALE" "ANALISI E VERIFICHE SVOLTE CON L'AUSILIO DI CODICI DI CALCOLO". Laddove nei capitoli successivi vengano richiamate norme antecedenti al DM 17.01.08 è dovuto o a progettazione simulata di edifico esistente.

3. CARATTERISTICHE MATERIALI UTILIZZATI

3.1. LEGENDA TABELLA DATI MATERIALI

Il programma consente l'uso di materiali diversi. Sono previsti i seguenti tipi di materiale:

1	materiale tipo cemento armato
2	materiale tipo acciaio
3	materiale tipo muratura
4	materiale tipo legno
5	materiale tipo generico

I materiali utilizzati nella modellazione sono individuati da una sigla identificativa ed un codice numerico (gli elementi strutturali richiamano quest'ultimo nella propria descrizione). Per ogni materiale vengono riportati in tabella i seguenti dati:

Young	modulo di elasticità normale E
Poisson	coefficiente di contrazione trasversale ni
G	modulo di elasticità tangenziale
Gamma	peso specifico
Alfa	coefficiente di dilatazione termica
Fattore di confidenza FC m	Fattore di confidenza specifico per materiale; (è riportato solo se diverso da quello globale della struttura)
Fattore di confidenza FC a	Fattore di confidenza specifico per l'armatura (è riportato solo se diverso da quello globale della

	struttura)
Elasto-plastico	Materiale elastico perfettamente plastico per aste non lineari
Massima compressione	Massima tensione di compressione per aste non lineari
Massima trazione	Massima tensione di trazione per aste non lineari
Fattore attrito	Coefficinete di attrito per aste non lineari
Rapporto HRDb	Rapporto di hardening a flessione
Rapporto HRDv	Rapporto di hardening a taglio

I dati soprariportati vengono utilizzati per la modellazione dello schema statico e per la determinazione dei carichi inerziali e termici. In relazione al tipo di materiale vengono riportati inoltre:

1	cemento armato		
		Resistenza Rc	resistenza a cmpressione cubica
		Resistenza fctm	resistenza media a trazione semplice
		Coefficiente ksb	Coefficiente di riduzione della resistenza a compressione da utilizzare nello stress block
2	acciaio		
		Tensione ft	Valore della tensione di rottura
		Tensione fy	Valore della tensione di snervamento
		Resistenza fd	Resistenza di calcolo per SL CNR-UNI 10011
		Resistenza fd (>40)	Resistenza di calcolo per SL CNR-UNI 10011 per spessori > 40mm
		Tensione ammissibile	Tensione ammissibile CNR-UNI 10011
		Tensione ammissibile (>40)	Tensione ammissibile CNR-UNI 10011 per spessori > 40mm
3	muratura		
		Muratura consolidata	Muratura per la quale si prevedono interventi di rinforzo"
		Incremento resistenza	Incremento conseguito in termini di resistenza
		Incremento rigidezza	Incremento conseguito in termini di rigidezza
		Resistenza f	Valore della resistenza a compressione

	Resistenza fv0	Valore della resistenza a taglio in assenza di tensioni normali
	Resistenza fh	Valore della resistenza a compressione orizzontale
	Resistenza fb	Valore della resistenza a compressione dei blocchi
	Resistenza fbh	Valore della resistenza a compressione dei blocchi in direzione orizzontale
	Resistenza fv0h	Valore della resistenza a taglio in assenza di tensioni normali per le travi
	Resistenza ft	Valore della resistenza a trazione per fessurazione diagonale
	Resistenza fvlim	Valore della massima resistenza a taglio
	Resistenza fbt	Valore della resistenza a trazione dei blocchi
	Coefficiente mu	Coefficiente d'attrito utilizzato per la resistenza a taglio (tipicamente 0.4)
	Coefficiente fi	Coefficiente d'ingranamento utilizzato per la resistenza a taglio
	Coefficiente ksb	Coefficiente di riduzione della resistenza a compressione da utilizzare nello stress block
4 legno		
	E0,05	Modulo di elasticità corrispondente ad un frattile del 5%
	Resistenza fc0	Valore della resistenza a compressione parallela
	Resistenza ft0	Valore della resistenza a trazione parallela
	Resistenza fm	Valore della resistenza a flessione
	Resistenza fv	Valore della resistenza a taglio
	Resist. ft0k	Resistenza caratteristica (tensione amm. per REGLES) per trazione
	Resist. fmk	Resistenza caratteristica (tensione amm. per REGLES) per flessione
	Resist. fvk	Resistenza caratteristica (tensione amm. per REGLES) per taglio
	Modulo E0,05	Modulo elastico parallelo caratteristico
	Lamellare	lamellare o massiccio

Vengono inoltre riportate le tabelle conteneti il riassunto delle nformazioni assegnate nei criteri di progetto in uso.

Con riferimento al **Documento di Affidabilità** “Test di validazione del software di calcolo PRO_SAP e dei moduli aggiuntivi PRO_SAP Modulo Geotecnico, PRO_CAD nodi acciaio e PRO_MST” - versione Maggio

2011, disponibile per il download sul sito **www.2si.it**, si segnalano i seguenti esempi applicativi:

Modellazione di strutture in c.a.

Test N°	Titolo
41	GERARCHIA DELLE RESISTENZE PER TRAVI IN C.A.
42	GERARCHIA DELLE RESISTENZE PER PILASTRI IN C.A.
43	VERIFICA ALLE TA DI STRUTTURE IN C.A.
44	VERIFICA AGLI SLU DI STRUTTURE IN C.A.
45	VERIFICA A PUNZONAMENTO ALLO SLU DI PIASTRE IN C.A.
46	VERIFICA A PUNZONAMENTO ALLO SLU DI TRAVI IN C.A.
47	PROGETTAZIONE A TAGLIO DI STRUTTURE IN C.A. SECONDO IL D.M. 9/1/96
48	PROGETTAZIONE A TAGLIO DI STRUTTURE IN C.A. SECONDO IL D.M. 14/1/2008
49	VERIFICA ALLO SLE (TENSIONI E FESSURAZIONE) DI STRUTTURE IN C.A.
50	VERIFICA ALLO SLE (DEFORMAZIONE) DI STRUTTURE IN C.A.
51	FATTORE DI STRUTTURA
52	SOVRARESISTENZE
53	DETTAGLI COSTRUTTIVI C.A.: LIMITI D'ARMATURA PILASTRI E NODI TRAVE-PILASTRO
54	PARETI IN C.A. SNELLE IN ZONA SISMICA
80	ANALISI PUSHOVER DI UN EDIFICIO IN C.A.
120	PROGETTO E VERIFICA DI TRAVI PREM

Modellazione di strutture in acciaio

Test N°	Titolo
55	VERIFICA DI STABILITA' DI ASTE COMPRESSE IN ACCIAIO – METODO OMEGA
56	LUCE LIBERA DI TRAVI E ASTE IN ACCIAIO
57	LUCE LIBERA DI COLONNE IN ACCIAIO
58	SVERGOLAMENTO DI TRAVI IN ACCIAIO
59	FATTORE DI STRUTTURA

60	ACCIAIO D.M.2008
61	ACCIAIO EC3
62	GERARCHIA RESISTENZE STRUTTURE IN ACCIAIO
63	STABILITA' DI ASTE COMPOSTE IN ACCIAIO
73	COLLEGAMENTI IN ACCIAIO: NODO TRAVE COLONNA FLANGIATO CON PRESENZA IRRIGIDIMENTI TRASVERSALI
74	COLLEGAMENTI IN ACCIAIO: NODO TRAVE COLONNA FLANGIATO CON PRESENZA DI UN PIATTO DI RINFORZO SALDATO ALL'ANIMA DELLA COLONNA
75	COLLEGAMENTI IN ACCIAIO: NODO TRAVE COLONNA FLANGIATO CON PRESENZA DI DUE PIATTI DI RINFORZO SALDATI ALL'ANIMA DELLA COLONNA
76	COLLEGAMENTI IN ACCIAIO: NODO TRAVE COLONNA FLANGIATO A DUE VIE SU ALI COLONNA
77	COLLEGAMENTI IN ACCIAIO: NODO TRAVE COLONNA FLANGIATO A UNA VIA CON DUE COMBINAZIONI DI CARICO
78	COLLEGAMENTI IN ACCIAIO: NODO TRAVE COLONNA FLANGIATO SU ANIMA SENZA RINFORZI A QUATTRO FILE DI BULLONI DI CUI UNA SU PIASTRA INFERIORE E UNA SU PIASTRA SUPERIORE
79	VERIFICA DELLA PIASTRA NODO TRAVE COLONNA
85	TELAIO ACCIAIO: CONTROVENTI CONCENTRICI

Modellazione di strutture in muratura

Test N°	Titolo
81	ANALISI PUSHOVER DI UNA STRUTTURA IN MURATURA
84	ANALISI ELASTO PLASTICA INCREMENTALE, PARETE IN MURATURA
86	VERIFICA NON SISMICA DELLE MURATURE (D.M. 87 TA)
87	VERIFICA NON SISMICA DELLE MURATURE (D.M. 2005 SL)
88	FATTORE DI STRUTTURA

Modellazione di strutture in legno

Test N°	Titolo
17	SOLAIO: MISTO LEGNO-CALCESTRUZZO
89	VERIFICA ALLO SLU DI STRUTTURE IN LEGNO SECONDO EC5
90	VERIFICA ALLO SLE DI STRUTTURE IN LEGNO SECONDO EC5
91	FATTORE DI STRUTTURA
92	VERIFICHE EC5
93	SNELLEZZE EC5
94	VERIFICA AL FUOCO DI STRUTTURE IN LEGNO SECONDO EC5
117	PROGETTO E VERIFICA DI GUSCI IN MATERIALE XLAM
118	PROGETTO E VERIFICA DI PARETI IN MATERIALE XLAM E RELATIVI COLLEGAMENTI
119	PROGETTO E VERIFICA DI SOLAI IN MATERIALE XLAM

Id	Tipo / Note	V. caratt.	V. medio	Young	Poisson	G	Gamma	Alfa	Altri
		daN/cm2	daN/cm2	daN/cm2		daN/cm2	daN/cm3		
9	Calcestruzzo Classe C55/67			3.830e+05	0.20	1.596e+05	2.50e-03	1.00e-05	
	Resistenza Rc	670.0							
	Resistenza fctm		42.3						
	Rapporto Rfessurata								1.00
	Coefficiente ksb								0.85
	Rapporto HRDb								1.00e-05
	Rapporto HRDv								1.00e-05

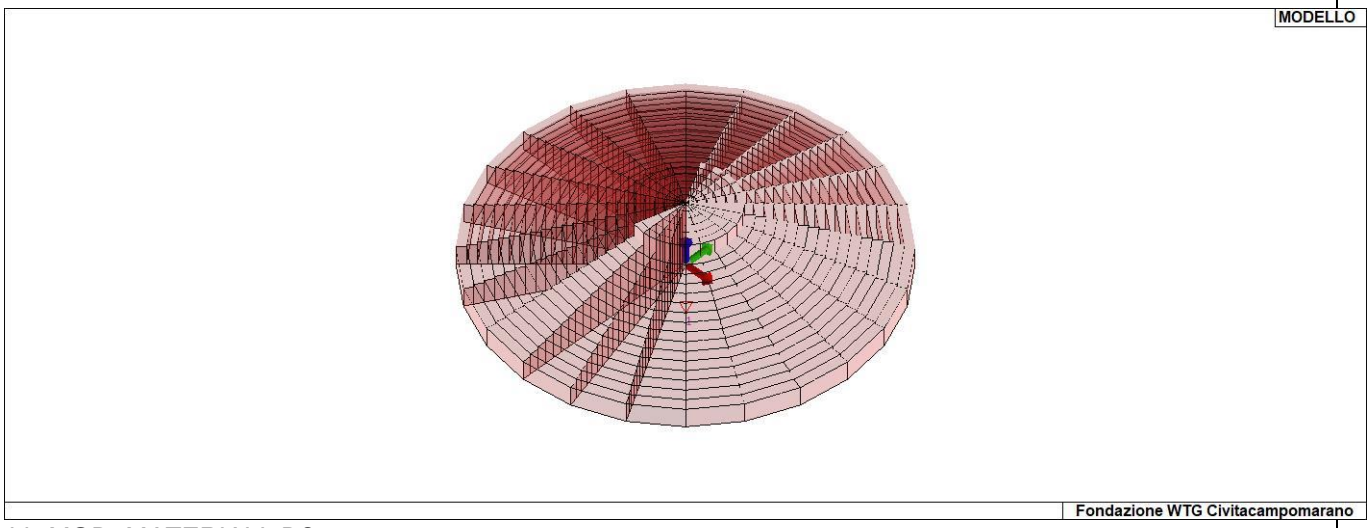

11_MOD_MATERIALI_D3

Gusci c.a.	1/7/..	2/8/..	3/9/..	4/10/..	5/11/..	6/12/..
Armatura						
Inclinazione Ax [gradi]	0.0	0.0				
Angolo Ax-Ay [gradi]	90.00	90.00				
Minima tesa	0.31	0.20				
Massima tesa	5000.00	5000.00				
Maglia unica centrale	No	No				
Copriferro [cm]	4.00	4.00				
Maglia x						
diametro	30	32				
passo	10	10				
diametro aggiuntivi	30	32				
Maglia y						
diametro	30	32				
passo	10	10				
diametro aggiuntivi	30	32				
Stati limite ultimi						
Tensione fy [daN/cm2]	4500.00	4500.00				
Tipo acciaio	tipo C	tipo C				
Coefficiente gamma s	1.15	1.15				

Gusci c.a.	1/7/..	2/8/..	3/9/..	4/10/..	5/11/..	6/12/..
Coefficiente gamma c	1.50	1.50				
Verifiche con N costante	Si	Si				
Applica SLU da DIN	No	No				
Tensioni ammissibili						
Tensione amm. cls [daN/cm2]	97.50	97.50				
Tensione amm. acciaio [daN/cm2]	2600.00	2600.00				
Rapporto omogeneizzazione N	15.00	15.00				
Massimo rapporto area compressa/tesa	1.00	1.00				
Resistenza al fuoco						
3- intradosso	No	No				
3+ estradosso	No	No				
Tempo di esposizione R	15	15				

4. MODELLAZIONE DELLE SEZIONI

4.1. LEGENDA TABELLA DATI SEZIONI

Il programma consente l'uso di sezioni diverse. Sono previsti i seguenti tipi di sezione:

1. sezione di tipo generico
2. profilati semplici
3. profilati accoppiati e speciali

Le sezioni utilizzate nella modellazione sono individuate da una sigla identificativa ed un codice numerico (gli elementi strutturali richiamano quest'ultimo nella propria descrizione). Per ogni sezione vengono riportati in tabella i seguenti dati:

Area	area della sezione
A V2	area della sezione/fattore di taglio (per il taglio in direzione 2)
A V3	area della sezione/fattore di taglio (per il taglio in direzione 3)
Jt	fattore torsionale di rigidezza
J2-2	momento d'inerzia della sezione riferito all'asse 2
J3-3	momento d'inerzia della sezione riferito all'asse 3
W2-2	modulo di resistenza della sezione riferito all'asse 2
W3-3	modulo di resistenza della sezione riferito all'asse 3
Wp2-2	modulo di resistenza plastico della sezione riferito all'asse 2
Wp3-3	modulo di resistenza plastico della sezione riferito all'asse 3

I dati sopra riportati vengono utilizzati per la determinazione dei carichi inerziali e per la definizione delle rigidezze degli elementi strutturali; qualora il valore di Area V2 (e/o Area V3) sia nullo la deformabilità per taglio V2 (e/o V3) è trascurata. La valutazione delle caratteristiche inerziali delle sezioni è condotta nel riferimento 2-3 dell'elemento.

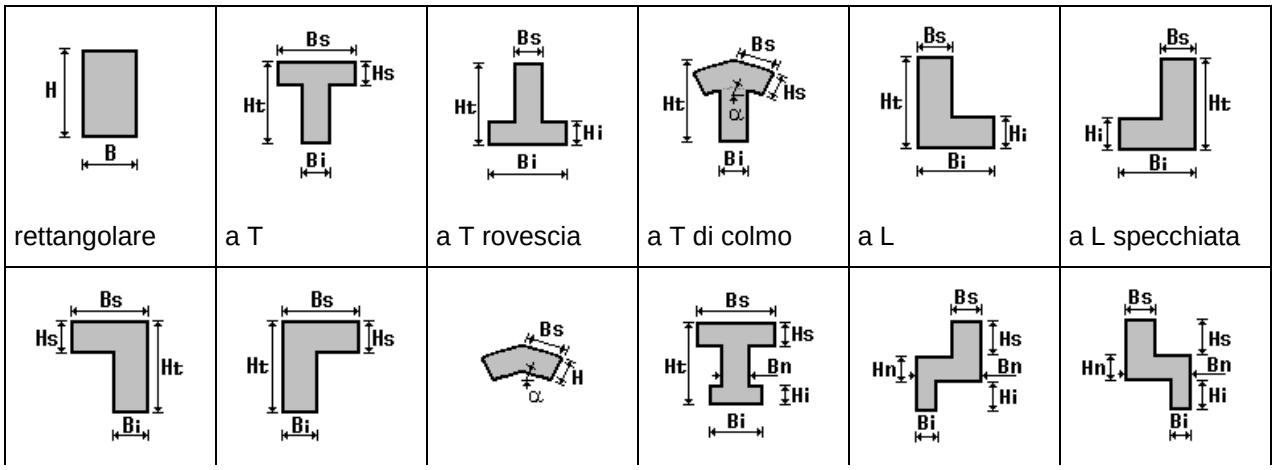

a L specchiata rovescia	a L rovescia	a L di colmo	a doppio T	a quattro specchiata	a quattro
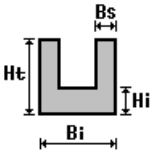	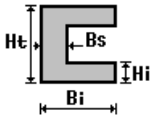	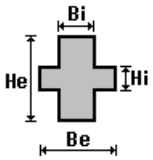	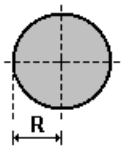	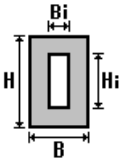	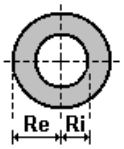
a U	a C	a croce	circolare	rettangolare cava	circolare cava

Per quanto concerne i profilati semplici ed accoppiati l'asse 2 del riferimento coincide con l'asse x riportato nei più diffusi profilatari.

Per quanto concerne le sezioni di tipo generico (tipo 1.):

i valori dimensionali con prefisso B sono riferiti all'asse 2

i valori dimensionali con prefisso H sono riferiti all'asse 3

Con riferimento al Documento di Affidabilità "Test di validazione del software di calcolo PRO_SAP e dei moduli aggiuntivi PRO_SAP Modulo Geotecnico, PRO_CAD nodi acciaio e PRO_MST" - versione Settembre 2014, disponibile per il download sul sito www.2si.it, si segnalano i seguenti esempi applicativi:

Test N°	Titolo
1	CARATTERISTICHE GEOMETRICHE E INERZIALI
45	VERIFICA AGLI SLU DI STRUTTURE IN C.A.
48	PROGETTAZIONE A TAGLIO DI STRUTTURE IN C.A. SECONDO IL D.M. 9/1/96
49	PROGETTAZIONE A TAGLIO DI STRUTTURE IN C.A. SECONDO IL D.M. 14/1/2008
50	VERIFICA ALLO SLE (TENSIONI E FESSURAZIONE) DI STRUTTURE IN C.A.
51	VERIFICA ALLO SLE (DEFORMAZIONE) DI STRUTTURE IN C.A.
104	ANALISI DI RESISTENZA AL FUOCO

Id	**Tipo**	**Area**	**A V2**	**A V3**	**Jt**	**J 2-2**	**J 3-3**	**W 2-2**	**W 3-3**	**Wp 2-2**	**Wp 3-3**
		cm2	cm2	cm2	cm4	cm4	cm4	cm3	cm3	cm3	cm3

5. MODELLAZIONE STRUTTURA: NODI

5.1. LEGENDA TABELLA DATI NODI

Il programma utilizza per la modellazione nodi strutturali.

Ogni nodo è individuato dalle coordinate cartesiane nel sistema di riferimento globale (X Y Z).

Ad ogni nodo è eventualmente associato un codice di vincolamento rigido, un codice di fondazione speciale, ed un set di sei molle (tre per le traslazioni, tre per le rotazioni). Le tabelle sottoriportate riflettono le succitate possibilità. In particolare per ogni nodo viene indicato in tabella:

Nodo	numero del nodo.
X	valore della coordinata X
Y	valore della coordinata Y
Z	valore della coordinata Z

Per i nodi ai quali sia associato un codice di vincolamento rigido, un codice di fondazione speciale o un set di molle viene indicato in tabella:

Nodo	numero del nodo.
X	valore della coordinata X
Y	valore della coordinata Y
Z	valore della coordinata Z
Note	eventuale codice di vincolo (es. v=110010 sei valori relativi ai sei gradi di libertà previsti per il nodo TxTyTzRxRyRz, il valore 1 indica che lo spostamento o rotazione relativo è impedito, il valore 0 indica che lo spostamento o rotazione relativo è libero).
Note	(FS = 1, 2,…) eventuale codice del tipo di fondazione speciale (1, 2,… fanno riferimento alle tipologie: plinto, palo, plinto su pali,…) che è collegato al nodo. (ISO = “id SIGLA”) indice e sigla identificativa dell’ eventuale isolatore sismico assegnato al nodo
Rig. TX	valore della rigidezza dei vincoli elastici eventualmente applicati al nodo, nello specifico TX (idem per TY, TZ, RX, RY, RZ).

Per strutture sismicamente isolate viene inoltre inserita la tabella delle caratteristiche per gli isolatori utilizzati; le caratteristiche sono indicate in conformità al cap. 7.10 del D.M. 17/01/18

5.1.1. TABELLA DATI NODI

Nodo	X	YZ	Nodo	X	Y	Z	Nodo	X	Y	Z

	cm	cm	cm		cm	cm	cm		cm	cm	cm
1	0.0	-1160.0	0.0	2	-300.2	-1120.5	0.0	3	300.2	-1120.5	0.0
4	0.0	-1106.2	0.0	5	-286.3	-1068.6	0.0	6	286.3	-1068.6	0.0
7	0.0	-1052.5	0.0	8	-272.4	-1016.6	0.0	9	272.4	-1016.6	0.0
10	-580.0	-1004.6	0.0	11	580.0	-1004.6	0.0	12	0.0	-998.8	0.0
13	-258.5	-964.7	0.0	14	258.5	-964.7	0.0	15	-553.1	-958.0	0.0
16	553.1	-958.0	0.0	18	-244.6	-912.8	0.0	19	244.6	-912.8	0.0
20	-526.3	-911.5	0.0	21	526.2	-911.5	0.0	22	0.0	-891.2	0.0
23	-499.4	-864.9	0.0	24	499.4	-864.9	0.0	25	-230.7	-860.8	0.0
26	230.7	-860.8	0.0	27	0.0	-837.5	0.0	28	-820.2	-820.2	0.0
29	820.2	-820.2	0.0	32	-216.8	-809.0	0.0	33	216.8	-809.0	0.0
34	0.0	-783.8	0.0	35	-782.2	-782.2	0.0	36	782.2	-782.2	0.0
37	-445.6	-771.8	0.0	38	445.6	-771.8	0.0	39	-202.8	-757.0	0.0
40	202.8	-757.0	0.0	41	-744.2	-744.2	0.0	42	744.2	-744.2	0.0
43	0.0	-730.0	0.0	44	-418.8	-725.3	0.0	45	418.7	-725.3	0.0
46	-706.2	-706.2	0.0	47	706.2	-706.2	0.0	48	-188.9	-705.1	0.0
49	188.9	-705.1	0.0	50	-391.9	-678.7	0.0	51	391.9	-678.7	0.0
52	0.0	-676.3	0.0	53	-668.2	-668.2	0.0	54	668.2	-668.2	0.0
55	-175.0	-653.2	0.0	56	175.0	-653.2	0.0	57	-365.0	-632.2	0.0
58	365.0	-632.2	0.0	59	-630.2	-630.2	0.0	60	630.2	-630.2	0.0
61	0.0	-622.5	0.0	62	-161.1	-601.3	0.0	63	161.1	-601.3	0.0
64	-592.2	-592.2	0.0	65	592.2	-592.2	0.0	66	-338.1	-585.6	0.0
67	338.1	-585.6	0.0	68	-1004.6	-580.0	0.0	69	1004.6	-580.0	0.0
70	0.0	-568.8	0.0	71	-554.2	-554.2	0.0	72	554.2	-554.2	0.0
73	-958.0	-553.1	0.0	74	958.0	-553.1	0.0	75	-147.2	-549.4	0.0
76	147.2	-549.4	0.0	77	-311.3	-539.1	0.0	78	311.2	-539.1	0.0
79	-911.5	-526.3	0.0	80	911.5	-526.3	0.0	81	-516.2	-516.2	0.0
82	516.2	-516.2	0.0	83	0.0	-515.0	0.0	84	-864.9	-499.4	0.0
85	864.9	-499.4	0.0	86	-133.3	-497.5	0.0	87	133.3	-497.5	0.0

88	-284.4	-492.6	0.0	89	284.4	-492.6	0.0	90	-478.2	-478.2
0.0										
91	478.2	-478.2	0.0	94	0.0	-461.3	0.0	95	-257.5	-446.0
0.0										
96	257.5	-446.0	0.0	97	-771.8	-445.6	0.0	98	771.8	-445.6
0.0										
99	-119.4	-445.5	0.0	100	119.4	-445.5	0.0	101	-440.2	-440.2
0.0										
102	440.2	-440.2	0.0	103	-725.3	-418.8	0.0	104	725.3	-418.8
0.0										
105	0.0	-407.5	0.0	106	-402.2	-402.2	0.0	107	402.2	-402.2
0.0										
108	-230.6	-399.5	0.0	109	230.6	-399.5	0.0	110	-105.5	-393.6
0.0										
111	105.5	-393.6	0.0	112	-678.7	-391.9	0.0	113	678.7	-391.9
0.0										
114	-632.2	-365.0	0.0	115	632.2	-365.0	0.0	116	-364.2	-364.2
0.0										
117	364.2	-364.2	0.0	118	0.0	-353.8	0.0	119	-203.8	-352.9
0.0										
120	203.7	-352.9	0.0	121	-91.6	-341.7	0.0	122	91.6	-341.7
0.0										
123	-585.6	-338.1	0.0	124	585.6	-338.1	0.0	125	-326.2	-326.2
0.0										
126	326.2	-326.2	0.0	127	-539.1	-311.3	0.0	128	539.1	-311.3
0.0										
129	-176.9	-306.4	0.0	130	176.9	-306.4	0.0	131	-1120.5	-300.2
0.0										
132	1120.5	-300.2	0.0	133	0.0	-300.0	0.0	134	-77.6	-289.8
0.0										
135	77.6	-289.8	0.0	136	-288.1	-288.1	0.0	137	288.1	-288.1
0.0										
138	-1068.6	-286.3	0.0	139	1068.6	-286.3	0.0	140	-492.6	-284.4
0.0										
141	492.6	-284.4	0.0	142	-1016.6	-272.4	0.0	143	1016.6	-272.4
0.0										
144	0.0	-260.0	0.0	145	-150.0	-259.8	0.0	146	150.0	-259.8
0.0										
147	-964.7	-258.5	0.0	148	964.7	-258.5	0.0	149	-446.0	-257.5
0.0										
150	446.0	-257.5	0.0	151	-67.3	-251.1	0.0	152	67.3	-251.1
0.0										
153	-250.1	-250.1	0.0	154	250.1	-250.1	0.0	155	-912.8	-244.6
0.0										
156	912.8	-244.6	0.0	157	-860.8	-230.7	0.0	158	-399.5	-230.6
0.0										
159	399.5	-230.6	0.0	160	860.8	-230.7	0.0	161	-130.0	-225.2
0.0										
162	130.0	-225.2	0.0	163	-809.0	-216.8	0.0	164	809.0	-216.8
0.0										
165	-212.1	-212.1	0.0	166	212.1	-212.1	0.0	167	0.0	-210.0
0.0										
168	-352.9	-203.8	0.0	169	352.9	-203.8	0.0	170	-757.0	-202.8
0.0										
171	-54.4	-202.8	0.0	172	54.4	-202.8	0.0	173	757.0	-202.8
0.0										
174	-705.1	-188.9	0.0	175	705.1	-188.9	0.0	176	-183.8	-183.8
0.0										

177	183.8	-183.8	0.0	178	-105.0	-181.9	0.0	179	105.0	-181.9
0.0										
180	-306.4	-176.9	0.0	181	306.4	-176.9	0.0	182	-653.2	-175.0
0.0										
183	653.2	-175.0	0.0	184	-601.3	-161.1	0.0	185	601.3	-161.1
0.0										
186	0.0	-160.0	0.0	187	-41.4	-154.5	0.0	188	41.4	-154.5
0.0										
189	-259.8	-150.0	0.0	190	259.8	-150.0	0.0	191	-148.5	-148.5
0.0										
192	148.5	-148.5	0.0	193	-549.4	-147.2	0.0	194	549.4	-147.2
0.0										
195	-80.0	-138.6	0.0	196	80.0	-138.6	0.0	197	-497.5	-133.3
0.0										
198	497.5	-133.3	0.0	199	-225.2	-130.0	0.0	200	225.2	-130.0
0.0										
201	-445.5	-119.4	0.0	202	445.5	-119.4	0.0	203	-113.1	-113.1
0.0										
204	113.1	-113.1	0.0	205	0.0	-110.0	0.0	206	-28.5	-106.3
0.0										
207	28.5	-106.3	0.0	208	-393.6	-105.5	0.0	209	393.6	-105.5
0.0										
210	-181.9	-105.0	0.0	211	181.9	-105.0	0.0	212	-55.0	-95.3
0.0										
213	55.0	-95.3	0.0	214	-341.7	-91.6	0.0	215	341.7	-91.6
0.0										
216	-138.6	-80.0	0.0	217	138.6	-80.0	0.0	218	-77.8	-77.8
0.0										
219	77.8	-77.8	0.0	220	-289.8	-77.6	0.0	221	289.8	-77.6
0.0										
222	-251.1	-67.3	0.0	223	251.1	-67.3	0.0	224	0.0	-60.0
0.0										
225	-15.5	-58.0	0.0	226	15.5	-58.0	0.0	227	-95.3	-55.0
0.0										
228	95.3	-55.0	0.0	229	-202.8	-54.4	0.0	230	202.8	-54.4
0.0										
231	-30.0	-52.0	0.0	232	30.0	-52.0	0.0	233	-42.4	-42.4
0.0										
234	42.4	-42.4	0.0	235	-154.5	-41.4	0.0	236	154.5	-41.4
0.0										
237	-52.0	-30.0	0.0	238	52.0	-30.0	0.0	239	-106.3	-28.5
0.0										
240	106.3	-28.5	0.0	241	-58.0	-15.5	0.0	242	58.0	-15.5
0.0										
243	-1160.0	0.0	0.0	244	-1106.3	0.0	0.0	245	-1052.5	0.0
0.0										
246	-998.8	0.0	0.0	248	-891.2	0.0	0.0	249	-837.5	0.0
0.0										
250	-783.8	0.0	0.0	251	-730.0	0.0	0.0	252	-676.3	0.0
0.0										
253	-622.5	0.0	0.0	254	-568.8	0.0	0.0	255	-515.0	0.0
0.0										
256	-461.3	0.0	0.0	257	-407.5	0.0	0.0	258	-353.8	0.0
0.0										
259	-300.0	0.0	0.0	260	-260.0	0.0	0.0	261	-210.0	0.0
0.0										
262	-160.0	0.0	0.0	263	-110.0	0.0	0.0	264	-60.0	0.0
0.0										

265	0.0	0.0	0.0	266	60.0	0.0	0.0	267	110.0	0.0
0.0										
268	160.0	0.0	0.0	269	210.0	0.0	0.0	270	260.0	0.0
0.0										
271	300.0	0.0	0.0	272	353.8	0.0	0.0	273	407.5	0.0
0.0										
274	461.3	0.0	0.0	275	515.0	0.0	0.0	276	568.8	0.0
0.0										
277	622.5	0.0	0.0	278	676.3	0.0	0.0	279	730.0	0.0
0.0										
280	783.8	0.0	0.0	281	837.5	0.0	0.0	282	891.2	0.0
0.0										
284	998.8	0.0	0.0	285	1052.5	0.0	0.0	286	1106.2	0.0
0.0										
287	1160.0	0.0	0.0	288	-58.0	15.5	0.0	289	58.0	15.5
0.0										
290	-106.3	28.5	0.0	291	106.3	28.5	0.0	292	-52.0	30.0
0.0										
293	52.0	30.0	0.0	294	-154.5	41.4	0.0	295	154.5	41.4
0.0										
296	-42.4	42.4	0.0	297	42.4	42.4	0.0	298	-30.0	52.0
0.0										
299	30.0	52.0	0.0	300	-202.8	54.4	0.0	301	202.8	54.4
0.0										
302	-95.3	55.0	0.0	303	95.3	55.0	0.0	304	-15.5	58.0
0.0										
305	15.5	58.0	0.0	306	0.0	60.0	0.0	307	-251.1	67.3
0.0										
308	251.1	67.3	0.0	309	-289.8	77.6	0.0	310	289.8	77.6
0.0										
311	-77.8	77.8	0.0	312	77.8	77.8	0.0	313	-138.6	80.0
0.0										
314	138.6	80.0	0.0	315	-341.7	91.6	0.0	316	341.7	91.6
0.0										
317	-55.0	95.3	0.0	318	55.0	95.3	0.0	319	-181.9	105.0
0.0										
320	181.9	105.0	0.0	321	-393.6	105.5	0.0	322	393.6	105.5
0.0										
323	-28.5	106.3	0.0	324	28.5	106.3	0.0	325	0.0	110.0
0.0										
326	-113.1	113.1	0.0	327	113.1	113.1	0.0	328	-445.5	119.4
0.0										
329	445.5	119.4	0.0	330	-225.2	130.0	0.0	331	225.2	130.0
0.0										
332	-497.5	133.3	0.0	333	497.5	133.3	0.0	334	-80.0	138.6
0.0										
335	80.0	138.6	0.0	336	-549.4	147.2	0.0	337	549.4	147.2
0.0										
338	-148.5	148.5	0.0	339	148.5	148.5	0.0	340	-259.8	150.0
0.0										
341	259.8	150.0	0.0	342	-41.4	154.5	0.0	343	41.4	154.5
0.0										
344	0.0	160.0	0.0	345	-601.3	161.1	0.0	346	601.3	161.1
0.0										
347	-653.2	175.0	0.0	348	653.2	175.0	0.0	349	-306.4	176.9
0.0										
350	306.4	176.9	0.0	351	-105.0	181.9	0.0	352	105.0	181.9
0.0										

353	-183.8	183.8	0.0	354	183.8	183.8	0.0	355	-705.1	188.9
0.0										
356	705.1	188.9	0.0	357	-757.0	202.8	0.0	358	-54.4	202.8
0.0										
359	54.4	202.8	0.0	360	757.0	202.8	0.0	361	-352.9	203.8
0.0										
362	352.9	203.7	0.0	363	0.0	210.0	0.0	364	-212.1	212.1
0.0										
365	212.1	212.1	0.0	366	-809.0	216.8	0.0	367	809.0	216.8
0.0										
368	-130.0	225.2	0.0	369	130.0	225.2	0.0	370	-860.8	230.7
0.0										
371	-399.5	230.6	0.0	372	399.5	230.6	0.0	373	860.8	230.7
0.0										
374	-912.8	244.6	0.0	375	912.8	244.6	0.0	376	-250.1	250.1
0.0										
377	250.1	250.1	0.0	378	-67.3	251.1	0.0	379	67.3	251.1
0.0										
380	-446.0	257.5	0.0	381	446.0	257.5	0.0	382	-964.7	258.5
0.0										
383	964.7	258.5	0.0	384	-150.0	259.8	0.0	385	150.0	259.8
0.0										
386	0.0	260.0	0.0	387	-1016.6	272.4	0.0	388	1016.6	272.4
0.0										
389	-492.6	284.4	0.0	390	492.6	284.4	0.0	391	-1068.6	286.3
0.0										
392	1068.6	286.3	0.0	393	-288.1	288.1	0.0	394	288.1	288.1
0.0										
395	-77.6	289.8	0.0	396	77.6	289.8	0.0	397	0.0	300.0
0.0										
398	-1120.5	300.2	0.0	399	1120.5	300.2	0.0	400	-176.9	306.4
0.0										
401	176.9	306.4	0.0	402	-539.1	311.3	0.0	403	539.1	311.2
0.0										
404	-326.2	326.2	0.0	405	326.2	326.2	0.0	406	-585.6	338.1
0.0										
407	585.6	338.1	0.0	408	-91.6	341.7	0.0	409	91.6	341.7
0.0										
410	-203.7	352.9	0.0	411	203.8	352.9	0.0	412	0.0	353.8
0.0										
413	-364.2	364.2	0.0	414	364.2	364.2	0.0	415	-632.2	365.0
0.0										
416	632.2	365.0	0.0	417	-678.7	391.9	0.0	418	678.7	391.9
0.0										
419	-105.5	393.6	0.0	420	105.5	393.6	0.0	421	-230.6	399.5
0.0										
422	230.6	399.5	0.0	423	-402.2	402.2	0.0	424	402.2	402.2
0.0										
425	0.0	407.5	0.0	426	-725.3	418.8	0.0	427	725.3	418.7
0.0										
428	-440.2	440.2	0.0	429	440.2	440.2	0.0	430	-119.4	445.5
0.0										
431	119.4	445.5	0.0	432	-771.8	445.6	0.0	433	771.8	445.6
0.0										
434	-257.5	446.0	0.0	435	257.5	446.0	0.0	436	0.0	461.3
0.0										
439	-478.2	478.2	0.0	440	478.2	478.2	0.0	441	-284.4	492.6
0.0										

442	284.4	492.6	0.0	443	-133.3	497.5	0.0	444	133.3	497.5
0.0										
445	-864.9	499.4	0.0	446	864.9	499.4	0.0	447	0.0	515.0
0.0										
448	-516.2	516.2	0.0	449	516.2	516.2	0.0	450	-911.5	526.3
0.0										
451	911.5	526.2	0.0	452	-311.2	539.1	0.0	453	311.3	539.1
0.0										
454	-147.2	549.4	0.0	455	147.2	549.4	0.0	456	-958.0	553.1
0.0										
457	958.0	553.1	0.0	458	-554.2	554.2	0.0	459	554.2	554.2
0.0										
460	0.0	568.8	0.0	461	-1004.6	580.0	0.0	462	1004.6	580.0
0.0										
463	-338.1	585.6	0.0	464	338.1	585.6	0.0	465	-592.2	592.2
0.0										
466	592.2	592.2	0.0	467	-161.1	601.3	0.0	468	161.1	601.3
0.0										
469	0.0	622.5	0.0	470	-630.2	630.2	0.0	471	630.2	630.2
0.0										
472	-365.0	632.2	0.0	473	365.0	632.2	0.0	474	-175.0	653.2
0.0										
475	175.0	653.2	0.0	476	-668.2	668.2	0.0	477	668.2	668.2
0.0										
478	0.0	676.3	0.0	479	-391.9	678.7	0.0	480	391.9	678.7
0.0										
481	-188.9	705.1	0.0	482	188.9	705.1	0.0	483	-706.2	706.2
0.0										
484	706.2	706.2	0.0	485	-418.7	725.3	0.0	486	418.8	725.3
0.0										
487	0.0	730.0	0.0	488	-744.2	744.2	0.0	489	744.2	744.2
0.0										
490	-202.8	757.0	0.0	491	202.8	757.0	0.0	492	-445.6	771.8
0.0										
493	445.6	771.8	0.0	494	-782.2	782.2	0.0	495	782.2	782.2
0.0										
496	0.0	783.8	0.0	497	-216.8	809.0	0.0	498	216.8	809.0
0.0										
501	-820.2	820.2	0.0	502	820.2	820.2	0.0	503	0.0	837.5
0.0										
504	-230.7	860.8	0.0	505	230.7	860.8	0.0	506	-499.4	864.9
0.0										
507	499.4	864.9	0.0	508	0.0	891.2	0.0	509	-526.2	911.5
0.0										
510	526.3	911.5	0.0	511	-244.6	912.8	0.0	512	244.6	912.8
0.0										
514	-553.1	958.0	0.0	515	553.1	958.0	0.0	516	-258.5	964.7
0.0										
517	258.5	964.7	0.0	518	0.0	998.8	0.0	519	-580.0	1004.6
0.0										
520	580.0	1004.6	0.0	521	-272.4	1016.6	0.0	522	272.4	1016.6
0.0										
523	0.0	1052.5	0.0	524	-286.3	1068.6	0.0	525	286.3	1068.6
0.0										
526	0.0	1106.2	0.0	527	-300.2	1120.5	0.0	528	300.2	1120.5
0.0										
529	0.0	1160.0	0.0							

Nodo	X	Y Z	Note	Rig. TX	Rig. TY	Rig. TZ	Rig. RX	Rig. RY	Rig. RZ
cm	cm	cm	daN/cm	daN/cm	daN/cm	daN cm/rad	daN cm/rad	daN cm/rad	
17	0.0	-945.0	0.0	FS=4					
30	-472.5	-818.4	0.0	FS=4					
31	472.5	-818.4	0.0	FS=4					
92	-818.4	-472.5	0.0	FS=4					
93	818.4	-472.5	0.0	FS=4					
247	-945.0	0.00.0	FS=4						
283	945.0	0.00.0	FS=4						
437	-818.4	472.5	0.0	FS=4					
438	818.4	472.5	0.0	FS=4					
499	-472.5	818.4	0.0	FS=4					
500	472.5	818.4	0.0	FS=4					
513	0.0	945.0	0.0	FS=4					

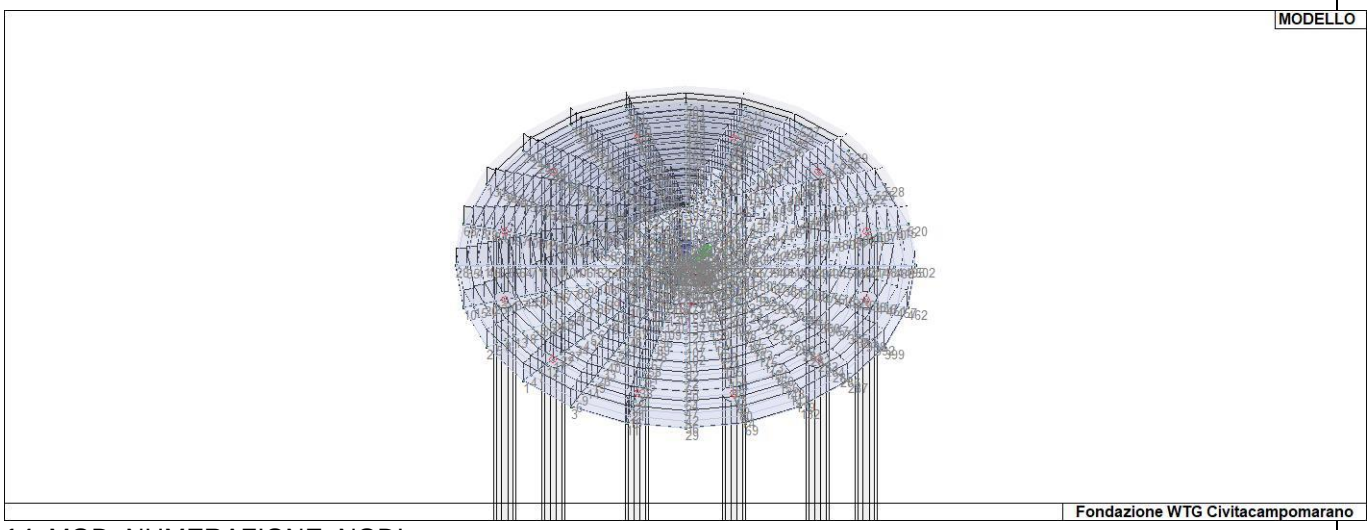

14_MOD_NUMERAZIONE_NODI

6. MODELLAZIONE STRUTTURA: ELEMENTI SHELL

6.1. LEGENDA TABELLA DATI SHELL

Il programma utilizza per la modellazione elementi a tre o quattro nodi denominati in generale shell.

Ogni elemento shell è individuato dai nodi I, J, K, L (L=I per gli elementi a tre nodi).

Ogni elemento è caratterizzato da un insieme di proprietà riportate in tabella che ne completano la modellazione.

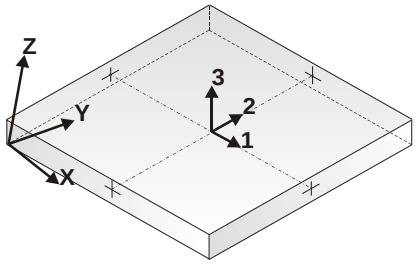

orientamento elementi 3D non verticali

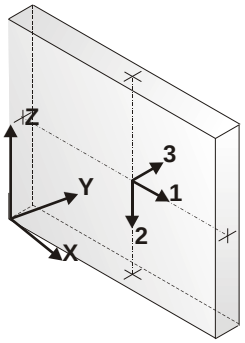

orientamento elementi 3D verticali

In particolare per ogni elemento viene indicato in tabella:

Elem.	numero dell'elemento
Note	codice di comportamento: *Guscio* (elemento guscio in elevazione non verticale) *Guscio fond.* (elemento guscio su suolo elastico) *Setto* (elemento guscio in elevazione verticale) *Membrana* (elemento guscio con comportamento membranale)
Nodo I (J, K, L)	numero del nodo I (J, K, L)
Mat.	codice del materiale assegnato all'elemento
Spessore	spessore dell'elemento (costante)
Wink V	costante di sottofondo (coefficiente di Winkler) per la modellazione del suolo elastico verticale
Wink O	costante di sottofondo (coefficiente di Winkler) per la modellazione del suolo elastico orizzontale

Con riferimento al **Documento di Affidabilità** "*Test di validazione del software di calcolo PRO_SAP e dei moduli aggiuntivi PRO_SAP Modulo Geotecnico, PRO_CAD nodi acciaio e PRO_MST*" - versione Maggio 2011, disponibile per il download sul sito **www.2si.it**, si segnalano i seguenti esempi applicativi:

Test N°	Titolo
8	MENSOLE CON ELEMENTI PLATE E MATERIALE ORTOTROPO
10	PIASTRA CON ELEMENTI PLATE E MATERIALE ORTOTROPO
21	DRILLING
25	TENSIONI DI ELEMENTI PLATE
31	REALIZZAZIONE DI MESH PIANA SU GEOMETRIA CON PUNTI FISSI IMPORTATA DA FILE .DXF
32	REALIZZAZIONE DI MESH PIANA SU GEOMETRIA CON SEGMENTI E FORI INTERNI IMPORTATA DA FILE .DXF
33	REALIZZAZIONE DI MESH PIANE SU GEOMETRIE COSTRUITE IN PRO_SAP
34	ANALISI DI BUCKLING DI PIASTRA ISOTROPA
35	ANALISI DI BUCKLING DI UN CILINDRO COMPRESSO INCASTRATO ALLA BASE
36	ANALISI DI PARETI FORATE
37	BIMETALLIC STRIP (NAFEMS EXERCISE 6)
38	ANALISI ELASTICA DI PIASTRA CON INTAGLIO CIRCOLARE (FLAT BAR WITH EDGE NOTCHES-NAFEMS EXERCISE 9)
39	PLATEA NERVATA
45	VERIFICA A PUNZONAMENTO ALLO SLU DI PIASTRE IN C.A.
117	PROGETTO E VERIFICA DI GUSCI IN MATERIALE XLAM
118	PROGETTO E VERIFICA DI PARETI IN MATERIALE XLAM E RELATIVI COLLEGAMENTI

Elem.	Note	Nodo I	Nodo J	Nodo K	Nodo L	Mat.	Spessore	SvincoloWink	V Wink O
					cm		daN/cm3	daN/cm3	
1	Guscio fond.	2 1	4	5	9	125.0		10.00	4.12
2	Guscio fond.	5 4	7	8	9	140.0		10.00	4.12
3	Guscio fond.	8 7	12	13	9	155.0		10.00	4.12
4	Guscio fond.	13 12	17	18	9	170.0		10.00	4.12
5	Guscio fond.	18 17	22	25	9	185.0		10.00	4.12
6	Guscio fond.	25 22	27	32	9	200.0		10.00	4.12
7	Guscio fond.	32 27	34	39	9	215.0		10.00	4.12

8	Guscio fond.	39	34	43	48	9	230.0	10.00	4.12
9	Guscio fond.	48	43	52	55	9	245.0	10.00	4.12
10	Guscio fond.	55	52	61	62	9	260.0	10.00	4.12
11	Guscio fond.	62	61	70	75	9	275.0	10.00	4.12
12	Guscio fond.	75	70	83	86	9	290.0	10.00	4.12
13	Guscio fond.	86	83	94	99	9	305.0	10.00	4.12
14	Guscio fond.	99	94	105	110	9	320.0	10.00	4.12
15	Guscio fond.	110	105	118	121	9	335.0	10.00	4.12
16	Guscio fond.	121	118	133	134	9	350.0	10.00	4.12
17	Guscio fond.	134	133	144	151	9	435.0	10.00	4.12
18	Guscio fond.	151	144	167	171	9	435.0	10.00	4.12
19	Guscio fond.	171	167	186	187	9	435.0	10.00	4.12
20	Guscio fond.	187	186	205	206	9	435.0	10.00	4.12
21	Guscio fond.	206	205	224	225	9	435.0	10.00	4.12
22	Guscio fond.	225	224	265		9	435.0	10.00	4.12
23	Guscio fond.	1	3	6	4	9	125.0	10.00	4.12
24	Guscio fond.	4	6	9	7	9	140.0	10.00	4.12
25	Guscio fond.	7	9	14	12	9	155.0	10.00	4.12
26	Guscio fond.	12	14	19	17	9	170.0	10.00	4.12
27	Guscio fond.	17	19	26	22	9	185.0	10.00	4.12
28	Guscio fond.	22	26	33	27	9	200.0	10.00	4.12
29	Guscio fond.	27	33	40	34	9	215.0	10.00	4.12
30	Guscio fond.	34	40	49	43	9	230.0	10.00	4.12
31	Guscio fond.	43	49	56	52	9	245.0	10.00	4.12
32	Guscio fond.	52	56	63	61	9	260.0	10.00	4.12
33	Guscio fond.	61	63	76	70	9	275.0	10.00	4.12
34	Guscio fond.	70	76	87	83	9	290.0	10.00	4.12
35	Guscio fond.	83	87	100	94	9	305.0	10.00	4.12
36	Guscio fond.	94	100	111	105	9	320.0	10.00	4.12
37	Guscio fond.	105	111	122	118	9	335.0	10.00	4.12
38	Guscio fond.	118	122	135	133	9	350.0	10.00	4.12
39	Guscio fond.	133	135	152	144	9	435.0	10.00	4.12
40	Guscio fond.	144	152	172	167	9	435.0	10.00	4.12
41	Guscio fond.	167	172	188	186	9	435.0	10.00	4.12
42	Guscio fond.	186	188	207	205	9	435.0	10.00	4.12
43	Guscio fond.	205	207	226	224	9	435.0	10.00	4.12
44	Guscio fond.	224	226	265		9	435.0	10.00	4.12
45	Guscio fond.	3	11	16	6	9	125.0	10.00	4.12
46	Guscio fond.	6	16	21	9	9	140.0	10.00	4.12
47	Guscio fond.	9	21	24	14	9	155.0	10.00	4.12
48	Guscio fond.	14	24	31	19	9	170.0	10.00	4.12
49	Guscio fond.	19	31	38	26	9	185.0	10.00	4.12
50	Guscio fond.	26	38	45	33	9	200.0	10.00	4.12
51	Guscio fond.	33	45	51	40	9	215.0	10.00	4.12
52	Guscio fond.	40	51	58	49	9	230.0	10.00	4.12
53	Guscio fond.	49	58	67	56	9	245.0	10.00	4.12

54Guscio fond.	56 67	78	63	9	260.0	10.00	4.12
55Guscio fond.	63 78	89	76	9	275.0	10.00	4.12
56Guscio fond.	76 89	96	87	9	290.0	10.00	4.12
57Guscio fond.	87 96	109	100	9	305.0	10.00	4.12
58Guscio fond.	100109	120	111	9	320.0	10.00	4.12
59Guscio fond.	111120	130	122	9	335.0	10.00	4.12
60Guscio fond.	122130	146	135	9	350.0	10.00	4.12
61Guscio fond.	135146	162	152	9	435.0	10.00	4.12
62Guscio fond.	152162	179	172	9	435.0	10.00	4.12
63Guscio fond.	172179	196	188	9	435.0	10.00	4.12
64Guscio fond.	188196	213	207	9	435.0	10.00	4.12
65Guscio fond.	207213	232	226	9	435.0	10.00	4.12
66Guscio fond.	265226	232		9	435.0	10.00	4.12
67Guscio fond.	11 29	36	16	9	125.0	10.00	4.12
68Guscio fond.	16 36	42	21	9	140.0	10.00	4.12
69Guscio fond.	21 42	47	24	9	155.0	10.00	4.12
70Guscio fond.	24 47	54	31	9	170.0	10.00	4.12
71Guscio fond.	31 54	60	38	9	185.0	10.00	4.12
72Guscio fond.	38 60	65	45	9	200.0	10.00	4.12
73Guscio fond.	45 65	72	51	9	215.0	10.00	4.12
74Guscio fond.	51 72	82	58	9	230.0	10.00	4.12
75Guscio fond.	58 82	91	67	9	245.0	10.00	4.12
76Guscio fond.	67 91	102	78	9	260.0	10.00	4.12
77Guscio fond.	78102	107	89	9	275.0	10.00	4.12
78Guscio fond.	89107	117	96	9	290.0	10.00	4.12
79Guscio fond.	96117	126	109	9	305.0	10.00	4.12
80Guscio fond.	109126	137	120	9	320.0	10.00	4.12
81Guscio fond.	120137	154	130	9	335.0	10.00	4.12
82Guscio fond.	130154	166	146	9	350.0	10.00	4.12
83Guscio fond.	146166	177	162	9	435.0	10.00	4.12
84Guscio fond.	162177	192	179	9	435.0	10.00	4.12
85Guscio fond.	179192	204	196	9	435.0	10.00	4.12
86Guscio fond.	196204	219	213	9	435.0	10.00	4.12
87Guscio fond.	213219	234	232	9	435.0	10.00	4.12
88Guscio fond.	265232	234		9	435.0	10.00	4.12
89Guscio fond.	36 29	69	74	9	125.0	10.00	4.12
90Guscio fond.	42 36	74	80	9	140.0	10.00	4.12
91Guscio fond.	47 42	80	85	9	155.0	10.00	4.12
92Guscio fond.	54 47	85	93	9	170.0	10.00	4.12
93Guscio fond.	60 54	93	98	9	185.0	10.00	4.12
94Guscio fond.	65 60	98	104	9	200.0	10.00	4.12
95Guscio fond.	72 65	104	113	9	215.0	10.00	4.12
96Guscio fond.	82 72	113	115	9	230.0	10.00	4.12
97Guscio fond.	91 82	115	124	9	245.0	10.00	4.12
98Guscio fond.	10291	124	128	9	260.0	10.00	4.12
99Guscio fond.	107102	128	141	9	275.0	10.00	4.12

100Guscio fond.	117107	141	150	9	290.0	10.00	4.12
101Guscio fond.	126117	150	159	9	305.0	10.00	4.12
102Guscio fond.	137126	159	169	9	320.0	10.00	4.12
103Guscio fond.	154137	169	181	9	335.0	10.00	4.12
104Guscio fond.	166154	181	190	9	350.0	10.00	4.12
105Guscio fond.	177166	190	200	9	435.0	10.00	4.12
106Guscio fond.	192177	200	211	9	435.0	10.00	4.12
107Guscio fond.	204192	211	217	9	435.0	10.00	4.12
108Guscio fond.	219204	217	228	9	435.0	10.00	4.12
109Guscio fond.	234219	228	238	9	435.0	10.00	4.12
110Guscio fond.	265234	238		9	435.0	10.00	4.12
111Guscio fond.	74 69	132	139	9	125.0	10.00	4.12
112Guscio fond.	80 74	139	143	9	140.0	10.00	4.12
113Guscio fond.	85 80	143	148	9	155.0	10.00	4.12
114Guscio fond.	93 85	148	156	9	170.0	10.00	4.12
115Guscio fond.	98 93	156	160	9	185.0	10.00	4.12
116Guscio fond.	10498	160	164	9	200.0	10.00	4.12
117Guscio fond.	113104	164	173	9	215.0	10.00	4.12
118Guscio fond.	115113	173	175	9	230.0	10.00	4.12
119Guscio fond.	124115	175	183	9	245.0	10.00	4.12
120Guscio fond.	128124	183	185	9	260.0	10.00	4.12
121Guscio fond.	141128	185	194	9	275.0	10.00	4.12
122Guscio fond.	150141	194	198	9	290.0	10.00	4.12
123Guscio fond.	159150	198	202	9	305.0	10.00	4.12
124Guscio fond.	169159	202	209	9	320.0	10.00	4.12
125Guscio fond.	181169	209	215	9	335.0	10.00	4.12
126Guscio fond.	190181	215	221	9	350.0	10.00	4.12
127Guscio fond.	200190	221	223	9	435.0	10.00	4.12
128Guscio fond.	211200	223	230	9	435.0	10.00	4.12
129Guscio fond.	217211	230	236	9	435.0	10.00	4.12
130Guscio fond.	228217	236	240	9	435.0	10.00	4.12
131Guscio fond.	238228	240	242	9	435.0	10.00	4.12
132Guscio fond.	265238	242		9	435.0	10.00	4.12
133Guscio fond.	139132	287	286	9	125.0	10.00	4.12
134Guscio fond.	143139	286	285	9	140.0	10.00	4.12
135Guscio fond.	148143	285	284	9	155.0	10.00	4.12
136Guscio fond.	156148	284	283	9	170.0	10.00	4.12
137Guscio fond.	160156	283	282	9	185.0	10.00	4.12
138Guscio fond.	164160	282	281	9	200.0	10.00	4.12
139Guscio fond.	173164	281	280	9	215.0	10.00	4.12
140Guscio fond.	175173	280	279	9	230.0	10.00	4.12
141Guscio fond.	183175	279	278	9	245.0	10.00	4.12
142Guscio fond.	185183	278	277	9	260.0	10.00	4.12
143Guscio fond.	194185	277	276	9	275.0	10.00	4.12
144Guscio fond.	198194	276	275	9	290.0	10.00	4.12
145Guscio fond.	202198	275	274	9	305.0	10.00	4.12

146Guscio fond.	209202	274	273	9	320.0	10.00	4.12
147Guscio fond.	215209	273	272	9	335.0	10.00	4.12
148Guscio fond.	221215	272	271	9	350.0	10.00	4.12
149Guscio fond.	223221	271	270	9	435.0	10.00	4.12
150Guscio fond.	230223	270	269	9	435.0	10.00	4.12
151Guscio fond.	236230	269	268	9	435.0	10.00	4.12
152Guscio fond.	240236	268	267	9	435.0	10.00	4.12
153Guscio fond.	242240	267	266	9	435.0	10.00	4.12
154Guscio fond.	265242	266		9	435.0	10.00	4.12
155Guscio fond.	286287	399	392	9	125.0	10.00	4.12
156Guscio fond.	285286	392	388	9	140.0	10.00	4.12
157Guscio fond.	284285	388	383	9	155.0	10.00	4.12
158Guscio fond.	283284	383	375	9	170.0	10.00	4.12
159Guscio fond.	282283	375	373	9	185.0	10.00	4.12
160Guscio fond.	281282	373	367	9	200.0	10.00	4.12
161Guscio fond.	280281	367	360	9	215.0	10.00	4.12
162Guscio fond.	279280	360	356	9	230.0	10.00	4.12
163Guscio fond.	278279	356	348	9	245.0	10.00	4.12
164Guscio fond.	277278	348	346	9	260.0	10.00	4.12
165Guscio fond.	276277	346	337	9	275.0	10.00	4.12
166Guscio fond.	275276	337	333	9	290.0	10.00	4.12
167Guscio fond.	274275	333	329	9	305.0	10.00	4.12
168Guscio fond.	273274	329	322	9	320.0	10.00	4.12
169Guscio fond.	272273	322	316	9	335.0	10.00	4.12
170Guscio fond.	271272	316	310	9	350.0	10.00	4.12
171Guscio fond.	270271	310	308	9	435.0	10.00	4.12
172Guscio fond.	269270	308	301	9	435.0	10.00	4.12
173Guscio fond.	268269	301	295	9	435.0	10.00	4.12
174Guscio fond.	267268	295	291	9	435.0	10.00	4.12
175Guscio fond.	266267	291	289	9	435.0	10.00	4.12
176Guscio fond.	265266	289		9	435.0	10.00	4.12
177Guscio fond.	392399	462	457	9	125.0	10.00	4.12
178Guscio fond.	388392	457	451	9	140.0	10.00	4.12
179Guscio fond.	383388	451	446	9	155.0	10.00	4.12
180Guscio fond.	375383	446	438	9	170.0	10.00	4.12
181Guscio fond.	373375	438	433	9	185.0	10.00	4.12
182Guscio fond.	367373	433	427	9	200.0	10.00	4.12
183Guscio fond.	360367	427	418	9	215.0	10.00	4.12
184Guscio fond.	356360	418	416	9	230.0	10.00	4.12
185Guscio fond.	348356	416	407	9	245.0	10.00	4.12
186Guscio fond.	346348	407	403	9	260.0	10.00	4.12
187Guscio fond.	337346	403	390	9	275.0	10.00	4.12
188Guscio fond.	333337	390	381	9	290.0	10.00	4.12
189Guscio fond.	329333	381	372	9	305.0	10.00	4.12
190Guscio fond.	322329	372	362	9	320.0	10.00	4.12
191Guscio fond.	316322	362	350	9	335.0	10.00	4.12

192Guscio fond.	310316	350	341	9	350.0	10.00	4.12
193Guscio fond.	308310	341	331	9	435.0	10.00	4.12
194Guscio fond.	301308	331	320	9	435.0	10.00	4.12
195Guscio fond.	295301	320	314	9	435.0	10.00	4.12
196Guscio fond.	291295	314	303	9	435.0	10.00	4.12
197Guscio fond.	289291	303	293	9	435.0	10.00	4.12
198Guscio fond.	265289	293		9	435.0	10.00	4.12
199Guscio fond.	457462	502	495	9	125.0	10.00	4.12
200Guscio fond.	451457	495	489	9	140.0	10.00	4.12
201Guscio fond.	446451	489	484	9	155.0	10.00	4.12
202Guscio fond.	438446	484	477	9	170.0	10.00	4.12
203Guscio fond.	433438	477	471	9	185.0	10.00	4.12
204Guscio fond.	427433	471	466	9	200.0	10.00	4.12
205Guscio fond.	418427	466	459	9	215.0	10.00	4.12
206Guscio fond.	416418	459	449	9	230.0	10.00	4.12
207Guscio fond.	407416	449	440	9	245.0	10.00	4.12
208Guscio fond.	403407	440	429	9	260.0	10.00	4.12
209Guscio fond.	390403	429	424	9	275.0	10.00	4.12
210Guscio fond.	381390	424	414	9	290.0	10.00	4.12
211Guscio fond.	372381	414	405	9	305.0	10.00	4.12
212Guscio fond.	362372	405	394	9	320.0	10.00	4.12
213Guscio fond.	350362	394	377	9	335.0	10.00	4.12
214Guscio fond.	341350	377	365	9	350.0	10.00	4.12
215Guscio fond.	331341	365	354	9	435.0	10.00	4.12
216Guscio fond.	320331	354	339	9	435.0	10.00	4.12
217Guscio fond.	314320	339	327	9	435.0	10.00	4.12
218Guscio fond.	303314	327	312	9	435.0	10.00	4.12
219Guscio fond.	293303	312	297	9	435.0	10.00	4.12
220Guscio fond.	265293	297		9	435.0	10.00	4.12
221Guscio fond.	515495	502	520	9	125.0	10.00	4.12
222Guscio fond.	510489	495	515	9	140.0	10.00	4.12
223Guscio fond.	507484	489	510	9	155.0	10.00	4.12
224Guscio fond.	500477	484	507	9	170.0	10.00	4.12
225Guscio fond.	493471	477	500	9	185.0	10.00	4.12
226Guscio fond.	486466	471	493	9	200.0	10.00	4.12
227Guscio fond.	480459	466	486	9	215.0	10.00	4.12
228Guscio fond.	473449	459	480	9	230.0	10.00	4.12
229Guscio fond.	464440	449	473	9	245.0	10.00	4.12
230Guscio fond.	453429	440	464	9	260.0	10.00	4.12
231Guscio fond.	442424	429	453	9	275.0	10.00	4.12
232Guscio fond.	435414	424	442	9	290.0	10.00	4.12
233Guscio fond.	422405	414	435	9	305.0	10.00	4.12
234Guscio fond.	411394	405	422	9	320.0	10.00	4.12
235Guscio fond.	401377	394	411	9	335.0	10.00	4.12
236Guscio fond.	385365	377	401	9	350.0	10.00	4.12
237Guscio fond.	369354	365	385	9	435.0	10.00	4.12

238Guscio fond.	352339	354	369	9	435.0	10.00	4.12
239Guscio fond.	335327	339	352	9	435.0	10.00	4.12
240Guscio fond.	318312	327	335	9	435.0	10.00	4.12
241Guscio fond.	299297	312	318	9	435.0	10.00	4.12
242Guscio fond.	265297	299		9	435.0	10.00	4.12
243Guscio fond.	525515	520	528	9	125.0	10.00	4.12
244Guscio fond.	522510	515	525	9	140.0	10.00	4.12
245Guscio fond.	517507	510	522	9	155.0	10.00	4.12
246Guscio fond.	512500	507	517	9	170.0	10.00	4.12
247Guscio fond.	505493	500	512	9	185.0	10.00	4.12
248Guscio fond.	498486	493	505	9	200.0	10.00	4.12
249Guscio fond.	491480	486	498	9	215.0	10.00	4.12
250Guscio fond.	482473	480	491	9	230.0	10.00	4.12
251Guscio fond.	475464	473	482	9	245.0	10.00	4.12
252Guscio fond.	468453	464	475	9	260.0	10.00	4.12
253Guscio fond.	455442	453	468	9	275.0	10.00	4.12
254Guscio fond.	444435	442	455	9	290.0	10.00	4.12
255Guscio fond.	431422	435	444	9	305.0	10.00	4.12
256Guscio fond.	420411	422	431	9	320.0	10.00	4.12
257Guscio fond.	409401	411	420	9	335.0	10.00	4.12
258Guscio fond.	396385	401	409	9	350.0	10.00	4.12
259Guscio fond.	379369	385	396	9	435.0	10.00	4.12
260Guscio fond.	359352	369	379	9	435.0	10.00	4.12
261Guscio fond.	343335	352	359	9	435.0	10.00	4.12
262Guscio fond.	324318	335	343	9	435.0	10.00	4.12
263Guscio fond.	305299	318	324	9	435.0	10.00	4.12
264Guscio fond.	265299	305		9	435.0	10.00	4.12
265Guscio fond.	526525	528	529	9	125.0	10.00	4.12
266Guscio fond.	523522	525	526	9	140.0	10.00	4.12
267Guscio fond.	518517	522	523	9	155.0	10.00	4.12
268Guscio fond.	513512	517	518	9	170.0	10.00	4.12
269Guscio fond.	508505	512	513	9	185.0	10.00	4.12
270Guscio fond.	503498	505	508	9	200.0	10.00	4.12
271Guscio fond.	496491	498	503	9	215.0	10.00	4.12
272Guscio fond.	487482	491	496	9	230.0	10.00	4.12
273Guscio fond.	478475	482	487	9	245.0	10.00	4.12
274Guscio fond.	469468	475	478	9	260.0	10.00	4.12
275Guscio fond.	460455	468	469	9	275.0	10.00	4.12
276Guscio fond.	447444	455	460	9	290.0	10.00	4.12
277Guscio fond.	436431	444	447	9	305.0	10.00	4.12
278Guscio fond.	425420	431	436	9	320.0	10.00	4.12
279Guscio fond.	412409	420	425	9	335.0	10.00	4.12
280Guscio fond.	397396	409	412	9	350.0	10.00	4.12
281Guscio fond.	386379	396	397	9	435.0	10.00	4.12
282Guscio fond.	363359	379	386	9	435.0	10.00	4.12
283Guscio fond.	344343	359	363	9	435.0	10.00	4.12

284Guscio fond.	325324	343	344	9	435.0	10.00	4.12
285Guscio fond.	306305	324	325	9	435.0	10.00	4.12
286Guscio fond.	306265	305		9	435.0	10.00	4.12
287Guscio fond.	524526	529	527	9	125.0	10.00	4.12
288Guscio fond.	521523	526	524	9	140.0	10.00	4.12
289Guscio fond.	516518	523	521	9	155.0	10.00	4.12
290Guscio fond.	511513	518	516	9	170.0	10.00	4.12
291Guscio fond.	504508	513	511	9	185.0	10.00	4.12
292Guscio fond.	497503	508	504	9	200.0	10.00	4.12
293Guscio fond.	490496	503	497	9	215.0	10.00	4.12
294Guscio fond.	481487	496	490	9	230.0	10.00	4.12
295Guscio fond.	474478	487	481	9	245.0	10.00	4.12
296Guscio fond.	467469	478	474	9	260.0	10.00	4.12
297Guscio fond.	454460	469	467	9	275.0	10.00	4.12
298Guscio fond.	443447	460	454	9	290.0	10.00	4.12
299Guscio fond.	430436	447	443	9	305.0	10.00	4.12
300Guscio fond.	419425	436	430	9	320.0	10.00	4.12
301Guscio fond.	408412	425	419	9	335.0	10.00	4.12
302Guscio fond.	395397	412	408	9	350.0	10.00	4.12
303Guscio fond.	378386	397	395	9	435.0	10.00	4.12
304Guscio fond.	358363	386	378	9	435.0	10.00	4.12
305Guscio fond.	342344	363	358	9	435.0	10.00	4.12
306Guscio fond.	323325	344	342	9	435.0	10.00	4.12
307Guscio fond.	304306	325	323	9	435.0	10.00	4.12
308Guscio fond.	304265	306		9	435.0	10.00	4.12
309Guscio fond.	514524	527	519	9	125.0	10.00	4.12
310Guscio fond.	509521	524	514	9	140.0	10.00	4.12
311Guscio fond.	506516	521	509	9	155.0	10.00	4.12
312Guscio fond.	499511	516	506	9	170.0	10.00	4.12
313Guscio fond.	492504	511	499	9	185.0	10.00	4.12
314Guscio fond.	485497	504	492	9	200.0	10.00	4.12
315Guscio fond.	479490	497	485	9	215.0	10.00	4.12
316Guscio fond.	472481	490	479	9	230.0	10.00	4.12
317Guscio fond.	463474	481	472	9	245.0	10.00	4.12
318Guscio fond.	452467	474	463	9	260.0	10.00	4.12
319Guscio fond.	441454	467	452	9	275.0	10.00	4.12
320Guscio fond.	434443	454	441	9	290.0	10.00	4.12
321Guscio fond.	421430	443	434	9	305.0	10.00	4.12
322Guscio fond.	410419	430	421	9	320.0	10.00	4.12
323Guscio fond.	400408	419	410	9	335.0	10.00	4.12
324Guscio fond.	384395	408	400	9	350.0	10.00	4.12
325Guscio fond.	368378	395	384	9	435.0	10.00	4.12
326Guscio fond.	351358	378	368	9	435.0	10.00	4.12
327Guscio fond.	334342	358	351	9	435.0	10.00	4.12
328Guscio fond.	317323	342	334	9	435.0	10.00	4.12
329Guscio fond.	298304	323	317	9	435.0	10.00	4.12

330Guscio fond.	298265	304		9	435.0	10.00	4.12
331Guscio fond.	494514	519	501	9	125.0	10.00	4.12
332Guscio fond.	488509	514	494	9	140.0	10.00	4.12
333Guscio fond.	483506	509	488	9	155.0	10.00	4.12
334Guscio fond.	476499	506	483	9	170.0	10.00	4.12
335Guscio fond.	470492	499	476	9	185.0	10.00	4.12
336Guscio fond.	465485	492	470	9	200.0	10.00	4.12
337Guscio fond.	458479	485	465	9	215.0	10.00	4.12
338Guscio fond.	448472	479	458	9	230.0	10.00	4.12
339Guscio fond.	439463	472	448	9	245.0	10.00	4.12
340Guscio fond.	428452	463	439	9	260.0	10.00	4.12
341Guscio fond.	423441	452	428	9	275.0	10.00	4.12
342Guscio fond.	413434	441	423	9	290.0	10.00	4.12
343Guscio fond.	404421	434	413	9	305.0	10.00	4.12
344Guscio fond.	393410	421	404	9	320.0	10.00	4.12
345Guscio fond.	376400	410	393	9	335.0	10.00	4.12
346Guscio fond.	364384	400	376	9	350.0	10.00	4.12
347Guscio fond.	353368	384	364	9	435.0	10.00	4.12
348Guscio fond.	338351	368	353	9	435.0	10.00	4.12
349Guscio fond.	326334	351	338	9	435.0	10.00	4.12
350Guscio fond.	311317	334	326	9	435.0	10.00	4.12
351Guscio fond.	296298	317	311	9	435.0	10.00	4.12
352Guscio fond.	296265	298		9	435.0	10.00	4.12
353Guscio fond.	461456	494	501	9	125.0	10.00	4.12
354Guscio fond.	456450	488	494	9	140.0	10.00	4.12
355Guscio fond.	450445	483	488	9	155.0	10.00	4.12
356Guscio fond.	445437	476	483	9	170.0	10.00	4.12
357Guscio fond.	437432	470	476	9	185.0	10.00	4.12
358Guscio fond.	432426	465	470	9	200.0	10.00	4.12
359Guscio fond.	426417	458	465	9	215.0	10.00	4.12
360Guscio fond.	417415	448	458	9	230.0	10.00	4.12
361Guscio fond.	415406	439	448	9	245.0	10.00	4.12
362Guscio fond.	406402	428	439	9	260.0	10.00	4.12
363Guscio fond.	402389	423	428	9	275.0	10.00	4.12
364Guscio fond.	389380	413	423	9	290.0	10.00	4.12
365Guscio fond.	380371	404	413	9	305.0	10.00	4.12
366Guscio fond.	371361	393	404	9	320.0	10.00	4.12
367Guscio fond.	361349	376	393	9	335.0	10.00	4.12
368Guscio fond.	349340	364	376	9	350.0	10.00	4.12
369Guscio fond.	340330	353	364	9	435.0	10.00	4.12
370Guscio fond.	330319	338	353	9	435.0	10.00	4.12
371Guscio fond.	319313	326	338	9	435.0	10.00	4.12
372Guscio fond.	313302	311	326	9	435.0	10.00	4.12
373Guscio fond.	302292	296	311	9	435.0	10.00	4.12
374Guscio fond.	292265	296		9	435.0	10.00	4.12
375Guscio fond.	398391	456	461	9	125.0	10.00	4.12

376Guscio fond.	391387	450	456	9	140.0	10.00	4.12
377Guscio fond.	387382	445	450	9	155.0	10.00	4.12
378Guscio fond.	382374	437	445	9	170.0	10.00	4.12
379Guscio fond.	374370	432	437	9	185.0	10.00	4.12
380Guscio fond.	370366	426	432	9	200.0	10.00	4.12
381Guscio fond.	366357	417	426	9	215.0	10.00	4.12
382Guscio fond.	357355	415	417	9	230.0	10.00	4.12
383Guscio fond.	355347	406	415	9	245.0	10.00	4.12
384Guscio fond.	347345	402	406	9	260.0	10.00	4.12
385Guscio fond.	345336	389	402	9	275.0	10.00	4.12
386Guscio fond.	336332	380	389	9	290.0	10.00	4.12
387Guscio fond.	332328	371	380	9	305.0	10.00	4.12
388Guscio fond.	328321	361	371	9	320.0	10.00	4.12
389Guscio fond.	321315	349	361	9	335.0	10.00	4.12
390Guscio fond.	315309	340	349	9	350.0	10.00	4.12
391Guscio fond.	309307	330	340	9	435.0	10.00	4.12
392Guscio fond.	307300	319	330	9	435.0	10.00	4.12
393Guscio fond.	300294	313	319	9	435.0	10.00	4.12
394Guscio fond.	294290	302	313	9	435.0	10.00	4.12
395Guscio fond.	290288	292	302	9	435.0	10.00	4.12
396Guscio fond.	288265	292		9	435.0	10.00	4.12
397Guscio fond.	243244	391	398	9	125.0	10.00	4.12
398Guscio fond.	244245	387	391	9	140.0	10.00	4.12
399Guscio fond.	245246	382	387	9	155.0	10.00	4.12
400Guscio fond.	246247	374	382	9	170.0	10.00	4.12
401Guscio fond.	247248	370	374	9	185.0	10.00	4.12
402Guscio fond.	248249	366	370	9	200.0	10.00	4.12
403Guscio fond.	249250	357	366	9	215.0	10.00	4.12
404Guscio fond.	250251	355	357	9	230.0	10.00	4.12
405Guscio fond.	251252	347	355	9	245.0	10.00	4.12
406Guscio fond.	252253	345	347	9	260.0	10.00	4.12
407Guscio fond.	253254	336	345	9	275.0	10.00	4.12
408Guscio fond.	254255	332	336	9	290.0	10.00	4.12
409Guscio fond.	255256	328	332	9	305.0	10.00	4.12
410Guscio fond.	256257	321	328	9	320.0	10.00	4.12
411Guscio fond.	257258	315	321	9	335.0	10.00	4.12
412Guscio fond.	258259	309	315	9	350.0	10.00	4.12
413Guscio fond.	259260	307	309	9	435.0	10.00	4.12
414Guscio fond.	260261	300	307	9	435.0	10.00	4.12
415Guscio fond.	261262	294	300	9	435.0	10.00	4.12
416Guscio fond.	262263	290	294	9	435.0	10.00	4.12
417Guscio fond.	263264	288	290	9	435.0	10.00	4.12
418Guscio fond.	264265	288		9	435.0	10.00	4.12
419Guscio fond.	131138	244	243	9	125.0	10.00	4.12
420Guscio fond.	138142	245	244	9	140.0	10.00	4.12
421Guscio fond.	142147	246	245	9	155.0	10.00	4.12

422Guscio fond.	147155	247	246	9	170.0	10.00	4.12
423Guscio fond.	155157	248	247	9	185.0	10.00	4.12
424Guscio fond.	157163	249	248	9	200.0	10.00	4.12
425Guscio fond.	163170	250	249	9	215.0	10.00	4.12
426Guscio fond.	170174	251	250	9	230.0	10.00	4.12
427Guscio fond.	174182	252	251	9	245.0	10.00	4.12
428Guscio fond.	182184	253	252	9	260.0	10.00	4.12
429Guscio fond.	184193	254	253	9	275.0	10.00	4.12
430Guscio fond.	193197	255	254	9	290.0	10.00	4.12
431Guscio fond.	197201	256	255	9	305.0	10.00	4.12
432Guscio fond.	201208	257	256	9	320.0	10.00	4.12
433Guscio fond.	208214	258	257	9	335.0	10.00	4.12
434Guscio fond.	214220	259	258	9	350.0	10.00	4.12
435Guscio fond.	220222	260	259	9	435.0	10.00	4.12
436Guscio fond.	222229	261	260	9	435.0	10.00	4.12
437Guscio fond.	229235	262	261	9	435.0	10.00	4.12
438Guscio fond.	235239	263	262	9	435.0	10.00	4.12
439Guscio fond.	239241	264	263	9	435.0	10.00	4.12
440Guscio fond.	264241	265		9	435.0	10.00	4.12
441Guscio fond.	68 73	138	131	9	125.0	10.00	4.12
442Guscio fond.	73 79	142	138	9	140.0	10.00	4.12
443Guscio fond.	79 84	147	142	9	155.0	10.00	4.12
444Guscio fond.	84 92	155	147	9	170.0	10.00	4.12
445Guscio fond.	92 97	157	155	9	185.0	10.00	4.12
446Guscio fond.	97103	163	157	9	200.0	10.00	4.12
447Guscio fond.	103112	170	163	9	215.0	10.00	4.12
448Guscio fond.	112114	174	170	9	230.0	10.00	4.12
449Guscio fond.	114123	182	174	9	245.0	10.00	4.12
450Guscio fond.	123127	184	182	9	260.0	10.00	4.12
451Guscio fond.	127140	193	184	9	275.0	10.00	4.12
452Guscio fond.	140149	197	193	9	290.0	10.00	4.12
453Guscio fond.	149158	201	197	9	305.0	10.00	4.12
454Guscio fond.	158168	208	201	9	320.0	10.00	4.12
455Guscio fond.	168180	214	208	9	335.0	10.00	4.12
456Guscio fond.	180189	220	214	9	350.0	10.00	4.12
457Guscio fond.	189199	222	220	9	435.0	10.00	4.12
458Guscio fond.	199210	229	222	9	435.0	10.00	4.12
459Guscio fond.	210216	235	229	9	435.0	10.00	4.12
460Guscio fond.	216227	239	235	9	435.0	10.00	4.12
461Guscio fond.	227237	241	239	9	435.0	10.00	4.12
462Guscio fond.	241237	265		9	435.0	10.00	4.12
463Guscio fond.	28 35	73	68	9	125.0	10.00	4.12
464Guscio fond.	35 41	79	73	9	140.0	10.00	4.12
465Guscio fond.	41 46	84	79	9	155.0	10.00	4.12
466Guscio fond.	46 53	92	84	9	170.0	10.00	4.12
467Guscio fond.	53 59	97	92	9	185.0	10.00	4.12

468Guscio fond.	59 64	103	97	9	200.0	10.00	4.12
469Guscio fond.	64 71	112	103	9	215.0	10.00	4.12
470Guscio fond.	71 81	114	112	9	230.0	10.00	4.12
471Guscio fond.	81 90	123	114	9	245.0	10.00	4.12
472Guscio fond.	90101	127	123	9	260.0	10.00	4.12
473Guscio fond.	101106	140	127	9	275.0	10.00	4.12
474Guscio fond.	106116	149	140	9	290.0	10.00	4.12
475Guscio fond.	116125	158	149	9	305.0	10.00	4.12
476Guscio fond.	125136	168	158	9	320.0	10.00	4.12
477Guscio fond.	136153	180	168	9	335.0	10.00	4.12
478Guscio fond.	153165	189	180	9	350.0	10.00	4.12
479Guscio fond.	165176	199	189	9	435.0	10.00	4.12
480Guscio fond.	176191	210	199	9	435.0	10.00	4.12
481Guscio fond.	191203	216	210	9	435.0	10.00	4.12
482Guscio fond.	203218	227	216	9	435.0	10.00	4.12
483Guscio fond.	218233	237	227	9	435.0	10.00	4.12
484Guscio fond.	237233	265		9	435.0	10.00	4.12
485Guscio fond.	28 10	15	35	9	125.0	10.00	4.12
486Guscio fond.	35 15	20	41	9	140.0	10.00	4.12
487Guscio fond.	41 20	23	46	9	155.0	10.00	4.12
488Guscio fond.	46 23	30	53	9	170.0	10.00	4.12
489Guscio fond.	53 30	37	59	9	185.0	10.00	4.12
490Guscio fond.	59 37	44	64	9	200.0	10.00	4.12
491Guscio fond.	64 44	50	71	9	215.0	10.00	4.12
492Guscio fond.	71 50	57	81	9	230.0	10.00	4.12
493Guscio fond.	81 57	66	90	9	245.0	10.00	4.12
494Guscio fond.	90 66	77	101	9	260.0	10.00	4.12
495Guscio fond.	10177	88	106	9	275.0	10.00	4.12
496Guscio fond.	10688	95	116	9	290.0	10.00	4.12
497Guscio fond.	11695	108	125	9	305.0	10.00	4.12
498Guscio fond.	125108	119	136	9	320.0	10.00	4.12
499Guscio fond.	136119	129	153	9	335.0	10.00	4.12
500Guscio fond.	153129	145	165	9	350.0	10.00	4.12
501Guscio fond.	165145	161	176	9	435.0	10.00	4.12
502Guscio fond.	176161	178	191	9	435.0	10.00	4.12
503Guscio fond.	191178	195	203	9	435.0	10.00	4.12
504Guscio fond.	203195	212	218	9	435.0	10.00	4.12
505Guscio fond.	218212	231	233	9	435.0	10.00	4.12
506Guscio fond.	233231	265		9	435.0	10.00	4.12
507Guscio fond.	10 2	5	15	9	125.0	10.00	4.12
508Guscio fond.	15 5	8	20	9	140.0	10.00	4.12
509Guscio fond.	20 8	13	23	9	155.0	10.00	4.12
510Guscio fond.	23 13	18	30	9	170.0	10.00	4.12
511Guscio fond.	30 18	25	37	9	185.0	10.00	4.12
512Guscio fond.	37 25	32	44	9	200.0	10.00	4.12
513Guscio fond.	44 32	39	50	9	215.0	10.00	4.12

514Guscio fond.	50 39	48	57	9	230.0	10.00	4.12
515Guscio fond.	57 48	55	66	9	245.0	10.00	4.12
516Guscio fond.	66 55	62	77	9	260.0	10.00	4.12
517Guscio fond.	77 62	75	88	9	275.0	10.00	4.12
518Guscio fond.	88 75	86	95	9	290.0	10.00	4.12
519Guscio fond.	95 86	99	108	9	305.0	10.00	4.12
520Guscio fond.	10899	110	119	9	320.0	10.00	4.12
521Guscio fond.	119110	121	129	9	335.0	10.00	4.12
522Guscio fond.	129121	134	145	9	350.0	10.00	4.12
523Guscio fond.	145134	151	161	9	435.0	10.00	4.12
524Guscio fond.	161151	171	178	9	435.0	10.00	4.12
525Guscio fond.	178171	187	195	9	435.0	10.00	4.12
526Guscio fond.	195187	206	212	9	435.0	10.00	4.12
527Guscio fond.	212206	225	231	9	435.0	10.00	4.12
528Guscio fond.	231225	265		9	435.0	10.00	4.12

MODELLO

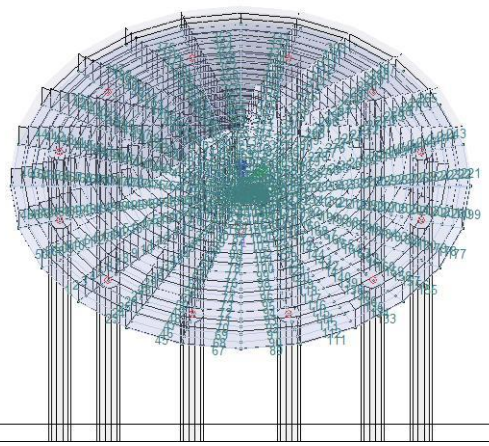

Fondazione WTG Civitacampomarano

16_MOD_NUMERAZIONE_D3

MODELLO

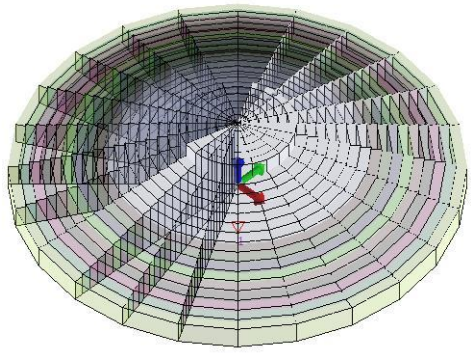

Fondazione WTG Civitacampomarano

16_MOD_SPESSORI_D3

7. MODELLAZIONE DELLE AZIONI

7.1. LEGENDA TABELLA DATI AZIONI

Il programma consente l'uso di diverse tipologie di carico (azioni). Le azioni utilizzate nella modellazione sono individuate da una sigla identificativa ed un codice numerico (gli elementi strutturali richiamano quest'ultimo nella propria descrizione). Per ogni azione applicata alla struttura viene di riportato il codice, il tipo e la sigla identificativa. Le tabelle successive dettagliano i valori caratteristici di ogni azione in relazione al tipo. Le tabelle riportano infatti i seguenti dati in relazione al tipo:

1	**carico concentrato nodale** 6 dati (forza Fx, Fy, Fz, momento Mx, My, Mz)
2	**spostamento nodale impresso** 6 dati (spostamento Tx,Ty,Tz, rotazione Rx,Ry,Rz)
3	**carico distribuito globale su elemento tipo trave** 7 dati (fx,fy,fz,mx,my,mz,ascissa di inizio carico) 7 dati (fx,fy,fz,mx,my,mz,ascissa di fine carico)
4	**carico distribuito locale su elemento tipo trave** 7 dati (f1,f2,f3,m1,m2,m3,ascissa di inizio carico) 7 dati (f1,f2,f3,m1,m2,m3,ascissa di fine carico)
5	**carico concentrato globale su elemento tipo trave** 7 dati (Fx,Fy,Fz,Mx,My,Mz,ascissa di carico)
6	**carico concentrato locale su elemento tipo trave** 7 dati (F1, F2, F3, M1, M2, M3, ascissa di carico)
7	**variazione termica applicata ad elemento tipo trave** 7 dati (variazioni termiche: uniforme, media e differenza in altezza e larghezza al nodo iniziale e finale)
8	**carico di pressione uniforme su elemento tipo piastra** 1 dato (pressione)
9	**carico di pressione variabile su elemento tipo piastra** 4 dati (pressione, quota, pressione, quota)
10	**variazione termica applicata ad elemento tipo piastra** 2 dati (variazioni termiche: media e differenza nello spessore)
11	**carico variabile generale su elementi tipo trave e piastra** 1 dato descrizione della tipologia

	4 dati per segmento (posizione, valore, posizione, valore) la tipologia precisa l'ascissa di definizione, la direzione del carico, la modalità di carico e la larghezza d'influenza per gli elementi tipo trave
12	**gruppo di carichi con impronta su piastra** 9 dati (numero di ripetizioni in direzione X e Y, valore di ciascun carico, posizione centrale del primo, dimensioni dell' impronta, interasse tra i carichi

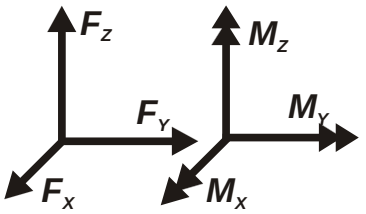

Carico concentrato nodale

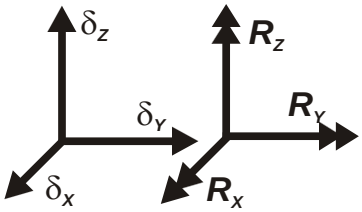

Spostamento impresso

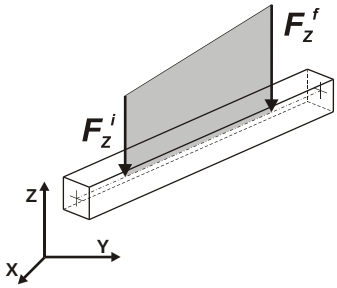

Carico distribuito globale

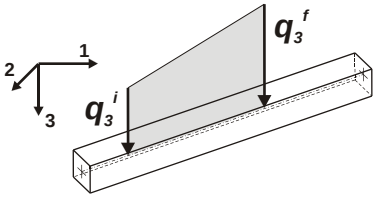

Carico distribuito locale

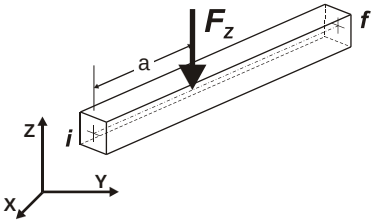

Carico concentrato globale

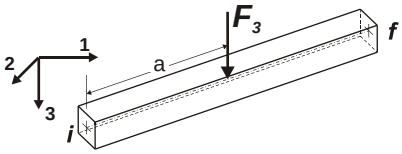

Carico concentrato locale

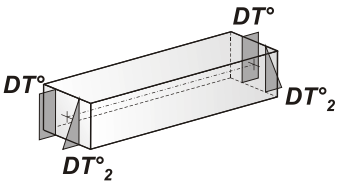

Carico termico 2D

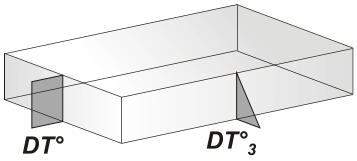

Carico termico 3D

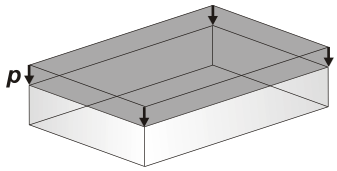

Carico pressione uniforme

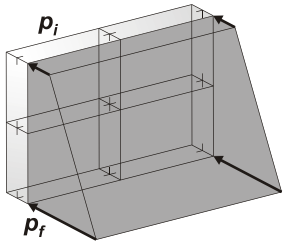

Carico pressione variabile

Tipo	carico concentrato nodale

Id	Tipo	Fx	Fy	Fz	Mx	My	Mz
		daN	daN	daN	daN cm	daN cm	daN cm
1	struttura sovrastante	0.0	0.0	-3.068e+04	0.0	0.0	0.0

Id	Tipo	Fx	Fy	Fz	Mx	My	Mz
2	azione sismica orizzontale	4438.22	0.0	0.0	0.0	0.0	0.0
3	azione sismica 1	0.0	0.0	1.091e+06	0.0	0.0	0.0
4	azione sismica 2-24	0.0	0.0	1.053e+06	0.0	0.0	0.0
5	azione sismica 3-23	0.0	0.0	9.445e+05	0.0	0.0	0.0
6	azione sismica 4-22	0.0	0.0	7.712e+05	0.0	0.0	0.0
7	azione sismica 5-21	0.0	0.0	5.453e+05	0.0	0.0	0.0
8	azione sismica 6-20	0.0	0.0	2.823e+05	0.0	0.0	0.0
9	azione sismica 8-18	0.0	0.0	-2.823e+05	0.0	0.0	0.0
10	azione sismica 9-17	0.0	0.0	-5.453e+05	0.0	0.0	0.0
11	azione sismica 10-16	0.0	0.0	-7.712e+05	0.0	0.0	0.0
12	azione sismica 11-15	0.0	0.0	-9.445e+05	0.0	0.0	0.0
13	azione sismica 12-14	0.0	0.0	-1.053e+06	0.0	0.0	0.0
14	azione sismica 13	0.0	0.0	-1.091e+06	0.0	0.0	0.0
15	vento azione orizzontale	1.405e+04	0.0	0.0	0.0	0.0	0.0
16	Vento 1	0.0	0.0	-9.527e+05	0.0	0.0	0.0
17	Vento 2-24	0.0	0.0	-9.203e+05	0.0	0.0	0.0
18	Vento 3-23	0.0	0.0	-8.251e+05	0.0	0.0	0.0
19	Vento 4-22	0.0	0.0	-6.737e+05	0.0	0.0	0.0
20	Vento 5-21	0.0	0.0	-4.764e+05	0.0	0.0	0.0
21	Vento 6-20	0.0	0.0	-2.466e+05	0.0	0.0	0.0
22	Vento 8-18	0.0	0.0	2.466e+05	0.0	0.0	0.0
23	Vento 9-17	0.0	0.0	4.764e+05	0.0	0.0	0.0
24	Vento 10-16	0.0	0.0	6.739e+05	0.0	0.0	0.0
25	Vento 11-15	0.0	0.0	8.251e+05	0.0	0.0	0.0
26	Vento 12-14	0.0	0.0	9.203e+05	0.0	0.0	0.0
27	Vento 13	0.0	0.0	9.527e+05	0.0	0.0	0.0

Tipo	carico variabile generale

Id	Tipo	ascissa	valore	ascissa	valore
		cm	daN/cm2	cm	daN/cm2
28	Terreno Riporto 1				
	Unif. Qz Area L2=0.0		-0.59		
29	Terreno Riporto 2				
	Unif. Qz Area L2=0.0		-0.56		
30	Terreno Riporto 3				
	Unif. Qz Area L2=0.0		-0.53		
31	Terreno Riporto 4				
	Unif. Qz Area L2=0.0		-0.50		
32	Terreno Riporto 5				
	Unif. Qz Area L2=0.0		-0.47		
33	Terreno Riporto 6				
	Unif. Qz Area L2=0.0		-0.44		
34	Terreno Riporto 7				
	Unif. Qz Area L2=0.0		-0.41		
35	Terreno Riporto 8				
	Unif. Qz Area L2=0.0		-0.38		
36	Terreno Riporto 9				
	Unif. Qz Area L2=0.0		-0.35		
37	Terreno Riporto 10				
	Unif. Qz Area L2=0.0		-0.29		
38	Terreno Riporto 11				
	Unif. Qz Area L2=0.0		-0.29		
39	Terreno Riporto 12				
	Unif. Qz Area L2=0.0		-0.24		
40	Terreno Riporto 13				
	Unif. Qz Area L2=0.0		-0.24		

Id	Tipo	ascissa	valore	ascissa	valore
41	Terreno Riporto 14				
	Unif. Qz Area L2=0.0		-0.21		
42	Terreno Riporto 15				
	Unif. Qz Area L2=0.0		-0.05		
43	Terreno Riporto 16				
	Unif. Qz Area L2=0.0		-0.15		

Tipo	gruppo di carichi con impronta su piastra

Id	Tipo	Ripet. X	Ripet. Y	Carico FZ	Centro X	Centro Y	dim. X	dim. Y	Passo X	Passo Y
				daN	cm	cm	cm	cm	cm	cm
44	PROVA	0	0	1.000e+04	0.0	0.0	5.00	5.00	20.00	10.00

8. SCHEMATIZZAZIONE DEI CASI DI CARICO

8.1. LEGENDA TABELLA CASI DI CARICO

Il programma consente l'applicazione di diverse tipologie di casi di carico.

Sono previsti i seguenti 11 tipi di casi di carico:

	Sigla	***Tipo***	***Descrizione***
1	**Ggk**	A	caso di carico comprensivo del peso proprio struttura
2	**Gk**	NA	caso di carico con azioni permanenti
3	**Qk**	NA	caso di carico con azioni variabili
4	**Gsk**	A	caso di carico comprensivo dei carichi permanenti sui solai e sulle coperture
5	**Qsk**	A	caso di carico comprensivo dei carichi variabili sui solai
6	**Qnk**	A	caso di carico comprensivo dei carichi di neve sulle coperture
7	**Qtk**	SA	caso di carico comprensivo di una variazione termica agente sulla struttura
8	**Qvk**	NA	caso di carico comprensivo di azioni da vento sulla struttura
9	**Esk**	SA	caso di carico sismico con analisi statica equivalente
10	**Edk**	SA	caso di carico sismico con analisi dinamica
11	**Etk**	NA	caso di carico comprensivo di azioni derivanti dall' incremento di spinta delle terre in condizione sismica
12	**Pk**	NA	caso di carico comprensivo di azioni derivanti da coazioni, cedimenti e precompressioni

Sono di tipo automatico A (ossia non prevedono introduzione dati da parte dell'utente) i seguenti casi di carico: 1-Ggk; 4-Gsk; 5-Qsk; 6-Qnk.

Sono di tipo semi-automatico SA (ossia prevedono una minima introduzione dati da parte dell'utente) i seguenti casi di carico:

7-Qtk, in quanto richiede solo il valore della variazione termica;

9-Esk e 10-Edk, in quanto richiedono il valore dell'angolo di ingresso del sisma e l'individuazione dei casi di carico partecipanti alla definizione delle masse.

Sono di tipo non automatico NA ossia prevedono la diretta applicazione di carichi generici agli elementi strutturali (si veda il precedente punto Modellazione delle Azioni) i restanti casi di carico.

Nella tabella successiva vengono riportati i casi di carico agenti sulla struttura, con l'indicazione dei dati relativi al caso di carico stesso:

Numero Tipo e *Sigla identificativa*, *Valore di riferimento* del caso di carico (se previsto).

In successione, per i casi di carico non automatici, viene riportato l'elenco di nodi ed elementi direttamente

caricati con la sigla identificativa del carico.

Per i casi di carico di tipo sismico (9-Esk e 10-Edk), viene riportata la tabella di definizione delle masse: per ogni caso di carico partecipante alla definizione delle masse viene indicata la relativa aliquota (partecipazione) considerata. Si precisa che per i caso di carico 5-Qsk e 6-Qnk la partecipazione è prevista localmente per ogni elemento solaio o copertura presente nel modello (si confronti il valore Sksol nel capitolo relativo agli elementi solaio) e pertanto la loro partecipazione è di norma pari a uno.

CDC	Tipo	Sigla Id	Note
1	Ggk	CDC=Ggk (peso proprio della struttura)	
2	Gk	CDC=G1k (struttura sovrastante)	Nodo: 144 Azione : struttura sovrastante
			Nodo:da 151 a 152 Azione : struttura sovrastante
			Nodo:da 161 a 162 Azione : struttura sovrastante
			Nodo:da 176 a 177 Azione : struttura sovrastante
			Nodo:da 199 a 200 Azione : struttura sovrastante
			Nodo:da 222 a 223 Azione : struttura sovrastante
			Nodo: 260 Azione : struttura sovrastante
			Nodo: 270 Azione : struttura sovrastante
			Nodo:da 307 a 308 Azione : struttura sovrastante
			Nodo:da 330 a 331 Azione : struttura sovrastante
			Nodo:da 353 a 354 Azione : struttura sovrastante
			Nodo:da 368 a 369 Azione : struttura sovrastante
			Nodo:da 378 a 379 Azione : struttura sovrastante
			Nodo: 386 Azione : struttura sovrastante
			D3 : 266 Azione : PROVA
3	Gk	CDC=G1k (sisma x)	Nodo: 144 Azione : azione sismica orizzontale
			Nodo:da 151 a 152 Azione : azione sismica orizzontale
			Nodo:da 151 a 152 Azione : azione sismica 8-18
			Nodo:da 161 a 162 Azione : azione sismica orizzontale
			Nodo:da 161 a 162 Azione : azione sismica 9-17
			Nodo:da 176 a 177 Azione : azione sismica orizzontale
			Nodo:da 176 a 177 Azione : azione sismica 10-16
			Nodo:da 199 a 200 Azione : azione sismica orizzontale

CDC	Tipo	Sigla Id	Note
			Nodo:da 199 a 200 Azione : azione sismica 11-15
			Nodo:da 222 a 223 Azione : azione sismica orizzontale
			Nodo:da 222 a 223 Azione : azione sismica 12-14
			Nodo: 260 Azione : azione sismica orizzontale
			Nodo: 260 Azione : azione sismica 13
			Nodo: 270 Azione : azione sismica orizzontale
			Nodo: 270 Azione : azione sismica 1
			Nodo:da 307 a 308 Azione : azione sismica orizzontale
			Nodo:da 307 a 308 Azione : azione sismica 12-14
			Nodo:da 330 a 331 Azione : azione sismica orizzontale
			Nodo:da 330 a 331 Azione : azione sismica 11-15
			Nodo:da 353 a 354 Azione : azione sismica orizzontale
			Nodo:da 353 a 354 Azione : azione sismica 10-16
			Nodo:da 368 a 369 Azione : azione sismica orizzontale
			Nodo:da 368 a 369 Azione : azione sismica 9-17
			Nodo:da 378 a 379 Azione : azione sismica orizzontale
			Nodo:da 378 a 379 Azione : azione sismica 8-18
			Nodo: 386 Azione : azione sismica orizzontale
4	Gk	CDC=G1k (terreno di riporto)	D3 :da 1 a 2 Azione : Terreno Riporto 1
			D3 : 3 Azione : Terreno Riporto 3
			D3 : 4 Azione : Terreno Riporto 4
			D3 :da 5 a 6 Azione : Terreno Riporto 5
			D3 : 7 Azione : Terreno Riporto 7
			D3 : 8 Azione : Terreno Riporto 8
			D3 : 9 Azione : Terreno Riporto 9
			D3 : 10 Azione : Terreno Riporto 10
			D3 : 11 Azione : Terreno Riporto 11

CDC	Tipo	Sigla Id	Note
			D3 : 12 Azione : Terreno Riporto 12
			D3 : 13 Azione : Terreno Riporto 13
			D3 : 14 Azione : Terreno Riporto 14
			D3 : 15 Azione : Terreno Riporto 15
			D3 : 16 Azione : Terreno Riporto 16
			D3 :da 23 a 24 Azione : Terreno Riporto 1
			D3 : 25 Azione : Terreno Riporto 3
			D3 : 26 Azione : Terreno Riporto 4
			D3 :da 27 a 28 Azione : Terreno Riporto 5
			D3 : 29 Azione : Terreno Riporto 7
			D3 : 30 Azione : Terreno Riporto 8
			D3 : 31 Azione : Terreno Riporto 9
			D3 : 32 Azione : Terreno Riporto 10
			D3 : 33 Azione : Terreno Riporto 11
			D3 : 34 Azione : Terreno Riporto 12
			D3 : 35 Azione : Terreno Riporto 13
			D3 : 36 Azione : Terreno Riporto 14
			D3 : 37 Azione : Terreno Riporto 15
			D3 : 38 Azione : Terreno Riporto 16
			D3 :da 45 a 46 Azione : Terreno Riporto 1
			D3 : 47 Azione : Terreno Riporto 3
			D3 : 48 Azione : Terreno Riporto 4
			D3 :da 49 a 50 Azione : Terreno Riporto 5
			D3 : 51 Azione : Terreno Riporto 7
			D3 : 52 Azione : Terreno Riporto 8
			D3 : 53 Azione : Terreno Riporto 9
			D3 : 54 Azione : Terreno Riporto 10
			D3 : 55 Azione : Terreno Riporto 11
			D3 : 56 Azione : Terreno Riporto 12
			D3 : 57 Azione : Terreno Riporto 13
			D3 : 58 Azione : Terreno Riporto 14

CDC	Tipo	Sigla Id	Note
			D3 : 59 Azione : Terreno Riporto 15
			D3 : 60 Azione : Terreno Riporto 16
			D3 :da 67 a 68 Azione : Terreno Riporto 1
			D3 : 69 Azione : Terreno Riporto 3
			D3 : 70 Azione : Terreno Riporto 4
			D3 :da 71 a 72 Azione : Terreno Riporto 5
			D3 : 73 Azione : Terreno Riporto 7
			D3 : 74 Azione : Terreno Riporto 8
			D3 : 75 Azione : Terreno Riporto 9
			D3 : 76 Azione : Terreno Riporto 10
			D3 : 77 Azione : Terreno Riporto 11
			D3 : 78 Azione : Terreno Riporto 12
			D3 : 79 Azione : Terreno Riporto 13
			D3 : 80 Azione : Terreno Riporto 14
			D3 : 81 Azione : Terreno Riporto 15
			D3 : 82 Azione : Terreno Riporto 16
			D3 :da 89 a 90 Azione : Terreno Riporto 1
			D3 : 91 Azione : Terreno Riporto 3
			D3 : 92 Azione : Terreno Riporto 4
			D3 :da 93 a 94 Azione : Terreno Riporto 5
			D3 : 95 Azione : Terreno Riporto 7
			D3 : 96 Azione : Terreno Riporto 8
			D3 : 97 Azione : Terreno Riporto 9
			D3 : 98 Azione : Terreno Riporto 10
			D3 : 99 Azione : Terreno Riporto 11
			D3 : 100 Azione : Terreno Riporto 12
			D3 : 101 Azione : Terreno Riporto 13
			D3 : 102 Azione : Terreno Riporto 14
			D3 : 103 Azione : Terreno Riporto 15
			D3 : 104 Azione : Terreno Riporto 16
			D3 :da 111 a 112 Azione : Terreno Riporto 1

CDC	Tipo	Sigla Id	Note
			D3 : 113 Azione : Terreno Riporto 3
			D3 : 114 Azione : Terreno Riporto 4
			D3 :da 115 a 116 Azione : Terreno Riporto 5
			D3 : 117 Azione : Terreno Riporto 7
			D3 : 118 Azione : Terreno Riporto 8
			D3 : 119 Azione : Terreno Riporto 9
			D3 : 120 Azione : Terreno Riporto 10
			D3 : 121 Azione : Terreno Riporto 11
			D3 : 122 Azione : Terreno Riporto 12
			D3 : 123 Azione : Terreno Riporto 13
			D3 : 124 Azione : Terreno Riporto 14
			D3 : 125 Azione : Terreno Riporto 15
			D3 : 126 Azione : Terreno Riporto 16
			D3 :da 133 a 134 Azione : Terreno Riporto 1
			D3 : 135 Azione : Terreno Riporto 3
			D3 : 136 Azione : Terreno Riporto 4
			D3 :da 137 a 138 Azione : Terreno Riporto 5
			D3 : 139 Azione : Terreno Riporto 7
			D3 : 140 Azione : Terreno Riporto 8
			D3 : 141 Azione : Terreno Riporto 9
			D3 : 142 Azione : Terreno Riporto 10
			D3 : 143 Azione : Terreno Riporto 11
			D3 : 144 Azione : Terreno Riporto 12
			D3 : 145 Azione : Terreno Riporto 13
			D3 : 146 Azione : Terreno Riporto 14
			D3 : 147 Azione : Terreno Riporto 15
			D3 : 148 Azione : Terreno Riporto 16
			D3 :da 155 a 156 Azione : Terreno Riporto 1
			D3 : 157 Azione : Terreno Riporto 3
			D3 : 158 Azione : Terreno Riporto 4
			D3 :da 159 a 160 Azione : Terreno Riporto 5

CDC	Tipo	Sigla Id	Note
			D3 : 161 Azione : Terreno Riporto 7
			D3 : 162 Azione : Terreno Riporto 8
			D3 : 163 Azione : Terreno Riporto 9
			D3 : 164 Azione : Terreno Riporto 10
			D3 : 165 Azione : Terreno Riporto 11
			D3 : 166 Azione : Terreno Riporto 12
			D3 : 167 Azione : Terreno Riporto 13
			D3 : 168 Azione : Terreno Riporto 14
			D3 : 169 Azione : Terreno Riporto 15
			D3 : 170 Azione : Terreno Riporto 16
			D3 :da 177 a 178 Azione : Terreno Riporto 1
			D3 : 179 Azione : Terreno Riporto 3
			D3 : 180 Azione : Terreno Riporto 4
			D3 :da 181 a 182 Azione : Terreno Riporto 5
			D3 : 183 Azione : Terreno Riporto 7
			D3 : 184 Azione : Terreno Riporto 8
			D3 : 185 Azione : Terreno Riporto 9
			D3 : 186 Azione : Terreno Riporto 10
			D3 : 187 Azione : Terreno Riporto 11
			D3 : 188 Azione : Terreno Riporto 12
			D3 : 189 Azione : Terreno Riporto 13
			D3 : 190 Azione : Terreno Riporto 14
			D3 : 191 Azione : Terreno Riporto 15
			D3 : 192 Azione : Terreno Riporto 16
			D3 :da 199 a 200 Azione : Terreno Riporto 1
			D3 : 201 Azione : Terreno Riporto 3
			D3 : 202 Azione : Terreno Riporto 4
			D3 :da 203 a 204 Azione : Terreno Riporto 5
			D3 : 205 Azione : Terreno Riporto 7
			D3 : 206 Azione : Terreno Riporto 8
			D3 : 207 Azione : Terreno Riporto 9

CDC	Tipo	Sigla Id	Note
			D3 : 208 Azione : Terreno Riporto 10
			D3 : 209 Azione : Terreno Riporto 11
			D3 : 210 Azione : Terreno Riporto 12
			D3 : 211 Azione : Terreno Riporto 13
			D3 : 212 Azione : Terreno Riporto 14
			D3 : 213 Azione : Terreno Riporto 15
			D3 : 214 Azione : Terreno Riporto 16
			D3 :da 221 a 222 Azione : Terreno Riporto 1
			D3 : 223 Azione : Terreno Riporto 3
			D3 : 224 Azione : Terreno Riporto 4
			D3 :da 225 a 226 Azione : Terreno Riporto 5
			D3 : 227 Azione : Terreno Riporto 7
			D3 : 228 Azione : Terreno Riporto 8
			D3 : 229 Azione : Terreno Riporto 9
			D3 : 230 Azione : Terreno Riporto 10
			D3 : 231 Azione : Terreno Riporto 11
			D3 : 232 Azione : Terreno Riporto 12
			D3 : 233 Azione : Terreno Riporto 13
			D3 : 234 Azione : Terreno Riporto 14
			D3 : 235 Azione : Terreno Riporto 15
			D3 : 236 Azione : Terreno Riporto 16
			D3 :da 243 a 244 Azione : Terreno Riporto 1
			D3 : 245 Azione : Terreno Riporto 3
			D3 : 246 Azione : Terreno Riporto 4
			D3 :da 247 a 248 Azione : Terreno Riporto 5
			D3 : 249 Azione : Terreno Riporto 7
			D3 : 250 Azione : Terreno Riporto 8
			D3 : 251 Azione : Terreno Riporto 9
			D3 : 252 Azione : Terreno Riporto 10
			D3 : 253 Azione : Terreno Riporto 11
			D3 : 254 Azione : Terreno Riporto 12

CDC	Tipo	Sigla Id	Note
			D3 : 255 Azione : Terreno Riporto 13
			D3 : 256 Azione : Terreno Riporto 14
			D3 : 257 Azione : Terreno Riporto 15
			D3 : 258 Azione : Terreno Riporto 16
			D3 :da 265 a 266 Azione : Terreno Riporto 1
			D3 : 267 Azione : Terreno Riporto 3
			D3 : 268 Azione : Terreno Riporto 4
			D3 :da 269 a 270 Azione : Terreno Riporto 5
			D3 : 271 Azione : Terreno Riporto 7
			D3 : 272 Azione : Terreno Riporto 8
			D3 : 273 Azione : Terreno Riporto 9
			D3 : 274 Azione : Terreno Riporto 10
			D3 : 275 Azione : Terreno Riporto 11
			D3 : 276 Azione : Terreno Riporto 12
			D3 : 277 Azione : Terreno Riporto 13
			D3 : 278 Azione : Terreno Riporto 14
			D3 : 279 Azione : Terreno Riporto 15
			D3 : 280 Azione : Terreno Riporto 16
			D3 :da 287 a 288 Azione : Terreno Riporto 1
			D3 : 289 Azione : Terreno Riporto 3
			D3 : 290 Azione : Terreno Riporto 4
			D3 :da 291 a 292 Azione : Terreno Riporto 5
			D3 : 293 Azione : Terreno Riporto 7
			D3 : 294 Azione : Terreno Riporto 8
			D3 : 295 Azione : Terreno Riporto 9
			D3 : 296 Azione : Terreno Riporto 10
			D3 : 297 Azione : Terreno Riporto 11
			D3 : 298 Azione : Terreno Riporto 12
			D3 : 299 Azione : Terreno Riporto 13
			D3 : 300 Azione : Terreno Riporto 14
			D3 : 301 Azione : Terreno Riporto 15

CDC	Tipo	Sigla Id	Note
			D3 : 302 Azione : Terreno Riporto 16
			D3 :da 309 a 310 Azione : Terreno Riporto 1
			D3 : 311 Azione : Terreno Riporto 3
			D3 : 312 Azione : Terreno Riporto 4
			D3 :da 313 a 314 Azione : Terreno Riporto 5
			D3 : 315 Azione : Terreno Riporto 7
			D3 : 316 Azione : Terreno Riporto 8
			D3 : 317 Azione : Terreno Riporto 9
			D3 : 318 Azione : Terreno Riporto 10
			D3 : 319 Azione : Terreno Riporto 11
			D3 : 320 Azione : Terreno Riporto 12
			D3 : 321 Azione : Terreno Riporto 13
			D3 : 322 Azione : Terreno Riporto 14
			D3 : 323 Azione : Terreno Riporto 15
			D3 : 324 Azione : Terreno Riporto 16
			D3 :da 331 a 332 Azione : Terreno Riporto 1
			D3 : 333 Azione : Terreno Riporto 3
			D3 : 334 Azione : Terreno Riporto 4
			D3 :da 335 a 336 Azione : Terreno Riporto 5
			D3 : 337 Azione : Terreno Riporto 7
			D3 : 338 Azione : Terreno Riporto 8
			D3 : 339 Azione : Terreno Riporto 9
			D3 : 340 Azione : Terreno Riporto 10
			D3 : 341 Azione : Terreno Riporto 11
			D3 : 342 Azione : Terreno Riporto 12
			D3 : 343 Azione : Terreno Riporto 13
			D3 : 344 Azione : Terreno Riporto 14
			D3 : 345 Azione : Terreno Riporto 15
			D3 : 346 Azione : Terreno Riporto 16
			D3 : 353 Azione : Terreno Riporto 1
			D3 : 354 Azione : Terreno Riporto 2

CDC	Tipo	Sigla Id	Note
			D3 : 355 Azione : Terreno Riporto 3
			D3 : 356 Azione : Terreno Riporto 4
			D3 :da 357 a 358 Azione : Terreno Riporto 5
			D3 : 359 Azione : Terreno Riporto 7
			D3 : 360 Azione : Terreno Riporto 8
			D3 : 361 Azione : Terreno Riporto 9
			D3 : 362 Azione : Terreno Riporto 10
			D3 : 363 Azione : Terreno Riporto 11
			D3 : 364 Azione : Terreno Riporto 12
			D3 : 365 Azione : Terreno Riporto 13
			D3 : 366 Azione : Terreno Riporto 14
			D3 : 367 Azione : Terreno Riporto 15
			D3 : 368 Azione : Terreno Riporto 16
			D3 :da 375 a 376 Azione : Terreno Riporto 1
			D3 : 377 Azione : Terreno Riporto 3
			D3 : 378 Azione : Terreno Riporto 4
			D3 :da 379 a 380 Azione : Terreno Riporto 5
			D3 : 381 Azione : Terreno Riporto 7
			D3 : 382 Azione : Terreno Riporto 8
			D3 : 383 Azione : Terreno Riporto 9
			D3 : 384 Azione : Terreno Riporto 10
			D3 : 385 Azione : Terreno Riporto 11
			D3 : 386 Azione : Terreno Riporto 12
			D3 : 387 Azione : Terreno Riporto 13
			D3 : 388 Azione : Terreno Riporto 14
			D3 : 389 Azione : Terreno Riporto 15
			D3 : 390 Azione : Terreno Riporto 16
			D3 :da 397 a 398 Azione : Terreno Riporto 1
			D3 : 399 Azione : Terreno Riporto 3
			D3 : 400 Azione : Terreno Riporto 4
			D3 : 401 Azione : Terreno Riporto 5

CDC	Tipo	Sigla Id	Note
			D3 : 402 Azione : Terreno Riporto 6
			D3 : 403 Azione : Terreno Riporto 7
			D3 : 404 Azione : Terreno Riporto 8
			D3 : 405 Azione : Terreno Riporto 9
			D3 : 406 Azione : Terreno Riporto 10
			D3 : 407 Azione : Terreno Riporto 11
			D3 : 408 Azione : Terreno Riporto 12
			D3 : 409 Azione : Terreno Riporto 13
			D3 : 410 Azione : Terreno Riporto 14
			D3 : 411 Azione : Terreno Riporto 15
			D3 : 412 Azione : Terreno Riporto 16
			D3 :da 419 a 420 Azione : Terreno Riporto 1
			D3 : 421 Azione : Terreno Riporto 3
			D3 : 422 Azione : Terreno Riporto 4
			D3 :da 423 a 424 Azione : Terreno Riporto 5
			D3 : 425 Azione : Terreno Riporto 7
			D3 : 426 Azione : Terreno Riporto 8
			D3 : 427 Azione : Terreno Riporto 9
			D3 : 428 Azione : Terreno Riporto 10
			D3 : 429 Azione : Terreno Riporto 11
			D3 : 430 Azione : Terreno Riporto 12
			D3 : 431 Azione : Terreno Riporto 13
			D3 : 432 Azione : Terreno Riporto 14
			D3 : 433 Azione : Terreno Riporto 15
			D3 : 434 Azione : Terreno Riporto 16
			D3 :da 441 a 442 Azione : Terreno Riporto 1
			D3 : 443 Azione : Terreno Riporto 3
			D3 : 444 Azione : Terreno Riporto 4
			D3 :da 445 a 446 Azione : Terreno Riporto 5
			D3 : 447 Azione : Terreno Riporto 7
			D3 : 448 Azione : Terreno Riporto 8

CDC	Tipo	Sigla Id	Note
			D3 : 449 Azione : Terreno Riporto 9
			D3 : 450 Azione : Terreno Riporto 10
			D3 : 451 Azione : Terreno Riporto 11
			D3 : 452 Azione : Terreno Riporto 12
			D3 : 453 Azione : Terreno Riporto 13
			D3 : 454 Azione : Terreno Riporto 14
			D3 : 455 Azione : Terreno Riporto 15
			D3 : 456 Azione : Terreno Riporto 16
			D3 :da 463 a 464 Azione : Terreno Riporto 1
			D3 : 465 Azione : Terreno Riporto 3
			D3 : 466 Azione : Terreno Riporto 4
			D3 :da 467 a 468 Azione : Terreno Riporto 5
			D3 : 469 Azione : Terreno Riporto 7
			D3 : 470 Azione : Terreno Riporto 8
			D3 : 471 Azione : Terreno Riporto 9
			D3 : 472 Azione : Terreno Riporto 10
			D3 : 473 Azione : Terreno Riporto 11
			D3 : 474 Azione : Terreno Riporto 12
			D3 : 475 Azione : Terreno Riporto 13
			D3 : 476 Azione : Terreno Riporto 14
			D3 : 477 Azione : Terreno Riporto 15
			D3 : 478 Azione : Terreno Riporto 16
			D3 :da 485 a 486 Azione : Terreno Riporto 1
			D3 : 487 Azione : Terreno Riporto 3
			D3 : 488 Azione : Terreno Riporto 4
			D3 :da 489 a 490 Azione : Terreno Riporto 5
			D3 : 491 Azione : Terreno Riporto 7
			D3 : 492 Azione : Terreno Riporto 8
			D3 : 493 Azione : Terreno Riporto 9
			D3 : 494 Azione : Terreno Riporto 10
			D3 : 495 Azione : Terreno Riporto 11

CDC	Tipo	Sigla Id	Note
			D3 : 496 Azione : Terreno Riporto 12
			D3 : 497 Azione : Terreno Riporto 13
			D3 : 498 Azione : Terreno Riporto 14
			D3 : 499 Azione : Terreno Riporto 15
			D3 : 500 Azione : Terreno Riporto 16
			D3 :da 507 a 508 Azione : Terreno Riporto 1
			D3 : 509 Azione : Terreno Riporto 3
			D3 : 510 Azione : Terreno Riporto 4
			D3 :da 511 a 512 Azione : Terreno Riporto 5
			D3 : 513 Azione : Terreno Riporto 7
			D3 : 514 Azione : Terreno Riporto 8
			D3 : 515 Azione : Terreno Riporto 9
			D3 : 516 Azione : Terreno Riporto 10
			D3 : 517 Azione : Terreno Riporto 11
			D3 : 518 Azione : Terreno Riporto 12
			D3 : 519 Azione : Terreno Riporto 13
			D3 : 520 Azione : Terreno Riporto 14
			D3 : 521 Azione : Terreno Riporto 15
			D3 : 522 Azione : Terreno Riporto 16
5	Qvk	CDC=Qvk (carico da vento)	Nodo: 144 Azione : vento azione orizzontale
			Nodo: 151 Azione : Vento 8-18
			Nodo:da 151 a 152 Azione : vento azione orizzontale
			Nodo: 161 Azione : Vento 9-17
			Nodo:da 161 a 162 Azione : vento azione orizzontale
			Nodo: 176 Azione : Vento 10-16
			Nodo:da 176 a 177 Azione : vento azione orizzontale
			Nodo: 199 Azione : Vento 11-15
			Nodo:da 199 a 200 Azione : vento azione orizzontale
			Nodo: 222 Azione : Vento 12-14
			Nodo:da 222 a 223 Azione : vento azione

CDC	Tipo	Sigla Id	Note
			orizzontale
			Nodo: 260 Azione : Vento 13
			Nodo: 260 Azione : vento azione orizzontale
			Nodo: 270 Azione : Vento 1
			Nodo: 270 Azione : vento azione orizzontale
			Nodo: 307 Azione : Vento 12-14
			Nodo:da 307 a 308 Azione : vento azione orizzontale
			Nodo: 330 Azione : Vento 11-15
			Nodo:da 330 a 331 Azione : vento azione orizzontale
			Nodo: 353 Azione : Vento 10-16
			Nodo:da 353 a 354 Azione : vento azione orizzontale
			Nodo: 368 Azione : Vento 9-17
			Nodo:da 368 a 369 Azione : vento azione orizzontale
			Nodo: 378 Azione : Vento 8-18
			Nodo:da 378 a 379 Azione : vento azione orizzontale
			Nodo:da 378 a 379 Azione : vento azione orizzontale
			Nodo: 386 Azione : vento azione orizzontale

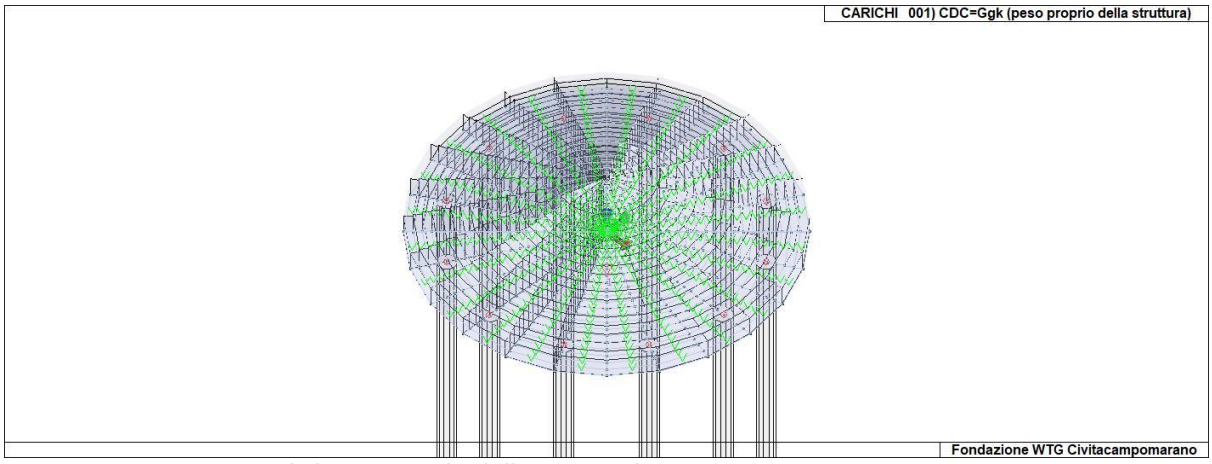

22_CDC_001_CDC=Ggk (peso proprio della struttura)

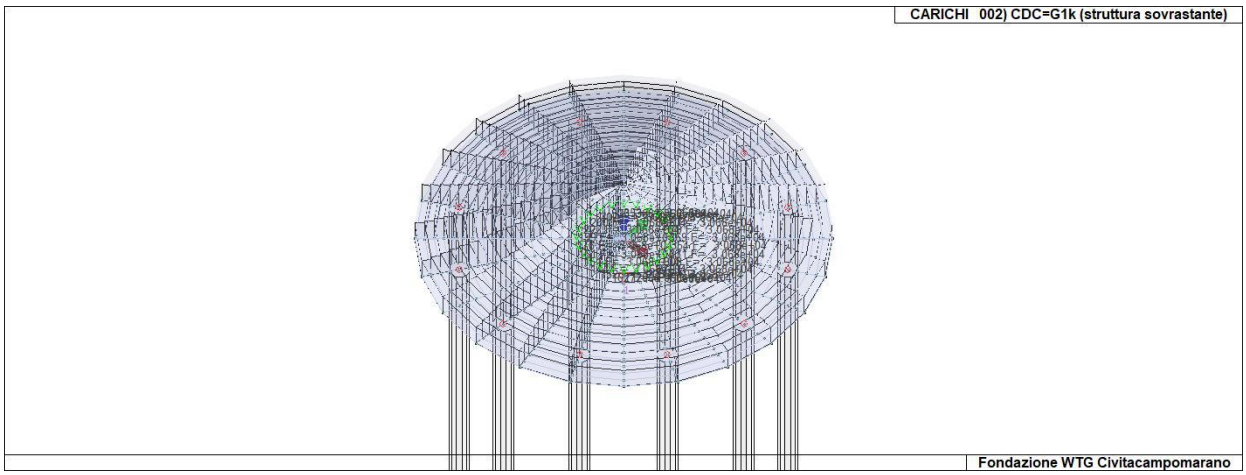

22_CDC_002_CDC=G1k (struttura sovrastante)

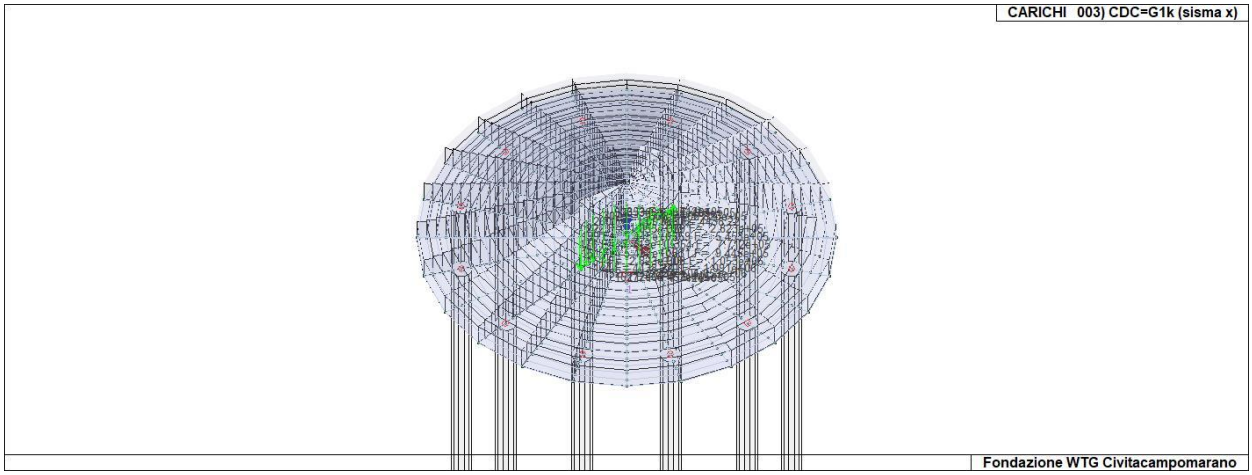

22_CDC_003_CDC=G1k (sisma x)

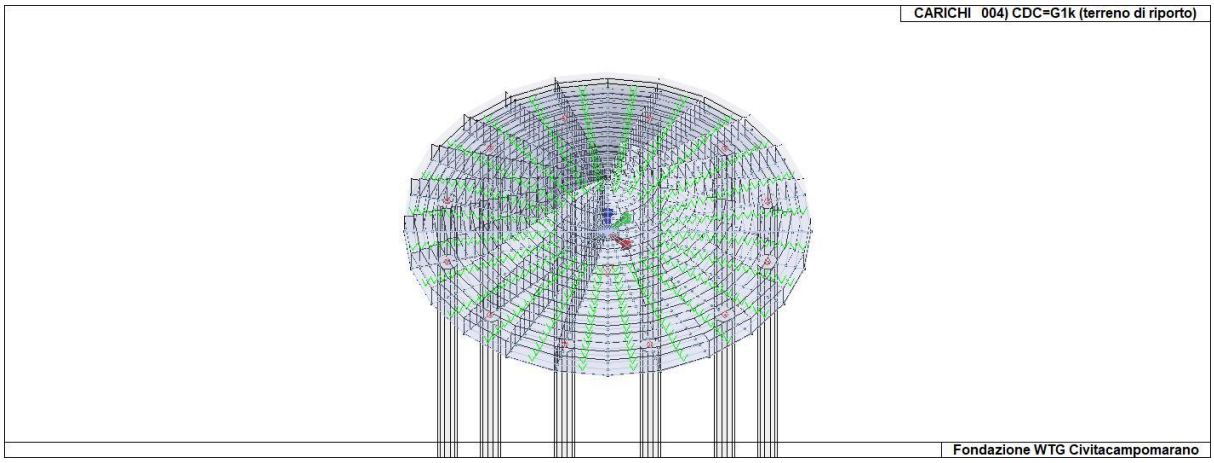

22_CDC_004_CDC=G1k (terreno di riporto)

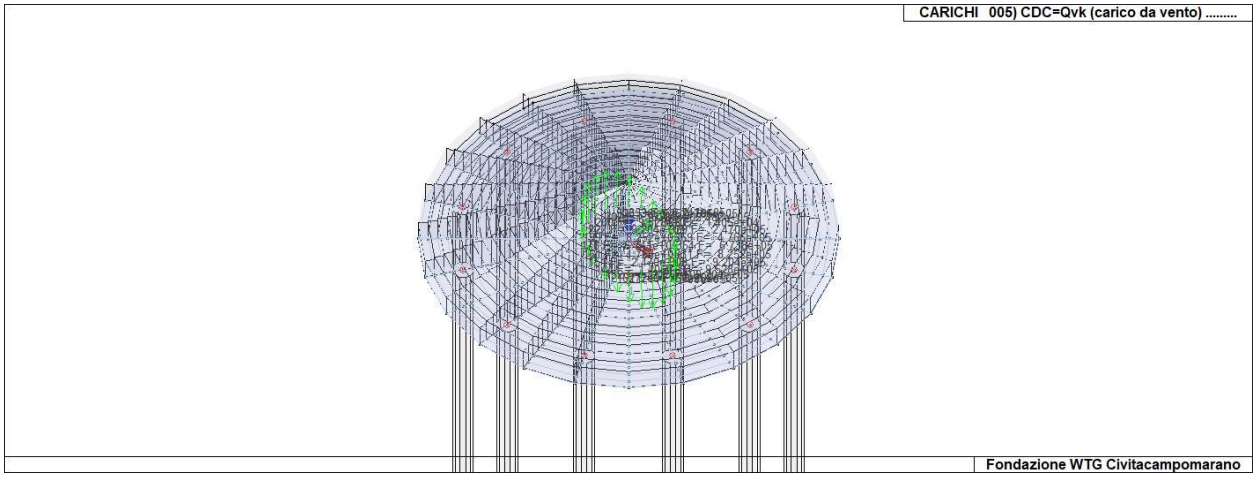

22_CDC_005_CDC=Qvk (carico da vento) .....

9. DEFINIZIONE DELLE COMBINAZIONI

9.1. LEGENDA TABELLA COMBINAZIONI DI CARICO

Il programma combina i diversi tipi di casi di carico (CDC) secondo le regole previste dalla normativa vigente.

Le combinazioni previste sono destinate al controllo di sicurezza della struttura ed alla verifica degli spostamenti e delle sollecitazioni.

La prima tabella delle combinazioni riportata di seguito comprende le seguenti informazioni: Numero, Tipo, Sigla identificativa. Una seconda tabella riporta il peso nella combinazione assunto per ogni caso di carico.

Ai fini delle verifiche degli stati limite si definiscono le seguenti combinazioni delle azioni:

***Combinazione fondamentale** SLU*

$\gamma G1 \cdot G1 + \gamma G2 \cdot G2 + \gamma P \cdot P + \gamma Q1 \cdot Qk1 + \gamma Q2 \cdot \psi 02 \cdot Qk2 + \gamma Q3 \cdot \psi 03 \cdot Qk3 + \ldots$

***Combinazione caratteristica** (rara) SLE*

$G1 + G2 + P + Qk1 + \psi 02 \cdot Qk2 + \psi 03 \cdot Qk3 + \ldots$

***Combinazione frequente** SLE*

$G1 + G2 + P + \psi 11 \cdot Qk1 + \psi 22 \cdot Qk2 + \psi 23 \cdot Qk3 + \ldots$

***Combinazione quasi permanente** SLE*

$G1 + G2 + P + \psi 21 \cdot Qk1 + \psi 22 \cdot Qk2 + \psi 23 \cdot Qk3 + \ldots$

***Combinazione sismica**, impiegata per gli stati limite ultimi e di esercizio connessi all'azione sismica E*

$E + G_1 + G_2 + P + \psi 21 \cdot Qk1 + \psi 22 \cdot Qk2 + \ldots$

***Combinazione eccezionale**, impiegata per gli stati limite connessi alle azioni eccezionali*

$G1 + G2 + Ad + P + \psi 21 \cdot Qk1 + \psi 22 \cdot Qk2 + \ldots$

Dove:

NTC 2018 Tabella 2.5.I

Destinazione d'uso/azione	***ψ0***	***ψ1***	***ψ2***
Categoria A residenziali	*0,70*	*0,50*	*0,30*
Categoria B uffici	*0,70*	*0,50*	*0,30*
Categoria C ambienti suscettibili di affollamento	*0,70*	*0,70*	*0,60*
Categoria D ambienti ad uso commerciale	*0,70*	*0,70*	*0,60*
Categoria E biblioteche, archivi, magazzini,…	*1,00*	*0,90*	*0,80*
Categoria F Rimesse e parcheggi (autoveicoli <= 30kN)	*0,70*	*0,70*	*0,60*
Categoria G Rimesse e parcheggi (autoveicoli > 30kN)	*0,70*	*0,50*	*0,30*
Categoria H Coperture	*0,00*	*0,00*	*0,00*
Vento	*0,60*	*0,20*	*0,00*

Neve a quota <= 1000 m	*0,50*	*0,20*	*0,00*
Neve a quota > 1000 m	*0,70*	*0,50*	*0,20*
Variazioni Termiche	*0,60*	*0,50*	*0,00*

Nelle verifiche possono essere adottati in alternativa due diversi approcci progettuali:

- per l'approccio 1 si considerano due diverse combinazioni di gruppi di coefficienti di sicurezza parziali per le azioni, per i materiali e per la resistenza globale (combinazione 1 con coefficienti A1 e combinazione 2 con coefficienti A2),

- per l'approccio 2 si definisce un'unica combinazione per le azioni, per la resistenza dei materiali e per la resistenza globale (con coefficienti A1).

NTC 2018 Tabella 2.6.I

		Coefficiente γf	***EQU***	***A1***	***A2***
Carichi permanenti	*Favorevoli*	$\gamma G1$	*0,9*	*1,0*	*1,0*
	Sfavorevoli		*1,1*	*1,3*	*1,0*
Carichi permanenti non strutturali *(Non compiutamente definiti)*	*Favorevoli*	$\gamma G2$	*0,8*	*0,8*	*0,8*
	Sfavorevoli		*1,5*	*1,5*	*1,3*
Carichi variabili	*Favorevoli*	γQi	*0,0*	*0,0*	*0,0*
	Sfavorevoli		*1,5*	*1,5*	*1,3*

Cmb	**Tipo**	**Sigla Id**	**effetto P-delta**
1	SLU	Fondamentale	
2	SLE(f)	Combinazione 2 da definire	
3	SLU	Combinazione 3 da definire	

Cmb	**CDC 1/15...**	**CDC 2/16...**	**CDC 3/17...**	**CDC 4/18...**	**CDC 5/19...**	**CDC 6/20...**	**CDC 7/21...**	**CDC 8/22...**	**CDC 9/23...**	**CDC 10/24...**	**CDC 11/25...**	**CDC 12/26...**	**CDC 13/27...**	**CDC 14/28...**
1	1.30	1.30	0.0	1.30	1.30									
2	1.00	1.00	0.0	1.00	1.00									
3	1.00	1.00	1.00	1.00	1.00									

10. RISULTATI NODALI

10.1. LEGENDA RISULTATI NODALI

Il controllo dei risultati delle analisi condotte, per quanto concerne i nodi strutturali, è possibile in relazione alle tabelle sottoriportate.

Una prima tabella riporta infatti per ogni nodo e per ogni combinazione (o caso di carico) gli spostamenti nodali.

Una seconda tabella riporta per ogni nodo a cui sia associato un vincolo rigido e/o elastico o una fondazione speciale e per ogni combinazione (o caso di carico) i valori delle azioni esercitate dalla struttura sui vincoli (reazioni vincolari cambiate di segno).

Una terza tabella, infine riassume per ogni nodo le sei combinazioni in cui si attingono i valori minimi e massimi della reazione Fz, della reazione Mx e della reazione My.

Nodo	Cmb	Traslazione X	Traslazione Y	Traslazione Z	Rotazione X	Rotazione Y	Rotazione Z
	mm	mm	mm				
1	1	0.19	-0.05	-1.21	-3.42e-05	2.06e-04	0.0
1	2	0.15	-0.04	-0.93	-2.63e-05	1.59e-04	0.0
1	3	0.19	-0.04	-0.93	-2.63e-05	-1.85e-05	0.0
2	1	0.19	0.02	-0.65	1.81e-05	2.03e-04	0.0
2	2	0.15	0.01	-0.50	1.39e-05	1.56e-04	0.0
2	3	0.18	-0.04	-0.98	-3.40e-05	-1.07e-05	0.0
3	1	0.22	-0.11	-1.77	-8.59e-05	1.85e-04	0.0
3	2	0.17	-0.09	-1.36	-6.60e-05	1.42e-04	0.0
4	1	0.20	-0.05	-1.23	-3.44e-05	2.06e-04	0.0
4	2	0.15	-0.04	-0.94	-2.64e-05	1.58e-04	0.0
5	1	0.20	0.02	-0.67	1.73e-05	2.03e-04	0.0
5	2	0.15	0.01	-0.51	1.33e-05	1.56e-04	0.0
5	3	0.18	-0.04	-1.00	-3.44e-05	-1.08e-05	0.0
6	1	0.23	-0.11	-1.79	-8.61e-05	1.84e-04	0.0
6	2	0.17	-0.09	-1.38	-6.62e-05	1.42e-04	0.0
7	1	0.20	-0.05	-1.24	-3.43e-05	2.13e-04	0.0
7	2	0.15	-0.04	-0.96	-2.64e-05	1.64e-04	0.0
8	1	0.20	0.02	-0.68	1.82e-05	2.10e-04	0.0
8	2	0.15	0.01	-0.53	1.40e-05	1.62e-04	0.0
8	3	0.18	-0.04	-1.02	-3.50e-05	-1.18e-05	0.0
9	1	0.23	-0.11	-1.81	-8.81e-05	1.91e-04	0.0
9	2	0.17	-0.09	-1.39	-6.78e-05	1.47e-04	0.0
10	1	0.23	0.07	-0.12	5.86e-05	1.73e-04	0.0
10	2	0.18	0.06	-0.09	4.51e-05	1.33e-04	0.0
10	3	0.17	-0.04	-1.03	-3.62e-05	2.40e-06	0.0
11	1	0.28	-0.15	-2.29	-1.18e-04	1.38e-04	0.0

11 2	0.21	-0.12	-1.76	-9.07e-05	1.06e-04	0.0
12 1	0.20	-0.05	-1.26	-3.39e-05	2.21e-04	0.0
12 2	0.15	-0.04	-0.97	-2.61e-05	1.70e-04	0.0
13 1	0.20	0.02	-0.70	1.91e-05	2.20e-04	0.0
13 2	0.15	0.01	-0.54	1.47e-05	1.69e-04	0.0
13 3	0.19	-0.04	-1.03	-3.55e-05	-1.32e-05	0.0
14 1	0.22	-0.11	-1.83	-9.00e-05	2.01e-04	0.0
14 2	0.17	-0.09	-1.41	-6.92e-05	1.55e-04	0.0
15 1	0.24	0.07	-0.14	5.77e-05	1.72e-04	0.0
15 2	0.18	0.05	-0.11	4.44e-05	1.33e-04	0.0
15 3	0.17	-0.04	-1.05	-3.63e-05	2.22e-06	0.0
16 1	0.28	-0.15	-2.31	-1.17e-04	1.38e-04	0.0
16 2	0.22	-0.12	-1.78	-9.02e-05	1.06e-04	0.0
17 1	0.20	-0.05	-1.28	-3.34e-05	2.23e-04	0.0
17 2	0.15	-0.04	-0.98	-2.57e-05	1.71e-04	0.0
18 1	0.19	0.02	-0.72	1.95e-05	2.31e-04	0.0
18 2	0.15	0.01	-0.55	1.50e-05	1.78e-04	0.0
18 3	0.19	-0.04	-1.05	-3.55e-05	-1.42e-05	0.0
19 1	0.22	-0.11	-1.86	-9.04e-05	2.12e-04	0.0
19 2	0.17	-0.09	-1.43	-6.95e-05	1.63e-04	0.0
20 1	0.24	0.07	-0.16	5.95e-05	1.79e-04	0.0
20 2	0.18	0.05	-0.12	4.57e-05	1.37e-04	0.0
20 3	0.17	-0.04	-1.07	-3.65e-05	1.41e-06	0.0
21 1	0.28	-0.15	-2.33	-1.19e-04	1.44e-04	0.0
21 2	0.22	-0.12	-1.79	-9.14e-05	1.11e-04	0.0
22 1	0.18	-0.05	-1.30	-3.72e-05	2.47e-04	0.0
22 2	0.14	-0.04	-1.00	-2.87e-05	1.90e-04	0.0
22 3	0.20	-0.04	-1.00	-2.87e-05	-2.40e-05	0.0
23 1	0.23	0.07	-0.17	6.01e-05	1.86e-04	0.0
23 2	0.18	0.05	-0.13	4.62e-05	1.43e-04	0.0
23 3	0.17	-0.04	-1.08	-3.63e-05	1.22e-06	0.0
24 1	0.28	-0.15	-2.35	-1.19e-04	1.52e-04	0.0
24 2	0.22	-0.12	-1.81	-9.13e-05	1.17e-04	0.0
25 2	0.14	0.01	-0.57	1.52e-05	1.88e-04	0.0
25 3	0.19	-0.05	-1.07	-3.60e-05	-1.67e-05	0.0
26 1	0.20	-0.12	-1.88	-9.22e-05	2.26e-04	0.0
26 2	0.16	-0.09	-1.45	-7.09e-05	1.73e-04	0.0
26 3	0.21	-0.03	-0.95	-1.97e-05	-3.17e-05	0.0
27 1	0.16	-0.05	-1.33	-3.76e-05	2.64e-04	0.0
27 2	0.12	-0.04	-1.02	-2.89e-05	2.03e-04	0.0
27 3	0.20	-0.04	-1.02	-2.89e-05	-2.77e-05	0.0
28 1	0.29	0.10	0.33	7.91e-05	1.29e-04	0.0
28 2	0.22	0.08	0.25	6.09e-05	9.92e-05	0.0
28 3	0.16	-0.04	-1.08	-3.49e-05	1.51e-05	0.0
29 1	0.35	-0.17	-2.75	-1.29e-04	7.93e-05	0.0
29 2	0.27	-0.13	-2.11	-9.90e-05	6.10e-05	0.0

30 1	0.23	0.06	-0.19	5.59e-05	1.90e-04	0.0
30 2	0.18	0.05	-0.15	4.30e-05	1.47e-04	0.0
30 3	0.17	-0.04	-1.10	-3.44e-05	5.07e-06	0.0
31 1	0.28	-0.14	-2.37	-1.14e-04	1.57e-04	0.0
31 2	0.22	-0.11	-1.82	-8.74e-05	1.21e-04	0.0
32 2	0.13	0.01	-0.59	1.53e-05	1.99e-04	0.0
32 3	0.19	-0.05	-1.09	-3.56e-05	-1.88e-05	0.0
33 1	0.19	-0.12	-1.90	-9.16e-05	2.40e-04	0.0
33 2	0.15	-0.09	-1.46	-7.05e-05	1.85e-04	0.0
33 3	0.21	-0.03	-0.96	-1.97e-05	-3.36e-05	0.0
34 1	0.14	-0.05	-1.35	-3.67e-05	2.80e-04	0.0
34 2	0.11	-0.04	-1.04	-2.82e-05	2.15e-04	0.0
34 3	0.21	-0.04	-1.04	-2.82e-05	-3.03e-05	0.0
35 1	0.29	0.09	0.31	7.82e-05	1.29e-04	0.0
35 2	0.22	0.07	0.24	6.02e-05	9.94e-05	0.0
35 3	0.16	-0.04	-1.10	-3.52e-05	1.52e-05	0.0
36 1	0.36	-0.16	-2.77	-1.29e-04	7.89e-05	0.0
36 2	0.28	-0.13	-2.13	-9.89e-05	6.07e-05	0.0
37 1	0.22	0.07	-0.21	6.22e-05	2.11e-04	0.0
37 2	0.17	0.05	-0.16	4.79e-05	1.63e-04	0.0
37 3	0.17	-0.05	-1.12	-3.88e-05	-1.66e-06	0.0
38 1	0.27	-0.16	-2.40	-1.27e-04	1.74e-04	0.0
38 2	0.21	-0.12	-1.85	-9.75e-05	1.34e-04	0.0
39 2	0.11	0.01	-0.60	1.52e-05	2.11e-04	0.0
39 3	0.20	-0.05	-1.10	-3.46e-05	-2.12e-05	0.0
40 1	0.17	-0.12	-1.92	-8.99e-05	2.56e-04	0.0
40 2	0.13	-0.09	-1.48	-6.92e-05	1.97e-04	0.0
40 3	0.22	-0.03	-0.98	-1.93e-05	-3.56e-05	0.0
41 1	0.29	0.09	0.29	8.07e-05	1.34e-04	0.0
41 2	0.22	0.07	0.23	6.20e-05	1.03e-04	0.0
41 3	0.16	-0.04	-1.12	-3.58e-05	1.46e-05	0.0
42 1	0.36	-0.16	-2.79	-1.32e-04	8.30e-05	0.0
42 2	0.28	-0.13	-2.15	-1.01e-04	6.39e-05	0.0
43 1	0.12	-0.05	-1.37	-3.52e-05	2.96e-04	0.0
43 2	0.09	-0.04	-1.06	-2.71e-05	2.27e-04	0.0
43 3	0.21	-0.04	-1.06	-2.71e-05	-3.26e-05	0.0
44 1	0.20	0.07	-0.23	6.37e-05	2.27e-04	0.0
44 2	0.15	0.05	-0.18	4.90e-05	1.75e-04	0.0
44 3	0.18	-0.05	-1.14	-3.89e-05	-5.26e-06	0.0
45 1	0.25	-0.16	-2.43	-1.29e-04	1.90e-04	0.0
45 2	0.19	-0.12	-1.87	-9.90e-05	1.46e-04	0.0
46 1	0.29	0.10	0.28	8.31e-05	1.42e-04	0.0
46 2	0.22	0.07	0.21	6.39e-05	1.09e-04	0.0
46 3	0.16	-0.04	-1.14	-3.63e-05	1.36e-05	0.0
47 1	0.36	-0.17	-2.82	-1.35e-04	9.03e-05	0.0
47 2	0.27	-0.13	-2.17	-1.04e-04	6.95e-05	0.0

48 2	0.10	0.01	-0.62	1.51e-05	2.23e-04	0.0
48 3	0.20	-0.04	-1.12	-3.33e-05	-2.37e-05	0.0
49 1	0.15	-0.12	-1.94	-8.72e-05	2.72e-04	0.0
49 2	0.12	-0.09	-1.49	-6.70e-05	2.09e-04	0.0
49 3	0.22	-0.03	-0.99	-1.86e-05	-3.77e-05	0.0
50 1	0.18	0.07	-0.26	6.34e-05	2.43e-04	0.0
50 2	0.14	0.05	-0.20	4.87e-05	1.87e-04	0.0
50 3	0.18	-0.05	-1.16	-3.78e-05	-8.45e-06	0.0
51 1	0.23	-0.16	-2.45	-1.27e-04	2.06e-04	0.0
51 2	0.18	-0.12	-1.88	-9.76e-05	1.59e-04	0.0
52 1	0.10	-0.05	-1.40	-3.33e-05	3.12e-04	0.0
52 2	0.07	-0.04	-1.07	-2.56e-05	2.40e-04	0.0
52 3	0.22	-0.04	-1.07	-2.56e-05	-3.49e-05	0.0
53 1	0.28	0.10	0.26	8.40e-05	1.52e-04	0.0
53 2	0.22	0.07	0.20	6.46e-05	1.17e-04	0.0
53 3	0.16	-0.04	-1.15	-3.64e-05	1.27e-05	0.0
54 1	0.35	-0.17	-2.84	-1.36e-04	1.00e-04	0.0
54 2	0.27	-0.13	-2.18	-1.04e-04	7.72e-05	0.0
55 2	0.08	0.01	-0.65	1.49e-05	2.36e-04	0.0
55 3	0.21	-0.04	-1.14	-3.16e-05	-2.64e-05	0.0
56 1	0.13	-0.11	-1.95	-8.35e-05	2.90e-04	0.0
56 2	0.10	-0.09	-1.50	-6.42e-05	2.23e-04	0.0
56 3	0.23	-0.03	-1.01	-1.77e-05	-3.97e-05	0.0
57 1	0.16	0.07	-0.29	6.21e-05	2.60e-04	0.0
57 2	0.12	0.06	-0.22	4.78e-05	2.00e-04	0.0
57 3	0.19	-0.05	-1.18	-3.62e-05	-1.17e-05	0.0
58 1	0.21	-0.16	-2.46	-1.23e-04	2.25e-04	0.0
58 2	0.16	-0.12	-1.89	-9.47e-05	1.73e-04	0.0
58 3	0.23	-0.02	-0.93	-1.07e-05	-3.88e-05	0.0
59 1	0.27	0.10	0.24	8.54e-05	1.65e-04	0.0
59 2	0.21	0.07	0.19	6.57e-05	1.27e-04	0.0
59 3	0.16	-0.04	-1.18	-3.67e-05	1.03e-05	0.0
60 1	0.34	-0.17	-2.86	-1.38e-04	1.12e-04	0.0
60 2	0.26	-0.13	-2.20	-1.06e-04	8.60e-05	0.0
61 1	0.07	-0.05	-1.42	-3.12e-05	3.29e-04	0.0
61 2	0.05	-0.04	-1.09	-2.40e-05	2.53e-04	0.0
61 3	0.22	-0.04	-1.09	-2.40e-05	-3.72e-05	0.0
62 2	0.06	0.01	-0.67	1.45e-05	2.49e-04	0.0
62 3	0.21	-0.04	-1.15	-2.96e-05	-2.93e-05	0.0
63 1	0.10	-0.11	-1.96	-7.89e-05	3.08e-04	0.0
63 2	0.08	-0.08	-1.51	-6.07e-05	2.37e-04	0.0
63 3	0.23	-0.03	-1.03	-1.66e-05	-4.17e-05	0.0
64 1	0.26	0.10	0.22	8.52e-05	1.79e-04	0.0
64 2	0.20	0.08	0.17	6.55e-05	1.38e-04	0.0
64 3	0.16	-0.04	-1.20	-3.61e-05	7.73e-06	0.0
65 1	0.33	-0.17	-2.89	-1.38e-04	1.27e-04	0.0

65 2	0.25	-0.13	-2.22	-1.06e-04	9.75e-05	0.0
66 1	0.14	0.07	-0.32	6.02e-05	2.77e-04	0.0
66 2	0.11	0.05	-0.25	4.63e-05	2.13e-04	0.0
66 3	0.19	-0.04	-1.20	-3.42e-05	-1.51e-05	0.0
67 1	0.19	-0.16	-2.47	-1.18e-04	2.44e-04	0.0
67 2	0.14	-0.12	-1.90	-9.07e-05	1.88e-04	0.0
67 3	0.23	-0.02	-0.95	-1.02e-05	-4.08e-05	0.0
68 1	0.34	0.09	0.67	7.11e-05	8.33e-05	0.0
68 2	0.26	0.07	0.52	5.47e-05	6.40e-05	0.0
68 3	0.14	-0.03	-1.11	-2.66e-05	2.75e-05	0.0
69 1	0.42	-0.14	-3.09	-1.05e-04	2.39e-05	0.0
69 2	0.33	-0.11	-2.37	-8.10e-05	1.84e-05	0.0
70 1	0.04	-0.04	-1.43	-2.87e-05	3.47e-04	0.0
70 2	0.03	-0.03	-1.10	-2.21e-05	2.67e-04	0.0
70 3	0.23	-0.03	-1.10	-2.21e-05	-3.96e-05	0.0
71 1	0.24	0.10	0.20	8.40e-05	1.96e-04	0.0
71 2	0.18	0.08	0.15	6.46e-05	1.51e-04	0.0
71 3	0.17	-0.04	-1.21	-3.51e-05	4.62e-06	0.0
72 1	0.31	-0.17	-2.90	-1.35e-04	1.44e-04	0.0
72 2	0.24	-0.13	-2.23	-1.04e-04	1.11e-04	0.0
73 1	0.35	0.09	0.66	7.03e-05	8.40e-05	0.0
73 2	0.27	0.07	0.50	5.41e-05	6.46e-05	0.0
73 3	0.14	-0.03	-1.13	-2.66e-05	2.73e-05	0.0
74 1	0.43	-0.13	-3.11	-1.05e-04	2.45e-05	0.0
74 2	0.33	-0.10	-2.39	-8.05e-05	1.88e-05	0.0
75 2	0.04	0.01	-0.69	1.40e-05	2.63e-04	0.0
75 3	0.22	-0.04	-1.17	-2.73e-05	-3.23e-05	0.0
76 1	0.07	-0.11	-1.97	-7.37e-05	3.27e-04	0.0
76 2	0.05	-0.08	-1.51	-5.67e-05	2.51e-04	0.0
76 3	0.24	-0.03	-1.04	-1.54e-05	-4.37e-05	0.0
77 1	0.11	0.07	-0.36	5.77e-05	2.96e-04	0.0
77 2	0.09	0.05	-0.28	4.44e-05	2.28e-04	0.0
77 3	0.20	-0.04	-1.21	-3.20e-05	-1.87e-05	0.0
78 1	0.16	-0.15	-2.47	-1.12e-04	2.65e-04	0.0
78 2	0.12	-0.12	-1.90	-8.59e-05	2.04e-04	0.0
78 3	0.24	-0.02	-0.97	-9.51e-06	-4.27e-05	0.0
79 1	0.34	0.09	0.64	7.20e-05	8.81e-05	0.0
79 2	0.27	0.07	0.49	5.54e-05	6.78e-05	0.0
79 3	0.14	-0.03	-1.15	-2.69e-05	2.69e-05	0.0
80 1	0.43	-0.13	-3.13	-1.06e-04	2.87e-05	0.0
80 2	0.33	-0.10	-2.41	-8.17e-05	2.21e-05	0.0
81 1	0.22	0.10	0.16	8.21e-05	2.14e-04	0.0
81 2	0.17	0.08	0.13	6.31e-05	1.64e-04	0.0
81 3	0.17	-0.04	-1.23	-3.37e-05	1.03e-06	0.0
82 1	0.29	-0.17	-2.91	-1.31e-04	1.64e-04	0.0
82 2	0.22	-0.13	-2.24	-1.01e-04	1.26e-04	0.0

83 1	9.73e-03	-0.04	-1.45	-2.61e-05	3.65e-04	0.0
83 2	7.48e-03	-0.03	-1.12	-2.01e-05	2.81e-04	0.0
83 3	0.24	-0.03	-1.12	-2.01e-05	-4.20e-05	0.0
84 1	0.34	0.09	0.63	7.24e-05	9.54e-05	0.0
84 2	0.26	0.07	0.48	5.57e-05	7.34e-05	0.0
84 3	0.14	-0.03	-1.17	-2.68e-05	2.66e-05	0.0
85 1	0.42	-0.13	-3.15	-1.06e-04	3.67e-05	0.0
85 2	0.33	-0.10	-2.42	-8.18e-05	2.82e-05	0.0
86 2	0.01	0.01	-0.72	1.33e-05	2.77e-04	0.0
86 3	0.23	-0.04	-1.18	-2.48e-05	-3.54e-05	0.0
87 1	0.04	-0.10	-1.97	-6.77e-05	3.47e-04	0.0
87 2	0.03	-0.08	-1.52	-5.20e-05	2.67e-04	0.0
87 3	0.24	-0.03	-1.06	-1.40e-05	-4.58e-05	0.0
88 1	0.08	0.07	-0.40	5.47e-05	3.15e-04	0.0
88 2	0.06	0.05	-0.31	4.20e-05	2.42e-04	0.0
88 3	0.21	-0.04	-1.22	-2.95e-05	-2.25e-05	0.0
89 1	0.13	-0.15	-2.47	-1.04e-04	2.86e-04	0.0
89 2	0.10	-0.11	-1.90	-8.03e-05	2.20e-04	0.0
89 3	0.24	-0.02	-0.98	-8.80e-06	-4.47e-05	0.0
90 1	0.19	0.10	0.12	7.93e-05	2.33e-04	0.0
90 2	0.15	0.07	0.10	6.10e-05	1.79e-04	0.0
90 3	0.18	-0.04	-1.25	-3.20e-05	-2.97e-06	0.0
91 1	0.26	-0.17	-2.92	-1.26e-04	1.86e-04	0.0
91 2	0.20	-0.13	-2.24	-9.71e-05	1.43e-04	0.0
92 1	0.33	0.08	0.61	6.80e-05	1.05e-04	0.0
92 2	0.26	0.06	0.47	5.23e-05	8.06e-05	0.0
92 3	0.14	-0.03	-1.18	-2.50e-05	2.85e-05	0.0
93 1	0.42	-0.13	-3.16	-1.01e-04	4.70e-05	0.0
93 2	0.32	-0.10	-2.43	-7.80e-05	3.61e-05	0.0
94 1	-0.02	-0.04	-1.47	-2.32e-05	3.83e-04	0.0
94 2	-0.02	-0.03	-1.13	-1.78e-05	2.95e-04	0.0
94 3	0.24	-0.03	-1.13	-1.78e-05	-4.46e-05	0.0
95 1	0.05	0.07	-0.45	5.10e-05	3.35e-04	0.0
95 2	0.04	0.05	-0.35	3.92e-05	2.58e-04	0.0
95 3	0.21	-0.04	-1.24	-2.67e-05	-2.66e-05	0.0
96 1	0.09	-0.14	-2.45	-9.61e-05	3.09e-04	0.0
96 2	0.07	-0.11	-1.89	-7.40e-05	2.38e-04	0.0
96 3	0.25	-0.02	-1.00	-8.03e-06	-4.67e-05	0.0
97 1	0.33	0.09	0.59	7.59e-05	1.16e-04	0.0
97 2	0.25	0.07	0.46	5.84e-05	8.91e-05	0.0
97 3	0.15	-0.03	-1.21	-2.83e-05	2.49e-05	0.0
98 1	0.42	-0.14	-3.20	-1.13e-04	5.12e-05	0.0
98 2	0.32	-0.11	-2.46	-8.70e-05	3.94e-05	0.0
99 2	-0.02	0.01	-0.75	1.23e-05	2.91e-04	0.0
99 3	0.23	-0.03	-1.19	-2.20e-05	-3.87e-05	0.0
1001	-1.61e-04	-0.09	-1.97	-6.08e-05	3.67e-04	0.0

1002	-1.24e-04	-0.07	-1.51	-4.68e-05	2.82e-04	0.0
1003	0.25	-0.02	-1.07	-1.25e-05	-4.79e-05	0.0
1011	0.17	0.10	0.08	7.58e-05	2.53e-04	0.0
1012	0.13	0.07	0.06	5.83e-05	1.95e-04	0.0
1013	0.18	-0.04	-1.26	-2.99e-05	-7.33e-06	0.0
1021	0.23	-0.16	-2.91	-1.20e-04	2.09e-04	0.0
1022	0.18	-0.12	-2.24	-9.21e-05	1.61e-04	0.0
1023	0.24	-0.01	-0.92	-3.93e-06	-4.12e-05	0.0
1031	0.31	0.09	0.57	7.74e-05	1.30e-04	0.0
1032	0.24	0.07	0.44	5.95e-05	9.99e-05	0.0
1033	0.15	-0.03	-1.23	-2.83e-05	2.13e-05	0.0
1041	0.40	-0.14	-3.23	-1.15e-04	6.47e-05	0.0
1042	0.31	-0.11	-2.48	-8.84e-05	4.98e-05	0.0
1051	-0.06	-0.03	-1.49	-2.00e-05	4.02e-04	0.0
1052	-0.05	-0.03	-1.14	-1.54e-05	3.09e-04	0.0
1053	0.25	-0.03	-1.14	-1.54e-05	-4.73e-05	0.0
1061	0.13	0.09	0.03	7.15e-05	2.75e-04	0.0
1062	0.10	0.07	0.02	5.50e-05	2.12e-04	0.0
1063	0.19	-0.04	-1.27	-2.76e-05	-1.20e-05	0.0
1071	0.20	-0.16	-2.89	-1.12e-04	2.34e-04	0.0
1072	0.15	-0.12	-2.23	-8.63e-05	1.80e-04	0.0
1073	0.24	-0.01	-0.93	-3.67e-06	-4.33e-05	0.0
1081	0.01	0.06	-0.51	4.65e-05	3.56e-04	0.0
1082	9.00e-03	0.05	-0.39	3.58e-05	2.74e-04	0.0
1083	0.22	-0.03	-1.25	-2.37e-05	-3.09e-05	0.0
1091	0.05	-0.13	-2.43	-8.67e-05	3.33e-04	0.0
1092	0.04	-0.10	-1.87	-6.67e-05	2.56e-04	0.0
1093	0.25	-0.02	-1.02	-7.19e-06	-4.87e-05	0.0
1102	-0.04	0.01	-0.78	1.11e-05	3.06e-04	0.0
1103	0.24	-0.03	-1.20	-1.89e-05	-4.22e-05	0.0
1111	-0.04	-0.08	-1.96	-5.31e-05	3.87e-04	0.0
1112	-0.03	-0.06	-1.51	-4.08e-05	2.98e-04	0.0
1113	0.25	-0.02	-1.09	-1.08e-05	-5.02e-05	0.0
1121	0.30	0.09	0.54	7.68e-05	1.47e-04	0.0
1122	0.23	0.07	0.42	5.90e-05	1.13e-04	0.0
1123	0.15	-0.03	-1.25	-2.75e-05	1.73e-05	0.0
1131	0.39	-0.14	-3.25	-1.13e-04	8.31e-05	0.0
1132	0.30	-0.11	-2.50	-8.72e-05	6.39e-05	0.0
1141	0.28	0.09	0.51	7.50e-05	1.66e-04	0.0
1142	0.21	0.07	0.39	5.77e-05	1.27e-04	0.0
1143	0.16	-0.03	-1.27	-2.63e-05	1.29e-05	0.0
1151	0.36	-0.14	-3.26	-1.10e-04	1.05e-04	0.0
1152	0.28	-0.11	-2.51	-8.47e-05	8.06e-05	0.0
1161	0.10	0.09	-0.04	6.65e-05	2.98e-04	0.0
1162	0.08	0.07	-0.03	5.11e-05	2.29e-04	0.0
1163	0.20	-0.03	-1.28	-2.50e-05	-1.70e-05	0.0

1171	0.16	-0.15	-2.87	-1.03e-04	2.61e-04	0.0
1172	0.12	-0.11	-2.21	-7.95e-05	2.01e-04	0.0
1173	0.25	-0.01	-0.95	-3.38e-06	-4.54e-05	0.0
1181	-0.10	-0.03	-1.50	-1.65e-05	4.21e-04	0.0
1182	-0.08	-0.02	-1.15	-1.27e-05	3.23e-04	0.0
1183	0.26	-0.02	-1.15	-1.27e-05	-5.04e-05	0.0
1191	-0.03	0.06	-0.56	4.11e-05	3.78e-04	0.0
1192	-0.02	0.05	-0.43	3.16e-05	2.91e-04	0.0
1193	0.23	-0.03	-1.25	-2.04e-05	-3.55e-05	0.0
1201	5.68e-03	-0.12	-2.41	-7.57e-05	3.58e-04	0.0
1202	4.37e-03	-0.09	-1.85	-5.83e-05	2.75e-04	0.0
1203	0.26	-0.01	-1.03	-6.28e-06	-5.10e-05	0.0
1212	-0.07	0.01	-0.81	9.25e-06	3.21e-04	0.0
1213	0.25	-0.03	-1.21	-1.56e-05	-4.62e-05	0.0
1221	-0.08	-0.07	-1.95	-4.39e-05	4.09e-04	0.0
1222	-0.06	-0.06	-1.50	-3.38e-05	3.14e-04	0.0
1223	0.26	-0.02	-1.10	-8.96e-06	-5.28e-05	0.0
1231	0.25	0.09	0.47	7.24e-05	1.87e-04	0.0
1232	0.19	0.07	0.36	5.57e-05	1.44e-04	0.0
1233	0.17	-0.03	-1.29	-2.49e-05	8.14e-06	0.0
1241	0.34	-0.14	-3.26	-1.06e-04	1.29e-04	0.0
1242	0.26	-0.11	-2.51	-8.13e-05	9.92e-05	0.0
1251	0.06	0.08	-0.11	6.05e-05	3.22e-04	0.0
1252	0.05	0.07	-0.08	4.65e-05	2.48e-04	0.0
1253	0.21	-0.03	-1.29	-2.22e-05	-2.24e-05	0.0
1261	0.11	-0.14	-2.83	-9.33e-05	2.90e-04	0.0
1262	0.09	-0.11	-2.18	-7.17e-05	2.23e-04	0.0
1263	0.25	-0.01	-0.97	-3.07e-06	-4.77e-05	0.0
1271	0.22	0.09	0.41	6.91e-05	2.09e-04	0.0
1272	0.17	0.07	0.32	5.32e-05	1.61e-04	0.0
1273	0.17	-0.03	-1.30	-2.32e-05	3.00e-06	0.0
1281	0.30	-0.14	-3.25	-1.00e-04	1.55e-04	0.0
1282	0.23	-0.10	-2.50	-7.71e-05	1.20e-04	0.0
1291	-0.07	0.05	-0.63	3.42e-05	4.01e-04	0.0
1292	-0.06	0.04	-0.48	2.63e-05	3.08e-04	0.0
1293	0.24	-0.03	-1.26	-1.68e-05	-4.07e-05	0.0
1301	-0.04	-0.10	-2.37	-6.28e-05	3.84e-04	0.0
1302	-0.03	-0.08	-1.82	-4.83e-05	2.96e-04	0.0
1303	0.26	-0.01	-1.05	-5.26e-06	-5.34e-05	0.0
1311	0.39	0.06	0.89	4.29e-05	4.80e-05	0.0
1312	0.30	0.04	0.68	3.30e-05	3.69e-05	0.0
1313	0.14	-0.01	-1.13	-1.49e-05	3.59e-05	0.0
1321	0.48	-0.08	-3.31	-6.10e-05	-1.98e-05	0.0
1322	0.37	-0.06	-2.54	-4.69e-05	-1.52e-05	0.0
1331	-0.14	-0.02	-1.51	-1.26e-05	4.39e-04	0.0
1332	-0.11	-0.02	-1.16	-9.66e-06	3.38e-04	0.0

1333	0.27	-0.02	-1.16	-9.66e-06	-5.41e-05	0.0
1342	-0.11	9.07e-03	-0.84	6.55e-06	3.36e-04	0.0
1343	0.26	-0.02	-1.21	-1.18e-05	-5.09e-05	0.0
1351	-0.13	-0.06	-1.94	-3.28e-05	4.31e-04	0.0
1352	-0.10	-0.04	-1.49	-2.52e-05	3.31e-04	0.0
1353	0.27	-0.01	-1.11	-6.84e-06	-5.59e-05	0.0
1361	0.02	0.08	-0.18	5.33e-05	3.48e-04	0.0
1362	0.01	0.06	-0.14	4.10e-05	2.68e-04	0.0
1363	0.22	-0.03	-1.30	-1.90e-05	-2.83e-05	0.0
1371	0.06	-0.13	-2.79	-8.16e-05	3.20e-04	0.0
1372	0.05	-0.10	-2.14	-6.27e-05	2.46e-04	0.0
1373	0.26	-8.99e-03	-0.99	-2.73e-06	-5.01e-05	0.0
1381	0.39	0.05	0.87	4.25e-05	4.89e-05	0.0
1382	0.30	0.04	0.67	3.27e-05	3.77e-05	0.0
1383	0.14	-0.01	-1.15	-1.50e-05	3.60e-05	0.0
1391	0.48	-0.08	-3.33	-6.08e-05	-1.99e-05	0.0
1392	0.37	-0.06	-2.56	-4.68e-05	-1.53e-05	0.0
1401	0.19	0.09	0.35	6.52e-05	2.34e-04	0.0
1402	0.15	0.07	0.27	5.01e-05	1.80e-04	0.0
1403	0.18	-0.03	-1.31	-2.14e-05	-2.52e-06	0.0
1411	0.27	-0.13	-3.22	-9.39e-05	1.84e-04	0.0
1412	0.21	-0.10	-2.48	-7.22e-05	1.42e-04	0.0
1421	0.39	0.05	0.86	4.38e-05	5.16e-05	0.0
1422	0.30	0.04	0.66	3.37e-05	3.97e-05	0.0
1423	0.14	-0.01	-1.17	-1.53e-05	3.58e-05	0.0
1431	0.48	-0.08	-3.35	-6.24e-05	-1.84e-05	0.0
1432	0.37	-0.06	-2.58	-4.80e-05	-1.42e-05	0.0
1441	-0.16	-0.02	-1.52	-1.10e-05	4.43e-04	0.0
1442	-0.12	-0.02	-1.17	-8.44e-06	3.41e-04	0.0
1443	0.28	-0.02	-1.17	-8.44e-06	-5.64e-05	0.0
1451	-0.12	0.04	-0.69	2.49e-05	4.25e-04	0.0
1452	-0.09	0.03	-0.53	1.91e-05	3.27e-04	0.0
1453	0.25	-0.02	-1.26	-1.27e-05	-4.68e-05	0.0
1461	-0.10	-0.08	-2.33	-4.66e-05	4.12e-04	0.0
1462	-0.07	-0.06	-1.79	-3.59e-05	3.17e-04	0.0
1463	0.27	-9.51e-03	-1.07	-4.05e-06	-5.64e-05	0.0
1471	0.39	0.05	0.85	4.50e-05	5.74e-05	0.0
1472	0.30	0.04	0.65	3.46e-05	4.41e-05	0.0
1473	0.14	-0.01	-1.19	-1.55e-05	3.51e-05	0.0
1481	0.48	-0.08	-3.38	-6.40e-05	-1.36e-05	0.0
1482	0.37	-0.06	-2.60	-4.92e-05	-1.05e-05	0.0
1491	0.15	0.08	0.28	6.05e-05	2.60e-04	0.0
1492	0.12	0.06	0.22	4.65e-05	2.00e-04	0.0
1493	0.19	-0.03	-1.32	-1.94e-05	-8.45e-06	0.0
1501	0.22	-0.12	-3.19	-8.66e-05	2.15e-04	0.0
1502	0.17	-0.10	-2.45	-6.66e-05	1.65e-04	0.0

1503	0.25	-6.47e-03	-0.91	0.0	-4.32e-05	0.0
1512	-0.12	5.37e-03	-0.85	4.14e-06	3.39e-04	0.0
1513	0.27	-0.02	-1.22	-1.02e-05	-5.37e-05	0.0
1521	-0.14	-0.05	-1.94	-2.66e-05	4.36e-04	0.0
1522	-0.11	-0.04	-1.49	-2.04e-05	3.35e-04	0.0
1523	0.28	-0.01	-1.12	-6.08e-06	-5.80e-05	0.0
1531	-0.03	0.07	-0.27	4.43e-05	3.76e-04	0.0
1532	-0.03	0.05	-0.21	3.41e-05	2.89e-04	0.0
1533	0.23	-0.02	-1.30	-1.56e-05	-3.48e-05	0.0
1541	7.27e-03	-0.11	-2.73	-6.76e-05	3.53e-04	0.0
1542	5.59e-03	-0.08	-2.10	-5.20e-05	2.71e-04	0.0
1543	0.26	-7.58e-03	-1.01	-2.34e-06	-5.28e-05	0.0
1551	0.38	0.05	0.83	4.55e-05	6.67e-05	0.0
1552	0.29	0.04	0.64	3.50e-05	5.13e-05	0.0
1553	0.14	-0.01	-1.22	-1.55e-05	3.43e-05	0.0
1561	0.48	-0.08	-3.41	-6.44e-05	-4.27e-06	0.0
1562	0.37	-0.06	-2.62	-4.95e-05	-3.29e-06	0.0
1571	0.37	0.06	0.81	4.63e-05	7.76e-05	0.0
1572	0.29	0.04	0.63	3.56e-05	5.97e-05	0.0
1573	0.14	-0.02	-1.24	-1.56e-05	3.19e-05	0.0
1581	0.11	0.08	0.20	5.50e-05	2.88e-04	0.0
1582	0.08	0.06	0.15	4.23e-05	2.21e-04	0.0
1583	0.20	-0.02	-1.33	-1.72e-05	-1.48e-05	0.0
1591	0.18	-0.12	-3.14	-7.81e-05	2.48e-04	0.0
1592	0.14	-0.09	-2.42	-6.01e-05	1.90e-04	0.0
1593	0.25	-5.79e-03	-0.93	0.0	-4.58e-05	0.0
1601	0.47	-0.08	-3.43	-6.56e-05	5.13e-06	0.0
1602	0.36	-0.06	-2.64	-5.05e-05	3.94e-06	0.0
1611	-0.14	0.03	-0.72	1.82e-05	4.32e-04	0.0
1612	-0.11	0.02	-0.56	1.40e-05	3.32e-04	0.0
1613	0.26	-0.02	-1.27	-1.09e-05	-5.01e-05	0.0
1621	-0.12	-0.06	-2.32	-3.72e-05	4.21e-04	0.0
1622	-0.09	-0.05	-1.79	-2.86e-05	3.24e-04	0.0
1623	0.28	-8.12e-03	-1.08	-3.72e-06	-5.86e-05	0.0
1631	0.36	0.06	0.79	4.61e-05	9.24e-05	0.0
1632	0.28	0.04	0.61	3.55e-05	7.11e-05	0.0
1633	0.14	-0.02	-1.26	-1.53e-05	2.89e-05	0.0
1641	0.46	-0.08	-3.45	-6.53e-05	2.06e-05	0.0
1642	0.35	-0.06	-2.66	-5.02e-05	1.58e-05	0.0
1651	-0.09	0.05	-0.36	3.24e-05	4.07e-04	0.0
1652	-0.07	0.04	-0.27	2.49e-05	3.13e-04	0.0
1653	0.25	-0.02	-1.30	-1.18e-05	-4.23e-05	0.0
1661	-0.06	-0.09	-2.67	-5.02e-05	3.89e-04	0.0
1662	-0.04	-0.07	-2.05	-3.86e-05	2.99e-04	0.0
1663	0.27	-5.82e-03	-1.03	-1.84e-06	-5.60e-05	0.0
1671	-0.18	-0.02	-1.53	-8.85e-06	4.50e-04	0.0

1672	-0.14	-0.01	-1.17	-6.81e-06	3.46e-04	0.0
1673	0.28	-0.01	-1.17	-6.81e-06	-5.60e-05	0.0
1681	0.06	0.07	0.11	4.84e-05	3.18e-04	0.0
1682	0.05	0.06	0.08	3.72e-05	2.44e-04	0.0
1683	0.21	-0.02	-1.33	-1.48e-05	-2.18e-05	0.0
1691	0.12	-0.11	-3.08	-6.84e-05	2.83e-04	0.0
1692	0.09	-0.08	-2.37	-5.26e-05	2.18e-04	0.0
1693	0.26	-5.06e-03	-0.95	0.0	-4.85e-05	0.0
1701	0.34	0.06	0.76	4.54e-05	1.10e-04	0.0
1702	0.26	0.04	0.59	3.50e-05	8.47e-05	0.0
1703	0.15	-0.02	-1.28	-1.49e-05	2.52e-05	0.0
1712	-0.14	1.01e-03	-0.92	1.37e-06	3.46e-04	0.0
1713	0.27	-0.01	-1.21	-7.94e-06	-5.39e-05	0.0
1721	-0.18	-0.03	-1.85	-1.89e-05	4.45e-04	0.0
1722	-0.13	-0.03	-1.43	-1.45e-05	3.42e-04	0.0
1723	0.28	-0.01	-1.14	-5.21e-06	-5.74e-05	0.0
1731	0.44	-0.08	-3.47	-6.42e-05	3.99e-05	0.0
1732	0.34	-0.06	-2.67	-4.94e-05	3.07e-05	0.0
1741	0.32	0.05	0.73	4.43e-05	1.30e-04	0.0
1742	0.25	0.04	0.56	3.41e-05	1.00e-04	0.0
1743	0.15	-0.02	-1.30	-1.43e-05	2.07e-05	0.0
1751	0.42	-0.08	-3.48	-6.24e-05	6.25e-05	0.0
1752	0.32	-0.06	-2.67	-4.80e-05	4.81e-05	0.0
1761	-0.12	0.04	-0.39	2.42e-05	4.18e-04	0.0
1762	-0.09	0.03	-0.30	1.86e-05	3.22e-04	0.0
1763	0.26	-0.02	-1.31	-1.01e-05	-4.63e-05	0.0
1771	-0.09	-0.07	-2.66	-3.97e-05	4.03e-04	0.0
1772	-0.07	-0.05	-2.04	-3.05e-05	3.10e-04	0.0
1773	0.28	-4.85e-03	-1.04	-1.82e-06	-5.83e-05	0.0
1781	-0.18	0.02	-0.89	1.02e-05	4.44e-04	0.0
1782	-0.13	0.01	-0.69	7.86e-06	3.42e-04	0.0
1783	0.27	-0.01	-1.25	-8.26e-06	-5.12e-05	0.0
1791	-0.16	-0.04	-2.16	-2.55e-05	4.35e-04	0.0
1792	-0.12	-0.03	-1.66	-1.96e-05	3.35e-04	0.0
1793	0.28	-7.38e-03	-1.10	-3.53e-06	-5.80e-05	0.0
1801	5.70e-03	0.06	9.27e-03	4.02e-05	3.51e-04	0.0
1802	4.38e-03	0.05	7.13e-03	3.09e-05	2.70e-04	0.0
1803	0.23	-0.02	-1.33	-1.21e-05	-2.95e-05	0.0
1811	0.06	-0.09	-3.01	-5.67e-05	3.22e-04	0.0
1812	0.04	-0.07	-2.31	-4.36e-05	2.48e-04	0.0
1813	0.26	-4.23e-03	-0.97	0.0	-5.15e-05	0.0
1821	0.29	0.05	0.68	4.28e-05	1.52e-04	0.0
1822	0.23	0.04	0.52	3.29e-05	1.17e-04	0.0
1823	0.16	-0.02	-1.31	-1.36e-05	1.57e-05	0.0
1831	0.39	-0.08	-3.47	-5.99e-05	8.82e-05	0.0
1832	0.30	-0.06	-2.67	-4.61e-05	6.79e-05	0.0

1841	0.27	0.05	0.63	4.08e-05	1.77e-04	0.0
1842	0.20	0.04	0.48	3.14e-05	1.36e-04	0.0
1843	0.16	-0.01	-1.33	-1.27e-05	1.01e-05	0.0
1851	0.36	-0.08	-3.46	-5.69e-05	1.17e-04	0.0
1852	0.27	-0.06	-2.66	-4.38e-05	8.97e-05	0.0
1861	-0.20	-0.01	-1.53	-6.73e-06	4.56e-04	0.0
1862	-0.16	-9.64e-03	-1.18	-5.17e-06	3.50e-04	0.0
1863	0.28	-9.64e-03	-1.18	-5.17e-06	-5.61e-05	0.0
1871	-0.21	-2.18e-03	-1.28	0.0	4.56e-04	0.0
1872	-0.16	-1.68e-03	-0.98	0.0	3.51e-04	0.0
1873	0.27	-0.01	-1.21	-5.77e-06	-5.45e-05	0.0
1881	-0.20	-0.02	-1.78	-1.24e-05	4.52e-04	0.0
1882	-0.15	-0.02	-1.37	-9.57e-06	3.48e-04	0.0
1883	0.28	-8.16e-03	-1.15	-4.22e-06	-5.72e-05	0.0
1891	-0.06	0.05	-0.10	2.95e-05	3.88e-04	0.0
1892	-0.05	0.04	-0.07	2.27e-05	2.99e-04	0.0
1893	0.24	-0.01	-1.33	-9.15e-06	-3.83e-05	0.0
1901	-0.02	-0.07	-2.93	-4.20e-05	3.66e-04	0.0
1902	-0.01	-0.05	-2.25	-3.23e-05	2.82e-04	0.0
1903	0.27	-3.19e-03	-1.00	0.0	-5.50e-05	0.0
1911	-0.16	0.02	-0.63	1.44e-05	4.35e-04	0.0
1912	-0.12	0.02	-0.48	1.11e-05	3.35e-04	0.0
1913	0.26	-0.01	-1.28	-7.54e-06	-4.85e-05	0.0
1921	-0.14	-0.05	-2.42	-2.69e-05	4.23e-04	0.0
1922	-0.11	-0.04	-1.86	-2.07e-05	3.25e-04	0.0
1923	0.28	-4.87e-03	-1.07	-2.07e-06	-5.81e-05	0.0
1931	0.23	0.05	0.56	3.85e-05	2.03e-04	0.0
1932	0.18	0.04	0.43	2.96e-05	1.56e-04	0.0
1933	0.17	-0.01	-1.34	-1.17e-05	4.05e-06	0.0
1941	0.32	-0.07	-3.43	-5.33e-05	1.47e-04	0.0
1942	0.24	-0.06	-2.64	-4.10e-05	1.13e-04	0.0
1952	-0.15	4.89e-03	-0.80	3.44e-06	3.48e-04	0.0
1953	0.27	-0.01	-1.23	-5.82e-06	-5.27e-05	0.0
1961	-0.19	-0.03	-2.02	-1.61e-05	4.46e-04	0.0
1962	-0.14	-0.02	-1.55	-1.24e-05	3.43e-04	0.0
1963	0.28	-6.38e-03	-1.12	-3.13e-06	-5.79e-05	0.0
1971	0.19	0.05	0.48	3.57e-05	2.31e-04	0.0
1972	0.15	0.04	0.37	2.74e-05	1.78e-04	0.0
1973	0.18	-0.01	-1.35	-1.06e-05	-2.49e-06	0.0
1981	0.27	-0.07	-3.39	-4.92e-05	1.81e-04	0.0
1982	0.21	-0.05	-2.61	-3.78e-05	1.39e-04	0.0
1991	-0.09	0.04	-0.14	2.22e-05	4.04e-04	0.0
1992	-0.07	0.03	-0.10	1.71e-05	3.11e-04	0.0
1993	0.25	-0.01	-1.34	-7.81e-06	-4.29e-05	0.0
2001	-0.06	-0.06	-2.91	-3.31e-05	3.85e-04	0.0
2002	-0.05	-0.04	-2.24	-2.55e-05	2.96e-04	0.0

2003	0.28	-2.58e-03	-1.01	0.0	-5.75e-05	0.0
2011	0.15	0.05	0.39	3.24e-05	2.62e-04	0.0
2012	0.11	0.04	0.30	2.49e-05	2.01e-04	0.0
2013	0.19	-0.01	-1.35	-9.40e-06	-9.56e-06	0.0
2021	0.22	-0.07	-3.33	-4.44e-05	2.17e-04	0.0
2022	0.17	-0.05	-2.56	-3.41e-05	1.67e-04	0.0
2023	0.25	-2.90e-03	-0.91	0.0	-4.41e-05	0.0
2031	-0.19	0.01	-0.84	7.14e-06	4.48e-04	0.0
2032	-0.15	8.51e-03	-0.65	5.49e-06	3.45e-04	0.0
2033	0.27	-9.05e-03	-1.26	-5.21e-06	-5.09e-05	0.0
2041	-0.18	-0.03	-2.22	-1.66e-05	4.39e-04	0.0
2042	-0.14	-0.02	-1.71	-1.28e-05	3.38e-04	0.0
2043	0.28	-4.59e-03	-1.10	-2.10e-06	-5.82e-05	0.0
2051	-0.22	-8.63e-03	-1.53	-4.61e-06	4.60e-04	0.0
2052	-0.17	-6.64e-03	-1.18	-3.55e-06	3.54e-04	0.0
2053	0.28	-6.64e-03	-1.18	-3.55e-06	-5.62e-05	0.0
2061	-0.22	-3.65e-03	-1.36	-1.66e-06	4.60e-04	0.0
2062	-0.17	-2.81e-03	-1.04	-1.28e-06	3.54e-04	0.0
2063	0.28	-6.92e-03	-1.20	-3.79e-06	-5.52e-05	0.0
2071	-0.22	-0.01	-1.71	-7.25e-06	4.58e-04	0.0
2072	-0.17	-0.01	-1.31	-5.58e-06	3.52e-04	0.0
2073	0.28	-5.90e-03	-1.16	-3.07e-06	-5.71e-05	0.0
2081	0.10	0.04	0.29	2.85e-05	2.95e-04	0.0
2082	0.07	0.03	0.23	2.19e-05	2.27e-04	0.0
2083	0.21	-0.01	-1.35	-8.08e-06	-1.73e-05	0.0
2091	0.16	-0.06	-3.26	-3.88e-05	2.56e-04	0.0
2092	0.12	-0.05	-2.51	-2.99e-05	1.97e-04	0.0
2093	0.26	-2.53e-03	-0.93	0.0	-4.70e-05	0.0
2101	-0.15	0.02	-0.43	1.35e-05	4.27e-04	0.0
2102	-0.11	0.02	-0.33	1.04e-05	3.28e-04	0.0
2103	0.26	-9.77e-03	-1.30	-5.76e-06	-4.60e-05	0.0
2111	-0.12	-0.04	-2.62	-2.23e-05	4.11e-04	0.0
2112	-0.09	-0.03	-2.02	-1.71e-05	3.16e-04	0.0
2113	0.28	-2.91e-03	-1.04	-1.02e-06	-5.78e-05	0.0
2122	-0.17	5.01e-04	-0.92	0.0	3.53e-04	0.0
2123	0.27	-6.62e-03	-1.22	-3.70e-06	-5.41e-05	0.0
2131	-0.21	-0.02	-1.87	-8.83e-06	4.55e-04	0.0
2132	-0.16	-0.01	-1.44	-6.79e-06	3.50e-04	0.0
2133	0.28	-4.88e-03	-1.14	-2.44e-06	-5.77e-05	0.0
2141	0.04	0.04	0.18	2.37e-05	3.32e-04	0.0
2142	0.03	0.03	0.14	1.82e-05	2.55e-04	0.0
2143	0.22	-9.50e-03	-1.35	-6.62e-06	-2.58e-05	0.0
2151	0.09	-0.05	-3.18	-3.22e-05	3.00e-04	0.0
2152	0.07	-0.04	-2.45	-2.48e-05	2.31e-04	0.0
2153	0.26	-2.11e-03	-0.95	0.0	-5.03e-05	0.0
2161	-0.19	0.01	-0.68	6.94e-06	4.43e-04	0.0

2162	-0.14	8.54e-03	-0.53	5.34e-06	3.41e-04	0.0
2163	0.27	-6.67e-03	-1.28	-3.93e-06	-4.93e-05	0.0
2171	-0.16	-0.02	-2.38	-1.36e-05	4.32e-04	0.0
2172	-0.13	-0.02	-1.83	-1.05e-05	3.32e-04	0.0
2173	0.28	-2.99e-03	-1.08	-1.23e-06	-5.83e-05	0.0
2182	-0.17	2.55e-03	-0.81	1.79e-06	3.52e-04	0.0
2183	0.27	-5.68e-03	-1.24	-3.23e-06	-5.30e-05	0.0
2191	-0.20	-0.02	-2.01	-8.84e-06	4.51e-04	0.0
2192	-0.16	-0.01	-1.55	-6.80e-06	3.47e-04	0.0
2193	0.28	-3.73e-03	-1.12	-1.78e-06	-5.80e-05	0.0
2201	-0.04	0.03	0.07	1.74e-05	3.74e-04	0.0
2202	-0.03	0.02	0.05	1.34e-05	2.88e-04	0.0
2203	0.24	-7.68e-03	-1.35	-5.00e-06	-3.55e-05	0.0
2211	8.18e-03	-0.04	-3.09	-2.39e-05	3.50e-04	0.0
2212	6.30e-03	-0.03	-2.38	-1.83e-05	2.69e-04	0.0
2213	0.27	-1.60e-03	-0.98	0.0	-5.42e-05	0.0
2221	-0.08	0.02	0.02	1.31e-05	3.94e-04	0.0
2222	-0.06	0.02	0.02	1.01e-05	3.03e-04	0.0
2223	0.25	-6.85e-03	-1.35	-4.25e-06	-4.06e-05	0.0
2231	-0.04	-0.03	-3.07	-1.88e-05	3.72e-04	0.0
2232	-0.03	-0.02	-2.36	-1.44e-05	2.86e-04	0.0
2233	0.28	-1.28e-03	-0.99	0.0	-5.69e-05	0.0
2241	-0.23	-4.73e-03	-1.53	-2.51e-06	4.62e-04	0.0
2242	-0.18	-3.64e-03	-1.18	-1.93e-06	3.56e-04	0.0
2243	0.28	-3.64e-03	-1.18	-1.93e-06	-5.64e-05	0.0
2251	-0.23	-3.17e-03	-1.44	-1.60e-06	4.63e-04	0.0
2252	-0.18	-2.44e-03	-1.11	-1.23e-06	3.56e-04	0.0
2253	0.28	-3.65e-03	-1.19	-1.97e-06	-5.58e-05	0.0
2261	-0.23	-5.98e-03	-1.63	-3.25e-06	4.62e-04	0.0
2262	-0.18	-4.60e-03	-1.25	-2.50e-06	3.55e-04	0.0
2263	0.28	-3.39e-03	-1.17	-1.76e-06	-5.69e-05	0.0
2272	-0.16	3.01e-03	-0.73	1.96e-06	3.50e-04	0.0
2273	0.27	-4.12e-03	-1.25	-2.40e-06	-5.21e-05	0.0
2281	-0.20	-0.01	-2.12	-7.13e-06	4.47e-04	0.0
2282	-0.15	-9.68e-03	-1.63	-5.49e-06	3.44e-04	0.0
2283	0.28	-2.56e-03	-1.11	-1.14e-06	-5.83e-05	0.0
2291	-0.14	0.01	-0.30	8.04e-06	4.20e-04	0.0
2292	-0.10	0.01	-0.23	6.19e-06	3.23e-04	0.0
2293	0.26	-5.05e-03	-1.32	-3.12e-06	-4.44e-05	0.0
2301	-0.10	-0.02	-2.75	-1.26e-05	4.03e-04	0.0
2302	-0.08	-0.02	-2.12	-9.67e-06	3.10e-04	0.0
2303	0.28	-1.52e-03	-1.03	0.0	-5.75e-05	0.0
2311	-0.23	-1.67e-03	-1.35	0.0	4.63e-04	0.0
2312	-0.18	-1.28e-03	-1.04	0.0	3.56e-04	0.0
2313	0.28	-3.38e-03	-1.20	-1.85e-06	-5.53e-05	0.0
2321	-0.23	-6.55e-03	-1.72	-3.60e-06	4.60e-04	0.0

2322	-0.17	-5.04e-03	-1.32	-2.77e-06	3.54e-04	0.0
2323	0.28	-2.94e-03	-1.16	-1.48e-06	-5.72e-05	0.0
2331	-0.23	-5.27e-04	-1.27	0.0	4.63e-04	0.0
2332	-0.18	-4.05e-04	-0.98	0.0	3.56e-04	0.0
2333	0.28	-2.83e-03	-1.21	-1.57e-06	-5.48e-05	0.0
2341	-0.22	-6.21e-03	-1.80	-3.42e-06	4.59e-04	0.0
2342	-0.17	-4.77e-03	-1.38	-2.63e-06	3.53e-04	0.0
2343	0.28	-2.35e-03	-1.15	-1.15e-06	-5.75e-05	0.0
2351	-0.18	6.99e-03	-0.59	4.22e-06	4.40e-04	0.0
2352	-0.14	5.37e-03	-0.45	3.24e-06	3.38e-04	0.0
2353	0.26	-3.41e-03	-1.29	-2.11e-06	-4.82e-05	0.0
2361	-0.16	-0.01	-2.47	-7.66e-06	4.27e-04	0.0
2362	-0.12	-0.01	-1.90	-5.89e-06	3.28e-04	0.0
2363	0.28	-1.62e-03	-1.07	0.0	-5.82e-05	0.0
2372	-0.18	8.17e-05	-0.93	0.0	3.56e-04	0.0
2373	0.28	-2.02e-03	-1.22	-1.14e-06	-5.44e-05	0.0
2381	-0.22	-4.90e-03	-1.86	-2.68e-06	4.58e-04	0.0
2382	-0.17	-3.77e-03	-1.43	-2.06e-06	3.52e-04	0.0
2383	0.28	-1.68e-03	-1.14	0.0	-5.78e-05	0.0
2391	-0.21	2.65e-03	-0.88	1.61e-06	4.54e-04	0.0
2392	-0.16	2.04e-03	-0.68	1.24e-06	3.49e-04	0.0
2393	0.27	-2.08e-03	-1.26	-1.27e-06	-5.15e-05	0.0
2401	-0.19	-7.18e-03	-2.19	-3.97e-06	4.45e-04	0.0
2402	-0.15	-5.53e-03	-1.68	-3.05e-06	3.42e-04	0.0
2403	0.28	-1.41e-03	-1.10	0.0	-5.84e-05	0.0
2412	-0.18	1.99e-04	-0.90	0.0	3.55e-04	0.0
2413	0.28	-1.01e-03	-1.22	0.0	-5.41e-05	0.0
2421	-0.22	-2.81e-03	-1.89	-1.46e-06	4.57e-04	0.0
2422	-0.17	-2.16e-03	-1.46	-1.12e-06	3.51e-04	0.0
2423	0.28	-9.48e-04	-1.14	0.0	-5.79e-05	0.0
2431	0.40	3.24e-03	0.96	0.0	3.69e-05	0.0
2432	0.31	2.50e-03	0.74	0.0	2.84e-05	0.0
2433	0.13	2.50e-03	-1.13	0.0	3.88e-05	0.0
2441	0.40	3.08e-03	0.95	0.0	3.82e-05	0.0
2442	0.31	2.37e-03	0.73	0.0	2.94e-05	0.0
2443	0.13	2.37e-03	-1.15	0.0	3.86e-05	0.0
2451	0.40	2.92e-03	0.93	0.0	4.13e-05	0.0
2452	0.31	2.24e-03	0.72	0.0	3.18e-05	0.0
2453	0.13	2.24e-03	-1.18	0.0	3.83e-05	0.0
2461	0.40	2.74e-03	0.92	0.0	4.84e-05	0.0
2462	0.31	2.11e-03	0.71	0.0	3.72e-05	0.0
2463	0.13	2.11e-03	-1.20	0.0	3.81e-05	0.0
2471	0.39	2.50e-03	0.90	0.0	6.04e-05	0.0
2472	0.30	1.92e-03	0.69	0.0	4.65e-05	0.0
2473	0.13	1.92e-03	-1.21	0.0	3.90e-05	0.0
2481	0.39	2.42e-03	0.88	0.0	6.63e-05	0.0

2482	0.30	1.86e-03	0.68	0.0	5.10e-05	0.0
2483	0.13	1.86e-03	-1.24	0.0	3.69e-05	0.0
2491	0.37	2.28e-03	0.86	0.0	7.94e-05	0.0
2492	0.29	1.76e-03	0.67	0.0	6.11e-05	0.0
2493	0.14	1.76e-03	-1.26	0.0	3.32e-05	0.0
2501	0.36	2.13e-03	0.84	0.0	9.67e-05	0.0
2502	0.28	1.64e-03	0.64	0.0	7.44e-05	0.0
2503	0.14	1.64e-03	-1.29	0.0	2.88e-05	0.0
2511	0.34	1.97e-03	0.80	0.0	1.17e-04	0.0
2512	0.26	1.52e-03	0.62	0.0	9.00e-05	0.0
2513	0.15	1.52e-03	-1.30	0.0	2.39e-05	0.0
2521	0.31	1.81e-03	0.75	0.0	1.40e-04	0.0
2522	0.24	1.40e-03	0.58	0.0	1.08e-04	0.0
2523	0.15	1.40e-03	-1.32	0.0	1.86e-05	0.0
2531	0.28	1.66e-03	0.70	0.0	1.65e-04	0.0
2532	0.22	1.28e-03	0.54	0.0	1.27e-04	0.0
2533	0.16	1.28e-03	-1.33	0.0	1.27e-05	0.0
2541	0.25	1.50e-03	0.63	0.0	1.92e-04	0.0
2542	0.19	1.16e-03	0.48	0.0	1.47e-04	0.0
2543	0.17	1.16e-03	-1.35	0.0	6.43e-06	0.0
2551	0.21	1.36e-03	0.55	0.0	2.21e-04	0.0
2552	0.16	1.04e-03	0.42	0.0	1.70e-04	0.0
2553	0.18	1.04e-03	-1.35	0.0	0.0	0.0
2561	0.16	1.21e-03	0.46	0.0	2.52e-04	0.0
2562	0.12	9.32e-04	0.35	0.0	1.94e-04	0.0
2563	0.19	9.32e-04	-1.36	0.0	-7.68e-06	0.0
2571	0.11	1.07e-03	0.36	0.0	2.87e-04	0.0
2572	0.08	8.25e-04	0.27	0.0	2.21e-04	0.0
2573	0.20	8.25e-04	-1.36	0.0	-1.57e-05	0.0
2581	0.05	9.41e-04	0.24	0.0	3.25e-04	0.0
2582	0.04	7.24e-04	0.19	0.0	2.50e-04	0.0
2583	0.22	7.24e-04	-1.36	0.0	-2.45e-05	0.0
2591	-0.03	8.14e-04	0.12	0.0	3.69e-04	0.0
2592	-0.02	6.26e-04	0.09	0.0	2.84e-04	0.0
2593	0.24	6.26e-04	-1.36	0.0	-3.45e-05	0.0
2601	-0.07	7.14e-04	0.08	0.0	3.90e-04	0.0
2602	-0.05	5.49e-04	0.06	0.0	3.00e-04	0.0
2603	0.25	5.49e-04	-1.36	0.0	-3.97e-05	0.0
2611	-0.13	5.83e-04	-0.26	0.0	4.17e-04	0.0
2612	-0.10	4.48e-04	-0.20	0.0	3.21e-04	0.0
2613	0.26	4.48e-04	-1.32	0.0	-4.38e-05	0.0
2621	-0.18	4.41e-04	-0.55	0.0	4.38e-04	0.0
2622	-0.14	3.39e-04	-0.43	0.0	3.37e-04	0.0
2623	0.26	3.39e-04	-1.29	0.0	-4.79e-05	0.0
2631	-0.21	2.84e-04	-0.86	0.0	4.53e-04	0.0
2632	-0.16	2.18e-04	-0.66	0.0	3.49e-04	0.0

2633	0.27	2.18e-04	-1.26	0.0	-5.13e-05	0.0
2641	-0.23	1.17e-04	-1.16	0.0	4.62e-04	0.0
2642	-0.18	8.97e-05	-0.89	0.0	3.55e-04	0.0
2643	0.28	8.97e-05	-1.22	0.0	-5.40e-05	0.0
2651	-0.23	-7.83e-05	-1.53	0.0	4.64e-04	0.0
2652	-0.18	-6.02e-05	-1.18	0.0	3.57e-04	0.0
2653	0.28	-6.02e-05	-1.18	0.0	-5.65e-05	0.0
2661	-0.22	-2.51e-04	-1.91	0.0	4.57e-04	0.0
2662	-0.17	-1.93e-04	-1.47	0.0	3.51e-04	0.0
2663	0.28	-1.93e-04	-1.14	0.0	-5.79e-05	0.0
2671	-0.19	-3.79e-04	-2.21	0.0	4.44e-04	0.0
2672	-0.15	-2.91e-04	-1.70	0.0	3.41e-04	0.0
2673	0.28	-2.91e-04	-1.10	0.0	-5.84e-05	0.0
2681	-0.15	-4.98e-04	-2.51	0.0	4.25e-04	0.0
2682	-0.12	-3.83e-04	-1.93	0.0	3.27e-04	0.0
2683	0.28	-3.83e-04	-1.06	0.0	-5.82e-05	0.0
2691	-0.10	-6.14e-04	-2.79	0.0	4.00e-04	0.0
2692	-0.08	-4.72e-04	-2.15	0.0	3.07e-04	0.0
2693	0.28	-4.72e-04	-1.02	0.0	-5.74e-05	0.0
2701	-0.03	-7.31e-04	-3.12	0.0	3.68e-04	0.0
2702	-0.02	-5.62e-04	-2.40	0.0	2.83e-04	0.0
2703	0.28	-5.62e-04	-0.98	0.0	-5.66e-05	0.0
2711	0.02	-8.26e-04	-3.15	0.0	3.44e-04	0.0
2712	0.01	-6.35e-04	-2.42	0.0	2.65e-04	0.0
2713	0.27	-6.35e-04	-0.97	0.0	-5.39e-05	0.0
2721	0.10	-9.56e-04	-3.24	0.0	2.92e-04	0.0
2722	0.08	-7.36e-04	-2.49	0.0	2.25e-04	0.0
2723	0.26	-7.36e-04	-0.95	0.0	-4.99e-05	0.0
2731	0.18	-1.09e-03	-3.33	0.0	2.47e-04	0.0
2732	0.14	-8.40e-04	-2.56	0.0	1.90e-04	0.0
2733	0.26	-8.40e-04	-0.92	0.0	-4.65e-05	0.0
2741	0.24	-1.23e-03	-3.40	0.0	2.06e-04	0.0
2742	0.18	-9.47e-04	-2.61	0.0	1.58e-04	0.0
2743	0.25	-9.47e-04	-0.90	0.0	-4.34e-05	0.0
2751	0.29	-1.37e-03	-3.46	0.0	1.69e-04	0.0
2752	0.22	-1.06e-03	-2.66	0.0	1.30e-04	0.0
2761	0.34	-1.52e-03	-3.50	0.0	1.34e-04	0.0
2762	0.26	-1.17e-03	-2.69	0.0	1.03e-04	0.0
2771	0.38	-1.66e-03	-3.53	0.0	1.02e-04	0.0
2772	0.29	-1.28e-03	-2.71	0.0	7.87e-05	0.0
2781	0.41	-1.81e-03	-3.54	0.0	7.31e-05	0.0
2782	0.32	-1.39e-03	-2.73	0.0	5.62e-05	0.0
2791	0.44	-1.96e-03	-3.55	0.0	4.66e-05	0.0
2792	0.34	-1.51e-03	-2.73	0.0	3.58e-05	0.0
2801	0.46	-2.11e-03	-3.54	0.0	2.33e-05	0.0
2802	0.36	-1.62e-03	-2.72	0.0	1.79e-05	0.0

2811	0.48	-2.26e-03	-3.52	0.0	4.19e-06	0.0
2812	0.37	-1.73e-03	-2.71	0.0	3.22e-06	0.0
2821	0.49	-2.39e-03	-3.49	0.0	-8.29e-06	0.0
2822	0.38	-1.84e-03	-2.69	0.0	-6.37e-06	0.0
2831	0.48	-2.47e-03	-3.45	0.0	-6.38e-06	0.0
2832	0.37	-1.90e-03	-2.66	0.0	-4.91e-06	0.0
2841	0.49	-2.69e-03	-3.44	0.0	-1.94e-05	0.0
2842	0.38	-2.07e-03	-2.65	0.0	-1.49e-05	0.0
2851	0.50	-2.86e-03	-3.42	0.0	-2.74e-05	0.0
2852	0.38	-2.20e-03	-2.63	0.0	-2.10e-05	0.0
2861	0.50	-3.02e-03	-3.40	0.0	-3.06e-05	0.0
2862	0.38	-2.33e-03	-2.61	0.0	-2.36e-05	0.0
2871	0.50	-3.18e-03	-3.38	0.0	-3.16e-05	0.0
2872	0.38	-2.45e-03	-2.60	0.0	-2.43e-05	0.0
2882	-0.18	-2.98e-05	-0.90	0.0	3.55e-04	0.0
2883	0.28	1.18e-03	-1.22	0.0	-5.41e-05	0.0
2891	-0.22	2.31e-03	-1.89	1.50e-06	4.57e-04	0.0
2892	-0.17	1.78e-03	-1.46	1.15e-06	3.51e-04	0.0
2893	0.28	5.69e-04	-1.14	0.0	-5.79e-05	0.0
2902	-0.16	-1.62e-03	-0.68	-1.21e-06	3.49e-04	0.0
2903	0.27	2.49e-03	-1.26	1.30e-06	-5.15e-05	0.0
2911	-0.19	6.44e-03	-2.19	4.02e-06	4.45e-04	0.0
2912	-0.15	4.96e-03	-1.68	3.09e-06	3.42e-04	0.0
2913	0.28	8.43e-04	-1.10	0.0	-5.84e-05	0.0
2922	-0.18	5.56e-05	-0.93	0.0	3.55e-04	0.0
2923	0.28	2.15e-03	-1.22	1.17e-06	-5.44e-05	0.0
2931	-0.22	4.44e-03	-1.86	2.71e-06	4.58e-04	0.0
2932	-0.17	3.42e-03	-1.43	2.08e-06	3.52e-04	0.0
2933	0.28	1.32e-03	-1.14	0.0	-5.78e-05	0.0
2941	-0.18	-6.13e-03	-0.59	-4.18e-06	4.40e-04	0.0
2942	-0.14	-4.72e-03	-0.45	-3.21e-06	3.38e-04	0.0
2943	0.26	4.07e-03	-1.29	2.14e-06	-4.83e-05	0.0
2951	-0.16	0.01	-2.47	7.73e-06	4.27e-04	0.0
2952	-0.12	9.65e-03	-1.90	5.95e-06	3.28e-04	0.0
2953	0.28	8.71e-04	-1.06	0.0	-5.83e-05	0.0
2961	-0.23	6.40e-04	-1.27	0.0	4.63e-04	0.0
2962	-0.18	4.92e-04	-0.98	0.0	3.56e-04	0.0
2963	0.28	2.91e-03	-1.21	1.59e-06	-5.48e-05	0.0
2971	-0.22	5.79e-03	-1.80	3.45e-06	4.59e-04	0.0
2972	-0.17	4.46e-03	-1.38	2.65e-06	3.53e-04	0.0
2973	0.28	2.04e-03	-1.15	1.17e-06	-5.76e-05	0.0
2981	-0.23	1.70e-03	-1.35	0.0	4.63e-04	0.0
2982	-0.18	1.31e-03	-1.04	0.0	3.56e-04	0.0
2983	0.28	3.40e-03	-1.20	1.87e-06	-5.54e-05	0.0
2991	-0.22	6.20e-03	-1.72	3.63e-06	4.60e-04	0.0
2992	-0.17	4.77e-03	-1.32	2.79e-06	3.54e-04	0.0

2993	0.28	2.67e-03	-1.16	1.50e-06	-5.73e-05	0.0
3001	-0.13	-0.01	-0.30	-8.00e-06	4.20e-04	0.0
3002	-0.10	-9.40e-03	-0.23	-6.16e-06	3.23e-04	0.0
3003	0.26	5.93e-03	-1.32	3.15e-06	-4.44e-05	0.0
3011	-0.10	0.02	-2.75	1.27e-05	4.03e-04	0.0
3012	-0.08	0.02	-2.12	9.74e-06	3.10e-04	0.0
3013	0.28	6.07e-04	-1.03	0.0	-5.75e-05	0.0
3022	-0.16	-2.64e-03	-0.73	-1.93e-06	3.50e-04	0.0
3023	0.27	4.48e-03	-1.25	2.42e-06	-5.22e-05	0.0
3031	-0.20	0.01	-2.12	7.18e-06	4.47e-04	0.0
3032	-0.15	9.15e-03	-1.63	5.52e-06	3.44e-04	0.0
3033	0.28	2.03e-03	-1.11	1.17e-06	-5.83e-05	0.0
3041	-0.23	3.10e-03	-1.44	1.62e-06	4.63e-04	0.0
3042	-0.18	2.39e-03	-1.11	1.24e-06	3.56e-04	0.0
3043	0.28	3.60e-03	-1.19	1.99e-06	-5.59e-05	0.0
3051	-0.23	5.71e-03	-1.63	3.27e-06	4.62e-04	0.0
3052	-0.17	4.40e-03	-1.25	2.52e-06	3.55e-04	0.0
3053	0.28	3.19e-03	-1.17	1.77e-06	-5.69e-05	0.0
3061	-0.23	4.57e-03	-1.53	2.53e-06	4.62e-04	0.0
3062	-0.18	3.51e-03	-1.18	1.95e-06	3.56e-04	0.0
3063	0.28	3.51e-03	-1.18	1.95e-06	-5.64e-05	0.0
3071	-0.08	-0.02	0.02	-1.31e-05	3.93e-04	0.0
3072	-0.06	-0.02	0.02	-1.01e-05	3.03e-04	0.0
3073	0.25	7.92e-03	-1.35	4.27e-06	-4.06e-05	0.0
3081	-0.04	0.03	-3.07	1.89e-05	3.72e-04	0.0
3082	-0.03	0.02	-2.36	1.45e-05	2.86e-04	0.0
3083	0.28	1.94e-04	-0.99	0.0	-5.69e-05	0.0
3091	-0.04	-0.03	0.07	-1.74e-05	3.74e-04	0.0
3092	-0.03	-0.02	0.05	-1.34e-05	2.88e-04	0.0
3093	0.24	8.89e-03	-1.35	5.00e-06	-3.55e-05	0.0
3101	8.81e-03	0.04	-3.09	2.40e-05	3.50e-04	0.0
3102	6.77e-03	0.03	-2.38	1.84e-05	2.69e-04	0.0
3103	0.27	3.73e-04	-0.98	0.0	-5.42e-05	0.0
3112	-0.17	-2.27e-03	-0.81	-1.77e-06	3.52e-04	0.0
3113	0.27	5.95e-03	-1.24	3.26e-06	-5.31e-05	0.0
3121	-0.20	0.01	-2.01	8.88e-06	4.51e-04	0.0
3122	-0.16	0.01	-1.55	6.83e-06	3.47e-04	0.0
3123	0.28	3.26e-03	-1.12	1.81e-06	-5.81e-05	0.0
3131	-0.18	-0.01	-0.68	-6.89e-06	4.43e-04	0.0
3132	-0.14	-7.94e-03	-0.53	-5.30e-06	3.41e-04	0.0
3133	0.27	7.27e-03	-1.28	3.96e-06	-4.94e-05	0.0
3141	-0.16	0.02	-2.38	1.37e-05	4.32e-04	0.0
3142	-0.13	0.02	-1.83	1.05e-05	3.32e-04	0.0
3143	0.28	2.30e-03	-1.08	1.28e-06	-5.83e-05	0.0
3151	0.04	-0.04	0.18	-2.37e-05	3.32e-04	0.0
3152	0.03	-0.03	0.14	-1.82e-05	2.55e-04	0.0

3153	0.22	0.01	-1.35	6.60e-06	-2.58e-05	0.0
3161	0.09	0.05	-3.18	3.24e-05	3.00e-04	0.0
3162	0.07	0.04	-2.45	2.49e-05	2.31e-04	0.0
3163	0.26	6.95e-04	-0.95	0.0	-5.04e-05	0.0
3172	-0.17	-3.54e-04	-0.92	0.0	3.53e-04	0.0
3173	0.28	6.77e-03	-1.22	3.72e-06	-5.42e-05	0.0
3181	-0.21	0.02	-1.87	8.86e-06	4.55e-04	0.0
3182	-0.16	0.01	-1.44	6.81e-06	3.50e-04	0.0
3183	0.28	4.50e-03	-1.14	2.46e-06	-5.78e-05	0.0
3191	-0.15	-0.02	-0.43	-1.34e-05	4.26e-04	0.0
3192	-0.11	-0.02	-0.33	-1.03e-05	3.28e-04	0.0
3193	0.26	0.01	-1.30	5.80e-06	-4.61e-05	0.0
3201	-0.12	0.04	-2.62	2.24e-05	4.11e-04	0.0
3202	-0.09	0.03	-2.02	1.72e-05	3.16e-04	0.0
3203	0.28	2.08e-03	-1.04	1.08e-06	-5.79e-05	0.0
3211	0.10	-0.04	0.29	-2.86e-05	2.95e-04	0.0
3212	0.07	-0.03	0.23	-2.20e-05	2.27e-04	0.0
3213	0.21	0.01	-1.35	8.04e-06	-1.73e-05	0.0
3221	0.16	0.06	-3.26	3.90e-05	2.56e-04	0.0
3222	0.12	0.04	-2.51	3.00e-05	1.97e-04	0.0
3223	0.26	9.09e-04	-0.93	0.0	-4.71e-05	0.0
3231	-0.22	3.64e-03	-1.36	1.68e-06	4.60e-04	0.0
3232	-0.17	2.80e-03	-1.04	1.29e-06	3.54e-04	0.0
3233	0.28	6.92e-03	-1.20	3.80e-06	-5.54e-05	0.0
3241	-0.22	0.01	-1.71	7.26e-06	4.58e-04	0.0
3242	-0.17	9.73e-03	-1.31	5.59e-06	3.52e-04	0.0
3243	0.28	5.62e-03	-1.16	3.08e-06	-5.72e-05	0.0
3251	-0.22	8.43e-03	-1.53	4.62e-06	4.60e-04	0.0
3252	-0.17	6.48e-03	-1.18	3.56e-06	3.54e-04	0.0
3253	0.28	6.48e-03	-1.18	3.56e-06	-5.64e-05	0.0
3261	-0.19	-0.01	-0.84	-7.09e-06	4.48e-04	0.0
3262	-0.15	-8.02e-03	-0.65	-5.45e-06	3.45e-04	0.0
3263	0.27	9.54e-03	-1.26	5.25e-06	-5.10e-05	0.0
3271	-0.17	0.03	-2.22	1.67e-05	4.39e-04	0.0
3272	-0.13	0.02	-1.71	1.28e-05	3.37e-04	0.0
3273	0.28	4.00e-03	-1.09	2.14e-06	-5.83e-05	0.0
3281	0.15	-0.04	0.39	-3.25e-05	2.62e-04	0.0
3282	0.11	-0.03	0.30	-2.50e-05	2.01e-04	0.0
3283	0.19	0.01	-1.35	9.36e-06	-9.58e-06	0.0
3291	0.22	0.06	-3.33	4.46e-05	2.17e-04	0.0
3292	0.17	0.05	-2.56	3.43e-05	1.67e-04	0.0
3293	0.25	1.08e-03	-0.91	0.0	-4.41e-05	0.0
3301	-0.09	-0.04	-0.14	-2.22e-05	4.04e-04	0.0
3302	-0.07	-0.03	-0.10	-1.70e-05	3.11e-04	0.0
3303	0.25	0.01	-1.34	7.84e-06	-4.30e-05	0.0
3311	-0.06	0.06	-2.91	3.32e-05	3.85e-04	0.0

3312	-0.05	0.04	-2.24	2.56e-05	2.96e-04	0.0
3313	0.28	1.60e-03	-1.01	0.0	-5.76e-05	0.0
3321	0.19	-0.05	0.48	-3.58e-05	2.31e-04	0.0
3322	0.15	-0.04	0.37	-2.75e-05	1.78e-04	0.0
3323	0.18	0.02	-1.35	1.06e-05	-2.49e-06	0.0
3331	0.27	0.07	-3.39	4.93e-05	1.81e-04	0.0
3332	0.21	0.05	-2.61	3.79e-05	1.39e-04	0.0
3342	-0.15	-4.58e-03	-0.80	-3.41e-06	3.48e-04	0.0
3343	0.27	0.01	-1.23	5.86e-06	-5.29e-05	0.0
3351	-0.19	0.03	-2.02	1.62e-05	4.46e-04	0.0
3352	-0.14	0.02	-1.55	1.24e-05	3.43e-04	0.0
3353	0.28	5.90e-03	-1.12	3.16e-06	-5.81e-05	0.0
3361	0.23	-0.05	0.56	-3.85e-05	2.03e-04	0.0
3362	0.18	-0.04	0.43	-2.96e-05	1.56e-04	0.0
3363	0.17	0.02	-1.34	1.17e-05	4.07e-06	0.0
3371	0.32	0.07	-3.43	5.35e-05	1.47e-04	0.0
3372	0.24	0.06	-2.64	4.11e-05	1.13e-04	0.0
3381	-0.16	-0.02	-0.63	-1.43e-05	4.35e-04	0.0
3382	-0.12	-0.02	-0.48	-1.10e-05	3.35e-04	0.0
3383	0.26	0.01	-1.28	7.60e-06	-4.87e-05	0.0
3391	-0.14	0.05	-2.42	2.70e-05	4.23e-04	0.0
3392	-0.11	0.03	-1.86	2.07e-05	3.25e-04	0.0
3393	0.28	4.17e-03	-1.07	2.12e-06	-5.82e-05	0.0
3401	-0.06	-0.05	-0.10	-2.95e-05	3.88e-04	0.0
3402	-0.04	-0.04	-0.07	-2.27e-05	2.99e-04	0.0
3403	0.24	0.02	-1.33	9.17e-06	-3.84e-05	0.0
3411	-0.02	0.07	-2.93	4.21e-05	3.66e-04	0.0
3412	-0.01	0.05	-2.25	3.24e-05	2.82e-04	0.0
3413	0.27	2.09e-03	-0.99	0.0	-5.51e-05	0.0
3421	-0.20	2.23e-03	-1.28	0.0	4.55e-04	0.0
3422	-0.16	1.72e-03	-0.98	0.0	3.50e-04	0.0
3423	0.28	0.01	-1.21	5.78e-06	-5.48e-05	0.0
3431	-0.20	0.02	-1.78	1.24e-05	4.52e-04	0.0
3432	-0.15	0.02	-1.37	9.58e-06	3.48e-04	0.0
3433	0.28	7.82e-03	-1.15	4.23e-06	-5.74e-05	0.0
3441	-0.20	0.01	-1.53	6.72e-06	4.55e-04	0.0
3442	-0.16	9.45e-03	-1.18	5.17e-06	3.50e-04	0.0
3443	0.28	9.45e-03	-1.18	5.17e-06	-5.63e-05	0.0
3451	0.27	-0.05	0.63	-4.09e-05	1.77e-04	0.0
3452	0.20	-0.04	0.48	-3.14e-05	1.36e-04	0.0
3453	0.17	0.02	-1.33	1.27e-05	1.01e-05	0.0
3461	0.36	0.07	-3.46	5.71e-05	1.17e-04	0.0
3462	0.28	0.06	-2.66	4.39e-05	8.97e-05	0.0
3471	0.30	-0.05	0.68	-4.28e-05	1.52e-04	0.0
3472	0.23	-0.04	0.52	-3.29e-05	1.17e-04	0.0
3473	0.16	0.02	-1.31	1.35e-05	1.57e-05	0.0

3481	0.39	0.08	-3.47	6.01e-05	8.82e-05	0.0
3482	0.30	0.06	-2.67	4.62e-05	6.79e-05	0.0
3491	7.32e-03	-0.06	9.03e-03	-4.02e-05	3.51e-04	0.0
3492	5.63e-03	-0.05	6.95e-03	-3.09e-05	2.70e-04	0.0
3493	0.23	0.02	-1.33	1.21e-05	-2.96e-05	0.0
3501	0.06	0.09	-3.01	5.68e-05	3.22e-04	0.0
3502	0.04	0.07	-2.31	4.37e-05	2.48e-04	0.0
3503	0.26	2.96e-03	-0.97	0.0	-5.15e-05	0.0
3512	-0.13	-0.01	-0.69	-7.79e-06	3.41e-04	0.0
3513	0.27	0.02	-1.25	8.33e-06	-5.15e-05	0.0
3521	-0.16	0.04	-2.16	2.56e-05	4.35e-04	0.0
3522	-0.12	0.03	-1.66	1.97e-05	3.35e-04	0.0
3523	0.28	6.84e-03	-1.10	3.56e-06	-5.82e-05	0.0
3531	-0.12	-0.04	-0.39	-2.41e-05	4.18e-04	0.0
3532	-0.09	-0.03	-0.30	-1.86e-05	3.22e-04	0.0
3533	0.26	0.02	-1.31	1.02e-05	-4.65e-05	0.0
3541	-0.09	0.07	-2.66	3.98e-05	4.03e-04	0.0
3542	-0.07	0.05	-2.04	3.06e-05	3.10e-04	0.0
3543	0.28	4.04e-03	-1.04	1.89e-06	-5.84e-05	0.0
3551	0.32	-0.05	0.73	-4.44e-05	1.30e-04	0.0
3552	0.25	-0.04	0.56	-3.41e-05	1.00e-04	0.0
3553	0.15	0.02	-1.30	1.43e-05	2.08e-05	0.0
3561	0.42	0.08	-3.48	6.25e-05	6.26e-05	0.0
3562	0.32	0.06	-2.67	4.81e-05	4.81e-05	0.0
3571	0.34	-0.05	0.76	-4.55e-05	1.10e-04	0.0
3572	0.26	-0.04	0.59	-3.50e-05	8.47e-05	0.0
3573	0.15	0.02	-1.28	1.49e-05	2.52e-05	0.0
3582	-0.14	-9.19e-04	-0.92	-1.37e-06	3.45e-04	0.0
3583	0.27	0.01	-1.21	7.94e-06	-5.43e-05	0.0
3591	-0.17	0.03	-1.85	1.89e-05	4.44e-04	0.0
3592	-0.13	0.03	-1.43	1.45e-05	3.42e-04	0.0
3593	0.28	9.79e-03	-1.13	5.23e-06	-5.77e-05	0.0
3601	0.44	0.08	-3.47	6.43e-05	3.99e-05	0.0
3602	0.34	0.06	-2.67	4.95e-05	3.07e-05	0.0
3611	0.06	-0.07	0.11	-4.84e-05	3.18e-04	0.0
3612	0.05	-0.05	0.08	-3.72e-05	2.44e-04	0.0
3613	0.21	0.02	-1.33	1.47e-05	-2.18e-05	0.0
3621	0.12	0.10	-3.08	6.85e-05	2.83e-04	0.0
3622	0.09	0.08	-2.37	5.27e-05	2.18e-04	0.0
3623	0.26	3.61e-03	-0.95	0.0	-4.85e-05	0.0
3631	-0.18	0.02	-1.53	8.83e-06	4.49e-04	0.0
3632	-0.14	0.01	-1.17	6.79e-06	3.46e-04	0.0
3633	0.28	0.01	-1.17	6.79e-06	-5.64e-05	0.0
3641	-0.09	-0.05	-0.36	-3.24e-05	4.07e-04	0.0
3642	-0.07	-0.04	-0.27	-2.49e-05	3.13e-04	0.0
3643	0.25	0.02	-1.30	1.18e-05	-4.25e-05	0.0

3651	-0.06	0.08	-2.67	5.03e-05	3.89e-04	0.0
3652	-0.04	0.06	-2.05	3.87e-05	2.99e-04	0.0
3653	0.27	4.92e-03	-1.03	1.92e-06	-5.61e-05	0.0
3661	0.36	-0.05	0.79	-4.61e-05	9.25e-05	0.0
3662	0.28	-0.04	0.61	-3.55e-05	7.12e-05	0.0
3663	0.14	0.02	-1.26	1.53e-05	2.90e-05	0.0
3671	0.46	0.08	-3.45	6.54e-05	2.06e-05	0.0
3672	0.35	0.06	-2.66	5.03e-05	1.59e-05	0.0
3681	-0.14	-0.03	-0.72	-1.81e-05	4.32e-04	0.0
3682	-0.11	-0.02	-0.56	-1.39e-05	3.32e-04	0.0
3683	0.27	0.02	-1.27	1.09e-05	-5.06e-05	0.0
3691	-0.12	0.06	-2.32	3.73e-05	4.21e-04	0.0
3692	-0.09	0.05	-1.79	2.87e-05	3.24e-04	0.0
3693	0.28	7.54e-03	-1.08	3.78e-06	-5.87e-05	0.0
3701	0.37	-0.05	0.81	-4.62e-05	7.77e-05	0.0
3702	0.29	-0.04	0.63	-3.56e-05	5.98e-05	0.0
3703	0.14	0.02	-1.24	1.56e-05	3.20e-05	0.0
3711	0.11	-0.08	0.20	-5.50e-05	2.88e-04	0.0
3712	0.09	-0.06	0.15	-4.23e-05	2.21e-04	0.0
3713	0.20	0.03	-1.33	1.72e-05	-1.49e-05	0.0
3721	0.18	0.11	-3.14	7.83e-05	2.47e-04	0.0
3722	0.14	0.09	-2.42	6.02e-05	1.90e-04	0.0
3723	0.25	4.16e-03	-0.93	0.0	-4.58e-05	0.0
3731	0.47	0.08	-3.43	6.58e-05	5.15e-06	0.0
3732	0.36	0.06	-2.64	5.06e-05	3.96e-06	0.0
3741	0.38	-0.05	0.83	-4.54e-05	6.68e-05	0.0
3742	0.29	-0.04	0.64	-3.49e-05	5.14e-05	0.0
3743	0.14	0.02	-1.21	1.55e-05	3.43e-05	0.0
3751	0.48	0.08	-3.41	6.45e-05	-4.24e-06	0.0
3752	0.37	0.06	-2.62	4.97e-05	-3.26e-06	0.0
3761	-0.03	-0.07	-0.27	-4.43e-05	3.76e-04	0.0
3762	-0.02	-0.05	-0.21	-3.41e-05	2.89e-04	0.0
3763	0.23	0.03	-1.30	1.56e-05	-3.50e-05	0.0
3771	9.24e-03	0.11	-2.73	6.78e-05	3.53e-04	0.0
3772	7.11e-03	0.08	-2.10	5.21e-05	2.71e-04	0.0
3773	0.27	6.56e-03	-1.01	2.43e-06	-5.29e-05	0.0
3782	-0.11	-5.11e-03	-0.85	-4.11e-06	3.38e-04	0.0
3783	0.28	0.02	-1.22	1.03e-05	-5.51e-05	0.0
3791	-0.14	0.05	-1.94	2.67e-05	4.35e-04	0.0
3792	-0.11	0.04	-1.49	2.05e-05	3.35e-04	0.0
3793	0.28	0.01	-1.12	6.14e-06	-5.83e-05	0.0
3801	0.15	-0.08	0.28	-6.05e-05	2.60e-04	0.0
3802	0.12	-0.06	0.22	-4.66e-05	2.00e-04	0.0
3803	0.19	0.03	-1.32	1.94e-05	-8.46e-06	0.0
3811	0.23	0.12	-3.19	8.67e-05	2.15e-04	0.0
3812	0.17	0.09	-2.45	6.67e-05	1.65e-04	0.0

3813	0.25	4.65e-03	-0.91	0.0	-4.32e-05	0.0
3821	0.39	-0.05	0.85	-4.50e-05	5.74e-05	0.0
3822	0.30	-0.04	0.65	-3.46e-05	4.42e-05	0.0
3823	0.14	0.02	-1.19	1.55e-05	3.52e-05	0.0
3831	0.48	0.07	-3.38	6.41e-05	-1.36e-05	0.0
3832	0.37	0.06	-2.60	4.93e-05	-1.05e-05	0.0
3841	-0.12	-0.04	-0.70	-2.49e-05	4.24e-04	0.0
3842	-0.09	-0.03	-0.53	-1.91e-05	3.26e-04	0.0
3843	0.26	0.02	-1.26	1.27e-05	-4.72e-05	0.0
3851	-0.09	0.08	-2.33	4.67e-05	4.12e-04	0.0
3852	-0.07	0.06	-1.79	3.59e-05	3.17e-04	0.0
3853	0.27	8.89e-03	-1.07	4.12e-06	-5.66e-05	0.0
3861	-0.15	0.02	-1.52	1.10e-05	4.42e-04	0.0
3862	-0.12	0.02	-1.17	8.49e-06	3.40e-04	0.0
3863	0.28	0.02	-1.17	8.49e-06	-5.69e-05	0.0
3871	0.39	-0.05	0.86	-4.37e-05	5.17e-05	0.0
3872	0.30	-0.04	0.66	-3.36e-05	3.98e-05	0.0
3873	0.14	0.02	-1.17	1.53e-05	3.59e-05	0.0
3881	0.49	0.07	-3.35	6.26e-05	-1.84e-05	0.0
3882	0.37	0.06	-2.58	4.81e-05	-1.41e-05	0.0
3891	0.19	-0.08	0.35	-6.52e-05	2.34e-04	0.0
3892	0.15	-0.06	0.27	-5.02e-05	1.80e-04	0.0
3893	0.18	0.03	-1.31	2.14e-05	-2.51e-06	0.0
3901	0.27	0.13	-3.22	9.40e-05	1.84e-04	0.0
3902	0.21	0.10	-2.48	7.23e-05	1.42e-04	0.0
3911	0.39	-0.05	0.87	-4.24e-05	4.90e-05	0.0
3912	0.30	-0.04	0.67	-3.26e-05	3.77e-05	0.0
3913	0.14	0.02	-1.15	1.51e-05	3.61e-05	0.0
3921	0.48	0.07	-3.33	6.10e-05	-1.98e-05	0.0
3922	0.37	0.06	-2.56	4.69e-05	-1.53e-05	0.0
3931	0.02	-0.08	-0.18	-5.33e-05	3.48e-04	0.0
3932	0.01	-0.06	-0.14	-4.10e-05	2.68e-04	0.0
3933	0.22	0.03	-1.30	1.90e-05	-2.84e-05	0.0
3941	0.07	0.12	-2.79	8.17e-05	3.20e-04	0.0
3942	0.05	0.10	-2.14	6.28e-05	2.46e-04	0.0
3943	0.26	7.83e-03	-0.99	2.83e-06	-5.01e-05	0.0
3952	-0.10	-8.91e-03	-0.84	-6.56e-06	3.36e-04	0.0
3953	0.26	0.02	-1.21	1.18e-05	-5.15e-05	0.0
3961	-0.12	0.06	-1.94	3.29e-05	4.30e-04	0.0
3962	-0.10	0.04	-1.49	2.53e-05	3.31e-04	0.0
3963	0.27	0.01	-1.11	6.92e-06	-5.62e-05	0.0
3971	-0.14	0.02	-1.51	1.27e-05	4.39e-04	0.0
3972	-0.11	0.02	-1.16	9.76e-06	3.38e-04	0.0
3973	0.27	0.02	-1.16	9.76e-06	-5.45e-05	0.0
3981	0.39	-0.05	0.89	-4.28e-05	4.81e-05	0.0
3982	0.30	-0.04	0.68	-3.29e-05	3.70e-05	0.0

3983	0.14	0.02	-1.13	1.50e-05	3.59e-05	0.0
3991	0.48	0.07	-3.31	6.11e-05	-1.98e-05	0.0
3992	0.37	0.06	-2.54	4.70e-05	-1.52e-05	0.0
4001	-0.07	-0.05	-0.63	-3.42e-05	4.00e-04	0.0
4002	-0.05	-0.04	-0.48	-2.63e-05	3.08e-04	0.0
4003	0.24	0.03	-1.26	1.67e-05	-4.10e-05	0.0
4011	-0.04	0.10	-2.37	6.29e-05	3.84e-04	0.0
4012	-0.03	0.08	-1.82	4.84e-05	2.95e-04	0.0
4013	0.27	0.01	-1.05	5.34e-06	-5.36e-05	0.0
4021	0.22	-0.09	0.41	-6.92e-05	2.09e-04	0.0
4022	0.17	-0.07	0.32	-5.32e-05	1.61e-04	0.0
4023	0.17	0.03	-1.30	2.32e-05	3.03e-06	0.0
4031	0.31	0.13	-3.24	1.00e-04	1.55e-04	0.0
4032	0.24	0.10	-2.50	7.72e-05	1.20e-04	0.0
4041	0.06	-0.08	-0.11	-6.05e-05	3.22e-04	0.0
4042	0.05	-0.06	-0.08	-4.65e-05	2.48e-04	0.0
4043	0.21	0.03	-1.29	2.21e-05	-2.25e-05	0.0
4051	0.12	0.14	-2.83	9.34e-05	2.90e-04	0.0
4052	0.09	0.11	-2.18	7.18e-05	2.23e-04	0.0
4053	0.25	8.91e-03	-0.97	3.16e-06	-4.77e-05	0.0
4061	0.25	-0.09	0.47	-7.24e-05	1.87e-04	0.0
4062	0.20	-0.07	0.36	-5.57e-05	1.44e-04	0.0
4063	0.17	0.03	-1.29	2.48e-05	8.19e-06	0.0
4071	0.34	0.14	-3.26	1.06e-04	1.29e-04	0.0
4072	0.26	0.10	-2.50	8.14e-05	9.92e-05	0.0
4082	-0.07	-0.01	-0.81	-9.25e-06	3.21e-04	0.0
4083	0.25	0.03	-1.21	1.56e-05	-4.65e-05	0.0
4091	-0.08	0.07	-1.95	4.41e-05	4.08e-04	0.0
4092	-0.06	0.06	-1.50	3.39e-05	3.14e-04	0.0
4093	0.26	0.02	-1.10	9.04e-06	-5.30e-05	0.0
4101	-0.03	-0.06	-0.56	-4.11e-05	3.78e-04	0.0
4102	-0.02	-0.04	-0.43	-3.16e-05	2.91e-04	0.0
4103	0.23	0.03	-1.25	2.04e-05	-3.57e-05	0.0
4111	8.36e-03	0.12	-2.41	7.58e-05	3.58e-04	0.0
4112	6.43e-03	0.09	-1.85	5.83e-05	2.75e-04	0.0
4113	0.26	0.01	-1.03	6.36e-06	-5.11e-05	0.0
4121	-0.10	0.03	-1.50	1.66e-05	4.20e-04	0.0
4122	-0.08	0.02	-1.15	1.28e-05	3.23e-04	0.0
4123	0.26	0.02	-1.15	1.28e-05	-5.07e-05	0.0
4131	0.10	-0.09	-0.04	-6.65e-05	2.98e-04	0.0
4132	0.08	-0.07	-0.03	-5.11e-05	2.29e-04	0.0
4133	0.20	0.04	-1.29	2.50e-05	-1.71e-05	0.0
4141	0.16	0.15	-2.87	1.03e-04	2.61e-04	0.0
4142	0.12	0.11	-2.21	7.96e-05	2.01e-04	0.0
4143	0.25	9.86e-03	-0.95	3.47e-06	-4.55e-05	0.0
4151	0.28	-0.09	0.51	-7.50e-05	1.66e-04	0.0

4152	0.21	-0.07	0.39	-5.77e-05	1.28e-04	0.0
4153	0.16	0.03	-1.27	2.63e-05	1.30e-05	0.0
4161	0.37	0.14	-3.26	1.10e-04	1.05e-04	0.0
4162	0.28	0.11	-2.51	8.48e-05	8.06e-05	0.0
4171	0.30	-0.09	0.54	-7.68e-05	1.47e-04	0.0
4172	0.23	-0.07	0.42	-5.90e-05	1.13e-04	0.0
4173	0.16	0.03	-1.25	2.75e-05	1.74e-05	0.0
4181	0.39	0.14	-3.25	1.14e-04	8.32e-05	0.0
4182	0.30	0.11	-2.50	8.73e-05	6.40e-05	0.0
4192	-0.04	-0.01	-0.78	-1.11e-05	3.06e-04	0.0
4193	0.24	0.03	-1.20	1.90e-05	-4.24e-05	0.0
4201	-0.04	0.08	-1.96	5.31e-05	3.87e-04	0.0
4202	-0.03	0.06	-1.51	4.09e-05	2.98e-04	0.0
4203	0.26	0.02	-1.09	1.09e-05	-5.04e-05	0.0
4211	0.01	-0.06	-0.51	-4.65e-05	3.56e-04	0.0
4212	0.01	-0.05	-0.39	-3.58e-05	2.74e-04	0.0
4213	0.22	0.04	-1.25	2.37e-05	-3.10e-05	0.0
4221	0.05	0.13	-2.43	8.68e-05	3.33e-04	0.0
4222	0.04	0.10	-1.87	6.67e-05	2.56e-04	0.0
4223	0.25	0.02	-1.02	7.26e-06	-4.88e-05	0.0
4231	0.14	-0.09	0.02	-7.15e-05	2.75e-04	0.0
4232	0.11	-0.07	0.02	-5.50e-05	2.12e-04	0.0
4233	0.19	0.04	-1.28	2.76e-05	-1.20e-05	0.0
4241	0.20	0.15	-2.89	1.12e-04	2.34e-04	0.0
4242	0.15	0.12	-2.23	8.64e-05	1.80e-04	0.0
4243	0.24	0.01	-0.93	3.75e-06	-4.33e-05	0.0
4251	-0.06	0.03	-1.48	2.01e-05	4.01e-04	0.0
4252	-0.05	0.03	-1.14	1.55e-05	3.09e-04	0.0
4253	0.25	0.03	-1.14	1.55e-05	-4.75e-05	0.0
4261	0.32	-0.09	0.57	-7.74e-05	1.30e-04	0.0
4262	0.24	-0.07	0.44	-5.95e-05	1.00e-04	0.0
4263	0.15	0.03	-1.23	2.83e-05	2.14e-05	0.0
4271	0.41	0.14	-3.23	1.15e-04	6.48e-05	0.0
4272	0.31	0.11	-2.48	8.85e-05	4.98e-05	0.0
4281	0.17	-0.09	0.08	-7.58e-05	2.53e-04	0.0
4282	0.13	-0.07	0.06	-5.83e-05	1.95e-04	0.0
4283	0.19	0.04	-1.26	2.99e-05	-7.32e-06	0.0
4291	0.24	0.16	-2.91	1.20e-04	2.09e-04	0.0
4292	0.18	0.12	-2.24	9.22e-05	1.61e-04	0.0
4293	0.24	0.01	-0.91	4.01e-06	-4.12e-05	0.0
4302	-0.01	-0.01	-0.75	-1.23e-05	2.91e-04	0.0
4303	0.24	0.03	-1.19	2.20e-05	-3.88e-05	0.0
4311	3.08e-03	0.09	-1.97	6.09e-05	3.67e-04	0.0
4312	2.37e-03	0.07	-1.51	4.69e-05	2.82e-04	0.0
4313	0.25	0.02	-1.07	1.25e-05	-4.80e-05	0.0
4321	0.33	-0.08	0.59	-7.58e-05	1.16e-04	0.0

4322	0.25	-0.06	0.46	-5.83e-05	8.92e-05	0.0
4323	0.15	0.03	-1.21	2.83e-05	2.51e-05	0.0
4331	0.42	0.14	-3.20	1.13e-04	5.13e-05	0.0
4332	0.32	0.10	-2.46	8.71e-05	3.95e-05	0.0
4341	0.05	-0.07	-0.45	-5.10e-05	3.35e-04	0.0
4342	0.04	-0.05	-0.35	-3.92e-05	2.58e-04	0.0
4343	0.22	0.04	-1.24	2.67e-05	-2.67e-05	0.0
4351	0.09	0.14	-2.45	9.62e-05	3.09e-04	0.0
4352	0.07	0.11	-1.89	7.40e-05	2.38e-04	0.0
4353	0.25	0.02	-1.00	8.09e-06	-4.67e-05	0.0
4361	-0.02	0.04	-1.47	2.33e-05	3.83e-04	0.0
4362	-0.02	0.03	-1.13	1.79e-05	2.94e-04	0.0
4363	0.24	0.03	-1.13	1.79e-05	-4.47e-05	0.0
4371	0.34	-0.08	0.61	-6.81e-05	1.05e-04	0.0
4372	0.26	-0.06	0.47	-5.24e-05	8.08e-05	0.0
4373	0.14	0.03	-1.18	2.49e-05	2.87e-05	0.0
4381	0.42	0.12	-3.16	1.02e-04	4.71e-05	0.0
4382	0.32	0.09	-2.43	7.82e-05	3.63e-05	0.0
4391	0.20	-0.09	0.12	-7.93e-05	2.33e-04	0.0
4392	0.15	-0.07	0.10	-6.10e-05	1.79e-04	0.0
4393	0.18	0.04	-1.25	3.20e-05	-2.95e-06	0.0
4401	0.27	0.16	-2.91	1.26e-04	1.86e-04	0.0
4402	0.20	0.13	-2.24	9.72e-05	1.43e-04	0.0
4411	0.08	-0.07	-0.40	-5.46e-05	3.15e-04	0.0
4412	0.07	-0.05	-0.31	-4.20e-05	2.42e-04	0.0
4413	0.21	0.04	-1.22	2.95e-05	-2.26e-05	0.0
4421	0.13	0.15	-2.47	1.05e-04	2.86e-04	0.0
4422	0.10	0.11	-1.90	8.04e-05	2.20e-04	0.0
4423	0.24	0.02	-0.98	8.86e-06	-4.47e-05	0.0
4432	0.01	-0.01	-0.72	-1.33e-05	2.77e-04	0.0
4433	0.23	0.04	-1.18	2.48e-05	-3.55e-05	0.0
4441	0.04	0.10	-1.97	6.77e-05	3.46e-04	0.0
4442	0.03	0.08	-1.52	5.21e-05	2.66e-04	0.0
4443	0.24	0.02	-1.06	1.40e-05	-4.59e-05	0.0
4451	0.34	-0.08	0.63	-7.24e-05	9.56e-05	0.0
4452	0.26	-0.06	0.48	-5.57e-05	7.36e-05	0.0
4453	0.15	0.03	-1.17	2.68e-05	2.68e-05	0.0
4461	0.43	0.13	-3.15	1.06e-04	3.68e-05	0.0
4462	0.33	0.10	-2.42	8.19e-05	2.83e-05	0.0
4471	0.01	0.04	-1.45	2.61e-05	3.64e-04	0.0
4472	0.01	0.03	-1.12	2.01e-05	2.80e-04	0.0
4473	0.24	0.03	-1.12	2.01e-05	-4.21e-05	0.0
4481	0.22	-0.10	0.16	-8.20e-05	2.14e-04	0.0
4482	0.17	-0.07	0.13	-6.31e-05	1.64e-04	0.0
4483	0.17	0.04	-1.23	3.37e-05	1.08e-06	0.0
4491	0.29	0.17	-2.91	1.32e-04	1.64e-04	0.0

4492	0.23	0.13	-2.24	1.01e-04	1.26e-04	0.0
4501	0.35	-0.08	0.64	-7.19e-05	8.83e-05	0.0
4502	0.27	-0.06	0.49	-5.53e-05	6.79e-05	0.0
4503	0.15	0.03	-1.15	2.69e-05	2.70e-05	0.0
4511	0.43	0.13	-3.13	1.06e-04	2.87e-05	0.0
4512	0.33	0.10	-2.41	8.18e-05	2.21e-05	0.0
4521	0.12	-0.07	-0.36	-5.77e-05	2.96e-04	0.0
4522	0.09	-0.05	-0.28	-4.44e-05	2.28e-04	0.0
4523	0.20	0.04	-1.21	3.20e-05	-1.88e-05	0.0
4531	0.16	0.15	-2.47	1.12e-04	2.65e-04	0.0
4532	0.12	0.12	-1.90	8.60e-05	2.04e-04	0.0
4533	0.24	0.02	-0.97	9.56e-06	-4.28e-05	0.0
4542	0.04	-0.01	-0.69	-1.40e-05	2.63e-04	0.0
4543	0.22	0.04	-1.17	2.73e-05	-3.24e-05	0.0
4551	0.07	0.10	-1.97	7.37e-05	3.27e-04	0.0
4552	0.06	0.08	-1.51	5.67e-05	2.51e-04	0.0
4553	0.24	0.03	-1.04	1.54e-05	-4.38e-05	0.0
4561	0.35	-0.08	0.66	-7.02e-05	8.42e-05	0.0
4562	0.27	-0.06	0.51	-5.40e-05	6.48e-05	0.0
4563	0.15	0.03	-1.13	2.67e-05	2.75e-05	0.0
4571	0.43	0.13	-3.11	1.05e-04	2.45e-05	0.0
4572	0.33	0.10	-2.39	8.06e-05	1.89e-05	0.0
4581	0.24	-0.10	0.20	-8.40e-05	1.96e-04	0.0
4582	0.19	-0.07	0.15	-6.46e-05	1.51e-04	0.0
4583	0.17	0.04	-1.21	3.51e-05	4.69e-06	0.0
4591	0.31	0.17	-2.90	1.35e-04	1.44e-04	0.0
4592	0.24	0.13	-2.23	1.04e-04	1.11e-04	0.0
4601	0.05	0.04	-1.43	2.88e-05	3.47e-04	0.0
4602	0.04	0.03	-1.10	2.21e-05	2.67e-04	0.0
4603	0.23	0.03	-1.10	2.21e-05	-3.97e-05	0.0
4611	0.35	-0.08	0.67	-7.11e-05	8.35e-05	0.0
4612	0.27	-0.07	0.52	-5.47e-05	6.42e-05	0.0
4613	0.15	0.03	-1.11	2.66e-05	2.77e-05	0.0
4621	0.43	0.13	-3.09	1.05e-04	2.40e-05	0.0
4622	0.33	0.10	-2.37	8.11e-05	1.84e-05	0.0
4631	0.14	-0.07	-0.32	-6.02e-05	2.77e-04	0.0
4632	0.11	-0.05	-0.25	-4.63e-05	2.13e-04	0.0
4633	0.20	0.05	-1.20	3.43e-05	-1.52e-05	0.0
4641	0.19	0.16	-2.47	1.18e-04	2.44e-04	0.0
4642	0.15	0.12	-1.90	9.08e-05	1.88e-04	0.0
4643	0.23	0.02	-0.95	1.02e-05	-4.08e-05	0.0
4651	0.26	-0.09	0.22	-8.51e-05	1.79e-04	0.0
4652	0.20	-0.07	0.17	-6.55e-05	1.38e-04	0.0
4653	0.17	0.04	-1.20	3.61e-05	7.82e-06	0.0
4661	0.33	0.17	-2.89	1.38e-04	1.27e-04	0.0
4662	0.26	0.13	-2.22	1.06e-04	9.75e-05	0.0

4672	0.06	-0.01	-0.67	-1.45e-05	2.49e-04	0.0
4673	0.22	0.04	-1.15	2.96e-05	-2.94e-05	0.0
4681	0.10	0.11	-1.96	7.90e-05	3.08e-04	0.0
4682	0.08	0.08	-1.51	6.08e-05	2.37e-04	0.0
4683	0.23	0.03	-1.02	1.67e-05	-4.18e-05	0.0
4691	0.08	0.05	-1.42	3.12e-05	3.29e-04	0.0
4692	0.06	0.04	-1.09	2.40e-05	2.53e-04	0.0
4693	0.23	0.04	-1.09	2.40e-05	-3.73e-05	0.0
4701	0.27	-0.09	0.24	-8.53e-05	1.65e-04	0.0
4702	0.21	-0.07	0.19	-6.56e-05	1.27e-04	0.0
4703	0.16	0.04	-1.18	3.68e-05	1.04e-05	0.0
4711	0.35	0.17	-2.86	1.38e-04	1.12e-04	0.0
4712	0.27	0.13	-2.20	1.07e-04	8.60e-05	0.0
4721	0.17	-0.07	-0.29	-6.21e-05	2.60e-04	0.0
4722	0.13	-0.05	-0.22	-4.78e-05	2.00e-04	0.0
4723	0.19	0.05	-1.18	3.62e-05	-1.17e-05	0.0
4731	0.22	0.16	-2.46	1.23e-04	2.25e-04	0.0
4732	0.17	0.12	-1.89	9.47e-05	1.73e-04	0.0
4733	0.23	0.02	-0.93	1.07e-05	-3.88e-05	0.0
4742	0.08	-0.01	-0.65	-1.48e-05	2.36e-04	0.0
4743	0.21	0.04	-1.14	3.17e-05	-2.65e-05	0.0
4751	0.13	0.11	-1.95	8.35e-05	2.90e-04	0.0
4752	0.10	0.09	-1.50	6.42e-05	2.23e-04	0.0
4753	0.23	0.03	-1.01	1.78e-05	-3.98e-05	0.0
4761	0.28	-0.09	0.26	-8.39e-05	1.53e-04	0.0
4762	0.22	-0.07	0.20	-6.45e-05	1.17e-04	0.0
4763	0.16	0.04	-1.15	3.64e-05	1.28e-05	0.0
4771	0.36	0.16	-2.84	1.36e-04	1.00e-04	0.0
4772	0.27	0.13	-2.18	1.05e-04	7.73e-05	0.0
4781	0.10	0.05	-1.39	3.33e-05	3.12e-04	0.0
4782	0.08	0.04	-1.07	2.56e-05	2.40e-04	0.0
4783	0.22	0.04	-1.07	2.56e-05	-3.50e-05	0.0
4791	0.19	-0.07	-0.26	-6.33e-05	2.43e-04	0.0
4792	0.14	-0.05	-0.20	-4.87e-05	1.87e-04	0.0
4793	0.19	0.05	-1.16	3.78e-05	-8.44e-06	0.0
4801	0.24	0.16	-2.45	1.27e-04	2.06e-04	0.0
4802	0.18	0.12	-1.88	9.76e-05	1.59e-04	0.0
4812	0.10	-0.01	-0.62	-1.51e-05	2.23e-04	0.0
4813	0.21	0.05	-1.12	3.34e-05	-2.38e-05	0.0
4821	0.16	0.11	-1.94	8.72e-05	2.72e-04	0.0
4822	0.12	0.09	-1.49	6.71e-05	2.09e-04	0.0
4823	0.23	0.03	-0.99	1.86e-05	-3.77e-05	0.0
4831	0.29	-0.09	0.28	-8.30e-05	1.42e-04	0.0
4832	0.22	-0.07	0.22	-6.38e-05	1.10e-04	0.0
4833	0.16	0.04	-1.14	3.64e-05	1.38e-05	0.0
4841	0.36	0.16	-2.81	1.35e-04	9.03e-05	0.0

4842	0.28	0.13	-2.17	1.04e-04	6.95e-05	0.0
4851	0.20	-0.07	-0.23	-6.36e-05	2.27e-04	0.0
4852	0.16	-0.05	-0.18	-4.89e-05	1.75e-04	0.0
4853	0.18	0.05	-1.14	3.89e-05	-5.23e-06	0.0
4861	0.26	0.16	-2.42	1.29e-04	1.90e-04	0.0
4862	0.20	0.12	-1.87	9.90e-05	1.46e-04	0.0
4871	0.13	0.05	-1.37	3.52e-05	2.96e-04	0.0
4872	0.10	0.04	-1.06	2.71e-05	2.27e-04	0.0
4873	0.22	0.04	-1.06	2.71e-05	-3.27e-05	0.0
4881	0.29	-0.09	0.29	-8.06e-05	1.34e-04	0.0
4882	0.23	-0.07	0.23	-6.20e-05	1.03e-04	0.0
4883	0.16	0.04	-1.12	3.59e-05	1.48e-05	0.0
4891	0.36	0.16	-2.79	1.32e-04	8.30e-05	0.0
4892	0.28	0.12	-2.15	1.01e-04	6.39e-05	0.0
4902	0.12	-0.01	-0.60	-1.52e-05	2.11e-04	0.0
4903	0.20	0.05	-1.10	3.47e-05	-2.13e-05	0.0
4911	0.18	0.12	-1.92	8.99e-05	2.56e-04	0.0
4912	0.14	0.09	-1.48	6.92e-05	1.97e-04	0.0
4913	0.22	0.03	-0.98	1.93e-05	-3.57e-05	0.0
4921	0.22	-0.07	-0.21	-6.22e-05	2.11e-04	0.0
4922	0.17	-0.05	-0.16	-4.78e-05	1.63e-04	0.0
4923	0.18	0.05	-1.12	3.88e-05	-1.60e-06	0.0
4931	0.27	0.16	-2.40	1.27e-04	1.74e-04	0.0
4932	0.21	0.12	-1.84	9.75e-05	1.34e-04	0.0
4941	0.29	-0.09	0.31	-7.81e-05	1.29e-04	0.0
4942	0.23	-0.07	0.24	-6.01e-05	9.96e-05	0.0
4943	0.16	0.04	-1.10	3.53e-05	1.54e-05	0.0
4951	0.36	0.16	-2.77	1.29e-04	7.89e-05	0.0
4952	0.28	0.12	-2.13	9.89e-05	6.07e-05	0.0
4961	0.15	0.05	-1.35	3.67e-05	2.80e-04	0.0
4962	0.11	0.04	-1.04	2.82e-05	2.15e-04	0.0
4963	0.21	0.04	-1.04	2.82e-05	-3.03e-05	0.0
4972	0.13	-0.01	-0.59	-1.52e-05	1.99e-04	0.0
4973	0.20	0.05	-1.09	3.56e-05	-1.89e-05	0.0
4981	0.19	0.12	-1.90	9.16e-05	2.40e-04	0.0
4982	0.15	0.09	-1.46	7.05e-05	1.85e-04	0.0
4983	0.22	0.03	-0.96	1.97e-05	-3.37e-05	0.0
4991	0.24	-0.06	-0.19	-5.59e-05	1.91e-04	0.0
4992	0.18	-0.05	-0.15	-4.30e-05	1.47e-04	0.0
4993	0.17	0.04	-1.10	3.43e-05	5.25e-06	0.0
5001	0.29	0.14	-2.36	1.14e-04	1.57e-04	0.0
5002	0.22	0.11	-1.82	8.75e-05	1.21e-04	0.0
5011	0.29	-0.09	0.33	-7.91e-05	1.29e-04	0.0
5012	0.22	-0.07	0.25	-6.08e-05	9.93e-05	0.0
5013	0.16	0.04	-1.08	3.50e-05	1.53e-05	0.0
5021	0.36	0.16	-2.74	1.29e-04	7.93e-05	0.0

5022	0.28	0.12	-2.11	9.91e-05	6.10e-05	0.0
5031	0.16	0.05	-1.33	3.76e-05	2.64e-04	0.0
5032	0.13	0.04	-1.02	2.89e-05	2.03e-04	0.0
5033	0.21	0.04	-1.02	2.89e-05	-2.78e-05	0.0
5042	0.14	-0.01	-0.57	-1.52e-05	1.88e-04	0.0
5043	0.19	0.05	-1.07	3.60e-05	-1.68e-05	0.0
5051	0.21	0.12	-1.88	9.22e-05	2.25e-04	0.0
5052	0.16	0.09	-1.45	7.09e-05	1.73e-04	0.0
5053	0.21	0.03	-0.95	1.97e-05	-3.17e-05	0.0
5061	0.24	-0.06	-0.17	-6.00e-05	1.86e-04	0.0
5062	0.18	-0.05	-0.13	-4.62e-05	1.43e-04	0.0
5063	0.17	0.04	-1.08	3.63e-05	1.33e-06	0.0
5071	0.29	0.15	-2.35	1.19e-04	1.52e-04	0.0
5072	0.22	0.11	-1.81	9.14e-05	1.17e-04	0.0
5081	0.18	0.05	-1.30	3.73e-05	2.47e-04	0.0
5082	0.14	0.04	-1.00	2.87e-05	1.90e-04	0.0
5083	0.20	0.04	-1.00	2.87e-05	-2.41e-05	0.0
5091	0.24	-0.07	-0.16	-5.94e-05	1.79e-04	0.0
5092	0.19	-0.05	-0.12	-4.57e-05	1.37e-04	0.0
5093	0.17	0.04	-1.07	3.65e-05	1.51e-06	0.0
5101	0.29	0.15	-2.33	1.19e-04	1.44e-04	0.0
5102	0.22	0.11	-1.79	9.14e-05	1.11e-04	0.0
5111	0.20	-0.02	-0.72	-1.95e-05	2.31e-04	0.0
5112	0.15	-0.01	-0.55	-1.50e-05	1.78e-04	0.0
5113	0.19	0.04	-1.05	3.55e-05	-1.42e-05	0.0
5121	0.22	0.11	-1.85	9.04e-05	2.12e-04	0.0
5122	0.17	0.09	-1.43	6.95e-05	1.63e-04	0.0
5131	0.20	0.05	-1.28	3.34e-05	2.23e-04	0.0
5132	0.16	0.04	-0.98	2.57e-05	1.71e-04	0.0
5141	0.24	-0.07	-0.14	-5.77e-05	1.73e-04	0.0
5142	0.19	-0.05	-0.11	-4.44e-05	1.33e-04	0.0
5143	0.17	0.04	-1.05	3.63e-05	2.33e-06	0.0
5151	0.29	0.15	-2.31	1.17e-04	1.38e-04	0.0
5152	0.22	0.11	-1.78	9.02e-05	1.06e-04	0.0
5161	0.20	-0.02	-0.70	-1.90e-05	2.20e-04	0.0
5162	0.15	-0.01	-0.54	-1.46e-05	1.69e-04	0.0
5163	0.19	0.04	-1.03	3.55e-05	-1.33e-05	0.0
5171	0.23	0.11	-1.83	9.00e-05	2.01e-04	0.0
5172	0.17	0.09	-1.41	6.92e-05	1.55e-04	0.0
5181	0.20	0.05	-1.26	3.39e-05	2.21e-04	0.0
5182	0.15	0.04	-0.97	2.61e-05	1.70e-04	0.0
5191	0.24	-0.07	-0.12	-5.86e-05	1.73e-04	0.0
5192	0.18	-0.05	-0.09	-4.51e-05	1.33e-04	0.0
5193	0.17	0.04	-1.03	3.62e-05	2.50e-06	0.0
5201	0.28	0.15	-2.29	1.18e-04	1.38e-04	0.0
5202	0.22	0.12	-1.76	9.07e-05	1.06e-04	0.0

5211	0.21	-0.02	-0.68	-1.81e-05	2.10e-04	0.0
5212	0.16	-0.01	-0.53	-1.39e-05	1.62e-04	0.0
5213	0.19	0.04	-1.02	3.50e-05	-1.19e-05	0.0
5221	0.23	0.11	-1.81	8.81e-05	1.91e-04	0.0
5222	0.18	0.09	-1.39	6.78e-05	1.47e-04	0.0
5231	0.20	0.05	-1.24	3.43e-05	2.13e-04	0.0
5232	0.16	0.04	-0.96	2.64e-05	1.64e-04	0.0
5241	0.21	-0.02	-0.67	-1.73e-05	2.03e-04	0.0
5242	0.16	-0.01	-0.51	-1.33e-05	1.56e-04	0.0
5243	0.19	0.04	-1.00	3.44e-05	-1.08e-05	0.0
5251	0.23	0.11	-1.79	8.61e-05	1.84e-04	0.0
5252	0.18	0.08	-1.38	6.62e-05	1.42e-04	0.0
5261	0.20	0.05	-1.23	3.44e-05	2.06e-04	0.0
5262	0.16	0.04	-0.94	2.64e-05	1.58e-04	0.0
5271	0.20	-0.02	-0.65	-1.81e-05	2.03e-04	0.0
5272	0.15	-0.01	-0.50	-1.39e-05	1.56e-04	0.0
5273	0.19	0.04	-0.98	3.40e-05	-1.07e-05	0.0
5281	0.23	0.11	-1.77	8.59e-05	1.85e-04	0.0
5282	0.17	0.08	-1.36	6.60e-05	1.42e-04	0.0
5291	0.20	0.05	-1.21	3.42e-05	2.06e-04	0.0
5292	0.15	0.04	-0.93	2.63e-05	1.59e-04	0.0
5293	0.20	0.04	-0.93	2.63e-05	-1.85e-05	0.0

Nodo	**Traslazione X**	**Traslazione Y**	**Traslazione Z**	**Rotazione X**	**Rotazione Y**	**Rotazione Z**
	-0.23	-0.17	-3.55	-1.38e-05	-5.87e-05	0.0
	0.50	0.17	0.96	1.38e-05	4.64e-05	0.0

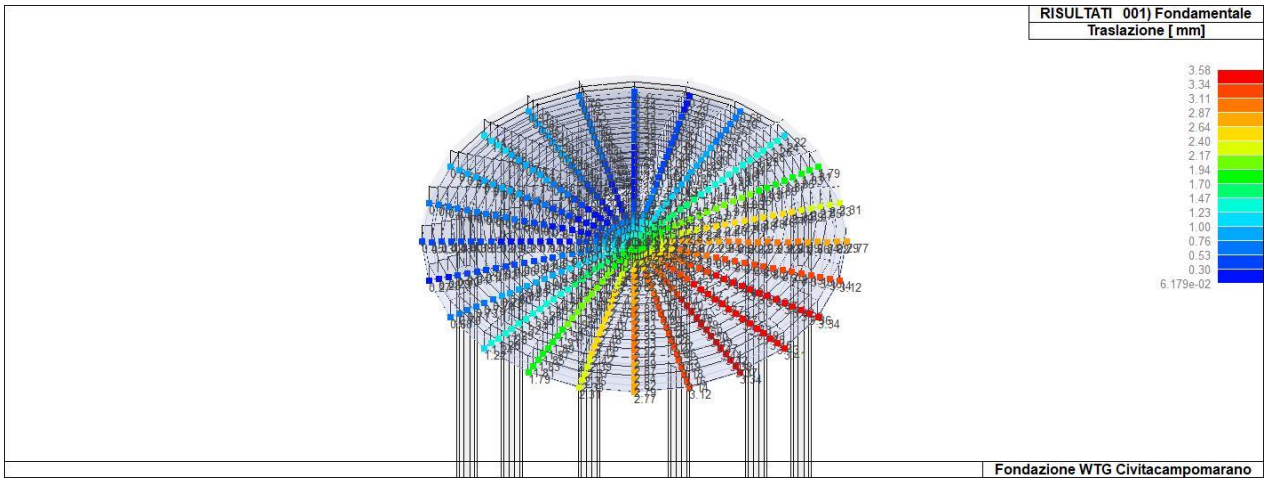

41_RIS_SPOSTAMENTI_001_Fondamentale

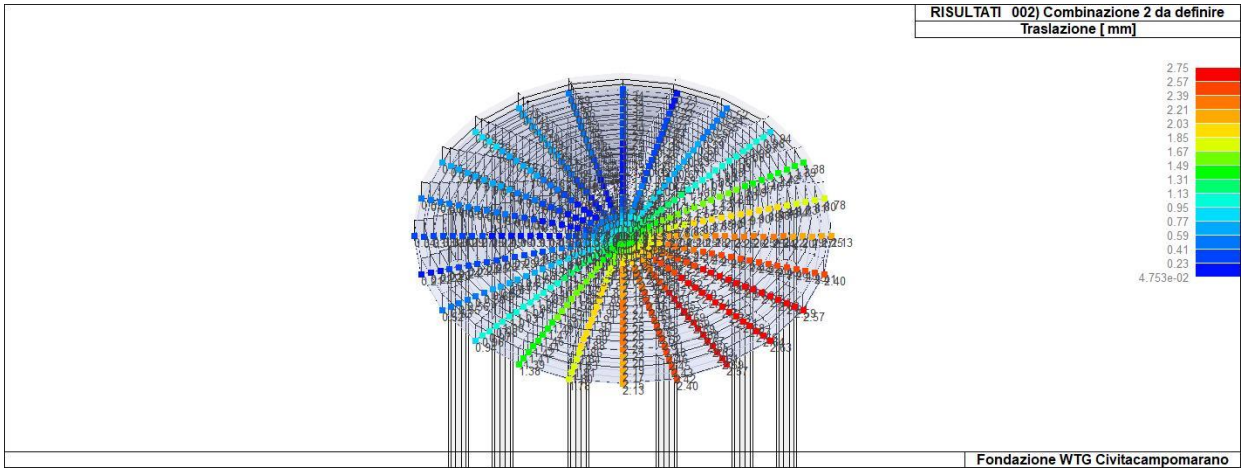

41_RIS_SPOSTAMENTI_002_Combinazione 2 da definire

Nodo	Cmb	Azione X	Azione Y	Azione Z	Azione RX	Azione RY	Azione RZ
	N	N	N	N mm	N mm	N mm	
17 1	-7.186e+04	-4.796e+04	-4.239e+05	-1.104e+08	3.500e+08	0.0	
17 2	-5.528e+04	-3.689e+04	-3.261e+05	-8.491e+07	2.693e+08	0.0	
17 3	1.023e+05	-3.689e+04	-3.261e+05	-8.491e+07	-1.753e+08	0.0	
30 1	-3.048e+04	7.195e+04	-6.280e+04	1.718e+08	2.511e+08	0.0	
30 2	-2.344e+04	5.535e+04	-4.831e+04	1.322e+08	1.931e+08	0.0	
30 3	7.611e+04	-4.523e+04	-3.643e+05	-1.072e+08	-1.132e+08	0.0	
31 1	1.747e+04	-1.550e+05	-7.850e+05	-3.630e+08	1.407e+08	0.0	
31 2	1.344e+04	-1.192e+05	-6.038e+05	-2.792e+08	1.082e+08	0.0	
31 3	1.130e+05	-1.865e+04	-2.878e+05	-3.983e+07	-1.981e+08	0.0	
92 1	8.280e+04	8.992e+04	2.015e+05	2.129e+08	-1.704e+07	0.0	
92 2	6.369e+04	6.917e+04	1.550e+05	1.637e+08	-1.310e+07	0.0	
92 3	4.710e+04	-3.141e+04	-3.923e+05	-7.567e+07	-4.296e+07	0.0	
93 1	1.658e+05	-1.378e+05	-1.049e+06	-3.231e+08	-2.082e+08	0.0	
93 2	1.276e+05	-1.060e+05	-8.071e+05	-2.486e+08	-1.602e+08	0.0	
93 3	1.110e+05	-5448.03	-2.598e+05	-9.165e+06	-1.900e+08	0.0	
2471	1.421e+05	1142.91	2.983e+05	1.689e+06	-1.570e+08	0.0	
2472	1.093e+05	879.16	2.295e+05	1.299e+06	-1.207e+08	0.0	
2473	3.468e+04	879.16	-4.025e+05	1.299e+06	-1.238e+07	0.0	
2831	2.381e+05	-1062.57	-1.146e+06	-1.472e+06	-3.778e+08	0.0	
2832	1.831e+05	-817.36	-8.815e+05	-1.132e+06	-2.906e+08	0.0	
2833	1.085e+05	-817.36	-2.494e+05	-1.132e+06	-1.823e+08	0.0	
4371	8.388e+04	-8.794e+04	2.016e+05	-2.099e+08	-1.844e+07	0.0	
4372	6.452e+04	-6.765e+04	1.551e+05	-1.614e+08	-1.418e+07	0.0	
4373	4.793e+04	3.293e+04	-3.923e+05	7.796e+07	-4.404e+07	0.0	
4381	1.670e+05	1.360e+05	-1.049e+06	3.206e+08	-2.099e+08	0.0	
4382	1.285e+05	1.046e+05	-8.070e+05	2.466e+08	-1.615e+08	0.0	
4383	1.119e+05	4030.49	-2.596e+05	7.177e+06	-1.914e+08	0.0	
4991	-2.845e+04	-7.087e+04	-6.280e+04	-1.702e+08	2.481e+08	0.0	
4992	-2.188e+04	-5.452e+04	-4.831e+04	-1.309e+08	1.909e+08	0.0	
4993	7.766e+04	4.606e+04	-3.643e+05	1.085e+08	-1.154e+08	0.0	

5001	1.957e+04	1.539e+05	-7.847e+05	3.615e+08	1.376e+08	0.0
5002	1.505e+04	1.184e+05	-6.036e+05	2.780e+08	1.058e+08	0.0
5003	1.146e+05	1.783e+04	-2.876e+05	3.864e+07	-2.005e+08	0.0
5131	-6.941e+04	4.794e+04	-4.238e+05	1.104e+08	3.464e+08	0.0
5132	-5.339e+04	3.688e+04	-3.260e+05	8.490e+07	2.664e+08	0.0
5133	1.042e+05	3.688e+04	-3.260e+05	8.490e+07	-1.781e+08	0.0

Nodo	Azione X	Azione Y	Azione Z	Azione RX	Azione RY	Azione RZ
	-7.186e+04	-1.550e+05	-1.146e+06	-3.630e+08	-3.778e+08	0.0
	2.381e+05	1.539e+05	2.983e+05	3.615e+08	3.500e+08	0.0

Nodo	Cmb	Azione X	Azione Y	Azione Z	Azione RX	Azione RY	Azione RZ
	N	N	N	N mm	N mm	N mm	
17	1	-7.186e+04	-4.796e+04	-4.239e+05	-1.104e+08	3.500e+08	0.0
	2	-5.528e+04	-3.689e+04	-3.261e+05	-8.491e+07	2.693e+08	0.0
	1	-7.186e+04	-4.796e+04	-4.239e+05	-1.104e+08	3.500e+08	0.0
	2	-5.528e+04	-3.689e+04	-3.261e+05	-8.491e+07	2.693e+08	0.0
	3	1.023e+05	-3.689e+04	-3.261e+05	-8.491e+07	-1.753e+08	0.0
	1	-7.186e+04	-4.796e+04	-4.239e+05	-1.104e+08	3.500e+08	0.0
30	3	7.611e+04	-4.523e+04	-3.643e+05	-1.072e+08	-1.132e+08	0.0
	2	-2.344e+04	5.535e+04	-4.831e+04	1.322e+08	1.931e+08	0.0
	3	7.611e+04	-4.523e+04	-3.643e+05	-1.072e+08	-1.132e+08	0.0
	1	-3.048e+04	7.195e+04	-6.280e+04	1.718e+08	2.511e+08	0.0
	3	7.611e+04	-4.523e+04	-3.643e+05	-1.072e+08	-1.132e+08	0.0
	1	-3.048e+04	7.195e+04	-6.280e+04	1.718e+08	2.511e+08	0.0
31	1	1.747e+04	-1.550e+05	-7.850e+05	-3.630e+08	1.407e+08	0.0
	3	1.130e+05	-1.865e+04	-2.878e+05	-3.983e+07	-1.981e+08	0.0
	1	1.747e+04	-1.550e+05	-7.850e+05	-3.630e+08	1.407e+08	0.0
	3	1.130e+05	-1.865e+04	-2.878e+05	-3.983e+07	-1.981e+08	0.0
	3	1.130e+05	-1.865e+04	-2.878e+05	-3.983e+07	-1.981e+08	0.0
	1	1.747e+04	-1.550e+05	-7.850e+05	-3.630e+08	1.407e+08	0.0
92	3	4.710e+04	-3.141e+04	-3.923e+05	-7.567e+07	-4.296e+07	0.0
	1	8.280e+04	8.992e+04	2.015e+05	2.129e+08	-1.704e+07	0.0
	3	4.710e+04	-3.141e+04	-3.923e+05	-7.567e+07	-4.296e+07	0.0
	1	8.280e+04	8.992e+04	2.015e+05	2.129e+08	-1.704e+07	0.0
	3	4.710e+04	-3.141e+04	-3.923e+05	-7.567e+07	-4.296e+07	0.0
	2	6.369e+04	6.917e+04	1.550e+05	1.637e+08	-1.310e+07	0.0
93	1	1.658e+05	-1.378e+05	-1.049e+06	-3.231e+08	-2.082e+08	0.0
	3	1.110e+05	-5448.03	-2.598e+05	-9.165e+06	-1.900e+08	0.0
	1	1.658e+05	-1.378e+05	-1.049e+06	-3.231e+08	-2.082e+08	0.0
	3	1.110e+05	-5448.03	-2.598e+05	-9.165e+06	-1.900e+08	0.0
	1	1.658e+05	-1.378e+05	-1.049e+06	-3.231e+08	-2.082e+08	0.0
	2	1.276e+05	-1.060e+05	-8.071e+05	-2.486e+08	-1.602e+08	0.0
2473		3.468e+04	879.16	-4.025e+05	1.299e+06	-1.238e+07	0.0
	1	1.421e+05	1142.91	2.983e+05	1.689e+06	-1.570e+08	0.0

2	1.093e+05	879.16	2.295e+05	1.299e+06	-1.207e+08	0.0
1	1.421e+05	1142.91	2.983e+05	1.689e+06	-1.570e+08	0.0
1	1.421e+05	1142.91	2.983e+05	1.689e+06	-1.570e+08	0.0
3	3.468e+04	879.16	-4.025e+05	1.299e+06	-1.238e+07	0.0
2831	2.381e+05	-1062.57	-1.146e+06	-1.472e+06	-3.778e+08	0.0
3	1.085e+05	-817.36	-2.494e+05	-1.132e+06	-1.823e+08	0.0
1	2.381e+05	-1062.57	-1.146e+06	-1.472e+06	-3.778e+08	0.0
2	1.831e+05	-817.36	-8.815e+05	-1.132e+06	-2.906e+08	0.0
1	2.381e+05	-1062.57	-1.146e+06	-1.472e+06	-3.778e+08	0.0
3	1.085e+05	-817.36	-2.494e+05	-1.132e+06	-1.823e+08	0.0
4373	4.793e+04	3.293e+04	-3.923e+05	7.796e+07	-4.404e+07	0.0
1	8.388e+04	-8.794e+04	2.016e+05	-2.099e+08	-1.844e+07	0.0
1	8.388e+04	-8.794e+04	2.016e+05	-2.099e+08	-1.844e+07	0.0
3	4.793e+04	3.293e+04	-3.923e+05	7.796e+07	-4.404e+07	0.0
3	4.793e+04	3.293e+04	-3.923e+05	7.796e+07	-4.404e+07	0.0
2	6.452e+04	-6.765e+04	1.551e+05	-1.614e+08	-1.418e+07	0.0
4381	1.670e+05	1.360e+05	-1.049e+06	3.206e+08	-2.099e+08	0.0
3	1.119e+05	4030.49	-2.596e+05	7.177e+06	-1.914e+08	0.0
3	1.119e+05	4030.49	-2.596e+05	7.177e+06	-1.914e+08	0.0
1	1.670e+05	1.360e+05	-1.049e+06	3.206e+08	-2.099e+08	0.0
1	1.670e+05	1.360e+05	-1.049e+06	3.206e+08	-2.099e+08	0.0
2	1.285e+05	1.046e+05	-8.070e+05	2.466e+08	-1.615e+08	0.0
4993	7.766e+04	4.606e+04	-3.643e+05	1.085e+08	-1.154e+08	0.0
2	-2.188e+04	-5.452e+04	-4.831e+04	-1.309e+08	1.909e+08	0.0
1	-2.845e+04	-7.087e+04	-6.280e+04	-1.702e+08	2.481e+08	0.0
3	7.766e+04	4.606e+04	-3.643e+05	1.085e+08	-1.154e+08	0.0
3	7.766e+04	4.606e+04	-3.643e+05	1.085e+08	-1.154e+08	0.0
1	-2.845e+04	-7.087e+04	-6.280e+04	-1.702e+08	2.481e+08	0.0
5001	1.957e+04	1.539e+05	-7.847e+05	3.615e+08	1.376e+08	0.0
3	1.146e+05	1.783e+04	-2.876e+05	3.864e+07	-2.005e+08	0.0
3	1.146e+05	1.783e+04	-2.876e+05	3.864e+07	-2.005e+08	0.0
1	1.957e+04	1.539e+05	-7.847e+05	3.615e+08	1.376e+08	0.0
3	1.146e+05	1.783e+04	-2.876e+05	3.864e+07	-2.005e+08	0.0
1	1.957e+04	1.539e+05	-7.847e+05	3.615e+08	1.376e+08	0.0
5131	-6.941e+04	4.794e+04	-4.238e+05	1.104e+08	3.464e+08	0.0
2	-5.339e+04	3.688e+04	-3.260e+05	8.490e+07	2.664e+08	0.0
2	-5.339e+04	3.688e+04	-3.260e+05	8.490e+07	2.664e+08	0.0
1	-6.941e+04	4.794e+04	-4.238e+05	1.104e+08	3.464e+08	0.0
3	1.042e+05	3.688e+04	-3.260e+05	8.490e+07	-1.781e+08	0.0
1	-6.941e+04	4.794e+04	-4.238e+05	1.104e+08	3.464e+08	0.0

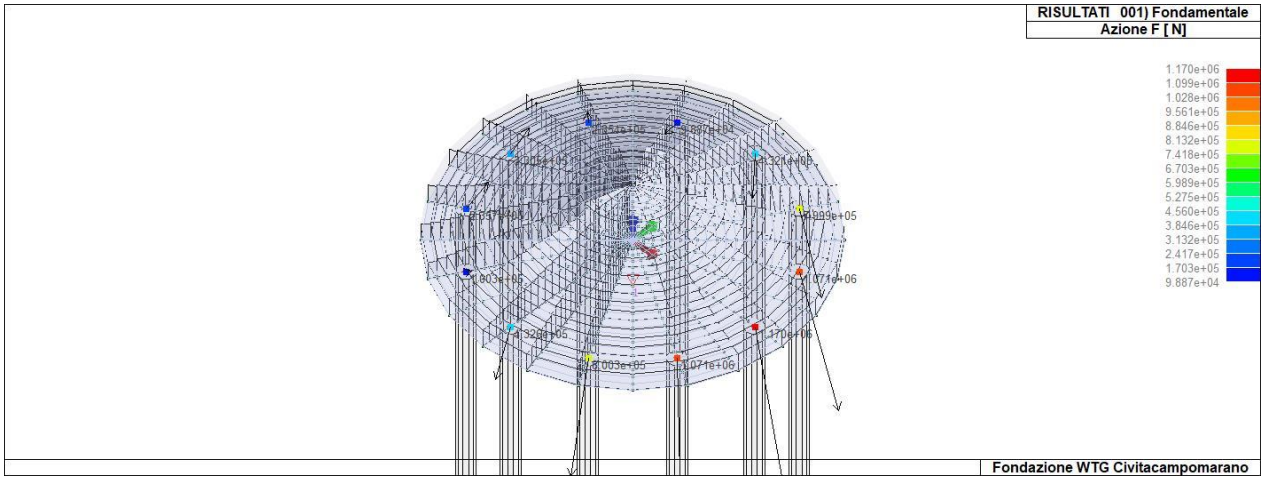

42_RIS_REAZIONI_001_Fondamentale

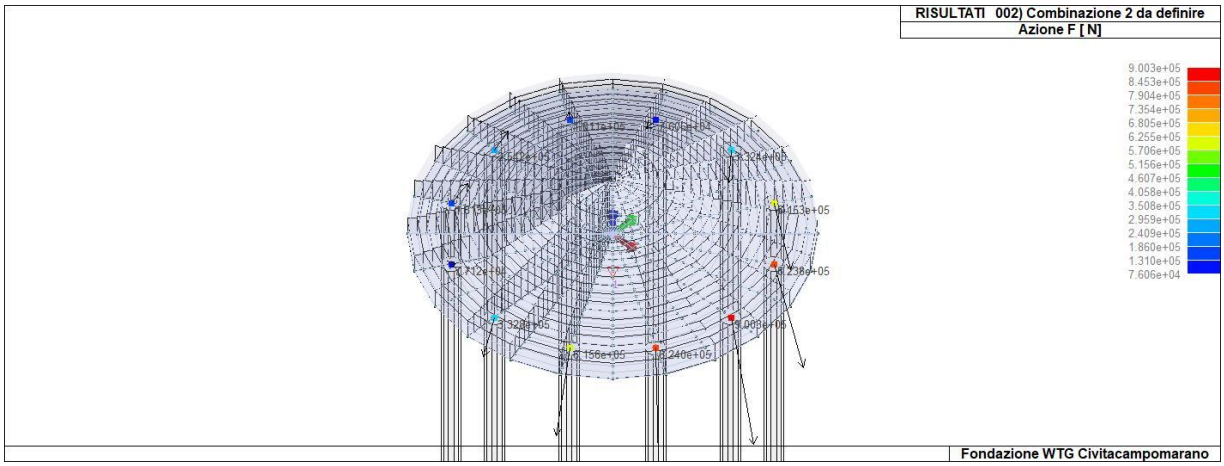

42_RIS_REAZIONI_002_Combinazione 2 da definire

11. RISULTATI OPERE DI FONDAZIONE

11.1. LEGENDA RISULTATI OPERE DI FONDAZIONE

Il controllo dei risultati delle analisi condotte, per quanto concerne le opere di fondazione, è possibile in relazione alle tabelle sotto riportate.

La prima tabella è riferita alle fondazioni tipo palo e plinto su pali.

Per questo tipo di fondazione vengono riportate le sei componenti di sollecitazione (espresse nel riferimento globale della struttura) per ogni palo componente l'opera.

In particolare viene riportato:

Nodo	numero del nodo a cui è applicato il plinto
Tipo	codice corrispondente al nome assegnato al tipo di plinto di fondazione: 3) palo singolo (*PALO*) 4) plinto su palo 5) plinto su due pali (*PL.2P*) 6) plinto su tre pali (*PL.3P*) 7) plinto su quattro pali (*PL.4P*) 8) plinto rettangolare su cinque pali (*PL.5P.R*) 9) plinto pentagonale su cinque pali (*PL.5P*) 10) plinto su sei pali (*PL.6P*)
Palo	numero del palo
Comb.	combinazione di carico in cui si verificano le sei componenti di sollecitazione.
Quota	quota assoluta della sezione del palo per cui si riportano le sei componenti di sollecitazione.

L'azione Fz (corrispondente allo sforzo normale nel palo) è costante poiché il peso del palo stesso non è considerato nella modellazione.

La seconda tabella è riferita alle fondazioni tipo plinto su suolo elastico.

Per questo tipo di fondazione vengono riportate le pressioni nei quattro vertici dell'impronta sul terreno.

In particolare viene riportato:

Nodo		numero del nodo a cui è applicato il plinto
Tipo		Codice identificativo del nome assegnato al plinto
area		area dell'impronta del plinto
Wink O	**Wink V**	coefficienti di Winkler (orizzontale e verticale) adottati

Comb	Combinazione di carico in cui si verificano i valori riportati
Pt (P1 P2 P3 P4)	valori di pressione nei vertici

La terza tabella è riferita alle fondazioni tipo platea su suolo elastico.

Per questo tipo di fondazione vengono riportate le pressioni in ogni vertice (nodo) degli elementi costituenti la platea.

La quarta tabella è riferita alle fondazioni tipo trave su suolo elastico.

Per questo tipo di fondazione vengono riportate le pressioni alle estremità dell'elemento e la massima (in valore assoluto) pressione lungo lo sviluppo dell'elemento.

Vengono inoltre riportati, con funzione statistica, i valori massimo e minimo delle pressioni che compaiono nella tabella.

Con riferimento al **Documento di Affidabilità** "*Test di validazione del software di calcolo PRO_SAP e dei moduli aggiuntivi PRO_SAP Modulo Geotecnico, PRO_CAD nodi acciaio e PRO_MST*" - versione Settembre 2014, disponibile per il download sul sito **www.2si.it**, si segnalano i seguenti esempi applicativi:

Test N°	Titolo
105	PLINTO SUPERFICIALE
106	PLINTO SUPERFICIALE
107	PLINTO SUPERFICIALE
108	PLINTO SUPERFICIALE
109	PLINTO SUPERFICIALE
110	PLINTO SUPERFICIALE
111	PLINTO SUPERFICIALE
112	PLINTO SUPERFICIALE
113	PLINTO SUPERFICIALE
114	PLINTO SUPERFICIALE
115	PLINTO SUPERFICIALE
116	PLINTO SUPERFICIALE
117	PLINTO SUPERFICIALE
118	PLINTO SUPERFICIALE
119	PLINTO SUPERFICIALE
120	PLINTO SUPERFICIALE
121	PLINTO SUPERFICIALE
122	PLINTO SUPERFICIALE
123	PLINTO SUPERFICIALE
124	FONDAZIONE NASTRIFORME
125	CALCOLO DEI K DI WINKLER

Nodo	Tipo	Palo	Cmb	Quota	Fx	Fy	Fz	Mx	My	Mz
				mm	N	N	N	N mm	N mm	N mm

Nodo	Tipo	Palo	Cmb	Quota	Fx	Fy	Fz	Mx	My	Mz
17	PALO D 120.00	1	1	0.0	-7.186e+04	-4.796e+04	-4.239e+05	1.104e+08	3.500e+08	0.0
		1	2	0.0	-5.528e+04	-3.689e+04	-3.261e+05	8.491e+07	2.693e+08	0.0
		1	3	0.0	1.023e+05	-3.689e+04	-3.261e+05	8.491e+07	-1.753e+08	0.0
30	PALO D 120.00	1	1	0.0	-3.048e+04	7.195e+04	-6.280e+04	-1.718e+08	2.511e+08	0.0
		1	2	0.0	-2.344e+04	5.535e+04	-4.831e+04	-1.322e+08	1.931e+08	0.0
		1	3	0.0	7.611e+04	-4.523e+04	-3.643e+05	1.072e+08	-1.132e+08	0.0
31	PALO D 120.00	1	1	0.0	1.747e+04	-1.550e+05	-7.850e+05	3.630e+08	1.407e+08	0.0
		1	2	0.0	1.344e+04	-1.192e+05	-6.038e+05	2.792e+08	1.082e+08	0.0
		1	3	0.0	1.130e+05	-1.865e+04	-2.878e+05	3.983e+07	-1.981e+08	0.0
92	PALO D 120.00	1	1	0.0	8.280e+04	8.992e+04	2.015e+05	-2.129e+08	-1.704e+07	0.0
		1	2	0.0	6.369e+04	6.917e+04	1.550e+05	-1.637e+08	-1.310e+07	0.0
		1	3	0.0	4.710e+04	-3.141e+04	-3.923e+05	7.567e+07	-4.296e+07	0.0
93	PALO D 120.00	1	1	0.0	1.658e+05	-1.378e+05	-1.049e+06	3.231e+08	-2.082e+08	0.0
		1	2	0.0	1.276e+05	-1.060e+05	-8.071e+05	2.486e+08	-1.602e+08	0.0
		1	3	0.0	1.110e+05	-5448.03	-2.598e+05	9.165e+06	-1.900e+08	0.0
247	PALO D 120.00	1	1	0.0	1.421e+05	1142.91	2.983e+05	-1.689e+06	-1.570e+08	0.0
		1	2	0.0	1.093e+05	879.16	2.295e+05	-1.299e+06	-1.207e+08	0.0
		1	3	0.0	3.468e+04	879.16	-4.025e+05	-1.299e+06	-1.238e+07	0.0
283	PALO D 120.00	1	1	0.0	2.381e+05	-1062.57	-1.146e+06	1.472e+06	-3.778e+08	0.0
		1	2	0.0	1.831e+05	-817.36	-8.815e+05	1.132e+06	-2.906e+08	0.0
		1	3	0.0	1.085e+05	-817.36	-2.494e+05	1.132e+06	-1.823e+08	0.0
437	PALO D 120.00	1	1	0.0	8.388e+04	-8.794e+04	2.016e+05	2.099e+08	-1.844e+07	0.0
		1	2	0.0	6.452e+04	-6.765e+04	1.551e+05	1.614e+08	-1.418e+07	0.0
		1	3	0.0	4.793e+04	3.293e+04	-3.923e+05	-7.796e+07	-4.404e+07	0.0
438	PALO D 120.00	1	1	0.0	1.670e+05	1.360e+05	-1.049e+06	-3.206e+08	-2.099e+08	0.0
		1	2	0.0	1.285e+05	1.046e+05	-8.070e+05	-2.466e+08	-1.615e+08	0.0
		1	3	0.0	1.119e+05	4030.49	-2.596e+05	-7.177e+06	-1.914e+08	0.0
499	PALO D	1	1	0.0	-2.845e+04	-7.087e+04	-6.280e+04	1.702e+08	2.481e+08	0.0

Nodo	Tipo	Palo	Cmb	Quota	Fx	Fy	Fz	Mx	My	Mz
	120.00									
		1	2	0.0	-2.188e+04	-5.452e+04	-4.831e+04	1.309e+08	1.909e+08	0.0
		1	3	0.0	7.766e+04	4.606e+04	-3.643e+05	-1.085e+08	-1.154e+08	0.0
500	PALO D 120.00	1	1	0.0	1.957e+04	1.539e+05	-7.847e+05	-3.615e+08	1.376e+08	0.0
		1	2	0.0	1.505e+04	1.184e+05	-6.036e+05	-2.780e+08	1.058e+08	0.0
		1	3	0.0	1.146e+05	1.783e+04	-2.876e+05	-3.864e+07	-2.005e+08	0.0
513	PALO D 120.00	1	1	0.0	-6.941e+04	4.794e+04	-4.238e+05	-1.104e+08	3.464e+08	0.0
		1	2	0.0	-5.339e+04	3.688e+04	-3.260e+05	-8.490e+07	2.664e+08	0.0
		1	3	0.0	1.042e+05	3.688e+04	-3.260e+05	-8.490e+07	-1.781e+08	0.0
Nodo					**Fx**	**Fy**	**Fz**	**Mx**	**My**	**Mz**
					-7.186e+04	-1.550e+05	-1.146e+06	-3.615e+08	-3.778e+08	0.0
					2.381e+05	1.539e+05	2.983e+05	3.630e+08	3.500e+08	0.0

Nodo (G)	Pt 1/12	Pt 2/13	Pt 3...	Pt 4...
	daN/cm2	daN/cm2	daN/cm2	
1	-1.21	-0.93		
2	-0.50	-0.98		
3	-1.77	-1.36		
4	-1.23	-0.94		
5	-0.51	-1.00		
6	-1.79	-1.38		
7	-1.24	-0.96		
8	-0.53	-1.02		
9	-1.81	-1.39		
10	-0.09	-1.03		
11	-2.29	-1.76		
12	-1.26	-0.97		
13	-0.54	-1.03		
14	-1.83	-1.41		
15	-0.11	-1.05		
16	-2.31	-1.78		
17	-1.28	-0.98		
18	-0.55	-1.05		
19	-1.86	-1.43		
20	-0.12	-1.07		
21	-2.33	-1.79		

22	-1.30	-1.00
23	-0.13	-1.08
24	-2.35	-1.81
25	-0.57	-1.07
26	-1.88	-1.45
27	-1.33	-1.02
28	0.25	-1.08
29	-2.75	-2.11
30	-0.15	-1.10
31	-2.37	-1.82
32	-0.59	-1.09
33	-1.90	-1.46
34	-1.35	-1.04
35	0.24	-1.10
36	-2.77	-2.13
37	-0.16	-1.12
38	-2.40	-1.85
39	-0.60	-1.10
40	-1.92	-1.48
41	0.23	-1.12
42	-2.79	-2.15
43	-1.37	-1.06
44	-0.18	-1.14
45	-2.43	-1.87
46	0.21	-1.14
47	-2.82	-2.17
48	-0.62	-1.12
49	-1.94	-1.49
50	-0.20	-1.16
51	-2.45	-1.88
52	-1.40	-1.07
53	0.20	-1.15
54	-2.84	-2.18
55	-0.65	-1.14
56	-1.95	-1.50
57	-0.22	-1.18
58	-2.46	-1.89
59	0.19	-1.18
60	-2.86	-2.20
61	-1.42	-1.09
62	-0.67	-1.15
63	-1.96	-1.51
64	0.17	-1.20
65	-2.89	-2.22
66	-0.25	-1.20
67	-2.47	-1.90

68	0.52	-1.11
69	-3.09	-2.37
70	-1.43	-1.10
71	0.15	-1.21
72	-2.90	-2.23
73	0.50	-1.13
74	-3.11	-2.39
75	-0.69	-1.17
76	-1.97	-1.51
77	-0.28	-1.21
78	-2.47	-1.90
79	0.49	-1.15
80	-3.13	-2.41
81	0.13	-1.23
82	-2.91	-2.24
83	-1.45	-1.12
84	0.48	-1.17
85	-3.15	-2.42
86	-0.72	-1.18
87	-1.97	-1.52
88	-0.31	-1.22
89	-2.47	-1.90
90	0.10	-1.25
91	-2.92	-2.24
92	0.47	-1.18
93	-3.16	-2.43
94	-1.47	-1.13
95	-0.35	-1.24
96	-2.45	-1.89
97	0.46	-1.21
98	-3.20	-2.46
99	-0.75	-1.19
100	-1.97	-1.51
101	0.06	-1.26
102	-2.91	-2.24
103	0.44	-1.23
104	-3.23	-2.48
105	-1.49	-1.14
106	0.02	-1.27
107	-2.89	-2.23
108	-0.39	-1.25
109	-2.43	-1.87
110	-0.78	-1.20
111	-1.96	-1.51
112	0.42	-1.25
113	-3.25	-2.50

114	0.39	-1.27
115	-3.26	-2.51
116	-0.03	-1.28
117	-2.87	-2.21
118	-1.50	-1.15
119	-0.43	-1.25
120	-2.41	-1.85
121	-0.81	-1.21
122	-1.95	-1.50
123	0.36	-1.29
124	-3.26	-2.51
125	-0.08	-1.29
126	-2.83	-2.18
127	0.32	-1.30
128	-3.25	-2.50
129	-0.48	-1.26
130	-2.37	-1.82
131	0.68	-1.13
132	-3.31	-2.54
133	-1.51	-1.16
134	-0.84	-1.21
135	-1.94	-1.49
136	-0.14	-1.30
137	-2.79	-2.14
138	0.67	-1.15
139	-3.33	-2.56
140	0.27	-1.31
141	-3.22	-2.48
142	0.66	-1.17
143	-3.35	-2.58
144	-1.52	-1.17
145	-0.53	-1.26
146	-2.33	-1.79
147	0.65	-1.19
148	-3.38	-2.60
149	0.22	-1.32
150	-3.19	-2.45
151	-0.85	-1.22
152	-1.94	-1.49
153	-0.21	-1.30
154	-2.73	-2.10
155	0.64	-1.22
156	-3.41	-2.62
157	0.63	-1.24
158	0.15	-1.33
159	-3.14	-2.42

160	-3.43	-2.64
161	-0.56	-1.27
162	-2.32	-1.79
163	0.61	-1.26
164	-3.45	-2.66
165	-0.27	-1.30
166	-2.67	-2.05
167	-1.53	-1.17
168	0.08	-1.33
169	-3.08	-2.37
170	0.59	-1.28
171	-0.92	-1.21
172	-1.85	-1.43
173	-3.47	-2.67
174	0.56	-1.30
175	-3.48	-2.67
176	-0.30	-1.31
177	-2.66	-2.04
178	-0.69	-1.25
179	-2.16	-1.66
180	7.13e-03	-1.33
181	-3.01	-2.31
182	0.52	-1.31
183	-3.47	-2.67
184	0.48	-1.33
185	-3.46	-2.66
186	-1.53	-1.18
187	-1.28	-0.98
188	-1.78	-1.37
189	-0.07	-1.33
190	-2.93	-2.25
191	-0.48	-1.28
192	-2.42	-1.86
193	0.43	-1.34
194	-3.43	-2.64
195	-0.80	-1.23
196	-2.02	-1.55
197	0.37	-1.35
198	-3.39	-2.61
199	-0.10	-1.34
200	-2.91	-2.24
201	0.30	-1.35
202	-3.33	-2.56
203	-0.65	-1.26
204	-2.22	-1.71
205	-1.53	-1.18

206	-1.36	-1.04
207	-1.71	-1.31
208	0.23	-1.35
209	-3.26	-2.51
210	-0.33	-1.30
211	-2.62	-2.02
212	-0.92	-1.22
213	-1.87	-1.44
214	0.14	-1.35
215	-3.18	-2.45
216	-0.53	-1.28
217	-2.38	-1.83
218	-0.81	-1.24
219	-2.01	-1.55
220	0.05	-1.35
221	-3.09	-2.38
222	0.02	-1.35
223	-3.07	-2.36
224	-1.53	-1.18
225	-1.44	-1.11
226	-1.63	-1.25
227	-0.73	-1.25
228	-2.12	-1.63
229	-0.23	-1.32
230	-2.75	-2.12
231	-1.35	-1.04
232	-1.72	-1.32
233	-1.27	-0.98
234	-1.80	-1.38
235	-0.45	-1.29
236	-2.47	-1.90
237	-0.93	-1.22
238	-1.86	-1.43
239	-0.68	-1.26
240	-2.19	-1.68
241	-0.90	-1.22
242	-1.89	-1.46
243	0.74	-1.13
244	0.73	-1.15
245	0.72	-1.18
246	0.71	-1.20
247	0.69	-1.21
248	0.68	-1.24
249	0.67	-1.26
250	0.64	-1.29
251	0.62	-1.30

252	0.58	-1.32
253	0.54	-1.33
254	0.48	-1.35
255	0.42	-1.35
256	0.35	-1.36
257	0.27	-1.36
258	0.19	-1.36
259	0.09	-1.36
260	0.06	-1.36
261	-0.20	-1.32
262	-0.43	-1.29
263	-0.66	-1.26
264	-0.89	-1.22
265	-1.53	-1.18
266	-1.91	-1.47
267	-2.21	-1.70
268	-2.51	-1.93
269	-2.79	-2.15
270	-3.12	-2.40
271	-3.15	-2.42
272	-3.24	-2.49
273	-3.33	-2.56
274	-3.40	-2.61
275	-3.46	-2.66
276	-3.50	-2.69
277	-3.53	-2.71
278	-3.54	-2.73
279	-3.55	-2.73
280	-3.54	-2.72
281	-3.52	-2.71
282	-3.49	-2.69
283	-3.45	-2.66
284	-3.44	-2.65
285	-3.42	-2.63
286	-3.40	-2.61
287	-3.38	-2.60
288	-0.90	-1.22
289	-1.89	-1.46
290	-0.68	-1.26
291	-2.19	-1.68
292	-0.93	-1.22
293	-1.86	-1.43
294	-0.45	-1.29
295	-2.47	-1.90
296	-1.27	-0.98
297	-1.80	-1.38

298	-1.35	-1.04
299	-1.72	-1.32
300	-0.23	-1.32
301	-2.75	-2.12
302	-0.73	-1.25
303	-2.12	-1.63
304	-1.44	-1.11
305	-1.63	-1.25
306	-1.53	-1.18
307	0.02	-1.35
308	-3.07	-2.36
309	0.05	-1.35
310	-3.09	-2.38
311	-0.81	-1.24
312	-2.01	-1.55
313	-0.53	-1.28
314	-2.38	-1.83
315	0.14	-1.35
316	-3.18	-2.45
317	-0.92	-1.22
318	-1.87	-1.44
319	-0.33	-1.30
320	-2.62	-2.02
321	0.23	-1.35
322	-3.26	-2.51
323	-1.36	-1.04
324	-1.71	-1.31
325	-1.53	-1.18
326	-0.65	-1.26
327	-2.22	-1.71
328	0.30	-1.35
329	-3.33	-2.56
330	-0.10	-1.34
331	-2.91	-2.24
332	0.37	-1.35
333	-3.39	-2.61
334	-0.80	-1.23
335	-2.02	-1.55
336	0.43	-1.34
337	-3.43	-2.64
338	-0.48	-1.28
339	-2.42	-1.86
340	-0.07	-1.33
341	-2.93	-2.25
342	-1.28	-0.98
343	-1.78	-1.37

344	-1.53	-1.18
345	0.48	-1.33
346	-3.46	-2.66
347	0.52	-1.31
348	-3.47	-2.67
349	6.95e-03	-1.33
350	-3.01	-2.31
351	-0.69	-1.25
352	-2.16	-1.66
353	-0.30	-1.31
354	-2.66	-2.04
355	0.56	-1.30
356	-3.48	-2.67
357	0.59	-1.28
358	-0.92	-1.21
359	-1.85	-1.43
360	-3.47	-2.67
361	0.08	-1.33
362	-3.08	-2.37
363	-1.53	-1.17
364	-0.27	-1.30
365	-2.67	-2.05
366	0.61	-1.26
367	-3.45	-2.66
368	-0.56	-1.27
369	-2.32	-1.79
370	0.63	-1.24
371	0.15	-1.33
372	-3.14	-2.42
373	-3.43	-2.64
374	0.64	-1.21
375	-3.41	-2.62
376	-0.21	-1.30
377	-2.73	-2.10
378	-0.85	-1.22
379	-1.94	-1.49
380	0.22	-1.32
381	-3.19	-2.45
382	0.65	-1.19
383	-3.38	-2.60
384	-0.53	-1.26
385	-2.33	-1.79
386	-1.52	-1.17
387	0.66	-1.17
388	-3.35	-2.58
389	0.27	-1.31

390	-3.22	-2.48
391	0.67	-1.15
392	-3.33	-2.56
393	-0.14	-1.30
394	-2.79	-2.14
395	-0.84	-1.21
396	-1.94	-1.49
397	-1.51	-1.16
398	0.68	-1.13
399	-3.31	-2.54
400	-0.48	-1.26
401	-2.37	-1.82
402	0.32	-1.30
403	-3.24	-2.50
404	-0.08	-1.29
405	-2.83	-2.18
406	0.36	-1.29
407	-3.26	-2.50
408	-0.81	-1.21
409	-1.95	-1.50
410	-0.43	-1.25
411	-2.41	-1.85
412	-1.50	-1.15
413	-0.03	-1.29
414	-2.87	-2.21
415	0.39	-1.27
416	-3.26	-2.51
417	0.42	-1.25
418	-3.25	-2.50
419	-0.78	-1.20
420	-1.96	-1.51
421	-0.39	-1.25
422	-2.43	-1.87
423	0.02	-1.28
424	-2.89	-2.23
425	-1.48	-1.14
426	0.44	-1.23
427	-3.23	-2.48
428	0.06	-1.26
429	-2.91	-2.24
430	-0.75	-1.19
431	-1.97	-1.51
432	0.46	-1.21
433	-3.20	-2.46
434	-0.35	-1.24
435	-2.45	-1.89

436	-1.47	-1.13
437	0.47	-1.18
438	-3.16	-2.43
439	0.10	-1.25
440	-2.91	-2.24
441	-0.31	-1.22
442	-2.47	-1.90
443	-0.72	-1.18
444	-1.97	-1.52
445	0.48	-1.17
446	-3.15	-2.42
447	-1.45	-1.12
448	0.13	-1.23
449	-2.91	-2.24
450	0.49	-1.15
451	-3.13	-2.41
452	-0.28	-1.21
453	-2.47	-1.90
454	-0.69	-1.17
455	-1.97	-1.51
456	0.51	-1.13
457	-3.11	-2.39
458	0.15	-1.21
459	-2.90	-2.23
460	-1.43	-1.10
461	0.52	-1.11
462	-3.09	-2.37
463	-0.25	-1.20
464	-2.47	-1.90
465	0.17	-1.20
466	-2.89	-2.22
467	-0.67	-1.15
468	-1.96	-1.51
469	-1.42	-1.09
470	0.19	-1.18
471	-2.86	-2.20
472	-0.22	-1.18
473	-2.46	-1.89
474	-0.65	-1.14
475	-1.95	-1.50
476	0.20	-1.15
477	-2.84	-2.18
478	-1.39	-1.07
479	-0.20	-1.16
480	-2.45	-1.88
481	-0.62	-1.12

482	-1.94	-1.49
483	0.22	-1.14
484	-2.81	-2.17
485	-0.18	-1.14
486	-2.42	-1.87
487	-1.37	-1.06
488	0.23	-1.12
489	-2.79	-2.15
490	-0.60	-1.10
491	-1.92	-1.48
492	-0.16	-1.12
493	-2.40	-1.84
494	0.24	-1.10
495	-2.77	-2.13
496	-1.35	-1.04
497	-0.59	-1.09
498	-1.90	-1.46
499	-0.15	-1.10
500	-2.36	-1.82
501	0.25	-1.08
502	-2.74	-2.11
503	-1.33	-1.02
504	-0.57	-1.07
505	-1.88	-1.45
506	-0.13	-1.08
507	-2.35	-1.81
508	-1.30	-1.00
509	-0.12	-1.07
510	-2.33	-1.79
511	-0.55	-1.05
512	-1.85	-1.43
513	-1.28	-0.98
514	-0.11	-1.05
515	-2.31	-1.78
516	-0.54	-1.03
517	-1.83	-1.41
518	-1.26	-0.97
519	-0.09	-1.03
520	-2.29	-1.76
521	-0.53	-1.02
522	-1.81	-1.39
523	-1.24	-0.96
524	-0.51	-1.00
525	-1.79	-1.38
526	-1.23	-0.94
527	-0.50	-0.98

528	-1.77	-1.36
529	-1.21	-0.93

Nodo (G)	Pt 1/12	Pt 2/13	Pt 3...	Pt 4...
	-3.55			
	0.74			

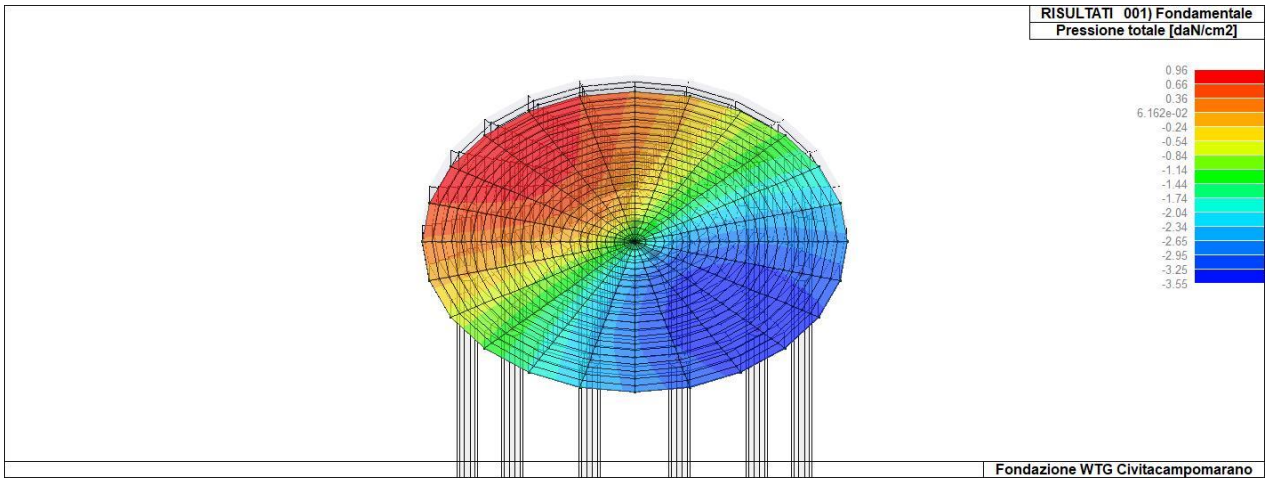

46_RIS_PRESSIONI_001_Fondamentale

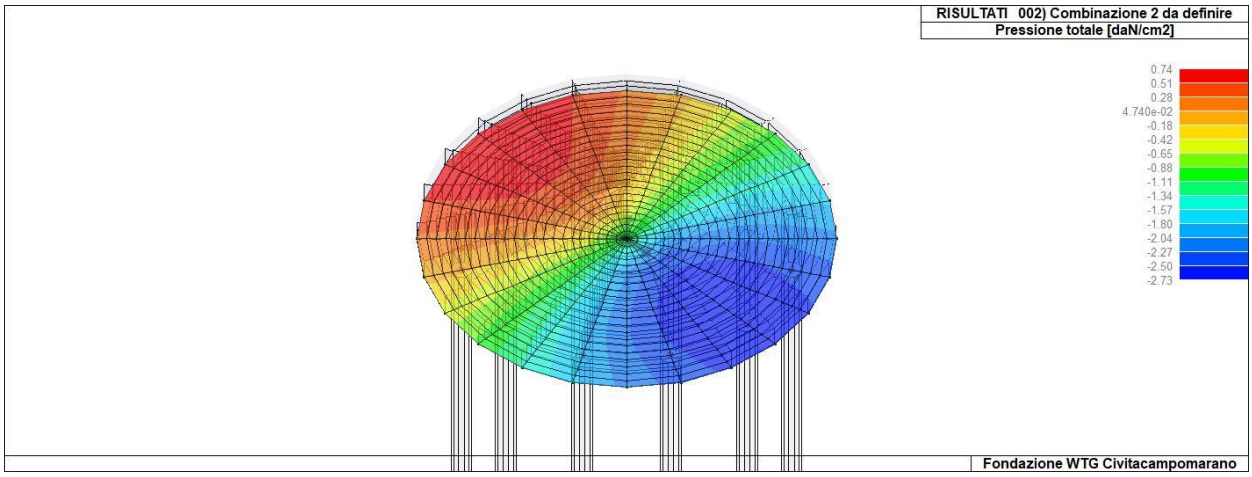

46_RIS_PRESSIONI_002_Combinazione 2 da definire

12. RISULTATI ELEMENTI TIPO SHELL

12.1. LEGENDA RISULTATI ELEMENTI TIPO SHELL

Il controllo dei risultati delle analisi condotte, per quanto concerne gli elementi tipo shell, è possibile in relazione alle tabelle sottoriportate.

Per ogni elemento, e per ogni combinazione(o caso di carico) vengono riportati i risultati più significativi.

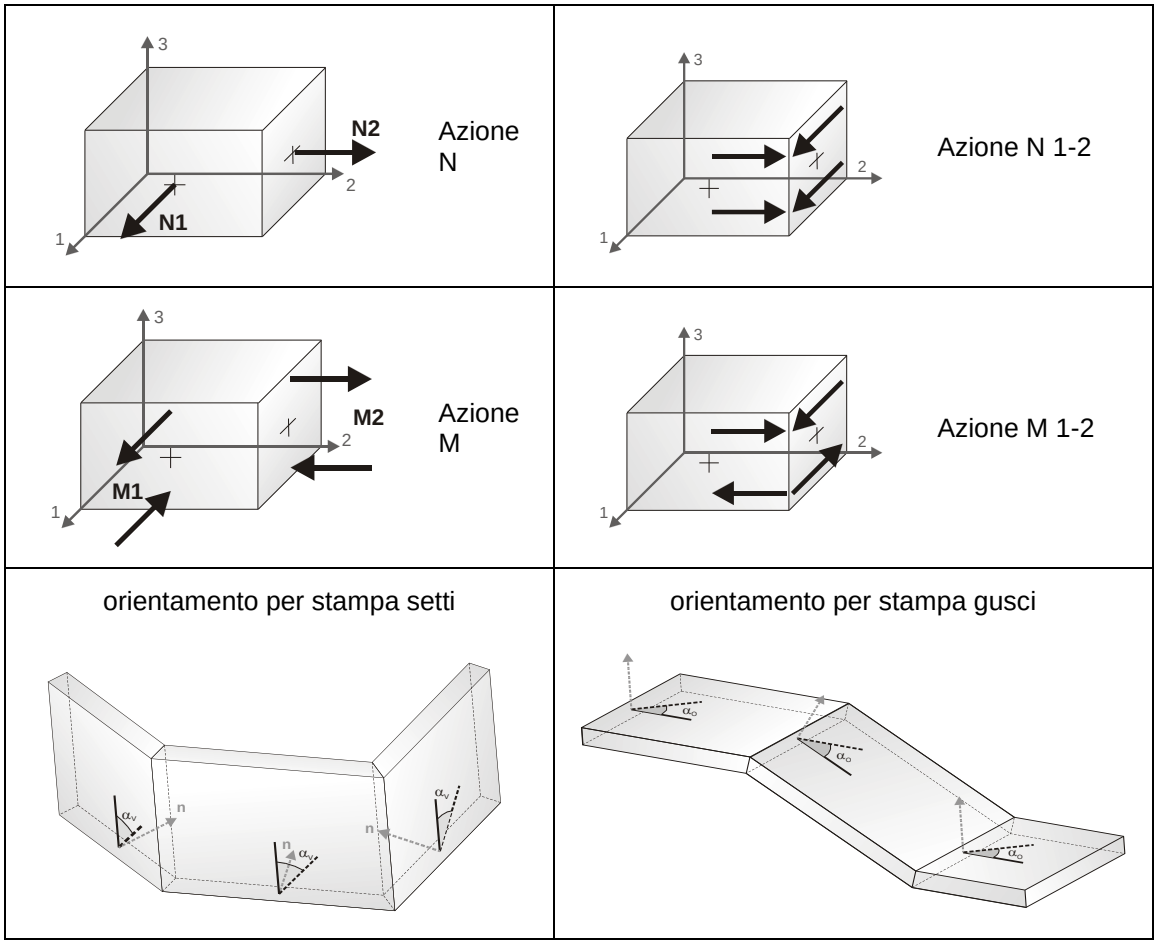

In particolare vengono riportati in ogni nodo di un elemento per ogni combinazione:

tensione di Von Mises		(valore riassuntivo del complessivo stato di sollecitazione)
N max		sforzo membranale principale massimo
N min		sforzo membranale principale minimo
M max		sforzo flessionale principale massimo
M min		sforzo flessionale principale minimo
N1	**N2**	sforzi membranali e flessionali in direzione locale 1 e 2 dell'elemento (lo sforzo 2-1 è uguale allo sforzo 1-2 per la reciprocità delle tensioni tangenziali)
N1-2	**M1**	
M2	**M1-2**	

I suddetti risultati possono a scelta del progettista essere preceduti o sostituiti da valori di sollecitazione non più riferiti al sistema locale dell'elemento ma al sistema globale.

In questo caso gli elementi vengono raggruppati in gruppi (M_S: macro gusci o macro setti, raggruppati per materiale, spessore, e posizione fisica) per la valutazione dei valori mediati ai nodi appartenenti agli elementi dei gruppi stessi.

I valori di sollecitazione sono, in questo caso, riferiti ad una terna specifica del gruppo ruotata di α_O attorno all'asse Z per i gusci e ruotata di α_V attorno alla normale (che per definizione è orizzontale) al piano del setto.

Per i setti, in particolare, se α_V è zero, l'asse '1-1 rappresenta la verticale e l'asse '2-2 l'orizzontale contenuta nel setto.

Le azioni sui setti possono essere espresse anche con formato macro, cioè riferite all'intero macroelemento.

In particolare vengono riportati per ogni quota Z dei nodi e per ogni combinazione i seguenti valori:

N memb.	Azione membranale complessiva agente sulla parete in direzione Z
V memb.	Azione complessiva di taglio agente nel piano del macroelemento
V orto	Azione complessiva di taglio agente in direzione perpendicolare al macroelemento
M memb.	Azione flessionale complessiva agente nel piano del macroelemento
M orto	Azione flessionale complessiva agente in direzione perpendicolare al macroelemento
T	Azione torsionale complessiva agente nel piano orizzontale

Macro	Tipo	Angolo 1-X (gradi)
1	**Guscio**	**0.0**

M_G M 1-2	Cmb	Nodo	N max	N min	N 1	N 2	N 1-2	M max	M min	M 1M	2
			N/mm	N/mm	N/mm	N/mm	N	N	N	N	N
1	1	1	103.46	-2.74	103.31	-2.59	3.96	1897.74	-1.185e+04	-1.100e+04	1048.60	3309.11
1	1	2	0.87	-29.42	-25.42	-3.13	10.26	3246.50	-259.89	2916.85	69.76	1023.33
1	1	3	261.86	-4.42	242.33	15.11	69.42	454.77	-5.716e+04	-5.406e+04	-2643.72	-1.300e+04
1	1	4	121.04	-18.07	109.37	-6.39	-38.58	9.255e+04	-1.038e+05	-1.159e+04	300.75	9.801e+04
1	1	5	22.43	-43.13	-37.25	16.55	-18.74	9.712e+04	-8.477e+04	5.011e+04	-3.776e+04	7.963e+04
1	1	6	270.16	-25.32	262.60	-17.76	46.67	6.254e+04	-1.286e+05	-1.040e+05	3.792e+04	6.403e+04
1	1	10	3.19	-151.89	-110.13	-38.58	68.80	3.621e+04	533.18	2.966e+04	7082.15	-1.381e+04
1	1	11	358.44	-8.33	263.78	86.34	160.50	1469.99	-5.813e+04	-4.564e+04	-1.101e+04	-2.425e+04
1	1	15	19.94	-163.71	-143.59	-0.17	57.35	1.145e+05	-5.763e+04	1.092e+05	-5.224e+04	2.999e+04

1	1	16	378.87	-29.18	304.42	45.27	157.59	4.909e+04	-1.286e+05	-1.264e+05	4.689e+04	1.968e+04
1	1	28	4.76	-281.07	-135.75	-140.56	142.89	5.359e+04	1058.63	2.850e+04	2.615e+04	-2.624e+04
1	1	29	513.74	-8.62	250.15	254.97	261.17	110.15	-1.085e+05	-5.538e+04	-5.302e+04	-5.429e+04
1	1	35	27.55	-278.27	-147.11	-103.61	151.36	1.102e+05	-3.003e+04	1.067e+05	-2.644e+04	-2.217e+04
1	1	36	520.37	-45.57	259.13	215.67	282.13	1.833e+04	-1.523e+05	-1.335e+05	-436.59	-5.338e+04
1	1	68	7.31	-338.75	-77.53	-253.91	148.87	7.036e+04	518.20	1.945e+04	5.142e+04	-3.104e+04
1	1	69	545.21	-12.48	125.26	407.47	240.51	1569.01	-9.241e+04	-2.339e+04	-6.745e+04	-4.151e+04
1	1	73	29.29	-353.79	-83.73	-240.77	174.71	1.104e+05	-3637.71	8.120e+04	2.559e+04	-4.980e+04
1	1	74	572.03	-41.69	128.78	401.56	274.89	-743.29	-1.287e+05	-8.656e+04	-4.288e+04	-6.013e+04
1	1	131	7.19	-426.79	-21.47	-398.13	107.78	8.317e+04	1263.04	6976.70	7.745e+04	-2.086e+04
1	1	132	659.27	-11.06	33.43	614.78	166.86	-80.65	-1.381e+05	-9556.59	-1.287e+05	-3.491e+04
1	1	138	39.10	-422.82	4.03	-387.75	122.35	1.031e+05	1.627e+04	4.068e+04	7.868e+04	-3.903e+04
1	1	139	665.42	-57.77	-5.26	612.91	187.66	-1.510e+04	-1.580e+05	-4.053e+04	-1.326e+05	-5.467e+04
1	1	243	8.83	-407.54	8.83	-407.54	8.05e-02	8.289e+04	482.41	482.43	8.289e+04	-38.10
1	1	244	33.71	-424.70	33.71	-424.70	0.13	9.720e+04	2.786e+04	2.786e+04	9.720e+04	79.98
1	1	286	643.04	-46.46	-46.46	643.04	9.06e-02	-2.725e+04	-1.204e+05	-2.725e+04	-1.204e+05	39.02
1	1	287	613.72	-14.01	-14.01	613.72	7.05e-02	1616.82	-1.050e+05	1616.80	-1.050e+05	-43.99
1	1	391	39.13	-423.31	4.11	-388.29	-122.35	1.031e+05	1.608e+04	4.076e+04	7.842e+04	3.923e+04
1	1	392	665.65	-57.79	-5.30	613.16	-187.66	-1.505e+04	-1.580e+05	-4.057e+04	-1.325e+05	5.475e+04
1	1	398	7.19	-427.40	-21.43	-398.79	-107.79	8.305e+04	1272.10	6942.73	7.738e+04	2.077e+04
1	1	399	659.55	-11.06	33.37	615.12	-166.80	-79.09	-1.381e+05	-9518.26	-1.287e+05	3.484e+04
1	1	456	29.33	-354.84	-83.76	-241.76	-175.09	1.108e+05	-3672.84	8.145e+04	2.563e+04	4.994e+04
1	1	457	572.47	-41.72	128.71	402.04	-275.01	-675.15	-1.287e+05	-8.659e+04	-4.276e+04	6.013e+04
1	1	461	7.31	-339.78	-77.66	-254.81	-149.24	7.054e+04	514.46	1.941e+04	5.165e+04	3.108e+04
1	1	462	545.74	-12.49	125.26	407.98	-240.67	1570.00	-9.234e+04	-2.329e+04	-6.747e+04	4.143e+04
1	1	494	27.62	-279.55	-147.68	-104.25	-152.05	1.103e+05	-2.987e+04	1.067e+05	-2.626e+04	2.221e+04
1	1	495	521.01	-45.62	259.38	216.01	-282.48	1.843e+04	-1.522e+05	-1.335e+05	-287.69	5.333e+04
1	1	501	4.76	-282.38	-136.25	-141.37	-143.54	5.370e+04	1052.62	2.849e+04	2.626e+04	2.630e+04
1	1	502	514.53	-8.63	250.39	255.51	-261.56	113.09	-1.084e+05	-5.524e+04	-5.303e+04	5.424e+04
1	1	514	19.98	-164.66	-144.29	-0.39	-57.85	1.141e+05	-5.766e+04	1.087e+05	-5.223e+04	-3.007e+04
1	1	515	379.53	-29.21	304.82	45.50	-157.97	4.917e+04	-1.285e+05	-1.263e+05	4.695e+04	-1.975e+04
1	1	519	3.20	-153.20	-110.98	-39.02	-69.43	3.583e+04	553.84	2.931e+04	7078.07	1.370e+04
1	1	520	359.27	-8.34	264.27	86.67	-160.93	1465.94	-5.800e+04	-4.548e+04	-1.106e+04	2.425e+04
1	1	524	22.44	-43.67	-37.87	16.64	18.71	9.700e+04	-8.485e+04	4.992e+04	-3.777e+04	-7.966e+04
1	1	525	270.68	-25.39	263.11	-17.82	-46.73	6.261e+04	-1.286e+05	-1.039e+05	3.795e+04	-6.408e+04
1	1	526	121.09	-18.09	109.40	-6.40	38.61	9.252e+04	-1.038e+05	-1.162e+04	303.41	-9.800e+04
1	1	527	0.90	-30.17	-26.02	-3.25	-10.57	3041.42	-242.60	2701.06	97.77	-1000.96
1	1	528	262.50	-4.42	242.85	15.23	-69.71	453.80	-5.707e+04	-5.394e+04	-2671.80	1.304e+04
1	1	529	103.53	-2.75	103.37	-2.59	-4.09	1849.84	-1.183e+04	-1.103e+04	1050.00	-3209.56
1	2	1	79.59	-2.11	79.47	-1.99	3.04	1459.80	-9113.07	-8459.88	806.61	2545.47
1	2	2	0.67	-22.63	-19.55	-2.41	7.89	2497.31	-199.91	2243.73	53.66	787.18
1	2	3	201.43	-3.40	186.40	11.62	53.40	349.82	-4.397e+04	-4.158e+04	-2033.63	-9997.15
1	2	4	93.11	-13.90	84.13	-4.92	-29.68	7.119e+04	-7.987e+04	-8913.56	231.35	7.540e+04
1	2	5	17.26	-33.18	-28.65	12.73	-14.42	7.471e+04	-6.521e+04	3.854e+04	-2.905e+04	6.125e+04
1	2	6	207.82	-19.48	202.00	-13.66	35.90	4.811e+04	-9.892e+04	-7.998e+04	2.917e+04	4.925e+04
1	2	10	2.46	-116.84	-84.71	-29.67	52.92	2.785e+04	410.14	2.282e+04	5447.81	-1.062e+04

1	2	11	275.73	-6.41	202.91	66.41	123.46	1130.76	-4.471e+04	-3.511e+04	-8470.44	-1.865e+04
1	2	15	15.34	-125.93	-110.46	-0.13	44.12	8.811e+04	-4.433e+04	8.396e+04	-4.018e+04	2.307e+04
1	2	16	291.44	-22.44	234.17	34.82	121.22	3.777e+04	-9.892e+04	-9.722e+04	3.607e+04	1.514e+04
1	2	28	3.66	-216.21	-104.42	-108.12	109.92	4.122e+04	814.33	2.192e+04	2.011e+04	-2.018e+04
1	2	29	395.18	-6.63	192.42	196.13	200.90	84.73	-8.346e+04	-4.260e+04	-4.078e+04	-4.176e+04
1	2	35	21.19	-214.05	-113.16	-79.70	116.43	8.481e+04	-2.310e+04	8.204e+04	-2.034e+04	-1.706e+04
1	2	36	400.28	-35.05	199.33	165.90	217.02	1.410e+04	-1.171e+05	-1.027e+05	-335.84	-4.106e+04
1	2	68	5.62	-260.58	-59.64	-195.31	114.51	5.412e+04	398.61	1.496e+04	3.956e+04	-2.388e+04
1	2	69	419.39	-9.60	96.35	313.43	185.01	1206.93	-7.109e+04	-1.799e+04	-5.189e+04	-3.193e+04
1	2	73	22.53	-272.15	-64.41	-185.21	134.39	8.495e+04	-2798.24	6.246e+04	1.969e+04	-3.831e+04
1	2	74	440.02	-32.07	99.06	308.89	211.45	-571.76	-9.900e+04	-6.659e+04	-3.298e+04	-4.625e+04
1	2	131	5.53	-328.30	-16.52	-306.25	82.91	6.397e+04	971.57	5366.69	5.958e+04	-1.605e+04
1	2	132	507.13	-8.51	25.72	472.91	128.35	-62.04	-1.063e+05	-7351.22	-9.897e+04	-2.685e+04
1	2	138	30.08	-325.24	3.10	-298.27	94.11	7.930e+04	1.251e+04	3.129e+04	6.052e+04	-3.003e+04
1	2	139	511.86	-44.44	-4.05	471.47	144.35	-1.161e+04	-1.216e+05	-3.117e+04	-1.020e+05	-4.205e+04
1	2	243	6.79	-313.49	6.79	-313.49	6.19e-02	6.376e+04	371.08	371.10	6.376e+04	-29.31
1	2	244	25.93	-326.69	25.93	-326.69	0.10	7.477e+04	2.143e+04	2.143e+04	7.477e+04	61.53
1	2	286	494.65	-35.74	-35.74	494.65	6.97e-02	-2.096e+04	-9.264e+04	-2.096e+04	-9.264e+04	30.02
1	2	287	472.09	-10.78	-10.78	472.09	5.43e-02	1243.71	-8.073e+04	1243.70	-8.073e+04	-33.84
1	2	391	30.10	-325.62	3.16	-298.68	-94.12	7.931e+04	1.237e+04	3.136e+04	6.032e+04	3.018e+04
1	2	392	512.04	-44.45	-4.08	471.66	-144.36	-1.158e+04	-1.216e+05	-3.121e+04	-1.019e+05	4.211e+04
1	2	398	5.53	-328.77	-16.48	-306.76	-82.91	6.388e+04	978.53	5340.56	5.952e+04	1.598e+04
1	2	399	507.35	-8.51	25.67	473.17	-128.31	-60.84	-1.062e+05	-7321.74	-9.897e+04	2.680e+04
1	2	456	22.56	-272.96	-64.43	-185.97	-134.68	8.519e+04	-2825.26	6.265e+04	1.972e+04	3.842e+04
1	2	457	440.36	-32.09	99.01	309.26	-211.54	-519.34	-9.898e+04	-6.661e+04	-3.289e+04	4.626e+04
1	2	461	5.62	-261.37	-59.74	-196.01	-114.80	5.426e+04	395.74	1.493e+04	3.973e+04	2.391e+04
1	2	462	419.80	-9.61	96.36	313.83	-185.13	1207.69	-7.103e+04	-1.792e+04	-5.190e+04	3.187e+04
1	2	494	21.25	-215.04	-113.60	-80.19	-116.96	8.484e+04	-2.298e+04	8.207e+04	-2.020e+04	1.708e+04
1	2	495	400.78	-35.09	199.52	166.16	-217.30	1.417e+04	-1.171e+05	-1.027e+05	-221.30	4.102e+04
1	2	501	3.66	-217.21	-104.81	-108.74	-110.42	4.131e+04	809.70	2.192e+04	2.020e+04	2.023e+04
1	2	502	395.79	-6.64	192.61	196.55	-201.20	86.99	-8.337e+04	-4.250e+04	-4.079e+04	4.172e+04
1	2	514	15.37	-126.66	-110.99	-0.30	-44.50	8.780e+04	-4.436e+04	8.362e+04	-4.018e+04	-2.313e+04
1	2	515	291.95	-22.47	234.48	35.00	-121.52	3.782e+04	-9.888e+04	-9.717e+04	3.611e+04	-1.519e+04
1	2	519	2.46	-117.85	-85.37	-30.01	-53.41	2.756e+04	426.03	2.254e+04	5444.67	1.054e+04
1	2	520	276.36	-6.41	203.28	66.67	-123.79	1127.65	-4.462e+04	-3.498e+04	-8508.67	1.865e+04
1	2	524	17.26	-33.59	-29.13	12.80	14.39	7.461e+04	-6.527e+04	3.840e+04	-2.905e+04	-6.127e+04
1	2	525	208.22	-19.53	202.39	-13.71	-35.95	4.816e+04	-9.890e+04	-7.993e+04	2.919e+04	-4.930e+04
1	2	526	93.15	-13.92	84.15	-4.92	29.70	7.117e+04	-7.988e+04	-8936.88	233.39	-7.538e+04
1	2	527	0.69	-23.21	-20.02	-2.50	-8.13	2339.56	-186.61	2077.74	75.21	-769.97
1	2	528	201.92	-3.40	186.80	11.71	-53.62	349.08	-4.390e+04	-4.149e+04	-2055.23	1.003e+04
1	2	529	79.64	-2.11	79.51	-1.99	-3.15	1422.96	-9099.30	-8484.03	807.69	-2468.90

M_G			N max	N min	N 1	N 2	N 1-2	M max	M min	M 1	M 2
M 1-2											
			-427.40	-147.68	-424.70	-282.48		-1.580e+05	-1.335e+05	-1.326e+05	-9.800e+04
			665.65	304.82	643.04	282.13	1.145e+05		1.092e+05	9.720e+04	9.801e+04

Macro	Tipo	Angolo 1-X (gradi)
2	**Guscio**	**0.0**

M_G M 1-2	Cmb	Nodo	N max	N min	N 1	N 2	N 1-2	M max	M min	M 1M	2
			N/mm	N/mm	N/mm	N/mm	N/mm	N	N	N	N	N
2	1	4	122.19	-14.06	115.23	-7.10	-29.99	8.845e+04	-1.028e+05	-1.583e+04	1516.12	9.521e+04
2	1	5	16.25	-35.83	-32.88	13.31	-12.03	9.323e+04	-8.081e+04	4.902e+04	-3.660e+04	7.576e+04
2	1	6	259.13	-26.67	249.50	-17.04	51.58	5.424e+04	-1.408e+05	-1.249e+05	3.835e+04	5.335e+04
2	1	7	143.75	-36.24	117.18	-9.67	-63.84	1.573e+05	-1.714e+05	-1.405e+04	-16.06	1.642e+05
2	1	8	50.42	-59.98	-41.01	31.45	-41.65	1.778e+05	-1.394e+05	9.048e+04	-5.205e+04	1.417e+05
2	1	9	280.77	-57.63	277.48	-54.33	33.23	1.042e+05	-2.242e+05	-1.770e+05	5.691e+04	1.153e+05
2	1	15	19.84	-151.12	-128.88	-2.40	57.52	1.206e+05	-5.110e+04	1.181e+05	-4.860e+04	2.055e+04
2	1	16	379.15	-31.65	298.14	49.36	163.45	4.312e+04	-1.413e+05	-1.411e+05	4.295e+04	5510.42
2	1	20	40.42	-165.48	-153.86	28.79	47.53	2.069e+05	-7.806e+04	1.924e+05	-6.353e+04	6.269e+04
2	1	21	390.73	-50.67	324.76	15.30	157.38	6.562e+04	-2.226e+05	-2.135e+05	5.647e+04	5.053e+04
2	1	35	30.34	-268.27	-135.09	-102.84	148.43	1.225e+05	-2.442e+04	1.127e+05	-1.466e+04	-3.659e+04
2	1	36	501.44	-50.70	241.49	209.26	275.60	1.726e+04	-1.895e+05	-1.498e+05	-2.242e+04	-8.142e+04
2	1	41	57.88	-269.02	-145.29	-65.85	158.55	2.055e+05	-2.989e+04	2.037e+05	-2.805e+04	-2.075e+04
2	1	42	523.14	-98.46	252.03	172.64	308.25	8565.68	-2.659e+05	-2.445e+05	-1.278e+04	-7.350e+04
2	1	73	33.18	-339.87	-73.47	-233.22	168.56	1.328e+05	-1988.08	8.278e+04	4.800e+04	-6.510e+04
2	1	74	569.91	-47.13	120.38	402.40	274.41	879.35	-1.604e+05	-8.846e+04	-7.107e+04	-8.017e+04
2	1	79	51.76	-347.18	-77.03	-218.39	186.53	2.016e+05	3.183e+04	1.768e+05	5.663e+04	-5.996e+04
2	1	80	580.40	-70.06	121.07	389.27	296.30	-4.126e+04	-2.204e+05	-1.839e+05	-7.777e+04	-7.217e+04
2	1	138	44.15	-408.40	10.76	-375.01	118.30	1.364e+05	1.108e+04	3.502e+04	1.124e+05	-4.925e+04
2	1	139	641.73	-64.87	-14.50	591.36	181.81	-5216.84	-2.165e+05	-3.328e+04	-1.884e+05	-7.170e+04
2	1	142	80.71	-408.42	40.22	-367.93	134.78	1.842e+05	7.054e+04	1.157e+05	1.391e+05	-5.563e+04
2	1	143	664.55	-123.45	-63.12	604.21	209.53	-6.810e+04	-2.684e+05	-1.108e+05	-2.257e+05	-8.205e+04
2	1	244	38.73	-409.99	38.73	-409.99	0.23	1.330e+05	2.021e+04	2.021e+04	1.330e+05	11.92
2	1	245	58.32	-416.42	58.32	-416.41	0.27	1.622e+05	1.095e+05	1.095e+05	1.622e+05	164.26
2	1	285	650.38	-77.60	-77.60	650.38	0.20	-1.095e+05	-1.904e+05	-1.095e+05	-1.904e+05	90.08
2	1	286	639.99	-52.91	-52.91	639.99	0.19	-1.718e+04	-1.648e+05	-1.718e+04	-1.648e+05	-28.39
2	1	387	80.76	-408.91	40.48	-368.63	-134.54	1.844e+05	7.016e+04	1.158e+05	1.388e+05	5.596e+04
2	1	388	664.76	-123.48	-63.30	604.58	-209.32	-6.801e+04	-2.684e+05	-1.109e+05	-2.255e+05	8.218e+04
2	1	391	44.18	-409.02	10.92	-375.76	-118.18	1.362e+05	1.099e+04	3.503e+04	1.122e+05	4.933e+04
2	1	392	642.02	-64.89	-14.64	591.77	-181.64	-5210.52	-2.164e+05	-3.326e+04	-1.883e+05	7.167e+04
2	1	450	51.82	-348.17	-76.80	-219.55	-186.83	2.020e+05	3.152e+04	1.771e+05	5.646e+04	6.025e+04
2	1	451	580.80	-70.08	120.80	389.92	-296.32	-4.106e+04	-2.205e+05	-1.840e+05	-7.754e+04	7.220e+04
2	1	456	33.21	-340.92	-73.34	-234.36	-168.85	1.330e+05	-1904.42	8.292e+04	4.822e+04	6.520e+04
2	1	457	570.44	-47.15	120.16	403.13	-274.47	860.19	-1.603e+05	-8.836e+04	-7.105e+04	8.010e+04
2	1	488	57.99	-270.24	-145.61	-66.64	-159.29	2.054e+05	-2.981e+04	2.035e+05	-2.795e+04	2.083e+04
2	1	489	523.71	-98.55	252.01	173.16	-308.62	8750.28	-2.658e+05	-2.445e+05	-1.254e+04	7.343e+04
2	1	494	30.40	-269.61	-135.50	-103.72	-149.16	1.225e+05	-2.418e+04	1.127e+05	-1.437e+04	3.665e+04

2	1	495	502.22	-50.74	241.60	209.88	-276.03	1.727e+04	-1.893e+05	-1.497e+05	-2.236e+04	8.135e+04
2	1	509	40.46	-166.35	-154.48	28.58	-48.12	2.064e+05	-7.817e+04	1.918e+05	-6.357e+04	-6.278e+04
2	1	510	391.30	-50.70	325.00	15.59	-157.83	6.582e+04	-2.226e+05	-2.134e+05	5.663e+04	-5.065e+04
2	1	514	19.83	-152.38	-129.66	-2.88	-58.27	1.200e+05	-5.107e+04	1.174e+05	-4.855e+04	-2.063e+04
2	1	515	379.94	-31.67	298.48	49.80	-163.99	4.309e+04	-1.411e+05	-1.409e+05	4.292e+04	-5526.53
2	1	521	50.34	-60.40	-41.62	31.57	41.55	1.776e+05	-1.395e+05	9.019e+04	-5.206e+04	-1.417e+05
2	1	522	281.21	-57.71	277.88	-54.39	-33.40	1.043e+05	-2.242e+05	-1.768e+05	5.697e+04	-1.154e+05
2	1	523	143.76	-36.28	117.18	-9.69	63.87	1.573e+05	-1.714e+05	-1.408e+04	-3.96	-1.642e+05
2	1	524	16.07	-36.37	-33.57	13.28	11.78	9.296e+04	-8.083e+04	4.870e+04	-3.657e+04	-7.571e+04
2	1	525	259.73	-26.69	250.01	-16.98	-51.86	5.422e+04	-1.406e+05	-1.247e+05	3.833e+04	-5.332e+04
2	1	526	122.13	-13.99	115.25	-7.11	29.83	8.829e+04	-1.027e+05	-1.588e+04	1519.48	-9.507e+04
2	2	4	93.99	-10.82	88.64	-5.46	-23.07	6.804e+04	-7.905e+04	-1.218e+04	1166.25	7.324e+04
2	2	5	12.50	-27.56	-25.29	10.24	-9.26	7.171e+04	-6.216e+04	3.771e+04	-2.815e+04	5.827e+04
2	2	6	199.33	-20.51	191.92	-13.10	39.68	4.172e+04	-1.083e+05	-9.607e+04	2.950e+04	4.104e+04
2	2	7	110.58	-27.87	90.14	-7.44	-49.11	1.210e+05	-1.318e+05	-1.081e+04	-12.35	1.263e+05
2	2	8	38.79	-46.14	-31.55	24.19	-32.04	1.368e+05	-1.072e+05	6.960e+04	-4.004e+04	1.090e+05
2	2	9	215.98	-44.33	213.44	-41.80	25.56	8.015e+04	-1.725e+05	-1.361e+05	4.377e+04	8.869e+04
2	2	15	15.26	-116.25	-99.14	-1.85	44.25	9.277e+04	-3.931e+04	9.085e+04	-3.739e+04	1.581e+04
2	2	16	291.65	-24.35	229.34	37.97	125.73	3.317e+04	-1.087e+05	-1.085e+05	3.304e+04	4238.79
2	2	20	31.09	-127.29	-118.35	22.15	36.56	1.592e+05	-6.005e+04	1.480e+05	-4.887e+04	4.823e+04
2	2	21	300.56	-38.97	249.81	11.77	121.06	5.047e+04	-1.713e+05	-1.642e+05	4.344e+04	3.887e+04
2	2	35	23.34	-206.36	-103.92	-79.11	114.18	9.422e+04	-1.879e+04	8.671e+04	-1.128e+04	-2.815e+04
2	2	36	385.73	-39.00	185.76	160.97	212.00	1.328e+04	-1.458e+05	-1.152e+05	-1.725e+04	-6.263e+04
2	2	41	44.52	-206.94	-111.76	-50.65	121.96	1.581e+05	-2.299e+04	1.567e+05	-2.158e+04	-1.596e+04
2	2	42	402.41	-75.74	193.87	132.80	237.12	6588.98	-2.045e+05	-1.881e+05	-9831.33	-5.654e+04
2	2	73	25.52	-261.44	-56.52	-179.40	129.66	1.021e+05	-1529.30	6.368e+04	3.692e+04	-5.008e+04
2	2	74	438.39	-36.25	92.60	309.54	211.08	676.42	-1.234e+05	-6.804e+04	-5.467e+04	-6.167e+04
2	2	79	39.81	-267.06	-59.25	-168.00	143.48	1.551e+05	2.449e+04	1.360e+05	4.356e+04	-4.612e+04
2	2	80	446.46	-53.89	93.13	299.44	227.92	-3.174e+04	-1.695e+05	-1.415e+05	-5.983e+04	-5.551e+04
2	2	138	33.96	-314.15	8.27	-288.47	91.00	1.049e+05	8526.73	2.694e+04	8.649e+04	-3.789e+04
2	2	139	493.64	-49.90	-11.16	454.89	139.85	-4012.96	-1.665e+05	-2.560e+04	-1.449e+05	-5.515e+04
2	2	142	62.08	-314.17	30.93	-283.02	103.68	1.417e+05	5.426e+04	8.899e+04	1.070e+05	-4.279e+04
2	2	143	511.19	-94.96	-48.55	464.78	161.18	-5.238e+04	-2.065e+05	-8.526e+04	-1.736e+05	-6.312e+04
2	2	244	29.79	-315.38	29.79	-315.38	0.17	1.023e+05	1.555e+04	1.555e+04	1.023e+05	9.17
2	2	245	44.86	-320.32	44.86	-320.32	0.20	1.248e+05	8.424e+04	8.424e+04	1.248e+05	126.35
2	2	285	500.29	-59.69	-59.69	500.29	0.15	-8.425e+04	-1.465e+05	-8.425e+04	-1.465e+05	69.29
2	2	286	492.30	-40.70	-40.70	492.30	0.15	-1.321e+04	-1.267e+05	-1.321e+04	-1.267e+05	-21.84
2	2	387	62.12	-314.54	31.14	-283.56	-103.49	1.419e+05	5.397e+04	8.909e+04	1.067e+05	4.305e+04
2	2	388	511.36	-94.99	-48.69	465.06	-161.02	-5.231e+04	-2.065e+05	-8.529e+04	-1.735e+05	6.321e+04
2	2	391	33.99	-314.63	8.40	-289.04	-90.91	1.048e+05	8454.76	2.695e+04	8.630e+04	3.794e+04
2	2	392	493.86	-49.91	-11.26	455.21	-139.73	-4008.09	-1.665e+05	-2.559e+04	-1.449e+05	5.513e+04
2	2	450	39.86	-267.82	-59.08	-168.88	-143.71	1.554e+05	2.424e+04	1.362e+05	4.343e+04	4.634e+04
2	2	451	446.77	-53.91	92.92	299.94	-227.94	-3.159e+04	-1.696e+05	-1.415e+05	-5.965e+04	5.554e+04
2	2	456	25.55	-262.24	-56.42	-180.28	-129.89	1.023e+05	-1464.94	6.379e+04	3.709e+04	5.016e+04
2	2	457	438.80	-36.27	92.43	310.10	-211.13	661.68	-1.233e+05	-6.797e+04	-5.465e+04	6.161e+04
2	2	488	44.61	-207.87	-112.01	-51.26	-122.53	1.580e+05	-2.293e+04	1.566e+05	-2.150e+04	1.602e+04

2	2	489	402.86	-75.80	193.85	133.20	-237.40	6730.99	-2.045e+05	-1.881e+05	-9646.18	5.648e+04
2	2	494	23.38	-207.39	-104.23	-79.78	-114.74	9.422e+04	-1.860e+04	8.667e+04	-1.105e+04	2.819e+04
2	2	495	386.33	-39.03	185.85	161.45	-212.33	1.329e+04	-1.456e+05	-1.151e+05	-1.720e+04	6.257e+04
2	2	509	31.12	-127.96	-118.83	21.99	-37.01	1.588e+05	-6.013e+04	1.475e+05	-4.890e+04	-4.829e+04
2	2	510	301.00	-39.00	250.00	12.00	-121.40	5.063e+04	-1.712e+05	-1.642e+05	4.356e+04	-3.896e+04
2	2	514	15.26	-117.21	-99.74	-2.22	-44.82	9.229e+04	-3.929e+04	9.035e+04	-3.734e+04	-1.587e+04
2	2	515	292.26	-24.36	229.60	38.30	-126.15	3.314e+04	-1.085e+05	-1.084e+05	3.302e+04	-4251.18
2	2	521	38.73	-46.46	-32.02	24.28	31.96	1.366e+05	-1.073e+05	6.938e+04	-4.004e+04	-1.090e+05
2	2	522	216.31	-44.40	213.76	-41.84	-25.69	8.023e+04	-1.724e+05	-1.360e+05	4.382e+04	-8.874e+04
2	2	523	110.59	-27.90	90.14	-7.45	49.13	1.210e+05	-1.318e+05	-1.083e+04	-3.05	-1.263e+05
2	2	524	12.36	-27.97	-25.82	10.22	9.06	7.150e+04	-6.217e+04	3.746e+04	-2.813e+04	-5.824e+04
2	2	525	199.80	-20.53	192.32	-13.06	-39.89	4.171e+04	-1.082e+05	-9.594e+04	2.949e+04	-4.101e+04
2	2	526	93.95	-10.76	88.65	-5.47	22.94	6.792e+04	-7.896e+04	-1.221e+04	1168.83	-7.313e+04

M_G		N max	N min	N 1	N 2	N 1-2	M max	M min	M 1	M 2
M 1-2										
		-416.42	-154.48	-416.41	-308.62		-2.684e+05	-2.445e+05	-2.257e+05	-1.642e+05
		664.76	325.00	650.38	308.25	2.069e+05		2.037e+05	1.622e+05	1.642e+05

Macro	Tipo	Angolo 1-X (gradi)
3	**Guscio**	**0.0**

M_G	Cmb	Nodo	N max	N min	N 1	N 2	N 1-2	M max	M min	M 1	M 2
M 1-2											
			N/mm	N/mm	N/mm	N/mm	N/mm	N	N	N	N	N
3	1	7	143.15	-30.09	123.07	-10.01	-55.46	1.601e+05	-1.769e+05	-1.824e+04	1419.29	1.682e+05
3	1	8	44.02	-51.13	-35.68	28.57	-35.08	1.779e+05	-1.394e+05	9.148e+04	-5.290e+04	1.413e+05
3	1	9	255.95	-58.16	252.05	-54.26	34.80	9.723e+04	-2.452e+05	-2.095e+05	6.146e+04	1.047e+05
3	1	12	164.73	-54.00	122.70	-11.96	-86.18	2.195e+05	-2.325e+05	-1.500e+04	2004.82	2.258e+05
3	1	13	91.85	-88.37	-48.22	51.70	-75.00	2.872e+05	-2.073e+05	1.438e+05	-6.389e+04	2.244e+05
3	1	14	293.84	-103.17	293.56	-102.89	10.62	1.488e+05	-3.590e+05	-2.818e+05	7.155e+04	1.823e+05
3	1	20	40.34	-144.75	-133.38	28.97	44.45	2.204e+05	-7.444e+04	2.105e+05	-6.454e+04	5.310e+04
3	1	21	382.75	-52.26	312.93	17.56	159.68	6.189e+04	-2.416e+05	-2.372e+05	5.754e+04	3.605e+04
3	1	23	62.42	-163.61	-157.68	56.49	36.12	3.196e+05	-7.163e+04	2.910e+05	-4.310e+04	1.017e+05
3	1	24	393.13	-70.50	335.70	-13.07	152.73	5.895e+04	-3.329e+05	-3.126e+05	3.859e+04	8.697e+04
3	1	41	60.70	-245.34	-126.41	-58.24	149.18	2.231e+05	-2.298e+04	2.160e+05	-1.593e+04	-4.106e+04
3	1	42	478.50	-103.25	221.68	153.57	288.87	7939.45	-3.175e+05	-2.708e+05	-3.882e+04	-1.142e+05
3	1	46	97.49	-256.18	-145.30	-13.39	164.07	3.461e+05	-1.512e+04	3.457e+05	-1.473e+04	-1.192e+04
3	1	47	518.05	-165.26	242.30	110.49	335.24	-2.648e+04	-4.349e+05	-4.109e+05	-5.048e+04	-9.606e+04
3	1	79	55.97	-319.74	-63.16	-200.60	174.84	2.287e+05	3.641e+04	1.820e+05	8.304e+04	-8.241e+04
3	1	80	564.81	-75.10	109.61	380.10	289.96	-4.232e+04	-2.566e+05	-1.891e+05	-1.098e+05	-9.951e+04
3	1	84	72.77	-329.20	-67.55	-188.88	191.61	3.322e+05	1.067e+05	3.179e+05	1.209e+05	-5.489e+04
3	1	85	572.55	-94.77	110.87	366.91	308.12	-1.187e+05	-3.463e+05	-3.225e+05	-1.425e+05	-6.971e+04
3	1	142	86.17	-373.57	48.73	-336.13	125.74	2.280e+05	6.528e+04	1.077e+05	1.855e+05	-7.143e+04

3	1	143	608.20	-130.41	-74.44	552.23	195.47	-5.267e+04	-3.501e+05	-9.917e+04	-3.037e+05	-1.080e+05
3	1	147	130.53	-383.01	82.89	-335.37	148.98	3.110e+05	1.649e+05	2.435e+05	2.324e+05	-7.285e+04
3	1	148	650.57	-204.14	-134.11	580.55	234.41	-1.699e+05	-4.365e+05	-2.358e+05	-3.705e+05	-1.150e+05
3	1	245	63.83	-386.26	63.83	-386.26	0.36	2.097e+05	9.900e+04	9.900e+04	2.097e+05	75.27
3	1	246	80.52	-394.06	80.52	-394.06	0.35	2.552e+05	2.537e+05	2.551e+05	2.538e+05	369.04
3	1	284	639.04	-104.36	-104.36	639.04	0.23	-2.510e+05	-2.838e+05	-2.510e+05	-2.838e+05	244.81
3	1	285	631.92	-83.78	-83.78	631.92	0.27	-9.615e+04	-2.463e+05	-9.615e+04	-2.463e+05	8.73
3	1	382	130.57	-383.45	83.45	-336.32	-148.33	3.114e+05	1.644e+05	2.437e+05	2.321e+05	7.326e+04
3	1	383	650.75	-204.17	-134.51	581.09	-233.88	-1.698e+05	-4.364e+05	-2.358e+05	-3.704e+05	1.151e+05
3	1	387	86.23	-374.15	49.08	-337.01	-125.38	2.279e+05	6.505e+04	1.078e+05	1.852e+05	7.164e+04
3	1	388	608.47	-130.44	-74.70	552.73	-195.14	-5.263e+04	-3.501e+05	-9.915e+04	-3.035e+05	1.080e+05
3	1	445	72.89	-330.11	-67.12	-190.09	-191.89	3.326e+05	1.057e+05	3.181e+05	1.202e+05	5.550e+04
3	1	446	572.90	-94.79	110.53	367.58	-308.12	-1.181e+05	-3.467e+05	-3.228e+05	-1.419e+05	6.988e+04
3	1	450	56.03	-320.74	-62.79	-201.93	-175.07	2.290e+05	3.626e+04	1.821e+05	8.307e+04	8.264e+04
3	1	451	565.30	-75.11	109.24	380.96	-289.95	-4.227e+04	-2.564e+05	-1.890e+05	-1.097e+05	9.944e+04
3	1	483	97.54	-257.17	-145.16	-14.47	-164.87	3.456e+05	-1.523e+04	3.452e+05	-1.482e+04	1.213e+04
3	1	484	518.49	-165.34	241.84	111.31	-335.62	-2.622e+04	-4.347e+05	-4.108e+05	-5.017e+04	9.598e+04
3	1	488	60.78	-246.64	-126.60	-59.25	-149.98	2.229e+05	-2.281e+04	2.158e+05	-1.571e+04	4.117e+04
3	1	489	479.22	-103.32	221.57	154.33	-289.32	8029.81	-3.173e+05	-2.706e+05	-3.866e+04	1.140e+05
3	1	506	62.54	-164.46	-158.35	56.43	-36.74	3.192e+05	-7.203e+04	2.905e+05	-4.338e+04	-1.019e+05
3	1	507	393.62	-70.58	335.89	-12.85	-153.18	5.953e+04	-3.332e+05	-3.127e+05	3.907e+04	-8.728e+04
3	1	509	40.28	-145.87	-134.12	28.52	-45.28	2.196e+05	-7.447e+04	2.097e+05	-6.452e+04	-5.318e+04
3	1	510	383.46	-52.27	313.15	18.04	-160.28	6.195e+04	-2.413e+05	-2.370e+05	5.758e+04	-3.612e+04
3	1	516	91.58	-88.54	-48.76	51.80	74.72	2.868e+05	-2.074e+05	1.433e+05	-6.386e+04	-2.243e+05
3	1	517	294.08	-103.20	293.78	-102.90	-11.02	1.489e+05	-3.588e+05	-2.815e+05	7.164e+04	-1.823e+05
3	1	518	164.84	-54.19	122.65	-12.00	86.38	2.198e+05	-2.328e+05	-1.504e+04	2033.79	-2.261e+05
3	1	521	43.71	-51.52	-36.40	28.60	34.80	1.776e+05	-1.394e+05	9.105e+04	-5.288e+04	-1.412e+05
3	1	522	256.46	-58.19	252.48	-54.22	-35.14	9.726e+04	-2.450e+05	-2.092e+05	6.148e+04	-1.047e+05
3	1	523	143.04	-30.02	123.04	-10.03	55.32	1.599e+05	-1.768e+05	-1.829e+04	1433.23	-1.681e+05
3	2	7	110.12	-23.14	94.67	-7.70	-42.66	1.231e+05	-1.361e+05	-1.403e+04	1091.76	1.294e+05
3	2	8	33.86	-39.33	-27.45	21.98	-26.99	1.369e+05	-1.072e+05	7.037e+04	-4.069e+04	1.087e+05
3	2	9	196.89	-44.74	193.88	-41.73	26.77	7.479e+04	-1.886e+05	-1.611e+05	4.728e+04	8.057e+04
3	2	12	126.72	-41.54	94.38	-9.20	-66.29	1.688e+05	-1.788e+05	-1.154e+04	1542.17	1.737e+05
3	2	13	70.65	-67.98	-37.09	39.77	-57.69	2.209e+05	-1.595e+05	1.106e+05	-4.914e+04	1.726e+05
3	2	14	226.03	-79.36	225.81	-79.14	8.17	1.144e+05	-2.761e+05	-2.167e+05	5.504e+04	1.403e+05
3	2	20	31.03	-111.35	-102.60	22.28	34.19	1.696e+05	-5.726e+04	1.620e+05	-4.965e+04	4.085e+04
3	2	21	294.43	-40.20	240.72	13.51	122.83	4.760e+04	-1.858e+05	-1.825e+05	4.426e+04	2.773e+04
3	2	23	48.02	-125.85	-121.29	43.46	27.78	2.458e+05	-5.510e+04	2.239e+05	-3.315e+04	7.824e+04
3	2	24	302.41	-54.23	258.23	-10.05	117.49	4.535e+04	-2.561e+05	-2.404e+05	2.969e+04	6.690e+04
3	2	41	46.69	-188.73	-97.24	-44.80	114.75	1.716e+05	-1.768e+04	1.662e+05	-1.225e+04	-3.159e+04
3	2	42	368.07	-79.42	170.52	118.13	222.21	6107.27	-2.442e+05	-2.083e+05	-2.986e+04	-8.781e+04
3	2	46	74.99	-197.06	-111.77	-10.30	126.21	2.663e+05	-1.163e+04	2.660e+05	-1.133e+04	-9167.87
3	2	47	398.50	-127.13	186.38	84.99	257.88	-2.037e+04	-3.346e+05	-3.161e+05	-3.883e+04	-7.389e+04
3	2	79	43.06	-245.95	-48.59	-154.31	134.49	1.759e+05	2.801e+04	1.400e+05	6.387e+04	-6.339e+04
3	2	80	434.47	-57.77	84.31	292.39	223.05	-3.256e+04	-1.973e+05	-1.454e+05	-8.446e+04	-7.654e+04
3	2	84	55.98	-253.23	-51.96	-145.30	147.39	2.555e+05	8.205e+04	2.446e+05	9.302e+04	-4.223e+04

3	2	85	440.43	-72.90	85.29	282.24	237.02	-9.128e+04	-2.664e+05	-2.481e+05	-1.096e+05	-5.362e+04
3	2	142	66.29	-287.36	37.49	-258.56	96.73	1.754e+05	5.022e+04	8.286e+04	1.427e+05	-5.495e+04
3	2	143	467.85	-100.32	-57.26	424.79	150.36	-4.052e+04	-2.693e+05	-7.628e+04	-2.336e+05	-8.310e+04
3	2	147	100.41	-294.62	63.76	-257.98	114.60	2.392e+05	1.268e+05	1.873e+05	1.788e+05	-5.604e+04
3	2	148	500.44	-157.03	-103.16	446.58	180.32	-1.307e+05	-3.357e+05	-1.814e+05	-2.850e+05	-8.846e+04
3	2	245	49.10	-297.13	49.10	-297.12	0.28	1.613e+05	7.615e+04	7.615e+04	1.613e+05	57.90
3	2	246	61.94	-303.12	61.94	-303.12	0.27	1.963e+05	1.951e+05	1.962e+05	1.952e+05	283.88
3	2	284	491.57	-80.28	-80.28	491.57	0.18	-1.931e+05	-2.183e+05	-1.931e+05	-2.183e+05	188.32
3	2	285	486.09	-64.45	-64.45	486.09	0.21	-7.396e+04	-1.895e+05	-7.396e+04	-1.895e+05	6.72
3	2	382	100.44	-294.96	64.19	-258.71	-114.10	2.395e+05	1.264e+05	1.874e+05	1.785e+05	5.636e+04
3	2	383	500.58	-157.05	-103.47	447.00	-179.90	-1.306e+05	-3.357e+05	-1.814e+05	-2.849e+05	8.855e+04
3	2	387	66.33	-287.81	37.75	-259.24	-96.45	1.753e+05	5.004e+04	8.289e+04	1.425e+05	5.511e+04
3	2	388	468.06	-100.34	-57.46	425.18	-150.11	-4.048e+04	-2.693e+05	-7.627e+04	-2.335e+05	8.311e+04
3	2	445	56.07	-253.93	-51.63	-146.23	-147.61	2.558e+05	8.131e+04	2.447e+05	9.247e+04	4.269e+04
3	2	446	440.69	-72.92	85.02	282.75	-237.01	-9.084e+04	-2.667e+05	-2.483e+05	-1.092e+05	5.375e+04
3	2	450	43.10	-246.72	-48.30	-155.33	-134.67	1.761e+05	2.789e+04	1.401e+05	6.390e+04	6.357e+04
3	2	451	434.85	-57.78	84.03	293.04	-223.04	-3.252e+04	-1.972e+05	-1.454e+05	-8.436e+04	7.649e+04
3	2	483	75.03	-197.82	-111.66	-11.13	-126.83	2.658e+05	-1.172e+04	2.655e+05	-1.140e+04	9331.09
3	2	484	398.84	-127.18	186.03	85.62	-258.17	-2.017e+04	-3.344e+05	-3.160e+05	-3.860e+04	7.383e+04
3	2	488	46.76	-189.72	-97.38	-45.58	-115.37	1.714e+05	-1.755e+04	1.660e+05	-1.208e+04	3.167e+04
3	2	489	368.63	-79.47	170.44	118.72	-222.55	6176.78	-2.441e+05	-2.081e+05	-2.974e+04	8.773e+04
3	2	506	48.11	-126.51	-121.81	43.41	-28.26	2.455e+05	-5.541e+04	2.235e+05	-3.337e+04	-7.841e+04
3	2	507	302.78	-54.29	258.38	-9.89	-117.83	4.579e+04	-2.563e+05	-2.405e+05	3.005e+04	-6.714e+04
3	2	509	30.98	-112.21	-103.17	21.94	-34.83	1.690e+05	-5.729e+04	1.613e+05	-4.963e+04	-4.091e+04
3	2	510	294.97	-40.21	240.88	13.88	-123.30	4.765e+04	-1.856e+05	-1.823e+05	4.430e+04	-2.778e+04
3	2	516	70.44	-68.11	-37.51	39.84	57.47	2.206e+05	-1.595e+05	1.102e+05	-4.913e+04	-1.725e+05
3	2	517	226.22	-79.39	225.98	-79.15	-8.47	1.145e+05	-2.760e+05	-2.166e+05	5.511e+04	-1.403e+05
3	2	518	126.80	-41.69	94.34	-9.23	66.44	1.691e+05	-1.791e+05	-1.157e+04	1564.45	-1.740e+05
3	2	521	33.62	-39.63	-28.00	22.00	26.77	1.366e+05	-1.072e+05	7.004e+04	-4.067e+04	-1.086e+05
3	2	522	197.28	-44.76	194.22	-41.71	-27.03	7.482e+04	-1.885e+05	-1.609e+05	4.729e+04	-8.055e+04
3	2	523	110.03	-23.09	94.65	-7.71	42.55	1.230e+05	-1.360e+05	-1.407e+04	1102.48	-1.293e+05

M_G		N max	N min	N 1	N 2	N 1-2	M max	M min	M 1	M 2
M 1-2										
		-394.06	-158.35	-394.06	-335.62		-4.365e+05	-4.109e+05	-3.705e+05	-2.261e+05
		650.75	335.89	639.04	335.24	3.461e+05		3.457e+05	2.538e+05	2.258e+05

Macro	Tipo	Angolo 1-X (gradi)
4	**Guscio**	**0.0**

M_G	Cmb	Nodo	N max	N min	N 1	N 2	N 1-2	M max	M min	M 1	M 2
M 1-2											
			N/mm	N/mm	N/mm	N/mm	N/mm	N	N	N	N	N
4	1	12	154.43	-38.00	128.17	-11.73	-66.07	2.305e+05	-2.458e+05	-1.780e+04	2512.69	2.379e+05

4	1	13	76.49	-66.11	-34.91	45.29	-58.96	2.855e+05	-2.060e+05	1.430e+05	-6.344e+04	2.230e+05
4	1	14	247.81	-101.08	246.87	-100.14	18.08	1.387e+05	-3.857e+05	-3.274e+05	8.036e+04	1.649e+05
4	1	17	183.38	-68.70	129.97	-15.28	-103.01	2.388e+05	-2.422e+05	-2.152e+04	1.813e+04	2.396e+05
4	1	18	154.18	-141.50	-67.46	80.15	-128.10	4.846e+05	-3.499e+05	2.438e+05	-1.091e+05	3.781e+05
4	1	19	313.76	-168.48	311.53	-166.25	-32.77	2.445e+05	-6.000e+05	-4.498e+05	9.431e+04	3.229e+05
4	1	23	60.21	-126.19	-119.34	53.37	35.06	3.411e+05	-7.182e+04	3.195e+05	-5.022e+04	9.193e+04
4	1	24	370.35	-71.55	305.67	-6.87	156.20	5.875e+04	-3.586e+05	-3.449e+05	4.507e+04	7.432e+04
4	1	30	76.68	-159.46	-157.34	74.55	22.30	4.229e+05	3471.06	3.774e+05	4.893e+04	1.304e+05
4	1	31	395.80	-83.67	344.59	-32.46	148.09	-8976.02	-4.242e+05	-4.006e+05	-3.251e+04	9.602e+04
4	1	46	102.86	-210.65	-106.06	-1.73	147.82	3.647e+05	-2472.22	3.603e+05	1977.75	-4.018e+04
4	1	47	438.68	-173.87	184.53	80.28	301.81	-2.706e+04	-5.027e+05	-4.440e+05	-8.575e+04	-1.564e+05
4	1	53	146.20	-248.37	-159.57	57.40	164.78	5.840e+05	-2.481e+04	5.839e+05	-2.479e+04	3413.90
4	1	54	501.59	-241.48	238.47	21.64	355.36	-6.740e+04	-7.126e+05	-6.944e+05	-8.566e+04	-1.070e+05
4	1	84	81.90	-281.57	-39.25	-160.42	171.33	3.612e+05	1.162e+05	3.269e+05	1.505e+05	-8.503e+04
4	1	85	536.35	-104.00	85.64	346.70	292.36	-1.251e+05	-3.831e+05	-3.321e+05	-1.761e+05	-1.027e+05
4	1	92	80.39	-307.83	-64.93	-162.51	187.87	4.959e+05	2.449e+05	4.932e+05	2.476e+05	-2.599e+04
4	1	93	564.60	-107.89	106.90	349.80	313.54	-2.545e+05	-4.933e+05	-4.768e+05	-2.709e+05	-6.045e+04
4	1	147	142.99	-319.23	101.63	-277.87	131.94	3.630e+05	1.623e+05	2.295e+05	2.958e+05	-9.476e+04
4	1	148	551.17	-218.10	-156.50	489.57	208.78	-1.432e+05	-5.498e+05	-2.126e+05	-4.803e+05	-1.530e+05
4	1	155	178.93	-347.54	120.79	-289.41	165.01	5.146e+05	2.894e+05	4.444e+05	3.596e+05	-1.043e+05
4	1	156	615.60	-289.17	-206.92	533.35	260.11	-3.442e+05	-6.808e+05	-4.592e+05	-5.658e+05	-1.596e+05
4	1	246	92.94	-341.83	92.94	-341.83	0.34	3.126e+05	2.411e+05	2.411e+05	3.126e+05	242.70
4	1	247	87.21	-367.84	87.21	-367.84	0.34	4.698e+05	3.862e+05	4.698e+05	3.862e+05	1051.34
4	1	283	627.36	-117.66	-117.66	627.36	0.20	-4.291e+05	-4.336e+05	-4.335e+05	-4.293e+05	807.82
4	1	284	597.68	-116.30	-116.30	597.68	0.23	-2.361e+05	-3.483e+05	-2.361e+05	-3.483e+05	130.46
4	1	374	178.81	-347.78	121.91	-290.89	-163.47	5.143e+05	2.896e+05	4.442e+05	3.597e+05	1.041e+05
4	1	375	615.63	-289.15	-207.84	534.32	-258.76	-3.444e+05	-6.802e+05	-4.587e+05	-5.659e+05	1.591e+05
4	1	382	143.04	-319.76	102.14	-278.86	-131.36	3.632e+05	1.619e+05	2.296e+05	2.955e+05	9.510e+04
4	1	383	551.42	-218.12	-156.87	490.17	-208.29	-1.431e+05	-5.496e+05	-2.126e+05	-4.802e+05	1.530e+05
4	1	437	80.61	-308.66	-64.44	-163.61	-188.21	4.970e+05	2.426e+05	4.941e+05	2.455e+05	2.731e+04
4	1	438	564.90	-107.98	106.57	350.36	-313.58	-2.527e+05	-4.947e+05	-4.781e+05	-2.693e+05	6.118e+04
4	1	445	82.03	-282.56	-38.88	-161.65	-171.65	3.614e+05	1.154e+05	3.268e+05	1.501e+05	8.553e+04
4	1	446	536.83	-104.02	85.35	347.46	-292.40	-1.248e+05	-3.831e+05	-3.322e+05	-1.757e+05	1.028e+05
4	1	476	145.73	-248.63	-158.40	55.50	-165.65	5.822e+05	-2.430e+04	5.822e+05	-2.428e+04	-3151.86
4	1	477	501.57	-241.34	236.96	23.28	-355.76	-6.770e+04	-7.115e+05	-6.933e+05	-8.598e+04	1.069e+05
4	1	483	102.95	-211.85	-106.07	-2.83	-148.69	3.641e+05	-2577.79	3.596e+05	1925.71	4.039e+04
4	1	484	439.33	-173.95	184.23	81.16	-302.28	-2.685e+04	-5.024e+05	-4.438e+05	-8.547e+04	1.563e+05
4	1	499	77.07	-160.43	-158.20	74.85	-22.87	4.234e+05	1800.24	3.776e+05	4.756e+04	-1.311e+05
4	1	500	396.27	-83.92	344.88	-32.53	-148.45	-7067.69	-4.256e+05	-4.017e+05	-3.090e+04	-9.698e+04
4	1	506	60.34	-127.41	-120.31	53.24	-35.80	3.403e+05	-7.210e+04	3.186e+05	-5.039e+04	-9.211e+04
4	1	507	371.05	-71.64	306.03	-6.62	-156.70	5.913e+04	-3.586e+05	-3.448e+05	4.538e+04	-7.454e+04
4	1	511	153.21	-140.84	-67.63	79.99	127.15	4.832e+05	-3.491e+05	2.428e+05	-1.087e+05	-3.772e+05
4	1	512	313.33	-168.06	311.24	-165.97	31.65	2.438e+05	-5.988e+05	-4.490e+05	9.407e+04	-3.221e+05
4	1	513	183.78	-69.26	129.87	-15.35	103.61	2.403e+05	-2.437e+05	-2.155e+04	1.817e+04	-2.412e+05
4	1	516	76.18	-66.47	-35.69	45.40	58.68	2.850e+05	-2.060e+05	1.424e+05	-6.342e+04	-2.229e+05
4	1	517	248.23	-101.14	247.25	-100.16	-18.46	1.388e+05	-3.854e+05	-3.270e+05	8.044e+04	-1.649e+05

4	1	518	154.52	-38.20	128.09	-11.77	66.30	2.306e+05	-2.459e+05	-1.785e+04	2545.73	-2.380e+05
4	2	12	118.79	-29.23	98.59	-9.02	-50.82	1.773e+05	-1.891e+05	-1.369e+04	1932.84	1.830e+05
4	2	13	58.84	-50.85	-26.85	34.84	-45.35	2.196e+05	-1.584e+05	1.100e+05	-4.880e+04	1.715e+05
4	2	14	190.62	-77.75	189.90	-77.03	13.91	1.067e+05	-2.967e+05	-2.518e+05	6.182e+04	1.268e+05
4	2	17	141.06	-52.84	99.98	-11.76	-79.24	1.837e+05	-1.863e+05	-1.656e+04	1.394e+04	1.843e+05
4	2	18	118.60	-108.84	-51.89	61.65	-98.54	3.728e+05	-2.692e+05	1.876e+05	-8.393e+04	2.909e+05
4	2	19	241.36	-129.60	239.64	-127.88	-25.21	1.881e+05	-4.615e+05	-3.460e+05	7.254e+04	2.484e+05
4	2	23	46.32	-97.07	-91.80	41.05	26.97	2.624e+05	-5.524e+04	2.458e+05	-3.863e+04	7.072e+04
4	2	24	284.89	-55.04	235.13	-5.29	120.15	4.519e+04	-2.759e+05	-2.653e+05	3.467e+04	5.717e+04
4	2	30	58.98	-122.66	-121.03	57.35	17.15	3.253e+05	2670.05	2.903e+05	3.764e+04	1.003e+05
4	2	31	304.46	-64.36	265.07	-24.97	113.92	-6904.63	-3.263e+05	-3.082e+05	-2.501e+04	7.386e+04
4	2	46	79.13	-162.04	-81.59	-1.33	113.71	2.805e+05	-1901.70	2.771e+05	1521.35	-3.090e+04
4	2	47	337.45	-133.75	141.95	61.75	232.16	-2.081e+04	-3.867e+05	-3.416e+05	-6.596e+04	-1.203e+05
4	2	53	112.46	-191.06	-122.75	44.15	126.76	4.492e+05	-1.909e+04	4.492e+05	-1.907e+04	2626.08
4	2	54	385.84	-185.75	183.44	16.64	273.36	-5.184e+04	-5.482e+05	-5.341e+05	-6.589e+04	-8.231e+04
4	2	84	63.00	-216.59	-30.19	-123.40	131.80	2.778e+05	8.940e+04	2.514e+05	1.158e+05	-6.541e+04
4	2	85	412.57	-80.00	65.88	266.70	224.89	-9.625e+04	-2.947e+05	-2.554e+05	-1.355e+05	-7.902e+04
4	2	92	61.84	-236.79	-49.94	-125.01	144.52	3.815e+05	1.884e+05	3.794e+05	1.905e+05	-1.999e+04
4	2	93	434.31	-83.00	82.23	269.08	241.19	-1.957e+05	-3.794e+05	-3.668e+05	-2.084e+05	-4.650e+04
4	2	147	109.99	-245.56	78.17	-213.75	101.49	2.793e+05	1.248e+05	1.765e+05	2.275e+05	-7.289e+04
4	2	148	423.98	-167.77	-120.39	376.59	160.60	-1.102e+05	-4.229e+05	-1.635e+05	-3.695e+05	-1.177e+05
4	2	155	137.64	-267.34	92.92	-222.62	126.93	3.958e+05	2.226e+05	3.418e+05	2.766e+05	-8.023e+04
4	2	156	473.54	-222.44	-159.17	410.27	200.08	-2.648e+05	-5.237e+05	-3.532e+05	-4.352e+05	-1.228e+05
4	2	246	71.49	-262.95	71.49	-262.95	0.26	2.404e+05	1.855e+05	1.855e+05	2.404e+05	186.69
4	2	247	67.09	-282.95	67.09	-282.95	0.27	3.614e+05	2.970e+05	3.614e+05	2.971e+05	808.73
4	2	283	482.59	-90.51	-90.51	482.59	0.16	-3.301e+05	-3.336e+05	-3.334e+05	-3.302e+05	621.40
4	2	284	459.76	-89.46	-89.46	459.76	0.17	-1.816e+05	-2.679e+05	-1.816e+05	-2.679e+05	100.35
4	2	374	137.54	-267.52	93.78	-223.76	-125.75	3.956e+05	2.227e+05	3.417e+05	2.767e+05	8.011e+04
4	2	375	473.56	-222.42	-159.87	411.02	-199.05	-2.650e+05	-5.233e+05	-3.529e+05	-4.353e+05	1.224e+05
4	2	382	110.03	-245.97	78.57	-214.51	-101.05	2.794e+05	1.245e+05	1.766e+05	2.273e+05	7.315e+04
4	2	383	424.17	-167.79	-120.67	377.05	-160.22	-1.101e+05	-4.228e+05	-1.635e+05	-3.694e+05	1.177e+05
4	2	437	62.00	-237.43	-49.57	-125.85	-144.78	3.823e+05	1.866e+05	3.801e+05	1.889e+05	2.100e+04
4	2	438	434.54	-83.06	81.98	269.51	-241.22	-1.944e+05	-3.806e+05	-3.678e+05	-2.071e+05	4.706e+04
4	2	445	63.10	-217.36	-29.91	-124.34	-132.04	2.780e+05	8.881e+04	2.514e+05	1.154e+05	6.579e+04
4	2	446	412.95	-80.02	65.66	267.27	-224.92	-9.599e+04	-2.947e+05	-2.555e+05	-1.352e+05	7.904e+04
4	2	476	112.10	-191.25	-121.85	42.69	-127.43	4.478e+05	-1.869e+04	4.478e+05	-1.868e+04	-2424.50
4	2	477	385.83	-185.64	182.28	17.90	-273.66	-5.208e+04	-5.473e+05	-5.333e+05	-6.614e+04	8.226e+04
4	2	483	79.19	-162.96	-81.59	-2.18	-114.38	2.801e+05	-1982.92	2.766e+05	1481.31	3.107e+04
4	2	484	337.95	-133.81	141.71	62.43	-232.52	-2.066e+04	-3.864e+05	-3.413e+05	-6.574e+04	1.202e+05
4	2	499	59.28	-123.40	-121.69	57.57	-17.59	3.257e+05	1384.80	2.905e+05	3.658e+04	-1.009e+05
4	2	500	304.83	-64.56	265.29	-25.02	-114.20	-5436.69	-3.274e+05	-3.090e+05	-2.377e+04	-7.460e+04
4	2	506	46.41	-98.01	-92.55	40.96	-27.54	2.618e+05	-5.546e+04	2.451e+05	-3.876e+04	-7.085e+04
4	2	507	285.42	-55.11	235.41	-5.09	-120.54	4.549e+04	-2.758e+05	-2.652e+05	3.491e+04	-5.734e+04
4	2	511	117.85	-108.34	-52.02	61.53	97.81	3.717e+05	-2.685e+05	1.867e+05	-8.361e+04	-2.902e+05
4	2	512	241.02	-129.27	239.41	-127.67	24.35	1.876e+05	-4.606e+05	-3.454e+05	7.236e+04	-2.478e+05
4	2	513	141.37	-53.28	99.90	-11.81	79.70	1.849e+05	-1.875e+05	-1.658e+04	1.398e+04	-1.855e+05

4	2	516	58.60	-51.13	-27.46	34.92	45.14	2.192e+05	-1.585e+05	1.095e+05	-4.879e+04	-1.715e+05
4	2	517	190.94	-77.80	190.19	-77.05	-14.20	1.068e+05	-2.964e+05	-2.516e+05	6.188e+04	-1.268e+05
4	2	518	118.86	-29.39	98.53	-9.06	51.00	1.774e+05	-1.892e+05	-1.373e+04	1958.26	-1.831e+05

M_G M 1-2		N max	N min	N 1	N 2	N 1-2	M max	M min	M 1	M 2
		-367.84	-207.84	-367.84	-355.76		-7.126e+05	-6.944e+05	-5.659e+05	-3.772e+05
		627.36	344.88	627.36	355.36	5.840e+05		5.839e+05	3.862e+05	3.781e+05

Macro	Tipo	Angolo 1-X (gradi)
5	**Guscio**	**0.0**

M_G M 1-2	Cmb	Nodo	N max	N min	N 1	N 2	N 1-2	M max	M min	M 1	M 2
			N/mm	N/mm	N/mm	N/mm	N/mm	N	N	N	N	N
5	1	17	216.74	-141.11	126.76	-51.14	-155.25	6.376e+05	-4.970e+05	-6774.55	1.474e+05	5.620e+05
5	1	18	143.01	-118.47	-55.91	80.45	-111.56	3.731e+05	-2.592e+05	1.952e+05	-8.134e+04	2.843e+05
5	1	19	270.26	-132.16	266.89	-128.79	-36.68	6.227e+04	-5.874e+05	-4.877e+05	-3.739e+04	2.341e+05
5	1	22	226.19	-152.36	130.58	-56.76	-164.48	5.157e+05	-5.470e+05	-5.327e+04	2.196e+04	5.300e+05
5	1	25	169.97	-131.75	-52.23	90.45	-132.93	5.796e+05	-3.675e+05	3.006e+05	-8.854e+04	4.317e+05
5	1	26	292.88	-164.53	288.49	-160.15	-44.58	1.933e+05	-7.513e+05	-5.432e+05	-1.479e+04	3.915e+05
5	1	30	162.85	-155.75	-155.62	162.72	6.46	6.815e+05	-2.929e+05	6.241e+05	-2.355e+05	2.293e+05
5	1	31	367.53	-223.41	320.13	-176.01	160.51	4.621e+05	-5.696e+05	-5.606e+05	4.532e+05	9.580e+04
5	1	37	170.48	-164.83	-164.75	170.40	5.10	7.404e+05	-1.799e+05	6.612e+05	-1.007e+05	2.582e+05
5	1	38	381.19	-239.21	332.18	-190.19	167.35	1.493e+05	-7.725e+05	-7.302e+05	1.070e+05	1.930e+05
5	1	53	131.64	-205.51	-132.82	58.95	138.65	5.657e+05	1.014e+05	5.643e+05	1.028e+05	-2.560e+04
5	1	54	422.04	-185.61	214.03	22.40	288.32	-2.763e+05	-8.022e+05	-7.700e+05	-3.085e+05	-1.260e+05
5	1	59	158.67	-198.54	-130.54	90.67	140.24	7.894e+05	8.940e+04	7.842e+05	9.455e+04	5.982e+04
5	1	60	438.77	-232.38	213.71	-7.32	316.85	-2.670e+05	-9.579e+05	-9.573e+05	-2.676e+05	-2.068e+04
5	1	92	205.09	-248.29	17.00	-60.19	223.38	5.789e+05	-9031.12	4.865e+05	8.340e+04	-2.140e+05
5	1	93	495.40	-301.12	-30.44	224.73	377.27	2.247e+05	-5.137e+05	-2.688e+05	-2.009e+04	-3.476e+05
5	1	97	214.22	-258.55	16.90	-61.23	233.13	7.634e+05	2.301e+05	7.411e+05	2.523e+05	-1.066e+05
5	1	98	512.88	-320.98	-36.86	228.76	395.21	-2.593e+05	-7.971e+05	-7.349e+05	-3.214e+05	-1.719e+05
5	1	155	154.42	-285.32	104.64	-235.55	139.32	5.927e+05	3.936e+05	4.891e+05	4.972e+05	-9.946e+04
5	1	156	514.85	-221.57	-153.04	446.31	213.95	-5.236e+05	-8.743e+05	-6.078e+05	-7.900e+05	-1.498e+05
5	1	157	185.23	-270.29	130.97	-216.04	147.55	7.744e+05	4.890e+05	7.527e+05	5.106e+05	-7.551e+04
5	1	160	528.35	-276.88	-200.72	452.20	235.63	-6.781e+05	-9.316e+05	-8.562e+05	-7.535e+05	-1.159e+05
5	1	247	228.76	-290.60	228.76	-290.60	1.33	4.278e+05	2.086e+05	2.086e+05	4.278e+05	-1062.48
5	1	248	239.03	-301.83	239.02	-301.83	1.01	6.048e+05	5.475e+05	6.048e+05	5.475e+05	114.33
5	1	282	562.59	-352.39	-352.39	562.58	0.76	-5.606e+05	-6.541e+05	-5.606e+05	-6.541e+05	-93.53
5	1	283	543.64	-330.91	-330.91	543.64	1.10	8.631e+04	-4.414e+05	8.631e+04	-4.414e+05	-1081.76
5	1	370	185.18	-270.51	132.01	-217.33	-146.31	7.751e+05	4.882e+05	7.531e+05	5.102e+05	7.640e+04
5	1	373	528.38	-276.86	-201.42	452.94	-234.64	-6.775e+05	-9.319e+05	-8.562e+05	-7.531e+05	1.163e+05
5	1	374	154.36	-285.66	105.57	-236.86	-138.16	5.936e+05	3.924e+05	4.895e+05	4.965e+05	1.006e+05

5	1	375	514.96	-221.52	-153.69	447.13	-212.97	-5.231e+05	-8.744e+05	-6.081e+05	-7.894e+05	1.504e+05
5	1	432	214.04	-258.81	118.57	-63.35	-232.85	7.625e+05	2.294e+05	7.401e+05	2.518e+05	1.069e+05
5	1	433	512.88	-320.92	-38.26	230.22	-394.70	-2.591e+05	-7.964e+05	-7.343e+05	-3.212e+05	1.718e+05
5	1	437	204.55	-248.51	19.08	-63.04	-222.78	5.765e+05	-7435.39	4.840e+05	8.503e+04	2.132e+05
5	1	438	495.42	-300.87	-32.38	226.92	-376.44	2.233e+05	-5.115e+05	-2.665e+05	-2.171e+04	3.464e+05
5	1	470	158.53	-198.89	-129.72	89.36	-141.20	7.882e+05	8.866e+04	7.831e+05	9.376e+04	-5.950e+04
5	1	471	438.78	-232.34	212.64	-6.21	-317.22	-2.662e+05	-9.577e+05	-9.571e+05	-2.668e+05	2.055e+04
5	1	476	131.33	-206.14	-132.19	57.38	-139.60	5.653e+05	1.004e+05	5.638e+05	1.018e+05	2.586e+04
5	1	477	422.27	-185.45	213.09	23.73	-288.73	-2.754e+05	-8.023e+05	-7.703e+05	-3.074e+05	1.258e+05
5	1	492	170.12	-164.80	-164.68	170.01	-6.31	7.385e+05	-1.797e+05	6.593e+05	-1.005e+05	-2.578e+05
5	1	493	381.03	-239.10	331.37	-189.44	-168.31	1.494e+05	-7.715e+05	-7.292e+05	1.071e+05	-1.928e+05
5	1	499	161.50	-155.25	-155.04	161.29	-8.15	6.776e+05	-2.905e+05	6.205e+05	-2.334e+05	-2.281e+05
5	1	500	367.21	-222.78	318.78	-174.35	-161.96	4.601e+05	-5.666e+05	-5.578e+05	4.513e+05	-9.457e+04
5	1	504	169.76	-131.84	-52.83	90.74	132.62	5.791e+05	-3.678e+05	2.999e+05	-8.864e+04	-4.317e+05
5	1	505	292.75	-164.58	288.47	-160.30	44.04	1.938e+05	-7.511e+05	-5.428e+05	-1.444e+04	-3.917e+05
5	1	508	225.70	-152.14	130.43	-56.86	164.08	5.150e+05	-5.462e+05	-5.328e+04	2.205e+04	-5.292e+05
5	1	511	142.38	-118.41	-56.48	80.45	110.97	3.731e+05	-2.601e+05	1.947e+05	-8.167e+04	-2.848e+05
5	1	512	270.17	-131.91	266.94	-128.67	35.93	6.318e+04	-5.877e+05	-4.876e+05	-3.688e+04	-2.348e+05
5	1	513	215.34	-139.89	126.65	-51.20	153.75	6.347e+05	-4.941e+05	-6823.54	1.474e+05	-5.591e+05
5	2	17	166.72	-108.55	97.51	-39.34	-119.42	4.905e+05	-3.823e+05	-5211.19	1.134e+05	4.323e+05
5	2	18	110.01	-91.13	-43.01	61.89	-85.81	2.870e+05	-1.994e+05	1.501e+05	-6.257e+04	2.187e+05
5	2	19	207.89	-101.66	205.30	-99.07	-28.22	4.790e+04	-4.519e+05	-3.752e+05	-2.876e+04	1.801e+05
5	2	22	173.99	-117.20	100.45	-43.66	-126.52	3.967e+05	-4.208e+05	-4.098e+04	1.689e+04	4.077e+05
5	2	25	130.75	-101.35	-40.17	69.58	-102.25	4.458e+05	-2.827e+05	2.312e+05	-6.810e+04	3.321e+05
5	2	26	225.29	-126.56	221.92	-123.19	-34.29	1.487e+05	-5.779e+05	-4.179e+05	-1.138e+04	3.012e+05
5	2	30	125.27	-119.81	-119.71	125.17	4.97	5.242e+05	-2.253e+05	4.801e+05	-1.811e+05	1.764e+05
5	2	31	282.72	-171.86	246.26	-135.40	123.47	3.555e+05	-4.381e+05	-4.312e+05	3.486e+05	7.369e+04
5	2	37	131.14	-126.79	-126.73	131.08	3.92	5.696e+05	-1.384e+05	5.086e+05	-7.747e+04	1.986e+05
5	2	38	293.23	-184.00	255.52	-146.30	128.73	1.149e+05	-5.942e+05	-5.617e+05	8.229e+04	1.484e+05
5	2	53	101.26	-158.09	-102.17	45.34	106.65	4.351e+05	7.798e+04	4.341e+05	7.907e+04	-1.969e+04
5	2	54	324.65	-142.78	164.64	17.23	221.79	-2.126e+05	-6.171e+05	-5.923e+05	-2.373e+05	-9.696e+04
5	2	59	122.05	-152.72	-100.41	69.74	107.88	6.072e+05	6.877e+04	6.032e+05	7.273e+04	4.602e+04
5	2	60	337.51	-178.75	164.39	-5.63	243.73	-2.054e+05	-7.368e+05	-7.364e+05	-2.058e+05	-1.591e+04
5	2	92	157.76	-190.99	13.07	-46.30	171.83	4.453e+05	-6947.01	3.742e+05	6.415e+04	-1.646e+05
5	2	93	381.08	-231.63	-23.42	172.87	290.21	1.729e+05	-3.951e+05	-2.068e+05	-1.546e+04	-2.674e+05
5	2	97	164.78	-198.88	13.00	-47.10	179.33	5.872e+05	1.770e+05	5.701e+05	1.941e+05	-8.204e+04
5	2	98	394.52	-246.91	-28.35	175.97	304.01	-1.994e+05	-6.131e+05	-5.653e+05	-2.472e+05	-1.322e+05
5	2	155	118.78	-219.48	80.49	-181.19	107.17	4.559e+05	3.028e+05	3.762e+05	3.824e+05	-7.651e+04
5	2	156	396.04	-170.44	-117.72	343.32	164.58	-4.027e+05	-6.725e+05	-4.676e+05	-6.077e+05	-1.153e+05
5	2	157	142.48	-207.92	100.75	-166.18	113.50	5.957e+05	3.762e+05	5.790e+05	3.928e+05	-5.808e+04
5	2	160	406.43	-212.98	-154.40	347.85	181.25	-5.216e+05	-7.167e+05	-6.586e+05	-5.796e+05	-8.919e+04
5	2	247	175.97	-223.54	175.97	-223.54	1.02	3.291e+05	1.605e+05	1.605e+05	3.291e+05	-817.29
5	2	248	183.87	-232.18	183.87	-232.18	0.78	4.652e+05	4.211e+05	4.652e+05	4.211e+05	87.95
5	2	282	432.76	-271.07	-271.07	432.76	0.58	-4.312e+05	-5.031e+05	-4.312e+05	-5.031e+05	-71.94
5	2	283	418.19	-254.55	-254.54	418.19	0.84	6.639e+04	-3.396e+05	6.639e+04	-3.396e+05	-832.12
5	2	370	142.45	-208.09	101.54	-167.18	-112.54	5.963e+05	3.755e+05	5.793e+05	3.925e+05	5.877e+04

5	2	373	406.45	-212.97	-154.94	348.42	-180.49	-5.211e+05	-7.168e+05	-6.586e+05	-5.793e+05	8.945e+04
5	2	374	118.74	-219.74	81.20	-182.20	-106.28	4.567e+05	3.018e+05	3.765e+05	3.819e+05	7.736e+04
5	2	375	396.12	-170.40	-118.22	343.94	-163.82	-4.024e+05	-6.726e+05	-4.678e+05	-6.072e+05	1.157e+05
5	2	432	164.64	-199.09	14.29	-48.73	-179.12	5.866e+05	1.765e+05	5.693e+05	1.937e+05	8.226e+04
5	2	433	394.52	-246.87	-29.43	177.09	-303.61	-1.993e+05	-6.126e+05	-5.649e+05	-2.471e+05	1.321e+05
5	2	437	157.34	-191.16	14.67	-48.49	-171.37	4.434e+05	-5719.53	3.723e+05	6.541e+04	1.640e+05
5	2	438	381.09	-231.44	-24.91	174.56	-289.57	1.718e+05	-3.935e+05	-2.050e+05	-1.670e+04	2.665e+05
5	2	470	121.95	-152.99	-99.79	68.74	-108.61	6.063e+05	6.820e+04	6.024e+05	7.213e+04	-4.577e+04
5	2	471	337.52	-178.73	163.57	-4.78	-244.01	-2.047e+05	-7.367e+05	-7.362e+05	-2.052e+05	1.581e+04
5	2	476	101.02	-158.57	-101.68	44.14	-107.38	4.348e+05	7.721e+04	4.337e+05	7.832e+04	1.989e+04
5	2	477	324.82	-142.65	163.91	18.26	-222.10	-2.118e+05	-6.171e+05	-5.925e+05	-2.365e+05	9.680e+04
5	2	492	130.87	-126.77	-126.68	130.77	-4.85	5.681e+05	-1.382e+05	5.072e+05	-7.730e+04	-1.983e+05
5	2	493	293.10	-183.92	254.90	-145.72	-129.47	1.149e+05	-5.934e+05	-5.609e+05	8.238e+04	-1.483e+05
5	2	499	124.23	-119.42	-119.26	124.07	-6.27	5.212e+05	-2.235e+05	4.773e+05	-1.796e+05	-1.754e+05
5	2	500	282.47	-171.37	245.22	-134.11	-124.58	3.539e+05	-4.358e+05	-4.291e+05	3.471e+05	-7.275e+04
5	2	504	130.58	-101.42	-40.64	69.80	102.01	4.454e+05	-2.829e+05	2.307e+05	-6.819e+04	-3.321e+05
5	2	505	225.19	-126.60	221.90	-123.30	33.88	1.491e+05	-5.778e+05	-4.176e+05	-1.110e+04	-3.013e+05
5	2	508	173.62	-117.03	100.33	-43.74	126.21	3.961e+05	-4.202e+05	-4.098e+04	1.696e+04	-4.071e+05
5	2	511	109.52	-91.09	-43.45	61.88	85.36	2.870e+05	-2.000e+05	1.498e+05	-6.283e+04	-2.191e+05
5	2	512	207.83	-101.47	205.34	-98.98	27.64	4.860e+04	-4.521e+05	-3.751e+05	-2.837e+04	-1.806e+05
5	2	513	165.65	-107.60	97.42	-39.38	118.27	4.882e+05	-3.801e+05	-5248.88	1.134e+05	-4.301e+05

M_G		N max	N min	N 1	N 2	N 1-2	M max	M min	M 1	M 2
M 1-2										
		-352.39	-352.39	-301.83	-394.70		-9.579e+05	-9.573e+05	-7.900e+05	-5.591e+05
		562.59	332.18	562.58	395.21	7.894e+05		7.842e+05	5.475e+05	5.620e+05

Macro	Tipo	Angolo 1-X (gradi)
6	**Guscio**	**0.0**

M_G	Cmb	Nodo	N max	N min	N 1	N 2	N 1-2	M max	M min	M 1	M 2
M 1-2											
			N/mm	N/mm	N/mm	N/mm	N/mm	N	N	N	N	N
6	1	22	223.00	-158.40	124.44	-59.84	-166.96	5.415e+05	-5.790e+05	-6.742e+04	2.991e+04	5.581e+05
6	1	25	178.87	-131.18	-46.28	93.97	-138.26	5.926e+05	-3.759e+05	3.133e+05	-9.662e+04	4.387e+05
6	1	26	249.16	-181.33	240.85	-173.01	-59.25	1.789e+05	-7.973e+05	-6.148e+05	-3533.96	3.806e+05
6	1	27	266.66	-207.22	127.54	-68.10	-215.80	5.824e+05	-7.449e+05	-1.052e+05	-5.737e+04	6.632e+05
6	1	32	226.25	-171.64	-63.87	118.48	-176.82	7.951e+05	-4.783e+05	4.198e+05	-1.030e+05	5.806e+05
6	1	33	304.01	-232.67	291.21	-219.87	-81.89	2.535e+05	-1.014e+06	-7.133e+05	-4.713e+04	5.391e+05
6	1	37	186.63	-134.72	-134.27	186.19	-11.98	7.821e+05	-1.847e+05	7.148e+05	-1.174e+05	2.461e+05
6	1	38	330.94	-253.69	290.93	-213.69	147.61	1.558e+05	-8.284e+05	-8.010e+05	1.285e+05	1.618e+05
6	1	44	228.48	-178.63	-177.21	227.06	-24.03	9.858e+05	-1.712e+05	8.700e+05	-5.540e+04	3.473e+05
6	1	45	367.79	-298.78	334.40	-265.38	145.42	4871.87	-1.145e+06	-1.056e+06	-8.327e+04	3.059e+05
6	1	59	175.97	-145.79	-98.50	128.68	113.94	8.232e+05	1.165e+05	8.230e+05	1.167e+05	1.374e+04

6	1	60	337.23	-251.96	156.14	-70.87	271.85	-3.030e+05	-1.038e+06	-1.024e+06	-3.177e+05	-1.026e+05
6	1	64	221.22	-181.11	-125.75	165.85	138.60	1.100e+06	1.498e+05	1.088e+06	1.611e+05	1.029e+05
6	1	65	402.13	-316.33	188.59	-102.78	328.36	-3.826e+05	-1.311e+06	-1.310e+06	-3.830e+05	2.007e+04
6	1	97	227.52	-185.01	42.63	-0.11	205.15	8.114e+05	2.505e+05	7.593e+05	3.026e+05	-1.627e+05
6	1	98	425.09	-338.57	-70.30	156.82	364.55	-2.631e+05	-8.742e+05	-7.483e+05	-3.890e+05	-2.472e+05
6	1	103	258.41	-215.63	32.73	10.05	236.75	1.112e+06	4.178e+05	1.103e+06	4.263e+05	-7.672e+04
6	1	104	458.46	-382.44	-71.25	147.28	406.00	-5.914e+05	-1.264e+06	-1.242e+06	-6.129e+05	-1.183e+05
6	1	157	199.44	-179.55	148.80	-128.90	128.95	8.074e+05	5.493e+05	7.408e+05	6.159e+05	-1.129e+05
6	1	160	392.76	-297.37	-227.89	323.27	207.66	-7.039e+05	-1.055e+06	-8.411e+05	-9.178e+05	-1.713e+05
6	1	163	246.48	-214.81	182.90	-151.23	159.02	1.105e+06	6.829e+05	1.087e+06	7.004e+05	-8.390e+04
6	1	164	464.42	-370.26	-284.36	378.52	253.62	-9.410e+05	-1.291e+06	-1.237e+06	-9.942e+05	-1.256e+05
6	1	248	251.46	-212.55	251.45	-212.55	1.21	6.545e+05	5.777e+05	5.777e+05	6.545e+05	-116.95
6	1	249	278.72	-238.63	278.72	-238.62	1.34	1.011e+06	7.808e+05	1.011e+06	7.808e+05	387.67
6	1	281	493.31	-414.73	-414.73	493.31	1.02	-9.912e+05	-1.125e+06	-1.125e+06	-9.912e+05	83.30
6	1	282	460.96	-370.97	-370.97	460.96	0.96	-5.176e+05	-7.894e+05	-5.176e+05	-7.894e+05	-296.99
6	1	366	246.22	-214.69	184.44	-152.90	-157.04	1.105e+06	6.821e+05	1.087e+06	6.999e+05	8.483e+04
6	1	367	464.26	-370.14	-285.43	379.55	-252.01	-9.403e+05	-1.291e+06	-1.237e+06	-9.937e+05	1.259e+05
6	1	370	199.24	-179.62	150.04	-130.42	-127.36	8.081e+05	5.485e+05	7.410e+05	6.156e+05	1.136e+05
6	1	373	392.77	-297.28	-228.78	324.27	-206.34	-7.035e+05	-1.055e+06	-8.410e+05	-9.174e+05	1.715e+05
6	1	426	257.91	-215.30	35.08	7.53	-236.20	1.111e+06	4.166e+05	1.102e+06	4.253e+05	7.723e+04
6	1	427	458.12	-382.19	-73.15	149.08	-405.20	-5.908e+05	-1.263e+06	-1.242e+06	-6.123e+05	1.183e+05
6	1	432	227.06	-185.12	44.60	-2.67	-204.73	8.101e+05	2.502e+05	7.579e+05	3.024e+05	1.628e+05
6	1	433	425.08	-338.39	-72.02	158.71	-363.88	-2.633e+05	-8.731e+05	-7.473e+05	-3.891e+05	2.468e+05
6	1	465	220.62	-180.64	-124.05	164.03	-139.66	1.098e+06	1.489e+05	1.087e+06	1.601e+05	-1.026e+05
6	1	466	401.61	-316.02	186.70	-101.11	-328.69	-3.816e+05	-1.310e+06	-1.310e+06	-3.821e+05	-2.021e+04
6	1	470	175.35	-145.87	-97.39	126.86	-115.00	8.218e+05	1.158e+05	8.216e+05	1.161e+05	-1.345e+04
6	1	471	337.17	-251.68	154.74	-69.25	-272.29	-3.024e+05	-1.038e+06	-1.023e+06	-3.169e+05	1.024e+05
6	1	485	227.85	-178.03	-176.77	226.59	22.55	9.840e+05	-1.715e+05	8.681e+05	-5.566e+04	-3.471e+05
6	1	486	367.07	-298.42	333.05	-264.39	-146.58	5533.29	-1.144e+06	-1.056e+06	-8.266e+04	-3.059e+05
6	1	492	185.70	-134.45	-134.11	185.36	10.43	7.797e+05	-1.842e+05	7.124e+05	-1.169e+05	-2.456e+05
6	1	493	330.68	-253.31	289.89	-212.52	-148.85	1.556e+05	-8.268e+05	-7.995e+05	1.283e+05	-1.615e+05
6	1	497	225.67	-171.23	-64.26	118.69	176.11	7.942e+05	-4.785e+05	4.188e+05	-1.031e+05	-5.804e+05
6	1	498	303.28	-232.40	290.78	-219.90	80.86	2.541e+05	-1.013e+06	-7.126e+05	-4.669e+04	-5.392e+05
6	1	503	265.89	-206.84	127.33	-68.27	215.18	5.821e+05	-7.444e+05	-1.051e+05	-5.722e+04	-6.628e+05
6	1	504	178.11	-130.93	-46.86	94.04	137.53	5.918e+05	-3.761e+05	3.124e+05	-9.670e+04	-4.386e+05
6	1	505	248.79	-180.99	240.74	-172.93	58.30	1.794e+05	-7.968e+05	-6.142e+05	-3218.45	-3.807e+05
6	1	508	222.13	-157.80	124.27	-59.94	166.14	5.404e+05	-5.778e+05	-6.743e+04	3.000e+04	-5.570e+05
6	2	22	171.54	-121.85	95.72	-46.03	-128.43	4.165e+05	-4.454e+05	-5.186e+04	2.301e+04	4.293e+05
6	2	25	137.59	-100.90	-35.60	72.29	-106.35	4.558e+05	-2.892e+05	2.410e+05	-7.432e+04	3.375e+05
6	2	26	191.66	-139.48	185.27	-133.09	-45.57	1.376e+05	-6.133e+05	-4.730e+05	-2718.43	2.928e+05
6	2	27	205.12	-159.40	98.11	-52.39	-166.00	4.480e+05	-5.730e+05	-8.090e+04	-4.413e+04	5.102e+05
6	2	32	174.04	-132.03	-49.13	91.14	-136.02	6.116e+05	-3.679e+05	3.229e+05	-7.924e+04	4.466e+05
6	2	33	233.85	-178.98	224.00	-169.13	-62.99	1.950e+05	-7.800e+05	-5.487e+05	-3.625e+04	4.147e+05
6	2	37	143.56	-103.63	-103.28	143.22	-9.21	6.016e+05	-1.421e+05	5.498e+05	-9.029e+04	1.893e+05
6	2	38	254.57	-195.15	223.79	-164.37	113.55	1.199e+05	-6.372e+05	-6.162e+05	9.884e+04	1.244e+05
6	2	44	175.76	-137.41	-136.32	174.66	-18.48	7.583e+05	-1.317e+05	6.692e+05	-4.262e+04	2.671e+05

6	2	45	282.92	-229.83	257.23	-204.14	111.86	3747.60	-8.805e+05	-8.127e+05	-6.405e+04	2.353e+05
6	2	59	135.36	-112.15	-75.77	98.98	87.64	6.332e+05	8.959e+04	6.330e+05	8.980e+04	1.057e+04
6	2	60	259.41	-193.81	120.10	-54.51	209.12	-2.331e+05	-7.988e+05	-7.876e+05	-2.443e+05	-7.893e+04
6	2	64	170.17	-139.32	-96.73	127.58	106.62	8.459e+05	1.152e+05	8.372e+05	1.239e+05	7.918e+04
6	2	65	309.33	-243.33	145.07	-79.06	252.59	-2.943e+05	-1.008e+06	-1.008e+06	-2.946e+05	1.544e+04
6	2	97	175.02	-142.31	32.79	-8.65e-02	157.81	6.241e+05	1.927e+05	5.841e+05	2.328e+05	-1.252e+05
6	2	98	326.99	-260.44	-54.07	120.63	280.43	-2.024e+05	-6.725e+05	-5.756e+05	-2.992e+05	-1.901e+05
6	2	103	198.78	-165.87	25.18	7.73	182.11	8.552e+05	3.214e+05	8.486e+05	3.280e+05	-5.901e+04
6	2	104	352.66	-294.18	-54.81	113.29	312.31	-4.550e+05	-9.720e+05	-9.554e+05	-4.715e+05	-9.098e+04
6	2	157	153.42	-138.11	114.46	-99.16	99.19	6.211e+05	4.226e+05	5.698e+05	4.738e+05	-8.687e+04
6	2	160	302.12	-228.75	-175.30	248.67	159.74	-5.414e+05	-8.115e+05	-6.470e+05	-7.060e+05	-1.318e+05
6	2	163	189.60	-165.24	140.69	-116.33	122.32	8.497e+05	5.253e+05	8.363e+05	5.387e+05	-6.454e+04
6	2	164	357.25	-284.82	-218.74	291.17	195.09	-7.238e+05	-9.928e+05	-9.519e+05	-7.647e+05	-9.659e+04
6	2	248	193.43	-163.50	193.43	-163.50	0.93	5.035e+05	4.444e+05	4.444e+05	5.035e+05	-89.96
6	2	249	214.40	-183.56	214.40	-183.56	1.03	7.774e+05	6.006e+05	7.774e+05	6.006e+05	298.21
6	2	281	379.47	-319.03	-319.02	379.47	0.78	-7.624e+05	-8.656e+05	-8.656e+05	-7.624e+05	64.07
6	2	282	354.58	-285.37	-285.36	354.58	0.74	-3.982e+05	-6.073e+05	-3.982e+05	-6.073e+05	-228.45
6	2	366	189.40	-165.14	141.87	-117.62	-120.80	8.500e+05	5.247e+05	8.363e+05	5.384e+05	6.526e+04
6	2	367	357.12	-284.72	-219.56	291.96	-193.85	-7.233e+05	-9.929e+05	-9.518e+05	-7.644e+05	9.682e+04
6	2	370	153.26	-138.17	115.41	-100.33	-97.97	6.216e+05	4.220e+05	5.700e+05	4.736e+05	8.742e+04
6	2	373	302.13	-228.67	-175.98	249.44	-158.72	-5.412e+05	-8.114e+05	-6.469e+05	-7.057e+05	1.319e+05
6	2	426	198.39	-165.62	26.99	5.79	-181.69	8.545e+05	3.204e+05	8.479e+05	3.271e+05	5.941e+04
6	2	427	352.40	-294.00	-56.27	114.67	-311.69	-4.545e+05	-9.716e+05	-9.551e+05	-4.710e+05	9.099e+04
6	2	432	174.66	-142.40	34.31	-2.05	-157.48	6.232e+05	1.925e+05	5.830e+05	2.326e+05	1.252e+05
6	2	433	326.98	-260.30	-55.40	122.09	-279.91	-2.025e+05	-6.716e+05	-5.748e+05	-2.993e+05	1.898e+05
6	2	465	169.71	-138.95	-95.43	126.18	-107.43	8.446e+05	1.145e+05	8.360e+05	1.232e+05	-7.892e+04
6	2	466	308.93	-243.09	143.62	-77.78	-252.84	-2.936e+05	-1.008e+06	-1.008e+06	-2.939e+05	-1.555e+04
6	2	470	134.88	-112.21	-74.91	97.59	-88.46	6.322e+05	8.907e+04	6.320e+05	8.927e+04	-1.035e+04
6	2	471	259.36	-193.60	119.03	-53.27	-209.46	-2.326e+05	-7.984e+05	-7.873e+05	-2.438e+05	7.878e+04
6	2	485	175.27	-136.94	-135.98	174.30	17.34	7.569e+05	-1.319e+05	6.678e+05	-4.282e+04	-2.670e+05
6	2	486	282.36	-229.55	256.19	-203.38	-112.76	4256.38	-8.798e+05	-8.120e+05	-6.359e+04	-2.353e+05
6	2	492	142.84	-103.42	-103.16	142.58	8.02	5.998e+05	-1.417e+05	5.480e+05	-8.994e+04	-1.889e+05
6	2	493	254.37	-194.85	222.99	-163.48	-114.50	1.197e+05	-6.360e+05	-6.150e+05	9.870e+04	-1.242e+05
6	2	497	173.59	-131.72	-49.43	91.30	135.47	6.109e+05	-3.681e+05	3.222e+05	-7.931e+04	-4.464e+05
6	2	498	233.29	-178.77	223.68	-169.16	62.20	1.954e+05	-7.795e+05	-5.482e+05	-3.592e+04	-4.148e+05
6	2	503	204.53	-159.10	97.94	-52.52	165.53	4.477e+05	-5.726e+05	-8.087e+04	-4.401e+04	-5.098e+05
6	2	504	137.01	-100.72	-36.05	72.34	105.79	4.553e+05	-2.893e+05	2.403e+05	-7.438e+04	-3.374e+05
6	2	505	191.38	-139.22	185.18	-133.02	44.84	1.380e+05	-6.129e+05	-4.725e+05	-2475.73	-2.928e+05
6	2	508	170.87	-121.38	95.59	-46.11	127.80	4.157e+05	-4.445e+05	-5.187e+04	2.308e+04	-4.285e+05

M_G			N max	N min	N 1	N 2	N 1-2	M max	M min	M 1	M 2
M 1-2											
			-414.73	-414.73	-265.38	-405.20		-1.311e+06	-1.310e+06	-9.942e+05	-6.628e+05
			493.31	334.40	493.31	406.00	1.112e+06		1.103e+06	7.808e+05	6.632e+05

Macro	Tipo	Angolo 1-X (gradi)
7	**Guscio**	**0.0**

M_G M 1-2	Cmb	Nodo	N max	N min	N 1	N 2	N 1-2	M max	M min	M 1M	2
			N/mm	N/mm	N/mm	N/mm	N/mm	N	N	N	N	N
7	1	27	248.58	-203.45	114.83	-69.70	-206.32	5.978e+05	-7.742e+05	-1.269e+05	-4.946e+04	6.849e+05
7	1	32	226.96	-155.67	-45.05	116.35	-173.46	8.148e+05	-4.889e+05	4.388e+05	-1.129e+05	5.906e+05
7	1	33	246.52	-240.71	229.63	-223.82	-89.12	2.403e+05	-1.065e+06	-7.923e+05	-3.216e+04	5.304e+05
7	1	34	296.31	-255.31	121.43	-80.43	-256.68	7.057e+05	-9.873e+05	-1.590e+05	-1.226e+05	8.463e+05
7	1	39	276.11	-202.07	-68.31	142.35	-214.64	1.041e+06	-6.043e+05	5.566e+05	-1.204e+05	7.495e+05
7	1	40	306.67	-295.28	283.93	-272.54	-114.77	2.958e+05	-1.341e+06	-9.235e+05	-1.217e+05	7.135e+05
7	1	44	240.92	-133.16	-128.37	236.13	-42.06	1.024e+06	-1.643e+05	9.257e+05	-6.571e+04	3.278e+05
7	1	45	289.88	-307.41	265.68	-283.21	117.75	-1.177e+04	-1.201e+06	-1.141e+06	-7.196e+04	2.607e+05
7	1	50	284.82	-180.43	-174.43	278.82	-52.49	1.304e+06	-1.792e+05	1.140e+06	-1.486e+04	4.656e+05
7	1	51	338.38	-360.79	316.27	-338.68	122.35	-1.072e+05	-1.581e+06	-1.440e+06	-2.486e+05	4.341e+05
7	1	64	235.95	-108.01	-75.89	203.83	100.08	1.139e+06	1.830e+05	1.136e+06	1.856e+05	5.002e+04
7	1	65	277.37	-328.27	114.29	-165.19	268.65	-4.298e+05	-1.391e+06	-1.386e+06	-4.350e+05	-7.046e+04
7	1	71	281.56	-153.28	-110.90	239.18	128.97	1.480e+06	2.393e+05	1.458e+06	2.605e+05	1.606e+05
7	1	72	350.80	-393.68	153.45	-196.33	328.60	-5.585e+05	-1.770e+06	-1.763e+06	-5.650e+05	8.856e+04
7	1	103	269.52	-116.01	68.01	85.50	192.56	1.153e+06	4.650e+05	1.123e+06	4.955e+05	-1.417e+05
7	1	104	330.26	-393.65	-115.31	51.92	352.16	-6.404e+05	-1.331e+06	-1.260e+06	-7.108e+05	-2.089e+05
7	1	112	306.35	-155.56	59.30	91.49	230.39	1.539e+06	6.157e+05	1.536e+06	6.185e+05	-5.121e+04
7	1	113	379.41	-448.26	-119.41	50.56	405.01	-9.108e+05	-1.807e+06	-1.800e+06	-9.185e+05	-8.286e+04
7	1	163	255.89	-95.38	199.49	-38.98	128.95	1.128e+06	7.684e+05	1.075e+06	8.212e+05	-1.273e+05
7	1	164	298.32	-381.94	-307.04	223.42	212.94	-1.009e+06	-1.387e+06	-1.220e+06	-1.175e+06	-1.877e+05
7	1	170	302.35	-142.76	231.57	-71.97	162.78	1.530e+06	9.287e+05	1.518e+06	9.414e+05	-8.634e+04
7	1	173	380.28	-454.52	-361.84	287.60	262.25	-1.277e+06	-1.791e+06	-1.760e+06	-1.308e+06	-1.227e+05
7	1	249	287.13	-116.97	287.12	-116.96	1.42	9.812e+05	9.146e+05	9.812e+05	9.146e+05	208.23
7	1	250	320.83	-153.05	320.83	-153.05	1.64	1.476e+06	1.055e+06	1.476e+06	1.055e+06	546.05
7	1	280	395.56	-481.46	-481.46	395.56	1.22	-1.373e+06	-1.722e+06	-1.722e+06	-1.373e+06	158.49
7	1	281	346.17	-426.32	-426.32	346.17	1.09	-1.080e+06	-1.168e+06	-1.080e+06	-1.168e+06	-70.33
7	1	357	301.85	-142.20	233.51	-73.87	-160.23	1.530e+06	9.277e+05	1.517e+06	9.406e+05	8.744e+04
7	1	360	379.92	-454.30	-363.17	288.79	-260.23	-1.277e+06	-1.791e+06	-1.760e+06	-1.308e+06	1.230e+05
7	1	366	255.43	-95.07	201.11	-40.75	-126.83	1.128e+06	7.676e+05	1.075e+06	8.208e+05	1.280e+05
7	1	367	298.16	-381.75	-308.18	224.59	-211.21	-1.008e+06	-1.387e+06	-1.220e+06	-1.175e+06	1.878e+05
7	1	417	305.47	-154.50	62.32	88.64	-229.61	1.538e+06	6.142e+05	1.535e+06	6.171e+05	5.183e+04
7	1	418	378.68	-447.83	-121.73	52.58	-403.96	-9.098e+05	-1.807e+06	-1.799e+06	-9.175e+05	8.294e+04
7	1	426	268.69	-115.51	70.47	82.72	-192.01	1.152e+06	4.640e+05	1.121e+06	4.947e+05	1.420e+05
7	1	427	329.94	-393.30	-117.31	53.94	-351.33	-6.400e+05	-1.330e+06	-1.260e+06	-7.103e+05	2.087e+05
7	1	458	280.63	-152.01	-108.49	237.10	-130.14	1.478e+06	2.380e+05	1.456e+06	2.591e+05	-1.603e+05
7	1	459	349.76	-393.15	150.97	-194.37	-328.88	-5.573e+05	-1.769e+06	-1.762e+06	-5.638e+05	-8.870e+04
7	1	465	234.90	-107.35	-74.17	201.72	-101.26	1.137e+06	1.821e+05	1.134e+06	1.847e+05	-4.974e+04
7	1	466	276.85	-327.77	112.34	-163.26	-269.08	-4.290e+05	-1.390e+06	-1.385e+06	-4.342e+05	7.025e+04

7	1	479	284.08	-179.31	-173.69	278.45	50.75	1.302e+06	-1.798e+05	1.138e+06	-1.549e+04	-4.654e+05
7	1	480	337.11	-360.25	314.44	-337.58	-123.67	-1.062e+05	-1.580e+06	-1.439e+06	-2.477e+05	-4.342e+05
7	1	485	239.87	-132.50	-128.07	235.45	40.35	1.022e+06	-1.645e+05	9.233e+05	-6.588e+04	-3.275e+05
7	1	486	289.18	-306.86	264.35	-282.03	-119.09	-1.130e+04	-1.200e+06	-1.139e+06	-7.152e+04	-2.606e+05
7	1	490	275.47	-201.46	-68.65	142.67	213.78	1.039e+06	-6.046e+05	5.555e+05	-1.206e+05	-7.493e+05
7	1	491	305.51	-294.92	283.23	-272.64	113.49	2.966e+05	-1.340e+06	-9.226e+05	-1.211e+05	-7.136e+05
7	1	496	295.40	-254.94	121.15	-80.69	255.99	7.055e+05	-9.868e+05	-1.589e+05	-1.224e+05	-8.459e+05
7	1	497	226.07	-155.19	-45.58	116.46	172.56	8.137e+05	-4.891e+05	4.376e+05	-1.130e+05	-5.904e+05
7	1	498	245.74	-240.22	229.28	-223.76	87.91	2.407e+05	-1.064e+06	-7.914e+05	-3.176e+04	-5.303e+05
7	1	503	247.67	-202.92	114.61	-69.86	205.55	5.973e+05	-7.734e+05	-1.268e+05	-4.929e+04	-6.842e+05
7	2	27	191.22	-156.50	88.33	-53.61	-158.71	4.599e+05	-5.955e+05	-9.760e+04	-3.805e+04	5.269e+05
7	2	32	174.59	-119.75	-34.66	89.50	-133.43	6.268e+05	-3.761e+05	3.375e+05	-8.684e+04	4.543e+05
7	2	33	189.63	-185.16	176.64	-172.17	-68.56	1.849e+05	-8.191e+05	-6.095e+05	-2.474e+04	4.080e+05
7	2	34	227.93	-196.39	93.41	-61.87	-197.45	5.428e+05	-7.595e+05	-1.223e+05	-9.434e+04	6.510e+05
7	2	39	212.39	-155.44	-52.54	109.50	-165.11	8.004e+05	-4.649e+05	4.282e+05	-9.262e+04	5.766e+05
7	2	40	235.90	-227.14	218.41	-209.64	-88.28	2.276e+05	-1.032e+06	-7.104e+05	-9.362e+04	5.489e+05
7	2	44	185.33	-102.43	-98.75	181.64	-32.35	7.879e+05	-1.264e+05	7.120e+05	-5.054e+04	2.521e+05
7	2	45	222.98	-236.47	204.37	-217.85	90.58	-9056.41	-9.238e+05	-8.775e+05	-5.535e+04	2.005e+05
7	2	50	219.10	-138.79	-134.17	214.48	-40.38	1.003e+06	-1.378e+05	8.770e+05	-1.143e+04	3.581e+05
7	2	51	260.29	-277.53	243.28	-260.52	94.12	-8.250e+04	-1.216e+06	-1.108e+06	-1.913e+05	3.339e+05
7	2	64	181.50	-83.09	-58.38	156.79	76.99	8.761e+05	1.407e+05	8.741e+05	1.428e+05	3.848e+04
7	2	65	213.36	-252.52	87.92	-127.07	206.66	-3.306e+05	-1.070e+06	-1.066e+06	-3.346e+05	-5.420e+04
7	2	71	216.58	-117.90	-85.30	183.98	99.20	1.138e+06	1.841e+05	1.122e+06	2.004e+05	1.236e+05
7	2	72	269.85	-302.83	118.04	-151.02	252.77	-4.296e+05	-1.361e+06	-1.356e+06	-4.346e+05	6.812e+04
7	2	103	207.32	-89.24	52.32	65.77	148.13	8.870e+05	3.577e+05	8.636e+05	3.812e+05	-1.090e+05
7	2	104	254.04	-302.80	-88.70	39.94	270.89	-4.926e+05	-1.024e+06	-9.696e+05	-5.468e+05	-1.607e+05
7	2	112	235.65	-119.66	45.61	70.38	177.22	1.184e+06	4.736e+05	1.182e+06	4.758e+05	-3.939e+04
7	2	113	291.86	-344.81	-91.85	38.89	311.55	-7.006e+05	-1.390e+06	-1.384e+06	-7.065e+05	-6.374e+04
7	2	163	196.84	-73.37	153.46	-29.99	99.20	8.677e+05	5.911e+05	8.271e+05	6.317e+05	-9.789e+04
7	2	164	229.48	-293.80	-236.19	171.86	163.80	-7.759e+05	-1.067e+06	-9.388e+05	-9.039e+05	-1.444e+05
7	2	170	232.58	-109.81	178.13	-55.36	125.21	1.177e+06	7.144e+05	1.167e+06	7.241e+05	-6.641e+04
7	2	173	292.52	-349.63	-278.34	221.23	201.73	-9.825e+05	-1.378e+06	-1.354e+06	-1.007e+06	-9.437e+04
7	2	249	220.87	-89.98	220.86	-89.97	1.09	7.548e+05	7.035e+05	7.548e+05	7.035e+05	160.18
7	2	250	246.79	-117.73	246.79	-117.73	1.26	1.135e+06	8.114e+05	1.135e+06	8.114e+05	420.04
7	2	280	304.27	-370.36	-370.36	304.27	0.94	-1.056e+06	-1.324e+06	-1.324e+06	-1.056e+06	121.91
7	2	281	266.29	-327.94	-327.94	266.29	0.84	-8.308e+05	-8.988e+05	-8.308e+05	-8.988e+05	-54.10
7	2	357	232.19	-109.39	179.62	-56.82	-123.26	1.177e+06	7.136e+05	1.167e+06	7.236e+05	6.726e+04
7	2	360	292.25	-349.46	-279.36	222.14	-200.18	-9.820e+05	-1.378e+06	-1.354e+06	-1.006e+06	9.463e+04
7	2	366	196.48	-73.13	154.70	-31.35	-97.56	8.680e+05	5.904e+05	8.271e+05	6.314e+05	9.843e+04
7	2	367	229.35	-293.66	-237.06	172.76	-162.47	-7.756e+05	-1.067e+06	-9.387e+05	-9.036e+05	1.445e+05
7	2	417	234.98	-118.85	47.94	68.18	-176.62	1.183e+06	4.724e+05	1.181e+06	4.747e+05	3.987e+04
7	2	418	291.29	-344.48	-93.64	40.45	-310.74	-6.999e+05	-1.390e+06	-1.384e+06	-7.058e+05	6.380e+04
7	2	426	206.69	-88.86	54.20	63.63	-147.70	8.861e+05	3.569e+05	8.625e+05	3.805e+05	1.092e+05
7	2	427	253.80	-302.54	-90.24	41.49	-270.26	-4.923e+05	-1.023e+06	-9.690e+05	-5.464e+05	1.605e+05
7	2	458	215.87	-116.93	-83.45	182.39	-100.11	1.137e+06	1.831e+05	1.120e+06	1.993e+05	-1.233e+05
7	2	459	269.04	-302.42	116.13	-149.51	-252.99	-4.287e+05	-1.361e+06	-1.356e+06	-4.337e+05	-6.823e+04

7	2	465	180.69	-82.57	-57.05	155.17	-77.89	8.746e+05	1.401e+05	8.726e+05	1.421e+05	-3.826e+04
7	2	466	212.96	-252.13	86.42	-125.59	-206.98	-3.300e+05	-1.069e+06	-1.065e+06	-3.340e+05	5.404e+04
7	2	479	218.52	-137.93	-133.60	214.19	39.04	1.002e+06	-1.383e+05	8.753e+05	-1.192e+04	-3.580e+05
7	2	480	259.32	-277.12	241.88	-259.68	-95.13	-8.167e+04	-1.216e+06	-1.107e+06	-1.905e+05	-3.340e+05
7	2	485	184.52	-101.92	-98.52	181.11	31.04	7.861e+05	-1.265e+05	7.102e+05	-5.067e+04	-2.519e+05
7	2	486	222.45	-236.05	203.35	-216.95	-91.61	-8692.32	-9.228e+05	-8.765e+05	-5.501e+04	-2.005e+05
7	2	490	211.90	-154.97	-52.81	109.75	164.44	7.996e+05	-4.650e+05	4.273e+05	-9.276e+04	-5.764e+05
7	2	491	235.00	-226.86	217.87	-209.72	87.30	2.282e+05	-1.031e+06	-7.097e+05	-9.312e+04	-5.489e+05
7	2	496	227.23	-196.11	93.19	-62.07	196.92	5.427e+05	-7.591e+05	-1.222e+05	-9.416e+04	-6.507e+05
7	2	497	173.90	-119.38	-35.06	89.59	132.74	6.259e+05	-3.762e+05	3.366e+05	-8.689e+04	-4.541e+05
7	2	498	189.03	-184.78	176.37	-172.12	67.63	1.852e+05	-8.184e+05	-6.088e+05	-2.443e+04	-4.080e+05
7	2	503	190.51	-156.09	88.16	-53.74	158.11	4.594e+05	-5.949e+05	-9.756e+04	-3.792e+04	-5.263e+05

M_G M 1-2			N max	N min	N 1	N 2	N 1-2	M max	M min	M 1	M 2
			-481.46	-481.46	-338.68	-403.96		-1.807e+06	-1.800e+06	-1.373e+06	-8.459e+05
			395.56	320.83	395.56	405.01	1.539e+06		1.536e+06	1.055e+06	8.463e+05

Macro	Tipo	Angolo 1-X (gradi)
8	**Guscio**	**0.0**

M_G M 1-2	Cmb	Nodo	N max	N min	N 1	N 2	N 1-2	M max	M min	M 1	M 2
			N/mm	N/mm	N/mm	N/mm	N/mm	N	N	N	N	N
8	1	34	274.01	-253.04	102.68	-81.70	-246.88	7.196e+05	-1.022e+06	-1.879e+05	-1.144e+05	8.699e+05
8	1	39	278.86	-183.21	-44.70	140.35	-211.70	1.068e+06	-6.173e+05	5.827e+05	-1.324e+05	7.628e+05
8	1	40	243.49	-305.55	214.13	-276.19	-123.53	2.819e+05	-1.399e+06	-1.015e+06	-1.022e+05	7.057e+05
8	1	43	324.16	-305.71	112.82	-94.38	-297.41	8.672e+05	-1.271e+06	-2.165e+05	-1.871e+05	1.069e+06
8	1	48	328.32	-234.17	-72.66	166.81	-254.49	1.329e+06	-7.514e+05	7.170e+05	-1.395e+05	9.479e+05
8	1	49	307.02	-362.44	270.96	-326.39	-151.12	3.355e+05	-1.737e+06	-1.177e+06	-2.243e+05	9.202e+05
8	1	50	303.31	-131.31	-118.17	290.17	-74.41	1.347e+06	-1.667e+05	1.205e+06	-2.469e+04	4.414e+05
8	1	51	243.26	-373.35	231.23	-361.32	85.28	-1.394e+05	-1.646e+06	-1.545e+06	-2.409e+05	3.777e+05
8	1	57	345.63	-181.24	-168.12	332.51	-82.09	1.690e+06	-1.913e+05	1.467e+06	3.187e+04	6.083e+05
8	1	58	303.22	-430.73	290.06	-417.57	97.39	-2.173e+05	-2.089e+06	-1.886e+06	-4.209e+05	5.828e+05
8	1	71	303.68	-71.50	-52.41	284.60	82.43	1.526e+06	2.816e+05	1.518e+06	2.893e+05	9.740e+04
8	1	72	209.28	-407.94	69.03	-267.68	258.64	-6.225e+05	-1.852e+06	-1.852e+06	-6.227e+05	-1.681e+04
8	1	81	347.30	-123.61	-93.82	317.51	114.64	1.938e+06	3.526e+05	1.903e+06	3.878e+05	2.337e+05
8	1	82	288.86	-473.84	112.99	-297.97	321.26	-7.790e+05	-2.336e+06	-2.315e+06	-7.997e+05	1.781e+05
8	1	112	323.10	-40.62	100.01	182.48	177.12	1.580e+06	6.862e+05	1.561e+06	7.051e+05	-1.285e+05
8	1	113	220.09	-460.77	-171.44	-69.24	336.57	-9.996e+05	-1.871e+06	-1.827e+06	-1.044e+06	-1.924e+05
8	1	114	361.76	-90.52	90.77	180.47	221.65	2.049e+06	8.425e+05	2.049e+06	8.430e+05	-2.438e+04
8	1	115	288.00	-522.38	-176.16	-58.22	400.88	-1.259e+06	-2.440e+06	-2.438e+06	-1.262e+06	-5.005e+04
8	1	170	313.47	-2.53	249.68	61.26	126.84	1.546e+06	1.044e+06	1.505e+06	1.086e+06	-1.383e+05
8	1	173	188.32	-465.85	-385.63	108.10	214.58	-1.404e+06	-1.854e+06	-1.739e+06	-1.518e+06	-1.957e+05

8	1	174	358.28	-59.75	279.46	19.07	163.52	2.054e+06	1.225e+06	2.046e+06	1.234e+06	-8.515e+04
8	1	175	278.26	-538.11	-439.17	179.32	266.42	-1.676e+06	-2.427e+06	-2.410e+06	-1.694e+06	-1.133e+05
8	1	250	329.28	-6.36	329.28	-6.36	1.71	1.444e+06	1.219e+06	1.444e+06	1.219e+06	367.61
8	1	251	367.22	-56.75	367.21	-56.74	1.98	2.021e+06	1.379e+06	2.021e+06	1.379e+06	655.56
8	1	279	282.09	-555.72	-555.72	282.08	1.44	-1.812e+06	-2.396e+06	-2.396e+06	-1.812e+06	192.22
8	1	280	211.29	-492.46	-492.46	211.28	1.28	-1.595e+06	-1.673e+06	-1.673e+06	-1.595e+06	4.59
8	1	355	357.38	-58.58	281.85	16.95	-160.35	2.054e+06	1.223e+06	2.045e+06	1.233e+06	8.636e+04
8	1	356	277.64	-537.74	-440.75	180.65	-263.96	-1.675e+06	-2.427e+06	-2.410e+06	-1.693e+06	1.137e+05
8	1	357	312.57	-1.62	251.70	59.25	-124.18	1.546e+06	1.043e+06	1.504e+06	1.085e+06	1.392e+05
8	1	360	187.93	-465.52	-387.00	109.41	-212.47	-1.403e+06	-1.853e+06	-1.739e+06	-1.518e+06	1.958e+05
8	1	415	360.33	-88.47	94.61	177.25	-220.56	2.047e+06	8.407e+05	2.047e+06	8.412e+05	2.508e+04
8	1	416	286.77	-521.69	-178.95	-55.98	-399.53	-1.258e+06	-2.439e+06	-2.437e+06	-1.260e+06	5.013e+04
8	1	417	321.66	-39.17	103.12	179.37	-176.34	1.578e+06	6.848e+05	1.559e+06	7.038e+05	1.290e+05
8	1	418	219.32	-460.15	-173.82	-67.01	-335.51	-9.989e+05	-1.871e+06	-1.826e+06	-1.044e+06	1.923e+05
8	1	448	345.98	-121.35	-90.54	315.17	-115.96	1.936e+06	3.509e+05	1.900e+06	3.860e+05	-2.333e+05
8	1	449	287.15	-473.02	109.85	-295.72	-321.47	-7.775e+05	-2.335e+06	-2.314e+06	-7.981e+05	-1.783e+05
8	1	458	302.16	-69.93	-50.01	282.24	-83.75	1.523e+06	2.804e+05	1.516e+06	2.880e+05	-9.712e+04
8	1	459	208.17	-407.14	66.52	-265.49	-259.03	-6.214e+05	-1.851e+06	-1.850e+06	-6.217e+05	1.657e+04
8	1	472	344.77	-179.48	-166.98	332.26	80.00	1.688e+06	-1.924e+05	1.465e+06	3.082e+04	-6.081e+05
8	1	473	301.27	-429.97	287.64	-416.35	-98.89	-2.158e+05	-2.088e+06	-1.884e+06	-4.195e+05	-5.831e+05
8	1	479	302.10	-130.11	-117.60	289.59	72.44	1.345e+06	-1.673e+05	1.203e+06	-2.528e+04	-4.412e+05
8	1	480	241.96	-372.55	229.46	-360.05	-86.76	-1.384e+05	-1.645e+06	-1.543e+06	-2.400e+05	-3.778e+05
8	1	481	327.68	-233.35	-72.98	167.31	253.48	1.328e+06	-7.518e+05	7.156e+05	-1.398e+05	-9.476e+05
8	1	482	305.32	-362.01	269.93	-326.61	149.56	3.366e+05	-1.736e+06	-1.176e+06	-2.234e+05	-9.202e+05
8	1	487	323.04	-305.36	112.45	-94.77	296.63	8.672e+05	-1.270e+06	-2.163e+05	-1.868e+05	-1.069e+06
8	1	490	277.93	-182.54	-45.20	140.59	210.66	1.066e+06	-6.175e+05	5.812e+05	-1.325e+05	-7.624e+05
8	1	491	242.27	-304.96	213.52	-276.21	122.09	2.826e+05	-1.398e+06	-1.014e+06	-1.016e+05	-7.056e+05
8	1	496	272.97	-252.54	102.39	-81.96	246.06	7.192e+05	-1.021e+06	-1.878e+05	-1.141e+05	-8.694e+05
8	2	34	210.78	-194.65	78.98	-62.85	-189.90	5.535e+05	-7.861e+05	-1.446e+05	-8.798e+04	6.692e+05
8	2	39	214.51	-140.93	-34.38	107.96	-162.85	8.212e+05	-4.748e+05	4.482e+05	-1.018e+05	5.868e+05
8	2	40	187.30	-235.04	164.72	-212.45	-95.02	2.169e+05	-1.076e+06	-7.806e+05	-7.859e+04	5.429e+05
8	2	43	249.35	-235.16	86.79	-72.60	-228.77	6.671e+05	-9.776e+05	-1.665e+05	-1.440e+05	8.223e+05
8	2	48	252.56	-180.13	-55.89	128.31	-195.76	1.022e+06	-5.780e+05	5.515e+05	-1.073e+05	7.292e+05
8	2	49	236.17	-278.80	208.43	-251.07	-116.25	2.581e+05	-1.336e+06	-9.052e+05	-1.725e+05	7.078e+05
8	2	50	233.32	-101.01	-90.90	223.21	-57.24	1.037e+06	-1.282e+05	9.273e+05	-1.899e+04	3.396e+05
8	2	51	187.13	-287.19	177.87	-277.94	65.60	-1.072e+05	-1.266e+06	-1.188e+06	-1.853e+05	2.905e+05
8	2	57	265.87	-139.42	-129.33	255.78	-63.14	1.300e+06	-1.471e+05	1.129e+06	2.452e+04	4.680e+05
8	2	58	233.25	-331.33	223.13	-321.21	74.92	-1.671e+05	-1.607e+06	-1.451e+06	-3.238e+05	4.483e+05
8	2	71	233.60	-55.00	-40.32	218.92	63.41	1.174e+06	2.166e+05	1.168e+06	2.225e+05	7.492e+04
8	2	72	160.99	-313.80	53.10	-205.91	198.96	-4.788e+05	-1.424e+06	-1.424e+06	-4.790e+05	-1.293e+04
8	2	81	267.16	-95.09	-72.17	244.24	88.19	1.491e+06	2.712e+05	1.464e+06	2.983e+05	1.798e+05
8	2	82	222.20	-364.50	86.91	-229.21	247.12	-5.993e+05	-1.797e+06	-1.781e+06	-6.152e+05	1.370e+05
8	2	112	248.54	-31.24	76.93	140.37	136.25	1.215e+06	5.278e+05	1.201e+06	5.424e+05	-9.886e+04
8	2	113	169.30	-354.43	-131.87	-53.26	258.90	-7.689e+05	-1.440e+06	-1.405e+06	-8.034e+05	-1.480e+05
8	2	114	278.28	-69.63	69.82	138.82	170.50	1.576e+06	6.481e+05	1.576e+06	6.485e+05	-1.875e+04
8	2	115	221.54	-401.83	-135.51	-44.79	308.37	-9.688e+05	-1.877e+06	-1.875e+06	-9.704e+05	-3.850e+04

8	2	170	241.13	-1.95	192.06	47.12	97.57	1.189e+06	8.031e+05	1.157e+06	8.351e+05	-1.064e+05
8	2	173	144.86	-358.35	-296.64	83.15	165.06	-1.080e+06	-1.426e+06	-1.338e+06	-1.168e+06	-1.506e+05
8	2	174	275.60	-45.96	214.97	14.67	125.78	1.580e+06	9.421e+05	1.574e+06	9.489e+05	-6.550e+04
8	2	175	214.04	-413.93	-337.83	137.94	204.93	-1.289e+06	-1.867e+06	-1.854e+06	-1.303e+06	-8.715e+04
8	2	250	253.30	-4.90	253.29	-4.89	1.31	1.111e+06	9.375e+05	1.111e+06	9.375e+05	282.77
8	2	251	282.48	-43.65	282.47	-43.65	1.52	1.555e+06	1.061e+06	1.555e+06	1.061e+06	504.28
8	2	279	216.99	-427.48	-427.47	216.99	1.11	-1.394e+06	-1.843e+06	-1.843e+06	-1.394e+06	147.86
8	2	280	162.53	-378.82	-378.82	162.53	0.98	-1.227e+06	-1.287e+06	-1.287e+06	-1.227e+06	3.53
8	2	355	274.91	-45.06	216.81	13.03	-123.35	1.580e+06	9.411e+05	1.573e+06	9.481e+05	6.643e+04
8	2	356	213.57	-413.64	-339.04	138.96	-203.05	-1.289e+06	-1.867e+06	-1.853e+06	-1.302e+06	8.742e+04
8	2	357	240.44	-1.25	193.61	45.58	-95.52	1.189e+06	8.023e+05	1.157e+06	8.346e+05	1.070e+05
8	2	360	144.56	-358.09	-297.70	84.16	-163.44	-1.080e+06	-1.426e+06	-1.338e+06	-1.167e+06	1.506e+05
8	2	415	277.18	-68.06	72.78	136.34	-169.66	1.575e+06	6.467e+05	1.574e+06	6.471e+05	1.929e+04
8	2	416	220.59	-401.30	-137.65	-43.06	-307.33	-9.678e+05	-1.876e+06	-1.875e+06	-9.695e+05	3.857e+04
8	2	417	247.43	-30.13	79.32	137.98	-135.65	1.214e+06	5.268e+05	1.199e+06	5.414e+05	9.920e+04
8	2	418	168.71	-353.96	-133.71	-51.55	-258.09	-7.684e+05	-1.439e+06	-1.404e+06	-8.028e+05	1.479e+05
8	2	448	266.13	-93.35	-69.65	242.44	-89.20	1.489e+06	2.699e+05	1.462e+06	2.969e+05	-1.795e+05
8	2	449	220.89	-363.86	84.50	-227.48	-247.28	-5.980e+05	-1.796e+06	-1.780e+06	-6.140e+05	-1.371e+05
8	2	458	232.43	-53.79	-38.47	217.11	-64.43	1.172e+06	2.157e+05	1.166e+06	2.216e+05	-7.471e+04
8	2	459	160.13	-313.18	51.17	-204.22	-199.25	-4.780e+05	-1.424e+06	-1.423e+06	-4.782e+05	1.275e+04
8	2	472	265.21	-138.06	-128.44	255.59	61.54	1.298e+06	-1.480e+05	1.127e+06	2.371e+04	-4.678e+05
8	2	473	231.74	-330.75	221.26	-320.27	-76.07	-1.660e+05	-1.606e+06	-1.449e+06	-3.227e+05	-4.485e+05
8	2	479	232.38	-100.08	-90.46	222.76	55.73	1.034e+06	-1.287e+05	9.252e+05	-1.944e+04	-3.394e+05
8	2	480	186.13	-286.58	176.51	-276.96	-66.74	-1.065e+05	-1.265e+06	-1.187e+06	-1.846e+05	-2.906e+05
8	2	481	252.06	-179.50	-56.14	128.70	194.99	1.021e+06	-5.783e+05	5.505e+05	-1.075e+05	-7.289e+05
8	2	482	234.86	-278.47	207.63	-251.24	115.05	2.589e+05	-1.335e+06	-9.043e+05	-1.718e+05	-7.079e+05
8	2	487	248.49	-234.89	86.50	-72.90	228.17	6.671e+05	-9.772e+05	-1.664e+05	-1.437e+05	-8.220e+05
8	2	490	213.79	-140.41	-34.77	108.15	162.05	8.201e+05	-4.750e+05	4.471e+05	-1.019e+05	-5.865e+05
8	2	491	186.36	-234.58	164.25	-212.47	93.91	2.174e+05	-1.075e+06	-7.797e+05	-7.813e+04	-5.428e+05
8	2	496	209.98	-194.26	78.76	-63.05	189.27	5.532e+05	-7.855e+05	-1.445e+05	-8.779e+04	-6.688e+05

M_G M 1-2			N max	N min	N 1	N 2	N 1-2	M max	M min	M 1	M 2
			-555.72	-555.72	-417.57	-399.53		-2.440e+06	-2.438e+06	-1.812e+06	-1.069e+06
			367.22	367.21	332.51	400.88	2.054e+06		2.049e+06	1.379e+06	1.069e+06

Macro	Tipo	Angolo 1-X (gradi)
9	**Guscio**	**0.0**

M_G M 1-2	Cmb	Nodo	N max	N min	N 1	N 2	N 1-2	M max	M min	M 1	M 2
			N/mm	N/mm	N/mm	N/mm	N/mm	N	N	N	N	N
9	1	43	298.71	-305.60	88.75	-95.64	-287.75	8.821e+05	-1.313e+06	-2.524e+05	-1.782e+05	1.097e+06
9	1	48	333.44	-213.38	-45.03	165.09	-252.42	1.363e+06	-7.665e+05	7.503e+05	-1.535e+05	9.643e+05

9	1	49	238.43	-376.81	192.28	-330.67	-162.06	3.194e+05	-1.803e+06	-1.283e+06	-2.004e+05	9.126e+05
9	1	52	350.88	-359.10	101.69	-109.91	-338.86	1.062e+06	-1.599e+06	-2.790e+05	-2.578e+05	1.330e+06
9	1	55	381.53	-267.42	-76.98	191.09	-295.49	1.667e+06	-9.205e+05	9.043e+05	-1.575e+05	1.180e+06
9	1	56	304.79	-434.43	252.43	-382.07	-189.64	3.777e+05	-2.204e+06	-1.476e+06	-3.500e+05	1.161e+06
9	1	57	371.14	-129.24	-104.62	346.52	-108.23	1.741e+06	-1.743e+05	1.545e+06	2.132e+04	5.799e+05
9	1	58	193.96	-449.65	189.81	-445.50	51.48	-2.630e+05	-2.165e+06	-2.013e+06	-4.148e+05	5.156e+05
9	1	66	410.35	-182.39	-160.01	387.97	-112.98	2.148e+06	-2.024e+05	1.855e+06	9.083e+04	7.766e+05
9	1	67	263.92	-508.33	257.46	-501.88	70.33	-3.386e+05	-2.681e+06	-2.402e+06	-6.172e+05	7.582e+05
9	1	81	379.84	-35.99	-27.07	370.92	60.24	1.992e+06	4.062e+05	1.976e+06	4.223e+05	1.587e+05
9	1	82	131.18	-493.40	17.70	-379.93	240.83	-8.637e+05	-2.421e+06	-2.419e+06	-8.657e+05	5.533e+04
9	1	90	418.59	-93.36	-74.38	399.61	96.73	2.484e+06	4.910e+05	2.429e+06	5.450e+05	3.237e+05
9	1	91	218.34	-559.11	66.38	-407.15	308.30	-1.042e+06	-3.012e+06	-2.969e+06	-1.085e+06	2.865e+05
9	1	114	388.34	35.65	136.82	287.17	159.52	2.092e+06	9.360e+05	2.080e+06	9.477e+05	-1.157e+05
9	1	115	100.49	-538.35	-236.14	-201.72	318.96	-1.386e+06	-2.504e+06	-2.474e+06	-1.416e+06	-1.802e+05
9	1	123	424.51	-23.59	125.38	275.55	211.09	2.654e+06	1.109e+06	2.653e+06	1.109e+06	8279.37
9	1	124	186.65	-604.03	-239.68	-177.70	394.12	-1.656e+06	-3.180e+06	-3.180e+06	-1.656e+06	-1.031e+04
9	1	174	373.73	99.33	299.47	173.59	121.91	2.064e+06	1.372e+06	2.032e+06	1.405e+06	-1.469e+05
9	1	175	59.21	-550.71	-465.18	-26.33	211.79	-1.863e+06	-2.462e+06	-2.386e+06	-1.938e+06	-1.989e+05
9	1	182	415.95	31.30	327.52	119.73	161.85	2.685e+06	1.575e+06	2.679e+06	1.581e+06	-8.054e+04
9	1	183	160.93	-623.70	-518.67	55.90	267.16	-2.143e+06	-3.196e+06	-3.187e+06	-2.153e+06	-9.947e+04
9	1	251	375.97	114.77	375.95	114.79	2.04	1.986e+06	1.576e+06	1.986e+06	1.576e+06	450.10
9	1	252	416.51	48.00	416.50	48.01	2.37	2.665e+06	1.761e+06	2.665e+06	1.761e+06	685.31
9	1	278	155.16	-636.06	-636.05	155.15	1.71	-2.319e+06	-3.182e+06	-3.182e+06	-2.319e+06	210.87
9	1	279	62.35	-566.98	-566.97	62.35	1.51	-2.081e+06	-2.343e+06	-2.343e+06	-2.081e+06	31.97
9	1	347	414.43	33.37	330.41	117.39	-157.97	2.684e+06	1.573e+06	2.678e+06	1.579e+06	8.176e+04
9	1	348	159.95	-623.11	-520.54	57.38	-264.20	-2.142e+06	-3.196e+06	-3.187e+06	-2.152e+06	9.984e+04
9	1	355	372.06	101.21	301.92	171.36	-118.65	2.064e+06	1.371e+06	2.031e+06	1.404e+06	1.477e+05
9	1	356	58.47	-550.16	-466.82	-24.87	-209.23	-1.862e+06	-2.461e+06	-2.386e+06	-1.938e+06	1.990e+05
9	1	406	422.32	-20.21	130.18	271.93	-209.61	2.651e+06	1.106e+06	2.651e+06	1.106e+06	-7562.64
9	1	407	184.76	-602.97	-243.03	-175.18	-392.40	-1.655e+06	-3.179e+06	-3.179e+06	-1.655e+06	1.042e+04
9	1	415	386.04	38.37	140.71	283.70	-158.45	2.090e+06	9.343e+05	2.078e+06	9.461e+05	1.162e+05
9	1	416	99.10	-537.36	-239.01	-199.25	-317.61	-1.385e+06	-2.503e+06	-2.473e+06	-1.415e+06	1.801e+05
9	1	439	416.77	-89.81	-69.99	396.95	-98.20	2.480e+06	4.888e+05	2.426e+06	5.427e+05	-3.233e+05
9	1	440	215.77	-557.88	62.47	-404.58	-308.39	-1.040e+06	-3.011e+06	-2.968e+06	-1.083e+06	-2.867e+05
9	1	448	377.79	-33.32	-23.83	368.30	-61.72	1.988e+06	4.046e+05	1.972e+06	4.206e+05	-1.584e+05
9	1	449	129.29	-492.20	14.54	-377.44	-241.14	-8.623e+05	-2.420e+06	-2.418e+06	-8.643e+05	-5.558e+04
9	1	463	409.38	-179.78	-158.30	387.89	110.44	2.145e+06	-2.039e+05	1.852e+06	8.925e+04	-7.763e+05
9	1	464	261.08	-507.30	254.27	-500.49	-72.02	-3.366e+05	-2.679e+06	-2.400e+06	-6.153e+05	-7.584e+05
9	1	472	369.77	-127.36	-103.67	346.07	105.92	1.738e+06	-1.754e+05	1.542e+06	2.028e+04	-5.796e+05
9	1	473	191.90	-448.55	187.46	-444.11	-53.14	-2.616e+05	-2.163e+06	-2.011e+06	-4.136e+05	-5.157e+05
9	1	474	380.89	-266.32	-77.27	191.83	294.30	1.666e+06	-9.210e+05	9.027e+05	-1.581e+05	-1.180e+06
9	1	475	302.40	-433.91	250.94	-382.45	187.73	3.791e+05	-2.202e+06	-1.474e+06	-3.487e+05	-1.161e+06
9	1	478	349.48	-358.78	101.20	-110.50	337.94	1.062e+06	-1.598e+06	-2.787e+05	-2.574e+05	-1.330e+06
9	1	481	332.50	-212.50	-45.51	165.51	251.24	1.362e+06	-7.668e+05	7.485e+05	-1.538e+05	-9.638e+05
9	1	482	236.67	-376.12	191.36	-330.81	160.35	3.204e+05	-1.801e+06	-1.281e+06	-1.995e+05	-9.125e+05
9	1	487	297.48	-305.11	88.38	-96.02	286.84	8.819e+05	-1.312e+06	-2.522e+05	-1.778e+05	-1.096e+06

9	2	43	229.78-235.0768.27	-73.57	-221.34	6.785e+05	-1.010e+06	-1.942e+05	-1.371e+05	8.437e+05
9	2	48	256.50-164.14-34.64	126.99	-194.17	1.049e+06	-5.896e+05	5.771e+05	-1.181e+05	7.417e+05
9	2	49	183.41-289.86147.91	-254.36	-124.66	2.457e+05	-1.387e+06	-9.869e+05	-1.541e+05	7.020e+05
9	2	52	269.91-276.2378.23	-84.55	-260.66	8.169e+05	-1.230e+06	-2.146e+05	-1.983e+05	1.023e+06
9	2	55	293.48-205.70-59.21	146.99	-227.30	1.283e+06	-7.081e+05	6.956e+05	-1.212e+05	9.076e+05
9	2	56	234.46-334.18194.18	-293.90	-145.88	2.905e+05	-1.695e+06	-1.135e+06	-2.692e+05	8.934e+05
9	2	57	285.49-99.42-80.48	266.55	-83.25	1.339e+06	-1.340e+05	1.189e+06	1.640e+04	4.461e+05
9	2	58	149.20-345.88146.01	-342.70	39.60	-2.023e+05	-1.665e+06	-1.548e+06	-3.191e+05	3.966e+05
9	2	66	315.66-140.30-123.08	298.44	-86.91	1.652e+06	-1.557e+05	1.427e+06	6.987e+04	5.974e+05
9	2	67	203.02-391.03198.05	-386.06	54.10	-2.605e+05	-2.062e+06	-1.848e+06	-4.747e+05	5.832e+05
9	2	81	292.19-27.68-20.82	285.32	46.34	1.532e+06	3.125e+05	1.520e+06	3.248e+05	1.221e+05
9	2	82	100.90-379.5413.62	-292.25	185.25	-6.644e+05	-1.862e+06	-1.861e+06	-6.659e+05	4.256e+04
9	2	90	321.99-71.82-57.21	307.39	74.41	1.910e+06	3.777e+05	1.869e+06	4.193e+05	2.490e+05
9	2	91	167.96-430.0851.06	-313.19	237.15	-8.016e+05	-2.317e+06	-2.284e+06	-8.344e+05	2.204e+05
9	2	114	298.7227.42105.24	220.90	122.71	1.609e+06	7.200e+05	1.600e+06	7.290e+05	-8.899e+04
9	2	115	77.30-414.12-181.64	-155.17	245.35	-1.066e+06	-1.926e+06	-1.903e+06	-1.089e+06	-1.386e+05
9	2	123	326.55-18.1496.44	211.96	162.38	2.041e+06	8.527e+05	2.041e+06	8.527e+05	6368.75
9	2	124	143.58-464.64-184.37	-136.69	303.17	-1.274e+06	-2.446e+06	-2.446e+06	-1.274e+06	-7931.90
9	2	174	287.4976.40230.36	133.53	93.78	1.588e+06	1.056e+06	1.563e+06	1.081e+06	-1.130e+05
9	2	175	45.54-423.63-357.83	-20.25	162.91	-1.433e+06	-1.894e+06	-1.835e+06	-1.491e+06	-1.530e+05
9	2	182	319.9624.08251.94	92.10	124.50	2.065e+06	1.211e+06	2.061e+06	1.216e+06	-6.196e+04
9	2	183	123.79-479.77-398.98	43.00	205.51	-1.649e+06	-2.459e+06	-2.452e+06	-1.656e+06	-7.651e+04
9	2	251	289.2188.28289.19	88.30	1.57	1.528e+06	1.212e+06	1.528e+06	1.212e+06	346.23
9	2	252	320.3936.92320.38	36.93	1.82	2.050e+06	1.354e+06	2.050e+06	1.354e+06	527.16
9	2	278	119.35-489.27-489.27	119.35	1.31	-1.784e+06	-2.447e+06	-2.447e+06	-1.784e+06	162.21
9	2	279	47.96-436.14-436.13	47.96	1.16	-1.601e+06	-1.802e+06	-1.802e+06	-1.601e+06	24.59
9	2	347	318.7925.67254.16	90.30	-121.52	2.065e+06	1.210e+06	2.060e+06	1.215e+06	6.289e+04
9	2	348	123.04-479.32-400.42	44.14	-203.23	-1.648e+06	-2.459e+06	-2.451e+06	-1.655e+06	7.680e+04
9	2	355	286.2077.85232.25	131.81	-91.27	1.588e+06	1.055e+06	1.562e+06	1.080e+06	1.136e+05
9	2	356	44.98-423.20-359.09	-19.13	-160.95	-1.432e+06	-1.893e+06	-1.835e+06	-1.490e+06	1.531e+05
9	2	406	324.86-15.54100.14	209.17	-161.24	2.039e+06	8.510e+05	2.039e+06	8.510e+05	-5817.42
9	2	407	142.12-463.82-186.95	-134.76	-301.85	-1.273e+06	-2.446e+06	-2.446e+06	-1.273e+06	8014.52
9	2	415	296.9529.52108.24	218.23	-121.88	1.607e+06	7.187e+05	1.598e+06	7.278e+05	8.935e+04
9	2	416	76.23-413.35-183.85	-153.27	-244.31	-1.065e+06	-1.925e+06	-1.902e+06	-1.088e+06	1.385e+05
9	2	439	320.59-69.08-53.84	305.35	-75.54	1.908e+06	3.760e+05	1.866e+06	4.175e+05	-2.487e+05
9	2	440	165.98-429.1448.05	-311.21	-237.22	-8.001e+05	-2.316e+06	-2.283e+06	-8.329e+05	-2.205e+05
9	2	448	290.60-25.63-18.33	283.31	-47.47	1.530e+06	3.112e+05	1.517e+06	3.235e+05	-1.219e+05
9	2	449	99.45-378.6111.18	-290.34	-185.49	-6.633e+05	-1.861e+06	-1.860e+06	-6.648e+05	-4.276e+04
9	2	463	314.91-138.29-121.77	298.38	84.95	1.650e+06	-1.569e+05	1.424e+06	6.866e+04	-5.972e+05
9	2	464	200.83-390.23195.59	-384.99	-55.40	-2.589e+05	-2.061e+06	-1.846e+06	-4.733e+05	-5.834e+05
9	2	472	284.43-97.97-79.74	266.21	81.48	1.337e+06	-1.349e+05	1.186e+06	1.560e+04	-4.459e+05
9	2	473	147.62-345.04144.20	-341.63	-40.88	-2.012e+05	-1.664e+06	-1.547e+06	-3.182e+05	-3.967e+05
9	2	474	292.99-204.86-59.44	147.56	226.39	1.281e+06	-7.085e+05	6.944e+05	-1.216e+05	-9.074e+05
9	2	475	232.62-333.78193.03	-294.19	144.41	2.916e+05	-1.694e+06	-1.134e+06	-2.682e+05	-8.934e+05
9	2	478	268.83-275.9877.85	-85.00	259.95	8.170e+05	-1.229e+06	-2.144e+05	-1.980e+05	-1.023e+06
9	2	481	255.77-163.46-35.01	127.32	193.26	1.047e+06	-5.899e+05	5.758e+05	-1.183e+05	-7.414e+05

9	2	482	182.05	-289.32	147.20	-254.47	123.34	2.464e+05	-1.386e+06	-9.857e+05	-1.534e+05	-7.019e+05
9	2	487	228.83	-234.70	67.99	-73.86	220.65	6.783e+05	-1.009e+06	-1.940e+05	-1.368e+05	-8.432e+05

M_G M 1-2	N max	N min	N 1	N 2	N 1-2	M max	M min	M 1	M 2
	-636.06	-636.05	-501.88	-392.40		-3.196e+06	-3.187e+06	-2.319e+06	-1.330e+06
	424.51	416.50	399.61	394.12	2.685e+06		2.679e+06	1.761e+06	1.330e+06

Macro	Tipo	Angolo 1-X (gradi)
10	**Guscio**	**0.0**

M_G M 1-2	Cmb	Nodo	N max	N min	N 1	N 2	N 1-2	M max	M min	M 1	M 2
			N/mm	N/mm	N/mm	N/mm	N/mm	N	N	N	N	N
10	1	52	322.85	-361.04	72.96	-111.15	-329.33	1.079e+06	-1.648e+06	-3.216e+05	-2.479e+05	1.363e+06
10	1	55	389.05	-244.96	-45.65	189.74	-294.35	1.709e+06	-9.378e+05	9.452e+05	-1.737e+05	1.199e+06
10	1	56	231.03	-453.79	164.34	-387.09	-203.04	3.583e+05	-2.279e+06	-1.599e+06	-3.219e+05	1.154e+06
10	1	61	376.33	-415.16	88.10	-126.93	-380.86	1.288e+06	-1.975e+06	-3.476e+05	-3.394e+05	1.632e+06
10	1	62	434.34	-301.08	-81.30	214.57	-336.64	2.061e+06	-1.112e+06	1.122e+06	-1.721e+05	1.448e+06
10	1	63	299.87	-510.40	228.94	-439.46	-229.01	4.221e+05	-2.747e+06	-1.824e+06	-5.014e+05	1.440e+06
10	1	66	443.37	-127.68	-89.04	404.73	-143.44	2.207e+06	-1.805e+05	1.947e+06	7.934e+04	7.435e+05
10	1	67	143.14	-535.24	142.76	-534.86	16.04	-3.978e+05	-2.768e+06	-2.553e+06	-6.121e+05	6.796e+05
10	1	77	477.85	-184.24	-150.89	444.49	-144.81	2.684e+06	-2.086e+05	2.307e+06	1.678e+05	9.732e+05
10	1	78	221.55	-592.81	219.43	-590.69	41.48	-4.801e+05	-3.369e+06	-2.998e+06	-8.507e+05	9.660e+05
10	1	90	463.75	-1.98	0.58	461.19	34.45	2.545e+06	5.577e+05	2.516e+06	5.861e+05	2.359e+05
10	1	91	45.96	-586.45	-40.17	-500.32	216.91	-1.150e+06	-3.102e+06	-3.091e+06	-1.161e+06	1.445e+05
10	1	101	494.48	-63.43	-52.76	483.81	76.44	3.126e+06	6.588e+05	3.047e+06	7.376e+05	4.338e+05
10	1	102	141.86	-650.17	13.85	-522.16	291.55	-1.352e+06	-3.808e+06	-3.735e+06	-1.426e+06	4.172e+05
10	1	123	465.90	108.87	176.79	397.97	140.13	2.699e+06	1.226e+06	2.693e+06	1.233e+06	-9.838e+04
10	1	124	-25.75	-625.48	-307.34	-343.89	299.31	-1.821e+06	-3.245e+06	-3.226e+06	-1.840e+06	-1.625e+05
10	1	127	494.39	42.69	162.07	375.00	199.18	3.367e+06	1.422e+06	3.366e+06	1.423e+06	5.157e+04
10	1	128	77.81	-692.52	-308.76	-305.95	385.16	-2.113e+06	-4.050e+06	-4.049e+06	-2.114e+06	4.421e+04
10	1	182	440.32	204.96	349.47	295.80	114.58	2.690e+06	1.757e+06	2.665e+06	1.783e+06	-1.528e+05
10	1	183	-85.64	-638.38	-547.02	-177.00	205.32	-2.386e+06	-3.212e+06	-3.161e+06	-2.437e+06	-1.988e+05
10	1	184	476.70	126.51	376.12	227.08	158.44	3.435e+06	1.985e+06	3.432e+06	1.989e+06	-7.090e+04
10	1	185	32.11	-712.51	-601.27	-79.13	265.44	-2.687e+06	-4.110e+06	-4.106e+06	-2.691e+06	-7.955e+04
10	1	252	425.63	244.22	425.60	244.25	2.43	2.627e+06	1.993e+06	2.627e+06	1.993e+06	465.51
10	1	253	467.73	158.91	467.71	158.94	2.83	3.428e+06	2.206e+06	3.428e+06	2.206e+06	645.02
10	1	277	17.17	-721.29	-721.28	17.16	2.00	-2.902e+06	-4.108e+06	-4.108e+06	-2.902e+06	183.32
10	1	278	-98.62	-647.62	-647.62	-98.63	1.76	-2.637e+06	-3.123e+06	-3.123e+06	-2.637e+06	25.67
10	1	345	474.21	129.90	379.59	224.51	-153.70	3.434e+06	1.984e+06	3.430e+06	1.987e+06	7.203e+04
10	1	346	30.66	-711.61	-603.43	-77.52	-261.91	-2.686e+06	-4.110e+06	-4.105e+06	-2.690e+06	7.985e+04
10	1	347	437.37	208.39	352.43	293.33	-110.61	2.689e+06	1.756e+06	2.663e+06	1.782e+06	1.537e+05
10	1	348	-86.86	-637.48	-548.93	-175.41	-202.28	-2.385e+06	-3.211e+06	-3.160e+06	-2.436e+06	1.989e+05

10	1	402	491.2047.78168.06	370.92	-197.15	3.364e+06	1.419e+06	3.363e+06	1.421e+06	-5.085e+04
10	1	403	75.06-690.96-312.72	-303.17	-382.98	-2.112e+06	-4.049e+06	-4.048e+06	-2.113e+06	-4.416e+04
10	1	406	462.56113.20181.66	394.10	-138.67	2.697e+06	1.224e+06	2.690e+06	1.231e+06	9.886e+04
10	1	407	-27.98-623.94-310.74	-341.18	-297.59	-1.820e+06	-3.243e+06	-3.225e+06	-1.838e+06	1.623e+05
10	1	428	492.05-58.21-46.90	480.74	-78.07	3.122e+06	6.560e+05	3.043e+06	7.347e+05	-4.333e+05
10	1	429	138.20-648.42 9.01	-519.22	-291.44	-1.350e+06	-3.807e+06	-3.733e+06	-1.423e+06	-4.173e+05
10	1	439	461.102.05 4.91	458.24	-36.10	2.541e+06	5.556e+05	2.513e+06	5.839e+05	-2.356e+05
10	1	440	43.09-584.71-44.09	-497.52	-217.10	-1.148e+06	-3.100e+06	-3.089e+06	-1.159e+06	-1.448e+05
10	1	452	476.73-180.46-148.37	444.63	141.63	2.680e+06	-2.108e+05	2.304e+06	1.655e+05	-9.727e+05
10	1	453	217.56-591.39215.23	-589.06	-43.38	-4.776e+05	-3.367e+06	-2.996e+06	-8.484e+05	-9.663e+05
10	1	463	441.83-124.92-87.54	404.45	140.67	2.203e+06	-1.822e+05	1.943e+06	7.775e+04	-7.432e+05
10	1	464	140.12-533.78139.65	-533.30	-17.90	-3.960e+05	-2.765e+06	-2.551e+06	-6.104e+05	-6.798e+05
10	1	467	433.71-299.61-81.55	215.64	335.20	2.059e+06	-1.112e+06	1.120e+06	-1.731e+05	-1.448e+06
10	1	468	296.52-509.75226.80	-440.02	226.63	4.240e+05	-2.745e+06	-1.822e+06	-4.996e+05	-1.440e+06
10	1	469	374.50-414.8787.44	-127.80	379.73	1.289e+06	-1.974e+06	-3.471e+05	-3.386e+05	-1.631e+06
10	1	474	388.11-243.82-46.12	190.40	293.00	1.707e+06	-9.383e+05	9.432e+05	-1.743e+05	-1.199e+06
10	1	475	228.55-452.97162.97	-387.39	200.98	3.597e+05	-2.277e+06	-1.597e+06	-3.206e+05	-1.154e+06
10	1	478	321.34-360.5972.48	-111.73	328.29	1.079e+06	-1.647e+06	-3.213e+05	-2.474e+05	-1.363e+06
10	2	52	248.35-277.7356.12	-85.50	-253.33	8.298e+05	-1.268e+06	-2.474e+05	-1.907e+05	1.049e+06
10	2	55	299.27-188.43-35.12	145.95	-226.42	1.315e+06	-7.214e+05	7.271e+05	-1.336e+05	9.227e+05
10	2	56	177.72-349.07126.41	-297.76	-156.19	2.756e+05	-1.753e+06	-1.230e+06	-2.476e+05	8.876e+05
10	2	61	289.49-319.3567.77	-97.64	-292.97	9.910e+05	-1.519e+06	-2.674e+05	-2.610e+05	1.255e+06
10	2	62	334.11-231.60-62.54	165.05	-258.95	1.585e+06	-8.550e+05	8.628e+05	-1.324e+05	1.114e+06
10	2	63	230.67-392.62176.10	-338.05	-176.16	3.247e+05	-2.113e+06	-1.403e+06	-3.857e+05	1.108e+06
10	2	66	341.06-98.22-68.49	311.33	-110.34	1.697e+06	-1.389e+05	1.498e+06	6.103e+04	5.720e+05
10	2	67	110.11-411.72109.81	-411.43	12.34	-3.060e+05	-2.129e+06	-1.964e+06	-4.708e+05	5.228e+05
10	2	77	367.57-141.72-116.07	341.92	-111.39	2.064e+06	-1.605e+05	1.775e+06	1.291e+05	7.486e+05
10	2	78	170.42-456.01168.79	-454.38	31.91	-3.693e+05	-2.592e+06	-2.307e+06	-6.544e+05	7.431e+05
10	2	90	356.73-1.52 0.45	354.76	26.50	1.958e+06	4.290e+05	1.936e+06	4.509e+05	1.814e+05
10	2	91	35.35-451.11-30.90	-384.86	166.86	-8.847e+05	-2.386e+06	-2.378e+06	-8.930e+05	1.112e+05
10	2	101	380.37-48.79-40.58	372.16	58.80	2.405e+06	5.068e+05	2.344e+06	5.674e+05	3.337e+05
10	2	102	109.13-500.1310.65	-401.66	224.27	-1.040e+06	-2.929e+06	-2.873e+06	-1.097e+06	3.209e+05
10	2	123	358.3883.75136.00	306.13	107.79	2.076e+06	9.433e+05	2.071e+06	9.484e+05	-7.567e+04
10	2	124	-19.81-481.14-236.42	-264.53	230.24	-1.401e+06	-2.496e+06	-2.481e+06	-1.415e+06	-1.250e+05
10	2	127	380.3032.84124.67	288.46	153.22	2.590e+06	1.094e+06	2.589e+06	1.095e+06	3.967e+04
10	2	128	59.85-532.70-237.51	-235.35	296.28	-1.626e+06	-3.116e+06	-3.115e+06	-1.626e+06	3.401e+04
10	2	182	338.71157.66268.82	227.54	88.14	2.069e+06	1.351e+06	2.050e+06	1.371e+06	-1.176e+05
10	2	183	-65.87-491.06-420.78	-136.16	157.94	-1.835e+06	-2.471e+06	-2.431e+06	-1.874e+06	-1.530e+05
10	2	184	366.6997.32289.33	174.68	121.88	2.642e+06	1.527e+06	2.640e+06	1.530e+06	-5.454e+04
10	2	185	24.70-548.09-462.52	-60.87	204.19	-2.067e+06	-3.162e+06	-3.158e+06	-2.070e+06	-6.119e+04
10	2	252	327.41187.86327.38	187.89	1.87	2.020e+06	1.533e+06	2.020e+06	1.533e+06	358.08
10	2	253	359.79122.24359.77	122.26	2.18	2.637e+06	1.697e+06	2.637e+06	1.697e+06	496.17
10	2	277	13.20-554.84-554.83	13.20	1.54	-2.232e+06	-3.160e+06	-3.160e+06	-2.232e+06	141.01
10	2	278	-75.87-498.17-498.17	-75.87	1.35	-2.028e+06	-2.403e+06	-2.403e+06	-2.028e+06	19.74
10	2	345	364.7799.92291.99	172.70	-118.23	2.641e+06	1.526e+06	2.639e+06	1.529e+06	5.541e+04
10	2	346	23.58-547.39-464.18	-59.63	-201.47	-2.066e+06	-3.162e+06	-3.158e+06	-2.069e+06	6.142e+04

10	2	347	336.44	160.30	271.10	225.64	-85.08	2.069e+06	1.350e+06	2.049e+06	1.370e+06	1.182e+05
10	2	348	-66.82	-490.37	-422.25	-134.93	-155.60	-1.835e+06	-2.470e+06	-2.431e+06	-1.874e+06	1.530e+05
10	2	402	377.85	36.75	129.28	285.32	-151.65	2.588e+06	1.092e+06	2.587e+06	1.093e+06	-3.911e+04
10	2	403	57.74	-531.50	-240.56	-233.21	-294.60	-1.624e+06	-3.115e+06	-3.114e+06	-1.625e+06	-3.397e+04
10	2	406	355.81	87.08	139.74	303.15	-106.67	2.074e+06	9.417e+05	2.069e+06	9.469e+05	7.604e+04
10	2	407	-21.52	-479.96	-239.03	-262.44	-228.92	-1.400e+06	-2.495e+06	-2.480e+06	-1.414e+06	1.249e+05
10	2	428	378.50	-44.78	-36.08	369.80	-60.05	2.401e+06	5.046e+05	2.341e+06	5.651e+05	-3.333e+05
10	2	429	106.31	-498.78	6.93	-399.40	-224.18	-1.039e+06	-2.928e+06	-2.872e+06	-1.095e+06	-3.210e+05
10	2	439	354.69	1.58	3.78	352.50	-27.77	1.955e+06	4.273e+05	1.933e+06	4.492e+05	-1.812e+05
10	2	440	33.15	-449.78	-33.92	-382.71	-167.00	-8.833e+05	-2.385e+06	-2.376e+06	-8.916e+05	-1.114e+05
10	2	452	366.71	-138.82	-114.13	342.03	108.95	2.061e+06	-1.621e+05	1.772e+06	1.273e+05	-7.483e+05
10	2	453	167.35	-454.92	165.56	-453.12	-33.37	-3.674e+05	-2.590e+06	-2.305e+06	-6.526e+05	-7.433e+05
10	2	463	339.87	-96.09	-67.34	311.12	108.21	1.695e+06	-1.401e+05	1.495e+06	5.980e+04	-5.717e+05
10	2	464	107.79	-410.60	107.42	-410.23	-13.77	-3.046e+05	-2.127e+06	-1.962e+06	-4.696e+05	-5.229e+05
10	2	467	333.62	-230.47	-62.73	165.88	257.85	1.584e+06	-8.557e+05	8.613e+05	-1.331e+05	-1.114e+06
10	2	468	228.10	-392.12	174.46	-338.48	174.33	3.262e+05	-2.112e+06	-1.401e+06	-3.843e+05	-1.108e+06
10	2	469	288.08	-319.13	67.26	-98.31	292.10	9.912e+05	-1.519e+06	-2.670e+05	-2.605e+05	-1.255e+06
10	2	474	298.54	-187.55	-35.47	146.47	225.38	1.313e+06	-7.218e+05	7.256e+05	-1.341e+05	-9.223e+05
10	2	475	175.81	-348.44	125.36	-298.00	154.60	2.767e+05	-1.752e+06	-1.228e+06	-2.466e+05	-8.875e+05
10	2	478	247.19	-277.38	55.75	-85.94	252.53	8.298e+05	-1.267e+06	-2.471e+05	-1.903e+05	-1.048e+06

M_G M 1-2	N max	N min	N 1	N 2	N 1-2	M max	M min	M 1	M 2
	-721.29	-721.28	-590.69	-382.98		-4.110e+06	-4.108e+06	-2.902e+06	-1.631e+06
	494.48	467.71	483.81	385.16	3.435e+06		3.432e+06	2.206e+06	1.632e+06

Macro	Tipo	Angolo 1-X (gradi)
11	**Guscio**	**0.0**

M_G M 1-2	Cmb	Nodo	N max	N min	N 1	N 2	N 1-2	M max	M min	M 1	M 2
			N/mm	N/mm	N/mm	N/mm	N/mm	N	N	N	N	N
11	1	61	346.13	-419.11	55.19	-128.16	-371.47	1.308e+06	-2.033e+06	-3.968e+05	-3.283e+05	1.670e+06
11	1	62	444.27	-277.19	-46.51	213.58	-336.47	2.111e+06	-1.131e+06	1.171e+06	-1.907e+05	1.471e+06
11	1	63	221.29	-535.39	131.21	-445.31	-245.05	3.989e+05	-2.833e+06	-1.965e+06	-4.691e+05	1.432e+06
11	1	70	400.08	-473.32	72.28	-145.52	-422.90	1.545e+06	-2.403e+06	-4.228e+05	-4.348e+05	1.974e+06
11	1	75	485.67	-334.94	-86.01	236.74	-377.23	2.515e+06	-1.323e+06	1.372e+06	-1.789e+05	1.755e+06
11	1	76	292.44	-589.51	201.50	-498.56	-268.21	4.656e+05	-3.374e+06	-2.222e+06	-6.861e+05	1.760e+06
11	1	77	518.59	-127.01	-72.41	463.99	-179.64	2.752e+06	-1.814e+05	2.415e+06	1.554e+05	9.351e+05
11	1	78	91.56	-629.10	90.96	-628.50	-20.78	-5.536e+05	-3.467e+06	-3.175e+06	-8.462e+05	8.757e+05
11	1	88	546.49	-187.04	-141.61	501.06	-176.82	3.308e+06	-2.044e+05	2.831e+06	2.722e+05	1.203e+06
11	1	89	177.26	-683.19	177.10	-683.03	11.90	-6.505e+05	-4.168e+06	-3.683e+06	-1.136e+06	1.213e+06
11	1	101	553.61	30.18	30.26	553.54	6.31	3.196e+06	7.404e+05	3.150e+06	7.862e+05	3.322e+05
11	1	102	-42.88	-687.97	-104.06	-626.79	189.00	-1.486e+06	-3.904e+06	-3.877e+06	-1.513e+06	2.544e+05

11	1	106	573.41	-34.81	-29.77	568.36	55.16	3.881e+06	8.634e+05	3.769e+06	9.755e+05	5.706e+05
11	1	107	62.26	-747.19	-43.73	-641.20	273.06	-1.718e+06	-4.742e+06	-4.627e+06	-1.834e+06	5.788e+05
11	1	127	555.36	176.36	218.76	512.96	119.46	3.416e+06	1.566e+06	3.414e+06	1.569e+06	-7.178e+04
11	1	128	-155.47	-722.24	-383.77	-493.94	277.98	-2.319e+06	-4.115e+06	-4.105e+06	-2.328e+06	-1.313e+05
11	1	140	570.52	105.85	200.02	476.36	186.79	4.211e+06	1.791e+06	4.206e+06	1.796e+06	1.132e+05
11	1	141	-35.13	-787.67	-382.57	-440.23	375.17	-2.642e+06	-5.076e+06	-5.070e+06	-2.648e+06	1.234e+05
11	1	184	518.52	306.06	399.92	424.66	105.51	3.437e+06	2.204e+06	3.417e+06	2.224e+06	-1.546e+05
11	1	185	-241.11	-730.50	-631.90	-339.71	196.29	-2.985e+06	-4.112e+06	-4.078e+06	-3.019e+06	-1.938e+05
11	1	193	541.71	221.17	425.34	337.54	154.14	4.329e+06	2.463e+06	4.328e+06	2.465e+06	-5.187e+04
11	1	194	-103.61	-805.48	-687.51	-221.58	262.45	-3.315e+06	-5.195e+06	-5.194e+06	-3.316e+06	-4.805e+04
11	1	253	477.18	379.48	477.10	379.56	2.88	3.387e+06	2.477e+06	3.387e+06	2.477e+06	380.98
11	1	254	520.32	272.73	520.27	272.78	3.35	4.340e+06	2.721e+06	4.340e+06	2.721e+06	468.34
11	1	276	-128.13	-811.07	-811.06	-128.14	2.35	-3.568e+06	-5.211e+06	-5.211e+06	-3.568e+06	126.44
11	1	277	-269.33	-733.15	-733.14	-269.34	2.06	-3.271e+06	-4.044e+06	-4.044e+06	-3.271e+06	-7.53
11	1	336	537.84	226.37	429.42	334.79	-148.38	4.327e+06	2.462e+06	4.326e+06	2.463e+06	5.268e+04
11	1	337	-105.70	-804.14	-690.01	-219.84	-258.24	-3.314e+06	-5.194e+06	-5.193e+06	-3.315e+06	4.825e+04
11	1	345	513.82	311.59	403.44	421.97	-100.69	3.435e+06	2.203e+06	3.415e+06	2.223e+06	1.552e+05
11	1	346	-243.05	-729.05	-634.12	-337.98	-192.68	-2.984e+06	-4.111e+06	-4.077e+06	-3.018e+06	1.937e+05
11	1	389	566.15	113.05	207.41	471.79	-183.98	4.207e+06	1.788e+06	4.202e+06	1.794e+06	-1.126e+05
11	1	390	-38.97	-785.45	-387.25	-437.16	-372.40	-2.640e+06	-5.075e+06	-5.068e+06	-2.646e+06	-1.234e+05
11	1	402	550.94	182.48	224.79	508.64	-117.46	3.413e+06	1.564e+06	3.410e+06	1.566e+06	7.216e+04
11	1	403	-158.79	-719.97	-387.80	-490.96	-275.81	-2.317e+06	-4.113e+06	-4.103e+06	-2.327e+06	1.311e+05
11	1	423	570.19	-27.38	-21.92	564.73	-56.87	3.875e+06	8.602e+05	3.763e+06	9.721e+05	-5.700e+05
11	1	424	57.23	-744.76	-49.70	-637.83	-272.62	-1.716e+06	-4.739e+06	-4.624e+06	-1.831e+06	-5.790e+05
11	1	428	550.31	35.90	36.03	550.19	-8.11	3.191e+06	7.377e+05	3.145e+06	7.834e+05	-3.318e+05
11	1	429	-46.97	-685.58	-108.91	-623.64	-189.00	-1.484e+06	-3.902e+06	-3.875e+06	-1.511e+06	-2.547e+05
11	1	441	545.15	-181.55	-137.86	501.45	172.75	3.303e+06	-2.071e+05	2.827e+06	2.691e+05	-1.202e+06
11	1	442	171.78	-681.27	171.55	-681.04	-14.00	-6.475e+05	-4.165e+06	-3.680e+06	-1.133e+06	-1.213e+06
11	1	452	516.85	-123.04	-70.13	463.93	176.24	2.747e+06	-1.836e+05	2.411e+06	1.531e+05	-9.346e+05
11	1	453	87.34	-627.20	86.85	-626.71	18.72	-5.513e+05	-3.465e+06	-3.172e+06	-8.440e+05	-8.759e+05
11	1	454	485.03	-332.94	-86.19	238.28	375.43	2.513e+06	-1.324e+06	1.370e+06	-1.804e+05	-1.755e+06
11	1	455	287.72	-588.65	198.38	-499.32	265.16	4.681e+05	-3.371e+06	-2.220e+06	-6.836e+05	-1.759e+06
11	1	460	397.56	-473.06	71.35	-146.86	421.42	1.546e+06	-2.402e+06	-4.220e+05	-4.337e+05	-1.974e+06
11	1	467	443.33	-275.68	-46.94	214.58	334.88	2.109e+06	-1.132e+06	1.168e+06	-1.916e+05	-1.471e+06
11	1	468	217.84	-534.42	129.21	-445.80	242.51	4.007e+05	-2.830e+06	-1.962e+06	-4.673e+05	-1.432e+06
11	1	469	344.21	-418.68	54.56	-129.03	370.24	1.308e+06	-2.032e+06	-3.962e+05	-3.275e+05	-1.669e+06
11	2	61	266.26	-322.39	42.45	-98.59	-285.75	1.006e+06	-1.564e+06	-3.052e+05	-2.525e+05	1.285e+06
11	2	62	341.74	-213.23	-35.78	164.29	-258.83	1.624e+06	-8.701e+05	9.005e+05	-1.467e+05	1.132e+06
11	2	63	170.22	-411.84	100.93	-342.54	-188.50	3.068e+05	-2.179e+06	-1.511e+06	-3.608e+05	1.102e+06
11	2	70	307.75	-364.09	55.60	-111.94	-325.31	1.189e+06	-1.848e+06	-3.252e+05	-3.345e+05	1.519e+06
11	2	75	373.59	-257.64	-66.16	182.11	-290.18	1.935e+06	-1.017e+06	1.055e+06	-1.376e+05	1.350e+06
11	2	76	224.95	-453.47	155.00	-383.51	-206.31	3.582e+05	-2.596e+06	-1.710e+06	-5.278e+05	1.353e+06

11	2	77	398.92	-97.70	-55.70	356.91	-138.18	2.117e+06	-1.395e+05	1.858e+06	1.195e+05	7.193e+05
11	2	78	70.43	-483.92	69.97	-483.46	-15.99	-4.259e+05	-2.667e+06	-2.442e+06	-6.510e+05	6.736e+05
11	2	88	420.38	-143.88	-108.93	385.43	-136.01	2.545e+06	-1.572e+05	2.178e+06	2.094e+05	9.252e+05
11	2	89	136.36	-525.53	136.23	-525.40	9.16	-5.004e+05	-3.206e+06	-2.833e+06	-8.737e+05	9.332e+05
11	2	101	425.86	23.22	23.27	425.80	4.85	2.458e+06	5.695e+05	2.423e+06	6.048e+05	2.555e+05
11	2	102	-32.99	-529.21	-80.05	-482.15	145.39	-1.143e+06	-3.003e+06	-2.982e+06	-1.164e+06	1.957e+05
11	2	106	441.08	-26.78	-22.90	437.20	42.43	2.985e+06	6.642e+05	2.899e+06	7.504e+05	4.390e+05
11	2	107	47.89	-574.76	-33.64	-493.23	210.04	-1.322e+06	-3.648e+06	-3.559e+06	-1.410e+06	4.452e+05
11	2	127	427.20	135.66	168.28	394.58	91.89	2.628e+06	1.205e+06	2.626e+06	1.207e+06	-5.521e+04
11	2	128	-119.59	-555.57	-295.21	-379.96	213.83	-1.784e+06	-3.165e+06	-3.158e+06	-1.791e+06	-1.010e+05
11	2	140	438.87	81.42	153.86	366.43	143.68	3.239e+06	1.378e+06	3.235e+06	1.382e+06	8.706e+04
11	2	141	-27.02	-605.90	-294.29	-338.64	288.59	-2.032e+06	-3.905e+06	-3.900e+06	-2.037e+06	9.492e+04
11	2	184	398.86	235.43	307.63	326.66	81.16	2.644e+06	1.696e+06	2.629e+06	1.711e+06	-1.189e+05
11	2	185	-185.47	-561.92	-486.08	-261.32	150.99	-2.296e+06	-3.163e+06	-3.137e+06	-2.322e+06	-1.491e+05
11	2	193	416.70	170.13	327.19	259.65	118.57	3.330e+06	1.895e+06	3.329e+06	1.896e+06	-3.990e+04
11	2	194	-79.70	-619.60	-528.85	-170.45	201.89	-2.550e+06	-3.996e+06	-3.995e+06	-2.551e+06	-3.696e+04
11	2	253	367.06	291.90	367.00	291.97	2.22	2.605e+06	1.905e+06	2.605e+06	1.905e+06	293.06
11	2	254	400.25	209.79	400.21	209.83	2.57	3.338e+06	2.093e+06	3.338e+06	2.093e+06	360.26
11	2	276	-98.56	-623.90	-623.90	-98.57	1.81	-2.744e+06	-4.008e+06	-4.008e+06	-2.744e+06	97.26
11	2	277	-207.18	-563.96	-563.96	-207.19	1.58	-2.516e+06	-3.111e+06	-3.111e+06	-2.516e+06	-5.80
11	2	336	413.73	174.13	330.32	257.53	-114.14	3.329e+06	1.894e+06	3.328e+06	1.895e+06	4.052e+04
11	2	337	-81.31	-618.57	-530.77	-169.10	-198.65	-2.549e+06	-3.996e+06	-3.995e+06	-2.550e+06	3.711e+04
11	2	345	395.25	239.68	310.34	324.59	-77.46	2.642e+06	1.694e+06	2.627e+06	1.710e+06	1.194e+05
11	2	346	-186.96	-560.81	-487.78	-259.99	-148.22	-2.295e+06	-3.163e+06	-3.136e+06	-2.321e+06	1.490e+05
11	2	389	435.50	86.96	159.55	362.92	-141.53	3.236e+06	1.376e+06	3.232e+06	1.380e+06	-8.663e+04
11	2	390	-29.97	-604.19	-297.89	-336.28	-286.47	-2.031e+06	-3.904e+06	-3.899e+06	-2.036e+06	-9.491e+04
11	2	402	423.80	140.37	172.92	391.26	-90.36	2.625e+06	1.203e+06	2.623e+06	1.205e+06	5.551e+04
11	2	403	-122.14	-553.82	-298.31	-377.66	-212.16	-1.782e+06	-3.164e+06	-3.156e+06	-1.790e+06	1.009e+05
11	2	423	438.61	-21.07	-16.86	434.41	-43.75	2.981e+06	6.617e+05	2.895e+06	7.478e+05	-4.385e+05
11	2	424	44.03	-572.89	-38.23	-490.64	-209.71	-1.320e+06	-3.646e+06	-3.557e+06	-1.408e+06	-4.453e+05
11	2	428	423.32	27.61	27.71	423.22	-6.24	2.454e+06	5.674e+05	2.419e+06	6.026e+05	-2.552e+05
11	2	429	-36.13	-527.37	-83.78	-479.72	-145.38	-1.142e+06	-3.001e+06	-2.980e+06	-1.163e+06	-1.959e+05
11	2	441	419.34	-139.65	-106.04	385.73	132.88	2.541e+06	-1.593e+05	2.174e+06	2.070e+05	-9.246e+05
11	2	442	132.14	-524.06	131.96	-523.88	-10.77	-4.981e+05	-3.204e+06	-2.831e+06	-8.715e+05	-9.333e+05
11	2	452	397.57	-94.65	-53.94	356.87	135.57	2.113e+06	-1.412e+05	1.854e+06	1.177e+05	-7.189e+05
11	2	453	67.19	-482.46	66.81	-482.09	14.40	-4.241e+05	-2.665e+06	-2.440e+06	-6.493e+05	-6.738e+05
11	2	454	373.10	-256.11	-66.30	183.29	288.79	1.933e+06	-1.018e+06	1.054e+06	-1.388e+05	-1.350e+06
11	2	455	221.32	-452.81	152.60	-384.09	203.97	3.600e+05	-2.593e+06	-1.707e+06	-5.258e+05	-1.353e+06
11	2	460	305.81	-363.89	54.89	-112.97	324.17	1.189e+06	-1.847e+06	-3.246e+05	-3.336e+05	-1.518e+06
11	2	467	341.02	-212.06	-36.11	165.06	257.60	1.622e+06	-8.707e+05	8.988e+05	-1.474e+05	-1.131e+06
11	2	468	167.57	-411.09	99.40	-342.92	186.55	3.083e+05	-2.177e+06	-1.510e+06	-3.594e+05	-1.102e+06
11	2	469	264.78	-322.06	41.97	-99.26	284.80	1.006e+06	-1.563e+06	-3.048e+05	-2.519e+05	-1.284e+06

M_G M 1-2	N max	N min	N 1	N 2	N 1-2	M max	M min	M 1	M 2
	-811.07	-811.06	-683.03	-422.90		-5.211e+06	-5.211e+06	-3.568e+06	-1.974e+06
	573.41	520.27	568.36	421.42	4.340e+06		4.340e+06	2.721e+06	1.974e+06

Macro	Tipo	Angolo 1-X (gradi)
12	**Guscio**	**0.0**

M_G M 1-2	Cmb	Nodo	N max	N min	N 1	N 2	N 1-2	M max	M min	M 1	M 2
			N/mm	N/mm	N/mm	N/mm	N/mm	N	N	N	N	N
12	1	70	368.06	-479.18	35.63	-146.75	-413.69	1.568e+06	-2.469e+06	-4.785e+05	-4.224e+05	2.018e+06
12	1	75	497.99	-309.79	-47.94	236.14	-378.09	2.574e+06	-1.344e+06	1.429e+06	-1.999e+05	1.782e+06
12	1	76	209.48	-620.41	94.29	-505.22	-286.93	4.380e+05	-3.471e+06	-2.383e+06	-6.494e+05	1.752e+06
12	1	83	421.81	-533.02	54.72	-165.94	-464.49	1.830e+06	-2.882e+06	-5.047e+05	-5.473e+05	2.356e+06
12	1	86	534.63	-369.17	-91.85	257.30	-416.82	3.035e+06	-1.548e+06	1.657e+06	-1.694e+05	2.102e+06
12	1	87	283.13	-670.97	171.75	-559.60	-306.36	5.008e+05	-4.092e+06	-2.673e+06	-9.183e+05	2.122e+06
12	1	88	594.95	-127.45	-55.76	523.26	-215.99	3.386e+06	-1.709e+05	2.957e+06	2.587e+05	1.159e+06
12	1	89	40.04	-729.79	35.65	-725.40	-57.95	-7.396e+05	-4.278e+06	-3.886e+06	-1.132e+06	1.111e+06
12	1	95	614.51	-191.21	-133.40	556.70	-207.93	4.033e+06	-1.797e+05	3.433e+06	4.202e+05	1.472e+06
12	1	96	132.63	-778.35	132.32	-778.05	-16.70	-8.615e+05	-5.096e+06	-4.464e+06	-1.494e+06	1.509e+06
12	1	106	646.98	60.14	61.02	646.10	-22.68	3.958e+06	9.618e+05	3.888e+06	1.032e+06	4.542e+05
12	1	107	-132.03	-797.82	-172.72	-757.14	159.48	-1.881e+06	-4.843e+06	-4.790e+06	-1.934e+06	3.938e+05
12	1	116	653.32	-8.60	-6.78	651.50	34.71	4.768e+06	1.116e+06	4.609e+06	1.276e+06	7.466e+05
12	1	117	-17.20	-849.89	-104.80	-762.29	255.48	-2.151e+06	-5.838e+06	-5.661e+06	-2.328e+06	7.876e+05
12	1	140	654.18	237.03	261.77	629.44	98.54	4.263e+06	1.965e+06	4.263e+06	1.965e+06	-2.804e+04
12	1	141	-284.42	-829.03	-464.52	-648.94	256.22	-2.892e+06	-5.139e+06	-5.136e+06	-2.894e+06	-7.689e+04
12	1	149	651.07	163.75	238.41	576.42	175.52	5.216e+06	2.227e+06	5.201e+06	2.242e+06	2.071e+05
12	1	150	-147.61	-889.56	-460.48	-576.70	366.40	-3.253e+06	-6.295e+06	-6.275e+06	-3.273e+06	2.438e+05
12	1	193	612.72	394.31	450.86	556.17	95.67	4.327e+06	2.722e+06	4.313e+06	2.736e+06	-1.477e+05
12	1	194	-400.93	-828.74	-720.28	-509.39	186.11	-3.669e+06	-5.185e+06	-5.164e+06	-3.690e+06	-1.782e+05
12	1	197	611.83	310.07	475.31	446.60	150.20	5.405e+06	3.016e+06	5.405e+06	3.016e+06	-1.443e+04
12	1	198	-240.40	-903.68	-778.07	-366.01	259.87	-4.034e+06	-6.494e+06	-6.494e+06	-4.034e+06	5895.12
12	1	254	530.74	516.22	529.89	517.06	3.40	4.294e+06	3.033e+06	4.294e+06	3.033e+06	190.15
12	1	255	574.30	384.77	574.22	384.85	3.93	5.441e+06	3.313e+06	5.441e+06	3.313e+06	151.74
12	1	275	-275.06	-905.94	-905.93	-275.08	2.73	-4.323e+06	-6.537e+06	-6.537e+06	-4.323e+06	-33.48
12	1	276	-445.77	-823.15	-823.14	-445.78	2.39	-3.991e+06	-5.140e+06	-5.140e+06	-3.991e+06	-105.64
12	1	332	606.23	317.50	480.02	443.72	-143.22	5.402e+06	3.015e+06	5.402e+06	3.015e+06	1.467e+04
12	1	333	-243.32	-901.75	-780.91	-364.16	-254.88	-4.032e+06	-6.493e+06	-6.493e+06	-4.032e+06	-6001.41

12	1	336	606.55	401.73	454.99	553.29	-89.84	4.325e+06	2.721e+06	4.311e+06	2.734e+06	1.480e+05	
12	1	337	-403.87	-826.48	-722.82	-507.54	-181.83	-3.668e+06	-5.184e+06	-5.163e+06	-3.689e+06	1.779e+05	
12	1	380	645.37	173.44	247.45	571.35	-171.62	5.210e+06	2.224e+06	5.195e+06	2.239e+06	-2.069e+05	
12	1	381	-152.79	-886.50	-465.92	-573.37	-362.90	-3.251e+06	-6.292e+06	-6.273e+06	-3.270e+06	-2.440e+05	
12	1	389	648.79	245.04	269.21	624.62	-95.79	4.258e+06	1.962e+06	4.258e+06	1.962e+06	2.827e+04	
12	1	390	-289.08	-825.85	-469.24	-645.69	-253.47	-2.890e+06	-5.136e+06	-5.134e+06	-2.892e+06	7.653e+04	
12	1	413	649.09	1.77	3.82	647.04	-36.34	4.761e+06	1.113e+06	4.601e+06	1.272e+06	-7.457e+05	
12	1	414	-23.90	-846.63	-112.10	-758.43	-254.53	-2.148e+06	-5.834e+06	-5.658e+06	-2.325e+06	-7.878e+05	
12	1	423	642.94	68.01	68.76	642.19	20.77	3.952e+06	9.586e+05	3.881e+06	1.029e+06	-4.537e+05	
12	1	424	-137.57	-794.69	-178.68	-753.57	-159.15	-1.878e+06	-4.840e+06	-4.786e+06	-1.932e+06	-3.941e+05	
12	1	434	612.76	-183.08	-127.67	557.35	202.55	4.026e+06	-1.829e+05	3.427e+06	4.161e+05	-1.470e+06	
12	1	435	125.18	-775.77	124.94	-775.53	14.50	-8.580e+05	-5.092e+06	-4.459e+06	-1.490e+06	-1.509e+06	
12	1	441	592.93	-121.74	-52.28	523.47	211.70	3.380e+06	-1.738e+05	2.951e+06	2.555e+05	-1.158e+06	
12	1	442	34.30	-727.37	30.21	-723.28	55.69	-7.367e+05	-4.274e+06	-3.882e+06	-1.129e+06	-1.111e+06	
12	1	443	533.94	-366.34	-91.91	259.51	414.43	3.032e+06	-1.549e+06	1.654e+06	-1.716e+05	-2.101e+06	
12	1	444	276.37	-669.75	167.09	-560.48	302.40	5.037e+05	-4.088e+06	-2.669e+06	-9.149e+05	-2.122e+06	
12	1	447	418.10	-532.77	53.34	-168.01	462.37	1.831e+06	-2.880e+06	-5.036e+05	-5.454e+05	-2.356e+06	
12	1	454	497.05	-307.74	-48.30	237.61	376.14	2.571e+06	-1.346e+06	1.427e+06	-2.015e+05	-1.781e+06	
12	1	455	204.65	-619.22	91.35	-505.91	283.74	4.404e+05	-3.467e+06	-2.380e+06	-6.469e+05	-1.751e+06	
12	1	460	365.47	-478.79	34.75	-148.07	412.12	1.569e+06	-2.467e+06	-4.776e+05	-4.212e+05	-2.018e+06	
12	2	70	283.13	-368.60	27.41	-112.88	-318.22	1.206e+06	-1.899e+06	-3.681e+05	-3.249e+05	1.553e+06	
12	2	75	383.07	-238.30	-36.87	181.65	-290.84	1.980e+06	-1.034e+06	1.100e+06	-1.538e+05	1.371e+06	
12	2	76	161.14	-477.24	72.53	-388.63	-220.71	3.370e+05	-2.670e+06	-1.833e+06	-4.996e+05	1.347e+06	
12	2	83	324.47	-410.02	42.10	-127.65	-357.30	1.408e+06	-2.217e+06	-3.882e+05	-4.210e+05	1.813e+06	
12	2	86	411.25	-283.98	-70.65	197.92	-320.63	2.335e+06	-1.191e+06	1.274e+06	-1.303e+05	1.617e+06	
12	2	87	217.79	-516.13	132.12	-430.46	-235.66	3.852e+05	-3.148e+06	-2.056e+06	-7.064e+05	1.633e+06	
12	2	88	457.66	-98.04	-42.90	402.51	-166.14	2.605e+06	-1.315e+05	2.274e+06	1.990e+05	8.918e+05	
12	2	89	30.80	-561.38	27.43	-558.00	-44.58	-5.689e+05	-3.291e+06	-2.989e+06	-8.705e+05	8.543e+05	
12	2	95	472.70	-147.08	-102.62	428.23	-159.95	3.102e+06	-1.382e+05	2.641e+06	3.233e+05	1.132e+06	
12	2	96	102.02	-598.73	101.79	-598.50	-12.84	-6.627e+05	-3.920e+06	-3.434e+06	-1.149e+06	1.161e+06	
12	2	106	497.68	46.26	46.94	497.00	-17.45	3.045e+06	7.399e+05	2.991e+06	7.941e+05	3.494e+05	
12	2	107	-101.56	-613.71	-132.86	-582.41	122.67	-1.447e+06	-3.725e+06	-3.684e+06	-1.488e+06	3.029e+05	
12	2	116	502.56	-6.62	-5.22	501.15	26.70	3.668e+06	8.586e+05	3.545e+06	9.814e+05	5.743e+05	
12	2	117	-13.23	-653.76	-80.61	-586.37	196.53	-1.655e+06	-4.491e+06	-4.355e+06	-1.791e+06	6.058e+05	
12	2	140	503.22	182.33	201.36	484.18	75.80	3.279e+06	1.511e+06	3.279e+06	1.512e+06	-2.157e+04	
12	2	141	-218.79	-637.72	-357.32	-499.18	197.09	-2.224e+06	-3.953e+06	-3.951e+06	-2.226e+06	-5.915e+04	
12	2	149	500.83	125.96	183.39	443.40	135.02	4.012e+06	1.713e+06	4.001e+06	1.724e+06	1.593e+05	
12	2	150	-113.55	-684.28	-354.21	-443.62	281.84	-2.502e+06	-4.842e+06	-4.827e+06	-2.518e+06	1.876e+05	
12	2	193	471.32	303.31	346.81	427.82	73.59	3.329e+06	2.094e+06	3.318e+06	2.105e+06	-1.136e+05	
12	2	194	-308.41	-637.49	-554.06	-391.84	143.16	-2.822e+06	-3.988e+06	-3.972e+06	-2.839e+06	-1.371e+05	
12	2	197	470.64	238.51	365.62	343.54	115.54	4.158e+06	2.320e+06	4.158e+06	2.320e+06	-1.110e+04	
12	2	198	-184.93	-695.14	-598.52	-281.54	199.90	-3.103e+06	-4.995e+06	-4.995e+06	-3.103e+06		

4534.71												
12	2	254	408.26	397.09	407.61	397.74	2.61	3.303e+06	2.333e+06	3.303e+06	2.333e+06	146.27
12	2	255	441.77	295.98	441.71	296.04	3.02	4.185e+06	2.548e+06	4.185e+06	2.548e+06	116.73
12	2	275	-211.59	-696.88	-696.87	-211.60	2.10	-3.325e+06	-5.029e+06	-5.029e+06	-3.325e+06	-25.76
12	2	276	-342.90	-633.20	-633.18	-342.91	1.84	-3.070e+06	-3.954e+06	-3.954e+06	-3.070e+06	-81.26
12	2	332	466.33	244.23	369.24	341.32	-110.17	4.156e+06	2.319e+06	4.156e+06	2.319e+06	1.128e+04
12	2	333	-187.17	-693.66	-600.70	-280.12	-196.06	-3.102e+06	-4.994e+06	-4.994e+06	-3.102e+06	-4616.47
12	2	336	466.57	309.02	349.99	425.60	-69.11	3.327e+06	2.093e+06	3.316e+06	2.103e+06	1.138e+05
12	2	337	-310.67	-635.76	-556.01	-390.41	-139.87	-2.822e+06	-3.988e+06	-3.971e+06	-2.838e+06	1.369e+05
12	2	380	496.44	133.41	190.35	439.50	-132.01	4.008e+06	1.711e+06	3.996e+06	1.722e+06	-1.591e+05
12	2	381	-117.53	-681.92	-358.40	-441.06	-279.15	-2.501e+06	-4.840e+06	-4.825e+06	-2.516e+06	-1.877e+05
12	2	389	499.07	188.49	207.09	480.48	-73.68	3.275e+06	1.509e+06	3.275e+06	1.509e+06	2.175e+04
12	2	390	-222.37	-635.27	-360.95	-496.68	-194.97	-2.223e+06	-3.951e+06	-3.949e+06	-2.225e+06	5.887e+04
12	2	413	499.30	1.36	2.94	497.73	-27.95	3.662e+06	8.559e+05	3.539e+06	9.785e+05	-5.736e+05
12	2	414	-18.38	-651.26	-86.23	-583.41	-195.79	-1.652e+06	-4.488e+06	-4.352e+06	-1.788e+06	-6.060e+05
12	2	423	494.57	52.31	52.89	493.99	15.97	3.040e+06	7.374e+05	2.986e+06	7.916e+05	-3.490e+05
12	2	424	-105.82	-611.30	-137.45	-579.67	-122.42	-1.445e+06	-3.723e+06	-3.682e+06	-1.486e+06	-3.032e+05
12	2	434	471.36	-140.83	-98.21	428.73	155.81	3.097e+06	-1.407e+05	2.636e+06	3.201e+05	-1.131e+06
12	2	435	96.29	-596.74	96.11	-596.56	11.15	-6.600e+05	-3.917e+06	-3.430e+06	-1.146e+06	-1.161e+06
12	2	441	456.10	-93.64	-40.21	402.67	162.84	2.600e+06	-1.337e+05	2.270e+06	1.966e+05	-8.910e+05
12	2	442	26.39	-559.52	23.24	-556.37	42.84	-5.667e+05	-3.288e+06	-2.986e+06	-8.684e+05	-8.543e+05
12	2	443	410.72	-281.80	-70.70	199.62	318.79	2.332e+06	-1.192e+06	1.272e+06	-1.320e+05	-1.616e+06
12	2	444	212.59	-515.20	128.53	-431.14	232.62	3.875e+05	-3.145e+06	-2.053e+06	-7.038e+05	-1.632e+06
12	2	447	321.61	-409.82	41.03	-129.24	355.67	1.409e+06	-2.216e+06	-3.874e+05	-4.196e+05	-1.812e+06
12	2	454	382.34	-236.72	-37.16	182.78	289.34	1.978e+06	-1.035e+06	1.098e+06	-1.550e+05	-1.370e+06
12	2	455	157.43	-476.32	70.27	-389.16	218.27	3.388e+05	-2.667e+06	-1.831e+06	-4.976e+05	-1.347e+06
12	2	460	281.13	-368.30	26.73	-113.90	317.01	1.207e+06	-1.898e+06	-3.674e+05	-3.240e+05	-1.552e+06

M_G			N max	N min	N 1	N 2	N 1-2	M max	M min	M 1	M 2
M 1-2											
			-905.94	-905.93	-778.05	-464.49		-6.537e+06	-6.537e+06	-4.323e+06	-2.356e+06
			654.18	574.22	651.50	462.37	5.441e+06		5.441e+06	3.313e+06	2.356e+06

Macro	Tipo	Angolo 1-X (gradi)
13	**Guscio**	**0.0**

M_G	Cmb	Nodo	N max	N min	N 1	N 2	N 1-2	M max	M min	M 1	M 2
M 1-2											
			N/mm	N/mm	N/mm	N/mm	N/mm	N	N	N	N	N
13	1	83	388.34	-540.69	14.79	-167.14	-455.52	1.857e+06	-2.957e+06	-5.667e+05	-5.333e+05	2.407e+06

13	1	86	549.31	-342.90	-50.71	257.12	-418.71	3.103e+06	-1.572e+06	1.724e+06	-1.931e+05	2.132e+06
13	1	87	196.37	-707.67	55.72	-567.02	-327.68	4.686e+05	-4.200e+06	-2.854e+06	-8.769e+05	2.115e+06
13	1	94	441.89	-594.28	36.28	-188.66	-505.73	2.135e+06	-3.409e+06	-5.924e+05	-6.813e+05	2.772e+06
13	1	95	670.30	-129.43	-40.64	581.52	-251.24	4.122e+06	-1.394e+05	3.577e+06	4.055e+05	1.423e+06
13	1	96	-10.20	-835.38	-20.95	-824.63	-93.56	-9.675e+05	-5.215e+06	-4.694e+06	-1.489e+06	1.394e+06
13	1	99	580.82	-404.64	-100.10	276.28	-455.38	3.622e+06	-1.774e+06	1.975e+06	-1.270e+05	2.485e+06
13	1	100	273.48	-754.43	142.49	-623.43	-342.77	5.124e+05	-4.908e+06	-3.172e+06	-1.223e+06	2.529e+06
13	1	108	680.25	-197.86	-128.56	610.95	-236.76	4.874e+06	-1.172e+05	4.115e+06	6.412e+05	1.792e+06
13	1	109	90.23	-877.38	88.42	-875.57	-41.79	-1.131e+06	-6.173e+06	-5.345e+06	-1.960e+06	1.869e+06
13	1	116	740.71	87.32	91.23	736.81	-50.38	4.853e+06	1.233e+06	4.746e+06	1.341e+06	6.145e+05
13	1	117	-218.28	-914.65	-244.07	-888.86	131.51	-2.346e+06	-5.942e+06	-5.847e+06	-2.442e+06	5.793e+05
13	1	125	731.87	13.52	13.96	731.43	17.87	5.820e+06	1.434e+06	5.587e+06	1.667e+06	9.844e+05
13	1	126	-92.19	-957.92	-166.79	-883.33	242.93	-2.667e+06	-7.135e+06	-6.861e+06	-2.941e+06	1.073e+06
13	1	149	757.57	290.98	304.87	743.68	79.29	5.268e+06	2.433e+06	5.267e+06	2.434e+06	4.683e+04
13	1	150	-407.66	-945.55	-548.70	-804.51	236.59	-3.551e+06	-6.351e+06	-6.351e+06	-3.551e+06	1.774e+04
13	1	158	733.06	214.33	276.37	671.02	168.32	6.428e+06	2.742e+06	6.393e+06	2.777e+06	3.599e+05
13	1	159	-253.47	-998.57	-541.84	-710.21	362.91	-3.956e+06	-7.762e+06	-7.712e+06	-4.007e+06	4.368e+05
13	1	197	719.50	467.89	502.38	685.01	86.54	5.398e+06	3.318e+06	5.390e+06	3.325e+06	-1.232e+05
13	1	198	-557.13	-934.99	-812.75	-679.37	176.77	-4.447e+06	-6.471e+06	-6.461e+06	-4.457e+06	-1.409e+05
13	1	201	686.40	388.25	526.64	548.01	148.69	6.725e+06	3.648e+06	6.723e+06	3.649e+06	5.899e+04
13	1	202	-370.17	-1008.95	-874.42	-504.70	260.46	-4.844e+06	-8.078e+06	-8.075e+06	-4.848e+06	1.032e+05
13	1	255	651.50	583.78	584.01	651.27	3.98	5.391e+06	3.668e+06	5.391e+06	3.668e+06	-193.10
13	1	256	630.66	488.14	630.52	488.29	4.57	6.801e+06	3.981e+06	6.801e+06	3.981e+06	-436.55
13	1	274	-415.05	-1007.85	-1007.83	-415.07	3.18	-5.167e+06	-8.166e+06	-8.166e+06	-5.167e+06	-272.37
13	1	275	-621.39	-918.14	-918.11	-621.42	2.78	-4.803e+06	-6.460e+06	-6.460e+06	-4.803e+06	-263.79
13	1	328	678.97	398.09	531.90	545.16	-140.28	6.721e+06	3.647e+06	6.720e+06	3.648e+06	-5.987e+04
13	1	329	-374.08	-1006.29	-877.60	-502.77	-254.55	-4.843e+06	-8.077e+06	-8.073e+06	-4.846e+06	-1.038e+05
13	1	332	712.75	476.40	507.14	682.01	-79.50	5.394e+06	3.316e+06	5.387e+06	3.323e+06	1.228e+05
13	1	333	-561.42	-931.63	-815.63	-677.41	-171.72	-4.446e+06	-6.470e+06	-6.460e+06	-4.455e+06	1.404e+05
13	1	371	725.96	226.79	287.18	665.57	-162.78	6.420e+06	2.738e+06	6.385e+06	2.774e+06	-3.605e+05
13	1	372	-260.24	-994.50	-548.10	-706.64	-358.47	-3.954e+06	-7.759e+06	-7.708e+06	-4.005e+06	-4.373e+05
13	1	380	751.38	300.94	313.95	738.37	-75.44	5.262e+06	2.430e+06	5.261e+06	2.431e+06	-4.706e+04
13	1	381	-413.84	-941.35	-554.20	-801.00	-233.11	-3.549e+06	-6.348e+06	-6.348e+06	-3.549e+06	-1.828e+04
13	1	404	726.29	27.91	28.42	725.78	-18.87	5.809e+06	1.430e+06	5.576e+06	1.663e+06	-9.832e+05
13	1	405	-100.90	-953.69	-175.64	-878.94	-241.16	-2.663e+06	-7.131e+06	-6.856e+06	-2.938e+06	-1.073e+06
13	1	413	735.80	98.01	101.72	732.09	48.54	4.845e+06	1.230e+06	4.737e+06	1.337e+06	-6.137e+05
13	1	414	-225.48	-910.71	-251.37	-884.82	-130.67	-2.343e+06	-5.938e+06	-5.842e+06	-2.439e+06	-5.797e+05
13	1	421	677.73	-185.37	-119.34	611.70	229.41	4.862e+06	-1.204e+05	4.106e+06	6.360e+05	-1.788e+06
13	1	422	80.22	-873.90	78.56	-872.24	39.75	-1.127e+06	-6.167e+06	-5.339e+06	-1.956e+06	-1.868e+06

13	1	430	579.94	-400.37	-99.93	279.50	451.95	3.617e+06	-1.775e+06	1.972e+06	-1.304e+05	-2.483e+06
13	1	431	263.58	-752.55	135.21	-624.18	337.58	5.156e+05	-4.901e+06	-3.167e+06	-1.219e+06	-2.527e+06
13	1	434	667.83	-121.05	-35.22	582.00	245.65	4.113e+06	-1.428e+05	3.569e+06	4.012e+05	-1.421e+06
13	1	435	-17.88	-832.32	-28.22	-821.98	91.20	-9.641e+05	-5.210e+06	-4.688e+06	-1.486e+06	-1.394e+06
13	1	436	435.94	-593.94	33.97	-191.97	502.39	2.136e+06	-3.405e+06	-5.906e+05	-6.782e+05	-2.770e+06
13	1	443	548.32	-340.01	-50.95	259.26	416.20	3.099e+06	-1.574e+06	1.721e+06	-1.955e+05	-2.131e+06
13	1	444	189.50	-706.11	51.25	-567.86	323.59	4.715e+05	-4.195e+06	-2.850e+06	-8.734e+05	-2.114e+06
13	1	447	384.59	-540.30	13.48	-169.18	453.33	1.858e+06	-2.955e+06	-5.655e+05	-5.314e+05	-2.406e+06
13	2	83	298.72	-415.91	11.38	-128.57	-350.40	1.429e+06	-2.275e+06	-4.360e+05	-4.102e+05	1.852e+06
13	2	86	422.55	-263.77	-39.01	197.78	-322.09	2.387e+06	-1.209e+06	1.326e+06	-1.485e+05	1.640e+06
13	2	87	151.05	-544.36	42.86	-436.17	-252.06	3.605e+05	-3.231e+06	-2.196e+06	-6.745e+05	1.627e+06
13	2	94	339.92	-457.14	27.90	-145.13	-389.02	1.642e+06	-2.622e+06	-4.557e+05	-5.241e+05	2.132e+06
13	2	95	515.62	-99.56	-31.26	447.32	-193.26	3.170e+06	-1.072e+05	2.751e+06	3.119e+05	1.095e+06
13	2	96	-7.84	-642.60	-16.11	-634.33	-71.97	-7.442e+05	-4.012e+06	-3.610e+06	-1.145e+06	1.072e+06
13	2	99	446.78	-311.26	-77.00	212.52	-350.29	2.786e+06	-1.365e+06	1.519e+06	-9.766e+04	1.911e+06
13	2	100	210.37	-580.33	109.61	-479.56	-263.67	3.941e+05	-3.775e+06	-2.440e+06	-9.411e+05	1.945e+06
13	2	108	523.27	-152.20	-98.89	469.96	-182.12	3.749e+06	-9.017e+04	3.166e+06	4.933e+05	1.378e+06
13	2	109	69.40	-674.91	68.01	-673.52	-32.14	-8.700e+05	-4.749e+06	-4.111e+06	-1.507e+06	1.437e+06
13	2	116	569.78	67.17	70.18	566.77	-38.76	3.733e+06	9.488e+05	3.651e+06	1.032e+06	4.727e+05
13	2	117	-167.91	-703.58	-187.75	-683.74	101.16	-1.804e+06	-4.571e+06	-4.497e+06	-1.878e+06	4.456e+05
13	2	125	562.98	10.40	10.74	562.64	13.75	4.477e+06	1.103e+06	4.298e+06	1.282e+06	7.572e+05
13	2	126	-70.92	-736.87	-128.30	-679.49	186.87	-2.051e+06	-5.489e+06	-5.278e+06	-2.262e+06	8.252e+05
13	2	149	582.75	223.83	234.52	572.06	61.00	4.052e+06	1.872e+06	4.052e+06	1.872e+06	3.602e+04
13	2	150	-313.58	-727.35	-422.08	-618.85	181.99	-2.732e+06	-4.886e+06	-4.886e+06	-2.732e+06	1.365e+04
13	2	158	563.89	164.87	212.59	516.17	129.47	4.945e+06	2.109e+06	4.917e+06	2.136e+06	2.768e+05
13	2	159	-194.98	-768.13	-416.80	-546.31	279.16	-3.043e+06	-5.971e+06	-5.932e+06	-3.082e+06	3.360e+05
13	2	197	553.46	359.91	386.45	526.93	66.57	4.152e+06	2.552e+06	4.146e+06	2.558e+06	-9.478e+04
13	2	198	-428.56	-719.22	-625.19	-522.59	135.98	-3.421e+06	-4.978e+06	-4.970e+06	-3.428e+06	-1.084e+05
13	2	201	528.00	298.65	405.11	421.55	114.38	5.173e+06	2.806e+06	5.172e+06	2.807e+06	4.538e+04
13	2	202	-284.75	-776.12	-672.63	-388.23	200.35	-3.726e+06	-6.214e+06	-6.212e+06	-3.729e+06	7.939e+04
13	2	255	501.16	449.06	449.24	500.98	3.06	4.147e+06	2.822e+06	4.147e+06	2.822e+06	-148.54
13	2	256	485.13	375.49	485.01	375.60	3.51	5.231e+06	3.062e+06	5.231e+06	3.062e+06	-335.81
13	2	274	-319.27	-775.27	-775.25	-319.29	2.45	-3.974e+06	-6.281e+06	-6.281e+06	-3.974e+06	-209.51
13	2	275	-477.99	-706.26	-706.24	-478.01	2.14	-3.694e+06	-4.969e+06	-4.969e+06	-3.694e+06	-202.91
13	2	328	522.29	306.22	409.16	419.35	-107.91	5.170e+06	2.805e+06	5.169e+06	2.806e+06	-4.606e+04
13	2	329	-287.76	-774.07	-675.08	-386.75	-195.81	-3.725e+06	-6.213e+06	-6.210e+06	-3.728e+06	-7.981e+04
13	2	332	548.27	366.46	390.10	524.62	-61.15	4.150e+06	2.551e+06	4.144e+06	2.556e+06	9.447e+04
13	2	333	-431.86	-716.64	-627.41	-521.09	-132.09	-3.420e+06	-4.977e+06	-4.969e+06	-3.427e+06	1.080e+05
13	2	371	558.43	174.46	220.91	511.98	-125.21	4.939e+06	2.107e+06	4.911e+06	2.134e+06	-2.773e+05
13	2	372	-200.18	-765.00	-421.62	-543.57	-275.75	-3.041e+06	-5.969e+06	-5.929e+06	-3.080e+06	-3.364e+05

13	2	380	577.99	231.49	241.50	567.98	-58.03	4.047e+06	1.870e+06	4.047e+06	1.870e+06	-3.620e+04
13	2	381	-318.34	-724.12	-426.31	-616.15	-179.31	-2.730e+06	-4.883e+06	-4.883e+06	-2.730e+06	-1.407e+04
13	2	404	558.68	21.47	21.86	558.29	-14.52	4.468e+06	1.100e+06	4.289e+06	1.280e+06	-7.563e+05
13	2	405	-77.61	-733.61	-135.11	-676.11	-185.51	-2.049e+06	-5.485e+06	-5.274e+06	-2.260e+06	-8.254e+05
13	2	413	566.00	75.39	78.25	563.14	37.34	3.727e+06	9.461e+05	3.644e+06	1.029e+06	-4.721e+05
13	2	414	-173.45	-700.55	-193.36	-680.63	-100.51	-1.802e+06	-4.568e+06	-4.494e+06	-1.876e+06	-4.459e+05
13	2	421	521.33	-142.59	-91.80	470.54	176.47	3.740e+06	-9.263e+04	3.159e+06	4.892e+05	-1.375e+06
13	2	422	61.70	-672.23	60.43	-670.96	30.57	-8.670e+05	-4.744e+06	-4.107e+06	-1.504e+06	-1.437e+06
13	2	430	446.11	-307.98	-76.87	215.00	347.65	2.782e+06	-1.366e+06	1.517e+06	-1.003e+05	-1.910e+06
13	2	431	202.76	-578.88	104.01	-480.14	259.68	3.966e+05	-3.770e+06	-2.436e+06	-9.377e+05	-1.944e+06
13	2	434	513.72	-93.11	-27.09	447.70	188.96	3.164e+06	-1.098e+05	2.746e+06	3.086e+05	-1.093e+06
13	2	435	-13.75	-640.25	-21.71	-632.29	70.15	-7.416e+05	-4.008e+06	-3.606e+06	-1.143e+06	-1.072e+06
13	2	436	335.34	-456.88	26.13	-147.67	386.46	1.643e+06	-2.619e+06	-4.543e+05	-5.217e+05	-2.131e+06
13	2	443	421.78	-261.55	-39.19	199.43	320.16	2.384e+06	-1.211e+06	1.324e+06	-1.503e+05	-1.639e+06
13	2	444	145.77	-543.16	39.42	-436.81	248.91	3.627e+05	-3.227e+06	-2.192e+06	-6.718e+05	-1.626e+06
13	2	447	295.84	-415.61	10.37	-130.14	348.72	1.429e+06	-2.273e+06	-4.350e+05	-4.087e+05	-1.851e+06

M_G	N max	N min	N 1	N 2	N 1-2	M max	M min	M 1	M 2
	-1008.95	-1007.83	-888.86	-505.73		-8.166e+06	-8.166e+06	-5.167e+06	-2.770e+06
	757.57	630.52	743.68	502.39	6.801e+06		6.801e+06	3.981e+06	2.772e+06

Macro	Tipo	Angolo 1-X (gradi)
14	**Guscio**	**0.0**

M_G	Cmb	Nodo	N max	N min	N 1	N 2	N 1-2	M max	M min	M 1	M 2
			N/mm	N/mm	N/mm	N/mm	N/mm	N	N	N	N	N
14	1	94	407.34	-603.55	-6.35	-189.87	-497.05	2.167e+06	-3.493e+06	-6.604e+05	-6.656e+05	2.830e+06
14	1	99	597.58	-377.48	-56.36	276.45	-458.25	3.700e+06	-1.802e+06	2.052e+06	-1.542e+05	2.520e+06
14	1	100	183.64	-796.23	18.98	-631.57	-366.37	4.760e+05	-5.027e+06	-3.374e+06	-1.176e+06	2.522e+06
14	1	105	462.55	-658.81	18.40	-214.66	-548.44	2.436e+06	-3.963e+06	-6.831e+05	-8.438e+05	3.198e+06
14	1	108	742.26	-134.15	-29.93	638.03	-283.69	4.972e+06	-6.981e+04	4.279e+06	6.239e+05	1.737e+06
14	1	109	-56.89	-943.64	-74.76	-925.78	-124.59	-1.255e+06	-6.300e+06	-5.602e+06	-1.953e+06	1.741e+06
14	1	110	625.17	-443.94	-113.35	294.58	-494.11	4.270e+06	-1.970e+06	2.318e+06	-1.815e+04	2.893e+06
14	1	111	267.28	-841.02	118.88	-692.62	-377.43	4.696e+05	-5.823e+06	-3.705e+06	-1.648e+06	2.973e+06
14	1	119	743.00	-209.97	-131.71	664.74	-261.64	5.850e+06	1.506e+04	4.873e+06	9.913e+05	2.178e+06
14	1	120	55.17	-980.70	51.73	-977.27	-59.58	-1.488e+06	-7.431e+06	-6.320e+06	-2.599e+06	2.317e+06
14	1	125	830.83	110.50	118.08	823.26	-73.48	5.910e+06	1.572e+06	5.742e+06	1.740e+06	8.360e+05
14	1	126	-297.97	-1035.85	-314.78	-1019.04	110.11	-2.897e+06	-7.238e+06	-7.069e+06	-3.066e+06	8.405e+05
14	1	136	806.96	28.25	28.36	806.85	9.23	7.086e+06	1.840e+06	6.725e+06	2.201e+06	1.328e+06
14	1	137	-155.71	-1071.98	-225.12	-1002.56	242.46	-3.283e+06	-8.698e+06	-8.252e+06	-3.729e+06	1.489e+06

14	1	158	858.75	338.44	346.75	850.44	65.25	6.477e+06	2.983e+06	6.468e+06	2.993e+06	1.796e+05	
14	1	159	-519.87	-1069.67	-635.36	-954.18	223.96	-4.307e+06	-7.807e+06	-7.797e+06	-4.317e+06	1.840e+05	
14	1	168	812.88	254.40	312.60	754.68	170.63	7.931e+06	3.343e+06	7.844e+06	3.430e+06	6.245e+05	
14	1	169	-343.34	-1116.33	-626.14	-833.52	372.33	-4.753e+06	-9.576e+06	-9.452e+06	-4.877e+06	7.637e+05	
14	1	201	827.23	531.12	554.97	803.37	80.59	6.709e+06	3.994e+06	6.707e+06	3.996e+06	-6.337e+04	
14	1	202	-700.07	-1050.52	-910.72	-839.87	171.61	-5.317e+06	-8.040e+06	-8.039e+06	-5.319e+06	-6.104e+04	
14	1	208	762.32	451.23	581.11	632.44	153.41	8.395e+06	4.354e+06	8.385e+06	4.364e+06	2.042e+05	
14	1	209	-480.57	-1125.15	-980.01	-625.71	269.24	-5.734e+06	-1.007e+07	-1.005e+07	-5.753e+06	2.847e+05	
14	1	256	773.77	640.24	640.40	773.61	4.61	6.745e+06	4.380e+06	6.745e+06	4.380e+06	-789.31	
14	1	257	692.28	572.05	692.05	572.27	5.22	8.536e+06	4.714e+06	8.536e+06	4.714e+06	-1299.05	
14	1	273	-534.35	-1121.67	-1121.65	-534.37	3.67	-6.082e+06	-1.023e+07	-1.023e+07	-6.082e+06	-733.29	
14	1	274	-785.64	-1020.15	-1020.11	-785.68	3.21	-5.702e+06	-8.079e+06	-8.079e+06	-5.702e+06	-568.65	
14	1	321	753.29	463.27	586.71	629.85	-143.40	8.390e+06	4.352e+06	8.380e+06	4.362e+06	-2.068e+05	
14	1	322	-485.60	-1121.65	-983.47	-623.78	-262.29	-5.733e+06	-1.007e+07	-1.005e+07	-5.752e+06	-2.861e+05	
14	1	328	820.40	540.29	560.29	800.40	-72.12	6.705e+06	3.993e+06	6.703e+06	3.994e+06	6.182e+04	
14	1	329	-705.92	-1045.86	-913.93	-837.85	-165.66	-5.316e+06	-8.038e+06	-8.037e+06	-5.318e+06	5.992e+04	
14	1	361	804.44	269.76	325.02	749.18	-162.76	7.921e+06	3.340e+06	7.833e+06	3.427e+06	-6.266e+05	
14	1	362	-351.87	-1111.13	-633.17	-829.83	-366.68	-4.750e+06	-9.572e+06	-9.448e+06	-4.875e+06	-7.649e+05	
14	1	371	851.97	350.42	357.64	844.74	-59.77	6.469e+06	2.980e+06	6.459e+06	2.990e+06	-1.807e+05	
14	1	372	-527.67	-1064.45	-641.66	-950.46	-219.53	-4.305e+06	-7.803e+06	-7.793e+06	-4.314e+06	-1.850e+05	
14	1	393	799.6	447.93	48.02	799.55	-8.25	7.069e+06	1.837e+06	6.708e+06	2.199e+06	-1.327e+06	
14	1	394	-166.70	-1066.61	-235.67	-997.64	-239.39	-3.279e+06	-8.691e+06	-8.245e+06	-3.726e+06	-1.489e+06	
14	1	404	824.87	124.94	132.46	817.34	72.20	5.897e+06	1.569e+06	5.730e+06	1.736e+06	-8.348e+05	
14	1	405	-307.02	-1031.09	-323.64	-1014.47	-108.44	-2.893e+06	-7.232e+06	-7.063e+06	-3.063e+06	-8.410e+05	
14	1	410	738.82	-189.58	-115.64	664.88	251.36	5.830e+06	1.332e+04	4.857e+06	9.856e+05	-2.170e+06	
14	1	411	41.97	-976.11	38.62	-972.76	58.33	-1.484e+06	-7.422e+06	-6.311e+06	-2.595e+06	-2.316e+06	
14	1	419	623.63	-436.84	-112.64	299.42	488.57	4.261e+06	-1.971e+06	2.314e+06	-2.342e+04	-2.889e+06	
14	1	420	252.51	-837.96	106.98	-692.43	370.83	4.726e+05	-5.811e+06	-3.696e+06	-1.643e+06	-2.970e+06	
14	1	421	738.98	-121.43	-21.12	638.68	276.12	4.960e+06	-7.313e+04	4.268e+06	6.184e+05	-1.733e+06	
14	1	422	-67.03	-939.83	-84.53	-922.32	122.37	-1.252e+06	-6.292e+06	-5.595e+06	-1.949e+06	-1.741e+06	
14	1	425	451.90	-658.10	13.89	-220.09	542.53	2.436e+06	-3.954e+06	-6.796e+05	-8.381e+05	-3.194e+06	
14	1	430	596.42	-373.18	-56.35	279.59	454.77	3.695e+06	-1.803e+06	2.049e+06	-1.578e+05	-2.518e+06	
14	1	431	173.64	-794.03	11.94	-632.33	361.01	4.791e+05	-5.019e+06	-3.368e+06	-1.172e+06	-2.520e+06	
14	1	436	401.44	-603.06	-8.48	-193.14	493.69	2.168e+06	-3.489e+06	-6.584e+05	-6.623e+05	-2.828e+06	
14	2	94	313.34	-464.27	-4.88	-146.05	-382.34	1.667e+06	-2.687e+06	-5.080e+05	-5.120e+05	2.177e+06	
14	2	99	459.67	-290.37	-43.35	212.66	-352.50	2.846e+06	-1.386e+06	1.579e+06	-1.186e+05	1.938e+06	
14	2	100	141.26	-612.48	14.60	-485.82	-281.83	3.662e+05	-3.867e+06	-2.596e+06	-9.047e+05	1.940e+06	
14	2	105	355.81	-506.78	14.16	-165.12	-421.88	1.874e+06	-3.048e+06	-5.255e+05	-6.491e+05	2.460e+06	
14	2	108	570.97	-103.19	-23.02	490.80	-218.22	3.825e+06	-5.370e+04	3.291e+06	4.799e+05	1.336e+06	

14	2	109	-43.76	-725.88	-57.50	-712.14	-95.84	-9.656e+05	-4.846e+06	-4.309e+06	-1.502e+06	1.339e+06
14	2	110	480.90	-341.49	-87.19	226.60	-380.08	3.284e+06	-1.516e+06	1.783e+06	-1.396e+04	2.226e+06
14	2	111	205.60	-646.94	91.44	-532.79	-290.33	3.612e+05	-4.479e+06	-2.850e+06	-1.268e+06	2.287e+06
14	2	119	571.54	-161.51	-101.31	511.34	-201.26	4.500e+06	1.158e+04	3.749e+06	7.626e+05	1.675e+06
14	2	120	42.43	-754.39	39.79	-751.74	-45.83	-1.145e+06	-5.716e+06	-4.862e+06	-1.999e+06	1.782e+06
14	2	125	639.10	85.00	90.83	633.28	-56.52	4.546e+06	1.209e+06	4.417e+06	1.338e+06	6.430e+05
14	2	126	-229.20	-796.81	-242.14	-783.88	84.70	-2.228e+06	-5.568e+06	-5.438e+06	-2.359e+06	6.465e+05
14	2	136	620.74	21.73	21.81	620.66	7.10	5.451e+06	1.415e+06	5.173e+06	1.693e+06	1.022e+06
14	2	137	-119.78	-824.60	-173.17	-771.20	186.50	-2.525e+06	-6.691e+06	-6.348e+06	-2.868e+06	1.145e+06
14	2	158	660.58	260.34	266.73	654.18	50.19	4.983e+06	2.295e+06	4.975e+06	2.302e+06	1.382e+05
14	2	159	-399.90	-822.83	-488.74	-733.99	172.28	-3.313e+06	-6.005e+06	-5.998e+06	-3.320e+06	1.416e+05
14	2	168	625.29	195.69	240.46	580.53	131.25	6.101e+06	2.572e+06	6.034e+06	2.638e+06	4.804e+05
14	2	169	-264.11	-858.72	-481.65	-641.17	286.41	-3.656e+06	-7.366e+06	-7.271e+06	-3.751e+06	5.874e+05
14	2	201	636.33	408.55	426.90	617.98	61.99	5.161e+06	3.073e+06	5.160e+06	3.074e+06	-4.874e+04
14	2	202	-538.52	-808.09	-700.56	-646.05	132.01	-4.090e+06	-6.185e+06	-6.184e+06	-4.091e+06	-4.695e+04
14	2	208	586.40	347.10	447.01	486.49	118.01	6.458e+06	3.349e+06	6.450e+06	3.357e+06	1.571e+05
14	2	209	-369.67	-865.50	-753.86	-481.31	207.10	-4.411e+06	-7.747e+06	-7.733e+06	-4.425e+06	2.190e+05
14	2	256	595.21	492.49	492.61	595.09	3.55	5.189e+06	3.369e+06	5.189e+06	3.369e+06	-607.16
14	2	257	532.52	440.04	532.35	440.21	4.02	6.566e+06	3.626e+06	6.566e+06	3.626e+06	-999.27
14	2	273	-411.04	-862.83	-862.81	-411.05	2.82	-4.678e+06	-7.866e+06	-7.866e+06	-4.678e+06	-564.07
14	2	274	-604.34	-784.73	-784.70	-604.37	2.47	-4.386e+06	-6.215e+06	-6.215e+06	-4.386e+06	-437.42
14	2	321	579.46	356.36	451.32	484.50	-110.30	6.454e+06	3.348e+06	6.446e+06	3.356e+06	-1.591e+05
14	2	322	-373.54	-862.81	-756.52	-479.83	-201.76	-4.410e+06	-7.745e+06	-7.731e+06	-4.424e+06	-2.201e+05
14	2	328	631.08	415.61	430.99	615.69	-55.48	5.157e+06	3.071e+06	5.156e+06	3.072e+06	4.756e+04
14	2	329	-543.02	-804.51	-703.02	-644.50	-127.43	-4.090e+06	-6.183e+06	-6.182e+06	-4.091e+06	4.609e+04
14	2	361	618.80	207.51	250.01	576.29	-125.20	6.093e+06	2.569e+06	6.026e+06	2.636e+06	-4.820e+05
14	2	362	-270.67	-854.71	-487.05	-638.33	-282.06	-3.654e+06	-7.363e+06	-7.267e+06	-3.750e+06	-5.884e+05
14	2	371	655.36	269.55	275.11	649.80	-45.98	4.976e+06	2.293e+06	4.969e+06	2.300e+06	-1.390e+05
14	2	372	-405.90	-818.81	-493.58	-731.12	-168.87	-3.311e+06	-6.002e+06	-5.995e+06	-3.319e+06	-1.423e+05
14	2	393	615.11	36.87	36.94	615.04	-6.34	5.438e+06	1.413e+06	5.160e+06	1.691e+06	-1.021e+06
14	2	394	-128.23	-820.47	-181.28	-767.42	-184.14	-2.522e+06	-6.686e+06	-6.342e+06	-2.866e+06	-1.146e+06
14	2	404	634.51	96.10	101.89	628.72	55.54	4.536e+06	1.207e+06	4.408e+06	1.336e+06	-6.422e+05
14	2	405	-236.17	-793.15	-248.96	-780.36	-83.41	-2.226e+06	-5.563e+06	-5.433e+06	-2.356e+06	-6.469e+05
14	2	410	568.32	-145.83	-88.95	511.44	193.35	4.484e+06	1.025e+04	3.737e+06	7.582e+05	-1.669e+06
14	2	411	32.28	-750.85	29.71	-748.27	44.87	-1.141e+06	-5.709e+06	-4.854e+06	-1.996e+06	-1.782e+06
14	2	419	479.71	-336.03	-86.64	230.32	375.82	3.278e+06	-1.516e+06	1.780e+06	-1.801e+04	-2.222e+06
14	2	420	194.23	-644.59	82.29	-532.64	285.25	3.635e+05	-4.470e+06	-2.843e+06	-1.264e+06	-2.284e+06
14	2	421	568.45	-93.41	-16.25	491.29	212.40	3.815e+06	-5.626e+04	3.283e+06	4.757e+05	-1.333e+06

14	2	422	-51.56	-722.95	-65.03	-709.48	94.13	-9.627e+05	-4.840e+06	-4.304e+06	-1.499e+06	-1.339e+06
14	2	425	347.62	-506.23	10.69	-169.30	417.33	1.874e+06	-3.042e+06	-5.227e+05	-6.447e+05	-2.457e+06
14	2	430	458.78	-287.06	-43.35	215.07	349.82	2.842e+06	-1.387e+06	1.576e+06	-1.214e+05	-1.937e+06
14	2	431	133.57	-610.79	9.18	-486.40	277.70	3.686e+05	-3.861e+06	-2.591e+06	-9.012e+05	-1.938e+06
14	2	436	308.80	-463.89	-6.52	-148.57	379.76	1.668e+06	-2.684e+06	-5.065e+05	-5.094e+05	-2.176e+06

M_G		N max	N min	N 1	N 2	N 1-2	M max	M min	M 1	M 2
M 1-2										
		-1125.15	-1121.65	-1019.04	-548.44		-1.023e+07	-1.023e+06	-6.082e+06	-3.194e+06
		858.75	692.05	850.44	542.53	8.536e+06		8.536e+06	4.714e+06	3.198e+06

Macro	Tipo	Angolo 1-X (gradi)
15	**Guscio**	**0.0**

M_G	Cmb	Nodo	N max	N min	N 1	N 2	N 1-2	M max	M min	M 1	M 2
M 1-2											
			N/mm	N/mm	N/mm	N/mm	N/mm	N	N	N	N	N
15	1	105	427.38	-668.97	-25.89	-215.70	-539.90	2.477e+06	-4.059e+06	-7.561e+05	-8.260e+05	3.267e+06
15	1	110	643.23	-416.01	-67.88	295.10	-497.55	4.360e+06	-2.004e+06	2.406e+06	-5.089e+04	2.935e+06
15	1	111	175.44	-885.86	-9.40	-701.02	-402.50	4.315e+05	-5.951e+06	-3.928e+06	-1.592e+06	2.970e+06
15	1	118	491.52	-733.24	3.85	-245.57	-599.55	2.670e+06	-4.491e+06	-7.705e+05	-1.050e+06	3.578e+06
15	1	119	808.66	-144.53	-29.21	693.34	-310.84	5.956e+06	6.822e+04	5.057e+06	9.676e+05	2.118e+06
15	1	120	-94.84	-1052.46	-117.72	-1029.58	-146.24	-1.631e+06	-7.558e+06	-6.604e+06	-2.585e+06	2.179e+06
15	1	121	673.06	-494.73	-137.61	315.93	-538.06	4.946e+06	-2.068e+06	2.652e+06	2.256e+05	3.290e+06
15	1	122	274.68	-936.44	111.82	-773.59	-413.17	3.054e+05	-6.824e+06	-4.230e+06	-2.288e+06	3.430e+06
15	1	129	805.53	-235.75	-153.41	723.19	-281.00	6.980e+06	2.756e+05	5.672e+06	1.583e+06	2.656e+06
15	1	130	39.82	-1093.04	36.11	-1089.33	-64.72	-1.980e+06	-8.916e+06	-7.352e+06	-3.544e+06	2.898e+06
15	1	136	912.46	126.92	136.48	902.91	-86.11	7.174e+06	2.001e+06	6.898e+06	2.277e+06	1.163e+06
15	1	137	-364.76	-1157.80	-378.59	-1143.96	103.84	-3.551e+06	-8.789e+06	-8.480e+06	-3.859e+06	1.233e+06
15	1	153	879.04	27.00	27.35	878.69	17.21	8.651e+06	2.363e+06	8.037e+06	2.977e+06	1.866e+06
15	1	154	-192.83	-1196.61	-269.65	-1119.79	266.85	-4.010e+06	-1.064e+07	-9.858e+06	-4.797e+06	2.145e+06
15	1	168	949.01	378.51	385.59	941.92	63.18	7.968e+06	3.623e+06	7.927e+06	3.664e+06	4.232e+05
15	1	169	-613.74	-1196.84	-722.84	-1087.74	227.41	-5.159e+06	-9.598e+06	-9.545e+06	-5.212e+06	4.838e+05
15	1	180	888.70	275.59	344.37	819.91	193.50	9.876e+06	4.021e+06	9.657e+06	4.240e+06	1.111e+06
15	1	181	-399.27	-1248.32	-711.69	-935.90	409.46	-5.617e+06	-1.192e+07	-1.162e+07	-5.922e+06	1.353e+06
15	1	208	920.62	588.41	610.31	898.72	82.45	8.366e+06	4.743e+06	8.364e+06	4.744e+06	6.740e+04
15	1	209	-818.06	-1173.85	-1017.09	-974.82	176.63	-6.265e+06	-1.001e+07	-1.001e+07	-6.268e+06	1.026e+05
15	1	214	836.85	490.22	642.69	684.38	172.06	1.061e+07	5.094e+06	1.057e+07	5.139e+06	4.967e+05
15	1	215	-549.73	-1260.41	-1101.47	-708.66	296.13	-6.651e+06	-1.270e+07	-1.263e+07	-6.719e+06	6.369e+05
15	1	257	869.93	701.88	702.05	869.77	5.27	8.471e+06	5.153e+06	8.471e+06	5.153e+06	-1750.82

15	1	258	765.73	617.88	765.50	618.10	5.82	1.086e+07	5.465e+06	1.086e+07	5.465e+06	-2619.00
15	1	272	-608.74	-1257.40	-1257.38	-608.77	4.21	-7.008e+06	-1.296e+07	-1.296e+07	-7.008e+06	-1372.99
15	1	273	-920.41	-1133.77	-1133.71	-920.47	3.70	-6.667e+06	-1.013e+07	-1.013e+07	-6.667e+06	-1009.52
15	1	315	826.60	503.96	648.12	682.44	-160.41	1.061e+07	5.091e+06	1.056e+07	5.137e+06	-5.020e+05
15	1	316	-555.83	-1256.13	-1105.14	-706.83	-287.99	-6.649e+06	-1.270e+07	-1.263e+07	-6.718e+06	-6.396e+05
15	1	321	913.62	598.41	616.01	896.03	-72.36	8.360e+06	4.742e+06	8.359e+06	4.743e+06	-7.089e+04
15	1	322	-825.39	-1168.01	-1020.59	-972.80	-169.64	-6.264e+06	-1.001e+07	-1.001e+07	-6.266e+06	-1.045e+05
15	1	349	879.04	293.50	357.38	815.16	-182.55	9.864e+06	4.017e+06	9.642e+06	4.239e+06	-1.117e+06
15	1	350	-409.63	-1241.93	-719.32	-932.24	-402.30	-5.614e+06	-1.192e+07	-1.161e+07	-5.920e+06	-1.356e+06
15	1	361	941.82	392.57	398.20	936.19	-55.33	7.957e+06	3.620e+06	7.915e+06	3.662e+06	-4.261e+05
15	1	362	-623.17	-1190.65	-729.93	-1083.89	-221.78	-5.157e+06	-9.593e+06	-9.539e+06	-5.210e+06	-4.854e+05
15	1	376	870.02	52.29	52.44	869.87	-10.99	8.629e+06	2.360e+06	8.011e+06	2.977e+06	-1.868e+06
15	1	377	-206.27	-1189.99	-281.74	-1114.52	-261.82	-4.006e+06	-1.064e+07	-9.847e+06	-4.795e+06	-2.147e+06
15	1	393	905.29	146.38	156.42	895.25	86.73	7.156e+06	1.998e+06	6.879e+06	2.275e+06	-1.162e+06
15	1	394	-375.86	-1152.22	-389.20	-1138.88	-100.89	-3.548e+06	-8.781e+06	-8.472e+06	-3.857e+06	-1.234e+06
15	1	400	797.68	-199.85	-122.07	719.90	267.47	6.941e+06	2.783e+05	5.639e+06	1.581e+06	-2.642e+06
15	1	401	23.14	-1087.22	19.26	-1083.34	65.56	-1.975e+06	-8.903e+06	-7.338e+06	-3.541e+06	-2.897e+06
15	1	408	668.89	-480.33	-134.97	323.54	526.90	4.928e+06	-2.064e+06	2.647e+06	2.170e+05	-3.278e+06
15	1	409	253.15	-931.63	91.86	-770.34	406.30	3.079e+05	-6.805e+06	-4.213e+06	-2.284e+06	-3.423e+06
15	1	410	803.68	-123.97	-13.83	693.53	300.08	5.935e+06	6.651e+04	5.040e+06	9.616e+05	-2.110e+06
15	1	411	-108.01	-1047.80	-130.87	-1024.95	144.77	-1.627e+06	-7.548e+06	-6.593e+06	-2.582e+06	-2.178e+06
15	1	412	469.79	-731.38	-7.33	-254.26	587.75	2.669e+06	-4.469e+06	-7.608e+05	-1.039e+06	-3.566e+06
15	1	419	641.56	-409.13	-67.38	299.81	492.22	4.351e+06	-2.005e+06	2.403e+06	-5.643e+04	-2.930e+06
15	1	420	160.46	-882.54	-21.13	-700.95	395.50	4.343e+05	-5.938e+06	-3.918e+06	-1.587e+06	-2.966e+06
15	1	425	416.98	-668.01	-29.83	-221.20	533.99	2.477e+06	-4.049e+06	-7.526e+05	-8.199e+05	-3.263e+06
15	2	105	328.76	-514.59	-19.91	-165.93	-415.31	1.905e+06	-3.122e+06	-5.816e+05	-6.354e+05	2.513e+06
15	2	110	494.79	-320.01	-52.21	227.00	-382.73	3.354e+06	-1.542e+06	1.851e+06	-3.915e+04	2.258e+06
15	2	111	134.95	-681.43	-7.23	-539.25	-309.62	3.319e+05	-4.578e+06	-3.022e+06	-1.224e+06	2.285e+06
15	2	118	378.10	-564.03	2.96	-188.90	-461.19	2.054e+06	-3.454e+06	-5.927e+05	-8.076e+05	2.752e+06
15	2	119	622.05	-111.18	-22.47	533.34	-239.11	4.582e+06	5.248e+04	3.890e+06	7.443e+05	1.629e+06
15	2	120	-72.96	-809.58	-90.56	-791.98	-112.49	-1.254e+06	-5.814e+06	-5.080e+06	-1.988e+06	1.676e+06
15	2	121	517.74	-380.56	-105.85	243.03	-413.89	3.804e+06	-1.591e+06	2.040e+06	1.736e+05	2.531e+06
15	2	122	211.29	-720.34	86.02	-595.07	-317.83	2.349e+05	-5.249e+06	-3.254e+06	-1.760e+06	2.638e+06
15	2	129	619.64	-181.34	-118.00	556.30	-216.15	5.369e+06	2.120e+05	4.363e+06	1.218e+06	2.043e+06
15	2	130	30.63	-840.80	27.78	-837.95	-49.78	-1.523e+06	-6.858e+06	-5.656e+06	-2.726e+06	2.229e+06
15	2	136	701.89	97.63	104.99	694.54	-66.24	5.519e+06	1.539e+06	5.306e+06	1.751e+06	8.945e+05
15	2	137	-280.58	-890.62	-291.23	-879.97	79.88	-2.732e+06	-6.761e+06	-6.523e+06	-2.969e+06	9.482e+05
15	2	153	676.18	20.77	21.04	675.91	13.24	6.654e+06	1.818e+06	6.183e+06	2.290e+06	1.435e+06
15	2	154	-148.33	-920.47	-207.43	-861.38	205.27	-3.085e+06	-8.188e+06	-7.583e+06	-3.690e+06	1.650e+06
15	2	168	730.01	291.16	296.61	724.56	48.60	6.130e+06	2.787e+06	6.098e+06	2.819e+06	3.255e+05

15	2	169	-472.11	-920.65	-556.03	-836.72	174.93	-3.968e+06	-7.383e+06	-7.342e+06	-4.009e+06	3.721e+05
15	2	180	683.61	211.99	264.90	630.70	148.85	7.597e+06	3.093e+06	7.428e+06	3.262e+06	8.548e+05
15	2	181	-307.13	-960.25	-547.46	-719.92	314.97	-4.320e+06	-9.171e+06	-8.936e+06	-4.555e+06	1.041e+06
15	2	208	708.17	452.62	469.47	691.32	63.42	6.435e+06	3.649e+06	6.434e+06	3.650e+06	5.185e+04
15	2	209	-629.28	-902.96	-782.37	-749.86	135.87	-4.819e+06	-7.701e+06	-7.699e+06	-4.821e+06	7.891e+04
15	2	214	643.73	377.09	494.38	526.44	132.35	8.165e+06	3.918e+06	8.130e+06	3.953e+06	3.821e+05
15	2	215	-422.87	-969.55	-847.29	-545.13	227.79	-5.116e+06	-9.769e+06	-9.717e+06	-5.168e+06	4.899e+05
15	2	257	669.18	539.91	540.04	669.05	4.05	6.516e+06	3.964e+06	6.516e+06	3.964e+06	-1346.78
15	2	258	589.02	475.29	588.84	475.47	4.48	8.352e+06	4.204e+06	8.352e+06	4.204e+06	-2014.62
15	2	272	-468.27	-967.23	-967.21	-468.29	3.24	-5.391e+06	-9.969e+06	-9.969e+06	-5.391e+06	-1056.15
15	2	273	-708.01	-872.13	-872.08	-708.05	2.85	-5.129e+06	-7.789e+06	-7.789e+06	-5.129e+06	-776.55
15	2	315	635.85	387.66	498.55	524.95	-123.39	8.160e+06	3.916e+06	8.125e+06	3.952e+06	-3.862e+05
15	2	316	-427.56	-966.25	-850.11	-543.71	-221.53	-5.115e+06	-9.767e+06	-9.715e+06	-5.167e+06	-4.920e+05
15	2	321	702.79	460.32	473.85	689.25	-55.66	6.431e+06	3.647e+06	6.430e+06	3.649e+06	-5.453e+04
15	2	322	-634.91	-898.47	-785.07	-748.31	-130.49	-4.818e+06	-7.699e+06	-7.697e+06	-4.820e+06	-8.041e+04
15	2	349	676.19	225.77	274.91	627.05	-140.42	7.587e+06	3.090e+06	7.417e+06	3.260e+06	-8.589e+05
15	2	350	-315.10	-955.33	-553.32	-717.11	-309.46	-4.318e+06	-9.167e+06	-8.931e+06	-4.554e+06	-1.043e+06
15	2	361	724.48	301.98	306.31	720.14	-42.56	6.121e+06	2.785e+06	6.088e+06	2.817e+06	-3.277e+05
15	2	362	-479.36	-915.88	-561.49	-833.76	-170.60	-3.967e+06	-7.379e+06	-7.338e+06	-4.008e+06	-3.734e+05
15	2	376	669.2	540.22	40.34	669.13	-8.45	6.637e+06	1.815e+06	6.162e+06	2.290e+06	-1.437e+06
15	2	377	-158.67	-915.38	-216.72	-857.32	-201.40	-3.082e+06	-8.182e+06	-7.575e+06	-3.689e+06	-1.651e+06
15	2	393	696.38	112.60	120.33	688.65	66.72	5.504e+06	1.537e+06	5.292e+06	1.750e+06	-8.940e+05
15	2	394	-289.12	-886.32	-299.38	-876.06	-77.61	-2.729e+06	-6.755e+06	-6.517e+06	-2.967e+06	-9.489e+05
15	2	400	613.60	-153.73	-93.90	553.77	205.75	5.339e+06	2.140e+05	4.338e+06	1.216e+06	-2.033e+06
15	2	401	17.80	-836.33	14.81	-833.34	50.43	-1.520e+06	-6.849e+06	-5.645e+06	-2.724e+06	-2.229e+06
15	2	408	514.53	-369.48	-103.82	248.87	405.31	3.790e+06	-1.588e+06	2.036e+06	1.670e+05	-2.521e+06
15	2	409	194.73	-716.64	70.66	-592.57	312.54	2.369e+05	-5.235e+06	-3.241e+06	-1.757e+06	-2.633e+06
15	2	410	618.21	-95.37	-10.64	533.48	230.83	4.565e+06	5.116e+04	3.877e+06	7.397e+05	-1.623e+06
15	2	411	-83.09	-806.00	-100.67	-788.42	111.36	-1.251e+06	-5.806e+06	-5.072e+06	-1.986e+06	-1.675e+06
15	2	412	361.37	-562.60	-5.64	-195.59	452.12	2.053e+06	-3.438e+06	-5.852e+05	-7.996e+05	-2.743e+06
15	2	419	493.51	-314.71	-51.83	230.63	378.63	3.347e+06	-1.542e+06	1.848e+06	-4.341e+04	-2.254e+06
15	2	420	123.43	-678.88	-16.25	-539.19	304.23	3.341e+05	-4.568e+06	-3.014e+06	-1.220e+06	-2.281e+06
15	2	425	320.76	-513.85	-22.94	-170.15	410.76	1.905e+06	-3.115e+06	-5.789e+05	-6.307e+05	-2.510e+06

M_G			N max	N min	N 1	N 2	N 1-2	M max	M min	M 1	M 2	M 1-2
			-1260.41	-1257.38	-1143.96	-599.55		-1.296e+07	-1.296e+07	-7.008e+06	-3.566e+06	
			949.01	765.50	941.92	587.75	1.086e+07		1.086e+07	5.465e+06	3.578e+06	

Macro	Tipo	Angolo 1-X (gradi)
16	**Guscio**	**0.0**

M_G	Cmb	Nodo	N max	N min	N 1	N 2	N 1-2	M max	M min	M 1	M 2
			N/mm	N/mm	N/mm	N/mm	N	N	N	N	N
16	1	118	456.90	-742.10	-39.84	-245.36	-590.63	2.731e+06	-4.606e+06	-8.461e+05	-1.029e+06	3.668e+06
16	1	121	689.82	-466.99	-92.67	315.50	-541.20	5.055e+06	-2.118e+06	2.756e+06	1.806e+05	3.347e+06
16	1	122	184.76	-978.00	-14.61	-778.62	-438.26	2.759e+05	-6.963e+06	-4.473e+06	-2.214e+06	3.439e+06
16	1	129	867.60	-171.31	-52.75	749.03	-330.34	7.093e+06	3.270e+05	5.879e+06	1.541e+06	2.596e+06
16	1	130	-107.50	-1159.18	-129.98	-1136.70	-152.08	-2.135e+06	-9.035e+06	-7.662e+06	-3.508e+06	2.755e+06
16	1	133	559.80	-845.09	-2.39	-282.90	-688.30	2.663e+06	-4.824e+06	-8.403e+05	-1.320e+06	3.736e+06
16	1	134	747.99	-589.72	-192.55	350.81	-611.20	5.534e+06	-1.890e+06	2.875e+06	7.698e+05	3.559e+06
16	1	135	332.94	-1061.80	150.10	-878.96	-470.73	-1.306e+05	-7.835e+06	-4.620e+06	-3.346e+06	3.799e+06
16	1	145	882.93	-311.29	-228.64	800.28	-303.10	8.280e+06	7.739e+05	6.379e+06	2.675e+06	3.264e+06
16	1	146	86.00	-1228.24	83.27	-1225.51	-59.83	-2.670e+06	-1.070e+07	-8.299e+06	-5.076e+06	3.680e+06
16	1	153	978.17	124.78	132.11	970.83	-78.78	8.728e+06	2.542e+06	8.229e+06	3.041e+06	1.684e+06
16	1	154	-399.07	-1274.25	-417.90	-1255.42	126.97	-4.314e+06	-1.071e+07	-1.010e+07	-4.917e+06	1.867e+06
16	1	165	954.64	-27.94	-25.35	952.05	50.37	1.069e+07	3.008e+06	9.492e+06	4.207e+06	2.788e+06
16	1	166	-158.85	-1338.44	-260.61	-1236.68	331.18	-4.808e+06	-1.321e+07	-1.165e+07	-6.368e+06	3.268e+06
16	1	180	1014.80	400.39	412.45	1002.75	85.21	9.887e+06	4.335e+06	9.742e+06	4.481e+06	8.869e+05
16	1	181	-667.33	-1318.15	-801.31	-1184.17	263.15	-6.071e+06	-1.190e+07	-1.171e+07	-6.265e+06	1.045e+06
16	1	189	959.26	240.16	345.13	854.29	253.90	1.257e+07	4.690e+06	1.198e+07	5.277e+06	2.069e+06
16	1	190	-375.29	-1394.61	-771.73	-998.18	496.92	-6.423e+06	-1.516e+07	-1.438e+07	-7.199e+06	2.485e+06
16	1	214	978.45	633.47	665.79	946.14	100.51	1.056e+07	5.518e+06	1.054e+07	5.542e+06	3.436e+05
16	1	215	-884.64	-1297.35	-1130.03	-1051.95	202.63	-7.224e+06	-1.261e+07	-1.257e+07	-7.260e+06	4.356e+05
16	1	220	903.54	467.78	696.81	674.51	217.60	1.376e+07	5.734e+06	1.361e+07	5.890e+06	1.109e+06
16	1	221	-531.42	-1410.18	-1226.40	-715.19	357.38	-7.429e+06	-1.639e+07	-1.619e+07	-7.637e+06	1.349e+06
16	1	258	911.33	768.72	768.97	911.09	5.86	1.077e+07	5.934e+06	1.077e+07	5.934e+06	-3056.47
16	1	259	841.63	589.38	841.47	589.54	6.26	1.417e+07	6.087e+06	1.417e+07	6.087e+06	-4215.69
16	1	271	-592.13	-1408.67	-1408.64	-592.16	4.77	-7.770e+06	-1.682e+07	-1.682e+07	-7.770e+06	-2447.68
16	1	272	-989.11	-1260.44	-1260.38	-989.17	4.24	-7.628e+06	-1.283e+07	-1.283e+07	-7.628e+06	-1762.61
16	1	309	892.52	482.40	701.27	673.64	-204.59	1.376e+07	5.730e+06	1.360e+07	5.889e+06	-1.118e+06
16	1	310	-538.52	-1405.16	-1230.07	-713.61	-347.97	-7.427e+06	-1.639e+07	-1.618e+07	-7.636e+06	-1.354e+06
16	1	315	970.47	645.12	671.50	944.10	-88.80	1.055e+07	5.516e+06	1.053e+07	5.540e+06	-3.498e+05
16	1	316	-892.97	-1290.79	-1133.73	-1050.04	-194.46	-7.223e+06	-1.260e+07	-1.257e+07	-7.259e+06	-4.390e+05
16	1	340	948.49	259.06	355.88	851.67	-239.53	1.256e+07	4.682e+06	1.197e+07	5.275e+06	-2.079e+06

16	1	341	-387.49	-1386.96	-779.53	-994.92	-487.99	-6.419e+06	-1.515e+07	-1.438e+07	-7.198e+06	-2.489e+06
16	1	349	1007.31	416.98	426.46	997.83	-74.24	9.874e+06	4.331e+06	9.726e+06	4.479e+06	-8.931e+05
16	1	350	-678.42	-1310.96	-809.00	-1180.38	-256.02	-6.069e+06	-1.190e+07	-1.170e+07	-6.264e+06	-1.049e+06
16	1	364	946.47	-3.92	-2.60	945.15	-35.35	1.067e+07	2.997e+06	9.459e+06	4.209e+06	-2.799e+06
16	1	365	-174.61	-1330.47	-273.55	-1231.54	-323.37	-4.801e+06	-1.320e+07	-1.164e+07	-6.367e+06	-3.271e+06
16	1	376	970.54	150.68	159.65	961.57	85.28	8.703e+06	2.539e+06	8.199e+06	3.042e+06	-1.688e+06
16	1	377	-412.37	-1267.82	-430.17	-1250.02	-122.11	-4.310e+06	-1.070e+07	-1.009e+07	-4.915e+06	-1.869e+06
16	1	384	869.99	-248.67	-162.02	783.34	299.03	8.213e+06	7.760e+05	6.298e+06	2.691e+06	-3.252e+06
16	1	385	66.90	-1221.44	63.59	-1218.14	65.19	-2.663e+06	-1.069e+07	-8.278e+06	-5.076e+06	-3.681e+06
16	1	395	727.08	-543.34	-177.89	361.63	575.09	5.476e+06	-1.863e+06	2.858e+06	7.555e+05	-3.516e+06
16	1	396	308.78	-1057.26	121.39	-869.87	469.97	-1.238e+05	-7.813e+06	-4.588e+06	-3.348e+06	-3.794e+06
16	1	397	511.35	-842.08	-40.38	-290.34	665.08	2.660e+06	-4.769e+06	-8.016e+05	-1.307e+06	-3.706e+06
16	1	400	857.89	-132.47	-20.67	746.10	313.40	7.051e+06	3.312e+05	5.844e+06	1.538e+06	-2.579e+06
16	1	401	-124.36	-1153.83	-147.45	-1130.75	152.43	-2.131e+06	-9.021e+06	-7.646e+06	-3.506e+06	-2.754e+06
16	1	408	687.23	-455.46	-91.63	323.40	532.33	5.039e+06	-2.116e+06	2.752e+06	1.715e+05	-3.337e+06
16	1	409	161.31	-973.05	-36.26	-775.48	430.21	2.781e+05	-6.941e+06	-4.452e+06	-2.211e+06	-3.431e+06
16	1	412	434.16	-738.80	-48.99	-255.65	577.31	2.729e+06	-4.583e+06	-8.376e+05	-1.017e+06	-3.655e+06
16	2	118	351.46	-570.85	-30.64	-188.74	-454.33	2.101e+06	-3.543e+06	-6.508e+05	-7.916e+05	2.821e+06
16	2	121	530.63	-359.22	-71.29	242.69	-416.31	3.888e+06	-1.629e+06	2.120e+06	1.389e+05	2.575e+06
16	2	122	142.12	-752.31	-11.24	-598.94	-337.13	2.122e+05	-5.356e+06	-3.440e+06	-1.703e+06	2.645e+06
16	2	129	667.38	-131.78	-40.58	576.18	-254.10	5.456e+06	2.515e+05	4.522e+06	1.186e+06	1.997e+06
16	2	130	-82.69	-891.67	-99.98	-874.39	-116.99	-1.642e+06	-6.950e+06	-5.894e+06	-2.699e+06	2.119e+06
16	2	133	430.61	-650.07	-1.84	-217.62	-529.46	2.049e+06	-3.711e+06	-6.464e+05	-1.016e+06	2.874e+06
16	2	134	575.38	-453.63	-148.11	269.86	-470.15	4.257e+06	-1.454e+06	2.211e+06	5.921e+05	2.738e+06
16	2	135	256.11	-816.77	115.46	-676.12	-362.10	-1.004e+05	-6.027e+06	-3.553e+06	-2.574e+06	2.923e+06
16	2	145	679.18	-239.45	-175.88	615.60	-233.15	6.369e+06	5.953e+05	4.907e+06	2.058e+06	2.511e+06
16	2	146	66.16	-944.80	64.06	-942.70	-46.03	-2.054e+06	-8.234e+06	-6.384e+06	-3.905e+06	2.831e+06
16	2	153	752.44	95.98	101.62	746.80	-60.60	6.714e+06	1.955e+06	6.330e+06	2.339e+06	1.296e+06
16	2	154	-306.98	-980.19	-321.46	-965.71	97.67	-3.319e+06	-8.235e+06	-7.772e+06	-3.782e+06	1.436e+06
16	2	165	734.34	-21.49	-19.50	732.35	38.74	8.223e+06	2.314e+06	7.301e+06	3.236e+06	2.145e+06
16	2	166	-122.19	-1029.57	-200.47	-951.29	254.75	-3.698e+06	-1.016e+07	-8.963e+06	-4.898e+06	2.514e+06
16	2	180	780.62	307.99	317.27	771.34	65.55	7.606e+06	3.335e+06	7.494e+06	3.447e+06	6.823e+05
16	2	181	-513.33	-1013.96	-616.39	-910.90	202.42	-4.670e+06	-9.156e+06	-9.007e+06	-4.819e+06	8.042e+05
16	2	189	737.89	184.74	265.49	657.15	195.31	9.670e+06	3.608e+06	9.218e+06	4.059e+06	1.592e+06
16	2	190	-288.69	-1072.78	-593.64	-767.83	382.25	-4.941e+06	-1.166e+07	-1.107e+07	-5.538e+06	1.912e+06
16	2	214	752.66	487.29	512.14	727.80	77.32	8.122e+06	4.245e+06	8.104e+06	4.263e+06	2.643e+05
16	2	215	-680.49	-997.96	-869.26	-809.19	155.87	-5.557e+06	-9.697e+06	-9.669e+06	-5.585e+06	3.350e+05
16	2	220	695.03	359.83	536.00	518.86	167.38	1.059e+07	4.411e+06	1.047e+07	4.531e+06	8.528e+05
16	2	221	-408.78	-1084.75	-943.39	-550.15	274.91	-5.715e+06	-1.261e+07	-1.245e+07	-5.875e+06	1.038e+06

16	2	258	701.03	591.33	591.51	700.84	4.51	8.287e+06	4.564e+06	8.287e+06	4.564e+06	-2351.13
16	2	259	647.40	453.37	647.29	453.49	4.82	1.090e+07	4.682e+06	1.090e+07	4.682e+06	-3242.84
16	2	271	-455.49	-1083.59	-1083.57	-455.51	3.67	-5.977e+06	-1.293e+07	-1.293e+07	-5.977e+06	-1882.83
16	2	272	-760.85	-969.57	-969.52	-760.90	3.26	-5.868e+06	-9.872e+06	-9.872e+06	-5.868e+06	-1355.85
16	2	309	686.55	371.08	539.44	518.19	-157.38	1.058e+07	4.408e+06	1.046e+07	4.530e+06	-8.597e+05
16	2	310	-414.25	-1080.89	-946.21	-548.93	-267.67	-5.713e+06	-1.261e+07	-1.245e+07	-5.874e+06	-1.042e+06
16	2	315	746.51	496.25	516.54	726.23	-68.30	8.118e+06	4.243e+06	8.099e+06	4.262e+06	-2.691e+05
16	2	316	-686.90	-992.92	-872.10	-807.72	-149.58	-5.556e+06	-9.695e+06	-9.667e+06	-5.584e+06	-3.377e+05
16	2	340	729.61	199.28	273.75	655.13	-184.25	9.662e+06	3.602e+06	9.205e+06	4.058e+06	-1.599e+06
16	2	341	-298.07	-1066.89	-599.64	-765.32	-375.38	-4.938e+06	-1.166e+07	-1.106e+07	-5.537e+06	-1.915e+06
16	2	349	774.86	320.75	328.05	767.56	-57.11	7.595e+06	3.332e+06	7.482e+06	3.445e+06	-6.870e+05
16	2	350	-521.86	-1008.43	-622.31	-907.99	-196.94	-4.668e+06	-9.151e+06	-9.001e+06	-4.818e+06	-8.066e+05
16	2	364	728.05	-3.02	-2.00	727.04	-27.20	8.209e+06	2.305e+06	7.276e+06	3.237e+06	-2.153e+06
16	2	365	-134.32	-1023.44	-210.42	-947.33	-248.75	-3.693e+06	-1.016e+07	-8.952e+06	-4.897e+06	-2.516e+06
16	2	376	746.57	115.91	122.80	739.67	65.60	6.694e+06	1.953e+06	6.307e+06	2.340e+06	-1.298e+06
16	2	377	-317.21	-975.24	-330.90	-961.55	-93.93	-3.316e+06	-8.228e+06	-7.763e+06	-3.780e+06	-1.438e+06
16	2	384	669.22	-191.28	-124.63	602.57	230.02	6.318e+06	5.969e+05	4.844e+06	2.070e+06	-2.502e+06
16	2	385	51.46	-939.57	48.91	-937.03	50.15	-2.048e+06	-8.224e+06	-6.367e+06	-3.904e+06	-2.832e+06
16	2	395	559.29	-417.96	-136.84	278.18	442.37	4.213e+06	-1.433e+06	2.199e+06	5.812e+05	-2.704e+06
16	2	396	237.53	-813.28	93.38	-669.13	361.51	-9.524e+04	-6.010e+06	-3.529e+06	-2.576e+06	-2.918e+06
16	2	397	393.35	-647.75	-31.06	-223.34	511.60	2.046e+06	-3.668e+06	-6.166e+05	-1.005e+06	-2.851e+06
16	2	400	659.92	-101.90	-15.90	573.92	241.07	5.424e+06	2.548e+05	4.496e+06	1.183e+06	-1.984e+06
16	2	401	-95.66	-887.56	-113.42	-869.80	117.25	-1.639e+06	-6.939e+06	-5.882e+06	-2.697e+06	-2.118e+06
16	2	408	528.64	-350.35	-70.48	248.77	409.48	3.876e+06	-1.628e+06	2.117e+06	1.319e+05	-2.567e+06
16	2	409	124.08	-748.50	-27.90	-596.52	330.93	2.139e+05	-5.339e+06	-3.425e+06	-1.701e+06	-2.639e+06
16	2	412	333.97	-568.31	-37.68	-196.66	444.08	2.099e+06	-3.526e+06	-6.443e+05	-7.820e+05	-2.812e+06

M_G		**N max**	**N min**	**N 1**	**N 2**	**N 1-2**	**M max**	**M min**	**M 1**	**M 2**	**M 1-2**
		-1410.18	-1408.64	-1255.42	-688.30		-1.682e+07	-1.682e+07	-7.770e+06	-3.794e+06	
		1014.80		841.47	1002.75	665.08	1.417e+07		1.417e+07	6.087e+06	3.799e+06

Macro	Tipo	Angolo 1-X (gradi)
17	**Guscio**	**0.0**

M_G	**Cmb**	**Nodo**	**N max**	**N min**	**N 1**	**N 2**	**N 1-2**	**M max**	**M min**	**M 1**	**M 2**	**M 1-2**
			N/mm	N/mm	N/mm	N/mm	N/mm	N	N	N	N	N
17	1	133	322.39	-892.95	-283.39	-287.16	-607.67	2.840e+06	-5.387e+06	-1.340e+06	-1.207e+06	4.113e+06

17	1	134	828.91	-402.39	79.66	346.86	-600.98	6.047e+06	-2.017e+06	3.405e+06	6.244e+05	3.785e+06
17	1	135	-169.51	-1398.14	-647.04	-920.60	-598.89	-5.505e+05	-8.573e+06	-6.067e+06	-3.056e+06	3.718e+06
17	1	144	334.35	-906.70	-286.26	-286.09	-620.52	2.657e+06	-5.451e+06	-1.393e+06	-1.402e+06	4.054e+06
17	1	145	1313.67	42.02	398.90	956.79	-571.37	8.860e+06	1.297e+06	7.530e+06	2.627e+06	2.879e+06
17	1	146	-615.12	-1881.70	-967.90	-1528.91	-567.78	-3.887e+06	-1.136e+07	-1.014e+07	-5.108e+06	2.764e+06
17	1	151	755.66	-497.79	-13.35	271.21	-610.36	6.468e+06	-1.682e+06	3.375e+06	1.411e+06	3.955e+06
17	1	152	-74.76	-1327.81	-559.24	-843.34	-610.21	-1.110e+06	-9.265e+06	-6.162e+06	-4.213e+06	3.959e+06
17	1	161	1159.01	-127.45	225.28	806.27	-573.89	1.006e+07	1.790e+06	7.875e+06	3.974e+06	3.645e+06
17	1	162	-445.32	-1730.94	-798.06	-1378.20	-573.65	-4.580e+06	-1.286e+07	-1.067e+07	-6.773e+06	3.652e+06
17	1	165	1738.98	414.73	645.16	1508.55	-502.05	1.111e+07	4.306e+06	1.062e+07	4.800e+06	1.766e+06
17	1	166	-988.78	-2306.00	-1216.36	-2078.42	-497.98	-6.920e+06	-1.359e+07	-1.317e+07	-7.347e+06	1.633e+06
17	1	167	289.67	-863.16	-286.56	-286.93	-576.41	2.124e+06	-4.907e+06	-1.388e+06	-1.394e+06	3.516e+06
17	1	171	618.48	-535.38	-107.45	190.55	-557.36	5.193e+06	-1.845e+06	2.574e+06	7.742e+05	3.402e+06
17	1	172	-38.50	-1191.58	-465.81	-764.27	-556.89	-9.358e+05	-7.976e+06	-5.351e+06	-3.561e+06	3.405e+06
17	1	176	1513.13	182.88	406.94	1289.07	-497.85	1.317e+07	4.743e+06	1.183e+07	6.089e+06	3.087e+06
17	1	177	-755.89	-2084.83	-980.04	-1860.68	-497.63	-7.532e+06	-1.597e+07	-1.462e+07	-8.883e+06	3.096e+06
17	1	178	925.51	-230.54	58.58	636.40	-500.65	8.059e+06	1.000e+06	6.276e+06	2.784e+06	3.068e+06
17	1	179	-343.76	-1498.22	-632.27	-1209.71	-499.84	-3.780e+06	-1.084e+07	-9.055e+06	-5.569e+06	3.072e+06
17	1	186	166.72	-739.78	-286.67	-286.38	-453.25	1.325e+06	-4.099e+06	-1.385e+06	-1.389e+06	2.712e+06
17	1	187	411.14	-496.08	-160.42	75.48	-438.00	3.657e+06	-1.771e+06	1.641e+06	2.457e+05	2.623e+06
17	1	188	-77.25	-983.93	-412.99	-648.19	-437.82	-1.003e+06	-6.432e+06	-4.411e+06	-3.023e+06	2.624e+06
17	1	189	2070.38	695.64	809.57	1956.45	-379.00	1.270e+07	6.751e+06	1.258e+07	6.870e+06	8.310e+05
17	1	190	-1270.48	-2636.71	-1383.09	-2524.11	-375.72	-9.394e+06	-1.516e+07	-1.506e+07	-9.485e+06	7.161e+05
17	1	191	1189.76	30.74	200.00	1020.51	-409.30	1.053e+07	3.438e+06	9.470e+06	4.494e+06	2.524e+06
17	1	192	-605.47	-1762.05	-774.33	-1593.20	-408.39	-6.217e+06	-1.331e+07	-1.225e+07	-7.277e+06	2.529e+06
17	1	195	639.35	-269.41	-43.24	413.18	-392.92	5.834e+06	3.949e+05	4.466e+06	1.763e+06	2.360e+06
17	1	196	-304.22	-1211.88	-530.37	-985.73	-392.59	-3.168e+06	-8.609e+06	-7.237e+06	-4.539e+06	2.363e+06
17	1	199	1789.45	416.54	525.87	1680.13	-371.68	1.558e+07	6.990e+06	1.493e+07	7.633e+06	2.260e+06
17	1	200	-989.87	-2360.87	-1099.37	-2251.36	-371.68	-9.778e+06	-1.838e+07	-1.773e+07	-1.043e+07	2.268e+06
17	1	203	835.82	-75.17	56.76	703.89	-320.60	7.706e+06	2.251e+06	6.899e+06	3.058e+06	1.936e+06
17	1	204	-498.83	-1408.03	-630.70	-1276.16	-320.17	-5.024e+06	-1.048e+07	-9.673e+06	-5.833e+06	1.940e+06
17	1	205	25.50	-599.11	-286.98	-286.63	-312.31	4.988e+05	-3.267e+06	-1.383e+06	-1.385e+06	1.883e+06
17	1	206	193.07	-431.96	-201.71	-37.18	-301.50	2.099e+06	-1.667e+06	7.034e+05	-2.718e+05	1.819e+06
17	1	207	-141.94	-766.42	-372.31	-536.05	-301.31	-1.100e+06	-4.867e+06	-3.470e+06	-2.497e+06	1.819e+06
17	1	210	1393.10	230.83	307.61	1316.31	-288.70	1.242e+07	5.303e+06	1.194e+07	5.791e+06	

1.797e+06												
17	1	211	-806.06	-1964.91	-882.70	-1888.27	-287.99	-8.083e+06	-1.521e+07	-1.472e+07	-8.572e+06	1.802e+06
17	1	212	349.42	-276.37	-122.20	195.24	-269.65	3.591e+06	-1.782e+05	2.649e+06	7.640e+05	1.632e+06
17	1	213	-297.87	-922.49	-451.99	-768.37	-269.28	-2.589e+06	-6.359e+06	-5.416e+06	-3.533e+06	1.633e+06
17	1	216	987.14	73.47	133.00	927.61	-225.48	9.145e+06	3.673e+06	8.774e+06	4.043e+06	1.375e+06
17	1	217	-647.94	-1558.96	-707.42	-1499.47	-225.06	-6.445e+06	-1.192e+07	-1.155e+07	-6.817e+06	1.378e+06
17	1	218	483.96	-143.00	-53.83	394.79	-218.98	4.873e+06	1.099e+06	4.321e+06	1.651e+06	1.334e+06
17	1	219	-431.63	-1056.76	-520.65	-967.73	-218.46	-3.867e+06	-7.641e+06	-7.088e+06	-4.420e+06	1.335e+06
17	1	220	2281.00	870.25	900.07	2251.18	-202.95	1.361e+07	8.377e+06	1.360e+07	8.390e+06	2.689e+05
17	1	221	-1445.63	-2846.76	-1475.27	-2817.12	-201.63	-1.105e+07	-1.604e+07	-1.603e+07	-1.106e+07	2.034e+05
17	1	222	1965.35	561.56	589.89	1937.02	-197.39	1.709e+07	8.394e+06	1.693e+07	8.562e+06	1.197e+06
17	1	223	-1135.23	-2536.37	-1163.76	-2507.84	-197.88	-1.118e+07	-1.990e+07	-1.973e+07	-1.135e+07	1.202e+06
17	1	224	-120.98	-453.40	-287.38	-286.99	-166.21	-3.559e+05	-2.407e+06	-1.382e+06	-1.382e+06	1.026e+06
17	1	225	-29.29	-362.67	-239.83	-152.13	-160.82	5.166e+05	-1.536e+06	-2.442e+05	-7.751e+05	9.913e+05
17	1	226	-211.99	-544.85	-334.97	-421.87	-160.66	-1.227e+06	-3.280e+06	-2.519e+06	-1.988e+06	9.913e+05
17	1	227	587.65	-41.00	-1.25	547.89	-153.01	5.858e+06	2.079e+06	5.606e+06	2.331e+06	9.426e+05
17	1	228	-534.07	-1160.16	-573.65	-1120.58	-152.36	-4.846e+06	-8.625e+06	-8.373e+06	-5.098e+06	9.433e+05
17	1	229	1521.60	356.29	375.05	1502.84	-146.64	1.362e+07	6.473e+06	1.349e+07	6.597e+06	9.325e+05
17	1	230	-932.07	-2092.83	-950.87	-2074.03	-146.52	-9.253e+06	-1.640e+07	-1.628e+07	-9.378e+06	9.356e+05
17	1	231	56.81	-278.80	-196.11	-25.88	-144.61	1.331e+06	-7.251e+05	8.167e+05	-2.111e+05	8.902e+05
17	1	232	-296.18	-630.74	-378.80	-548.13	-144.28	-2.038e+06	-4.094e+06	-3.580e+06	-2.552e+06	8.902e+05
17	1	233	131.39	-207.42	-159.43	83.40	-118.13	2.031e+06	-2.991e+04	1.730e+06	2.713e+05	7.280e+05
17	1	234	-367.90	-705.17	-415.67	-657.40	-117.61	-2.733e+06	-4.794e+06	-4.493e+06	-3.034e+06	7.278e+05
17	1	235	1083.05	166.43	180.79	1068.69	-113.81	1.005e+07	4.564e+06	9.956e+06	4.658e+06	7.111e+05
17	1	236	-741.49	-1654.35	-755.83	-1640.00	-113.52	-7.337e+06	-1.283e+07	-1.273e+07	-7.431e+06	7.127e+05
17	1	237	189.27	-153.30	-132.05	168.03	-82.62	2.569e+06	5.026e+05	2.432e+06	6.398e+05	5.145e+05
17	1	238	-422.36	-762.97	-443.33	-742.00	-81.89	-3.265e+06	-5.332e+06	-5.195e+06	-3.402e+06	5.139e+05
17	1	239	653.54	22.55	31.89	644.19	-76.22	6.477e+06	2.693e+06	6.414e+06	2.756e+06	4.852e+05
17	1	240	-598.15	-1225.78	-607.36	-1216.58	-75.46	-5.460e+06	-9.244e+06	-9.181e+06	-5.523e+06	4.851e+05
17	1	241	226.40	-120.02	-115.28	221.66	-40.24	2.908e+06	8.364e+05	2.874e+06	8.706e+05	2.637e+05
17	1	242	-455.92	-800.15	-460.47	-795.60	-39.32	-3.598e+06	-5.670e+06	-5.637e+06	-3.632e+06	2.626e+05
17	1	259	2353.70	929.65	929.67	2353.67	6.26	1.390e+07	8.951e+06	1.390e+07	8.951e+06	-6965.94
17	1	260	2026.53	610.63	610.66	2026.49	6.74	1.761e+07	8.869e+06	1.761e+07	8.869e+06	-7599.26

17	1	261	1566.63	398.68	398.72	1566.59	6.97	1.402e+07	6.869e+06	1.402e+07	6.869e+06	-7995.69
17	1	262	1117.18	197.34	197.39	1117.13	6.71	1.036e+07	4.866e+06	1.036e+07	4.866e+06	-7731.17
17	1	263	677.28	43.20	43.26	677.22	6.17	6.689e+06	2.901e+06	6.689e+06	2.901e+06	-7083.79
17	1	264	240.15	-109.79	-109.69	240.05	5.90	3.025e+06	9.491e+05	3.025e+06	9.491e+05	-6861.10
17	1	265	-281.45	-294.11	-287.92	-287.64	6.33	-1.371e+06	-1.387e+06	-1.380e+06	-1.378e+06	-7617.31
17	1	266	-466.33	-814.17	-466.47	-814.03	6.98	-3.710e+06	-5.787e+06	-5.787e+06	-3.710e+06	-8483.45
17	1	267	-619.41	-1249.33	-619.48	-1249.25	7.06	-5.668e+06	-9.456e+06	-9.456e+06	-5.668e+06	-8300.70
17	1	268	-773.15	-1687.76	-773.20	-1687.71	6.69	-7.640e+06	-1.313e+07	-1.313e+07	-7.640e+06	-7438.58
17	1	269	-975.10	-2137.03	-975.13	-2137.00	6.07	-9.651e+06	-1.681e+07	-1.681e+07	-9.651e+06	-6326.81
17	1	270	-1184.67	-2596.91	-1184.69	-2596.89	5.36	-1.166e+07	-2.042e+07	-2.042e+07	-1.166e+07	-5217.23
17	1	271	-1505.27	-2918.95	-1505.28	-2918.93	4.79	-1.164e+07	-1.631e+07	-1.631e+07	-1.164e+07	-4465.26
17	1	288	229.50	-123.30	-115.43	221.64	52.09	2.912e+06	8.331e+05	2.874e+06	8.708e+05	-2.776e+05
17	1	289	-452.87	-804.11	-461.16	-795.83	53.31	-3.592e+06	-5.674e+06	-5.635e+06	-3.631e+06	-2.797e+05
17	1	290	657.31	19.42	31.98	644.75	88.62	6.480e+06	2.688e+06	6.413e+06	2.755e+06	-4.996e+05
17	1	291	-596.25	-1229.40	-609.22	-1216.43	89.68	-5.454e+06	-9.246e+06	-9.178e+06	-5.522e+06	-5.020e+05
17	1	292	195.17	-159.70	-132.36	167.84	94.63	2.576e+06	4.963e+05	2.432e+06	6.407e+05	-5.288e+05
17	1	293	-416.41	-770.73	-444.65	-742.49	95.95	-3.254e+06	-5.338e+06	-5.192e+06	-3.399e+06	-5.313e+05
17	1	294	1087.52	163.88	181.84	1069.57	127.52	1.005e+07	4.556e+06	9.953e+06	4.654e+06	-7.273e+05
17	1	295	-740.74	-1657.12	-758.69	-1639.17	127.00	-7.332e+06	-1.282e+07	-1.273e+07	-7.430e+06	-7.280e+05
17	1	296	139.61	-216.70	-159.93	82.84	130.40	2.042e+06	-3.872e+04	1.730e+06	2.733e+05	-7.429e+05
17	1	297	-359.42	-716.30	-417.49	-658.23	131.72	-2.716e+06	-4.803e+06	-4.489e+06	-3.030e+06	-7.456e+05
17	1	298	66.82	-290.59	-196.90	-26.87	157.19	1.346e+06	-7.360e+05	8.179e+05	-2.079e+05	-9.058e+05
17	1	299	-285.76	-644.41	-380.87	-549.30	158.32	-2.018e+06	-4.105e+06	-3.576e+06	-2.547e+06	-9.081e+05
17	1	300	1525.56	355.03	377.63	1502.96	161.10	1.361e+07	6.464e+06	1.349e+07	6.592e+06	-9.499e+05
17	1	301	-932.29	-2094.61	-954.36	-2072.53	158.65	-9.249e+06	-1.640e+07	-1.627e+07	-9.377e+06	-9.487e+05
17	1	302	594.80	-47.19	-1.23	548.84	165.51	5.864e+06	2.069e+06	5.605e+06	2.328e+06	-9.576e+05
17	1	303	-530.08	-1167.61	-577.26	-1120.43	166.89	-4.833e+06	-8.628e+06	-8.367e+06	-5.095e+06	-9.613e+05
17	1	304	-17.99	-376.40	-241.03	-153.36	173.76	5.351e+05	-1.548e+06	-2.423e+05	-7.709e+05	-1.008e+06
17	1	305	-200.42	-559.81	-336.98	-423.25	174.44	-1.206e+06	-3.293e+06	-2.515e+06	-1.983e+06	-1.009e+06
17	1	306	-109.12	-468.30	-289.06	-288.36	179.59	-3.351e+05	-2.420e+06	-1.379e+06	-1.377e+06	-1.043e+06
17	1	307	1968.28	561.30	593.78	1935.80	211.29	1.709e+07	8.385e+06	1.692e+07	8.558e+06	-1.214e+06
17	1	308	-1135.76	-2537.58	-1167.46	-2505.88	208.43	-1.118e+07	-1.989e+07	-1.972e+07	-1.135e+07	-1.213e+06
17	1	309	2282.67	871.25	904.95	2248.97	215.49	1.360e+07	8.371e+06	1.359e+07	8.387e+06	-

2.841e+05												
17	1	310	-1446.41	-2847.43	-1478.91	-2814.93	210.91	-1.105e+07	-1.603e+07	-1.602e+07	-1.105e+07	-
2.124e+05												
17	1	311	493.39	-152.05	-54.06	395.39	231.62	4.884e+06	1.087e+06	4.321e+06	1.650e+06	-1.349e+06
17	1	312	-425.17	-1068.41	-525.70	-967.88	233.58	-3.847e+06	-7.647e+06	-7.079e+06	-4.414e+06	-
1.354e+06												
17	1	313	996.58	67.95	134.79	929.73	240.02	9.149e+06	3.656e+06	8.769e+06	4.036e+06	-1.393e+06
17	1	314	-646.26	-1564.92	-713.27	-1497.91	238.89	-6.434e+06	-1.192e+07	-1.154e+07	-6.814e+06	-
1.394e+06												
17	1	317	359.81	-288.56	-122.97	194.22	282.74	3.607e+06	-1.909e+05	2.650e+06	7.669e+05	-1.650e+06
17	1	318	-288.65	-938.51	-457.85	-769.32	285.18	-2.562e+06	-6.368e+06	-5.405e+06	-3.525e+06	-
1.655e+06												
17	1	319	1402.22	227.92	313.29	1316.85	304.90	1.242e+07	5.283e+06	1.192e+07	5.781e+06	-
1.820e+06												
17	1	320	-806.50	-1968.79	-889.98	-1885.30	300.10	-8.073e+06	-1.520e+07	-1.471e+07	-8.570e+06	-
1.816e+06												
17	1	323	204.34	-447.81	-203.76	-39.71	315.60	2.123e+06	-1.680e+06	7.069e+05	-2.640e+05	-1.839e+06
17	1	324	-130.52	-785.57	-377.90	-538.19	317.57	-1.067e+06	-4.880e+06	-3.459e+06	-2.488e+06	-
1.843e+06												
17	1	325	37.46	-618.08	-291.00	-289.62	327.77	5.305e+05	-3.280e+06	-1.376e+06	-1.374e+06	-1.905e+06
17	1	326	850.81	-84.42	58.33	708.06	336.34	7.716e+06	2.225e+06	6.895e+06	3.047e+06	-1.958e+06
17	1	327	-495.75	-1418.12	-639.74	-1274.13	334.79	-5.004e+06	-1.048e+07	-9.656e+06	-5.829e+06	-
1.959e+06												
17	1	330	1796.15	415.90	534.74	1677.31	387.18	1.557e+07	6.970e+06	1.491e+07	7.626e+06	-
2.282e+06												
17	1	331	-991.13	-2363.40	-1107.09	-2247.44	381.68	-9.770e+06	-1.837e+07	-1.772e+07	-1.042e+07	-
2.279e+06												
17	1	334	653.53	-281.20	-41.93	414.26	407.93	5.851e+06	3.709e+05	4.463e+06	1.759e+06	-2.383e+06
17	1	335	-298.66	-1227.92	-542.65	-983.92	408.90	-3.136e+06	-8.612e+06	-7.214e+06	-4.534e+06	-
2.387e+06												
17	1	338	1208.02	24.77	209.47	1023.32	429.46	1.053e+07	3.400e+06	9.449e+06	4.480e+06	-
2.555e+06												
17	1	339	-606.11	-1768.82	-786.16	-1588.77	420.62	-6.200e+06	-1.330e+07	-1.223e+07	-7.275e+06	-
2.545e+06												
17	1	340	2073.81	700.33	822.44	1951.70	390.90	1.268e+07	6.740e+06	1.256e+07	6.864e+06	-
8.496e+05												
17	1	341	-1272.37	-2638.05	-1390.60	-2519.81	384.05	-9.390e+06	-1.515e+07	-1.505e+07	-9.483e+06	-
7.253e+05												
17	1	342	422.19	-514.31	-162.49	70.37	453.54	3.691e+06	-1.786e+06	1.645e+06	2.597e+05	-2.650e+06
17	1	343	-67.14	-1008.99	-428.05	-648.08	457.89	-9.539e+05	-6.442e+06	-4.383e+06	-3.013e+06	-2.657e+06
17	1	344	179.34	-768.20	-297.68	-291.18	473.76	1.383e+06	-4.117e+06	-1.363e+06	-1.371e+06	-2.750e+06
17	1	351	970.26	-242.89	75.18	652.19	533.57	8.086e+06	9.076e+05	6.254e+06	2.740e+06	-3.130e+06
17	1	352	-344.29	-1509.67	-650.14	-1203.82	512.73	-3.753e+06	-1.084e+07	-9.020e+06	-5.568e+06	-
3.092e+06												
17	1	353	1525.45	179.46	422.74	1282.17	517.95	1.316e+07	4.707e+06	1.179e+07	6.083e+06	-
3.122e+06												
17	1	354	-758.38	-2088.94	-992.56	-1854.76	506.70	-7.518e+06	-1.596e+07	-1.460e+07	-8.882e+06	-
3.108e+06												
17	1	358	614.13	-538.84	-95.43	170.72	560.91	5.225e+06	-1.847e+06	2.560e+06	8.184e+05	-3.427e+06
17	1	359	-37.33	-1213.15	-492.77	-757.70	572.79	-8.887e+05	-7.969e+06	-5.296e+06	-3.562e+06	-3.433e+06
17	1	363	300.75	-923.32	-343.02	-279.55	611.21	2.267e+06	-4.932e+06	-1.276e+06	-1.390e+06	-3.599e+06
17	1	364	1744.43	436.18	679.02	1501.59	508.65	1.107e+07	4.287e+06	1.056e+07	4.795e+06	-
1.786e+06												
17	1	365	-992.72	-2307.97	-1228.40	-2072.28	504.42	-6.913e+06	-1.358e+07	-1.314e+07	-7.346e+06	-

1.642e+06												
17	1	368	1175.90	-144.49	243.19	788.22	601.33	1.010e+07	1.729e+06	7.827e+06	4.003e+06	-3.724e+06
17	1	369	-449.72	-1737.00	-817.06	-1369.66	581.31	-4.561e+06	-1.284e+07	-1.063e+07	-6.775e+06	-3.665e+06
17	1	378	756.96	-493.27	-8.98	272.67	609.04	6.508e+06	-1.707e+06	3.388e+06	1.413e+06	-3.987e+06
17	1	379	-80.73	-1335.06	-587.74	-828.05	615.54	-1.083e+06	-9.239e+06	-6.098e+06	-4.225e+06	-3.969e+06
17	1	384	1322.92	132.01	517.43	937.50	557.19	8.693e+06	1.294e+06	7.327e+06	2.660e+06	-2.870e+06
17	1	385	-624.01	-1884.17	-986.09	-1522.09	570.24	-3.877e+06	-1.134e+07	-1.011e+07	-5.109e+06	-2.770e+06
17	1	386	329.84	-901.00	-314.75	-256.41	614.73	2.676e+06	-5.433e+06	-1.295e+06	-1.461e+06	-4.054e+06
17	1	395	814.33	-360.37	90.25	363.71	571.21	6.035e+06	-2.021e+06	3.429e+06	5.852e+05	-3.768e+06
17	1	396	-194.78	-1400.40	-676.50	-918.68	590.52	-5.362e+05	-8.528e+06	-6.008e+06	-3.056e+06	-3.713e+06
17	1	397	230.97	-886.64	-348.46	-307.22	558.42	2.836e+06	-5.237e+06	-1.223e+06	-1.179e+06	-4.036e+06
17	2	133	247.99	-686.88	-218.00	-220.89	-467.44	2.184e+06	-4.144e+06	-1.031e+06	-9.285e+05	3.164e+06
17	2	134	637.63	-309.53	61.28	266.82	-462.29	4.651e+06	-1.552e+06	2.619e+06	4.803e+05	2.911e+06
17	2	135	-130.39	-1075.49	-497.73	-708.16	-460.69	-4.234e+05	-6.594e+06	-4.667e+06	-2.351e+06	2.860e+06
17	2	144	257.19	-697.46	-220.20	-220.07	-477.33	2.044e+06	-4.193e+06	-1.071e+06	-1.078e+06	3.119e+06
17	2	145	1010.52	32.32	306.85	735.99	-439.52	6.815e+06	9.978e+05	5.792e+06	2.021e+06	2.215e+06
17	2	146	-473.17	-1447.46	-744.54	-1176.09	-436.75	-2.990e+06	-8.742e+06	-7.802e+06	-3.929e+06	2.126e+06
17	2	151	581.28	-382.92	-10.27	208.63	-469.51	4.976e+06	-1.294e+06	2.596e+06	1.085e+06	3.042e+06
17	2	152	-57.51	-1021.39	-430.18	-648.72	-469.39	-8.536e+05	-7.127e+06	-4.740e+06	-3.241e+06	3.046e+06
17	2	161	891.54	-98.04	173.30	620.21	-441.46	7.738e+06	1.377e+06	6.058e+06	3.057e+06	2.804e+06
17	2	162	-342.55	-1331.50	-613.89	-1060.15	-441.27	-3.523e+06	-9.890e+06	-8.204e+06	-5.210e+06	2.810e+06
17	2	165	1337.68	319.02	496.28	1160.42	-386.19	8.548e+06	3.312e+06	8.169e+06	3.692e+06	1.358e+06
17	2	166	-760.60	-1773.85	-935.66	-1598.78	-383.06	-5.323e+06	-1.046e+07	-1.013e+07	-5.652e+06	1.256e+06
17	2	167	222.82	-663.97	-220.43	-220.72	-443.39	1.634e+06	-3.774e+06	-1.068e+06	-1.072e+06	2.704e+06
17	2	171	475.75	-411.83	-82.66	146.58	-428.74	3.995e+06	-1.419e+06	1.980e+06	5.955e+05	2.617e+06
17	2	172	-29.62	-916.60	-358.32	-587.90	-428.38	-7.199e+05	-6.136e+06	-4.116e+06	-2.739e+06	2.619e+06
17	2	176	1163.95	140.68	313.03	991.59	-382.96	1.013e+07	3.649e+06	9.097e+06	4.684e+06	2.375e+06
17	2	177	-581.45	-1603.72	-753.88	-1431.29	-382.80	-5.793e+06	-1.229e+07	-1.125e+07	-6.833e+06	2.381e+06
17	2	178	711.93	-177.34	45.06	489.53	-385.11	6.200e+06	7.695e+05	4.827e+06	2.142e+06	2.360e+06
17	2	179	-264.43	-1152.48	-486.36	-930.54	-384.49	-2.908e+06	-8.341e+06	-6.965e+06	-4.284e+06	2.363e+06
17	2	186	128.25	-569.06	-220.52	-220.29	-348.65	1.019e+06	-3.153e+06	-1.066e+06	-1.068e+06	2.086e+06
17	2	187	316.26	-381.60	-123.40	58.06	-336.92	2.813e+06	-1.362e+06	1.262e+06	1.890e+05	2.017e+06
17	2	188	-59.42	-756.87	-317.68	-498.61	-336.79	-7.712e+05	-4.947e+06	-3.393e+06	-2.325e+06	2.019e+06
17	2	189	1592.60	535.11	622.74	1504.96	-291.54	9.772e+06	5.193e+06	9.680e+06	5.284e+06	6.392e+05
17	2	190	-977.29	-2028.24	-1063.91	-1941.62	-289.02	-7.226e+06	-1.166e+07	-1.159e+07	-7.296e+06	5.508e+05
17	2	191	915.20	23.65	153.85	785.00	-314.85	8.097e+06	2.644e+06	7.285e+06	3.457e+06	1.941e+06
17	2	192	-465.75	-1355.43	-595.64	-1225.54	-314.15	-4.782e+06	-1.024e+07	-9.425e+06	-5.597e+06	

17	2	195	491.81	-207.24	-33.26	317.83	-302.24	4.488e+06	3.038e+05	3.435e+06	1.356e+06	1.815e+06
17	2	196	-234.02	-932.22	-407.98	-758.25	-301.99	-2.437e+06	-6.622e+06	-5.567e+06	-3.492e+06	1.818e+06
17	2	199	1376.50	320.42	404.51	1292.40	-285.90	1.198e+07	5.377e+06	1.149e+07	5.872e+06	1.739e+06
17	2	200	-761.43	-1816.05	-845.67	-1731.81	-285.90	-7.522e+06	-1.414e+07	-1.364e+07	-8.019e+06	1.745e+06
17	2	203	642.94	-57.83	43.66	541.45	-246.61	5.928e+06	1.732e+06	5.307e+06	2.352e+06	1.490e+06
17	2	204	-383.71	-1083.10	-485.16	-981.66	-246.29	-3.864e+06	-8.063e+06	-7.441e+06	-4.487e+06	1.492e+06
17	2	205	19.61	-460.86	-220.75	-220.49	-240.24	3.837e+05	-2.513e+06	-1.064e+06	-1.065e+06	1.448e+06
17	2	206	148.52	-332.28	-155.16	-28.60	-231.92	1.615e+06	-1.283e+06	5.411e+05	-2.091e+05	1.399e+06
17	2	207	-109.19	-589.55	-286.39	-412.35	-231.78	-8.463e+05	-3.744e+06	-2.669e+06	-1.921e+06	1.400e+06
17	2	210	1071.61	177.56	236.62	1012.55	-222.07	9.556e+06	4.080e+06	9.181e+06	4.454e+06	1.383e+06
17	2	211	-620.04	-1511.47	-679.00	-1452.52	-221.53	-6.218e+06	-1.170e+07	-1.132e+07	-6.594e+06	1.386e+06
17	2	212	268.78	-212.59	-94.00	150.19	-207.42	2.762e+06	-1.371e+05	2.038e+06	5.877e+05	1.255e+06
17	2	213	-229.13	-709.61	-347.68	-591.05	-207.14	-1.992e+06	-4.892e+06	-4.166e+06	-2.717e+06	1.256e+06
17	2	216	759.34	56.52	102.30	713.55	-173.45	7.034e+06	2.825e+06	6.749e+06	3.110e+06	1.058e+06
17	2	217	-498.41	-1199.20	-544.17	-1153.44	-173.12	-4.958e+06	-9.170e+06	-8.884e+06	-5.244e+06	1.060e+06
17	2	218	372.28	-110.00	-41.41	303.68	-168.45	3.749e+06	8.457e+05	3.324e+06	1.270e+06	1.026e+06
17	2	219	-332.02	-812.89	-400.50	-744.41	-168.05	-2.974e+06	-5.878e+06	-5.452e+06	-3.400e+06	1.027e+06
17	2	220	1754.62	669.42	692.36	1731.67	-156.12	1.047e+07	6.444e+06	1.046e+07	6.454e+06	2.068e+05
17	2	221	-1112.02	-2189.82	-1134.83	-2167.01	-155.10	-8.498e+06	-1.234e+07	-1.233e+07	-8.504e+06	1.564e+05
17	2	222	1511.81	431.97	453.76	1490.02	-151.83	1.315e+07	6.457e+06	1.302e+07	6.586e+06	9.206e+05
17	2	223	-873.26	-1951.05	-895.20	-1929.11	-152.22	-8.602e+06	-1.531e+07	-1.518e+07	-8.732e+06	9.247e+05
17	2	224	-93.06	-348.77	-221.07	-220.76	-127.85	-2.738e+05	-1.852e+06	-1.063e+06	-1.063e+06	7.889e+05
17	2	225	-22.53	-278.98	-184.49	-117.02	-123.70	3.974e+05	-1.181e+06	-1.879e+05	-5.962e+05	7.625e+05
17	2	226	-163.07	-419.11	-257.67	-324.51	-123.58	-9.439e+05	-2.523e+06	-1.938e+06	-1.529e+06	7.626e+05
17	2	227	452.03	-31.54	-0.96	421.45	-117.70	4.506e+06	1.599e+06	4.312e+06	1.793e+06	7.251e+05
17	2	228	-410.82	-892.43	-441.27	-861.99	-117.20	-3.728e+06	-6.635e+06	-6.441e+06	-3.922e+06	7.256e+05
17	2	229	1170.46	274.07	288.50	1156.03	-112.80	1.047e+07	4.979e+06	1.038e+07	5.075e+06	7.173e+05
17	2	230	-716.98	-1609.87	-731.44	-1595.41	-112.71	-7.118e+06	-1.262e+07	-1.252e+07	-7.214e+06	7.197e+05
17	2	231	43.70	-214.46	-150.86	-19.91	-111.24	1.024e+06	-5.578e+05	6.282e+05	-1.624e+05	6.848e+05
17	2	232	-227.83	-485.19	-291.38	-421.63	-110.98	-1.568e+06	-3.149e+06	-2.754e+06	-1.963e+06	6.848e+05
17	2	233	101.07	-159.55	-122.64	64.15	-90.87	1.562e+06	-2.301e+04	1.330e+06	2.087e+05	5.600e+05
17	2	234	-283.00	-542.44	-319.75	-505.69	-90.47	-2.102e+06	-3.687e+06	-3.456e+06	-2.334e+06	5.599e+05
17	2	235	833.11	128.03	139.07	822.07	-87.55	7.731e+06	3.511e+06	7.658e+06	3.583e+06	5.470e+05

17	2	236	-570.37	-1272.57	-581.41	-1261.54	-87.32	-5.644e+06	-9.866e+06	-9.793e+06	-5.717e+06	5.482e+05
17	2	237	145.59	-117.92	-101.58	129.25	-63.55	1.976e+06	3.866e+05	1.871e+06	4.922e+05	3.958e+05
17	2	238	-324.89	-586.90	-341.03	-570.77	-62.99	-2.511e+06	-4.101e+06	-3.996e+06	-2.617e+06	3.953e+05
17	2	239	502.72	17.34	24.53	495.53	-58.63	4.982e+06	2.072e+06	4.934e+06	2.120e+06	3.733e+05
17	2	240	-460.12	-942.91	-467.20	-935.83	-58.04	-4.200e+06	-7.111e+06	-7.062e+06	-4.249e+06	3.731e+05
17	2	241	174.15	-92.32	-88.68	170.51	-30.95	2.237e+06	6.434e+05	2.211e+06	6.697e+05	2.029e+05
17	2	242	-350.71	-615.50	-354.21	-612.00	-30.24	-2.768e+06	-4.362e+06	-4.336e+06	-2.794e+06	2.020e+05
17	2	259	1810.54	715.11	715.13	1810.52	4.82	1.069e+07	6.886e+06	1.069e+07	6.886e+06	-5358.42
17	2	260	1558.87	469.71	469.74	1558.84	5.19	1.355e+07	6.822e+06	1.355e+07	6.822e+06	-5845.58
17	2	261	1205.10	306.68	306.71	1205.07	5.36	1.079e+07	5.284e+06	1.079e+07	5.284e+06	-6150.53
17	2	262	859.37	151.80	151.84	859.33	5.16	7.968e+06	3.743e+06	7.968e+06	3.743e+06	-5947.06
17	2	263	520.99	33.23	33.28	520.94	4.75	5.146e+06	2.231e+06	5.146e+06	2.231e+06	-5449.07
17	2	264	184.73	-84.46	-84.38	184.65	4.54	2.327e+06	7.301e+05	2.327e+06	7.301e+05	-5277.77
17	2	265	-216.50	-226.24	-221.47	-221.26	4.87	-1.055e+06	-1.067e+06	-1.061e+06	-1.060e+06	-5859.47
17	2	266	-358.72	-626.28	-358.83	-626.17	5.37	-2.854e+06	-4.452e+06	-4.452e+06	-2.854e+06	-6525.73
17	2	267	-476.47	-961.02	-476.53	-960.96	5.43	-4.360e+06	-7.274e+06	-7.274e+06	-4.360e+06	-6385.16
17	2	268	-594.73	-1298.28	-594.77	-1298.24	5.14	-5.877e+06	-1.010e+07	-1.010e+07	-5.877e+06	-5721.98
17	2	269	-750.08	-1643.87	-750.10	-1643.84	4.67	-7.424e+06	-1.293e+07	-1.293e+07	-7.424e+06	-4866.77
17	2	270	-911.28	-1997.62	-911.30	-1997.60	4.12	-8.969e+06	-1.570e+07	-1.570e+07	-8.969e+06	-4013.25
17	2	271	-1157.90	-2245.35	-1157.91	-2245.33	3.68	-8.951e+06	-1.255e+07	-1.255e+07	-8.951e+06	-3434.81
17	2	288	176.54	-94.84	-88.79	170.49	40.07	2.240e+06	6.408e+05	2.211e+06	6.699e+05	-2.135e+05
17	2	289	-348.36	-618.55	-354.74	-612.17	41.01	-2.763e+06	-4.364e+06	-4.335e+06	-2.793e+06	-2.152e+05
17	2	290	505.62	14.94	24.60	495.96	68.17	4.985e+06	2.067e+06	4.933e+06	2.119e+06	-3.843e+05
17	2	291	-458.66	-945.69	-468.63	-935.72	68.98	-4.196e+06	-7.112e+06	-7.060e+06	-4.248e+06	-3.862e+05
17	2	292	150.13	-122.85	-101.82	129.10	72.79	1.982e+06	3.817e+05	1.871e+06	4.929e+05	-4.068e+05
17	2	293	-320.32	-592.87	-342.04	-571.15	73.81	-2.503e+06	-4.106e+06	-3.994e+06	-2.615e+06	-4.087e+05
17	2	294	836.55	126.07	139.88	822.74	98.09	7.732e+06	3.505e+06	7.656e+06	3.580e+06	-5.595e+05
17	2	295	-569.80	-1274.71	-583.61	-1260.90	97.69	-5.640e+06	-9.865e+06	-9.790e+06	-5.715e+06	-5.600e+05
17	2	296	107.39	-166.69	-123.02	63.72	100.31	1.571e+06	-2.978e+04	1.331e+06	2.102e+05	-5.715e+05
17	2	297	-276.48	-551.00	-321.14	-506.33	101.32	-2.090e+06	-3.695e+06	-3.453e+06	-2.331e+06	-5.735e+05
17	2	298	51.40	-223.53	-151.46	-20.67	120.92	1.035e+06	-5.661e+05	6.291e+05	-1.599e+05	-6.968e+05
17	2	299	-219.82	-495.70	-292.98	-422.54	121.78	-1.552e+06	-3.158e+06	-2.751e+06	-1.959e+06	-6.985e+05
17	2	300	1173.51	273.10	290.49	1156.12	123.92	1.047e+07	4.972e+06	1.037e+07	5.071e+06	-7.307e+05
17	2	301	-717.14	-1611.24	-734.12	-1594.26	122.04	-7.114e+06	-1.262e+07	-1.252e+07	-7.213e+06	-

7.297e+05													
17	2	302	457.54	-36.30	-0.95	422.19	127.31	4.511e+06	1.591e+06	4.311e+06	1.791e+06	-7.366e+05	
17	2	303	-407.75	-898.16	-444.04	-861.87	128.38	-3.718e+06	-6.637e+06	-6.436e+06	-3.919e+06	-7.394e+05	
17	2	304	-13.84	-289.54	-185.41	-117.97	133.66	4.116e+05	-1.191e+06	-1.864e+05	-5.930e+05	-7.751e+05	
17	2	305	-154.17	-430.62	-259.22	-325.58	134.19	-9.274e+05	-2.533e+06	-1.935e+06	-1.525e+06	-7.762e+05	
17	2	306	-83.94	-360.23	-222.35	-221.81	138.14	-2.577e+05	-1.862e+06	-1.061e+06	-1.059e+06	-8.021e+05	
17	2	307	1514.06	431.77	456.75	1489.08	162.53	1.315e+07	6.450e+06	1.301e+07	6.583e+06	-9.335e+05	
17	2	308	-873.66	-1951.99	-898.05	-1927.60	160.33	-8.599e+06	-1.530e+07	-1.517e+07	-8.731e+06	-9.329e+05	
17	2	309	1755.90	670.19	696.12	1729.98	165.76	1.046e+07	6.440e+06	1.045e+07	6.451e+06	-2.185e+05	
17	2	310	-1112.62	-2190.33	-1137.63	-2165.33	162.24	-8.497e+06	-1.233e+07	-1.233e+07	-8.504e+06	-1.634e+05	
17	2	311	379.53	-116.97	-41.58	304.15	178.17	3.757e+06	8.362e+05	3.323e+06	1.269e+06	-1.038e+06	
17	2	312	-327.05	-821.86	-404.38	-744.53	179.68	-2.959e+06	-5.882e+06	-5.445e+06	-3.396e+06	-1.042e+06	
17	2	313	766.60	52.27	103.69	715.18	184.63	7.038e+06	2.812e+06	6.746e+06	3.104e+06	-1.072e+06	
17	2	314	-497.12	-1203.79	-548.67	-1152.24	183.76	-4.949e+06	-9.169e+06	-8.876e+06	-5.242e+06	-1.073e+06	
17	2	317	276.78	-221.97	-94.60	149.40	217.49	2.775e+06	-1.469e+05	2.038e+06	5.899e+05	-1.269e+06	
17	2	318	-222.04	-721.93	-352.19	-591.78	219.37	-1.971e+06	-4.899e+06	-4.157e+06	-2.712e+06	-1.273e+06	
17	2	319	1078.63	175.32	240.99	1012.96	234.54	9.555e+06	4.064e+06	9.171e+06	4.447e+06	-1.400e+06	
17	2	320	-620.39	-1514.45	-684.60	-1450.23	230.85	-6.210e+06	-1.170e+07	-1.131e+07	-6.592e+06	-1.397e+06	
17	2	323	157.19	-344.47	-156.74	-30.55	242.77	1.633e+06	-1.293e+06	5.438e+05	-2.031e+05	-1.415e+06	
17	2	324	-100.40	-604.28	-290.69	-413.99	244.28	-8.211e+05	-3.753e+06	-2.661e+06	-1.914e+06	-1.418e+06	
17	2	325	28.81	-475.45	-223.85	-222.79	252.13	4.080e+05	-2.523e+06	-1.058e+06	-1.057e+06	-1.466e+06	
17	2	326	654.47	-64.94	44.87	544.66	258.73	5.935e+06	1.712e+06	5.304e+06	2.343e+06	-1.506e+06	
17	2	327	-381.35	-1090.87	-492.11	-980.10	257.53	-3.849e+06	-8.063e+06	-7.428e+06	-4.484e+06	-1.507e+06	
17	2	330	1381.66	319.92	411.34	1290.24	297.83	1.198e+07	5.362e+06	1.147e+07	5.866e+06	-1.756e+06	
17	2	331	-762.41	-1818.00	-851.61	-1728.80	293.60	-7.515e+06	-1.413e+07	-1.363e+07	-8.018e+06	-1.753e+06	
17	2	334	502.72	-216.31	-32.26	318.66	313.79	4.501e+06	2.853e+05	3.433e+06	1.353e+06	-1.833e+06	
17	2	335	-229.74	-944.55	-417.43	-756.86	314.54	-2.413e+06	-6.624e+06	-5.549e+06	-3.488e+06	-1.836e+06	
17	2	338	929.25	19.05	161.13	787.17	330.35	8.099e+06	2.616e+06	7.268e+06	3.446e+06	-1.966e+06	
17	2	339	-466.24	-1360.63	-604.74	-1222.13	323.56	-4.769e+06	-1.023e+07	-9.408e+06	-5.596e+06	-1.958e+06	
17	2	340	1595.24	538.71	632.64	1501.31	300.69	9.757e+06	5.184e+06	9.661e+06	5.280e+06	-6.536e+05	
17	2	341	-978.74	-2029.27	-1069.70	-1938.32	295.42	-7.223e+06	-1.165e+07	-1.158e+07	-7.295e+06	-5.580e+05	
17	2	342	324.76	-395.62	-124.99	54.13	348.88	2.839e+06	-1.374e+06	1.265e+06	1.997e+05	-2.038e+06	
17	2	343	-51.65	-776.15	-329.27	-498.52	352.23	-7.338e+05	-4.955e+06	-3.371e+06	-2.318e+06	-2.044e+06	
17	2	344	137.95	-590.92	-228.98	-223.99	364.43	1.064e+06	-3.167e+06	-1.048e+06	-1.055e+06	-2.115e+06	
17	2	351	746.35	-186.84	57.83	501.68	410.44	6.220e+06	6.982e+05	4.811e+06	2.108e+06	-2.408e+06	

17	2	352	-264.84	-1161.28	-500.10	-926.01	394.40	-2.887e+06	-8.335e+06	-6.939e+06	-4.283e+06	-2.378e+06
17	2	353	1173.42	138.05	325.19	986.28	398.42	1.013e+07	3.621e+06	9.068e+06	4.679e+06	-2.401e+06
17	2	354	-583.37	-1606.88	-763.51	-1426.74	389.77	-5.783e+06	-1.228e+07	-1.123e+07	-6.833e+06	-2.390e+06
17	2	358	472.40	-414.49	-73.40	131.32	431.47	4.019e+06	-1.421e+06	1.969e+06	6.295e+05	-2.636e+06
17	2	359	-28.71	-933.19	-379.06	-582.85	440.61	-6.836e+05	-6.130e+06	-4.074e+06	-2.740e+06	-2.640e+06
17	2	363	231.35	-710.25	-263.86	-215.04	470.16	1.744e+06	-3.794e+06	-9.815e+05	-1.069e+06	-2.768e+06
17	2	364	1341.87	335.53	522.32	1155.07	391.27	8.515e+06	3.297e+06	8.124e+06	3.689e+06	-1.374e+06
17	2	365	-763.63	-1775.36	-944.93	-1594.06	388.01	-5.318e+06	-1.044e+07	-1.011e+07	-5.651e+06	-1.263e+06
17	2	368	904.54	-111.15	187.07	606.32	462.56	7.770e+06	1.330e+06	6.021e+06	3.080e+06	-2.865e+06
17	2	369	-345.94	-1336.15	-628.50	-1053.59	447.16	-3.508e+06	-9.878e+06	-8.175e+06	-5.211e+06	-2.819e+06
17	2	378	582.28	-379.43	-6.90	209.75	468.50	5.006e+06	-1.313e+06	2.606e+06	1.087e+06	-3.067e+06
17	2	379	-62.10	-1026.97	-452.11	-636.96	473.50	-8.331e+05	-7.107e+06	-4.691e+06	-3.250e+06	-3.053e+06
17	2	384	1017.63	101.55	398.03	721.15	428.60	6.687e+06	9.956e+05	5.636e+06	2.046e+06	-2.208e+06
17	2	385	-480.01	-1449.36	-758.53	-1170.84	438.65	-2.982e+06	-8.722e+06	-7.774e+06	-3.930e+06	-2.131e+06
17	2	386	253.72	-693.08	-242.12	-197.24	472.87	2.059e+06	-4.179e+06	-9.961e+05	-1.124e+06	-3.118e+06
17	2	395	626.40	-277.21	69.42	279.78	439.39	4.642e+06	-1.554e+06	2.637e+06	4.501e+05	-2.899e+06
17	2	396	-149.83	-1077.23	-520.38	-706.68	454.25	-4.124e+05	-6.560e+06	-4.621e+06	-2.351e+06	-2.856e+06
17	2	397	177.67	-682.03	-268.05	-236.32	429.56	2.181e+06	-4.029e+06	-9.409e+05	-9.066e+05	-3.105e+06

M_G		N max	N min	N 1	N 2	N 1-2	M max	M min	M 1	M 2	M 1-2
		-2918.95	-1505.28	-2918.93	-620.52		-2.042e+07	-2.042e+07	-1.166e+07	-4.054e+06	
		2353.70		929.67	2353.67	615.54	1.761e+07		1.761e+07	8.951e+06	4.113e+06

Elem.	Cmb	Nodo	Von Mises	N max	N min	N 1	N 2	N 1-2	M max	M min	M 1	M 2	M 1-2
			N/mm2	N/mm	N/mm	N/mm	N/mm	N/mm	N	N	N	N	N
1	1	2	1.12	18.68	-20.38	18.57	-20.27	-2.09	3929.84	-2.158e+04	-1.779e+04	132.93	9080.73
		1	0.45	46.05	16.05	41.29	20.81	10.96	3246.91	-981.65	2668.95	-403.69	1452.55
		4	6.68	111.07	-26.74	109.57	-25.23	-14.34	1.011e+05	-8.660e+04	-1.089e+04	2.541e+04	9.209e+04
		5	6.59	29.94	-31.19	-23.98	22.73	-19.71	8.237e+04	-1.061e+05	-4606.56	-1.911e+04	9.394e+04
1	2	2	0.86	14.37	-15.68	14.29	-15.59	-1.61	3022.95	-1.660e+04	-1.368e+04	102.25	6985.18
		1	0.35	35.42	12.35	31.76	16.01	8.43	2497.62	-755.12	2053.04	-310.53	1117.34
		4	5.14	85.44	-20.57	84.28	-19.41	-11.03	7.779e+04	-6.662e+04	-8377.67	1.955e+04	7.084e+04
		5	5.07	23.03	-23.99	-18.45	17.49	-15.16	6.336e+04	-8.160e+04	-3543.51	-1.470e+04	7.226e+04
2	1	5	5.09	9.45	-28.60	-16.95	-2.19	-17.54	7.991e+04	-1.032e+05	-4876.20	-1.839e+04	9.129e+04
		4	5.07	102.94	-0.51	101.71	0.72	-11.20	9.326e+04	-8.589e+04	-1.671e+04	2.407e+04	8.722e+04
		7	8.87	129.59	-36.90	121.98	-29.30	-34.76	1.570e+05	-1.519e+05	-3.374e+04	3.884e+04	1.502e+05
		8	9.12	57.18	-42.33	-10.73	25.58	-46.32	1.588e+05	-1.628e+05	1.260e+04	-1.662e+04	1.601e+05
2	2	5	3.91	7.27	-22.00	-13.04	-1.69	-13.49	6.147e+04	-7.936e+04	-3750.92	-1.414e+04	7.022e+04
		4	3.90	79.18	-0.39	78.24	0.55	-8.62	7.174e+04	-6.607e+04	-1.285e+04	1.852e+04	6.709e+04

	7	6.82	99.68	-28.39	93.83	-22.54	-26.74	1.208e+05	-1.169e+05	-2.596e+04	2.988e+04	1.155e+05
	8	7.01	43.98	-32.56	-8.25	19.67	-35.63	1.221e+05	-1.252e+05	9688.73	-1.278e+04	1.232e+05
3 1	8	7.47	45.36	-39.75	-3.45	9.05	-42.09	1.610e+05	-1.623e+05	1.574e+04	-1.705e+04	1.608e+05
	7	7.30	120.46	-19.12	112.53	-11.20	-32.31	1.530e+05	-1.586e+05	-4.391e+04	3.831e+04	1.502e+05
	12	9.79	162.28	-42.72	149.88	-30.32	-48.85	1.896e+05	-2.219e+05	-7.954e+04	4.718e+04	1.957e+05
	13	11.87	95.62	-77.12	-4.68	23.19	-85.24	2.727e+05	-2.311e+05	3.630e+04	5336.10	2.514e+05
3 2	8	5.74	34.89	-30.58	-2.65	6.96	-32.38	1.239e+05	-1.249e+05	1.211e+04	-1.312e+04	1.237e+05
	7	5.62	92.66	-14.71	86.56	-8.61	-24.85	1.177e+05	-1.220e+05	-3.378e+04	2.947e+04	1.156e+05
	12	7.53	124.83	-32.86	115.30	-23.33	-37.58	1.458e+05	-1.707e+05	-6.118e+04	3.629e+04	1.506e+05
	13	9.13	73.56	-59.32	-3.60	17.84	-65.57	2.098e+05	-1.778e+05	2.793e+04	4104.69	1.934e+05
4 1	13	9.75	153.55	7.16	101.05	59.66	-70.21	2.587e+05	-2.442e+05	1.930e+04	-4857.99	2.512e+05
	12	8.17	49.56	-81.22	32.06	-63.73	-44.52	2.029e+05	-2.190e+05	-6.965e+04	5.352e+04	2.018e+05
	17	10.64	341.75	52.10	333.87	59.98	-47.13	9.500e+04	-3.770e+05	-3.061e+05	2.404e+04	1.687e+05
	18	17.60	46.99	-260.77	-135.96	-77.81	-151.11	5.625e+05	-3.134e+05	1.525e+05	9.657e+04	4.371e+05
4 2	13	7.50	118.11	5.51	77.73	45.89	-54.00	1.990e+05	-1.879e+05	1.485e+04	-3736.91	1.932e+05
	12	6.28	38.12	-62.48	24.66	-49.02	-34.24	1.561e+05	-1.685e+05	-5.357e+04	4.117e+04	1.552e+05
	17	8.19	262.88	40.07	256.82	46.14	-36.25	7.308e+04	-2.900e+05	-2.354e+05	1.849e+04	1.298e+05
	18	13.54	36.15	-200.59	-104.58	-59.86	-116.24	4.327e+05	-2.411e+05	1.173e+05	7.428e+04	3.362e+05
5 1	18	11.13	132.06	-130.59	-81.03	82.51	-102.76	3.755e+05	-2.778e+05	1.702e+05	-7.255e+04	3.033e+05
	17	18.74	255.02	-152.04	227.38	-124.40	-102.40	5.130e+05	-6.043e+05	-3.631e+05	2.718e+05	4.597e+05
	22	17.70	181.26	-158.63	113.41	-90.78	-135.86	5.228e+05	-5.435e+05	-1.679e+05	1.472e+05	5.094e+05
	25	15.98	201.25	-109.87	45.30	46.07	-155.56	5.388e+05	-4.171e+05	1.235e+05	-1812.69	4.738e+05
5 2	18	8.56	101.59	-100.45	-62.33	63.47	-79.05	2.888e+05	-2.137e+05	1.309e+05	-5.581e+04	2.333e+05
	17	14.41	196.17	-116.96	174.91	-95.70	-78.77	3.946e+05	-4.649e+05	-2.793e+05	2.091e+05	3.536e+05
	22	13.61	139.43	-122.02	87.24	-69.83	-104.51	4.022e+05	-4.181e+05	-1.292e+05	1.133e+05	3.918e+05
	25	12.29	154.80	-84.52	34.85	35.44	-119.66	4.144e+05	-3.208e+05	9.500e+04	-1394.38	3.645e+05
6 1	25	14.09	186.66	-120.31	17.12	49.24	-152.64	5.782e+05	-4.009e+05	1.803e+05	-2979.51	4.809e+05
	22	16.01	193.94	-161.93	129.98	-97.97	-136.64	5.074e+05	-6.098e+05	-2.584e+05	1.560e+05	5.188e+05
	27	19.23	265.49	-206.06	182.99	-123.56	-179.16	6.000e+05	-7.337e+05	-2.463e+05	1.125e+05	6.422e+05
	32	18.46	222.25	-171.88	-17.34	67.71	-192.43	7.697e+05	-5.136e+05	2.161e+05	4.000e+04	6.356e+05
6 2	25	10.84	143.58	-92.54	13.17	37.88	-117.42	4.448e+05	-3.084e+05	1.387e+05	-2291.93	3.699e+05
	22	12.31	149.18	-124.56	99.99	-75.36	-105.10	3.903e+05	-4.691e+05	-1.987e+05	1.200e+05	3.991e+05
	27	14.79	204.23	-158.51	140.76	-95.04	-137.82	4.615e+05	-5.644e+05	-1.895e+05	8.656e+04	4.940e+05
	32	14.20	170.96	-132.22	-13.34	52.08	-148.02	5.921e+05	-3.950e+05	1.663e+05	3.077e+04	4.889e+05
7 1	32	16.43	235.35	-146.50	28.44	60.40	-190.26	8.118e+05	-5.046e+05	2.674e+05	3.979e+04	6.483e+05
	27	17.21	224.85	-207.79	133.92	-116.85	-176.27	5.893e+05	-7.879e+05	-3.161e+05	1.175e+05	6.536e+05
	34	21.21	301.56	-251.41	194.18	-144.03	-218.74	7.280e+05	-9.686e+05	-3.398e+05	9.921e+04	8.194e+05
	39	20.64	268.63	-206.87	-18.03	79.79	-232.66	1.019e+06	-6.347e+05	3.089e+05	7.573e+04	8.187e+05
7 2	32	12.64	181.04	-112.69	21.88	46.46	-146.35	6.245e+05	-3.882e+05	2.057e+05	3.061e+04	4.987e+05
	27	13.24	172.96	-159.84	103.01	-89.89	-135.59	4.533e+05	-6.061e+05	-2.432e+05	9.039e+04	5.027e+05
	34	16.32	231.97	-193.40	149.37	-110.79	-168.26	5.600e+05	-7.451e+05	-2.614e+05	7.631e+04	6.303e+05
	39	15.88	206.63	-159.13	-13.87	61.38	-178.97	7.840e+05	-4.882e+05	2.376e+05	5.825e+04	6.298e+05
8 1	39	18.54	289.56	-172.33	41.34	75.88	-230.30	1.073e+06	-6.242e+05	3.731e+05	7.562e+04	8.355e+05
	34	19.11	252.31	-258.91	133.52	-140.12	-215.91	7.156e+05	-1.031e+06	-4.195e+05	1.039e+05	8.333e+05
	43	23.35	333.84	-298.76	200.64	-165.56	-257.91	8.914e+05	-1.247e+06	-4.498e+05	9.382e+04	1.034e+06
	48	22.79	318.50	-242.36	-15.87	92.00	-275.19	1.307e+06	-7.799e+05	4.137e+05	1.138e+05	1.033e+06

8	2	39	14.26	222.74	-132.57	31.80	58.37	-177.15	8.254e+05	-4.802e+05	2.870e+05	5.817e+04	6.427e+05
		34	14.70	194.09	-199.16	102.71	-107.78	-166.08	5.505e+05	-7.932e+05	-3.227e+05	7.996e+04	6.410e+05
		43	17.96	256.80	-229.82	154.34	-127.36	-198.40	6.857e+05	-9.595e+05	-3.460e+05	7.217e+04	7.956e+05
		48	17.53	245.00	-186.43	-12.21	70.77	-211.69	1.006e+06	-6.000e+05	3.182e+05	8.752e+04	7.945e+05
9	1	48	20.64	346.60	-200.24	54.37	91.98	-272.77	1.374e+06	-7.669e+05	4.934e+05	1.138e+05	1.054e+06
		43	21.18	276.79	-313.30	129.11	-165.61	-255.61	8.762e+05	-1.322e+06	-5.452e+05	9.902e+04	1.051e+06
		52	25.53	364.65	-349.03	204.66	-189.04	-297.64	1.087e+06	-1.572e+06	-5.757e+05	9.099e+04	1.287e+06
		55	24.96	369.16	-279.07	-13.65	103.74	-318.76	1.644e+06	-9.491e+05	5.348e+05	1.604e+05	1.283e+06
9	2	48	15.88	266.62	-154.03	41.83	70.76	-209.83	1.057e+06	-5.899e+05	3.796e+05	8.754e+04	8.104e+05
		43	16.29	212.92	-241.00	99.31	-127.39	-196.62	6.740e+05	-1.017e+06	-4.194e+05	7.617e+04	8.085e+05
		52	19.64	280.50	-268.49	157.43	-145.42	-228.95	8.362e+05	-1.209e+06	-4.428e+05	6.999e+04	9.899e+05
		55	19.20	283.97	-214.67	-10.50	79.80	-245.20	1.265e+06	-7.300e+05	4.114e+05	1.233e+05	9.870e+05
10	1	55	22.75	404.39	-229.68	67.08	107.63	-316.38	1.725e+06	-9.330e+05	6.311e+05	1.605e+05	1.308e+06
		52	23.31	299.84	-370.76	122.17	-193.09	-295.94	1.069e+06	-1.661e+06	-6.887e+05	9.698e+04	1.307e+06
		61	27.74	394.01	-402.08	206.34	-214.42	-337.90	1.315e+06	-1.945e+06	-7.184e+05	8.753e+04	1.579e+06
		62	27.13	419.36	-316.28	-11.48	114.56	-362.38	2.036e+06	-1.141e+06	6.754e+05	2.195e+05	1.572e+06
10	2	55	17.50	311.07	-176.67	51.60	82.79	-243.37	1.327e+06	-7.177e+05	4.855e+05	1.235e+05	1.006e+06
		52	17.93	230.65	-285.20	93.98	-148.53	-227.64	8.224e+05	-1.278e+06	-5.298e+05	7.460e+04	1.006e+06
		61	21.34	303.08	-309.30	158.72	-164.94	-259.93	1.011e+06	-1.496e+06	-5.526e+05	6.733e+04	1.215e+06
		62	20.87	322.58	-243.29	-8.83	88.13	-278.75	1.566e+06	-8.778e+05	5.195e+05	1.689e+05	1.209e+06
11	1	62	24.87	461.58	-259.94	79.44	122.21	-360.13	2.131e+06	-1.122e+06	7.893e+05	2.199e+05	1.601e+06
		61	25.46	321.72	-430.90	113.20	-222.38	-336.83	1.294e+06	-2.049e+06	-8.500e+05	9.446e+04	1.603e+06
		70	29.92	421.47	-457.42	205.75	-241.70	-378.23	1.573e+06	-2.370e+06	-8.784e+05	8.111e+04	1.913e+06
		75	29.30	468.13	-353.64	-9.75	124.24	-405.38	2.488e+06	-1.354e+06	8.379e+05	2.966e+05	1.902e+06
11	2	62	19.13	355.06	-199.95	61.11	94.00	-277.02	1.639e+06	-8.629e+05	6.071e+05	1.691e+05	1.232e+06
		61	19.59	247.48	-331.46	87.07	-171.06	-259.10	9.952e+05	-1.576e+06	-6.538e+05	7.266e+04	1.233e+06
		70	23.02	324.21	-351.86	158.27	-185.93	-290.95	1.210e+06	-1.823e+06	-6.757e+05	6.239e+04	1.471e+06
		75	22.54	360.10	-272.03	-7.50	95.57	-311.83	1.914e+06	-1.042e+06	6.445e+05	2.281e+05	1.463e+06
12	1	75	27.00	517.11	-290.73	91.05	135.34	-403.31	2.599e+06	-1.331e+06	9.707e+05	2.971e+05	1.936e+06
		70	27.60	342.19	-493.00	102.46	-253.28	-377.82	1.550e+06	-2.490e+06	-1.030e+06	8.910e+04	1.941e+06
		83	32.04	446.69	-514.59	203.13	-271.03	-418.10	1.860e+06	-2.847e+06	-1.056e+06	6.860e+04	2.286e+06
		86	31.43	514.74	-391.22	-9.17	132.69	-447.39	3.006e+06	-1.582e+06	1.024e+06	4.000e+05	2.272e+06
12	2	75	20.77	397.78	-223.64	70.03	104.11	-310.24	1.999e+06	-1.024e+06	7.467e+05	2.285e+05	1.489e+06
		70	21.23	263.22	-379.23	78.82	-194.83	-290.63	1.192e+06	-1.915e+06	-7.919e+05	6.854e+04	1.493e+06
		83	24.65	343.61	-395.84	156.25	-208.48	-321.61	1.431e+06	-2.190e+06	-8.121e+05	5.277e+04	1.758e+06
		86	24.18	395.95	-300.94	-7.06	102.07	-344.15	2.312e+06	-1.217e+06	7.880e+05	3.077e+05	1.748e+06
13	1	86	29.08	570.03	-322.22	101.03	146.79	-445.54	3.133e+06	-1.555e+06	1.177e+06	4.007e+05	2.311e+06
		83	29.68	361.06	-556.35	90.43	-285.72	-418.38	1.834e+06	-2.983e+06	-1.227e+06	7.784e+04	2.319e+06
		94	34.00	469.95	-573.68	199.18	-302.90	-457.46	2.167e+06	-3.371e+06	-1.248e+06	4.412e+04	2.693e+06
		99	33.43	558.94	-429.80	-10.90	140.04	-488.58	3.590e+06	-1.810e+06	1.235e+06	5.450e+05	2.678e+06
13	2	86	22.37	438.49	-247.86	77.72	112.91	-342.72	2.410e+06	-1.196e+06	9.056e+05	3.082e+05	1.778e+06
		83	22.83	277.74	-427.96	69.56	-219.78	-321.83	1.411e+06	-2.295e+06	-9.438e+05	5.988e+04	1.784e+06
		94	26.16	361.50	-441.29	153.21	-233.00	-351.89	1.667e+06	-2.593e+06	-9.599e+05	3.394e+04	2.071e+06
		99	25.72	429.95	-330.62	-8.39	107.72	-375.83	2.762e+06	-1.392e+06	9.502e+05	4.192e+05	2.060e+06
14	1	99	31.07	619.77	-355.24	108.05	156.48	-486.90	3.735e+06	-1.780e+06	1.409e+06	5.452e+05	2.724e+06
		94	31.63	378.65	-620.89	77.91	-320.14	-458.43	2.140e+06	-3.524e+06	-1.439e+06	5.504e+04	2.732e+06

105	35.62	493.73	-636.30	196.04	-338.61	-497.78	2.470e+06	-3.922e+06	-1.448e+06	-3884.05	3.113e+06
110	35.16	601.61	-472.25	-17.42	146.78	-530.62	4.235e+06	-2.009e+06	1.466e+06	7.608e+05	3.102e+06
14 2 99	23.90	476.74	-273.26	83.12	120.37	-374.54	2.873e+06	-1.370e+06	1.084e+06	4.194e+05	2.095e+06
94	24.33	291.27	-477.60	59.93	-246.26	-352.64	1.646e+06	-2.711e+06	-1.107e+06	4.234e+04	2.101e+06
105	27.40	379.79	-489.46	150.80	-260.47	-382.90	1.900e+06	-3.017e+06	-1.114e+06	-2987.73	2.395e+06
110	27.05	462.78	-363.27	-13.40	112.91	-408.17	3.258e+06	-1.545e+06	1.127e+06	5.852e+05	2.386e+06
15 1110	32.82	668.82	-390.18	112.70	165.94	-528.83	4.400e+06	-1.978e+06	1.663e+06	7.594e+05	3.157e+06
105	33.30	394.87	-689.70	63.74	-358.58	-499.48	2.444e+06	-4.096e+06	-1.661e+06	9755.41	3.162e+06
118	36.47	530.79	-705.60	204.88	-379.69	-544.74	2.710e+06	-4.443e+06	-1.630e+06	-1.031e+05	3.494e+06
121	36.25	644.82	-531.12	-39.96	153.65	-579.95	4.904e+06	-2.110e+06	1.690e+06	1.103e+06	3.495e+06
15 2110	25.25	514.48	-300.14	86.70	127.65	-406.79	3.385e+06	-1.522e+06	1.279e+06	5.842e+05	2.428e+06
105	25.61	303.74	-530.54	49.03	-275.83	-384.22	1.880e+06	-3.150e+06	-1.278e+06	7504.16	2.432e+06
118	28.05	408.30	-542.77	157.60	-292.07	-419.03	2.085e+06	-3.418e+06	-1.254e+06	-7.927e+04	2.688e+06
121	27.88	496.01	-408.56	-30.74	118.20	-446.11	3.772e+06	-1.623e+06	1.300e+06	8.483e+05	2.688e+06
16 1121	34.08	751.98	-403.17	159.88	188.94	-577.39	5.133e+06	-2.057e+06	1.971e+06	1.105e+06	3.569e+06
118	34.35	381.64	-797.27	1.68	-417.31	-550.97	2.664e+06	-4.684e+06	-1.925e+06	-9.379e+04	3.558e+06
133	35.33	689.04	-764.12	342.47	-417.55	-619.29	2.778e+06	-4.686e+06	-1.606e+06	-3.012e+05	3.674e+06
134	35.77	667.42	-712.21	-195.07	150.28	-667.86	5.407e+06	-2.007e+06	1.714e+06	1.686e+06	3.707e+06
16 2121	26.22	578.45	-310.13	122.98	145.33	-444.15	3.948e+06	-1.583e+06	1.516e+06	8.497e+05	2.745e+06
118	26.42	293.57	-613.28	1.29	-321.01	-423.82	2.049e+06	-3.603e+06	-1.481e+06	-7.215e+04	2.737e+06
133	27.17	530.03	-587.79	263.44	-321.19	-476.37	2.137e+06	-3.604e+06	-1.236e+06	-2.317e+05	2.826e+06
134	27.51	513.40	-547.86	-150.05	115.60	-513.74	4.159e+06	-1.544e+06	1.318e+06	1.297e+06	2.852e+06
17 1134	25.28	1156.07	-126.25	698.11	331.71	-614.43	5.968e+06	-2.204e+06	2.275e+06	1.489e+06	4.067e+06
133	25.20	17.69	-1212.83	-592.82	-602.32	-615.24	3.004e+06	-5.276e+06	-2.287e+06	1.487e+04	3.977e+06
144	23.90	675.83	-429.77	487.64	-241.58	-415.51	1.695e+06	-5.882e+06	-3.413e+06	-7.737e+05	3.551e+06
151	25.55	300.67	-808.50	-457.54	-50.29	-515.85	6.904e+06	-8.643e+05	3.281e+06	2.759e+06	3.875e+06
17 2134	19.45	889.29	-97.12	537.01	255.16	-472.64	4.591e+06	-1.695e+06	1.750e+06	1.145e+06	3.128e+06
133	19.39	13.61	-932.95	-456.02	-463.32	-473.26	2.311e+06	-4.058e+06	-1.759e+06	1.144e+04	3.059e+06
144	18.38	519.87	-330.60	375.11	-185.83	-319.62	1.304e+06	-4.524e+06	-2.625e+06	-5.951e+05	2.732e+06
151	19.65	231.28	-621.93	-351.96	-38.68	-396.81	5.310e+06	-6.649e+05	2.524e+06	2.122e+06	2.981e+06
18 1151	28.60	695.02	-861.54	-253.31	86.80	-759.47	7.318e+06	-1.376e+06	3.270e+06	2.672e+06	4.337e+06
144	27.53	683.61	-842.31	271.83	-430.53	-677.33	2.395e+06	-6.292e+06	-3.387e+06	-5.097e+05	4.098e+06
167	21.60	153.85	-959.32	-362.21	-443.25	-555.10	2.395e+06	-4.614e+06	-1.865e+06	-3.542e+05	3.422e+06
171	21.77	733.75	-410.15	265.97	57.64	-562.38	4.882e+06	-2.083e+06	1.227e+06	1.572e+06	3.478e+06
18 2151	22.00	534.63	-662.72	-194.86	66.77	-584.21	5.629e+06	-1.058e+06	2.515e+06	2.055e+06	3.336e+06
144	21.17	525.85	-647.93	209.10	-331.18	-521.02	1.842e+06	-4.840e+06	-2.605e+06	-3.921e+05	3.153e+06
167	16.61	118.34	-737.93	-278.62	-340.97	-427.00	1.842e+06	-3.549e+06	-1.434e+06	-2.724e+05	2.632e+06
171	16.74	564.42	-315.50	204.59	44.34	-432.60	3.755e+06	-1.602e+06	9.437e+05	1.209e+06	2.675e+06
19 1171	22.46	605.20	-604.62	-30.35	30.94	-604.13	5.266e+06	-1.788e+06	1.771e+06	1.708e+06	3.527e+06
167	22.14	354.37	-859.46	-67.93	-437.15	-578.16	2.068e+06	-4.980e+06	-2.409e+06	-5.035e+05	3.393e+06
186	17.00	142.48	-749.95	-203.00	-404.47	-434.69	1.349e+06	-4.056e+06	-2.028e+06	-6.791e+05	2.617e+06
187	16.92	424.90	-474.53	-9.76	-39.87	-449.46	3.617e+06	-1.797e+06	8.792e+05	9.409e+05	2.707e+06
19 2171	17.28	465.54	-465.09	-23.35	23.80	-464.72	4.051e+06	-1.375e+06	1.362e+06	1.313e+06	2.713e+06
167	17.03	272.60	-661.12	-52.26	-336.27	-444.74	1.591e+06	-3.831e+06	-1.853e+06	-3.873e+05	2.610e+06
186	13.08	109.60	-576.88	-156.15	-311.13	-334.38	1.038e+06	-3.120e+06	-1.560e+06	-5.224e+05	2.013e+06
187	13.01	326.84	-365.02	-7.51	-30.67	-345.74	2.783e+06	-1.382e+06	6.763e+05	7.238e+05	2.082e+06

20	1187	17.07	412.29	-508.62	-54.49	-41.84	-460.41	3.677e+06	-1.767e+06	9.605e+05	9.492e+05	2.722e+06
	186	17.20	178.63	-742.04	-158.37	-405.04	-443.50	1.322e+06	-4.119e+06	-2.109e+06	-6.872e+05	2.626e+06
	205	12.09	19.96	-594.74	-208.91	-365.87	-297.16	4.925e+05	-3.252e+06	-1.860e+06	-8.999e+05	1.810e+06
	206	11.56	189.43	-426.57	-117.99	-119.15	-308.00	2.086e+06	-1.663e+06	2.057e+05	2.178e+05	1.875e+06
20	2187	13.13	317.15	-391.25	-41.92	-32.18	-354.16	2.828e+06	-1.359e+06	7.388e+05	7.302e+05	2.094e+06
	186	13.23	137.41	-570.80	-121.82	-311.57	-341.16	1.017e+06	-3.168e+06	-1.622e+06	-5.286e+05	2.020e+06
	205	9.30	15.35	-457.49	-160.70	-281.44	-228.59	3.788e+05	-2.502e+06	-1.431e+06	-6.922e+05	1.392e+06
	206	8.89	145.72	-328.13	-90.76	-91.65	-236.92	1.605e+06	-1.279e+06	1.582e+05	1.675e+05	1.442e+06
21	1206	11.70	197.70	-437.90	-123.50	-116.69	-317.78	2.113e+06	-1.673e+06	2.268e+05	2.137e+05	1.893e+06
	205	12.24	30.66	-603.56	-203.89	-369.02	-306.17	5.045e+05	-3.281e+06	-1.881e+06	-8.955e+05	1.827e+06
	224	7.24	-125.14	-448.00	-244.58	-328.56	-155.87	-3.641e+05	-2.395e+06	-1.640e+06	-1.119e+06	9.812e+05
	225	6.34	-34.63	-358.20	-196.49	-196.34	-161.78	5.052e+05	-1.529e+06	-5.162e+05	-5.072e+05	1.017e+06
21	2206	9.00	152.08	-336.84	-95.00	-89.77	-244.45	1.626e+06	-1.287e+06	1.745e+05	1.644e+05	1.456e+06
	205	9.42	23.58	-464.28	-156.84	-283.86	-235.52	3.881e+05	-2.524e+06	-1.447e+06	-6.889e+05	1.406e+06
	224	5.57	-96.26	-344.61	-188.14	-252.74	-119.90	-2.801e+05	-1.842e+06	-1.262e+06	-8.605e+05	7.548e+05
	225	4.88	-26.64	-275.54	-151.15	-151.03	-124.45	3.887e+05	-1.176e+06	-3.971e+05	-3.902e+05	7.823e+05
22	1225	6.47	-25.23	-368.15	-312.22	-81.16	126.69	5.294e+05	-1.542e+06	1.980e+05	-1.211e+06	-7.593e+05
	224	7.38	-115.64	-457.62	-431.93	-141.33	90.14	-3.490e+05	-2.421e+06	-5.042e+05	-2.266e+06	-5.454e+05
	265	5.04	-277.52	-297.02	-279.07	-295.47	-5.26	-1.366e+06	-1.393e+06	-1.391e+06	-1.369e+06	8037.44
22	2225	4.98	-19.41	-283.19	-240.17	-62.43	97.45	4.072e+05	-1.186e+06	1.523e+05	-9.314e+05	-5.841e+05
	224	5.68	-88.95	-352.01	-332.25	-108.71	69.34	-2.685e+05	-1.862e+06	-3.879e+05	-1.743e+06	-4.196e+05
	265	3.87	-213.48	-228.47	-214.67	-227.29	-4.05	-1.051e+06	-1.072e+06	-1.070e+06	-1.053e+06	6182.65
23	1	1	2.45	162.85	-23.50	159.67	-20.32	-24.14	3914.47	-2.608e+04	-2.306e+04	897.95	9020.76
		3	3.00	214.61	15.97	208.94	21.64	33.07	254.03	-3.631e+04	-3.620e+04	143.42	2008.09
		6	7.53	263.09	-37.70	262.43	-37.04	14.04	8.227e+04	-1.123e+05	-5.332e+04	2.333e+04	8.940e+04
		4	7.79	131.93	-10.32	101.45	20.16	-58.37	8.543e+04	-1.225e+05	-9621.41	-2.747e+04	1.036e+05
23	2	1	1.89	125.27	-18.08	122.82	-15.63	-18.57	3011.13	-2.006e+04	-1.774e+04	690.73	6939.04
		3	2.31	165.09	12.29	160.73	16.65	25.44	195.41	-2.793e+04	-2.785e+04	110.32	1544.68
		6	5.79	202.37	-29.00	201.87	-28.49	10.80	6.328e+04	-8.635e+04	-4.102e+04	1.794e+04	6.877e+04
		4	5.99	101.49	-7.94	78.04	15.51	-44.90	6.572e+04	-9.425e+04	-7401.09	-2.113e+04	7.969e+04
24	1	4	6.21	141.47	-27.64	121.43	-7.60	-54.65	8.491e+04	-1.209e+05	-1.143e+04	-2.457e+04	1.027e+05
		6	6.25	247.07	-15.03	246.06	-14.03	16.21	7.243e+04	-1.233e+05	-7.649e+04	2.563e+04	8.349e+04
		9	10.14	262.94	-64.20	262.67	-63.93	-9.45	1.286e+05	-2.062e+05	-1.062e+05	2.856e+04	1.532e+05
		7	10.33	158.63	-36.28	102.53	19.82	-88.24	1.582e+05	-1.914e+05	1.117e+04	-4.439e+04	1.726e+05
24	2	4	4.78	108.82	-21.26	93.41	-5.85	-42.04	6.531e+04	-9.301e+04	-8789.63	-1.890e+04	7.900e+04
		6	4.81	190.05	-11.56	189.28	-10.79	12.47	5.572e+04	-9.484e+04	-5.884e+04	1.971e+04	6.422e+04
		9	7.80	202.26	-49.38	202.05	-49.17	-7.27	9.892e+04	-1.586e+05	-8.166e+04	2.197e+04	1.179e+05
		7	7.95	122.02	-27.91	78.87	15.24	-67.88	1.217e+05	-1.473e+05	8591.30	-3.415e+04	1.328e+05
25	1	7	8.73	165.97	-41.19	124.80	-0.02	-82.67	1.676e+05	-1.957e+05	1.454e+04	-4.259e+04	1.794e+05
		9	8.74	234.53	-49.45	234.31	-49.23	-7.90	1.200e+05	-2.281e+05	-1.431e+05	3.495e+04	1.495e+05
		14	12.54	271.73	-96.09	267.13	-91.49	-40.91	1.669e+05	-3.388e+05	-1.837e+05	1.169e+04	2.332e+05
		12	11.83	169.30	-67.39	82.81	19.10	-113.98	2.495e+05	-2.431e+05	6.066e+04	-5.429e+04	2.395e+05
25	2	7	6.72	127.67	-31.68	96.00	-0.01	-63.59	1.289e+05	-1.505e+05	1.118e+04	-3.276e+04	1.380e+05
		9	6.72	180.41	-38.04	180.24	-37.87	-6.08	9.229e+04	-1.754e+05	-1.100e+05	2.688e+04	1.150e+05
		14	9.65	209.03	-73.92	205.48	-70.37	-31.47	1.283e+05	-2.606e+05	-1.413e+05	8989.85	1.794e+05
		12	9.10	130.23	-51.84	63.70	14.69	-87.68	1.919e+05	-1.870e+05	4.666e+04	-4.176e+04	1.842e+05

26	1	12	10.47	262.44 2.10	213.98	50.56	-101.34	2.582e+05	-2.726e+05	4.877e+04	-6.322e+04 2.594e+05
		14	10.43	132.26-135.86	127.59	-131.18	-35.10	1.666e+05	-3.485e+05	-2.163e+05	3.443e+04 2.249e+05
		19	16.89	413.17-41.43	395.41	-23.67	-88.08	1.593e+05	-6.292e+05	-3.602e+05	-1.096e+05 3.738e+05
		17	11.87	45.32-209.80	-90.29	-74.19	-127.31	4.216e+05	-1.464e+05	2.820e+05	-6718.16 2.446e+05
26	2	12	8.05	201.88 1.61	164.60	38.89	-77.95	1.986e+05	-2.097e+05	3.752e+04	-4.863e+04 1.995e+05
		14	8.02	101.74-104.50	98.14	-100.91	-27.00	1.281e+05	-2.681e+05	-1.664e+05	2.648e+04 1.730e+05
		19	13.00	317.82-31.87	304.16	-18.21	-67.75	1.226e+05	-4.840e+05	-2.771e+05	-8.433e+04 2.876e+05
		17	9.13	34.86-161.38	-69.45	-57.07	-97.93	3.243e+05	-1.126e+05	2.169e+05	-5167.82 1.881e+05
27	1	17	19.97	193.74-145.47	14.48	33.79	-169.33	7.851e+05	-4.125e+05	3.733e+05	-820.15 5.688e+05
		19	11.64	308.08-146.91	302.83	-141.67	-48.55	3.285e+04	-5.418e+05	-4.539e+05	-5.503e+04 2.068e+05
		26	16.06	237.56-162.36	207.46	-132.27	-105.50	2.274e+05	-6.950e+05	-3.708e+05	-9.685e+04 4.404e+05
		22	17.85	273.92-148.89	137.85	-12.82	-197.53	5.091e+05	-5.510e+05	6.249e+04	-1.044e+05 5.234e+05
27	2	17	15.36	149.03-111.90	11.14	25.99	-130.26	6.039e+05	-3.173e+05	2.872e+05	-630.88 4.376e+05
		19	8.96	236.98-113.01	232.95	-108.97	-37.35	2.527e+04	-4.168e+05	-3.492e+05	-4.233e+04 1.591e+05
		26	12.35	182.74-124.89	159.58	-101.74	-81.15	1.749e+05	-5.346e+05	-2.852e+05	-7.450e+04 3.388e+05
		22	13.73	210.70-114.53	106.04	-9.86	-151.94	3.916e+05	-4.238e+05	4.807e+04	-8.033e+04 4.026e+05
28	1	22	16.18	252.89-155.71	109.78	-12.60	-194.92	5.761e+05	-5.487e+05	1.286e+05	-1.012e+05 5.505e+05
		26	14.50	222.91-173.74	191.86	-142.68	-106.56	1.845e+05	-7.635e+05	-4.880e+05	-9.102e+04 4.304e+05
		33	18.78	304.12-228.54	263.25	-187.67	-141.78	2.740e+05	-9.738e+05	-5.146e+05	-1.852e+05 6.017e+05
		27	19.19	267.92-208.47	63.84	-4.39	-235.74	5.653e+05	-7.566e+05	3.574e+04	-2.271e+05 6.477e+05
28	2	22	12.44	194.53-119.78	84.45	-9.69	-149.94	4.431e+05	-4.221e+05	9.892e+04	-7.786e+04 4.235e+05
		26	11.15	171.47-133.64	147.58	-109.75	-81.97	1.419e+05	-5.873e+05	-3.754e+05	-7.002e+04 3.311e+05
		33	14.45	233.94-175.80	202.50	-144.36	-109.06	2.108e+05	-7.491e+05	-3.959e+05	-1.424e+05 4.629e+05
		27	14.76	206.09-160.36	49.10	-3.38	-181.34	4.348e+05	-5.820e+05	2.749e+04	-1.747e+05 4.983e+05
29	1	27	17.16	273.16-199.95	87.60	-14.39	-230.99	6.064e+05	-7.604e+05	6.372e+04	-2.178e+05 6.688e+05
		33	16.95	221.97-233.71	171.90	-183.64	-142.51	2.430e+05	-1.049e+06	-6.297e+05	-1.761e+05 6.048e+05
		40	21.14	312.80-289.12	253.27	-229.59	-179.68	3.127e+05	-1.306e+06	-6.798e+05	-3.137e+05 7.885e+05
		34	21.23	291.19-259.34	40.96	-9.11	-274.13	6.838e+05	-1.006e+06	2.209e+04	-3.447e+05 8.249e+05
29	2	27	13.20	210.12-153.81	67.38	-11.07	-177.69	4.665e+05	-5.850e+05	4.902e+04	-1.675e+05 5.144e+05
		33	13.04	170.75-179.78	132.23	-141.26	-109.62	1.870e+05	-8.068e+05	-4.844e+05	-1.355e+05 4.653e+05
		40	16.26	240.61-222.40	194.83	-176.61	-138.22	2.406e+05	-1.005e+06	-5.229e+05	-2.413e+05 6.066e+05
		34	16.33	223.99-199.49	31.51	-7.01	-210.87	5.260e+05	-7.741e+05	1.700e+04	-2.651e+05 6.345e+05
30	1	34	19.06	296.45-247.91	64.04	-15.50	-269.26	7.236e+05	-1.013e+06	4.484e+04	-3.338e+05 8.471e+05
		40	19.20	217.41-301.03	144.52	-228.15	-180.20	2.792e+05	-1.395e+06	-8.142e+05	-3.012e+05 7.966e+05
		49	23.52	317.17-354.58	234.55	-271.96	-220.62	3.532e+05	-1.704e+06	-8.765e+05	-4.745e+05 1.009e+06
		43	23.42	314.61-312.79	17.49	-15.67	-313.26	8.435e+05	-1.295e+06	1.756e+04	-4.689e+05 1.041e+06
30	2	34	14.66	228.04-190.70	49.26	-11.93	-207.12	5.566e+05	-7.789e+05	3.449e+04	-2.568e+05 6.517e+05
		40	14.77	167.24-231.56	111.17	-175.50	-138.62	2.148e+05	-1.073e+06	-6.263e+05	-2.317e+05 6.128e+05
		49	18.09	243.98-272.75	180.43	-209.20	-169.71	2.717e+05	-1.311e+06	-6.742e+05	-3.650e+05 7.761e+05
		43	18.02	242.01-240.61	13.45	-12.06	-240.97	6.488e+05	-9.960e+05	1.350e+04	-3.607e+05 8.009e+05
31	1	43	21.16	321.32-298.58	40.72	-17.98	-308.56	8.880e+05	-1.303e+06	4.196e+04	-4.569e+05 1.067e+06
		49	21.47	210.52-375.20	109.65	-274.32	-221.15	3.134e+05	-1.807e+06	-1.035e+06	-4.590e+05 1.021e+06
		56	25.93	319.31-424.92	210.10	-315.71	-263.34	3.975e+05	-2.172e+06	-1.108e+06	-6.663e+05 1.266e+06
		52	25.64	337.25-369.31	-8.70	-23.36	-353.20	1.037e+06	-1.626e+06	1.885e+04	-6.079e+05 1.294e+06
31	2	43	16.28	247.17-229.68	31.32	-13.83	-237.35	6.830e+05	-1.002e+06	3.228e+04	-3.515e+05 8.205e+05
		49	16.51	161.94-288.61	84.35	-211.02	-170.11	2.411e+05	-1.390e+06	-7.960e+05	-3.531e+05 7.850e+05

	56	19.95	245.62-326.86	161.61	-242.86	-202.57	3.058e+05	-1.671e+06	-8.524e+05	-5.125e+05	9.735e+05
	52	19.72	259.42-284.08	-6.69	-17.97	-271.69	7.978e+05	-1.251e+06	1.450e+04	-4.676e+05	9.956e+05
32 1	52	23.31	346.53-351.99	16.09	-21.55	-348.75	1.088e+06	-1.636e+06	4.728e+04	-5.947e+05	1.324e+06
	56	23.77	201.65-455.03	68.49	-321.88	-264.02	3.503e+05	-2.291e+06	-1.293e+06	-6.479e+05	1.281e+06
	63	28.34	318.91-499.25	180.63	-360.97	-306.62	4.446e+05	-2.715e+06	-1.377e+06	-8.932e+05	1.561e+06
	61	27.85	358.82-428.40	-37.48	-32.09	-393.60	1.262e+06	-2.005e+06	2.447e+04	-7.675e+05	1.585e+06
32 2	52	17.93	266.56-270.76	12.38	-16.58	-268.27	8.373e+05	-1.258e+06	3.637e+04	-4.574e+05	1.018e+06
	56	18.29	155.11-350.02	52.69	-247.60	-203.10	2.695e+05	-1.762e+06	-9.946e+05	-4.984e+05	9.852e+05
	63	21.80	245.32-384.04	138.94	-277.67	-235.86	3.420e+05	-2.089e+06	-1.059e+06	-6.871e+05	1.201e+06
	61	21.43	276.02-329.54	-28.83	-24.69	-302.77	9.710e+05	-1.543e+06	1.882e+04	-5.904e+05	1.219e+06
33 1	61	25.45	371.19-407.95	-10.45	-26.31	-389.49	1.322e+06	-2.016e+06	5.824e+04	-7.528e+05	1.619e+06
	63	26.10	190.63-539.30	22.14	-370.81	-307.56	3.889e+05	-2.852e+06	-1.591e+06	-8.721e+05	1.580e+06
	76	30.75	315.98-576.80	147.21	-408.03	-349.56	4.906e+05	-3.341e+06	-1.686e+06	-1.164e+06	1.898e+06
	70	30.04	378.87-489.39	-68.43	-42.10	-433.93	1.518e+06	-2.436e+06	3.376e+04	-9.516e+05	1.914e+06
33 2	61	19.58	285.53-313.81	-8.04	-20.24	-299.61	1.017e+06	-1.551e+06	4.480e+04	-5.791e+05	1.245e+06
	63	20.07	146.64-414.85	17.03	-285.24	-236.59	2.991e+05	-2.194e+06	-1.224e+06	-6.709e+05	1.215e+06
	76	23.66	243.06-443.69	113.24	-313.87	-268.89	3.774e+05	-2.570e+06	-1.297e+06	-8.955e+05	1.460e+06
	70	23.10	291.44-376.46	-52.64	-32.38	-333.79	1.168e+06	-1.874e+06	2.597e+04	-7.320e+05	1.473e+06
34 1	70	27.58	394.56-465.98	-38.82	-32.61	-430.26	1.587e+06	-2.448e+06	7.389e+04	-9.351e+05	1.953e+06
	76	28.42	177.64-626.75	-27.87	-421.23	-350.82	4.257e+05	-3.497e+06	-1.931e+06	-1.140e+06	1.921e+06
	87	33.13	311.02-656.93	111.53	-457.43	-391.54	5.283e+05	-4.057e+06	-2.035e+06	-1.493e+06	2.277e+06
	83	32.15	397.13-551.66	-100.82	-53.71	-473.81	1.801e+06	-2.918e+06	4.639e+04	-1.163e+06	2.281e+06
34 2	70	21.22	303.50-358.45	-29.86	-25.08	-330.97	1.220e+06	-1.883e+06	5.683e+04	-7.193e+05	1.502e+06
	76	21.86	136.65-482.11	-21.44	-324.02	-269.86	3.275e+05	-2.690e+06	-1.485e+06	-8.771e+05	1.478e+06
	87	25.49	239.25-505.33	85.79	-351.87	-301.18	4.064e+05	-3.121e+06	-1.565e+06	-1.149e+06	1.751e+06
	83	24.73	305.49-424.36	-77.56	-41.32	-364.47	1.385e+06	-2.245e+06	3.568e+04	-8.948e+05	1.754e+06
35 1	83	29.66	416.21-525.62	-68.46	-40.95	-470.72	1.880e+06	-2.931e+06	9.378e+04	-1.145e+06	2.325e+06
	87	30.73	163.39-716.10	-79.24	-473.47	-393.09	4.537e+05	-4.232e+06	-2.312e+06	-1.466e+06	2.305e+06
	100	35.44	305.53-739.43	76.38	-510.28	-432.37	5.423e+05	-4.870e+06	-2.422e+06	-1.906e+06	2.694e+06
	94	34.11	414.07-615.11	-133.71	-67.34	-513.52	2.103e+06	-3.447e+06	6.179e+04	-1.406e+06	2.676e+06
35 2	83	22.81	320.16-404.33	-52.66	-31.50	-362.09	1.446e+06	-2.255e+06	7.214e+04	-8.806e+05	1.788e+06
	87	23.64	125.68-550.85	-60.96	-364.21	-302.38	3.490e+05	-3.256e+06	-1.779e+06	-1.128e+06	1.773e+06
	100	27.26	235.02-568.79	58.75	-392.52	-332.59	4.171e+05	-3.746e+06	-1.863e+06	-1.466e+06	2.072e+06
	94	26.23	318.51-473.16	-102.85	-51.80	-395.01	1.618e+06	-2.652e+06	4.753e+04	-1.081e+06	2.059e+06
36 1	94	31.60	436.62-586.81	-98.26	-51.93	-511.19	2.194e+06	-3.462e+06	1.174e+05	-1.385e+06	2.727e+06
	100	32.97	149.37-806.39	-128.48	-528.54	-434.00	4.581e+05	-5.065e+06	-2.732e+06	-1.875e+06	2.728e+06
	111	37.55	303.64-825.51	47.09	-568.96	-473.15	5.013e+05	-5.782e+06	-2.835e+06	-2.445e+06	3.135e+06
	105	35.72	431.64-681.59	-166.36	-83.58	-555.08	2.402e+06	-4.004e+06	7.799e+04	-1.680e+06	3.080e+06
36 2	94	24.31	335.86-451.40	-75.59	-39.94	-393.23	1.688e+06	-2.663e+06	9.028e+04	-1.066e+06	2.097e+06
	100	25.36	114.90-620.30	-98.83	-406.57	-333.85	3.524e+05	-3.896e+06	-2.101e+06	-1.442e+06	2.099e+06
	111	28.89	233.57-635.01	36.22	-437.66	-363.96	3.856e+05	-4.448e+06	-2.181e+06	-1.881e+06	2.412e+06
	105	27.48	332.03-524.30	-127.97	-64.30	-426.98	1.847e+06	-3.080e+06	6.000e+04	-1.293e+06	2.369e+06
37 1	105	33.25	460.59-648.93	-123.42	-64.92	-553.99	2.509e+06	-4.022e+06	1.449e+05	-1.658e+06	3.138e+06
	111	35.06	137.06-898.90	-172.42	-589.42	-474.16	4.098e+05	-5.996e+06	-3.179e+06	-2.408e+06	3.180e+06
	122	39.23	321.78-918.90	40.32	-637.45	-519.59	3.400e+05	-6.774e+06	-3.238e+06	-3.196e+06	3.557e+06
	118	36.57	452.66-761.30	-204.50	-104.14	-604.90	2.631e+06	-4.539e+06	8.194e+04	-1.990e+06	3.432e+06

37	2105	25.58	354.30	-499.18	-94.94	-49.94	-426.15	1.930e+06	-3.094e+06	1.114e+05	-1.275e+06	2.414e+06
	111	26.97	105.43	-691.46	-132.63	-453.40	-364.74	3.153e+05	-4.613e+06	-2.445e+06	-1.852e+06	2.446e+06
	122	30.17	247.52	-706.85	31.02	-490.35	-399.69	2.616e+05	-5.211e+06	-2.491e+06	-2.458e+06	2.736e+06
	118	28.13	348.20	-585.61	-157.31	-80.11	-465.31	2.024e+06	-3.491e+06	6.303e+04	-1.531e+06	2.640e+06
38	1118	34.24	535.05	-689.82	-90.54	-64.24	-612.30	2.799e+06	-4.530e+06	2.238e+05	-1.955e+06	3.499e+06
	122	36.86	97.69	-1016.91	-248.76	-670.46	-515.88	2.244e+05	-7.051e+06	-3.673e+06	-3.153e+06	3.628e+06
	135	39.67	494.62	-1020.43	184.97	-710.77	-610.95	-3.635e+04	-7.685e+06	-3.401e+06	-4.320e+06	3.797e+06
	133	35.61	436.29	-931.80	-352.55	-142.97	-675.97	2.550e+06	-4.964e+06	-8.127e+04	-2.332e+06	3.585e+06
38	2118	26.34	411.58	-530.63	-69.64	-49.41	-471.00	2.153e+06	-3.484e+06	1.722e+05	-1.504e+06	2.691e+06
	122	28.36	75.15	-782.24	-191.36	-515.73	-396.83	1.726e+05	-5.423e+06	-2.825e+06	-2.426e+06	2.791e+06
	135	30.52	380.48	-784.94	142.28	-546.74	-469.96	-2.796e+04	-5.911e+06	-2.617e+06	-3.323e+06	2.920e+06
	133	27.39	335.61	-716.77	-271.19	-109.97	-519.98	1.962e+06	-3.819e+06	-6.251e+04	-1.794e+06	2.757e+06
39	1133	25.33	666.76	-612.74	19.60	34.42	-639.71	2.676e+06	-5.497e+06	-4.016e+05	-2.420e+06	3.960e+06
	135	27.42	-467.12	-1703.82	-1271.36	-899.58	-589.75	-3.108e+05	-8.547e+06	-4.964e+06	-3.894e+06	4.083e+06
	152	29.41	239.80	-872.82	-114.26	-518.76	-518.24	-1.925e+06	-9.704e+06	-6.068e+06	-5.561e+06	3.881e+06
	144	22.86	-141.74	-1245.17	-1059.42	-327.49	-412.87	3.084e+06	-4.487e+06	6.259e+05	-2.029e+06	3.545e+06
39	2133	19.49	512.89	-471.34	15.08	26.48	-492.08	2.058e+06	-4.229e+06	-3.089e+05	-1.861e+06	3.046e+06
	135	21.09	-359.32	-1310.63	-977.97	-691.98	-453.65	-2.391e+05	-6.575e+06	-3.819e+06	-2.995e+06	3.141e+06
	152	22.62	184.46	-671.40	-87.89	-399.05	-398.65	-1.481e+06	-7.464e+06	-4.667e+06	-4.278e+06	2.985e+06
	144	17.59	-109.03	-957.83	-814.94	-251.91	-317.59	2.372e+06	-3.451e+06	4.815e+05	-1.561e+06	2.727e+06
40	1144	27.01	270.18	-1260.04	-845.18	-144.68	-680.24	3.514e+06	-5.205e+06	6.052e+05	-2.297e+06	4.111e+06
	152	31.86	284.37	-1266.42	-320.06	-661.99	-756.31	-1.432e+06	-1.010e+07	-6.052e+06	-5.478e+06	4.324e+06
	172	24.26	-164.33	-1307.79	-839.28	-632.85	-562.33	-7.115e+05	-7.653e+06	-4.002e+06	-4.362e+06	3.466e+06
	167	22.07	384.74	-727.79	-211.07	-131.97	-554.86	1.844e+06	-5.191e+06	-9.104e+05	-2.436e+06	3.434e+06
40	2144	20.78	207.83	-969.26	-650.14	-111.30	-523.26	2.703e+06	-4.004e+06	4.655e+05	-1.767e+06	3.162e+06
	152	24.51	218.75	-974.17	-246.20	-509.22	-581.78	-1.101e+06	-7.768e+06	-4.655e+06	-4.214e+06	3.326e+06
	172	18.66	-126.41	-1005.99	-645.60	-486.80	-432.57	-5.473e+05	-5.887e+06	-3.078e+06	-3.356e+06	2.666e+06
	167	16.97	295.96	-559.84	-162.36	-101.52	-426.81	1.419e+06	-3.993e+06	-7.003e+05	-1.874e+06	2.642e+06
41	1167	22.04	287.04	-927.41	-504.97	-135.40	-578.42	2.198e+06	-4.849e+06	-3.670e+05	-2.284e+06	3.390e+06
	172	25.38	31.32	-1177.36	-542.57	-603.47	-603.57	-9.918e+05	-8.050e+06	-4.546e+06	-4.495e+06	3.529e+06
	188	19.64	-98.92	-997.50	-563.63	-532.79	-449.03	-9.780e+05	-6.391e+06	-3.650e+06	-3.719e+06	2.706e+06
	186	17.08	177.10	-715.68	-370.38	-168.20	-434.79	1.284e+06	-4.125e+06	-7.423e+05	-2.099e+06	2.618e+06
41	2167	16.95	220.80	-713.39	-388.44	-104.15	-444.94	1.691e+06	-3.730e+06	-2.823e+05	-1.757e+06	2.608e+06
	172	19.52	24.09	-905.66	-417.37	-464.20	-464.29	-7.629e+05	-6.192e+06	-3.497e+06	-3.458e+06	2.714e+06
	188	15.11	-76.09	-767.31	-433.56	-409.84	-345.40	-7.523e+05	-4.916e+06	-2.807e+06	-2.861e+06	2.082e+06
	186	13.14	136.23	-550.52	-284.91	-129.38	-334.46	9.875e+05	-3.173e+06	-5.710e+05	-1.615e+06	2.014e+06
42	1186	17.18	169.23	-752.00	-415.03	-167.73	-443.71	1.345e+06	-4.096e+06	-6.611e+05	-2.090e+06	2.625e+06
	188	19.86	-65.02	-984.84	-518.93	-530.93	-459.87	-1.006e+06	-6.451e+06	-3.731e+06	-3.726e+06	2.722e+06
	207	14.26	-147.22	-762.69	-455.99	-453.93	-307.73	-1.105e+06	-4.854e+06	-2.972e+06	-2.987e+06	1.875e+06
	205	12.10	21.24	-593.48	-365.06	-207.18	-297.06	4.847e+05	-3.261e+06	-9.061e+05	-1.870e+06	1.810e+06
42	2186	13.21	130.18	-578.46	-319.26	-129.03	-341.31	1.035e+06	-3.151e+06	-5.085e+05	-1.607e+06	2.019e+06
	188	15.27	-50.01	-757.57	-399.17	-408.41	-353.75	-7.740e+05	-4.962e+06	-2.870e+06	-2.866e+06	2.094e+06
	207	10.97	-113.25	-586.68	-350.76	-349.18	-236.72	-8.500e+05	-3.734e+06	-2.286e+06	-2.298e+06	1.442e+06
	205	9.31	16.34	-456.53	-280.81	-159.37	-228.50	3.728e+05	-2.508e+06	-6.970e+05	-1.438e+06	1.392e+06
43	1205	12.24	30.14	-604.67	-370.14	-204.38	-306.39	5.136e+05	-3.272e+06	-8.855e+05	-1.873e+06	1.827e+06
	207	14.39	-136.42	-770.83	-450.53	-456.72	-317.19	-1.095e+06	-4.880e+06	-2.993e+06	-2.983e+06	1.893e+06

	226	9.41	-216.18	-539.64	-378.22	-377.59	-161.73	-1.234e+06	-3.269e+06	-2.247e+06	-2.256e+06	1.017e+06	
	224	7.25	-126.50	-448.97	-330.14	-245.33	-155.56	-3.687e+05	-2.399e+06	-1.123e+06	-1.645e+06	9.810e+05	
43	2205	9.41	23.18	-465.13	-284.73	-157.22	-235.68	3.951e+05	-2.517e+06	-6.811e+05	-1.441e+06	1.406e+06	
	207	11.07	-104.94	-592.95	-346.56	-351.32	-243.99	-8.423e+05	-3.754e+06	-2.302e+06	-2.294e+06	1.456e+06	
	226	7.24	-166.29	-415.11	-290.94	-290.46	-124.41	-9.494e+05	-2.514e+06	-1.728e+06	-1.735e+06	7.825e+05	
	224	5.58	-97.31	-345.36	-253.95	-188.72	-119.66	-2.836e+05	-1.845e+06	-8.638e+05	-1.265e+06	7.546e+05	
44	1224	7.37	-116.63	-459.02	-367.98	-207.67	151.27	-3.418e+05	-2.414e+06	-8.920e+05	-1.864e+06	-9.152e+05	
	226	9.46	-206.81	-548.76	-495.99	-259.58	123.53	-1.221e+06	-3.292e+06	-1.546e+06	-2.967e+06	-7.530e+05	
	265	5.03	-278.40	-298.00	-283.16	-293.24	-8.41	-1.365e+06	-1.392e+06	-1.385e+06	-1.372e+06	1.203e+04	
44	2224	5.67	-89.72	-353.09	-283.06	-159.75	116.36	-2.629e+05	-1.857e+06	-6.861e+05	-1.434e+06	-7.040e+05	
	226	7.27	-159.08	-422.12	-381.53	-199.68	95.02	-9.393e+05	-2.532e+06	-1.189e+06	-2.283e+06	-5.792e+05	
	265	3.87	-214.15	-229.23	-217.81	-225.57	-6.47	-1.050e+06	-1.071e+06	-1.065e+06	-1.056e+06	9253.00	
45	1 3	5.66	309.32	-25.04	303.34	-19.06	-44.31	1962.81	-7.930e+04	-7.867e+04	1328.92	7149.34	
	11	4.19	307.61	9.04	297.97	18.69	52.80	1281.54	-4.738e+04	-4.728e+04	1184.19	2174.25	
	16	7.15	371.22	-37.60	365.86	-32.24	46.48	5.425e+04	-1.114e+05	-6.478e+04	7598.72	7.451e+04	
	6	8.46	277.41	-13.13	259.68	4.60	-69.54	4.562e+04	-1.477e+05	-7.235e+04	-2.977e+04	9.430e+04	
45	2 3	4.35	237.94	-19.26	233.34	-14.66	-34.08	1509.86	-6.100e+04	-6.052e+04	1022.24	5499.49	
	11	3.22	236.63	6.96	229.20	14.38	40.61	985.80	-3.644e+04	-3.637e+04	910.91	1672.50	
	16	5.50	285.55	-28.92	281.43	-24.80	35.76	4.173e+04	-8.572e+04	-4.983e+04	5845.17	5.732e+04	
	6	6.51	213.39	-10.10	199.76	3.54	-53.49	3.509e+04	-1.136e+05	-5.565e+04	-2.290e+04	7.254e+04	
46	1 6	7.35	271.23	-38.34	257.14	-24.24	-64.54	3.921e+04	-1.614e+05	-9.861e+04	-2.360e+04	9.304e+04	
	16	6.32	361.83	-19.28	356.18	-13.64	46.03	4.528e+04	-1.247e+05	-9.034e+04	1.094e+04	6.825e+04	
	21	8.39	378.78	-51.48	375.71	-48.41	36.21	5.624e+04	-1.967e+05	-1.166e+05	-2.384e+04	1.177e+05	
	9	10.76	298.61	-51.07	268.70	-21.15	-97.80	8.207e+04	-2.446e+05	-1.019e+05	-6.065e+04	1.620e+05	
46	2 6	5.66	208.64	-29.49	197.80	-18.65	-49.65	3.016e+04	-1.242e+05	-7.586e+04	-1.816e+04	7.157e+04	
	16	4.86	278.33	-14.83	273.99	-10.49	35.41	3.483e+04	-9.591e+04	-6.949e+04	8412.65	5.250e+04	
	21	6.45	291.37	-39.60	289.01	-37.24	27.86	4.326e+04	-1.513e+05	-8.972e+04	-1.834e+04	9.051e+04	
	9	8.28	229.70	-39.28	206.69	-16.27	-75.23	6.313e+04	-1.881e+05	-7.835e+04	-4.665e+04	1.246e+05	
47	1 9	9.36	277.41	-66.91	252.23	-41.72	-89.65	7.677e+04	-2.647e+05	-1.351e+05	-5.281e+04	1.657e+05	
	21	7.49	360.03	-39.70	357.13	-36.80	33.93	4.617e+04	-2.161e+05	-1.512e+05	-1.875e+04	1.132e+05	
	24	8.92	392.25	-61.89	389.79	-59.42	33.35	8305.36	-2.991e+05	-1.988e+05	-9.203e+04	1.441e+05	
	14	13.53	316.00	-110.30	263.37	-57.67	-140.23	1.338e+05	-3.822e+05	-1.482e+05	-1.002e+05	2.569e+05	
47	2 9	7.20	213.40	-51.47	194.02	-32.09	-68.96	5.906e+04	-2.036e+05	-1.039e+05	-4.062e+04	1.275e+05	
	21	5.76	276.94	-30.54	274.71	-28.31	26.10	3.551e+04	-1.663e+05	-1.163e+05	-1.443e+04	8.708e+04	
	24	6.87	301.73	-47.61	299.84	-45.71	25.66	6388.74	-2.301e+05	-1.529e+05	-7.079e+04	1.109e+05	
	14	10.41	243.07	-84.84	202.59	-44.36	-107.87	1.029e+05	-2.940e+05	-1.140e+05	-7.711e+04	1.976e+05	
48	1 14	12.17	364.60	-67.55	324.97	-27.91	-124.72	1.145e+05	-4.266e+05	-2.150e+05	-9.706e+04	2.640e+05	
	24	7.28	268.49	-98.11	264.94	-94.56	35.90	4464.89	-3.051e+05	-2.192e+05	-8.144e+04	1.386e+05	
	31	11.59	542.80	11.51	540.21	14.10	37.05	-1.808e+05	-4.939e+05	-4.591e+05	-2.157e+05	9.849e+04	
	19	18.66	214.36	-295.54	113.48	-194.66	-203.13	3.345e+05	-5.756e+05	-1.271e+05	-1.141e+05	4.550e+05	
48	2 14	9.36	280.46	-51.96	249.98	-21.47	-95.94	8.806e+04	-3.281e+05	-1.654e+05	-7.466e+04	2.031e+05	
	24	5.60	206.53	-75.47	203.80	-72.74	27.61	3434.53	-2.347e+05	-1.686e+05	-6.265e+04	1.066e+05	
	31	8.92	417.54	8.85	415.54	10.85	28.50	-1.391e+05	-3.799e+05	-3.531e+05	-1.659e+05	7.576e+04	
	19	14.35	164.89	-227.34	87.29	-149.74	-156.25	2.573e+05	-4.428e+05	-9.773e+04	-8.776e+04	3.500e+05	
49	1 19	14.01	245.72	-130.70	117.22	-2.21	-178.49	1.090e+05	-6.503e+05	-1.887e+05	-3.526e+05	3.707e+05	
	31	17.26	405.18	-237.29	405.18	-237.29	0.10	3.265e+05	-6.350e+05	-5.151e+05	2.066e+05	3.177e+05	

	38	16.35	326.04	-228.40	321.01	-223.37	-52.58	1.510e+05	-7.650e+05	-4.516e+05	-1.624e+05	4.345e+05
	26	17.55	349.89	-168.39	250.58	-69.08	-203.98	1.597e+05	-8.080e+05	-2.457e+05	-4.026e+05	4.775e+05
49 2	19	10.78	189.02	-100.54	90.17	-1.70	-137.30	8.385e+04	-5.003e+05	-1.452e+05	-2.713e+05	2.852e+05
	31	13.28	311.68	-182.53	311.68	-182.53	0.07	2.511e+05	-4.884e+05	-3.962e+05	1.589e+05	2.443e+05
	38	12.58	250.80	-175.69	246.93	-171.82	-40.45	1.161e+05	-5.884e+05	-3.474e+05	-1.249e+05	3.342e+05
	26	13.50	269.15	-129.53	192.75	-53.14	-156.91	1.228e+05	-6.216e+05	-1.890e+05	-3.097e+05	3.673e+05
50 1	26	15.58	275.54	-189.05	160.52	-74.03	-200.51	1.735e+05	-8.313e+05	-2.662e+05	-3.915e+05	4.985e+05
	38	15.22	291.98	-242.96	286.41	-237.39	-54.28	1.195e+05	-8.483e+05	-5.900e+05	-1.388e+05	4.281e+05
	45	18.61	363.24	-294.19	349.13	-280.07	-95.29	1.982e+04	-1.135e+06	-6.716e+05	-4.432e+05	5.659e+05
	33	19.66	303.92	-236.84	154.75	-87.67	-241.69	2.334e+05	-1.054e+06	-2.773e+05	-5.437e+05	6.300e+05
50 2	26	11.98	211.95	-145.42	123.48	-56.95	-154.24	1.335e+05	-6.395e+05	-2.048e+05	-3.012e+05	3.835e+05
	38	11.71	224.60	-186.89	220.32	-182.61	-41.76	9.192e+04	-6.525e+05	-4.539e+05	-1.067e+05	3.293e+05
	45	14.31	279.42	-226.30	268.56	-215.44	-73.30	1.525e+04	-8.728e+05	-5.166e+05	-3.410e+05	4.353e+05
	33	15.13	233.79	-182.18	119.04	-67.44	-185.91	1.796e+05	-8.111e+05	-2.133e+05	-4.182e+05	4.846e+05
51 1	33	17.48	271.40	-248.04	123.59	-100.22	-234.37	2.376e+05	-1.081e+06	-3.150e+05	-5.282e+05	6.505e+05
	45	16.97	255.62	-297.47	237.84	-279.68	-97.57	-1.585e+04	-1.216e+06	-8.123e+05	-4.197e+05	5.672e+05
	51	21.11	341.41	-355.86	313.69	-328.14	-136.24	-8.787e+04	-1.565e+06	-9.255e+05	-7.276e+05	7.320e+05
	40	21.81	300.59	-301.49	111.48	-112.38	-279.46	2.793e+05	-1.376e+06	-3.420e+05	-7.548e+05	8.016e+05
51 2	33	13.44	208.77	-190.80	95.07	-77.09	-180.29	1.827e+05	-8.313e+05	-2.423e+05	-4.063e+05	5.004e+05
	45	13.05	196.63	-228.82	182.95	-215.14	-75.06	-1.220e+04	-9.355e+05	-6.249e+05	-3.229e+05	4.363e+05
	51	16.24	262.62	-273.74	241.30	-252.41	-104.80	-6.759e+04	-1.204e+06	-7.119e+05	-5.597e+05	5.631e+05
	40	16.78	231.22	-231.92	85.75	-86.44	-214.97	2.149e+05	-1.059e+06	-2.631e+05	-5.806e+05	6.166e+05
52 1	40	19.49	269.98	-310.47	80.50	-120.99	-272.18	2.847e+05	-1.403e+06	-3.827e+05	-7.358e+05	8.253e+05
	51	19.26	211.05	-365.01	175.65	-329.62	-138.33	-1.362e+05	-1.661e+06	-1.095e+06	-7.020e+05	7.366e+05
	58	23.69	311.64	-424.72	266.90	-379.97	-175.91	-1.971e+05	-2.068e+06	-1.221e+06	-1.044e+06	9.314e+05
	49	24.03	296.93	-370.37	62.94	-136.38	-318.42	3.183e+05	-1.769e+06	-4.282e+05	-1.023e+06	1.001e+06
52 2	40	14.99	207.67	-238.82	61.92	-93.07	-209.37	2.190e+05	-1.079e+06	-2.944e+05	-5.660e+05	6.348e+05
	51	14.82	162.35	-280.78	135.12	-253.55	-106.41	-1.047e+05	-1.278e+06	-8.423e+05	-5.400e+05	5.666e+05
	58	18.22	239.73	-326.71	205.31	-292.29	-135.32	-1.516e+05	-1.591e+06	-9.392e+05	-8.033e+05	7.165e+05
	49	18.49	228.40	-284.90	48.41	-104.91	-244.93	2.448e+05	-1.361e+06	-3.294e+05	-7.869e+05	7.697e+05
53 1	49	21.61	266.78	-378.86	28.86	-140.95	-311.45	3.254e+05	-1.798e+06	-4.723e+05	-1.001e+06	1.028e+06
	58	21.67	161.50	-442.85	103.33	-384.68	-178.24	-2.601e+05	-2.181e+06	-1.425e+06	-1.016e+06	9.385e+05
	67	26.31	277.47	-501.22	212.12	-435.86	-215.92	-3.183e+05	-2.656e+06	-1.562e+06	-1.412e+06	1.166e+06
	56	26.32	290.35	-444.02	7.62	-161.29	-357.34	3.582e+05	-2.236e+06	-5.340e+05	-1.344e+06	1.232e+06
53 2	49	16.62	205.21	-291.43	22.20	-108.42	-239.58	2.503e+05	-1.383e+06	-3.633e+05	-7.697e+05	7.911e+05
	58	16.67	124.23	-340.65	79.48	-295.91	-137.11	-2.001e+05	-1.678e+06	-1.096e+06	-7.815e+05	7.219e+05
	67	20.24	213.44	-385.55	163.17	-335.28	-166.09	-2.448e+05	-2.043e+06	-1.202e+06	-1.086e+06	8.972e+05
	56	20.24	223.35	-341.55	5.86	-124.07	-274.88	2.755e+05	-1.720e+06	-4.107e+05	-1.034e+06	9.478e+05
54 1	56	23.80	260.87	-453.00	-30.32	-161.81	-350.82	3.664e+05	-2.267e+06	-5.825e+05	-1.318e+06	1.264e+06
	67	24.13	109.66	-530.11	23.40	-443.85	-218.50	-3.971e+05	-2.788e+06	-1.804e+06	-1.380e+06	1.176e+06
	78	28.99	240.18	-584.79	150.69	-495.30	-256.55	-4.592e+05	-3.341e+06	-1.955e+06	-1.846e+06	1.440e+06
	63	28.64	280.93	-521.65	-52.81	-187.91	-395.56	4.000e+05	-2.780e+06	-6.592e+05	-1.720e+06	1.499e+06
54 2	56	18.31	200.67	-348.46	-23.32	-124.47	-269.86	2.819e+05	-1.744e+06	-4.481e+05	-1.014e+06	9.725e+05
	67	18.57	84.35	-407.77	18.00	-341.42	-168.08	-3.055e+05	-2.144e+06	-1.388e+06	-1.062e+06	9.048e+05
	78	22.30	184.75	-449.84	115.92	-381.00	-197.34	-3.532e+05	-2.570e+06	-1.504e+06	-1.420e+06	1.108e+06
	63	22.03	216.10	-401.27	-40.62	-144.55	-304.28	3.077e+05	-2.138e+06	-5.071e+05	-1.323e+06	1.153e+06

55	1	63	26.03	252.40	-531.93	-95.03	-184.50	-389.61	4.090e+05	-2.814e+06	-7.131e+05 -1.692e+06 1.535e+06
		78	26.66	56.94	-625.84	-62.43	-506.47	-259.33	-5.552e+05	-3.492e+06	-2.237e+06 -1.811e+06 1.453e+06
		89	31.72	200.95	-674.58	84.49	-558.11	-297.33	-6.283e+05	-4.138e+06	-2.402e+06 -2.364e+06 1.755e+06
		76	30.99	269.02	-602.33	-116.58	-216.73	-432.78	4.409e+05	-3.408e+06	-8.044e+05 -2.162e+06 1.801e+06
55	2	63	20.03	194.15	-409.18	-73.10	-141.93	-299.70	3.146e+05	-2.164e+06	-5.486e+05 -1.301e+06 1.181e+06
		78	20.51	43.80	-481.42	-48.02	-389.59	-199.49	-4.271e+05	-2.686e+06	-1.721e+06 -1.393e+06 1.118e+06
		89	24.40	154.58	-518.90	64.99	-429.32	-228.71	-4.833e+05	-3.183e+06	-1.848e+06 -1.819e+06 1.350e+06
		76	23.84	206.94	-463.33	-89.68	-166.71	-332.91	3.392e+05	-2.621e+06	-6.188e+05 -1.663e+06 1.385e+06
56	1	76	28.30	241.79	-614.54	-163.15	-209.60	-427.54	4.504e+05	-3.445e+06	-8.643e+05 -2.130e+06 1.842e+06
		89	29.26	4.37	-728.49	-151.98	-572.14	-300.23	-7.431e+05	-4.308e+06	-2.726e+06 -2.325e+06 1.771e+06
		96	34.54	161.31	-769.51	16.36	-624.56	-337.51	-8.375e+05	-5.064e+06	-2.908e+06 -2.993e+06 2.113e+06
		87	33.33	255.37	-685.15	-181.61	-248.18	-469.08	4.736e+05	-4.128e+06	-9.702e+05 -2.684e+06 2.135e+06
56	2	76	21.77	185.99	-472.72	-125.50	-161.23	-328.87	3.465e+05	-2.650e+06	-6.648e+05 -1.639e+06 1.417e+06
		89	22.51	3.36	-560.38	-116.91	-440.11	-230.94	-5.716e+05	-3.314e+06	-2.097e+06 -1.789e+06 1.363e+06
		96	26.57	124.08	-591.93	12.58	-480.43	-259.62	-6.442e+05	-3.895e+06	-2.237e+06 -2.302e+06 1.625e+06
		87	25.64	196.43	-527.04	-139.70	-190.91	-360.83	3.643e+05	-3.175e+06	-7.463e+05 -2.065e+06 1.642e+06
57	1	87	30.56	229.83	-699.72	-232.18	-237.72	-464.77	4.836e+05	-4.168e+06	-1.036e+06 -2.648e+06 2.182e+06
		96	31.93	-46.85	-835.91	-241.82	-640.94	-340.34	-9.728e+05	-5.252e+06	-3.276e+06 -2.949e+06 2.133e+06
		109	37.45	123.79	-868.79	-49.17	-695.84	-376.51	-1.105e+06	-6.139e+06	-3.470e+06 -3.773e+06 2.512e+06
		100	35.61	241.60	-769.58	-245.00	-282.98	-505.23	4.828e+05	-4.946e+06	-1.157e+06 -3.307e+06 2.492e+06
57	2	87	23.51	176.79	-538.25	-178.60	-182.86	-357.51	3.720e+05	-3.206e+06	-7.970e+05 -2.037e+06 1.678e+06
		96	24.56	-36.04	-643.01	-186.01	-493.03	-261.80	-7.483e+05	-4.040e+06	-2.520e+06 -2.269e+06 1.641e+06
		109	28.81	95.22	-668.30	-37.82	-535.26	-289.62	-8.501e+05	-4.722e+06	-2.670e+06 -2.903e+06 1.932e+06
		100	27.39	185.84	-591.98	-188.46	-217.68	-388.64	3.714e+05	-3.805e+06	-8.897e+05 -2.544e+06 1.917e+06
58	1	100	32.77	218.39	-786.55	-298.44	-269.73	-502.27	4.940e+05	-4.988e+06	-1.228e+06 -3.266e+06 2.545e+06
		109	34.70	-94.69	-945.70	-326.42	-713.97	-378.82	-1.262e+06	-6.343e+06	-3.882e+06 -3.723e+06 2.539e+06
		120	40.48	93.96	-973.00	-103.97	-775.07	-414.74	-1.461e+06	-7.393e+06	-4.076e+06 -4.777e+06 2.945e+06
		111	37.72	231.09	-856.71	-302.93	-322.69	-543.81	4.382e+05	-5.864e+06	-1.362e+06 -4.065e+06 2.847e+06
58	2	100	25.21	167.99	-605.04	-229.57	-207.48	-386.36	3.800e+05	-3.837e+06	-9.445e+05 -2.513e+06 1.957e+06
		109	26.69	-72.84	-727.46	-251.09	-549.21	-291.40	-9.711e+05	-4.879e+06	-2.986e+06 -2.864e+06 1.953e+06
		120	31.14	72.28	-748.46	-79.98	-596.21	-319.03	-1.124e+06	-5.687e+06	-3.136e+06 -3.675e+06 2.265e+06
		111	29.01	177.76	-659.00	-233.02	-248.22	-418.31	3.371e+05	-4.511e+06	-1.047e+06 -3.127e+06 2.190e+06
59	1	111	34.84	214.40	-873.39	-353.15	-305.84	-543.38	4.533e+05	-5.907e+06	-1.435e+06 -4.019e+06 2.906e+06
		120	37.58	-136.81	-1056.60	-398.72	-794.69	-415.09	-1.641e+06	-7.608e+06	-4.531e+06 -4.717e+06 2.982e+06
		130	43.70	91.09	-1086.36	-126.92	-868.35	-457.35	-1.952e+06	-8.868e+06	-4.678e+06 -6.142e+06 3.379e+06
		122	39.42	227.83	-954.23	-355.12	-371.28	-590.97	2.710e+05	-6.874e+06	-1.585e+06 -5.018e+06 3.133e+06
59	2	111	26.80	164.92	-671.84	-271.66	-235.26	-417.99	3.487e+05	-4.544e+06	-1.104e+06 -3.091e+06 2.235e+06
		120	28.91	-105.24	-812.77	-306.71	-611.30	-319.30	-1.262e+06	-5.852e+06	-3.486e+06 -3.629e+06 2.294e+06
		130	33.61	70.07	-835.66	-97.63	-667.96	-351.81	-1.502e+06	-6.821e+06	-3.599e+06 -4.724e+06 2.600e+06
		122	30.32	175.25	-734.02	-273.17	-285.60	-454.60	2.084e+05	-5.288e+06	-1.219e+06 -3.860e+06 2.410e+06
60	1	122	36.52	274.23	-941.49	-337.85	-329.40	-607.85	3.283e+05	-6.876e+06	-1.597e+06 -4.951e+06 3.188e+06
		130	40.72	-201.02	-1178.61	-485.22	-894.41	-443.91	-2.169e+06	-9.126e+06	-5.228e+06 -6.068e+06 3.453e+06
		146	47.04	266.66	-1226.84	14.54	-974.72	-559.44	-2.598e+06	-1.056e+07	-5.022e+06 -8.134e+06 3.663e+06
		135	40.30	174.71	-1106.62	-486.41	-445.50	-640.34	-2.225e+05	-7.988e+06	-1.928e+06 -6.282e+06 3.215e+06
60	2	122	28.09	210.95	-724.22	-259.89	-253.39	-467.57	2.525e+05	-5.289e+06	-1.228e+06 -3.808e+06 2.452e+06
		130	31.32	-154.63	-906.62	-373.24	-688.01	-341.47	-1.668e+06	-7.020e+06	-4.021e+06 -4.667e+06 2.656e+06

	146	36.18	205.12	-943.72	11.19	-749.78	-430.34	-1.998e+06	-8.122e+06	-3.863e+06	-6.257e+06	2.818e+06	
	135	31.00	134.39	-851.24	-374.16	-342.70	-492.57	-1.711e+05	-6.144e+06	-1.483e+06	-4.832e+06	2.473e+06	
61	1135	27.70	171.05	-1135.41	-679.85	-284.50	-622.60	-7.898e+05	-8.599e+06	-3.143e+06	-6.246e+06	3.583e+06	
	146	33.50	-881.21	-2156.51	-1882.75	-1154.96	-523.62	-3.593e+06	-1.142e+07	-7.394e+06	-7.619e+06	3.912e+06	
	162	36.85	-167.17	-1340.71	-727.83	-780.05	-586.19	-5.201e+06	-1.327e+07	-8.404e+06	-1.006e+07	3.947e+06	
	152	25.59	-528.04	-1682.31	-1608.66	-601.69	-282.11	-7.085e+05	-8.231e+06	-2.166e+06	-6.773e+06	2.973e+06	
61	2135	21.31	131.58	-873.39	-522.96	-218.85	-478.93	-6.076e+05	-6.614e+06	-2.418e+06	-4.804e+06	2.756e+06	
	146	25.77	-677.85	-1658.85	-1448.27	-888.43	-402.78	-2.764e+06	-8.785e+06	-5.688e+06	-5.861e+06	3.010e+06	
	162	28.34	-128.59	-1031.32	-559.87	-600.04	-450.91	-4.001e+06	-1.021e+07	-6.464e+06	-7.742e+06	3.036e+06	
	152	19.68	-406.19	-1294.08	-1237.43	-462.84	-217.01	-5.450e+05	-6.332e+06	-1.666e+06	-5.210e+06	2.287e+06	
62	1152	29.98	-140.85	-1644.04	-1399.06	-385.83	-555.19	-3.094e+05	-9.090e+06	-2.196e+06	-7.204e+06	3.606e+06	
	162	38.42	-104.44	-1673.20	-909.64	-868.00	-784.10	-4.938e+06	-1.363e+07	-8.399e+06	-1.017e+07	4.254e+06	
	179	29.87	-455.45	-1622.19	-1278.66	-798.98	-531.78	-3.610e+06	-1.052e+07	-5.961e+06	-8.168e+06	3.274e+06	
	172	25.71	28.36	-1053.82	-693.35	-332.11	-510.05	-1.166e+06	-8.287e+06	-3.080e+06	-6.374e+06	3.157e+06	
62	2152	23.06	-108.35	-1264.64	-1076.20	-296.79	-427.07	-2.380e+05	-6.993e+06	-1.689e+06	-5.542e+06	2.774e+06	
	162	29.56	-80.34	-1287.08	-699.72	-667.69	-603.16	-3.799e+06	-1.048e+07	-6.460e+06	-7.822e+06	3.272e+06	
	179	22.98	-350.35	-1247.84	-983.58	-614.60	-409.07	-2.777e+06	-8.092e+06	-4.585e+06	-6.283e+06	2.518e+06	
	172	19.78	21.81	-810.63	-533.35	-255.47	-392.35	-8.972e+05	-6.375e+06	-2.369e+06	-4.903e+06	2.428e+06	
63	1172	25.12	-29.60	-1247.12	-964.78	-311.93	-513.84	-8.652e+05	-7.924e+06	-2.574e+06	-6.215e+06	3.024e+06	
	179	30.58	-272.32	-1475.65	-999.74	-748.24	-588.38	-3.830e+06	-1.091e+07	-6.469e+06	-8.275e+06	3.425e+06	
	196	24.21	-322.27	-1227.51	-905.39	-644.38	-433.40	-3.144e+06	-8.573e+06	-5.117e+06	-6.600e+06	2.611e+06	
	188	19.78	-70.78	-959.11	-725.40	-304.49	-391.15	-1.042e+06	-6.456e+06	-2.407e+06	-5.091e+06	2.351e+06	
63	2172	19.32	-22.77	-959.32	-742.14	-239.95	-395.27	-6.655e+05	-6.095e+06	-1.980e+06	-4.781e+06	2.326e+06	
	179	23.53	-209.48	-1135.12	-769.03	-575.57	-452.60	-2.946e+06	-8.395e+06	-4.976e+06	-6.365e+06	2.634e+06	
	196	18.62	-247.90	-944.24	-696.45	-495.68	-333.38	-2.418e+06	-6.595e+06	-3.936e+06	-5.077e+06	2.009e+06	
	188	15.22	-54.44	-737.78	-558.00	-234.22	-300.88	-8.016e+05	-4.966e+06	-1.852e+06	-3.916e+06	1.809e+06	
64	1188	19.81	-73.77	-994.79	-766.93	-301.63	-397.42	-9.835e+05	-6.429e+06	-2.332e+06	-5.081e+06	2.351e+06	
	196	24.30	-292.60	-1211.27	-863.65	-640.22	-445.54	-3.172e+06	-8.626e+06	-5.192e+06	-6.606e+06	2.634e+06	
	213	18.04	-302.29	-919.89	-691.57	-530.61	-298.12	-2.592e+06	-6.349e+06	-3.975e+06	-4.966e+06	1.813e+06	
	207	14.27	-146.20	-761.25	-606.92	-300.53	-266.65	-1.114e+06	-4.861e+06	-2.050e+06	-3.924e+06	1.622e+06	
64	2188	15.24	-56.75	-765.22	-589.94	-232.02	-305.71	-7.566e+05	-4.946e+06	-1.794e+06	-3.908e+06	1.808e+06	
	196	18.69	-225.08	-931.75	-664.35	-492.48	-342.72	-2.440e+06	-6.635e+06	-3.994e+06	-5.081e+06	2.026e+06	
	213	13.88	-232.53	-707.61	-531.98	-408.16	-229.33	-1.993e+06	-4.884e+06	-3.058e+06	-3.820e+06	1.394e+06	
	207	10.98	-112.46	-585.58	-466.86	-231.18	-205.12	-8.570e+05	-3.739e+06	-1.577e+06	-3.019e+06	1.248e+06	
65	1207	14.37	-137.92	-770.91	-611.23	-297.59	-274.91	-1.087e+06	-4.872e+06	-2.031e+06	-3.927e+06	1.638e+06	
	213	18.08	-292.70	-926.24	-686.06	-532.87	-307.37	-2.585e+06	-6.370e+06	-3.995e+06	-4.961e+06	1.830e+06	
	232	11.87	-299.86	-626.31	-505.75	-420.43	-157.55	-2.043e+06	-4.085e+06	-2.794e+06	-3.334e+06	9.850e+05	
	226	9.42	-217.07	-541.00	-461.02	-297.05	-139.69	-1.240e+06	-3.271e+06	-1.747e+06	-2.764e+06	8.792e+05	
65	2207	11.05	-106.09	-593.00	-470.18	-228.91	-211.47	-8.359e+05	-3.748e+06	-1.563e+06	-3.021e+06	1.260e+06	
	213	13.90	-225.15	-712.49	-527.74	-409.90	-236.44	-1.989e+06	-4.900e+06	-3.073e+06	-3.816e+06	1.408e+06	
	232	9.13	-230.66	-481.78	-389.04	-323.41	-121.19	-1.571e+06	-3.143e+06	-2.149e+06	-2.565e+06	7.577e+05	
	226	7.25	-166.97	-416.16	-354.63	-228.50	-107.45	-9.538e+05	-2.517e+06	-1.344e+06	-2.127e+06	6.763e+05	
66	1265	5.03	-279.15	-299.03	-295.21	-282.97	-7.84	-1.363e+06	-1.391e+06	-1.368e+06	-1.386e+06	1.042e+04	
	226	9.44	-207.90	-550.00	-294.38	-463.51	148.69	-1.213e+06	-3.286e+06	-2.768e+06	-1.732e+06	-8.977e+05	
	232	11.90	-291.70	-633.92	-421.91	-503.71	166.15	-2.033e+06	-4.104e+06	-3.330e+06	-2.807e+06	-1.001e+06	
66	2265	3.87	-214.73	-230.02	-227.08	-217.67	-6.03	-1.049e+06	-1.070e+06	-1.052e+06	-1.066e+06	8011.88	

	226	7.26	-159.92	-423.07	-226.45	-356.54	114.37	-9.333e+05	-2.528e+06	-2.129e+06	-1.332e+06	-6.906e+05
	232	9.15	-224.39	-487.63	-324.54	-387.47	127.81	-1.564e+06	-3.157e+06	-2.562e+06	-2.159e+06	-7.704e+05
67 1	11	6.14	410.10	-26.52	400.44	-16.87	-64.21	2961.42	-7.018e+04	-6.952e+04	2304.28	6901.62
	29	7.38	479.24	6.22	468.28	17.17	71.14	1407.95	-9.471e+04	-9.464e+04	1345.07	2457.64
	36	9.43	515.22	-54.52	507.79	-47.09	64.63	3.478e+04	-1.424e+05	-1.146e+05	6962.55	6.445e+04
	16	9.15	390.05	-24.29	358.77	6.99	-109.47	4.488e+04	-1.467e+05	-6.365e+04	-3.818e+04	9.494e+04
67 2	11	4.72	315.46	-20.40	308.03	-12.97	-49.40	2278.02	-5.398e+04	-5.348e+04	1772.52	5308.94
	29	5.68	368.64	4.79	360.22	13.21	54.72	1083.04	-7.285e+04	-7.280e+04	1034.67	1890.49
	36	7.26	396.32	-41.94	390.61	-36.22	49.71	2.675e+04	-1.095e+05	-8.812e+04	5355.81	4.958e+04
	16	7.04	300.04	-18.69	275.98	5.38	-84.21	3.452e+04	-1.128e+05	-4.896e+04	-2.937e+04	7.303e+04
68 1	16	8.06	398.57	-46.12	373.23	-20.78	-103.09	4.155e+04	-1.585e+05	-8.572e+04	-3.119e+04	9.622e+04
	36	9.05	492.58	-42.17	484.96	-34.55	63.38	3.216e+04	-1.783e+05	-1.607e+05	1.452e+04	5.831e+04
	42	11.18	509.55	-102.63	505.53	-98.60	49.47	2.949e+04	-2.557e+05	-2.047e+05	-2.154e+04	1.093e+05
	21	11.20	408.02	-55.19	358.78	-5.94	-142.78	7.529e+04	-2.489e+05	-7.770e+04	-9.589e+04	1.618e+05
68 2	16	6.20	306.59	-35.48	287.10	-15.98	-79.30	3.196e+04	-1.219e+05	-6.594e+04	-2.399e+04	7.402e+04
	36	6.96	378.90	-32.44	373.04	-26.58	48.75	2.474e+04	-1.371e+05	-1.236e+05	1.117e+04	4.486e+04
	42	8.60	391.96	-78.95	388.87	-75.85	38.05	2.269e+04	-1.967e+05	-1.575e+05	-1.657e+04	8.410e+04
	21	8.62	313.86	-42.45	275.98	-4.57	-109.83	5.792e+04	-1.914e+05	-5.977e+04	-7.376e+04	1.245e+05
69 1	21	9.90	408.66	-67.99	367.72	-27.05	-133.55	7.763e+04	-2.670e+05	-1.006e+05	-8.881e+04	1.722e+05
	42	10.72	462.03	-96.14	458.16	-92.27	46.31	2.763e+04	-3.080e+05	-2.726e+05	-7767.68	1.031e+05
	47	12.93	500.27	-158.37	498.81	-156.92	30.91	-1.333e+04	-4.201e+05	-3.387e+05	-9.477e+04	1.628e+05
	24	12.74	403.91	-89.01	331.58	-16.68	-174.41	1.097e+05	-3.668e+05	-7.728e+04	-1.798e+05	2.327e+05
69 2	21	7.62	314.35	-52.30	282.86	-20.81	-102.73	5.972e+04	-2.054e+05	-7.736e+04	-6.832e+04	1.325e+05
	42	8.25	355.41	-73.95	352.43	-70.98	35.62	2.125e+04	-2.369e+05	-2.097e+05	-5975.14	7.930e+04
	47	9.95	384.82	-121.83	383.70	-120.71	23.77	-1.025e+04	-3.232e+05	-2.605e+05	-7.290e+04	1.252e+05
	24	9.80	310.70	-68.47	255.06	-12.83	-134.16	8.439e+04	-2.822e+05	-5.945e+04	-1.383e+05	1.790e+05
70 1	24	11.90	478.22	-51.00	422.64	4.58	-162.25	1.132e+05	-4.124e+05	-1.166e+05	-1.825e+05	2.607e+05
	47	11.77	349.83	-195.43	347.76	-193.37	33.46	-9343.13	-4.727e+05	-4.191e+05	-6.300e+04	1.483e+05
	54	16.12	574.05	-147.50	574.03	-147.47	-4.20	-1.482e+05	-7.158e+05	-5.713e+05	-2.928e+05	2.473e+05
	31	12.08	267.89	-197.93	172.33	-102.37	-188.10	2.018e+05	-3.934e+05	5.058e+04	-2.421e+05	2.591e+05
70 2	24	9.15	367.86	-39.23	325.11	3.53	-124.81	8.710e+04	-3.172e+05	-8.969e+04	-1.404e+05	2.006e+05
	47	9.06	269.10	-150.33	267.51	-148.75	25.74	-7187.02	-3.636e+05	-3.224e+05	-4.846e+04	1.141e+05
	54	12.40	441.58	-113.46	441.56	-113.44	-3.23	-1.140e+05	-5.506e+05	-4.394e+05	-2.252e+05	1.902e+05
	31	9.29	206.07	-152.26	132.56	-78.75	-144.69	1.553e+05	-3.026e+05	3.890e+04	-1.863e+05	1.993e+05
71 1	31	19.64	345.13	-224.78	220.43	-100.08	-235.62	6.252e+05	-5.315e+05	1.232e+05	-2.956e+04	5.733e+05
	54	13.57	453.39	-199.97	449.93	-196.52	47.36	-3.250e+05	-7.418e+05	-7.294e+05	-3.374e+05	7.088e+04
	60	15.51	391.72	-224.28	390.91	-223.48	-22.25	-2.513e+05	-9.074e+05	-6.738e+05	-4.849e+05	3.142e+05
	38	17.27	436.50	-250.17	342.23	-155.89	-236.32	1.482e+05	-7.805e+05	-2.521e+05	-3.803e+05	4.599e+05
71 2	31	15.11	265.48	-172.91	169.56	-76.98	-181.25	4.809e+05	-4.089e+05	9.475e+04	-2.273e+04	4.410e+05
	54	10.44	348.76	-153.82	346.10	-151.17	36.43	-2.500e+05	-5.706e+05	-5.610e+05	-2.596e+05	5.452e+04
	60	11.93	301.32	-172.52	300.70	-171.91	-17.12	-1.933e+05	-6.980e+05	-5.183e+05	-3.730e+05	2.417e+05
	38	13.29	335.77	-192.44	263.25	-119.92	-181.78	1.140e+05	-6.004e+05	-1.939e+05	-2.925e+05	3.538e+05
72 1	38	15.74	370.55	-265.08	268.83	-163.36	-233.05	1.928e+05	-8.090e+05	-2.548e+05	-3.615e+05	4.980e+05
	60	14.62	312.96	-241.37	311.91	-240.32	-24.13	-3.098e+05	-1.003e+06	-8.450e+05	-4.677e+05	2.907e+05
	65	18.10	401.06	-312.07	397.82	-308.83	-47.95	-3.748e+05	-1.274e+06	-9.102e+05	-7.387e+05	4.414e+05
	45	18.97	372.86	-303.88	245.85	-176.86	-264.24	-9713.94	-1.155e+06	-4.274e+05	-7.373e+05	5.512e+05

72	2	38	12.11	285.04	-203.91	206.79	-125.66	-179.27	1.483e+05	-6.223e+05	-1.960e+05	-2.781e+05	3.831e+05
		60	11.25	240.74	-185.67	239.93	-184.86	-18.56	-2.383e+05	-7.714e+05	-6.500e+05	-3.598e+05	2.236e+05
		65	13.92	308.50	-240.05	306.01	-237.56	-36.88	-2.883e+05	-9.801e+05	-7.002e+05	-5.682e+05	3.396e+05
		45	14.60	286.82	-233.75	189.11	-136.05	-203.26	-7472.26	-8.884e+05	-3.287e+05	-5.671e+05	4.240e+05
73	1	45	16.96	324.23	-317.44	197.64	-190.85	-255.36	-7690.20	-1.186e+06	-4.833e+05	-7.101e+05	5.780e+05
		65	16.74	253.06	-316.83	247.89	-311.66	-54.03	-4.297e+05	-1.377e+06	-1.092e+06	-7.151e+05	4.347e+05
		72	20.70	354.77	-388.59	346.52	-380.33	-77.89	-5.526e+05	-1.738e+06	-1.198e+06	-1.092e+06	5.902e+05
		51	21.45	335.59	-365.96	180.90	-211.26	-290.85	-1.263e+05	-1.598e+06	-6.120e+05	-1.112e+06	6.919e+05
73	2	45	13.05	249.41	-244.19	152.03	-146.81	-196.43	-5915.54	-9.121e+05	-3.718e+05	-5.462e+05	4.446e+05
		65	12.88	194.66	-243.71	190.69	-239.74	-41.56	-3.306e+05	-1.059e+06	-8.399e+05	-5.501e+05	3.344e+05
		72	15.93	272.90	-298.91	266.55	-292.56	-59.92	-4.251e+05	-1.337e+06	-9.217e+05	-8.401e+05	4.540e+05
		51	16.50	258.15	-281.51	139.15	-162.51	-223.73	-9.715e+04	-1.229e+06	-4.708e+05	-8.553e+05	5.323e+05
74	1	51	19.15	275.48	-381.69	115.39	-221.60	-282.10	-1.426e+05	-1.631e+06	-6.928e+05	-1.081e+06	7.186e+05
		72	19.04	182.26	-396.71	169.92	-384.38	-83.59	-6.231e+05	-1.850e+06	-1.411e+06	-1.062e+06	5.881e+05
		82	23.52	296.44	-468.18	279.89	-451.62	-111.27	-7.715e+05	-2.306e+06	-1.546e+06	-1.532e+06	7.675e+05
		58	24.05	294.93	-436.86	108.19	-250.12	-319.04	-2.372e+05	-2.111e+06	-8.163e+05	-1.532e+06	8.658e+05
74	2	51	14.73	211.91	-293.61	88.76	-170.46	-217.00	-1.097e+05	-1.255e+06	-5.330e+05	-8.316e+05	5.528e+05
		72	14.65	140.20	-305.16	130.71	-295.68	-64.30	-4.793e+05	-1.423e+06	-1.085e+06	-8.170e+05	4.524e+05
		82	18.10	228.03	-360.14	215.30	-347.40	-85.59	-5.934e+05	-1.774e+06	-1.189e+06	-1.179e+06	5.904e+05
		58	18.50	226.87	-336.05	83.22	-192.40	-245.41	-1.824e+05	-1.624e+06	-6.279e+05	-1.178e+06	6.660e+05
75	1	58	21.54	226.43	-456.46	26.68	-256.71	-310.66	-2.658e+05	-2.148e+06	-9.168e+05	-1.497e+06	8.954e+05
		82	21.57	101.11	-482.59	76.81	-458.29	-116.61	-8.640e+05	-2.428e+06	-1.796e+06	-1.497e+06	7.677e+05
		91	26.47	230.15	-553.28	201.47	-524.60	-147.13	-1.032e+06	-2.984e+06	-1.957e+06	-2.059e+06	9.749e+05
		67	26.66	250.45	-515.54	27.23	-292.32	-348.08	-3.586e+05	-2.706e+06	-1.048e+06	-2.017e+06	1.069e+06
75	2	58	16.57	174.18	-351.13	20.52	-197.47	-238.97	-2.045e+05	-1.653e+06	-7.052e+05	-1.152e+06	6.888e+05
		82	16.59	77.78	-371.23	59.08	-352.53	-89.70	-6.646e+05	-1.868e+06	-1.381e+06	-1.151e+06	5.905e+05
		91	20.36	177.04	-425.60	154.98	-403.54	-113.18	-7.937e+05	-2.296e+06	-1.505e+06	-1.584e+06	7.499e+05
		67	20.51	192.66	-396.57	20.95	-224.86	-267.75	-2.758e+05	-2.081e+06	-8.058e+05	-1.552e+06	8.222e+05
76	1	67	23.98	176.67	-540.43	-68.58	-295.17	-340.18	-3.985e+05	-2.748e+06	-1.167e+06	-1.979e+06	1.102e+06
		91	24.43	13.31	-576.22	-29.02	-533.89	-152.19	-1.149e+06	-3.118e+06	-2.249e+06	-2.018e+06	9.774e+05
		102	29.71	158.40	-644.57	113.64	-599.81	-184.23	-1.339e+06	-3.782e+06	-2.437e+06	-2.684e+06	1.215e+06
		78	29.30	202.98	-600.89	-60.59	-337.32	-377.37	-5.008e+05	-3.397e+06	-1.311e+06	-2.586e+06	1.300e+06
76	2	67	18.45	135.90	-415.71	-52.75	-227.06	-261.68	-3.065e+05	-2.114e+06	-8.977e+05	-1.522e+06	8.479e+05
		91	18.80	10.24	-443.25	-22.32	-410.69	-117.07	-8.841e+05	-2.398e+06	-1.730e+06	-1.552e+06	7.518e+05
		102	22.85	121.85	-495.82	87.41	-461.39	-141.71	-1.030e+06	-2.909e+06	-1.874e+06	-2.065e+06	9.345e+05
		78	22.54	156.14	-462.22	-46.61	-259.48	-290.28	-3.852e+05	-2.613e+06	-1.009e+06	-1.989e+06	1.000e+06
77	1	78	26.47	126.30	-632.48	-169.64	-336.54	-370.10	-5.520e+05	-3.443e+06	-1.450e+06	-2.544e+06	1.338e+06
		102	27.65	-77.63	-678.53	-144.57	-611.59	-189.06	-1.484e+06	-3.928e+06	-2.775e+06	-2.637e+06	1.220e+06
		107	33.19	83.84	-742.20	19.42	-677.78	-221.51	-1.703e+06	-4.715e+06	-2.990e+06	-3.427e+06	1.490e+06
		89	32.00	153.62	-691.86	-153.09	-385.14	-406.51	-6.725e+05	-4.199e+06	-1.612e+06	-3.259e+06	1.559e+06
77	2	78	20.36	97.15	-486.52	-130.49	-258.88	-284.69	-4.247e+05	-2.648e+06	-1.116e+06	-1.957e+06	1.029e+06
		102	21.27	-59.72	-521.95	-111.21	-470.45	-145.43	-1.142e+06	-3.021e+06	-2.134e+06	-2.029e+06	9.382e+05
		107	25.53	64.49	-570.92	14.94	-521.37	-170.39	-1.310e+06	-3.627e+06	-2.300e+06	-2.636e+06	1.146e+06
		89	24.61	118.17	-532.20	-117.76	-296.26	-312.70	-5.173e+05	-3.230e+06	-1.240e+06	-2.507e+06	1.199e+06
78	1	89	29.02	75.91	-731.29	-274.48	-380.89	-400.08	-7.360e+05	-4.247e+06	-1.771e+06	-3.212e+06	1.601e+06
		107	30.96	-168.41	-789.39	-266.06	-691.74	-226.06	-1.878e+06	-4.874e+06	-3.377e+06	-3.375e+06	1.498e+06

	117	36.85	9.58	-845.94	-77.01	-759.35	-258.03	-2.133e+06	-5.810e+06	-3.620e+06	-4.324e+06	1.804e+06	
	96	34.77	104.00	-787.25	-247.03	-436.22	-435.47	-8.852e+05	-5.128e+06	-1.954e+06	-4.060e+06	1.842e+06	
78 2	89	22.33	58.39	-562.53	-211.14	-293.00	-307.75	-5.661e+05	-3.267e+06	-1.362e+06	-2.471e+06	1.231e+06	
	107	23.81	-129.54	-607.22	-204.66	-532.11	-173.90	-1.445e+06	-3.749e+06	-2.598e+06	-2.596e+06	1.152e+06	
	117	28.35	7.37	-650.72	-59.24	-584.11	-198.49	-1.641e+06	-4.469e+06	-2.784e+06	-3.326e+06	1.388e+06	
	96	26.75	80.00	-605.58	-190.02	-335.55	-334.98	-6.809e+05	-3.945e+06	-1.503e+06	-3.123e+06	1.417e+06	
79 1	96	31.66	26.71	-835.11	-379.59	-428.80	-430.21	-9.621e+05	-5.178e+06	-2.132e+06	-4.008e+06	1.888e+06	
	117	34.42	-255.91	-907.34	-388.23	-775.01	-262.09	-2.343e+06	-5.980e+06	-4.058e+06	-4.265e+06	1.816e+06	
	126	40.83	-60.16	-955.50	-169.37	-846.30	-293.00	-2.647e+06	-7.106e+06	-4.324e+06	-5.429e+06	2.160e+06	
	109	37.65	56.72	-886.02	-337.64	-491.66	-465.04	-1.157e+06	-6.209e+06	-2.336e+06	-5.029e+06	2.137e+06	
79 2	96	24.35	20.55	-642.39	-291.99	-329.85	-330.93	-7.401e+05	-3.983e+06	-1.640e+06	-3.083e+06	1.452e+06	
	117	26.48	-196.85	-697.95	-298.64	-596.16	-201.61	-1.802e+06	-4.600e+06	-3.122e+06	-3.281e+06	1.397e+06	
	126	31.41	-46.28	-735.00	-130.29	-651.00	-225.39	-2.036e+06	-5.466e+06	-3.326e+06	-4.176e+06	1.661e+06	
	109	28.97	43.63	-681.56	-259.72	-378.20	-357.72	-8.896e+05	-4.776e+06	-1.797e+06	-3.868e+06	1.644e+06	
80 1	109	34.39	-18.78	-941.90	-479.17	-481.51	-461.56	-1.248e+06	-6.257e+06	-2.534e+06	-4.971e+06	2.188e+06	
	126	38.14	-336.81	-1029.53	-503.22	-863.12	-295.94	-2.894e+06	-7.282e+06	-4.814e+06	-5.362e+06	2.177e+06	
	137	45.33	-117.95	-1071.75	-247.03	-942.67	-326.27	-3.262e+06	-8.665e+06	-5.086e+06	-6.841e+06	2.555e+06	
	120	40.68	16.43	-988.46	-418.03	-554.01	-497.82	-1.515e+06	-7.470e+06	-2.755e+06	-6.229e+06	2.418e+06	
80 2	109	26.45	-14.44	-724.54	-368.59	-370.39	-355.05	-9.599e+05	-4.813e+06	-1.949e+06	-3.824e+06	1.683e+06	
	126	29.34	-259.09	-791.94	-387.10	-663.94	-227.65	-2.226e+06	-5.602e+06	-3.703e+06	-4.125e+06	1.674e+06	
	137	34.87	-90.73	-824.42	-190.03	-725.13	-250.98	-2.509e+06	-6.665e+06	-3.913e+06	-5.262e+06	1.965e+06	
	120	31.29	12.63	-760.36	-321.56	-426.16	-382.94	-1.165e+06	-5.746e+06	-2.119e+06	-4.792e+06	1.860e+06	
81 1	120	37.25	-52.47	-1048.72	-561.02	-540.17	-498.01	-1.620e+06	-7.509e+06	-2.968e+06	-6.162e+06	2.474e+06	
	137	42.29	-407.65	-1152.55	-600.04	-960.15	-326.04	-3.551e+06	-8.838e+06	-5.627e+06	-6.761e+06	2.582e+06	
	154	50.76	-142.13	-1199.99	-285.58	-1056.54	-362.19	-3.991e+06	-1.060e+07	-5.853e+06	-8.740e+06	2.974e+06	
	130	43.93	-11.38	-1099.79	-481.70	-629.47	-539.16	-2.007e+06	-8.964e+06	-3.196e+06	-7.776e+06	2.618e+06	
81 2	120	28.66	-40.36	-806.70	-431.56	-415.51	-383.09	-1.246e+06	-5.776e+06	-2.283e+06	-4.740e+06	1.903e+06	
	137	32.53	-313.57	-886.58	-461.57	-738.58	-250.80	-2.731e+06	-6.798e+06	-4.329e+06	-5.201e+06	1.986e+06	
	154	39.05	-109.33	-923.07	-219.68	-812.72	-278.60	-3.070e+06	-8.156e+06	-4.502e+06	-6.723e+06	2.288e+06	
	130	33.80	-8.76	-845.99	-370.54	-484.21	-414.74	-1.544e+06	-6.896e+06	-2.459e+06	-5.981e+06	2.014e+06	
82 1	130	40.25	-12.33	-1141.39	-565.33	-588.39	-564.41	-2.100e+06	-8.946e+06	-3.366e+06	-7.679e+06	2.658e+06	
	154	47.43	-492.87	-1272.67	-691.73	-1073.81	-339.89	-4.331e+06	-1.079e+07	-6.485e+06	-8.638e+06	3.045e+06	
	166	57.65	23.22	-1371.86	-157.30	-1191.34	-468.25	-4.755e+06	-1.309e+07	-6.358e+06	-1.148e+07	3.284e+06	
	146	48.23	-93.88	-1230.40	-587.64	-736.64	-563.35	-2.739e+06	-1.085e+07	-3.701e+06	-9.893e+06	2.623e+06	
82 2	130	30.96	-9.49	-877.99	-434.87	-452.61	-434.16	-1.615e+06	-6.881e+06	-2.590e+06	-5.907e+06	2.045e+06	
	154	36.48	-379.13	-978.98	-532.10	-826.01	-261.46	-3.332e+06	-8.301e+06	-4.988e+06	-6.645e+06	2.342e+06	
	166	44.35	17.86	-1055.28	-121.00	-916.41	-360.19	-3.658e+06	-1.007e+07	-4.891e+06	-8.833e+06	2.526e+06	
	146	37.10	-72.22	-946.46	-452.03	-566.65	-433.35	-2.107e+06	-8.350e+06	-2.847e+06	-7.610e+06	2.018e+06	
83 1	146	31.68	-300.60	-1655.32	-1352.67	-603.24	-564.27	-4.180e+06	-1.131e+07	-5.761e+06	-9.728e+06	2.962e+06	
	166	40.50	-1201.07	-2535.34	-2385.44	-1350.98	-421.35	-6.604e+06	-1.371e+07	-9.412e+06	-1.091e+07	3.476e+06	
	177	45.93	-526.25	-1792.68	-1311.39	-1007.54	-614.72	-7.940e+06	-1.630e+07	-1.026e+07	-1.398e+07	3.745e+06	
	162	34.37	-839.83	-2082.24	-2067.96	-854.11	-132.44	-4.209e+06	-1.185e+07	-4.906e+06	-1.115e+07	2.199e+06	
83 2	146	24.37	-231.23	-1273.32	-1040.52	-464.03	-434.05	-3.216e+06	-8.699e+06	-4.432e+06	-7.483e+06	2.278e+06	
	166	31.15	-923.90	-1950.26	-1834.95	-1039.21	-324.12	-5.080e+06	-1.055e+07	-7.240e+06	-8.390e+06	2.674e+06	
	177	35.33	-404.81	-1378.98	-1008.76	-775.03	-472.86	-6.107e+06	-1.254e+07	-7.894e+06	-1.075e+07	2.880e+06	
	162	26.43	-646.02	-1601.72	-1590.74	-657.01	-101.88	-3.238e+06	-9.114e+06	-3.774e+06	-8.578e+06	1.692e+06	

84	1162	36.28	-507.47	-1989.98	-1877.33	-620.12	-392.82	-3.898e+06	-1.276e+07	-4.941e+06	-1.172e+07	2.856e+06
	177	46.73	-458.01	-2033.31	-1456.87	-1034.45	-758.80	-7.888e+06	-1.664e+07	-1.027e+07	-1.426e+07	3.895e+06
	192	37.22	-701.79	-1879.01	-1650.59	-930.21	-465.53	-6.099e+06	-1.302e+07	-7.608e+06	-1.151e+07	2.858e+06
	179	31.33	-307.96	-1369.22	-1148.17	-529.00	-430.96	-3.954e+06	-1.115e+07	-5.134e+06	-9.972e+06	2.665e+06
84	2162	27.91	-390.37	-1530.75	-1444.10	-477.01	-302.17	-2.998e+06	-9.816e+06	-3.801e+06	-9.013e+06	2.197e+06
	177	35.94	-352.32	-1564.08	-1120.67	-795.73	-583.69	-6.068e+06	-1.280e+07	-7.898e+06	-1.097e+07	2.996e+06
	192	28.63	-539.84	-1445.39	-1269.68	-715.55	-358.10	-4.691e+06	-1.002e+07	-5.852e+06	-8.855e+06	2.199e+06
	179	24.10	-236.89	-1053.24	-883.21	-406.93	-331.51	-3.041e+06	-8.579e+06	-3.949e+06	-7.671e+06	2.050e+06
85	1179	30.38	-323.49	-1541.65	-1378.62	-486.51	-414.74	-3.716e+06	-1.080e+07	-4.700e+06	-9.818e+06	2.451e+06
	192	37.85	-535.35	-1734.57	-1408.44	-861.47	-533.61	-6.256e+06	-1.337e+07	-8.045e+06	-1.159e+07	3.088e+06
	204	29.79	-512.99	-1423.68	-1205.22	-731.45	-388.87	-5.003e+06	-1.045e+07	-6.329e+06	-9.126e+06	2.339e+06
	196	24.33	-301.42	-1188.69	-1050.84	-439.28	-321.42	-3.202e+06	-8.631e+06	-4.003e+06	-7.831e+06	1.925e+06
85	2179	23.37	-248.84	-1185.88	-1060.48	-374.24	-319.03	-2.858e+06	-8.309e+06	-3.616e+06	-7.552e+06	1.886e+06
	192	29.11	-411.80	-1334.28	-1083.42	-662.67	-410.47	-4.812e+06	-1.029e+07	-6.188e+06	-8.912e+06	2.375e+06
	204	22.92	-394.61	-1095.14	-927.09	-562.65	-299.13	-3.848e+06	-8.041e+06	-4.869e+06	-7.020e+06	1.799e+06
	196	18.71	-231.86	-914.38	-808.34	-337.91	-247.25	-2.463e+06	-6.639e+06	-3.079e+06	-6.024e+06	1.481e+06
86	1196	24.26	-300.18	-1220.46	-1086.42	-434.22	-324.63	-3.152e+06	-8.607e+06	-3.938e+06	-7.821e+06	1.916e+06
	204	29.86	-488.51	-1406.05	-1169.29	-725.27	-401.47	-5.029e+06	-1.049e+07	-6.394e+06	-9.130e+06	2.366e+06
	219	21.93	-434.87	-1055.48	-899.94	-590.41	-268.96	-3.867e+06	-7.635e+06	-4.802e+06	-6.700e+06	1.628e+06
	213	18.05	-301.56	-918.41	-827.40	-392.57	-218.76	-2.601e+06	-6.354e+06	-3.148e+06	-5.806e+06	1.325e+06
86	2196	18.66	-230.91	-938.81	-835.71	-334.01	-249.72	-2.424e+06	-6.621e+06	-3.029e+06	-6.016e+06	1.474e+06
	204	22.97	-375.78	-1081.58	-899.45	-557.90	-308.83	-3.868e+06	-8.073e+06	-4.919e+06	-7.023e+06	1.820e+06
	219	16.87	-334.52	-811.91	-692.26	-454.16	-206.89	-2.974e+06	-5.873e+06	-3.694e+06	-5.154e+06	1.252e+06
	213	13.88	-231.97	-706.47	-636.46	-301.97	-168.28	-2.001e+06	-4.888e+06	-2.422e+06	-4.466e+06	1.019e+06
87	1213	18.06	-294.88	-925.46	-830.65	-389.69	-225.39	-2.578e+06	-6.362e+06	-3.133e+06	-5.808e+06	1.338e+06
	219	21.95	-427.40	-1059.34	-894.74	-592.00	-277.35	-3.865e+06	-7.649e+06	-4.819e+06	-6.695e+06	1.643e+06
	234	14.07	-370.74	-701.90	-618.92	-453.72	-143.51	-2.736e+06	-4.788e+06	-3.245e+06	-4.279e+06	8.866e+05
	232	11.87	-300.31	-627.89	-580.63	-347.57	-115.09	-2.049e+06	-4.087e+06	-2.345e+06	-3.791e+06	7.183e+05
87	2213	13.89	-226.83	-711.89	-638.96	-299.76	-173.37	-1.983e+06	-4.894e+06	-2.410e+06	-4.468e+06	1.029e+06
	219	16.89	-328.77	-814.88	-688.26	-455.39	-213.35	-2.973e+06	-5.884e+06	-3.707e+06	-5.150e+06	1.264e+06
	234	10.82	-285.18	-539.92	-476.09	-349.02	-110.39	-2.104e+06	-3.683e+06	-2.496e+06	-3.292e+06	6.820e+05
	232	9.13	-231.01	-482.99	-446.64	-267.36	-88.53	-1.576e+06	-3.144e+06	-1.804e+06	-2.916e+06	5.526e+05
88	1265	5.03	-279.87	-299.90	-298.78	-280.98	-4.60	-1.362e+06	-1.390e+06	-1.363e+06	-1.389e+06	6068.96
	232	11.89	-292.79	-634.91	-344.80	-582.90	122.83	-2.026e+06	-4.099e+06	-3.794e+06	-2.331e+06	-7.349e+05
	234	14.09	-364.48	-707.35	-454.51	-617.32	150.88	-2.730e+06	-4.800e+06	-4.276e+06	-3.254e+06	-9.002e+05
88	2265	3.87	-215.28	-230.69	-229.83	-216.14	-3.54	-1.048e+06	-1.069e+06	-1.049e+06	-1.068e+06	4668.43
	232	9.14	-225.22	-488.39	-265.23	-448.39	94.49	-1.558e+06	-3.153e+06	-2.918e+06	-1.793e+06	-5.653e+05
	234	10.84	-280.37	-544.11	-349.62	-474.86	116.06	-2.100e+06	-3.692e+06	-3.289e+06	-2.503e+06	-6.924e+05
89	1 36	10.46	526.07	-37.17	-16.75	505.65	105.27	4870.43	-1.652e+05	-3.187e+04	-1.285e+05	-6.999e+04
	29	9.32	548.49	-23.72	-12.49	537.26	79.37	2340.00	-1.258e+05	2198.52	-1.257e+05	-4255.97
	69	7.45	516.18	-2.82	11.56	501.80	-85.19	2547.38	-8.734e+04	2528.48	-8.733e+04	-1303.32
	74	8.36	569.40	-48.12	-31.22	552.51	-100.73	-442.89	-1.162e+05	-1.254e+04	-1.041e+05	-3.541e+04
89	2 36	8.04	404.67	-28.59	-12.89	388.96	80.98	3746.48	-1.271e+05	-2.451e+04	-9.881e+04	-5.384e+04
	29	7.17	421.92	-18.25	-9.61	413.28	61.06	1800.00	-9.679e+04	1691.17	-9.668e+04	-3273.82
	69	5.73	397.06	-2.17	8.89	386.00	-65.53	1959.52	-6.719e+04	1944.99	-6.717e+04	-1002.56
	74	6.43	438.00	-37.01	-24.02	425.01	-77.49	-340.69	-8.938e+04	-9648.12	-8.007e+04	-2.724e+04

90	1	42	12.00	536.97	-94.54	-67.41	509.83	128.06	-9889.87	-2.784e+05	-8.681e+04	-2.015e+05	-1.214e+05
		36	10.08	510.65	-59.57	-41.90	492.98	98.80	5971.76	-2.043e+05	-2.153e+04	-1.768e+05	-7.090e+04
		74	8.31	561.15	-41.27	-25.32	545.20	-96.72	608.27	-1.494e+05	-5189.68	-1.436e+05	-2.891e+04
		80	8.51	576.28	-73.08	-55.77	558.96	-104.61	-5.825e+04	-1.940e+05	-8.089e+04	-1.713e+05	-5.060e+04
90	2	42	9.23	413.05	-72.72	-51.85	392.18	98.51	-7607.59	-2.142e+05	-6.677e+04	-1.550e+05	-9.339e+04
		36	7.75	392.80	-45.82	-32.23	379.22	76.00	4593.66	-1.572e+05	-1.656e+04	-1.360e+05	-5.454e+04
		74	6.39	431.65	-31.75	-19.48	419.38	-74.40	467.90	-1.149e+05	-3992.06	-1.104e+05	-2.224e+04
		80	6.54	443.29	-56.22	-42.90	429.97	-80.47	-4.481e+04	-1.492e+05	-6.223e+04	-1.318e+05	-3.892e+04
91	1	47	14.17	536.05	-172.37	-132.28	495.96	163.69	-3.726e+04	-4.521e+05	-1.766e+05	-3.127e+05	-1.959e+05
		42	11.42	495.10	-110.49	-86.63	471.24	117.82	-8854.97	-3.299e+05	-7.203e+04	-2.667e+05	-1.276e+05
		80	8.42	553.63	-69.85	-54.12	537.91	-97.76	-6.048e+04	-2.329e+05	-7.136e+04	-2.220e+05	-4.193e+04
		85	8.94	577.01	-94.47	-74.05	556.59	-115.30	-1.809e+05	-2.940e+05	-2.076e+05	-2.674e+05	-4.799e+04
91	2	47	10.90	412.35	-132.59	-101.75	381.51	125.91	-2.866e+04	-3.478e+05	-1.359e+05	-2.406e+05	-1.507e+05
		42	8.78	380.84	-84.99	-66.64	362.49	90.63	-6811.52	-2.538e+05	-5.541e+04	-2.052e+05	-9.819e+04
		80	6.48	425.87	-53.73	-41.63	413.77	-75.20	-4.652e+04	-1.791e+05	-5.490e+04	-1.708e+05	-3.225e+04
		85	6.87	443.85	-72.67	-56.96	428.14	-88.69	-1.392e+05	-2.262e+05	-1.597e+05	-2.057e+05	-3.691e+04
92	1	54	17.60	429.30	-335.64	-273.24	366.90	209.38	1.535e+04	-7.114e+05	-2.957e+05	-4.003e+05	-3.596e+05
		47	13.89	527.80	-152.56	-117.40	492.64	150.62	-4.237e+04	-5.351e+05	-1.593e+05	-4.182e+05	-2.096e+05
		85	8.05	482.04	-124.36	-102.01	459.69	-114.25	-1.884e+05	-3.203e+05	-1.959e+05	-3.128e+05	-3.055e+04
		93	12.23	656.49	-58.65	-37.18	635.02	-122.04	-3.947e+05	-4.934e+05	-3.954e+05	-4.927e+05	8539.30
92	2	54	13.53	330.23	-258.18	-210.18	282.23	161.06	1.181e+04	-5.472e+05	-2.275e+05	-3.079e+05	-2.766e+05
		47	10.69	406.00	-117.36	-90.31	378.95	115.86	-3.259e+04	-4.116e+05	-1.225e+05	-3.217e+05	-1.613e+05
		85	6.19	370.80	-95.66	-78.47	353.61	-87.89	-1.449e+05	-2.464e+05	-1.507e+05	-2.406e+05	-2.350e+04
		93	9.41	504.99	-45.12	-28.60	488.48	-93.87	-3.036e+05	-3.795e+05	-3.042e+05	-3.790e+05	6568.69
93	1	60	17.54	485.82	-240.47	-177.32	422.66	204.65	-2.824e+05	-1.009e+06	-7.088e+05	-5.823e+05	-3.576e+05
		54	16.32	405.06	-185.61	-94.07	313.52	213.75	-1.933e+05	-8.969e+05	-5.553e+05	-5.349e+05	-3.516e+05
		93	14.32	522.32	-314.07	-298.98	507.23	-111.32	1.312e+05	-5.369e+05	1.224e+05	-5.281e+05	-7.606e+04
		98	13.65	479.78	-313.51	-309.97	476.24	-52.83	-2.632e+05	-7.880e+05	-4.227e+05	-6.285e+05	-2.414e+05
93	2	60	13.49	373.71	-184.98	-136.40	325.13	157.42	-2.172e+05	-7.759e+05	-5.452e+05	-4.479e+05	-2.751e+05
		54	12.55	311.58	-142.78	-72.36	241.17	164.43	-1.487e+05	-6.899e+05	-4.272e+05	-4.114e+05	-2.705e+05
		93	11.01	401.79	-241.59	-229.98	390.18	-85.63	1.009e+05	-4.130e+05	9.418e+04	-4.063e+05	-5.851e+04
		98	10.50	369.06	-241.16	-238.44	366.34	-40.64	-2.025e+05	-6.061e+05	-3.252e+05	-4.834e+05	-1.857e+05
94	1	65	19.28	403.37	-320.74	-235.61	318.23	233.23	-3.900e+05	-1.348e+06	-1.001e+06	-7.365e+05	-4.602e+05
		60	15.98	362.07	-263.11	-189.89	288.84	201.03	-2.959e+05	-1.074e+06	-6.877e+05	-6.826e+05	-3.892e+05
		98	13.25	401.80	-331.60	-328.15	398.35	-50.19	-2.915e+05	-8.785e+05	-3.889e+05	-7.811e+05	-2.184e+05
		104	16.95	455.45	-379.28	-378.73	454.90	-21.43	-5.824e+05	-1.258e+06	-8.955e+05	-9.452e+05	-3.371e+05
94	2	65	14.83	310.28	-246.72	-181.24	244.80	179.41	-3.000e+05	-1.037e+06	-7.701e+05	-5.665e+05	-3.540e+05
		60	12.29	278.51	-202.39	-146.07	222.19	154.64	-2.276e+05	-8.265e+05	-5.290e+05	-5.251e+05	-2.994e+05
		98	10.19	309.07	-255.07	-252.42	306.42	-38.61	-2.242e+05	-6.758e+05	-2.991e+05	-6.008e+05	-1.680e+05
		104	13.04	350.34	-291.75	-291.33	349.92	-16.48	-4.480e+05	-9.680e+05	-6.889e+05	-7.271e+05	-2.593e+05
95	1	72	21.58	346.93	-398.87	-294.46	242.51	258.79	-5.641e+05	-1.802e+06	-1.415e+06	-9.509e+05	-5.737e+05
		65	17.34	301.88	-339.92	-250.40	212.36	222.35	-4.298e+05	-1.405e+06	-9.729e+05	-8.615e+05	-4.842e+05
		104	15.71	308.12	-385.57	-385.28	307.82	-14.32	-6.383e+05	-1.344e+06	-8.578e+05	-1.125e+06	-3.267e+05
		113	20.74	380.88	-445.02	-444.90	380.75	10.13	-8.992e+05	-1.799e+06	-1.392e+06	-1.306e+06	-4.477e+05
95	2	72	16.60	266.87	-306.82	-226.50	186.55	199.07	-4.339e+05	-1.386e+06	-1.088e+06	-7.315e+05	-4.413e+05
		65	13.34	232.22	-261.48	-192.62	163.36	171.04	-3.306e+05	-1.080e+06	-7.484e+05	-6.627e+05	-3.724e+05

104		12.08	237.01	-296.60	-296.37	236.79	-11.02	-4.910e+05	-1.034e+06	-6.599e+05	-8.651e+05	-2.513e+05
113		15.95	292.98	-342.32	-342.23	292.89	7.79	-6.917e+05	-1.384e+06	-1.071e+06	-1.004e+06	-3.444e+05
96	1 82	24.19	281.34	-479.57	-352.26	154.03	284.01	-7.862e+05	-2.365e+06	-1.934e+06	-1.217e+06	-7.034e+05
72		19.33	236.44	-419.30	-305.72	122.86	248.16	-6.218e+05	-1.854e+06	-1.380e+06	-1.095e+06	-5.991e+05
113		18.92	197.74	-452.22	-451.78	197.30	16.88	-9.894e+05	-1.888e+06	-1.350e+06	-1.527e+06	-4.407e+05
115		24.61	292.92	-518.88	-516.93	290.97	39.75	-1.248e+06	-2.427e+06	-1.953e+06	-1.723e+06	-5.780e+05
96	2 82	18.61	216.41	-368.90	-270.97	118.49	218.47	-6.048e+05	-1.819e+06	-1.488e+06	-9.365e+05	-5.411e+05
72		14.87	181.88	-322.54	-235.17	94.51	190.89	-4.783e+05	-1.426e+06	-1.062e+06	-8.424e+05	-4.609e+05
113		14.55	152.11	-347.86	-347.52	151.77	12.98	-7.611e+05	-1.453e+06	-1.039e+06	-1.175e+06	-3.390e+05
115		18.93	225.32	-399.14	-397.64	223.82	30.58	-9.603e+05	-1.867e+06	-1.502e+06	-1.325e+06	-4.446e+05
97	1 91	26.98	206.56	-564.96	-411.40	53.00	308.05	-1.052e+06	-3.040e+06	-2.555e+06	-1.536e+06	-8.534e+05
82		21.65	161.32	-504.29	-360.42	17.45	273.98	-8.634e+05	-2.414e+06	-1.893e+06	-1.384e+06	-7.321e+05
115		22.58	76.31	-528.99	-525.41	72.73	46.41	-1.375e+06	-2.523e+06	-1.907e+06	-1.991e+06	-5.724e+05
124		28.39	195.17	-600.54	-594.45	189.08	69.37	-1.646e+06	-3.164e+06	-2.605e+06	-2.205e+06	-7.323e+05
97	2 91	20.75	158.89	-434.58	-316.46	40.77	236.96	-8.092e+05	-2.338e+06	-1.966e+06	-1.182e+06	-6.564e+05
82		16.65	124.09	-387.92	-277.24	13.42	210.75	-6.641e+05	-1.857e+06	-1.456e+06	-1.065e+06	-5.632e+05
115		17.37	58.70	-406.92	-404.16	55.94	35.70	-1.058e+06	-1.940e+06	-1.467e+06	-1.531e+06	-4.403e+05
124		21.84	150.13	-461.95	-457.27	145.44	53.36	-1.266e+06	-2.434e+06	-2.004e+06	-1.696e+06	-5.633e+05
98	1102	30.13	125.34	-655.78	-472.91	-57.53	330.76	-1.365e+06	-3.835e+06	-3.290e+06	-1.911e+06	-1.025e+06
91		24.19	78.64	-596.70	-416.45	-101.61	298.73	-1.151e+06	-3.086e+06	-2.509e+06	-1.729e+06	-8.856e+05
124		26.18	-52.57	-615.03	-604.59	-63.01	75.92	-1.810e+06	-3.266e+06	-2.554e+06	-2.522e+06	-7.279e+05
128		32.21	90.27	-689.53	-676.61	77.35	99.54	-2.103e+06	-4.032e+06	-3.376e+06	-2.760e+06	-9.142e+05
98	2102	23.18	96.41	-504.45	-363.78	-44.25	254.43	-1.050e+06	-2.950e+06	-2.530e+06	-1.470e+06	-7.884e+05
91		18.61	60.49	-459.00	-320.35	-78.16	229.79	-8.854e+05	-2.374e+06	-1.930e+06	-1.330e+06	-6.812e+05
124		20.14	-40.44	-473.10	-465.07	-48.47	58.40	-1.392e+06	-2.513e+06	-1.965e+06	-1.940e+06	-5.599e+05
128		24.77	69.44	-530.41	-520.47	59.50	76.57	-1.618e+06	-3.102e+06	-2.597e+06	-2.123e+06	-7.032e+05
99	1107	33.61	40.69	-752.17	-537.47	-174.01	352.32	-1.734e+06	-4.769e+06	-4.158e+06	-2.345e+06	-1.217e+06
102		27.15	-8.14	-697.41	-474.91	-230.64	322.27	-1.488e+06	-3.881e+06	-3.237e+06	-2.132e+06	-1.061e+06
128		29.81	-185.21	-710.61	-688.33	-207.49	105.86	-2.308e+06	-4.140e+06	-3.319e+06	-3.130e+06	-9.111e+05
141		36.16	-18.30	-785.80	-763.13	-40.98	129.96	-2.631e+06	-5.057e+06	-4.293e+06	-3.395e+06	-1.127e+06
99	2107	25.85	31.30	-578.60	-413.44	-133.85	271.02	-1.334e+06	-3.669e+06	-3.199e+06	-1.804e+06	-9.363e+05
102		20.89	-6.26	-536.47	-365.31	-177.41	247.90	-1.145e+06	-2.985e+06	-2.490e+06	-1.640e+06	-8.160e+05
128		22.93	-142.47	-546.62	-529.49	-159.60	81.43	-1.776e+06	-3.185e+06	-2.553e+06	-2.408e+06	-7.008e+05
141		27.82	-14.08	-604.46	-587.02	-31.52	99.97	-2.024e+06	-3.890e+06	-3.302e+06	-2.612e+06	-8.668e+05
100	1117	37.27	-43.97	-853.84	-605.84	-291.97	373.29	-2.169e+06	-5.866e+06	-5.195e+06	-2.840e+06	-1.425e+06
107		30.41	-95.64	-806.26	-536.49	-365.42	344.86	-1.884e+06	-4.812e+06	-4.100e+06	-2.596e+06	-1.257e+06
141		33.56	-316.95	-816.35	-776.17	-357.13	135.84	-2.881e+06	-5.169e+06	-4.230e+06	-3.821e+06	-1.126e+06
150		40.38	-126.03	-889.45	-854.38	-161.10	159.81	-3.241e+06	-6.274e+06	-5.399e+06	-4.116e+06	-1.374e+06
100	2117	28.67	-33.82	-656.80	-466.03	-224.59	287.14	-1.668e+06	-4.512e+06	-3.996e+06	-2.185e+06	-1.096e+06
107		23.39	-73.57	-620.20	-412.68	-281.09	265.28	-1.449e+06	-3.702e+06	-3.154e+06	-1.997e+06	-9.667e+05
141		25.82	-243.81	-627.96	-597.06	-274.71	104.49	-2.216e+06	-3.976e+06	-3.254e+06	-2.939e+06	-8.659e+05
150		31.06	-96.95	-684.19	-657.22	-123.92	122.93	-2.493e+06	-4.826e+06	-4.153e+06	-3.166e+06	-1.057e+06
101	1126	41.25	-124.22	-960.35	-679.52	-405.05	394.90	-2.686e+06	-7.165e+06	-6.454e+06	-3.397e+06	-1.637e+06
117		33.84	-180.60	-922.02	-602.05	-500.57	367.22	-2.349e+06	-5.905e+06	-5.130e+06	-3.124e+06	-1.468e+06
150		37.53	-442.48	-932.20	-868.36	-506.32	164.89	-3.540e+06	-6.387e+06	-5.329e+06	-4.598e+06	-1.376e+06
159		45.06	-226.85	-1000.84	-952.06	-275.63	188.09	-3.943e+06	-7.741e+06	-6.762e+06	-4.922e+06	-1.661e+06

101	2126	31.73	-95.56	-738.73	-522.71	-311.58	303.77	-2.066e+06	-5.512e+06	-4.965e+06	-2.613e+06	-1.259e+06
	117	26.03	-138.92	-709.25	-463.12	-385.05	282.48	-1.807e+06	-4.542e+06	-3.946e+06	-2.403e+06	-1.129e+06
	150	28.87	-340.37	-717.08	-667.97	-389.48	126.84	-2.723e+06	-4.913e+06	-4.099e+06	-3.537e+06	-1.058e+06
	159	34.66	-174.50	-769.88	-732.35	-212.03	144.69	-3.033e+06	-5.954e+06	-5.201e+06	-3.786e+06	-1.278e+06
102	1137	45.77	-193.46	-1072.21	-761.92	-503.75	419.98	-3.303e+06	-8.731e+06	-8.026e+06	-4.008e+06	-1.825e+06
	126	37.54	-259.01	-1042.29	-673.22	-628.08	390.99	-2.899e+06	-7.195e+06	-6.381e+06	-3.713e+06	-1.683e+06
	159	41.87	-556.54	-1056.01	-966.50	-646.05	191.57	-4.296e+06	-7.847e+06	-6.682e+06	-5.461e+06	-1.667e+06
	169	50.51	-311.17	-1121.64	-1060.53	-372.28	213.99	-4.739e+06	-9.552e+06	-8.495e+06	-5.796e+06	-1.992e+06
102	2137	35.21	-148.82	-824.77	-586.09	-387.50	323.06	-2.541e+06	-6.716e+06	-6.174e+06	-3.083e+06	-1.403e+06
	126	28.88	-199.24	-801.76	-517.86	-483.14	300.76	-2.230e+06	-5.534e+06	-4.908e+06	-2.856e+06	-1.295e+06
	159	32.21	-428.10	-812.32	-743.46	-496.96	147.36	-3.305e+06	-6.036e+06	-5.140e+06	-4.201e+06	-1.282e+06
	169	38.85	-239.36	-862.80	-815.79	-286.37	164.61	-3.646e+06	-7.348e+06	-6.535e+06	-4.459e+06	-1.532e+06
103	1154	51.29	-243.52	-1193.25	-861.13	-575.63	452.90	-4.030e+06	-1.069e+07	-1.007e+07	-4.642e+06	-1.924e+06
	137	41.69	-321.69	-1163.22	-752.06	-732.85	420.66	-3.551e+06	-8.740e+06	-7.941e+06	-4.350e+06	-1.873e+06
	169	46.86	-654.28	-1182.93	-1074.75	-762.46	213.28	-5.151e+06	-9.640e+06	-8.401e+06	-6.391e+06	-2.007e+06
	181	57.38	-355.44	-1258.68	-1189.23	-424.90	240.65	-5.604e+06	-1.189e+07	-1.081e+07	-6.681e+06	-2.368e+06
103	2154	39.45	-187.32	-917.88	-662.41	-442.79	348.38	-3.100e+06	-8.221e+06	-7.750e+06	-3.571e+06	-1.480e+06
	137	32.07	-247.46	-894.79	-578.51	-563.73	323.58	-2.732e+06	-6.723e+06	-6.108e+06	-3.346e+06	-1.441e+06
	169	36.05	-503.29	-909.94	-826.73	-586.50	164.06	-3.962e+06	-7.416e+06	-6.462e+06	-4.916e+06	-1.544e+06
	181	44.14	-273.42	-968.22	-914.79	-326.84	185.11	-4.311e+06	-9.147e+06	-8.319e+06	-5.139e+06	-1.822e+06
104	1166	59.07	-340.46	-1305.47	-996.50	-649.44	450.22	-4.855e+06	-1.334e+07	-1.292e+07	-5.280e+06	-1.850e+06
	154	46.46	-304.59	-1276.50	-823.57	-757.53	484.83	-4.296e+06	-1.062e+07	-9.954e+06	-4.965e+06	-1.945e+06
	181	53.19	-753.69	-1297.00	-1196.46	-854.22	210.98	-6.075e+06	-1.197e+07	-1.069e+07	-7.357e+06	-2.432e+06
	190	66.72	-214.61	-1450.18	-1345.81	-318.98	343.60	-6.389e+06	-1.507e+07	-1.414e+07	-7.318e+06	-2.684e+06
104	2166	45.44	-261.89	-1004.21	-766.53	-499.57	346.32	-3.735e+06	-1.026e+07	-9.938e+06	-4.061e+06	-1.423e+06
	154	35.74	-234.30	-981.93	-633.52	-582.71	372.95	-3.304e+06	-8.171e+06	-7.657e+06	-3.819e+06	-1.496e+06
	181	40.91	-579.76	-997.69	-920.36	-657.09	162.30	-4.673e+06	-9.208e+06	-8.223e+06	-5.659e+06	-1.871e+06
	190	51.32	-165.09	-1115.52	-1035.24	-245.37	264.31	-4.914e+06	-1.159e+07	-1.088e+07	-5.629e+06	-2.064e+06
105	1177	43.74	-1066.99	-2406.63	-1067.49	-2406.13	-25.99	-7.193e+06	-1.508e+07	-1.487e+07	-7.405e+06	-1.276e+06
	166	38.85	-721.70	-2131.44	-900.04	-1953.10	468.62	-7.231e+06	-1.348e+07	-1.263e+07	-8.078e+06	-2.138e+06
	190	46.07	-1411.22	-2808.26	-1474.23	-2745.25	289.93	-9.105e+06	-1.531e+07	-1.353e+07	-1.088e+07	-2.803e+06
	200	53.03	-823.90	-2187.05	-1185.66	-1825.28	601.89	-9.982e+06	-1.857e+07	-1.703e+07	-1.152e+07	-3.288e+06
105	2177	33.64	-820.76	-1851.25	-821.15	-1850.87	-19.99	-5.533e+06	-1.160e+07	-1.144e+07	-5.696e+06	-9.813e+05
	166	29.89	-555.16	-1639.57	-692.34	-1502.39	360.48	-5.563e+06	-1.037e+07	-9.714e+06	-6.214e+06	-1.645e+06
	190	35.44	-1085.55	-2160.20	-1134.02	-2111.73	223.02	-7.004e+06	-1.178e+07	-1.041e+07	-8.369e+06	-2.156e+06
	200	40.79	-633.77	-1682.35	-912.05	-1404.06	462.99	-7.679e+06	-1.428e+07	-1.310e+07	-8.858e+06	-2.529e+06
106	1192	38.53	-598.90	-1654.92	-709.14	-1544.68	322.90	-6.335e+06	-1.358e+07	-1.299e+07	-6.932e+06	-1.993e+06
	177	45.45	-802.68	-2276.36	-831.52	-2247.52	204.13	-7.015e+06	-1.596e+07	-1.553e+07	-7.444e+06	-1.913e+06
	200	53.89	-752.81	-2321.66	-1149.90	-1924.58	682.13	-1.009e+07	-1.893e+07	-1.748e+07	-1.153e+07	-3.270e+06
	211	43.26	-887.50	-2059.88	-1017.46	-1929.91	368.07	-8.010e+06	-1.499e+07	-1.417e+07	-8.831e+06	-2.248e+06
106	2192	29.64	-460.69	-1273.02	-545.49	-1188.21	248.39	-4.873e+06	-1.045e+07	-9.989e+06	-5.333e+06	-1.533e+06
	177	34.96	-617.44	-1751.05	-639.63	-1728.86	157.02	-5.396e+06	-1.227e+07	-1.194e+07	-5.727e+06	-1.471e+06
	200	41.45	-579.08	-1785.90	-884.54	-1480.44	524.71	-7.758e+06	-1.456e+07	-1.345e+07	-8.871e+06	-2.515e+06
	211	33.27	-682.69	-1584.52	-782.66	-1484.55	283.13	-6.161e+06	-1.153e+07	-1.090e+07	-6.793e+06	-1.730e+06
107	1204	29.89	-499.01	-1388.94	-563.22	-1324.74	230.26	-5.051e+06	-1.050e+07	-1.013e+07	-5.419e+06	-1.368e+06
	192	37.67	-574.72	-1790.86	-647.14	-1718.44	287.79	-6.161e+06	-1.328e+07	-1.285e+07	-6.600e+06	-1.712e+06

211		43.68	-739.41	-1936.94	-935.33	-1741.02	442.98	-8.107e+06	-1.526e+07	-1.420e+07	-9.166e+06	-2.541e+06
217		34.27	-658.60	-1572.20	-787.87	-1442.94	318.41	-6.429e+06	-1.190e+07	-1.113e+07	-7.204e+06	-1.908e+06
107	2204	22.99	-383.85	-1068.42	-433.25	-1019.03	177.12	-3.885e+06	-8.077e+06	-7.794e+06	-4.168e+06	-1.052e+06
192		28.98	-442.09	-1377.58	-497.80	-1321.88	221.38	-4.740e+06	-1.022e+07	-9.882e+06	-5.077e+06	-1.317e+06
211		33.60	-568.78	-1489.95	-719.48	-1339.25	340.75	-6.236e+06	-1.174e+07	-1.092e+07	-7.051e+06	-1.955e+06
217		26.36	-506.62	-1209.39	-606.05	-1109.95	244.93	-4.945e+06	-9.154e+06	-8.558e+06	-5.542e+06	-1.468e+06
108	1219	21.94	-434.39	-1054.15	-476.79	-1011.75	156.46	-3.875e+06	-7.638e+06	-7.388e+06	-4.125e+06	-9.376e+05
204		29.83	-494.52	-1413.74	-556.31	-1351.94	230.18	-5.012e+06	-1.048e+07	-1.012e+07	-5.369e+06	-1.351e+06
217		34.31	-639.24	-1556.12	-780.10	-1415.26	330.62	-6.450e+06	-1.193e+07	-1.113e+07	-7.254e+06	-1.938e+06
228		25.03	-536.12	-1160.08	-628.99	-1067.21	222.09	-4.844e+06	-8.623e+06	-8.073e+06	-5.394e+06	-1.333e+06
108	2219	16.88	-334.15	-810.88	-366.76	-778.27	120.35	-2.981e+06	-5.875e+06	-5.683e+06	-3.173e+06	-7.213e+05
204		22.94	-380.40	-1087.49	-427.93	-1039.96	177.07	-3.855e+06	-8.061e+06	-7.787e+06	-4.130e+06	-1.040e+06
217		26.39	-491.73	-1197.01	-600.08	-1088.66	254.32	-4.962e+06	-9.177e+06	-8.559e+06	-5.580e+06	-1.491e+06
228		19.25	-412.40	-892.37	-483.84	-820.93	170.84	-3.726e+06	-6.633e+06	-6.210e+06	-4.149e+06	-1.025e+06
109	1234	14.08	-370.86	-703.43	-393.15	-681.15	83.15	-2.741e+06	-4.789e+06	-4.653e+06	-2.877e+06	-5.091e+05
219		21.94	-429.79	-1058.10	-474.18	-1013.71	161.01	-3.860e+06	-7.642e+06	-7.388e+06	-4.114e+06	-9.471e+05
228		25.04	-531.11	-1161.38	-629.81	-1062.69	229.04	-4.846e+06	-8.630e+06	-8.068e+06	-5.408e+06	-1.345e+06
238		15.80	-424.26	-760.98	-474.84	-710.41	120.29	-3.266e+06	-5.329e+06	-5.028e+06	-3.567e+06	-7.285e+05
109	2234	10.83	-285.28	-541.10	-302.42	-523.96	63.96	-2.109e+06	-3.684e+06	-3.580e+06	-2.213e+06	-3.916e+05
219		16.88	-330.61	-813.93	-364.76	-779.78	123.85	-2.969e+06	-5.879e+06	-5.683e+06	-3.165e+06	-7.286e+05
228		19.26	-408.55	-893.37	-484.47	-817.45	176.19	-3.728e+06	-6.638e+06	-6.206e+06	-4.160e+06	-1.035e+06
238		12.15	-326.36	-585.37	-365.26	-546.47	92.53	-2.512e+06	-4.099e+06	-3.868e+06	-2.744e+06	-5.604e+05
110	1265	5.03	-280.66	-300.41	-300.39	-280.68	-0.63	-1.361e+06	-1.389e+06	-1.361e+06	-1.389e+06	933.99
234		14.08	-365.46	-708.07	-390.46	-683.06	89.12	-2.724e+06	-4.797e+06	-4.656e+06	-2.865e+06	-5.225e+05
238		15.81	-420.07	-764.16	-474.89	-709.35	125.92	-3.264e+06	-5.335e+06	-5.025e+06	-3.573e+06	-7.382e+05
110	2265	3.87	-215.89	-231.08	-231.07	-215.91	-0.48	-1.047e+06	-1.069e+06	-1.047e+06	-1.069e+06	718.45
234		10.83	-281.12	-544.67	-300.36	-525.43	68.56	-2.095e+06	-3.690e+06	-3.581e+06	-2.204e+06	-4.019e+05
238		12.16	-323.13	-587.82	-365.30	-545.66	96.86	-2.511e+06	-4.104e+06	-3.866e+06	-2.749e+06	-5.679e+05
111	1 74	9.82	580.14	-40.75	-8.80	548.19	137.17	-920.96	-1.413e+05	-3.891e+04	-1.033e+05	-6.237e+04
	69	8.56	575.28	-23.19	-8.76	560.85	91.80	3303.75	-1.002e+05	3152.39	-1.000e+05	-3954.99
	132	10.33	646.87	-5.87	8.23	632.78	-94.86	2243.45	-1.350e+05	2231.04	-1.350e+05	-1305.06
	139	11.04	663.95	-61.14	-46.37	649.18	-102.42	-7500.21	-1.561e+05	-1.071e+04	-1.529e+05	-2.162e+04
111	2 74	7.56	446.26	-31.35	-6.77	421.69	105.52	-708.43	-1.087e+05	-2.993e+04	-7.948e+04	-4.798e+04
	69	6.59	442.52	-17.84	-6.74	431.42	70.62	2541.34	-7.707e+04	2424.92	-7.696e+04	-3042.30
	132	7.94	497.59	-4.51	6.33	486.76	-72.97	1725.73	-1.038e+05	1716.18	-1.038e+05	-1003.89
	139	8.49	510.73	-47.03	-35.67	499.37	-78.78	-5769.39	-1.201e+05	-8241.91	-1.176e+05	-1.663e+04
112	1 80	10.82	593.19	-75.71	-31.45	548.93	166.28	-2.411e+04	-2.470e+05	-1.224e+05	-1.487e+05	-1.107e+05
	74	9.45	582.46	-56.78	-29.25	554.93	129.78	1197.77	-1.715e+05	-2.952e+04	-1.408e+05	-6.604e+04
	139	11.16	638.75	-62.06	-48.06	624.74	-98.07	1770.68	-2.139e+05	505.93	-2.127e+05	-1.647e+04
	143	12.08	659.79	-124.92	-111.96	646.82	-100.04	-5.817e+04	-2.670e+05	-6.427e+04	-2.609e+05	-3.517e+04
112	2 80	8.33	456.30	-58.24	-24.19	422.25	127.91	-1.855e+04	-1.900e+05	-9.415e+04	-1.144e+05	-8.513e+04
	74	7.27	448.05	-43.68	-22.50	426.87	99.83	921.36	-1.319e+05	-2.271e+04	-1.083e+05	-5.080e+04
	139	8.59	491.34	-47.74	-36.97	480.57	-75.44	1362.07	-1.646e+05	389.18	-1.636e+05	-1.267e+04
	143	9.29	507.53	-96.10	-86.12	497.56	-76.95	-4.474e+04	-2.054e+05	-4.944e+04	-2.007e+05	-2.705e+04
113	1 85	12.09	583.81	-110.78	-49.56	522.59	196.90	-5.545e+04	-3.996e+05	-2.581e+05	-1.969e+05	-1.693e+05
	80	10.22	582.25	-86.61	-48.28	543.91	155.47	-2.290e+04	-2.815e+05	-1.118e+05	-1.926e+05	-1.228e+05

143	12.26	602.25	-128.02	-116.07	590.30	-92.65	-4.348e+04	-3.487e+05	-4.598e+04	-3.462e+05	-2.750e+04
148	13.38	644.20	-201.49	-189.43	632.13	-100.29	-1.652e+05	-4.310e+05	-1.735e+05	-4.227e+05	-4.628e+04
113 2 85	9.30	449.08	-85.21	-38.13	401.99	151.46	-4.265e+04	-3.074e+05	-1.985e+05	-1.515e+05	-1.303e+05
80	7.86	447.88	-66.62	-37.14	418.40	119.59	-1.762e+04	-2.165e+05	-8.600e+04	-1.481e+05	-9.448e+04
143	9.43	463.27	-98.47	-89.28	454.08	-71.27	-3.344e+04	-2.682e+05	-3.537e+04	-2.663e+05	-2.115e+04
148	10.29	495.54	-154.99	-145.71	486.26	-77.14	-1.271e+05	-3.316e+05	-1.335e+05	-3.252e+05	-3.560e+04
114 1 93	12.26	493.97	-178.40	-105.31	420.88	209.29	-6.446e+04	-5.429e+05	-4.102e+05	-1.972e+05	-2.142e+05
85	11.73	605.27	-98.26	-44.20	551.21	187.37	-5.397e+04	-4.537e+05	-2.542e+05	-2.535e+05	-1.999e+05
148	13.35	518.32	-226.58	-213.55	505.29	-97.66	-1.375e+05	-5.378e+05	-1.395e+05	-5.358e+05	-2.836e+04
156	15.18	642.97	-254.01	-245.08	634.04	-89.06	-3.914e+05	-6.651e+05	-3.994e+05	-6.571e+05	-4.611e+04
114 2 93	9.43	379.98	-137.23	-81.01	323.75	160.99	-4.959e+04	-4.176e+05	-3.155e+05	-1.517e+05	-1.648e+05
85	9.02	465.59	-75.58	-34.00	424.01	144.13	-4.152e+04	-3.490e+05	-1.955e+05	-1.950e+05	-1.537e+05
148	10.27	398.71	-174.30	-164.27	388.69	-75.12	-1.058e+05	-4.137e+05	-1.073e+05	-4.122e+05	-2.181e+04
156	11.67	494.59	-195.39	-188.52	487.72	-68.51	-3.010e+05	-5.116e+05	-3.072e+05	-5.055e+05	-3.547e+04
115 1 98	14.68	547.89	-330.37	-271.11	488.64	220.30	-2.551e+05	-8.064e+05	-5.484e+05	-5.131e+05	-2.751e+05
93	16.58	486.52	-306.21	-219.05	399.37	247.98	3.588e+05	-5.310e+05	-1.407e+04	-1.581e+05	-4.390e+05
156	15.82	532.23	-232.51	-206.85	506.56	-137.73	-5.178e+05	-8.761e+05	-5.464e+05	-8.475e+05	9.710e+04
160	15.46	510.39	-273.29	-266.34	503.44	-73.48	-6.870e+05	-8.984e+05	-7.562e+05	-8.292e+05	-9.923e+04
115 2 98	11.29	421.45	-254.13	-208.55	375.87	169.46	-1.963e+05	-6.203e+05	-4.219e+05	-3.947e+05	-2.116e+05
93	12.75	374.25	-235.54	-168.50	307.21	190.75	2.760e+05	-4.084e+05	-1.082e+04	-1.216e+05	-3.377e+05
156	12.17	409.40	-178.86	-159.11	389.66	-105.95	-3.983e+05	-6.739e+05	-4.203e+05	-6.519e+05	7.469e+04
160	11.89	392.61	-210.22	-204.88	387.26	-56.52	-5.284e+05	-6.911e+05	-5.817e+05	-6.379e+05	-7.633e+04
116 1104	17.37	462.52	-386.64	-319.07	394.96	229.80	-6.003e+05	-1.269e+06	-1.065e+06	-8.041e+05	-3.078e+05
98	13.77	451.70	-348.85	-285.06	387.90	216.80	-2.339e+05	-8.706e+05	-5.175e+05	-5.871e+05	-3.164e+05
160	14.91	383.99	-293.68	-286.22	376.52	-70.74	-7.170e+05	-1.031e+06	-7.316e+05	-1.017e+06	-6.625e+04
164	17.56	464.01	-368.52	-363.37	458.86	-65.26	-9.493e+05	-1.266e+06	-1.114e+06	-1.102e+06	-1.582e+05
116 2104	13.36	355.79	-297.41	-245.44	303.82	176.77	-4.618e+05	-9.761e+05	-8.194e+05	-6.185e+05	-2.367e+05
98	10.59	347.46	-268.35	-219.28	298.39	166.77	-1.800e+05	-6.697e+05	-3.981e+05	-4.516e+05	-2.434e+05
160	11.47	295.38	-225.91	-220.17	289.63	-54.41	-5.515e+05	-7.933e+05	-5.628e+05	-7.821e+05	-5.096e+04
164	13.51	356.93	-283.48	-279.52	352.97	-50.20	-7.303e+05	-9.739e+05	-8.567e+05	-8.475e+05	-1.217e+05
117 1113	20.79	378.33	-451.88	-377.29	303.74	237.40	-9.222e+05	-1.816e+06	-1.614e+06	-1.125e+06	-3.743e+05
104	15.72	354.02	-403.35	-333.66	284.33	218.91	-6.425e+05	-1.317e+06	-1.025e+06	-9.346e+05	-3.344e+05
164	16.41	289.03	-377.40	-372.82	284.45	-55.05	-1.013e+06	-1.378e+06	-1.081e+06	-1.310e+06	-1.423e+05
173	21.39	381.74	-452.51	-449.31	378.54	-51.54	-1.283e+06	-1.771e+06	-1.610e+06	-1.445e+06	-2.296e+05
117 2113	15.99	291.02	-347.60	-290.22	233.65	182.61	-7.094e+05	-1.397e+06	-1.242e+06	-8.651e+05	-2.879e+05
104	12.09	272.32	-310.27	-256.66	218.72	168.40	-4.942e+05	-1.013e+06	-7.888e+05	-7.189e+05	-2.572e+05
164	12.62	222.33	-290.31	-286.78	218.81	-42.35	-7.789e+05	-1.060e+06	-8.313e+05	-1.008e+06	-1.094e+05
173	16.45	293.65	-348.08	-345.62	291.19	-39.64	-9.873e+05	-1.362e+06	-1.238e+06	-1.112e+06	-1.766e+05
118 1115	24.79	283.21	-526.01	-441.76	198.96	247.14	-1.270e+06	-2.453e+06	-2.234e+06	-1.489e+06	-4.594e+05
113	18.45	243.53	-470.40	-389.06	162.19	226.83	-1.010e+06	-1.855e+06	-1.569e+06	-1.295e+06	-3.994e+05
173	19.66	177.58	-460.91	-458.17	174.83	-41.79	-1.404e+06	-1.853e+06	-1.568e+06	-1.689e+06	-2.168e+05
175	25.50	281.11	-535.97	-534.49	279.62	-34.80	-1.679e+06	-2.411e+06	-2.228e+06	-1.862e+06	-3.171e+05
118 2115	19.07	217.85	-404.62	-339.82	153.05	190.11	-9.771e+05	-1.887e+06	-1.718e+06	-1.145e+06	-3.534e+05
113	14.20	187.33	-361.84	-299.28	124.76	174.49	-7.768e+05	-1.427e+06	-1.207e+06	-9.961e+05	-3.073e+05
173	15.13	136.60	-354.55	-352.44	134.49	-32.15	-1.080e+06	-1.426e+06	-1.207e+06	-1.299e+06	-1.667e+05
175	19.62	216.24	-412.29	-411.14	215.09	-26.77	-1.292e+06	-1.855e+06	-1.714e+06	-1.433e+06	-2.440e+05

119	1124	28.63	178.16	-607.54	-511.30	81.92	257.59	-1.666e+06	-3.196e+06	-2.955e+06	-1.908e+06	-5.580e+05
115		22.16	125.52	-548.55	-451.14	28.11	237.01	-1.397e+06	-2.485e+06	-2.185e+06	-1.697e+06	-4.863e+05
175		23.41	46.59	-545.16	-544.05	45.48	-25.68	-1.858e+06	-2.469e+06	-2.179e+06	-2.148e+06	-3.048e+05
183		29.64	165.54	-621.74	-621.44	165.24	-15.45	-2.143e+06	-3.183e+06	-2.968e+06	-2.358e+06	-4.206e+05
119	2124	22.03	137.04	-467.34	-393.31	63.01	198.15	-1.282e+06	-2.459e+06	-2.273e+06	-1.467e+06	-4.292e+05
115		17.05	96.55	-421.96	-347.03	21.62	182.31	-1.075e+06	-1.911e+06	-1.680e+06	-1.306e+06	-3.741e+05
175		18.01	35.84	-419.36	-418.50	34.98	-19.76	-1.429e+06	-1.899e+06	-1.676e+06	-1.652e+06	-2.344e+05
183		22.80	127.34	-478.26	-478.03	127.11	-11.88	-1.649e+06	-2.448e+06	-2.283e+06	-1.814e+06	-3.235e+05
120	1128	32.49	65.35	-695.50	-585.05	-45.10	268.02	-2.123e+06	-4.068e+06	-3.803e+06	-2.389e+06	-6.677e+05
124		25.76	1.73	-636.58	-518.32	-116.54	248.00	-1.831e+06	-3.223e+06	-2.900e+06	-2.154e+06	-5.875e+05
183		27.25	-100.42	-631.82	-631.73	-100.51	-6.94	-2.378e+06	-3.225e+06	-2.913e+06	-2.690e+06	-4.085e+05
185		33.83	38.91	-711.12	-711.08	38.87	5.58	-2.685e+06	-4.098e+06	-3.846e+06	-2.937e+06	-5.414e+05
120	2128	24.99	50.27	-535.00	-450.04	-34.69	206.17	-1.633e+06	-3.130e+06	-2.925e+06	-1.837e+06	-5.136e+05
124		19.82	1.33	-489.68	-398.71	-89.64	190.77	-1.409e+06	-2.479e+06	-2.231e+06	-1.657e+06	-4.519e+05
183		20.96	-77.24	-486.02	-485.95	-77.31	-5.34	-1.829e+06	-2.481e+06	-2.240e+06	-2.070e+06	-3.142e+05
185		26.02	29.93	-547.01	-546.98	29.90	4.29	-2.065e+06	-3.152e+06	-2.958e+06	-2.259e+06	-4.165e+05
121	1141	36.46	-51.94	-789.56	-662.83	-178.67	278.25	-2.653e+06	-5.096e+06	-4.809e+06	-2.939e+06	-7.863e+05
128		29.39	-125.28	-734.32	-589.74	-269.86	259.14	-2.329e+06	-4.089e+06	-3.742e+06	-2.676e+06	-7.000e+05
185		31.16	-258.51	-722.37	-721.98	-258.90	13.45	-2.975e+06	-4.130e+06	-3.783e+06	-3.322e+06	-5.297e+05
194		38.14	-94.16	-805.13	-804.08	-95.21	27.32	-3.311e+06	-5.183e+06	-4.888e+06	-3.606e+06	-6.826e+05
121	2141	28.05	-39.95	-607.36	-509.87	-137.44	214.04	-2.040e+06	-3.920e+06	-3.699e+06	-2.261e+06	-6.049e+05
128		22.60	-96.37	-564.86	-453.65	-207.59	199.34	-1.792e+06	-3.145e+06	-2.879e+06	-2.058e+06	-5.385e+05
185		23.97	-198.85	-555.67	-555.37	-199.15	10.34	-2.288e+06	-3.177e+06	-2.910e+06	-2.555e+06	-4.075e+05
194		29.34	-72.43	-619.33	-618.52	-73.24	21.01	-2.547e+06	-3.987e+06	-3.760e+06	-2.774e+06	-5.250e+05
122	1150	40.70	-169.13	-889.75	-745.11	-313.76	288.63	-3.265e+06	-6.315e+06	-6.015e+06	-3.565e+06	-9.087e+05
141		33.12	-251.66	-841.95	-665.21	-428.40	270.35	-2.902e+06	-5.108e+06	-4.742e+06	-3.269e+06	-8.213e+05
194		35.22	-421.51	-818.38	-815.38	-424.52	34.40	-3.658e+06	-5.207e+06	-4.818e+06	-4.047e+06	-6.717e+05
198		42.75	-227.82	-904.96	-901.44	-231.34	48.73	-4.028e+06	-6.482e+06	-6.141e+06	-4.370e+06	-8.492e+05
122	2150	31.30	-130.10	-684.42	-573.17	-241.35	222.02	-2.511e+06	-4.858e+06	-4.627e+06	-2.742e+06	-6.990e+05
141		25.48	-193.59	-647.65	-511.70	-329.54	207.96	-2.232e+06	-3.929e+06	-3.647e+06	-2.514e+06	-6.317e+05
194		27.09	-324.24	-629.53	-627.22	-326.55	26.46	-2.814e+06	-4.005e+06	-3.706e+06	-3.113e+06	-5.167e+05
198		32.89	-175.24	-696.13	-693.42	-177.95	37.48	-3.099e+06	-4.986e+06	-4.724e+06	-3.361e+06	-6.532e+05
123	1159	45.38	-279.97	-996.44	-833.54	-442.87	300.29	-3.969e+06	-7.785e+06	-7.487e+06	-4.267e+06	-1.024e+06
150		37.07	-372.76	-958.99	-745.26	-586.49	282.16	-3.562e+06	-6.316e+06	-5.940e+06	-3.938e+06	-9.460e+05
198		39.53	-581.37	-921.84	-912.83	-590.38	54.67	-4.435e+06	-6.496e+06	-6.063e+06	-4.868e+06	-8.399e+05
202		47.89	-353.99	-1012.49	-1005.27	-361.21	68.57	-4.838e+06	-8.067e+06	-7.679e+06	-5.226e+06	-1.049e+06
123	2159	34.90	-215.36	-766.49	-641.18	-340.67	230.99	-3.053e+06	-5.988e+06	-5.759e+06	-3.282e+06	-7.873e+05
150		28.52	-286.74	-737.68	-573.28	-451.14	217.05	-2.740e+06	-4.859e+06	-4.569e+06	-3.029e+06	-7.277e+05
198		30.40	-447.21	-709.11	-702.17	-454.14	42.05	-3.411e+06	-4.997e+06	-4.663e+06	-3.745e+06	-6.461e+05
202		36.84	-272.30	-778.84	-773.28	-277.85	52.75	-3.722e+06	-6.205e+06	-5.907e+06	-4.020e+06	-8.070e+05
124	1169	50.84	-375.29	-1111.25	-932.14	-554.39	315.81	-4.766e+06	-9.601e+06	-9.334e+06	-5.033e+06	-1.105e+06
159		41.41	-483.20	-1083.34	-831.58	-734.96	296.16	-4.317e+06	-7.768e+06	-7.402e+06	-4.683e+06	-1.063e+06
202		44.27	-727.88	-1034.61	-1016.40	-746.09	72.48	-5.306e+06	-8.066e+06	-7.590e+06	-5.783e+06	-1.043e+06
209		53.95	-460.33	-1131.46	-1120.41	-471.38	85.41	-5.728e+06	-1.006e+07	-9.628e+06	-6.158e+06	-1.295e+06
124	2169	39.11	-288.68	-854.80	-717.03	-426.45	242.93	-3.666e+06	-7.385e+06	-7.180e+06	-3.872e+06	-8.499e+05
159		31.85	-371.69	-833.34	-639.67	-565.35	227.81	-3.321e+06	-5.975e+06	-5.694e+06	-3.602e+06	-8.174e+05

202		34.06	-559.91	-795.86	-781.85	-573.91	55.76	-4.082e+06	-6.205e+06	-5.839e+06	-4.448e+06	-8.023e+05
209		41.50	-354.10	-870.36	-861.85	-362.60	65.70	-4.406e+06	-7.737e+06	-7.406e+06	-4.737e+06	-9.959e+05
125	1181	57.77	-442.58	-1238.48	-1050.41	-630.64	338.10	-5.629e+06	-1.195e+07	-1.176e+07	-5.824e+06	-1.096e+06
169		46.40	-573.21	-1210.76	-926.98	-856.99	316.85	-5.166e+06	-9.556e+06	-9.235e+06	-5.488e+06	-1.144e+06
209		49.80	-849.88	-1155.81	-1130.43	-875.25	84.38	-6.256e+06	-1.004e+07	-9.523e+06	-6.770e+06	-1.296e+06
215		61.74	-521.65	-1271.16	-1257.29	-535.51	100.98	-6.645e+06	-1.268e+07	-1.222e+07	-7.106e+06	-1.603e+06
125	2181	44.44	-340.45	-952.68	-808.01	-485.11	260.08	-4.330e+06	-9.195e+06	-9.045e+06	-4.480e+06	-8.428e+05
169		35.69	-440.93	-931.35	-713.06	-659.22	243.73	-3.974e+06	-7.351e+06	-7.104e+06	-4.221e+06	-8.797e+05
209		38.31	-653.75	-889.08	-869.56	-673.27	64.90	-4.812e+06	-7.721e+06	-7.326e+06	-5.208e+06	-9.969e+05
215		47.49	-401.27	-977.81	-967.15	-411.93	77.68	-5.112e+06	-9.757e+06	-9.402e+06	-5.466e+06	-1.233e+06
126	1190	67.76	-527.60	-1347.43	-1207.30	-667.72	308.61	-6.452e+06	-1.526e+07	-1.515e+07	-6.555e+06	-9.476e+05
181		52.46	-580.97	-1339.30	-1018.85	-901.42	374.59	-6.065e+06	-1.184e+07	-1.162e+07	-6.282e+06	-1.098e+06
215		56.85	-947.62	-1268.12	-1253.92	-961.82	65.93	-7.222e+06	-1.265e+07	-1.208e+07	-7.786e+06	-1.655e+06
221		72.68	-422.19	-1464.98	-1427.55	-459.62	193.99	-7.410e+06	-1.635e+07	-1.592e+07	-7.836e+06	-1.904e+06
126	2190	52.12	-405.84	-1036.48	-928.69	-513.63	237.39	-4.963e+06	-1.174e+07	-1.166e+07	-5.042e+06	-7.289e+05
181		40.35	-446.90	-1030.23	-783.73	-693.40	288.15	-4.665e+06	-9.105e+06	-8.939e+06	-4.832e+06	-8.445e+05
215		43.73	-728.94	-975.47	-964.56	-739.86	50.72	-5.556e+06	-9.727e+06	-9.294e+06	-5.989e+06	-1.273e+06
221		55.91	-324.76	-1126.91	-1098.12	-353.55	149.22	-5.700e+06	-1.257e+07	-1.225e+07	-6.028e+06	-1.465e+06
127	1200	51.43	-1203.38	-2624.06	-1227.21	-2600.23	-182.43	-9.486e+06	-1.767e+07	-1.766e+07	-9.495e+06	-2.651e+05
190		44.85	-1069.23	-2525.68	-1154.61	-2440.30	342.15	-9.667e+06	-1.502e+07	-1.475e+07	-9.936e+06	-1.169e+06
221		49.52	-1502.92	-2951.13	-1516.24	-2937.81	138.28	-1.085e+07	-1.616e+07	-1.532e+07	-1.170e+07	-1.941e+06
223		57.38	-1048.52	-2488.33	-1302.20	-2234.66	548.54	-1.121e+07	-1.989e+07	-1.902e+07	-1.208e+07	-2.607e+06
127	2200	39.56	-925.68	-2018.51	-944.01	-2000.18	-140.33	-7.297e+06	-1.359e+07	-1.359e+07	-7.304e+06	-2.039e+05
190		34.50	-822.48	-1942.83	-888.16	-1877.15	263.19	-7.436e+06	-1.155e+07	-1.135e+07	-7.643e+06	-8.989e+05
221		38.09	-1156.09	-2270.10	-1166.34	-2259.85	106.37	-8.348e+06	-1.243e+07	-1.178e+07	-8.997e+06	-1.493e+06
223		44.14	-806.55	-1914.10	-1001.69	-1718.97	421.95	-8.622e+06	-1.530e+07	-1.463e+07	-9.291e+06	-2.006e+06
128	1211	44.22	-824.00	-1892.16	-860.15	-1856.02	193.14	-8.153e+06	-1.541e+07	-1.521e+07	-8.352e+06	-1.186e+06
200		52.96	-1005.54	-2484.51	-1005.55	-2484.51	1.92	-9.456e+06	-1.845e+07	-1.837e+07	-9.535e+06	-8.393e+05
223		58.38	-968.16	-2519.30	-1206.41	-2281.05	559.28	-1.139e+07	-2.031e+07	-1.960e+07	-1.210e+07	-2.422e+06
230		47.25	-999.58	-2152.89	-1054.68	-2097.79	245.99	-9.217e+06	-1.628e+07	-1.595e+07	-9.545e+06	-1.485e+06
128	2211	34.01	-633.85	-1455.51	-661.65	-1427.71	148.57	-6.271e+06	-1.185e+07	-1.170e+07	-6.425e+06	-9.120e+05
200		40.74	-773.49	-1911.16	-773.50	-1911.16	1.48	-7.273e+06	-1.419e+07	-1.413e+07	-7.334e+06	-6.456e+05
223		44.91	-744.74	-1937.92	-928.01	-1754.65	430.22	-8.761e+06	-1.563e+07	-1.508e+07	-9.311e+06	-1.863e+06
230		36.34	-768.91	-1656.07	-811.29	-1613.68	189.22	-7.090e+06	-1.252e+07	-1.227e+07	-7.342e+06	-1.143e+06
129	1217	34.34	-650.32	-1546.03	-667.75	-1528.61	123.70	-6.463e+06	-1.193e+07	-1.184e+07	-6.559e+06	-7.176e+05
211		43.56	-766.00	-1977.99	-782.77	-1961.23	141.54	-8.040e+06	-1.520e+07	-1.509e+07	-8.144e+06	-8.564e+05
230		47.41	-870.43	-2069.24	-964.65	-1975.02	322.60	-9.260e+06	-1.644e+07	-1.595e+07	-9.757e+06	-1.822e+06
236		37.15	-749.37	-1662.84	-809.61	-1602.61	226.70	-7.328e+06	-1.281e+07	-1.246e+07	-7.681e+06	-1.347e+06
129	2217	26.42	-500.25	-1189.26	-513.65	-1175.85	95.16	-4.972e+06	-9.179e+06	-9.106e+06	-5.045e+06	-5.520e+05
211		33.50	-589.23	-1521.53	-602.13	-1508.64	108.88	-6.184e+06	-1.169e+07	-1.161e+07	-6.264e+06	-6.588e+05
230		36.47	-669.56	-1591.72	-742.04	-1519.25	248.16	-7.123e+06	-1.265e+07	-1.227e+07	-7.505e+06	-1.402e+06
236		28.58	-576.44	-1279.11	-622.78	-1232.77	174.39	-5.637e+06	-9.857e+06	-9.585e+06	-5.909e+06	-1.036e+06
130	1228	25.03	-535.85	-1159.07	-547.31	-1147.61	83.73	-4.850e+06	-8.624e+06	-8.560e+06	-4.914e+06	-4.869e+05
217		34.29	-643.40	-1561.64	-659.46	-1545.58	120.36	-6.438e+06	-1.192e+07	-1.183e+07	-6.528e+06	-6.951e+05
236		37.17	-734.38	-1651.48	-800.79	-1585.07	237.68	-7.341e+06	-1.283e+07	-1.246e+07	-7.713e+06	-1.379e+06
240		27.00	-599.31	-1226.44	-643.48	-1182.28	160.46	-5.458e+06	-9.244e+06	-8.990e+06	-5.712e+06	-9.475e+05

130	2228	19.26	-412.19	-891.59	-421.01	-882.78	64.41	-3.731e+06	-6.634e+06	-6.585e+06	-3.780e+06	-3.746e+05
	217	26.38	-494.92	-1201.26	-507.28	-1188.91	92.58	-4.953e+06	-9.169e+06	-9.100e+06	-5.021e+06	-5.347e+05
	236	28.59	-564.91	-1270.37	-615.99	-1219.29	182.83	-5.647e+06	-9.870e+06	-9.584e+06	-5.933e+06	-1.061e+06
	240	20.77	-461.01	-943.42	-494.98	-909.45	123.43	-4.198e+06	-7.111e+06	-6.915e+06	-4.394e+06	-7.288e+05
131	1238	15.80	-424.22	-762.19	-430.49	-755.92	45.62	-3.270e+06	-5.329e+06	-5.294e+06	-3.305e+06	-2.652e+05
	228	25.03	-533.15	-1160.15	-545.15	-1148.15	85.91	-4.843e+06	-8.625e+06	-8.560e+06	-4.908e+06	-4.921e+05
	240	27.00	-596.43	-1225.80	-643.47	-1178.76	165.51	-5.462e+06	-9.246e+06	-8.986e+06	-5.721e+06	-9.561e+05
	242	16.90	-457.09	-799.26	-482.09	-774.26	89.04	-3.598e+06	-5.670e+06	-5.529e+06	-3.739e+06	-5.210e+05
131	2238	12.16	-326.32	-586.30	-331.15	-581.48	35.09	-2.516e+06	-4.099e+06	-4.073e+06	-2.542e+06	-2.040e+05
	228	19.25	-410.12	-892.43	-419.35	-883.19	66.09	-3.725e+06	-6.634e+06	-6.584e+06	-3.775e+06	-3.785e+05
	240	20.77	-458.79	-942.92	-494.98	-906.74	127.31	-4.201e+06	-7.112e+06	-6.912e+06	-4.401e+06	-7.355e+05
	242	13.00	-351.61	-614.81	-370.83	-595.58	68.49	-2.768e+06	-4.362e+06	-4.253e+06	-2.876e+06	-4.008e+05
132	1265	5.03	-281.61	-300.40	-299.86	-282.15	3.12	-1.361e+06	-1.388e+06	-1.362e+06	-1.387e+06	-3802.17
	238	15.80	-420.82	-764.60	-428.08	-757.34	49.43	-3.259e+06	-5.333e+06	-5.296e+06	-3.296e+06	-2.746e+05
	242	16.90	-454.58	-800.63	-481.39	-773.81	92.52	-3.598e+06	-5.671e+06	-5.528e+06	-3.741e+06	-5.261e+05
132	2265	3.87	-216.63	-231.08	-230.66	-217.04	2.40	-1.047e+06	-1.068e+06	-1.048e+06	-1.067e+06	-2924.75
	238	12.15	-323.71	-588.16	-329.30	-582.57	38.02	-2.507e+06	-4.102e+06	-4.074e+06	-2.536e+06	-2.112e+05
	242	13.00	-349.67	-615.87	-370.30	-595.24	71.17	-2.768e+06	-4.362e+06	-4.252e+06	-2.878e+06	-4.047e+05
133	1139	11.46	667.67	-55.20	-35.61	648.09	117.35	-1.938e+04	-1.633e+05	-2.485e+04	-1.579e+05	-2.752e+04
	132	11.03	671.96	-16.55	-2.33	657.74	97.90	2518.24	-1.462e+05	2508.91	-1.462e+05	-1177.95
	287	9.06	614.41	-14.80	1.34	598.27	-99.47	3277.48	-1.067e+05	3269.69	-1.067e+05	925.48
	286	9.49	646.37	-49.25	-22.45	619.57	-133.88	-2.724e+04	-1.207e+05	-2.962e+04	-1.183e+05	1.472e+04
133	2139	8.82	513.60	-42.46	-27.39	498.53	90.27	-1.491e+04	-1.256e+05	-1.911e+04	-1.214e+05	-2.117e+04
	132	8.48	516.89	-12.73	-1.79	505.96	75.31	1937.11	-1.125e+05	1929.93	-1.125e+05	-906.12
	287	6.97	472.62	-11.39	1.03	460.21	-76.51	2521.14	-8.210e+04	2515.15	-8.210e+04	711.91
	286	7.30	497.21	-37.88	-17.27	476.59	-102.99	-2.095e+04	-9.282e+04	-2.278e+04	-9.099e+04	1.133e+04
134	1143	12.45	669.73	-122.41	-100.81	648.13	129.01	-7.499e+04	-2.728e+05	-8.808e+04	-2.597e+05	-4.917e+04
	139	11.55	645.24	-68.20	-50.45	627.48	111.14	-8209.95	-2.230e+05	-1.272e+04	-2.185e+05	-3.081e+04
	286	9.56	642.26	-55.28	-31.22	618.20	-127.29	-1.716e+04	-1.650e+05	-1.998e+04	-1.621e+05	2.024e+04
	285	9.61	655.55	-82.22	-49.40	622.73	-152.11	-1.034e+05	-1.968e+05	-1.170e+05	-1.832e+05	3.304e+04
134	2143	9.58	515.18	-94.16	-77.55	498.56	99.23	-5.768e+04	-2.098e+05	-6.775e+04	-1.998e+05	-3.782e+04
	139	8.89	496.34	-52.46	-38.80	482.68	85.50	-6315.35	-1.715e+05	-9788.01	-1.681e+05	-2.370e+04
	286	7.36	494.04	-42.52	-24.01	475.54	-97.92	-1.320e+04	-1.269e+05	-1.537e+04	-1.247e+05	1.557e+04
	285	7.39	504.27	-63.25	-38.00	479.02	-117.01	-7.951e+04	-1.514e+05	-9.003e+04	-1.409e+05	2.542e+04
135	1148	13.95	657.45	-207.29	-180.68	630.84	149.35	-1.733e+05	-4.432e+05	-2.034e+05	-4.131e+05	-8.492e+04
	143	12.54	614.45	-133.11	-113.64	594.98	119.07	-5.822e+04	-3.553e+05	-6.955e+04	-3.439e+05	-5.690e+04
	285	9.59	635.63	-87.62	-58.53	606.53	-142.11	-9.181e+04	-2.508e+05	-1.054e+05	-2.372e+05	4.448e+04
	284	10.41	648.30	-112.92	-70.29	605.66	-175.04	-2.007e+05	-3.346e+05	-2.685e+05	-2.669e+05	6.696e+04
135	2148	10.73	505.73	-159.45	-138.98	485.26	114.88	-1.333e+05	-3.409e+05	-1.564e+05	-3.178e+05	-6.532e+04
	143	9.65	472.65	-102.39	-87.41	457.68	91.59	-4.478e+04	-2.733e+05	-5.350e+04	-2.646e+05	-4.377e+04
	285	7.38	488.94	-67.40	-45.02	466.56	-109.31	-7.063e+04	-1.930e+05	-8.109e+04	-1.825e+05	3.422e+04
	284	8.01	498.69	-86.86	-54.07	465.90	-134.65	-1.544e+05	-2.574e+05	-2.065e+05	-2.053e+05	5.150e+04
136	1156	15.78	588.56	-324.66	-292.54	556.44	168.24	-2.954e+05	-6.981e+05	-3.997e+05	-5.938e+05	-1.764e+05
	148	14.27	585.05	-210.65	-184.84	559.24	140.97	-1.478e+05	-5.628e+05	-1.749e+05	-5.357e+05	-1.026e+05
	284	10.10	605.88	-125.76	-84.09	564.21	-169.55	-1.931e+05	-3.914e+05	-2.591e+05	-3.254e+05	9.345e+04
	283	12.44	640.55	-127.66	-80.12	593.02	-185.09	-3.040e+05	-5.609e+05	-4.670e+05	-3.978e+05	1.237e+05

136	2156	12.14	452.74	-249.74	-225.03	428.03	129.41	-2.273e+05	-5.370e+05	-3.074e+05	-4.568e+05	-1.357e+05
	148	10.98	450.04	-162.04	-142.18	430.18	108.44	-1.137e+05	-4.329e+05	-1.345e+05	-4.120e+05	-7.891e+04
	284	7.77	466.06	-96.74	-64.69	434.01	-130.43	-1.485e+05	-3.011e+05	-1.993e+05	-2.503e+05	7.189e+04
	283	9.57	492.73	-98.20	-61.63	456.17	-142.38	-2.338e+05	-4.315e+05	-3.593e+05	-3.060e+05	9.517e+04
137	1160	16.43	546.62	-280.77	-249.65	515.51	157.41	-6.691e+05	-9.649e+05	-8.381e+05	-7.959e+05	-1.464e+05
	156	16.96	513.46	-226.63	-168.48	455.31	199.13	-4.389e+05	-9.629e+05	-6.263e+05	-7.755e+05	-2.511e+05
	283	13.64	554.22	-340.89	-292.99	506.31	-201.45	1.194e+05	-4.762e+05	4.193e+04	-3.987e+05	2.003e+05
	282	12.59	563.54	-353.41	-327.43	537.56	-152.14	-5.603e+05	-6.547e+05	-5.640e+05	-6.510e+05	1.829e+04
137	2160	12.64	420.48	-215.98	-192.04	396.54	121.08	-5.147e+05	-7.422e+05	-6.447e+05	-6.122e+05	-1.126e+05
	156	13.04	394.97	-174.33	-129.60	350.24	153.18	-3.376e+05	-7.407e+05	-4.818e+05	-5.965e+05	-1.932e+05
	283	10.49	426.32	-262.22	-225.37	389.47	-154.96	9.182e+04	-3.663e+05	3.225e+04	-3.067e+05	1.541e+05
	282	9.69	433.49	-271.85	-251.87	413.51	-117.03	-4.310e+05	-5.036e+05	-4.338e+05	-5.007e+05	1.407e+04
138	1164	18.12	465.10	-372.27	-336.49	429.33	169.35	-9.322e+05	-1.316e+06	-1.210e+06	-1.038e+06	-1.715e+05
	160	15.53	403.18	-302.72	-267.31	367.77	154.09	-6.884e+05	-1.081e+06	-8.122e+05	-9.572e+05	-1.824e+05
	282	12.34	463.24	-373.31	-345.96	435.88	-148.78	-5.163e+05	-7.913e+05	-5.273e+05	-7.802e+05	5.394e+04
	281	16.67	494.01	-415.14	-393.13	472.01	-139.71	-9.914e+05	-1.125e+06	-1.123e+06	-9.936e+05	-1.724e+04
138	2164	13.94	357.77	-286.36	-258.84	330.25	130.27	-7.171e+05	-1.012e+06	-9.305e+05	-7.986e+05	-1.319e+05
	160	11.95	310.14	-232.86	-205.62	282.90	118.53	-5.296e+05	-8.315e+05	-6.248e+05	-7.363e+05	-1.403e+05
	282	9.50	356.34	-287.16	-266.12	335.29	-114.45	-3.972e+05	-6.087e+05	-4.057e+05	-6.002e+05	4.150e+04
	281	12.83	380.01	-319.34	-302.41	363.08	-107.47	-7.626e+05	-8.656e+05	-8.639e+05	-7.643e+05	-1.326e+04
139	1173	21.65	378.95	-456.67	-417.69	339.97	176.21	-1.270e+06	-1.812e+06	-1.728e+06	-1.355e+06	-1.961e+05
	164	16.68	308.68	-387.55	-349.92	271.04	157.43	-1.005e+06	-1.396e+06	-1.175e+06	-1.226e+06	-1.939e+05
	281	14.98	347.44	-427.65	-405.40	325.19	-129.43	-1.079e+06	-1.169e+06	-1.079e+06	-1.169e+06	3205.21
	280	21.61	395.85	-481.50	-463.08	377.43	-125.77	-1.373e+06	-1.722e+06	-1.716e+06	-1.378e+06	-4.264e+04
139	2173	16.66	291.50	-351.28	-321.30	261.52	135.55	-9.773e+05	-1.394e+06	-1.329e+06	-1.042e+06	-1.508e+05
	164	12.83	237.44	-298.12	-269.17	208.49	121.10	-7.729e+05	-1.074e+06	-9.039e+05	-9.427e+05	-1.492e+05
	281	11.52	267.26	-328.96	-311.85	250.15	-99.56	-8.302e+05	-8.996e+05	-8.302e+05	-8.995e+05	2465.54
	280	16.62	304.50	-370.38	-356.21	290.33	-96.75	-1.056e+06	-1.324e+06	-1.320e+06	-1.060e+06	-3.280e+04
140	1175	25.72	275.46	-540.29	-497.83	232.99	181.21	-1.673e+06	-2.444e+06	-2.375e+06	-1.742e+06	-2.209e+05
	173	19.59	200.24	-471.97	-428.85	157.12	164.70	-1.404e+06	-1.854e+06	-1.685e+06	-1.573e+06	-2.177e+05
	280	19.45	212.29	-493.51	-473.93	192.71	-115.90	-1.592e+06	-1.676e+06	-1.668e+06	-1.600e+06	-2.484e+04
	279	26.03	282.21	-555.63	-539.80	266.39	-114.06	-1.813e+06	-2.396e+06	-2.388e+06	-1.821e+06	-6.883e+04
140	2175	19.78	211.89	-415.61	-382.94	179.22	139.39	-1.287e+06	-1.880e+06	-1.827e+06	-1.340e+06	-1.699e+05
	173	15.07	154.03	-363.05	-329.88	120.86	126.69	-1.080e+06	-1.426e+06	-1.296e+06	-1.210e+06	-1.674e+05
	280	14.96	163.30	-379.62	-364.56	148.24	-89.15	-1.225e+06	-1.289e+06	-1.283e+06	-1.231e+06	-1.910e+04
	279	20.02	217.09	-427.41	-415.23	204.91	-87.74	-1.394e+06	-1.843e+06	-1.837e+06	-1.401e+06	-5.295e+04
141	1183	29.83	156.32	-625.66	-579.60	110.26	184.11	-2.143e+06	-3.211e+06	-3.150e+06	-2.204e+06	-2.482e+05
	175	23.27	73.19	-557.64	-507.63	23.19	170.42	-1.867e+06	-2.455e+06	-2.324e+06	-1.997e+06	-2.441e+05
	279	23.58	63.31	-567.97	-550.16	45.51	-104.52	-2.080e+06	-2.344e+06	-2.334e+06	-2.090e+06	-5.084e+04
	278	30.27	155.23	-635.94	-622.37	141.66	-102.72	-2.319e+06	-3.182e+06	-3.170e+06	-2.331e+06	-1.010e+05
141	2183	22.95	120.25	-481.28	-445.85	84.82	141.62	-1.648e+06	-2.470e+06	-2.423e+06	-1.695e+06	-1.910e+05
	175	17.90	56.30	-428.95	-390.49	17.84	131.09	-1.436e+06	-1.888e+06	-1.788e+06	-1.536e+06	-1.877e+05
	279	18.14	48.70	-436.90	-423.20	35.00	-80.40	-1.600e+06	-1.803e+06	-1.795e+06	-1.608e+06	-3.911e+04
	278	23.28	119.40	-489.19	-478.75	108.97	-79.01	-1.784e+06	-2.447e+06	-2.438e+06	-1.793e+06	-7.767e+04
142	1185	34.00	25.33	-713.92	-664.10	-24.49	185.33	-2.689e+06	-4.123e+06	-4.067e+06	-2.745e+06	-2.781e+05
	183	27.06	-69.30	-646.50	-588.09	-127.71	174.08	-2.393e+06	-3.199e+06	-3.092e+06	-2.500e+06	-2.733e+05

278		27.57	-97.59	-648.69	-632.31	-113.96	-93.58	-2.636e+06	-3.124e+06	-3.110e+06	-2.650e+06	-8.229e+04
277		34.52	17.24	-721.22	-709.83	5.86	-91.00	-2.901e+06	-4.108e+06	-4.091e+06	-2.919e+06	-1.425e+05
142	2185	26.15	19.49	-549.17	-510.85	-18.84	142.57	-2.068e+06	-3.172e+06	-3.129e+06	-2.111e+06	-2.139e+05
183		20.82	-53.31	-497.31	-452.37	-98.24	133.91	-1.841e+06	-2.461e+06	-2.379e+06	-1.923e+06	-2.102e+05
278		21.21	-75.07	-498.99	-486.39	-87.66	-71.98	-2.028e+06	-2.403e+06	-2.392e+06	-2.039e+06	-6.330e+04
277		26.55	13.27	-554.78	-546.02	4.50	-70.00	-2.232e+06	-3.160e+06	-3.147e+06	-2.245e+06	-1.096e+05
143	1194	38.32	-112.95	-805.93	-752.06	-166.82	185.56	-3.318e+06	-5.207e+06	-5.155e+06	-3.370e+06	-3.082e+05
185		30.95	-222.04	-740.31	-671.21	-291.13	176.17	-2.994e+06	-4.095e+06	-4.002e+06	-3.086e+06	-3.050e+05
277		31.58	-268.13	-734.37	-719.31	-283.19	-82.43	-3.270e+06	-4.045e+06	-4.025e+06	-3.290e+06	-1.231e+05
276		38.93	-127.96	-811.13	-801.87	-137.22	-79.00	-3.568e+06	-5.211e+06	-5.187e+06	-3.591e+06	-1.966e+05
143	2194	29.47	-86.88	-619.95	-578.51	-128.32	142.73	-2.553e+06	-4.005e+06	-3.966e+06	-2.592e+06	-2.370e+05
185		23.81	-170.80	-569.47	-516.32	-223.95	135.51	-2.303e+06	-3.150e+06	-3.079e+06	-2.374e+06	-2.346e+05
277		24.29	-206.26	-564.90	-553.31	-217.84	-63.41	-2.516e+06	-3.112e+06	-3.096e+06	-2.531e+06	-9.469e+04
276		29.94	-98.43	-623.95	-616.82	-105.55	-60.77	-2.744e+06	-4.008e+06	-3.990e+06	-2.763e+06	-1.513e+05
144	1198	42.92	-252.69	-902.69	-844.44	-310.94	185.66	-4.038e+06	-6.506e+06	-6.460e+06	-4.084e+06	-3.328e+05
194		34.98	-378.66	-840.77	-757.71	-461.72	177.44	-3.680e+06	-5.164e+06	-5.083e+06	-3.761e+06	-3.366e+05
276		35.73	-444.31	-824.61	-810.76	-458.17	-71.26	-3.991e+06	-5.141e+06	-5.113e+06	-4.018e+06	-1.768e+05
275		43.65	-274.70	-906.22	-898.96	-281.96	-67.34	-4.323e+06	-6.538e+06	-6.505e+06	-4.356e+06	-2.684e+05
144	2198	33.02	-194.38	-694.37	-649.57	-239.19	142.82	-3.106e+06	-5.004e+06	-4.969e+06	-3.142e+06	-2.560e+05
194		26.91	-291.28	-646.75	-582.86	-355.17	136.49	-2.831e+06	-3.972e+06	-3.910e+06	-2.893e+06	-2.590e+05
276		27.48	-341.78	-634.32	-623.66	-352.44	-54.82	-3.070e+06	-3.955e+06	-3.933e+06	-3.091e+06	-1.360e+05
275		33.58	-211.31	-697.09	-691.50	-216.89	-51.80	-3.325e+06	-5.029e+06	-5.004e+06	-3.351e+06	-2.064e+05
145	1202	48.06	-385.76	-1006.01	-943.24	-448.53	187.07	-4.850e+06	-8.091e+06	-8.054e+06	-4.886e+06	-3.408e+05
198		39.28	-531.42	-949.61	-848.57	-632.46	179.01	-4.458e+06	-6.448e+06	-6.379e+06	-4.526e+06	-3.624e+05
275		40.14	-619.55	-919.97	-907.07	-632.46	-60.91	-4.802e+06	-6.461e+06	-6.422e+06	-4.840e+06	-2.488e+05
274		48.93	-414.36	-1008.48	-1002.91	-419.93	-57.25	-5.167e+06	-8.166e+06	-8.120e+06	-5.212e+06	-3.671e+05
145	2202	36.97	-296.74	-773.85	-725.57	-345.02	143.90	-3.731e+06	-6.224e+06	-6.196e+06	-3.759e+06	-2.621e+05
198		30.22	-408.78	-730.47	-652.74	-486.51	137.70	-3.429e+06	-4.960e+06	-4.907e+06	-3.482e+06	-2.787e+05
275		30.88	-476.58	-707.67	-697.75	-486.50	-46.85	-3.694e+06	-4.970e+06	-4.940e+06	-3.723e+06	-1.914e+05
274		37.64	-318.74	-775.75	-771.47	-323.02	-44.04	-3.974e+06	-6.281e+06	-6.246e+06	-4.009e+06	-2.824e+05
146	1209	54.13	-499.79	-1119.85	-1053.09	-566.56	192.20	-5.740e+06	-1.008e+07	-1.006e+07	-5.762e+06	-3.091e+05
202		44.03	-671.17	-1067.52	-945.81	-792.88	182.83	-5.328e+06	-8.015e+06	-7.963e+06	-5.380e+06	-3.705e+05
274		45.03	-783.30	-1022.49	-1010.06	-795.73	-53.08	-5.701e+06	-8.080e+06	-8.027e+06	-5.753e+06	-3.490e+05
273		55.21	-533.18	-1122.80	-1118.42	-537.55	-50.61	-6.081e+06	-1.023e+07	-1.016e+07	-6.145e+06	-5.104e+05
146	2209	41.64	-384.46	-861.42	-810.07	-435.81	147.84	-4.416e+06	-7.757e+06	-7.740e+06	-4.433e+06	-2.378e+05
202		33.87	-516.29	-821.17	-727.54	-609.91	140.64	-4.098e+06	-6.165e+06	-6.125e+06	-4.138e+06	-2.850e+05
274		34.63	-602.54	-786.53	-776.97	-612.10	-40.83	-4.385e+06	-6.215e+06	-6.175e+06	-4.426e+06	-2.685e+05
273		42.47	-410.14	-863.69	-860.33	-413.50	-38.93	-4.678e+06	-7.866e+06	-7.817e+06	-4.727e+06	-3.926e+05
147	1215	61.95	-575.70	-1251.78	-1184.40	-643.07	202.52	-6.656e+06	-1.272e+07	-1.271e+07	-6.662e+06	-1.911e+05
209		49.56	-785.35	-1192.79	-1053.02	-925.12	193.42	-6.272e+06	-9.986e+06	-9.955e+06	-6.303e+06	-3.358e+05
273		50.74	-917.53	-1136.65	-1123.62	-930.55	-51.82	-6.666e+06	-1.013e+07	-1.005e+07	-6.740e+06	-4.978e+05
272		63.32	-606.54	-1259.58	-1256.14	-609.98	-47.26	-7.008e+06	-1.296e+07	-1.287e+07	-7.099e+06	-7.312e+05
147	2215	47.65	-442.84	-962.91	-911.08	-494.67	155.78	-5.120e+06	-9.783e+06	-9.778e+06	-5.125e+06	-1.470e+05
209		38.12	-604.11	-917.53	-810.01	-711.63	148.78	-4.825e+06	-7.681e+06	-7.658e+06	-4.848e+06	-2.583e+05
273		39.03	-705.79	-874.34	-864.32	-715.81	-39.86	-5.128e+06	-7.789e+06	-7.733e+06	-5.184e+06	-3.829e+05
272		48.71	-466.57	-968.91	-966.26	-469.21	-36.36	-5.391e+06	-9.969e+06	-9.899e+06	-5.461e+06	-5.625e+05

148	1221	73.23	-611.83	-1384.19	-1354.66	-641.36	148.12	-7.441e+06	-1.645e+07	-1.645e+07	-7.441e+06	2.211e+04
	215	56.47	-817.86	-1330.37	-1160.90	-987.33	241.11	-7.223e+06	-1.257e+07	-1.256e+07	-7.229e+06	-1.739e+05
	272	57.99	-979.51	-1270.04	-1242.33	-1007.22	-85.34	-7.626e+06	-1.284e+07	-1.272e+07	-7.742e+06	-7.672e+05
	271	74.92	-568.79	-1431.98	-1430.97	-569.81	29.59	-7.766e+06	-1.682e+07	-1.671e+07	-7.878e+06	-9.979e+05
148	2221	56.33	-470.63	-1064.76	-1042.04	-493.35	113.94	-5.724e+06	-1.265e+07	-1.265e+07	-5.724e+06	1.701e+04
	215	43.43	-629.12	-1023.36	-893.00	-759.48	185.47	-5.556e+06	-9.669e+06	-9.665e+06	-5.561e+06	-1.338e+05
	272	44.60	-753.47	-976.95	-955.64	-774.79	-65.65	-5.866e+06	-9.874e+06	-9.785e+06	-5.955e+06	-5.902e+05
	271	57.63	-437.53	-1101.53	-1100.74	-438.31	22.77	-5.974e+06	-1.294e+07	-1.285e+07	-6.060e+06	-7.676e+05
149	1223	56.54	-1245.80	-2713.72	-1322.34	-2637.18	-326.33	-1.096e+07	-1.942e+07	-1.935e+07	-1.103e+07	7.635e+05
	221	48.87	-1323.90	-2806.84	-1349.57	-2781.16	193.41	-1.120e+07	-1.595e+07	-1.595e+07	-1.121e+07	-1.192e+05
	271	50.48	-1473.77	-2950.46	-1474.14	-2950.10	-23.26	-1.161e+07	-1.634e+07	-1.614e+07	-1.181e+07	-9.472e+05
	270	58.59	-1190.22	-2670.70	-1349.13	-2511.78	458.28	-1.154e+07	-2.018e+07	-1.981e+07	-1.191e+07	-1.750e+06
149	2223	43.49	-958.31	-2087.48	-1017.18	-2028.60	-251.02	-8.432e+06	-1.494e+07	-1.489e+07	-8.485e+06	5.873e+05
	221	37.60	-1018.38	-2159.10	-1038.13	-2139.36	148.78	-8.618e+06	-1.227e+07	-1.227e+07	-8.621e+06	-9.171e+04
	271	38.83	-1133.67	-2269.59	-1133.95	-2269.30	-17.89	-8.930e+06	-1.257e+07	-1.242e+07	-9.083e+06	-7.286e+05
	270	45.07	-915.55	-2054.38	-1037.79	-1932.14	352.52	-8.878e+06	-1.553e+07	-1.524e+07	-9.163e+06	-1.346e+06
150	1230	47.75	-969.34	-2063.45	-971.67	-2061.12	50.38	-9.283e+06	-1.650e+07	-1.649e+07	-9.296e+06	-2.981e+05
	223	57.89	-1103.05	-2599.52	-1130.30	-2572.27	-200.10	-1.106e+07	-2.007e+07	-2.006e+07	-1.107e+07	2.905e+05
	270	59.76	-1087.73	-2614.50	-1200.06	-2502.17	398.61	-1.172e+07	-2.071e+07	-2.048e+07	-1.194e+07	-1.410e+06
	269	48.79	-1028.82	-2153.40	-1039.19	-2143.02	107.51	-9.648e+06	-1.680e+07	-1.674e+07	-9.702e+06	-6.214e+05
150	2230	36.73	-745.65	-1587.27	-747.44	-1585.48	38.75	-7.141e+06	-1.270e+07	-1.269e+07	-7.151e+06	-2.293e+05
	223	44.53	-848.50	-1999.63	-869.46	-1978.67	-153.92	-8.507e+06	-1.544e+07	-1.543e+07	-8.514e+06	2.235e+05
	270	45.97	-836.71	-2011.15	-923.13	-1924.74	306.62	-9.014e+06	-1.593e+07	-1.575e+07	-9.188e+06	-1.085e+06
	269	37.53	-791.40	-1656.46	-799.38	-1648.48	82.70	-7.422e+06	-1.292e+07	-1.288e+07	-7.463e+06	-4.780e+05
151	1236	37.19	-745.56	-1648.83	-745.64	-1648.74	8.81	-7.345e+06	-1.283e+07	-1.283e+07	-7.345e+06	-1.895e+04
	230	47.35	-883.92	-2090.76	-884.08	-2090.60	-14.16	-9.226e+06	-1.641e+07	-1.641e+07	-9.226e+06	5.737e+04
	269	48.67	-919.56	-2122.49	-947.32	-2094.73	180.61	-9.640e+06	-1.683e+07	-1.670e+07	-9.776e+06	-9.794e+05
	268	38.15	-778.99	-1689.66	-795.03	-1673.62	119.80	-7.638e+06	-1.313e+07	-1.304e+07	-7.728e+06	-6.954e+05
151	2236	28.61	-573.51	-1268.33	-573.57	-1268.26	6.77	-5.650e+06	-9.870e+06	-9.870e+06	-5.650e+06	-1.458e+04
	230	36.42	-679.94	-1608.28	-680.06	-1608.15	-10.89	-7.097e+06	-1.262e+07	-1.262e+07	-7.097e+06	4.413e+04
	269	37.44	-707.35	-1632.68	-728.71	-1611.33	138.93	-7.415e+06	-1.295e+07	-1.284e+07	-7.520e+06	-7.534e+05
	268	29.35	-599.22	-1299.74	-611.56	-1287.40	92.15	-5.876e+06	-1.010e+07	-1.003e+07	-5.944e+06	-5.350e+05
152	1240	27.01	-599.19	-1225.91	-599.23	-1225.87	5.18	-5.461e+06	-9.245e+06	-9.245e+06	-5.461e+06	-3007.12
	236	37.15	-736.53	-1654.33	-736.54	-1654.33	2.42	-7.335e+06	-1.283e+07	-1.283e+07	-7.335e+06	8472.47
	268	38.14	-767.32	-1685.88	-785.75	-1667.44	128.80	-7.641e+06	-1.314e+07	-1.304e+07	-7.739e+06	-7.260e+05
	267	27.68	-620.19	-1250.07	-632.71	-1237.56	87.89	-5.666e+06	-9.457e+06	-9.390e+06	-5.733e+06	-4.977e+05
152	2240	20.77	-460.91	-943.01	-460.95	-942.97	3.99	-4.201e+06	-7.111e+06	-7.111e+06	-4.201e+06	-2313.17
	236	28.58	-566.56	-1272.56	-566.57	-1272.56	1.86	-5.642e+06	-9.866e+06	-9.866e+06	-5.642e+06	6517.28
	268	29.34	-590.25	-1296.83	-604.43	-1282.65	99.08	-5.878e+06	-1.010e+07	-1.003e+07	-5.953e+06	-5.584e+05
	267	21.30	-477.07	-961.59	-486.70	-951.97	67.61	-4.359e+06	-7.274e+06	-7.223e+06	-4.410e+06	-3.829e+05
153	1242	16.90	-457.01	-799.93	-457.07	-799.87	4.53	-3.601e+06	-5.670e+06	-5.670e+06	-3.601e+06	-2721.46
	240	27.00	-597.64	-1225.01	-597.68	-1224.97	4.86	-5.460e+06	-9.243e+06	-9.243e+06	-5.460e+06	-3436.82
	267	27.68	-618.57	-1248.64	-631.90	-1235.30	90.69	-5.669e+06	-9.455e+06	-9.387e+06	-5.737e+06	-5.020e+05
	266	17.27	-467.16	-813.95	-474.93	-806.18	51.32	-3.711e+06	-5.787e+06	-5.750e+06	-3.748e+06	-2.775e+05
153	2242	13.00	-351.55	-615.33	-351.59	-615.29	3.49	-2.770e+06	-4.361e+06	-4.361e+06	-2.770e+06	-2093.43
	240	20.77	-459.72	-942.32	-459.75	-942.29	3.74	-4.200e+06	-7.110e+06	-7.110e+06	-4.200e+06	-2643.71

	267	21.29	-475.82	-960.49	-486.08	-950.23	69.76	-4.361e+06	-7.273e+06	-7.221e+06	-4.413e+06	-3.862e+05
	266	13.29	-359.35	-626.11	-365.33	-620.14	39.47	-2.854e+06	-4.452e+06	-4.423e+06	-2.883e+06	-2.135e+05
154	1265	5.03	-282.74	-299.80	-297.57	-284.98	5.76	-1.362e+06	-1.386e+06	-1.365e+06	-1.384e+06	-7050.35
	242	16.89	-455.00	-800.81	-455.10	-800.71	5.95	-3.595e+06	-5.670e+06	-5.670e+06	-3.595e+06	-7475.07
	266	17.27	-465.49	-814.41	-473.54	-806.36	52.37	-3.709e+06	-5.787e+06	-5.749e+06	-3.747e+06	-2.777e+05
154	2265	3.87	-217.50	-230.62	-228.90	-219.22	4.43	-1.048e+06	-1.066e+06	-1.050e+06	-1.064e+06	-5423.35
	242	12.99	-350.00	-616.01	-350.08	-615.93	4.58	-2.766e+06	-4.362e+06	-4.362e+06	-2.766e+06	-5750.06
	266	13.28	-358.07	-626.47	-364.26	-620.28	40.29	-2.853e+06	-4.451e+06	-4.422e+06	-2.882e+06	-2.136e+05
155	1286	9.48	645.92	-49.88	-23.00	619.04	134.08	-2.711e+04	-1.204e+05	-2.947e+04	-1.180e+05	-1.463e+04
	287	9.04	614.17	-14.35	1.82	598.00	99.52	3223.92	-1.064e+05	3215.33	-1.064e+05	-970.03
	399	11.04	672.67	-17.00	-2.81	658.48	-97.90	2572.87	-1.464e+05	2564.15	-1.464e+05	1139.58
	392	11.47	668.37	-54.64	-35.08	648.81	-117.30	-1.946e+04	-1.635e+05	-2.497e+04	-1.579e+05	2.763e+04
155	2286	7.29	496.86	-38.37	-17.69	476.19	103.14	-2.086e+04	-9.259e+04	-2.267e+04	-9.078e+04	-1.125e+04
	287	6.96	472.44	-11.04	1.40	460.00	76.55	2479.94	-8.187e+04	2473.33	-8.187e+04	-746.17
	399	8.49	517.44	-13.08	-2.16	506.53	-75.31	1979.13	-1.126e+05	1972.42	-1.126e+05	876.60
	392	8.82	514.13	-42.03	-26.98	499.08	-90.23	-1.497e+04	-1.257e+05	-1.920e+04	-1.215e+05	2.125e+04
156	1285	9.59	655.08	-82.85	-49.86	622.10	152.49	-1.033e+05	-1.964e+05	-1.168e+05	-1.828e+05	-3.284e+04
	286	9.55	642.12	-54.93	-30.74	617.93	127.58	-1.718e+04	-1.646e+05	-2.001e+04	-1.618e+05	-2.024e+04
	392	11.56	645.77	-68.63	-50.95	628.08	-111.01	-8144.10	-2.231e+05	-1.266e+04	-2.186e+05	3.083e+04
	388	12.45	670.28	-121.92	-100.42	648.78	-128.72	-7.500e+04	-2.729e+05	-8.817e+04	-2.597e+05	4.933e+04
156	2285	7.38	503.91	-63.73	-38.36	478.54	117.30	-7.943e+04	-1.511e+05	-8.986e+04	-1.406e+05	-2.526e+04
	286	7.35	493.94	-42.26	-23.65	475.33	98.14	-1.321e+04	-1.266e+05	-1.539e+04	-1.244e+05	-1.557e+04
	392	8.90	496.75	-52.80	-39.19	483.14	-85.39	-6264.69	-1.716e+05	-9738.06	-1.681e+05	2.371e+04
	388	9.58	515.60	-93.78	-77.25	499.06	-99.01	-5.769e+04	-2.099e+05	-6.783e+04	-1.998e+05	3.795e+04
157	1284	10.38	647.59	-113.60	-70.74	604.73	175.46	-2.007e+05	-3.336e+05	-2.681e+05	-2.662e+05	-6.642e+04
	285	9.58	635.58	-87.31	-58.00	606.27	142.57	-9.179e+04	-2.504e+05	-1.054e+05	-2.368e+05	-4.442e+04
	388	12.55	614.77	-133.58	-114.25	595.43	-118.71	-5.808e+04	-3.553e+05	-6.943e+04	-3.440e+05	5.696e+04
	383	13.95	657.81	-206.68	-180.32	631.44	-148.66	-1.733e+05	-4.433e+05	-2.035e+05	-4.131e+05	8.506e+04
157	2284	7.99	498.14	-87.38	-54.42	465.17	134.97	-1.544e+05	-2.566e+05	-2.062e+05	-2.048e+05	-5.109e+04
	285	7.37	488.91	-67.16	-44.62	466.36	109.67	-7.061e+04	-1.926e+05	-8.107e+04	-1.822e+05	-3.417e+04
	388	9.65	472.90	-102.76	-87.89	458.03	-91.32	-4.468e+04	-2.733e+05	-5.341e+04	-2.646e+05	4.382e+04
	383	10.73	506.01	-158.99	-138.70	485.72	-114.35	-1.333e+05	-3.410e+05	-1.565e+05	-3.178e+05	6.543e+04
158	1283	12.35	636.50	-129.99	-82.26	588.77	185.22	-3.034e+05	-5.572e+05	-4.658e+05	-3.948e+05	-1.218e+05
	284	10.10	607.24	-124.60	-82.72	565.36	169.99	-1.933e+05	-3.909e+05	-2.591e+05	-3.251e+05	-9.314e+04
	383	14.26	583.60	-211.93	-186.36	558.03	-140.30	-1.474e+05	-5.624e+05	-1.746e+05	-5.353e+05	1.026e+05
	375	15.79	591.01	-321.88	-290.35	559.47	-166.72	-2.970e+05	-6.986e+05	-4.008e+05	-5.948e+05	1.758e+05
158	2283	9.50	489.61	-99.99	-63.27	452.90	142.48	-2.334e+05	-4.286e+05	-3.583e+05	-3.037e+05	-9.369e+04
	284	7.77	467.11	-95.85	-63.63	434.89	130.76	-1.487e+05	-3.007e+05	-1.993e+05	-2.501e+05	-7.165e+04
	383	10.97	448.92	-163.02	-143.35	429.26	-107.93	-1.134e+05	-4.326e+05	-1.343e+05	-4.118e+05	7.895e+04
	375	12.14	454.62	-247.60	-223.34	430.36	-128.25	-2.284e+05	-5.374e+05	-3.083e+05	-4.575e+05	1.352e+05
159	1282	12.59	564.42	-354.16	-327.65	537.91	153.80	-5.599e+05	-6.544e+05	-5.637e+05	-6.506e+05	-1.847e+04
	283	13.61	552.32	-340.18	-291.28	503.41	203.11	1.206e+05	-4.741e+05	4.152e+04	-3.950e+05	-2.020e+05
	375	16.99	515.09	-227.37	-169.93	457.66	-198.35	-4.382e+05	-9.644e+05	-6.260e+05	-7.766e+05	2.521e+05
	373	16.42	545.55	-280.04	-249.41	514.92	-156.05	-6.684e+05	-9.650e+05	-8.380e+05	-7.954e+05	1.468e+05
159	2282	9.69	434.17	-272.43	-252.04	413.78	118.31	-4.307e+05	-5.034e+05	-4.336e+05	-5.005e+05	-1.421e+04
	283	10.47	424.86	-261.68	-224.06	387.24	156.24	9.280e+04	-3.647e+05	3.194e+04	-3.038e+05	-1.554e+05

375		13.07	396.22	-174.90	-130.72	352.04	-152.58	-3.371e+05	-7.418e+05	-4.816e+05	-5.974e+05	1.939e+05
373		12.63	419.65	-215.42	-191.85	396.09	-120.04	-5.141e+05	-7.423e+05	-6.446e+05	-6.118e+05	1.129e+05
160	1281	16.67	493.89	-415.60	-392.96	471.25	141.68	-9.910e+05	-1.125e+06	-1.123e+06	-9.933e+05	1.742e+04
282		12.33	463.21	-373.17	-345.13	435.18	150.55	-5.161e+05	-7.904e+05	-5.274e+05	-7.792e+05	-5.441e+04
373		15.53	403.16	-302.81	-268.11	368.46	-152.62	-6.879e+05	-1.081e+06	-8.119e+05	-9.570e+05	1.827e+05
367		18.12	465.04	-371.72	-336.73	430.05	-167.50	-9.316e+05	-1.316e+06	-1.210e+06	-1.038e+06	1.718e+05
160	2281	12.82	379.91	-319.69	-302.28	362.50	108.99	-7.623e+05	-8.655e+05	-8.637e+05	-7.641e+05	1.340e+04
282		9.49	356.32	-287.05	-265.48	334.75	115.81	-3.970e+05	-6.080e+05	-4.057e+05	-5.994e+05	-4.186e+04
373		11.94	310.13	-232.93	-206.24	283.43	-117.40	-5.292e+05	-8.316e+05	-6.245e+05	-7.362e+05	1.405e+05
367		13.94	357.72	-285.94	-259.02	330.81	-128.85	-7.166e+05	-1.012e+06	-9.304e+05	-7.984e+05	1.322e+05
161	1280	21.61	395.71	-481.87	-462.75	376.58	128.13	-1.373e+06	-1.722e+06	-1.716e+06	-1.378e+06	4.297e+04
281		14.98	347.48	-427.57	-404.58	324.50	131.48	-1.079e+06	-1.169e+06	-1.079e+06	-1.169e+06	-3292.02
367		16.67	308.51	-387.47	-350.79	271.83	-155.51	-1.004e+06	-1.396e+06	-1.175e+06	-1.225e+06	1.941e+05
360		21.65	378.74	-456.08	-418.12	340.78	-173.93	-1.270e+06	-1.812e+06	-1.727e+06	-1.354e+06	1.965e+05
161	2280	16.62	304.39	-370.67	-355.96	289.68	98.56	-1.056e+06	-1.324e+06	-1.320e+06	-1.060e+06	3.305e+04
281		11.52	267.29	-328.90	-311.22	249.61	101.14	-8.301e+05	-8.993e+05	-8.302e+05	-8.992e+05	-2532.32
367		12.82	237.31	-298.06	-269.84	209.10	-119.62	-7.725e+05	-1.074e+06	-9.036e+05	-9.425e+05	1.493e+05
360		16.66	291.34	-350.83	-321.63	262.14	-133.79	-9.768e+05	-1.394e+06	-1.329e+06	-1.042e+06	1.512e+05
162	1279	26.03	282.09	-555.94	-539.31	265.46	116.86	-1.812e+06	-2.396e+06	-2.388e+06	-1.821e+06	6.923e+04
280		19.45	212.35	-493.48	-473.05	191.93	118.32	-1.592e+06	-1.676e+06	-1.668e+06	-1.600e+06	2.488e+04
360		19.59	199.82	-471.69	-429.83	157.96	-162.35	-1.404e+06	-1.853e+06	-1.685e+06	-1.573e+06	2.178e+05
356		25.72	274.97	-539.62	-498.44	233.80	-178.46	-1.672e+06	-2.444e+06	-2.374e+06	-1.742e+06	2.213e+05
162	2279	20.02	216.99	-427.64	-414.86	204.20	89.89	-1.394e+06	-1.843e+06	-1.837e+06	-1.400e+06	5.325e+04
280		14.96	163.35	-379.60	-363.89	147.64	91.02	-1.224e+06	-1.289e+06	-1.283e+06	-1.231e+06	1.914e+04
360		15.07	153.71	-362.84	-330.64	121.51	-124.88	-1.080e+06	-1.426e+06	-1.296e+06	-1.210e+06	1.675e+05
356		19.79	211.52	-415.09	-383.42	179.84	-137.27	-1.286e+06	-1.880e+06	-1.826e+06	-1.340e+06	1.703e+05
163	1278	30.27	155.10	-636.18	-621.71	140.63	106.03	-2.319e+06	-3.182e+06	-3.170e+06	-2.331e+06	1.014e+05
279		23.58	63.43	-568.02	-549.20	44.61	107.38	-2.080e+06	-2.344e+06	-2.334e+06	-2.090e+06	5.093e+04
356		23.27	72.38	-557.06	-508.73	24.05	-167.59	-1.866e+06	-2.454e+06	-2.324e+06	-1.997e+06	2.442e+05
348		29.83	155.47	-624.83	-580.40	111.04	-180.82	-2.142e+06	-3.211e+06	-3.149e+06	-2.203e+06	2.487e+05
163	2278	23.28	119.31	-489.37	-478.24	108.18	81.56	-1.784e+06	-2.447e+06	-2.438e+06	-1.793e+06	7.799e+04
279		18.14	48.79	-436.94	-422.46	34.31	82.60	-1.600e+06	-1.803e+06	-1.795e+06	-1.608e+06	3.918e+04
356		17.90	55.68	-428.51	-391.33	18.50	-128.92	-1.436e+06	-1.888e+06	-1.788e+06	-1.536e+06	1.878e+05
348		22.95	119.59	-480.64	-446.46	85.42	-139.09	-1.648e+06	-2.470e+06	-2.422e+06	-1.695e+06	1.913e+05
164	1277	34.52	17.11	-721.37	-708.97	4.71	94.88	-2.901e+06	-4.108e+06	-4.091e+06	-2.918e+06	1.429e+05
278		27.57	-97.38	-648.85	-631.24	-114.98	96.94	-2.636e+06	-3.124e+06	-3.110e+06	-2.650e+06	8.237e+04
348		27.06	-70.66	-645.50	-589.30	-126.86	-170.73	-2.392e+06	-3.198e+06	-3.091e+06	-2.499e+06	2.734e+05
346		34.00	24.01	-712.86	-665.09	-23.76	-181.43	-2.688e+06	-4.123e+06	-4.067e+06	-2.744e+06	2.785e+05
164	2277	26.55	13.16	-554.90	-545.36	3.62	72.99	-2.232e+06	-3.160e+06	-3.147e+06	-2.245e+06	1.099e+05
278		21.21	-74.91	-499.11	-485.57	-88.45	74.57	-2.027e+06	-2.403e+06	-2.392e+06	-2.038e+06	6.336e+04
348		20.82	-54.35	-496.54	-453.31	-97.58	-131.33	-1.840e+06	-2.460e+06	-2.378e+06	-1.923e+06	2.103e+05
346		26.16	18.47	-548.36	-511.61	-18.28	-139.56	-2.067e+06	-3.171e+06	-3.128e+06	-2.111e+06	2.142e+05
165	1276	38.93	-128.14	-811.17	-800.80	-138.52	83.54	-3.567e+06	-5.211e+06	-5.187e+06	-3.591e+06	1.969e+05
277		31.58	-267.79	-734.68	-718.11	-284.36	86.37	-3.270e+06	-4.045e+06	-4.025e+06	-3.290e+06	1.231e+05
346		30.95	-224.17	-738.68	-672.55	-290.30	-172.20	-2.993e+06	-4.094e+06	-4.002e+06	-3.086e+06	3.050e+05
337		38.32	-114.87	-804.53	-753.24	-166.16	-180.95	-3.317e+06	-5.206e+06	-5.155e+06	-3.369e+06	3.084e+05

165	2276	29.94	-98.57	-623.98	-616.00	-106.55	64.26	-2.744e+06	-4.008e+06	-3.990e+06	-2.763e+06	1.514e+05
	277	24.29	-206.00	-565.14	-552.39	-218.74	66.44	-2.515e+06	-3.112e+06	-3.096e+06	-2.531e+06	9.469e+04
	346	23.81	-172.44	-568.22	-517.35	-223.31	-132.46	-2.303e+06	-3.149e+06	-3.078e+06	-2.373e+06	2.346e+05
	337	29.47	-88.36	-618.87	-579.41	-127.82	-139.19	-2.552e+06	-4.005e+06	-3.965e+06	-2.592e+06	2.372e+05
166	1275	43.65	-274.97	-906.12	-897.65	-283.44	72.63	-4.323e+06	-6.538e+06	-6.505e+06	-4.356e+06	2.683e+05
	276	35.73	-443.77	-825.15	-809.41	-459.50	75.86	-3.991e+06	-5.141e+06	-5.113e+06	-4.018e+06	1.766e+05
	337	34.98	-381.85	-838.29	-759.18	-460.96	-172.77	-3.679e+06	-5.163e+06	-5.082e+06	-3.760e+06	3.364e+05
	333	42.92	-255.38	-900.81	-845.78	-310.41	-180.25	-4.037e+06	-6.505e+06	-6.459e+06	-4.083e+06	3.328e+05
166	2275	33.58	-211.51	-697.02	-690.50	-218.03	55.87	-3.325e+06	-5.029e+06	-5.003e+06	-3.351e+06	2.064e+05
	276	27.48	-341.36	-634.73	-622.62	-353.46	58.35	-3.070e+06	-3.955e+06	-3.933e+06	-3.091e+06	1.358e+05
	337	26.91	-293.73	-644.84	-583.98	-354.58	-132.90	-2.830e+06	-3.971e+06	-3.909e+06	-2.892e+06	2.588e+05
	333	33.02	-196.45	-692.93	-650.60	-238.77	-138.65	-3.106e+06	-5.004e+06	-4.968e+06	-3.141e+06	2.560e+05
167	1274	48.93	-414.77	-1008.19	-1001.34	-421.62	63.39	-5.166e+06	-8.166e+06	-8.120e+06	-5.212e+06	3.665e+05
	275	40.14	-618.68	-920.84	-905.54	-633.98	66.25	-4.802e+06	-6.461e+06	-6.423e+06	-4.840e+06	2.483e+05
	333	39.28	-535.95	-946.00	-850.14	-631.81	-173.54	-4.457e+06	-6.446e+06	-6.378e+06	-4.525e+06	3.618e+05
	329	48.06	-389.37	-1003.53	-944.72	-448.18	-180.73	-4.849e+06	-8.089e+06	-8.053e+06	-4.885e+06	3.402e+05
167	2274	37.64	-319.06	-775.53	-770.26	-324.33	48.76	-3.974e+06	-6.281e+06	-6.246e+06	-4.009e+06	2.819e+05
	275	30.88	-475.91	-708.34	-696.57	-487.68	50.96	-3.694e+06	-4.970e+06	-4.940e+06	-3.723e+06	1.910e+05
	333	30.21	-412.27	-727.69	-653.95	-486.01	-133.50	-3.428e+06	-4.958e+06	-4.906e+06	-3.481e+06	2.783e+05
	329	36.97	-299.51	-771.95	-726.70	-344.75	-139.02	-3.730e+06	-6.222e+06	-6.195e+06	-3.758e+06	2.617e+05
168	1273	55.21	-533.78	-1122.28	-1116.57	-539.49	57.71	-6.081e+06	-1.023e+07	-1.016e+07	-6.145e+06	5.090e+05
	274	45.03	-781.96	-1023.84	-1008.32	-797.48	59.27	-5.701e+06	-8.080e+06	-8.028e+06	-5.753e+06	3.479e+05
	329	44.02	-677.22	-1062.65	-947.46	-792.41	-176.44	-5.326e+06	-8.013e+06	-7.961e+06	-5.378e+06	3.693e+05
	322	54.13	-504.41	-1116.69	-1054.62	-566.48	-184.81	-5.739e+06	-1.008e+07	-1.006e+07	-5.761e+06	3.076e+05
168	2273	42.47	-410.60	-863.29	-858.90	-414.99	44.39	-4.678e+06	-7.866e+06	-7.817e+06	-4.727e+06	3.915e+05
	274	34.64	-601.50	-787.57	-775.63	-613.44	45.59	-4.385e+06	-6.215e+06	-6.175e+06	-4.425e+06	2.676e+05
	329	33.86	-520.94	-817.42	-728.82	-609.55	-135.72	-4.097e+06	-6.164e+06	-6.124e+06	-4.137e+06	2.841e+05
	322	41.64	-388.01	-858.99	-811.24	-435.76	-142.16	-4.415e+06	-7.756e+06	-7.739e+06	-4.431e+06	2.366e+05
169	1272	63.32	-607.45	-1258.73	-1253.98	-612.19	55.39	-7.008e+06	-1.296e+07	-1.287e+07	-7.098e+06	7.285e+05
	273	50.74	-915.67	-1138.51	-1121.64	-932.55	58.95	-6.666e+06	-1.013e+07	-1.005e+07	-6.739e+06	4.958e+05
	322	49.55	-792.83	-1186.77	-1054.68	-924.93	-185.98	-6.271e+06	-9.983e+06	-9.953e+06	-6.301e+06	3.337e+05
	316	61.94	-581.18	-1248.07	-1185.85	-643.40	-193.97	-6.655e+06	-1.271e+07	-1.271e+07	-6.661e+06	1.882e+05
169	2272	48.71	-467.27	-968.25	-964.60	-470.92	42.61	-5.390e+06	-9.969e+06	-9.900e+06	-5.460e+06	5.604e+05
	273	39.03	-704.36	-875.78	-862.80	-717.34	45.35	-5.128e+06	-7.789e+06	-7.733e+06	-5.184e+06	3.814e+05
	322	38.12	-609.87	-912.90	-811.29	-711.48	-143.06	-4.824e+06	-7.680e+06	-7.656e+06	-4.847e+06	2.567e+05
	316	47.65	-447.06	-960.06	-912.19	-494.93	-149.21	-5.119e+06	-9.781e+06	-9.776e+06	-5.124e+06	1.448e+05
170	1271	74.92	-571.83	-1428.99	-1428.51	-572.32	-20.38	-7.766e+06	-1.682e+07	-1.671e+07	-7.876e+06	9.932e+05
	272	57.99	-976.32	-1273.23	-1240.07	-1009.48	93.51	-7.626e+06	-1.284e+07	-1.272e+07	-7.741e+06	7.639e+05
	316	56.46	-826.59	-1323.42	-1162.45	-987.56	-232.51	-7.222e+06	-1.257e+07	-1.256e+07	-7.227e+06	1.703e+05
	310	73.22	-616.36	-1381.69	-1355.80	-642.25	-138.37	-7.439e+06	-1.644e+07	-1.644e+07	-7.439e+06	-2.714e+04
170	2271	57.63	-439.87	-1099.23	-1098.85	-440.25	-15.68	-5.974e+06	-1.294e+07	-1.285e+07	-6.059e+06	7.640e+05
	272	44.61	-751.02	-979.40	-953.90	-776.52	71.93	-5.866e+06	-9.874e+06	-9.786e+06	-5.954e+06	5.876e+05
	316	43.43	-635.84	-1018.01	-894.19	-759.66	-178.86	-5.555e+06	-9.667e+06	-9.663e+06	-5.559e+06	1.310e+05
	310	56.32	-474.12	-1062.84	-1042.92	-494.04	-106.44	-5.722e+06	-1.265e+07	-1.265e+07	-5.722e+06	-2.088e+04
171	1270	58.59	-1194.38	-2666.58	-1346.36	-2514.60	-447.94	-1.154e+07	-2.018e+07	-1.982e+07	-1.191e+07	1.740e+06
	271	50.48	-1470.90	-2953.29	-1471.62	-2952.58	32.50	-1.161e+07	-1.634e+07	-1.614e+07	-1.180e+07	9.386e+05

310		48.87	-1327.55	-2804.67	-1350.76	-2781.47	-183.68	-1.120e+07	-1.595e+07	-1.595e+07	-1.120e+07	1.099e+05	
308		56.53	-1241.77	-2719.44	-1323.21	-2638.00	337.22	-1.096e+07	-1.942e+07	-1.935e+07	-1.103e+07	-7.745e+05	
171	2270	45.07	-918.75	-2051.22	-1035.66	-1934.31	-344.57	-8.879e+06	-1.552e+07	-1.524e+07	-9.161e+06	1.339e+06	
271		38.83	-1131.47	-2271.76	-1132.01	-2271.22	25.00	-8.931e+06	-1.257e+07	-1.242e+07	-9.081e+06	7.220e+05	
310		37.59	-1021.19	-2157.44	-1039.04	-2139.59	-141.29	-8.616e+06	-1.227e+07	-1.227e+07	-8.618e+06	8.453e+04	
308		43.49	-955.21	-2091.88	-1017.86	-2029.23	259.40	-8.427e+06	-1.494e+07	-1.488e+07	-8.482e+06	-5.958e+05	
172	1269	48.79	-1027.83	-2154.39	-1036.04	-2146.19	-95.80	-9.647e+06	-1.680e+07	-1.675e+07	-9.699e+06	6.092e+05	
270		59.76	-1090.66	-2611.55	-1197.23	-2504.98	-388.25	-1.172e+07	-2.071e+07	-2.048e+07	-1.194e+07	1.400e+06	
308		57.89	-1100.98	-2603.35	-1131.24	-2573.10	211.03	-1.105e+07	-2.007e+07	-2.006e+07	-1.106e+07	-3.015e+05	
301		47.75	-970.62	-2064.15	-971.95	-2062.82	-38.04	-9.280e+06	-1.650e+07	-1.649e+07	-9.291e+06	2.849e+05	
172	2269	37.53	-790.64	-1657.23	-796.95	-1650.91	-73.69	-7.421e+06	-1.292e+07	-1.288e+07	-7.461e+06	4.686e+05	
270		45.97	-838.97	-2008.89	-920.95	-1926.90	-298.65	-9.014e+06	-1.593e+07	-1.576e+07	-9.186e+06	1.077e+06	
308		44.53	-846.91	-2002.57	-870.18	-1979.30	162.33	-8.504e+06	-1.544e+07	-1.543e+07	-8.511e+06	-2.319e+05	
301		36.73	-746.63	-1587.80	-747.65	-1586.79	-29.26	-7.138e+06	-1.269e+07	-1.268e+07	-7.147e+06	2.191e+05	
173	1268	38.15	-778.84	-1689.81	-791.56	-1677.09	-106.89	-7.638e+06	-1.313e+07	-1.305e+07	-7.724e+06	6.811e+05	
269		48.67	-919.92	-2122.11	-944.12	-2097.90	-168.87	-9.640e+06	-1.683e+07	-1.670e+07	-9.773e+06	9.672e+05	
301		47.34	-883.81	-2092.89	-884.39	-2092.31	26.53	-9.221e+06	-1.641e+07	-1.641e+07	-9.221e+06	-7.060e+04	
295		37.18	-744.94	-1651.45	-744.96	-1651.43	4.68	-7.340e+06	-1.283e+07	-1.283e+07	-7.340e+06	3701.55	
173	2268	29.35	-599.11	-1299.85	-608.90	-1290.07	-82.22	-5.876e+06	-1.010e+07	-1.004e+07	-5.941e+06	5.239e+05	
269		37.44	-707.63	-1632.39	-726.25	-1613.77	-129.90	-7.416e+06	-1.295e+07	-1.285e+07	-7.517e+06	7.440e+05	
301		36.41	-679.85	-1609.92	-680.30	-1609.47	20.41	-7.093e+06	-1.262e+07	-1.262e+07	-7.093e+06	-5.430e+04	
295		28.60	-573.03	-1270.35	-573.05	-1270.33	3.60	-5.646e+06	-9.870e+06	-9.870e+06	-5.646e+06	2847.35	
174	1267	27.68	-620.18	-1250.09	-629.06	-1241.21	-74.26	-5.666e+06	-9.457e+06	-9.395e+06	-5.729e+06	4.817e+05	
268		38.14	-767.39	-1685.78	-782.25	-1670.92	-115.88	-7.641e+06	-1.314e+07	-1.304e+07	-7.735e+06	7.116e+05	
295		37.15	-735.74	-1657.20	-735.87	-1657.07	11.09	-7.329e+06	-1.282e+07	-1.282e+07	-7.329e+06	-2.378e+04	
291		27.01	-597.23	-1229.51	-597.36	-1229.39	8.80	-5.455e+06	-9.246e+06	-9.246e+06	-5.455e+06	-1.356e+04	
174	2267	21.30	-477.06	-961.61	-483.89	-954.78	-57.12	-4.359e+06	-7.274e+06	-7.227e+06	-4.407e+06	3.705e+05	
268		29.34	-590.30	-1296.75	-601.73	-1285.32	-89.14	-5.878e+06	-1.010e+07	-1.003e+07	-5.950e+06	5.474e+05	
295		28.58	-565.95	-1274.77	-566.05	-1274.67	8.53	-5.638e+06	-9.865e+06	-9.865e+06	-5.638e+06	-1.829e+04	
291		20.77	-459.41	-945.78	-459.51	-945.69	6.77	-4.196e+06	-7.112e+06	-7.112e+06	-4.196e+06	-1.043e+04	
175	1266	17.27	-467.14	-813.96	-471.31	-809.78	-37.82	-3.711e+06	-5.787e+06	-5.754e+06	-3.744e+06	2.611e+05	
267		27.68	-618.66	-1248.54	-628.23	-1238.97	-77.05	-5.669e+06	-9.455e+06	-9.392e+06	-5.733e+06	4.860e+05	
291		27.00	-595.71	-1228.72	-595.84	-1228.58	9.14	-5.454e+06	-9.244e+06	-9.244e+06	-5.454e+06	-1.319e+04	
289		16.90	-453.88	-803.99	-454.11	-803.75	9.06	-3.595e+06	-5.673e+06	-5.673e+06	-3.595e+06	-1.379e+04	
175	2266	13.29	-359.34	-626.12	-362.55	-622.91	-29.10	-2.854e+06	-4.452e+06	-4.426e+06	-2.880e+06	2.009e+05	
267		21.29	-475.89	-960.41	-483.25	-953.05	-59.27	-4.361e+06	-7.273e+06	-7.224e+06	-4.410e+06	3.738e+05	
291		20.77	-458.24	-945.17	-458.34	-945.06	7.03	-4.195e+06	-7.111e+06	-7.111e+06	-4.195e+06	-1.014e+04	
289		13.00	-349.13	-618.45	-349.32	-618.27	6.97	-2.765e+06	-4.364e+06	-4.364e+06	-2.765e+06	-1.061e+04	
176	1265	5.03	-283.97	-298.61	-294.23	-288.35	6.70	-1.364e+06	-1.384e+06	-1.369e+06	-1.380e+06	-8145.42	
266		17.27	-465.54	-814.36	-469.93	-809.97	-38.89	-3.709e+06	-5.787e+06	-5.753e+06	-3.743e+06	2.613e+05	
289		16.89	-451.99	-804.70	-452.16	-804.54	7.59	-3.590e+06	-5.673e+06	-5.673e+06	-3.590e+06	-8967.80	
176	2265	3.87	-218.44	-229.70	-226.33	-221.81	5.16	-1.050e+06	-1.065e+06	-1.053e+06	-1.061e+06	-6265.71	
266		13.28	-358.11	-626.43	-361.48	-623.05	-29.91	-2.853e+06	-4.451e+06	-4.426e+06	-2.879e+06	2.010e+05	
289		13.00	-347.69	-619.00	-347.81	-618.87	5.84	-2.761e+06	-4.364e+06	-4.364e+06	-2.761e+06	-6898.31	
177	1392	11.04	663.73	-61.73	-46.93	648.93	102.55	-7339.40	-1.559e+05	-1.059e+04	-1.527e+05	2.172e+04	
399		10.32	646.73	-5.42	8.71	632.61	94.94	2189.10	-1.348e+05	2177.44	-1.347e+05	1263.40	

462		8.58	576.05	-23.66	-9.26	561.65	-91.82	3356.72	-1.004e+05	3209.01	-1.003e+05	3912.42
457		9.84	581.03	-40.15	-8.26	549.15	-137.07	-999.81	-1.416e+05	-3.905e+04	-1.035e+05	6.246e+04
177	2392	8.49	510.56	-47.49	-36.10	499.17	78.89	-5645.69	-1.199e+05	-8143.32	-1.174e+05	1.671e+04
399		7.94	497.49	-4.17	6.70	486.62	73.03	1683.92	-1.037e+05	1674.96	-1.037e+05	971.84
462		6.60	443.12	-18.20	-7.12	432.04	-70.63	2582.09	-7.725e+04	2468.47	-7.713e+04	3009.56
457		7.57	446.95	-30.88	-6.36	422.42	-105.44	-769.08	-1.089e+05	-3.004e+04	-7.963e+04	4.804e+04
178	1388	12.08	659.68	-125.48	-112.42	646.62	100.41	-5.797e+04	-2.669e+05	-6.412e+04	-2.608e+05	3.533e+04
392		11.15	638.79	-61.67	-47.59	624.72	98.29	1725.73	-2.137e+05	456.78	-2.124e+05	1.648e+04
457		9.46	583.12	-57.15	-29.75	555.72	-129.58	1173.06	-1.717e+05	-2.948e+04	-1.410e+05	6.602e+04
451		10.84	594.07	-75.11	-31.02	549.98	-166.01	-2.414e+04	-2.474e+05	-1.226e+05	-1.489e+05	1.108e+05
178	2388	9.29	507.44	-96.52	-86.48	497.40	77.24	-4.459e+04	-2.053e+05	-4.932e+04	-2.006e+05	2.718e+04
392		8.58	491.38	-47.44	-36.61	480.55	75.61	1327.48	-1.644e+05	351.37	-1.634e+05	1.268e+04
457		7.28	448.56	-43.96	-22.88	427.48	-99.68	902.35	-1.321e+05	-2.268e+04	-1.085e+05	5.079e+04
451		8.34	456.98	-57.77	-23.86	423.06	-127.70	-1.857e+04	-1.903e+05	-9.430e+04	-1.146e+05	8.527e+04
179	1383	13.38	644.20	-202.16	-189.91	631.95	101.07	-1.649e+05	-4.309e+05	-1.733e+05	-4.225e+05	4.642e+04
388		12.25	602.48	-127.59	-115.53	590.42	93.08	-4.352e+04	-3.485e+05	-4.604e+04	-3.460e+05	2.756e+04
451		10.23	582.79	-86.94	-48.85	544.70	-155.10	-2.294e+04	-2.817e+05	-1.118e+05	-1.928e+05	1.229e+05
446		12.12	584.89	-110.13	-49.16	523.93	-196.61	-5.536e+04	-4.005e+05	-2.585e+05	-1.974e+05	1.699e+05
179	2383	10.29	495.54	-155.51	-146.08	486.12	77.75	-1.269e+05	-3.314e+05	-1.333e+05	-3.250e+05	3.571e+04
388		9.43	463.45	-98.15	-88.87	454.17	71.60	-3.348e+04	-2.681e+05	-3.541e+04	-2.661e+05	2.120e+04
451		7.87	448.30	-66.87	-37.58	419.00	-119.31	-1.764e+04	-2.167e+05	-8.599e+04	-1.483e+05	9.451e+04
446		9.32	449.92	-84.71	-37.82	403.02	-151.24	-4.258e+04	-3.081e+05	-1.988e+05	-1.519e+05	1.307e+05
180	1375	15.14	640.59	-256.74	-247.46	631.31	90.76	-3.902e+05	-6.636e+05	-3.980e+05	-6.558e+05	4.547e+04
383		13.36	520.28	-225.36	-212.15	507.07	98.37	-1.376e+05	-5.380e+05	-1.397e+05	-5.359e+05	2.843e+04
446		11.73	604.34	-99.46	-45.64	550.52	-187.03	-5.373e+04	-4.540e+05	-2.542e+05	-2.536e+05	2.002e+05
438		12.35	498.44	-176.08	-103.22	425.58	-209.38	-6.508e+04	-5.464e+05	-4.114e+05	-2.001e+05	2.162e+05
180	2375	11.64	492.76	-197.49	-190.35	485.62	69.82	-3.002e+05	-5.104e+05	-3.062e+05	-5.044e+05	3.498e+04
383		10.28	400.21	-173.35	-163.19	390.05	75.67	-1.059e+05	-4.138e+05	-1.074e+05	-4.122e+05	2.187e+04
446		9.03	464.88	-76.51	-35.11	423.48	-143.87	-4.133e+04	-3.493e+05	-1.955e+05	-1.951e+05	1.540e+05
438		9.50	383.42	-135.45	-79.40	327.37	-161.06	-5.006e+04	-4.203e+05	-3.164e+05	-1.539e+05	1.663e+05
181	1373	15.46	511.52	-273.98	-266.77	504.31	74.95	-6.865e+05	-8.988e+05	-7.560e+05	-8.292e+05	9.963e+04
375		15.78	530.74	-231.59	-205.52	504.67	138.54	-5.183e+05	-8.742e+05	-5.465e+05	-8.460e+05	-9.616e+04
438		16.54	488.36	-306.55	-220.97	402.78	-246.38	3.560e+05	-5.310e+05	-1.335e+04	-1.616e+05	4.373e+05
433		14.66	547.04	-329.60	-271.09	488.53	-218.78	-2.553e+05	-8.061e+05	-5.483e+05	-5.131e+05	2.748e+05
181	2373	11.89	393.48	-210.76	-205.20	387.93	57.65	-5.281e+05	-6.914e+05	-5.816e+05	-6.379e+05	7.664e+04
375		12.14	408.26	-178.14	-158.09	388.21	106.57	-3.987e+05	-6.724e+05	-4.204e+05	-6.507e+05	-7.397e+04
438		12.73	375.66	-235.81	-169.98	309.83	-189.52	2.739e+05	-4.084e+05	-1.027e+04	-1.243e+05	3.363e+05
433		11.28	420.80	-253.54	-208.53	375.79	-168.29	-1.964e+05	-6.201e+05	-4.218e+05	-3.947e+05	2.114e+05
182	1367	17.55	463.75	-368.82	-363.37	458.29	67.18	-9.486e+05	-1.266e+06	-1.113e+06	-1.101e+06	1.586e+05
373		14.90	384.03	-293.40	-285.60	376.23	72.29	-7.168e+05	-1.031e+06	-7.316e+05	-1.016e+06	6.652e+04
433		13.75	451.72	-348.83	-286.11	388.99	-215.13	-2.345e+05	-8.703e+05	-5.171e+05	-5.877e+05	3.159e+05
427		17.36	462.33	-385.95	-319.49	395.87	-227.93	-5.999e+05	-1.269e+06	-1.065e+06	-8.038e+05	3.079e+05
182	2367	13.50	356.73	-283.71	-279.51	352.53	51.67	-7.297e+05	-9.739e+05	-8.564e+05	-8.473e+05	1.220e+05
373		11.46	295.41	-225.69	-219.69	289.41	55.60	-5.514e+05	-7.931e+05	-5.628e+05	-7.817e+05	5.117e+04
433		10.58	347.48	-268.33	-220.08	299.23	-165.48	-1.804e+05	-6.694e+05	-3.977e+05	-4.521e+05	2.430e+05
427		13.35	355.63	-296.88	-245.76	304.52	-175.33	-4.615e+05	-9.760e+05	-8.192e+05	-6.183e+05	2.368e+05

183	1360	21.39	381.23	-452.64	-449.15	377.73	53.88	-1.283e+06	-1.771e+06	-1.609e+06	-1.445e+06	2.300e+05
	367	16.40	288.88	-377.10	-372.17	283.95	57.05	-1.012e+06	-1.378e+06	-1.081e+06	-1.309e+06	1.424e+05
	427	15.71	353.68	-403.11	-334.73	285.30	-216.96	-6.423e+05	-1.317e+06	-1.025e+06	-9.343e+05	3.342e+05
	418	20.79	377.76	-451.07	-377.91	304.60	-235.14	-9.215e+05	-1.816e+06	-1.614e+06	-1.124e+06	3.745e+05
183	2360	16.46	293.25	-348.19	-345.50	290.56	41.44	-9.866e+05	-1.362e+06	-1.238e+06	-1.111e+06	1.769e+05
	367	12.62	222.21	-290.07	-286.29	218.43	43.88	-7.787e+05	-1.060e+06	-8.312e+05	-1.007e+06	1.096e+05
	427	12.08	272.06	-310.08	-257.49	219.46	-166.89	-4.941e+05	-1.013e+06	-7.884e+05	-7.187e+05	2.571e+05
	418	16.00	290.59	-346.98	-290.70	234.31	-180.87	-7.088e+05	-1.397e+06	-1.241e+06	-8.647e+05	2.881e+05
184	1356	25.51	280.35	-535.91	-534.17	278.61	37.59	-1.678e+06	-2.411e+06	-2.227e+06	-1.862e+06	3.176e+05
	360	19.66	177.21	-460.54	-457.46	174.13	44.20	-1.403e+06	-1.853e+06	-1.568e+06	-1.688e+06	2.169e+05
	418	18.46	242.73	-469.86	-390.24	163.11	-224.49	-1.009e+06	-1.854e+06	-1.569e+06	-1.294e+06	3.994e+05
	416	24.79	282.12	-525.01	-442.58	199.69	-244.41	-1.269e+06	-2.452e+06	-2.233e+06	-1.488e+06	4.597e+05
184	2356	19.62	215.65	-412.24	-410.90	214.32	28.92	-1.291e+06	-1.854e+06	-1.713e+06	-1.432e+06	2.443e+05
	360	15.13	136.32	-354.26	-351.89	133.95	34.00	-1.079e+06	-1.426e+06	-1.206e+06	-1.299e+06	1.669e+05
	418	14.20	186.72	-361.43	-300.18	125.47	-172.69	-7.763e+05	-1.426e+06	-1.207e+06	-9.956e+05	3.072e+05
	416	19.07	217.02	-403.85	-340.45	153.61	-188.01	-9.763e+05	-1.887e+06	-1.718e+06	-1.145e+06	3.536e+05
185	1348	29.64	164.43	-621.39	-620.95	163.99	18.75	-2.142e+06	-3.182e+06	-2.967e+06	-2.357e+06	4.211e+05
	356	23.41	45.94	-544.64	-543.26	44.56	28.54	-1.858e+06	-2.468e+06	-2.179e+06	-2.147e+06	3.049e+05
	416	22.16	124.09	-547.59	-452.45	28.95	-234.21	-1.396e+06	-2.484e+06	-2.184e+06	-1.696e+06	4.863e+05
	407	28.64	176.40	-606.24	-512.33	82.49	-254.32	-1.665e+06	-3.196e+06	-2.954e+06	-1.907e+06	5.583e+05
185	2348	22.80	126.49	-478.00	-477.65	126.14	14.42	-1.648e+06	-2.448e+06	-2.283e+06	-1.813e+06	3.239e+05
	356	18.01	35.34	-418.95	-417.89	34.28	21.95	-1.429e+06	-1.899e+06	-1.676e+06	-1.652e+06	2.345e+05
	416	17.05	95.45	-421.22	-348.03	22.27	-180.16	-1.074e+06	-1.911e+06	-1.680e+06	-1.305e+06	3.741e+05
	407	22.03	135.69	-466.34	-394.10	63.46	-195.63	-1.281e+06	-2.458e+06	-2.272e+06	-1.467e+06	4.295e+05
186	1346	33.82	37.32	-710.38	-710.38	37.31	-1.72	-2.683e+06	-4.097e+06	-3.845e+06	-2.936e+06	5.418e+05
	348	27.25	-101.49	-631.03	-630.83	-101.69	10.30	-2.377e+06	-3.224e+06	-2.912e+06	-2.690e+06	4.086e+05
	407	25.76	-0.55	-635.04	-519.76	-115.83	-244.65	-1.830e+06	-3.222e+06	-2.899e+06	-2.153e+06	5.875e+05
	403	32.49	62.73	-693.76	-586.29	-44.74	-264.11	-2.122e+06	-4.067e+06	-3.802e+06	-2.387e+06	6.680e+05
186	2346	26.02	28.71	-546.45	-546.44	28.70	-1.32	-2.064e+06	-3.152e+06	-2.957e+06	-2.259e+06	4.168e+05
	348	20.96	-78.07	-485.41	-485.26	-78.22	7.92	-1.829e+06	-2.480e+06	-2.240e+06	-2.069e+06	3.143e+05
	407	19.82	-0.42	-488.49	-399.82	-89.10	-188.19	-1.408e+06	-2.478e+06	-2.230e+06	-1.656e+06	4.519e+05
	403	24.99	48.25	-533.66	-450.99	-34.42	-203.16	-1.632e+06	-3.129e+06	-2.924e+06	-1.836e+06	5.139e+05
187	1337	38.14	-96.42	-803.86	-803.13	-97.16	-22.81	-3.310e+06	-5.183e+06	-4.887e+06	-3.605e+06	6.828e+05
	346	31.16	-260.21	-721.14	-720.94	-260.41	-9.52	-2.974e+06	-4.129e+06	-3.782e+06	-3.321e+06	5.297e+05
	403	29.38	-128.63	-732.04	-591.33	-269.35	-255.16	-2.328e+06	-4.087e+06	-3.741e+06	-2.674e+06	6.999e+05
	390	36.47	-55.63	-787.23	-664.25	-178.62	-273.59	-2.651e+06	-5.094e+06	-4.807e+06	-2.938e+06	7.865e+05
187	2337	29.34	-74.17	-618.36	-617.79	-74.74	-17.55	-2.546e+06	-3.987e+06	-3.759e+06	-2.773e+06	5.252e+05
	346	23.97	-200.16	-554.72	-554.57	-200.31	-7.33	-2.287e+06	-3.176e+06	-2.909e+06	-2.554e+06	4.075e+05
	403	22.60	-98.95	-563.11	-454.87	-207.19	-196.28	-1.790e+06	-3.144e+06	-2.877e+06	-2.057e+06	5.384e+05
	390	28.05	-42.80	-605.56	-510.96	-137.40	-210.45	-2.039e+06	-3.919e+06	-3.698e+06	-2.260e+06	6.050e+05
188	1333	42.75	-230.95	-903.00	-900.17	-233.78	-43.51	-4.027e+06	-6.481e+06	-6.140e+06	-4.368e+06	8.491e+05
	337	35.22	-424.15	-816.43	-814.15	-426.43	-29.85	-3.657e+06	-5.206e+06	-4.817e+06	-4.045e+06	6.715e+05
	390	33.12	-256.33	-838.76	-666.92	-428.17	-265.62	-2.900e+06	-5.106e+06	-4.740e+06	-3.267e+06	8.210e+05
	381	40.69	-174.16	-886.64	-746.67	-314.13	-283.08	-3.263e+06	-6.313e+06	-6.013e+06	-3.563e+06	9.086e+05
188	2333	32.88	-177.65	-694.61	-692.44	-179.83	-33.47	-3.098e+06	-4.985e+06	-4.723e+06	-3.360e+06	6.532e+05
	337	27.09	-326.27	-628.03	-626.27	-328.02	-22.96	-2.813e+06	-4.004e+06	-3.705e+06	-3.112e+06	5.165e+05

390		25.47	-197.18	-645.20	-513.02	-329.36	-204.33	-2.231e+06	-3.928e+06	-3.646e+06	-2.513e+06	6.315e+05
381		31.30	-133.97	-682.03	-574.36	-241.64	-217.76	-2.510e+06	-4.856e+06	-4.625e+06	-2.741e+06	6.989e+05
189	1329	47.88	-358.19	-1009.66	-1003.59	-364.26	-62.57	-4.837e+06	-8.065e+06	-7.678e+06	-5.224e+06	1.049e+06
333		39.52	-585.31	-918.83	-911.34	-592.80	-49.41	-4.434e+06	-6.494e+06	-6.062e+06	-4.867e+06	8.394e+05
381		37.07	-378.92	-954.81	-747.05	-586.67	-276.55	-3.560e+06	-6.313e+06	-5.938e+06	-3.935e+06	9.453e+05
372		45.37	-286.57	-992.39	-835.12	-443.84	-293.72	-3.967e+06	-7.781e+06	-7.484e+06	-4.264e+06	1.023e+06
189	2329	36.83	-275.53	-776.66	-771.99	-280.20	-48.13	-3.721e+06	-6.204e+06	-5.906e+06	-4.018e+06	8.066e+05
333		30.40	-450.24	-706.79	-701.03	-456.00	-38.01	-3.411e+06	-4.996e+06	-4.663e+06	-3.743e+06	6.457e+05
381		28.51	-291.47	-734.47	-574.65	-451.29	-212.73	-2.738e+06	-4.856e+06	-4.567e+06	-3.027e+06	7.272e+05
372		34.90	-220.44	-763.38	-642.40	-341.41	-225.94	-3.051e+06	-5.986e+06	-5.757e+06	-3.280e+06	7.868e+05
190	1322	53.95	-465.74	-1127.67	-1118.21	-475.20	-78.57	-5.726e+06	-1.006e+07	-9.627e+06	-6.155e+06	1.293e+06
329		44.27	-733.43	-1030.27	-1014.56	-749.13	-66.44	-5.305e+06	-8.064e+06	-7.589e+06	-5.781e+06	1.042e+06
372		41.40	-490.94	-1078.16	-833.34	-735.75	-289.53	-4.315e+06	-7.764e+06	-7.399e+06	-4.680e+06	1.061e+06
362		50.83	-383.64	-1106.14	-933.56	-556.21	-308.06	-4.763e+06	-9.597e+06	-9.330e+06	-5.030e+06	1.103e+06
190	2322	41.50	-358.26	-867.44	-860.16	-365.54	-60.44	-4.405e+06	-7.735e+06	-7.405e+06	-4.735e+06	9.948e+05
329		34.05	-564.18	-792.51	-780.43	-576.26	-51.11	-4.081e+06	-6.203e+06	-5.838e+06	-4.447e+06	8.015e+05
372		31.85	-377.64	-829.35	-641.03	-565.96	-222.71	-3.319e+06	-5.972e+06	-5.692e+06	-3.600e+06	8.164e+05
362		39.10	-295.11	-850.87	-718.12	-427.86	-236.97	-3.664e+06	-7.382e+06	-7.177e+06	-3.869e+06	8.486e+05
191	1316	61.73	-528.29	-1266.38	-1254.40	-540.28	-93.27	-6.643e+06	-1.268e+07	-1.222e+07	-7.102e+06	1.600e+06
322		49.80	-856.93	-1150.25	-1128.11	-879.07	-77.49	-6.255e+06	-1.003e+07	-9.522e+06	-6.768e+06	1.294e+06
362		46.39	-582.57	-1204.60	-928.53	-858.64	-309.05	-5.164e+06	-9.551e+06	-9.231e+06	-5.484e+06	1.141e+06
350		57.76	-452.73	-1232.27	-1051.34	-633.66	-329.10	-5.626e+06	-1.195e+07	-1.175e+07	-5.820e+06	1.092e+06
191	2316	47.49	-406.38	-974.14	-964.92	-415.60	-71.75	-5.110e+06	-9.755e+06	-9.401e+06	-5.463e+06	1.231e+06
322		38.31	-659.18	-884.81	-867.78	-676.21	-59.61	-4.812e+06	-7.719e+06	-7.325e+06	-5.206e+06	9.954e+05
362		35.69	-448.13	-926.62	-714.26	-660.49	-237.73	-3.972e+06	-7.347e+06	-7.101e+06	-4.218e+06	8.779e+05
350		44.43	-348.25	-947.90	-808.73	-487.43	-253.15	-4.327e+06	-9.191e+06	-9.042e+06	-4.477e+06	8.403e+05
192	1310	72.67	-430.88	-1458.43	-1423.79	-465.52	-185.46	-7.408e+06	-1.634e+07	-1.592e+07	-7.832e+06	1.899e+06
316		56.85	-955.12	-1262.40	-1250.96	-966.56	-58.19	-7.221e+06	-1.264e+07	-1.208e+07	-7.782e+06	1.651e+06
350		52.44	-592.01	-1332.14	-1019.86	-904.29	-365.53	-6.062e+06	-1.183e+07	-1.162e+07	-6.278e+06	1.094e+06
341		67.74	-539.04	-1340.51	-1207.22	-672.32	-298.43	-6.448e+06	-1.525e+07	-1.515e+07	-6.550e+06	9.418e+05
192	2310	55.90	-331.44	-1121.87	-1095.23	-358.09	-142.66	-5.699e+06	-1.257e+07	-1.225e+07	-6.025e+06	1.461e+06
316		43.73	-734.71	-971.08	-962.28	-743.51	-44.76	-5.555e+06	-9.725e+06	-9.293e+06	-5.986e+06	1.270e+06
350		40.34	-455.39	-1024.72	-784.51	-695.61	-281.17	-4.663e+06	-9.101e+06	-8.935e+06	-4.829e+06	8.414e+05
341		52.11	-414.64	-1031.16	-928.63	-517.17	-229.56	-4.960e+06	-1.173e+07	-1.165e+07	-5.038e+06	7.245e+05
193	1308	57.37	-1052.98	-2485.65	-1297.60	-2241.04	-539.09	-1.121e+07	-1.989e+07	-1.903e+07	-1.207e+07	2.598e+06
310		49.51	-1500.76	-2954.69	-1512.42	-2943.03	-129.68	-1.085e+07	-1.616e+07	-1.532e+07	-1.169e+07	1.933e+06
341		44.83	-1074.03	-2524.13	-1154.53	-2443.63	-332.04	-9.662e+06	-1.501e+07	-1.475e+07	-9.926e+06	1.158e+06
331		51.41	-1199.52	-2631.69	-1226.18	-2605.03	193.57	-9.476e+06	-1.767e+07	-1.766e+07	-9.483e+06	2.531e+05
193	2308	44.13	-809.99	-1912.04	-998.15	-1723.87	-414.69	-8.620e+06	-1.530e+07	-1.464e+07	-9.284e+06	1.999e+06
310		38.08	-1154.43	-2272.84	-1163.40	-2263.87	-99.75	-8.348e+06	-1.243e+07	-1.178e+07	-8.991e+06	1.487e+06
341		34.49	-826.18	-1941.63	-888.10	-1879.71	-255.41	-7.432e+06	-1.155e+07	-1.134e+07	-7.635e+06	8.909e+05
331		39.55	-922.71	-2024.38	-943.21	-2003.87	148.90	-7.289e+06	-1.359e+07	-1.358e+07	-7.295e+06	1.947e+05
194	1301	47.24	-998.69	-2155.78	-1048.86	-2105.61	-235.66	-9.212e+06	-1.628e+07	-1.596e+07	-9.534e+06	1.475e+06
308		58.37	-971.96	-2517.21	-1201.77	-2287.40	-549.82	-1.139e+07	-2.031e+07	-1.960e+07	-1.209e+07	2.413e+06
331		52.95	-1004.51	-2489.40	-1004.57	-2489.34	9.30	-9.447e+06	-1.845e+07	-1.837e+07	-9.523e+06	8.272e+05
320		44.20	-825.82	-1894.65	-857.40	-1863.07	-180.97	-8.144e+06	-1.540e+07	-1.521e+07	-8.338e+06	1.172e+06

194	2301	36.34	-768.22	-1658.29	-806.82	-1619.70	-181.28	-7.086e+06	-1.252e+07	-1.227e+07	-7.334e+06	1.134e+06
	308	44.90	-747.66	-1936.32	-924.43	-1759.54	-422.94	-8.758e+06	-1.562e+07	-1.508e+07	-9.303e+06	1.856e+06
	331	40.73	-772.70	-1914.92	-772.75	-1914.88	7.15	-7.267e+06	-1.419e+07	-1.413e+07	-7.326e+06	6.363e+05
	320	34.00	-635.25	-1457.42	-659.54	-1433.13	-139.21	-6.265e+06	-1.185e+07	-1.170e+07	-6.414e+06	9.014e+05
195	1295	37.14	-748.45	-1665.80	-802.42	-1611.82	-215.87	-7.322e+06	-1.281e+07	-1.247e+07	-7.668e+06	1.335e+06
	301	47.41	-871.07	-2070.57	-958.77	-1982.86	-312.27	-9.256e+06	-1.644e+07	-1.595e+07	-9.746e+06	1.811e+06
	320	43.54	-766.12	-1982.26	-780.03	-1968.34	-129.32	-8.030e+06	-1.519e+07	-1.509e+07	-8.130e+06	8.426e+05
	314	34.33	-648.79	-1551.79	-662.73	-1537.86	-111.31	-6.452e+06	-1.193e+07	-1.184e+07	-6.543e+06	7.031e+05
195	2295	28.57	-575.73	-1281.38	-617.25	-1239.86	-166.05	-5.632e+06	-9.857e+06	-9.590e+06	-5.899e+06	1.027e+06
	301	36.47	-670.05	-1592.74	-737.52	-1525.28	-240.21	-7.120e+06	-1.265e+07	-1.227e+07	-7.497e+06	1.393e+06
	320	33.49	-589.32	-1524.81	-600.02	-1514.11	-99.48	-6.177e+06	-1.169e+07	-1.161e+07	-6.254e+06	6.481e+05
	314	26.41	-499.07	-1193.69	-509.79	-1182.97	-85.63	-4.963e+06	-9.178e+06	-9.108e+06	-5.033e+06	5.408e+05
196	1291	27.00	-597.35	-1230.09	-635.00	-1192.44	-149.69	-5.452e+06	-9.245e+06	-8.999e+06	-5.698e+06	9.349e+05
	295	37.16	-733.73	-1654.14	-793.53	-1594.35	-226.86	-7.336e+06	-1.283e+07	-1.247e+07	-7.700e+06	1.367e+06
	314	34.28	-641.69	-1567.72	-654.45	-1554.96	-107.94	-6.426e+06	-1.192e+07	-1.183e+07	-6.512e+06	6.805e+05
	303	25.03	-531.72	-1166.53	-540.03	-1158.23	-72.13	-4.838e+06	-8.627e+06	-8.567e+06	-4.898e+06	4.731e+05
196	2291	20.77	-459.50	-946.22	-488.46	-917.26	-115.14	-4.194e+06	-7.112e+06	-6.922e+06	-4.383e+06	7.192e+05
	295	28.58	-564.41	-1272.42	-610.41	-1226.42	-174.50	-5.643e+06	-9.869e+06	-9.589e+06	-5.923e+06	1.051e+06
	314	26.37	-493.61	-1205.94	-503.42	-1196.12	-83.03	-4.943e+06	-9.168e+06	-9.102e+06	-5.009e+06	5.235e+05
	303	19.25	-409.02	-897.33	-415.41	-890.95	-55.48	-3.721e+06	-6.636e+06	-6.590e+06	-3.768e+06	3.639e+05
197	1289	16.90	-453.92	-803.34	-472.79	-784.47	-78.99	-3.593e+06	-5.673e+06	-5.540e+06	-3.726e+06	5.089e+05
	291	27.00	-594.69	-1229.30	-634.98	-1189.02	-154.74	-5.456e+06	-9.247e+06	-8.995e+06	-5.707e+06	9.436e+05
	303	25.02	-529.20	-1167.66	-537.97	-1158.90	-74.30	-4.830e+06	-8.628e+06	-8.566e+06	-4.891e+06	4.782e+05
	293	15.80	-418.11	-770.09	-421.69	-766.50	-35.35	-3.259e+06	-5.336e+06	-5.304e+06	-3.290e+06	2.529e+05
197	2289	13.00	-349.17	-617.95	-363.69	-603.44	-60.76	-2.764e+06	-4.364e+06	-4.262e+06	-2.866e+06	3.915e+05
	291	20.77	-457.45	-945.62	-488.44	-914.63	-119.03	-4.197e+06	-7.113e+06	-6.919e+06	-4.390e+06	7.258e+05
	303	19.25	-407.08	-898.20	-413.82	-891.46	-57.16	-3.716e+06	-6.637e+06	-6.590e+06	-3.763e+06	3.678e+05
	293	12.16	-321.62	-592.38	-324.38	-589.62	-27.19	-2.507e+06	-4.104e+06	-4.080e+06	-2.531e+06	1.946e+05
198	1265	5.03	-285.13	-296.91	-290.78	-291.27	5.88	-1.367e+06	-1.382e+06	-1.373e+06	-1.376e+06	-7092.71
	289	16.90	-451.67	-804.44	-472.12	-783.99	-82.44	-3.592e+06	-5.674e+06	-5.539e+06	-3.728e+06	5.140e+05
	293	15.80	-414.99	-772.22	-419.36	-767.85	-39.25	-3.248e+06	-5.339e+06	-5.306e+06	-3.282e+06	2.624e+05
198	2265	3.87	-219.33	-228.39	-223.67	-224.05	4.53	-1.052e+06	-1.063e+06	-1.056e+06	-1.059e+06	-5455.93
	289	13.00	-347.44	-618.80	-363.17	-603.07	-63.42	-2.763e+06	-4.365e+06	-4.260e+06	-2.868e+06	3.954e+05
	293	12.15	-319.23	-594.01	-322.58	-590.66	-30.19	-2.499e+06	-4.107e+06	-4.081e+06	-2.524e+06	2.018e+05
199	1457	8.35	569.40	-48.78	-31.80	552.42	101.02	-222.25	-1.159e+05	-1.239e+04	-1.037e+05	3.549e+04
	462	7.44	516.47	-2.36	12.06	502.04	85.31	2493.84	-8.696e+04	2476.22	-8.695e+04	1255.33
	502	9.34	549.75	-24.20	-12.98	538.54	-79.43	2393.62	-1.259e+05	2254.94	-1.257e+05	4215.52
	495	10.47	527.16	-36.65	-16.24	506.75	-105.32	4855.61	-1.653e+05	-3.198e+04	-1.285e+05	7.007e+04
199	2457	6.42	438.00	-37.52	-24.46	424.94	77.71	-170.96	-8.917e+04	-9532.14	-7.980e+04	2.730e+04
	462	5.72	397.28	-1.82	9.28	386.18	65.62	1918.34	-6.689e+04	1904.79	-6.688e+04	965.64
	502	7.18	422.89	-18.61	-9.99	414.26	-61.10	1841.25	-9.683e+04	1734.57	-9.672e+04	3242.71
	495	8.05	405.51	-28.19	-12.49	389.81	-81.01	3735.09	-1.271e+05	-2.460e+04	-9.881e+04	5.390e+04
200	1451	8.50	576.20	-73.74	-56.29	558.75	105.07	-5.784e+04	-1.937e+05	-8.065e+04	-1.709e+05	5.078e+04
	457	8.29	561.55	-40.94	-24.87	545.47	97.09	599.51	-1.489e+05	-5209.75	-1.431e+05	2.889e+04
	495	10.09	511.67	-60.03	-42.43	494.07	-98.75	6034.83	-2.043e+05	-2.145e+04	-1.768e+05	7.089e+04
	489	12.00	537.89	-94.11	-67.08	510.85	-127.88	-9798.35	-2.785e+05	-8.686e+04	-2.014e+05	1.215e+05

200	2451	6.54	443.23	-56.72	-43.30	429.81	80.83	-4.449e+04	-1.490e+05	-6.204e+04	-1.314e+05	3.906e+04
	457	6.38	431.96	-31.49	-19.13	419.59	74.69	461.16	-1.145e+05	-4007.50	-1.101e+05	2.223e+04
	495	7.76	393.59	-46.18	-32.64	380.06	-75.96	4642.18	-1.571e+05	-1.650e+04	-1.360e+05	5.453e+04
	489	9.23	413.76	-72.39	-51.60	392.96	-98.37	-7537.19	-2.142e+05	-6.681e+04	-1.550e+05	9.348e+04
201	1446	8.92	576.62	-95.17	-74.58	556.03	115.80	-1.800e+05	-2.937e+05	-2.071e+05	-2.665e+05	4.850e+04
	451	8.41	554.08	-69.55	-53.64	538.18	98.31	-6.037e+04	-2.324e+05	-7.132e+04	-2.214e+05	4.198e+04
	489	11.42	495.86	-111.02	-87.32	472.16	-117.57	-8680.61	-3.298e+05	-7.186e+04	-2.666e+05	1.276e+05
	484	14.17	536.68	-171.82	-132.03	496.88	-163.13	-3.716e+04	-4.521e+05	-1.767e+05	-3.125e+05	1.960e+05
201	2446	6.86	443.56	-73.21	-57.37	427.71	89.08	-1.384e+05	-2.259e+05	-1.593e+05	-2.050e+05	3.731e+04
	451	6.47	426.22	-53.50	-41.26	413.98	75.63	-4.644e+04	-1.787e+05	-5.486e+04	-1.703e+05	3.229e+04
	489	8.79	381.43	-85.40	-67.17	363.20	-90.43	-6677.39	-2.537e+05	-5.528e+04	-2.051e+05	9.819e+04
	484	10.90	412.83	-132.17	-101.56	382.22	-125.48	-2.858e+04	-3.477e+05	-1.359e+05	-2.404e+05	1.508e+05
202	1438	12.14	652.58	-61.09	-39.48	630.97	122.28	-3.937e+05	-4.897e+05	-3.942e+05	-4.892e+05	-6643.78
	446	8.04	483.94	-123.20	-100.68	461.42	114.74	-1.881e+05	-3.199e+05	-1.958e+05	-3.122e+05	3.084e+04
	484	13.88	526.65	-153.96	-119.08	491.78	-150.07	-4.192e+04	-5.345e+05	-1.589e+05	-4.175e+05	2.096e+05
	477	17.58	431.89	-332.69	-271.12	370.32	-208.06	1.385e+04	-7.115e+05	-2.966e+05	-4.010e+05	3.589e+05
202	2438	9.34	501.98	-46.99	-30.37	485.36	94.06	-3.028e+05	-3.767e+05	-3.032e+05	-3.763e+05	-5110.60
	446	6.19	372.26	-94.77	-77.45	354.94	88.26	-1.447e+05	-2.461e+05	-1.506e+05	-2.402e+05	2.372e+04
	484	10.67	405.12	-118.43	-91.60	378.29	-115.43	-3.225e+04	-4.112e+05	-1.222e+05	-3.212e+05	1.612e+05
	477	13.52	332.23	-255.92	-208.55	284.86	-160.05	1.066e+04	-5.473e+05	-2.282e+05	-3.085e+05	2.761e+05
203	1433	13.63	480.68	-314.20	-310.43	476.91	54.59	-2.628e+05	-7.869e+05	-4.221e+05	-6.276e+05	2.411e+05
	438	14.22	520.33	-313.05	-297.42	504.70	113.04	1.307e+05	-5.322e+05	1.223e+05	-5.238e+05	7.418e+04
	477	16.34	406.70	-186.08	-95.69	316.31	-213.10	-1.926e+05	-8.980e+05	-5.550e+05	-5.357e+05	3.525e+05
	471	17.53	484.74	-239.79	-177.24	422.19	-203.49	-2.814e+05	-1.008e+06	-7.084e+05	-5.814e+05	3.579e+05
203	2433	10.49	369.75	-241.69	-238.79	366.85	42.00	-2.022e+05	-6.053e+05	-3.247e+05	-4.828e+05	1.854e+05
	438	10.93	400.25	-240.81	-228.79	388.23	86.96	1.005e+05	-4.094e+05	9.408e+04	-4.029e+05	5.706e+04
	477	12.57	312.85	-143.14	-73.61	243.32	-163.92	-1.482e+05	-6.908e+05	-4.269e+05	-4.121e+05	2.712e+05
	471	13.48	372.88	-184.45	-136.34	324.76	-156.53	-2.165e+05	-7.757e+05	-5.449e+05	-4.472e+05	2.753e+05
204	1427	16.93	454.96	-379.49	-378.83	454.30	23.46	-5.815e+05	-1.258e+06	-8.948e+05	-9.443e+05	3.372e+05
	433	13.21	401.76	-331.25	-327.54	398.05	52.04	-2.913e+05	-8.766e+05	-3.885e+05	-7.794e+05	2.178e+05
	471	15.97	361.99	-263.04	-190.89	289.83	-199.73	-2.952e+05	-1.074e+06	-6.872e+05	-6.820e+05	3.894e+05
	466	19.27	402.97	-320.01	-236.09	319.05	-231.58	-3.891e+05	-1.347e+06	-1.001e+06	-7.357e+05	4.604e+05
204	2427	13.03	349.97	-291.92	-291.41	349.46	18.05	-4.473e+05	-9.674e+05	-6.883e+05	-7.264e+05	2.594e+05
	433	10.16	309.04	-254.81	-251.95	306.19	40.03	-2.241e+05	-6.743e+05	-2.989e+05	-5.996e+05	1.675e+05
	471	12.28	278.45	-202.34	-146.84	222.95	-153.64	-2.271e+05	-8.262e+05	-5.286e+05	-5.246e+05	2.995e+05
	466	14.82	309.98	-246.16	-181.60	245.42	-178.14	-2.993e+05	-1.036e+06	-7.697e+05	-5.659e+05	3.541e+05
205	1418	20.74	379.98	-444.97	-444.89	379.91	-7.73	-8.980e+05	-1.798e+06	-1.391e+06	-1.305e+06	4.479e+05
	427	15.69	307.82	-385.12	-384.73	307.43	16.43	-6.377e+05	-1.343e+06	-8.573e+05	-1.123e+06	3.266e+05
	466	17.32	301.38	-339.57	-251.54	213.36	-220.62	-4.290e+05	-1.404e+06	-9.722e+05	-8.606e+05	4.842e+05
	459	21.57	346.07	-397.98	-295.21	243.30	-256.72	-5.630e+05	-1.801e+06	-1.414e+06	-9.499e+05	5.740e+05
205	2418	15.95	292.30	-342.28	-342.23	292.24	-5.95	-6.908e+05	-1.383e+06	-1.070e+06	-1.004e+06	3.446e+05
	427	12.07	236.79	-296.25	-295.95	236.49	12.64	-4.906e+05	-1.033e+06	-6.595e+05	-8.642e+05	2.512e+05
	466	13.33	231.83	-261.20	-193.49	164.12	-169.70	-3.300e+05	-1.080e+06	-7.478e+05	-6.620e+05	3.724e+05
	459	16.59	266.21	-306.14	-227.09	187.15	-197.47	-4.330e+05	-1.386e+06	-1.088e+06	-7.307e+05	4.415e+05
206	1416	24.61	291.54	-518.50	-516.82	289.86	-36.93	-1.247e+06	-2.426e+06	-1.952e+06	-1.722e+06	5.784e+05
	418	18.92	197.00	-451.54	-451.22	196.68	-14.42	-9.886e+05	-1.887e+06	-1.350e+06	-1.526e+06	4.406e+05

459		19.30	235.37	-418.62	-307.04	123.79	-246.01	-6.208e+05	-1.852e+06	-1.379e+06	-1.094e+06	5.991e+05
449		24.17	279.79	-478.43	-353.29	154.65	-281.46	-7.848e+05	-2.364e+06	-1.933e+06	-1.216e+06	7.037e+05
206	2416	18.93	224.26	-398.85	-397.55	222.97	-28.41	-9.592e+05	-1.866e+06	-1.501e+06	-1.324e+06	4.449e+05
418		14.55	151.54	-347.34	-347.09	151.29	-11.09	-7.604e+05	-1.452e+06	-1.038e+06	-1.174e+06	3.389e+05
459		14.85	181.05	-322.01	-236.19	95.22	-189.24	-4.775e+05	-1.425e+06	-1.061e+06	-8.415e+05	4.608e+05
449		18.59	215.22	-368.02	-271.76	118.97	-216.51	-6.037e+05	-1.819e+06	-1.487e+06	-9.355e+05	5.413e+05
207	1407	28.39	193.15	-599.73	-594.19	187.60	-66.05	-1.644e+06	-3.163e+06	-2.604e+06	-2.204e+06	7.326e+05
416		22.58	74.96	-527.97	-524.81	71.80	-43.53	-1.374e+06	-2.522e+06	-1.906e+06	-1.989e+06	5.724e+05
449		21.63	159.47	-503.17	-361.94	18.24	-271.36	-8.620e+05	-2.412e+06	-1.892e+06	-1.382e+06	7.321e+05
440		26.95	204.13	-563.47	-412.71	53.38	-304.95	-1.050e+06	-3.039e+06	-2.554e+06	-1.535e+06	8.536e+05
207	2407	21.84	148.57	-461.33	-457.07	144.31	-50.81	-1.265e+06	-2.433e+06	-2.003e+06	-1.695e+06	5.636e+05
416		17.37	57.66	-406.13	-403.70	55.23	-33.48	-1.057e+06	-1.940e+06	-1.466e+06	-1.530e+06	4.403e+05
449		16.64	122.67	-387.06	-278.42	14.03	-208.74	-6.631e+05	-1.856e+06	-1.455e+06	-1.063e+06	5.631e+05
440		20.73	157.03	-433.44	-317.47	41.06	-234.58	-8.079e+05	-2.337e+06	-1.965e+06	-1.181e+06	6.566e+05
208	1403	32.21	87.39	-688.15	-676.16	75.40	-95.68	-2.101e+06	-4.031e+06	-3.374e+06	-2.758e+06	9.145e+05
407		26.18	-54.75	-613.51	-603.92	-64.33	-72.55	-1.809e+06	-3.265e+06	-2.553e+06	-2.521e+06	7.279e+05
440		24.16	75.80	-595.03	-418.20	-101.03	-295.56	-1.149e+06	-3.085e+06	-2.507e+06	-1.727e+06	8.855e+05
429		30.14	121.81	-653.82	-474.52	-57.49	-326.99	-1.363e+06	-3.834e+06	-3.288e+06	-1.909e+06	1.025e+06
208	2403	24.77	67.22	-529.35	-520.13	58.00	-73.60	-1.616e+06	-3.101e+06	-2.595e+06	-2.122e+06	7.035e+05
407		20.14	-42.11	-471.93	-464.56	-49.48	-55.81	-1.391e+06	-2.512e+06	-1.964e+06	-1.939e+06	5.599e+05
440		18.58	58.31	-457.72	-321.69	-77.71	-227.35	-8.840e+05	-2.373e+06	-1.928e+06	-1.328e+06	6.812e+05
429		23.18	93.70	-502.94	-365.02	-44.22	-251.53	-1.048e+06	-2.949e+06	-2.529e+06	-1.468e+06	7.886e+05
209	1390	36.16	-22.28	-783.68	-762.42	-43.55	-125.46	-2.629e+06	-5.055e+06	-4.291e+06	-3.393e+06	1.127e+06
403		29.81	-188.48	-708.36	-687.54	-209.30	-101.93	-2.307e+06	-4.139e+06	-3.317e+06	-3.128e+06	9.111e+05
429		27.15	-12.18	-695.08	-476.88	-230.37	-318.43	-1.486e+06	-3.878e+06	-3.235e+06	-2.129e+06	1.061e+06
424		33.61	35.79	-749.60	-539.36	-174.46	-347.74	-1.731e+06	-4.767e+06	-4.156e+06	-2.342e+06	1.217e+06
209	2390	27.82	-17.14	-602.83	-586.48	-33.50	-96.51	-2.022e+06	-3.889e+06	-3.301e+06	-2.610e+06	8.670e+05
403		22.93	-144.98	-544.90	-528.88	-161.00	-78.41	-1.774e+06	-3.184e+06	-2.552e+06	-2.406e+06	7.008e+05
429		20.89	-9.37	-534.68	-366.83	-177.21	-244.95	-1.143e+06	-2.983e+06	-2.489e+06	-1.638e+06	8.159e+05
424		25.85	27.53	-576.61	-414.89	-134.20	-267.49	-1.332e+06	-3.667e+06	-3.197e+06	-1.802e+06	9.363e+05
210	1381	40.38	-131.36	-886.42	-853.31	-164.47	-154.61	-3.239e+06	-6.272e+06	-5.397e+06	-4.113e+06	1.374e+06
390		33.56	-321.58	-813.19	-775.19	-359.58	-131.29	-2.879e+06	-5.167e+06	-4.228e+06	-3.818e+06	1.125e+06
424		30.41	-101.11	-803.19	-538.67	-365.63	-340.21	-1.881e+06	-4.809e+06	-4.097e+06	-2.593e+06	1.256e+06
414		37.27	-50.54	-850.49	-607.92	-293.12	-367.70	-2.166e+06	-5.863e+06	-5.192e+06	-2.837e+06	1.425e+06
210	2381	31.06	-101.05	-681.86	-656.39	-126.52	-118.93	-2.491e+06	-4.824e+06	-4.152e+06	-3.164e+06	1.057e+06
390		25.82	-247.37	-625.53	-596.30	-276.60	-100.99	-2.215e+06	-3.975e+06	-3.252e+06	-2.937e+06	8.657e+05
424		23.39	-77.78	-617.84	-414.36	-281.25	-261.70	-1.447e+06	-3.699e+06	-3.152e+06	-1.995e+06	9.664e+05
414		28.67	-38.88	-654.23	-467.63	-225.47	-282.85	-1.666e+06	-4.510e+06	-3.994e+06	-2.182e+06	1.096e+06
211	1372	45.05	-233.77	-996.74	-950.45	-280.07	-182.15	-3.940e+06	-7.737e+06	-6.759e+06	-4.918e+06	1.660e+06
381		37.53	-448.69	-927.98	-867.06	-509.61	-159.64	-3.538e+06	-6.384e+06	-5.327e+06	-4.595e+06	1.375e+06
414		33.83	-187.71	-918.14	-604.38	-501.48	-361.57	-2.346e+06	-5.901e+06	-5.126e+06	-3.120e+06	1.467e+06
405		41.25	-132.79	-956.08	-681.63	-407.24	-388.11	-2.683e+06	-7.161e+06	-6.450e+06	-3.393e+06	1.636e+06
211	2372	34.65	-179.83	-766.73	-731.11	-215.44	-140.12	-3.031e+06	-5.952e+06	-5.200e+06	-3.783e+06	1.277e+06
381		28.87	-345.14	-713.83	-666.97	-392.00	-122.80	-2.722e+06	-4.911e+06	-4.097e+06	-3.535e+06	1.058e+06
414		26.03	-144.40	-706.26	-464.91	-385.75	-278.13	-1.804e+06	-4.539e+06	-3.943e+06	-2.400e+06	1.129e+06
405		31.73	-102.15	-735.45	-524.33	-313.26	-298.54	-2.064e+06	-5.508e+06	-4.962e+06	-2.610e+06	1.258e+06

212	1362	50.50	-319.86	-1116.36	-1058.15	-378.07	-207.31	-4.737e+06	-9.548e+06	-8.493e+06	-5.792e+06	1.991e+06
	372	41.87	-564.39	-1050.75	-964.73	-650.41	-185.57	-4.294e+06	-7.843e+06	-6.679e+06	-5.457e+06	1.666e+06
	405	37.54	-267.96	-1037.58	-675.53	-630.02	-384.14	-2.896e+06	-7.189e+06	-6.376e+06	-3.708e+06	1.682e+06
	394	45.76	-204.33	-1066.88	-763.73	-507.47	-411.80	-3.299e+06	-8.724e+06	-8.021e+06	-4.003e+06	1.822e+06
212	2362	38.84	-246.05	-858.74	-813.96	-290.82	-159.47	-3.644e+06	-7.344e+06	-6.533e+06	-4.455e+06	1.531e+06
	372	32.20	-434.15	-808.27	-742.10	-500.32	-142.75	-3.303e+06	-6.033e+06	-5.138e+06	-4.198e+06	1.281e+06
	405	28.87	-206.12	-798.14	-519.64	-484.63	-295.49	-2.228e+06	-5.530e+06	-4.905e+06	-2.853e+06	1.294e+06
	394	35.20	-157.18	-820.67	-587.49	-390.36	-316.77	-2.538e+06	-6.711e+06	-6.170e+06	-3.079e+06	1.402e+06
213	1350	57.36	-365.98	-1252.14	-1185.73	-432.40	-233.33	-5.601e+06	-1.189e+07	-1.081e+07	-6.675e+06	2.365e+06
	362	46.85	-663.78	-1176.69	-1072.27	-768.20	-206.53	-5.149e+06	-9.635e+06	-8.398e+06	-6.386e+06	2.005e+06
	394	41.68	-332.64	-1157.67	-753.99	-736.32	-412.42	-3.548e+06	-8.732e+06	-7.935e+06	-4.345e+06	1.870e+06
	377	51.27	-256.92	-1186.74	-862.05	-581.60	-443.26	-4.026e+06	-1.068e+07	-1.007e+07	-4.636e+06	1.919e+06
213	2350	44.13	-281.52	-963.19	-912.10	-332.61	-179.49	-4.309e+06	-9.143e+06	-8.317e+06	-5.134e+06	1.819e+06
	362	36.04	-510.60	-905.15	-824.83	-590.92	-158.87	-3.960e+06	-7.412e+06	-6.460e+06	-4.912e+06	1.542e+06
	394	32.06	-255.87	-890.52	-579.99	-566.40	-317.25	-2.729e+06	-6.717e+06	-6.104e+06	-3.342e+06	1.439e+06
	377	39.44	-197.63	-912.88	-663.12	-447.39	-340.97	-3.097e+06	-8.214e+06	-7.745e+06	-3.566e+06	1.477e+06
214	1341	66.70	-227.20	-1442.16	-1340.83	-328.53	-335.92	-6.384e+06	-1.506e+07	-1.414e+07	-7.310e+06	2.679e+06
	350	53.17	-764.83	-1289.79	-1192.98	-861.64	-203.59	-6.073e+06	-1.196e+07	-1.069e+07	-7.350e+06	2.428e+06
	377	46.44	-317.72	-1269.99	-824.45	-763.26	-475.15	-4.292e+06	-1.061e+07	-9.948e+06	-4.957e+06	1.940e+06
	365	59.04	-356.28	-1297.71	-995.56	-658.43	-439.50	-4.849e+06	-1.333e+07	-1.291e+07	-5.270e+06	1.843e+06
214	2341	51.31	-174.77	-1109.35	-1031.41	-252.72	-258.40	-4.911e+06	-1.159e+07	-1.087e+07	-5.623e+06	2.061e+06
	350	40.90	-588.33	-992.15	-917.68	-662.80	-156.61	-4.671e+06	-9.204e+06	-8.221e+06	-5.654e+06	1.868e+06
	377	35.72	-244.40	-976.92	-634.20	-587.12	-365.50	-3.301e+06	-8.164e+06	-7.652e+06	-3.813e+06	1.493e+06
	365	45.42	-274.06	-998.24	-765.81	-506.49	-338.08	-3.730e+06	-1.026e+07	-9.933e+06	-4.054e+06	1.417e+06
215	1331	53.01	-829.08	-2185.67	-1179.34	-1835.41	-593.69	-9.975e+06	-1.856e+07	-1.704e+07	-1.150e+07	3.279e+06
	341	46.05	-1410.08	-2812.60	-1469.32	-2753.35	-282.10	-9.101e+06	-1.530e+07	-1.353e+07	-1.086e+07	2.796e+06
	365	38.82	-728.40	-2130.33	-898.79	-1959.94	-458.09	-7.224e+06	-1.346e+07	-1.262e+07	-8.061e+06	2.126e+06
	354	43.71	-1063.67	-2416.70	-1064.69	-2415.68	37.14	-7.177e+06	-1.507e+07	-1.486e+07	-7.385e+06	1.262e+06
215	2331	40.78	-637.76	-1681.28	-907.18	-1411.86	-456.69	-7.673e+06	-1.428e+07	-1.310e+07	-8.845e+06	2.523e+06
	341	35.42	-1084.68	-2163.54	-1130.25	-2117.96	-217.00	-7.001e+06	-1.177e+07	-1.041e+07	-8.357e+06	2.150e+06
	365	29.86	-560.31	-1638.72	-691.38	-1507.64	-352.38	-5.557e+06	-1.035e+07	-9.710e+06	-6.201e+06	1.635e+06
	354	33.63	-818.21	-1859.00	-818.99	-1858.22	28.57	-5.521e+06	-1.159e+07	-1.143e+07	-5.681e+06	9.709e+05
216	1320	43.24	-886.54	-2065.15	-1009.28	-1942.41	-359.99	-7.998e+06	-1.498e+07	-1.417e+07	-8.811e+06	2.240e+06
	331	53.87	-757.69	-2320.56	-1143.58	-1934.68	-673.93	-1.008e+07	-1.892e+07	-1.748e+07	-1.151e+07	3.262e+06
	354	45.43	-803.06	-2282.75	-828.63	-2257.18	-192.81	-7.001e+06	-1.595e+07	-1.552e+07	-7.424e+06	1.899e+06
	339	38.51	-601.46	-1659.75	-703.15	-1558.07	-311.89	-6.320e+06	-1.357e+07	-1.299e+07	-6.907e+06	1.979e+06
216	2320	33.26	-681.96	-1588.57	-776.37	-1494.16	-276.92	-6.153e+06	-1.153e+07	-1.090e+07	-6.778e+06	1.723e+06
	331	41.44	-582.84	-1785.05	-879.68	-1488.21	-518.41	-7.752e+06	-1.455e+07	-1.345e+07	-8.858e+06	2.509e+06
	354	34.94	-617.74	-1755.96	-637.41	-1736.29	-148.32	-5.385e+06	-1.227e+07	-1.194e+07	-5.711e+06	1.461e+06
	339	29.62	-462.66	-1276.73	-540.89	-1198.51	-239.92	-4.861e+06	-1.044e+07	-9.990e+06	-5.313e+06	1.523e+06
217	1314	34.26	-656.68	-1578.40	-777.67	-1457.41	-311.25	-6.417e+06	-1.190e+07	-1.113e+07	-7.182e+06	1.900e+06
	320	43.67	-740.35	-1940.26	-927.03	-1753.59	-434.91	-8.097e+06	-1.526e+07	-1.421e+07	-9.147e+06	2.533e+06
	339	37.65	-574.98	-1798.18	-641.17	-1731.99	-276.74	-6.145e+06	-1.328e+07	-1.285e+07	-6.575e+06	1.698e+06
	327	29.88	-496.06	-1398.74	-553.94	-1340.87	-221.11	-5.031e+06	-1.050e+07	-1.014e+07	-5.391e+06	1.356e+06
217	2314	26.35	-505.14	-1214.15	-598.21	-1121.09	-239.42	-4.936e+06	-9.153e+06	-8.565e+06	-5.525e+06	1.461e+06
	320	33.59	-569.50	-1492.51	-713.10	-1348.91	-334.55	-6.228e+06	-1.174e+07	-1.093e+07	-7.036e+06	1.948e+06

339		28.97	-442.29	-1383.22	-493.21	-1332.30	-212.88	-4.727e+06	-1.021e+07	-9.883e+06	-5.058e+06	1.306e+06
327		22.99	-381.59	-1075.95	-426.10	-1031.44	-170.08	-3.870e+06	-8.076e+06	-7.799e+06	-4.147e+06	1.043e+06
218	1303	25.02	-532.00	-1167.61	-617.17	-1082.44	-216.51	-4.831e+06	-8.626e+06	-8.085e+06	-5.372e+06	1.327e+06
314		34.30	-637.71	-1561.94	-769.79	-1429.86	-323.46	-6.439e+06	-1.193e+07	-1.113e+07	-7.232e+06	1.930e+06
327		29.82	-491.42	-1424.00	-547.16	-1368.26	-221.08	-4.992e+06	-1.048e+07	-1.013e+07	-5.342e+06	1.340e+06
312		21.94	-427.74	-1065.85	-465.29	-1028.30	-150.18	-3.855e+06	-7.643e+06	-7.399e+06	-4.100e+06	9.306e+05
218	2303	19.25	-409.23	-898.16	-474.74	-832.65	-166.55	-3.716e+06	-6.635e+06	-6.219e+06	-4.132e+06	1.020e+06
314		26.39	-490.55	-1201.49	-592.15	-1099.89	-248.82	-4.953e+06	-9.176e+06	-8.565e+06	-5.563e+06	1.485e+06
327		22.94	-378.01	-1095.38	-420.89	-1052.51	-170.06	-3.840e+06	-8.061e+06	-7.792e+06	-4.109e+06	1.031e+06
312		16.88	-329.03	-819.89	-357.92	-791.00	-115.52	-2.966e+06	-5.880e+06	-5.692e+06	-3.154e+06	7.158e+05
219	1293	15.80	-418.14	-768.94	-462.22	-724.85	-116.28	-3.254e+06	-5.336e+06	-5.042e+06	-3.548e+06	7.241e+05
303		25.03	-527.34	-1168.68	-618.00	-1078.03	-223.44	-4.834e+06	-8.633e+06	-8.080e+06	-5.386e+06	1.339e+06
312		21.94	-423.45	-1069.73	-462.93	-1030.26	-154.76	-3.840e+06	-7.648e+06	-7.399e+06	-4.088e+06	9.400e+05
297		14.08	-362.19	-714.67	-380.90	-695.96	-79.02	-2.725e+06	-4.798e+06	-4.667e+06	-2.856e+06	5.048e+05
219	2293	12.15	-321.65	-591.49	-355.56	-557.58	-89.45	-2.503e+06	-4.104e+06	-3.879e+06	-2.729e+06	5.570e+05
303		19.26	-405.64	-898.99	-475.38	-829.25	-171.88	-3.718e+06	-6.640e+06	-6.216e+06	-4.143e+06	1.030e+06
312		16.87	-325.73	-822.87	-356.10	-792.51	-119.05	-2.954e+06	-5.883e+06	-5.692e+06	-3.145e+06	7.231e+05
297		10.83	-278.61	-549.74	-293.00	-535.35	-60.78	-2.096e+06	-3.691e+06	-3.590e+06	-2.197e+06	3.883e+05
220	1265	5.03	-285.98	-294.94	-288.02	-292.90	3.76	-1.371e+06	-1.380e+06	-1.376e+06	-1.375e+06	-4592.89
293		15.81	-414.37	-771.72	-462.35	-723.73	-121.84	-3.253e+06	-5.341e+06	-5.040e+06	-3.554e+06	7.337e+05
297		14.08	-357.11	-719.05	-378.32	-697.84	-85.01	-2.708e+06	-4.806e+06	-4.669e+06	-2.844e+06	5.180e+05
220	2265	3.87	-219.98	-226.88	-221.55	-225.31	2.89	-1.054e+06	-1.062e+06	-1.059e+06	-1.057e+06	-3532.99
293		12.16	-318.74	-593.63	-355.66	-556.72	-93.72	-2.502e+06	-4.109e+06	-3.877e+06	-2.734e+06	5.644e+05
297		10.83	-274.70	-553.12	-291.02	-536.80	-65.40	-2.083e+06	-3.697e+06	-3.592e+06	-2.188e+06	3.985e+05
221	1515	9.16	391.17	-23.70	359.93	7.54	109.47	4.478e+04	-1.469e+05	-6.380e+04	-3.831e+04	-9.499e+04
495		9.43	515.41	-55.15	507.95	-47.69	-64.80	3.499e+04	-1.422e+05	-1.143e+05	7089.23	-6.453e+04
502		7.37	479.56	6.69	468.57	17.68	-71.25	1353.62	-9.441e+04	-9.435e+04	1292.65	-2415.46
520		6.16	411.23	-27.02	401.60	-17.38	64.27	3007.15	-7.036e+04	-6.972e+04	2361.30	-6853.41
221	2515	7.05	300.90	-18.23	276.87	5.80	84.21	3.445e+04	-1.130e+05	-4.908e+04	-2.947e+04	-7.307e+04
495		7.25	396.47	-42.42	390.73	-36.69	-49.85	2.691e+04	-1.094e+05	-8.792e+04	5453.25	-4.964e+04
502		5.67	368.89	5.14	360.44	13.60	-54.81	1041.24	-7.262e+04	-7.258e+04	994.35	-1858.04
520		4.74	316.33	-20.78	308.92	-13.37	49.44	2313.20	-5.413e+04	-5.363e+04	1816.39	-5271.85
222	1510	11.21	409.11	-54.60	360.02	-5.52	142.66	7.524e+04	-2.492e+05	-7.787e+04	-9.607e+04	-1.620e+05
489		11.17	509.79	-103.23	505.71	-99.15	-49.85	2.978e+04	-2.556e+05	-2.044e+05	-2.138e+04	-1.094e+05
495		9.04	493.11	-41.79	485.43	-34.11	-63.63	3.214e+04	-1.780e+05	-1.603e+05	1.448e+04	-5.831e+04
515		8.07	399.51	-46.49	374.30	-21.29	102.99	4.146e+04	-1.585e+05	-8.592e+04	-3.115e+04	-9.617e+04
222	2510	8.63	314.70	-42.00	276.94	-4.24	109.74	5.788e+04	-1.917e+05	-5.990e+04	-7.390e+04	-1.246e+05
489		8.59	392.15	-79.41	389.01	-76.27	-38.35	2.290e+04	-1.966e+05	-1.572e+05	-1.644e+04	-8.419e+04
495		6.95	379.31	-32.15	373.41	-26.24	-48.95	2.473e+04	-1.369e+05	-1.233e+05	1.114e+04	-4.485e+04
515		6.21	307.31	-35.76	287.92	-16.37	79.22	3.189e+04	-1.219e+05	-6.609e+04	-2.396e+04	-7.398e+04
223	1507	12.76	405.20	-88.42	333.08	-16.30	174.35	1.098e+05	-3.677e+05	-7.773e+04	-1.802e+05	-2.332e+05
484		12.92	500.52	-159.07	498.99	-157.55	-31.69	-1.292e+04	-4.198e+05	-3.383e+05	-9.444e+04	-1.629e+05
489		10.71	462.72	-95.75	458.78	-91.80	-46.76	2.766e+04	-3.077e+05	-2.722e+05	-7806.31	-1.031e+05
510		9.90	409.41	-68.33	368.73	-27.65	133.34	7.755e+04	-2.671e+05	-1.007e+05	-8.879e+04	-1.722e+05
223	2507	9.82	311.69	-68.02	256.22	-12.54	134.12	8.444e+04	-2.828e+05	-5.979e+04	-1.386e+05	-1.794e+05
484		9.94	385.02	-122.36	383.84	-121.19	-24.38	-9942.30	-3.229e+05	-2.602e+05	-7.265e+04	-1.253e+05

489	8.24	355.94	-73.65	352.90	-70.62	-35.97	2.127e+04	-2.367e+05	-2.094e+05	-6004.86 -7.933e+04
510	7.62	314.93	-52.56	283.64	-21.27	102.57	5.966e+04	-2.054e+05	-7.748e+04	-6.830e+04 -1.325e+05
224 1500	12.15	272.76	-195.57	177.42	-100.23	188.58	2.011e+05	-3.969e+05	4.750e+04	-2.433e+05 -2.612e+05
477	16.06	571.44	-150.17	571.44	-150.16	2.43	-1.474e+05	-7.134e+05	-5.695e+05	-2.913e+05 -2.465e+05
484	11.78	352.27	-194.20	350.13	-192.05	-34.15	-9383.86	-4.726e+05	-4.189e+05	-6.308e+04 -1.483e+05
507	11.90	477.45	-52.35	422.03	3.06	162.14	1.135e+05	-4.126e+05	-1.166e+05	-1.825e+05 -2.609e+05
224 2500	9.35	209.81	-150.44	136.47	-77.10	145.06	1.547e+05	-3.053e+05	3.654e+04	-1.872e+05 -2.009e+05
477	12.35	439.57	-115.51	439.57	-115.51	1.87	-1.134e+05	-5.488e+05	-4.381e+05	-2.241e+05 -1.896e+05
484	9.06	270.98	-149.38	269.33	-147.73	-26.27	-7218.36	-3.636e+05	-3.222e+05	-4.853e+04 -1.141e+05
507	9.16	367.27	-40.27	324.64	2.36	124.72	8.728e+04	-3.174e+05	-8.971e+04	-1.404e+05 -2.007e+05
225 1493	17.25	435.56	-249.46	342.09	-155.98	235.15	1.480e+05	-7.799e+05	-2.519e+05	-3.801e+05 -4.595e+05
471	15.51	392.82	-224.90	392.12	-224.20	20.82	-2.507e+05	-9.073e+05	-6.734e+05	-4.846e+05 -3.145e+05
477	13.53	451.93	-198.91	448.36	-195.34	-48.10	-3.246e+05	-7.402e+05	-7.273e+05	-3.374e+05 -7.184e+04
500	19.56	346.47	-224.47	224.15	-102.15	234.25	6.214e+05	-5.307e+05	1.195e+05	-2.873e+04 -5.713e+05
225 2493	13.27	335.05	-191.89	263.14	-119.99	180.89	1.138e+05	-5.999e+05	-1.937e+05	-2.924e+05 -3.534e+05
471	11.93	302.17	-173.00	301.63	-172.46	16.01	-1.928e+05	-6.979e+05	-5.180e+05	-3.727e+05 -2.419e+05
477	10.41	347.64	-153.01	344.89	-150.26	-37.00	-2.497e+05	-5.694e+05	-5.595e+05	-2.595e+05 -5.526e+04
500	15.04	266.52	-172.67	172.42	-78.58	180.20	4.780e+05	-4.082e+05	9.192e+04	-2.210e+04 -4.394e+05
226 1486	18.96	372.35	-303.09	246.75	-177.48	262.80	-9312.01	-1.154e+06	-4.268e+05	-7.368e+05 -5.512e+05
466	18.09	400.40	-312.19	397.41	-309.19	46.09	-3.738e+05	-1.274e+06	-9.093e+05	-7.381e+05 -4.417e+05
471	14.61	312.92	-240.89	312.00	-239.97	22.62	-3.093e+05	-1.002e+06	-8.440e+05	-4.675e+05 -2.909e+05
493	15.72	370.38	-264.93	270.00	-164.55	231.72	1.921e+05	-8.082e+05	-2.552e+05	-3.609e+05 -4.973e+05
226 2486	14.58	286.43	-233.15	189.80	-136.52	202.15	-7163.08	-8.880e+05	-3.283e+05	-5.668e+05 -4.240e+05
466	13.91	308.00	-240.14	305.70	-237.84	35.46	-2.875e+05	-9.797e+05	-6.995e+05	-5.678e+05 -3.398e+05
471	11.24	240.71	-185.30	240.00	-184.59	17.40	-2.379e+05	-7.710e+05	-6.492e+05	-3.597e+05 -2.238e+05
493	12.09	284.91	-203.79	207.70	-126.58	178.25	1.477e+05	-6.217e+05	-1.963e+05	-2.776e+05 -3.826e+05
227 1480	21.44	334.54	-365.05	181.67	-212.18	289.09	-1.254e+05	-1.597e+06	-6.111e+05	-1.111e+06 -6.920e+05
459	20.68	353.54	-388.42	345.75	-380.63	75.64	-5.512e+05	-1.737e+06	-1.197e+06	-1.091e+06 -5.905e+05
466	16.73	252.52	-316.18	247.70	-311.36	52.10	-4.290e+05	-1.376e+06	-1.091e+06	-7.147e+05 -4.348e+05
486	16.94	323.57	-317.07	198.65	-192.14	253.82	-7423.75	-1.185e+06	-4.828e+05	-7.093e+05 -5.776e+05
227 2480	16.49	257.34	-280.81	139.75	-163.22	222.38	-9.649e+04	-1.228e+06	-4.701e+05	-8.548e+05 -5.323e+05
459	15.91	271.96	-298.79	265.96	-292.79	58.19	-4.240e+05	-1.336e+06	-9.207e+05	-8.393e+05 -4.542e+05
466	12.87	194.24	-243.21	190.54	-239.51	40.08	-3.300e+05	-1.059e+06	-8.391e+05	-5.498e+05 -3.344e+05
486	13.03	248.90	-243.90	152.80	-147.80	195.25	-5710.58	-9.113e+05	-3.714e+05	-5.456e+05 -4.443e+05
228 1473	24.02	293.15	-435.77	108.75	-251.37	316.88	-2.359e+05	-2.110e+06	-8.149e+05	-1.531e+06 -8.659e+05
449	23.50	294.57	-467.67	278.77	-451.87	108.58	-7.697e+05	-2.305e+06	-1.544e+06	-1.531e+06 -7.678e+05
459	19.02	181.11	-395.80	169.42	-384.11	81.27	-6.221e+05	-1.849e+06	-1.410e+06	-1.061e+06 -5.881e+05
480	19.13	274.22	-381.03	116.29	-223.10	280.26	-1.418e+05	-1.630e+06	-6.918e+05	-1.080e+06 -7.184e+05
228 2473	18.48	225.50	-335.21	83.65	-193.36	243.75	-1.814e+05	-1.623e+06	-6.269e+05	-1.177e+06 -6.661e+05
449	18.08	226.59	-359.74	214.44	-347.59	83.52	-5.921e+05	-1.773e+06	-1.188e+06	-1.178e+06 -5.906e+05
459	14.63	139.31	-304.46	130.33	-295.47	62.51	-4.785e+05	-1.422e+06	-1.084e+06	-8.164e+05 -4.524e+05
480	14.72	210.94	-293.10	89.45	-171.62	215.58	-1.090e+05	-1.254e+06	-5.321e+05	-8.308e+05 -5.526e+05
229 1464	26.63	247.75	-514.20	27.52	-293.96	345.41	-3.568e+05	-2.704e+06	-1.046e+06	-2.016e+06 -1.069e+06
440	26.44	227.44	-552.32	199.90	-524.77	143.93	-1.030e+06	-2.983e+06	-1.955e+06	-2.058e+06 -9.752e+05
449	21.54	99.20	-481.30	75.94	-458.04	113.85	-8.626e+05	-2.427e+06	-1.794e+06	-1.496e+06 -7.677e+05
473	21.51	224.40	-455.47	27.41	-258.48	308.42	-2.645e+05	-2.147e+06	-9.152e+05	-1.496e+06 -8.952e+05

229	2464	20.49	190.58	-395.54	21.17	-226.12	265.70	-2.745e+05	-2.080e+06	-8.044e+05	-1.550e+06	-8.223e+05
	440	20.34	174.95	-424.86	153.77	-403.67	110.72	-7.921e+05	-2.295e+06	-1.504e+06	-1.583e+06	-7.502e+05
	449	16.57	76.31	-370.23	58.42	-352.34	87.57	-6.635e+05	-1.867e+06	-1.380e+06	-1.150e+06	-5.906e+05
	473	16.55	172.62	-350.36	21.09	-198.83	237.25	-2.035e+05	-1.651e+06	-7.040e+05	-1.151e+06	-6.886e+05
230	1453	29.27	199.11	-599.21	-60.70	-339.41	374.04	-4.984e+05	-3.395e+06	-1.309e+06	-2.584e+06	-1.300e+06
	429	29.71	154.61	-643.02	111.45	-599.86	180.45	-1.337e+06	-3.780e+06	-2.434e+06	-2.682e+06	-1.215e+06
	440	24.44	10.41	-574.42	-30.36	-533.65	148.93	-1.147e+06	-3.116e+06	-2.247e+06	-2.017e+06	-9.774e+05
	464	23.95	173.69	-539.04	-68.08	-297.26	337.44	-3.967e+05	-2.746e+06	-1.165e+06	-1.977e+06	-1.102e+06
230	2453	22.52	153.16	-460.93	-46.69	-261.08	287.73	-3.834e+05	-2.611e+06	-1.007e+06	-1.988e+06	-1.000e+06
	429	22.86	118.93	-494.63	85.73	-461.43	138.80	-1.028e+06	-2.907e+06	-1.873e+06	-2.063e+06	-9.347e+05
	440	18.80	8.01	-441.86	-23.35	-410.50	114.56	-8.826e+05	-2.397e+06	-1.728e+06	-1.551e+06	-7.518e+05
	464	18.42	133.61	-414.65	-52.37	-228.66	259.57	-3.052e+05	-2.112e+06	-8.961e+05	-1.521e+06	-8.477e+05
231	1442	31.96	148.24	-689.73	-153.77	-387.71	402.33	-6.696e+05	-4.196e+06	-1.609e+06	-3.256e+06	-1.559e+06
	424	33.19	78.68	-739.92	16.39	-677.63	217.05	-1.700e+06	-4.712e+06	-2.987e+06	-3.425e+06	-1.490e+06
	429	27.65	-81.76	-676.08	-146.55	-611.30	185.22	-1.482e+06	-3.925e+06	-2.772e+06	-2.635e+06	-1.220e+06
	453	26.44	122.12	-630.63	-169.51	-339.01	366.71	-5.497e+05	-3.440e+06	-1.447e+06	-2.542e+06	-1.337e+06
231	2442	24.58	114.03	-530.56	-118.29	-298.24	309.48	-5.151e+05	-3.228e+06	-1.238e+06	-2.505e+06	-1.199e+06
	424	25.53	60.53	-569.17	12.61	-521.26	166.96	-1.307e+06	-3.625e+06	-2.298e+06	-2.634e+06	-1.146e+06
	429	21.27	-62.90	-520.06	-112.73	-470.23	142.47	-1.140e+06	-3.019e+06	-2.132e+06	-2.027e+06	-9.382e+05
	453	20.34	93.94	-485.10	-130.39	-260.77	282.09	-4.229e+05	-2.646e+06	-1.113e+06	-1.955e+06	-1.029e+06
232	1435	34.72	96.67	-784.50	-248.59	-439.24	430.15	-8.818e+05	-5.124e+06	-1.950e+06	-4.056e+06	-1.841e+06
	414	36.85	2.75	-842.77	-81.18	-758.85	252.82	-2.130e+06	-5.806e+06	-3.616e+06	-4.320e+06	-1.804e+06
	424	30.96	-174.01	-786.20	-268.89	-691.31	221.55	-1.875e+06	-4.871e+06	-3.374e+06	-3.372e+06	-1.498e+06
	442	28.98	70.22	-728.90	-274.90	-383.78	395.83	-7.331e+05	-4.243e+06	-1.767e+06	-3.209e+06	-1.600e+06
232	2435	26.71	74.36	-603.46	-191.23	-337.88	330.88	-6.783e+05	-3.942e+06	-1.500e+06	-3.120e+06	-1.416e+06
	414	28.35	2.11	-648.29	-62.45	-583.73	194.48	-1.639e+06	-4.466e+06	-2.782e+06	-3.323e+06	-1.388e+06
	424	23.81	-133.85	-604.77	-206.84	-531.78	170.43	-1.443e+06	-3.747e+06	-2.595e+06	-2.594e+06	-1.152e+06
	442	22.29	54.02	-560.69	-211.46	-295.21	304.49	-5.639e+05	-3.264e+06	-1.360e+06	-2.469e+06	-1.231e+06
233	1422	37.59	46.87	-882.47	-340.63	-494.97	458.22	-1.153e+06	-6.202e+06	-2.331e+06	-5.024e+06	-2.136e+06
	405	40.82	-69.00	-951.29	-175.11	-845.18	286.99	-2.643e+06	-7.101e+06	-4.319e+06	-5.425e+06	-2.159e+06
	414	34.42	-263.19	-903.34	-392.24	-774.29	256.82	-2.340e+06	-5.976e+06	-4.054e+06	-4.262e+06	-1.815e+06
	435	31.60	19.11	-832.08	-380.88	-432.09	424.82	-9.587e+05	-5.173e+06	-2.128e+06	-4.004e+06	-1.887e+06
233	2422	28.92	36.05	-678.83	-262.02	-380.75	352.48	-8.867e+05	-4.771e+06	-1.793e+06	-3.864e+06	-1.643e+06
	405	31.40	-53.08	-731.77	-134.70	-650.14	220.76	-2.033e+06	-5.462e+06	-3.322e+06	-4.173e+06	-1.661e+06
	414	26.48	-202.45	-694.87	-301.72	-595.61	197.55	-1.800e+06	-4.597e+06	-3.118e+06	-3.278e+06	-1.396e+06
	435	24.31	14.70	-640.06	-292.98	-332.37	326.79	-7.375e+05	-3.979e+06	-1.637e+06	-3.080e+06	-1.451e+06
234	1411	40.60	3.41	-983.93	-423.37	-557.15	489.12	-1.511e+06	-7.461e+06	-2.749e+06	-6.222e+06	-2.416e+06
	394	45.31	-129.07	-1066.35	-254.89	-940.52	319.53	-3.258e+06	-8.658e+06	-5.080e+06	-6.837e+06	-2.553e+06
	405	38.13	-345.97	-1024.71	-508.83	-861.85	289.86	-2.891e+06	-7.276e+06	-4.808e+06	-5.359e+06	-2.175e+06
	422	34.32	-28.75	-938.12	-481.85	-485.02	454.68	-1.244e+06	-6.249e+06	-2.529e+06	-4.965e+06	-2.186e+06
234	2411	31.23	2.62	-756.87	-325.67	-428.58	376.24	-1.162e+06	-5.739e+06	-2.115e+06	-4.786e+06	-1.858e+06
	394	34.86	-99.28	-820.27	-196.07	-723.48	245.79	-2.506e+06	-6.660e+06	-3.908e+06	-5.259e+06	-1.964e+06
	405	29.33	-266.13	-788.24	-391.41	-662.96	222.97	-2.224e+06	-5.597e+06	-3.699e+06	-4.122e+06	-1.673e+06
	422	26.40	-22.12	-721.63	-370.65	-373.09	349.76	-9.570e+05	-4.807e+06	-1.945e+06	-3.819e+06	-1.682e+06
235	1401	43.84	-28.19	-1094.22	-490.93	-631.48	528.36	-2.003e+06	-8.952e+06	-3.187e+06	-7.768e+06	-2.613e+06
	377	50.74	-155.59	-1193.27	-296.16	-1052.70	355.11	-3.986e+06	-1.059e+07	-5.844e+06	-8.737e+06	-2.971e+06

394		42.28	-418.90	-1146.94	-607.86	-957.99	319.16	-3.547e+06	-8.830e+06	-5.620e+06	-6.757e+06	-2.580e+06
411		37.17	-65.22	-1044.07	-565.93	-543.36	489.29	-1.616e+06	-7.499e+06	-2.961e+06	-6.155e+06	-2.470e+06
235	2401	33.72	-21.69	-841.70	-377.64	-485.75	406.43	-1.541e+06	-6.886e+06	-2.451e+06	-5.975e+06	-2.010e+06
377		39.03	-119.68	-917.90	-227.81	-809.77	273.16	-3.066e+06	-8.149e+06	-4.495e+06	-6.720e+06	-2.285e+06
394		32.52	-322.23	-882.26	-467.58	-736.91	245.51	-2.729e+06	-6.792e+06	-4.323e+06	-5.198e+06	-1.984e+06
411		28.59	-50.17	-803.13	-435.33	-417.97	376.38	-1.243e+06	-5.769e+06	-2.277e+06	-4.734e+06	-1.900e+06
236	1385	48.19	-113.88	-1224.54	-602.51	-735.92	551.31	-2.732e+06	-1.084e+07	-3.687e+06	-9.885e+06	-2.613e+06
365		57.62	7.51	-1363.70	-171.17	-1185.01	461.61	-4.749e+06	-1.308e+07	-6.346e+06	-1.148e+07	-3.279e+06
377		47.41	-506.30	-1266.36	-702.31	-1070.35	332.51	-4.327e+06	-1.078e+07	-6.474e+06	-8.634e+06	-3.041e+06
401		40.16	-28.05	-1135.75	-573.97	-589.83	553.80	-2.096e+06	-8.932e+06	-3.356e+06	-7.671e+06	-2.651e+06
236	2385	37.07	-87.60	-941.95	-463.47	-566.09	424.08	-2.101e+06	-8.338e+06	-2.836e+06	-7.604e+06	-2.010e+06
365		44.33	5.78	-1049.00	-131.67	-911.55	355.09	-3.653e+06	-1.006e+07	-4.881e+06	-8.831e+06	-2.522e+06
377		36.47	-389.46	-974.12	-540.24	-823.35	255.77	-3.329e+06	-8.293e+06	-4.980e+06	-6.642e+06	-2.339e+06
401		30.89	-21.58	-873.66	-441.52	-453.71	426.00	-1.612e+06	-6.871e+06	-2.582e+06	-5.901e+06	-2.040e+06
237	1369	34.34	-838.45	-2095.87	-2084.09	-850.23	121.12	-4.186e+06	-1.183e+07	-4.871e+06	-1.115e+07	-2.184e+06
354		45.90	-532.77	-1792.35	-1325.86	-999.25	608.25	-7.928e+06	-1.629e+07	-1.024e+07	-1.398e+07	-3.737e+06
365		40.47	-1202.11	-2540.53	-2396.92	-1345.72	414.23	-6.597e+06	-1.370e+07	-9.389e+06	-1.091e+07	-3.468e+06
385		31.63	-310.17	-1654.10	-1363.83	-600.44	553.04	-4.170e+06	-1.128e+07	-5.734e+06	-9.721e+06	-2.946e+06
237	2369	26.41	-644.96	-1612.21	-1603.15	-654.02	93.17	-3.220e+06	-9.103e+06	-3.747e+06	-8.577e+06	-1.680e+06
354		35.31	-409.82	-1378.73	-1019.89	-768.66	467.89	-6.098e+06	-1.253e+07	-7.874e+06	-1.075e+07	-2.875e+06
365		31.13	-924.70	-1954.26	-1843.79	-1035.17	318.64	-5.075e+06	-1.054e+07	-7.222e+06	-8.390e+06	-2.668e+06
385		24.33	-238.59	-1272.39	-1049.10	-461.88	425.41	-3.208e+06	-8.680e+06	-4.410e+06	-7.478e+06	-2.266e+06
238	1352	31.31	-311.24	-1377.88	-1169.83	-519.28	422.64	-3.928e+06	-1.114e+07	-5.093e+06	-9.978e+06	-2.654e+06
339		37.20	-700.58	-1887.61	-1668.06	-920.13	460.88	-6.081e+06	-1.302e+07	-7.578e+06	-1.152e+07	-2.853e+06
354		46.70	-464.54	-2033.45	-1471.37	-1026.61	752.27	-7.876e+06	-1.663e+07	-1.024e+07	-1.426e+07	-3.888e+06
369		36.25	-509.99	-1998.91	-1893.74	-615.16	381.48	-3.877e+06	-1.274e+07	-4.906e+06	-1.172e+07	-2.840e+06
238	2352	24.09	-239.42	-1059.91	-899.87	-399.45	325.11	-3.022e+06	-8.571e+06	-3.917e+06	-7.675e+06	-2.042e+06
339		28.62	-538.91	-1452.01	-1283.12	-707.79	354.52	-4.678e+06	-1.001e+07	-5.829e+06	-8.860e+06	-2.195e+06
354		35.92	-357.34	-1564.19	-1131.83	-789.70	578.67	-6.058e+06	-1.279e+07	-7.878e+06	-1.097e+07	-2.990e+06
369		27.88	-392.30	-1537.62	-1456.72	-473.20	293.45	-2.982e+06	-9.803e+06	-3.774e+06	-9.012e+06	-2.185e+06
239	1335	24.33	-295.90	-1204.09	-1073.55	-426.44	318.61	-3.171e+06	-8.634e+06	-3.962e+06	-7.843e+06	-1.922e+06
327		29.78	-509.61	-1434.17	-1224.20	-719.58	387.35	-4.983e+06	-1.045e+07	-6.298e+06	-9.137e+06	-2.338e+06
339		37.83	-536.56	-1740.58	-1426.10	-851.03	528.90	-6.239e+06	-1.337e+07	-8.015e+06	-1.159e+07	-3.083e+06
352		30.37	-323.52	-1554.27	-1400.61	-477.19	406.83	-3.688e+06	-1.079e+07	-4.658e+06	-9.824e+06	-2.440e+06
239	2335	18.71	-227.62	-926.22	-825.81	-328.03	245.09	-2.439e+06	-6.641e+06	-3.048e+06	-6.033e+06	-1.479e+06
327		22.91	-392.01	-1103.21	-941.69	-553.52	297.96	-3.833e+06	-8.040e+06	-4.845e+06	-7.028e+06	-1.798e+06
339		29.10	-412.74	-1338.91	-1097.00	-654.64	406.85	-4.799e+06	-1.028e+07	-6.165e+06	-8.918e+06	-2.371e+06
352		23.36	-248.87	-1195.59	-1077.39	-367.07	312.94	-2.837e+06	-8.303e+06	-3.583e+06	-7.557e+06	-1.877e+06
240	1318	18.06	-292.15	-934.41	-846.79	-379.77	220.45	-2.573e+06	-6.363e+06	-3.117e+06	-5.819e+06	-1.329e+06
312		21.93	-428.24	-1067.39	-917.85	-577.78	270.59	-3.846e+06	-7.641e+06	-4.775e+06	-6.713e+06	-1.631e+06
327		29.85	-485.64	-1415.86	-1188.37	-713.13	399.83	-5.009e+06	-1.049e+07	-6.364e+06	-9.140e+06	-2.365e+06
335		24.26	-294.63	-1236.70	-1109.23	-422.10	322.24	-3.121e+06	-8.610e+06	-3.898e+06	-7.832e+06	-1.914e+06
240	2318	13.89	-224.73	-718.78	-651.38	-292.13	169.58	-1.980e+06	-4.895e+06	-2.398e+06	-4.476e+06	-1.022e+06
312		16.87	-329.41	-821.07	-706.04	-444.45	208.14	-2.959e+06	-5.877e+06	-3.673e+06	-5.164e+06	-1.255e+06
327		22.96	-373.57	-1089.12	-914.13	-548.56	307.56	-3.853e+06	-8.073e+06	-4.895e+06	-7.031e+06	-1.819e+06
335		18.66	-226.64	-951.31	-853.25	-324.69	247.87	-2.400e+06	-6.623e+06	-2.998e+06	-6.025e+06	-1.472e+06

241	1299	11.88	-289.78	-641.57	-595.84	-335.51	118.30	-2.029e+06	-4.099e+06	-2.324e+06	-3.804e+06	-7.236e+05
	297	14.08	-362.08	-713.27	-634.07	-441.28	146.77	-2.719e+06	-4.798e+06	-3.224e+06	-4.293e+06	-8.916e+05
	312	21.95	-421.20	-1070.72	-912.52	-579.40	278.80	-3.846e+06	-7.654e+06	-4.793e+06	-6.708e+06	-1.646e+06
	318	18.07	-285.82	-941.31	-849.84	-377.28	227.13	-2.552e+06	-6.371e+06	-3.102e+06	-5.821e+06	-1.342e+06
241	2299	9.14	-222.91	-493.51	-458.34	-258.08	91.00	-1.561e+06	-3.153e+06	-1.788e+06	-2.926e+06	-5.566e+05
	297	10.83	-278.52	-548.67	-487.74	-339.44	112.90	-2.092e+06	-3.691e+06	-2.480e+06	-3.302e+06	-6.858e+05
	312	16.89	-324.00	-823.63	-701.94	-445.69	214.46	-2.958e+06	-5.888e+06	-3.687e+06	-5.160e+06	-1.266e+06
	318	13.90	-219.86	-724.09	-653.73	-290.22	174.72	-1.963e+06	-4.901e+06	-2.386e+06	-4.477e+06	-1.032e+06
242	1265	5.03	-286.27	-293.12	-286.47	-292.93	1.14	-1.374e+06	-1.379e+06	-1.378e+06	-1.375e+06	-1744.25
	297	14.09	-356.25	-718.26	-442.11	-632.40	-153.98	-2.714e+06	-4.809e+06	-4.290e+06	-3.234e+06	9.048e+05
	299	11.89	-282.46	-648.51	-332.74	-598.23	-126.00	-2.006e+06	-4.111e+06	-3.807e+06	-2.310e+06	7.398e+05
242	2265	3.87	-220.21	-225.48	-220.36	-225.33	0.88	-1.057e+06	-1.061e+06	-1.060e+06	-1.058e+06	-1341.73
	297	10.84	-274.04	-552.51	-340.08	-486.46	-118.45	-2.088e+06	-3.699e+06	-3.300e+06	-2.488e+06	6.960e+05
	299	9.15	-217.28	-498.85	-255.95	-460.18	-96.92	-1.543e+06	-3.162e+06	-2.928e+06	-1.777e+06	5.690e+05
243	1525	8.47	278.38	-12.61	260.61	5.16	69.68	4.559e+04	-1.478e+05	-7.237e+04	-2.987e+04	-9.435e+04
	515	7.15	371.44	-38.27	366.04	-32.87	-46.74	5.450e+04	-1.111e+05	-6.439e+04	7743.35	-7.456e+04
	520	4.17	308.13	9.52	298.44	19.21	-52.92	1226.44	-4.695e+04	-4.685e+04	1132.47	-2125.64
	528	5.67	310.54	-25.53	304.58	-19.57	44.36	2009.22	-7.938e+04	-7.875e+04	1384.21	-7104.73
243	2525	6.51	214.14	-9.70	200.47	3.97	53.60	3.507e+04	-1.137e+05	-5.567e+04	-2.297e+04	-7.257e+04
	515	5.50	285.72	-29.44	281.57	-25.29	-35.95	4.193e+04	-8.550e+04	-4.953e+04	5956.42	-5.736e+04
	520	3.21	237.02	7.32	229.57	14.78	-40.70	943.42	-3.611e+04	-3.604e+04	871.13	-1635.10
	528	4.36	238.88	-19.64	234.30	-15.05	34.12	1545.56	-6.106e+04	-6.058e+04	1064.77	-5465.17
244	1522	10.76	299.42	-50.65	269.53	-20.76	97.82	8.211e+04	-2.446e+05	-1.018e+05	-6.069e+04	-1.621e+05
	510	8.38	378.84	-52.15	375.71	-49.02	-36.58	5.670e+04	-1.964e+05	-1.161e+05	-2.360e+04	-1.178e+05
	515	6.31	362.48	-18.94	356.75	-13.21	-46.37	4.534e+04	-1.242e+05	-8.980e+04	1.092e+04	-6.820e+04
	525	7.36	272.11	-38.80	258.05	-24.74	64.58	3.921e+04	-1.614e+05	-9.864e+04	-2.352e+04	-9.299e+04
244	2522	8.28	230.32	-38.96	207.33	-15.97	75.25	6.316e+04	-1.882e+05	-7.831e+04	-4.668e+04	-1.247e+05
	510	6.45	291.41	-40.12	289.01	-37.71	-28.14	4.362e+04	-1.511e+05	-8.929e+04	-1.815e+04	-9.061e+04
	515	4.85	278.83	-14.57	274.43	-10.16	-35.67	3.487e+04	-9.555e+04	-6.907e+04	8396.58	-5.246e+04
	525	5.66	209.31	-29.84	198.50	-19.03	49.68	3.016e+04	-1.241e+05	-7.588e+04	-1.809e+04	-7.153e+04
245	1517	13.52	316.47	-109.74	264.06	-57.33	139.97	1.338e+05	-3.821e+05	-1.481e+05	-1.003e+05	-2.569e+05
	507	8.92	391.92	-62.63	389.41	-60.12	-33.67	9387.81	-2.987e+05	-1.977e+05	-9.158e+04	-1.446e+05
	510	7.47	360.67	-39.38	357.69	-36.40	-34.38	4.638e+04	-2.156e+05	-1.505e+05	-1.870e+04	-1.132e+05
	522	9.36	277.97	-67.42	252.91	-42.36	89.59	7.687e+04	-2.645e+05	-1.350e+05	-5.264e+04	-1.656e+05
245	2517	10.40	243.44	-84.42	203.12	-44.10	107.67	1.029e+05	-2.940e+05	-1.139e+05	-7.714e+04	-1.976e+05
	507	6.86	301.48	-48.17	299.55	-46.25	-25.90	7221.39	-2.298e+05	-1.521e+05	-7.044e+04	-1.112e+05
	510	5.75	277.44	-30.29	275.15	-28.00	-26.45	3.568e+04	-1.659e+05	-1.158e+05	-1.438e+04	-8.708e+04
	522	7.20	213.82	-51.86	194.55	-32.59	68.92	5.913e+04	-2.035e+05	-1.038e+05	-4.049e+04	-1.274e+05
246	1512	18.62	216.74	-292.25	116.83	-192.34	202.17	3.326e+05	-5.757e+05	-1.280e+05	-1.151e+05	-4.541e+05
	500	11.52	538.65	8.86	536.06	11.46	-36.98	-1.779e+05	-4.915e+05	-4.551e+05	-2.143e+05	-1.005e+05
	507	7.28	270.66	-96.94	267.06	-93.34	-36.21	4977.98	-3.047e+05	-2.184e+05	-8.134e+04	-1.389e+05
	517	12.16	363.17	-69.03	323.71	-29.57	124.49	1.148e+05	-4.260e+05	-2.145e+05	-9.665e+04	-2.639e+05
246	2512	14.32	166.72	-224.81	89.87	-147.95	155.51	2.559e+05	-4.428e+05	-9.848e+04	-8.851e+04	-3.493e+05
	500	8.86	414.35	6.82	412.35	8.81	-28.45	-1.369e+05	-3.781e+05	-3.501e+05	-1.649e+05	-7.727e+04
	507	5.60	208.20	-74.57	205.43	-71.80	-27.85	3829.21	-2.344e+05	-1.680e+05	-6.257e+04	-1.068e+05
	517	9.35	279.36	-53.10	249.00	-22.74	95.76	8.834e+04	-3.277e+05	-1.650e+05	-7.434e+04	-2.030e+05

247	1505	17.55	348.79	-167.94	249.75	-68.90	203.39	1.604e+05	-8.077e+05	-2.450e+05	-4.023e+05	-4.776e+05
	493	16.32	326.67	-228.91	321.93	-224.17	51.11	1.513e+05	-7.635e+05	-4.505e+05	-1.617e+05	-4.340e+05
	500	17.13	402.75	-235.89	402.75	-235.89	-1.64	3.256e+05	-6.293e+05	-5.102e+05	2.065e+05	-3.155e+05
	512	14.04	246.74	-130.68	119.85	-3.79	178.30	1.093e+05	-6.514e+05	-1.898e+05	-3.523e+05	-3.716e+05
247	2505	13.50	268.30	-129.18	192.11	-53.00	156.45	1.233e+05	-6.213e+05	-1.884e+05	-3.095e+05	-3.674e+05
	493	12.56	251.29	-176.09	247.64	-172.44	39.31	1.164e+05	-5.873e+05	-3.466e+05	-1.244e+05	-3.339e+05
	500	13.18	309.81	-181.45	309.80	-181.45	-1.26	2.504e+05	-4.841e+05	-3.925e+05	1.588e+05	-2.427e+05
	512	10.80	189.80	-100.52	92.19	-2.91	137.15	8.410e+04	-5.011e+05	-1.460e+05	-2.710e+05	-2.858e+05
248	1498	19.65	303.40	-236.16	155.32	-88.08	240.77	2.339e+05	-1.054e+06	-2.767e+05	-5.433e+05	-6.300e+05
	486	18.58	362.31	-294.26	348.68	-280.63	93.62	2.075e+04	-1.134e+06	-6.704e+05	-4.424e+05	-5.658e+05
	493	15.18	291.64	-242.35	286.38	-237.09	52.71	1.197e+05	-8.460e+05	-5.880e+05	-1.383e+05	-4.273e+05
	505	15.57	275.17	-188.95	161.18	-74.95	199.78	1.740e+05	-8.308e+05	-2.658e+05	-3.910e+05	-4.985e+05
248	2498	15.12	233.38	-181.66	119.47	-67.76	185.21	1.799e+05	-8.108e+05	-2.129e+05	-4.179e+05	-4.846e+05
	486	14.30	278.70	-226.36	268.22	-215.87	72.01	1.596e+04	-8.719e+05	-5.157e+05	-3.403e+05	-4.352e+05
	493	11.67	224.34	-186.42	220.30	-182.38	40.55	9.207e+04	-6.507e+05	-4.523e+05	-1.064e+05	-3.287e+05
	505	11.98	211.67	-145.35	123.98	-57.66	153.68	1.339e+05	-6.391e+05	-2.045e+05	-3.008e+05	-3.835e+05
249	1491	21.80	299.65	-300.76	112.03	-113.13	278.30	2.800e+05	-1.376e+06	-3.413e+05	-7.542e+05	-8.016e+05
	480	21.09	339.93	-355.70	312.97	-328.74	134.26	-8.657e+04	-1.564e+06	-9.240e+05	-7.265e+05	-7.321e+05
	486	16.94	254.89	-296.75	237.71	-279.57	95.82	-1.518e+04	-1.215e+06	-8.107e+05	-4.191e+05	-5.668e+05
	498	17.46	270.67	-247.72	124.26	-101.31	233.37	2.381e+05	-1.080e+06	-3.143e+05	-5.275e+05	-6.503e+05
249	2491	16.77	230.50	-231.35	86.17	-87.02	214.08	2.154e+05	-1.058e+06	-2.625e+05	-5.802e+05	-6.166e+05
	480	16.22	261.48	-273.62	240.75	-252.88	103.28	-6.659e+04	-1.203e+06	-7.108e+05	-5.589e+05	-5.631e+05
	486	13.03	196.07	-228.27	182.86	-215.05	73.71	-1.167e+04	-9.343e+05	-6.236e+05	-3.224e+05	-4.360e+05
	498	13.43	208.21	-190.56	95.58	-77.93	179.51	1.831e+05	-8.307e+05	-2.418e+05	-4.058e+05	-5.002e+05
250	1482	24.02	295.42	-369.59	63.34	-137.51	316.97	3.192e+05	-1.769e+06	-4.272e+05	-1.022e+06	-1.001e+06
	473	23.67	309.51	-424.30	265.87	-380.66	173.56	-1.954e+05	-2.067e+06	-1.219e+06	-1.043e+06	-9.316e+05
	480	19.23	209.71	-364.08	175.28	-329.64	136.28	-1.351e+05	-1.659e+06	-1.093e+06	-7.011e+05	-7.364e+05
	491	19.48	268.80	-310.00	81.12	-122.33	270.94	2.853e+05	-1.402e+06	-3.818e+05	-7.350e+05	-8.250e+05
250	2482	18.47	227.24	-284.30	48.73	-105.78	243.82	2.455e+05	-1.360e+06	-3.286e+05	-7.862e+05	-7.697e+05
	473	18.20	238.09	-326.39	204.52	-292.81	133.50	-1.503e+05	-1.590e+06	-9.378e+05	-8.023e+05	-7.166e+05
	480	14.80	161.32	-280.06	134.83	-253.57	104.83	-1.039e+05	-1.276e+06	-8.409e+05	-5.393e+05	-5.665e+05
	491	14.98	206.77	-238.46	62.40	-94.10	208.41	2.195e+05	-1.079e+06	-2.937e+05	-5.654e+05	-6.346e+05
251	1475	26.30	288.10	-443.17	7.83	-162.90	355.53	3.595e+05	-2.234e+06	-5.326e+05	-1.342e+06	-1.232e+06
	464	26.28	274.49	-500.48	210.64	-436.63	213.08	-3.161e+05	-2.654e+06	-1.560e+06	-1.410e+06	-1.167e+06
	473	21.64	159.41	-441.65	102.62	-384.86	175.81	-2.586e+05	-2.179e+06	-1.423e+06	-1.015e+06	-9.384e+05
	482	21.59	265.03	-378.25	29.38	-142.60	309.93	3.263e+05	-1.797e+06	-4.710e+05	-9.995e+05	-1.028e+06
251	2475	20.23	221.61	-340.90	6.02	-125.31	273.48	2.765e+05	-1.719e+06	-4.097e+05	-1.033e+06	-9.478e+05
	464	20.22	211.15	-384.98	162.03	-335.87	163.91	-2.432e+05	-2.042e+06	-1.200e+06	-1.085e+06	-8.974e+05
	473	16.65	122.62	-339.73	78.94	-296.04	135.24	-1.990e+05	-1.676e+06	-1.095e+06	-7.806e+05	-7.218e+05
	482	16.61	203.87	-290.96	22.60	-109.69	238.41	2.510e+05	-1.382e+06	-3.623e+05	-7.688e+05	-7.909e+05
252	1468	28.62	277.66	-520.67	-52.89	-190.12	393.22	4.017e+05	-2.778e+06	-6.573e+05	-1.719e+06	-1.499e+06
	453	28.95	236.08	-583.64	148.58	-496.14	253.11	-4.565e+05	-3.339e+06	-1.952e+06	-1.844e+06	-1.440e+06
	464	24.10	106.61	-528.57	22.22	-444.18	215.60	-3.952e+05	-2.785e+06	-1.802e+06	-1.379e+06	-1.176e+06
	475	23.77	258.38	-452.22	-29.96	-163.87	348.94	3.677e+05	-2.265e+06	-5.809e+05	-1.317e+06	-1.264e+06
252	2468	22.02	213.58	-400.52	-40.69	-146.25	302.48	3.090e+05	-2.137e+06	-5.056e+05	-1.322e+06	-1.153e+06
	453	22.27	181.60	-448.95	114.29	-381.65	194.70	-3.512e+05	-2.568e+06	-1.502e+06	-1.418e+06	-1.108e+06

464		18.54	82.01	-406.60	17.10	-341.68	165.84	-3.040e+05	-2.142e+06	-1.386e+06	-1.060e+06 -9.047e+05
475		18.29	198.76	-347.86	-23.05	-126.06	268.41	2.829e+05	-1.742e+06	-4.468e+05	-1.013e+06 -9.723e+05
253	1455	30.96	264.32	-601.14	-117.12	-219.70	429.68	4.432e+05	-3.405e+06	-8.020e+05	-2.160e+06 -1.800e+06
442		31.68	195.36	-672.88	81.45	-558.96	293.14	-6.251e+05	-4.135e+06	-2.399e+06	-2.361e+06 -1.755e+06
453		26.63	52.69	-623.90	-64.26	-506.95	255.83	-5.528e+05	-3.489e+06	-2.234e+06	-1.809e+06 -1.453e+06
468		26.01	248.92	-530.95	-94.93	-187.10	387.20	4.108e+05	-2.811e+06	-7.110e+05	-1.690e+06 -1.535e+06
253	2455	23.82	203.33	-462.42	-90.09	-169.00	330.53	3.409e+05	-2.619e+06	-6.169e+05	-1.661e+06 -1.385e+06
442		24.37	150.28	-517.60	62.65	-429.97	225.49	-4.809e+05	-3.181e+06	-1.845e+06	-1.817e+06 -1.350e+06
453		20.48	40.53	-479.92	-49.43	-389.96	196.79	-4.252e+05	-2.684e+06	-1.718e+06	-1.391e+06 -1.118e+06
468		20.00	191.48	-408.42	-73.02	-143.92	297.85	3.160e+05	-2.163e+06	-5.469e+05	-1.300e+06 -1.181e+06
254	1444	33.29	248.60	-683.60	-182.91	-252.08	464.81	4.763e+05	-4.124e+06	-9.671e+05	-2.680e+06 -2.135e+06
435		34.49	153.74	-767.09	11.93	-625.27	332.38	-8.338e+05	-5.059e+06	-2.904e+06	-2.989e+06 -2.112e+06
442		29.21	-1.42	-726.04	-154.76	-572.70	295.97	-7.402e+05	-4.305e+06	-2.722e+06	-2.322e+06 -1.771e+06
455		28.26	236.91	-613.28	-163.47	-212.90	424.38	4.528e+05	-3.442e+06	-8.615e+05	-2.127e+06 -1.841e+06
254	2444	25.60	191.23	-525.84	-140.70	-193.91	357.55	3.664e+05	-3.172e+06	-7.440e+05	-2.062e+06 -1.642e+06
435		26.53	118.26	-590.07	9.18	-480.98	255.68	-6.414e+05	-3.892e+06	-2.234e+06	-2.300e+06 -1.625e+06
442		22.47	-1.09	-558.49	-119.05	-440.54	227.67	-5.694e+05	-3.311e+06	-2.094e+06	-1.786e+06 -1.362e+06
455		21.74	182.24	-471.75	-125.74	-163.77	326.44	3.483e+05	-2.647e+06	-6.627e+05	-1.636e+06 -1.417e+06
255	1431	35.54	231.72	-767.39	-247.74	-287.92	499.15	4.858e+05	-4.939e+06	-1.153e+06	-3.301e+06 -2.491e+06
422		37.38	113.62	-865.39	-55.72	-696.05	370.29	-1.101e+06	-6.132e+06	-3.465e+06	-3.769e+06 -2.511e+06
435		31.88	-54.61	-832.83	-246.01	-641.43	335.14	-9.694e+05	-5.247e+06	-3.271e+06	-2.945e+06 -2.133e+06
444		30.51	222.92	-698.03	-233.23	-241.89	460.45	4.864e+05	-4.163e+06	-1.033e+06	-2.644e+06 -2.181e+06
255	2431	27.34	178.25	-590.30	-190.57	-221.48	383.96	3.737e+05	-3.800e+06	-8.866e+05	-2.539e+06 -1.916e+06
422		28.76	87.40	-665.69	-42.86	-535.42	284.84	-8.470e+05	-4.717e+06	-2.665e+06	-2.899e+06 -1.931e+06
435		24.52	-42.01	-640.64	-189.24	-493.41	257.80	-7.457e+05	-4.036e+06	-2.516e+06	-2.266e+06 -1.640e+06
444		23.47	171.47	-536.95	-179.41	-186.07	354.20	3.742e+05	-3.202e+06	-7.943e+05	-2.034e+06 -1.677e+06
256	1420	37.62	216.47	-853.50	-308.62	-328.41	534.90	4.411e+05	-5.853e+06	-1.356e+06	-4.057e+06 -2.843e+06
411		40.40	80.59	-968.35	-113.70	-774.06	407.49	-1.457e+06	-7.383e+06	-4.068e+06	-4.772e+06 -2.942e+06
422		34.63	-104.98	-941.86	-332.79	-714.06	372.49	-1.259e+06	-6.335e+06	-3.875e+06	-3.719e+06 -2.537e+06
431		32.70	208.47	-784.17	-300.81	-274.90	496.15	4.970e+05	-4.981e+06	-1.223e+06	-3.260e+06 -2.542e+06
256	2420	28.94	166.52	-656.54	-237.40	-252.62	411.46	3.393e+05	-4.503e+06	-1.043e+06	-3.120e+06 -2.187e+06
411		31.08	61.99	-744.88	-87.46	-595.43	313.46	-1.121e+06	-5.679e+06	-3.129e+06	-3.671e+06 -2.263e+06
422		26.64	-80.76	-724.51	-255.99	-549.27	286.53	-9.683e+05	-4.873e+06	-2.981e+06	-2.861e+06 -1.952e+06
431		25.16	160.36	-603.21	-231.39	-211.46	381.65	3.823e+05	-3.831e+06	-9.410e+05	-2.508e+06 -1.956e+06
257	1409	39.27	206.27	-949.98	-367.27	-376.43	578.11	2.738e+05	-6.855e+06	-1.574e+06	-5.008e+06 -3.124e+06
401		43.60	74.54	-1080.29	-140.97	-864.78	449.93	-1.948e+06	-8.855e+06	-4.666e+06	-6.137e+06 -3.375e+06
411		37.49	-150.39	-1051.95	-408.57	-793.77	407.56	-1.637e+06	-7.597e+06	-4.522e+06	-4.712e+06 -2.979e+06
420		34.74	200.23	-869.81	-357.99	-311.59	534.52	4.561e+05	-5.894e+06	-1.428e+06	-4.010e+06 -2.901e+06
257	2409	30.21	158.67	-730.75	-282.52	-289.56	444.70	2.106e+05	-5.273e+06	-1.211e+06	-3.852e+06 -2.403e+06
401		33.54	57.34	-831.00	-108.44	-665.22	346.10	-1.498e+06	-6.812e+06	-3.589e+06	-4.721e+06 -2.596e+06
411		28.84	-115.69	-809.19	-314.28	-610.60	313.51	-1.259e+06	-5.844e+06	-3.479e+06	-3.625e+06 -2.291e+06
420		26.72	154.03	-669.09	-275.37	-239.69	411.17	3.508e+05	-4.534e+06	-1.099e+06	-3.085e+06 -2.231e+06
258	1396	40.13	144.92	-1103.99	-510.99	-448.08	623.66	-2.159e+05	-7.962e+06	-1.905e+06	-6.272e+06 -3.199e+06
385		46.97	248.46	-1219.13	-4.64	-966.03	554.42	-2.590e+06	-1.055e+07	-5.003e+06	-8.132e+06 -3.657e+06
401		40.61	-218.99	-1173.60	-500.33	-892.26	435.22	-2.165e+06	-9.111e+06	-5.214e+06	-6.062e+06 -3.447e+06
409		36.38	255.93	-936.19	-347.46	-332.79	596.01	3.306e+05	-6.857e+06	-1.585e+06	-4.941e+06 -3.178e+06

258	2396	30.87	111.48	-849.22	-393.07	-344.67	479.74	-1.661e+05	-6.124e+06	-1.466e+06	-4.825e+06	-2.461e+06
	385	36.13	191.12	-937.79	-3.57	-743.10	426.48	-1.992e+06	-8.112e+06	-3.849e+06	-6.255e+06	-2.813e+06
	401	31.24	-168.45	-902.77	-384.87	-686.36	334.78	-1.665e+06	-7.009e+06	-4.010e+06	-4.663e+06	-2.652e+06
	409	27.99	196.87	-720.14	-267.28	-255.99	458.47	2.543e+05	-5.274e+06	-1.220e+06	-3.800e+06	-2.445e+06
259	1379	25.55	-535.46	-1702.57	-1637.40	-600.62	267.97	-6.748e+05	-8.204e+06	-2.105e+06	-6.774e+06	-2.954e+06
	369	36.81	-174.51	-1340.72	-747.88	-767.34	583.03	-5.184e+06	-1.325e+07	-8.364e+06	-1.007e+07	-3.942e+06
	385	33.45	-889.39	-2162.69	-1899.42	-1152.66	515.66	-3.582e+06	-1.139e+07	-7.359e+06	-7.617e+06	-3.904e+06
	396	27.57	159.75	-1131.81	-695.65	-276.41	610.81	-7.793e+05	-8.561e+06	-3.099e+06	-6.241e+06	-3.560e+06
259	2379	19.65	-411.89	-1309.67	-1259.54	-462.01	206.13	-5.191e+05	-6.311e+06	-1.619e+06	-5.210e+06	-2.272e+06
	369	28.31	-134.24	-1031.32	-575.30	-590.26	448.48	-3.988e+06	-1.019e+07	-6.434e+06	-7.747e+06	-3.032e+06
	385	25.73	-684.15	-1663.61	-1461.09	-886.66	396.66	-2.756e+06	-8.765e+06	-5.661e+06	-5.860e+06	-3.003e+06
	396	21.21	122.88	-870.62	-535.12	-212.63	469.85	-5.995e+05	-6.586e+06	-2.384e+06	-4.801e+06	-2.738e+06
260	1359	25.77	25.31	-1068.57	-726.60	-316.65	507.08	-1.122e+06	-8.280e+06	-3.012e+06	-6.390e+06	-3.155e+06
	352	29.85	-453.51	-1636.88	-1301.93	-788.47	533.09	-3.581e+06	-1.051e+07	-5.918e+06	-8.175e+06	-3.276e+06
	369	38.37	-114.09	-1674.34	-930.02	-858.41	779.30	-4.921e+06	-1.361e+07	-8.358e+06	-1.017e+07	-4.249e+06
	379	29.95	-146.34	-1659.73	-1428.02	-378.05	544.95	-2.773e+05	-9.063e+06	-2.133e+06	-7.207e+06	-3.586e+06
260	2359	19.82	19.47	-821.98	-558.92	-243.58	390.06	-8.630e+05	-6.369e+06	-2.317e+06	-4.916e+06	-2.427e+06
	352	22.96	-348.85	-1259.14	-1001.48	-606.51	410.07	-2.755e+06	-8.086e+06	-4.552e+06	-6.289e+06	-2.520e+06
	369	29.51	-87.76	-1287.95	-715.40	-660.32	599.46	-3.785e+06	-1.047e+07	-6.429e+06	-7.826e+06	-3.268e+06
	379	23.04	-112.57	-1276.71	-1098.48	-290.81	419.19	-2.133e+05	-6.972e+06	-1.641e+06	-5.544e+06	-2.759e+06
261	1343	19.93	-60.84	-980.92	-750.67	-291.09	398.54	-9.958e+05	-6.467e+06	-2.359e+06	-5.104e+06	-2.367e+06
	335	24.21	-316.35	-1245.06	-927.68	-633.73	440.48	-3.112e+06	-8.575e+06	-5.078e+06	-6.609e+06	-2.622e+06
	352	30.57	-273.66	-1484.84	-1022.90	-735.60	588.30	-3.804e+06	-1.091e+07	-6.426e+06	-8.284e+06	-3.427e+06
	359	25.22	-27.26	-1272.16	-999.25	-300.17	515.04	-8.155e+05	-7.919e+06	-2.507e+06	-6.228e+06	-3.025e+06
261	2343	15.33	-46.80	-754.55	-577.44	-223.91	306.57	-7.660e+05	-4.975e+06	-1.815e+06	-3.926e+06	-1.820e+06
	335	18.62	-243.35	-957.74	-713.60	-487.48	338.83	-2.394e+06	-6.597e+06	-3.906e+06	-5.084e+06	-2.017e+06
	352	23.51	-210.51	-1142.18	-786.85	-565.85	452.54	-2.927e+06	-8.389e+06	-4.943e+06	-6.372e+06	-2.636e+06
	359	19.40	-20.97	-978.58	-768.66	-230.90	396.18	-6.273e+05	-6.092e+06	-1.928e+06	-4.791e+06	-2.327e+06
262	1324	14.40	-134.76	-779.88	-623.03	-291.62	276.74	-1.082e+06	-4.874e+06	-2.024e+06	-3.931e+06	-1.639e+06
	318	18.05	-292.90	-936.68	-708.42	-521.16	307.97	-2.563e+06	-6.359e+06	-3.949e+06	-4.973e+06	-1.827e+06
	335	24.30	-287.36	-1226.20	-885.00	-628.56	451.57	-3.142e+06	-8.628e+06	-5.155e+06	-6.615e+06	-2.644e+06
	343	19.97	-63.80	-1019.74	-792.97	-290.56	406.63	-9.365e+05	-6.439e+06	-2.284e+06	-5.091e+06	-2.366e+06
262	2324	11.07	-103.66	-599.91	-479.25	-224.32	212.88	-8.321e+05	-3.749e+06	-1.557e+06	-3.024e+06	-1.260e+06
	318	13.88	-225.30	-720.52	-544.94	-400.89	236.90	-1.972e+06	-4.891e+06	-3.038e+06	-3.826e+06	-1.406e+06
	335	18.69	-221.05	-943.23	-680.77	-483.51	347.36	-2.417e+06	-6.637e+06	-3.965e+06	-5.088e+06	-2.034e+06
	343	15.36	-49.08	-784.41	-609.98	-223.51	312.80	-7.204e+05	-4.953e+06	-1.757e+06	-3.916e+06	-1.820e+06
263	1305	9.43	-205.52	-555.85	-472.52	-288.85	149.16	-1.219e+06	-3.285e+06	-1.731e+06	-2.772e+06	-8.923e+05
	299	11.87	-289.33	-640.24	-517.67	-411.90	167.29	-2.023e+06	-4.097e+06	-2.778e+06	-3.342e+06	-9.982e+05
	318	18.08	-283.71	-941.69	-702.13	-523.28	316.60	-2.559e+06	-6.379e+06	-3.970e+06	-4.968e+06	-1.844e+06
	324	14.49	-126.41	-790.00	-627.73	-288.69	285.22	-1.054e+06	-4.884e+06	-2.004e+06	-3.934e+06	-1.654e+06
263	2305	7.26	-158.09	-427.57	-363.48	-222.19	114.74	-9.375e+05	-2.527e+06	-1.332e+06	-2.132e+06	-6.864e+05
	299	9.13	-222.56	-492.49	-398.21	-316.85	128.69	-1.556e+06	-3.152e+06	-2.137e+06	-2.571e+06	-7.678e+05
	318	13.91	-218.24	-724.38	-540.10	-402.52	243.54	-1.968e+06	-4.907e+06	-3.054e+06	-3.822e+06	-1.418e+06
	324	11.15	-97.24	-607.70	-482.87	-222.07	219.40	-8.109e+05	-3.757e+06	-1.542e+06	-3.026e+06	-1.272e+06
264	1265	5.03	-285.98	-291.79	-286.22	-291.54	-1.16	-1.377e+06	-1.379e+06	-1.379e+06	-1.377e+06	479.75
	299	11.90	-281.43	-647.38	-413.24	-515.57	-175.67	-2.014e+06	-4.115e+06	-3.338e+06	-2.790e+06	1.014e+06

305		9.46	-196.30	-565.01	-286.04	-475.26	-158.23	-1.192e+06	-3.299e+06	-2.776e+06	-1.715e+06	9.107e+05
264	2265	3.87	-219.99	-224.45	-220.17	-224.26	-0.89	-1.059e+06	-1.061e+06	-1.061e+06	-1.059e+06	369.04
299		9.16	-216.49	-497.98	-317.87	-396.60	-135.13	-1.549e+06	-3.165e+06	-2.568e+06	-2.146e+06	7.802e+05
305		7.28	-151.00	-434.62	-220.03	-365.59	-121.71	-9.166e+05	-2.538e+06	-2.135e+06	-1.319e+06	7.005e+05
265	1526	7.79	132.47	-9.73	101.95	20.78	58.38	8.522e+04	-1.227e+05	-9920.63	-2.760e+04	-1.036e+05
525		7.53	263.16	-38.34	262.50	-37.68	-14.06	8.245e+04	-1.121e+05	-5.311e+04	2.344e+04	-8.944e+04
528		2.99	214.67	16.46	208.97	22.16	-33.13	196.92	-3.606e+04	-3.595e+04	90.51	-1961.21
529		2.47	163.33	-24.01	160.17	-20.85	24.12	3902.63	-2.635e+04	-2.340e+04	951.89	-8975.04
265	2526	6.00	101.90	-7.49	78.43	15.99	44.91	6.556e+04	-9.442e+04	-7631.26	-2.123e+04	-7.970e+04
525		5.79	202.43	-29.49	201.92	-28.99	-10.81	6.342e+04	-8.625e+04	-4.086e+04	1.803e+04	-6.880e+04
528		2.30	165.13	12.66	160.74	17.04	-25.49	151.47	-2.774e+04	-2.765e+04	69.62	-1508.62
529		1.90	125.64	-18.47	123.21	-16.04	18.55	3002.02	-2.027e+04	-1.800e+04	732.22	-6903.88
266	1523	10.34	159.22	-35.73	103.11	20.38	88.26	1.580e+05	-1.918e+05	1.076e+04	-4.457e+04	-1.727e+05
522		10.14	263.00	-64.79	262.74	-64.52	9.34	1.288e+05	-2.060e+05	-1.059e+05	2.868e+04	-1.533e+05
525		6.24	247.39	-14.62	246.37	-13.61	-16.31	7.242e+04	-1.230e+05	-7.619e+04	2.557e+04	-8.345e+04
526		6.21	141.59	-27.94	121.69	-8.04	54.56	8.463e+04	-1.210e+05	-1.184e+04	-2.453e+04	-1.026e+05
266	2523	7.95	122.48	-27.48	79.32	15.68	67.89	1.215e+05	-1.475e+05	8278.80	-3.429e+04	-1.328e+05
522		7.80	202.31	-49.84	202.11	-49.63	7.18	9.908e+04	-1.585e+05	-8.146e+04	2.206e+04	-1.179e+05
525		4.80	190.30	-11.25	189.52	-10.47	-12.55	5.571e+04	-9.465e+04	-5.861e+04	1.967e+04	-6.419e+04
526		4.78	108.92	-21.49	93.61	-6.18	41.97	6.510e+04	-9.308e+04	-9105.85	-1.887e+04	-7.894e+04
267	1518	11.85	170.27	-66.91	83.65	19.70	114.20	2.492e+05	-2.440e+05	5.984e+04	-5.464e+04	-2.399e+05
517		12.54	271.73	-96.70	267.22	-92.19	40.51	1.671e+05	-3.385e+05	-1.833e+05	1.192e+04	-2.332e+05
522		8.73	234.99	-49.01	234.78	-48.80	7.72	1.200e+05	-2.278e+05	-1.427e+05	3.487e+04	-1.495e+05
523		8.73	165.95	-41.46	124.96	-0.47	82.59	1.673e+05	-1.958e+05	1.405e+04	-4.258e+04	-1.793e+05
267	2518	9.11	130.97	-51.47	64.35	15.15	87.84	1.917e+05	-1.877e+05	4.603e+04	-4.203e+04	-1.845e+05
517		9.64	209.03	-74.39	205.56	-70.92	31.16	1.285e+05	-2.604e+05	-1.410e+05	9166.43	-1.794e+05
522		6.71	180.76	-37.70	180.60	-37.54	5.94	9.227e+04	-1.753e+05	-1.098e+05	2.682e+04	-1.150e+05
523		6.71	127.65	-31.89	96.12	-0.36	63.53	1.287e+05	-1.506e+05	1.081e+04	-3.276e+04	-1.379e+05
268	1513	11.89	49.67	-207.05	-85.69	-71.69	128.17	4.202e+05	-1.499e+05	2.782e+05	-7914.69	-2.465e+05
512		16.83	409.92	-43.86	392.63	-26.58	86.86	1.599e+05	-6.267e+05	-3.585e+05	-1.082e+05	-3.728e+05
517		10.43	134.50	-134.46	129.93	-129.89	34.77	1.664e+05	-3.484e+05	-2.163e+05	3.425e+04	-2.249e+05
518		10.48	261.07	0.56	212.41	49.22	101.53	2.580e+05	-2.729e+05	4.828e+04	-6.320e+04	-2.596e+05
268	2513	9.15	38.21	-159.27	-65.92	-55.15	98.59	3.232e+05	-1.153e+05	2.140e+05	-6088.22	-1.896e+05
512		12.95	315.32	-33.74	302.02	-20.44	66.82	1.230e+05	-4.820e+05	-2.758e+05	-8.326e+04	-2.868e+05
517		8.02	103.46	-103.43	99.94	-99.92	26.74	1.280e+05	-2.680e+05	-1.664e+05	2.635e+04	-1.730e+05
518		8.06	200.82	0.43	163.39	37.86	78.10	1.985e+05	-2.100e+05	3.714e+04	-4.862e+04	-1.997e+05
269	1508	17.82	272.90	-148.31	136.99	-12.40	196.92	5.080e+05	-5.506e+05	6.199e+04	-1.045e+05	-5.227e+05
505		16.06	238.29	-162.79	208.75	-133.26	104.75	2.277e+05	-6.949e+05	-3.706e+05	-9.661e+04	-4.405e+05
512		11.62	306.30	-145.84	301.08	-140.62	48.31	3.384e+04	-5.408e+05	-4.519e+05	-5.500e+04	-2.077e+05
513		19.86	193.30	-143.80	17.43	32.07	168.39	7.800e+05	-4.115e+05	3.688e+05	-269.48	-5.665e+05
269	2508	13.71	209.93	-114.09	105.38	-9.54	151.47	3.908e+05	-4.235e+05	4.769e+04	-8.040e+04	-4.021e+05
505		12.35	183.30	-125.22	160.58	-102.50	80.58	1.752e+05	-5.346e+05	-2.851e+05	-7.432e+04	-3.389e+05
512		8.94	235.62	-112.18	231.60	-108.17	37.16	2.603e+04	-4.160e+05	-3.476e+05	-4.231e+04	-1.598e+05
513		15.28	148.69	-110.61	13.41	24.67	129.53	6.000e+05	-3.166e+05	2.837e+05	-207.29	-4.358e+05
270	1503	19.18	267.46	-207.72	64.13	-4.39	235.11	5.647e+05	-7.563e+05	3.536e+04	-2.270e+05	-6.473e+05
498		18.77	303.20	-228.67	262.91	-188.38	140.73	2.746e+05	-9.732e+05	-5.139e+05	-1.847e+05	-6.018e+05

505		14.48	222.55	-173.16	191.95	-142.56	105.70	1.848e+05	-7.629e+05	-4.871e+05	-9.094e+04 -4.305e+05
508		16.14	252.11	-155.36	110.05	-13.30	194.17	5.744e+05	-5.482e+05	1.272e+05	-1.010e+05 -5.496e+05
270	2503	14.75	205.74	-159.78	49.33	-3.37	180.85	4.344e+05	-5.818e+05	2.720e+04	-1.746e+05 -4.980e+05
498		14.44	233.23	-175.90	202.24	-144.91	108.25	2.112e+05	-7.486e+05	-3.953e+05	-1.421e+05 -4.629e+05
505		11.14	171.19	-133.20	147.65	-109.66	81.31	1.422e+05	-5.869e+05	-3.747e+05	-6.995e+04 -3.311e+05
508		12.42	193.93	-119.51	84.66	-10.23	149.36	4.418e+05	-4.217e+05	9.788e+04	-7.772e+04 -4.227e+05
271	1496	21.22	290.55	-258.63	41.20	-9.28	273.43	6.834e+05	-1.006e+06	2.186e+04	-3.445e+05 -8.246e+05
491		21.12	311.41	-289.13	252.67	-230.40	178.39	3.136e+05	-1.305e+06	-6.787e+05	-3.130e+05 -7.885e+05
498		16.93	221.16	-233.05	171.78	-183.68	141.38	2.434e+05	-1.048e+06	-6.287e+05	-1.758e+05 -6.047e+05
503		17.14	272.27	-199.61	87.73	-15.08	230.27	6.056e+05	-7.600e+05	6.313e+04	-2.175e+05 -6.682e+05
271	2496	16.32	223.50	-198.94	31.70	-7.14	210.33	5.257e+05	-7.739e+05	1.682e+04	-2.650e+05 -6.343e+05
491		16.25	239.55	-222.41	194.36	-177.23	137.22	2.412e+05	-1.004e+06	-5.221e+05	-2.408e+05 -6.066e+05
498		13.02	170.12	-179.27	132.14	-141.29	108.75	1.872e+05	-8.061e+05	-4.836e+05	-1.353e+05 -4.651e+05
503		13.18	209.43	-153.54	67.49	-11.60	177.13	4.658e+05	-5.846e+05	4.856e+04	-1.673e+05 -5.140e+05
272	1487	23.41	313.72	-312.13	17.63	-16.05	312.47	8.433e+05	-1.294e+06	1.747e+04	-4.686e+05 -1.041e+06
482		23.50	315.29	-354.50	233.73	-272.93	219.04	3.544e+05	-1.703e+06	-8.751e+05	-4.735e+05 -1.009e+06
491		19.18	216.15	-300.31	144.20	-228.36	178.84	2.798e+05	-1.393e+06	-8.129e+05	-3.007e+05 -7.964e+05
496		19.04	295.41	-247.54	64.13	-16.26	268.48	7.230e+05	-1.012e+06	4.453e+04	-3.334e+05 -8.467e+05
272	2487	18.01	241.32	-240.10	13.56	-12.34	240.36	6.487e+05	-9.957e+05	1.344e+04	-3.605e+05 -8.006e+05
482		18.08	242.53	-272.69	179.79	-209.95	168.49	2.726e+05	-1.310e+06	-6.731e+05	-3.642e+05 -7.761e+05
491		14.75	166.27	-231.01	110.92	-175.66	137.57	2.153e+05	-1.072e+06	-6.253e+05	-2.313e+05 -6.126e+05
496		14.65	227.23	-190.41	49.33	-12.51	206.52	5.562e+05	-7.784e+05	3.426e+04	-2.565e+05 -6.513e+05
273	1478	25.63	336.01	-368.69	-8.66	-24.02	352.27	1.037e+06	-1.626e+06	1.893e+04	-6.074e+05 -1.294e+06
475		25.91	316.78	-424.73	208.96	-316.91	261.39	3.991e+05	-2.170e+06	-1.106e+06	-6.649e+05 -1.266e+06
482		21.45	208.74	-374.42	109.09	-274.77	219.50	3.144e+05	-1.806e+06	-1.033e+06	-4.581e+05 -1.020e+06
487		21.14	320.07	-298.19	40.75	-18.87	307.69	8.876e+05	-1.302e+06	4.185e+04	-4.564e+05 -1.066e+06
273	2478	19.71	258.47	-283.61	-6.66	-18.48	270.97	7.978e+05	-1.251e+06	1.456e+04	-4.673e+05 -9.954e+05
475		19.93	243.68	-326.72	160.74	-243.78	201.07	3.070e+05	-1.669e+06	-8.510e+05	-5.114e+05 -9.735e+05
482		16.50	160.57	-288.01	83.92	-211.36	168.84	2.419e+05	-1.389e+06	-7.947e+05	-3.524e+05 -7.849e+05
487		16.27	246.21	-229.38	31.35	-14.52	236.68	6.828e+05	-1.002e+06	3.219e+04	-3.511e+05 -8.202e+05
274	1469	27.84	357.08	-427.82	-37.58	-33.17	392.44	1.263e+06	-2.005e+06	2.474e+04	-7.668e+05 -1.585e+06
468		28.32	315.49	-498.93	179.03	-362.47	304.16	4.466e+05	-2.713e+06	-1.375e+06	-8.913e+05 -1.561e+06
475		23.75	199.18	-454.18	67.62	-322.63	262.01	3.517e+05	-2.289e+06	-1.291e+06	-6.466e+05 -1.281e+06
478		23.29	344.98	-351.58	16.05	-22.66	347.74	1.088e+06	-1.635e+06	4.736e+04	-5.940e+05 -1.323e+06
274	2469	21.41	274.67	-329.09	-28.91	-25.51	301.88	9.712e+05	-1.542e+06	1.903e+04	-5.898e+05 -1.219e+06
468		21.78	242.68	-383.79	137.72	-278.83	233.97	3.436e+05	-2.087e+06	-1.058e+06	-6.856e+05 -1.201e+06
475		18.27	153.21	-349.37	52.02	-248.18	201.54	2.705e+05	-1.761e+06	-9.930e+05	-4.974e+05 -9.850e+05
478		17.92	265.37	-270.45	12.35	-17.43	267.50	8.372e+05	-1.258e+06	3.643e+04	-4.569e+05 -1.018e+06
275	1460	30.02	376.34	-488.83	-68.72	-43.78	432.40	1.518e+06	-2.434e+06	3.429e+04	-9.505e+05 -1.914e+06
455		30.72	311.24	-576.28	144.88	-409.93	346.36	4.932e+05	-3.338e+06	-1.683e+06	-1.161e+06 -1.898e+06
468		26.07	187.21	-538.35	20.80	-371.94	305.04	3.908e+05	-2.849e+06	-1.588e+06	-8.703e+05 -1.580e+06
469		25.44	369.19	-407.53	-10.59	-27.76	388.26	1.322e+06	-2.015e+06	5.855e+04	-7.518e+05 -1.619e+06
275	2460	23.09	289.49	-376.03	-52.86	-33.68	332.62	1.168e+06	-1.873e+06	2.638e+04	-7.311e+05 -1.472e+06
455		23.63	239.41	-443.29	111.45	-315.33	266.43	3.794e+05	-2.568e+06	-1.295e+06	-8.934e+05 -1.460e+06
468		20.05	144.01	-414.11	16.00	-286.11	234.64	3.006e+05	-2.192e+06	-1.222e+06	-6.694e+05 -1.215e+06
469		19.57	283.99	-313.48	-8.14	-21.35	298.66	1.017e+06	-1.550e+06	4.504e+04	-5.783e+05 -1.245e+06

276	1447	32.12	393.26	-551.04	-101.43	-56.36	471.61	1.802e+06	-2.916e+06	4.724e+04	-1.161e+06	-2.280e+06
	444	33.09	304.27	-656.05	107.99	-459.77	387.26	5.314e+05	-4.053e+06	-2.031e+06	-1.490e+06	-2.276e+06
	455	28.39	172.86	-625.62	-29.94	-422.82	347.57	4.281e+05	-3.493e+06	-1.928e+06	-1.138e+06	-1.920e+06
	460	27.57	391.82	-465.53	-39.10	-34.60	428.67	1.587e+06	-2.446e+06	7.448e+04	-9.337e+05	-1.953e+06
276	2447	24.71	302.51	-423.88	-78.02	-43.35	362.78	1.386e+06	-2.243e+06	3.634e+04	-8.933e+05	-1.754e+06
	444	25.45	234.06	-504.66	83.07	-353.67	297.89	4.088e+05	-3.117e+06	-1.563e+06	-1.146e+06	-1.751e+06
	455	21.84	132.97	-481.25	-23.03	-325.25	267.36	3.293e+05	-2.687e+06	-1.483e+06	-8.750e+05	-1.477e+06
	460	21.20	301.40	-358.10	-30.08	-26.61	329.75	1.221e+06	-1.882e+06	5.729e+04	-7.182e+05	-1.502e+06
277	1436	34.06	407.69	-614.22	-134.97	-71.55	509.97	2.104e+06	-3.443e+06	6.313e+04	-1.402e+06	-2.675e+06
	431	35.37	295.61	-737.88	70.66	-512.93	426.47	5.456e+05	-4.863e+06	-2.417e+06	-1.901e+06	-2.692e+06
	444	30.68	156.56	-714.66	-82.52	-475.58	388.76	4.566e+05	-4.227e+06	-2.308e+06	-1.463e+06	-2.303e+06
	447	29.63	412.23	-525.06	-69.01	-43.83	468.47	1.881e+06	-2.929e+06	9.471e+04	-1.143e+06	-2.324e+06
277	2436	26.20	313.61	-472.47	-103.83	-55.04	392.28	1.618e+06	-2.648e+06	4.856e+04	-1.079e+06	-2.058e+06
	431	27.21	227.39	-567.60	54.36	-394.56	328.06	4.197e+05	-3.741e+06	-1.859e+06	-1.462e+06	-2.071e+06
	444	23.60	120.43	-549.74	-63.48	-365.83	299.04	3.512e+05	-3.252e+06	-1.775e+06	-1.125e+06	-1.772e+06
	447	22.79	317.10	-403.89	-53.08	-33.71	360.37	1.447e+06	-2.253e+06	7.286e+04	-8.789e+05	-1.788e+06
278	1425	35.63	420.02	-679.92	-169.46	-90.44	548.55	2.402e+06	-3.995e+06	8.051e+04	-1.674e+06	-3.076e+06
	420	37.44	288.73	-822.61	37.26	-571.14	465.00	5.044e+05	-5.770e+06	-2.827e+06	-2.439e+06	-3.131e+06
	431	32.90	139.30	-804.37	-133.95	-531.12	428.01	4.614e+05	-5.057e+06	-2.726e+06	-1.870e+06	-2.726e+06
	436	31.56	430.36	-585.91	-99.26	-56.29	507.68	2.195e+06	-3.458e+06	1.188e+05	-1.381e+06	-2.725e+06
278	2425	27.41	323.09	-523.02	-130.36	-69.57	421.96	1.847e+06	-3.073e+06	6.193e+04	-1.288e+06	-2.366e+06
	420	28.80	222.10	-632.78	28.66	-439.34	357.70	3.880e+05	-4.438e+06	-2.175e+06	-1.876e+06	-2.409e+06
	431	25.31	107.16	-618.75	-103.04	-408.55	329.24	3.549e+05	-3.890e+06	-2.097e+06	-1.438e+06	-2.097e+06
	436	24.28	331.05	-450.70	-76.36	-43.30	390.52	1.689e+06	-2.660e+06	9.135e+04	-1.063e+06	-2.096e+06
279	1412	36.37	428.26	-757.89	-214.55	-115.08	590.98	2.628e+06	-4.516e+06	8.937e+04	-1.978e+06	-3.419e+06
	409	39.07	300.28	-913.55	22.85	-636.12	509.70	3.423e+05	-6.754e+06	-3.222e+06	-3.190e+06	-3.548e+06
	420	34.95	121.25	-895.83	-182.53	-592.04	465.50	4.127e+05	-5.983e+06	-3.169e+06	-2.401e+06	-3.175e+06
	425	33.17	450.14	-646.83	-124.96	-71.72	547.84	2.508e+06	-4.012e+06	1.470e+05	-1.651e+06	-3.134e+06
279	2412	27.98	329.43	-582.99	-165.04	-88.52	454.60	2.022e+06	-3.474e+06	6.875e+04	-1.521e+06	-2.630e+06
	409	30.05	230.99	-702.73	17.58	-489.32	392.07	2.633e+05	-5.196e+06	-2.479e+06	-2.454e+06	-2.730e+06
	420	26.88	93.27	-689.10	-140.41	-455.42	358.08	3.174e+05	-4.602e+06	-2.438e+06	-1.847e+06	-2.442e+06
	425	25.51	346.26	-497.56	-96.13	-55.17	421.41	1.930e+06	-3.086e+06	1.131e+05	-1.270e+06	-2.411e+06
280	1397	35.22	381.70	-931.07	-395.86	-153.51	645.10	2.547e+06	-4.912e+06	-4.532e+04	-2.319e+06	-3.552e+06
	396	39.57	476.05	-1013.93	160.68	-698.57	608.63	-2.939e+04	-7.666e+06	-3.373e+06	-4.322e+06	-3.789e+06
	409	36.67	69.20	-1012.43	-271.94	-671.29	502.60	2.265e+05	-7.027e+06	-3.653e+06	-3.147e+06	-3.618e+06
	412	34.06	517.49	-682.49	-90.61	-74.39	599.93	2.794e+06	-4.507e+06	2.277e+05	-1.941e+06	-3.486e+06
280	2397	27.09	293.62	-716.21	-304.51	-118.08	496.23	1.959e+06	-3.778e+06	-3.486e+04	-1.784e+06	-2.732e+06
	396	30.44	366.19	-779.95	123.60	-537.36	468.18	-2.261e+04	-5.897e+06	-2.595e+06	-3.325e+06	-2.914e+06
	409	28.21	53.23	-778.79	-209.19	-516.38	386.62	1.743e+05	-5.405e+06	-2.810e+06	-2.421e+06	-2.783e+06
	412	26.20	398.07	-524.99	-69.70	-57.22	461.49	2.149e+06	-3.467e+06	1.751e+05	-1.493e+06	-2.681e+06
281	1386	22.74	-198.60	-1284.56	-1135.97	-347.20	373.22	3.146e+06	-4.412e+06	7.616e+05	-2.028e+06	-3.512e+06
	379	29.41	244.02	-871.30	-138.72	-488.56	529.51	-1.904e+06	-9.685e+06	-6.006e+06	-5.583e+06	-3.885e+06
	396	27.19	-506.80	-1711.49	-1304.75	-913.54	569.70	-2.928e+05	-8.494e+06	-4.904e+06	-3.883e+06	-4.069e+06
	397	25.16	672.98	-595.71	15.53	61.74	633.92	2.671e+06	-5.446e+06	-3.387e+05	-2.437e+06	-3.921e+06
281	2386	17.49	-152.77	-988.13	-873.82	-267.08	287.09	2.420e+06	-3.394e+06	5.858e+05	-1.560e+06	-2.702e+06
	379	22.62	187.71	-670.23	-106.71	-375.81	407.32	-1.465e+06	-7.450e+06	-4.620e+06	-4.295e+06	-2.988e+06

396		20.92	-389.85	-1316.53	-1003.66	-702.72	438.23	-2.252e+05	-6.534e+06	-3.772e+06	-2.987e+06	-3.130e+06
397		19.35	517.68	-458.24	11.95	47.49	487.63	2.054e+06	-4.189e+06	-2.605e+05	-1.874e+06	-3.016e+06
282	1363	22.33	386.64	-738.08	-247.74	-103.71	557.73	1.924e+06	-5.208e+06	-8.078e+05	-2.476e+06	-3.467e+06
359		24.38	-158.88	-1344.13	-873.54	-629.47	579.92	-6.544e+05	-7.644e+06	-3.938e+06	-4.360e+06	-3.489e+06
379		31.75	266.31	-1258.11	-346.70	-645.10	747.46	-1.412e+06	-1.007e+07	-5.987e+06	-5.494e+06	-4.321e+06
386		27.17	267.15	-1317.56	-916.22	-134.18	689.15	3.592e+06	-5.156e+06	7.426e+05	-2.306e+06	-4.100e+06
282	2363	17.18	297.41	-567.76	-190.57	-79.77	429.02	1.480e+06	-4.006e+06	-6.214e+05	-1.904e+06	-2.667e+06
359		18.75	-122.22	-1033.94	-671.95	-484.21	446.09	-5.034e+05	-5.880e+06	-3.029e+06	-3.354e+06	-2.684e+06
379		24.43	204.85	-967.78	-266.69	-496.23	574.97	-1.086e+06	-7.745e+06	-4.605e+06	-4.226e+06	-3.324e+06
386		20.90	205.50	-1013.51	-704.79	-103.22	530.12	2.763e+06	-3.966e+06	5.712e+05	-1.774e+06	-3.154e+06
283	1344	17.32	190.84	-736.45	-378.04	-167.57	451.54	1.334e+06	-4.145e+06	-7.204e+05	-2.092e+06	-2.652e+06
343		19.82	-88.12	-1028.91	-588.38	-528.65	469.45	-9.219e+05	-6.402e+06	-3.608e+06	-3.716e+06	-2.740e+06
359		25.42	29.85	-1186.08	-568.13	-588.10	607.89	-9.547e+05	-8.042e+06	-4.488e+06	-4.508e+06	-3.544e+06
363		22.52	302.48	-989.15	-559.10	-127.57	608.71	2.312e+06	-4.868e+06	-2.656e+05	-2.290e+06	-3.444e+06
283	2344	13.32	146.80	-566.50	-290.80	-128.90	347.34	1.026e+06	-3.189e+06	-5.541e+05	-1.609e+06	-2.040e+06
343		15.25	-67.78	-791.47	-452.60	-406.65	361.11	-7.092e+05	-4.925e+06	-2.775e+06	-2.859e+06	-2.107e+06
359		19.55	22.97	-912.37	-437.02	-452.39	467.60	-7.344e+05	-6.186e+06	-3.453e+06	-3.468e+06	-2.726e+06
363		17.32	232.68	-760.89	-430.07	-98.13	468.24	1.779e+06	-3.744e+06	-2.043e+05	-1.761e+06	-2.650e+06
284	1325	12.26	33.19	-611.21	-371.78	-206.24	311.39	5.143e+05	-3.275e+06	-8.954e+05	-1.865e+06	-1.832e+06
324		14.39	-135.87	-782.99	-466.54	-452.32	323.48	-1.071e+06	-4.867e+06	-2.955e+06	-2.983e+06	-1.898e+06
343		20.00	-55.26	-1006.94	-536.27	-525.93	475.81	-9.611e+05	-6.461e+06	-3.696e+06	-3.725e+06	-2.750e+06
344		17.45	183.26	-782.85	-433.17	-166.42	464.27	1.404e+06	-4.114e+06	-6.260e+05	-2.084e+06	-2.661e+06
284	2325	9.43	25.53	-470.16	-285.98	-158.65	239.53	3.956e+05	-2.519e+06	-6.888e+05	-1.435e+06	-1.409e+06
324		11.07	-104.52	-602.30	-358.88	-347.94	248.83	-8.236e+05	-3.744e+06	-2.273e+06	-2.295e+06	-1.460e+06
343		15.39	-42.51	-774.57	-412.52	-404.56	366.01	-7.393e+05	-4.970e+06	-2.843e+06	-2.866e+06	-2.115e+06
344		13.43	140.97	-602.19	-333.21	-128.01	357.13	1.080e+06	-3.165e+06	-4.816e+05	-1.603e+06	-2.047e+06
285	1306	7.37	-114.73	-463.68	-335.15	-243.26	168.32	-3.485e+05	-2.412e+06	-1.116e+06	-1.644e+06	-9.975e+05
305		9.42	-204.59	-554.80	-383.84	-375.55	175.06	-1.212e+06	-3.282e+06	-2.239e+06	-2.255e+06	-1.035e+06
324		14.51	-125.01	-789.41	-459.85	-454.58	332.19	-1.063e+06	-4.893e+06	-2.977e+06	-2.979e+06	-1.915e+06
325		12.41	42.52	-624.17	-378.43	-203.22	321.62	5.464e+05	-3.286e+06	-8.709e+05	-1.869e+06	-1.850e+06
285	2306	5.67	-88.25	-356.68	-257.81	-187.12	129.48	-2.680e+05	-1.856e+06	-8.588e+05	-1.265e+06	-7.673e+05
305		7.25	-157.38	-426.77	-295.26	-288.89	134.66	-9.327e+05	-2.524e+06	-1.722e+06	-1.735e+06	-7.958e+05
324		11.16	-96.17	-607.24	-353.73	-349.67	255.53	-8.177e+05	-3.764e+06	-2.290e+06	-2.292e+06	-1.473e+06
325		9.55	32.70	-480.13	-291.10	-156.32	247.40	4.203e+05	-2.528e+06	-6.699e+05	-1.438e+06	-1.423e+06
286	1306	7.49	-104.69	-474.06	-375.75	-203.00	-163.24	-3.205e+05	-2.427e+06	-8.790e+05	-1.869e+06	9.300e+05
265		5.03	-285.28	-290.89	-289.03	-287.14	-2.64	-1.377e+06	-1.381e+06	-1.378e+06	-1.380e+06	1096.37
305		9.47	-195.25	-563.61	-503.80	-255.06	-135.84	-1.200e+06	-3.305e+06	-1.533e+06	-2.972e+06	7.683e+05
286	2306	5.76	-80.53	-364.66	-289.04	-156.15	-125.57	-2.465e+05	-1.867e+06	-6.762e+05	-1.438e+06	7.154e+05
265		3.87	-219.45	-223.76	-222.33	-220.87	-2.03	-1.059e+06	-1.062e+06	-1.060e+06	-1.062e+06	843.36
305		7.29	-150.19	-433.54	-387.54	-196.20	-104.49	-9.228e+05	-2.542e+06	-1.179e+06	-2.286e+06	5.910e+05
287	1524	6.59	30.52	-31.27	-24.13	23.39	19.74	8.216e+04	-1.063e+05	-4915.19	-1.920e+04	-9.395e+04
526		6.68	110.65	-27.38	109.14	-25.87	14.35	1.013e+05	-8.641e+04	-1.065e+04	2.554e+04	-9.209e+04
529		0.46	45.81	16.42	40.90	21.33	-10.97	3438.90	-953.24	2944.28	-458.62	-1388.45
527		1.13	18.60	-20.89	18.50	-20.78	2.01	3904.68	-2.185e+04	-1.814e+04	186.50	-9052.52
287	2524	5.07	23.48	-24.05	-18.56	17.99	15.19	6.320e+04	-8.175e+04	-3780.92	-1.477e+04	-7.227e+04
526		5.14	85.11	-21.06	83.95	-19.90	11.04	7.792e+04	-6.647e+04	-8192.04	1.964e+04	-7.084e+04

529	0.35	35.24	12.63	31.46	16.41	-8.44	2645.31	-733.26	2264.83	-352.78	-1068.04
527	0.87	14.31	-16.07	14.23	-15.99	1.55	3003.60	-1.681e+04	-1.395e+04	143.46	-6963.48
288 1521	9.12	57.52	-42.28	-10.96	26.20	46.31	1.585e+05	-1.630e+05	1.221e+04	-1.669e+04	-1.601e+05
523	8.87	129.01	-37.53	121.39	-29.91	34.81	1.573e+05	-1.517e+05	-3.341e+04	3.904e+04	-1.502e+05
526	5.06	102.71	-0.08	101.49	1.14	11.13	9.326e+04	-8.561e+04	-1.638e+04	2.403e+04	-8.712e+04
524	5.08	8.98	-28.99	-17.41	-2.59	17.48	7.964e+04	-1.033e+05	-5311.73	-1.831e+04	-9.122e+04
288 2521	7.01	44.24	-32.52	-8.43	20.15	35.62	1.219e+05	-1.254e+05	9393.77	-1.284e+04	-1.231e+05
523	6.82	99.24	-28.87	93.38	-23.01	26.77	1.210e+05	-1.167e+05	-2.570e+04	3.003e+04	-1.155e+05
526	3.89	79.00	-0.06	78.07	0.88	8.56	7.174e+04	-6.585e+04	-1.260e+04	1.849e+04	-6.702e+04
524	3.91	6.91	-22.30	-13.39	-2.00	13.44	6.126e+04	-7.944e+04	-4085.94	-1.409e+04	-7.017e+04
289 1516	11.86	95.68	-76.77	-5.03	23.94	85.00	2.722e+05	-2.313e+05	3.579e+04	5175.21	-2.513e+05
518	9.81	161.48	-43.54	148.95	-31.02	49.11	1.904e+05	-2.216e+05	-7.880e+04	4.758e+04	-1.961e+05
523	7.29	120.28	-18.73	112.34	-10.79	32.26	1.530e+05	-1.582e+05	-4.352e+04	3.833e+04	-1.501e+05
521	7.46	44.73	-40.25	-4.17	8.65	42.00	1.607e+05	-1.624e+05	1.525e+04	-1.694e+04	-1.607e+05
289 2516	9.12	73.60	-59.06	-3.87	18.41	65.39	2.094e+05	-1.779e+05	2.753e+04	3980.93	-1.933e+05
518	7.54	124.21	-33.50	114.58	-23.86	37.77	1.465e+05	-1.705e+05	-6.061e+04	3.660e+04	-1.509e+05
523	5.61	92.52	-14.41	86.41	-8.30	24.82	1.177e+05	-1.217e+05	-3.348e+04	2.949e+04	-1.155e+05
521	5.74	34.41	-30.96	-3.21	6.66	32.31	1.236e+05	-1.249e+05	1.173e+04	-1.303e+04	-1.236e+05
290 1511	17.54	48.73	-257.16	-133.56	-74.87	150.10	5.598e+05	-3.138e+05	1.506e+05	9.530e+04	-4.359e+05
513	10.63	337.34	49.07	329.09	57.32	48.07	9.805e+04	-3.751e+05	-3.024e+05	2.533e+04	-1.707e+05
518	8.17	51.12	-80.11	33.50	-62.48	44.75	2.032e+05	-2.189e+05	-6.926e+04	5.357e+04	-2.019e+05
516	9.75	151.23	5.56	98.37	58.42	70.04	2.585e+05	-2.440e+05	1.905e+04	-4618.65	-2.510e+05
290 2511	13.49	37.48	-197.82	-102.74	-57.59	115.46	4.306e+05	-2.414e+05	1.159e+05	7.331e+04	-3.353e+05
513	8.18	259.49	37.75	253.15	44.09	36.98	7.543e+04	-2.886e+05	-2.326e+05	1.949e+04	-1.313e+05
518	6.29	39.32	-61.62	25.77	-48.06	34.42	1.563e+05	-1.684e+05	-5.328e+04	4.120e+04	-1.553e+05
516	7.50	116.33	4.28	75.67	44.94	53.88	1.988e+05	-1.877e+05	1.466e+04	-3552.81	-1.931e+05
291 1504	15.97	200.44	-109.81	43.53	47.09	155.12	5.384e+05	-4.171e+05	1.231e+05	-1849.22	-4.737e+05
508	17.67	181.14	-158.60	113.96	-91.42	135.32	5.225e+05	-5.424e+05	-1.674e+05	1.475e+05	-5.086e+05
513	18.61	251.72	-150.32	224.21	-122.81	101.50	5.116e+05	-5.989e+05	-3.586e+05	2.713e+05	-4.573e+05
511	11.14	131.48	-129.74	-79.75	81.49	102.76	3.747e+05	-2.791e+05	1.680e+05	-7.241e+04	-3.040e+05
291 2504	12.29	154.18	-84.47	33.49	36.22	119.32	4.141e+05	-3.209e+05	9.469e+04	-1422.47	-3.644e+05
508	13.59	139.34	-122.00	87.66	-70.32	104.09	4.019e+05	-4.172e+05	-1.288e+05	1.135e+05	-3.913e+05
513	14.32	193.63	-115.63	172.47	-94.47	78.08	3.936e+05	-4.607e+05	-2.758e+05	2.087e+05	-3.518e+05
511	8.57	101.14	-99.80	-61.35	62.68	79.05	2.882e+05	-2.147e+05	1.292e+05	-5.570e+04	-2.339e+05
292 1497	18.44	221.97	-171.18	-17.65	68.45	191.80	7.688e+05	-5.137e+05	2.152e+05	3.983e+04	-6.352e+05
503	19.21	264.42	-206.05	182.29	-123.91	178.60	5.999e+05	-7.329e+05	-2.458e+05	1.128e+05	-6.418e+05
508	15.97	193.02	-161.11	129.38	-97.48	135.96	5.069e+05	-6.080e+05	-2.570e+05	1.560e+05	-5.178e+05
504	14.08	185.76	-120.17	16.44	49.15	152.09	5.775e+05	-4.011e+05	1.792e+05	-2866.80	-4.808e+05
292 2497	14.19	170.75	-131.67	-13.58	52.65	147.54	5.914e+05	-3.952e+05	1.656e+05	3.064e+04	-4.887e+05
503	14.78	203.40	-158.50	140.22	-95.32	137.38	4.614e+05	-5.638e+05	-1.891e+05	8.677e+04	-4.937e+05
508	12.28	148.47	-123.93	99.53	-74.99	104.58	3.900e+05	-4.677e+05	-1.977e+05	1.200e+05	-3.983e+05
504	10.83	142.89	-92.44	12.65	37.80	116.99	4.442e+05	-3.086e+05	1.379e+05	-2205.23	-3.698e+05
293 1490	20.62	268.31	-205.98	-18.27	80.60	231.93	1.018e+06	-6.350e+05	3.077e+05	7.539e+04	-8.183e+05
496	21.20	300.37	-251.38	193.39	-144.40	218.13	7.280e+05	-9.679e+05	-3.394e+05	9.950e+04	-8.191e+05
503	17.18	223.94	-207.11	133.35	-116.52	175.63	5.890e+05	-7.868e+05	-3.154e+05	1.176e+05	-6.529e+05
497	16.41	234.39	-146.10	27.82	60.46	189.54	8.107e+05	-5.047e+05	2.662e+05	3.977e+04	-6.479e+05

293	2490	15.86	206.39	-158.44	-14.05	62.00	178.41	7.831e+05	-4.884e+05	2.367e+05	5.799e+04	-6.295e+05
	496	16.31	231.05	-193.37	148.76	-111.08	167.79	5.600e+05	-7.445e+05	-2.611e+05	7.654e+04	-6.300e+05
	503	13.22	172.26	-159.32	102.58	-89.63	135.10	4.530e+05	-6.053e+05	-2.427e+05	9.044e+04	-5.023e+05
	497	12.62	180.30	-112.38	21.40	46.51	145.80	6.236e+05	-3.882e+05	2.048e+05	3.059e+04	-4.984e+05
294	1481	22.77	318.15	-241.31	-16.13	92.96	274.36	1.306e+06	-7.804e+05	4.123e+05	1.132e+05	-1.032e+06
	487	23.33	332.50	-298.72	199.77	-166.00	257.22	8.915e+05	-1.247e+06	-4.493e+05	9.418e+04	-1.034e+06
	496	19.09	251.29	-258.30	132.88	-139.89	215.22	7.154e+05	-1.030e+06	-4.190e+05	1.041e+05	-8.327e+05
	490	18.53	288.58	-171.74	40.74	76.10	229.48	1.072e+06	-6.244e+05	3.717e+05	7.541e+04	-8.349e+05
294	2481	17.52	244.73	-185.62	-12.41	71.51	211.04	1.005e+06	-6.003e+05	3.171e+05	8.711e+04	-7.942e+05
	487	17.95	255.77	-229.79	153.67	-127.69	197.86	6.858e+05	-9.589e+05	-3.456e+05	7.245e+04	-7.953e+05
	496	14.68	193.30	-198.69	102.21	-107.60	165.55	5.503e+05	-7.925e+05	-3.223e+05	8.004e+04	-6.406e+05
	490	14.25	221.99	-132.11	31.34	58.54	176.52	8.243e+05	-4.803e+05	2.859e+05	5.801e+04	-6.423e+05
295	1474	24.94	368.79	-277.82	-13.93	104.91	317.80	1.642e+06	-9.497e+05	5.332e+05	1.596e+05	-1.283e+06
	478	25.52	363.09	-349.00	203.68	-189.58	296.82	1.087e+06	-1.571e+06	-5.751e+05	9.148e+04	-1.287e+06
	487	21.16	275.60	-312.75	128.36	-165.52	254.85	8.761e+05	-1.321e+06	-5.446e+05	9.921e+04	-1.051e+06
	481	20.62	345.63	-199.45	53.76	92.42	271.85	1.372e+06	-7.673e+05	4.917e+05	1.134e+05	-1.053e+06
295	2474	19.18	283.69	-213.71	-10.72	80.70	244.46	1.263e+06	-7.306e+05	4.102e+05	1.227e+05	-9.866e+05
	478	19.63	279.30	-268.46	156.67	-145.83	228.33	8.364e+05	-1.208e+06	-4.424e+05	7.037e+04	-9.897e+05
	487	16.28	212.00	-240.58	98.74	-127.32	196.04	6.739e+05	-1.017e+06	-4.189e+05	7.632e+04	-8.081e+05
	481	15.86	265.87	-153.42	41.35	71.10	209.12	1.056e+06	-5.902e+05	3.783e+05	8.722e+04	-8.100e+05
296	1467	27.12	418.98	-314.73	-11.79	116.03	361.25	2.034e+06	-1.142e+06	6.735e+05	2.184e+05	-1.572e+06
	469	27.72	392.09	-402.08	205.17	-215.15	336.91	1.315e+06	-1.944e+06	-7.176e+05	8.824e+04	-1.579e+06
	478	23.30	298.39	-370.28	121.29	-193.17	295.06	1.069e+06	-1.660e+06	-6.880e+05	9.732e+04	-1.307e+06
	474	22.73	403.44	-228.63	66.46	108.35	315.34	1.723e+06	-9.335e+05	6.292e+05	1.598e+05	-1.307e+06
296	2467	20.86	322.29	-242.10	-9.07	89.25	277.88	1.565e+06	-8.785e+05	5.181e+05	1.680e+05	-1.209e+06
	469	21.33	301.61	-309.29	157.82	-165.50	259.16	1.011e+06	-1.496e+06	-5.520e+05	6.787e+04	-1.215e+06
	478	17.92	229.53	-284.83	93.30	-148.60	226.97	8.224e+05	-1.277e+06	-5.292e+05	7.486e+04	-1.005e+06
	474	17.49	310.34	-175.87	51.12	83.35	242.57	1.325e+06	-7.181e+05	4.840e+05	1.229e+05	-1.005e+06
297	1454	29.29	467.73	-351.67	-10.06	126.12	404.00	2.486e+06	-1.355e+06	8.358e+05	2.950e+05	-1.901e+06
	460	29.91	418.96	-457.47	204.26	-242.76	376.93	1.574e+06	-2.369e+06	-8.774e+05	8.217e+04	-1.912e+06
	469	25.45	319.89	-430.50	112.11	-222.72	335.77	1.294e+06	-2.048e+06	-8.491e+05	9.504e+04	-1.603e+06
	467	24.85	460.65	-258.56	78.81	123.29	358.92	2.128e+06	-1.123e+06	7.871e+05	2.188e+05	-1.601e+06
297	2454	22.53	359.79	-270.51	-7.74	97.02	310.77	1.912e+06	-1.042e+06	6.429e+05	2.269e+05	-1.463e+06
	460	23.01	322.28	-351.90	157.12	-186.74	289.94	1.211e+06	-1.822e+06	-6.749e+05	6.321e+04	-1.471e+06
	469	19.57	246.07	-331.15	86.24	-171.32	258.29	9.953e+05	-1.575e+06	-6.532e+05	7.310e+04	-1.233e+06
	467	19.12	354.35	-198.89	60.62	94.84	276.09	1.637e+06	-8.635e+05	6.054e+05	1.683e+05	-1.231e+06
298	1443	31.41	514.30	-388.59	-9.47	135.18	445.61	3.003e+06	-1.583e+06	1.022e+06	3.976e+05	-2.272e+06
	447	32.02	443.14	-514.71	201.08	-272.65	416.25	1.861e+06	-2.845e+06	-1.054e+06	7.029e+04	-2.285e+06
	460	27.58	339.75	-492.69	101.06	-254.00	376.46	1.550e+06	-2.488e+06	-1.028e+06	9.007e+04	-1.940e+06
	454	26.98	516.20	-288.86	90.43	136.91	401.86	2.596e+06	-1.332e+06	9.682e+05	2.955e+05	-1.935e+06
298	2443	24.16	395.61	-298.91	-7.29	103.99	342.78	2.310e+06	-1.218e+06	7.863e+05	3.059e+05	-1.747e+06
	447	24.63	340.88	-395.93	154.67	-209.73	320.19	1.432e+06	-2.189e+06	-8.110e+05	5.407e+04	-1.758e+06
	460	21.22	261.35	-378.99	77.74	-195.39	289.59	1.192e+06	-1.914e+06	-7.911e+05	6.929e+04	-1.493e+06
	454	20.75	397.08	-222.20	69.56	105.31	309.12	1.997e+06	-1.025e+06	7.448e+05	2.273e+05	-1.488e+06
299	1430	33.40	558.32	-426.06	-11.16	143.43	486.08	3.586e+06	-1.812e+06	1.233e+06	5.414e+05	-2.676e+06
	436	33.97	464.42	-573.90	196.04	-305.52	454.57	2.168e+06	-3.367e+06	-1.246e+06	4.693e+04	-2.691e+06

447		29.66	357.57	-556.15	88.48	-287.06	416.49	1.835e+06	-2.981e+06	-1.225e+06	7.949e+04 -2.318e+06
443		29.06	569.12	-319.61	100.48	149.03	443.70	3.129e+06	-1.556e+06	1.175e+06	3.983e+05 -2.310e+06
299	2430	25.69	429.48	-327.74	-8.59	110.33	373.91	2.758e+06	-1.394e+06	9.484e+05	4.165e+05 -2.059e+06
436		26.13	357.25	-441.46	150.80	-235.01	349.67	1.668e+06	-2.590e+06	-9.582e+05	3.610e+04 -2.070e+06
447		22.82	275.05	-427.81	68.06	-220.81	320.38	1.412e+06	-2.293e+06	-9.425e+05	6.115e+04 -1.783e+06
443		22.35	437.78	-245.85	77.29	114.64	341.31	2.407e+06	-1.197e+06	9.036e+05	3.063e+05 -1.777e+06
300	1419	35.10	600.27	-466.55	-17.78	151.50	526.65	4.228e+06	-2.009e+06	1.463e+06	7.554e+05 -3.098e+06
425		35.56	484.06	-636.56	190.54	-343.04	492.72	2.471e+06	-3.913e+06	-1.443e+06	1087.40 -3.110e+06
436		31.60	373.13	-620.82	74.85	-322.53	455.53	2.141e+06	-3.520e+06	-1.437e+06	5.791e+04 -2.730e+06
430		31.04	618.82	-351.38	107.72	159.72	484.40	3.730e+06	-1.782e+06	1.406e+06	5.416e+05 -2.722e+06
300	2419	27.00	461.74	-358.88	-13.68	116.54	405.12	3.252e+06	-1.546e+06	1.126e+06	5.811e+05 -2.383e+06
425		27.35	372.36	-489.66	146.57	-263.87	379.02	1.901e+06	-3.010e+06	-1.110e+06	836.46 -2.392e+06
436		24.31	287.03	-477.55	57.58	-248.10	350.41	1.647e+06	-2.708e+06	-1.105e+06	4.455e+04 -2.100e+06
430		23.87	476.01	-270.29	82.86	122.86	372.62	2.869e+06	-1.371e+06	1.082e+06	4.166e+05 -2.094e+06
301	1408	36.12	639.58	-521.94	-42.52	160.16	571.85	4.889e+06	-2.107e+06	1.688e+06	1.094e+06 -3.485e+06
412		36.31	511.82	-705.37	193.56	-387.12	534.87	2.710e+06	-4.422e+06	-1.618e+06	-9.379e+04 -3.484e+06
425		33.23	384.54	-689.90	57.72	-363.08	494.31	2.446e+06	-4.087e+06	-1.656e+06	1.507e+04 -3.158e+06
419		32.77	668.35	-383.55	113.85	170.95	525.17	4.392e+06	-1.979e+06	1.659e+06	7.538e+05 -3.153e+06
301	2408	27.79	491.98	-401.49	-32.71	123.20	439.88	3.761e+06	-1.621e+06	1.299e+06	8.417e+05 -2.681e+06
412		27.93	393.70	-542.60	148.90	-297.79	411.44	2.085e+06	-3.402e+06	-1.245e+06	-7.215e+04 -2.680e+06
425		25.56	295.80	-530.69	44.40	-279.29	380.24	1.881e+06	-3.144e+06	-1.274e+06	1.159e+04 -2.429e+06
419		25.21	514.11	-295.04	87.57	131.50	403.98	3.379e+06	-1.522e+06	1.277e+06	5.798e+05 -2.426e+06
302	1395	35.38	634.07	-700.24	-223.88	157.71	639.29	5.375e+06	-1.976e+06	1.727e+06	1.673e+06 -3.676e+06
397		34.94	648.62	-760.70	312.07	-424.15	600.87	2.775e+06	-4.627e+06	-1.565e+06	-2.869e+05 -3.645e+06
412		34.18	353.93	-798.21	-16.62	-427.65	538.17	2.666e+06	-4.660e+06	-1.913e+06	-8.191e+04 -3.547e+06
408		33.98	759.50	-386.20	174.69	198.60	572.72	5.116e+06	-2.059e+06	1.962e+06	1.095e+06 -3.561e+06
302	2395	27.22	487.75	-538.65	-172.22	121.32	491.76	4.135e+06	-1.520e+06	1.328e+06	1.287e+06 -2.827e+06
397		26.88	498.94	-585.15	240.05	-326.27	462.20	2.135e+06	-3.559e+06	-1.204e+06	-2.207e+05 -2.804e+06
412		26.29	272.26	-614.01	-12.79	-328.97	413.97	2.050e+06	-3.585e+06	-1.471e+06	-6.301e+04 -2.728e+06
408		26.14	584.23	-297.08	134.38	152.77	440.56	3.936e+06	-1.584e+06	1.510e+06	8.425e+05 -2.739e+06
303	1378	24.13	45.67	-961.56	-848.42	-67.47	318.05	6.918e+06	-2.023e+05	3.968e+06	2.748e+06 -3.507e+06
386		24.90	779.85	-445.21	518.95	-184.31	501.55	1.801e+06	-6.036e+06	-3.365e+06	-8.697e+05 -3.714e+06
397		24.09	-163.25	-1225.38	-742.03	-646.60	528.92	3.000e+06	-5.028e+06	-2.095e+06	6.668e+04 -3.866e+06
395		25.33	1293.09	-50.26	888.23	354.60	616.41	5.867e+06	-2.359e+06	2.054e+06	1.454e+06 -4.102e+06
303	2378	18.56	35.13	-739.66	-652.63	-51.90	244.65	5.321e+06	-1.556e+05	3.052e+06	2.114e+06 -2.698e+06
386		19.16	599.89	-342.47	399.19	-141.77	385.80	1.385e+06	-4.643e+06	-2.589e+06	-6.690e+05 -2.857e+06
397		18.53	-125.57	-942.60	-570.79	-497.38	406.86	2.308e+06	-3.868e+06	-1.611e+06	5.129e+04 -2.974e+06
395		19.48	994.68	-38.67	683.25	272.77	474.16	4.513e+06	-1.815e+06	1.580e+06	1.118e+06 -3.155e+06
304	1358	21.66	796.29	-355.45	418.34	22.50	540.80	4.788e+06	-2.176e+06	9.541e+05	1.658e+06 -3.464e+06
363		22.72	170.26	-1098.72	-474.85	-453.61	634.40	2.680e+06	-4.656e+06	-1.687e+06	-2.894e+05 -3.601e+06
386		26.47	629.75	-715.48	278.21	-363.94	591.04	2.224e+06	-6.185e+06	-3.329e+06	-6.312e+05 -3.982e+06
378		32.47	760.79	-1254.70	-575.07	81.15	952.84	8.176e+06	-1.492e+06	3.940e+06	2.744e+06 -4.797e+06
304	2358	16.66	612.53	-273.43	321.80	17.31	416.00	3.683e+06	-1.674e+06	7.339e+05	1.275e+06 -2.665e+06
363		17.48	130.97	-845.17	-365.27	-348.93	488.00	2.062e+06	-3.582e+06	-1.298e+06	-2.226e+05 -2.770e+06
386		20.36	484.43	-550.37	214.01	-279.95	454.64	1.711e+06	-4.757e+06	-2.561e+06	-4.856e+05 -3.063e+06
378		24.97	585.22	-965.16	-442.36	62.43	732.95	6.289e+06	-1.148e+06	3.031e+06	2.111e+06 -3.690e+06

305	1342	17.09	440.70	-485.49	5.02	-49.80	462.28	3.638e+06	-1.821e+06	8.534e+05	9.636e+05	-2.729e+06
	344	17.29	151.16	-784.74	-217.80	-415.78	457.36	1.417e+06	-4.071e+06	-2.006e+06	-6.484e+05	-2.659e+06
	363	22.54	372.22	-895.93	-75.08	-448.64	605.94	2.159e+06	-5.007e+06	-2.374e+06	-4.737e+05	-3.455e+06
	358	23.04	620.31	-659.91	-55.08	15.49	639.14	5.385e+06	-1.818e+06	1.819e+06	1.749e+06	-3.601e+06
305	2342	13.14	339.00	-373.45	3.86	-38.31	355.60	2.799e+06	-1.401e+06	6.564e+05	7.412e+05	-2.099e+06
	344	13.30	116.28	-603.65	-167.54	-319.83	351.82	1.090e+06	-3.132e+06	-1.543e+06	-4.988e+05	-2.045e+06
	363	17.34	286.32	-689.18	-57.75	-345.10	466.11	1.661e+06	-3.851e+06	-1.826e+06	-3.644e+05	-2.657e+06
	358	17.72	477.16	-507.62	-42.37	11.91	491.64	4.142e+06	-1.398e+06	1.399e+06	1.345e+06	-2.770e+06
306	1323	11.72	201.18	-441.56	-115.02	-125.36	321.33	2.109e+06	-1.677e+06	2.009e+05	2.306e+05	-1.893e+06
	325	12.26	31.27	-614.26	-210.09	-372.90	312.33	5.249e+05	-3.265e+06	-1.857e+06	-8.835e+05	-1.832e+06
	344	17.46	192.93	-769.60	-160.68	-415.99	464.03	1.377e+06	-4.138e+06	-2.101e+06	-6.606e+05	-2.662e+06
	342	17.31	424.36	-531.51	-55.97	-51.19	477.93	3.719e+06	-1.784e+06	9.646e+05	9.705e+05	-2.752e+06
306	2323	9.01	154.75	-339.66	-88.48	-96.43	247.18	1.622e+06	-1.290e+06	1.546e+05	1.774e+05	-1.456e+06
	325	9.43	24.05	-472.51	-161.61	-286.85	240.25	4.037e+05	-2.512e+06	-1.428e+06	-6.796e+05	-1.409e+06
	344	13.43	148.41	-592.00	-123.60	-319.99	356.94	1.059e+06	-3.183e+06	-1.616e+06	-5.082e+05	-2.048e+06
	342	13.32	326.43	-408.86	-43.06	-39.37	367.64	2.861e+06	-1.372e+06	7.420e+05	7.465e+05	-2.117e+06
307	1304	6.47	-23.28	-371.87	-194.28	-200.88	174.26	5.234e+05	-1.541e+06	-5.190e+05	-4.990e+05	-1.032e+06
	306	7.36	-113.27	-462.93	-242.83	-333.37	168.87	-3.432e+05	-2.408e+06	-1.641e+06	-1.109e+06	-9.974e+05
	325	12.41	42.87	-622.70	-203.59	-376.24	321.39	5.363e+05	-3.295e+06	-1.880e+06	-8.794e+05	-1.849e+06
	323	11.87	209.07	-454.30	-122.22	-123.01	331.69	2.139e+06	-1.686e+06	2.261e+05	2.269e+05	-1.912e+06
307	2304	4.98	-17.91	-286.06	-149.44	-154.52	134.05	4.027e+05	-1.186e+06	-3.992e+05	-3.838e+05	-7.941e+05
	306	5.66	-87.13	-356.10	-186.79	-256.44	129.90	-2.640e+05	-1.852e+06	-1.263e+06	-8.534e+05	-7.672e+05
	325	9.55	32.97	-479.00	-156.61	-289.41	247.22	4.125e+05	-2.535e+06	-1.446e+06	-6.765e+05	-1.423e+06
	323	9.13	160.83	-349.46	-94.02	-94.62	255.14	1.645e+06	-1.297e+06	1.739e+05	1.745e+05	-1.471e+06
308	1304	6.61	-13.97	-381.92	-324.51	-71.38	-133.52	5.481e+05	-1.554e+06	2.157e+05	-1.222e+06	7.671e+05
	265	5.04	-284.36	-290.18	-289.81	-284.73	-1.42	-1.378e+06	-1.382e+06	-1.378e+06	-1.382e+06	-4.60
	306	7.50	-103.80	-472.51	-444.73	-131.58	-97.32	-3.281e+05	-2.434e+06	-4.854e+05	-2.277e+06	5.536e+05
308	2304	5.08	-10.75	-293.79	-249.63	-54.91	-102.71	4.216e+05	-1.196e+06	1.659e+05	-9.401e+05	5.901e+05
	265	3.87	-218.74	-223.22	-222.93	-219.03	-1.09	-1.060e+06	-1.063e+06	-1.060e+06	-1.063e+06	-3.54
	306	5.77	-79.85	-363.47	-342.10	-101.21	-74.86	-2.524e+05	-1.873e+06	-3.734e+05	-1.752e+06	4.259e+05
309	1514	6.55	27.88	-155.44	-155.40	27.84	-2.68	1.069e+05	-7.305e+04	4.365e+04	-9754.20	-8.595e+04
	524	6.59	15.19	-56.91	-22.23	-19.49	36.02	1.145e+05	-6.606e+04	1.434e+04	3.406e+04	-8.972e+04
	527	1.68	21.80	-78.06	-77.20	20.94	9.23	2.466e+04	-1111.85	2.466e+04	-1111.85	2.92
	519	1.78	-14.89	-101.79	-97.94	-18.73	-17.86	2.940e+04	-3780.67	2.625e+04	-630.52	-9726.97
309	2514	5.04	21.45	-119.57	-119.54	21.42	-2.06	8.227e+04	-5.619e+04	3.358e+04	-7503.23	-6.611e+04
	524	5.07	11.69	-43.78	-17.10	-14.99	27.71	8.805e+04	-5.082e+04	1.103e+04	2.620e+04	-6.902e+04
	527	1.30	16.77	-60.05	-59.38	16.11	7.10	1.897e+04	-855.27	1.897e+04	-855.27	2.25
	519	1.37	-11.46	-78.30	-75.34	-14.41	-13.74	2.262e+04	-2908.20	2.020e+04	-485.02	-7482.29
310	1509	8.53	41.13	-153.14	-151.64	39.64	16.98	2.006e+05	-8.935e+04	9.318e+04	1.807e+04	-1.400e+05
	521	9.24	43.45	-78.80	-17.73	-17.62	61.13	1.988e+05	-1.180e+05	8134.48	7.262e+04	-1.551e+05
	524	4.96	25.92	-46.49	-29.09	8.51	30.94	1.093e+05	-6.144e+04	1.714e+04	3.074e+04	-8.511e+04
	514	5.35	6.43	-134.24	-134.18	6.37	-2.91	1.161e+05	-6.616e+04	6.134e+04	-1.138e+04	-8.358e+04
310	2509	6.56	31.64	-117.80	-116.65	30.49	13.06	1.543e+05	-6.873e+04	7.168e+04	1.390e+04	-1.077e+05
	521	7.11	33.42	-60.62	-13.63	-13.56	47.02	1.529e+05	-9.078e+04	6257.30	5.586e+04	-1.193e+05
	524	3.82	19.94	-35.77	-22.37	6.54	23.80	8.410e+04	-4.726e+04	1.319e+04	2.365e+04	-6.547e+04
	514	4.12	4.95	-103.26	-103.22	4.90	-2.24	8.933e+04	-5.090e+04	4.719e+04	-8752.98	-6.429e+04

311	1506	9.76	53.80	-161.97	-157.24	49.07	31.60	3.253e+05	-6.236e+04	1.784e+05	8.444e+04	-1.880e+05
	516	11.77	89.61	-102.45	-1.82	-11.02	95.92	3.045e+05	-1.865e+05	616.80	1.173e+05	-2.385e+05
	521	7.47	46.87	-66.96	-22.25	2.15	55.59	1.964e+05	-1.184e+05	7514.56	7.052e+04	-1.542e+05
	509	7.33	27.03	-122.74	-121.00	25.29	16.04	2.193e+05	-8.418e+04	1.207e+05	1.444e+04	-1.422e+05
311	2506	7.51	41.38	-124.60	-120.96	37.74	24.30	2.502e+05	-4.797e+04	1.373e+05	6.495e+04	-1.446e+05
	516	9.06	68.93	-78.81	-1.40	-8.48	73.78	2.342e+05	-1.435e+05	474.46	9.025e+04	-1.834e+05
	521	5.74	36.05	-51.51	-17.11	1.66	42.76	1.511e+05	-9.107e+04	5780.43	5.425e+04	-1.186e+05
	509	5.64	20.79	-94.42	-93.08	19.45	12.34	1.687e+05	-6.475e+04	9.287e+04	1.111e+04	-1.093e+05
312	1499	11.45	-18.55	-300.05	-293.19	-25.41	43.39	5.331e+05	1.290e+05	4.306e+05	2.316e+05	-1.759e+05
	511	15.87	258.49	-25.33	142.39	90.78	139.54	4.122e+05	-3.900e+05	-7.983e+04	1.021e+05	-3.906e+05
	516	9.79	24.86	-162.23	-95.36	-42.01	89.66	3.155e+05	-1.719e+05	1.731e+04	1.262e+05	-2.375e+05
	506	8.21	84.40	-25.79	-21.74	80.34	20.74	3.402e+05	-7.168e+04	1.970e+05	7.160e+04	-1.962e+05
312	2499	8.81	-14.27	-230.81	-225.53	-19.55	33.38	4.101e+05	9.924e+04	3.312e+05	1.781e+05	-1.353e+05
	511	12.21	198.84	-19.48	109.53	69.83	107.34	3.171e+05	-3.000e+05	-6.141e+04	7.850e+04	-3.005e+05
	516	7.53	19.12	-124.79	-73.36	-32.31	68.97	2.427e+05	-1.322e+05	1.332e+04	9.711e+04	-1.827e+05
	506	6.31	64.92	-19.84	-16.72	61.80	15.95	2.617e+05	-5.514e+04	1.515e+05	5.508e+04	-1.509e+05
313	1492	15.67	173.21	-123.68	-71.42	120.95	113.07	7.275e+05	-1.785e+05	3.446e+05	2.045e+05	-4.476e+05
	504	15.88	146.77	-161.57	2.62	-17.41	153.84	6.201e+05	-3.189e+05	-2439.18	3.037e+05	-4.439e+05
	511	11.07	170.27	-124.08	101.65	-55.46	124.46	3.831e+05	-2.525e+05	-9.415e+04	2.247e+05	-2.749e+05
	499	16.69	158.92	-175.17	-161.79	145.54	65.51	7.738e+05	-1.893e+05	5.199e+05	6.450e+04	-4.243e+05
313	2492	12.06	133.24	-95.14	-54.94	93.04	86.97	5.596e+05	-1.373e+05	2.650e+05	1.573e+05	-3.443e+05
	504	12.22	112.90	-124.28	2.01	-13.39	118.34	4.770e+05	-2.453e+05	-1876.29	2.336e+05	-3.414e+05
	511	8.52	130.98	-95.45	78.19	-42.66	95.74	2.947e+05	-1.942e+05	-7.242e+04	1.729e+05	-2.114e+05
	499	12.84	122.24	-134.74	-124.45	111.95	50.39	5.952e+05	-1.456e+05	4.000e+05	4.962e+04	-3.264e+05
314	1485	17.36	222.86	-172.40	-102.78	153.23	150.57	9.679e+05	-1.809e+05	4.592e+05	3.278e+05	-5.706e+05
	497	18.34	229.37	-171.29	90.11	-32.03	190.79	8.200e+05	-4.435e+05	-2.180e+04	3.982e+05	-5.958e+05
	504	13.91	172.10	-143.33	47.36	-18.60	154.23	6.063e+05	-3.512e+05	-4.198e+04	2.970e+05	-4.477e+05
	492	14.33	181.06	-101.76	-47.60	126.91	111.28	8.025e+05	-1.520e+05	4.575e+05	1.930e+05	-4.585e+05
314	2485	13.36	171.43	-132.62	-79.06	117.87	115.82	7.445e+05	-1.391e+05	3.532e+05	2.522e+05	-4.389e+05
	497	14.11	176.43	-131.76	69.31	-24.64	146.76	6.307e+05	-3.412e+05	-1.677e+04	3.063e+05	-4.583e+05
	504	10.70	132.38	-110.25	36.43	-14.30	118.64	4.664e+05	-2.702e+05	-3.230e+04	2.285e+05	-3.444e+05
	492	11.02	139.28	-78.27	-36.62	97.62	85.60	6.173e+05	-1.169e+05	3.519e+05	1.485e+05	-3.527e+05
315	1479	19.49	277.70	-180.28	-78.95	176.37	190.10	1.283e+06	-1.962e+05	6.056e+05	4.809e+05	-7.368e+05
	490	20.53	282.68	-196.97	122.60	-36.89	226.18	1.061e+06	-5.745e+05	-2.966e+04	5.164e+05	-7.710e+05
	497	16.18	219.33	-165.85	75.56	-22.07	186.30	8.167e+05	-4.734e+05	-4.810e+04	3.913e+05	-6.065e+05
	485	15.63	238.03	-106.51	-17.35	148.86	150.90	1.032e+06	-1.555e+05	5.575e+05	3.187e+05	-5.814e+05
315	2479	14.99	213.61	-138.68	-60.73	135.67	146.23	9.867e+05	-1.509e+05	4.658e+05	3.699e+05	-5.668e+05
	490	15.80	217.45	-151.52	94.30	-28.38	173.99	8.163e+05	-4.419e+05	-2.282e+04	3.972e+05	-5.930e+05
	497	12.45	168.72	-127.58	58.12	-16.98	143.31	6.282e+05	-3.642e+05	-3.700e+04	3.010e+05	-4.665e+05
	485	12.02	183.10	-81.93	-13.34	114.51	116.08	7.936e+05	-1.196e+05	4.288e+05	2.452e+05	-4.473e+05
316	1472	21.75	336.89	-185.50	-49.11	200.50	229.45	1.666e+06	-2.125e+05	7.862e+05	6.676e+05	-9.376e+05
	481	22.72	337.28	-225.45	154.54	-42.71	263.51	1.350e+06	-7.234e+05	-3.549e+04	6.616e+05	-9.761e+05
	490	18.32	268.62	-194.68	104.09	-30.15	221.71	1.061e+06	-6.105e+05	-5.923e+04	5.095e+05	-7.858e+05
	479	17.61	302.92	-107.19	20.94	174.79	190.08	1.354e+06	-1.653e+05	7.177e+05	4.710e+05	-7.496e+05
316	2472	16.73	259.15	-142.70	-37.78	154.23	176.50	1.282e+06	-1.635e+05	6.048e+05	5.136e+05	-7.212e+05
	481	17.48	259.44	-173.42	118.87	-32.86	202.70	1.038e+06	-5.565e+05	-2.730e+04	5.089e+05	-7.509e+05

490	14.09	206.63	-149.75	80.07	-23.19	170.55	8.160e+05	-4.696e+05	-4.556e+04	3.919e+05	-6.044e+05
479	13.54	233.02	-82.46	16.11	134.45	146.22	1.042e+06	-1.272e+05	5.521e+05	3.623e+05	-5.766e+05
317 1463	24.05	399.92	-190.53	-16.37	225.76	269.26	2.122e+06	-2.267e+05	1.003e+06	8.927e+05	-1.173e+06
474	24.92	393.08	-254.92	187.56	-49.40	301.56	1.689e+06	-8.927e+05	-4.041e+04	8.368e+05	-1.214e+06
481	20.44	320.51	-226.69	133.81	-40.00	259.43	1.351e+06	-7.664e+05	-7.016e+04	6.545e+05	-9.946e+05
472	19.74	373.24	-105.29	65.61	202.34	229.29	1.750e+06	-1.744e+05	9.190e+05	6.566e+05	-9.532e+05
317 2463	18.50	307.63	-146.56	-12.59	173.66	207.12	1.632e+06	-1.744e+05	7.712e+05	6.867e+05	-9.024e+05
474	19.17	302.37	-196.10	144.28	-38.00	231.97	1.299e+06	-6.867e+05	-3.108e+04	6.437e+05	-9.339e+05
481	15.73	246.54	-174.38	102.93	-30.77	199.56	1.039e+06	-5.896e+05	-5.397e+04	5.035e+05	-7.651e+05
472	15.19	287.11	-80.99	50.47	155.65	176.38	1.346e+06	-1.342e+05	7.069e+05	5.051e+05	-7.333e+05
318 1452	26.38	465.76	-195.75	18.16	251.84	309.43	2.656e+06	-2.357e+05	1.257e+06	1.163e+06	-1.445e+06
467	27.10	448.58	-284.63	220.60	-56.64	339.39	2.084e+06	-1.083e+06	-4.411e+04	1.046e+06	-1.487e+06
474	22.58	373.74	-259.98	164.46	-50.70	298.04	1.692e+06	-9.432e+05	-8.065e+04	8.295e+05	-1.236e+06
463	21.94	447.89	-102.71	114.11	231.07	269.02	2.220e+06	-1.801e+05	1.159e+06	8.804e+05	-1.192e+06
318 2452	20.29	358.27	-150.58	13.97	193.72	238.02	2.043e+06	-1.813e+05	9.671e+05	8.946e+05	-1.112e+06
467	20.85	345.06	-218.95	169.69	-43.57	261.07	1.603e+06	-8.331e+05	-3.393e+04	8.042e+05	-1.144e+06
474	17.37	287.49	-199.98	126.51	-39.00	229.26	1.302e+06	-7.255e+05	-6.204e+04	6.380e+05	-9.511e+05
463	16.88	344.53	-79.01	87.77	177.74	206.94	1.708e+06	-1.385e+05	8.919e+05	6.772e+05	-9.169e+05
319 1441	28.74	532.85	-201.23	53.19	278.43	349.33	3.278e+06	-2.343e+05	1.553e+06	1.490e+06	-1.756e+06
454	29.27	502.50	-314.39	252.53	-64.41	376.45	2.540e+06	-1.293e+06	-4.533e+04	1.293e+06	-1.796e+06
467	24.72	426.85	-293.66	195.06	-61.87	336.57	2.089e+06	-1.141e+06	-9.023e+04	1.038e+06	-1.513e+06
452	24.18	525.35	-100.25	164.65	260.46	309.11	2.770e+06	-1.796e+05	1.441e+06	1.149e+06	-1.468e+06
319 2441	22.11	409.88	-154.79	40.92	214.18	268.72	2.521e+06	-1.802e+05	1.195e+06	1.146e+06	-1.350e+06
454	22.52	386.54	-241.83	194.25	-49.55	289.58	1.954e+06	-9.943e+05	-3.487e+04	9.946e+05	-1.381e+06
467	19.01	328.35	-225.89	150.05	-47.59	258.90	1.607e+06	-8.779e+05	-6.941e+04	7.983e+05	-1.164e+06
452	18.60	404.12	-77.12	126.65	200.35	237.78	2.131e+06	-1.382e+05	1.108e+06	8.841e+05	-1.129e+06
320 1434	31.11	599.43	-206.97	86.97	305.48	388.11	3.999e+06	-2.125e+05	1.894e+06	1.892e+06	-2.106e+06
443	31.38	553.79	-344.30	282.17	-72.69	412.51	3.061e+06	-1.516e+06	-4.203e+04	1.587e+06	-2.139e+06
454	26.83	478.66	-327.38	224.61	-73.33	374.48	2.546e+06	-1.359e+06	-9.757e+04	1.285e+06	-1.826e+06
441	26.45	603.67	-98.14	215.48	290.06	348.92	3.408e+06	-1.677e+05	1.766e+06	1.475e+06	-1.782e+06
320 2434	23.93	461.10	-159.21	66.90	234.99	298.55	3.076e+06	-1.635e+05	1.457e+06	1.456e+06	-1.620e+06
443	24.14	425.99	-264.85	217.06	-55.91	317.31	2.355e+06	-1.166e+06	-3.233e+04	1.221e+06	-1.645e+06
454	20.64	368.20	-251.83	172.77	-56.41	288.06	1.959e+06	-1.046e+06	-7.506e+04	9.884e+05	-1.405e+06
441	20.34	464.36	-75.49	165.75	223.12	268.40	2.622e+06	-1.290e+05	1.358e+06	1.135e+06	-1.371e+06
321 1421	33.49	663.84	-213.32	116.98	333.54	425.00	4.834e+06	-1.524e+05	2.278e+06	2.403e+06	-2.492e+06
430	33.37	601.79	-374.93	308.19	-81.33	447.84	3.649e+06	-1.739e+06	-3.118e+04	1.940e+06	-2.507e+06
443	28.91	528.24	-361.14	251.98	-84.88	411.56	3.069e+06	-1.591e+06	-1.006e+05	1.579e+06	-2.174e+06
434	28.74	680.52	-96.54	264.31	319.67	387.54	4.147e+06	-1.345e+05	2.137e+06	1.876e+06	-2.137e+06
321 2421	25.76	510.64	-164.09	89.99	256.57	326.92	3.718e+06	-1.172e+05	1.752e+06	1.848e+06	-1.917e+06
430	25.67	462.92	-288.40	237.07	-62.56	344.49	2.807e+06	-1.338e+06	-2.399e+04	1.493e+06	-1.929e+06
443	22.24	406.34	-277.80	193.83	-65.29	316.58	2.361e+06	-1.224e+06	-7.735e+04	1.214e+06	-1.672e+06
434	22.11	523.48	-74.26	203.32	245.90	298.11	3.190e+06	-1.034e+05	1.644e+06	1.443e+06	-1.644e+06
322 1410	35.82	724.91	-221.87	138.95	364.09	459.82	5.798e+06	-2.030e+04	2.698e+06	3.079e+06	-2.903e+06
419	35.07	647.25	-407.40	329.48	-89.62	483.90	4.295e+06	-1.932e+06	-7961.08	2.371e+06	-2.878e+06
430	30.88	574.73	-395.70	275.43	-96.40	448.19	3.659e+06	-1.825e+06	-9.609e+04	1.931e+06	-2.548e+06
421	31.04	753.37	-95.76	307.95	349.66	424.06	4.999e+06	-6.268e+04	2.553e+06	2.384e+06	-2.530e+06

322	2410	27.55	557.63	-170.67	106.89	280.07	353.70	4.460e+06	-1.561e+04	2.076e+06	2.368e+06	-2.233e+06
419		26.98	497.88	-313.38	253.44	-68.94	372.23	3.304e+06	-1.486e+06	-6123.91	1.824e+06	-2.214e+06
430		23.75	442.10	-304.38	211.87	-74.15	344.76	2.815e+06	-1.403e+06	-7.392e+04	1.485e+06	-1.960e+06
421		23.88	579.52	-73.66	236.88	268.97	326.20	3.846e+06	-4.821e+04	1.964e+06	1.834e+06	-1.946e+06
323	1400	37.97	781.89	-242.84	140.25	398.80	495.79	6.899e+06	2.439e+05	3.114e+06	4.029e+06	-3.296e+06
408		36.08	698.63	-439.14	352.52	-93.03	523.45	4.966e+06	-2.021e+06	4.046e+04	2.904e+06	-3.187e+06
419		32.60	615.65	-435.58	288.63	-108.56	486.66	4.310e+06	-2.031e+06	-8.125e+04	2.361e+06	-2.926e+06
410		33.31	821.47	-94.09	344.59	382.79	457.39	5.980e+06	8.038e+04	3.006e+06	3.054e+06	-2.950e+06
323	2400	29.21	601.45	-186.80	107.89	306.77	381.37	5.307e+06	1.876e+05	2.395e+06	3.099e+06	-2.535e+06
408		27.75	537.41	-337.80	271.17	-71.56	402.66	3.820e+06	-1.555e+06	3.112e+04	2.234e+06	-2.451e+06
419		25.08	473.58	-335.06	222.02	-83.50	374.35	3.316e+06	-1.562e+06	-6.250e+04	1.816e+06	-2.251e+06
410		25.62	631.90	-72.38	265.07	294.46	351.84	4.600e+06	6.183e+04	2.312e+06	2.349e+06	-2.269e+06
324	1384	39.72	826.84	-398.80	14.88	413.17	579.56	8.075e+06	6.933e+05	3.279e+06	5.489e+06	-3.522e+06
395		35.23	829.03	-395.37	494.21	-60.56	545.75	5.579e+06	-1.751e+06	2.438e+05	3.585e+06	-3.262e+06
408		33.77	619.50	-529.24	228.47	-138.22	544.32	4.963e+06	-2.173e+06	-9.429e+04	2.884e+06	-3.243e+06
400		35.46	905.04	-54.62	416.74	433.68	479.75	7.130e+06	3.720e+05	3.508e+06	3.993e+06	-3.370e+06
324	2384	30.56	636.03	-306.77	11.44	317.82	445.82	6.212e+06	5.333e+05	2.523e+06	4.223e+06	-2.709e+06
395		27.10	637.71	-304.13	380.16	-46.59	419.81	4.292e+06	-1.347e+06	1.876e+05	2.757e+06	-2.509e+06
408		25.98	476.54	-407.11	175.75	-106.32	418.71	3.818e+06	-1.672e+06	-7.253e+04	2.218e+06	-2.494e+06
400		27.27	696.18	-42.02	320.57	333.60	369.04	5.484e+06	2.861e+05	2.699e+06	3.072e+06	-2.592e+06
325	1368	33.23	794.17	-588.34	134.62	71.22	690.53	1.082e+07	2.300e+06	5.573e+06	7.547e+06	-4.144e+06
378		20.99	1421.04	218.85	1420.99	218.90	7.68	4.667e+06	-2.294e+06	-1.297e+06	3.670e+06	-2.439e+06
395		25.16	437.99	-772.91	-92.27	-242.64	600.76	6.205e+06	-1.685e+06	7.324e+05	3.787e+06	-3.637e+06
384		25.91	1662.69	460.40	1480.23	642.86	431.37	8.564e+06	1.064e+06	4.464e+06	5.163e+06	-3.734e+06
325	2368	25.56	610.90	-452.57	103.55	54.78	531.18	8.323e+06	1.769e+06	4.287e+06	5.806e+06	-3.188e+06
378		16.15	1093.11	168.35	1093.07	168.39	5.91	3.590e+06	-1.765e+06	-9.976e+05	2.823e+06	-1.876e+06
395		19.35	336.92	-594.54	-70.98	-186.65	462.13	4.773e+06	-1.296e+06	5.634e+05	2.913e+06	-2.798e+06
384		19.93	1278.99	354.15	1138.64	494.51	331.82	6.588e+06	8.184e+05	3.434e+06	3.972e+06	-2.872e+06
326	1351	25.34	1156.06	-138.21	798.90	218.94	578.53	7.793e+06	6.326e+05	3.060e+06	5.366e+06	-3.390e+06
358		22.18	385.92	-621.73	1.78	-237.59	489.40	5.543e+06	-1.430e+06	5.118e+05	3.602e+06	-3.126e+06
378		30.52	1377.33	-552.63	1122.50	-297.80	653.36	6.523e+06	-3.092e+06	-1.181e+06	4.612e+06	-3.837e+06
368		32.98	1046.87	-407.05	331.80	308.02	726.87	1.075e+07	2.159e+06	5.557e+06	7.349e+06	-4.200e+06
326	2351	19.49	889.28	-106.32	614.54	168.42	445.02	5.995e+06	4.866e+05	2.354e+06	4.127e+06	-2.607e+06
358		17.06	296.86	-478.26	1.37	-182.76	376.46	4.264e+06	-1.100e+06	3.937e+05	2.770e+06	-2.404e+06
378		23.48	1059.49	-425.10	863.46	-229.08	502.58	5.018e+06	-2.378e+06	-9.084e+05	3.548e+06	-2.951e+06
368		25.37	805.29	-313.12	255.23	236.94	559.13	8.267e+06	1.661e+06	4.275e+06	5.653e+06	-3.230e+06
327	1334	19.29	675.66	-262.49	352.00	61.18	445.97	5.816e+06	3.366e+05	2.319e+06	3.834e+06	-2.633e+06
342		17.08	388.61	-521.46	148.78	-281.63	400.93	3.715e+06	-1.729e+06	-3.546e+05	2.341e+06	-2.365e+06
358		22.87	710.79	-575.06	427.47	-291.74	532.95	5.210e+06	-1.990e+06	-2.690e+05	3.489e+06	-3.071e+06
351		25.99	919.40	-308.87	434.96	175.57	600.28	8.139e+06	1.012e+06	3.663e+06	5.488e+06	-3.445e+06
327	2334	14.84	519.74	-201.91	270.77	47.06	343.05	4.474e+06	2.589e+05	1.784e+06	2.949e+06	-2.025e+06
342		13.14	298.93	-401.13	114.45	-216.64	308.41	2.858e+06	-1.330e+06	-2.728e+05	1.801e+06	-1.819e+06
358		17.59	546.76	-442.35	328.83	-224.42	409.96	4.008e+06	-1.531e+06	-2.069e+05	2.684e+06	-2.362e+06
351		19.99	707.23	-237.59	334.58	135.05	461.76	6.261e+06	7.782e+05	2.818e+06	4.221e+06	-2.650e+06
328	1317	12.83	357.98	-284.00	127.22	-53.24	308.04	3.598e+06	-1.901e+05	1.196e+06	2.211e+06	-1.825e+06
323		11.70	198.42	-443.38	39.82	-284.78	276.83	2.117e+06	-1.664e+06	-7.232e+05	1.176e+06	-1.635e+06

342		17.29	436.11	-519.79	204.66	-288.34	409.47	3.691e+06	-1.812e+06	-4.571e+05	2.337e+06	-2.371e+06
334		19.43	651.63	-293.25	299.49	58.88	456.87	5.868e+06	3.791e+05	2.406e+06	3.841e+06	-2.649e+06
328	2317	9.87	275.37	-218.46	97.87	-40.96	236.96	2.767e+06	-1.462e+05	9.202e+05	1.701e+06	-1.404e+06
323		9.00	152.63	-341.06	30.63	-219.06	212.95	1.628e+06	-1.280e+06	-5.563e+05	9.044e+05	-1.258e+06
342		13.30	335.47	-399.84	157.43	-221.80	314.98	2.840e+06	-1.394e+06	-3.516e+05	1.797e+06	-1.824e+06
334		14.95	501.25	-225.58	230.38	45.29	351.44	4.514e+06	2.916e+05	1.851e+06	2.955e+06	-2.038e+06
329	1298	6.49	62.41	-286.73	-60.62	-163.71	166.78	1.337e+06	-7.310e+05	2.150e+04	5.848e+05	-9.950e+05
304		6.46	-21.55	-371.43	-105.61	-287.38	149.48	5.271e+05	-1.535e+06	-1.025e+06	1.655e+04	-8.901e+05
323		11.85	208.73	-452.04	45.38	-288.70	285.04	2.129e+06	-1.694e+06	-7.456e+05	1.180e+06	-1.651e+06
317		12.94	363.69	-294.09	120.41	-50.81	317.55	3.620e+06	-1.946e+05	1.218e+06	2.207e+06	-1.842e+06
329	2298	4.99	48.00	-220.56	-46.63	-125.93	128.29	1.029e+06	-5.623e+05	1.654e+04	4.498e+05	-7.654e+05
304		4.97	-16.58	-285.72	-81.24	-221.06	114.98	4.055e+05	-1.181e+06	-7.883e+05	1.273e+04	-6.847e+05
323		9.12	160.56	-347.72	34.91	-222.07	219.26	1.637e+06	-1.303e+06	-5.736e+05	9.076e+05	-1.270e+06
317		9.95	279.76	-226.22	92.62	-39.09	244.27	2.784e+06	-1.497e+05	9.371e+05	1.698e+06	-1.417e+06
330	1298	6.60	70.01	-295.24	-269.05	43.82	-94.24	1.356e+06	-7.404e+05	1.199e+06	-5.835e+05	5.518e+05
265		5.04	-283.48	-289.51	-289.44	-283.55	0.62	-1.378e+06	-1.383e+06	-1.379e+06	-1.383e+06	-1860.57
304		6.61	-13.15	-380.39	-373.05	-20.48	-51.37	5.416e+05	-1.562e+06	4.978e+05	-1.518e+06	3.005e+05
330	2298	5.08	53.85	-227.11	-206.96	33.70	-72.49	1.043e+06	-5.696e+05	9.223e+05	-4.488e+05	4.244e+05
265		3.87	-218.07	-222.70	-222.65	-218.12	0.48	-1.060e+06	-1.064e+06	-1.061e+06	-1.063e+06	-1431.21
304		5.09	-10.11	-292.60	-286.96	-15.75	-39.52	4.166e+05	-1.202e+06	3.829e+05	-1.168e+06	2.312e+05
331	1494	6.15	36.55	-273.40	-270.24	33.40	-31.12	1.020e+05	-4.805e+04	5.665e+04	-2704.97	-6.891e+04
514		6.90	13.78	-175.59	-149.22	-12.59	65.56	1.228e+05	-4.378e+04	4.295e+04	3.612e+04	-8.324e+04
519		3.62	21.70	-205.02	-201.19	17.87	29.23	4.902e+04	-1872.73	4.901e+04	-1861.30	762.44
501		3.45	-10.66	-247.29	-241.63	-16.32	-36.16	4.268e+04	-3090.44	4.061e+04	-1027.61	-9495.03
331	2494	4.73	28.12	-210.30	-207.88	25.69	-23.94	7.846e+04	-3.696e+04	4.358e+04	-2080.74	-5.300e+04
514		5.31	10.60	-135.07	-114.78	-9.68	50.43	9.449e+04	-3.367e+04	3.304e+04	2.778e+04	-6.403e+04
519		2.79	16.70	-157.71	-154.76	13.75	22.49	3.771e+04	-1440.56	3.770e+04	-1431.77	586.50
501		2.65	-8.20	-190.23	-185.87	-12.56	-27.82	3.283e+04	-2377.26	3.124e+04	-790.47	-7303.87
332	1488	7.77	61.41	-255.06	-254.52	60.87	-13.04	1.945e+05	-5.008e+04	1.111e+05	3.339e+04	-1.160e+05
509		8.91	41.22	-181.00	-135.89	-3.90	89.39	2.129e+05	-6.763e+04	5.492e+04	9.032e+04	-1.391e+05
514		5.61	33.65	-170.93	-151.71	14.43	59.69	1.255e+05	-3.765e+04	5.733e+04	3.051e+04	-8.046e+04
494		5.43	21.14	-260.20	-256.97	17.91	-29.96	1.149e+05	-4.270e+04	7.931e+04	-7071.42	-6.593e+04
332	2488	5.98	47.24	-196.20	-195.79	46.82	-10.03	1.496e+05	-3.852e+04	8.543e+04	2.568e+04	-8.921e+04
509		6.85	31.71	-139.23	-104.53	-3.00	68.76	1.638e+05	-5.202e+04	4.225e+04	6.948e+04	-1.070e+05
514		4.31	25.88	-131.48	-116.70	11.10	45.91	9.653e+04	-2.896e+04	4.410e+04	2.347e+04	-6.189e+04
494		4.18	16.26	-200.16	-197.67	13.78	-23.05	8.841e+04	-3.285e+04	6.101e+04	-5439.55	-5.072e+04
333	1483	9.69	89.89	-237.80	-237.32	89.40	12.59	3.360e+05	-3.392e+04	1.910e+05	1.111e+05	-1.806e+05
506		10.10	73.84	-169.50	-100.85	5.19	109.51	3.131e+05	-8.171e+04	5.850e+04	1.729e+05	-1.889e+05
509		7.49	53.77	-169.24	-131.98	16.50	83.20	2.205e+05	-6.529e+04	7.087e+04	8.430e+04	-1.427e+05
488		6.89	52.27	-229.21	-228.64	51.71	-12.63	2.142e+05	-4.325e+04	1.452e+05	2.577e+04	-1.141e+05
333	2483	7.46	69.14	-182.93	-182.55	68.77	9.69	2.585e+05	-2.609e+04	1.469e+05	8.549e+04	-1.389e+05
506		7.77	56.80	-130.38	-77.58	3.99	84.24	2.408e+05	-6.286e+04	4.500e+04	1.330e+05	-1.453e+05
509		5.76	41.36	-130.19	-101.52	12.69	64.00	1.696e+05	-5.022e+04	5.452e+04	6.485e+04	-1.098e+05
488		5.30	40.21	-176.31	-175.88	39.77	-9.72	1.648e+05	-3.327e+04	1.117e+05	1.983e+04	-8.773e+04
334	1476	14.32	60.43	-324.34	-312.85	48.94	65.49	6.318e+05	7593.62	3.617e+05	2.777e+05	-3.093e+05
499		9.84	185.17	-33.28	65.70	86.19	108.75	3.425e+05	-1.543e+05	-7.204e+04	2.603e+05	-1.847e+05

506		9.03	36.28	-229.04	-176.63	-16.12	105.63	3.404e+05	-7.256e+04	9.531e+04	1.726e+05 -2.028e+05
483		7.92	120.69	-122.29	-122.29	120.68	0.90	3.429e+05	-2.856e+04	2.220e+05	9.233e+04 -1.740e+05
334	2476	11.02	46.48	-249.49	-240.65	37.65	50.37	4.860e+05	5841.25	2.782e+05	2.136e+05 -2.379e+05
499		7.57	142.44	-25.60	50.54	66.30	83.65	2.635e+05	-1.187e+05	-5.542e+04	2.002e+05 -1.421e+05
506		6.95	27.91	-176.18	-135.87	-12.40	81.25	2.619e+05	-5.582e+04	7.331e+04	1.327e+05 -1.560e+05
483		6.09	92.84	-94.07	-94.07	92.83	0.69	2.637e+05	-2.197e+04	1.707e+05	7.102e+04 -1.339e+05
335	1470	13.41	155.39	-157.20	-140.22	138.41	70.85	7.534e+05	5.763e+04	4.258e+05	3.852e+05 -3.473e+05
492		16.35	168.89	-207.78	-91.49	52.60	174.01	7.501e+05	-1.814e+05	1.461e+05	4.225e+05 -4.448e+05
499		16.86	182.16	-153.42	17.07	11.67	167.77	5.998e+05	-4.100e+05	-1.097e+05	2.995e+05 -4.616e+05
476		9.48	136.54	-227.59	-227.49	136.44	6.04	5.310e+05	1.218e+05	4.435e+05	2.092e+05 -1.677e+05
335	2470	10.32	119.53	-120.92	-107.86	106.47	54.50	5.795e+05	4.433e+04	3.276e+05	2.963e+05 -2.671e+05
492		12.58	129.91	-159.83	-70.38	40.46	133.85	5.770e+05	-1.396e+05	1.124e+05	3.250e+05 -3.421e+05
499		12.97	140.12	-118.01	13.13	8.97	129.05	4.614e+05	-3.154e+05	-8.442e+04	2.304e+05 -3.551e+05
476		7.29	105.03	-175.07	-174.99	104.95	4.64	4.085e+05	9.368e+04	3.412e+05	1.609e+05 -1.290e+05
336	1465	16.00	215.25	-177.87	-152.46	189.84	96.67	1.076e+06	1.263e+05	6.104e+05	5.920e+05 -4.748e+05
485		17.83	233.02	-183.83	-0.68	49.87	206.89	1.000e+06	-1.626e+05	2.160e+05	6.219e+05 -5.449e+05
492		14.57	190.72	-167.53	-31.01	54.21	173.98	7.573e+05	-2.169e+05	1.251e+05	4.153e+05 -4.650e+05
470		12.02	164.49	-121.57	-104.02	146.94	68.65	8.048e+05	1.040e+05	5.360e+05	3.728e+05 -3.408e+05
336	2465	12.31	165.58	-136.83	-117.28	146.03	74.36	8.278e+05	9.715e+04	4.695e+05	4.554e+05 -3.652e+05
485		13.71	179.25	-141.41	-0.52	38.36	159.14	7.695e+05	-1.251e+05	1.661e+05	4.784e+05 -4.192e+05
492		11.20	146.71	-128.87	-23.86	41.70	133.83	5.825e+05	-1.669e+05	9.620e+04	3.195e+05 -3.577e+05
470		9.25	126.53	-93.52	-80.01	113.03	52.81	6.191e+05	8.000e+04	4.123e+05	2.867e+05 -2.621e+05
337	1458	18.38	274.45	-154.32	-111.54	231.68	128.49	1.459e+06	2.187e+05	8.254e+05	8.521e+05 -6.199e+05
479		19.83	290.62	-178.50	52.57	59.54	234.53	1.322e+06	-1.638e+05	2.930e+05	8.652e+05 -6.856e+05
485		15.72	242.36	-159.13	21.99	61.24	199.78	1.012e+06	-1.735e+05	2.300e+05	6.086e+05 -5.617e+05
465		14.37	225.11	-84.84	-48.46	188.73	99.77	1.136e+06	1.692e+05	7.280e+05	5.774e+05 -4.776e+05
337	2458	14.14	211.12	-118.71	-85.80	178.21	98.84	1.122e+06	1.682e+05	6.350e+05	6.554e+05 -4.769e+05
479		15.25	223.55	-137.31	40.44	45.80	180.41	1.017e+06	-1.260e+05	2.254e+05	6.655e+05 -5.274e+05
485		12.09	186.43	-122.41	16.92	47.10	153.68	7.785e+05	-1.334e+05	1.769e+05	4.682e+05 -4.321e+05
465		11.06	173.16	-65.27	-37.27	145.17	76.75	8.740e+05	1.302e+05	5.600e+05	4.442e+05 -3.674e+05
338	1448	20.79	339.35	-127.47	-61.20	273.09	162.91	1.917e+06	3.326e+05	1.080e+06	1.169e+06 -7.909e+05
472		22.00	352.78	-173.60	108.29	70.89	262.53	1.710e+06	-1.725e+05	3.823e+05	1.155e+06 -8.581e+05
479		17.58	301.95	-153.70	80.26	67.99	227.74	1.336e+06	-1.694e+05	3.166e+05	8.496e+05 -7.037e+05
458		16.58	294.38	-46.46	15.24	232.69	131.23	1.531e+06	2.714e+05	9.678e+05	8.346e+05 -6.262e+05
338	2448	16.00	261.04	-98.05	-47.08	210.07	125.32	1.475e+06	2.558e+05	8.311e+05	8.993e+05 -6.084e+05
472		16.92	271.37	-133.54	83.30	54.53	201.94	1.315e+06	-1.327e+05	2.941e+05	8.883e+05 -6.601e+05
479		13.52	232.27	-118.23	61.74	52.30	175.19	1.027e+06	-1.303e+05	2.436e+05	6.535e+05 -5.413e+05
458		12.75	226.45	-35.73	11.72	178.99	100.95	1.178e+06	2.088e+05	7.444e+05	6.420e+05 -4.817e+05
339	1439	23.27	409.86	-100.10	-4.64	314.41	198.92	2.461e+06	4.700e+05	1.381e+06	1.550e+06 -9.918e+05
463		24.24	418.98	-169.17	167.11	82.71	291.03	2.168e+06	-1.815e+05	4.885e+05	1.498e+06 -1.061e+06
472		19.64	367.00	-150.14	141.20	75.65	256.48	1.725e+06	-1.763e+05	4.115e+05	1.137e+06 -8.788e+05
448		18.83	372.44	-8.79	86.77	276.88	165.23	2.002e+06	3.986e+05	1.252e+06	1.149e+06 -8.000e+05
339	2439	17.90	315.28	-77.00	-3.57	241.85	153.01	1.893e+06	3.616e+05	1.062e+06	1.193e+06 -7.629e+05
463		18.64	322.29	-130.13	128.54	63.62	223.87	1.667e+06	-1.396e+05	3.758e+05	1.152e+06 -8.159e+05
472		15.11	282.30	-115.49	108.62	58.19	197.29	1.327e+06	-1.356e+05	3.166e+05	8.750e+05 -6.760e+05
448		14.49	286.50	-6.76	66.75	212.98	127.10	1.540e+06	3.067e+05	9.628e+05	8.838e+05 -6.154e+05

340	1428	25.82	484.97	-72.89	56.47	355.62	235.44	3.102e+06	6.361e+05	1.731e+06	2.006e+06	-1.225e+06
	452	26.52	487.84	-165.32	227.86	94.66	319.72	2.704e+06	-1.862e+05	6.148e+05	1.903e+06	-1.294e+06
	463	21.78	436.49	-147.84	204.87	83.78	285.82	2.186e+06	-1.842e+05	5.230e+05	1.479e+06	-1.085e+06
	439	21.16	458.32	27.22	164.53	321.00	200.85	2.559e+06	5.516e+05	1.583e+06	1.528e+06	-1.004e+06
340	2428	19.87	373.06	-56.07	43.44	273.55	181.10	2.386e+06	4.893e+05	1.332e+06	1.543e+06	-9.423e+05
	452	20.40	375.26	-127.17	175.28	72.82	245.94	2.080e+06	-1.432e+05	4.729e+05	1.464e+06	-9.951e+05
	463	16.76	335.76	-113.72	157.59	64.44	219.86	1.682e+06	-1.417e+05	4.023e+05	1.138e+06	-8.342e+05
	439	16.28	352.55	20.94	126.56	246.93	154.50	1.969e+06	4.243e+05	1.218e+06	1.175e+06	-7.719e+05
341	1423	28.47	563.07	-46.48	119.90	396.69	271.54	3.854e+06	8.385e+05	2.137e+06	2.555e+06	-1.493e+06
	441	28.83	557.62	-162.05	288.91	106.66	348.11	3.328e+06	-1.802e+05	7.643e+05	2.384e+06	-1.556e+06
	452	23.98	509.05	-146.54	270.42	92.09	315.44	2.725e+06	-1.876e+05	6.552e+05	1.882e+06	-1.321e+06
	428	23.56	550.02	61.49	246.66	364.84	237.01	3.214e+06	7.351e+05	1.968e+06	1.981e+06	-1.240e+06
341	2423	21.90	433.13	-35.75	92.23	305.15	208.88	2.964e+06	6.450e+05	1.644e+06	1.965e+06	-1.149e+06
	441	22.18	428.94	-124.65	222.24	82.05	267.77	2.560e+06	-1.387e+05	5.880e+05	1.834e+06	-1.197e+06
	452	18.44	391.58	-112.73	208.02	70.84	242.64	2.096e+06	-1.443e+05	5.040e+05	1.448e+06	-1.016e+06
	428	18.13	423.09	47.30	189.74	280.65	182.31	2.473e+06	5.655e+05	1.514e+06	1.524e+06	-9.536e+05
342	1413	31.25	642.10	-21.63	182.72	437.76	306.39	4.738e+06	1.089e+06	2.603e+06	3.224e+06	-1.798e+06
	434	31.18	626.32	-159.40	348.02	118.89	375.78	4.053e+06	-1.536e+05	9.404e+05	2.959e+06	-1.845e+06
	441	26.21	582.88	-146.03	336.21	100.64	344.90	3.352e+06	-1.800e+05	8.113e+05	2.361e+06	-1.587e+06
	423	26.07	644.91	94.01	330.65	408.27	272.71	3.981e+06	9.570e+05	2.412e+06	2.527e+06	-1.511e+06
342	2413	24.04	493.92	-16.64	140.55	336.74	235.68	3.645e+06	8.377e+05	2.003e+06	2.480e+06	-1.383e+06
	434	23.98	481.78	-122.62	267.71	91.45	289.06	3.117e+06	-1.182e+05	7.234e+05	2.276e+06	-1.419e+06
	441	20.16	448.37	-112.33	258.62	77.42	265.31	2.579e+06	-1.384e+05	6.241e+05	1.816e+06	-1.221e+06
	423	20.05	496.09	72.31	254.35	314.06	209.77	3.063e+06	7.362e+05	1.855e+06	1.944e+06	-1.162e+06
343	1404	34.23	719.74	0.35	240.78	479.31	339.35	5.784e+06	1.405e+06	3.130e+06	4.060e+06	-2.140e+06
	421	33.54	691.89	-157.69	402.36	131.85	402.68	4.892e+06	-8.871e+04	1.146e+06	3.657e+06	-2.150e+06
	434	28.47	655.82	-146.23	399.80	109.79	373.89	4.079e+06	-1.511e+05	9.945e+05	2.934e+06	-1.880e+06
	413	28.70	739.68	124.53	412.92	451.29	306.98	4.880e+06	1.229e+06	2.917e+06	3.192e+06	-1.820e+06
343	2404	26.33	553.65	0.27	185.21	368.70	261.04	4.450e+06	1.081e+06	2.407e+06	3.123e+06	-1.646e+06
	421	25.80	532.23	-121.30	309.50	101.43	309.76	3.763e+06	-6.824e+04	8.813e+05	2.813e+06	-1.654e+06
	434	21.90	504.47	-112.48	307.54	84.45	287.60	3.138e+06	-1.163e+05	7.650e+05	2.257e+06	-1.446e+06
	413	22.08	568.99	95.79	317.63	347.15	236.14	3.754e+06	9.456e+05	2.244e+06	2.456e+06	-1.400e+06
344	1393	37.56	794.01	15.81	287.31	522.51	370.90	7.042e+06	1.811e+06	3.705e+06	5.147e+06	-2.514e+06
	410	35.87	753.07	-157.64	448.87	146.56	429.54	5.862e+06	4.673e+04	1.380e+06	4.529e+06	-2.445e+06
	421	30.75	725.24	-147.74	457.45	120.06	402.57	4.920e+06	-8.373e+04	1.207e+06	3.629e+06	-2.189e+06
	404	31.53	830.18	152.42	488.33	494.26	338.87	5.938e+06	1.569e+06	3.483e+06	4.024e+06	-2.167e+06
344	2393	28.89	610.78	12.17	221.01	401.93	285.31	5.417e+06	1.393e+06	2.850e+06	3.959e+06	-1.934e+06
	410	27.59	579.29	-121.26	345.28	112.74	330.42	4.509e+06	3.595e+04	1.062e+06	3.484e+06	-1.881e+06
	421	23.65	557.88	-113.65	351.88	92.35	309.67	3.785e+06	-6.441e+04	9.285e+05	2.792e+06	-1.684e+06
	404	24.25	638.60	117.24	375.64	380.20	260.67	4.567e+06	1.207e+06	2.679e+06	3.095e+06	-1.667e+06
345	1376	41.49	865.86	8.16	304.46	569.56	407.85	8.592e+06	2.334e+06	4.286e+06	6.641e+06	-2.899e+06
	400	38.10	814.15	-157.54	491.17	165.44	457.73	6.984e+06	3.124e+05	1.638e+06	5.659e+06	-2.662e+06
	410	33.01	786.60	-154.58	500.49	131.53	432.93	5.890e+06	5.241e+04	1.447e+06	4.496e+06	-2.489e+06
	393	34.65	912.54	177.93	551.27	539.20	367.26	7.200e+06	2.002e+06	4.098e+06	5.103e+06	-2.550e+06
345	2376	31.92	666.04	6.28	234.20	438.12	313.73	6.609e+06	1.795e+06	3.297e+06	5.108e+06	-2.230e+06
	400	29.31	626.27	-121.18	377.82	127.26	352.10	5.372e+06	2.403e+05	1.260e+06	4.353e+06	-2.048e+06

410		25.40	605.08	-118.91	384.99	101.18	333.02	4.531e+06	4.031e+04	1.113e+06	3.459e+06	-1.915e+06
393		26.65	701.95	136.87	424.05	414.77	282.50	5.539e+06	1.540e+06	3.153e+06	3.926e+06	-1.962e+06
346	1364	46.63	957.42	-173.01	169.00	615.41	519.27	1.056e+07	2.931e+06	4.642e+06	8.852e+06	-3.183e+06
384		40.34	921.20	-106.61	622.98	191.62	466.46	8.353e+06	8.564e+05	1.973e+06	7.236e+06	-2.669e+06
400		35.14	813.89	-213.47	474.65	125.77	483.15	6.973e+06	2.894e+05	1.659e+06	5.604e+06	-2.697e+06
376		38.38	993.31	226.11	628.13	591.29	383.16	8.778e+06	2.563e+06	4.759e+06	6.582e+06	-2.971e+06
346	2364	35.87	736.48	-133.08	130.00	473.40	399.44	8.125e+06	2.254e+06	3.570e+06	6.809e+06	-2.448e+06
384		31.03	708.62	-82.00	479.21	147.40	358.81	6.425e+06	6.588e+05	1.518e+06	5.566e+06	-2.053e+06
400		27.03	626.07	-164.20	365.12	96.75	371.66	5.364e+06	2.226e+05	1.276e+06	4.310e+06	-2.075e+06
376		29.53	764.09	173.93	483.18	454.84	294.74	6.752e+06	1.971e+06	3.661e+06	5.063e+06	-2.285e+06
347	1353	38.07	1226.01	-65.66	763.73	396.62	619.20	1.351e+07	5.125e+06	7.419e+06	1.122e+07	-3.738e+06
368		27.22	1570.41	318.32	1564.59	324.15	85.23	8.976e+06	1.335e+06	2.000e+06	8.312e+06	-2.153e+06
384		27.45	1051.01	-264.23	782.80	3.98	529.93	8.822e+06	1.524e+06	3.005e+06	7.341e+06	-2.935e+06
364		32.19	1991.47	654.09	1843.85	801.71	419.09	1.113e+07	4.019e+06	6.661e+06	8.485e+06	-3.435e+06
347	2353	29.29	943.08	-50.51	587.48	305.09	476.31	1.039e+07	3.943e+06	5.707e+06	8.630e+06	-2.875e+06
368		20.94	1208.01	244.86	1203.53	249.34	65.56	6.905e+06	1.027e+06	1.538e+06	6.394e+06	-1.656e+06
384		21.12	808.47	-203.25	602.15	3.06	407.64	6.786e+06	1.173e+06	2.312e+06	5.647e+06	-2.258e+06
364		24.76	1531.90	503.14	1418.34	616.70	322.38	8.559e+06	3.092e+06	5.124e+06	6.527e+06	-2.642e+06
348	1338	29.25	1332.84	118.09	1107.54	343.40	472.15	1.025e+07	3.271e+06	4.784e+06	8.732e+06	-2.874e+06
351		26.43	812.22	-277.46	603.84	-69.08	428.54	8.386e+06	1.112e+06	2.279e+06	7.219e+06	-2.669e+06
368		31.70	1472.09	-80.83	1370.19	21.07	384.52	9.938e+06	1.045e+06	2.040e+06	8.942e+06	-2.804e+06
353		39.32	1463.81	-106.47	907.34	450.00	751.10	1.384e+07	5.050e+06	7.427e+06	1.146e+07	-3.904e+06
348	2338	22.50	1025.26	90.84	851.95	264.15	363.19	7.881e+06	2.516e+06	3.680e+06	6.717e+06	-2.211e+06
351		20.33	624.78	-213.43	464.49	-53.14	329.64	6.451e+06	8.554e+05	1.753e+06	5.553e+06	-2.053e+06
368		24.39	1132.37	-62.18	1053.99	16.21	295.79	7.645e+06	8.037e+05	1.570e+06	6.879e+06	-2.157e+06
353		30.25	1126.01	-81.90	697.95	346.15	577.77	1.064e+07	3.885e+06	5.713e+06	8.815e+06	-3.003e+06
349	1326	22.47	871.16	-70.92	652.94	147.30	397.44	7.688e+06	2.198e+06	3.528e+06	6.358e+06	-2.352e+06
334		19.33	623.18	-283.52	486.84	-147.19	324.08	5.871e+06	4.147e+05	1.214e+06	5.071e+06	-1.930e+06
351		25.89	1011.16	-264.81	846.73	-100.38	427.52	8.037e+06	8.637e+05	1.853e+06	7.048e+06	-2.474e+06
338		30.42	1173.44	-43.13	858.90	271.41	532.66	1.059e+07	3.445e+06	5.221e+06	8.815e+06	-3.089e+06
349	2326	17.29	670.13	-54.55	502.26	113.31	305.73	5.914e+06	1.691e+06	2.714e+06	4.891e+06	-1.809e+06
334		14.87	479.37	-218.10	374.50	-113.22	249.29	4.516e+06	3.190e+05	9.341e+05	3.901e+06	-1.484e+06
351		19.91	777.82	-203.70	651.33	-77.21	328.86	6.183e+06	6.644e+05	1.425e+06	5.421e+06	-1.903e+06
338		23.40	902.65	-33.18	660.70	208.78	409.74	8.147e+06	2.650e+06	4.016e+06	6.781e+06	-2.376e+06
350	1311	14.79	492.97	-148.66	339.36	4.96	273.80	4.877e+06	1.086e+06	2.019e+06	3.945e+06	-1.633e+06
317		12.82	354.72	-284.63	264.75	-194.66	222.32	3.602e+06	-1.772e+05	3.685e+05	3.056e+06	-1.328e+06
334		19.41	664.24	-286.13	530.46	-152.35	330.52	5.849e+06	3.530e+05	1.140e+06	5.063e+06	-1.925e+06
326		22.60	846.43	-94.30	612.20	139.94	406.80	7.729e+06	2.234e+06	3.597e+06	6.365e+06	-2.374e+06
350	2311	11.38	379.21	-114.35	261.04	3.81	210.62	3.752e+06	8.354e+05	1.553e+06	3.034e+06	-1.256e+06
317		9.86	272.86	-218.94	203.66	-149.74	171.01	2.771e+06	-1.363e+05	2.835e+05	2.351e+06	-1.022e+06
334		14.93	510.96	-220.10	408.05	-117.20	254.25	4.500e+06	2.715e+05	8.766e+05	3.894e+06	-1.481e+06
326		17.38	651.10	-72.54	470.92	107.64	312.92	5.945e+06	1.718e+06	2.767e+06	4.896e+06	-1.826e+06
351	1296	7.17	136.46	-213.66	56.18	-133.39	147.18	2.037e+06	-3.581e+04	4.686e+05	1.532e+06	-8.894e+05
298		6.48	64.12	-286.56	17.61	-240.04	118.94	1.339e+06	-7.245e+05	-4.303e+05	1.045e+06	-7.214e+05
317		12.92	362.90	-291.57	269.11	-197.78	229.31	3.611e+06	-2.020e+05	3.504e+05	3.059e+06	-1.342e+06
311		14.86	495.69	-156.52	333.28	5.88	282.04	4.892e+06	1.086e+06	2.037e+06	3.941e+06	-1.648e+06

351	2296	5.52	104.97	-164.36	43.22	-102.61	113.21	1.567e+06	-2.755e+04	3.604e+05	1.179e+06	-6.841e+05
	298	4.99	49.32	-220.43	13.54	-184.65	91.50	1.030e+06	-5.573e+05	-3.310e+05	8.039e+05	-5.549e+05
	317	9.94	279.15	-224.28	207.01	-152.14	176.39	2.778e+06	-1.554e+05	2.695e+05	2.353e+06	-1.032e+06
	311	11.43	381.30	-120.40	256.37	4.52	216.95	3.763e+06	8.352e+05	1.567e+06	3.032e+06	-1.268e+06
352	1296	7.24	141.69	-220.27	-213.50	134.92	-49.04	2.049e+06	-4.128e+04	2.005e+06	2770.83	3.002e+05
	265	5.04	-282.42	-289.16	-287.59	-283.99	2.84	-1.378e+06	-1.386e+06	-1.382e+06	-1.381e+06	-3817.57
	298	6.60	70.81	-293.89	-293.88	70.79	-2.39	1.351e+06	-7.480e+05	1.351e+06	-7.476e+05	2.826e+04
352	2296	5.57	108.99	-169.44	-164.23	103.78	-37.72	1.576e+06	-3.175e+04	1.542e+06	2131.41	2.309e+05
	265	3.88	-217.25	-222.43	-221.22	-218.45	2.19	-1.060e+06	-1.066e+06	-1.063e+06	-1.063e+06	-2936.59
	298	5.08	54.47	-226.07	-226.06	54.45	-1.84	1.039e+06	-5.754e+05	1.039e+06	-5.751e+05	2.174e+04
353	1461	4.97	-3.12	-310.22	-11.59	-301.76	50.28	6.781e+04	-3107.51	-1990.20	6.669e+04	8831.03
	456	6.30	35.40	-350.75	26.77	-342.12	57.09	1.064e+05	-1.271e+04	1.035e+04	8.338e+04	4.707e+04
	494	6.89	19.75	-286.77	1.94	-268.96	-71.70	1.211e+05	-1.418e+04	3.621e+04	7.069e+04	6.540e+04
	501	5.37	20.28	-317.56	14.35	-311.63	-44.35	7.202e+04	-2099.27	-1988.20	7.191e+04	-2867.11
353	2461	3.82	-2.40	-238.63	-8.92	-232.12	38.68	5.216e+04	-2390.39	-1530.92	5.130e+04	6793.10
	456	4.85	27.23	-269.81	20.59	-263.17	43.92	8.188e+04	-9775.44	7964.16	6.414e+04	3.621e+04
	494	5.30	15.19	-220.59	1.49	-206.89	-55.15	9.314e+04	-1.091e+04	2.785e+04	5.438e+04	5.031e+04
	501	4.13	15.60	-244.27	11.04	-239.71	-34.12	5.540e+04	-1614.83	-1529.39	5.532e+04	-2205.47
354	1456	6.07	26.29	-331.32	18.02	-323.05	53.75	1.308e+05	-1.092e+04	4731.84	1.152e+05	4.442e+04
	450	6.99	53.79	-341.86	46.91	-334.98	51.72	1.937e+05	2.972e+04	7.497e+04	1.484e+05	7.329e+04
	488	8.48	55.19	-286.03	28.78	-259.62	-91.18	2.180e+05	-1.125e+04	9.869e+04	1.080e+05	1.145e+05
	494	6.13	40.11	-279.48	26.24	-265.60	-65.13	1.335e+05	-9144.99	2.871e+04	9.567e+04	6.299e+04
354	2456	4.67	20.23	-254.86	13.86	-248.50	41.35	1.006e+05	-8396.65	3639.88	8.859e+04	3.417e+04
	450	5.38	41.37	-262.97	36.08	-257.68	39.78	1.490e+05	2.286e+04	5.767e+04	1.142e+05	5.638e+04
	488	6.52	42.45	-220.02	22.14	-199.71	-70.14	1.677e+05	-8656.52	7.592e+04	8.311e+04	8.810e+04
	494	4.72	30.86	-214.98	20.18	-204.31	-50.10	1.027e+05	-7034.60	2.209e+04	7.359e+04	4.845e+04
355	1450	6.67	49.13	-308.18	42.54	-301.59	48.08	2.244e+05	3.478e+04	6.690e+04	1.922e+05	7.112e+04
	445	7.95	70.10	-330.64	63.55	-324.09	50.81	3.190e+05	1.282e+05	1.995e+05	2.476e+05	9.230e+04
	483	10.38	105.41	-276.76	63.84	-235.18	-119.00	3.575e+05	1110.60	1.933e+05	1.653e+05	1.776e+05
	488	7.42	69.60	-264.37	47.20	-241.98	-83.54	2.335e+05	-4342.13	8.964e+04	1.395e+05	1.163e+05
355	2450	5.13	37.79	-237.06	32.72	-231.99	36.98	1.726e+05	2.675e+04	5.146e+04	1.479e+05	5.471e+04
	445	6.12	53.92	-254.34	48.89	-249.30	39.08	2.454e+05	9.860e+04	1.535e+05	1.905e+05	7.100e+04
	483	7.98	81.09	-212.89	49.10	-180.91	-91.54	2.750e+05	854.30	1.487e+05	1.271e+05	1.366e+05
	488	5.70	53.54	-203.36	36.31	-186.13	-64.26	1.796e+05	-3340.10	6.896e+04	1.073e+05	8.944e+04
356	1445	6.86	98.41	-226.89	87.69	-216.18	58.06	3.416e+05	1.354e+05	1.855e+05	2.914e+05	8.850e+04
	437	10.81	29.85	-392.37	25.58	-388.10	42.22	5.123e+05	3.632e+05	4.105e+05	4.650e+05	6.944e+04
	476	13.01	231.26	-173.16	169.79	-111.69	-145.20	5.369e+05	-6.050e+04	2.830e+05	1.934e+05	2.953e+05
	483	9.42	85.62	-301.82	47.67	-263.87	-115.16	3.884e+05	2.038e+04	1.880e+05	2.207e+05	1.833e+05
356	2445	5.28	75.70	-174.53	67.46	-166.29	44.66	2.628e+05	1.041e+05	1.427e+05	2.242e+05	6.808e+04
	437	8.32	22.96	-301.82	19.68	-298.54	32.47	3.941e+05	2.794e+05	3.158e+05	3.577e+05	5.341e+04
	476	10.01	177.90	-133.20	130.61	-85.92	-111.69	4.130e+05	-4.654e+04	2.177e+05	1.488e+05	2.272e+05
	483	7.25	65.86	-232.17	36.67	-202.97	-88.59	2.987e+05	1.568e+04	1.446e+05	1.698e+05	1.410e+05
357	1437	11.36	211.48	-268.14	206.96	-263.62	46.34	6.074e+05	7.492e+04	1.482e+05	5.341e+05	1.834e+05
	432	12.05	207.22	-226.54	207.11	-226.44	-6.83	7.500e+05	2.362e+05	4.641e+05	5.221e+05	2.552e+05
	470	14.42	162.39	-241.30	91.39	-170.29	-153.70	8.234e+05	1.193e+05	6.087e+05	3.340e+05	3.241e+05
	476	11.27	143.03	-201.61	36.76	-95.34	-159.16	6.096e+05	6.898e+04	4.265e+05	2.521e+05	2.558e+05

357	2437	8.74	162.68-206.26	159.20	-202.79	35.64	4.672e+05	5.763e+04	1.140e+05	4.108e+05	1.411e+05
	432	9.27	159.40-174.26	159.32	-174.18	-5.26	5.769e+05	1.817e+05	3.570e+05	4.016e+05	1.963e+05
	470	11.09	124.92-185.61	70.30	-130.99	-118.23	6.334e+05	9.180e+04	4.682e+05	2.569e+05	2.493e+05
	476	8.67	110.03-155.08	28.28	-73.34	-122.43	4.689e+05	5.306e+04	3.281e+05	1.939e+05	1.968e+05
358	1432	11.23	217.34-159.21	217.25	-159.11	-5.99	8.163e+05	2.758e+05	4.425e+05	6.495e+05	2.496e+05
	426	14.58	253.61-210.56	251.29	-208.24	-32.76	1.100e+06	4.129e+05	7.792e+05	7.335e+05	3.427e+05
	465	16.51	226.10-183.52	116.64	-74.06	-181.26	1.120e+06	1.712e+05	8.543e+05	4.371e+05	4.262e+05
	470	12.60	186.22-170.19	97.79	-81.76	-153.94	8.389e+05	1.276e+05	5.921e+05	3.743e+05	3.386e+05
358	2432	8.64	167.19-122.47	167.12	-122.39	-4.60	6.279e+05	2.121e+05	3.404e+05	4.996e+05	1.920e+05
	426	11.22	195.09-161.97	193.30	-160.18	-25.20	8.460e+05	3.176e+05	5.994e+05	5.642e+05	2.636e+05
	465	12.70	173.93-141.17	89.72	-56.97	-139.43	8.617e+05	1.317e+05	6.571e+05	3.362e+05	3.278e+05
	470	9.69	143.25-130.91	75.22	-62.89	-118.42	6.453e+05	9.812e+04	4.555e+05	2.879e+05	2.604e+05
359	1426	13.20	258.06-90.94	253.89	-86.77	-37.93	1.160e+06	4.668e+05	7.560e+05	8.708e+05	3.418e+05
	417	17.53	301.09-154.29	292.30	-145.50	-62.64	1.526e+06	6.053e+05	1.145e+06	9.865e+05	4.533e+05
	458	18.74	286.90-149.80	146.15	-9.05	-204.10	1.497e+06	2.571e+05	1.175e+06	5.787e+05	5.433e+05
	465	14.43	244.76-129.93	128.82	-13.99	-173.20	1.138e+06	1.950e+05	8.346e+05	4.981e+05	4.403e+05
359	2426	10.16	198.51-69.95	195.30	-66.74	-29.18	8.923e+05	3.591e+05	5.815e+05	6.698e+05	2.629e+05
	417	13.48	231.60-118.68	224.85	-111.93	-48.18	1.174e+06	4.656e+05	8.804e+05	7.588e+05	3.487e+05
	458	14.42	220.69-115.23	112.42	-6.96	-157.00	1.151e+06	1.977e+05	9.037e+05	4.452e+05	4.179e+05
	465	11.10	188.28-99.95	99.09	-10.76	-133.23	8.752e+05	1.500e+05	6.420e+05	3.831e+05	3.387e+05
360	1417	15.94	310.73-14.52	296.16	0.05	-67.28	1.589e+06	6.800e+05	1.119e+06	1.151e+06	4.544e+05
	415	20.45	355.91-92.02	336.31	-72.41	-91.63	2.034e+06	8.296e+05	1.575e+06	1.289e+06	5.850e+05
	448	21.09	352.66-115.30	174.40	62.96	-227.25	1.954e+06	3.689e+05	1.570e+06	7.528e+05	6.792e+05
	458	16.48	310.15-93.62	155.52	61.00	-196.28	1.515e+06	2.894e+05	1.152e+06	6.525e+05	5.598e+05
360	2417	12.26	239.02-11.17	227.81	0.04	-51.76	1.223e+06	5.231e+05	8.605e+05	8.853e+05	3.495e+05
	415	15.73	273.78-70.78	258.70	-55.70	-70.49	1.565e+06	6.382e+05	1.212e+06	9.914e+05	4.500e+05
	448	16.22	271.28-88.69	134.15	48.43	-174.81	1.503e+06	2.838e+05	1.208e+06	5.791e+05	5.225e+05
	458	12.68	238.58-72.02	119.63	46.93	-150.98	1.166e+06	2.226e+05	8.864e+05	5.020e+05	4.306e+05
361	1415	18.70	375.0164.17	341.95	97.23	-95.83	2.104e+06	9.273e+05	1.546e+06	1.485e+06	5.878e+05
	406	23.39	418.24-27.74	382.71	7.78	-120.75	2.637e+06	1.094e+06	2.085e+06	1.646e+06	7.397e+05
	439	23.52	423.73-79.58	202.25	141.90	-249.84	2.500e+06	5.072e+05	2.046e+06	9.609e+05	8.356e+05
	448	18.67	383.48-58.20	180.68	144.61	-220.10	1.975e+06	4.105e+05	1.545e+06	8.405e+05	6.985e+05
361	2415	14.39	288.4749.36	263.04	74.79	-73.71	1.619e+06	7.133e+05	1.189e+06	1.143e+06	4.521e+05
	406	18.00	321.72-21.34	294.40	5.99	-92.88	2.029e+06	8.415e+05	1.604e+06	1.266e+06	5.690e+05
	439	18.09	325.95-61.22	155.57	109.16	-192.19	1.923e+06	3.902e+05	1.574e+06	7.392e+05	6.427e+05
	448	14.36	294.99-44.77	138.98	111.24	-169.31	1.519e+06	3.157e+05	1.188e+06	6.466e+05	5.373e+05
362	1406	21.49	452.14139.95	390.22	201.88	-124.49	2.715e+06	1.217e+06	2.053e+06	1.878e+06	7.441e+05
	402	26.40	487.9235.95	430.79	93.08	-150.18	3.349e+06	1.406e+06	2.692e+06	2.063e+06	9.197e+05
	428	26.02	499.19-43.61	230.22	225.36	-271.39	3.142e+06	6.757e+05	2.612e+06	1.206e+06	1.013e+06
	439	20.96	464.36-23.59	205.47	235.30	-243.52	2.522e+06	5.594e+05	2.018e+06	1.064e+06	8.579e+05
362	2406	16.53	347.80107.66	300.17	155.29	-95.76	2.089e+06	9.359e+05	1.580e+06	1.445e+06	5.724e+05
	402	20.31	375.3227.66	331.38	71.60	-115.53	2.576e+06	1.081e+06	2.071e+06	1.587e+06	7.075e+05
	428	20.01	383.99-33.54	177.09	173.36	-208.76	2.417e+06	5.198e+05	2.009e+06	9.278e+05	7.796e+05
	439	16.12	357.20-18.14	158.05	181.00	-187.32	1.940e+06	4.303e+05	1.552e+06	8.186e+05	6.599e+05
363	1402	24.36	542.07209.45	440.01	311.52	-153.40	3.436e+06	1.556e+06	2.657e+06	2.335e+06	9.261e+05
	389	29.54	564.0796.72	479.95	180.83	-179.55	4.192e+06	1.773e+06	3.418e+06	2.547e+06	1.128e+06

423		28.62	577.41	-8.39	258.46	310.56	-291.74	3.897e+06	8.816e+05	3.285e+06	1.493e+06	1.212e+06
428		23.32	551.17	9.75	230.39	330.53	-266.04	3.167e+06	7.402e+05	2.580e+06	1.327e+06	1.039e+06
363	2402	18.74	416.98	161.12	338.47	239.63	-118.00	2.643e+06	1.197e+06	2.043e+06	1.796e+06	7.124e+05
389		22.72	433.9	074.40	369.19	139.10	-138.11	3.224e+06	1.364e+06	2.629e+06	1.959e+06	8.677e+05
423		22.01	444.16	-6.46	198.82	238.89	-224.42	2.997e+06	6.782e+05	2.527e+06	1.148e+06	9.324e+05
428		17.94	423.97	7.50	177.22	254.25	-204.64	2.436e+06	5.694e+05	1.985e+06	1.020e+06	7.991e+05
364	1389	27.34	642.07	271.63	490.65	423.05	-182.11	4.286e+06	1.954e+06	3.379e+06	2.861e+06	1.137e+06
380		32.92	644.79	152.55	529.98	267.36	-208.16	5.194e+06	2.208e+06	4.299e+06	3.102e+06	1.368e+06
413		31.36	656.22	25.04	287.11	394.15	-311.02	4.783e+06	1.136e+06	4.094e+06	1.825e+06	1.428e+06
423		25.79	641.58	41.40	255.69	427.28	-287.57	3.923e+06	9.601e+05	3.251e+06	1.632e+06	1.241e+06
364	2389	21.03	493.90	208.94	377.42	325.42	-140.08	3.297e+06	1.503e+06	2.599e+06	2.201e+06	8.744e+05
380		25.32	495.99	117.35	407.67	205.66	-160.13	3.995e+06	1.698e+06	3.307e+06	2.386e+06	1.052e+06
413		24.12	504.78	19.26	220.85	303.19	-239.24	3.680e+06	8.739e+05	3.150e+06	1.404e+06	1.098e+06
423		19.83	493.52	31.84	196.69	328.67	-221.20	3.017e+06	7.385e+05	2.501e+06	1.255e+06	9.543e+05
365	1380	30.53	746.78	327.05	541.82	532.01	-209.81	5.294e+06	2.422e+06	4.256e+06	3.460e+06	1.380e+06
371		36.69	727.21	201.36	581.42	347.15	-235.39	6.403e+06	2.721e+06	5.394e+06	3.729e+06	1.642e+06
404		34.33	733.02	55.30	316.52	471.79	-329.85	5.834e+06	1.455e+06	5.084e+06	2.205e+06	1.650e+06
413		28.39	732.57	70.84	281.66	521.75	-308.32	4.810e+06	1.231e+06	4.056e+06	1.984e+06	1.459e+06
365	2380	23.49	574.45	251.58	416.79	409.24	-161.39	4.072e+06	1.863e+06	3.274e+06	2.662e+06	1.061e+06
371		28.22	559.39	154.89	447.25	267.04	-181.07	4.925e+06	2.093e+06	4.149e+06	2.869e+06	1.263e+06
404		26.41	563.86	42.54	243.48	362.92	-253.73	4.487e+06	1.120e+06	3.911e+06	1.696e+06	1.269e+06
413		21.84	563.51	54.49	216.66	401.35	-237.17	3.700e+06	9.465e+05	3.120e+06	1.526e+06	1.122e+06
366	1371	34.05	848.97	376.52	593.92	631.57	-235.48	6.505e+06	2.973e+06	5.346e+06	4.132e+06	1.659e+06
361		41.14	808.24	239.14	636.41	410.96	-261.27	7.901e+06	3.322e+06	6.805e+06	4.418e+06	1.954e+06
393		37.66	805.49	79.82	347.68	537.63	-350.18	7.097e+06	1.863e+06	6.330e+06	2.630e+06	1.851e+06
404		31.20	820.23	96.78	308.63	608.38	-329.22	5.857e+06	1.568e+06	5.041e+06	2.384e+06	1.684e+06
366	2371	26.20	653.06	289.63	456.86	485.82	-181.14	5.004e+06	2.287e+06	4.112e+06	3.179e+06	1.276e+06
361		31.64	621.72	183.95	489.55	316.12	-200.98	6.078e+06	2.555e+06	5.234e+06	3.399e+06	1.503e+06
393		28.97	619.61	61.40	267.44	413.57	-269.37	5.459e+06	1.433e+06	4.869e+06	2.023e+06	1.424e+06
404		24.00	630.95	74.45	237.41	467.99	-253.24	4.506e+06	1.206e+06	3.878e+06	1.834e+06	1.295e+06
367	1361	38.15	940.06	421.34	649.45	711.96	-257.47	7.996e+06	3.615e+06	6.746e+06	4.865e+06	1.978e+06
349		46.78	888.03	250.49	700.64	437.87	-290.43	9.837e+06	4.000e+06	8.716e+06	5.121e+06	2.299e+06
376		41.63	874.48	96.13	384.10	586.50	-375.79	8.665e+06	2.385e+06	7.967e+06	3.083e+06	1.974e+06
393		34.33	898.85	114.02	336.52	676.36	-353.72	7.112e+06	1.994e+06	6.279e+06	2.826e+06	1.889e+06
367	2361	29.35	723.13	324.11	499.57	547.66	-198.05	6.151e+06	2.781e+06	5.189e+06	3.742e+06	1.522e+06
349		35.99	683.10	192.68	538.96	336.82	-223.41	7.567e+06	3.077e+06	6.705e+06	3.939e+06	1.768e+06
376		32.03	672.67	73.94	295.46	451.16	-289.07	6.665e+06	1.835e+06	6.129e+06	2.371e+06	1.518e+06
393		26.41	691.42	87.71	258.86	520.27	-272.09	5.470e+06	1.534e+06	4.830e+06	2.174e+06	1.453e+06
368	1349	43.42	1008.23	482.86	711.81	779.28	-260.51	9.936e+06	4.340e+06	8.635e+06	5.641e+06	2.364e+06
340		54.52	1002.1	698.04	775.10	325.09	-392.09	1.248e+07	4.640e+06	1.150e+07	5.613e+06	2.585e+06
364		47.37	938.89	161.79	439.67	661.01	-372.46	1.078e+07	3.059e+06	1.027e+07	3.570e+06	1.919e+06
376		38.01	951.37	71.64	346.73	676.27	-407.84	8.628e+06	2.514e+06	7.891e+06	3.251e+06	1.991e+06
368	2349	33.40	775.56	371.43	547.55	599.44	-200.39	7.643e+06	3.339e+06	6.643e+06	4.339e+06	1.818e+06
340		41.94	770.89	75.41	596.23	250.07	-301.60	9.598e+06	3.569e+06	8.849e+06	4.318e+06	1.988e+06
364		36.44	722.23	124.46	338.21	508.47	-286.50	8.295e+06	2.353e+06	7.902e+06	2.746e+06	1.476e+06
376		29.24	731.82	55.10	266.71	520.21	-313.72	6.637e+06	1.933e+06	6.070e+06	2.501e+06	1.532e+06

369	1340	37.32	2253.72	836.07	904.01	2185.79	-302.81	1.279e+07	6.497e+06	1.113e+07	8.158e+06	2.773e+06
330		43.82	1615.81	256.46	601.82	1270.45	-591.76	1.576e+07	7.179e+06	1.424e+07	8.694e+06	3.271e+06
353		34.85	1858.28	498.48	499.79	1856.97	42.05	1.226e+07	4.362e+06	1.206e+07	4.567e+06	1.256e+06
364		30.60	1543.27	172.39	323.11	1392.55	-428.84	1.102e+07	4.550e+06	1.022e+07	5.348e+06	2.127e+06
369	2340	28.71	1733.63	643.13	695.39	1681.37	-232.93	9.837e+06	4.997e+06	8.559e+06	6.275e+06	2.133e+06
330		33.71	1242.93	197.28	462.94	977.27	-455.20	1.212e+07	5.522e+06	1.095e+07	6.688e+06	2.517e+06
353		26.80	1429.44	383.45	384.45	1428.44	32.35	9.434e+06	3.356e+06	9.276e+06	3.513e+06	9.662e+05
364		23.54	1187.13	132.61	248.55	1071.20	-329.87	8.474e+06	3.500e+06	7.860e+06	4.114e+06	1.636e+06
370	1330	44.69	1753.22	180.04	565.22	1368.05	-676.45	1.612e+07	7.269e+06	1.468e+07	8.715e+06	3.273e+06
319		34.14	1498.29	306.91	429.96	1375.23	-362.58	1.221e+07	5.202e+06	1.139e+07	6.023e+06	2.254e+06
338		30.77	1097.93	18.74	119.84	996.83	-314.46	1.079e+07	3.526e+06	1.021e+07	4.107e+06	1.970e+06
353		37.32	1721.28	223.92	247.26	1697.93	-185.50	1.314e+07	4.199e+06	1.272e+07	4.611e+06	1.874e+06
370	2330	34.37	1348.63	138.49	434.78	1052.34	-520.35	1.240e+07	5.592e+06	1.129e+07	6.704e+06	2.518e+06
319		26.26	1152.53	236.08	330.74	1057.87	-278.91	9.391e+06	4.001e+06	8.758e+06	4.633e+06	1.734e+06
338		23.67	844.56	14.42	92.19	766.79	-241.89	8.300e+06	2.713e+06	7.853e+06	3.160e+06	1.516e+06
353		28.70	1324.06	172.25	190.20	1306.10	-142.70	1.010e+07	3.230e+06	9.788e+06	3.547e+06	1.441e+06
371	1319	34.58	1373.61	162.77	349.63	1186.76	-437.42	1.247e+07	5.309e+06	1.142e+07	6.358e+06	2.533e+06
313		25.44	1010.77	78.53	202.39	886.91	-316.43	9.129e+06	3.638e+06	8.359e+06	4.408e+06	1.907e+06
326		22.55	830.08	-84.46	-24.09	769.71	-227.09	7.733e+06	2.254e+06	7.369e+06	2.618e+06	1.364e+06
338		30.19	1238.12	-4.88	62.23	1171.01	-280.92	1.050e+07	3.345e+06	1.007e+07	3.777e+06	1.705e+06
371	2319	26.60	1056.63	125.21	268.94	912.89	-336.48	9.595e+06	4.084e+06	8.788e+06	4.891e+06	1.948e+06
313		19.57	777.52	60.41	155.69	682.24	-243.41	7.022e+06	2.798e+06	6.430e+06	3.391e+06	1.467e+06
326		17.35	638.53	-64.97	-18.53	592.08	-174.69	5.948e+06	1.734e+06	5.668e+06	2.014e+06	1.050e+06
338		23.22	952.40	-3.76	47.87	900.78	-216.09	8.079e+06	2.573e+06	7.747e+06	2.905e+06	1.311e+06
372	1313	25.55	993.20	59.20	193.87	858.53	-328.09	9.159e+06	3.662e+06	8.362e+06	4.459e+06	1.935e+06
302		16.71	595.25	-45.03	42.93	507.29	-220.41	5.861e+06	2.066e+06	5.317e+06	2.611e+06	1.330e+06
311		14.78	490.43	-149.19	-109.64	450.88	-154.06	4.880e+06	1.096e+06	4.633e+06	1.343e+06	9.345e+05
326		22.56	855.81	-88.26	-29.62	797.16	-227.87	7.714e+06	2.215e+06	7.360e+06	2.569e+06	1.349e+06
372	2313	19.65	764.00	45.54	149.13	660.41	-252.38	7.045e+06	2.817e+06	6.432e+06	3.430e+06	1.489e+06
302		12.85	457.88	-34.64	33.02	390.22	-169.55	4.509e+06	1.589e+06	4.090e+06	2.008e+06	1.023e+06
311		11.37	377.25	-114.76	-84.34	346.83	-118.51	3.754e+06	8.432e+05	3.564e+06	1.033e+06	7.188e+05
326		17.36	658.31	-67.89	-22.78	613.20	-175.28	5.934e+06	1.704e+06	5.661e+06	1.977e+06	1.038e+06
373	1302	16.74	595.71	-50.29	43.22	502.21	-227.30	5.869e+06	2.070e+06	5.313e+06	2.625e+06	1.342e+06
292		8.02	193.30	-157.60	-112.37	148.07	-117.58	2.574e+06	4.974e+05	2.280e+06	7.913e+05	7.238e+05
296		7.17	138.02	-213.79	-194.28	118.51	-80.52	2.038e+06	-2.994e+04	1.906e+06	1.015e+05	5.044e+05
311		14.83	494.52	-153.89	-112.51	453.13	-158.50	4.885e+06	1.080e+06	4.634e+06	1.331e+06	9.435e+05
373	2302	12.88	458.24	-38.69	33.24	386.31	-174.84	4.514e+06	1.592e+06	4.087e+06	2.019e+06	1.033e+06
292		6.17	148.69	-121.23	-86.44	113.90	-90.45	1.980e+06	3.826e+05	1.754e+06	6.087e+05	5.568e+05
296		5.51	106.17	-164.46	-149.45	91.16	-61.94	1.567e+06	-2.303e+04	1.466e+06	7.807e+04	3.880e+05
311		11.41	380.40	-118.38	-86.55	348.56	-121.92	3.758e+06	8.310e+05	3.565e+06	1.024e+06	7.258e+05
374	1292	8.05	196.23	-162.12	-162.12	196.22	-1.47	2.580e+06	4.953e+05	2.580e+06	4.957e+05	2.981e+04
265		5.04	-280.84	-289.57	-284.55	-285.86	4.32	-1.376e+06	-1.389e+06	-1.387e+06	-1.378e+06	-4754.68
296		7.24	142.33	-219.13	-213.26	136.47	45.66	2.046e+06	-4.788e+04	2.017e+06	-1.904e+04	-2.440e+05
374	2292	6.19	150.95	-124.71	-124.71	150.94	-1.13	1.985e+06	3.810e+05	1.984e+06	3.813e+05	2.293e+04
265		3.88	-216.03	-222.75	-218.88	-219.89	3.32	-1.059e+06	-1.068e+06	-1.067e+06	-1.060e+06	-3657.44
296		5.57	109.49	-168.56	-164.05	104.98	35.13	1.574e+06	-3.683e+04	1.551e+06	-1.465e+04	-1.877e+05

375 1398	6.35	1.46	-414.50	-7.34	-405.71	59.85	8.139e+04	-2738.00	-1896.13	8.055e+04	8373.43
391	6.82	43.11	-421.38	32.65	-410.92	68.91	1.025e+05	6718.21	1.469e+04	9.453e+04	2.646e+04
456	7.11	26.91	-362.59	3.22	-338.90	-93.11	1.163e+05	4164.40	3.713e+04	8.329e+04	5.108e+04
461	6.09	18.23	-369.84	9.73	-361.34	-56.80	8.030e+04	-2886.73	-2725.18	8.014e+04	-3662.41
375 2398	4.89	1.12	-318.85	-5.64	-312.08	46.04	6.261e+04	-2106.16	-1458.56	6.196e+04	6441.10
391	5.24	33.16	-324.14	25.11	-316.09	53.01	7.885e+04	5167.85	1.130e+04	7.271e+04	2.036e+04
456	5.47	20.70	-278.92	2.47	-260.69	-71.62	8.943e+04	3203.38	2.856e+04	6.407e+04	3.929e+04
461	4.68	14.02	-284.49	7.48	-277.95	-43.69	6.177e+04	-2220.56	-2096.29	6.165e+04	-2817.24
376 1391	6.86	40.96	-405.79	31.40	-396.23	64.67	1.354e+05	2019.73	6671.11	1.308e+05	2.447e+04
387	7.35	82.61	-403.66	74.12	-395.17	63.69	1.837e+05	5.920e+04	7.594e+04	1.670e+05	4.247e+04
450	8.13	54.88	-359.51	21.62	-326.25	-112.59	2.106e+05	3.305e+04	1.170e+05	1.266e+05	8.864e+04
456	6.68	42.67	-353.05	22.90	-333.28	-86.21	1.371e+05	5329.88	2.913e+04	1.133e+05	5.068e+04
376 2391	5.28	31.51	-312.15	24.15	-304.79	49.74	1.042e+05	1553.63	5131.62	1.006e+05	1.882e+04
387	5.66	63.55	-310.51	57.02	-303.98	49.00	1.413e+05	4.554e+04	5.841e+04	1.285e+05	3.267e+04
450	6.25	42.22	-276.54	16.63	-250.96	-86.61	1.620e+05	2.542e+04	9.004e+04	9.737e+04	6.819e+04
456	5.13	32.82	-271.58	17.61	-256.37	-66.32	1.054e+05	4099.91	2.240e+04	8.712e+04	3.898e+04
377 1387	7.36	83.27	-368.05	75.40	-360.18	59.07	2.277e+05	5.445e+04	6.378e+04	2.184e+05	3.912e+04
382	8.33	128.20	-376.55	121.69	-370.04	56.96	3.102e+05	1.551e+05	1.903e+05	2.750e+05	6.499e+04
445	9.30	84.10	-337.99	38.11	-292.01	-131.51	3.463e+05	8.322e+04	2.509e+05	1.786e+05	1.265e+05
450	7.45	67.01	-337.39	37.73	-308.11	-104.81	2.337e+05	3.754e+04	1.075e+05	1.637e+05	9.399e+04
377 2387	5.66	64.05	-283.11	58.00	-277.06	45.43	1.752e+05	4.188e+04	4.906e+04	1.680e+05	3.009e+04
382	6.41	98.61	-289.65	93.61	-284.64	43.81	2.386e+05	1.193e+05	1.464e+05	2.116e+05	4.999e+04
445	7.15	64.69	-260.00	29.32	-224.62	-101.16	2.663e+05	6.401e+04	1.930e+05	1.374e+05	9.727e+04
450	5.73	51.55	-259.53	29.02	-237.00	-80.62	1.798e+05	2.887e+04	8.272e+04	1.260e+05	7.230e+04
378 1382	7.81	150.08	-288.48	140.68	-279.09	63.50	3.551e+05	1.529e+05	1.692e+05	3.388e+05	5.499e+04
374	10.69	147.61	-373.87	146.11	-372.36	27.99	5.301e+05	3.029e+05	3.850e+05	4.481e+05	1.092e+05
437	9.66	140.82	-234.40	89.26	-182.85	-129.18	4.907e+05	1.131e+05	4.278e+05	1.759e+05	1.406e+05
445	8.78	77.05	-349.63	32.67	-305.24	-130.26	3.814e+05	9.544e+04	2.440e+05	2.328e+05	1.428e+05
378 2382	6.01	115.44	-221.91	108.22	-214.68	48.84	2.731e+05	1.176e+05	1.301e+05	2.606e+05	4.230e+04
374	8.22	113.55	-287.59	112.39	-286.43	21.53	4.078e+05	2.330e+05	2.961e+05	3.447e+05	8.398e+04
437	7.43	108.32	-180.31	68.67	-140.65	-99.37	3.774e+05	8.698e+04	3.291e+05	1.353e+05	1.082e+05
445	6.76	59.27	-268.94	25.13	-234.80	-100.20	2.933e+05	7.342e+04	1.877e+05	1.790e+05	1.099e+05
379 1374	9.93	162.55	-299.49	146.48	-283.43	84.65	5.622e+05	4.187e+05	4.187e+05	5.622e+05	771.98
370	11.93	182.21	-253.62	180.75	-252.16	25.25	7.583e+05	4.810e+05	6.573e+05	5.820e+05	1.335e+05
432	13.00	221.49	-291.71	167.79	-238.02	-157.07	7.754e+05	2.223e+05	5.904e+05	4.073e+05	2.610e+05
437	12.35	215.84	-247.11	130.55	-161.82	-179.47	5.609e+05	-1.051e+05	2.839e+05	1.719e+05	3.283e+05
379 2374	7.64	125.04	-230.38	112.68	-218.02	65.11	4.325e+05	3.221e+05	3.221e+05	4.324e+05	593.83
370	9.18	140.16	-195.10	139.04	-193.97	19.42	5.833e+05	3.700e+05	5.056e+05	4.477e+05	1.027e+05
432	10.00	170.38	-224.40	129.07	-183.09	-120.83	5.965e+05	1.710e+05	4.541e+05	3.133e+05	2.007e+05
437	9.50	166.03	-190.08	100.42	-124.47	-138.06	4.315e+05	-8.085e+04	2.184e+05	1.322e+05	2.525e+05
380 1370	10.72	194.29	-169.79	192.33	-167.84	26.60	7.958e+05	5.504e+05	6.375e+05	7.087e+05	1.174e+05
366	14.90	244.25	-213.54	243.61	-212.91	17.02	1.095e+06	6.758e+05	9.678e+05	8.030e+05	1.927e+05
426	15.12	263.07	-220.91	192.01	-149.85	-171.30	1.122e+06	4.199e+05	9.494e+05	5.928e+05	3.026e+05
432	11.62	239.05	-213.31	175.85	-150.11	-156.83	8.043e+05	2.243e+05	5.711e+05	4.576e+05	2.844e+05
380 2370	8.24	149.45	-130.61	147.95	-129.11	20.46	6.122e+05	4.234e+05	4.904e+05	5.452e+05	9.031e+04
366	11.46	187.88	-164.26	187.39	-163.77	13.09	8.423e+05	5.198e+05	7.445e+05	6.177e+05	1.483e+05

426		11.63	202.37	-169.93	147.70	-115.27	-131.77	8.633e+05	3.230e+05	7.303e+05	4.560e+05	2.327e+05
432		8.94	183.89	-164.09	135.27	-115.47	-120.64	6.187e+05	1.726e+05	4.393e+05	3.520e+05	2.188e+05
381	1366	13.42	249.44	-84.44	249.15	-84.15	9.80	1.132e+06	7.594e+05	9.439e+05	9.472e+05	1.862e+05
357		18.00	299.60	-142.94	299.60	-142.93	1.52	1.522e+06	9.222e+05	1.370e+06	1.074e+06	2.604e+05
417		17.67	310.22	-155.09	225.42	-70.29	-179.63	1.550e+06	6.228e+05	1.367e+06	8.059e+05	3.691e+05
426		13.29	280.21	-140.97	203.95	-64.71	-162.18	1.144e+06	4.612e+05	9.236e+05	6.815e+05	3.192e+05
381	2366	10.32	191.88	-64.95	191.65	-64.73	7.54	8.706e+05	5.842e+05	7.261e+05	7.286e+05	1.432e+05
357		13.84	230.46	-109.95	230.46	-109.95	1.17	1.170e+06	7.094e+05	1.054e+06	8.258e+05	2.003e+05
417		13.59	238.63	-119.30	173.40	-54.07	-138.17	1.192e+06	4.791e+05	1.051e+06	6.199e+05	2.839e+05
426		10.22	215.55	-108.44	156.89	-49.78	-124.76	8.799e+05	3.547e+05	7.105e+05	5.242e+05	2.455e+05
382	1357	16.29	305.54	11.16	305.44	11.25	-5.28	1.555e+06	1.034e+06	1.342e+06	1.247e+06	2.559e+05
355		21.16	355.15	-60.90	354.52	-60.27	-16.21	2.046e+06	1.218e+06	1.865e+06	1.399e+06	3.417e+05
415		20.65	364.89	-85.08	262.23	17.58	-188.82	2.061e+06	8.515e+05	1.857e+06	1.056e+06	4.528e+05
417		15.57	332.95	-64.17	235.28	33.50	-171.02	1.567e+06	6.896e+05	1.337e+06	9.191e+05	3.856e+05
382	2357	12.53	235.03	8.58	234.96	8.65	-4.06	1.196e+06	7.954e+05	1.032e+06	9.591e+05	1.969e+05
355		16.28	273.19	-46.85	272.70	-46.36	-12.47	1.574e+06	9.370e+05	1.435e+06	1.076e+06	2.628e+05
415		15.88	280.68	-65.44	201.72	13.53	-145.25	1.585e+06	6.550e+05	1.428e+06	8.119e+05	3.483e+05
417		11.97	256.11	-49.36	180.98	25.77	-131.55	1.205e+06	5.305e+05	1.029e+06	7.070e+05	2.966e+05
383	1355	19.24	363.26	117.04	361.22	119.08	-22.31	2.075e+06	1.362e+06	1.832e+06	1.605e+06	3.381e+05
347		24.38	412.67	28.92	409.32	32.27	-35.71	2.676e+06	1.568e+06	2.460e+06	1.783e+06	4.386e+05
406		23.62	426.46	-12.73	301.09	112.64	-198.35	2.665e+06	1.118e+06	2.435e+06	1.349e+06	5.509e+05
415		18.32	397.14	12.52	269.74	139.91	-181.02	2.075e+06	9.413e+05	1.824e+06	1.192e+06	4.707e+05
383	2355	14.80	279.43	90.03	277.87	91.60	-17.16	1.597e+06	1.048e+06	1.409e+06	1.235e+06	2.601e+05
347		18.75	317.44	22.24	314.86	24.82	-27.47	2.058e+06	1.206e+06	1.892e+06	1.372e+06	3.374e+05
406		18.17	328.04	-9.79	231.61	86.64	-152.58	2.050e+06	8.604e+05	1.873e+06	1.038e+06	4.238e+05
415		14.09	305.49	9.63	207.49	107.62	-139.25	1.596e+06	7.241e+05	1.403e+06	9.172e+05	3.621e+05
384	1347	22.27	425.89	228.07	416.94	237.02	-41.10	2.704e+06	1.747e+06	2.423e+06	2.027e+06	4.357e+05
345		27.68	473.62	122.59	464.34	131.86	-56.29	3.425e+06	1.977e+06	3.169e+06	2.234e+06	5.528e+05
402		26.64	494.51	59.59	341.27	212.83	-207.76	3.379e+06	1.433e+06	3.119e+06	1.692e+06	6.621e+05
406		21.09	472.98	86.43	306.29	253.13	-191.44	2.678e+06	1.232e+06	2.399e+06	1.511e+06	5.708e+05
384	2347	17.13	327.61	175.44	320.72	182.32	-31.62	2.080e+06	1.343e+06	1.864e+06	1.559e+06	3.351e+05
345		21.29	364.32	94.30	357.19	101.43	-43.30	2.635e+06	1.521e+06	2.438e+06	1.718e+06	4.252e+05
402		20.49	380.39	45.83	262.51	163.71	-159.82	2.599e+06	1.102e+06	2.399e+06	1.302e+06	5.093e+05
406		16.22	363.83	66.49	235.61	194.71	-147.26	2.060e+06	9.475e+05	1.845e+06	1.162e+06	4.390e+05
385	1345	25.38	499.66	335.02	472.72	361.96	-60.91	3.452e+06	2.193e+06	3.128e+06	2.518e+06	5.507e+05
336		31.13	539.26	215.38	519.68	234.96	-77.19	4.319e+06	2.454e+06	4.017e+06	2.756e+06	6.867e+05
389		29.80	568.25	129.37	382.31	315.31	-216.87	4.223e+06	1.803e+06	3.934e+06	2.092e+06	7.843e+05
402		23.93	559.97	155.35	344.14	371.19	-201.86	3.390e+06	1.571e+06	3.080e+06	1.881e+06	6.840e+05
385	2345	19.52	384.35	257.70	363.63	278.43	-46.85	2.656e+06	1.687e+06	2.406e+06	1.937e+06	4.236e+05
336		23.95	414.82	165.68	399.75	180.74	-59.38	3.322e+06	1.888e+06	3.090e+06	2.120e+06	5.283e+05
389		22.92	437.12	99.52	294.09	242.54	-166.82	3.248e+06	1.387e+06	3.026e+06	1.609e+06	6.033e+05
402		18.41	430.75	119.50	264.72	285.53	-155.27	2.608e+06	1.209e+06	2.369e+06	1.447e+06	5.262e+05
386	1336	28.64	592.44	426.08	528.61	489.90	-80.90	4.345e+06	2.711e+06	3.971e+06	3.084e+06	6.859e+05
332		34.87	610.50	302.10	575.66	336.95	-97.64	5.394e+06	3.006e+06	5.044e+06	3.356e+06	8.444e+05
380		33.18	645.97	194.30	424.17	416.10	-225.80	5.226e+06	2.240e+06	4.915e+06	2.552e+06	9.129e+05
389		26.90	655.93	218.04	382.92	491.05	-212.17	4.231e+06	1.970e+06	3.891e+06	2.310e+06	8.082e+05

386	2336	22.03	455.72327.75	406.63	376.84	-62.23	3.342e+06	2.085e+06	3.055e+06	2.372e+06	5.276e+05
	332	26.82	469.62232.39	442.81	259.19	-75.11	4.149e+06	2.312e+06	3.880e+06	2.582e+06	6.495e+05
	380	25.53	496.90149.46	326.28	320.08	-173.69	4.020e+06	1.723e+06	3.780e+06	1.963e+06	7.023e+05
	389	20.69	504.56167.72	294.55	377.73	-163.20	3.254e+06	1.515e+06	2.993e+06	1.777e+06	6.217e+05
387	1332	32.15	701.40498.85	584.90	615.36	-100.12	5.417e+06	3.306e+06	4.993e+06	3.730e+06	8.455e+05
	328	39.09	686.69377.84	633.32	431.21	-116.77	6.711e+06	3.638e+06	6.314e+06	4.035e+06	1.032e+06
	371	36.97	724.75252.18	467.37	509.56	-235.34	6.438e+06	2.756e+06	6.118e+06	3.076e+06	1.038e+06
	380	30.07	756.61274.21	422.64	608.18	-222.65	5.229e+06	2.438e+06	4.867e+06	2.801e+06	9.387e+05
387	2332	24.73	539.54383.73	449.92	473.35	-77.02	4.167e+06	2.543e+06	3.841e+06	2.869e+06	6.504e+05
	328	30.07	528.22290.65	487.17	331.70	-89.82	5.163e+06	2.798e+06	4.857e+06	3.104e+06	7.936e+05
	371	28.44	557.50193.99	359.51	391.97	-181.03	4.952e+06	2.120e+06	4.706e+06	2.366e+06	7.981e+05
	380	23.13	582.01210.93	325.10	467.83	-171.27	4.023e+06	1.875e+06	3.744e+06	2.155e+06	7.221e+05
388	1328	36.07	811.55561.07	642.48	730.15	-117.32	6.729e+06	3.984e+06	6.256e+06	4.456e+06	1.036e+06
	321	44.17	765.00437.68	695.48	507.20	-133.87	8.380e+06	4.343e+06	7.940e+06	4.783e+06	1.258e+06
	361	41.43	800.71300.32	513.77	587.26	-247.48	7.941e+06	3.358e+06	7.641e+06	3.658e+06	1.134e+06
	371	33.59	855.73323.55	463.78	715.50	-234.44	6.432e+06	2.988e+06	6.064e+06	3.356e+06	1.065e+06
388	2328	27.75	624.27431.59	494.22	561.65	-90.25	5.176e+06	3.064e+06	4.813e+06	3.428e+06	7.971e+05
	321	33.98	588.46336.67	534.98	390.15	-102.98	6.446e+06	3.341e+06	6.107e+06	3.679e+06	9.678e+05
	361	31.87	615.93231.02	395.21	451.74	-190.37	6.108e+06	2.583e+06	5.877e+06	2.814e+06	8.724e+05
	371	25.84	658.25248.88	356.75	550.38	-180.34	4.948e+06	2.298e+06	4.665e+06	2.581e+06	8.189e+05
389	1321	40.72	905.54620.38	704.19	821.74	-129.90	8.385e+06	4.735e+06	7.871e+06	5.249e+06	1.269e+06
	315	50.78	845.44467.64	769.15	543.93	-151.67	1.059e+07	5.083e+06	1.013e+07	5.551e+06	1.536e+06
	349	47.14	870.12336.44	569.18	637.38	-264.65	9.891e+06	4.033e+06	9.656e+06	4.269e+06	1.150e+06
	361	37.69	944.52362.86	507.34	800.04	-251.32	7.918e+06	3.624e+06	7.577e+06	3.965e+06	1.161e+06
389	2321	31.32	696.57477.21	541.68	632.10	-99.93	6.450e+06	3.642e+06	6.055e+06	4.037e+06	9.763e+05
	315	39.06	650.34359.72	591.65	418.40	-116.67	8.149e+06	3.910e+06	7.790e+06	4.270e+06	1.181e+06
	349	36.26	669.32258.80	437.83	490.30	-203.58	7.608e+06	3.103e+06	7.427e+06	3.284e+06	8.848e+05
	361	28.99	726.55279.13	390.26	615.42	-193.32	6.091e+06	2.788e+06	5.829e+06	3.050e+06	8.934e+05
390	1315	46.75	955.04694.57	768.52	881.09	-117.44	1.059e+07	5.516e+06	1.003e+07	6.076e+06	1.589e+06
	309	60.22	973.65346.52	860.53	459.64	-241.13	1.372e+07	5.708e+06	1.329e+07	6.139e+06	1.807e+06
	340	55.50	894.96419.95	646.80	668.10	-237.27	1.265e+07	4.720e+06	1.251e+07	4.855e+06	1.025e+06
	349	42.70	1009.86347.64	539.18	818.31	-300.26	9.813e+06	4.320e+06	9.562e+06	4.572e+06	1.148e+06
390	2315	35.96	734.64534.29	591.17	677.76	-90.34	8.146e+06	4.243e+06	7.715e+06	4.674e+06	1.223e+06
	309	46.32	748.96266.56	661.95	353.57	-185.48	1.055e+07	4.391e+06	1.022e+07	4.722e+06	1.390e+06
	340	42.69	688.43323.04	497.54	513.93	-182.51	9.729e+06	3.631e+06	9.625e+06	3.735e+06	7.883e+05
	349	32.85	776.81267.42	414.76	629.47	-230.97	7.549e+06	3.323e+06	7.355e+06	3.517e+06	8.835e+05
391	1309	40.57	2388.88927.03	943.16	2372.75	-152.72	1.369e+07	8.212e+06	1.291e+07	8.990e+06	1.913e+06
	307	48.03	1914.54483.66	724.99	1673.22	-535.79	1.708e+07	8.414e+06	1.623e+07	9.272e+06	2.590e+06
	330	42.19	2065.69628.73	655.46	2038.95	194.18	1.486e+07	6.674e+06	1.486e+07	6.682e+06	2.520e+05
	340	36.11	1942.15516.32	584.34	1874.13	-303.90	1.259e+07	6.971e+06	1.234e+07	7.224e+06	1.166e+06
391	2309	31.21	1837.60713.10	725.51	1825.19	-117.48	1.053e+07	6.317e+06	9.934e+06	6.915e+06	1.471e+06
	307	36.95	1472.72372.05	557.68	1287.09	-412.15	1.314e+07	6.472e+06	1.248e+07	7.133e+06	1.992e+06
	330	32.45	1588.99483.64	504.20	1568.42	149.37	1.143e+07	5.134e+06	1.143e+07	5.140e+06	1.939e+05
	340	27.78	1493.96397.17	449.49	1441.64	-233.77	9.686e+06	5.362e+06	9.491e+06	5.557e+06	8.972e+05
392	1307	49.03	1948.19393.58	623.75	1718.02	-552.13	1.751e+07	8.587e+06	1.680e+07	9.303e+06	2.424e+06
	300	37.95	1586.34420.18	470.11	1536.41	-236.08	1.349e+07	6.423e+06	1.317e+07	6.751e+06	1.487e+06

319		35.13	1327.96	246.00	277.11	1296.86	-180.80	1.261e+07	5.360e+06	1.242e+07	5.549e+06	1.158e+06
330		43.82	1922.23	426.04	426.20	1922.07	15.51	1.564e+07	6.653e+06	1.556e+07	6.726e+06	8.070e+05
392	2307	37.72	1498.61	302.75	479.80	1321.56	-424.71	1.347e+07	6.606e+06	1.292e+07	7.156e+06	1.865e+06
300		29.20	1220.26	323.22	361.62	1181.85	-181.60	1.038e+07	4.941e+06	1.013e+07	5.193e+06	1.144e+06
319		27.02	1021.51	189.23	213.16	997.58	-139.08	9.702e+06	4.123e+06	9.556e+06	4.269e+06	8.905e+05
330		33.71	1478.64	327.72	327.84	1478.51	11.93	1.203e+07	5.118e+06	1.197e+07	5.174e+06	6.208e+05
393	1300	38.13	1501.89	294.97	382.64	1414.21	-313.26	1.365e+07	6.473e+06	1.317e+07	6.962e+06	1.809e+06
294		27.92	1096.24	171.68	226.44	1041.48	-218.25	1.004e+07	4.545e+06	9.692e+06	4.893e+06	1.338e+06
313		25.52	983.43	70.34	84.76	969.01	-113.86	9.160e+06	3.674e+06	9.068e+06	3.767e+06	7.054e+05
319		34.46	1416.16	188.86	202.54	1402.48	-128.84	1.241e+07	5.240e+06	1.231e+07	5.341e+06	8.431e+05
393	2300	29.33	1155.30	226.90	294.34	1087.86	-240.97	1.050e+07	4.979e+06	1.013e+07	5.355e+06	1.391e+06
294		21.48	843.26	132.06	174.18	801.14	-167.88	7.723e+06	3.496e+06	7.456e+06	3.764e+06	1.030e+06
313		19.63	756.49	54.11	65.20	745.39	-87.58	7.046e+06	2.826e+06	6.976e+06	2.897e+06	5.426e+05
319		26.51	1089.35	145.28	155.80	1078.83	-99.11	9.547e+06	4.031e+06	9.470e+06	4.108e+06	6.486e+05
394	1294	27.94	1084.57	156.77	217.38	1023.95	-229.27	1.006e+07	4.560e+06	9.692e+06	4.925e+06	1.369e+06
290		18.05	658.16	20.70	59.53	619.34	-152.45	6.480e+06	2.685e+06	6.232e+06	2.933e+06	9.376e+05
302		16.71	593.80	-45.39	-36.34	584.75	-75.53	5.863e+06	2.073e+06	5.801e+06	2.134e+06	4.773e+05
313		25.52	999.06	63.57	76.83	985.79	-110.61	9.148e+06	3.650e+06	9.061e+06	3.736e+06	6.843e+05
394	2294	21.49	834.28	120.59	167.22	787.66	-176.36	7.736e+06	3.508e+06	7.455e+06	3.789e+06	1.053e+06
290		13.88	506.28	15.93	45.79	476.42	-117.27	4.984e+06	2.065e+06	4.794e+06	2.256e+06	7.212e+05
302		12.85	456.77	-34.92	-27.95	449.81	-58.10	4.510e+06	1.595e+06	4.463e+06	1.642e+06	3.672e+05
313		19.63	768.51	48.90	59.10	758.30	-85.09	7.037e+06	2.807e+06	6.970e+06	2.874e+06	5.264e+05
395	1290	18.06	657.15	17.61	59.20	615.56	-157.71	6.482e+06	2.689e+06	6.229e+06	2.943e+06	9.465e+05
288		8.65	228.69	-121.99	-102.41	209.11	-80.52	2.911e+06	8.334e+05	2.778e+06	9.671e+05	5.098e+05
292		8.01	194.56	-157.84	-153.83	190.55	-37.38	2.574e+06	5.018e+05	2.542e+06	5.336e+05	2.545e+05
302		16.72	594.48	-48.09	-38.63	585.02	-77.39	5.864e+06	2.066e+06	5.801e+06	2.128e+06	4.819e+05
395	2290	13.89	505.50	13.54	45.54	473.51	-121.31	4.986e+06	2.069e+06	4.791e+06	2.264e+06	7.280e+05
288		6.65	175.92	-93.84	-78.78	160.85	-61.94	2.239e+06	6.411e+05	2.137e+06	7.439e+05	3.922e+05
292		6.16	149.66	-121.42	-118.33	146.58	-28.75	1.980e+06	3.860e+05	1.956e+06	4.104e+05	1.958e+05
302		12.86	457.29	-36.99	-29.71	450.02	-59.53	4.510e+06	1.589e+06	4.463e+06	1.637e+06	3.707e+05
396	1288	8.66	229.88	-124.76	-118.95	224.08	45.00	2.913e+06	8.328e+05	2.885e+06	8.612e+05	-2.411e+05
265		5.04	-279.02	-290.53	-281.04	-288.51	4.38	-1.374e+06	-1.392e+06	-1.391e+06	-1.375e+06	-3896.76
292		8.05	196.65	-161.27	-137.39	172.76	89.33	2.578e+06	4.905e+05	2.451e+06	6.169e+05	-4.979e+05
396	2288	6.66	176.83	-95.97	-91.50	172.37	34.62	2.241e+06	6.406e+05	2.219e+06	6.624e+05	-1.855e+05
265		3.88	-214.63	-223.48	-216.19	-221.93	3.37	-1.057e+06	-1.071e+06	-1.070e+06	-1.058e+06	-2997.51
292		6.19	151.27	-124.06	-105.68	132.90	68.71	1.983e+06	3.773e+05	1.886e+06	4.745e+05	-3.830e+05
397	1243	6.54	8.90	-407.72	-1.34	-397.49	64.48	8.647e+04	-3216.90	-2724.95	8.598e+04	6624.28
244		6.76	36.22	-426.67	17.95	-408.39	90.14	9.758e+04	2.725e+04	2.739e+04	9.745e+04	-3070.37
391		7.22	36.42	-426.49	20.79	-410.87	-83.60	1.068e+05	2.231e+04	2.923e+04	9.992e+04	2.317e+04
398		7.07	13.05	-440.43	4.17	-431.56	-62.81	9.264e+04	-2654.91	-2280.88	9.227e+04	-5958.50
397	2243	5.03	6.84	-313.63	-1.03	-305.76	49.60	6.652e+04	-2474.54	-2096.12	6.614e+04	5095.60
244		5.20	27.86	-328.21	13.81	-314.15	69.34	7.506e+04	2.096e+04	2.107e+04	7.496e+04	-2361.82
391		5.55	28.01	-328.07	15.99	-316.05	-64.31	8.218e+04	1.716e+04	2.249e+04	7.686e+04	1.782e+04
398		5.44	10.04	-338.80	3.21	-331.97	-48.32	7.126e+04	-2042.24	-1754.53	7.098e+04	-4583.46
398	1244	6.83	40.18	-411.54	23.88	-395.25	84.24	1.338e+05	1.930e+04	1.949e+04	1.336e+05	-4711.40
245		6.98	61.80	-419.34	40.42	-397.96	99.14	1.623e+05	1.092e+05	1.113e+05	1.602e+05	-1.030e+04

387		7.77	79.82-415.06	62.14	-397.38	-91.87	1.870e+05	7.923e+04	1.002e+05	1.660e+05	4.263e+04
391		7.21	48.11-412.95	34.76	-399.60	-77.32	1.415e+05	1.555e+04	1.994e+04	1.371e+05	2.310e+04
398	2244	5.26	30.90-316.57	18.37	-304.03	64.80	1.029e+05	1.484e+04	1.499e+04	1.027e+05	-3624.15
245		5.37	47.54-322.57	31.09	-306.13	76.26	1.248e+05	8.398e+04	8.558e+04	1.232e+05	-7919.97
387		5.98	61.40-319.28	47.80	-305.68	-70.67	1.438e+05	6.094e+04	7.705e+04	1.277e+05	3.279e+04
391		5.55	37.01-317.66	26.74	-307.38	-59.48	1.088e+05	1.196e+04	1.534e+04	1.054e+05	1.777e+04
399	1245	6.94	66.40-388.96	46.82	-369.38	92.37	2.095e+05	9.898e+04	1.011e+05	2.074e+05	-1.518e+04
246		7.97	86.20-399.03	59.57	-372.40	110.51	2.777e+05	2.306e+05	2.610e+05	2.473e+05	-2.252e+04
382		8.81	133.76-391.17	112.14	-369.55	-104.31	3.138e+05	1.724e+05	2.206e+05	2.656e+05	6.706e+04
387		7.65	89.86-380.94	74.15	-365.23	-84.56	2.311e+05	7.275e+04	8.736e+04	2.164e+05	4.582e+04
399	2245	5.34	51.08-299.20	36.02	-284.14	71.05	1.612e+05	7.614e+04	7.777e+04	1.595e+05	-1.168e+04
246		6.13	66.31-306.95	45.83	-286.46	85.01	2.136e+05	1.774e+05	2.008e+05	1.902e+05	-1.732e+04
382		6.78	102.89-300.90	86.26	-284.27	-80.24	2.414e+05	1.326e+05	1.697e+05	2.043e+05	5.159e+04
387		5.88	69.13-293.03	57.04	-280.94	-65.04	1.777e+05	5.596e+04	6.720e+04	1.665e+05	3.525e+04
400	1246	7.53	100.19-350.41	69.59	-319.81	113.37	3.215e+05	2.320e+05	2.494e+05	3.041e+05	-3.536e+04
247		10.05	93.41-370.64	68.17	-345.40	105.24	4.993e+05	3.543e+05	4.832e+05	3.705e+05	-4.560e+04
374		10.12	210.02-321.71	189.01	-300.71	-103.58	5.001e+05	2.746e+05	3.878e+05	3.870e+05	1.127e+05
382		8.70	138.61-353.64	114.99	-330.02	-105.21	3.729e+05	1.694e+05	2.042e+05	3.380e+05	7.664e+04
400	2246	5.79	77.07-269.55	53.53	-246.01	87.20	2.473e+05	1.785e+05	1.918e+05	2.339e+05	-2.720e+04
247		7.73	71.85-285.11	52.44	-265.69	80.95	3.841e+05	2.726e+05	3.717e+05	2.850e+05	-3.507e+04
374		7.78	161.55-247.47	145.39	-231.31	-79.68	3.847e+05	2.113e+05	2.983e+05	2.977e+05	8.673e+04
382		6.69	106.62-272.03	88.45	-253.86	-80.93	2.868e+05	1.303e+05	1.571e+05	2.600e+05	5.895e+04
401	1247	8.54	237.95-299.14	200.69	-261.88	136.47	4.449e+05	1.897e+05	2.296e+05	4.050e+05	-9.271e+04
248		10.50	240.34-303.25	224.13	-287.04	92.46	6.070e+05	5.448e+05	6.067e+05	5.451e+05	-4154.20
370		12.41	188.32-287.56	163.47	-262.71	-105.87	7.923e+05	4.950e+05	7.394e+05	5.479e+05	1.137e+05
374		10.99	162.95-288.60	110.97	-236.62	-144.12	6.515e+05	3.397e+05	4.985e+05	4.927e+05	1.559e+05
401	2247	6.57	183.04-230.11	154.38	-201.44	104.98	3.422e+05	1.459e+05	1.766e+05	3.115e+05	-7.132e+04
248		8.07	184.88-233.27	172.41	-220.80	71.12	4.669e+05	4.191e+05	4.667e+05	4.193e+05	-3195.54
370		9.55	144.86-221.20	125.74	-202.08	-81.44	6.095e+05	3.808e+05	5.688e+05	4.215e+05	8.745e+04
374		8.46	125.35-222.00	85.37	-182.02	-110.86	5.012e+05	2.613e+05	3.835e+05	3.790e+05	1.199e+05
402	1248	9.64	253.73-214.89	234.65	-195.81	92.61	6.561e+05	5.755e+05	5.823e+05	6.493e+05	-2.245e+04
249		14.51	279.61-239.23	265.11	-224.73	85.52	1.011e+06	7.803e+05	1.008e+06	7.827e+05	2.320e+04
366		15.08	248.54-216.18	217.12	-184.76	-116.67	1.115e+06	6.882e+05	1.064e+06	7.392e+05	1.385e+05
370		11.12	205.88-191.15	174.94	-160.20	-106.44	8.205e+05	5.466e+05	7.180e+05	6.491e+05	1.325e+05
402	2248	7.42	195.18-165.30	180.50	-150.62	71.24	5.047e+05	4.427e+05	4.479e+05	4.995e+05	-1.727e+04
249		11.16	215.09-184.02	203.93	-172.87	65.78	7.775e+05	6.002e+05	7.757e+05	6.021e+05	1.785e+04
366		11.60	191.19-166.29	167.02	-142.12	-89.75	8.578e+05	5.294e+05	8.186e+05	5.686e+05	1.065e+05
370		8.56	158.37-147.04	134.57	-123.23	-81.88	6.311e+05	4.205e+05	5.523e+05	4.993e+05	1.019e+05
403	1249	12.92	288.64-118.53	273.45	-103.34	77.17	9.814e+05	9.141e+05	9.791e+05	9.164e+05	1.217e+04
250		18.08	321.31-153.28	309.72	-141.69	73.25	1.476e+06	1.055e+06	1.470e+06	1.060e+06	4.879e+04
357		18.14	304.26-141.64	268.78	-106.16	-120.67	1.539e+06	9.329e+05	1.489e+06	9.830e+05	1.668e+05
366		13.33	262.50-106.78	227.92	-72.20	-107.58	1.125e+06	7.758e+05	1.038e+06	8.626e+05	1.510e+05
403	2249	9.94	222.03-91.18	210.34	-79.49	59.36	7.549e+05	7.032e+05	7.532e+05	7.049e+05	9362.13
250		13.91	247.16-117.91	238.24	-108.99	56.35	1.136e+06	8.112e+05	1.131e+06	8.156e+05	3.753e+04
357		13.96	234.05-108.95	206.75	-81.66	-92.83	1.184e+06	7.176e+05	1.145e+06	7.561e+05	1.283e+05
366		10.26	201.92-82.14	175.32	-55.54	-82.76	8.655e+05	5.967e+05	7.987e+05	6.636e+05	1.162e+05

404	1250	16.18	330.72	-7.83	317.55	5.34	65.47	1.444e+06	1.218e+06	1.438e+06	1.225e+06	3.907e+04
	251	21.47	367.48	-56.81	358.18	-47.51	62.12	2.021e+06	1.379e+06	2.012e+06	1.388e+06	7.649e+04
	355	21.30	359.68	-56.32	319.06	-15.70	-123.49	2.062e+06	1.229e+06	2.013e+06	1.278e+06	1.978e+05
	357	16.13	320.73	-15.52	278.01	27.19	-111.97	1.538e+06	1.052e+06	1.458e+06	1.131e+06	1.794e+05
404	2250	12.45	254.40	-6.02	244.27	4.11	50.36	1.111e+06	9.370e+05	1.106e+06	9.424e+05	3.006e+04
	251	16.51	282.68	-43.70	275.52	-36.54	47.79	1.555e+06	1.061e+06	1.548e+06	1.068e+06	5.884e+04
	355	16.39	276.68	-43.33	245.43	-12.08	-94.99	1.587e+06	9.450e+05	1.548e+06	9.834e+05	1.522e+05
	357	12.40	246.71	-11.94	213.86	20.91	-86.13	1.183e+06	8.092e+05	1.122e+06	8.701e+05	1.380e+05
405	1251	19.33	377.71	113.01	365.72	125.00	55.05	1.987e+06	1.575e+06	1.975e+06	1.586e+06	6.689e+04
	252	24.81	416.65	48.02	409.40	55.27	51.19	2.665e+06	1.760e+06	2.652e+06	1.774e+06	1.092e+05
	347	24.52	416.18	37.83	369.14	84.87	-124.85	2.692e+06	1.579e+06	2.642e+06	1.629e+06	2.316e+05
	355	19.05	381.99	84.26	326.96	139.29	-115.57	2.052e+06	1.380e+06	1.978e+06	1.455e+06	2.115e+05
405	2251	14.87	290.55	86.93	281.33	96.15	42.34	1.528e+06	1.212e+06	1.520e+06	1.220e+06	5.145e+04
	252	19.08	320.50	36.94	314.92	42.52	39.38	2.050e+06	1.354e+06	2.040e+06	1.364e+06	8.400e+04
	347	18.86	320.14	29.10	283.95	65.29	-96.04	2.071e+06	1.215e+06	2.032e+06	1.253e+06	1.781e+05
	355	14.65	293.84	64.81	251.51	107.14	-88.90	1.579e+06	1.061e+06	1.521e+06	1.119e+06	1.627e+05
406	1252	22.47	428.20	241.65	416.70	253.14	44.86	2.627e+06	1.992e+06	2.611e+06	2.008e+06	9.935e+04
	253	28.21	467.80	158.97	462.51	164.26	40.06	3.428e+06	2.206e+06	3.410e+06	2.224e+06	1.490e+05
	345	27.82	474.81	137.20	419.54	192.47	-124.92	3.442e+06	1.990e+06	3.391e+06	2.041e+06	2.678e+05
	347	22.05	449.65	187.92	375.76	261.80	-117.81	2.675e+06	1.764e+06	2.603e+06	1.837e+06	2.467e+05
406	2252	17.28	329.38	185.88	320.54	194.72	34.50	2.021e+06	1.532e+06	2.009e+06	1.545e+06	7.642e+04
	253	21.70	359.85	122.29	355.78	126.35	30.82	2.637e+06	1.697e+06	2.623e+06	1.711e+06	1.146e+05
	345	21.40	365.24	105.54	322.72	148.06	-96.09	2.648e+06	1.531e+06	2.609e+06	1.570e+06	2.060e+05
	347	16.96	345.88	144.55	289.05	201.39	-90.62	2.058e+06	1.357e+06	2.002e+06	1.413e+06	1.897e+05
407	1253	25.67	482.09	374.57	469.49	387.17	34.58	3.387e+06	2.476e+06	3.365e+06	2.498e+06	1.391e+05
	254	31.76	520.39	272.76	516.98	276.17	28.86	4.340e+06	2.721e+06	4.315e+06	2.746e+06	1.989e+05
	336	31.28	536.49	237.28	470.42	303.36	-124.12	4.336e+06	2.469e+06	4.285e+06	2.520e+06	3.044e+05
	345	25.15	528.13	288.02	424.79	391.36	-118.88	3.418e+06	2.212e+06	3.347e+06	2.283e+06	2.841e+05
407	2253	19.75	370.84	288.13	361.15	297.82	26.60	2.606e+06	1.905e+06	2.589e+06	1.921e+06	1.070e+05
	254	24.43	400.30	209.81	397.68	212.44	22.20	3.338e+06	2.093e+06	3.319e+06	2.112e+06	1.530e+05
	336	24.06	412.69	182.52	361.86	233.35	-95.47	3.335e+06	1.899e+06	3.296e+06	1.938e+06	2.342e+05
	345	19.34	406.25	221.55	326.76	301.04	-91.45	2.630e+06	1.701e+06	2.575e+06	1.756e+06	2.186e+05
408	1254	29.02	547.91	499.05	523.52	523.44	24.43	4.295e+06	3.033e+06	4.266e+06	3.062e+06	1.891e+05
	255	35.63	574.50	384.64	572.76	386.38	18.08	5.441e+06	3.312e+06	5.408e+06	3.346e+06	2.633e+05
	332	35.02	602.07	332.79	522.08	412.78	-123.05	5.411e+06	3.023e+06	5.363e+06	3.071e+06	3.369e+05
	336	28.39	620.83	377.21	474.26	523.78	-119.27	4.305e+06	2.730e+06	4.237e+06	2.799e+06	3.218e+05
408	2254	22.33	421.47	383.88	402.71	402.65	18.79	3.304e+06	2.333e+06	3.281e+06	2.355e+06	1.454e+05
	255	27.40	441.92	295.88	440.59	297.21	13.91	4.185e+06	2.548e+06	4.160e+06	2.573e+06	2.025e+05
	332	26.94	463.13	255.99	401.60	317.52	-94.65	4.162e+06	2.325e+06	4.125e+06	2.363e+06	2.591e+05
	336	21.84	477.56	290.16	364.81	402.91	-91.75	3.312e+06	2.100e+06	3.259e+06	2.153e+06	2.475e+05
409	1255	32.64	659.37	575.92	578.74	656.56	15.07	5.392e+06	3.667e+06	5.354e+06	3.706e+06	2.541e+05
	256	40.01	631.25	487.59	630.74	488.11	8.62	6.801e+06	3.981e+06	6.757e+06	4.025e+06	3.501e+05
	328	39.25	671.36	418.24	575.48	514.11	-122.78	6.730e+06	3.655e+06	6.688e+06	3.697e+06	3.555e+05
	332	31.89	725.04	453.00	524.51	653.53	-119.75	5.373e+06	3.325e+06	5.309e+06	3.389e+06	3.548e+05
409	2255	25.11	507.21	443.02	445.18	505.04	11.59	4.148e+06	2.821e+06	4.118e+06	2.851e+06	1.954e+05
	256	30.78	485.58	375.07	485.18	375.47	6.63	5.231e+06	3.062e+06	5.197e+06	3.096e+06	2.693e+05

328	30.19	516.43321.72	442.68	395.47	-94.45	5.177e+06	2.812e+06	5.145e+06	2.844e+06	2.735e+05
332	24.53	557.72348.46	403.47	502.72	-92.11	4.133e+06	2.558e+06	4.084e+06	2.607e+06	2.729e+05
410 1256	36.70	778.54635.48	635.90	778.12	7.79	6.746e+06	4.379e+06	6.695e+06	4.430e+06	3.427e+05
257	45.31	693.71570.63	693.68	570.66	1.75	8.536e+06	4.714e+06	8.476e+06	4.774e+06	4.747e+05
321	44.33	741.69488.77	633.19	597.27	-125.18	8.401e+06	4.361e+06	8.372e+06	4.389e+06	3.399e+05
328	35.81	830.69518.07	576.40	772.36	-121.79	6.681e+06	4.001e+06	6.628e+06	4.054e+06	3.732e+05
410 2256	28.23	598.88488.83	489.16	598.55	5.99	5.189e+06	3.369e+06	5.150e+06	3.408e+06	2.636e+05
257	34.85	533.62438.95	533.60	438.97	1.35	6.566e+06	3.626e+06	6.520e+06	3.672e+06	3.652e+05
321	34.10	570.53375.98	487.07	459.44	-96.29	6.462e+06	3.354e+06	6.440e+06	3.376e+06	2.614e+05
328	27.55	638.99398.51	443.38	594.12	-93.68	5.139e+06	3.078e+06	5.099e+06	3.119e+06	2.871e+05
411 1257	41.54	874.54697.30	697.49	874.35	5.81	8.471e+06	5.153e+06	8.403e+06	5.221e+06	4.719e+05
258	52.26	769.06614.52	768.97	614.60	-3.52	1.086e+07	5.465e+06	1.077e+07	5.548e+06	6.650e+05
315	50.98	808.13539.91	702.21	645.83	-131.11	1.062e+07	5.099e+06	1.061e+07	5.110e+06	2.482e+05
321	40.47	923.46574.69	631.91	866.24	-129.16	8.337e+06	4.747e+06	8.301e+06	4.783e+06	3.553e+05
411 2257	31.96	672.72536.38	536.53	672.58	4.47	6.517e+06	3.964e+06	6.464e+06	4.016e+06	3.630e+05
258	40.20	591.58472.71	591.52	472.77	-2.71	8.352e+06	4.204e+06	8.288e+06	4.268e+06	5.115e+05
315	39.21	621.64415.32	540.16	496.79	-100.85	8.172e+06	3.922e+06	8.163e+06	3.931e+06	1.909e+05
321	31.13	710.35442.07	486.08	666.34	-99.35	6.413e+06	3.652e+06	6.385e+06	3.679e+06	2.733e+05
412 1258	47.79	929.14750.93	757.46	922.61	33.48	1.077e+07	5.932e+06	1.067e+07	6.036e+06	7.031e+05
259	62.38	884.34546.65	866.22	564.77	-76.09	1.418e+07	6.084e+06	1.407e+07	6.186e+06	9.020e+05
309	60.74	826.99602.68	794.39	635.27	-79.05	1.381e+07	5.747e+06	1.381e+07	5.747e+06	5.883e+04
315	46.37	991.98589.60	680.91	900.67	-168.53	1.052e+07	5.513e+06	1.051e+07	5.523e+06	2.272e+05
412 2258	36.76	714.72577.64	582.66	709.70	25.75	8.288e+06	4.563e+06	8.208e+06	4.643e+06	5.409e+05
259	47.99	680.26420.50	666.33	434.44	-58.53	1.090e+07	4.680e+06	1.083e+07	4.758e+06	6.939e+05
309	46.72	636.14463.60	611.07	488.67	-60.80	1.062e+07	4.421e+06	1.062e+07	4.421e+06	4.526e+04
315	35.67	763.06453.54	523.78	692.82	-129.64	8.092e+06	4.240e+06	8.084e+06	4.248e+06	1.748e+05
413 1259	41.49	2381.23902.09	902.15	2381.17	9.07	1.391e+07	8.934e+06	1.374e+07	9.110e+06	9.199e+05
260	49.19	2094.94625.39	775.07	1945.26	-444.48	1.738e+07	8.753e+06	1.701e+07	9.117e+06	1.732e+06
307	47.17	2150.39671.11	752.28	2069.22	336.87	1.662e+07	8.161e+06	1.654e+07	8.232e+06	-7.729e+05
309	39.93	2227.33764.61	781.59	2210.34	-156.71	1.354e+07	8.505e+06	1.354e+07	8.508e+06	1.218e+05
413 2259	31.91	1831.72693.92	693.96	1831.67	6.98	1.070e+07	6.873e+06	1.057e+07	7.008e+06	7.076e+05
260	37.84	1611.49481.07	596.20	1496.35	-341.90	1.337e+07	6.733e+06	1.309e+07	7.013e+06	1.333e+06
307	36.28	1654.15516.24	578.68	1591.71	259.13	1.278e+07	6.278e+06	1.273e+07	6.332e+06	-5.945e+05
309	30.71	1713.33588.16	601.22	1700.26	-120.55	1.042e+07	6.542e+06	1.041e+07	6.544e+06	9.370e+04
414 1260	50.38	2041.27512.67	619.88	1934.06	-390.37	1.790e+07	8.927e+06	1.768e+07	9.155e+06	1.411e+06
261	39.46	1583.77450.06	458.14	1575.69	-95.35	1.401e+07	6.865e+06	1.396e+07	6.919e+06	6.204e+05
300	38.48	1494.84392.13	393.37	1493.60	-36.95	1.371e+07	6.498e+06	1.370e+07	6.508e+06	2.701e+05
307	48.57	2034.50522.35	553.96	2002.89	216.33	1.727e+07	8.264e+06	1.725e+07	8.275e+06	-3.189e+05
414 2260	38.76	1570.21394.36	476.83	1487.74	-300.29	1.377e+07	6.867e+06	1.360e+07	7.042e+06	1.085e+06
261	30.36	1218.29346.20	352.41	1212.07	-73.35	1.078e+07	5.281e+06	1.074e+07	5.322e+06	4.772e+05
300	29.60	1149.88301.64	302.59	1148.92	-28.42	1.055e+07	4.999e+06	1.054e+07	5.006e+06	2.077e+05
307	37.36	1565.00401.81	426.12	1540.69	166.41	1.328e+07	6.357e+06	1.327e+07	6.366e+06	-2.453e+05
415 1261	39.35	1552.00344.75	368.89	1527.86	-168.97	1.405e+07	6.860e+06	1.391e+07	6.992e+06	9.639e+05
262	28.87	1119.17203.12	215.96	1106.33	-107.70	1.036e+07	4.864e+06	1.027e+07	4.950e+06	6.823e+05
294	27.96	1081.84168.11	168.13	1081.82	4.45	1.006e+07	4.564e+06	1.006e+07	4.564e+06	3015.86
300	38.07	1524.20307.82	308.47	1523.55	28.14	1.362e+07	6.437e+06	1.362e+07	6.438e+06	-7.088e+04

415	2261	30.27	1193.84	265.19	283.76	1175.28	-129.98	1.081e+07	5.277e+06	1.070e+07	5.378e+06	7.414e+05
	262	22.21	860.90	156.25	166.13	851.02	-82.85	7.966e+06	3.741e+06	7.900e+06	3.808e+06	5.249e+05
	294	21.51	832.19	129.31	129.33	832.17	3.42	7.736e+06	3.511e+06	7.736e+06	3.511e+06	2319.89
	300	29.28	1172.46	236.78	237.28	1171.96	21.65	1.048e+07	4.952e+06	1.048e+07	4.952e+06	-5.452e+04
416	1262	28.87	1115.22	191.52	206.54	1100.20	-116.81	1.036e+07	4.867e+06	1.027e+07	4.961e+06	7.115e+05
	263	18.51	678.07	44.16	53.33	668.91	-75.65	6.690e+06	2.899e+06	6.627e+06	2.962e+06	4.831e+05
	290	18.05	657.52	20.55	20.63	657.44	7.07	6.480e+06	2.688e+06	6.480e+06	2.688e+06	-1.104e+04
	294	27.93	1087.53	158.89	159.02	1087.41	10.90	1.005e+07	4.554e+06	1.005e+07	4.554e+06	-2.307e+04
416	2262	22.20	857.86	147.32	158.88	846.31	-89.86	7.970e+06	3.744e+06	7.898e+06	3.816e+06	5.473e+05
	263	14.24	521.59	33.97	41.02	514.55	-58.20	5.146e+06	2.230e+06	5.098e+06	2.278e+06	3.716e+05
	290	13.88	505.78	15.81	15.87	505.72	5.44	4.985e+06	2.068e+06	4.985e+06	2.068e+06	-8494.87
	294	21.48	836.57	122.22	122.32	836.47	8.38	7.732e+06	3.503e+06	7.732e+06	3.503e+06	-1.775e+04
417	1263	18.51	676.46	42.29	52.22	666.53	-78.74	6.689e+06	2.902e+06	6.625e+06	2.966e+06	4.877e+05
	264	8.87	239.96	-108.83	-104.43	235.56	-38.93	3.025e+06	9.499e+05	2.991e+06	9.836e+05	2.623e+05
	288	8.65	229.38	-122.14	-121.99	229.23	7.32	2.911e+06	8.358e+05	2.911e+06	8.358e+05	-1.157e+04
	290	18.05	656.42	18.80	18.89	656.33	7.69	6.479e+06	2.688e+06	6.479e+06	2.688e+06	-1.099e+04
417	2263	14.24	520.35	32.53	40.17	512.71	-60.57	5.145e+06	2.233e+06	5.096e+06	2.282e+06	3.751e+05
	264	6.82	184.58	-83.71	-80.33	181.20	-29.95	2.327e+06	7.307e+05	2.301e+06	7.566e+05	2.018e+05
	288	6.65	176.45	-93.95	-93.84	176.33	5.63	2.239e+06	6.429e+05	2.239e+06	6.430e+05	-8897.05
	290	13.88	504.94	14.46	14.53	504.87	5.91	4.984e+06	2.068e+06	4.984e+06	2.068e+06	-8457.28
418	1264	8.88	240.36	-110.74	-87.55	217.16	87.21	3.025e+06	9.483e+05	2.900e+06	1.074e+06	-4.944e+05
	265	5.04	-277.35	-291.67	-277.94	-291.08	2.85	-1.372e+06	-1.395e+06	-1.395e+06	-1.372e+06	-1164.19
	288	8.66	230.08	-124.33	-72.08	177.84	125.64	2.912e+06	8.303e+05	2.626e+06	1.116e+06	-7.166e+05
418	2264	6.83	184.89	-85.19	-67.35	167.05	67.08	2.327e+06	7.294e+05	2.230e+06	8.258e+05	-3.803e+05
	265	3.88	-213.35	-224.36	-213.80	-223.91	2.19	-1.056e+06	-1.073e+06	-1.073e+06	-1.056e+06	-895.53
	288	6.66	176.98	-95.64	-55.45	136.80	96.65	2.240e+06	6.387e+05	2.020e+06	8.587e+05	-5.512e+05
419	1131	7.06	12.60	-439.42	3.71	-430.52	62.79	9.253e+04	-2601.71	-2233.19	9.216e+04	5909.49
	138	7.21	36.97	-425.53	21.30	-409.86	83.68	1.066e+05	2.228e+04	2.907e+04	9.986e+04	-2.295e+04
	244	6.77	35.57	-427.10	17.40	-408.93	-89.87	9.785e+04	2.743e+04	2.758e+04	9.770e+04	3245.53
	243	6.56	9.34	-407.93	-0.85	-397.73	-64.42	8.676e+04	-3271.01	-2776.03	8.627e+04	-6657.27
419	2131	5.43	9.69	-338.01	2.85	-331.17	48.30	7.118e+04	-2001.31	-1717.84	7.089e+04	4545.76
	138	5.55	28.44	-327.33	16.39	-315.27	64.37	8.204e+04	1.714e+04	2.236e+04	7.682e+04	-1.765e+04
	244	5.21	27.36	-328.54	13.39	-314.56	-69.13	7.527e+04	2.110e+04	2.121e+04	7.516e+04	2496.56
	243	5.05	7.19	-313.79	-0.66	-305.95	-49.55	6.674e+04	-2516.16	-2135.41	6.636e+04	-5120.98
420	1138	7.20	47.68	-412.11	34.23	-398.66	77.48	1.414e+05	1.562e+04	1.997e+04	1.370e+05	-2.298e+04
	142	7.76	80.31	-414.26	62.46	-396.42	92.24	1.867e+05	7.941e+04	1.000e+05	1.660e+05	-4.227e+04
	245	6.99	61.13	-419.78	39.98	-398.62	-98.62	1.627e+05	1.093e+05	1.115e+05	1.605e+05	1.064e+04
	244	6.85	40.50	-411.66	24.37	-395.53	-83.87	1.341e+05	1.929e+04	1.949e+04	1.339e+05	4778.63
420	2138	5.54	36.68	-317.00	26.33	-306.66	59.60	1.087e+05	1.201e+04	1.536e+04	1.054e+05	-1.768e+04
	142	5.97	61.78	-318.66	48.05	-304.93	70.96	1.436e+05	6.109e+04	7.695e+04	1.277e+05	-3.251e+04
	245	5.38	47.03	-322.91	30.75	-306.63	-75.86	1.252e+05	8.409e+04	8.579e+04	1.235e+05	8185.30
	244	5.27	31.16	-316.66	18.74	-304.25	-64.52	1.032e+05	1.484e+04	1.500e+04	1.030e+05	3675.87
421	1142	7.64	89.39	-380.34	73.47	-364.42	84.99	2.310e+05	7.299e+04	8.746e+04	2.165e+05	-4.557e+04
	147	8.80	134.38	-390.61	112.39	-368.62	105.18	3.134e+05	1.727e+05	2.204e+05	2.656e+05	-6.664e+04
	246	7.99	85.47	-399.71	59.16	-373.40	-109.87	2.790e+05	2.304e+05	2.615e+05	2.479e+05	2.331e+04
	245	6.95	66.67	-388.98	47.38	-369.69	-91.75	2.099e+05	9.900e+04	1.012e+05	2.077e+05	1.538e+04

421	2142	5.88	68.76	-292.57	56.51	-280.32	65.38	1.777e+05	5.614e+04	6.728e+04	1.665e+05	-3.505e+04
	147	6.77	103.37	-300.47	86.45	-283.55	80.91	2.411e+05	1.328e+05	1.696e+05	2.043e+05	-5.126e+04
	246	6.15	65.75	-307.47	45.51	-287.23	-84.51	2.146e+05	1.772e+05	2.011e+05	1.907e+05	1.793e+04
	245	5.35	51.29	-299.21	36.45	-284.37	-70.57	1.615e+05	7.615e+04	7.782e+04	1.598e+05	1.183e+04
422	1147	8.71	137.31	-354.97	113.31	-330.97	106.02	3.730e+05	1.700e+05	2.045e+05	3.384e+05	-7.630e+04
	155	10.10	212.93	-318.90	191.12	-297.10	105.46	4.993e+05	2.732e+05	3.866e+05	3.858e+05	-1.130e+05
	247	10.14	90.94	-374.96	66.01	-350.03	-104.85	5.025e+05	3.559e+05	4.845e+05	3.738e+05	4.805e+04
	246	7.53	101.30	-348.86	71.05	-318.62	-112.70	3.221e+05	2.317e+05	2.495e+05	3.044e+05	3.589e+04
422	2147	6.70	105.62	-273.05	87.16	-254.59	81.55	2.869e+05	1.307e+05	1.573e+05	2.603e+05	-5.869e+04
	155	7.77	163.79	-245.31	147.02	-228.54	81.12	3.841e+05	2.101e+05	2.974e+05	2.968e+05	-8.696e+04
	247	7.80	69.95	-288.43	50.78	-269.25	-80.66	3.865e+05	2.738e+05	3.727e+05	2.876e+05	3.696e+04
	246	5.79	77.92	-268.36	54.65	-245.09	-86.69	2.478e+05	1.783e+05	1.919e+05	2.342e+05	2.761e+04
423	1155	10.96	162.46	-286.90	109.30	-233.74	145.12	6.497e+05	3.405e+05	4.987e+05	4.914e+05	-1.546e+05
	157	12.41	189.10	-288.58	163.48	-262.96	107.62	7.916e+05	4.960e+05	7.394e+05	5.482e+05	-1.128e+05
	248	10.50	239.52	-302.22	224.02	-286.73	-90.31	6.075e+05	5.452e+05	6.072e+05	5.455e+05	4379.42
	247	8.58	238.44	-300.94	202.56	-265.06	-134.41	4.472e+05	1.911e+05	2.292e+05	4.091e+05	9.111e+04
423	2155	8.43	124.97	-220.69	84.08	-179.80	111.63	4.997e+05	2.619e+05	3.836e+05	3.780e+05	-1.189e+05
	157	9.55	145.46	-221.99	125.75	-202.28	82.79	6.089e+05	3.815e+05	5.687e+05	4.217e+05	-8.675e+04
	248	8.08	184.25	-232.48	172.33	-220.56	-69.47	4.673e+05	4.194e+05	4.671e+05	4.196e+05	3368.79
	247	6.60	183.42	-231.49	155.82	-203.89	-103.39	3.440e+05	1.470e+05	1.763e+05	3.147e+05	7.009e+04
424	1157	11.12	206.01	-191.19	173.89	-159.07	108.29	8.198e+05	5.474e+05	7.182e+05	6.491e+05	-1.317e+05
	163	15.07	249.29	-216.29	216.55	-183.56	119.04	1.115e+06	6.890e+05	1.064e+06	7.393e+05	-1.374e+05
	249	14.51	279.06	-239.25	265.45	-225.64	-82.90	1.011e+06	7.808e+05	1.009e+06	7.830e+05	-2.242e+04
	248	9.65	253.72	-214.76	235.61	-196.64	-90.33	6.572e+05	5.758e+05	5.825e+05	6.505e+05	2.235e+04
424	2157	8.56	158.47	-147.07	133.76	-122.36	83.30	6.306e+05	4.211e+05	5.524e+05	4.993e+05	-1.013e+05
	163	11.59	191.76	-166.38	166.58	-141.20	91.57	8.574e+05	5.300e+05	8.187e+05	5.687e+05	-1.057e+05
	249	11.16	214.66	-184.04	204.19	-173.57	-63.77	7.777e+05	6.006e+05	7.760e+05	6.023e+05	-1.725e+04
	248	7.42	195.17	-165.20	181.23	-151.27	-69.49	5.055e+05	4.429e+05	4.481e+05	5.004e+05	1.719e+04
425	1163	13.33	262.96	-107.19	226.71	-70.93	110.03	1.125e+06	7.766e+05	1.039e+06	8.627e+05	-1.502e+05
	170	18.14	305.18	-142.12	267.90	-104.84	123.64	1.539e+06	9.339e+05	1.489e+06	9.832e+05	-1.656e+05
	250	18.08	320.84	-153.31	310.25	-142.72	-70.07	1.476e+06	1.055e+06	1.471e+06	1.060e+06	-4.770e+04
	249	12.92	288.54	-118.33	274.42	-104.21	-74.47	9.815e+05	9.147e+05	9.793e+05	9.168e+05	-1.171e+04
425	2163	10.25	202.28	-82.45	174.39	-54.56	84.64	8.652e+05	5.974e+05	7.989e+05	6.636e+05	-1.156e+05
	170	13.95	234.76	-109.32	206.07	-80.64	95.11	1.184e+06	7.184e+05	1.146e+06	7.563e+05	-1.274e+05
	250	13.91	246.80	-117.93	238.65	-109.79	-53.90	1.136e+06	8.115e+05	1.131e+06	8.157e+05	-3.669e+04
	249	9.94	221.95	-91.02	211.09	-80.16	-57.29	7.550e+05	7.036e+05	7.533e+05	7.052e+05	-9009.19
426	1170	16.12	321.72	-16.57	276.59	28.56	115.02	1.538e+06	1.053e+06	1.459e+06	1.131e+06	-1.785e+05
	174	21.30	360.93	-57.43	317.86	-14.36	127.13	2.063e+06	1.230e+06	2.013e+06	1.279e+06	-1.966e+05
	251	21.47	367.10	-56.83	358.93	-48.66	-58.28	2.021e+06	1.379e+06	2.012e+06	1.388e+06	-7.520e+04
	250	16.18	330.50	-7.55	318.63	4.32	-62.22	1.444e+06	1.218e+06	1.438e+06	1.225e+06	-3.832e+04
426	2170	12.40	247.47	-12.75	212.76	21.97	88.48	1.183e+06	8.100e+05	1.122e+06	8.703e+05	-1.373e+05
	174	16.39	277.64	-44.17	244.51	-11.04	97.79	1.587e+06	9.459e+05	1.549e+06	9.838e+05	-1.512e+05
	251	16.51	282.39	-43.72	276.10	-37.43	-44.83	1.555e+06	1.061e+06	1.548e+06	1.068e+06	-5.785e+04
	250	12.45	254.23	-5.80	245.10	3.33	-47.86	1.111e+06	9.373e+05	1.106e+06	9.424e+05	-2.948e+04
427	1174	19.05	383.83	82.18	325.29	140.72	119.29	2.053e+06	1.381e+06	1.979e+06	1.455e+06	-2.106e+05
	182	24.52	417.97	35.83	367.59	86.21	129.28	2.693e+06	1.580e+06	2.643e+06	1.630e+06	-2.303e+05

252		24.81	416.3847.96	410.39	53.95	-46.59	2.665e+06	1.761e+06	2.652e+06	1.774e+06	-1.078e+05
251		19.33	377.26113.49	366.94	123.81	-51.14	1.986e+06	1.575e+06	1.976e+06	1.586e+06	-6.599e+04
427	2174	14.65	295.2563.22	250.23	108.24	91.76	1.579e+06	1.062e+06	1.522e+06	1.119e+06	-1.620e+05
182		18.86	321.5127.56	282.76	66.32	99.45	2.072e+06	1.216e+06	2.033e+06	1.254e+06	-1.772e+05
252		19.08	320.2936.89	315.69	41.50	-35.84	2.050e+06	1.354e+06	2.040e+06	1.364e+06	-8.296e+04
251		14.87	290.2087.30	282.26	95.24	-39.34	1.528e+06	1.212e+06	1.520e+06	1.220e+06	-5.076e+04
428	1182	22.05	452.76184.31	373.81	263.26	122.31	2.676e+06	1.766e+06	2.604e+06	1.838e+06	-2.459e+05
184		27.82	477.44133.94	417.61	193.77	130.28	3.444e+06	1.991e+06	3.393e+06	2.042e+06	-2.667e+05
253		28.21	467.71158.81	463.79	162.73	-34.58	3.428e+06	2.206e+06	3.410e+06	2.224e+06	-1.478e+05
252		22.47	427.30242.55	418.10	251.76	-40.19	2.627e+06	1.992e+06	2.611e+06	2.008e+06	-9.844e+04
428	2182	16.96	348.27141.78	287.55	202.51	94.09	2.059e+06	1.358e+06	2.003e+06	1.414e+06	-1.891e+05
184		21.40	367.26103.03	321.24	149.05	100.21	2.649e+06	1.532e+06	2.610e+06	1.571e+06	-2.051e+05
253		21.70	359.78122.16	356.76	125.17	-26.60	2.637e+06	1.697e+06	2.623e+06	1.711e+06	-1.137e+05
252		17.28	328.69186.58	321.61	193.66	-30.92	2.021e+06	1.533e+06	2.009e+06	1.545e+06	-7.572e+04
429	1184	25.15	532.85282.48	422.53	392.80	124.30	3.420e+06	2.213e+06	3.349e+06	2.284e+06	-2.835e+05
193		31.28	540.37232.28	468.11	304.54	130.54	4.338e+06	2.470e+06	4.287e+06	2.521e+06	-3.036e+05
254		31.77	520.60272.35	518.57	274.39	-22.38	4.340e+06	2.721e+06	4.315e+06	2.746e+06	-1.980e+05
253		25.67	480.03376.63	471.10	385.56	-29.05	3.387e+06	2.476e+06	3.366e+06	2.498e+06	-1.383e+05
429	2184	19.35	409.88217.29	325.02	302.15	95.62	2.631e+06	1.702e+06	2.576e+06	1.757e+06	-2.181e+05
193		24.06	415.67178.68	360.09	234.26	100.42	3.337e+06	1.900e+06	3.298e+06	1.939e+06	-2.336e+05
254		24.43	400.47209.50	398.90	211.07	-17.21	3.338e+06	2.093e+06	3.319e+06	2.112e+06	-1.523e+05
253		19.75	369.25289.71	362.38	296.58	-22.34	2.605e+06	1.905e+06	2.589e+06	1.921e+06	-1.064e+05
430	1193	28.40	626.97369.84	471.68	525.13	125.76	4.308e+06	2.731e+06	4.239e+06	2.800e+06	-3.216e+05
197		35.02	607.60325.58	519.43	413.75	130.73	5.414e+06	3.024e+06	5.365e+06	3.073e+06	-3.368e+05
255		35.63	575.28383.72	574.70	384.30	-10.48	5.441e+06	3.313e+06	5.408e+06	3.346e+06	-2.630e+05
254		29.02	541.47505.47	525.38	521.57	-17.90	4.295e+06	3.033e+06	4.266e+06	3.062e+06	-1.887e+05
430	2193	21.84	482.28284.49	362.83	403.94	96.74	3.314e+06	2.101e+06	3.261e+06	2.154e+06	-2.474e+05
197		26.94	467.38250.45	399.56	318.27	100.56	4.164e+06	2.326e+06	4.127e+06	2.364e+06	-2.591e+05
255		27.40	442.52295.17	442.08	295.62	-8.07	4.185e+06	2.548e+06	4.160e+06	2.574e+06	-2.023e+05
254		22.33	416.52388.82	404.14	401.21	-13.77	3.304e+06	2.333e+06	3.281e+06	2.355e+06	-1.451e+05
431	1197	31.90	731.95444.35	521.63	654.67	127.49	5.376e+06	3.327e+06	5.312e+06	3.390e+06	-3.554e+05
201		39.26	678.67408.60	572.59	514.68	131.89	6.734e+06	3.657e+06	6.692e+06	3.699e+06	-3.566e+05
256		40.01	633.06485.70	633.06	485.70	0.20	6.801e+06	3.981e+06	6.756e+06	4.025e+06	-3.509e+05
255		32.64	655.12580.15	580.89	654.38	-7.42	5.392e+06	3.667e+06	5.354e+06	3.706e+06	-2.544e+05
431	2197	24.54	563.04341.81	401.26	503.59	98.07	4.135e+06	2.559e+06	4.086e+06	2.608e+06	-2.734e+05
201		30.20	522.06314.31	440.46	395.91	101.46	5.180e+06	2.813e+06	5.148e+06	2.845e+06	-2.743e+05
256		30.78	486.97373.62	486.97	373.62	0.15	5.231e+06	3.062e+06	5.197e+06	3.096e+06	-2.699e+05
255		25.11	503.94446.27	446.84	503.37	-5.71	4.148e+06	2.821e+06	4.118e+06	2.851e+06	-1.957e+05
432	1201	35.82	837.93508.52	573.34	773.11	130.96	6.686e+06	4.003e+06	6.632e+06	4.056e+06	-3.750e+05
208		44.35	750.58476.88	630.29	597.17	135.84	8.406e+06	4.362e+06	8.377e+06	4.392e+06	-3.428e+05
257		45.31	696.95567.37	696.42	567.90	8.33	8.536e+06	4.714e+06	8.475e+06	4.774e+06	-4.772e+05
256		36.70	775.62638.38	638.39	775.61	1.08	6.746e+06	4.379e+06	6.695e+06	4.430e+06	-3.442e+05
432	2201	27.56	644.56391.17	441.03	594.70	100.74	5.143e+06	3.079e+06	5.102e+06	3.120e+06	-2.885e+05
208		34.11	577.37366.83	484.84	459.36	104.49	6.466e+06	3.356e+06	6.444e+06	3.378e+06	-2.637e+05
257		34.85	536.12436.44	535.70	436.85	6.41	6.566e+06	3.626e+06	6.519e+06	3.673e+06	-3.671e+05
256		28.23	596.63491.06	491.07	596.62	0.83	5.189e+06	3.369e+06	5.150e+06	3.408e+06	-2.648e+05

433	1208	40.48	931.07	564.19	628.93	866.33	139.86	8.342e+06	4.749e+06	8.306e+06	4.785e+06	-3.591e+05
	214	50.99	818.10	526.28	699.70	644.68	143.29	1.063e+07	5.101e+06	1.062e+07	5.113e+06	-2.540e+05
	258	52.26	773.45	610.18	772.11	611.52	14.74	1.086e+07	5.465e+06	1.077e+07	5.549e+06	-6.700e+05
	257	41.54	871.61	700.19	700.30	871.50	4.34	8.472e+06	5.153e+06	8.402e+06	5.222e+06	-4.752e+05
433	2208	31.14	716.21	433.99	483.79	666.40	107.59	6.417e+06	3.653e+06	6.389e+06	3.681e+06	-2.762e+05
	214	39.23	629.31	404.83	538.23	495.91	110.23	8.176e+06	3.924e+06	8.167e+06	3.933e+06	-1.954e+05
	258	40.20	594.96	469.37	593.93	470.40	11.34	8.352e+06	4.204e+06	8.287e+06	4.269e+06	-5.154e+05
	257	31.96	670.47	538.61	538.69	670.38	3.34	6.517e+06	3.964e+06	6.463e+06	4.017e+06	-3.656e+05
434	1214	46.38	1000.96	577.21	678.50	899.66	180.73	1.053e+07	5.515e+06	1.051e+07	5.526e+06	-2.339e+05
	220	60.76	835.05	590.69	792.93	632.81	92.29	1.381e+07	5.751e+06	1.381e+07	5.751e+06	-6.833e+04
	259	62.38	893.04	537.98	869.61	561.41	88.15	1.417e+07	6.084e+06	1.407e+07	6.188e+06	-9.102e+05
	258	47.79	922.53	757.51	760.55	919.50	-22.16	1.078e+07	5.932e+06	1.067e+07	6.038e+06	-7.090e+05
434	2214	35.68	769.97	444.01	521.92	692.05	139.02	8.096e+06	4.242e+06	8.088e+06	4.251e+06	-1.799e+05
	220	46.74	642.34	454.38	609.95	486.78	70.99	1.063e+07	4.424e+06	1.063e+07	4.424e+06	-5.256e+04
	259	47.99	686.95	413.83	668.93	431.86	67.80	1.090e+07	4.680e+06	1.082e+07	4.760e+06	-7.002e+05
	258	36.76	709.64	582.70	585.04	707.30	-17.05	8.289e+06	4.563e+06	8.207e+06	4.645e+06	-5.454e+05
435	1220	39.95	2229.00	760.57	780.48	2209.09	169.82	1.355e+07	8.511e+06	1.354e+07	8.515e+06	-1.372e+05
	222	47.18	2141.92	676.76	751.75	2066.93	-322.86	1.662e+07	8.173e+06	1.655e+07	8.241e+06	7.562e+05
	260	49.19	2100.03	620.32	778.69	1941.66	457.46	1.738e+07	8.751e+06	1.701e+07	9.121e+06	-1.747e+06
	259	41.49	2378.02	905.34	905.35	2378.02	3.03	1.392e+07	8.933e+06	1.373e+07	9.114e+06	-9.333e+05
435	2220	30.73	1714.62	585.06	600.37	1699.30	130.63	1.042e+07	6.547e+06	1.042e+07	6.550e+06	-1.055e+05
	222	36.29	1647.63	520.59	578.27	1589.95	-248.35	1.278e+07	6.287e+06	1.273e+07	6.339e+06	5.817e+05
	260	37.84	1615.41	477.17	598.99	1493.58	351.89	1.337e+07	6.732e+06	1.308e+07	7.016e+06	-1.344e+06
	259	31.91	1829.25	696.42	696.42	1829.24	2.33	1.070e+07	6.872e+06	1.057e+07	7.011e+06	-7.179e+05
436	1222	48.58	2028.17	525.85	553.57	2000.45	-202.19	1.727e+07	8.274e+06	1.726e+07	8.284e+06	3.020e+05
	229	38.48	1492.10	392.13	394.52	1489.71	51.22	1.371e+07	6.506e+06	1.370e+07	6.518e+06	-2.870e+05
	261	39.46	1582.66	451.20	461.77	1572.09	108.81	1.401e+07	6.866e+06	1.395e+07	6.923e+06	-6.358e+05
	260	50.38	2044.99	509.00	623.46	1930.53	403.38	1.791e+07	8.926e+06	1.767e+07	9.159e+06	-1.426e+06
436	2222	37.37	1560.13	404.50	425.82	1538.81	-155.53	1.328e+07	6.364e+06	1.328e+07	6.372e+06	2.323e+05
	229	29.60	1147.77	301.64	303.48	1145.93	39.40	1.055e+07	5.005e+06	1.054e+07	5.014e+06	-2.208e+05
	261	30.36	1217.43	347.08	355.21	1209.30	83.70	1.078e+07	5.282e+06	1.073e+07	5.325e+06	-4.891e+05
	260	38.76	1573.07	391.54	479.59	1485.02	310.29	1.377e+07	6.866e+06	1.359e+07	7.045e+06	-1.097e+06
437	1229	38.08	1519.74	309.45	309.61	1519.58	-13.85	1.362e+07	6.447e+06	1.362e+07	6.447e+06	5.387e+04
	235	27.96	1077.45	170.63	170.72	1077.36	8.84	1.005e+07	4.572e+06	1.005e+07	4.572e+06	-1.856e+04
	262	28.87	1119.06	203.21	219.40	1102.87	120.68	1.036e+07	4.864e+06	1.027e+07	4.954e+06	-6.973e+05
	261	39.35	1552.45	344.35	372.56	1524.25	182.43	1.405e+07	6.860e+06	1.391e+07	6.996e+06	-9.793e+05
437	2229	29.29	1169.03	238.04	238.16	1168.91	-10.66	1.048e+07	4.959e+06	1.048e+07	4.959e+06	4.144e+04
	235	21.51	828.81	131.26	131.32	828.74	6.80	7.734e+06	3.517e+06	7.734e+06	3.517e+06	-1.428e+04
	262	22.21	860.82	156.32	168.77	848.36	92.83	7.966e+06	3.741e+06	7.897e+06	3.811e+06	-5.364e+05
	261	30.27	1194.19	264.89	286.58	1172.50	140.33	1.081e+07	5.277e+06	1.070e+07	5.381e+06	-7.533e+05
438	1235	27.93	1082.98	161.48	161.49	1082.97	2.33	1.005e+07	4.562e+06	1.005e+07	4.562e+06	7569.22
	239	18.03	653.65	23.79	23.82	653.61	4.86	6.477e+06	2.694e+06	6.477e+06	2.694e+06	-2706.47
	263	18.51	678.05	44.15	56.49	665.71	87.58	6.690e+06	2.899e+06	6.624e+06	2.965e+06	-4.968e+05
	262	28.87	1115.33	191.42	210.03	1096.73	129.77	1.036e+07	4.867e+06	1.026e+07	4.965e+06	-7.265e+05
438	2235	21.49	833.06	124.22	124.22	833.06	1.79	7.731e+06	3.509e+06	7.731e+06	3.509e+06	5822.48
	239	13.87	502.81	18.30	18.33	502.78	3.74	4.982e+06	2.072e+06	4.982e+06	2.072e+06	-2081.90

263		14.24	521.5833.96	43.45	512.09	67.37	5.146e+06	2.230e+06	5.095e+06	2.281e+06	-3.821e+05	
262		22.20	857.95147.25	161.56	843.64	99.83	7.970e+06	3.744e+06	7.895e+06	3.819e+06	-5.588e+05	
439	1239	18.03	652.7021.93	21.96	652.67	4.21	6.476e+06	2.693e+06	6.476e+06	2.693e+06	-2807.09	
241		8.62	226.26-118.84	-118.79	226.21	4.12	2.908e+06	8.390e+05	2.908e+06	8.390e+05	-1818.17	
264		8.87	239.91-108.80	-101.37	232.48	50.36	3.025e+06	9.499e+05	2.988e+06	9.872e+05	-2.756e+05	
263		18.51	676.5742.17	55.41	663.34	90.67	6.689e+06	2.902e+06	6.621e+06	2.970e+06	-5.013e+05	
439	2239	13.87	502.0716.87	16.89	502.05	3.24	4.981e+06	2.072e+06	4.981e+06	2.072e+06	-2159.30	
241		6.63	174.05-91.41	-91.37	174.01	3.17	2.237e+06	6.454e+05	2.237e+06	6.454e+05	-1398.59	
264		6.82	184.55-83.69	-77.98	178.83	38.74	2.327e+06	7.307e+05	2.298e+06	7.594e+05	-2.120e+05	
263		14.24	520.4432.44	42.62	510.26	69.74	5.145e+06	2.233e+06	5.093e+06	2.285e+06	-3.857e+05	
440	1264	8.88	240.37-110.80	-93.10	222.67	-76.82	3.025e+06	9.483e+05	2.906e+06	1.067e+06	4.823e+05	
241		8.64	227.01-121.03	-77.47	183.45	-115.17	2.908e+06	8.337e+05	2.632e+06	1.110e+06	7.043e+05	
265		5.04	-276.09-292.78	-283.89	-284.98	8.33	-1.371e+06	-1.397e+06	-1.387e+06	-1.380e+06	-1.236e+04	
440	2264	6.83	184.90-85.23	-71.62	171.28	-59.10	2.327e+06	7.295e+05	2.235e+06	8.209e+05	3.710e+05	
241		6.64	174.62-93.10	-59.59	141.12	-88.59	2.237e+06	6.413e+05	2.025e+06	8.535e+05	5.418e+05	
265		3.88	-212.37-225.22	-218.38	-219.21	6.41	-1.054e+06	-1.074e+06	-1.067e+06	-1.062e+06	-9505.01	
441	1 68	6.05	17.77-368.58	9.25	-360.06	56.73	7.974e+04	-2817.98	-2658.61	7.958e+04	3623.71	
73		7.08	27.54-361.09	3.73	-337.28	93.19	1.156e+05	4003.11	3.684e+04	8.274e+04	-5.085e+04	
138		6.82	42.48-421.36	32.08	-410.96	-68.68	1.026e+05	7143.46	1.494e+04	9.484e+04	-2.616e+04	
131		6.37	1.90-414.29	-6.86	-405.54	-59.74	8.173e+04	-2796.94	-1956.02	8.088e+04	-8388.65	
441	2 68	4.65	13.67-283.53	7.12	-276.97	43.64	6.134e+04	-2167.68	-2045.09	6.121e+04	2787.47	
73		5.45	21.18-277.76	2.87	-259.45	71.69	8.891e+04	3079.31	2.834e+04	6.365e+04	-3.912e+04	
138		5.25	32.68-324.13	24.68	-316.12	-52.83	7.895e+04	5494.97	1.150e+04	7.295e+04	-2.012e+04	
131		4.90	1.46-318.69	-5.27	-311.95	-45.95	6.287e+04	-2151.49	-1504.63	6.222e+04	-6452.81	
442	1 73	6.65	42.30-351.90	22.37	-331.96	86.38	1.363e+05	5211.72	2.902e+04	1.125e+05	-5.055e+04	
79		8.10	55.49-358.06	21.97	-324.53	112.88	2.097e+05	3.314e+04	1.168e+05	1.260e+05	-8.818e+04	
142		7.35	82.01-403.49	73.65	-395.13	-63.15	1.837e+05	5.980e+04	7.623e+04	1.672e+05	-4.201e+04	
138		6.87	41.33-405.41	31.86	-395.94	-64.34	1.357e+05	2174.86	6741.53	1.312e+05	-2.427e+04	
442	2 73	5.11	32.54-270.69	17.21	-255.36	66.45	1.049e+05	4009.02	2.232e+04	8.656e+04	-3.888e+04	
79		6.23	42.69-275.43	16.90	-249.64	86.83	1.613e+05	2.549e+04	8.988e+04	9.695e+04	-6.783e+04	
142		5.66	63.08-310.37	56.65	-303.94	-48.58	1.413e+05	4.600e+04	5.864e+04	1.286e+05	-3.232e+04	
138		5.29	31.79-311.85	24.51	-304.57	-49.49	1.044e+05	1672.97	5185.79	1.009e+05	-1.867e+04	
443	1 79	7.42	66.69-336.39	37.06	-306.76	105.19	2.330e+05	3.762e+04	1.075e+05	1.631e+05	-9.365e+04	
84		9.26	84.74-336.42	38.34	-290.01	131.87	3.452e+05	8.369e+04	2.510e+05	1.779e+05	-1.255e+05	
147		8.33	127.49-376.22	121.20	-369.93	-55.92	3.100e+05	1.558e+05	1.906e+05	2.752e+05	-6.447e+04	
142		7.36	83.64-367.48	75.94	-359.77	-58.45	2.278e+05	5.471e+04	6.388e+04	2.187e+05	-3.879e+04	
443	2 79	5.71	51.30-258.76	28.51	-235.97	80.91	1.792e+05	2.894e+04	8.271e+04	1.254e+05	-7.204e+04	
84		7.12	65.19-258.78	29.49	-223.09	101.44	2.655e+05	6.438e+04	1.931e+05	1.369e+05	-9.658e+04	
147		6.41	98.07-289.40	93.23	-284.57	-43.01	2.384e+05	1.198e+05	1.466e+05	2.117e+05	-4.959e+04	
142		5.66	64.34-282.68	58.41	-276.75	-44.96	1.753e+05	4.208e+04	4.914e+04	1.682e+05	-2.983e+04	
444	1 84	8.77	75.79-350.17	31.01	-305.39	130.65	3.808e+05	9.614e+04	2.445e+05	2.324e+05	-1.422e+05	
92		9.59	143.25-229.46	91.13	-177.34	129.26	4.881e+05	1.122e+05	4.275e+05	1.728e+05	-1.382e+05	
155		10.73	144.94-376.20	143.65	-374.91	-25.97	5.315e+05	3.040e+05	3.864e+05	4.492e+05	-1.093e+05	
147		7.79	151.26-286.09	142.13	-276.97	-62.50	3.546e+05	1.531e+05	1.691e+05	3.386e+05	-5.456e+04	
444	2 84	6.75	58.30-269.36	23.85	-234.92	100.50	2.929e+05	7.396e+04	1.881e+05	1.788e+05	-1.094e+05	
92		7.37	110.19-176.51	70.10	-136.42	99.43	3.755e+05	8.630e+04	3.289e+05	1.329e+05	-1.063e+05	

155	8.25	111.50	-289.39	110.50	-288.39	-19.97	4.089e+05	2.339e+05	2.972e+05	3.455e+05	-8.409e+04
147	5.99	116.35	-220.07	109.33	-213.05	-48.08	2.728e+05	1.177e+05	1.301e+05	2.604e+05	-4.197e+04
445 1 92	12.40	216.23	-245.44	128.44	-157.65	181.18	5.615e+05	-1.085e+05	2.850e+05	1.680e+05	-3.299e+05
97	13.01	222.38	-292.36	167.53	-237.51	158.82	7.759e+05	2.226e+05	5.912e+05	4.074e+05	-2.609e+05
157	11.91	181.51	-252.16	180.25	-250.90	-23.31	7.575e+05	4.817e+05	6.576e+05	5.816e+05	-1.325e+05
155	9.96	163.32	-300.69	147.79	-285.17	-83.44	5.635e+05	4.189e+05	4.189e+05	5.635e+05	741.41
445 2 92	9.54	166.33	-188.80	98.80	-121.27	139.37	4.320e+05	-8.345e+04	2.192e+05	1.293e+05	-2.537e+05
97	10.01	171.06	-224.89	128.87	-182.70	122.17	5.969e+05	1.713e+05	4.547e+05	3.134e+05	-2.007e+05
157	9.16	139.62	-193.97	138.66	-193.00	-17.93	5.827e+05	3.706e+05	5.059e+05	4.474e+05	-1.019e+05
155	7.66	125.63	-231.30	113.69	-219.36	-64.18	4.334e+05	3.222e+05	3.222e+05	4.334e+05	570.32
446 1 97	11.64	239.45	-213.26	174.51	-148.32	158.69	8.050e+05	2.242e+05	5.722e+05	4.570e+05	-2.847e+05
103	15.14	264.09	-221.17	191.13	-148.22	173.43	1.123e+06	4.209e+05	9.506e+05	5.932e+05	-3.022e+05
163	14.89	244.01	-213.67	243.56	-213.21	-14.44	1.095e+06	6.767e+05	9.685e+05	8.029e+05	-1.919e+05
157	10.71	194.55	-169.59	192.89	-167.93	-24.54	7.950e+05	5.512e+05	6.377e+05	7.086e+05	-1.166e+05
446 2 97	8.95	184.19	-164.05	134.24	-114.09	122.07	6.193e+05	1.724e+05	4.401e+05	3.515e+05	-2.190e+05
103	11.64	203.14	-170.13	147.03	-114.02	133.41	8.638e+05	3.237e+05	7.312e+05	4.563e+05	-2.324e+05
163	11.45	187.70	-164.36	187.35	-164.01	-11.11	8.421e+05	5.205e+05	7.450e+05	6.176e+05	-1.476e+05
157	8.24	149.66	-130.45	148.38	-129.17	-18.88	6.116e+05	4.240e+05	4.905e+05	5.451e+05	-8.972e+04
447 1103	13.31	281.00	-141.56	202.42	-62.98	164.41	1.145e+06	4.620e+05	9.251e+05	6.818e+05	-3.191e+05
112	17.67	311.53	-156.05	224.14	-68.66	182.28	1.551e+06	6.240e+05	1.368e+06	8.066e+05	-3.686e+05
170	17.99	299.69	-143.56	299.68	-143.55	1.67	1.522e+06	9.234e+05	1.372e+06	1.074e+06	-2.595e+05
163	13.41	249.88	-84.63	249.73	-84.48	-7.14	1.131e+06	7.601e+05	9.444e+05	9.471e+05	-1.856e+05
447 2103	10.24	216.16	-108.89	155.71	-48.44	126.47	8.807e+05	3.554e+05	7.116e+05	5.245e+05	-2.454e+05
112	13.59	239.64	-120.04	172.42	-52.81	140.21	1.193e+06	4.800e+05	1.053e+06	6.204e+05	-2.835e+05
170	13.84	230.53	-110.43	230.52	-110.42	1.29	1.171e+06	7.103e+05	1.055e+06	8.259e+05	-1.996e+05
163	10.32	192.21	-65.10	192.10	-64.99	-5.49	8.702e+05	5.847e+05	7.264e+05	7.285e+05	-1.428e+05
448 1112	15.57	334.36	-65.68	233.44	35.25	173.75	1.568e+06	6.908e+05	1.339e+06	9.199e+05	-3.854e+05
114	20.65	366.69	-87.04	260.51	19.14	192.10	2.062e+06	8.531e+05	1.859e+06	1.057e+06	-4.523e+05
174	21.16	355.70	-62.13	354.73	-61.17	20.08	2.046e+06	1.220e+06	1.867e+06	1.399e+06	-3.408e+05
170	16.28	306.32	10.42	306.07	10.66	8.53	1.555e+06	1.035e+06	1.343e+06	1.247e+06	-2.554e+05
448 2112	11.98	257.20	-50.52	179.57	27.11	133.65	1.206e+06	5.314e+05	1.030e+06	7.076e+05	-2.965e+05
114	15.88	282.07	-66.95	200.39	14.72	147.77	1.586e+06	6.562e+05	1.430e+06	8.127e+05	-3.479e+05
174	16.28	273.61	-47.80	272.87	-47.05	15.44	1.574e+06	9.381e+05	1.436e+06	1.076e+06	-2.621e+05
170	12.53	235.63	8.01	235.44	8.20	6.56	1.196e+06	7.962e+05	1.033e+06	9.592e+05	-1.964e+05
449 1114	18.32	399.40	9.76	267.53	141.63	184.37	2.077e+06	9.429e+05	1.827e+06	1.193e+06	-4.706e+05
123	23.62	428.95	-16.02	298.85	114.07	202.39	2.668e+06	1.120e+06	2.438e+06	1.350e+06	-5.504e+05
182	24.38	413.94	26.76	409.69	31.01	40.36	2.677e+06	1.569e+06	2.462e+06	1.784e+06	-4.377e+05
174	19.24	364.70	115.41	361.91	118.20	26.24	2.076e+06	1.364e+06	1.834e+06	1.606e+06	-3.375e+05
449 2114	14.09	307.23	7.51	205.79	108.95	141.83	1.598e+06	7.253e+05	1.405e+06	9.181e+05	-3.620e+05
123	18.17	329.96	-12.33	229.89	87.74	155.69	2.052e+06	8.619e+05	1.875e+06	1.039e+06	-4.234e+05
182	18.76	318.42	20.58	315.15	23.85	31.04	2.059e+06	1.207e+06	1.894e+06	1.372e+06	-3.367e+05
174	14.80	280.54	88.77	278.39	90.92	20.19	1.597e+06	1.049e+06	1.411e+06	1.235e+06	-2.596e+05
450 1123	21.10	476.27	82.13	303.64	254.76	195.55	2.681e+06	1.234e+06	2.402e+06	1.513e+06	-5.707e+05
127	26.65	497.92	54.59	338.46	214.04	212.76	3.382e+06	1.435e+06	3.123e+06	1.694e+06	-6.617e+05
184	27.68	475.96	119.07	464.91	130.12	61.82	3.427e+06	1.979e+06	3.172e+06	2.234e+06	-5.520e+05
182	22.27	428.59	224.89	417.71	235.77	45.80	2.705e+06	1.748e+06	2.425e+06	2.028e+06	-4.352e+05

450	2123	16.23	366.3663.18	233.57	195.97	150.42	2.062e+06	9.491e+05	1.848e+06	1.163e+06	-4.390e+05
	127	20.50	383.0141.99	260.35	164.65	163.66	2.602e+06	1.104e+06	2.402e+06	1.303e+06	-5.090e+05
	184	21.29	366.1391.59	357.62	100.09	47.56	2.636e+06	1.522e+06	2.440e+06	1.719e+06	-4.246e+05
	182	17.13	329.68172.99	321.31	181.36	35.23	2.080e+06	1.345e+06	1.865e+06	1.560e+06	-3.348e+05
451	1127	23.94	564.33149.29	340.98	372.64	206.91	3.394e+06	1.574e+06	3.084e+06	1.884e+06	-6.841e+05
	140	29.80	572.77122.28	378.90	316.16	223.05	4.227e+06	1.806e+06	3.938e+06	2.094e+06	-7.843e+05
	193	31.13	543.11210.01	520.52	232.59	83.74	4.321e+06	2.456e+06	4.020e+06	2.757e+06	-6.863e+05
	184	25.38	504.30329.54	473.61	360.22	66.49	3.454e+06	2.195e+06	3.130e+06	2.519e+06	-5.504e+05
451	2127	18.41	434.10114.84	262.29	286.64	159.16	2.610e+06	1.210e+06	2.372e+06	1.449e+06	-5.262e+05
	140	22.92	440.5994.06	291.46	243.20	171.58	3.251e+06	1.389e+06	3.029e+06	1.611e+06	-6.033e+05
	193	23.95	417.77161.54	400.40	178.91	64.42	3.324e+06	1.889e+06	3.092e+06	2.121e+06	-5.279e+05
	184	19.52	387.92253.49	364.32	277.10	51.15	2.657e+06	1.688e+06	2.408e+06	1.938e+06	-4.234e+05
452	1140	26.90	661.28210.09	379.21	492.17	218.41	4.235e+06	1.972e+06	3.895e+06	2.313e+06	-8.088e+05
	149	33.19	651.74184.77	420.18	416.33	233.48	5.232e+06	2.243e+06	4.920e+06	2.555e+06	-9.137e+05
	197	34.87	616.17294.46	576.90	333.72	105.31	5.397e+06	3.008e+06	5.047e+06	3.358e+06	-8.447e+05
	193	28.64	598.62418.62	529.72	487.52	87.49	4.347e+06	2.712e+06	3.974e+06	3.086e+06	-6.861e+05
452	2140	20.70	508.68161.61	291.70	378.59	168.01	3.258e+06	1.517e+06	2.996e+06	1.779e+06	-6.221e+05
	149	25.53	501.34142.13	323.21	320.25	179.60	4.024e+06	1.726e+06	3.785e+06	1.966e+06	-7.028e+05
	197	26.83	473.97226.50	443.77	256.71	81.01	4.151e+06	2.314e+06	3.882e+06	2.583e+06	-6.497e+05
	193	22.03	460.48322.02	407.48	375.02	67.30	3.344e+06	2.086e+06	3.057e+06	2.373e+06	-5.278e+05
453	1149	30.08	762.80264.29	418.40	608.69	230.39	5.236e+06	2.441e+06	4.873e+06	2.804e+06	-9.401e+05
	158	36.98	731.80239.93	463.01	508.73	244.87	6.446e+06	2.759e+06	6.125e+06	3.080e+06	-1.040e+06
	201	39.10	694.21367.81	635.16	426.86	125.65	6.715e+06	3.639e+06	6.317e+06	4.038e+06	-1.033e+06
	197	32.15	707.85490.62	586.35	612.12	107.85	5.420e+06	3.308e+06	4.996e+06	3.732e+06	-8.465e+05
453	2149	23.14	586.77203.30	321.85	468.22	177.22	4.028e+06	1.878e+06	3.748e+06	2.157e+06	-7.231e+05
	158	28.45	562.92184.56	356.16	391.33	188.36	4.958e+06	2.122e+06	4.711e+06	2.369e+06	-7.997e+05
	201	30.08	534.01282.93	488.59	328.36	96.65	5.166e+06	2.800e+06	4.859e+06	3.106e+06	-7.947e+05
	197	24.73	544.50377.40	451.04	470.86	82.96	4.169e+06	2.544e+06	3.843e+06	2.871e+06	-6.511e+05
454	1158	33.61	862.59311.60	459.22	714.97	244.02	6.441e+06	2.990e+06	6.071e+06	3.360e+06	-1.067e+06
	168	41.45	808.97285.17	509.53	584.60	259.20	7.951e+06	3.361e+06	7.649e+06	3.663e+06	-1.138e+06
	208	44.19	774.14425.50	698.22	501.42	143.89	8.385e+06	4.345e+06	7.943e+06	4.787e+06	-1.261e+06
	201	36.08	817.76552.47	644.46	725.77	126.26	6.733e+06	3.985e+06	6.259e+06	4.459e+06	-1.038e+06
454	2158	25.85	663.53239.69	353.25	549.98	187.71	4.955e+06	2.300e+06	4.670e+06	2.585e+06	-8.211e+05
	168	31.89	622.28219.36	391.95	449.69	199.38	6.116e+06	2.585e+06	5.884e+06	2.818e+06	-8.758e+05
	208	33.99	595.49327.31	537.10	385.71	110.68	6.450e+06	3.342e+06	6.110e+06	3.682e+06	-9.702e+05
	201	27.75	629.05424.98	495.74	558.29	97.12	5.179e+06	3.065e+06	4.815e+06	3.430e+06	-7.987e+05
455	1168	37.72	951.95348.95	503.07	797.83	263.03	7.930e+06	3.627e+06	7.586e+06	3.971e+06	-1.167e+06
	180	47.18	879.46318.28	566.00	631.74	278.66	9.903e+06	4.037e+06	9.665e+06	4.276e+06	-1.158e+06
	214	50.80	855.89453.86	773.25	536.50	162.46	1.060e+07	5.086e+06	1.013e+07	5.557e+06	-1.541e+06
	208	40.73	911.68611.12	706.94	815.87	140.06	8.390e+06	4.736e+06	7.874e+06	5.253e+06	-1.273e+06
455	2168	29.01	732.27268.42	386.98	613.71	202.33	6.100e+06	2.790e+06	5.835e+06	3.055e+06	-8.975e+05
	180	36.29	676.51244.83	435.39	485.95	214.35	7.618e+06	3.106e+06	7.434e+06	3.289e+06	-8.910e+05
	214	39.08	658.37349.13	594.81	412.69	124.97	8.153e+06	3.912e+06	7.791e+06	4.274e+06	-1.186e+06
	208	31.33	701.29470.09	543.80	627.59	107.74	6.454e+06	3.643e+06	6.057e+06	4.041e+06	-9.794e+05
456	1180	42.74	1018.07331.91	536.72	813.26	313.98	9.826e+06	4.324e+06	9.571e+06	4.580e+06	-1.158e+06
	189	55.54	904.99399.55	646.00	658.54	252.64	1.266e+07	4.728e+06	1.252e+07	4.866e+06	-1.038e+06

220	60.23	985.26	331.64	866.46	450.44	252.06	1.372e+07	5.712e+06	1.329e+07	6.147e+06	-1.815e+06
214	46.77	961.06	684.63	772.16	873.53	128.58	1.060e+07	5.519e+06	1.003e+07	6.083e+06	-1.596e+06
456 2180	32.87	783.13	255.32	412.86	625.58	241.53	7.559e+06	3.326e+06	7.362e+06	3.523e+06	-8.905e+05
189	42.72	696.15	307.34	496.92	506.57	194.34	9.738e+06	3.637e+06	9.632e+06	3.743e+06	-7.982e+05
220	46.33	757.89	255.11	666.51	346.49	193.90	1.055e+07	4.394e+06	1.022e+07	4.729e+06	-1.397e+06
214	35.97	739.27	526.64	593.97	671.95	98.91	8.151e+06	4.245e+06	7.717e+06	4.679e+06	-1.228e+06
457 1189	36.15	1942.53	511.20	585.93	1867.80	318.41	1.261e+07	6.983e+06	1.235e+07	7.245e+06	-1.186e+06
199	42.20	2052.38	634.17	657.14	2029.41	-179.04	1.487e+07	6.697e+06	1.486e+07	6.706e+06	-2.721e+05
222	48.04	1916.71	479.31	732.25	1663.76	547.36	1.709e+07	8.420e+06	1.622e+07	9.289e+06	-2.603e+06
220	40.59	2383.92	929.00	947.76	2365.17	164.12	1.370e+07	8.216e+06	1.291e+07	9.006e+06	-1.926e+06
457 2189	27.81	1494.26	393.23	450.72	1436.77	244.93	9.699e+06	5.371e+06	9.497e+06	5.573e+06	-9.124e+05
199	32.46	1578.75	487.82	505.49	1561.08	-137.72	1.144e+07	5.152e+06	1.143e+07	5.159e+06	-2.093e+05
222	36.96	1474.39	368.70	563.27	1279.82	421.04	1.315e+07	6.477e+06	1.248e+07	7.145e+06	-2.002e+06
220	31.22	1833.79	714.62	729.04	1819.36	126.25	1.054e+07	6.320e+06	9.932e+06	6.927e+06	-1.481e+06
458 1199	43.84	1912.11	429.34	429.34	1912.11	-0.23	1.564e+07	6.674e+06	1.557e+07	6.751e+06	-8.274e+05
210	35.14	1320.27	247.31	283.65	1283.93	194.09	1.262e+07	5.379e+06	1.242e+07	5.575e+06	-1.175e+06
229	37.96	1581.22	422.70	478.09	1525.83	247.20	1.349e+07	6.434e+06	1.316e+07	6.768e+06	-1.499e+06
222	49.04	1949.46	389.47	630.33	1708.61	563.67	1.752e+07	8.595e+06	1.679e+07	9.320e+06	-2.437e+06
458 2199	33.73	1470.86	330.26	330.26	1470.86	-0.18	1.203e+07	5.134e+06	1.197e+07	5.193e+06	-6.365e+05
210	27.03	1015.59	190.24	218.19	987.64	149.30	9.704e+06	4.138e+06	9.553e+06	4.289e+06	-9.035e+05
229	29.20	1216.32	325.15	367.76	1173.71	190.15	1.038e+07	4.949e+06	1.012e+07	5.206e+06	-1.153e+06
222	37.73	1499.59	299.59	484.87	1314.31	433.59	1.347e+07	6.612e+06	1.292e+07	7.169e+06	-1.875e+06
459 1210	34.47	1406.36	192.11	208.94	1389.52	141.98	1.241e+07	5.261e+06	1.231e+07	5.366e+06	-8.599e+05
216	25.48	974.11	76.02	93.52	956.61	124.14	9.156e+06	3.691e+06	9.060e+06	3.787e+06	-7.175e+05
235	27.93	1091.57	174.34	235.03	1030.88	227.99	1.004e+07	4.554e+06	9.684e+06	4.909e+06	-1.349e+06
229	38.14	1498.43	295.78	390.74	1403.47	324.33	1.366e+07	6.482e+06	1.316e+07	6.979e+06	-1.821e+06
459 2210	26.51	1081.81	147.78	160.73	1068.86	109.21	9.548e+06	4.047e+06	9.467e+06	4.128e+06	-6.614e+05
216	19.60	749.32	58.48	71.94	735.86	95.49	7.043e+06	2.839e+06	6.969e+06	2.913e+06	-5.520e+05
235	21.48	839.67	134.11	180.79	792.99	175.38	7.722e+06	3.503e+06	7.449e+06	3.776e+06	-1.038e+06
229	29.34	1152.64	227.52	300.57	1079.59	249.49	1.050e+07	4.986e+06	1.012e+07	5.368e+06	-1.401e+06
460 1216	25.48	989.69	69.01	85.11	973.59	120.68	9.144e+06	3.666e+06	9.054e+06	3.756e+06	-6.963e+05
227	16.66	586.54	-39.02	-27.51	575.03	84.06	5.856e+06	2.083e+06	5.792e+06	2.147e+06	-4.873e+05
239	18.03	654.20	23.89	68.11	609.98	161.00	6.477e+06	2.690e+06	6.222e+06	2.944e+06	-9.474e+05
235	27.94	1080.29	159.18	226.09	1013.38	239.07	1.006e+07	4.568e+06	9.684e+06	4.940e+06	-1.380e+06
460 2216	19.60	761.30	53.08	65.47	748.91	92.83	7.033e+06	2.820e+06	6.964e+06	2.889e+06	-5.356e+05
227	12.82	451.18	-30.02	-21.16	442.33	64.67	4.505e+06	1.603e+06	4.455e+06	1.652e+06	-3.748e+05
239	13.87	503.23	18.38	52.39	469.21	123.84	4.982e+06	2.069e+06	4.786e+06	2.265e+06	-7.287e+05
235	21.49	830.99	122.44	173.91	779.52	183.90	7.735e+06	3.514e+06	7.449e+06	3.800e+06	-1.061e+06
461 1227	16.68	587.50	-41.96	-30.01	575.54	85.92	5.857e+06	2.076e+06	5.792e+06	2.141e+06	-4.921e+05
237	7.96	188.62	-151.39	-145.09	182.33	45.85	2.567e+06	5.079e+05	2.532e+06	5.426e+05	-2.647e+05
241	8.63	225.47	-118.65	-93.93	200.75	88.86	2.908e+06	8.367e+05	2.768e+06	9.766e+05	-5.197e+05
239	18.04	653.65	20.55	67.79	606.41	166.36	6.479e+06	2.695e+06	6.219e+06	2.954e+06	-9.564e+05
461 2227	12.83	451.92	-32.28	-23.08	442.72	66.09	4.505e+06	1.597e+06	4.455e+06	1.647e+06	-3.785e+05
237	6.13	145.10	-116.45	-111.61	140.25	35.27	1.974e+06	3.907e+05	1.948e+06	4.174e+05	-2.036e+05
241	6.63	173.44	-91.27	-72.26	154.42	68.35	2.237e+06	6.436e+05	2.129e+06	7.512e+05	-3.998e+05
239	13.87	502.81	15.81	52.15	466.47	127.97	4.984e+06	2.073e+06	4.784e+06	2.272e+06	-7.357e+05

462	1241	8.64	226.86	-121.57	-118.39	223.68	-33.15	2.909e+06	8.363e+05	2.884e+06	8.615e+05	2.272e+05
	237	8.00	190.79	-154.87	-136.62	172.53	-77.30	2.570e+06	4.970e+05	2.451e+06	6.167e+05	4.835e+05
	265	5.04	-275.39	-293.78	-280.54	-288.63	8.26	-1.370e+06	-1.398e+06	-1.392e+06	-1.375e+06	-1.132e+04
462	2241	6.64	174.51	-93.52	-91.07	172.06	-25.50	2.238e+06	6.433e+05	2.218e+06	6.627e+05	1.747e+05
	237	6.15	146.76	-119.13	-105.09	132.72	-59.46	1.977e+06	3.823e+05	1.885e+06	4.744e+05	3.719e+05
	265	3.88	-211.84	-225.99	-215.80	-222.03	6.35	-1.054e+06	-1.075e+06	-1.071e+06	-1.058e+06	-8704.25
463	1 28	5.34	19.80	-315.78	13.87	-309.85	44.23	7.177e+04	-2030.18	-1922.11	7.166e+04	2822.08
	35	6.88	20.25	-285.07	2.44	-267.26	71.55	1.210e+05	-1.437e+04	3.609e+04	7.049e+04	-6.544e+04
	73	6.29	34.71	-350.16	26.17	-341.62	-56.70	1.065e+05	-1.246e+04	1.049e+04	8.351e+04	-4.692e+04
	68	4.97	-2.66	-309.40	-11.08	-300.99	-50.11	6.799e+04	-3161.45	-2035.50	6.686e+04	-8879.28
463	2 28	4.11	15.23	-242.91	10.67	-238.34	34.02	5.521e+04	-1561.68	-1478.55	5.513e+04	2170.83
	35	5.29	15.57	-219.28	1.88	-205.58	55.04	9.304e+04	-1.106e+04	2.776e+04	5.422e+04	-5.034e+04
	73	4.84	26.70	-269.35	20.13	-262.78	-43.62	8.189e+04	-9581.23	8065.97	6.424e+04	-3.609e+04
	68	3.82	-2.05	-238.00	-8.52	-231.53	-38.55	5.230e+04	-2431.88	-1565.77	5.143e+04	-6830.22
464	1 35	6.12	39.63	-277.90	25.68	-263.95	65.08	1.334e+05	-9262.31	2.878e+04	9.539e+04	-6.309e+04
	41	8.47	55.60	-284.50	29.06	-257.96	91.23	2.180e+05	-1.130e+04	9.875e+04	1.079e+05	-1.145e+05
	79	6.99	53.05	-341.33	46.31	-334.59	-51.12	1.937e+05	3.027e+04	7.535e+04	1.487e+05	-7.306e+04
	73	6.07	26.59	-330.38	18.45	-322.24	-53.28	1.309e+05	-1.092e+04	4687.95	1.153e+05	-4.440e+04
464	2 35	4.71	30.49	-213.77	19.75	-203.04	50.06	1.026e+05	-7124.86	2.214e+04	7.338e+04	-4.853e+04
	41	6.52	42.77	-218.85	22.35	-198.43	70.18	1.677e+05	-8690.07	7.596e+04	8.302e+04	-8.811e+04
	79	5.38	40.81	-262.56	35.62	-257.38	-39.32	1.490e+05	2.328e+04	5.796e+04	1.143e+05	-5.620e+04
	73	4.67	20.46	-254.14	14.20	-247.88	-40.98	1.007e+05	-8401.93	3606.12	8.872e+04	-3.415e+04
465	1 41	7.41	69.07	-263.08	46.45	-240.46	83.67	2.336e+05	-4293.48	8.993e+04	1.394e+05	-1.163e+05
	46	10.38	105.99	-275.58	63.99	-233.57	119.43	3.578e+05	1193.52	1.937e+05	1.653e+05	-1.777e+05
	84	7.96	69.25	-330.44	62.86	-324.04	-50.14	3.192e+05	1.296e+05	2.005e+05	2.483e+05	-9.171e+04
	79	6.67	49.35	-307.19	42.94	-300.77	-47.40	2.246e+05	3.501e+04	6.709e+04	1.925e+05	-7.108e+04
465	2 41	5.70	53.13	-202.37	35.73	-184.97	64.36	1.797e+05	-3302.67	6.918e+04	1.072e+05	-8.950e+04
	46	7.99	81.53	-211.98	49.22	-179.67	91.87	2.752e+05	918.09	1.490e+05	1.272e+05	-1.367e+05
	84	6.12	53.27	-254.18	48.35	-249.27	-38.57	2.455e+05	9.971e+04	1.542e+05	1.910e+05	-7.055e+04
	79	5.13	37.96	-236.30	33.03	-231.36	-36.46	1.727e+05	2.693e+04	5.161e+04	1.481e+05	-5.468e+04
466	1 46	9.44	84.22	-302.46	45.88	-264.11	115.57	3.891e+05	2.087e+04	1.889e+05	2.211e+05	-1.834e+05
	53	13.04	234.52	-170.21	171.78	-107.47	146.47	5.373e+05	-6.221e+04	2.827e+05	1.924e+05	-2.963e+05
	92	10.88	27.16	-395.83	22.98	-391.66	-41.83	5.134e+05	3.678e+05	4.128e+05	4.684e+05	-6.727e+04
	84	6.85	99.41	-224.37	88.89	-213.85	-57.40	3.417e+05	1.362e+05	1.862e+05	2.918e+05	-8.818e+04
466	2 46	7.26	64.78	-232.66	35.29	-203.17	88.90	2.993e+05	1.605e+04	1.453e+05	1.701e+05	-1.411e+05
	53	10.03	180.40	-130.93	132.14	-82.67	112.67	4.133e+05	-4.785e+04	2.174e+05	1.480e+05	-2.280e+05
	92	8.37	20.89	-304.49	17.68	-301.27	-32.18	3.949e+05	2.829e+05	3.175e+05	3.603e+05	-5.174e+04
	84	5.27	76.47	-172.59	68.38	-164.50	-44.15	2.629e+05	1.048e+05	1.432e+05	2.244e+05	-6.783e+04
467	1 53	11.27	143.29	-200.17	34.89	-91.78	159.63	6.095e+05	6.933e+04	4.278e+05	2.510e+05	-2.552e+05
	59	14.44	163.01	-241.85	91.11	-169.96	154.72	8.247e+05	1.203e+05	6.101e+05	3.348e+05	-3.242e+05
	97	12.07	206.64	-225.32	206.46	-225.14	8.93	7.512e+05	2.372e+05	4.655e+05	5.228e+05	-2.554e+05
	92	11.46	212.56	-269.74	208.46	-265.64	-44.32	6.122e+05	7.454e+04	1.485e+05	5.382e+05	-1.852e+05
467	2 53	8.67	110.22	-153.98	26.84	-70.60	122.79	4.688e+05	5.333e+04	3.290e+05	1.931e+05	-1.963e+05
	59	11.11	125.39	-186.04	70.09	-130.74	119.01	6.344e+05	9.252e+04	4.693e+05	2.576e+05	-2.494e+05
	97	9.29	158.96	-173.32	158.81	-173.18	6.87	5.778e+05	1.824e+05	3.581e+05	4.021e+05	-1.965e+05
	92	8.82	163.51	-207.49	160.35	-204.34	-34.09	4.709e+05	5.734e+04	1.142e+05	4.140e+05	-1.425e+05

468 1	59	12.63	186.65-170.16	96.44	-79.94	155.08	8.403e+05	1.283e+05	5.938e+05	3.748e+05	-3.387e+05
	64	16.54	227.14-183.86	115.63	-72.36	182.74	1.122e+06	1.721e+05	8.560e+05	4.379e+05	-4.263e+05
	103	14.61	253.59-210.94	250.89	-208.24	35.29	1.101e+06	4.144e+05	7.810e+05	7.343e+05	-3.425e+05
	97	11.26	217.85-159.01	217.67	-158.84	8.20	8.181e+05	2.766e+05	4.436e+05	6.510e+05	-2.501e+05
468 2	59	9.71	143.58-130.89	74.18	-61.50	119.29	6.464e+05	9.868e+04	4.567e+05	2.883e+05	-2.606e+05
	64	12.72	174.72-141.43	88.95	-55.66	140.57	8.629e+05	1.324e+05	6.584e+05	3.368e+05	-3.280e+05
	103	11.24	195.07-162.26	192.99	-160.18	27.15	8.469e+05	3.187e+05	6.008e+05	5.649e+05	-2.635e+05
	97	8.66	167.58-122.32	167.44	-122.18	6.30	6.293e+05	2.127e+05	3.412e+05	5.008e+05	-1.924e+05
469 1	64	14.46	245.65-130.58	127.15	-12.08	174.76	1.140e+06	1.959e+05	8.366e+05	4.990e+05	-4.407e+05
	71	18.78	288.23-150.89	144.62	-7.29	206.00	1.498e+06	2.582e+05	1.177e+06	5.798e+05	-5.435e+05
	112	17.53	301.53-155.42	291.87	-145.77	65.70	1.527e+06	6.071e+05	1.147e+06	9.876e+05	-4.531e+05
	103	13.23	258.90-91.32	254.14	-86.57	40.54	1.161e+06	4.680e+05	7.575e+05	8.719e+05	-3.419e+05
469 2	64	11.12	188.96-100.45	97.81	-9.29	134.43	8.767e+05	1.507e+05	6.435e+05	3.838e+05	-3.390e+05
	71	14.45	221.71-116.07	111.25	-5.60	158.47	1.153e+06	1.986e+05	9.053e+05	4.460e+05	-4.181e+05
	112	13.48	231.94-119.56	224.52	-112.13	50.54	1.175e+06	4.670e+05	8.821e+05	7.597e+05	-3.485e+05
	103	10.18	199.15-70.25	195.49	-66.59	31.18	8.934e+05	3.600e+05	5.827e+05	6.707e+05	-2.630e+05
470 1	71	16.52	311.55-95.16	153.43	62.96	198.26	1.518e+06	2.906e+05	1.155e+06	6.538e+05	-5.603e+05
	81	21.13	354.35-117.43	172.26	64.66	229.67	1.957e+06	3.705e+05	1.573e+06	7.544e+05	-6.794e+05
	114	20.46	356.98-94.14	335.83	-73.00	95.35	2.036e+06	8.317e+05	1.578e+06	1.290e+06	-5.848e+05
	112	15.95	312.17-15.88	296.28	4.95e-03	70.42	1.591e+06	6.816e+05	1.121e+06	1.152e+06	-4.545e+05
470 2	71	12.71	239.65-73.20	118.02	48.43	152.51	1.168e+06	2.235e+05	8.882e+05	5.030e+05	-4.310e+05
	81	16.25	272.58-90.33	132.51	49.74	176.67	1.505e+06	2.850e+05	1.210e+06	5.803e+05	-5.226e+05
	114	15.74	274.60-72.42	258.33	-56.15	73.35	1.566e+06	6.398e+05	1.214e+06	9.925e+05	-4.498e+05
	112	12.27	240.13-12.21	227.91	3.81e-03	54.17	1.224e+06	5.243e+05	8.620e+05	8.862e+05	-3.496e+05
471 1	81	18.72	385.45-60.85	178.04	146.56	222.59	1.978e+06	4.121e+05	1.548e+06	8.423e+05	-6.990e+05
	90	23.56	425.89-83.03	199.36	143.49	252.92	2.503e+06	5.093e+05	2.049e+06	9.630e+05	-8.358e+05
	123	23.40	420.14-31.20	382.19	6.74	125.25	2.640e+06	1.096e+06	2.088e+06	1.648e+06	-7.396e+05
	114	18.71	377.3361.48	341.95	96.85	99.61	2.107e+06	9.291e+05	1.549e+06	1.487e+06	-5.879e+05
471 2	81	14.40	296.50-46.81	136.96	112.74	171.23	1.522e+06	3.170e+05	1.191e+06	6.480e+05	-5.377e+05
	90	18.12	327.61-63.87	153.36	110.38	194.56	1.925e+06	3.918e+05	1.576e+06	7.408e+05	-6.430e+05
	123	18.00	323.18-24.00	293.99	5.19	96.34	2.031e+06	8.433e+05	1.606e+06	1.267e+06	-5.689e+05
	114	14.39	290.2547.29	263.04	74.50	76.62	1.620e+06	7.147e+05	1.191e+06	1.144e+06	-4.522e+05
472 1	90	21.00	466.96-27.61	202.16	237.19	246.66	2.526e+06	5.616e+05	2.021e+06	1.067e+06	-8.585e+05
	101	26.07	501.94-48.76	226.43	226.75	275.35	3.146e+06	6.783e+05	2.616e+06	1.209e+06	-1.014e+06
	127	26.40	490.8830.76	430.25	91.40	155.63	3.353e+06	1.408e+06	2.695e+06	2.066e+06	-9.198e+05
	123	21.50	455.53135.60	390.10	201.04	129.05	2.718e+06	1.219e+06	2.056e+06	1.880e+06	-7.444e+05
472 2	90	16.16	359.20-21.24	155.50	182.46	189.74	1.943e+06	4.320e+05	1.555e+06	8.204e+05	-6.604e+05
	101	20.06	386.11-37.51	174.17	174.42	211.81	2.420e+06	5.218e+05	2.012e+06	9.299e+05	-7.799e+05
	127	20.31	377.6023.67	330.96	70.30	119.72	2.579e+06	1.083e+06	2.073e+06	1.589e+06	-7.075e+05
	123	16.54	350.41104.31	300.07	154.65	99.27	2.091e+06	9.375e+05	1.582e+06	1.446e+06	-5.726e+05
473 1	101	23.38	554.45 4.03	226.23	332.26	270.06	3.172e+06	7.429e+05	2.585e+06	1.330e+06	-1.040e+06
	106	28.68	580.90-15.75	253.57	311.58	296.91	3.902e+06	8.847e+05	3.290e+06	1.496e+06	-1.213e+06
	140	29.55	568.2989.40	479.47	178.22	186.14	4.196e+06	1.776e+06	3.422e+06	2.550e+06	-1.129e+06
	127	24.36	546.56203.27	439.80	310.03	158.91	3.439e+06	1.558e+06	2.660e+06	2.338e+06	-9.266e+05
473 2	101	17.98	426.50 3.10	174.02	255.59	207.73	2.440e+06	5.714e+05	1.988e+06	1.023e+06	-7.998e+05
	106	22.06	446.85-12.12	195.05	239.68	228.39	3.002e+06	6.805e+05	2.531e+06	1.151e+06	-9.330e+05

140	22.73	437.1568.77	368.83	137.09	143.18	3.228e+06	1.366e+06	2.632e+06	1.962e+06	-8.681e+05
127	18.74	420.43156.36	338.31	238.48	122.24	2.646e+06	1.199e+06	2.046e+06	1.798e+06	-7.128e+05
474 1106	25.85	645.6333.54	250.48	428.69	292.79	3.929e+06	9.633e+05	3.256e+06	1.636e+06	-1.242e+06
116	31.45	660.6614.77	280.93	394.50	317.91	4.791e+06	1.139e+06	4.101e+06	1.829e+06	-1.429e+06
149	32.93	650.43142.71	529.77	263.37	216.11	5.199e+06	2.211e+06	4.304e+06	3.106e+06	-1.369e+06
140	27.35	647.48263.57	490.44	420.61	188.76	4.291e+06	1.957e+06	3.383e+06	2.864e+06	-1.138e+06
474 2106	19.89	496.6425.80	192.68	329.76	225.22	3.022e+06	7.410e+05	2.505e+06	1.258e+06	-9.553e+05
116	24.19	508.2011.36	216.10	303.46	244.55	3.685e+06	8.765e+05	3.155e+06	1.407e+06	-1.099e+06
149	25.33	500.33109.78	407.52	202.59	166.24	4.000e+06	1.701e+06	3.311e+06	2.389e+06	-1.053e+06
140	21.04	498.06202.75	377.26	323.55	145.20	3.301e+06	1.505e+06	2.602e+06	2.203e+06	-8.752e+05
475 1116	28.48	737.5060.23	275.21	522.51	315.26	4.818e+06	1.234e+06	4.064e+06	1.989e+06	-1.461e+06
125	34.44	738.6741.17	309.06	470.77	339.25	5.845e+06	1.459e+06	5.093e+06	2.211e+06	-1.653e+06
158	36.71	734.36188.69	581.90	341.14	244.85	6.411e+06	2.724e+06	5.400e+06	3.735e+06	-1.645e+06
149	30.54	752.92317.09	541.82	528.19	217.81	5.301e+06	2.425e+06	4.261e+06	3.465e+06	-1.381e+06
475 2116	21.90	567.3146.33	211.70	401.93	242.50	3.706e+06	9.492e+05	3.126e+06	1.530e+06	-1.124e+06
125	26.49	568.2031.67	237.74	362.13	260.96	4.496e+06	1.122e+06	3.918e+06	1.700e+06	-1.271e+06
158	28.24	564.89145.14	447.62	262.42	188.34	4.931e+06	2.095e+06	4.154e+06	2.873e+06	-1.265e+06
149	23.50	579.17243.91	416.78	406.30	167.55	4.077e+06	1.866e+06	3.278e+06	2.665e+06	-1.063e+06
476 1125	31.31	826.2082.61	300.94	607.88	338.64	5.870e+06	1.571e+06	5.051e+06	2.390e+06	-1.688e+06
136	37.80	812.5160.67	339.46	533.73	363.15	7.113e+06	1.866e+06	6.342e+06	2.638e+06	-1.858e+06
168	41.16	816.86223.58	638.34	402.09	272.11	7.911e+06	3.325e+06	6.810e+06	4.426e+06	-1.959e+06
158	34.07	855.62364.58	594.51	625.68	245.03	6.514e+06	2.976e+06	5.351e+06	4.139e+06	-1.662e+06
476 2125	24.08	635.5463.55	231.49	467.60	260.50	4.515e+06	1.209e+06	3.885e+06	1.838e+06	-1.298e+06
136	29.08	625.0146.67	261.12	410.56	279.35	5.472e+06	1.435e+06	4.878e+06	2.029e+06	-1.429e+06
168	31.66	628.35171.98	491.03	309.30	209.31	6.085e+06	2.558e+06	5.239e+06	3.405e+06	-1.507e+06
158	26.21	658.17280.44	457.32	481.30	188.48	5.011e+06	2.289e+06	4.116e+06	3.184e+06	-1.278e+06
477 1136	34.48	906.0895.66	328.30	673.45	366.62	7.129e+06	1.997e+06	6.292e+06	2.834e+06	-1.896e+06
153	41.80	882.3870.97	376.95	576.40	393.26	8.687e+06	2.389e+06	7.982e+06	3.094e+06	-1.986e+06
180	46.82	898.00232.83	705.28	425.54	301.74	9.849e+06	4.005e+06	8.721e+06	5.132e+06	-2.306e+06
168	38.17	946.90407.23	651.26	702.88	268.60	8.008e+06	3.618e+06	6.752e+06	4.874e+06	-1.984e+06
477 2136	26.52	696.9873.59	252.54	518.04	282.02	5.484e+06	1.536e+06	4.840e+06	2.180e+06	-1.459e+06
153	32.15	678.7654.59	289.96	443.39	302.51	6.682e+06	1.837e+06	6.140e+06	2.380e+06	-1.528e+06
180	36.01	690.77179.10	542.53	327.34	232.11	7.576e+06	3.080e+06	6.708e+06	3.948e+06	-1.774e+06
168	29.36	728.39313.25	500.97	540.68	206.62	6.160e+06	2.783e+06	5.194e+06	3.749e+06	-1.526e+06
478 1153	38.17	959.8950.83	341.67	669.05	424.03	8.651e+06	2.517e+06	7.905e+06	3.263e+06	-2.005e+06
165	47.43	944.80130.55	435.53	639.82	394.10	1.081e+07	3.070e+06	1.029e+07	3.592e+06	-1.940e+06
189	54.56	1013.6480.67	784.99	309.32	401.30	1.249e+07	4.648e+06	1.150e+07	5.630e+06	-2.595e+06
180	43.45	1014.63465.78	714.80	765.60	273.24	9.950e+06	4.344e+06	8.640e+06	5.655e+06	-2.373e+06
478 2153	29.36	738.3839.10	262.82	514.66	326.18	6.655e+06	1.936e+06	6.081e+06	2.510e+06	-1.542e+06
165	36.49	726.77100.42	335.02	492.17	303.15	8.313e+06	2.362e+06	7.912e+06	2.763e+06	-1.492e+06
189	41.97	779.7262.05	603.84	237.94	308.69	9.605e+06	3.575e+06	8.850e+06	4.331e+06	-1.996e+06
180	33.42	780.48358.29	549.85	588.93	210.19	7.654e+06	3.342e+06	6.646e+06	4.350e+06	-1.825e+06
479 1165	30.67	1543.57168.50	331.69	1380.37	444.72	1.105e+07	4.568e+06	1.022e+07	5.389e+06	-2.155e+06
176	34.87	1835.29497.46	497.84	1834.90	-22.72	1.228e+07	4.404e+06	1.206e+07	4.619e+06	-1.282e+06
199	43.84	1614.86255.21	616.12	1253.95	600.38	1.576e+07	7.195e+06	1.423e+07	8.727e+06	-3.283e+06
189	37.36	2246.51831.80	906.01	2172.30	315.40	1.281e+07	6.508e+06	1.113e+07	8.190e+06	-2.788e+06

479	2165	23.59	1187.36	129.61	255.15	1061.83	342.09	8.496e+06	3.514e+06	7.865e+06	4.145e+06	-1.658e+06
	176	26.82	1411.76	382.66	382.96	1411.46	-17.48	9.445e+06	3.388e+06	9.280e+06	3.553e+06	-9.864e+05
	199	33.72	1242.20	196.31	473.94	964.57	461.83	1.213e+07	5.535e+06	1.095e+07	6.713e+06	-2.525e+06
	189	28.73	1728.09	639.85	696.93	1671.00	242.61	9.853e+06	5.006e+06	8.559e+06	6.300e+06	-2.144e+06
480	1176	37.30	1702.89	227.59	255.74	1674.74	201.84	1.315e+07	4.237e+06	1.272e+07	4.663e+06	-1.901e+06
	191	30.71	1082.5	322.73	133.17	972.09	323.80	1.079e+07	3.565e+06	1.020e+07	4.157e+06	-1.982e+06
	210	34.14	1487.51	311.29	441.50	1357.30	369.06	1.221e+07	5.223e+06	1.138e+07	6.055e+06	-2.262e+06
	199	44.71	1751.58	174.32	574.23	1351.67	686.17	1.613e+07	7.288e+06	1.467e+07	8.749e+06	-3.284e+06
480	2176	28.69	1309.92	175.07	196.72	1288.26	155.26	1.011e+07	3.259e+06	9.785e+06	3.587e+06	-1.462e+06
	191	23.62	832.7	217.49	102.44	747.76	249.08	8.298e+06	2.742e+06	7.842e+06	3.198e+06	-1.524e+06
	210	26.26	1144.24	239.45	339.62	1044.07	283.89	9.391e+06	4.018e+06	8.751e+06	4.657e+06	-1.740e+06
	199	34.39	1347.37	134.09	441.72	1039.75	527.83	1.241e+07	5.606e+06	1.129e+07	6.730e+06	-2.526e+06
481	1191	30.12	1218.77	1.31	73.84	1146.24	288.17	1.050e+07	3.383e+06	1.006e+07	3.824e+06	-1.715e+06
	203	22.47	816.61	-74.80	-10.40	752.20	230.79	7.722e+06	2.279e+06	7.354e+06	2.648e+06	-1.367e+06
	216	25.40	1000.4	684.12	214.10	870.48	319.71	9.125e+06	3.655e+06	8.347e+06	4.433e+06	-1.910e+06
	210	34.59	1365.65	165.19	362.04	1168.80	444.48	1.248e+07	5.329e+06	1.141e+07	6.389e+06	-2.540e+06
481	2191	23.17	937.52	1.01	56.80	881.72	221.67	8.077e+06	2.602e+06	7.738e+06	2.941e+06	-1.319e+06
	203	17.28	628.16	-57.54	-8.00	578.62	177.53	5.940e+06	1.753e+06	5.657e+06	2.037e+06	-1.052e+06
	216	19.54	769.5	964.70	164.69	669.60	245.93	7.019e+06	2.812e+06	6.421e+06	3.410e+06	-1.469e+06
	210	26.61	1050.50	127.07	278.49	899.08	341.90	9.596e+06	4.099e+06	8.781e+06	4.915e+06	-1.954e+06
482	1203	22.48	841.32	-79.35	-17.43	779.40	230.60	7.704e+06	2.240e+06	7.346e+06	2.598e+06	-1.353e+06
	218	14.71	481.35	-140.04	-97.40	438.72	157.08	4.869e+06	1.108e+06	4.619e+06	1.359e+06	-9.382e+05
	227	16.66	587.57	-38.77	54.49	494.31	222.97	5.855e+06	2.077e+06	5.304e+06	2.627e+06	-1.333e+06
	216	25.51	984.4	664.57	206.22	842.81	332.02	9.154e+06	3.678e+06	8.350e+06	4.483e+06	-1.939e+06
482	2203	17.29	647.17	-61.04	-13.40	599.54	177.39	5.927e+06	1.723e+06	5.651e+06	1.999e+06	-1.040e+06
	218	11.31	370.27	-107.72	-74.92	337.47	120.83	3.746e+06	8.523e+05	3.553e+06	1.045e+06	-7.217e+05
	227	12.82	451.97	-29.83	41.91	380.24	171.51	4.504e+06	1.597e+06	4.080e+06	2.021e+06	-1.025e+06
	216	19.62	757.2	849.67	158.63	648.31	255.40	7.042e+06	2.829e+06	6.423e+06	3.448e+06	-1.491e+06
483	1218	14.75	485.08	-144.80	-100.36	440.64	161.31	4.874e+06	1.093e+06	4.620e+06	1.347e+06	-9.474e+05
	233	7.09	129.82	-204.46	-181.94	107.30	83.79	2.026e+06	-2.150e+04	1.891e+06	1.140e+05	-5.090e+05
	237	7.97	187.22	-151.14	-100.60	136.67	120.61	2.566e+06	5.037e+05	2.266e+06	8.042e+05	-7.277e+05
	227	16.70	589.03	-44.31	54.96	489.75	230.25	5.863e+06	2.079e+06	5.300e+06	2.641e+06	-1.346e+06
483	2218	11.35	373.14	-111.38	-77.20	338.95	124.08	3.750e+06	8.407e+05	3.554e+06	1.036e+06	-7.287e+05
	233	5.45	99.86	-157.27	-139.95	82.54	64.45	1.559e+06	-1.654e+04	1.454e+06	8.767e+04	-3.915e+05
	237	6.13	144.01	-116.26	-77.38	105.13	92.78	1.974e+06	3.875e+05	1.743e+06	6.187e+05	-5.598e+05
	227	12.85	453.10	-34.08	42.28	376.73	177.12	4.510e+06	1.599e+06	4.077e+06	2.032e+06	-1.035e+06
484	1237	8.00	190.48	-155.82	-155.43	190.09	11.67	2.573e+06	5.017e+05	2.572e+06	5.026e+05	-4.224e+04
	233	7.16	134.11	-209.86	-206.21	130.46	-35.24	2.034e+06	-3.876e+04	2.008e+06	-1.271e+04	2.309e+05
	265	5.04	-275.31	-294.65	-277.72	-292.23	6.39	-1.369e+06	-1.397e+06	-1.395e+06	-1.371e+06	-8056.60
484	2237	6.15	146.53	-119.86	-119.56	146.22	8.98	1.979e+06	3.860e+05	1.978e+06	3.866e+05	-3.249e+04
	233	5.51	103.16	-161.43	-158.62	100.36	-27.11	1.565e+06	-2.982e+04	1.545e+06	-9778.48	1.776e+05
	265	3.88	-211.77	-226.65	-213.63	-224.79	4.92	-1.053e+06	-1.075e+06	-1.073e+06	-1.055e+06	-6197.38
485	1 28	3.45	-10.19	-246.46	-240.84	-15.80	35.99	4.270e+04	-3146.22	4.062e+04	-1069.49	9533.71
	10	3.61	21.20	-203.37	-199.52	17.36	-29.13	4.912e+04	-1818.77	4.912e+04	-1809.99	-668.69
	15	6.91	14.36	-174.20	-147.78	-12.06	-65.45	1.231e+05	-4.389e+04	4.312e+04	3.612e+04	8.344e+04
	35	6.15	35.91	-272.53	-269.40	32.79	30.88	1.020e+05	-4.818e+04	5.659e+04	-2741.96	6.900e+04

485	2	28	2.65	-7.84	-189.58	-185.26	-12.16	27.68	3.284e+04	-2420.17	3.125e+04	-822.69	7333.62
		10	2.78	16.31	-156.44	-153.48	13.35	-22.40	3.779e+04	-1399.06	3.778e+04	-1392.30	-514.38
		15	5.31	11.05	-134.00	-113.67	-9.28	-50.35	9.471e+04	-3.376e+04	3.317e+04	2.778e+04	6.418e+04
		35	4.73	27.62	-209.64	-207.23	25.22	23.75	7.849e+04	-3.707e+04	4.353e+04	-2109.20	5.308e+04
486	1	35	5.44	21.50	-259.10	-255.93	18.34	29.63	1.150e+05	-4.304e+04	7.924e+04	-7279.70	6.612e+04
		15	5.62	33.30	-169.53	-150.13	13.89	-59.66	1.260e+05	-3.773e+04	5.757e+04	3.069e+04	8.075e+04
		20	8.92	41.77	-179.61	-134.29	-3.54	-89.32	2.132e+05	-6.776e+04	5.510e+04	9.033e+04	1.394e+05
		41	7.78	60.77	-254.16	-253.66	60.27	12.59	1.948e+05	-5.021e+04	1.111e+05	3.349e+04	1.162e+05
486	2	35	4.18	16.54	-199.31	-196.87	14.11	22.79	8.846e+04	-3.311e+04	6.095e+04	-5599.77	5.086e+04
		15	4.32	25.62	-130.41	-115.48	10.69	-45.89	9.691e+04	-2.902e+04	4.428e+04	2.361e+04	6.211e+04
		20	6.86	32.13	-138.16	-103.30	-2.72	-68.71	1.640e+05	-5.213e+04	4.238e+04	6.949e+04	1.072e+05
		41	5.98	46.75	-195.51	-195.12	46.36	9.68	1.498e+05	-3.862e+04	8.546e+04	2.576e+04	8.938e+04
487	1	41	6.90	52.64	-227.92	-227.40	52.11	12.11	2.145e+05	-4.363e+04	1.452e+05	2.566e+04	1.144e+05
		20	7.50	53.49	-168.08	-130.42	15.84	-83.22	2.211e+05	-6.539e+04	7.116e+04	8.454e+04	1.431e+05
		23	10.10	74.40	-167.86	-98.91	5.45	-109.32	3.130e+05	-8.186e+04	5.837e+04	1.727e+05	1.890e+05
		46	9.71	89.20	-236.99	-236.44	88.65	-13.44	3.369e+05	-3.379e+04	1.913e+05	1.118e+05	1.810e+05
487	2	41	5.31	40.49	-175.32	-174.92	40.09	9.32	1.650e+05	-3.356e+04	1.117e+05	1.974e+04	8.800e+04
		20	5.77	41.15	-129.29	-100.33	12.18	-64.01	1.701e+05	-5.030e+04	5.474e+04	6.503e+04	1.101e+05
		23	7.77	57.23	-129.12	-76.09	4.20	-84.09	2.407e+05	-6.297e+04	4.490e+04	1.329e+05	1.453e+05
		46	7.47	68.62	-182.30	-181.88	68.19	-10.34	2.591e+05	-2.599e+04	1.471e+05	8.599e+04	1.392e+05
488	1	46	7.93	121.90	-119.24	-119.23	121.89	-1.67	3.434e+05	-2.885e+04	2.220e+05	9.256e+04	1.745e+05
		23	9.04	34.83	-229.24	-176.64	-17.77	-105.46	3.410e+05	-7.246e+04	9.568e+04	1.728e+05	2.031e+05
		30	9.81	188.02	-28.62	71.23	88.16	-107.99	3.404e+05	-1.557e+05	-7.473e+04	2.595e+05	1.833e+05
		53	14.40	58.13	-326.79	-314.66	46.01	-67.24	6.350e+05	8228.06	3.635e+05	2.797e+05	3.106e+05
488	2	46	6.10	93.77	-91.72	-91.71	93.76	-1.29	2.641e+05	-2.219e+04	1.707e+05	7.120e+04	1.342e+05
		23	6.96	26.79	-176.34	-135.88	-13.67	-81.12	2.623e+05	-5.574e+04	7.360e+04	1.329e+05	1.562e+05
		30	7.55	144.63	-22.02	54.79	67.82	-83.07	2.618e+05	-1.197e+05	-5.749e+04	1.996e+05	1.410e+05
		53	11.08	44.72	-251.38	-242.05	35.39	-51.72	4.884e+05	6329.28	2.796e+05	2.152e+05	2.389e+05
489	1	53	9.50	137.52	-228.38	-228.25	137.39	-6.89	5.323e+05	1.230e+05	4.455e+05	2.098e+05	1.673e+05
		30	16.98	184.27	-153.41	21.40	9.46	-168.73	6.019e+05	-4.144e+05	-1.130e+05	3.005e+05	4.642e+05
		37	16.39	169.48	-208.19	-91.00	52.29	-174.72	7.516e+05	-1.820e+05	1.466e+05	4.231e+05	4.459e+05
		59	13.44	155.16	-156.06	-138.22	137.32	-72.35	7.544e+05	5.816e+04	4.263e+05	3.863e+05	3.476e+05
489	2	53	7.31	105.79	-175.68	-175.58	105.69	-5.30	4.095e+05	9.464e+04	3.427e+05	1.614e+05	1.287e+05
		30	13.06	141.74	-118.00	16.46	7.28	-129.79	4.630e+05	-3.187e+05	-8.691e+04	2.312e+05	3.571e+05
		37	12.61	130.37	-160.15	-70.00	40.23	-134.40	5.782e+05	-1.400e+05	1.127e+05	3.255e+05	3.430e+05
		59	10.33	119.36	-120.05	-106.32	105.63	-55.66	5.803e+05	4.474e+04	3.280e+05	2.971e+05	2.674e+05
490	1	59	12.05	165.31	-121.44	-103.05	146.92	-70.25	8.062e+05	1.046e+05	5.371e+05	3.737e+05	3.412e+05
		37	14.61	191.40	-167.71	-29.10	52.79	-174.82	7.591e+05	-2.180e+05	1.250e+05	4.162e+05	4.663e+05
		44	17.86	234.05	-184.18	0.96	48.91	-207.74	1.002e+06	-1.625e+05	2.167e+05	6.228e+05	5.458e+05
		64	16.04	215.42	-178.48	-151.99	188.92	-98.66	1.078e+06	1.272e+05	6.116e+05	5.935e+05	4.752e+05
490	2	59	9.27	127.16	-93.42	-79.27	113.02	-54.04	6.202e+05	8.047e+04	4.132e+05	2.875e+05	2.624e+05
		37	11.24	147.23	-129.01	-22.39	40.61	-134.48	5.840e+05	-1.677e+05	9.612e+04	3.202e+05	3.587e+05
		44	13.74	180.04	-141.67	0.74	37.62	-159.80	7.708e+05	-1.250e+05	1.667e+05	4.790e+05	4.198e+05
		64	12.34	165.70	-137.29	-116.91	145.33	-75.89	8.291e+05	9.788e+04	4.704e+05	4.566e+05	3.656e+05
491	1	64	14.40	226.32	-85.52	-47.67	188.47	-101.84	1.138e+06	1.700e+05	7.294e+05	5.788e+05	4.782e+05
		44	15.76	243.22	-159.78	23.84	59.60	-200.71	1.014e+06	-1.735e+05	2.308e+05	6.098e+05	5.628e+05

	50	19.86	291.74-179.40	54.24	58.11	-235.56	1.324e+06	-1.634e+05	2.942e+05	8.665e+05	6.864e+05
	71	18.42	274.98-155.75	-111.35	230.58	-130.96	1.461e+06	2.201e+05	8.271e+05	8.541e+05	6.203e+05
491 2	64	11.08	174.09-65.79	-36.67	144.98	-78.34	8.755e+05	1.308e+05	5.611e+05	4.452e+05	3.678e+05
	44	12.12	187.09-122.91	18.34	45.85	-154.39	7.801e+05	-1.335e+05	1.776e+05	4.691e+05	4.329e+05
	50	15.28	224.42-138.00	41.72	44.70	-181.20	1.018e+06	-1.257e+05	2.263e+05	6.665e+05	5.280e+05
	71	14.17	211.52-119.81	-85.66	177.37	-100.74	1.124e+06	1.693e+05	6.362e+05	6.570e+05	4.772e+05
492 1	71	16.62	296.03-48.05	15.82	232.16	-133.77	1.534e+06	2.726e+05	9.697e+05	8.365e+05	6.269e+05
	50	17.61	303.04-154.92	82.15	65.97	-228.84	1.338e+06	-1.689e+05	3.180e+05	8.512e+05	7.048e+05
	57	22.03	354.00-175.20	109.94	68.86	-263.80	1.712e+06	-1.716e+05	3.839e+05	1.156e+06	8.589e+05
	81	20.84	340.32-129.86	-61.28	271.73	-165.96	1.920e+06	3.344e+05	1.083e+06	1.172e+06	7.914e+05
492 2	71	12.78	227.71-36.96	12.17	178.59	-102.90	1.180e+06	2.097e+05	7.459e+05	6.435e+05	4.822e+05
	50	13.55	233.11-119.17	63.19	50.75	-176.03	1.029e+06	-1.299e+05	2.446e+05	6.548e+05	5.421e+05
	57	16.95	272.31-134.77	84.57	52.97	-202.92	1.317e+06	-1.320e+05	2.953e+05	8.896e+05	6.607e+05
	81	16.03	261.78-99.90	-47.14	209.02	-127.66	1.477e+06	2.573e+05	8.327e+05	9.013e+05	6.088e+05
493 1	81	18.88	374.59-11.48	87.10	276.01	-168.35	2.005e+06	4.003e+05	1.254e+06	1.151e+06	8.007e+05
	57	19.68	368.31-152.07	143.13	73.11	-257.82	1.728e+06	-1.753e+05	4.134e+05	1.140e+06	8.798e+05
	66	24.27	420.31-171.69	168.75	79.88	-292.65	2.171e+06	-1.801e+05	4.906e+05	1.500e+06	1.062e+06
	90	23.32	411.35-103.75	-5.09	312.69	-202.69	2.464e+06	4.724e+05	1.383e+06	1.553e+06	9.923e+05
493 2	81	14.52	288.14-8.83	67.00	212.31	-129.50	1.542e+06	3.080e+05	9.647e+05	8.857e+05	6.160e+05
	57	15.14	283.31-116.98	110.10	56.24	-198.32	1.329e+06	-1.348e+05	3.180e+05	8.766e+05	6.768e+05
	66	18.67	323.32-132.07	129.81	61.45	-225.11	1.670e+06	-1.385e+05	3.774e+05	1.154e+06	8.165e+05
	90	17.94	316.42-79.81	-3.92	240.53	-155.92	1.896e+06	3.634e+05	1.064e+06	1.195e+06	7.633e+05
494 1	90	21.21	461.0123.18	164.48	319.71	-204.70	2.563e+06	5.539e+05	1.587e+06	1.531e+06	1.004e+06
	66	21.82	438.03-150.68	206.83	80.51	-287.50	2.190e+06	-1.827e+05	5.255e+05	1.482e+06	1.086e+06
	77	26.56	489.35-169.10	229.48	90.76	-321.83	2.708e+06	-1.842e+05	6.174e+05	1.906e+06	1.294e+06
	101	25.88	487.10-78.18	55.45	353.47	-240.17	3.106e+06	6.390e+05	1.735e+06	2.010e+06	1.226e+06
494 2	90	16.31	354.6317.83	126.52	245.93	-157.46	1.972e+06	4.260e+05	1.220e+06	1.177e+06	7.726e+05
	66	16.79	336.94-115.91	159.10	61.93	-221.15	1.684e+06	-1.405e+05	4.042e+05	1.140e+06	8.351e+05
	77	20.43	376.42-130.08	176.52	69.82	-247.57	2.083e+06	-1.417e+05	4.749e+05	1.466e+06	9.958e+05
	101	19.91	374.69-60.14	42.65	271.90	-184.75	2.389e+06	4.915e+05	1.334e+06	1.546e+06	9.429e+05
495 1	101	23.62	553.3355.77	246.05	363.05	-241.80	3.219e+06	7.379e+05	1.972e+06	1.985e+06	1.241e+06
	77	24.02	510.85-150.63	272.40	87.82	-317.61	2.730e+06	-1.854e+05	6.583e+05	1.886e+06	1.322e+06
	88	28.89	559.40-167.65	290.47	101.28	-351.00	3.333e+06	-1.776e+05	7.675e+05	2.388e+06	1.557e+06
	106	28.54	566.01-53.96	118.00	394.05	-277.56	3.860e+06	8.419e+05	2.142e+06	2.560e+06	1.494e+06
495 2	101	18.17	425.6442.90	189.27	279.27	-186.00	2.477e+06	5.676e+05	1.517e+06	1.527e+06	9.544e+05
	77	18.48	392.96-115.87	209.54	67.55	-244.31	2.100e+06	-1.427e+05	5.064e+05	1.451e+06	1.017e+06
	88	22.22	430.31-128.96	223.44	77.91	-270.00	2.564e+06	-1.367e+05	5.904e+05	1.837e+06	1.198e+06
	106	21.95	435.39-41.51	90.77	303.12	-213.51	2.969e+06	6.476e+05	1.647e+06	1.969e+06	1.149e+06
496 1	106	26.14	648.9486.12	329.15	405.91	-278.78	3.988e+06	9.603e+05	2.417e+06	2.532e+06	1.513e+06
	88	26.27	585.04-151.91	338.17	94.96	-347.83	3.358e+06	-1.772e+05	8.150e+05	2.366e+06	1.589e+06
	95	31.25	628.59-167.77	349.41	111.40	-379.98	4.060e+06	-1.506e+05	9.441e+05	2.965e+06	1.847e+06
	116	31.34	646.11-32.11	179.35	434.66	-314.17	4.746e+06	1.093e+06	2.609e+06	3.230e+06	1.800e+06
496 2	106	20.10	499.1866.25	253.19	312.24	-214.45	3.068e+06	7.387e+05	1.859e+06	1.947e+06	1.164e+06
	88	20.20	450.03-116.86	260.13	73.05	-267.56	2.583e+06	-1.363e+05	6.269e+05	1.820e+06	1.222e+06
	95	24.04	483.53-129.06	268.78	85.70	-292.29	3.123e+06	-1.158e+05	7.263e+05	2.281e+06	1.421e+06
	116	24.11	497.01-24.70	137.96	334.35	-241.67	3.651e+06	8.405e+05	2.007e+06	2.485e+06	1.385e+06

497	1116	28.79	744.57	113.77	409.97	448.38	-314.81	4.889e+06	1.233e+06	2.923e+06	3.199e+06	1.823e+06
	95	28.55	658.53	-154.84	401.63	102.06	-378.09	4.088e+06	-1.479e+05	9.987e+05	2.941e+06	1.882e+06
	108	33.65	695.10	-170.57	403.21	121.32	-409.25	4.903e+06	-8.579e+04	1.150e+06	3.667e+06	2.154e+06
	125	34.35	725.24	-14.29	234.86	476.09	-349.54	5.796e+06	1.408e+06	3.137e+06	4.068e+06	2.144e+06
497	2116	22.15	572.75	87.52	315.36	344.91	-242.17	3.761e+06	9.483e+05	2.248e+06	2.461e+06	1.402e+06
	95	21.96	506.56	-119.10	308.94	78.51	-290.84	3.144e+06	-1.138e+05	7.683e+05	2.262e+06	1.448e+06
	108	25.88	534.70	-131.21	310.16	93.32	-314.80	3.772e+06	-6.599e+04	8.845e+05	2.821e+06	1.657e+06
	125	26.42	557.88	-11.00	180.66	366.23	-268.88	4.459e+06	1.083e+06	2.413e+06	3.129e+06	1.649e+06
498	1125	31.64	836.13	137.73	482.78	491.08	-349.18	5.951e+06	1.573e+06	3.491e+06	4.032e+06	2.172e+06
	108	30.86	728.97	-160.71	458.92	109.34	-409.06	4.933e+06	-8.070e+04	1.212e+06	3.640e+06	2.193e+06
	119	36.06	758.08	-178.55	447.84	131.68	-440.83	5.882e+06	4.813e+04	1.385e+06	4.545e+06	2.452e+06
	136	37.71	801.62	-4.38	276.74	520.49	-384.13	7.059e+06	1.814e+06	3.716e+06	5.156e+06	2.522e+06
498	2125	24.34	643.18	105.94	371.37	377.75	-268.60	4.577e+06	1.210e+06	2.685e+06	3.102e+06	1.671e+06
	108	23.74	560.74	-123.63	353.01	84.10	-314.66	3.794e+06	-6.208e+04	9.321e+05	2.800e+06	1.687e+06
	119	27.74	583.14	-137.35	344.49	101.29	-339.10	4.525e+06	3.702e+04	1.066e+06	3.496e+06	1.886e+06
	136	29.01	616.63	-3.37	212.88	400.38	-295.48	5.430e+06	1.395e+06	2.859e+06	3.966e+06	1.940e+06
499	1136	34.81	919.61	157.42	540.36	536.67	-381.09	7.220e+06	2.004e+06	4.111e+06	5.113e+06	2.559e+06
	119	33.20	792.76	-174.74	501.48	116.53	-443.81	5.911e+06	5.345e+04	1.452e+06	4.513e+06	2.497e+06
	129	38.42	821.93	-194.20	482.27	145.47	-479.35	7.021e+06	3.102e+05	1.648e+06	5.683e+06	2.681e+06
	153	41.66	875.97	-17.25	286.04	572.68	-422.99	8.615e+06	2.337e+06	4.305e+06	6.647e+06	2.912e+06
499	2136	26.78	707.39	121.09	415.66	412.82	-293.15	5.554e+06	1.541e+06	3.162e+06	3.933e+06	1.969e+06
	119	25.54	609.81	-134.42	385.76	89.64	-341.39	4.547e+06	4.112e+04	1.117e+06	3.472e+06	1.921e+06
	129	29.55	632.26	-149.39	370.97	111.90	-368.73	5.401e+06	2.386e+05	1.268e+06	4.372e+06	2.062e+06
	153	32.05	673.82	-13.27	220.03	440.52	-325.37	6.627e+06	1.798e+06	3.311e+06	5.113e+06	2.240e+06
500	1153	38.59	999.47	195.70	602.94	592.23	-401.85	8.805e+06	2.566e+06	4.783e+06	6.589e+06	2.986e+06
	129	35.46	828.01	-244.68	476.66	106.67	-503.43	7.012e+06	2.834e+05	1.665e+06	5.631e+06	2.718e+06
	145	40.74	922.29	-168.60	577.80	175.89	-507.08	8.410e+06	8.628e+05	2.014e+06	7.259e+06	2.713e+06
	165	46.68	967.58	-189.53	147.33	630.72	-525.66	1.058e+07	2.943e+06	4.671e+06	8.849e+06	3.195e+06
500	2153	29.68	768.83	150.54	463.80	455.56	-309.12	6.773e+06	1.974e+06	3.679e+06	5.068e+06	2.297e+06
	129	27.28	636.93	-188.22	366.66	82.05	-387.26	5.394e+06	2.180e+05	1.281e+06	4.331e+06	2.091e+06
	145	31.34	709.46	-129.69	444.47	135.30	-390.06	6.469e+06	6.637e+05	1.549e+06	5.584e+06	2.087e+06
	165	35.91	744.30	-145.79	113.33	485.17	-404.35	8.136e+06	2.264e+06	3.593e+06	6.807e+06	2.457e+06
501	1165	32.25	1979.08	616.27	1812.37	782.98	-446.54	1.118e+07	4.040e+06	6.723e+06	8.501e+06	3.460e+06
	145	27.52	1063.46	-248.68	779.68	35.10	-540.21	8.857e+06	1.538e+06	3.072e+06	7.323e+06	2.979e+06
	161	27.44	1511.45	269.77	1496.48	284.74	-135.52	9.052e+06	1.417e+06	2.118e+06	8.350e+06	2.206e+06
	176	37.95	1220.19	-42.13	739.77	438.29	-612.90	1.350e+07	5.154e+06	7.475e+06	1.118e+07	3.739e+06
501	2165	24.81	1522.37	474.05	1394.13	602.29	-343.49	8.604e+06	3.108e+06	5.172e+06	6.540e+06	2.661e+06
	145	21.17	818.05	-191.29	599.76	27.00	-415.55	6.813e+06	1.183e+06	2.363e+06	5.633e+06	2.291e+06
	161	21.11	1162.65	207.52	1151.14	219.03	-104.25	6.963e+06	1.090e+06	1.630e+06	6.423e+06	1.697e+06
	176	29.19	938.61	-32.41	569.05	337.15	-471.46	1.038e+07	3.964e+06	5.750e+06	8.597e+06	2.876e+06
502	1176	39.37	1462.91	-120.15	883.70	459.06	-762.52	1.385e+07	5.088e+06	7.487e+06	1.146e+07	3.908e+06
	161	31.53	1415.43	-66.53	1304.28	44.62	-390.34	9.949e+06	1.121e+06	2.159e+06	8.911e+06	2.844e+06
	178	26.19	796.32	-267.68	575.24	-46.59	-431.69	8.356e+06	1.185e+06	2.359e+06	7.181e+06	2.654e+06
	191	29.18	1306.04	126.21	1077.58	354.67	-466.21	1.024e+07	3.310e+06	4.833e+06	8.721e+06	2.871e+06
502	2176	30.28	1125.31	-92.42	679.77	353.13	-586.55	1.066e+07	3.914e+06	5.759e+06	8.812e+06	3.006e+06
	161	24.25	1088.79	-51.18	1003.29	34.33	-300.26	7.653e+06	8.622e+05	1.661e+06	6.854e+06	2.188e+06

178	20.15	612.56	-205.91	442.49	-35.84	-332.07	6.427e+06	9.113e+05	1.815e+06	5.524e+06	2.041e+06
191	22.44	1004.6	597.08	828.91	272.82	-358.62	7.881e+06	2.546e+06	3.718e+06	6.709e+06	2.209e+06
503 1191	30.36	1162.94	-38.52	835.82	288.61	-534.80	1.059e+07	3.478e+06	5.269e+06	8.799e+06	3.086e+06
178	25.64	969.19	-249.53	806.07	-86.41	-414.96	8.018e+06	9.360e+05	1.924e+06	7.030e+06	2.454e+06
195	19.21	616.03	-272.00	477.89	-133.87	-321.85	5.854e+06	4.308e+05	1.232e+06	5.053e+06	1.924e+06
203	22.37	851.59	-61.07	632.25	158.26	-389.96	7.678e+06	2.229e+06	3.558e+06	6.348e+06	2.340e+06
503 2191	23.35	894.57	-29.63	642.94	222.01	-411.39	8.145e+06	2.676e+06	4.053e+06	6.768e+06	2.374e+06
178	19.72	745.53	-191.95	620.05	-66.47	-319.20	6.168e+06	7.200e+05	1.480e+06	5.408e+06	1.888e+06
195	14.78	473.87	-209.23	367.61	-102.98	-247.58	4.503e+06	3.314e+05	9.477e+05	3.887e+06	1.480e+06
203	17.21	655.07	-46.98	486.35	121.74	-299.97	5.906e+06	1.714e+06	2.737e+06	4.883e+06	1.800e+06
504 1203	22.52	834.04	-85.75	596.31	151.97	-402.67	7.720e+06	2.256e+06	3.624e+06	6.353e+06	2.367e+06
195	19.26	647.67	-273.26	513.46	-139.04	-324.95	5.832e+06	3.795e+05	1.167e+06	5.044e+06	1.917e+06
212	12.71	345.37	-272.51	253.94	-181.08	-219.38	3.585e+06	-1.663e+05	3.820e+05	3.037e+06	1.325e+06
218	14.71	482.71	-139.59	326.51	16.61	-269.82	4.867e+06	1.099e+06	2.035e+06	3.931e+06	1.628e+06
504 2203	17.32	641.57	-65.96	458.70	116.90	-309.75	5.938e+06	1.736e+06	2.787e+06	4.887e+06	1.820e+06
195	14.82	498.21	-210.20	394.97	-106.96	-249.96	4.486e+06	2.919e+05	8.979e+05	3.880e+06	1.475e+06
212	9.77	265.67	-209.62	195.34	-139.29	-168.76	2.758e+06	-1.279e+05	2.938e+05	2.336e+06	1.019e+06
218	11.32	371.31	-107.37	251.16	12.78	-207.55	3.744e+06	8.455e+05	1.565e+06	3.024e+06	1.252e+06
505 1218	14.78	486.74	-147.61	321.27	17.86	-278.54	4.882e+06	1.098e+06	2.053e+06	3.927e+06	1.644e+06
212	12.80	352.09	-279.26	257.14	-184.31	-225.68	3.594e+06	-1.883e+05	3.665e+05	3.040e+06	1.338e+06
231	6.37	54.16	-274.71	6.42	-226.97	-115.84	1.324e+06	-7.141e+05	-4.177e+05	1.028e+06	7.184e+05
233	7.09	128.02	-204.30	44.78	-121.06	-143.99	2.025e+06	-2.697e+04	4.818e+05	1.517e+06	8.862e+05
505 2218	11.37	374.42	-113.55	247.13	13.74	-214.26	3.755e+06	8.444e+05	1.579e+06	3.021e+06	1.264e+06
212	9.85	270.84	-214.82	197.80	-141.78	-173.60	2.765e+06	-1.449e+05	2.819e+05	2.338e+06	1.029e+06
231	4.90	41.66	-211.31	4.94	-174.59	-89.11	1.018e+06	-5.493e+05	-3.213e+05	7.905e+05	5.526e+05
233	5.45	98.48	-157.15	34.45	-93.12	-110.76	1.558e+06	-2.074e+04	3.706e+05	1.167e+06	6.817e+05
506 1233	7.16	133.64	-211.12	-202.15	124.67	54.88	2.038e+06	-3.245e+04	1.991e+06	1.442e+04	-3.080e+05
231	6.49	60.76	-282.13	-281.93	60.55	8.40	1.336e+06	-7.368e+05	1.335e+06	-7.362e+05	-3.663e+04
265	5.04	-275.77	-295.41	-276.25	-294.93	3.03	-1.368e+06	-1.396e+06	-1.396e+06	-1.368e+06	-3100.98
506 2233	5.51	102.80	-162.40	-155.50	95.90	42.22	1.567e+06	-2.496e+04	1.531e+06	1.109e+04	-2.369e+05
231	4.99	46.74	-217.02	-216.87	46.58	6.46	1.028e+06	-5.668e+05	1.027e+06	-5.663e+05	-2.818e+04
265	3.88	-212.13	-227.24	-212.50	-226.87	2.33	-1.052e+06	-1.074e+06	-1.074e+06	-1.053e+06	-2385.37
507 1 10	1.80	-14.41	-100.82	-97.03	-18.20	17.70	2.997e+04	-3787.27	2.687e+04	-690.61	9743.66
2	1.67	21.29	-76.70	-75.84	20.43	-9.15	2.468e+04	-1052.43	2.468e+04	-1052.20	76.42
5	6.59	15.74	-55.89	-21.23	-18.91	-35.80	1.145e+05	-6.609e+04	1.442e+04	3.399e+04	8.976e+04
15	6.56	27.21	-154.91	-154.87	27.18	2.45	1.074e+05	-7.285e+04	4.426e+04	-9660.58	8.602e+04
507 2 10	1.38	-11.09	-77.56	-74.64	-14.00	13.62	2.305e+04	-2913.28	2.067e+04	-531.24	7495.13
2	1.29	16.38	-59.00	-58.34	15.72	-7.04	1.898e+04	-809.56	1.898e+04	-809.39	58.79
5	5.07	12.11	-42.99	-16.33	-14.55	-27.54	8.807e+04	-5.084e+04	1.109e+04	2.615e+04	6.905e+04
15	5.05	20.93	-119.16	-119.13	20.91	1.88	8.265e+04	-5.604e+04	3.404e+04	-7431.22	6.617e+04
508 1 15	5.37	6.80	-133.13	-133.09	6.76	2.58	1.168e+05	-6.609e+04	6.219e+04	-1.144e+04	8.373e+04
5	4.97	25.68	-45.69	-28.02	8.02	-30.80	1.096e+05	-6.146e+04	1.725e+04	3.085e+04	8.524e+04
8	9.24	43.96	-77.92	-16.76	-17.20	-60.94	1.989e+05	-1.180e+05	8294.48	7.260e+04	1.552e+05
20	8.55	40.50	-152.79	-151.23	38.94	-17.27	2.013e+05	-8.899e+04	9.404e+04	1.828e+04	1.401e+05
508 2 15	4.13	5.23	-102.41	-102.37	5.20	1.98	8.988e+04	-5.084e+04	4.784e+04	-8800.21	6.441e+04
5	3.82	19.76	-35.14	-21.56	6.17	-23.69	8.428e+04	-4.728e+04	1.327e+04	2.373e+04	6.557e+04

	8	7.11	33.82	-59.94	-12.89	-13.23	-46.88	1.530e+05	-9.078e+04	6380.37	5.584e+04	1.194e+05
	20	6.57	31.15	-117.53	-116.33	29.96	-13.29	1.549e+05	-6.846e+04	7.234e+04	1.406e+04	1.078e+05
509 1	20	7.35	27.43	-121.67	-119.83	25.60	-16.44	2.203e+05	-8.399e+04	1.218e+05	1.448e+04	1.424e+05
	8	7.48	46.73	-66.55	-21.37	1.54	-55.47	1.968e+05	-1.183e+05	7761.75	7.071e+04	1.544e+05
	13	11.78	90.27	-101.82	-0.92	-10.63	-95.93	3.047e+05	-1.866e+05	838.21	1.173e+05	2.387e+05
	23	9.78	53.02	-161.94	-157.13	48.21	-31.79	3.262e+05	-6.141e+04	1.799e+05	8.492e+04	1.879e+05
509 2	20	5.66	21.10	-93.59	-92.18	19.69	-12.64	1.695e+05	-6.461e+04	9.371e+04	1.114e+04	1.095e+05
	8	5.75	35.95	-51.20	-16.44	1.19	-42.67	1.514e+05	-9.103e+04	5970.57	5.439e+04	1.188e+05
	13	9.06	69.44	-78.33	-0.71	-8.18	-73.79	2.344e+05	-1.436e+05	644.78	9.021e+04	1.836e+05
	23	7.52	40.79	-124.57	-120.87	37.09	-24.46	2.509e+05	-4.724e+04	1.384e+05	6.532e+04	1.445e+05
510 1	23	8.22	85.60	-23.14	-18.95	81.41	-20.94	3.412e+05	-7.120e+04	1.983e+05	7.174e+04	1.963e+05
	13	9.80	23.46	-163.40	-96.33	-43.61	-89.64	3.162e+05	-1.716e+05	1.801e+04	1.266e+05	2.378e+05
	18	15.92	262.17	-23.03	145.98	93.17	-140.13	4.124e+05	-3.920e+05	-8.067e+04	1.010e+05	3.918e+05
	30	11.50	-21.54	-303.43	-296.66	-28.31	-43.15	5.354e+05	1.325e+05	4.349e+05	2.330e+05	1.744e+05
510 2	23	6.32	65.85	-17.80	-14.58	62.62	-16.11	2.625e+05	-5.477e+04	1.525e+05	5.518e+04	1.510e+05
	13	7.54	18.05	-125.69	-74.10	-33.55	-68.95	2.433e+05	-1.320e+05	1.386e+04	9.741e+04	1.829e+05
	18	12.25	201.67	-17.71	112.29	71.67	-107.80	3.172e+05	-3.015e+05	-6.205e+04	7.771e+04	3.014e+05
	30	8.85	-16.57	-233.41	-228.20	-21.77	-33.19	4.119e+05	1.019e+05	3.346e+05	1.792e+05	1.341e+05
511 1	30	16.83	160.50	-177.17	-163.37	146.70	-66.86	7.798e+05	-1.902e+05	5.253e+05	6.437e+04	4.268e+05
	18	11.08	172.05	-124.44	104.58	-56.97	-124.31	3.826e+05	-2.526e+05	-9.503e+04	2.251e+05	2.743e+05
	25	15.89	146.81	-161.74	2.19	-17.12	-153.97	6.208e+05	-3.184e+05	-1607.43	3.040e+05	4.441e+05
	37	15.72	173.48	-123.48	-69.80	119.79	-114.28	7.297e+05	-1.784e+05	3.461e+05	2.052e+05	4.486e+05
511 2	30	12.94	123.46	-136.28	-125.67	112.85	-51.43	5.999e+05	-1.463e+05	4.041e+05	4.952e+04	3.283e+05
	18	8.52	132.35	-95.72	80.45	-43.82	-95.62	2.943e+05	-1.943e+05	-7.310e+04	1.731e+05	2.110e+05
	25	12.22	112.93	-124.41	1.69	-13.17	-118.44	4.775e+05	-2.449e+05	-1236.48	2.338e+05	3.416e+05
	37	12.09	133.45	-94.99	-53.69	92.15	-87.91	5.613e+05	-1.372e+05	2.663e+05	1.578e+05	3.451e+05
512 1	37	14.38	182.24	-102.10	-46.71	126.85	-112.61	8.056e+05	-1.519e+05	4.602e+05	1.935e+05	4.598e+05
	25	13.93	172.68	-143.64	48.46	-19.42	-154.48	6.071e+05	-3.510e+05	-4.145e+04	2.975e+05	4.480e+05
	32	18.36	230.25	-171.40	91.17	-32.31	-191.10	8.208e+05	-4.434e+05	-2.115e+04	3.986e+05	5.962e+05
	44	17.40	223.09	-173.27	-102.34	152.16	-151.92	9.700e+05	-1.803e+05	4.610e+05	3.287e+05	5.714e+05
512 2	37	11.06	140.18	-78.54	-35.93	97.58	-86.62	6.197e+05	-1.168e+05	3.540e+05	1.488e+05	3.537e+05
	25	10.71	132.83	-110.49	37.28	-14.94	-118.83	4.670e+05	-2.700e+05	-3.189e+04	2.289e+05	3.446e+05
	32	14.12	177.12	-131.84	70.13	-24.85	-147.00	6.314e+05	-3.411e+05	-1.627e+04	3.066e+05	4.586e+05
	44	13.38	171.61	-133.28	-78.73	117.05	-116.87	7.462e+05	-1.387e+05	3.546e+05	2.528e+05	4.395e+05
513 1	44	15.67	239.26	-107.18	-16.39	148.47	-152.35	1.034e+06	-1.550e+05	5.598e+05	3.194e+05	5.824e+05
	32	16.20	220.11	-166.37	76.77	-23.03	-186.69	8.178e+05	-4.733e+05	-4.735e+04	3.919e+05	6.070e+05
	39	20.55	283.63	-197.31	123.78	-37.45	-226.56	1.062e+06	-5.744e+05	-2.892e+04	5.168e+05	7.715e+05
	50	19.53	278.06	-181.62	-78.59	175.03	-191.69	1.285e+06	-1.953e+05	6.077e+05	4.821e+05	7.375e+05
513 2	44	12.05	184.05	-82.45	-12.61	114.21	-117.19	7.956e+05	-1.192e+05	4.306e+05	2.457e+05	4.480e+05
	32	12.46	169.32	-127.98	59.05	-17.72	-143.61	6.291e+05	-3.641e+05	-3.642e+04	3.015e+05	4.670e+05
	39	15.81	218.18	-151.77	95.22	-28.81	-174.27	8.171e+05	-4.418e+05	-2.225e+04	3.976e+05	5.934e+05
	50	15.02	213.90	-139.71	-60.45	134.64	-147.46	9.885e+05	-1.503e+05	4.674e+05	3.708e+05	5.673e+05
514 1	50	17.64	304.24	-108.36	21.84	174.04	-191.76	1.357e+06	-1.645e+05	7.202e+05	4.721e+05	7.505e+05
	39	18.34	269.47	-195.39	105.39	-31.30	-222.16	1.062e+06	-6.103e+05	-5.833e+04	5.102e+05	7.865e+05
	48	22.74	338.22	-226.05	155.77	-43.61	-263.94	1.351e+06	-7.232e+05	-3.458e+04	6.622e+05	9.767e+05
	57	21.78	337.38	-187.42	-48.82	198.78	-231.36	1.669e+06	-2.113e+05	7.887e+05	6.692e+05	9.383e+05

514	2	50	13.57	234.03	-83.36	16.80	133.87	-147.50	1.044e+06	-1.266e+05	5.540e+05	3.631e+05	5.773e+05
		39	14.10	207.29	-150.30	81.07	-24.08	-170.89	8.171e+05	-4.695e+05	-4.487e+04	3.925e+05	6.050e+05
		48	17.49	260.17	-173.89	119.82	-33.54	-203.03	1.039e+06	-5.563e+05	-2.660e+04	5.094e+05	7.513e+05
		57	16.76	259.52	-144.17	-37.55	152.91	-177.97	1.284e+06	-1.625e+05	6.067e+05	5.148e+05	7.218e+05
515	1	57	19.78	374.67	-107.11	66.43	201.13	-231.28	1.753e+06	-1.732e+05	9.219e+05	6.581e+05	9.542e+05
		48	20.46	321.40	-227.63	135.19	-41.41	-259.92	1.352e+06	-7.661e+05	-6.908e+04	6.554e+05	9.954e+05
		55	24.93	394.00	-255.86	188.86	-50.72	-302.04	1.691e+06	-8.922e+05	-3.930e+04	8.377e+05	1.215e+06
		66	24.09	400.52	-193.22	-16.20	223.50	-271.60	2.125e+06	-2.250e+05	1.005e+06	8.949e+05	1.174e+06
515	2	57	15.22	288.21	-82.39	51.10	154.72	-177.91	1.349e+06	-1.333e+05	7.092e+05	5.062e+05	7.340e+05
		48	15.74	247.23	-175.10	103.99	-31.86	-199.94	1.040e+06	-5.893e+05	-5.314e+04	5.041e+05	7.657e+05
		55	19.18	303.07	-196.82	145.27	-39.02	-232.34	1.300e+06	-6.863e+05	-3.023e+04	6.444e+05	9.344e+05
		66	18.53	308.10	-148.63	-12.46	171.93	-208.93	1.635e+06	-1.730e+05	7.735e+05	6.884e+05	9.029e+05
516	1	66	21.98	449.43	-105.39	114.78	229.26	-271.44	2.224e+06	-1.784e+05	1.163e+06	8.825e+05	1.193e+06
		55	22.60	374.65	-261.19	165.92	-52.47	-298.58	1.694e+06	-9.426e+05	-7.934e+04	8.306e+05	1.237e+06
		62	27.12	449.48	-286.02	221.99	-58.54	-339.95	2.086e+06	-1.082e+06	-4.280e+04	1.047e+06	1.488e+06
		77	26.43	466.49	-199.53	18.12	248.84	-312.39	2.660e+06	-2.334e+05	1.261e+06	1.166e+06	1.446e+06
516	2	66	16.91	345.71	-81.07	88.29	176.35	-208.80	1.711e+06	-1.373e+05	8.945e+05	6.789e+05	9.176e+05
		55	17.38	288.19	-200.92	127.63	-40.36	-229.68	1.303e+06	-7.251e+05	-6.103e+04	6.390e+05	9.518e+05
		62	20.86	345.75	-220.02	170.76	-45.03	-261.50	1.605e+06	-8.325e+05	-3.292e+04	8.052e+05	1.144e+06
		77	20.33	358.84	-153.49	13.94	191.42	-240.30	2.046e+06	-1.796e+05	9.698e+05	8.968e+05	1.112e+06
517	1	77	24.22	527.04	-104.10	165.10	257.83	-312.14	2.775e+06	-1.774e+05	1.445e+06	1.152e+06	1.469e+06
		62	24.74	427.77	-295.27	196.64	-64.14	-337.19	2.091e+06	-1.141e+06	-8.869e+04	1.039e+06	1.514e+06
		75	29.29	503.39	-316.42	254.08	-67.12	-377.14	2.543e+06	-1.292e+06	-4.384e+04	1.295e+06	1.796e+06
		88	28.79	533.76	-206.61	52.79	274.36	-353.22	3.283e+06	-2.314e+05	1.558e+06	1.494e+06	1.757e+06
517	2	77	18.63	405.41	-80.08	127.00	198.33	-240.11	2.134e+06	-1.364e+05	1.111e+06	8.864e+05	1.130e+06
		62	19.03	329.06	-227.13	151.26	-49.34	-259.38	1.609e+06	-8.773e+05	-6.822e+04	7.996e+05	1.165e+06
		75	22.53	387.23	-243.40	195.45	-51.63	-290.11	1.956e+06	-9.935e+05	-3.372e+04	9.961e+05	1.382e+06
		88	22.15	410.58	-158.93	40.61	211.05	-271.70	2.525e+06	-1.780e+05	1.198e+06	1.149e+06	1.351e+06
518	1	88	26.50	605.56	-103.69	215.56	286.31	-352.85	3.415e+06	-1.648e+05	1.771e+06	1.479e+06	1.784e+06
		75	26.86	479.61	-329.58	226.36	-76.33	-375.22	2.549e+06	-1.358e+06	-9.584e+04	1.287e+06	1.827e+06
		86	31.41	554.74	-347.35	284.02	-76.63	-413.43	3.064e+06	-1.515e+06	-4.049e+04	1.590e+06	2.139e+06
		95	31.19	600.63	-214.85	85.91	299.87	-393.46	4.006e+06	-2.091e+05	1.899e+06	1.898e+06	2.108e+06
518	2	88	20.39	465.81	-79.76	165.82	220.24	-271.43	2.627e+06	-1.268e+05	1.362e+06	1.138e+06	1.372e+06
		75	20.66	368.93	-253.53	174.13	-58.72	-288.63	1.961e+06	-1.045e+06	-7.373e+04	9.901e+05	1.406e+06
		86	24.16	426.72	-267.20	218.47	-58.95	-318.03	2.357e+06	-1.165e+06	-3.115e+04	1.223e+06	1.646e+06
		95	23.99	462.03	-165.27	66.08	230.67	-302.66	3.082e+06	-1.609e+05	1.460e+06	1.460e+06	1.621e+06
519	1	95	28.81	682.75	-104.69	263.73	314.33	-392.91	4.156e+06	-1.310e+05	2.142e+06	1.882e+06	2.139e+06
		86	28.94	529.27	-364.27	254.02	-89.03	-412.53	3.073e+06	-1.590e+06	-9.880e+04	1.582e+06	2.175e+06
		99	33.41	602.96	-379.74	310.54	-87.33	-449.28	3.654e+06	-1.738e+06	-2.997e+04	1.946e+06	2.508e+06
		108	33.60	665.65	-225.40	114.60	325.64	-432.85	4.845e+06	-1.489e+05	2.284e+06	2.412e+06	2.496e+06
519	2	95	22.16	525.19	-80.53	202.87	241.79	-302.24	3.197e+06	-1.007e+05	1.648e+06	1.448e+06	1.646e+06
		86	22.26	407.13	-280.21	195.40	-68.48	-317.33	2.364e+06	-1.223e+06	-7.600e+04	1.217e+06	1.673e+06
		99	25.70	463.82	-292.11	238.88	-67.17	-345.60	2.811e+06	-1.337e+06	-2.306e+04	1.497e+06	1.930e+06
		108	25.84	512.04	-173.38	88.16	250.50	-332.96	3.727e+06	-1.145e+05	1.757e+06	1.855e+06	1.920e+06
520	1	108	31.15	756.21	-108.25	306.01	341.95	-431.86	5.012e+06	-5.907e+04	2.560e+06	2.393e+06	2.534e+06
		99	30.92	576.04	-400.38	278.08	-102.41	-449.62	3.665e+06	-1.823e+06	-9.475e+04	1.937e+06	2.549e+06

110	35.15	649.03	-415.93	332.67	-99.57	-486.65	4.304e+06	-1.932e+06	-8034.13	2.380e+06	2.880e+06
119	36.00	728.20	-241.66	133.62	352.91	-472.37	5.818e+06	-1.824e+04	2.707e+06	3.093e+06	2.912e+06
520 2108	23.96	581.70	-83.27	235.40	263.04	-332.20	3.855e+06	-4.544e+04	1.969e+06	1.841e+06	1.949e+06
99	23.78	443.11	-307.98	213.91	-78.78	-345.86	2.819e+06	-1.402e+06	-7.288e+04	1.490e+06	1.961e+06
110	27.04	499.25	-319.95	255.90	-76.59	-374.34	3.311e+06	-1.486e+06	-6180.10	1.831e+06	2.216e+06
119	27.69	560.15	-185.89	102.78	271.47	-363.36	4.475e+06	-1.403e+04	2.082e+06	2.379e+06	2.240e+06
521 1119	33.48	825.33	-115.08	339.01	371.23	-469.93	6.001e+06	8.277e+04	3.015e+06	3.069e+06	2.959e+06
110	32.67	618.39	-442.59	293.52	-117.72	-489.02	4.319e+06	-2.031e+06	-8.163e+04	2.371e+06	2.929e+06
121	36.27	701.78	-458.82	355.58	-112.62	-530.98	4.988e+06	-2.025e+06	3.681e+04	2.925e+06	3.195e+06
129	38.31	789.56	-277.72	127.30	384.54	-517.91	6.939e+06	2.407e+05	3.131e+06	4.049e+06	3.317e+06
521 2119	25.76	634.87	-88.53	260.77	285.57	-361.48	4.617e+06	6.367e+04	2.320e+06	2.361e+06	2.276e+06
110	25.13	475.68	-340.46	225.78	-90.56	-376.17	3.323e+06	-1.562e+06	-6.279e+04	1.824e+06	2.253e+06
121	27.90	539.83	-352.93	273.52	-86.63	-408.45	3.837e+06	-1.558e+06	2.832e+04	2.250e+06	2.458e+06
129	29.47	607.35	-213.63	97.92	295.80	-398.39	5.337e+06	1.852e+05	2.408e+06	3.115e+06	2.552e+06
522 1129	35.83	910.31	-101.08	396.35	412.89	-505.63	7.176e+06	3.695e+05	3.526e+06	4.019e+06	3.394e+06
121	33.90	630.77	-533.93	249.06	-152.21	-546.69	4.977e+06	-2.180e+06	-1.049e+05	2.902e+06	3.247e+06
134	35.93	835.16	-473.83	476.42	-115.10	-583.86	5.663e+06	-1.774e+06	2.406e+05	3.648e+06	3.305e+06
145	40.30	849.26	-459.67	-24.61	414.20	-616.59	8.152e+06	6.827e+05	3.335e+06	5.500e+06	3.574e+06
522 2129	27.56	700.24	-77.75	304.88	317.61	-388.94	5.520e+06	2.842e+05	2.712e+06	3.091e+06	2.611e+06
121	26.08	485.21	-410.71	191.59	-117.09	-420.53	3.829e+06	-1.677e+06	-8.071e+04	2.233e+06	2.498e+06
134	27.64	642.43	-364.49	366.48	-88.54	-449.12	4.356e+06	-1.364e+06	1.851e+05	2.806e+06	2.542e+06
145	31.00	653.27	-353.59	-18.93	318.62	-474.30	6.271e+06	5.251e+05	2.565e+06	4.231e+06	2.749e+06
523 1145	27.34	1605.11	291.49	1309.54	587.06	-548.55	8.864e+06	1.055e+06	4.705e+06	5.214e+06	3.896e+06
134	25.33	540.96	-717.73	106.71	-283.48	-598.34	6.126e+06	-1.831e+06	4.538e+05	3.841e+06	3.600e+06
151	23.16	1112.21	-42.71	1036.99	32.51	-284.98	5.437e+06	-2.086e+06	-6.206e+05	3.971e+06	2.980e+06
161	31.53	768.22	-401.20	156.08	210.94	-584.07	1.047e+07	2.413e+06	5.617e+06	7.262e+06	3.941e+06
523 2145	21.03	1234.70	224.22	1007.34	451.59	-421.96	6.819e+06	8.117e+05	3.620e+06	4.011e+06	2.997e+06
134	19.48	416.12	-552.10	82.08	-218.06	-460.26	4.712e+06	-1.408e+06	3.491e+05	2.954e+06	2.769e+06
151	17.81	855.54	-32.85	797.68	25.01	-219.22	4.182e+06	-1.605e+06	-4.774e+05	3.055e+06	2.292e+06
161	24.25	590.94	-308.62	120.06	162.26	-449.28	8.051e+06	1.856e+06	4.321e+06	5.586e+06	3.032e+06
524 1161	33.53	1102.38	-473.29	336.33	292.76	-787.53	1.085e+07	2.134e+06	5.617e+06	7.363e+06	4.267e+06
151	27.50	1068.48	-432.16	825.82	-189.49	-552.51	6.279e+06	-2.467e+06	-5.862e+05	4.398e+06	3.594e+06
171	22.52	480.41	-603.47	120.19	-243.25	-510.56	5.491e+06	-1.602e+06	3.050e+05	3.583e+06	3.145e+06
178	24.73	1048.67	-119.57	705.43	223.67	-532.14	7.746e+06	8.177e+05	3.186e+06	5.378e+06	3.286e+06
524 2161	25.79	847.98	-364.07	258.71	225.20	-605.79	8.343e+06	1.642e+06	4.321e+06	5.664e+06	3.283e+06
151	21.15	821.91	-332.43	635.24	-145.76	-425.01	4.830e+06	-1.898e+06	-4.509e+05	3.383e+06	2.764e+06
171	17.32	369.54	-464.21	92.46	-187.12	-392.74	4.224e+06	-1.233e+06	2.346e+05	2.756e+06	2.419e+06
178	19.03	806.67	-91.98	542.64	172.06	-409.34	5.958e+06	6.290e+05	2.451e+06	4.137e+06	2.528e+06
525 1178	25.86	903.75	-301.24	426.89	175.61	-589.25	8.129e+06	1.052e+06	3.693e+06	5.488e+06	3.423e+06
171	22.36	674.36	-543.10	392.00	-260.74	-513.84	5.142e+06	-1.916e+06	-2.017e+05	3.428e+06	3.026e+06
187	16.93	386.17	-502.34	152.17	-268.34	-391.35	3.680e+06	-1.730e+06	-3.629e+05	2.313e+06	2.351e+06
195	19.13	655.15	-251.46	332.12	71.56	-434.18	5.799e+06	3.696e+05	2.346e+06	3.822e+06	2.612e+06
525 2178	19.89	695.19	-231.72	328.38	135.09	-453.27	6.253e+06	8.092e+05	2.841e+06	4.221e+06	2.633e+06
171	17.20	518.74	-417.77	301.54	-200.57	-395.26	3.955e+06	-1.474e+06	-1.551e+05	2.637e+06	2.328e+06
187	13.03	297.05	-386.41	117.05	-206.42	-301.04	2.830e+06	-1.331e+06	-2.792e+05	1.779e+06	1.808e+06
195	14.72	503.96	-193.43	255.48	55.05	-333.98	4.461e+06	2.843e+05	1.805e+06	2.940e+06	2.010e+06

526	1195	19.30	638.98	-281.32	290.36	67.29	-446.43	5.851e+06	3.996e+05	2.422e+06	3.829e+06	2.634e+06
	187	17.06	421.70	-499.33	193.68	-271.31	-397.51	3.655e+06	-1.789e+06	-4.384e+05	2.304e+06	2.351e+06
	206	11.55	187.97	-427.56	33.13	-272.72	-267.08	2.092e+06	-1.653e+06	-7.160e+05	1.155e+06	1.623e+06
	212	12.71	346.87	-271.80	117.77	-42.71	-298.74	3.581e+06	-1.760e+05	1.209e+06	2.196e+06	1.813e+06
526	2195	14.85	491.52	-216.40	223.36	51.76	-343.40	4.501e+06	3.074e+05	1.863e+06	2.945e+06	2.026e+06
	187	13.12	324.38	-384.10	148.98	-208.70	-305.78	2.811e+06	-1.376e+06	-3.372e+05	1.772e+06	1.809e+06
	206	8.89	144.59	-328.89	25.49	-209.79	-205.45	1.609e+06	-1.272e+06	-5.508e+05	8.884e+05	1.248e+06
	212	9.78	266.82	-209.08	90.60	-32.85	-229.80	2.755e+06	-1.354e+05	9.300e+05	1.689e+06	1.394e+06
527	1212	12.82	353.38	-281.95	112.21	-40.79	-308.32	3.603e+06	-1.820e+05	1.229e+06	2.192e+06	1.830e+06
	206	11.69	197.21	-435.84	37.39	-276.01	-275.01	2.104e+06	-1.680e+06	-7.347e+05	1.158e+06	1.638e+06
	225	6.33	-32.90	-357.68	-113.51	-277.06	-140.30	5.085e+05	-1.523e+06	-1.016e+06	1256.43	8.794e+05
	231	6.37	52.25	-274.82	-68.75	-153.82	-157.91	1.322e+06	-7.199e+05	3.125e+04	5.709e+05	9.847e+05
527	2212	9.86	271.83	-216.89	86.32	-31.38	-237.17	2.772e+06	-1.400e+05	9.455e+05	1.686e+06	1.408e+06
	206	8.99	151.70	-335.26	28.76	-212.32	-211.55	1.618e+06	-1.292e+06	-5.651e+05	8.911e+05	1.260e+06
	225	4.87	-25.30	-275.14	-87.32	-213.12	-107.92	3.911e+05	-1.172e+06	-7.816e+05	966.48	6.764e+05
	231	4.90	40.19	-211.40	-52.88	-118.32	-121.47	1.017e+06	-5.538e+05	2.404e+04	4.392e+05	7.574e+05
528	1231	6.49	60.10	-283.57	-255.61	32.14	93.95	1.341e+06	-7.297e+05	1.181e+06	-5.700e+05	-5.524e+05
	225	6.48	-24.39	-366.66	-358.88	-32.17	51.01	5.232e+05	-1.549e+06	4.784e+05	-1.505e+06	-3.013e+05
	265	5.04	-276.58	-296.16	-276.65	-296.10	-1.15	-1.367e+06	-1.395e+06	-1.395e+06	-1.368e+06	2636.01
528	2231	4.99	46.23	-218.13	-196.62	24.72	72.27	1.031e+06	-5.613e+05	9.086e+05	-4.385e+05	-4.249e+05
	225	4.99	-18.77	-282.05	-276.06	-24.75	39.24	4.024e+05	-1.192e+06	3.680e+05	-1.157e+06	-2.317e+05
	265	3.88	-212.76	-227.82	-212.81	-227.77	-0.89	-1.052e+06	-1.073e+06	-1.073e+06	-1.052e+06	2027.70

Elem.	Von Mises	N max	N min	N 1	N 2	N 1-2	M max	M min	M 1	M 2	M 1-2
		-2954.69	-2396.92	-2952.58	-787.53		-2.071e+07	-2.048e+07	-1.426e+07	-4.797e+06	
	74.92	2388.88		1843.85	2381.17	952.84	1.791e+07		1.768e+07	1.146e+07	4.337e+06

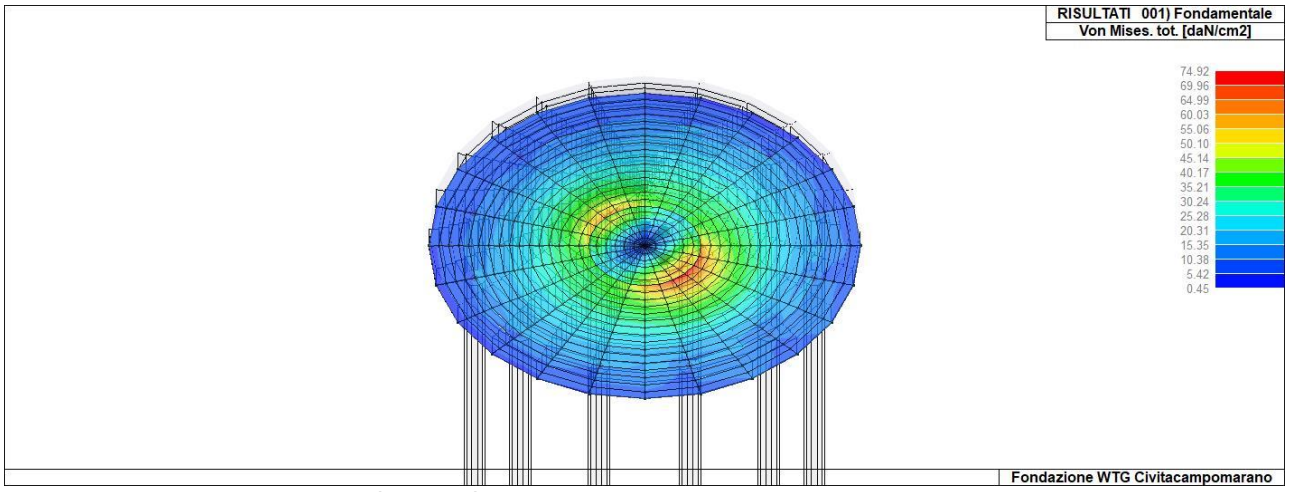

44_RIS_VONMISES_001_Fondamentale

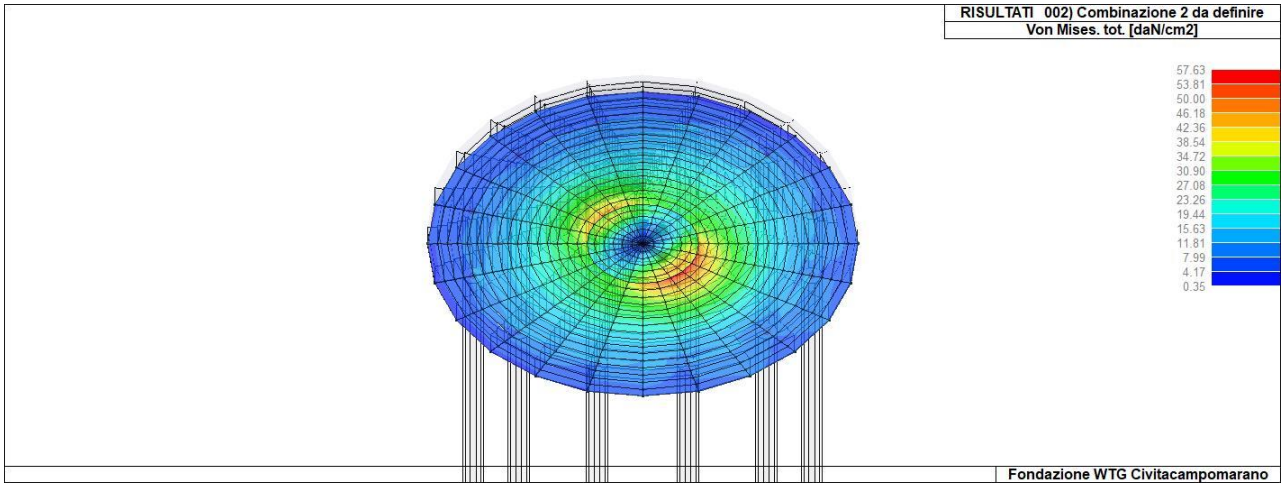

44_RIS_VONMISES_002_Combinazione 2 da definire

13. VERIFICHE ELEMENTI PARETE E/O GUSCIO IN C.A.

13.1. LEGENDA TABELLA VERIFICHE ELEMENTI PARETE E GUSCIO IN C.A.

Per le pareti in c.a., in ottemperanza al cap. 7 del DM 17-01-18, viene effettuata una doppia progettazione: sia come *Singolo Elemento* sia come *Parete Sismica* o *Parete Debolmente Armata.*

Per la progettazione come *Singolo Elemento* di ogni elemento vengono riportati il codice dello stato di verifica con le sigle **Ok e NV,** il rapporto x/d, la verifica per sollecitazioni ultime (verifica a compressione media gli sforzi membranali, verifica a presso-flessionale e verifica a sollecitazioni taglianti), gli sforzi membranali e flessionali, il quantitativo di armatura nella direzione principale e secondaria sia inferiore che superiore e il quantitativo di armatura a taglio.

Per la progettazione come *Parete Sismica* o *Parete Debolmente Armata* vengono riportate invece le caratteristiche geometriche della parete e delle zone dissipative (quest'ultime solo nel caso di parete sismica), i coefficienti di verifica a compressione assiale, pressoflessione e sollecitazioni taglianti.

Inoltre vengono riportate per ogni quota significativa l'armatura principale e secondaria, l'armatura in zona confinata (solo per parete sismica) e non confinata, l'armatura concentrata all'estremità (per pareti debolmente armate), lo sforzo assiale aggiuntivo per q superiore a 2 e i valori di inviluppo di taglio e momento. Per le pareti debolmente armate viene riportato anche lo stato di verifica relativo alla snellezza.

Le azioni derivate dall'analisi, in ogni combinazione di calcolo, sono elaborate come previsto al punto 7.4.4.5.1: traslazione del momento, incremento e variazione diagramma taglio, incremento e decremento sforzo assiale

La progettazione nel caso dei gusci viene effettuata una progettazione come *Singolo Elemento,* riportando in tabella il rapporto x/d, la verifica per sollecitazioni ultime, (verifica a compressione media gli sforzi membranali, verifica a presso-flessionale e verifica a sollecitazioni taglianti) di ogni elemento.

Per ogni elemento, viene riportata inoltre la maglia di armatura necessaria in relazione alle risultanze della progettazione dei nodi dell'elemento stesso. Le quantità di armature necessarie sono armature (disposte rispettivamente in direzione principale e secondaria, inferiore e superiore) distribuite nell'elemento ed espresse in centimetri quadri per sviluppo lineare pari ad un metro.

Nel caso dei gusci viene effettuata, inoltre, la verifica a punzonamento, riportando in tabella il codice dello stato di verifica, il coefficiente di verifica per piastre prive di armature a taglio lungo il perimetro resistente e lungo il perimetro del pilastro, coefficiente di incremento dovuto ai momenti flettenti, fattore di amplificazione per le fondazioni, il fattorei di amplificazione dell'altezza utile per individuare il perimetro di verifica lungo il quale l'armatura a taglio non è richiesta, il quantitativo di armatura a punzonamento, il numero di serie di armature, il numero di braccia di armatura ed il riferimento alla combinazione più gravosa.

Simbologia adottata nelle tabelle di verifica

Per gli elementi con progettazione "*Singolo Elemento …*" è presente una tabella con i simboli di seguito descritti:

Macro Guscio	Numero del macroelemento di tipo guscio (elementi non verticali contigui ed analoghi per proprietà)

Macro Setto	Numero del macroelemento di tipo setto (elementi verticali contigui ed analoghi per proprietà)
Spessore	Spessore della parete
Id Materiale	Codice del materiale assegnato all'elemento
Id Criterio	Codice del criterio di progetto assegnato all'elemento
Progettazione	Sigla tipo di Elemento: - Singolo Elemento; - Singolo Elemento FONDAZIONE; - Singolo Elemento NON DISSIPATIVO

Per gli elementi con progettazione "*Parete Sismica o Parete Debolmente Armata*" è presente una tabella con i simboli di seguito descritti:

Parete	Numero della PARETE SISMICA
Parete PDA	Numero della PARETE DEBOLMENTE ARMATA
H totale	Altezza complessiva della parete
Spessore	Spessore della parete
H critica	Altezza come da punto 7.4.4.5.1 per traslazione momento (solo in Parete Sismica)
H critica V	Altezza della zona dissipativa (solo in Parete Sismica)
L totale	Larghezza di base della parete
L confinata	Lunghezza della zona dissipativa (solo in Parete Sismica)
Verif. N	Verifica di cui al punto 7.4.4.5.1 compressione semplice
Verif. N-M	Verifica di cui al punto 7.4.4.5.1 pressoflessione
Fattore V	Fattore di amplificazione del taglio di cui al punto 7.4.4.5.1
Diagramma V	Diagramma elaborato per effetto modi superiori come da fig. 7.4.4
Verif. V	Verifica di cui al punto 7.4.4.5.1 taglio (compressione cls, trazione acciaio, scorrimento in zona critica) (solo in Parete Sismica)
Verifica Snellezza	Verifica di cui al punto 7.4.4.5.1 limitazione compressione per prevenire l'instabilità (solo in Parete Debolmente Armata)
Prog. composta	Sigla per la progettazione composta

Per le verifiche degli elementi con progettazione "*Singolo Elemento …*" e *Progettazione Composta* è presente una tabella con i simboli di seguito descritti:

Nodo	numero del nodo
Stato	codice di verifica dell'elemento **ok** o **NV**
x/d	rapporto tra posizione dell'asse neutro e altezza utile alla rottura della sezione (per

	sola flessione)
V N/M	Verifica delle sollecitazioni Normali (momento e sforzo normale)
Ver. rid	Rapporto Nd/Nu (Nu ottenuto con riduzione del 25% di fcd)
Af pr+	quantità di armatura richiesta in direzione principale relativa alla faccia positiva (estradosso piastre) (valore derivante da calcolo o minimo normativo)
Af pr-	quantità di armatura richiesta in direzione principale relativa alla faccia negativa (intradosso piastre) (valore derivante da calcolo o minimo normativo)
Af sec+	quantità di armatura richiesta in direzione secondaria relativa alla faccia positiva (estradosso piastre) (valore derivante da calcolo o minimo normativo)
Af sec-	quantità di armatura richiesta in direzione secondaria relativa alla faccia negativa (intradosso piastre) (valore derivante da calcolo o minimo normativo)
Nz No Nzo	Sforzi membranali per pareti e\o setti verticali
Mz Mo Mzo	Sforzi flessionali per pareti e\o setti verticali
Nx Ny Nxy	Sforzi membranali per gusci orizzontali
Mx Mx Mxy	Sforzi flessionali per gusci orizzontali

Nodo	numero del nodo
Stato	codice di verifica dell'elemento **ok** o **NV**
Max tau	Tensione tangenziale Massima
Ver V pr	Verifica a taglio nella direzione principale lato calcestruzzo
Ver V sec	Verifica a taglio nella direzione secondaria lato calcestruzzo
Af V pr	Armatura nella direzione principale
V pr-	Verifica dell'armatura nella direzione principale
Af V sec	Armatura nella direzione secondaria
V sec-	Verifica dell'armatura nella direzione secondaria

Per le verifiche degli elementi con progettazione "*Parete Sismica o Parete Debolmente Armata*", oltre alla tabella con le verifiche per gli elementi con progettazione "*Singolo Elemento …*", è presente una tabella con i simboli di seguito descritti:

Quota	Ascissa verticale di riferimento
Af conf.	Numero e diametro armatura presente in una zona confinata
Af std	Diametro e passo armatura in zona non confinata (doppia maglia)

Af estremi	Diametro dei ferri di estremità del pannello; se posto uguale 0, viene utilizzato il diametro standard
Af V (ori)	Diametro e passo armatura orizzontale (doppia maglia)
Ver. N	Rapporto tra azione di calcolo e resistenza a compressione (normalizzato a 1 in quanto da confrontare con 40% in CDB e 35 % in CDA)
Ver. N/M	Rapporto tra azione di calcolo e resistenza a pressoflessione
Ver. V acc(7)	Rapporto tra azione di calcolo e resistenza a taglio-trazione per alfaS minore di 2 secondo paragrafo 7.4.4.5.1
Ver. V cls	Rapporto tra azione di calcolo e resistenza a taglio-compressione
Ver. V acc	Rapporto tra azione di calcolo e resistenza a taglio-trazione
Ver. V scorr.	Rapporto tra azione di calcolo e resistenza a taglio scorrimento
N add	Sforzo assiale di cui al punto 7.4.4.5.1 da sommare e sottrarre nelle verifiche quando q supera 2
N invil M invil	Inviluppo del Momento e Sforzo Normale come al punto 7.4.4.5.1 (informativo) (solo in Parete Sismica)

Quota	Ascissa verticale di riferimento
N v.N	Valore dello sforzo assiale per cui Ver. N attinge il massimo valore
N v.M/N, M v.M/N	Valore dello sforzo assiale e momento per cui Ver. N/M attinge il massimo valore
N v.M/N, M v.M/N Mo v.M/N	Valore dello sforzo assiale e dei momenti per cui Ver. N/M attinge il massimo valore (per le pareti estese debolmente armate)
N v.Vcls, V v.Vcls,	Valore dello sforzo assiale e taglio per cui Ver. V. cls attinge il massimo valore
N v.Vacc, M v.Vacc, V v.Vacc,	Valore dello sforzo assiale, momento e taglio per cui Ver. V. acc attinge il massimo valore
N v.Vscorr, M v.Vscorr, V v.Vscorr,	Valore dello sforzo assiale, momento e taglio per cui Ver. V. scorr.e
N v.N	Valore dello sforzo assiale per cui Ver. N attinge il massimo valore
N v.M/N, M v.M/N	Valore dello sforzo assiale e momento per cui Ver. N/M attinge il massimo valore
N v.M/N, M v.M/N Mo v.M/N	Valore dello sforzo assiale e dei momenti per cui Ver. N/M attinge il massimo valore (per le pareti estese debolmente armate)
N v.Vcls, V v.Vcls,	Valore dello sforzo assiale e taglio per cui Ver. V. cls attinge il massimo valore

Quota	Ascissa verticale di riferimento
CtgT Vcls	Valore di ctg(teta) adottato nella verifica V compressione cls
Vrsd Vcls	Valore della resistenza a taglio trazione (armatura di calcolo)
Vrcd Vcls	Valore della resistenza a taglio compressione
CtgT Vacc	Valore di ctg(teta) adottato nella verifica V trazione armatura
Vrsd Vacc	Valore della resistenza a taglio trazione (armatura presente)
Vrcd Vacc	Valore della resistenza a taglio compressione
Vdd	Valore del contributo alla resistenza allo scorrimento come da [7.4.20]
Vid	Valore del contributo alla resistenza allo scorrimento come da [7.4.21]
A s.i.	Somma delle aree di armature
Incli.	Angolo di inclinazione delle armature
Dist.	Distanza alla base tra le armature inclinate

Quota	Ascissa verticale di riferimento
V[7.4.16]	Verifica a taglio-trazione dell'armatura dell'anima (7.4.16)
N M V	Sollecitazioni di calcolo della condizione più gravosa
Alfas	Rapporto di Taglio
Vrd,c	Resistenza a taglio degli elementi non armati
VRd,s	Resistenza a taglio nei confronti dello scorrimento
V[7.4.17]	Verifica a taglio-trazione dell'armatura dell'anima (7.4.17)
roH	Rapporto tra l'armatura orizzontale e l'area della sezione relativa di calcestruzzo
roV	Rapporto tra l'armatura verticale e l'area della sezione relativa di calcestruzzo
roN	Sforzo normale adimensionalizzato Ned/(bw fyd)

Per la verifica a *Punzonamento* è presente una tabella con i simboli di seguito descritti:

Nodo	numero del nodo
Stato	codice di verifica dell'elemento **ok** o **NV**
V. 6.47	Fattore di sicurezza per la verifica per piastre prive di armature a taglio lungo il perimetro resistente U1

V. 6.53	Fattore di sicurezza per la verifica per piastre prive di armature a taglio lungo il perimetro del pilastro U0
Beta	Fattore di incremento dovuto ai momenti flettenti
f. a fon	fattore di amplificazione per le fondazioni (solo per gusci di fondazione)
f. Uout	fattore di amplificazione dell'altezza utile per individuare il perimetro di verifica lungo il quale l'armatura a taglio non è richiesta
Aw tot	Quantitativo di armatura per la verifica di piastre munite di armatura (formula 6.52 dell'EC2)
Asw,min	Quantitativo minimo di armatura previsto dai dettagli costruttivi (formula 9.11 dell'EC2)
n. x serie	Numero di serie di armature
n.ser 0(R)	Numero di braccia delle armatura in direzione 0 (o numero di braccia radiale)
n.ser 90	Numero di braccia delle armatura in direzione 90 (solo se armatura cruciforme)
Rif. cmb	Riferimento combinazioni da cui si generano le verifiche più gravose

13.2. PROGETTAZIONE DELLE FONDAZIONI

Il D.M.17/01/2018 - par: 7.2.5 prevede:

"Sia per CD"A" sia per CD"B" il dimensionamento delle strutture di fondazione e la verifica di sicurezza del complesso fondazione-terreno devono essere eseguiti assumendo come azione in fondazione, trasmessa dagli elementi soprastanti, una tra le seguenti:

- quella derivante dall'analisi strutturale eseguita ipotizzando comportamento strutturale non dissipativo;
- […];
- quella trasferita dagli elementi soprastanti nell'ipotesi di comportamento strutturale dissipativo, amplificata di un coefficiente pari a 1,30 in CD"A" e 1,10 in CD"B";

Nel contesto visualizzazione risultati e nella stampa della relazione sulle fondazioni PRO_SAP mostra le sollecitazioni che derivano dall'analisi non incrementate sia in termini di pressioni sul terreno che in termini di sollecitazioni.

La progettazione degli elementi strutturali con proprietà fondazione è effettuata da PRO_SAP (per travi e platee) o da PRO_CAD Plinti (per plinti e pali di fondazione) incrementando le sollecitazioni delle combinazioni con sisma di un coefficiente pari 1.1 in CDB e 1.3 in CDA per pali, plinti, travi e platee.

Per i bicchieri dei plinti di fondazione prefabbricati l'incremento delle sollecitazioni ha un fattore pari a 1.2 in CDB e 1.35 in CDA.

N.B.: nel caso di comportamento strutturale non dissipativo la progettazione viene effettuata senza nessun incremento.

Le verifiche geotecniche vengono effettuate dal modulo geotecnico incrementando automaticamente le sollecitazioni del fattore 1.1 in CDB e 1.3 in CDA per pali, plinti, travi e platee.

N.B.: nel caso di comportamento strutturale non dissipativo le verifiche geotecniche vengono effettuate senza nessun incremento.

Macro Guscio	Spessore	Id Materiale	Id Criterio	Progettazione
	cm			
1	125.00	9	2	Singolo elemento

Nodo	Statox/d	V N/M	ver. rid	Af pr-	Af pr+	Af sec-	Af sec+	N x	N y	N xy	M x	M y	M xy
							N/mm	N/mm	N/mm	N	N	N	
1	ok 0.06	7.37e-03	6.56e-04	80.4	80.4	80.4	80.4	162.8	-23.5	-2.30e-02	-2.499e+04	2824.5	5612.8
2	ok 0.06	8.62e-03	2.14e-03	80.4	80.4	80.4	80.4	105.3	-6.9	-28.2	-3.022e+04	202.0	3893.9
3	ok 0.06	2.30e-02	6.99e-04	80.4	80.4	80.4	80.4	287.5	-3.2	82.7	-7.201e+04	-5331.4	-2.323e+04
4	ok 0.06	3.44e-02	7.46e-04	80.4	80.4	80.4	80.4	115.2	6.4	-45.9	-3.674e+04	-354.6	1.024e+05
5	ok 0.06	3.19e-02	1.56e-03	80.4	80.4	80.4	80.4	-46.2	6.1	-24.5	8.076e+04	-3.235e+04	7.039e+04
6	ok 0.06	4.22e-02	1.05e-03	80.4	80.4	80.4	80.4	271.5	-7.2	41.0	-1.328e+05	3.068e+04	5.163e+04
10	ok 0.06	1.54e-02	5.67e-03	80.4	80.4	80.4	80.4	-147.3	-34.9	97.2	2.960e+04	1.771e+04	-2.477e+04
11	ok 0.06	2.07e-02	7.40e-04	80.4	80.4	80.4	80.4	307.8	75.8	184.9	-4.957e+04	-1.765e+04	-3.290e+04
15	ok 0.06	3.48e-02	4.86e-03	80.4	80.4	80.4	80.4	-126.5	-1.2	66.1	9.719e+04	-6.259e+04	4.177e+04
16	ok 0.06	4.25e-02	1.05e-03	80.4	80.4	80.4	80.4	334.1	31.6	141.6	-1.459e+05	4.409e+04	1.227e+04
28	ok 0.06	2.22e-02	8.81e-03	80.4	80.4	80.4	80.4	-148.8	-147.2	167.8	2.262e+04	4.712e+04	-3.481e+04
29	ok 0.06	3.79e-02	6.62e-04	80.4	80.4	80.4	80.4	267.9	256.9	286.1	-4.930e+04	-7.418e+04	-6.286e+04
35	ok 0.06	3.48e-02	7.95e-03	80.4	80.4	80.4	80.4	-127.6	-109.0	153.9	1.013e+05	-4.740e+04	-1.080e+04
36	ok 0.06	4.92e-02	1.52e-03	80.4	80.4	80.4	80.4	278.5	210.4	279.6	-1.353e+05	-2.506e+04	-6.476e+04
68	ok 0.06	2.47e-02	1.03e-02	80.4	80.4	80.4	80.4	-85.0	-265.9	170.7	6822.8	7.010e+04	-2.651e+04
69	ok 0.06	3.03e-02	6.47e-04	80.4	80.4	80.4	80.4	139.6	412.5	266.3	-1.476e+04	-8.213e+04	-3.928e+04
73	ok 0.06	3.39e-02	1.01e-02	80.4	80.4	80.4	80.4	-112.1	-221.4	186.5	7.952e+04	4.006e+04	-5.218e+04
74	ok 0.06	4.24e-02	1.34e-03	80.4	80.4	80.4	80.4	169.8	369.6	293.9	-9.244e+04	-4.979e+04	-6.688e+04
131	ok 0.06	2.85e-02	1.23e-02	80.4	80.4	80.4	80.4	-23.0	-389.4	98.7	1.611e+04	6.282e+04	-3.522e+04
132	ok 0.06	4.50e-02	4.62e-04	80.4	80.4	80.4	80.4	32.6	608.4	153.7	-1.878e+04	-1.140e+05	-4.943e+04
138	ok 0.06	3.21e-02	1.19e-02	80.4	80.4	80.4	80.4	-7.7	-380.9	136.6	3.621e+04	9.272e+04	-3.132e+04
139	ok 0.06	5.03e-02	1.71e-03	80.4	80.4	80.4	80.4	-16.9	619.7	173.5	-4.681e+04	-1.168e+05	-6.554e+04
243	ok 0.06	2.67e-02	1.14e-02	80.4	80.4	80.4	80.4	9.1	-407.6	-10.9	464.2	8.303e+04	-1.795e+04
244	ok 0.06	2.98e-02	1.19e-02	80.4	80.4	80.4	80.4	33.4	-424.9	-31.6	2.793e+04	9.735e+04	-5940.5
286	ok 0.06	3.70e-02	1.39e-03	80.4	80.4	80.4	80.4	-46.2	643.3	-46.2	-2.732e+04	-1.206e+05	2748.2
287	ok 0.06	3.25e-02	4.13e-04	80.4	80.4	80.4	80.4	-14.2	613.8	-18.8	1635.3	-1.051e+05	-1.334e+04
391	ok 0.06	3.22e-02	1.19e-02	80.4	80.4	80.4	80.4	-8.2	-381.9	-136.6	3.643e+04	9.272e+04	3.153e+04
392	ok 0.06	5.03e-02	1.72e-03	80.4	80.4	80.4	80.4	-17.5	619.5	-173.5	-4.676e+04	-1.165e+05	6.560e+04
398	ok 0.06	2.85e-02	1.23e-02	80.4	80.4	80.4	80.4	-23.4	-389.7	-98.5	1.610e+04	6.255e+04	3.507e+04
399	ok 0.06	4.50e-02	4.74e-04	80.4	80.4	80.4	80.4	32.9	608.4	-153.5	-1.877e+04	-1.138e+05	4.930e+04
456	ok 0.06	3.40e-02	1.01e-02	80.4	80.4	80.4	80.4	-112.7	-223.0	-186.8	8.001e+04	4.042e+04	5.244e+04
457	ok 0.06	4.25e-02	1.36e-03	80.4	80.4	80.4	80.4	170.3	370.6	-294.0	-9.265e+04	-4.992e+04	6.696e+04

461	ok 0.06	2.48e-02	1.03e-02	80.4	80.4	80.4	80.4	-84.8	-266.8	-171.4	6820.4	7.060e+04	2.671e+04
462	ok 0.06	3.04e-02	6.60e-04	80.4	80.4	80.4	80.4	139.3	413.1	-266.8	-1.471e+04	-8.235e+04	3.935e+04
494	ok 0.06	3.48e-02	8.00e-03	80.4	80.4	80.4	80.4	-127.7	-109.2	-154.7	1.012e+05	-4.727e+04	1.083e+04
495	ok 0.06	4.93e-02	1.54e-03	80.4	80.4	80.4	80.4	279.3	211.2	-279.8	-1.354e+05	-2.502e+04	6.473e+04
501	ok 0.06	2.23e-02	8.86e-03	80.4	80.4	80.4	80.4	-149.3	-148.0	-168.9	2.263e+04	4.729e+04	3.495e+04
502	ok 0.06	3.79e-02	6.75e-04	80.4	80.4	80.4	80.4	268.1	257.4	-286.9	-4.925e+04	-7.424e+04	6.291e+04
514	ok 0.06	3.48e-02	4.90e-03	80.4	80.4	80.4	80.4	-126.7	-0.9	-66.7	9.660e+04	-6.271e+04	-4.189e+04
515	ok 0.06	4.26e-02	1.07e-03	80.4	80.4	80.4	80.4	335.1	32.4	-141.9	-1.461e+05	4.399e+04	-1.227e+04
519	ok 0.06	1.53e-02	5.72e-03	80.4	80.4	80.4	80.4	-148.2	-35.1	-98.2	2.942e+04	1.773e+04	2.477e+04
520	ok 0.06	2.07e-02	7.54e-04	80.4	80.4	80.4	80.4	308.4	75.8	-185.7	-4.963e+04	-1.773e+04	3.304e+04
524	ok 0.06	3.19e-02	1.59e-03	80.4	80.4	80.4	80.4	-47.3	5.6	24.5	8.068e+04	-3.227e+04	-7.042e+04
525	ok 0.06	4.23e-02	1.07e-03	80.4	80.4	80.4	80.4	272.5	-6.7	-41.0	-1.329e+05	3.062e+04	-5.168e+04
526	ok 0.06	3.45e-02	7.64e-04	80.4	80.4	80.4	80.4	115.7	7.1	45.9	-3.704e+04	-479.9	-1.024e+05
527	ok 0.06	8.69e-03	2.18e-03	80.4	80.4	80.4	80.4	-69.4	13.1	-28.2	2.088e+04	2664.1	9113.1
528	ok 0.06	2.30e-02	7.12e-04	80.4	80.4	80.4	80.4	288.5	-3.5	-83.2	-7.204e+04	-5327.7	2.331e+04
529	ok 0.06	7.44e-03	6.70e-04	80.4	80.4	80.4	80.4	163.3	-24.0	-0.1	-2.530e+04	2860.0	-5518.4

Nodo	x/d	V N/M	ver. rid	Af pr-	Af pr+	Af sec-	Af sec+	N x	N y	N xy	M x	M y	M xy
							-149.29	-424.93	-294.00	-1.461e+05	-1.206e+05	-1.024e+05	
	0.06	0.05	0.018	0.42	80.42	80.42	80.42	335.08	643.28	293.92	1.013e+05	9.735e+04	1.024e+05

Nodo	Stato	Max tau	Ver V pr	Ver V sec	Af V pr	Af V sec	V pr	V sec
	daN/cm2					N/mm	N/mm	
1ok	1.80							
2ok	2.29							
3ok	2.32							
4ok	0.75							
5ok	1.11							
6ok	1.11							
10ok	2.99							
11ok	3.04							
15ok	1.73							
16ok	1.87							
28ok	3.23							
29ok	3.26							
35ok	2.08							
36ok	2.09							
68ok	3.43							
69ok	3.48							
73ok	2.47							
74ok	2.60							
131	ok	3.31						
132	ok	3.34						
138	ok	2.55						
139	ok	2.56						
243	ok	2.94						

244	ok	2.55
286	ok	2.68
287	ok	2.99
391	ok	2.55
392	ok	2.57
398	ok	3.31
399	ok	3.34
456	ok	2.46
457	ok	2.60
461	ok	3.43
462	ok	3.48
494	ok	2.08
495	ok	2.09
501	ok	3.23
502	ok	3.26
514	ok	1.73
515	ok	1.87
519	ok	2.99
520	ok	3.04
524	ok	1.12
525	ok	1.11
526	ok	0.75
527	ok	2.29
528	ok	2.32
529	ok	1.80

Nodo	Max tau	Ver V pr	Ver V sec	Af V pr	Af V sec	V pr	V sec
	3.48						

Macro Guscio	Spessore	Id Materiale	Id Criterio	Progettazione
	cm			
2	140.00	9	2	Singolo elemento

Nodo	Statox/d	V N/M	ver. rid	Af pr-	Af pr+	Af sec-	Af sec+	N x	N y	N xy	M x	M y	M xy
							N/mm	N/mm	N/mm	N	N	N	
4	ok 0.06	3.00e-02	7.02e-04	80.4	80.4	80.4	80.4	133.4	-19.5	-36.1	-3.823e+04	2231.0	1.009e+05
5	ok 0.06	2.70e-02	1.16e-03	80.4	80.4	80.4	80.4	-44.5	24.5	-9.0	7.952e+04	-3.142e+04	6.508e+04
6	ok 0.06	4.08e-02	9.73e-04	80.4	80.4	80.4	80.4	261.6	-28.7	53.8	-1.534e+05	3.120e+04	3.927e+04
7	ok 0.06	4.78e-02	9.37e-04	80.4	80.4	80.4	80.4	124.0	-1.6	-74.5	-3.445e+04	1227.6	1.739e+05
8	ok 0.06	4.88e-02	1.98e-03	80.4	80.4	80.4	80.4	-59.9	26.0	-43.2	1.274e+05	-4.654e+04	1.325e+05
9	ok 0.06	6.20e-02	1.63e-03	80.4	80.4	80.4	80.4	295.4	-47.9	33.3	-2.104e+05	4.788e+04	1.000e+05
15	ok 0.06	3.16e-02	4.30e-03	80.4	80.4	80.4	80.4	-110.8	-15.5	51.3	1.106e+05	-5.986e+04	3.317e+04
16	ok 0.06	4.08e-02	1.17e-03	80.4	80.4	80.4	80.4	326.8	25.7	163.6	-1.585e+05	4.154e+04	-1431.5

20	ok	0.06	5.25e-02	4.56e-03	80.4	80.4	80.4	80.4	-135.6	23.3	55.0	1.820e+05	-6.971e+04	7.230e+04
21	ok	0.06	6.38e-02	1.40e-03	80.4	80.4	80.4	80.4	361.5	-8.7	139.2	-2.407e+05	6.717e+04	5.067e+04
35	ok	0.06	3.40e-02	7.06e-03	80.4	80.4	80.4	80.4	-125.7	-111.9	140.1	1.110e+05	-3.909e+04	-2.467e+04
36	ok	0.06	5.40e-02	1.51e-03	80.4	80.4	80.4	80.4	251.8	199.3	283.9	-1.476e+05	-5.078e+04	-9.334e+04
41	ok	0.06	5.38e-02	7.22e-03	80.4	80.4	80.4	80.4	-165.4	-63.5	162.2	2.128e+05	-6114.8	-3.408e+04
42	ok	0.06	7.33e-02	2.61e-03	80.4	80.4	80.4	80.4	270.2	172.2	311.9	-2.466e+05	-4.174e+04	-8.683e+04
73	ok	0.06	3.52e-02	8.94e-03	80.4	80.4	80.4	80.4	-90.6	-219.0	186.4	7.699e+04	6.455e+04	-6.526e+04
74	ok	0.06	4.58e-02	1.44e-03	80.4	80.4	80.4	80.4	148.1	377.6	298.3	-9.251e+04	-7.777e+04	-8.603e+04
79	ok	0.06	5.20e-02	9.09e-03	80.4	80.4	80.4	80.4	-108.6	-194.0	202.3	1.805e+05	6.233e+04	-6.560e+04
80	ok	0.06	6.49e-02	1.92e-03	80.4	80.4	80.4	80.4	171.1	346.4	322.8	-2.045e+05	-6.661e+04	-8.756e+04
138	ok	0.06	3.68e-02	1.05e-02	80.4	80.4	80.4	80.4	14.7	-378.8	105.8	4.213e+04	9.579e+04	-6.116e+04
139	ok	0.06	6.05e-02	1.73e-03	80.4	80.4	80.4	80.4	-18.9	595.6	168.5	-4.236e+04	-1.698e+05	-8.702e+04
142	ok	0.06	4.71e-02	1.05e-02	80.4	80.4	80.4	80.4	30.8	-364.7	148.5	1.121e+05	1.540e+05	-4.937e+04
143	ok	0.06	7.43e-02	3.17e-03	80.4	80.4	80.4	80.4	-71.6	606.4	197.5	-1.179e+05	-2.073e+05	-9.440e+04
244	ok	0.06	3.51e-02	1.05e-02	80.4	80.4	80.4	80.4	38.9	-410.1	-26.7	2.021e+04	1.332e+05	-1.019e+04
245	ok	0.06	4.17e-02	1.07e-02	80.4	80.4	80.4	80.4	58.0	-416.7	-38.5	1.096e+05	1.624e+05	3940.1
285	ok	0.06	5.33e-02	2.10e-03	80.4	80.4	80.4	80.4	-77.3	650.6	-59.9	-1.096e+05	-1.906e+05	2.336e+04
286	ok	0.06	4.47e-02	1.40e-03	80.4	80.4	80.4	80.4	-53.1	640.1	-38.9	-1.717e+04	-1.650e+05	1151.6
387	ok	0.06	4.71e-02	1.05e-02	80.4	80.4	80.4	80.4	30.5	-365.8	-148.2	1.123e+05	1.539e+05	4.971e+04
388	ok	0.06	7.43e-02	3.19e-03	80.4	80.4	80.4	80.4	-72.3	606.5	-197.4	-1.179e+05	-2.070e+05	9.450e+04
391	ok	0.06	3.68e-02	1.05e-02	80.4	80.4	80.4	80.4	14.5	-379.3	-105.5	4.215e+04	9.529e+04	6.118e+04
392	ok	0.06	6.06e-02	1.74e-03	80.4	80.4	80.4	80.4	-18.6	595.8	-168.2	-4.238e+04	-1.696e+05	8.692e+04
450	ok	0.06	5.22e-02	9.13e-03	80.4	80.4	80.4	80.4	-108.9	-195.7	-202.6	1.811e+05	6.251e+04	6.605e+04
451	ok	0.06	6.50e-02	1.91e-03	80.4	80.4	80.4	80.4	171.5	347.5	-322.8	-2.048e+05	-6.670e+04	8.770e+04
456	ok	0.06	3.54e-02	8.96e-03	80.4	80.4	80.4	80.4	-90.2	-220.2	-186.9	7.728e+04	6.510e+04	6.558e+04
457	ok	0.06	4.58e-02	1.45e-03	80.4	80.4	80.4	80.4	147.6	378.4	-298.6	-9.250e+04	-7.800e+04	8.612e+04
488	ok	0.06	5.38e-02	7.26e-03	80.4	80.4	80.4	80.4	-166.2	-64.7	-162.9	2.128e+05	-6045.2	3.416e+04
489	ok	0.06	7.33e-02	2.62e-03	80.4	80.4	80.4	80.4	270.6	173.2	-312.2	-2.467e+05	-4.160e+04	8.679e+04
494	ok	0.06	3.41e-02	7.10e-03	80.4	80.4	80.4	80.4	-126.2	-112.9	-140.5	1.110e+05	-3.875e+04	2.465e+04
495	ok	0.06	5.40e-02	1.52e-03	80.4	80.4	80.4	80.4	251.8	199.9	-284.7	-1.475e+05	-5.075e+04	9.337e+04
509	ok	0.06	5.24e-02	4.60e-03	80.4	80.4	80.4	80.4	-135.6	23.6	-55.6	1.812e+05	-6.994e+04	-7.246e+04
510	ok	0.06	6.39e-02	1.39e-03	80.4	80.4	80.4	80.4	362.4	-7.9	-139.6	-2.410e+05	6.711e+04	-5.071e+04
514	ok	0.06	3.15e-02	4.34e-03	80.4	80.4	80.4	80.4	-111.5	-16.3	-51.8	1.098e+05	-5.983e+04	-3.339e+04
515	ok	0.06	4.08e-02	1.18e-03	80.4	80.4	80.4	80.4	327.2	25.8	-164.4	-1.585e+05	4.145e+04	1564.4
521	ok	0.06	4.88e-02	2.00e-03	80.4	80.4	80.4	80.4	-60.9	25.6	43.2	1.272e+05	-4.648e+04	-1.325e+05
522	ok	0.06	6.20e-02	1.65e-03	80.4	80.4	80.4	80.4	296.2	-47.4	-33.5	-2.104e+05	4.788e+04	-1.001e+05
523	ok	0.06	4.78e-02	9.53e-04	80.4	80.4	80.4	80.4	124.5	-1.1	74.5	-3.487e+04	1058.1	-1.739e+05
524	ok	0.06	2.70e-02	1.18e-03	80.4	80.4	80.4	80.4	-45.5	24.9	8.6	7.932e+04	-3.143e+04	-6.499e+04
525	ok	0.06	4.08e-02	9.85e-04	80.4	80.4	80.4	80.4	262.3	-29.0	-54.3	-1.534e+05	3.123e+04	-3.920e+04
526	ok	0.06	3.00e-02	7.09e-04	80.4	80.4	80.4	80.4	133.6	-20.0	35.9	-3.861e+04	2245.0	-1.008e+05

Nodo	x/d	V N/M	ver. rid	Af pr-	Af pr+	Af sec-	Af sec+	N x	N y	N xy	M x	M y	M xy
							-166.17	-416.67	-322.80	-2.467e+05	-2.073e+05	-1.739e+05	
	0.06	0.07	0.018	0.42	80.42	80.42	80.42	362.36	650.64	322.77	2.128e+05	1.624e+05	1.739e+05

Nodo	Stato	Max tau	Ver V pr	Ver V sec	Af V pr	Af V sec	V pr	V sec

	daN/cm2		N/mm	N/mm
4ok	0.79			
5ok	1.27			
6ok	1.30			
7ok	0.62			
8ok	0.84			
9ok	0.85			
15ok	2.03			
16ok	2.14			
20ok	1.50			
21ok	1.72			
35ok	2.40			
36ok	2.44			
41ok	1.87			
42ok	1.93			
73ok	2.83			
74ok	2.94			
79ok	2.38			
80ok	2.58			
138	ok	2.89		
139	ok	2.93		
142	ok	2.49		
143	ok	2.58		
244	ok	2.86		
245	ok	2.62		
285	ok	2.80		
286	ok	2.97		
387	ok	2.50		
388	ok	2.58		
391	ok	2.90		
392	ok	2.93		
450	ok	2.38		
451	ok	2.58		
456	ok	2.82		
457	ok	2.94		
488	ok	1.87		
489	ok	1.94		
494	ok	2.40		
495	ok	2.44		
509	ok	1.50		
510	ok	1.72		
514	ok	2.03		
515	ok	2.14		
521	ok	0.85		
522	ok	0.85		
523	ok	0.62		

524	ok	1.27
525	ok	1.30
526	ok	0.79

Nodo	Max tau	Ver V pr	Ver V sec	Af V pr	Af V sec	V pr	V sec
	2.97						

Macro Guscio	Spessore	Id Materiale	Id Criterio	Progettazione
	cm			
3	155.00	9	2	Singolo elemento

Nodo	Statox/d	V N/M	ver. rid	Af pr-	Af pr+	Af sec-	Af sec+	N x	N y	N xy	M x	M y	M xy
							N/mm	N/mm	N/mm	N	N	N	
7	ok 0.05	4.37e-02	9.59e-04	80.4	80.4	80.4	80.4	144.1	-19.3	-63.7	-3.286e+04	4808.7	1.807e+05
8	ok 0.05	4.33e-02	1.55e-03	80.4	80.4	80.4	80.4	-57.2	37.4	-31.1	1.262e+05	-4.769e+04	1.314e+05
9	ok 0.05	6.00e-02	1.56e-03	80.4	80.4	80.4	80.4	272.6	-62.1	40.5	-2.402e+05	5.230e+04	8.807e+04
12	ok 0.05	5.47e-02	1.57e-03	80.4	80.4	80.4	80.4	111.2	-9.3	-101.9	-3285.2	9653.3	2.462e+05
13	ok 0.05	6.67e-02	2.37e-03	80.4	80.4	80.4	80.4	-70.2	58.6	-71.3	1.867e+05	-6.856e+04	2.099e+05
14	ok 0.05	8.71e-02	2.57e-03	80.4	80.4	80.4	80.4	315.5	-109.8	14.3	-3.228e+05	7.439e+04	1.647e+05
20	ok 0.05	4.89e-02	3.92e-03	80.4	80.4	80.4	80.4	-110.2	15.9	39.8	2.068e+05	-7.046e+04	6.271e+04
21	ok 0.05	6.14e-02	1.58e-03	80.4	80.4	80.4	80.4	350.4	-9.8	156.1	-2.626e+05	7.319e+04	3.890e+04
23	ok 0.05	7.14e-02	3.91e-03	80.4	80.4	80.4	80.4	-165.8	72.4	22.1	2.833e+05	-5.216e+04	1.041e+05
24	ok 0.05	8.41e-02	2.07e-03	80.4	80.4	80.4	80.4	371.0	-56.1	123.1	-3.401e+05	8.293e+04	1.098e+05
41	ok 0.05	5.18e-02	6.13e-03	80.4	80.4	80.4	80.4	-140.7	-53.3	160.2	2.206e+05	8665.3	-5.399e+04
42	ok 0.05	7.77e-02	2.57e-03	80.4	80.4	80.4	80.4	233.9	150.7	299.9	-2.675e+05	-7.130e+04	-1.271e+05
46	ok 0.05	7.81e-02	6.42e-03	80.4	80.4	80.4	80.4	-161.6	-7.9	174.6	3.548e+05	4142.8	-3.229e+04
47	ok 0.05	0.1	4.02e-03	80.4	80.4	80.4	80.4	258.6	105.0	345.8	-4.163e+05	-7.302e+04	-1.164e+05
79	ok 0.05	5.19e-02	7.84e-03	80.4	80.4	80.4	80.4	-87.7	-182.0	195.9	1.819e+05	8.872e+04	-8.586e+04
80	ok 0.05	6.67e-02	2.02e-03	80.4	80.4	80.4	80.4	148.4	347.3	319.3	-2.105e+05	-9.391e+04	-1.154e+05
84	ok 0.05	7.54e-02	7.84e-03	80.4	80.4	80.4	80.4	-32.1	-229.1	173.9	3.068e+05	1.420e+05	-4.685e+04
85	ok 0.05	9.31e-02	2.58e-03	80.4	80.4	80.4	80.4	173.5	299.6	341.5	-3.689e+05	-8.616e+04	-9.812e+04
142	ok 0.05	5.17e-02	8.86e-03	80.4	80.4	80.4	80.4	53.5	-337.3	112.7	1.140e+05	1.686e+05	-8.215e+04
143	ok 0.05	8.60e-02	3.10e-03	80.4	80.4	80.4	80.4	-78.1	552.4	184.2	-1.094e+05	-2.828e+05	-1.256e+05
147	ok 0.05	6.87e-02	9.10e-03	80.4	80.4	80.4	80.4	77.0	-333.2	163.8	2.384e+05	2.476e+05	-7.021e+04
148	ok 0.05	0.1	4.83e-03	80.4	80.4	80.4	80.4	-128.2	578.4	249.3	-2.289e+05	-3.876e+05	-1.092e+05
245	ok 0.05	4.74e-02	9.06e-03	80.4	80.4	80.4	80.4	64.0	-386.3	-34.6	9.901e+04	2.099e+05	1061.6
246	ok 0.05	6.13e-02	9.31e-03	80.4	80.4	80.4	80.4	80.2	-394.5	-50.1	2.552e+05	2.542e+05	2.426e+04
284	ok 0.05	7.87e-02	2.65e-03	80.4	80.4	80.4	80.4	-104.1	639.5	-81.6	-2.511e+05	-2.842e+05	6.488e+04
285	ok 0.05	6.09e-02	2.04e-03	80.4	80.4	80.4	80.4	-84.0	632.0	-51.2	-9.615e+04	-2.465e+05	2.591e+04
382	ok 0.05	6.88e-02	9.11e-03	80.4	80.4	80.4	80.4	76.9	-334.3	-163.1	2.387e+05	2.475e+05	7.060e+04
383	ok 0.05	0.1	4.81e-03	80.4	80.4	80.4	80.4	-128.0	579.1	-248.6	-2.291e+05	-3.875e+05	1.093e+05
387	ok 0.05	5.17e-02	8.87e-03	80.4	80.4	80.4	80.4	44.8	-335.9	-138.5	1.014e+05	2.024e+05	6.096e+04
388	ok 0.05	8.60e-02	3.11e-03	80.4	80.4	80.4	80.4	-78.0	552.9	-183.8	-1.094e+05	-2.825e+05	1.255e+05

445	ok 0.05	7.56e-02	7.87e-03	80.4	80.4	80.4	80.4	-31.0	-229.5	-174.1	3.065e+05	1.407e+05	4.714e+04
446	ok 0.05	9.34e-02	2.57e-03	80.4	80.4	80.4	80.4	173.8	301.0	-341.6	-3.696e+05	-8.625e+04	9.854e+04
450	ok 0.05	5.20e-02	7.86e-03	80.4	80.4	80.4	80.4	-87.0	-183.4	-196.4	1.822e+05	8.905e+04	8.633e+04
451	ok 0.05	6.67e-02	2.03e-03	80.4	80.4	80.4	80.4	147.8	348.1	-319.5	-2.105e+05	-9.408e+04	1.155e+05
483	ok 0.05	7.80e-02	6.45e-03	80.4	80.4	80.4	80.4	-161.9	-9.4	-175.2	3.545e+05	4090.9	3.245e+04
484	ok 0.05	0.1	4.00e-03	80.4	80.4	80.4	80.4	258.6	106.2	-346.0	-4.164e+05	-7.285e+04	1.163e+05
488	ok 0.05	5.17e-02	6.16e-03	80.4	80.4	80.4	80.4	-140.7	-54.1	-161.3	2.204e+05	8715.4	5.418e+04
489	ok 0.05	7.77e-02	2.59e-03	80.4	80.4	80.4	80.4	233.6	151.3	-300.6	-2.673e+05	-7.112e+04	1.271e+05
506	ok 0.05	7.12e-02	3.95e-03	80.4	80.4	80.4	80.4	-167.3	71.7	-22.9	2.834e+05	-5.201e+04	-1.041e+05
507	ok 0.05	8.43e-02	2.06e-03	80.4	80.4	80.4	80.4	372.0	-55.2	-123.6	-3.409e+05	8.300e+04	-1.098e+05
509	ok 0.05	4.87e-02	3.94e-03	80.4	80.4	80.4	80.4	-110.9	15.2	-40.4	2.057e+05	-7.051e+04	-6.294e+04
510	ok 0.05	6.14e-02	1.59e-03	80.4	80.4	80.4	80.4	350.6	-9.5	-156.9	-2.626e+05	7.313e+04	-3.881e+04
516	ok 0.05	6.67e-02	2.39e-03	80.4	80.4	80.4	80.4	-71.0	58.1	71.1	1.863e+05	-6.839e+04	-2.099e+05
517	ok 0.05	8.71e-02	2.56e-03	80.4	80.4	80.4	80.4	316.0	-109.2	-14.7	-3.227e+05	7.434e+04	-1.647e+05
518	ok 0.05	5.47e-02	1.56e-03	80.4	80.4	80.4	80.4	112.1	-8.8	102.0	-4188.6	9395.6	-2.465e+05
521	ok 0.05	4.32e-02	1.56e-03	80.4	80.4	80.4	80.4	-58.0	37.9	30.7	1.258e+05	-4.776e+04	-1.313e+05
522	ok 0.05	6.00e-02	1.57e-03	80.4	80.4	80.4	80.4	273.0	-62.5	-41.0	-2.400e+05	5.242e+04	-8.801e+04
523	ok 0.05	4.37e-02	9.66e-04	80.4	80.4	80.4	80.4	144.2	-19.7	63.5	-3.332e+04	4789.9	-1.805e+05

Nodo	x/d	V N/M	ver. rid	Af pr-	Af pr+	Af sec-	Af sec+	N x	N y	N xy	M x	M y	M xy
								-167.33	-394.47	-345.96	-4.164e+05	-3.876e+05	-2.465e+05
	0.05	0.11	9.31e-03	80.42	80.42	80.42	80.42	372.02	639.45	345.7	83.548e+05	2.542e+05	2.462e+05

Nodo	Stato	Max tau	Ver V pr	Ver V sec	Af V pr	Af V sec	V pr	V sec
	daN/cm2					N/mm	N/mm	
7	ok	0.60						
8	ok	1.05						
9	ok	1.14						
12	ok	0.63						
13	ok	0.76						
14	ok	1.26						
20	ok	1.93						
21	ok	2.06						
23	ok	1.47						
24	ok	1.88						
41	ok	2.32						
42	ok	2.41						
46	ok	2.08						
47	ok	2.53						
79	ok	2.88						
80	ok	3.00						
84	ok	2.56						
85	ok	2.98						
142	ok	2.96						
143	ok	3.06						
147	ok	2.81						

148	ok	3.25
245	ok	3.04
246	ok	2.97
284	ok	3.38
285	ok	3.16
382	ok	2.81
383	ok	3.24
387	ok	2.96
388	ok	3.06
445	ok	2.55
446	ok	2.98
450	ok	2.87
451	ok	3.00
483	ok	2.07
484	ok	2.53
488	ok	2.31
489	ok	2.42
506	ok	1.47
507	ok	1.88
509	ok	1.93
510	ok	2.06
516	ok	0.76
517	ok	1.25
518	ok	0.63
521	ok	1.05
522	ok	1.14
523	ok	0.60

Nodo	Max tau	Ver V pr	Ver V sec	Af V pr	Af V sec	V pr	V sec
	3.38						

Macro Guscio	Spessore	Id Materiale	Id Criterio	Progettazione
	cm			
4	170.00	9	2	Singolo elemento

Nodo	Statox/d	V N/M	ver. rid	Af pr-	Af pr+	Af sec-	Af sec+	N x	N y	N xy	M x	M y	M xy
							N/mm	N/mm	N/mm	N	N	N	
12	ok 0.05	5.59e-02	1.75e-03	80.4	80.4	80.4	80.4	237.4	27.1	-76.7	-2.028e+04	5828.1	2.651e+05
13	ok 0.05	6.29e-02	3.52e-03	80.4	80.4	80.4	80.4	-152.0	12.0	-44.7	2.021e+05	-5.743e+04	2.066e+05
14	ok 0.05	8.89e-02	2.92e-03	80.4	80.4	80.4	80.4	361.5	-64.4	36.6	-3.844e+05	7.235e+04	1.450e+05
17	ok 0.05	8.32e-02	4.51e-03	80.4	80.4	80.4	80.4	-57.1	-107.4	-125.	12.137e+05	6.150e+04	2.736e+05
18	ok 0.05	0.1	5.61e-03	80.4	80.4	80.4	80.4	39.2	200.0	-117.	82.230e+05	-2.026e+05	3.413e+05
19	ok 0.05	0.1	6.36e-03	80.4	80.4	80.4	80.4	212.0	-293.2	-34.7	-4.469e+05	2.058e+05	3.172e+05

23	ok 0.05	6.77e-02	4.93e-03	80.4	80.4	80.4	80.4	-219.6	25.2	49.4	3.204e+05	-5.193e+04	8.983e+04
24	ok 0.05	8.65e-02	2.11e-03	80.4	80.4	80.4	80.4	424.4	2.8	159.9	-3.929e+05	9.374e+04	9.932e+04
30	ok 0.05	0.1	6.53e-03	80.4	80.4	80.4	80.4	-287.9	-37.1	64.4	5.286e+05	1.393e+05	5.191e+04
31	ok 0.05	0.1	4.26e-03	80.4	80.4	80.4	80.4	437.0	117.3	212.2	-4.931e+05	-1.817e+05	-1.641e+04
46	ok 0.05	7.69e-02	6.51e-03	80.4	80.4	80.4	80.4	-180.6	-37.6	179.6	3.780e+05	3.200e+04	-6.303e+04
47	ok 0.05	0.1	4.21e-03	80.4	80.4	80.4	80.4	254.2	121.1	333.6	-4.577e+05	-1.198e+05	-1.793e+05
53	ok 0.05	0.1	7.03e-03	80.4	80.4	80.4	80.4	-246.0	-22.7	156.8	6.324e+05	1.079e+04	3.995e+04
54	ok 0.05	0.2	7.22e-03	80.4	80.4	80.4	80.4	310.7	115.9	347.4	-7.069e+05	-1.571e+05	-7.048e+04
84	ok 0.05	7.53e-02	7.53e-03	80.4	80.4	80.4	80.4	-110.6	-163.7	211.3	3.433e+05	1.336e+05	-9.625e+04
85	ok 0.05	9.67e-02	2.68e-03	80.4	80.4	80.4	80.4	175.5	331.5	343.0	-3.954e+05	-1.122e+05	-1.411e+05
92	ok 0.05	0.1	8.52e-03	80.4	80.4	80.4	80.4	-90.3	-278.4	189.4	4.984e+05	3.828e+05	-4.428e+04
93	ok 0.05	0.1	3.84e-03	80.4	80.4	80.4	80.4	94.1	503.8	293.1	-4.232e+05	-4.649e+05	-4.476e+04
147	ok 0.05	7.38e-02	7.64e-03	80.4	80.4	80.4	80.4	78.3	-296.0	159.9	2.265e+05	3.164e+05	-9.103e+04
148	ok 0.05	0.1	4.88e-03	80.4	80.4	80.4	80.4	-135.7	510.1	232.5	-2.076e+05	-5.030e+05	-1.458e+05
155	ok 0.05	0.1	8.10e-03	80.4	80.4	80.4	80.4	86.1	-317.3	165.0	4.729e+05	3.627e+05	-9.951e+04
156	ok 0.05	0.1	6.99e-03	80.4	80.4	80.4	80.4	-234.5	498.4	272.4	-4.486e+05	-5.449e+05	-1.955e+05
246	ok 0.05	6.43e-02	7.54e-03	80.4	80.4	80.4	80.4	93.6	-341.1	-58.4	2.411e+05	3.128e+05	2.755e+04
247	ok 0.05	9.94e-02	8.07e-03	80.4	80.4	80.4	80.4	86.1	-370.1	-47.4	4.702e+05	3.881e+05	6.073e+04
283	ok 0.05	0.1	2.80e-03	80.4	80.4	80.4	80.4	-116.6	629.5	-91.7	-4.338e+05	-4.311e+05	1.285e+05
284	ok 0.05	8.46e-02	2.71e-03	80.4	80.4	80.4	80.4	-116.9	597.1	-79.9	-2.360e+05	-3.485e+05	8.169e+04
374	ok 0.05	0.1	8.04e-03	80.4	80.4	80.4	80.4	90.0	-316.2	-163.5	4.714e+05	3.616e+05	9.950e+04
375	ok 0.05	0.2	6.93e-03	80.4	80.4	80.4	80.4	-232.7	501.8	-271.0	-4.496e+05	-5.460e+05	1.949e+05
382	ok 0.05	7.38e-02	7.61e-03	80.4	80.4	80.4	80.4	80.2	-295.2	-159.2	2.263e+05	3.159e+05	9.135e+04
383	ok 0.05	0.1	4.85e-03	80.4	80.4	80.4	80.4	-137.4	509.0	-231.9	-2.073e+05	-5.026e+05	1.458e+05
437	ok 0.05	0.1	8.44e-03	80.4	80.4	80.4	80.4	-87.0	-275.6	-188.9	4.978e+05	3.777e+05	4.427e+04
438	ok 0.05	0.1	3.79e-03	80.4	80.4	80.4	80.4	90.9	500.6	-292.2	-4.230e+05	-4.604e+05	4.418e+04
445	ok 0.05	7.54e-02	7.52e-03	80.4	80.4	80.4	80.4	-108.9	-163.6	-211.6	3.434e+05	1.334e+05	9.702e+04
446	ok 0.05	9.67e-02	2.65e-03	80.4	80.4	80.4	80.4	173.9	331.0	-343.0	-3.956e+05	-1.121e+05	1.413e+05
476	ok 0.05	0.1	6.98e-03	80.4	80.4	80.4	80.4	-242.0	-21.9	-157.8	6.293e+05	1.010e+04	-3.946e+04
477	ok 0.05	0.2	7.16e-03	80.4	80.4	80.4	80.4	306.4	114.9	-347.9	-7.045e+05	-1.563e+05	7.058e+04
483	ok 0.05	7.68e-02	6.49e-03	80.4	80.4	80.4	80.4	-179.0	-37.2	-180.3	3.772e+05	3.158e+04	6.320e+04
484	ok 0.05	0.1	4.18e-03	80.4	80.4	80.4	80.4	252.2	120.4	-333.9	-4.572e+05	-1.192e+05	1.792e+05
499	ok 0.05	0.1	6.46e-03	80.4	80.4	80.4	80.4	-284.7	-33.9	-64.0	5.258e+05	1.364e+05	-5.397e+04
500	ok 0.05	0.1	4.21e-03	80.4	80.4	80.4	80.4	433.1	114.4	-211.6	-4.909e+05	-1.786e+05	1.410e+04
506	ok 0.05	6.76e-02	4.93e-03	80.4	80.4	80.4	80.4	-219.2	26.4	-50.2	3.199e+05	-5.201e+04	-8.981e+04
507	ok 0.05	8.65e-02	2.09e-03	80.4	80.4	80.4	80.4	423.4	1.7	-160.4	-3.931e+05	9.398e+04	-9.935e+04
511	ok 0.05	0.1	5.53e-03	80.4	80.4	80.4	80.4	36.2	197.0	116.9	2.230e+05	-2.008e+05	-3.405e+05
512	ok 0.05	0.1	6.29e-03	80.4	80.4	80.4	80.4	214.5	-290.0	33.6	-4.472e+05	2.041e+05	-3.165e+05
513	ok 0.05	8.30e-02	4.46e-03	80.4	80.4	80.4	80.4	-52.3	-105.1	125.6	2.095e+05	6.077e+04	-2.752e+05
516	ok 0.05	6.27e-02	3.49e-03	80.4	80.4	80.4	80.4	-150.9	13.6	44.5	2.012e+05	-5.767e+04	-2.065e+05
517	ok 0.05	8.87e-02	2.89e-03	80.4	80.4	80.4	80.4	360.0	-65.9	-36.9	-3.838e+05	7.271e+04	-1.450e+05
518	ok 0.05	5.60e-02	1.72e-03	80.4	80.4	80.4	80.4	235.9	25.7	77.0	-2.080e+04	5876.2	-2.651e+05

Nodo	x/d	V N/M	ver. rid	Af pr-	Af pr+	Af sec-	Af sec+	N x	N y	N xy	M x	M y	M xy
								-287.8	8-370.08	-347.87	-7.069e+05	-5.460e+05	-3.405e+05
	0.05	0.15	8.52e-03	80.42	80.42	80.42	80.42	436.96	629.45	347.3	76.324e+05	3.881e+05	3.413e+05

Nodo	Stato	Max tau	Ver V pr	Ver V sec	Af V pr	Af V sec	V pr	V sec
	daN/cm2					N/mm	N/mm	
12ok	0.51							
13ok	0.93							
14ok	1.26							
17ok	2.19							
18ok	0.87							
19ok	2.28							
23ok	1.95							
24ok	2.14							
30ok	2.19							
31ok	4.26							
46ok	2.39							
47ok	2.74							
53ok	2.54							
54ok	4.23							
84ok	3.06							
85ok	3.25							
92ok	3.51							
93ok Av	5.63	0.07	0.11	4.2	6.3	595.9	904.5	
147	ok	3.19						
148	ok	3.54						
155	ok	3.59						
156	ok Av	5.29	0.10	0.08	5.6	4.3	802.1	611.1
246	ok	3.33						
247	ok	3.73						
283	ok Av	5.85	0.04	0.11	2.4	6.2	344.4	887.4
284	ok	3.53						
374	ok	3.59						
375	ok Av	5.29	0.10	0.08	5.6	4.3	801.8	611.0
382	ok	3.19						
383	ok	3.54						
437	ok	3.49						
438	ok Av	5.62	0.07	0.11	4.2	6.3	597.0	902.4
445	ok	3.05						
446	ok	3.26						
476	ok	2.54						
477	ok	4.23						
483	ok	2.39						
484	ok	2.74						
499	ok	2.18						
500	ok	4.24						
506	ok	1.95						
507	ok	2.14						
511	ok	0.87						

512	ok	2.28
513	ok	2.17
516	ok	0.94
517	ok	1.26
518	ok	0.52

Nodo		Max tau	Ver V pr	Ver V sec	Af V pr	Af V sec	V pr	V sec
	5.85	0.10	0.11	5.60	6.31	802.10	904.52	

Macro Guscio	Spessore	Id Materiale	Id Criterio	Progettazione
	cm			
5	185.00	9	2	Singolo elemento

Nodo	Statox/d	V N/M	ver. rid	Af pr-	Af pr+	Af sec-	Af sec+	N x	N y	N xy	M x	M y	M xy
							N/mm	N/mm	N/mm	N	N	N	
17	ok 0.04	0.1	3.04e-03	80.4	80.4	80.4	80.4	58.6	-10.4	-166.1	2.197e+05	1.528e+05	5.979e+05
18	ok 0.04	6.94e-02	2.61e-03	80.4	80.4	80.4	80.4	-104.8	106.3	-78.1	2.445e+05	-1.469e+05	2.615e+05
19	ok 0.04	0.1	2.94e-03	80.4	80.4	80.4	80.4	225.9	-110.9	-84.0	-4.748e+05	-6.648e+04	3.201e+05
22	ok 0.04	0.1	3.17e-03	80.4	80.4	80.4	80.4	186.4	-61.4	-171.3	-7.583e+04	3.389e+04	5.272e+05
25	ok 0.04	0.1	3.23e-03	80.4	80.4	80.4	80.4	-109.5	94.6	-115.7	3.571e+05	-5.477e+04	4.220e+05
26	ok 0.04	0.2	3.37e-03	80.4	80.4	80.4	80.4	348.0	-166.5	-31.2	-6.063e+05	-4.204e+04	3.931e+05
30	ok 0.04	0.1	3.54e-03	80.4	80.4	80.4	80.4	-146.0	176.9	-49.4	4.886e+05	-3.011e+05	3.199e+05
31	ok 0.04	0.1	4.74e-03	80.4	80.4	80.4	80.4	329.2	-208.9	93.8	-4.872e+05	5.808e+05	2.221e+05
37	ok 0.04	0.1	4.16e-03	80.4	80.4	80.4	80.4	-206.7	168.0	24.0	6.797e+05	-1.101e+05	2.489e+05
38	ok 0.04	0.1	5.00e-03	80.4	80.4	80.4	80.4	385.9	-199.6	179.4	-7.438e+05	1.115e+05	1.810e+05
53	ok 0.04	0.1	4.57e-03	80.4	80.4	80.4	80.4	-99.4	8.5	174.8	5.198e+05	1.356e+05	-7.051e+04
54	ok 0.04	0.2	4.00e-03	80.4	80.4	80.4	80.4	164.6	88.8	324.5	-6.526e+05	-4.142e+05	-1.709e+05
59	ok 0.04	0.1	4.84e-03	80.4	80.4	80.4	80.4	-155.1	76.2	166.1	8.212e+05	1.237e+05	4.904e+04
60	ok 0.04	0.2	4.81e-03	80.4	80.4	80.4	80.4	242.7	2.6	342.7	-1.007e+06	-2.837e+05	-3.147e+04
92	ok 0.04	0.1	5.39e-03	80.4	80.4	80.4	80.4	75.6	-132.7	217.5	4.718e+05	2.149e+05	-2.361e+05
93	ok 0.04	0.1	6.28e-03	80.4	80.4	80.4	80.4	46.9	133.5	394.0	-3.456e+05	1.734e+05	-3.613e+05
97	ok 0.04	0.1	5.85e-03	80.4	80.4	80.4	80.4	-4.1	-65.9	255.5	7.488e+05	2.498e+05	-1.195e+05
98	ok 0.04	0.2	6.61e-03	80.4	80.4	80.4	80.4	-4.1	221.6	424.4	-7.377e+05	-3.238e+05	-1.820e+05
155	ok 0.04	0.1	6.01e-03	80.4	80.4	80.4	80.4	65.9	-190.3	184.6	5.386e+05	4.515e+05	-1.483e+05
156	ok 0.04	0.2	4.65e-03	80.4	80.4	80.4	80.4	-106.3	393.1	273.1	-6.938e+05	-7.080e+05	-2.619e+05
157	ok 0.04	0.1	5.77e-03	80.4	80.4	80.4	80.4	128.4	-227.8	159.1	7.653e+05	5.223e+05	-8.420e+04
160	ok 0.04	0.2	5.61e-03	80.4	80.4	80.4	80.4	-195.9	461.7	251.1	-8.753e+05	-7.587e+05	-1.359e+05
247	ok 0.04	8.06e-02	6.02e-03	80.4	80.4	80.4	80.4	229.4	-291.9	-69.3	2.087e+05	4.296e+05	6.473e+04
248	ok 0.04	0.1	6.06e-03	80.4	80.4	80.4	80.4	238.7	-301.4	-21.1	6.050e+05	5.477e+05	1.221e+04
282	ok 0.04	0.1	7.08e-03	80.4	80.4	80.4	80.4	-352.1	562.2	-35.0	-5.607e+05	-6.542e+05	6409.1
283	ok 0.04	9.43e-02	6.82e-03	80.4	80.4	80.4	80.4	-331.5	544.8	-91.2	8.626e+04	-4.431e+05	1.364e+05
370	ok 0.04	0.1	5.75e-03	80.4	80.4	80.4	80.4	128.8	-228.0	-157.4	7.656e+05	5.217e+05	8.502e+04
373	ok 0.04	0.2	5.60e-03	80.4	80.4	80.4	80.4	-196.0	461.5	-249.6	-8.753e+05	-7.581e+05	1.363e+05

374	ok 0.04	0.1	5.99e-03	80.4	80.4	80.4	80.4	67.8	-193.4	-184.2	5.388e+05	4.524e+05	1.499e+05
375	ok 0.04	0.2	4.63e-03	80.4	80.4	80.4	80.4	-107.9	395.6	-272.8	-6.938e+05	-7.088e+05	2.630e+05
432	ok 0.04	0.1	5.83e-03	80.4	80.4	80.4	80.4	-2.7	-67.5	-254.5	7.481e+05	2.496e+05	1.198e+05
433	ok 0.04	0.2	6.59e-03	80.4	80.4	80.4	80.4	-5.1	222.6	-423.3	-7.375e+05	-3.239e+05	1.819e+05
437	ok 0.04	0.1	5.36e-03	80.4	80.4	80.4	80.4	77.3	-134.0	-215.3	4.684e+05	2.139e+05	2.338e+05
438	ok 0.04	0.1	6.26e-03	80.4	80.4	80.4	80.4	44.6	137.2	-394.7	-3.442e+05	1.693e+05	3.616e+05
470	ok 0.04	0.1	4.82e-03	80.4	80.4	80.4	80.4	-154.0	75.1	-166.2	8.200e+05	1.227e+05	-4.876e+04
471	ok 0.04	0.2	4.79e-03	80.4	80.4	80.4	80.4	241.5	3.5	-342.2	-1.007e+06	-2.828e+05	3.128e+04
476	ok 0.04	0.1	4.55e-03	80.4	80.4	80.4	80.4	-98.4	7.4	-174.2	5.187e+05	1.340e+05	6.975e+04
477	ok 0.04	0.2	3.98e-03	80.4	80.4	80.4	80.4	163.3	89.7	-323.3	-6.522e+05	-4.125e+05	1.697e+05
492	ok 0.04	0.1	4.15e-03	80.4	80.4	80.4	80.4	-206.2	167.3	-24.6	6.781e+05	-1.095e+05	-2.486e+05
493	ok 0.04	0.1	4.99e-03	80.4	80.4	80.4	80.4	384.6	-198.5	-179.7	-7.432e+05	1.113e+05	-1.808e+05
499	ok 0.04	0.1	3.50e-03	80.4	80.4	80.4	80.4	-147.0	175.7	46.0	4.878e+05	-2.980e+05	-3.171e+05
500	ok 0.04	0.1	4.72e-03	80.4	80.4	80.4	80.4	329.5	-207.5	-97.0	-4.872e+05	5.780e+05	-2.194e+05
504	ok 0.04	0.1	3.23e-03	80.4	80.4	80.4	80.4	-109.1	94.3	115.9	3.562e+05	-5.497e+04	-4.221e+05
505	ok 0.04	0.2	3.36e-03	80.4	80.4	80.4	80.4	346.9	-166.1	31.2	-6.057e+05	-4.160e+04	-3.933e+05
508	ok 0.04	0.1	3.17e-03	80.4	80.4	80.4	80.4	185.4	-60.8	170.9	-7.613e+04	3.360e+04	-5.264e+05
511	ok 0.04	6.95e-02	2.59e-03	80.4	80.4	80.4	80.4	-103.6	105.3	78.4	2.426e+05	-1.470e+05	-2.626e+05
512	ok 0.04	0.1	2.92e-03	80.4	80.4	80.4	80.4	227.8	-111.8	82.4	-4.763e+05	-6.576e+04	-3.202e+05
513	ok 0.04	0.1	3.01e-03	80.4	80.4	80.4	80.4	61.3	-11.8	164.5	2.159e+05	1.526e+05	-5.949e+05

Nodo	x/d	V N/M	ver. rid	Af pr-	Af pr+	Af sec-	Af sec+	N x	N y	N xy	M x	M y	M xy
								-352.07	-301.40	-423.27	-1.007e+06	-7.587e+05	-5.949e+05
	0.04	0.19	7.08e-03	80.42	80.42	80.42	80.42	385.89	562.20	424.3	8.212e+05	5.808e+05	5.979e+05

Nodo	Stato	Max tau	Ver V pr	Ver V sec	Af V pr	Af V sec	V pr	V sec
	daN/cm2					N/mm	N/mm	
17ok	2.49							
18ok	1.66							
19ok	1.89							
22ok	1.48							
25ok	0.87							
26ok	1.07							
30ok	2.29							
31ok Av	5.90	0.09	0.12	5.1	6.6	803.9	1033.2	
37ok	1.96							
38ok	4.32							
53ok	3.02							
54ok	3.41							
59ok	2.52							
60ok	2.72							
92ok	4.30							
93ok Av	8.39	0.17	0.16	9.2	8.6	1445.8	1351.5	
97ok	3.97							
98ok Av	6.33	0.12	0.10	6.8	5.4	1060.9	837.8	
155	ok	3.65						

156	ok	4.11						
157	ok	3.47						
160	ok	3.67						
247	ok Av	5.16	0.09	0.05	5.2	2.7	815.0	420.5
248	ok	4.61						
282	ok Av	6.97	0.13	0.05	7.5	2.6	1169.2	408.5
283	ok Av	9.22	0.16	0.10	8.9	5.6	1387.1	872.2
370	ok	3.47						
373	ok	3.67						
374	ok	3.65						
375	ok	4.11						
432	ok	3.96						
433	ok Av	6.33	0.12	0.10	6.8	5.3	1061.1	837.2
437	ok	4.29						
438	ok Av	8.38	0.17	0.16	9.2	8.6	1446.9	1349.1
470	ok	2.52						
471	ok	2.72						
476	ok	3.01						
477	ok	3.41						
492	ok	1.95						
493	ok	4.31						
499	ok	2.30						
500	ok Av	5.88	0.09	0.12	5.1	6.6	806.0	1031.2
504	ok	0.87						
505	ok	1.07						
508	ok	1.48						
511	ok	1.65						
512	ok	1.88						
513	ok	2.48						

Nodo		Max tau	Ver V pr	Ver V sec	Af V pr	Af V sec	V pr	V sec
	9.22	0.17	0.16	9.24	8.63	1446.90	1351.52	

Macro Guscio	Spessore	Id Materiale	Id Criterio	Progettazione
	cm			
6	200.00	9	2	Singolo elemento

Nodo	Statox/d	V N/M	ver. rid	Af pr-	Af pr+	Af sec-	Af sec+	N x	N y	N xy	M x	M y	M xy
							N/mm	N/mm	N/mm	N	N	N	
22	ok 0.04	0.1	3.02e-03	80.4	80.4	80.4	80.4	90.7	-58.7	-161.5	-1.170e+05	1.463e+04	5.548e+05
25	ok 0.04	0.1	2.68e-03	80.4	80.4	80.4	80.4	-21.8	88.2	-143.3	3.016e+05	-1.243e+05	4.408e+05
26	ok 0.04	0.1	3.53e-03	80.4	80.4	80.4	80.4	268.0	-181.5	-58.9	-6.371e+05	-2.069e+04	3.968e+05
27	ok 0.04	0.1	3.89e-03	80.4	80.4	80.4	80.4	123.7	-64.2	-218.9	-1.364e+05	-5.493e+04	6.597e+05

32	ok 0.04	0.1	3.21e-03	80.4	80.4	80.4	80.4	-62.0	120.9	-178.8	4.619e+05	-8.452e+04	5.700e+05
33	ok 0.04	0.2	4.42e-03	80.4	80.4	80.4	80.4	290.2	-223.1	-85.2	-7.618e+05	-5.921e+04	5.397e+05
37	ok 0.04	0.1	3.13e-03	80.4	80.4	80.4	80.4	-167.6	191.3	-5.7	6.833e+05	-1.422e+05	2.614e+05
38	ok 0.04	0.1	4.95e-03	80.4	80.4	80.4	80.4	333.8	-228.3	148.4	-7.754e+05	1.591e+05	1.804e+05
44	ok 0.04	0.2	3.44e-03	80.4	80.4	80.4	80.4	-181.9	231.8	-30.6	8.944e+05	-5.488e+04	3.373e+05
45	ok 0.04	0.2	5.67e-03	80.4	80.4	80.4	80.4	344.4	-275.4	135.8	-1.075e+06	-8.997e+04	2.924e+05
59	ok 0.04	0.1	3.18e-03	80.4	80.4	80.4	80.4	-118.7	135.2	125.3	8.398e+05	1.287e+05	1.808e+04
60	ok 0.04	0.2	4.91e-03	80.4	80.4	80.4	80.4	181.7	-82.8	283.2	-1.062e+06	-3.085e+05	-9.826e+04
64	ok 0.04	0.2	3.43e-03	80.4	80.4	80.4	80.4	-130.5	173.8	138.1	1.113e+06	1.810e+05	9.158e+04
65	ok 0.04	0.2	5.99e-03	80.4	80.4	80.4	80.4	194.9	-112.3	327.8	-1.348e+06	-3.901e+05	8723.6
97	ok 0.04	0.1	3.98e-03	80.4	80.4	80.4	80.4	70.2	-11.4	184.0	7.621e+05	3.326e+05	-1.649e+05
98	ok 0.04	0.2	6.51e-03	80.4	80.4	80.4	80.4	-107.4	177.6	337.9	-7.452e+05	-4.248e+05	-2.459e+05
103	ok 0.04	0.2	4.13e-03	80.4	80.4	80.4	80.4	18.8	24.1	242.6	1.112e+06	4.319e+05	-8.732e+04
104	ok 0.04	0.2	7.22e-03	80.4	80.4	80.4	80.4	-52.0	127.9	414.9	-1.245e+06	-6.247e+05	-1.253e+05
157	ok 0.04	0.1	3.57e-03	80.4	80.4	80.4	80.4	140.2	-125.4	147.7	7.511e+05	6.161e+05	-1.183e+05
160	ok 0.04	0.2	5.65e-03	80.4	80.4	80.4	80.4	-216.6	317.1	231.0	-8.619e+05	-9.075e+05	-1.950e+05
163	ok 0.04	0.2	4.04e-03	80.4	80.4	80.4	80.4	178.9	-145.9	166.8	1.094e+06	7.093e+05	-9.068e+04
164	ok 0.04	0.2	6.95e-03	80.4	80.4	80.4	80.4	-279.6	372.4	262.7	-1.251e+06	-9.967e+05	-1.435e+05
248	ok 0.04	0.1	4.01e-03	80.4	80.4	80.4	80.4	251.6	-212.7	-31.3	5.778e+05	6.551e+05	1.278e+04
249	ok 0.04	0.2	4.47e-03	80.4	80.4	80.4	80.4	278.5	-238.7	-16.5	1.011e+06	7.810e+05	7572.4
281	ok 0.04	0.2	7.76e-03	80.4	80.4	80.4	80.4	-414.6	493.4	-23.0	-1.125e+06	-9.914e+05	96.7
282	ok 0.04	0.1	6.97e-03	80.4	80.4	80.4	80.4	-371.1	461.1	-42.5	-5.177e+05	-7.899e+05	1.938e+04
366	ok 0.04	0.2	4.04e-03	80.4	80.4	80.4	80.4	180.1	-147.7	-164.7	1.095e+06	7.089e+05	9.167e+04
367	ok 0.04	0.2	6.94e-03	80.4	80.4	80.4	80.4	-280.3	373.6	-261.0	-1.251e+06	-9.963e+05	1.438e+05
370	ok 0.04	0.1	3.57e-03	80.4	80.4	80.4	80.4	141.7	-126.9	-146.2	7.511e+05	6.160e+05	1.191e+05
373	ok 0.04	0.2	5.65e-03	80.4	80.4	80.4	80.4	-217.8	318.1	-229.8	-8.617e+05	-9.073e+05	1.952e+05
426	ok 0.04	0.2	4.12e-03	80.4	80.4	80.4	80.4	20.8	21.3	-242.0	1.111e+06	4.311e+05	8.788e+04
427	ok 0.04	0.2	7.21e-03	80.4	80.4	80.4	80.4	-53.6	129.9	-414.1	-1.244e+06	-6.243e+05	1.254e+05
432	ok 0.04	0.1	3.98e-03	80.4	80.4	80.4	80.4	72.0	-13.9	-183.3	7.603e+05	3.317e+05	1.646e+05
433	ok 0.04	0.2	6.51e-03	80.4	80.4	80.4	80.4	-108.9	179.4	-337.0	-7.438e+05	-4.242e+05	2.452e+05
465	ok 0.04	0.2	3.43e-03	80.4	80.4	80.4	80.4	-129.1	171.7	-139.0	1.111e+06	1.800e+05	-9.120e+04
466	ok 0.04	0.2	5.97e-03	80.4	80.4	80.4	80.4	193.3	-110.4	-328.1	-1.347e+06	-3.892e+05	-8805.5
470	ok 0.04	0.1	3.18e-03	80.4	80.4	80.4	80.4	-117.4	133.5	-126.6	8.384e+05	1.280e+05	-1.755e+04
471	ok 0.04	0.2	4.91e-03	80.4	80.4	80.4	80.4	180.2	-81.2	-283.9	-1.061e+06	-3.078e+05	9.829e+04
485	ok 0.04	0.2	3.43e-03	80.4	80.4	80.4	80.4	-181.8	231.0	29.1	8.927e+05	-5.490e+04	-3.371e+05
486	ok 0.04	0.2	5.66e-03	80.4	80.4	80.4	80.4	343.4	-274.1	-136.9	-1.074e+06	-8.959e+04	-2.924e+05
492	ok 0.04	0.1	3.13e-03	80.4	80.4	80.4	80.4	-167.5	190.7	3.9	6.818e+05	-1.414e+05	-2.605e+05
493	ok 0.04	0.1	4.95e-03	80.4	80.4	80.4	80.4	332.8	-227.3	-149.9	-7.748e+05	1.586e+05	-1.798e+05
497	ok 0.04	0.1	3.20e-03	80.4	80.4	80.4	80.4	-62.7	120.8	178.1	4.610e+05	-8.461e+04	-5.698e+05
498	ok 0.04	0.2	4.41e-03	80.4	80.4	80.4	80.4	289.9	-222.7	84.2	-7.613e+05	-5.878e+04	-5.397e+05
503	ok 0.04	0.1	3.88e-03	80.4	80.4	80.4	80.4	123.8	-64.1	218.2	-1.367e+05	-5.501e+04	-6.592e+05
504	ok 0.04	0.1	2.68e-03	80.4	80.4	80.4	80.4	-22.4	88.0	142.7	3.005e+05	-1.242e+05	-4.408e+05
505	ok 0.04	0.1	3.53e-03	80.4	80.4	80.4	80.4	267.9	-181.6	57.8	-6.367e+05	-2.016e+04	-3.968e+05
508	ok 0.04	0.1	3.01e-03	80.4	80.4	80.4	80.4	90.3	-58.4	160.7	-1.160e+05	1.491e+04	-5.536e+05

Nodo	x/d	V N/M	ver. rid	Af pr-	Af pr+	Af sec-	Af sec+	N x	N y	N xy	M x	M y	M xy

-414.56-275.45 -414.09-1.348e+06-9.967e+05-6.592e+05

0.04 0.23 7.76e-03 80.42 80.42 80.42 80.42 344.43 493.43 414.941.113e+06 7.810e+05 6.597e+05

Nodo	Stato	Max tau	Ver V pr	Ver V sec	Af V pr	Af V sec	V pr	V sec
	daN/cm2					N/mm	N/mm	
22ok	1.22							
25ok	1.28							
26ok	1.55							
27ok	1.12							
32ok	0.97							
33ok	1.68							
37ok	1.94							
38ok	4.23							
44ok	2.15							
45ok	3.88							
59ok	3.02							
60ok	3.29							
64ok	3.00							
65ok	3.72							
97ok	4.12							
98ok Av	6.42	0.13	0.10	7.2	5.5	1217.5	938.6	
103	ok	4.11						
104	ok Av	5.84	0.11	0.08	6.1	4.6	1039.1	774.0
157	ok	3.92						
160	ok	4.19						
163	ok	4.14						
164	ok Av	4.86	0.10	0.04	5.4	2.5	924.3	423.3
248	ok Av	4.89	0.09	0.03	5.2	1.8	890.6	312.0
249	ok Av	4.74	0.09	0.03	5.2	1.4	881.9	241.3
281	ok Av	6.47	0.13	0.03	7.1	1.8	1211.0	300.3
282	ok Av	7.19	0.14	0.05	7.7	2.8	1303.9	472.1
366	ok	4.14						
367	ok Av	4.86	0.10	0.04	5.4	2.5	924.2	422.6
370	ok	3.91						
373	ok	4.19						
426	ok	4.11						
427	ok Av	5.84	0.11	0.08	6.1	4.6	1039.0	773.5
432	ok	4.12						
433	ok Av	6.42	0.13	0.10	7.2	5.5	1217.8	937.7
465	ok	2.99						
466	ok	3.72						
470	ok	3.02						
471	ok	3.29						
485	ok	2.15						
486	ok	3.88						
492	ok	1.94						

493	ok	4.23
497	ok	0.96
498	ok	1.67
503	ok	1.12
504	ok	1.28
505	ok	1.55
508	ok	1.22

Nodo		Max tau	Ver V pr	Ver V sec	Af V pr	Af V sec	V pr	V sec
	7.19	0.14	0.10	7.68	5.53	1303.92	938.55	

Macro Guscio	Spessore	Id Materiale	Id Criterio	Progettazione
	cm			
7	215.00	9	2	Singolo elemento

Nodo	Statox/d	V N/M	ver. rid	Af pr-	Af pr+	Af sec-	Af sec+	N x	N y	N xy	M x	M y	M xy
							N/mm	N/mm	N/mm	N	N	N	
27	ok 0.04	0.1	3.64e-03	80.4	80.4	80.4	80.4	84.0	-67.0	-202.7	-1.396e+05	-5.904e+04	6.874e+05
32	ok 0.04	0.1	2.91e-03	80.4	80.4	80.4	80.4	-20.3	109.1	-179.6	4.313e+05	-1.241e+05	5.968e+05
33	ok 0.04	0.2	4.34e-03	80.4	80.4	80.4	80.4	256.5	-233.2	-86.6	-8.062e+05	-3.702e+04	5.354e+05
34	ok 0.04	0.2	4.54e-03	80.4	80.4	80.4	80.4	111.1	-79.2	-258.3	-1.977e+05	-1.249e+05	8.443e+05
39	ok 0.04	0.2	3.62e-03	80.4	80.4	80.4	80.4	-60.0	146.4	-217.2	5.965e+05	-1.086e+05	7.385e+05
40	ok 0.04	0.2	5.28e-03	80.4	80.4	80.4	80.4	276.3	-277.2	-118.5	-9.693e+05	-1.275e+05	7.128e+05
44	ok 0.04	0.2	2.80e-03	80.4	80.4	80.4	80.4	-100.0	232.1	-49.4	9.364e+05	-5.716e+04	3.268e+05
45	ok 0.04	0.2	5.56e-03	80.4	80.4	80.4	80.4	231.0	-272.9	114.0	-1.156e+06	-7.617e+04	2.622e+05
50	ok 0.04	0.2	3.18e-03	80.4	80.4	80.4	80.4	-171.9	284.2	-59.1	1.169e+06	-8657.9	4.540e+05
51	ok 0.04	0.3	6.41e-03	80.4	80.4	80.4	80.4	316.5	-346.9	114.1	-1.466e+06	-2.583e+05	4.205e+05
64	ok 0.04	0.2	2.29e-03	80.4	80.4	80.4	80.4	-93.3	208.3	112.5	1.137e+06	1.984e+05	4.899e+04
65	ok 0.04	0.2	5.95e-03	80.4	80.4	80.4	80.4	135.9	-173.9	281.0	-1.399e+06	-4.351e+05	-7.149e+04
71	ok 0.04	0.2	2.73e-03	80.4	80.4	80.4	80.4	-110.7	248.0	126.7	1.481e+06	2.761e+05	1.477e+05
72	ok 0.04	0.3	6.98e-03	80.4	80.4	80.4	80.4	154.5	-206.5	326.3	-1.797e+06	-5.687e+05	7.561e+04
103	ok 0.04	0.2	2.48e-03	80.4	80.4	80.4	80.4	88.7	78.8	175.0	1.130e+06	4.992e+05	-1.437e+05
104	ok 0.04	0.2	7.06e-03	80.4	80.4	80.4	80.4	-142.3	64.8	331.0	-1.272e+06	-7.102e+05	-2.135e+05
112	ok 0.04	0.2	2.73e-03	80.4	80.4	80.4	80.4	52.4	103.1	232.4	1.547e+06	6.282e+05	-6.199e+04
113	ok 0.04	0.3	7.91e-03	80.4	80.4	80.4	80.4	-109.7	36.1	408.6	-1.807e+06	-9.317e+05	-9.163e+04
163	ok 0.04	0.2	1.88e-03	80.4	80.4	80.4	80.4	193.2	-37.4	144.8	1.075e+06	8.269e+05	-1.223e+05
164	ok 0.04	0.2	6.79e-03	80.4	80.4	80.4	80.4	-298.6	219.7	232.4	-1.226e+06	-1.174e+06	-1.938e+05
170	ok 0.04	0.2	2.51e-03	80.4	80.4	80.4	80.4	229.5	-66.5	167.7	1.524e+06	9.490e+05	-9.446e+04
173	ok 0.04	0.3	8.00e-03	80.4	80.4	80.4	80.4	-359.2	281.5	268.3	-1.772e+06	-1.310e+06	-1.411e+05
249	ok 0.04	0.2	2.08e-03	80.4	80.4	80.4	80.4	287.2	-117.0	-22.9	9.813e+05	9.148e+05	-3222.4
250	ok 0.04	0.2	2.68e-03	80.4	80.4	80.4	80.4	320.7	-153.1	-9.1	1.476e+06	1.055e+06	7041.3
280	ok 0.04	0.3	8.44e-03	80.4	80.4	80.4	80.4	-481.3	395.7	-12.7	-1.722e+06	-1.373e+06	2553.3
281	ok 0.04	0.2	7.49e-03	80.4	80.4	80.4	80.4	-426.5	346.2	-30.5	-1.080e+06	-1.169e+06	-8556.9

357	ok 0.04	0.2	2.50e-03	80.4	80.4	80.4	80.4	231.2	-68.5	-165.1	1.523e+06	9.484e+05	9.564e+04
360	ok 0.04	0.3	7.99e-03	80.4	80.4	80.4	80.4	-360.2	282.8	-266.2	-1.772e+06	-1.310e+06	1.415e+05
366	ok 0.04	0.2	1.87e-03	80.4	80.4	80.4	80.4	195.0	-39.2	-142.8	1.074e+06	8.265e+05	1.231e+05
367	ok 0.04	0.2	6.78e-03	80.4	80.4	80.4	80.4	-299.9	221.0	-230.8	-1.226e+06	-1.174e+06	1.940e+05
417	ok 0.04	0.2	2.72e-03	80.4	80.4	80.4	80.4	55.1	100.0	-231.6	1.546e+06	6.270e+05	6.266e+04
418	ok 0.04	0.3	7.90e-03	80.4	80.4	80.4	80.4	-111.7	38.4	-407.6	-1.807e+06	-9.310e+05	9.177e+04
426	ok 0.04	0.2	2.47e-03	80.4	80.4	80.4	80.4	91.0	76.1	-174.3	1.129e+06	4.981e+05	1.439e+05
427	ok 0.04	0.2	7.06e-03	80.4	80.4	80.4	80.4	-144.1	66.8	-330.0	-1.271e+06	-7.094e+05	2.131e+05
458	ok 0.04	0.2	2.70e-03	80.4	80.4	80.4	80.4	-108.5	245.6	-127.8	1.479e+06	2.748e+05	-1.473e+05
459	ok 0.04	0.3	6.97e-03	80.4	80.4	80.4	80.4	152.3	-204.2	-326.5	-1.797e+06	-5.676e+05	-7.569e+04
465	ok 0.04	0.2	2.28e-03	80.4	80.4	80.4	80.4	-91.4	206.2	-113.8	1.135e+06	1.975e+05	-4.857e+04
466	ok 0.04	0.2	5.95e-03	80.4	80.4	80.4	80.4	133.8	-172.0	-281.6	-1.398e+06	-4.343e+05	7.141e+04
479	ok 0.04	0.2	3.16e-03	80.4	80.4	80.4	80.4	-171.4	283.5	57.3	1.167e+06	-9126.1	-4.538e+05
480	ok 0.04	0.3	6.39e-03	80.4	80.4	80.4	80.4	315.0	-345.5	-115.4	-1.465e+06	-2.575e+05	-4.206e+05
485	ok 0.04	0.2	2.79e-03	80.4	80.4	80.4	80.4	-99.7	231.2	47.9	9.337e+05	-5.748e+04	-3.267e+05
486	ok 0.04	0.2	5.55e-03	80.4	80.4	80.4	80.4	229.7	-271.6	-115.1	-1.154e+06	-7.561e+04	-2.624e+05
490	ok 0.04	0.2	3.61e-03	80.4	80.4	80.4	80.4	-60.7	146.4	216.3	5.955e+05	-1.087e+05	-7.382e+05
491	ok 0.04	0.2	5.27e-03	80.4	80.4	80.4	80.4	275.8	-276.9	117.2	-9.685e+05	-1.270e+05	-7.128e+05
496	ok 0.04	0.2	4.53e-03	80.4	80.4	80.4	80.4	111.1	-79.2	257.6	-1.978e+05	-1.249e+05	-8.439e+05
497	ok 0.04	0.1	2.90e-03	80.4	80.4	80.4	80.4	-20.7	109.0	178.9	4.300e+05	-1.241e+05	-5.965e+05
498	ok 0.04	0.2	4.34e-03	80.4	80.4	80.4	80.4	256.2	-233.3	85.3	-8.053e+05	-3.649e+04	-5.352e+05
503	ok 0.04	0.1	3.63e-03	80.4	80.4	80.4	80.4	83.6	-66.8	202.0	-1.391e+05	-5.880e+04	-6.867e+05

Nodo	x/d	V N/M	ver. rid	Af pr-	Af pr+	Af sec-	Af sec+	N x	N y	N xy	M x	M y	M xy
								-481.31	-346.88	-407.57	-1.807e+06	-1.373e+06	-8.439e+05
	0.04	0.29	8.44e-03	80.42	80.42	80.42	80.42	320.67	395.67	408.6	51.547e+06	1.055e+06	8.443e+05

Nodo	Stato	Max tau	Ver V pr	Ver V sec	Af V pr	Af V sec	V pr	V sec
	daN/cm2					N/mm	N/mm	
27ok	0.93							
32ok	1.12							
33ok	1.85							
34ok	1.00							
39ok	1.11							
40ok	2.11							
44ok	2.16							
45ok	3.83							
50ok	2.39							
51ok	3.87							
64ok	3.26							
65ok	3.98							
71ok	3.44							
72ok Av	4.47	0.05	0.08	2.8	4.2	514.1	774.8	
103	ok	4.26						
104	ok Av	5.93	0.12	0.08	6.5	4.6	1181.3	843.5
112	ok Av	4.42	0.07	0.06	3.7	3.4	674.0	624.7

113	ok Av	5.90	0.11	0.08	6.0	4.4	1101.8	812.4
163	ok Av	4.43	0.09	0.04	5.0	2.4	920.3	437.8
164	ok Av	5.15	0.11	0.05	5.8	2.6	1067.9	471.2
170	ok Av	4.74	0.09	0.04	5.3	2.4	960.7	445.2
173	ok Av	5.78	0.12	0.05	6.4	2.8	1174.4	507.9
249	ok Av	4.99	0.10	0.03	5.5	1.4	1004.5	258.1
250	ok Av	5.07	0.10	0.02	5.6	1.2	1033.0	210.8
280	ok Av	6.56	0.13	0.02	7.3	1.4	1339.6	250.7
281	ok Av	6.67	0.13	0.03	7.4	1.8	1345.4	330.2
357	ok Av	4.74	0.09	0.04	5.2	2.4	959.8	444.3
360	ok Av	5.78	0.12	0.05	6.4	2.8	1174.3	507.3
366	ok Av	4.43	0.09	3.31e-03	5.0	0.2	918.9	33.7
367	ok Av	5.15	0.11	0.05	5.8	2.6	1067.8	470.5
417	ok Av	4.42	0.07	0.06	3.7	3.4	673.2	624.3
418	ok Av	5.90	0.11	0.08	6.0	4.4	1101.7	811.9
426	ok	4.25						
427	ok Av	5.93	0.12	0.08	6.5	4.6	1181.2	843.0
458	ok	3.43						
459	ok Av	4.47	0.05	0.08	2.8	4.2	514.3	774.0
465	ok	3.25						
466	ok	3.98						
479	ok	2.39						
480	ok	3.86						
485	ok	2.16						
486	ok	3.83						
490	ok	1.11						
491	ok	2.11						
496	ok	0.99						
497	ok	1.12						
498	ok	1.85						
503	ok	0.93						

Nodo		Max tau	Ver V pr	Ver V sec	Af V pr	Af V sec	V pr	V sec
	6.67	0.13	0.08	7.35	4.61	1345.43	843.52	

Macro Guscio	Spessore	Id Materiale	Id Criterio	Progettazione
	cm			
8	230.00	9	2	Singolo elemento

Nodo	Statox/d	V N/M	ver. rid	Af pr-	Af pr+	Af sec-	Af sec+	N x	N y	N xy	M x	M y	M xy
							N/mm	N/mm	N/mm	N	N	N	
34	ok 0.03	0.2	4.27e-03	80.4	80.4	80.4	80.4	73.0	-79.6	-244.0	-1.950e+05	-1.206e+05	8.726e+05
39	ok 0.03	0.2	3.22e-03	80.4	80.4	80.4	80.4	-17.7	134.9	-218.0	5.843e+05	-1.356e+05	7.685e+05

40	ok 0.03	0.2	5.12e-03	80.4	80.4	80.4	80.4	243.4	-283.9	-121.2	-1.018e+06	-1.006e+05	7.084e+05
43	ok 0.03	0.2	5.16e-03	80.4	80.4	80.4	80.4	98.0	-96.2	-298.3	-2.602e+05	-1.912e+05	1.069e+06
48	ok 0.03	0.2	4.00e-03	80.4	80.4	80.4	80.4	-60.1	172.2	-257.1	7.581e+05	-1.305e+05	9.370e+05
49	ok 0.03	0.3	6.11e-03	80.4	80.4	80.4	80.4	258.9	-332.3	-154.7	-1.223e+06	-2.283e+05	9.178e+05
50	ok 0.03	0.2	2.55e-03	80.4	80.4	80.4	80.4	-91.5	287.3	-81.8	1.215e+06	-2.225e+04	4.430e+05
51	ok 0.03	0.2	6.29e-03	80.4	80.4	80.4	80.4	199.5	-353.4	80.8	-1.558e+06	-2.387e+05	3.819e+05
57	ok 0.03	0.2	3.09e-03	80.4	80.4	80.4	80.4	-160.1	338.9	-88.1	1.500e+06	4.053e+04	5.954e+05
58	ok 0.03	0.3	7.20e-03	80.4	80.4	80.4	80.4	283.6	-425.5	90.5	-1.918e+06	-4.302e+05	5.696e+05
71	ok 0.03	0.2	1.57e-03	80.4	80.4	80.4	80.4	-71.6	288.0	95.0	1.510e+06	2.983e+05	9.687e+04
72	ok 0.03	0.3	6.91e-03	80.4	80.4	80.4	80.4	92.8	-275.7	271.2	-1.853e+06	-6.221e+05	-1.735e+04
81	ok 0.03	0.3	2.14e-03	80.4	80.4	80.4	80.4	-89.5	326.4	111.4	1.926e+06	4.015e+05	2.195e+05
82	ok 0.03	0.3	7.91e-03	80.4	80.4	80.4	80.4	109.7	-307.9	318.0	-2.348e+06	-8.034e+05	1.639e+05
112	ok 0.03	0.2	1.08e-03	80.4	80.4	80.4	80.4	118.5	177.8	161.3	1.571e+06	7.014e+05	-1.328e+05
113	ok 0.03	0.3	7.76e-03	80.4	80.4	80.4	80.4	-194.9	-59.5	317.9	-1.842e+06	-1.036e+06	-1.994e+05
114	ok 0.03	0.3	1.55e-03	80.4	80.4	80.4	80.4	89.3	190.3	221.2	2.061e+06	8.542e+05	-3.621e+04
115	ok 0.03	0.3	8.67e-03	80.4	80.4	80.4	80.4	-173.2	-69.6	401.3	-2.450e+06	-1.273e+06	-6.150e+04
170	ok 0.03	0.2	6.11e-04	80.4	80.4	80.4	80.4	256.8	60.0	110.5	1.509e+06	1.080e+06	-1.467e+05
173	ok 0.03	0.3	7.78e-03	80.4	80.4	80.4	80.4	-376.2	104.5	234.9	-1.739e+06	-1.519e+06	-1.958e+05
174	ok 0.03	0.3	1.02e-03	80.4	80.4	80.4	80.4	279.3	24.2	165.8	2.052e+06	1.241e+06	-9.481e+04
175	ok 0.03	0.3	8.91e-03	80.4	80.4	80.4	80.4	-438.5	173.6	269.6	-2.421e+06	-1.696e+06	-1.315e+05
250	ok 0.03	0.2	3.77e-04	80.4	80.4	80.4	80.4	329.2	-6.3	22.8	1.444e+06	1.219e+06	1.025e+04
251	ok 0.03	0.3	9.37e-04	80.4	80.4	80.4	80.4	367.1	-56.8	-3.5	2.021e+06	1.379e+06	8154.9
279	ok 0.03	0.3	9.17e-03	80.4	80.4	80.4	80.4	-555.6	282.2	-5.9	-2.396e+06	-1.813e+06	6902.3
280	ok 0.03	0.2	8.14e-03	80.4	80.4	80.4	80.4	-492.6	211.3	-25.7	-1.673e+06	-1.595e+06	-1.526e+04
355	ok 0.03	0.3	1.00e-03	80.4	80.4	80.4	80.4	281.4	22.0	-162.6	2.051e+06	1.240e+06	9.608e+04
356	ok 0.03	0.3	8.90e-03	80.4	80.4	80.4	80.4	-439.8	175.1	-267.1	-2.421e+06	-1.695e+06	1.319e+05
357	ok 0.03	0.2	6.39e-04	80.4	80.4	80.4	80.4	258.6	58.1	-107.7	1.509e+06	1.080e+06	1.474e+05
360	ok 0.03	0.3	7.78e-03	80.4	80.4	80.4	80.4	-377.8	105.9	-232.9	-1.739e+06	-1.518e+06	1.959e+05
415	ok 0.03	0.3	1.52e-03	80.4	80.4	80.4	80.4	92.9	186.9	-220.0	2.060e+06	8.526e+05	3.697e+04
416	ok 0.03	0.3	8.66e-03	80.4	80.4	80.4	80.4	-175.7	-67.2	-399.9	-2.449e+06	-1.272e+06	6.165e+04
417	ok 0.03	0.2	1.06e-03	80.4	80.4	80.4	80.4	121.4	174.8	-160.4	1.569e+06	7.000e+05	1.332e+05
418	ok 0.03	0.3	7.75e-03	80.4	80.4	80.4	80.4	-197.2	-57.4	-316.6	-1.841e+06	-1.035e+06	1.991e+05
448	ok 0.03	0.3	2.10e-03	80.4	80.4	80.4	80.4	-86.4	323.8	-112.6	1.924e+06	3.998e+05	-2.191e+05
449	ok 0.03	0.3	7.89e-03	80.4	80.4	80.4	80.4	106.8	-305.5	-318.2	-2.347e+06	-8.020e+05	-1.640e+05
458	ok 0.03	0.2	1.54e-03	80.4	80.4	80.4	80.4	-69.1	285.6	-96.5	1.508e+06	2.970e+05	-9.646e+04
459	ok 0.03	0.3	6.90e-03	80.4	80.4	80.4	80.4	90.2	-273.5	-271.7	-1.852e+06	-6.210e+05	1.721e+04
472	ok 0.03	0.2	3.06e-03	80.4	80.4	80.4	80.4	-159.1	338.3	86.0	1.497e+06	3.960e+04	-5.952e+05
473	ok 0.03	0.3	7.18e-03	80.4	80.4	80.4	80.4	281.4	-424.0	-91.9	-1.917e+06	-4.290e+05	-5.697e+05
479	ok 0.03	0.2	2.53e-03	80.4	80.4	80.4	80.4	-90.9	286.7	80.0	1.212e+06	-2.289e+04	-4.428e+05
480	ok 0.03	0.2	6.28e-03	80.4	80.4	80.4	80.4	197.7	-352.1	-82.2	-1.557e+06	-2.378e+05	-3.821e+05
481	ok 0.03	0.2	3.98e-03	80.4	80.4	80.4	80.4	-60.7	172.5	256.1	7.568e+05	-1.307e+05	-9.367e+05
482	ok 0.03	0.3	6.09e-03	80.4	80.4	80.4	80.4	258.1	-332.2	153.1	-1.222e+06	-2.275e+05	-9.179e+05
487	ok 0.03	0.2	5.15e-03	80.4	80.4	80.4	80.4	97.9	-96.3	297.5	-2.602e+05	-1.909e+05	-1.068e+06
490	ok 0.03	0.2	3.21e-03	80.4	80.4	80.4	80.4	-18.1	134.9	217.1	5.827e+05	-1.356e+05	-7.681e+05
491	ok 0.03	0.2	5.11e-03	80.4	80.4	80.4	80.4	242.9	-284.1	119.7	-1.017e+06	-9.987e+04	-7.083e+05
496	ok 0.03	0.2	4.26e-03	80.4	80.4	80.4	80.4	72.5	-79.5	243.2	-1.946e+05	-1.204e+05	-8.720e+05

Nodo	x/d	V N/M	ver. rid	Af pr-	Af pr+	Af sec-	Af sec+	N x	N y	N xy	M x	M y	M xy
								-555.59	-425.50	-399.90	-2.450e+06	-1.813e+06	-1.068e+06
	0.03	0.35	9.17e-03	80.42	80.42	80.42	80.42	367.07	338.90	401.28	2.061e+06	1.379e+06	1.069e+06

Nodo	Stato	Max tau	Ver V pr	Ver V sec	Af V pr	Af V sec	V pr	V sec
	daN/cm2					N/mm	N/mm	
34ok	0.85							
39ok	1.08							
40ok	2.12							
43ok	1.10							
48ok	1.33							
49ok	2.47							
50ok	2.34							
51ok	3.79							
57ok	2.69							
58ok	4.08							
71ok	3.53							
72ok Av	4.57	0.07	0.08	4.0	4.2	786.9	819.7	
81ok	3.87							
82ok Av	5.09	0.07	0.09	4.0	4.9	782.2	952.4	
112	ok Av	4.51	0.09	0.06	4.8	3.4	939.0	674.7
113	ok Av	5.96	0.11	0.08	6.3	4.5	1238.6	873.8
114	ok Av	4.84	0.08	0.07	4.7	3.7	925.7	722.9
115	ok Av	6.25	0.11	0.08	6.2	4.6	1213.6	907.1
170	ok Av	4.92	0.10	0.04	5.6	2.5	1091.6	484.4
173	ok Av	5.95	0.12	0.05	6.7	2.8	1316.9	550.8
174	ok Av	5.31	0.10	0.05	5.8	2.6	1143.5	503.3
175	ok Av	6.55	0.13	0.05	7.2	3.0	1414.6	590.4
250	ok Av	5.28	0.11	0.02	5.9	1.1	1153.8	224.3
251	ok Av	5.53	0.11	0.02	6.2	1.0	1217.7	187.5
279	ok Av	6.95	0.14	0.02	7.8	1.1	1532.7	218.7
280	ok Av	6.73	0.14	0.02	7.5	1.4	1474.4	269.3
355	ok Av	5.31	0.10	0.05	5.8	2.6	1142.7	502.8
356	ok Av	6.54	0.13	0.05	7.2	3.0	1414.4	590.0
357	ok Av	4.92	0.10	0.04	5.6	2.5	1090.7	483.4
360	ok Av	5.95	0.12	0.05	6.7	2.8	1316.7	550.2
415	ok Av	4.83	0.08	0.07	4.7	3.7	924.9	722.4
416	ok Av	6.25	0.11	0.08	6.2	4.6	1213.3	906.7
417	ok Av	4.50	0.09	0.06	4.8	3.4	938.3	674.2
418	ok Av	5.96	0.11	0.08	6.3	4.5	1238.4	873.3
448	ok	3.87						
449	ok Av	5.09	0.07	0.09	4.0	4.9	782.0	951.6
458	ok	3.53						
459	ok Av	4.57	0.07	0.08	4.0	4.2	786.8	818.9
472	ok	2.68						

473	ok	4.08
479	ok	2.34
480	ok	3.79
481	ok	1.33
482	ok	2.47
487	ok	1.10
490	ok	1.08
491	ok	2.12
496	ok	0.85

Nodo		Max tau	Ver V pr	Ver V sec	Af V pr	Af V sec	V pr	V sec
	6.95	0.14	0.09	7.81	4.86	1532.72	952.40	

Macro Guscio	Spessore	Id Materiale	Id Criterio	Progettazione
	cm			
9	245.00	9	2	Singolo elemento

Nodo	Statox/d	V N/M	ver. rid	Af pr-	Af pr+	Af sec-	Af sec+	N x	N y	N xy	M x	M y	M xy
							N/mm	N/mm	N/mm	N	N	N	
43	ok 0.03	0.2	4.88e-03	80.4	80.4	80.4	80.4	57.9	-94.4	-285.0	-2.622e+05	-1.840e+05	1.099e+06
48	ok 0.03	0.2	3.55e-03	80.4	80.4	80.4	80.4	-15.6	161.9	-258.6	7.597e+05	-1.524e+05	9.685e+05
49	ok 0.03	0.3	5.90e-03	80.4	80.4	80.4	80.4	160.3	-325.0	-163.9	-1.289e+06	-2.047e+05	9.112e+05
52	ok 0.03	0.2	5.75e-03	80.4	80.4	80.4	80.4	82.5	-114.5	-339.3	-3.268e+05	-2.622e+05	1.331e+06
55	ok 0.03	0.2	4.35e-03	80.4	80.4	80.4	80.4	-59.8	197.9	-298.3	9.481e+05	-1.497e+05	1.169e+06
56	ok 0.03	0.3	6.92e-03	80.4	80.4	80.4	80.4	235.6	-389.2	-193.0	-1.524e+06	-3.538e+05	1.158e+06
57	ok 0.03	0.2	2.37e-03	80.4	80.4	80.4	80.4	-77.4	344.9	-115.9	1.558e+06	2.202e+04	5.814e+05
58	ok 0.03	0.3	7.11e-03	80.4	80.4	80.4	80.4	157.9	-439.2	46.5	-2.029e+06	-4.123e+05	5.189e+05
66	ok 0.03	0.3	3.01e-03	80.4	80.4	80.4	80.4	-146.9	395.5	-118.7	1.890e+06	1.006e+05	7.623e+05
67	ok 0.03	0.4	8.03e-03	80.4	80.4	80.4	80.4	245.0	-510.1	64.2	-2.439e+06	-6.252e+05	7.448e+05
81	ok 0.03	0.3	1.42e-03	80.4	80.4	80.4	80.4	-5.5	368.6	47.7	1.989e+06	4.160e+05	1.576e+05
82	ok 0.03	0.3	7.86e-03	80.4	80.4	80.4	80.4	-8.9	-372.6	228.3	-2.426e+06	-8.659e+05	5.424e+04
90	ok 0.03	0.3	1.62e-03	80.4	80.4	80.4	80.4	-65.6	408.5	92.4	2.454e+06	5.582e+05	3.083e+05
91	ok 0.03	0.4	8.80e-03	80.4	80.4	80.4	80.4	58.3	-416.7	304.0	-3.002e+06	-1.090e+06	2.711e+05
114	ok 0.03	0.3	1.12e-03	80.4	80.4	80.4	80.4	154.9	283.9	144.2	2.094e+06	9.420e+05	-1.224e+05
115	ok 0.03	0.3	8.54e-03	80.4	80.4	80.4	80.4	-258.9	-193.8	300.9	-2.491e+06	-1.407e+06	-1.888e+05
123	ok 0.03	0.4	1.15e-03	80.4	80.4	80.4	80.4	128.7	284.2	208.4	2.668e+06	1.120e+06	-4848.5
124	ok 0.03	0.4	9.46e-03	80.4	80.4	80.4	80.4	-242.3	-187.1	391.9	-3.196e+06	-1.666e+06	-2.443e+04
174	ok 0.03	0.3	7.86e-04	80.4	80.4	80.4	80.4	307.7	172.4	104.7	2.039e+06	1.401e+06	-1.580e+05
175	ok 0.03	0.3	8.69e-03	80.4	80.4	80.4	80.4	-475.9	-22.7	190.3	-2.390e+06	-1.937e+06	-2.044e+05
182	ok 0.03	0.4	8.53e-04	80.4	80.4	80.4	80.4	329.3	124.5	161.3	2.686e+06	1.588e+06	-9.139e+04
183	ok 0.03	0.4	9.75e-03	80.4	80.4	80.4	80.4	-520.2	50.9	267.1	-3.198e+06	-2.156e+06	-1.174e+05
251	ok 0.03	0.3	4.68e-04	80.4	80.4	80.4	80.4	375.9	114.9	22.0	1.986e+06	1.576e+06	1.426e+04
252	ok 0.03	0.4	6.16e-04	80.4	80.4	80.4	80.4	416.4	48.0	1.1	2.665e+06	1.761e+06	9508.8

278	ok 0.03	0.4	9.91e-03	80.4	80.4	80.4	80.4	-635.9	155.2	-0.3	-3.182e+06	-2.319e+06	1.100e+04
279	ok 0.03	0.3	8.85e-03	80.4	80.4	80.4	80.4	-567.1	62.4	-23.9	-2.343e+06	-2.081e+06	-1.754e+04
347	ok 0.03	0.4	8.96e-04	80.4	80.4	80.4	80.4	332.0	122.0	-157.4	2.685e+06	1.587e+06	9.266e+04
348	ok 0.03	0.4	9.73e-03	80.4	80.4	80.4	80.4	-521.8	52.5	-264.1	-3.197e+06	-2.155e+06	1.178e+05
355	ok 0.03	0.3	8.31e-04	80.4	80.4	80.4	80.4	310.0	170.3	-101.4	2.038e+06	1.400e+06	1.588e+05
356	ok 0.03	0.3	8.68e-03	80.4	80.4	80.4	80.4	-477.4	-21.3	-187.6	-2.390e+06	-1.936e+06	2.044e+05
406	ok 0.03	0.4	1.19e-03	80.4	80.4	80.4	80.4	133.2	280.5	-206.9	2.665e+06	1.118e+06	5625.0
407	ok 0.03	0.4	9.44e-03	80.4	80.4	80.4	80.4	-245.4	-184.4	-390.1	-3.195e+06	-1.665e+06	2.460e+04
415	ok 0.03	0.3	1.16e-03	80.4	80.4	80.4	80.4	158.7	280.5	-143.0	2.091e+06	9.402e+05	1.228e+05
416	ok 0.03	0.3	8.53e-03	80.4	80.4	80.4	80.4	-261.7	-191.3	-299.4	-2.490e+06	-1.405e+06	1.886e+05
439	ok 0.03	0.3	1.56e-03	80.4	80.4	80.4	80.4	-61.4	405.6	-93.8	2.451e+06	5.560e+05	-3.079e+05
440	ok 0.03	0.4	8.78e-03	80.4	80.4	80.4	80.4	54.6	-413.9	-304.0	-3.001e+06	-1.088e+06	-2.712e+05
448	ok 0.03	0.3	1.44e-03	80.4	80.4	80.4	80.4	-2.4	366.0	-49.0	1.986e+06	4.143e+05	-1.575e+05
449	ok 0.03	0.3	7.84e-03	80.4	80.4	80.4	80.4	-12.0	-370.1	-228.4	-2.425e+06	-8.645e+05	-5.460e+04
463	ok 0.03	0.3	2.97e-03	80.4	80.4	80.4	80.4	-145.3	395.1	116.1	1.887e+06	9.916e+04	-7.620e+05
464	ok 0.03	0.4	8.01e-03	80.4	80.4	80.4	80.4	242.0	-508.5	-65.9	-2.438e+06	-6.236e+05	-7.450e+05
472	ok 0.03	0.2	2.34e-03	80.4	80.4	80.4	80.4	-76.5	344.4	113.8	1.555e+06	2.097e+04	-5.812e+05
473	ok 0.03	0.3	7.09e-03	80.4	80.4	80.4	80.4	155.5	-437.8	-48.0	-2.027e+06	-4.111e+05	-5.192e+05
474	ok 0.03	0.2	4.33e-03	80.4	80.4	80.4	80.4	-60.4	198.5	297.0	9.466e+05	-1.501e+05	-1.169e+06
475	ok 0.03	0.3	6.90e-03	80.4	80.4	80.4	80.4	234.2	-389.3	191.0	-1.522e+06	-3.526e+05	-1.158e+06
478	ok 0.03	0.2	5.74e-03	80.4	80.4	80.4	80.4	82.2	-114.9	338.3	-3.267e+05	-2.618e+05	-1.331e+06
481	ok 0.03	0.2	3.53e-03	80.4	80.4	80.4	80.4	-15.9	162.1	257.6	7.578e+05	-1.527e+05	-9.681e+05
482	ok 0.03	0.3	5.89e-03	80.4	80.4	80.4	80.4	159.4	-325.0	162.3	-1.287e+06	-2.039e+05	-9.111e+05
487	ok 0.03	0.2	4.87e-03	80.4	80.4	80.4	80.4	57.4	-94.6	284.2	-2.617e+05	-1.837e+05	-1.098e+06

Nodo	x/d	V N/M	ver. rid	Af pr-	Af pr+	Af sec-	Af sec+	N x	N y	N xy	M x	M y	M xy
							-635.9	4-510.11	-390.13	-3.198e+06	-2.319e+06	-1.331e+06	
	0.03	0.42	9.91e-03	80.42	80.42	80.42	80.42	416.38	408.50	391.88	2.686e+06	1.761e+06	1.331e+06

Nodo	Stato	Max tau	Ver V pr	Ver V sec	Af V pr	Af V sec	V pr	V sec
	daN/cm2					N/mm	N/mm	
43	ok 0.98							
48	ok 1.20							
49	ok 2.37							
52	ok 1.43							
55	ok 1.68							
56	ok 2.87							
57	ok 2.57							
58	ok 3.95							
66	ok 3.06							
67	ok Av 4.45	0.02	0.09	1.1	4.9	222.7	1035.6	
81	ok 3.85							
82	ok Av 5.07	0.08	0.09	4.2	4.8	880.4	999.9	
90	ok Av 4.34	0.04	0.08	2.4	4.3	494.6	906.0	
91	ok Av 5.69	0.07	0.10	4.1	5.5	863.0	1153.4	
114	ok Av 4.85	0.09	0.07	5.0	3.7	1044.2	773.1	

115	ok Av	6.25	0.12	0.08	6.4	4.6	1346.1	967.0
123	ok Av	5.34	0.09	0.07	5.0	4.1	1049.8	852.7
124	ok Av	6.78	0.12	0.09	6.5	5.0	1360.8	1049.8
174	ok Av	5.41	0.11	0.05	6.1	2.6	1272.1	542.9
175	ok Av	6.63	0.13	0.05	7.4	3.0	1556.2	633.6
182	ok Av	5.90	0.12	0.05	6.4	2.7	1344.6	573.4
183	ok Av	7.28	0.14	0.06	8.0	3.3	1665.8	681.0
251	ok Av	5.68	0.11	0.02	6.4	1.0	1336.6	199.6
252	ok Av	6.09	0.12	0.01	6.9	0.8	1437.7	165.1
278	ok Av	7.53	0.15	0.02	8.5	0.9	1780.1	195.2
279	ok Av	7.08	0.14	0.02	8.0	1.1	1666.3	233.3
347	ok Av	5.90	0.12	0.05	6.4	2.7	1343.7	573.3
348	ok Av	7.28	0.14	0.06	8.0	3.3	1665.5	680.7
355	ok Av	5.41	0.11	0.05	6.1	2.6	1271.3	542.3
356	ok Av	6.63	0.13	0.05	7.4	3.0	1556.0	633.2
406	ok Av	5.34	0.09	0.07	5.0	4.1	1048.7	852.3
407	ok Av	6.77	0.12	0.09	6.5	5.0	1360.4	1049.3
415	ok Av	4.85	0.09	0.07	5.0	3.7	1043.3	772.6
416	ok Av	6.24	0.12	0.08	6.4	4.6	1345.9	966.5
439	ok Av	4.34	0.04	0.08	2.4	4.3	493.9	904.9
440	ok Av	5.69	0.07	0.10	4.1	5.5	862.6	1152.7
448	ok	3.84						
449	ok Av	5.06	0.08	0.09	4.2	4.8	880.3	999.0
463	ok	3.06						
464	ok Av	4.45	0.02	0.09	1.1	4.9	222.8	1034.5
472	ok	2.57						
473	ok	3.95						
474	ok	1.67						
475	ok	2.86						
478	ok	1.42						
481	ok	1.20						
482	ok	2.36						
487	ok	0.98						

Nodo		Max tau	Ver V pr	Ver V sec	Af V pr	Af V sec	V pr	V sec
	7.53	0.15	0.10	8.50	5.51	1780.05	1153.45	

Macro Guscio	Spessore	Id Materiale	Id Criterio	Progettazione
	cm			
10	260.00	9	2	Singolo elemento

Nodo	Statox/d	V N/M	ver. rid	Af pr-	Af pr+	Af sec-	Af sec+	N x	N y	N xy	M x	M y	M xy
							N/mm	N/mm	N/mm	N	N	N	

52	ok 0.03	0.2	5.47e-03	80.4	80.4	80.4	80.4	40.2	-111.1	-326.7	-3.370e+05	-2.547e+05	1.364e+06
55	ok 0.03	0.2	3.86e-03	80.4	80.4	80.4	80.4	-14.1	188.8	-300.4	9.616e+05	-1.699e+05	1.202e+06
56	ok 0.03	0.3	6.72e-03	80.4	80.4	80.4	80.4	130.2	-383.6	-204.5	-1.613e+06	-3.274e+05	1.154e+06
61	ok 0.03	0.3	6.32e-03	80.4	80.4	80.4	80.4	64.5	-134.1	-380.9	-3.993e+05	-3.438e+05	1.634e+06
62	ok 0.03	0.3	4.67e-03	80.4	80.4	80.4	80.4	-59.5	222.9	-339.6	1.169e+06	-1.647e+05	1.437e+06
63	ok 0.03	0.4	7.70e-03	80.4	80.4	80.4	80.4	207.1	-447.8	-231.9	-1.874e+06	-5.054e+05	1.435e+06
66	ok 0.03	0.3	2.22e-03	80.4	80.4	80.4	80.4	-60.4	404.4	-151.5	1.965e+06	8.006e+04	7.444e+05
67	ok 0.03	0.4	7.98e-03	80.4	80.4	80.4	80.4	109.5	-529.9	10.7	-2.574e+06	-6.106e+05	6.818e+05
77	ok 0.03	0.3	2.95e-03	80.4	80.4	80.4	80.4	-132.8	453.0	-150.3	2.345e+06	1.783e+05	9.575e+05
78	ok 0.03	0.4	8.87e-03	80.4	80.4	80.4	80.4	201.4	-599.3	36.0	-3.040e+06	-8.579e+05	9.522e+05
90	ok 0.03	0.3	1.67e-03	80.4	80.4	80.4	80.4	24.3	459.9	22.0	2.536e+06	5.812e+05	2.329e+05
91	ok 0.03	0.4	8.81e-03	80.4	80.4	80.4	80.4	-69.1	-493.8	204.4	-3.107e+06	-1.160e+06	1.416e+05
101	ok 0.03	0.4	1.68e-03	80.4	80.4	80.4	80.4	-39.4	492.6	71.1	3.074e+06	7.509e+05	4.171e+05
102	ok 0.03	0.5	9.68e-03	80.4	80.4	80.4	80.4	0.5	-531.0	286.2	-3.769e+06	-1.432e+06	4.005e+05
123	ok 0.03	0.4	1.39e-03	80.4	80.4	80.4	80.4	195.4	395.8	124.7	2.710e+06	1.227e+06	-1.077e+05
124	ok 0.03	0.4	9.40e-03	80.4	80.4	80.4	80.4	-330.6	-337.0	281.2	-3.245e+06	-1.831e+06	-1.731e+05
127	ok 0.03	0.4	1.39e-03	80.4	80.4	80.4	80.4	169.8	382.7	194.4	3.381e+06	1.436e+06	3.708e+04
128	ok 0.03	0.5	1.03e-02	80.4	80.4	80.4	80.4	-316.5	-313.7	380.4	-4.068e+06	-2.124e+06	2.782e+04
182	ok 0.03	0.4	1.09e-03	80.4	80.4	80.4	80.4	358.7	294.8	96.7	2.674e+06	1.778e+06	-1.674e+05
183	ok 0.03	0.4	9.54e-03	80.4	80.4	80.4	80.4	-558.8	-173.4	182.9	-3.169e+06	-2.434e+06	-2.103e+05
184	ok 0.03	0.5	1.05e-03	80.4	80.4	80.4	80.4	380.1	231.3	154.8	3.439e+06	1.996e+06	-8.281e+04
185	ok 0.03	0.5	1.05e-02	80.4	80.4	80.4	80.4	-605.2	-83.4	261.8	-4.117e+06	-2.695e+06	-9.747e+04
252	ok 0.03	0.4	8.72e-04	80.4	80.4	80.4	80.4	425.5	244.3	22.2	2.627e+06	1.993e+06	1.793e+04
253	ok 0.03	0.5	7.41e-04	80.4	80.4	80.4	80.4	467.6	158.9	5.6	3.428e+06	2.206e+06	1.079e+04
277	ok 0.03	0.5	1.06e-02	80.4	80.4	80.4	80.4	-721.2	17.2	4.7	-4.108e+06	-2.902e+06	1.411e+04
278	ok 0.03	0.4	9.58e-03	80.4	80.4	80.4	80.4	-647.7	-98.6	-23.3	-3.123e+06	-2.637e+06	-1.999e+04
345	ok 0.03	0.5	1.11e-03	80.4	80.4	80.4	80.4	383.3	228.7	-150.1	3.437e+06	1.995e+06	8.398e+04
346	ok 0.03	0.5	1.05e-02	80.4	80.4	80.4	80.4	-607.2	-81.6	-258.2	-4.116e+06	-2.694e+06	9.780e+04
347	ok 0.03	0.4	1.14e-03	80.4	80.4	80.4	80.4	361.5	292.4	-92.7	2.673e+06	1.777e+06	1.681e+05
348	ok 0.03	0.4	9.53e-03	80.4	80.4	80.4	80.4	-560.6	-171.9	-179.8	-3.168e+06	-2.433e+06	2.103e+05
402	ok 0.03	0.4	1.43e-03	80.4	80.4	80.4	80.4	175.5	378.5	-192.3	3.379e+06	1.433e+06	-3.630e+04
403	ok 0.03	0.5	1.02e-02	80.4	80.4	80.4	80.4	-320.2	-310.8	-378.2	-4.067e+06	-2.122e+06	-2.771e+04
406	ok 0.03	0.4	1.44e-03	80.4	80.4	80.4	80.4	200.2	391.9	-123.2	2.707e+06	1.224e+06	1.081e+05
407	ok 0.03	0.4	9.37e-03	80.4	80.4	80.4	80.4	-333.9	-334.4	-279.4	-3.244e+06	-1.830e+06	1.728e+05
428	ok 0.03	0.4	1.71e-03	80.4	80.4	80.4	80.4	-33.7	489.3	-72.6	3.070e+06	7.482e+05	-4.166e+05
429	ok 0.03	0.5	9.65e-03	80.4	80.4	80.4	80.4	-4.1	-527.9	-286.0	-3.767e+06	-1.430e+06	-4.006e+05
439	ok 0.03	0.3	1.70e-03	80.4	80.4	80.4	80.4	28.5	457.0	-23.6	2.532e+06	5.790e+05	-2.327e+05
440	ok 0.03	0.4	8.78e-03	80.4	80.4	80.4	80.4	-73.0	-491.0	-204.5	-3.105e+06	-1.158e+06	-1.419e+05
452	ok 0.03	0.3	2.89e-03	80.4	80.4	80.4	80.4	-130.3	452.8	147.1	2.342e+06	1.761e+05	-9.570e+05
453	ok 0.03	0.4	8.85e-03	80.4	80.4	80.4	80.4	197.3	-597.4	-37.8	-3.038e+06	-8.557e+05	-9.524e+05
463	ok 0.03	0.3	2.18e-03	80.4	80.4	80.4	80.4	-59.0	404.2	148.9	1.961e+06	7.848e+04	-7.442e+05
464	ok 0.03	0.4	7.96e-03	80.4	80.4	80.4	80.4	106.4	-528.3	-12.5	-2.571e+06	-6.090e+05	-6.820e+05
467	ok 0.03	0.3	4.65e-03	80.4	80.4	80.4	80.4	-60.0	223.9	338.0	1.167e+06	-1.656e+05	-1.437e+06
468	ok 0.03	0.4	7.69e-03	80.4	80.4	80.4	80.4	205.1	-448.1	229.5	-1.872e+06	-5.037e+05	-1.435e+06
469	ok 0.03	0.3	6.32e-03	80.4	80.4	80.4	80.4	64.1	-134.8	379.6	-3.989e+05	-3.431e+05	-1.633e+06
474	ok 0.03	0.2	3.84e-03	80.4	80.4	80.4	80.4	-14.4	189.3	299.2	9.595e+05	-1.705e+05	-1.202e+06

475	ok 0.03	0.3	6.70e-03	80.4	80.4	80.4	80.4	128.8	-383.8	202.6	-1.611e+06	-3.262e+05	-1.154e+06	
478	ok 0.03	0.2	5.47e-03	80.4	80.4	80.4	80.4	39.6	-111.5	325.7	-3.364e+05	-2.543e+05	-1.364e+06	

Nodo	x/d	V N/M	ver. rid	Af pr-	Af pr+	Af sec-	Af sec+	N x	N y	N xy	M x	M y	M xy
							-721.19	-599.27	-380.88	-4.117e+06	-2.902e+06	-1.633e+06	
	0.03	0.50	0.0180.42	80.42	80.42	80.42	467.61	492.60	380.42	3.439e+06	2.206e+06	1.634e+06	

Nodo	Stato	Max tau	Ver V pr	Ver V sec	Af V pr	Af V sec	V pr	V sec
	daN/cm2					N/mm	N/mm	
52ok	1.32							
55ok	1.54							
56ok	2.68							
61ok	1.97							
62ok	2.19							
63ok	3.37							
66ok	2.91							
67ok Av	4.28	0.03	0.09	1.9	4.8	425.1	1061.0	
77ok	3.56							
78ok Av	4.98	0.03	0.10	1.4	5.6	313.3	1245.5	
90ok Av	4.23	0.06	0.08	3.1	4.2	698.4	945.8	
91ok Av	5.57	0.08	0.10	4.3	5.4	958.1	1205.6	
101	ok Av	4.90	0.05	0.09	2.9	5.0	647.8	1111.5
102	ok Av	6.36	0.08	0.11	4.2	6.3	932.6	1396.5
123	ok Av	5.30	0.09	0.07	5.2	4.1	1163.0	904.2
124	ok Av	6.71	0.12	0.09	6.7	5.0	1490.2	1111.5
127	ok Av	5.95	0.10	0.08	5.4	4.6	1192.5	1025.1
128	ok Av	7.46	0.12	0.10	6.9	5.6	1538.7	1240.9
182	ok Av	5.93	0.12	0.05	6.6	2.8	1469.3	613.9
183	ok Av	7.29	0.15	0.06	8.1	3.3	1807.0	726.3
184	ok Av	6.58	0.13	0.05	7.1	3.0	1576.3	666.0
185	ok Av	8.07	0.16	0.06	8.8	3.5	1948.0	788.2
252	ok Av	6.18	0.13	0.01	7.0	0.8	1553.1	176.7
253	ok Av	6.75	0.14	0.01	7.6	0.7	1700.3	145.2
277	ok Av	8.27	0.17	0.01	9.4	0.8	2084.7	172.6
278	ok Av	7.61	0.15	0.02	8.6	0.9	1913.1	208.5
345	ok Av	6.57	0.13	0.05	7.1	3.0	1575.4	666.1
346	ok Av	8.07	0.16	0.06	8.8	3.5	1947.6	788.1
347	ok Av	5.93	0.12	0.05	6.6	2.8	1468.5	613.7
348	ok Av	7.29	0.15	0.06	8.1	3.3	1806.8	726.1
402	ok Av	5.95	0.10	0.08	5.4	4.6	1191.1	1024.8
403	ok Av	7.46	0.12	0.10	6.9	5.6	1538.1	1240.6
406	ok Av	5.29	0.09	0.07	5.2	4.1	1161.9	903.7
407	ok Av	6.71	0.12	0.09	6.7	5.0	1489.8	1111.0
428	ok Av	4.89	0.05	0.09	2.9	5.0	646.7	1110.2
429	ok Av	6.35	0.08	0.11	4.2	6.3	932.0	1395.7
439	ok Av	4.23	0.06	0.08	3.1	4.2	697.6	944.6

440	ok Av	5.57	0.08	0.10	4.3	5.4	957.7	1204.8
452	ok	3.55						
453	ok Av	4.98	0.03	0.10	1.4	5.6	313.2	1244.2
463	ok	2.91						
464	ok Av	4.27	0.03	0.09	1.9	4.8	425.1	1059.9
467	ok	2.18						
468	ok	3.36						
469	ok	1.96						
474	ok	1.54						
475	ok	2.68						
478	ok	1.31						

Nodo		Max tau	Ver V pr	Ver V sec	Af V pr	Af V sec	V pr	V sec
	8.27	0.17	0.11	9.37	6.27	2084.70	1396.47	

Macro Guscio	Spessore	Id Materiale	Id Criterio	Progettazione
	cm			
11	275.00	9	2	Singolo elemento

Nodo	Statox/d	V N/M	ver. rid	Af pr-	Af pr+	Af sec-	Af sec+	N x	N y	N xy	M x	M y	M xy
							N/mm	N/mm	N/mm	N	N	N	
61	ok 0.03	0.3	6.04e-03	80.4	80.4	80.4	80.4	20.3	-129.5	-368.8	-4.189e+05	-3.366e+05	1.671e+06
62	ok 0.03	0.2	4.14e-03	80.4	80.4	80.4	80.4	-13.0	214.7	-342.3	1.194e+06	-1.849e+05	1.473e+06
63	ok 0.03	0.4	7.57e-03	80.4	80.4	80.4	80.4	95.0	-443.7	-246.2	-1.988e+06	-4.754e+05	1.433e+06
70	ok 0.03	0.3	6.87e-03	80.4	80.4	80.4	80.4	44.3	-154.9	-422.6	-4.785e+05	-4.393e+05	1.977e+06
75	ok 0.03	0.3	4.96e-03	80.4	80.4	80.4	80.4	-59.6	246.6	-380.2	1.423e+06	-1.714e+05	1.744e+06
76	ok 0.03	0.4	8.45e-03	80.4	80.4	80.4	80.4	174.8	-508.1	-270.6	-2.276e+06	-6.904e+05	1.753e+06
77	ok 0.03	0.3	2.16e-03	80.4	80.4	80.4	80.4	-42.0	465.0	-187.9	2.440e+06	1.567e+05	9.351e+05
78	ok 0.03	0.4	8.87e-03	80.4	80.4	80.4	80.4	55.9	-624.8	-26.4	-3.202e+06	-8.457e+05	8.768e+05
88	ok 0.03	0.4	2.90e-03	80.4	80.4	80.4	80.4	-118.7	510.4	-182.2	2.872e+06	2.834e+05	1.186e+06
89	ok 0.03	0.5	9.71e-03	80.4	80.4	80.4	80.4	153.6	-691.8	6.9	-3.728e+06	-1.143e+06	1.199e+06
101	ok 0.03	0.4	1.95e-03	80.4	80.4	80.4	80.4	55.8	553.3	-6.1	3.176e+06	7.818e+05	3.272e+05
102	ok 0.03	0.5	9.78e-03	80.4	80.4	80.4	80.4	-135.0	-621.1	176.6	-3.902e+06	-1.510e+06	2.494e+05
106	ok 0.03	0.5	1.93e-03	80.4	80.4	80.4	80.4	-11.7	576.9	48.8	3.797e+06	9.896e+05	5.526e+05
107	ok 0.03	0.6	1.06e-02	80.4	80.4	80.4	80.4	-62.5	-649.0	266.7	-4.662e+06	-1.841e+06	5.608e+05
127	ok 0.03	0.4	1.71e-03	80.4	80.4	80.4	80.4	238.2	511.6	103.8	3.436e+06	1.562e+06	-8.409e+04
128	ok 0.03	0.5	1.03e-02	80.4	80.4	80.4	80.4	-407.9	-487.9	259.6	-4.129e+06	-2.320e+06	-1.447e+05
140	ok 0.03	0.5	1.64e-03	80.4	80.4	80.4	80.4	212.0	483.1	179.9	4.223e+06	1.810e+06	9.738e+04
141	ok 0.03	0.6	1.11e-02	80.4	80.4	80.4	80.4	-395.2	-446.3	367.9	-5.091e+06	-2.657e+06	1.050e+05
184	ok 0.03	0.4	1.47e-03	80.4	80.4	80.4	80.4	410.0	423.8	87.1	3.430e+06	2.219e+06	-1.732e+05
185	ok 0.03	0.5	1.04e-02	80.4	80.4	80.4	80.4	-644.7	-336.2	173.2	-4.090e+06	-3.015e+06	-2.115e+05
193	ok 0.03	0.6	1.29e-03	80.4	80.4	80.4	80.4	431.5	341.1	147.3	4.335e+06	2.473e+06	-6.480e+04
194	ok 0.03	0.6	1.13e-02	80.4	80.4	80.4	80.4	-694.1	-224.8	255.0	-5.205e+06	-3.321e+06	-6.661e+04

253	ok 0.03	0.4	1.33e-03	80.4	80.4	80.4	80.4	477.0	379.6	22.8	3.387e+06	2.477e+06	2.203e+04
254	ok 0.03	0.6	9.82e-04	80.4	80.4	80.4	80.4	520.2	272.8	10.0	4.340e+06	2.721e+06	1.181e+04
276	ok 0.03	0.6	1.14e-02	80.4	80.4	80.4	80.4	-811.0	-128.1	9.7	-5.211e+06	-3.568e+06	1.656e+04
277	ok 0.03	0.4	1.03e-02	80.4	80.4	80.4	80.4	-733.2	-269.3	-23.2	-4.044e+06	-3.271e+06	-2.380e+04
336	ok 0.03	0.6	1.36e-03	80.4	80.4	80.4	80.4	435.4	338.3	-141.5	4.334e+06	2.471e+06	6.564e+04
337	ok 0.03	0.6	1.13e-02	80.4	80.4	80.4	80.4	-696.4	-223.0	-250.8	-5.204e+06	-3.320e+06	6.683e+04
345	ok 0.03	0.4	1.51e-03	80.4	80.4	80.4	80.4	413.4	421.2	-82.2	3.428e+06	2.218e+06	1.738e+05
346	ok 0.03	0.5	1.04e-02	80.4	80.4	80.4	80.4	-646.8	-334.6	-169.6	-4.089e+06	-3.014e+06	2.114e+05
389	ok 0.03	0.5	1.69e-03	80.4	80.4	80.4	80.4	219.2	478.5	-177.0	4.219e+06	1.807e+06	-9.676e+04
390	ok 0.03	0.6	1.10e-02	80.4	80.4	80.4	80.4	-399.7	-443.2	-365.2	-5.090e+06	-2.655e+06	-1.050e+05
402	ok 0.03	0.4	1.76e-03	80.4	80.4	80.4	80.4	244.2	507.3	-101.8	3.432e+06	1.560e+06	8.438e+04
403	ok 0.03	0.5	1.03e-02	80.4	80.4	80.4	80.4	-411.9	-485.0	-257.4	-4.127e+06	-2.318e+06	1.444e+05
423	ok 0.03	0.5	1.97e-03	80.4	80.4	80.4	80.4	-4.0	573.1	-50.3	3.792e+06	9.863e+05	-5.520e+05
424	ok 0.03	0.6	1.05e-02	80.4	80.4	80.4	80.4	-68.2	-645.6	-266.2	-4.659e+06	-1.839e+06	-5.609e+05
428	ok 0.03	0.4	1.99e-03	80.4	80.4	80.4	80.4	61.5	550.0	4.3	3.171e+06	7.790e+05	-3.269e+05
429	ok 0.03	0.5	9.75e-03	80.4	80.4	80.4	80.4	-139.9	-618.0	-176.5	-3.899e+06	-1.508e+06	-2.498e+05
441	ok 0.03	0.4	2.82e-03	80.4	80.4	80.4	80.4	-114.9	510.4	178.1	2.868e+06	2.804e+05	-1.185e+06
442	ok 0.03	0.5	9.68e-03	80.4	80.4	80.4	80.4	148.2	-689.6	-8.9	-3.726e+06	-1.140e+06	-1.199e+06
452	ok 0.03	0.3	2.17e-03	80.4	80.4	80.4	80.4	-39.9	465.0	184.7	2.436e+06	1.544e+05	-9.346e+05
453	ok 0.03	0.4	8.85e-03	80.4	80.4	80.4	80.4	51.8	-623.0	24.4	-3.199e+06	-8.435e+05	-8.770e+05
454	ok 0.03	0.3	4.93e-03	80.4	80.4	80.4	80.4	-60.1	248.2	378.2	1.420e+06	-1.728e+05	-1.743e+06
455	ok 0.03	0.4	8.43e-03	80.4	80.4	80.4	80.4	171.7	-508.5	267.6	-2.274e+06	-6.880e+05	-1.753e+06
460	ok 0.03	0.3	6.86e-03	80.4	80.4	80.4	80.4	43.6	-156.1	420.9	-4.779e+05	-4.383e+05	-1.976e+06
467	ok 0.03	0.2	4.12e-03	80.4	80.4	80.4	80.4	-13.3	215.4	340.9	1.192e+06	-1.857e+05	-1.472e+06
468	ok 0.03	0.4	7.55e-03	80.4	80.4	80.4	80.4	93.1	-444.2	243.8	-1.985e+06	-4.736e+05	-1.433e+06
469	ok 0.03	0.3	6.04e-03	80.4	80.4	80.4	80.4	19.5	-130.1	367.7	-4.182e+05	-3.359e+05	-1.670e+06

Nodo	x/d	V N/M	ver. rid	Af pr-	Af pr+	Af sec-	Af sec+	N x	N y	N xy	M x	M y	M xy
								-810.9	9-691.80	-422.55	-5.211e+06	-3.568e+06	-1.976e+06
	0.03	0.58	0.0180.42	80.42	80.42	80.42	520.20	576.88	420.90	4.340e+06	2.721e+06	1.977e+06	

Nodo	Stato	Max tau	Ver V pr	Ver V sec	Af V pr	Af V sec	V pr	V sec
	daN/cm2					N/mm	N/mm	
61ok	1.88							
62ok	2.08							
63ok	3.19							
70ok	2.73							
75ok	2.92							
76ok Av	4.06	0.03	0.08	1.9	4.2	457.9	985.2	
77ok	3.41							
78ok Av	4.80	0.03	0.10	1.5	5.4	359.0	1275.6	
88ok Av	4.23	6.62e-03	0.09	0.4	4.8	86.7	1129.0	
89ok Av	5.69	0.02	0.12	0.9	6.4	218.5	1519.8	
101	ok Av	4.77	0.06	0.09	3.1	4.9	723.7	1154.8
102	ok Av	6.21	0.08	0.11	4.3	6.2	1022.6	1454.0
106	ok Av	5.60	0.05	0.11	2.8	5.9	670.9	1380.9

107	ok Av	7.16	0.08	0.13	4.2	7.2	995.0	1705.3
127	ok Av	5.87	0.10	0.08	5.5	4.6	1300.3	1079.2
128	ok Av	7.36	0.13	0.10	7.1	5.5	1663.7	1306.3
140	ok Av	6.71	0.10	0.10	5.8	5.3	1360.6	1254.4
141	ok Av	8.32	0.13	0.11	7.4	6.3	1751.3	1494.3
184	ok Av	6.56	0.13	0.05	7.2	3.0	1697.2	708.0
185	ok Av	8.03	0.16	0.06	8.9	3.5	2087.0	836.6
193	ok Av	7.38	0.14	0.06	7.9	3.4	1855.6	790.1
194	ok Av	9.00	0.17	0.07	9.7	3.9	2282.0	925.7
253	ok Av	6.79	0.14	0.01	7.7	0.7	1812.5	156.8
254	ok Av	7.56	0.15	9.61e-03	8.6	0.5	2021.7	125.8
276	ok Av	9.20	0.19	0.01	10.4	0.6	2459.4	149.9
277	ok Av	8.30	0.17	0.01	9.4	0.8	2215.6	186.3
336	ok Av	7.38	0.14	0.06	7.9	3.4	1854.4	790.8
337	ok Av	9.00	0.17	0.07	9.7	3.9	2281.5	925.9
345	ok Av	6.55	0.13	0.05	7.2	3.0	1696.3	708.2
346	ok Av	8.03	0.16	0.06	8.8	3.5	2086.6	836.5
389	ok Av	6.70	0.10	0.10	5.8	5.3	1358.7	1254.3
390	ok Av	8.32	0.13	0.11	7.4	6.3	1750.4	1494.1
402	ok Av	5.87	0.10	0.08	5.5	4.6	1298.8	1078.9
403	ok Av	7.36	0.13	0.10	7.1	5.5	1663.1	1305.9
423	ok Av	5.60	0.05	0.11	2.8	5.9	669.2	1379.6
424	ok Av	7.16	0.08	0.13	4.2	7.2	994.1	1704.5
428	ok Av	4.77	0.06	0.09	3.1	4.9	722.6	1153.6
429	ok Av	6.21	0.08	0.11	4.3	6.2	1022.0	1453.1
441	ok Av	4.22	6.63e-03	0.09	0.4	4.8	86.9	1126.8
442	ok Av	5.68	0.02	0.12	0.9	6.4	218.0	1518.3
452	ok	3.40						
453	ok Av	4.80	0.03	0.10	1.5	5.4	358.8	1274.3
454	ok	2.91						
455	ok Av	4.05	0.03	0.08	1.9	4.2	457.2	983.4
460	ok	2.72						
467	ok	2.08						
468	ok	3.18						
469	ok	1.88						

Nodo		Max tau	Ver V pr	Ver V sec	Af V pr	Af V sec	V pr	V sec
	9.20	0.19	0.13	10.43	7.23	2459.38	1705.30	

Macro Guscio	Spessore	Id Materiale	Id Criterio	Progettazione
	cm			
12	290.00	9	2	Singolo elemento

Nodo	Statox/d	V N/M	ver. rid	Af pr-	Af pr+	Af sec-	Af sec+	N x	N y	N xy	M x	M y	M xy
							N/mm	N/mm	N/mm	N	N	N	
70	ok 0.03	0.3	6.59e-03	80.4	80.4	80.4	80.4	-1.4	-149.4	-411.0	-5.081e+05	-4.323e+05	2.019e+06
75	ok 0.03	0.3	4.40e-03	80.4	80.4	80.4	80.4	-12.6	239.0	-383.8	1.460e+06	-1.924e+05	1.783e+06
76	ok 0.03	0.4	8.38e-03	80.4	80.4	80.4	80.4	56.2	-505.3	-288.0	-2.415e+06	-6.565e+05	1.753e+06
83	ok 0.03	0.4	7.37e-03	80.4	80.4	80.4	80.4	22.6	-177.1	-463.8	-5.645e+05	-5.524e+05	2.359e+06
86	ok 0.03	0.3	5.23e-03	80.4	80.4	80.4	80.4	-61.1	268.5	-419.8	1.711e+06	-1.612e+05	2.089e+06
87	ok 0.03	0.5	9.16e-03	80.4	80.4	80.4	80.4	140.3	-570.1	-308.2	-2.731e+06	-9.232e+05	2.116e+06
88	ok 0.03	0.4	2.44e-03	80.4	80.4	80.4	80.4	-23.6	525.5	-224.5	2.989e+06	2.606e+05	1.158e+06
89	ok 0.03	0.5	9.77e-03	80.4	80.4	80.4	80.4	-1.2	-722.9	-63.7	-3.920e+06	-1.131e+06	1.111e+06
95	ok 0.03	0.5	2.87e-03	80.4	80.4	80.4	80.4	-105.8	566.6	-213.3	3.477e+06	4.323e+05	1.454e+06
96	ok 0.03	0.6	1.05e-02	80.4	80.4	80.4	80.4	103.5	-786.7	-21.3	-4.513e+06	-1.500e+06	1.494e+06
106	ok 0.03	0.5	2.26e-03	80.4	80.4	80.4	80.4	88.3	646.7	-35.1	3.920e+06	1.028e+06	4.472e+05
107	ok 0.03	0.5	1.08e-02	80.4	80.4	80.4	80.4	-205.5	-752.3	147.1	-4.823e+06	-1.929e+06	3.867e+05
116	ok 0.03	0.5	2.21e-03	80.4	80.4	80.4	80.4	15.9	659.5	27.4	4.640e+06	1.291e+06	7.274e+05
117	ok 0.03	0.6	1.14e-02	80.4	80.4	80.4	80.4	-129.0	-768.9	248.2	-5.699e+06	-2.336e+06	7.683e+05
140	ok 0.03	0.5	2.05e-03	80.4	80.4	80.4	80.4	282.2	628.8	82.6	4.290e+06	1.958e+06	-4.379e+04
141	ok 0.03	0.6	1.13e-02	80.4	80.4	80.4	80.4	-489.7	-643.6	237.5	-5.165e+06	-2.885e+06	-9.379e+04
149	ok 0.03	0.6	1.91e-03	80.4	80.4	80.4	80.4	254.5	582.0	166.5	5.220e+06	2.255e+06	1.900e+05
150	ok 0.03	0.7	1.19e-02	80.4	80.4	80.4	80.4	-477.9	-581.0	356.6	-6.299e+06	-3.281e+06	2.236e+05
193	ok 0.03	0.5	1.85e-03	80.4	80.4	80.4	80.4	461.7	555.6	76.8	4.329e+06	2.731e+06	-1.710e+05
194	ok 0.03	0.5	1.12e-02	80.4	80.4	80.4	80.4	-733.8	-506.1	162.5	-5.180e+06	-3.685e+06	-2.023e+05
197	ok 0.03	0.7	1.56e-03	80.4	80.4	80.4	80.4	483.8	449.4	140.0	5.413e+06	3.025e+06	-2.861e+04
198	ok 0.03	0.7	1.21e-02	80.4	80.4	80.4	80.4	-787.3	-368.1	248.4	-6.506e+06	-4.038e+06	-1.405e+04
254	ok 0.03	0.5	1.75e-03	80.4	80.4	80.4	80.4	529.8	517.1	23.6	4.294e+06	3.033e+06	2.682e+04
255	ok 0.03	0.7	1.29e-03	80.4	80.4	80.4	80.4	574.2	384.8	14.5	5.441e+06	3.313e+06	1.289e+04
275	ok 0.03	0.7	1.21e-02	80.4	80.4	80.4	80.4	-905.9	-275.0	14.8	-6.537e+06	-4.323e+06	1.882e+04
276	ok 0.03	0.5	1.10e-02	80.4	80.4	80.4	80.4	-823.2	-445.7	-23.2	-5.140e+06	-3.991e+06	-2.905e+04
332	ok 0.03	0.7	1.62e-03	80.4	80.4	80.4	80.4	488.4	446.5	-133.0	5.411e+06	3.023e+06	2.888e+04
333	ok 0.03	0.7	1.21e-02	80.4	80.4	80.4	80.4	-790.0	-366.2	-243.4	-6.505e+06	-4.037e+06	1.397e+04
336	ok 0.03	0.5	1.89e-03	80.4	80.4	80.4	80.4	465.7	552.8	-70.9	4.327e+06	2.729e+06	1.713e+05
337	ok 0.03	0.5	1.12e-02	80.4	80.4	80.4	80.4	-736.3	-504.3	-158.2	-5.179e+06	-3.683e+06	2.020e+05
380	ok 0.03	0.6	1.97e-03	80.4	80.4	80.4	80.4	263.3	577.0	-162.5	5.214e+06	2.253e+06	-1.897e+05
381	ok 0.03	0.7	1.18e-02	80.4	80.4	80.4	80.4	-483.2	-577.6	-353.1	-6.297e+06	-3.279e+06	-2.238e+05
389	ok 0.03	0.5	2.10e-03	80.4	80.4	80.4	80.4	289.7	624.0	-79.8	4.285e+06	1.955e+06	4.394e+04
390	ok 0.03	0.6	1.12e-02	80.4	80.4	80.4	80.4	-494.4	-640.4	-234.7	-5.163e+06	-2.883e+06	9.336e+04
413	ok 0.03	0.5	2.25e-03	80.4	80.4	80.4	80.4	26.4	654.9	-28.8	4.632e+06	1.287e+06	-7.264e+05
414	ok 0.03	0.6	1.14e-02	80.4	80.4	80.4	80.4	-136.1	-765.0	-247.2	-5.695e+06	-2.333e+06	-7.685e+05
423	ok 0.03	0.5	2.30e-03	80.4	80.4	80.4	80.4	96.0	642.9	33.1	3.914e+06	1.024e+06	-4.467e+05
424	ok 0.03	0.5	1.07e-02	80.4	80.4	80.4	80.4	-211.4	-748.8	-146.7	-4.820e+06	-1.926e+06	-3.871e+05
434	ok 0.03	0.5	2.77e-03	80.4	80.4	80.4	80.4	-99.9	566.8	207.9	3.471e+06	4.284e+05	-1.452e+06
435	ok 0.03	0.6	1.05e-02	80.4	80.4	80.4	80.4	96.2	-784.1	19.3	-4.509e+06	-1.497e+06	-1.494e+06
441	ok 0.03	0.4	2.45e-03	80.4	80.4	80.4	80.4	-20.3	525.9	220.4	2.983e+06	2.573e+05	-1.157e+06
442	ok 0.03	0.5	9.74e-03	80.4	80.4	80.4	80.4	-6.7	-720.8	61.5	-3.916e+06	-1.129e+06	-1.111e+06
443	ok 0.03	0.3	5.19e-03	80.4	80.4	80.4	80.4	-61.5	271.0	417.1	1.709e+06	-1.635e+05	-2.088e+06
444	ok 0.03	0.5	9.13e-03	80.4	80.4	80.4	80.4	135.6	-570.6	304.2	-2.727e+06	-9.199e+05	-2.115e+06

447	ok 0.03	0.4	7.36e-03	80.4	80.4	80.4	80.4	21.4	-179.2	461.4-5.635e+05-5.506e+05-2.359e+06
454	ok 0.03	0.3	4.37e-03	80.4	80.4	80.4	80.4	-12.8	240.1	382.21.458e+06-1.938e+05-1.782e+06
455	ok 0.03	0.4	8.36e-03	80.4	80.4	80.4	80.4	53.3	-506.1	284.9-2.411e+06-6.539e+05-1.753e+06
460	ok 0.03	0.3	6.58e-03	80.4	80.4	80.4	80.4	-2.4	-150.5	409.6-5.071e+05-4.312e+05-2.019e+06

Nodo	x/d	V N/M	ver. rid	Af pr-	Af pr+	Af sec-	Af sec+	N x	N y	N xy	M x	M y	M xy
							-905.87	-786.74	-463.77	-6.537e+06	-4.323e+06	-2.359e+06	
	0.03	0.68	0.0180.42	80.42	80.42	80.42	574.17	659.49	461.37	5.441e+06	3.313e+06	2.359e+06	

Nodo	Stato	Max tau	Ver V pr	Ver V sec	Af V pr	Af V sec	V pr	V sec
	daN/cm2					N/mm	N/mm	
70ok	2.68							
75ok	2.84							
76ok Av	3.90	0.04	0.07	2.0	4.0	506.7	995.9	
83ok Av	3.79	0.07	0.02	4.2	1.2	1033.5	288.3	
86ok Av	3.94	0.06	0.05	3.4	2.9	848.2	723.7	
87ok Av	5.02	0.05	0.09	3.0	4.9	739.5	1213.0	
88ok Av	4.08	9.03e-03	0.08	0.5	4.6	124.9	1147.4	
89ok Av	5.51	0.02	0.11	1.0	6.2	254.5	1555.7	
95ok Av	5.16	0.02	0.10	1.0	5.8	246.5	1437.9	
96ok Av	6.66	5.19e-03	0.14	0.3	7.6	71.8	1883.1	
106	ok Av	5.46	0.05	0.10	3.0	5.7	738.6	1429.9
107	ok Av	6.99	0.08	0.13	4.3	7.1	1077.5	1769.0
116	ok Av	6.54	0.05	0.13	2.7	7.0	683.0	1742.7
117	ok Av	8.20	0.08	0.15	4.2	8.5	1052.3	2112.2
140	ok Av	6.59	0.11	0.09	5.9	5.3	1462.2	1313.1
141	ok Av	8.18	0.14	0.11	7.5	6.3	1870.4	1564.5
149	ok Av	7.69	0.11	0.11	6.3	6.3	1565.8	1564.3
150	ok Av	9.42	0.15	0.13	8.1	7.4	2011.0	1834.2
193	ok Av	7.31	0.14	0.06	7.9	3.4	1972.0	835.2
194	ok Av	8.91	0.17	0.07	9.7	3.9	2417.1	977.8
197	ok Av	8.40	0.16	0.07	8.9	3.9	2206.1	959.8
198	ok Av	10.16	0.19	0.08	10.8	4.5	2695.6	1110.7
254	ok Av	7.55	0.15	0.01	8.6	0.6	2130.3	138.4
255	ok Av	8.60	0.18	7.64e-03	9.8	0.4	2428.5	105.6
275	ok Av	10.37	0.21	9.18e-03	11.8	0.5	2930.5	127.0
276	ok Av	9.17	0.19	0.01	10.4	0.7	2586.9	164.9
332	ok Av	8.40	0.16	0.07	8.9	3.9	2204.7	961.2
333	ok Av	10.16	0.19	0.08	10.8	4.5	2694.9	1111.3
336	ok Av	7.31	0.14	0.06	7.9	3.4	1970.9	835.9
337	ok Av	8.91	0.17	0.07	9.7	3.9	2416.6	978.0
380	ok Av	7.68	0.11	0.11	6.3	6.3	1563.3	1564.7
381	ok Av	9.42	0.15	0.13	8.1	7.4	2009.8	1834.3
389	ok Av	6.59	0.11	0.09	5.9	5.3	1460.3	1313.0
390	ok Av	8.18	0.14	0.11	7.5	6.3	1869.5	1564.3
413	ok Av	6.53	0.05	0.13	2.7	7.0	680.4	1741.4

414	ok Av	8.20	0.08	0.15	4.2	8.5	1050.9	2111.5
423	ok Av	5.45	0.05	0.10	3.0	5.7	736.9	1428.5
424	ok Av	6.99	0.08	0.13	4.3	7.1	1076.6	1768.2
434	ok Av	5.15	0.02	0.10	1.0	5.8	247.3	1435.0
435	ok Av	6.65	5.11e-03	0.14	0.3	7.6	70.7	1881.4
441	ok Av	4.07	9.04e-03	0.08	0.5	4.6	124.9	1145.1
442	ok Av	5.50	0.02	0.11	1.0	6.2	254.0	1554.2
443	ok Av	3.93	0.06	0.05	3.4	2.9	846.2	721.9
444	ok Av	5.02	0.05	0.09	3.0	4.9	739.2	1210.7
447	ok Av	3.79	0.07	0.02	4.1	1.2	1031.4	286.8
454	ok	2.83						
455	ok Av	3.89	0.04	0.07	2.0	3.9	505.9	976.7
460	ok	2.67						

Nodo		Max tau	Ver V pr	Ver V sec	Af V pr	Af V sec	V pr	V sec
	10.37	0.21	0.15	11.77	8.48	2930.55	2112.16	

Macro Guscio	Spessore	Id Materiale	Id Criterio	Progettazione
	cm			
13	305.00	9	2	Singolo elemento

Nodo	Statox/d	V N/M	ver. rid	Af pr-	Af pr+	Af sec-	Af sec+	N x	N y	N xy	M x	M y	M xy
							N/mm	N/mm	N/mm	N	N	N	
83	ok 0.03	0.3	7.10e-03	80.4	80.4	80.4	80.4	-24.3	-171.0	-452.8	-6.045e+05	-5.445e+05	2.409e+06
86	ok 0.03	0.3	4.65e-03	80.4	80.4	80.4	80.4	-13.5	261.3	-424.4	1.762e+06	-1.843e+05	2.132e+06
87	ok 0.03	0.5	9.14e-03	80.4	80.4	80.4	80.4	15.8	-568.5	-328.7	-2.894e+06	-8.844e+05	2.117e+06
94	ok 0.03	0.4	7.85e-03	80.4	80.4	80.4	80.4	0.3	-201.4	-504.6	-6.559e+05	-6.879e+05	2.775e+06
95	ok 0.03	0.4	2.73e-03	80.4	80.4	80.4	80.4	-6.7	584.7	-259.9	3.617e+06	4.076e+05	1.421e+06
96	ok 0.03	0.6	1.07e-02	80.4	80.4	80.4	80.4	-59.6	-823.1	-99.5	-4.736e+06	-1.488e+06	1.393e+06
99	ok 0.03	0.4	5.48e-03	80.4	80.4	80.4	80.4	-65.4	288.6	-458.4	2.033e+06	-1.175e+05	2.472e+06
100	ok 0.03	0.5	9.82e-03	80.4	80.4	80.4	80.4	106.7	-634.7	-343.8	-3.234e+06	-1.229e+06	2.523e+06
108	ok 0.03	0.5	2.88e-03	80.4	80.4	80.4	80.4	-96.6	621.1	-242.1	4.163e+06	6.543e+05	1.773e+06
109	ok 0.03	0.7	1.13e-02	80.4	80.4	80.4	80.4	54.5	-883.8	-46.0	-5.399e+06	-1.967e+06	1.854e+06
116	ok 0.03	0.5	2.57e-03	80.4	80.4	80.4	80.4	120.1	738.2	-62.9	4.786e+06	1.336e+06	6.050e+05
117	ok 0.03	0.6	1.18e-02	80.4	80.4	80.4	80.4	-278.4	-884.8	119.0	-5.889e+06	-2.434e+06	5.698e+05
125	ok 0.03	0.6	2.51e-03	80.4	80.4	80.4	80.4	41.3	738.5	9.7	5.621e+06	1.682e+06	9.643e+05
126	ok 0.03	0.7	1.23e-02	80.4	80.4	80.4	80.4	-196.4	-888.2	234.8	-6.903e+06	-2.949e+06	1.053e+06
149	ok 0.03	0.6	2.38e-03	80.4	80.4	80.4	80.4	326.4	743.6	63.0	5.300e+06	2.425e+06	2.717e+04
150	ok 0.03	0.6	1.22e-02	80.4	80.4	80.4	80.4	-574.9	-799.8	217.5	-6.387e+06	-3.540e+06	-3396.1
158	ok 0.03	0.7	2.18e-03	80.4	80.4	80.4	80.4	296.6	675.2	157.0	6.414e+06	2.791e+06	3.414e+05
159	ok 0.03	0.8	1.28e-02	80.4	80.4	80.4	80.4	-564.0	-712.4	350.5	-7.739e+06	-4.015e+06	4.148e+05
197	ok 0.03	0.6	2.20e-03	80.4	80.4	80.4	80.4	513.9	684.6	67.1	5.409e+06	3.319e+06	-1.519e+05
198	ok 0.03	0.6	1.21e-02	80.4	80.4	80.4	80.4	-826.9	-676.3	152.7	-6.482e+06	-4.449e+06	-1.716e+05

201	ok 0.03	0.8	1.80e-03	80.4	80.4	80.4	80.4	537.5	549.8	134.9	6.733e+06	3.658e+06	4.288e+04
202	ok 0.03	0.8	1.29e-02	80.4	80.4	80.4	80.4	-862.5	-504.0	276.2	-8.062e+06	-4.843e+06	1.256e+05
255	ok 0.03	0.6	2.12e-03	80.4	80.4	80.4	80.4	584.1	651.2	-16.7	5.391e+06	3.668e+06	-3.251e+04
256	ok 0.03	0.8	1.55e-03	80.4	80.4	80.4	80.4	630.5	488.3	-10.1	6.801e+06	3.981e+06	-1.541e+04
274	ok 0.03	0.8	1.29e-02	80.4	80.4	80.4	80.4	-1007.9	-415.1	-13.8	-8.166e+06	-5.167e+06	-2.231e+04
275	ok 0.03	0.6	1.17e-02	80.4	80.4	80.4	80.4	-918.2	-621.4	-23.3	-6.460e+06	-4.803e+06	-3.555e+04
328	ok 0.03	0.8	1.87e-03	80.4	80.4	80.4	80.4	542.7	546.9	-126.5	6.730e+06	3.656e+06	-4.371e+04
329	ok 0.03	0.8	1.29e-02	80.4	80.4	80.4	80.4	-865.7	-502.1	-270.3	-8.060e+06	-4.842e+06	-1.262e+05
332	ok 0.03	0.6	2.24e-03	80.4	80.4	80.4	80.4	518.6	681.7	-60.0	5.406e+06	3.317e+06	1.514e+05
333	ok 0.03	0.6	1.21e-02	80.4	80.4	80.4	80.4	-829.8	-674.4	-147.6	-6.480e+06	-4.448e+06	1.711e+05
371	ok 0.03	0.7	2.25e-03	80.4	80.4	80.4	80.4	307.1	669.8	-151.5	6.406e+06	2.788e+06	-3.418e+05
372	ok 0.03	0.8	1.27e-02	80.4	80.4	80.4	80.4	-570.1	-708.8	-346.0	-7.736e+06	-4.012e+06	-4.152e+05
380	ok 0.03	0.6	2.43e-03	80.4	80.4	80.4	80.4	335.5	738.3	-59.0	5.294e+06	2.423e+06	-2.748e+04
381	ok 0.03	0.6	1.22e-02	80.4	80.4	80.4	80.4	-580.4	-796.3	-214.0	-6.384e+06	-3.538e+06	2789.0
404	ok 0.03	0.6	2.56e-03	80.4	80.4	80.4	80.4	55.5	732.9	-10.4	5.610e+06	1.679e+06	-9.632e+05
405	ok 0.03	0.7	1.22e-02	80.4	80.4	80.4	80.4	-205.1	-883.8	-233.0	-6.898e+06	-2.946e+06	-1.053e+06
413	ok 0.03	0.5	2.62e-03	80.4	80.4	80.4	80.4	130.6	733.6	60.9	4.777e+06	1.332e+06	-6.042e+05
414	ok 0.03	0.6	1.17e-02	80.4	80.4	80.4	80.4	-285.8	-880.8	-118.0	-5.884e+06	-2.431e+06	-5.703e+05
421	ok 0.03	0.5	2.87e-03	80.4	80.4	80.4	80.4	-86.9	621.1	234.9	4.154e+06	6.494e+05	-1.770e+06
422	ok 0.03	0.7	1.13e-02	80.4	80.4	80.4	80.4	44.8	-880.4	44.1	-5.392e+06	-1.963e+06	-1.853e+06
430	ok 0.03	0.4	5.44e-03	80.4	80.4	80.4	80.4	-65.5	292.4	454.4	2.030e+06	-1.212e+05	-2.470e+06
431	ok 0.03	0.5	9.79e-03	80.4	80.4	80.4	80.4	99.3	-635.0	338.7	-3.228e+06	-1.225e+06	-2.521e+06
434	ok 0.03	0.4	2.75e-03	80.4	80.4	80.4	80.4	-1.6	585.6	254.5	3.610e+06	4.031e+05	-1.419e+06
435	ok 0.03	0.6	1.06e-02	80.4	80.4	80.4	80.4	-66.9	-820.5	97.2	-4.731e+06	-1.485e+06	-1.393e+06
436	ok 0.03	0.4	7.84e-03	80.4	80.4	80.4	80.4	-1.9	-204.6	500.8	-6.542e+05	-6.848e+05	-2.773e+06
443	ok 0.03	0.3	4.61e-03	80.4	80.4	80.4	80.4	-13.5	263.0	422.3	1.759e+06	-1.865e+05	-2.131e+06
444	ok 0.03	0.5	9.12e-03	80.4	80.4	80.4	80.4	11.4	-569.5	324.6	-2.890e+06	-8.809e+05	-2.116e+06
447	ok 0.03	0.3	7.10e-03	80.4	80.4	80.4	80.4	-25.7	-172.9	450.9	-6.031e+05	-5.427e+05	-2.408e+06

Nodo	x/d	V N/M	ver. rid	Af pr-	Af pr+	Af sec-	Af sec+	N x	N y	N xy	M x	M y	M xy
								-1007.8	7-888.21	-504.61	-8.166e+06	-5.167e+06	-2.773e+06
	0.03	0.81	0.018	0.42	80.42	80.42	80.42	630.54	743.63	500.8	6.801e+06	3.981e+06	2.775e+06

Nodo	Stato	Max tau	Ver V pr	Ver V sec	Af V pr	Af V sec	V pr	V sec
	daN/cm2					N/mm	N/mm	
83	ok Av	3.75	0.07	0.02	4.2	1.1	1091.6	280.2
86	ok Av	3.87	0.06	0.05	3.5	2.8	912.7	730.0
87	ok Av	4.88	0.06	0.08	3.1	4.7	802.0	1225.7
94	ok Av	5.26	0.11	0.02	5.8	1.2	1530.7	327.7
95	ok Av	5.01	0.02	0.10	1.1	5.6	295.7	1463.3
96	ok Av	6.47	6.56e-03	0.13	0.4	7.3	95.6	1926.5
99	ok Av	5.37	0.09	0.07	4.9	3.6	1281.9	954.0
100	ok Av	6.39	0.08	0.10	4.4	5.8	1149.1	1517.9
108	ok Av	6.47	0.03	0.13	1.9	7.1	488.3	1865.0
109	ok Av	8.01	0.01	0.16	0.8	9.1	214.1	2375.5
116	ok Av	6.38	0.05	0.12	2.8	6.9	740.4	1799.0

117	ok Av	8.01	0.08	0.15	4.3	8.3	1125.1	2184.0
125	ok Av	7.83	0.05	0.15	2.6	8.6	683.3	2242.6
126	ok Av	9.60	0.08	0.18	4.2	10.2	1105.0	2664.7
149	ok Av	7.53	0.11	0.11	6.3	6.2	1659.6	1629.3
150	ok Av	9.24	0.15	0.13	8.1	7.3	2122.7	1911.4
158	ok Av	9.00	0.13	0.14	7.0	7.6	1829.6	1994.5
159	ok Av	10.88	0.16	0.16	8.9	8.8	2339.9	2299.8
197	ok Av	8.27	0.16	0.07	8.8	3.8	2316.9	1009.2
198	ok Av	10.01	0.19	0.08	10.8	4.5	2825.5	1167.9
201	ok Av	9.75	0.18	0.08	10.2	4.6	2666.5	1198.7
202	ok Av	11.68	0.22	0.09	12.3	5.2	3230.6	1366.2
255	ok Av	8.51	0.17	8.24e-03	9.7	0.5	2532.5	120.0
256	ok Av	9.96	0.20	5.86e-03	11.3	0.3	2964.5	85.3
274	ok Av	11.91	0.24	7.02e-03	13.5	0.4	3544.4	102.2
275	ok Av	10.27	0.21	9.91e-03	11.6	0.6	3053.6	144.3
328	ok Av	9.75	0.18	0.08	10.2	4.6	2664.7	1201.1
329	ok Av	11.68	0.22	0.09	12.3	5.2	3229.7	1367.3
332	ok Av	8.27	0.16	0.07	8.8	3.9	2315.4	1010.7
333	ok Av	10.01	0.19	0.08	10.8	4.5	2824.8	1168.5
371	ok Av	9.00	0.13	0.14	7.0	7.6	1826.1	1995.7
372	ok Av	10.88	0.16	0.16	8.9	8.8	2338.4	2300.3
380	ok Av	7.53	0.11	0.11	6.3	6.2	1657.0	1629.7
381	ok Av	9.24	0.15	0.13	8.1	7.3	2121.5	1911.5
404	ok Av	7.83	0.05	0.15	2.6	8.5	679.1	2241.5
405	ok Av	9.60	0.08	0.18	4.2	10.2	1102.9	2664.3
413	ok Av	6.37	0.05	0.12	2.8	6.9	737.7	1797.7
414	ok Av	8.00	0.08	0.15	4.3	8.3	1123.7	2183.3
421	ok Av	6.46	0.03	0.13	1.9	7.1	490.6	1861.4
422	ok Av	8.00	0.01	0.16	0.8	9.1	216.0	2373.8
430	ok Av	5.36	0.09	0.07	4.9	3.6	1280.2	951.5
431	ok Av	6.39	0.08	0.10	4.4	5.8	1149.7	1515.0
434	ok Av	5.00	0.02	0.10	1.1	5.6	296.5	1460.4
435	ok Av	6.47	6.49e-03	0.13	0.4	7.3	94.5	1924.8
436	ok Av	5.25	0.11	0.02	5.8	1.2	1529.0	325.5
443	ok Av	3.86	0.06	0.05	3.5	2.8	910.5	728.4
444	ok Av	4.87	0.06	0.08	3.1	4.7	801.6	1223.2
447	ok Av	3.74	0.07	0.02	4.2	0.9	1089.3	238.9

Nodo		**Max tau**	**Ver V pr**	**Ver V sec**	**Af V pr**	**Af V sec**	**V pr**	**V sec**
	11.91	0.24	0.18	13.52	10.16	3544.42	2664.67	

Macro Guscio	**Spessore**	**Id Materiale**	**Id Criterio**	**Progettazione**
	cm			
14	320.00	9	2	Singolo elemento

Nodo	Statox/d	V N/M	ver. rid	Af pr-	Af pr+	Af sec-	Af sec+	N x	N y	N xy	M x	M y	M xy
							N/mm	N/mm	N/mm	N	N	N	
94	ok 0.02	0.4	7.58e-03	80.4	80.4	80.4	80.4	-47.5	-194.7	-494.3	-7.069e+05	-6.774e+05	2.832e+06
99	ok 0.02	0.4	4.89e-03	80.4	80.4	80.4	80.4	-17.1	281.7	-464.0	2.099e+06	-1.450e+05	2.519e+06
100	ok 0.02	0.5	9.84e-03	80.4	80.4	80.4	80.4	-23.0	-634.1	-367.4	-3.423e+06	-1.184e+06	2.524e+06
105	ok 0.02	0.4	8.32e-03	80.4	80.4	80.4	80.4	-21.3	-228.7	-546.9	-7.491e+05	-8.534e+05	3.202e+06
108	ok 0.02	0.5	3.05e-03	80.4	80.4	80.4	80.4	5.9	642.1	-292.7	4.327e+06	6.256e+05	1.733e+06
109	ok 0.02	0.6	1.15e-02	80.4	80.4	80.4	80.4	-115.3	-925.1	-130.8	-5.654e+06	-1.951e+06	1.739e+06
110	ok 0.02	0.4	5.76e-03	80.4	80.4	80.4	80.4	-74.7	307.8	-496.9	2.379e+06	-6203.0	2.881e+06
111	ok 0.02	0.6	1.05e-02	80.4	80.4	80.4	80.4	78.7	-704.3	-377.5	-3.771e+06	-1.656e+06	2.969e+06
119	ok 0.02	0.6	3.19e-03	80.4	80.4	80.4	80.4	-95.1	674.7	-266.8	4.925e+06	1.005e+06	2.160e+06
120	ok 0.02	0.8	1.21e-02	80.4	80.4	80.4	80.4	12.4	-984.5	-63.2	-6.379e+06	-2.606e+06	2.304e+06
125	ok 0.02	0.6	2.88e-03	80.4	80.4	80.4	80.4	148.6	825.3	-86.4	5.790e+06	1.733e+06	8.236e+05
126	ok 0.02	0.7	1.27e-02	80.4	80.4	80.4	80.4	-350.7	-1015.6	97.2	-7.120e+06	-3.056e+06	8.282e+05
136	ok 0.02	0.7	2.83e-03	80.4	80.4	80.4	80.4	60.7	812.5	0.2	6.764e+06	2.215e+06	1.308e+06
137	ok 0.02	0.8	1.31e-02	80.4	80.4	80.4	80.4	-260.6	-1005.1	233.4	-8.299e+06	-3.735e+06	1.469e+06
158	ok 0.02	0.7	2.68e-03	80.4	80.4	80.4	80.4	369.4	850.8	48.4	6.507e+06	2.983e+06	1.555e+05
159	ok 0.02	0.7	1.32e-02	80.4	80.4	80.4	80.4	-662.7	-949.8	204.3	-7.839e+06	-4.304e+06	1.581e+05
168	ok 0.02	0.9	2.43e-03	80.4	80.4	80.4	80.4	337.2	756.9	156.7	7.870e+06	3.442e+06	6.042e+05
169	ok 0.02	0.9	1.37e-02	80.4	80.4	80.4	80.4	-653.5	-833.0	356.9	-9.485e+06	-4.882e+06	7.393e+05
201	ok 0.02	0.8	2.48e-03	80.4	80.4	80.4	80.4	567.1	803.1	60.5	6.730e+06	3.989e+06	-9.787e+04
202	ok 0.02	0.7	1.30e-02	80.4	80.4	80.4	80.4	-925.6	-836.9	146.8	-8.063e+06	-5.310e+06	-9.855e+04
208	ok 0.02	1.0	1.99e-03	80.4	80.4	80.4	80.4	567.7	632.0	171.3	8.372e+06	4.357e+06	2.239e+05
209	ok 0.02	0.9	1.38e-02	80.4	80.4	80.4	80.4	-965.0	-626.8	289.9	-1.004e+07	-5.750e+06	3.116e+05
256	ok 0.02	0.8	2.40e-03	80.4	80.4	80.4	80.4	640.4	773.5	-16.7	6.745e+06	4.380e+06	-3.943e+04
257	ok 0.02	1.0	1.70e-03	80.4	80.4	80.4	80.4	692.0	572.3	-14.2	8.536e+06	4.714e+06	-2.056e+04
273	ok 0.02	0.9	1.37e-02	80.4	80.4	80.4	80.4	-1121.7	-534.4	-18.9	-1.023e+07	-6.082e+06	-2.828e+04
274	ok 0.02	0.7	1.25e-02	80.4	80.4	80.4	80.4	-1020.1	-785.6	-23.5	-8.079e+06	-5.702e+06	-4.288e+04
321	ok 0.02	1.0	2.06e-03	80.4	80.4	80.4	80.4	573.2	629.4	-161.2	8.367e+06	4.355e+06	-2.265e+05
322	ok 0.02	0.9	1.38e-02	80.4	80.4	80.4	80.4	-968.5	-624.9	-282.9	-1.003e+07	-5.749e+06	-3.130e+05
328	ok 0.02	0.8	2.52e-03	80.4	80.4	80.4	80.4	572.4	800.3	-52.0	6.725e+06	3.987e+06	9.626e+04
329	ok 0.02	0.7	1.30e-02	80.4	80.4	80.4	80.4	-928.7	-835.0	-140.8	-8.061e+06	-5.309e+06	9.740e+04
361	ok 0.02	0.9	2.50e-03	80.4	80.4	80.4	80.4	349.5	751.5	-149.0	7.859e+06	3.439e+06	-6.062e+05
362	ok 0.02	0.9	1.36e-02	80.4	80.4	80.4	80.4	-660.5	-829.3	-351.2	-9.481e+06	-4.880e+06	-7.404e+05
371	ok 0.02	0.7	2.73e-03	80.4	80.4	80.4	80.4	380.4	845.1	-42.8	6.498e+06	2.980e+06	-1.566e+05
372	ok 0.02	0.7	1.32e-02	80.4	80.4	80.4	80.4	-669.0	-946.1	-199.8	-7.835e+06	-4.301e+06	-1.591e+05
393	ok 0.02	0.7	2.90e-03	80.4	80.4	80.4	80.4	79.8	805.5	1.1	6.747e+06	2.213e+06	-1.307e+06
394	ok 0.02	0.8	1.30e-02	80.4	80.4	80.4	80.4	-271.0	-1000.2	-230.3	-8.292e+06	-3.732e+06	-1.469e+06
404	ok 0.02	0.6	2.94e-03	80.4	80.4	80.4	80.4	163.2	819.4	84.8	5.777e+06	1.730e+06	-8.224e+05
405	ok 0.02	0.7	1.27e-02	80.4	80.4	80.4	80.4	-359.7	-1011.0	-95.5	-7.114e+06	-3.053e+06	-8.288e+05
410	ok 0.02	0.6	3.23e-03	80.4	80.4	80.4	80.4	-78.1	673.5	257.2	4.908e+06	1.001e+06	-2.153e+06
411	ok 0.02	0.8	1.20e-02	80.4	80.4	80.4	80.4	-0.5	-980.0	62.0	-6.369e+06	-2.602e+06	-2.303e+06
419	ok 0.02	0.4	5.69e-03	80.4	80.4	80.4	80.4	-74.1	313.9	490.3	2.375e+06	-1.233e+04	-2.876e+06
420	ok 0.02	0.6	1.04e-02	80.4	80.4	80.4	80.4	66.7	-703.7	371.2	-3.761e+06	-1.651e+06	-2.965e+06

421	ok 0.02	0.5	3.08e-03	80.4	80.4	80.4	80.4	14.2	643.4	285.14.317e+06	6.198e+05	-1.729e+06	
422	ok 0.02	0.6	1.15e-02	80.4	80.4	80.4	80.4	-125.2	-921.6	128.6-5.646e+06	-1.948e+06	-1.739e+06	
425	ok 0.02	0.4	8.30e-03	80.4	80.4	80.4	80.4	-26.1	-233.8	540.1-7.454e+05	-8.479e+05	-3.198e+06	
430	ok 0.02	0.4	4.83e-03	80.4	80.4	80.4	80.4	-16.8	284.2	461.22.096e+06	-1.481e+05	-2.517e+06	
431	ok 0.02	0.5	9.82e-03	80.4	80.4	80.4	80.4	-29.9	-635.1	362.0-3.417e+06	-1.179e+06	-2.522e+06	
436	ok 0.02	0.4	7.58e-03	80.4	80.4	80.4	80.4	-49.8	-197.9	491.4-7.048e+05	-6.741e+05	-2.830e+06	

Nodo	x/d	V N/M	ver. rid	Af pr-	Af pr+	Af sec-	Af sec+	N x	N y	N xy	M x	M y	M xy
								-1121.67	-1015.60	-546.87	-1.023e+07	-6.082e+06	-3.198e+06
	0.02	0.98	0.0180.42	80.42	80.42	80.42	692.04	850.81	540.08	8.536e+06	4.714e+06	3.202e+06	

Nodo	Stato	Max tau	Ver V pr	Ver V sec	Af V pr	Af V sec	V pr	V sec
	daN/cm2					N/mm	N/mm	
94	ok Av	5.21	0.10	0.02	5.8	1.1	1605.8	313.6
99	ok Av	5.31	0.09	0.06	5.0	3.5	1365.8	960.6
100	ok Av	6.26	0.08	0.10	4.5	5.6	1227.8	1532.5
105	ok Av	7.33	0.15	0.02	8.2	1.4	2261.9	376.9
108	ok Av	6.33	0.04	0.12	2.0	6.9	554.2	1901.6
109	ok Av	7.81	0.02	0.16	1.0	8.8	270.7	2427.0
110	ok Av	7.35	0.13	0.08	7.0	4.7	1920.3	1283.4
111	ok Av	8.38	0.12	0.13	6.4	7.1	1759.5	1943.7
119	ok Av	8.35	0.06	0.16	3.1	9.0	844.2	2470.4
120	ok Av	9.96	0.03	0.20	1.9	11.1	530.3	3069.9
125	ok Av	7.64	0.05	0.15	2.6	8.4	729.7	2311.1
126	ok Av	9.37	0.08	0.18	4.2	10.0	1163.2	2745.0
136	ok Av	9.66	0.04	0.19	2.4	10.7	663.5	2949.4
137	ok Av	11.58	0.08	0.23	4.2	12.5	1160.9	3447.4
158	ok Av	8.80	0.13	0.14	7.0	7.5	1915.3	2070.9
159	ok Av	10.64	0.16	0.16	8.9	8.7	2440.5	2384.3
168	ok Av	10.84	0.14	0.17	7.9	9.4	2183.5	2602.3
169	ok Av	12.92	0.18	0.19	10.1	10.8	2782.7	2965.0
201	ok Av	9.56	0.18	0.08	10.1	4.6	2771.3	1257.1
202	ok Av	11.45	0.22	0.09	12.2	5.2	3352.0	1428.4
208	ok Av	11.61	0.22	0.10	12.0	5.6	3298.8	1535.6
209	ok Av	13.76	0.26	0.11	14.4	6.3	3959.1	1738.2
256	ok Av	9.80	0.20	6.88e-03	11.1	0.4	3063.0	105.2
257	ok Av	11.84	0.24	3.61e-03	13.5	0.2	3704.3	55.2
273	ok Av	14.01	0.29	5.36e-03	15.9	0.3	4381.0	82.0
274	ok Av	11.71	0.24	7.94e-03	13.3	0.4	3660.4	121.5
321	ok Av	11.61	0.22	0.10	12.0	5.6	3296.5	1539.2
322	ok Av	13.76	0.26	0.11	14.4	6.3	3958.0	1740.0
328	ok Av	9.55	0.18	0.08	10.1	4.6	2769.5	1259.6
329	ok Av	11.45	0.22	0.09	12.2	5.2	3351.2	1429.6
361	ok Av	10.84	0.14	0.17	7.9	9.5	2179.0	2604.7
362	ok Av	12.91	0.18	0.19	10.1	10.8	2780.6	2966.2
371	ok Av	8.80	0.12	0.14	6.9	7.5	1911.8	2072.1

372	ok Av	10.64	0.16	0.16	8.9	8.7	2438.8	2384.9
393	ok Av	9.65	0.04	0.19	2.4	10.7	657.0	2949.2
394	ok Av	11.58	0.08	0.23	4.2	12.5	1157.9	3447.5
404	ok Av	7.64	0.05	0.15	2.6	8.4	725.4	2310.1
405	ok Av	9.36	0.08	0.18	4.2	10.0	1161.1	2744.6
410	ok Av	8.34	0.06	0.16	3.1	9.0	849.5	2466.3
411	ok Av	9.96	0.03	0.20	1.9	11.1	533.6	3068.3
419	ok Av	7.34	0.13	0.08	7.0	4.6	1919.5	1280.1
420	ok Av	8.38	0.12	0.13	6.4	7.0	1762.1	1940.2
421	ok Av	6.32	0.04	0.12	2.0	6.9	556.5	1898.0
422	ok Av	7.80	0.02	0.16	1.0	8.8	272.6	2425.2
425	ok Av	7.33	0.15	0.02	8.2	1.4	2261.8	373.4
430	ok Av	5.30	0.09	0.06	5.0	3.5	1364.0	958.6
431	ok Av	6.25	0.08	0.10	4.5	5.6	1228.4	1529.3
436	ok Av	5.21	0.10	0.02	5.8	1.1	1603.9	311.6

Nodo		Max tau	Ver V pr	Ver V sec	Af V pr	Af V sec	V pr	V sec
	14.01	0.29	0.23	15.91	12.52	4381.05	3447.46	

Macro Guscio	Spessore	Id Materiale	Id Criterio	Progettazione
	cm			
15	335.00	9	2	Singolo elemento

Nodo	Statox/d	V N/M	ver. rid	Af pr-	Af pr+	Af sec-	Af sec+	N x	N y	N xy	M x	M y	M xy
							N/mm	N/mm	N/mm	N	N	N	
105	ok 0.02	0.4	8.07e-03	80.4	80.4	80.4	80.4	-72.7	-222.1	-537.1	-8.141e+05	-8.370e+05	3.270e+06
110	ok 0.02	0.4	5.18e-03	80.4	80.4	80.4	80.4	-23.3	301.9	-503.9	2.464e+06	-4.228e+04	2.932e+06
111	ok 0.02	0.6	1.05e-02	80.4	80.4	80.4	80.4	-56.8	-705.0	-404.0	-3.989e+06	-1.598e+06	2.972e+06
118	ok 0.02	0.5	8.91e-03	80.4	80.4	80.4	80.4	-46.2	-262.4	-597.3	-8.415e+05	-1.066e+06	3.583e+06
119	ok 0.02	0.6	3.42e-03	80.4	80.4	80.4	80.4	11.4	698.8	-320.9	5.116e+06	9.686e+05	2.111e+06
120	ok 0.02	0.7	1.24e-02	80.4	80.4	80.4	80.4	-163.2	-1030.2	-153.5	-6.667e+06	-2.581e+06	2.174e+06
121	ok 0.02	0.5	6.21e-03	80.4	80.4	80.4	80.4	-88.4	331.4	-541.0	2.719e+06	2.429e+05	3.281e+06
122	ok 0.02	0.7	1.12e-02	80.4	80.4	80.4	80.4	60.4	-786.8	-412.2	-4.303e+06	-2.300e+06	3.429e+06
129	ok 0.02	0.7	3.65e-03	80.4	80.4	80.4	80.4	-105.6	733.3	-286.7	5.733e+06	1.598e+06	2.643e+06
130	ok 0.02	0.9	1.29e-02	80.4	80.4	80.4	80.4	-15.7	-1095.5	-68.2	-7.422e+06	-3.549e+06	2.890e+06
136	ok 0.02	0.7	3.20e-03	80.4	80.4	80.4	80.4	170.9	906.1	-100.4	6.954e+06	2.269e+06	1.146e+06
137	ok 0.02	0.8	1.36e-02	80.4	80.4	80.4	80.4	-418.6	-1141.6	89.5	-8.542e+06	-3.847e+06	1.216e+06
153	ok 0.02	0.9	3.22e-03	80.4	80.4	80.4	80.4	71.0	882.3	5.5	8.089e+06	2.987e+06	1.846e+06
154	ok 0.02	1.0	1.40e-02	80.4	80.4	80.4	80.4	-317.9	-1118.9	255.1	-9.920e+06	-4.797e+06	2.126e+06
168	ok 0.02	0.8	2.92e-03	80.4	80.4	80.4	80.4	410.9	943.2	44.6	7.972e+06	3.653e+06	3.933e+05
169	ok 0.02	0.8	1.42e-02	80.4	80.4	80.4	80.4	-753.0	-1084.2	206.0	-9.594e+06	-5.197e+06	4.513e+05
180	ok 0.02	1.0	2.68e-03	80.4	85.2	80.4	83.6	378.6	819.1	173.8	9.695e+06	4.246e+06	1.086e+06
181	ok 0.02	1.0	1.47e-02	85.7	80.4	81.3	80.4	-749.9	-931.2	387.5	-1.166e+07	-5.919e+06	1.323e+06

208	ok 0.02	0.9	2.65e-03	80.4	80.4	80.4	80.4	596.8	898.5	104.4	8.339e+06	4.752e+06	1.087e+05
209	ok 0.02	0.9	1.40e-02	80.4	80.4	80.4	80.4	-1000.8	-977.4	203.4	-9.980e+06	-6.278e+06	1.483e+05
214	ok 0.03	1.0	2.07e-03	80.4	94.2	80.4	81.7	623.7	686.0	198.6	1.055e+07	5.136e+06	5.264e+05
215	ok 0.03	1.0	1.48e-02	88.6	80.4	80.4	80.4	-1080.2	-712.6	326.6	-1.261e+07	-6.722e+06	6.755e+05
257	ok 0.02	0.9	2.53e-03	80.4	80.4	80.4	80.4	702.1	869.7	-18.0	8.471e+06	5.153e+06	-4.755e+04
258	ok 0.03	1.0	1.64e-03	80.4	96.8	80.4	80.4	765.4	618.1	-23.4	1.086e+07	5.465e+06	-3.408e+04
272	ok 0.03	1.0	1.47e-02	89.5	80.4	80.4	80.4	-1257.4	-608.8	-29.5	-1.296e+07	-7.008e+06	-4.315e+04
273	ok 0.02	0.8	1.33e-02	80.4	80.4	80.4	80.4	-1133.7	-920.4	-25.1	-1.013e+07	-6.667e+06	-5.199e+04
315	ok 0.03	1.0	2.15e-03	80.4	94.2	80.4	81.6	628.9	684.2	-186.9	1.054e+07	5.135e+06	-5.318e+05
316	ok 0.02	1.0	1.48e-02	88.6	80.4	80.5	80.4	-1083.9	-710.8	-318.4	-1.260e+07	-6.720e+06	-6.782e+05
321	ok 0.02	0.9	2.69e-03	80.4	80.4	80.4	80.4	602.5	895.7	-94.4	8.333e+06	4.751e+06	-1.121e+05
322	ok 0.02	0.9	1.39e-02	80.4	80.4	80.4	80.4	-1004.3	-975.3	-196.4	-9.977e+06	-6.277e+06	-1.502e+05
349	ok 0.02	1.0	2.75e-03	80.4	85.2	80.4	83.6	392.0	814.5	-163.0	9.680e+06	4.244e+06	-1.091e+06
350	ok 0.02	1.0	1.46e-02	85.6	80.4	81.3	80.4	-757.5	-927.5	-380.4	-1.166e+07	-5.917e+06	-1.325e+06
361	ok 0.02	0.8	2.97e-03	80.4	80.4	80.4	80.4	423.9	937.5	-36.4	7.960e+06	3.651e+06	-3.964e+05
362	ok 0.02	0.8	1.41e-02	80.4	80.4	80.4	80.4	-760.1	-1080.4	-200.3	-9.589e+06	-5.195e+06	-4.530e+05
376	ok 0.02	0.9	3.31e-03	80.4	80.4	80.4	80.4	96.1	874.5	0.5	8.063e+06	2.987e+06	-1.848e+06
377	ok 0.02	1.0	1.40e-02	80.4	80.4	80.4	80.4	-330.0	-1113.7	-250.2	-9.909e+06	-4.795e+06	-2.127e+06
393	ok 0.02	0.7	3.26e-03	80.4	80.4	80.4	80.4	192.1	898.4	100.9	6.934e+06	2.268e+06	-1.145e+06
394	ok 0.02	0.8	1.35e-02	80.4	80.4	80.4	80.4	-429.3	-1136.5	-86.5	-8.533e+06	-3.844e+06	-1.217e+06
400	ok 0.02	0.7	3.71e-03	80.4	80.4	80.4	80.4	-71.7	728.3	275.8	5.699e+06	1.597e+06	-2.631e+06
401	ok 0.02	0.9	1.28e-02	80.4	80.4	80.4	80.4	-32.7	-1089.7	68.9	-7.408e+06	-3.547e+06	-2.889e+06
408	ok 0.02	0.5	6.11e-03	80.4	80.4	80.4	80.4	-82.9	342.4	527.7	2.713e+06	2.318e+05	-3.266e+06
409	ok 0.02	0.7	1.11e-02	80.4	80.4	80.4	80.4	40.2	-783.9	405.5	-4.286e+06	-2.296e+06	-3.423e+06
410	ok 0.02	0.6	3.48e-03	80.4	80.4	80.4	80.4	26.8	700.6	309.9	5.099e+06	9.613e+05	-2.103e+06
411	ok 0.02	0.7	1.23e-02	80.4	80.4	80.4	80.4	-176.8	-1025.5	152.0	-6.656e+06	-2.578e+06	-2.173e+06
412	ok 0.02	0.5	8.87e-03	80.4	80.4	80.4	80.4	-59.9	-269.7	583.7	-8.309e+05	-1.057e+06	-3.570e+06
419	ok 0.02	0.4	5.10e-03	80.4	80.4	80.4	80.4	-21.1	305.9	499.9	2.460e+06	-4.692e+04	-2.929e+06
420	ok 0.02	0.6	1.05e-02	80.4	80.4	80.4	80.4	-69.0	-705.5	396.6	-3.978e+06	-1.592e+06	-2.967e+06
425	ok 0.02	0.4	8.07e-03	80.4	80.4	80.4	80.4	-77.4	-228.0	531.9	-8.103e+05	-8.306e+05	-3.266e+06

Nodo	x/d	V N/M	ver. rid	Af pr-	Af pr+	Af sec-	Af sec+	N x	N y	N xy	M x	M y	M xy
								-1257.3	8-1141.63	-597.28	-1.296e+07	-7.008e+06	-3.570e+06
	0.03	0.98	0.0189.49	96.79	81.32	83.63	765.43	943.20	583.7	21.086e+07	5.465e+06	3.583e+06	

Nodo	Stato	Max tau	Ver V pr	Ver V sec	Af V pr	Af V sec	V pr	V sec
	daN/cm2					N/mm	N/mm	
105	ok Av	7.28	0.15	0.02	8.2	1.2	2362.3	359.3
110	ok Av	7.29	0.13	0.08	7.0	4.5	2019.6	1287.1
111	ok Av	8.26	0.12	0.12	6.5	6.8	1864.0	1965.2
118	ok Av	10.29	0.21	0.03	11.6	1.5	3343.2	439.5
119	ok Av	8.20	0.06	0.16	3.3	8.7	938.1	2519.4
120	ok Av	9.76	0.04	0.20	2.1	10.9	610.4	3141.7
121	ok Av	10.24	0.18	0.11	10.0	6.1	2883.7	1770.1
122	ok Av	11.25	0.17	0.16	9.2	8.9	2661.3	2555.0
129	ok Av	11.09	0.09	0.21	4.9	11.6	1426.6	3361.5

130	ok Av	12.79	0.06	0.25	3.5	14.1	1006.5	4070.2
136	ok Av	9.44	0.04	0.19	2.4	10.5	694.7	3034.7
137	ok Av	11.32	0.08	0.22	4.2	12.3	1210.6	3551.1
153	ok Av	12.33	0.04	0.25	2.3	13.8	658.9	3986.9
154	ok Av	14.43	0.08	0.29	4.2	15.8	1215.9	4571.5
168	ok Av	10.57	0.14	0.17	7.8	9.3	2256.7	2697.9
169	ok Av	12.62	0.18	0.19	10.0	10.6	2878.7	3073.4
180	ok Av	13.50	0.17	0.22	9.4	12.1	2719.5	3491.1
181	ok Av	15.83	0.21	0.24	11.8	13.6	3408.9	3912.0
208	ok Av	11.32	0.21	0.10	11.8	5.6	3391.8	1613.2
209	ok Av	13.45	0.25	0.11	14.1	6.3	4077.7	1822.3
214	ok Av	14.30	0.26	0.13	14.7	7.0	4229.6	2023.5
215	ok Av	16.74	0.31	0.14	17.3	7.8	5004.6	2251.9
257	ok Av	11.56	0.24	5.76e-03	13.1	0.3	3789.3	92.3
258	ok Av	14.57	0.30	2.13e-04	16.5	1.19e-02	4776.0	3.4
272	ok Av	17.03	0.35	1.23e-03	19.3	6.85e-02	5584.0	19.8
273	ok Av	13.71	0.28	7.39e-03	15.6	0.4	4492.7	118.4
315	ok Av	14.30	0.26	0.13	14.6	7.0	4227.0	2028.8
316	ok Av	16.74	0.31	0.14	17.3	7.8	5003.3	2254.6
321	ok Av	11.32	0.21	0.10	11.7	5.6	3389.5	1617.1
322	ok Av	13.45	0.25	0.11	14.1	6.3	4076.6	1824.1
349	ok Av	13.50	0.17	0.22	9.4	12.1	2713.9	3495.3
350	ok Av	15.83	0.21	0.24	11.8	13.6	3406.2	3914.0
361	ok Av	10.57	0.14	0.17	7.8	9.4	2252.1	2700.5
362	ok Av	12.62	0.18	0.19	10.0	10.7	2876.6	3074.6
376	ok Av	12.33	0.04	0.25	2.3	13.8	649.9	3988.6
377	ok Av	14.43	0.08	0.29	4.2	15.8	1211.9	4572.5
393	ok Av	9.43	0.04	0.19	2.4	10.5	688.0	3034.6
394	ok Av	11.32	0.08	0.22	4.2	12.3	1207.4	3551.2
400	ok Av	11.10	0.09	0.21	5.0	11.6	1437.7	3357.7
401	ok Av	12.79	0.06	0.25	3.5	14.1	1011.9	4069.4
408	ok Av	10.24	0.18	0.11	10.0	6.1	2886.3	1765.4
409	ok Av	11.26	0.17	0.16	9.2	8.8	2667.2	2551.5
410	ok Av	8.19	0.06	0.16	3.3	8.7	943.4	2515.2
411	ok Av	9.76	0.04	0.20	2.1	10.9	613.9	3140.1
412	ok Av	10.30	0.21	0.03	11.6	1.5	3347.4	434.2
419	ok Av	7.29	0.13	0.08	7.0	4.5	2019.1	1284.7
420	ok Av	8.26	0.12	0.12	6.5	6.8	1866.6	1961.7
425	ok Av	7.28	0.15	0.02	8.2	1.2	2362.1	355.9

Nodo		**Max tau**	**Ver V pr**	**Ver V sec**	**Af V pr**	**Af V sec**	**V pr**	**V sec**
	17.03	0.35	0.29	19.35	15.84	5583.96	4572.49	

Macro Guscio	Spessore	Id Materiale	Id Criterio	Progettazione
	cm			

Macro Guscio	Spessore	Id Materiale	Id Criterio	Progettazione
16	350.00	9	2	Singolo elemento

Nodo	Statox/d	V N/M	ver. rid	Af pr-	Af pr+	Af sec-	Af sec+	N x	N y	N xy	M x	M y	M xy
							N/mm	N/mm	N/mm	N	N	N	
118	ok 0.02	0.5	8.96e-03	80.4	80.4	80.4	80.4	-148.1	-267.6	-586.4	-9.734e+05	-1.046e+06	3.674e+06
121	ok 0.02	0.5	6.00e-03	80.4	80.4	80.4	80.4	10.9	337.9	-554.0	2.880e+06	1.956e+05	3.335e+06
122	ok 0.02	0.7	1.14e-02	80.4	80.4	80.4	80.4	-122.4	-796.8	-443.7	-4.603e+06	-2.223e+06	3.437e+06
129	ok 0.02	0.7	4.00e-03	80.4	80.4	80.4	80.4	41.2	768.0	-351.7	5.998e+06	1.547e+06	2.574e+06
130	ok 0.02	0.8	1.32e-02	80.4	80.4	80.4	80.4	-231.3	-1148.4	-169.2	-7.793e+06	-3.503e+06	2.739e+06
133	ok 0.02	0.5	1.05e-02	80.4	80.4	80.4	80.4	-174.0	-321.5	-680.1	-1.047e+06	-1.366e+06	3.754e+06
134	ok 0.02	0.5	8.00e-03	80.4	80.4	80.4	80.4	-23.1	384.4	-622.0	3.076e+06	8.125e+05	3.542e+06
135	ok 0.02	0.8	1.24e-02	80.4	80.4	80.4	80.4	-27.6	-904.3	-467.2	-4.839e+06	-3.371e+06	3.813e+06
145	ok 0.02	0.8	5.16e-03	80.4	80.4	80.4	80.4	-60.9	814.6	-325.3	6.578e+06	2.695e+06	3.236e+06
146	ok 0.02	1.0	1.38e-02	80.4	80.4	80.4	80.4	-98.7	-1225.6	-73.8	-8.530e+06	-5.064e+06	3.669e+06
153	ok 0.02	0.9	3.61e-03	80.4	80.4	80.4	80.4	210.8	984.4	-109.2	8.336e+06	3.035e+06	1.645e+06
154	ok 0.02	0.9	1.43e-02	80.4	80.4	80.4	80.4	-505.0	-1260.5	96.6	-1.022e+07	-4.899e+06	1.828e+06
165	ok 0.02	1.0	3.87e-03	80.4	85.9	80.4	85.9	130.6	944.8	3.3	9.679e+06	4.199e+06	2.731e+06
166	ok 0.03	1.0	1.54e-02	94.8	80.4	88.9	80.4	-433.0	-1212.9	284.1	-1.188e+07	-6.324e+06	3.211e+06
180	ok 0.02	1.0	3.13e-03	80.4	82.4	80.4	81.7	469.7	1010.7	46.2	9.825e+06	4.469e+06	8.277e+05
181	ok 0.02	1.0	1.50e-02	80.8	80.4	80.8	80.4	-865.8	-1184.8	219.9	-1.180e+07	-6.243e+06	9.800e+05
189	ok 0.03	1.0	3.01e-03	80.4	107.0	80.4	91.0	469.2	835.3	174.2	1.213e+07	5.254e+06	1.973e+06
190	ok 0.03	1.0	1.62e-02	106.2	80.4	84.9	80.4	-910.1	-965.0	409.0	-1.457e+07	-7.144e+06	2.370e+06
214	ok 0.02	1.0	2.65e-03	80.4	90.1	80.4	81.3	635.5	942.7	145.9	1.049e+07	5.550e+06	4.196e+05
215	ok 0.02	1.0	1.49e-02	83.1	80.4	80.4	80.4	-1095.5	-1052.7	255.4	-1.252e+07	-7.275e+06	5.224e+05
220	ok 0.03	1.0	2.05e-03	80.4	117.7	80.4	86.2	627.3	689.6	325.3	1.352e+07	5.909e+06	1.240e+06
221	ok 0.03	1.0	1.63e-02	111.9	80.4	81.7	80.4	-1148.6	-738.5	479.4	-1.608e+07	-7.674e+06	1.512e+06
258	ok 0.02	1.0	2.40e-03	80.4	92.3	80.4	80.5	769.0	911.1	-42.0	1.077e+07	5.934e+06	-8.560e+04
259	ok 0.03	1.0	1.17e-03	80.4	119.9	80.4	80.7	841.4	589.6	-112.5	1.417e+07	6.087e+06	-1.494e+05
271	ok 0.03	1.0	1.59e-02	113.5	80.4	80.4	80.4	-1408.6	-592.2	-130.5	-1.682e+07	-7.770e+06	-1.836e+05
272	ok 0.02	1.0	1.43e-02	83.7	80.4	80.4	80.4	-1260.4	-989.1	-52.0	-1.283e+07	-7.628e+06	-9.682e+04
309	ok 0.03	1.0	2.14e-03	80.4	117.6	80.4	86.1	631.3	688.9	-312.2	1.352e+07	5.908e+06	-1.249e+06
310	ok 0.03	1.0	1.62e-02	111.9	80.4	81.7	80.4	-1152.3	-737.0	-469.9	-1.608e+07	-7.673e+06	-1.517e+06
315	ok 0.02	1.0	2.68e-03	80.4	90.1	80.4	81.3	641.0	940.5	-134.4	1.048e+07	5.549e+06	-4.257e+05
316	ok 0.02	1.0	1.49e-02	83.1	80.4	80.4	80.4	-1099.3	-1050.7	-247.2	-1.251e+07	-7.274e+06	-5.258e+05
340	ok 0.03	1.0	3.09e-03	80.4	107.0	80.4	91.0	482.1	832.8	-160.2	1.212e+07	5.252e+06	-1.983e+06
341	ok 0.03	1.0	1.61e-02	106.2	80.4	85.0	80.4	-917.9	-961.7	-400.1	-1.456e+07	-7.143e+06	-2.375e+06
349	ok 0.02	1.0	3.18e-03	80.4	82.5	80.4	81.7	485.2	1005.9	-34.8	9.809e+06	4.467e+06	-8.343e+05
350	ok 0.02	1.0	1.50e-02	80.7	80.4	80.7	80.4	-873.5	-1181.1	-212.7	-1.180e+07	-6.241e+06	-9.831e+05
364	ok 0.02	1.0	3.95e-03	80.4	86.0	80.4	86.0	161.9	938.8	10.5	9.642e+06	4.200e+06	-2.741e+06
365	ok 0.03	1.0	1.53e-02	94.7	80.4	89.0	80.4	-446.1	-1207.9	-276.6	-1.186e+07	-6.323e+06	-3.214e+06
376	ok 0.02	0.9	3.68e-03	80.4	80.4	80.4	80.4	244.4	975.0	117.0	8.304e+06	3.037e+06	-1.650e+06
377	ok 0.02	0.9	1.43e-02	80.4	80.4	80.4	80.4	-517.5	-1255.1	-91.7	-1.021e+07	-4.896e+06	-1.830e+06
384	ok 0.02	0.8	4.75e-03	80.4	80.4	80.4	80.4	12.6	802.0	329.1	6.502e+06	2.707e+06	-3.233e+06

385	ok 0.02	1.0	1.38e-02	80.4	80.4	80.4	80.4	-119.4	-1219.0	78.3	-8.508e+06	-5.064e+06	-3.670e+06	
395	ok 0.02	0.5	7.87e-03	80.4	80.4	80.4	80.4	27.1	406.6	582.0	3.040e+06	7.887e+05	-3.488e+06	
396	ok 0.02	0.8	1.24e-02	80.4	80.4	80.4	80.4	-60.8	-898.3	463.2	-4.807e+06	-3.371e+06	-3.806e+06	
397	ok 0.02	0.5	1.05e-02	80.4	80.4	80.4	80.4	-224.8	-324.6	654.5	-1.003e+06	-1.361e+06	-3.725e+06	
400	ok 0.02	0.7	4.12e-03	80.4	80.4	80.4	80.4	80.0	770.4	333.2	5.962e+06	1.539e+06	-2.554e+06	
401	ok 0.02	0.8	1.32e-02	80.4	80.4	80.4	80.4	-250.0	-1142.6	169.2	-7.776e+06	-3.500e+06	-2.738e+06	
408	ok 0.02	0.5	5.95e-03	80.4	80.4	80.4	80.4	26.9	346.4	550.1	2.869e+06	1.882e+05	-3.328e+06	
409	ok 0.02	0.7	1.14e-02	80.4	80.4	80.4	80.4	-148.7	-794.6	433.8	-4.581e+06	-2.219e+06	-3.429e+06	
412	ok 0.02	0.5	8.97e-03	80.4	80.4	80.4	80.4	-162.9	-281.4	573.0	-9.637e+05	-1.031e+06	-3.663e+06	

Nodo	x/d	V N/M	ver. rid	Af pr-	Af pr+	Af sec-	Af sec+	N x	N y	N xy	M x	M y	M xy
								-1408.65	-1260.52	-680.06	-1.682e+07	-7.770e+06	-3.806e+06
	0.03	0.98	0.02	113.52	119.90	89.03	91.04	841.40	1010.71	654.48	1.417e+07	6.087e+06	3.813e+06

Nodo	Stato	Max tau	Ver V pr	Ver V sec	Af V pr	Af V sec	V pr	V sec
	daN/cm2					N/mm	N/mm	
118	ok Av	10.34	0.21	0.03	11.6	1.5	3515.5	451.6
121	ok Av	10.44	0.18	0.11	10.2	6.1	3071.3	1836.1
122	ok Av	11.49	0.17	0.16	9.6	8.8	2905.7	2657.5
129	ok Av	11.37	0.10	0.21	5.4	11.7	1634.4	3538.1
130	ok Av	13.04	0.08	0.26	4.2	14.2	1262.0	4288.6
133	ok Av	14.73	0.30	0.03	16.6	1.9	5016.6	561.5
134	ok Av	15.09	0.27	0.16	14.8	8.6	4471.8	2601.9
135	ok Av	16.21	0.25	0.21	14.2	11.8	4272.5	3553.6
145	ok Av	16.21	0.15	0.29	8.5	16.4	2555.8	4934.9
146	ok Av	18.02	0.13	0.35	7.0	19.2	2117.0	5802.4
153	ok Av	12.53	0.04	0.25	2.5	14.2	750.4	4271.9
154	ok Av	14.59	0.08	0.29	4.6	16.2	1378.4	4900.5
165	ok Av	17.44	0.05	0.36	3.0	19.8	908.3	5972.7
166	ok Av	19.71	0.10	0.40	5.4	22.2	1631.7	6696.7
180	ok Av	13.53	0.17	0.23	9.5	12.8	2856.5	3852.8
181	ok Av	15.82	0.22	0.26	11.9	14.3	3606.5	4317.2
189	ok Av	18.39	0.22	0.33	12.4	18.1	3744.5	5449.5
190	ok Av	20.96	0.28	0.36	15.3	19.8	4611.6	5982.5
214	ok Av	14.13	0.26	0.14	14.4	8.0	4360.5	2410.0
215	ok Av	16.54	0.31	0.16	17.2	8.9	5181.9	2678.3
220	ok Av	18.82	0.34	0.21	19.0	11.7	5737.4	3527.5
221	ok Av	21.58	0.40	0.23	22.2	12.7	6688.9	3831.9
258	ok Av	14.19	0.29	0.02	16.1	1.2	4852.7	355.1
259	ok Av	18.64	0.38	0.04	21.0	2.5	6344.3	750.0
271	ok Av	21.47	0.44	0.05	24.2	2.7	7315.3	802.4
272	ok Av	16.64	0.34	0.02	18.9	1.3	5689.3	406.5
309	ok Av	18.83	0.34	0.21	19.0	11.7	5734.6	3534.5
310	ok Av	21.58	0.40	0.23	22.2	12.7	6687.3	3835.9
315	ok Av	14.13	0.26	0.14	14.4	8.0	4357.9	2415.4
316	ok Av	16.54	0.31	0.16	17.2	8.9	5180.4	2681.1

340	ok Av	18.40	0.22	0.33	12.4	18.1	3738.2	5456.2
341	ok Av	20.97	0.27	0.36	15.3	19.8	4608.2	5986.0
349	ok Av	13.53	0.17	0.23	9.4	12.8	2850.7	3857.2
350	ok Av	15.82	0.21	0.26	11.9	14.3	3603.7	4319.4
364	ok Av	17.45	0.05	0.36	3.0	19.8	896.8	5978.3
365	ok Av	19.71	0.10	0.40	5.4	22.2	1626.3	6699.2
376	ok Av	12.53	0.04	0.25	2.5	14.2	740.5	4273.7
377	ok Av	14.59	0.08	0.29	4.6	16.2	1374.1	4901.6
384	ok Av	16.24	0.15	0.29	8.5	16.3	2578.4	4932.4
385	ok Av	18.03	0.13	0.35	7.0	19.2	2124.8	5803.3
395	ok Av	15.12	0.27	0.16	14.9	8.6	4484.7	2600.5
396	ok Av	16.23	0.26	0.21	14.2	11.8	4283.3	3551.9
397	ok Av	14.76	0.30	0.03	16.7	1.8	5030.0	552.0
400	ok Av	11.37	0.10	0.21	5.5	11.7	1645.7	3534.2
401	ok Av	13.04	0.08	0.26	4.2	14.2	1267.5	4287.8
408	ok Av	10.44	0.18	0.11	10.2	6.1	3074.5	1831.5
409	ok Av	11.49	0.17	0.16	9.6	8.8	2911.9	2654.0
412	ok Av	10.35	0.21	0.03	11.7	1.5	3519.6	446.0

Nodo		Max tau	Ver V pr	Ver V sec	Af V pr	Af V sec	V pr	V sec
	21.58	0.44	0.40	24.24	22.20	7315.31	6699.23	

Macro Guscio	Spessore	Id Materiale	Id Criterio	Progettazione
	cm			
17	435.00	9	2	Singolo elemento

Nodo	Statox/d	V N/M	ver. rid	Af pr-	Af pr+	Af sec-	Af sec+	N x	N y	N xy	M x	M y	M xy
							N/mm	N/mm	N/mm	N	N	N	
133	ok 0.02	0.4	1.11e-02	87.0	87.0	87.0	87.0	185.4	-131.4	-619.8	-1.461e+06	-1.361e+06	4.086e+06
134	ok 0.02	0.4	7.59e-03	87.0	87.0	87.0	87.0	-373.5	196.7	-561.0	3.495e+06	7.992e+05	3.743e+06
135	ok 0.02	0.6	1.55e-02	87.0	87.0	87.0	87.0	-181.7	-782.7	-580.0	-6.131e+06	-3.258e+06	3.631e+06
144	ok 0.02	0.5	1.15e-02	87.0	87.0	87.0	87.0	84.6	-243.3	-745.1	-2.277e+06	-1.619e+06	4.331e+06
145	ok 0.02	0.6	7.40e-03	87.0	87.0	87.0	87.0	-18.1	832.8	-499.4	7.525e+06	2.870e+06	2.824e+06
146	ok 0.02	0.8	1.97e-02	87.0	87.0	87.0	87.0	-529.9	-1426.0	-508.0	-1.009e+07	-5.397e+06	2.682e+06
151	ok 0.02	0.5	8.66e-03	87.0	87.0	87.0	87.0	-444.1	277.6	-689.6	4.382e+06	1.560e+06	4.111e+06
152	ok 0.02	0.7	1.53e-02	87.0	87.0	87.0	87.0	-130.1	-851.9	-686.3	-7.161e+06	-4.369e+06	4.102e+06
161	ok 0.02	0.7	8.07e-03	87.0	87.0	87.0	87.0	-226.9	856.0	-572.3	8.890e+06	4.089e+06	3.635e+06
162	ok 0.02	0.9	1.90e-02	87.0	87.0	87.0	87.0	-349.1	-1428.5	-569.2	-1.167e+07	-6.902e+06	3.634e+06
165	ok 0.02	0.9	6.99e-03	87.0	87.0	87.0	87.0	290.8	1421.3	-391.4	1.051e+07	5.099e+06	1.777e+06
166	ok 0.02	0.8	2.31e-02	87.0	87.0	87.0	87.0	-837.6	-2015.5	-387.3	-1.301e+07	-7.699e+06	1.644e+06
167	ok 0.02	0.4	8.75e-03	87.0	87.0	87.0	87.0	-66.1	-276.9	-546.2	-1.825e+06	-1.522e+06	3.514e+06
171	ok 0.02	0.4	5.52e-03	87.0	87.0	87.0	87.0	-294.1	171.0	-489.5	3.009e+06	8.792e+05	3.383e+06
172	ok 0.02	0.6	1.19e-02	87.0	87.0	87.0	87.0	-279.8	-745.7	-488.4	-5.795e+06	-3.659e+06	3.397e+06

176	ok 0.02	0.9	7.36e-03	87.0	87.0	87.0	87.0	-10.2	1353.0	-402.41.273e+07	6.210e+06	2.929e+06
177	ok 0.02	1.0	2.20e-02	96.7	87.0	95.3	87.0	-567.4	-1923.9	-400.4-1.551e+07	-9.020e+06	2.937e+06
178	ok 0.02	0.6	5.25e-03	87.0	87.0	87.0	87.0	-72.2	600.8	-412.16.709e+06	2.831e+06	3.016e+06
179	ok 0.02	0.7	1.48e-02	87.0	87.0	87.0	87.0	-502.4	-1174.7	-410.6-9.501e+06	-5.604e+06	3.026e+06
186	ok 0.02	0.3	6.86e-03	87.0	87.0	87.0	87.0	-254.4	-284.2	-446.1-1.443e+06	-1.398e+06	2.704e+06
187	ok 0.02	0.2	4.64e-03	87.0	87.0	87.0	87.0	-186.1	70.0	-425.41.691e+06	2.587e+05	2.608e+06
188	ok 0.02	0.4	9.10e-03	87.0	87.0	87.0	87.0	-387.2	-642.7	-425.4-4.463e+06	-3.035e+06	2.611e+06
189	ok 0.02	1.0	6.41e-03	87.0	91.9	87.0	87.3	548.5	1905.2	-228.11.244e+07	7.154e+06	9.647e+05
190	ok 0.02	0.9	2.56e-02	87.0	87.0	87.0	87.0	-1101.0	-2493.9	-212.6-1.487e+07	-9.815e+06	8.762e+05
191	ok 0.02	0.7	5.25e-03	87.0	87.0	87.0	87.0	131.3	974.0	-321.49.872e+06	4.480e+06	2.403e+06
192	ok 0.02	0.9	1.71e-02	87.0	87.0	87.0	87.0	-706.9	-1546.9	-320.0-1.267e+07	-7.251e+06	2.408e+06
195	ok 0.02	0.4	3.50e-03	87.0	87.0	87.0	87.0	-59.7	403.7	-378.84.507e+06	1.778e+06	2.343e+06
196	ok 0.02	0.6	1.12e-02	87.0	87.0	87.0	87.0	-513.7	-976.4	-378.6-7.280e+06	-4.553e+06	2.347e+06
199	ok 0.02	1.0	6.77e-03	87.0	102.9	87.0	91.4	199.6	1726.4	-197.91.565e+07	7.772e+06	2.011e+06
200	ok 0.02	1.0	2.39e-02	108.3	87.0	95.0	87.0	-778.1	-2296.4	-197.6-1.843e+07	-1.058e+07	2.026e+06
203	ok 0.02	0.5	3.71e-03	87.0	87.0	87.0	87.0	49.3	692.5	-308.66.931e+06	3.071e+06	1.919e+06
204	ok 0.02	0.7	1.30e-02	87.0	87.0	87.0	87.0	-623.0	-1264.9	-308.2-9.706e+06	-5.844e+06	1.922e+06
205	ok 0.02	0.2	5.52e-03	87.0	87.0	87.0	87.0	-285.9	-287.0	-317.1-1.391e+06	-1.385e+06	1.893e+06
206	ok 0.02	0.1	3.99e-03	87.0	87.0	87.0	87.0	-203.0	-35.7	-305.37.010e+05	-2.772e+05	1.828e+06
207	ok 0.02	0.3	7.03e-03	87.0	87.0	87.0	87.0	-368.5	-538.7	-305.6-3.483e+06	-2.493e+06	1.827e+06
210	ok 0.02	0.9	5.08e-03	87.0	87.0	87.0	87.0	292.9	1274.7	-216.41.225e+07	5.747e+06	1.589e+06
211	ok 0.02	1.0	1.88e-02	87.0	87.0	87.0	87.0	-869.4	-1846.7	-215.5-1.504e+07	-8.518e+06	1.586e+06
212	ok 0.02	0.2	2.90e-03	87.0	87.0	87.0	87.0	-128.2	199.6	-272.12.664e+06	7.567e+05	1.635e+06
213	ok 0.02	0.4	8.45e-03	87.0	87.0	87.0	87.0	-446.3	-772.7	-271.5-5.431e+06	-3.525e+06	1.635e+06
216	ok 0.02	0.6	3.84e-03	87.0	87.0	87.0	87.0	132.1	918.0	-217.48.795e+06	4.052e+06	1.357e+06
217	ok 0.02	0.8	1.43e-02	87.0	87.0	87.0	87.0	-706.3	-1490.0	-216.9-1.157e+07	-6.825e+06	1.359e+06
218	ok 0.02	0.3	3.08e-03	87.0	87.0	87.0	87.0	-60.2	399.3	-218.64.335e+06	1.645e+06	1.330e+06
219	ok 0.02	0.5	9.66e-03	87.0	87.0	87.0	87.0	-523.9	-964.6	-217.9-7.084e+06	-4.429e+06	1.333e+06
220	ok 0.02	1.0	5.75e-03	87.0	99.5	87.0	89.3	760.9	2228.7	-20.81.349e+07	8.565e+06	5.184e+05
221	ok 0.02	0.9	2.69e-02	87.0	87.0	87.0	87.0	-1323.9	-2806.8	1.6-1.590e+07	-1.126e+07	4.987e+05
222	ok 0.02	1.0	6.64e-03	87.0	114.8	87.0	89.8	389.7	1949.3	17.31.742e+07	8.691e+06	9.187e+05
223	ok 0.02	1.0	2.47e-02	113.8	87.0	92.3	87.0	-968.3	-2519.1	15.5-2.021e+07	-1.149e+07	9.372e+05
224	ok 0.02	0.2	4.19e-03	87.0	87.0	87.0	87.0	-286.4	-286.9	-171.0-1.387e+06	-1.383e+06	1.036e+06
225	ok 0.02	0.1	3.36e-03	87.0	87.0	87.0	87.0	-225.7	-240.7	29.4-1.195e+06	-1.135e+06	-1.054e+05
226	ok 0.02	0.2	5.02e-03	87.0	87.0	87.0	87.0	-331.7	-423.9	-164.6-2.529e+06	-1.984e+06	9.991e+05
227	ok 0.02	0.4	3.20e-03	87.0	87.0	87.0	87.0	1.3	546.2	-153.65.603e+06	2.336e+06	9.440e+05
228	ok 0.02	0.6	1.06e-02	87.0	87.0	87.0	87.0	-576.0	-1118.9	-153.0-8.371e+06	-5.104e+06	9.447e+05
229	ok 0.02	1.0	4.79e-03	87.0	89.0	87.0	87.9	456.7	1547.2	-195.61.328e+07	6.644e+06	1.200e+06
230	ok 0.02	1.0	1.96e-02	90.6	87.0	88.2	87.0	-1033.5	-2119.0	-194.9-1.606e+07	-9.433e+06	1.214e+06
231	ok 0.02	9.36e-02	2.59e-03	87.0	87.0	87.0	87.0	-230.8	-260.0	26.7-1.313e+06	-1.202e+06	-9.407e+04
232	ok 0.02	0.3	5.79e-03	87.0	87.0	87.0	87.0	-374.2	-551.4	-146.4-3.592e+06	-2.545e+06	8.932e+05
233	ok 0.02	0.1	2.61e-03	87.0	87.0	87.0	87.0	-235.3	-276.4	21.7-1.414e+06	-1.260e+06	-7.595e+04
234	ok 0.02	0.3	6.46e-03	87.0	87.0	87.0	87.0	-411.2	-660.6	-117.7-4.503e+06	-3.028e+06	7.263e+05
235	ok 0.02	0.7	3.88e-03	87.0	87.0	87.0	87.0	176.6	1067.9	-117.09.955e+06	4.658e+06	7.175e+05
236	ok 0.02	0.8	1.52e-02	87.0	87.0	87.0	87.0	-765.4	-1646.8	-120.1-1.271e+07	-7.428e+06	7.371e+05
237	ok 0.02	0.2	2.67e-03	87.0	87.0	87.0	87.0	-129.6	166.8	-83.32.428e+06	6.467e+05	5.162e+05

238	ok 0.02	0.4	6.98e-03	87.0	87.0	87.0	87.0	-445.9	-740.5	-82.8	-5.191e+06	-3.409e+06	5.158e+05
239	ok 0.02	0.4	3.27e-03	87.0	87.0	87.0	87.0	33.3	644.1	-76.8	6.413e+06	2.758e+06	4.869e+05
240	ok 0.02	0.6	1.12e-02	87.0	87.0	87.0	87.0	-608.6	-1216.5	-76.1	-9.181e+06	-5.525e+06	4.867e+05
241	ok 0.02	0.2	2.71e-03	87.0	87.0	87.0	87.0	-114.0	221.4	-40.7	2.873e+06	8.738e+05	2.659e+05
242	ok 0.02	0.4	7.31e-03	87.0	87.0	87.0	87.0	-461.7	-795.2	-40.0	-5.635e+06	-3.635e+06	2.651e+05
259	ok 0.02	1.0	5.11e-03	87.0	100.4	87.0	90.4	929.7	2353.7	-187.6	1.390e+07	8.952e+06	-3.036e+05
260	ok 0.02	1.0	6.34e-03	87.0	117.0	87.0	87.2	541.3	2012.7	220.5	1.790e+07	8.935e+06	-2.752e+05
261	ok 0.02	1.0	4.46e-03	87.0	91.6	87.0	87.1	452.5	1581.3	52.5	1.400e+07	6.878e+06	-3.116e+05
262	ok 0.02	0.7	3.85e-03	87.0	87.0	87.0	87.0	203.3	1119.0	11.2	1.036e+07	4.864e+06	-2.944e+04
263	ok 0.02	0.5	3.27e-03	87.0	87.0	87.0	87.0	42.3	676.4	8.9	6.689e+06	2.902e+06	-1.174e+04
264	ok 0.02	0.2	2.71e-03	87.0	87.0	87.0	87.0	-108.7	239.8	5.4	3.025e+06	9.500e+05	-7256.4
265	ok 0.02	9.55e-02	2.74e-03	87.0	87.0	87.0	87.0	-282.2	-287.8	9.3	-1.389e+06	-1.377e+06	-1.311e+04
266	ok 0.02	0.4	7.43e-03	87.0	87.0	87.0	87.0	-467.3	-813.8	6.7	-5.787e+06	-3.711e+06	-9084.8
267	ok 0.02	0.6	1.14e-02	87.0	87.0	87.0	87.0	-618.7	-1248.5	9.5	-9.455e+06	-5.669e+06	-1.257e+04
268	ok 0.02	0.8	1.54e-02	87.0	87.0	87.0	87.0	-779.0	-1689.7	11.3	-1.313e+07	-7.638e+06	-3.087e+04
269	ok 0.02	1.0	1.97e-02	92.4	87.0	87.1	87.0	-1030.2	-2152.1	51.1	-1.678e+07	-9.662e+06	-3.235e+05
270	ok 0.02	1.0	2.43e-02	114.7	87.0	88.2	87.0	-1119.1	-2583.1	216.5	-2.070e+07	-1.173e+07	-2.573e+05
271	ok 0.02	0.9	2.69e-02	87.0	87.0	87.0	87.0	-1505.3	-2918.9	-213.5	-1.631e+07	-1.164e+07	-3.540e+05
288	ok 0.02	0.2	2.69e-03	87.0	87.0	87.0	87.0	-114.1	221.3	52.5	2.873e+06	8.742e+05	-2.797e+05
289	ok 0.02	0.4	7.34e-03	87.0	87.0	87.0	87.0	-462.4	-795.4	54.0	-5.634e+06	-3.634e+06	-2.822e+05
290	ok 0.02	0.4	3.24e-03	87.0	87.0	87.0	87.0	33.3	644.8	89.2	6.413e+06	2.756e+06	-5.013e+05
291	ok 0.02	0.6	1.12e-02	87.0	87.0	87.0	87.0	-610.4	-1216.3	90.3	-9.178e+06	-5.523e+06	-5.037e+05
292	ok 0.02	0.2	2.64e-03	87.0	87.0	87.0	87.0	-129.8	166.6	95.3	2.428e+06	6.478e+05	-5.303e+05
293	ok 0.02	0.4	7.04e-03	87.0	87.0	87.0	87.0	-447.2	-741.0	96.9	-5.188e+06	-3.406e+06	-5.332e+05
294	ok 0.02	0.7	3.84e-03	87.0	87.0	87.0	87.0	177.7	1068.8	130.7	9.952e+06	4.654e+06	-7.337e+05
295	ok 0.02	0.8	1.52e-02	87.0	87.0	87.0	87.0	-768.3	-1645.9	133.5	-1.271e+07	-7.427e+06	-7.525e+05
296	ok 0.02	0.1	2.56e-03	87.0	87.0	87.0	87.0	-156.1	80.4	130.2	1.725e+06	2.830e+05	-7.410e+05
297	ok 0.02	0.3	6.56e-03	87.0	87.0	87.0	87.0	-413.1	-661.4	131.8	-4.499e+06	-3.024e+06	-7.441e+05
298	ok 0.02	9.28e-02	2.69e-03	87.0	87.0	87.0	87.0	-231.4	-260.8	-17.0	-1.312e+06	-1.200e+06	8.208e+04
299	ok 0.02	0.3	5.92e-03	87.0	87.0	87.0	87.0	-376.4	-552.4	160.4	-3.588e+06	-2.541e+06	-9.111e+05
300	ok 0.02	1.0	4.72e-03	87.0	89.0	87.0	87.8	459.3	1547.2	210.1	1.328e+07	6.639e+06	-1.217e+06
301	ok 0.02	1.0	1.97e-02	90.6	87.0	88.3	87.0	-1037.0	-2117.5	207.0	-1.606e+07	-9.432e+06	-1.227e+06
302	ok 0.02	0.4	3.15e-03	87.0	87.0	87.0	87.0	1.2	547.2	166.2	5.602e+06	2.334e+06	-9.590e+05
303	ok 0.02	0.6	1.07e-02	87.0	87.0	87.0	87.0	-579.6	-1118.7	167.6	-8.364e+06	-5.101e+06	-9.627e+05
304	ok 0.02	0.1	3.48e-03	87.0	87.0	87.0	87.0	-226.7	-241.7	-19.4	-1.193e+06	-1.132e+06	9.284e+04
305	ok 0.02	0.2	5.15e-03	87.0	87.0	87.0	87.0	-333.7	-425.1	178.4	-2.525e+06	-1.979e+06	-1.017e+06
306	ok 0.02	0.2	4.32e-03	87.0	87.0	87.0	87.0	-288.0	-288.3	184.4	-1.385e+06	-1.378e+06	-1.053e+06
307	ok 0.02	1.0	6.54e-03	87.0	114.7	87.0	89.7	393.6	1948.2	-3.5	1.741e+07	8.686e+06	-9.354e+05
308	ok 0.02	1.0	2.47e-02	113.8	87.0	92.4	87.0	-972.0	-2517.2	-4.9	-2.021e+07	-1.149e+07	-9.480e+05
309	ok 0.02	1.0	5.73e-03	87.0	99.5	87.0	89.3	765.4	2226.6	33.5	1.348e+07	8.562e+06	-5.334e+05
310	ok 0.02	0.9	2.70e-02	87.0	87.0	87.0	87.0	-1327.6	-2804.6	7.7	-1.589e+07	-1.126e+07	-5.077e+05
311	ok 0.02	0.3	3.01e-03	87.0	87.0	87.0	87.0	-60.5	399.6	231.1	4.334e+06	1.644e+06	-1.346e+06
312	ok 0.02	0.5	9.77e-03	87.0	87.0	87.0	87.0	-528.9	-964.7	233.0	-7.075e+06	-4.424e+06	-1.353e+06
313	ok 0.02	0.6	3.77e-03	87.0	87.0	87.0	87.0	133.7	920.0	232.1	8.791e+06	4.044e+06	-1.376e+06
314	ok 0.02	0.8	1.44e-02	87.0	87.0	87.0	87.0	-712.2	-1488.4	230.7	-1.156e+07	-6.822e+06	-1.376e+06
317	ok 0.02	0.2	2.83e-03	87.0	87.0	87.0	87.0	-129.2	198.8	285.1	2.665e+06	7.596e+05	-1.652e+06

318	ok 0.02	0.4	8.59e-03	87.0	87.0	87.0	87.0	-452.1	-773.3	287.1-5.420e+06-3.518e+06-1.657e+06
319	ok 0.02	0.9	4.98e-03	87.0	87.0	87.0	87.0	298.6	1275.4	232.71.224e+07 5.738e+06-1.612e+06
320	ok 0.02	1.0	1.88e-02	87.0	87.0	87.0	87.0	-876.7	-1843.8	227.6-1.503e+07-8.516e+06-1.600e+06
323	ok 0.02	0.1	4.14e-03	87.0	87.0	87.0	87.0	-208.1	-37.1	320.57.211e+05-2.681e+05-1.847e+06
324	ok 0.02	0.3	7.21e-03	87.0	87.0	87.0	87.0	-373.8	-540.6	321.6-3.472e+06-2.484e+06-1.850e+06
325	ok 0.02	0.2	5.69e-03	87.0	87.0	87.0	87.0	-289.7	-290.1	332.8-1.384e+06-1.375e+06-1.916e+06
326	ok 0.02	0.5	3.61e-03	87.0	87.0	87.0	87.0	50.7	694.9	324.66.926e+06 3.061e+06-1.941e+06
327	ok 0.02	0.7	1.31e-02	87.0	87.0	87.0	87.0	-632.0	-1262.8	322.8-9.690e+06-5.840e+06-1.942e+06
330	ok 0.02	1.0	6.63e-03	87.0	102.9	87.0	91.4	209.3	1723.9	212.71.563e+07 7.763e+06-2.032e+06
331	ok 0.02	1.0	2.39e-02	108.2	87.0	95.1	87.0	-785.8	-2292.5	207.6-1.842e+07-1.058e+07-2.037e+06
334	ok 0.02	0.4	3.44e-03	87.0	87.0	87.0	87.0	-61.2	400.8	390.14.507e+06 1.778e+06-2.362e+06
335	ok 0.02	0.6	1.14e-02	87.0	87.0	87.0	87.0	-526.0	-974.0	395.0-7.257e+06-4.548e+06-2.372e+06
338	ok 0.02	0.7	5.08e-03	87.0	87.0	87.0	87.0	141.1	975.6	342.29.851e+06 4.465e+06-2.437e+06
339	ok 0.02	0.9	1.72e-02	87.0	87.0	87.0	87.0	-718.7	-1542.5	332.2-1.265e+07-7.249e+06-2.424e+06
340	ok 0.02	1.0	6.38e-03	87.0	92.0	87.0	87.3	558.3	1900.1	241.11.241e+07 7.149e+06-9.835e+05
341	ok 0.02	0.9	2.57e-02	87.0	87.0	87.0	87.0	-1108.5	-2489.6	221.0-1.486e+07-9.813e+06-8.853e+05
342	ok 0.02	0.2	4.85e-03	87.0	87.0	87.0	87.0	-197.7	64.9	435.71.713e+06 2.740e+05-2.625e+06
343	ok 0.02	0.4	9.39e-03	87.0	87.0	87.0	87.0	-401.6	-640.2	444.3-4.435e+06-3.028e+06-2.644e+06
344	ok 0.02	0.3	7.16e-03	87.0	87.0	87.0	87.0	-257.6	-288.0	463.4-1.430e+06-1.382e+06-2.739e+06
351	ok 0.02	0.6	5.06e-03	87.0	87.0	87.0	87.0	-59.5	594.2	435.96.688e+06 2.810e+06-3.077e+06
352	ok 0.02	0.7	1.49e-02	87.0	87.0	87.0	87.0	-520.5	-1168.6	423.6-9.467e+06-5.604e+06-3.046e+06
353	ok 0.02	0.9	7.20e-03	87.0	87.0	87.0	87.0	12.3	1345.0	415.31.269e+07 6.195e+06-2.958e+06
354	ok 0.02	1.0	2.20e-02	96.5	87.0	95.5	87.0	-579.9	-1918.1	409.5-1.549e+07-9.019e+06-2.949e+06
358	ok 0.02	0.4	6.02e-03	87.0	87.0	87.0	87.0	-379.3	143.5	430.73.175e+06 9.388e+05-3.303e+06
359	ok 0.02	0.6	1.23e-02	87.0	87.0	87.0	87.0	-308.0	-735.3	503.5-5.738e+06-3.664e+06-3.426e+06
363	ok 0.02	0.4	1.00e-02	87.0	87.0	87.0	87.0	-100.9	-250.5	557.4-1.734e+06-1.550e+06-3.565e+06
364	ok 0.02	0.9	6.96e-03	87.0	87.0	87.0	87.0	305.2	1410.5	405.51.047e+07 5.099e+06-1.802e+06
365	ok 0.02	0.8	2.32e-02	87.0	87.0	87.0	87.0	-849.6	-2009.2	393.9-1.299e+07-7.698e+06-1.653e+06
368	ok 0.02	0.7	7.82e-03	87.0	87.0	87.0	87.0	-363.0	568.8	510.78.793e+06 4.328e+06-3.628e+06
369	ok 0.02	0.9	1.91e-02	87.0	87.0	87.0	87.0	-368.5	-1419.9	576.4-1.163e+07-6.903e+06-3.646e+06
378	ok 0.02	0.5	1.20e-02	87.0	87.0	87.0	87.0	-810.5	316.6	835.55.161e+06 1.523e+06-4.478e+06
379	ok 0.02	0.7	1.55e-02	87.0	87.0	87.0	87.0	-158.3	-833.5	683.4-7.097e+06-4.384e+06-4.110e+06
384	ok 0.02	0.7	7.45e-03	87.0	87.0	87.0	87.0	-17.7	804.5	513.37.447e+06 2.899e+06-2.854e+06
385	ok 0.02	0.7	1.97e-02	87.0	87.0	87.0	87.0	-546.7	-1417.5	511.8-1.006e+07-5.398e+06-2.688e+06
386	ok 0.02	0.5	1.20e-02	87.0	87.0	87.0	87.0	114.3	-200.0	654.0-2.253e+06-1.708e+06-4.195e+06
395	ok 0.02	0.4	8.73e-03	87.0	87.0	87.0	87.0	-539.1	204.2	478.03.752e+06 7.680e+05-3.652e+06
396	ok 0.02	0.6	1.56e-02	87.0	87.0	87.0	87.0	-202.4	-769.7	580.1-6.076e+06-3.264e+06-3.628e+06
397	ok 0.02	0.4	1.12e-02	87.0	87.0	87.0	87.0	180.4	-103.1	618.3-1.389e+06-1.386e+06-4.058e+06

Nodo	x/d	V N/M	ver. rid	Af pr-	Af pr+	Af sec-	Af sec+	N x	N y	N xy	M x	M y	M xy
								-1505.31	-2918.93	-745.14	-2.070e+07	-1.173e+07	-4.478e+06
	0.02	0.99	0.03	114.70	117.01	95.47	91.42	929.65	2353.71	835.45	1.790e+07	8.952e+06	4.331e+06

Nodo	Stato	Max tau	Ver V pr	Ver V sec	Af V pr	Af V sec	V pr	V sec
	daN/cm2					N/mm	N/mm	
133	ok Av	16.86	0.34	0.07	18.8	3.7	7075.6	1390.1

134	ok Av	20.08	0.36	0.20	19.8	11.3	7452.7	4274.7
135	ok Av	21.96	0.37	0.26	20.4	14.3	7698.3	5385.6
144	ok Av	20.90	0.38	0.19	21.3	10.4	8039.6	3913.4
145	ok Av	23.90	0.30	0.39	16.7	21.4	6288.8	8060.0
146	ok Av	25.97	0.30	0.44	16.6	24.4	6238.0	9195.7
151	ok Av	30.12	0.57	0.35	31.6	19.6	1.189e+04	7394.9
152	ok Av	34.02	0.63	0.41	35.0	22.9	1.319e+04	8642.2
161	ok Av	41.18	0.82	0.63	45.4	34.8	1.709e+04	1.312e+04
162	ok Av	45.05	0.88	0.70	48.7	38.8	1.833e+04	1.462e+04
165	ok Av	26.28	0.16	0.51	9.0	28.5	3399.0	1.072e+04
166	ok Av	28.50	0.20	0.56	10.9	31.3	4104.4	1.180e+04
167	ok Av	23.49	0.48	0.05	26.6	2.6	1.000e+04	987.5
171	ok Av	27.58	0.56	0.03	31.3	1.7	1.180e+04	647.1
172	ok Av	28.89	0.59	0.02	32.8	1.3	1.236e+04	485.4
176	ok Av	49.34	0.97	0.89	53.6	49.5	2.020e+04	1.863e+04
177	ok Av	53.18	1.00	0.97	57.9	53.9	2.128e+04	2.028e+04
178	ok Av	31.66	0.64	0.08	35.7	4.6	1.343e+04	1720.7
179	ok Av	32.92	0.67	0.10	37.0	5.3	1.394e+04	1999.5
186	ok Av	21.15	0.43	3.69e-03	24.0	0.2	9047.7	77.1
187	ok Av	21.49	0.44	1.57e-03	24.4	8.71e-02	9194.8	32.8
188	ok Av	21.62	0.44	2.30e-03	24.6	0.1	9250.3	48.0
189	ok Av	26.99	0.29	0.55	16.0	30.6	6030.2	1.154e+04
190	ok Av	29.32	0.34	0.60	19.0	33.2	7165.3	1.250e+04
191	ok Av	33.90	0.66	0.20	36.9	11.0	1.389e+04	4155.3
192	ok Av	35.11	0.68	0.22	38.0	12.1	1.431e+04	4555.3
195	ok Av	21.86	0.45	6.66e-03	24.8	0.4	9351.0	139.3
196	ok Av	21.99	0.45	8.86e-03	25.0	0.5	9406.9	185.4
199	ok Av	54.23	0.97	1.00	54.1	65.7	2.038e+04	2.241e+04
200	ok Av	57.84	1.00	1.00	57.6	79.3	2.125e+04	2.412e+04
203	ok Av	22.04	0.45	0.02	25.0	0.9	9422.9	337.0
204	ok Av	22.16	0.45	0.02	25.2	1.0	9475.7	389.9
205	ok Av	21.13	0.43	6.15e-04	24.0	3.42e-02	9039.5	12.9
206	ok Av	21.17	0.43	4.96e-04	24.0	2.75e-02	9054.5	10.4
207	ok Av	21.19	0.43	1.51e-03	24.1	8.38e-02	9065.9	31.6
210	ok Av	34.08	0.62	0.31	34.7	17.2	1.306e+04	6474.7
211	ok Av	35.23	0.64	0.33	35.5	18.5	1.336e+04	6970.4
212	ok Av	21.22	0.43	1.83e-03	24.1	0.1	9079.8	38.3
213	ok Av	21.26	0.43	2.83e-03	24.1	0.2	9095.3	59.3
216	ok Av	21.98	0.45	0.03	24.9	1.4	9391.7	527.0
217	ok Av	22.09	0.45	0.03	25.1	1.5	9437.9	583.1
218	ok Av	21.28	0.44	3.05e-03	24.2	0.2	9101.7	63.7
219	ok Av	21.32	0.44	3.97e-03	24.2	0.2	9120.2	83.0
220	ok Av	25.96	0.35	0.49	19.5	27.4	7353.8	1.032e+04
221	ok Av	28.38	0.40	0.53	22.5	29.5	8464.4	1.109e+04
222	ok Av	55.89	0.84	1.00	46.8	73.8	1.763e+04	2.348e+04
223	ok Av	58.75	0.87	1.00	48.3	88.3	1.821e+04	2.510e+04

224	ok Av	21.21	0.43	3.99e-04	24.1	2.21e-02	9075.2	8.3
225	ok Av	21.21	0.43	1.74e-04	24.1	9.66e-03	9074.8	3.6
226	ok Av	21.22	0.43	7.34e-04	24.1	4.08e-02	9079.4	15.4
227	ok Av	21.30	0.44	3.82e-03	24.2	0.2	9113.8	79.9
228	ok Av	21.35	0.44	4.62e-03	24.3	0.3	9134.3	96.5
229	ok Av	32.20	0.53	0.38	29.7	21.4	1.118e+04	8050.4
230	ok Av	33.28	0.54	0.41	30.1	22.9	1.134e+04	8607.0
231	ok Av	21.22	0.43	3.47e-04	24.1	1.93e-02	9077.8	7.3
232	ok Av	21.24	0.43	9.96e-04	24.1	5.53e-02	9086.6	20.8
233	ok Av	21.23	0.43	4.92e-04	24.1	2.73e-02	9083.2	10.3
234	ok Av	21.26	0.43	1.09e-03	24.1	6.06e-02	9095.2	22.8
235	ok Av	21.71	0.44	0.03	24.6	1.7	9266.6	658.0
236	ok Av	21.80	0.44	0.03	24.7	1.9	9303.1	713.7
237	ok Av	21.25	0.43	5.38e-04	24.1	2.99e-02	9089.3	11.2
238	ok Av	21.28	0.44	9.80e-04	24.2	5.44e-02	9103.3	20.5
239	ok Av	21.30	0.44	3.97e-03	24.2	0.2	9113.0	83.1
240	ok Av	21.35	0.44	4.59e-03	24.3	0.3	9134.0	96.0
241	ok Av	21.26	0.43	4.69e-04	24.1	2.60e-02	9093.8	9.8
242	ok Av	21.29	0.44	8.47e-04	24.2	4.70e-02	9108.8	17.7
259	ok Av	23.27	0.32	0.35	17.6	19.7	6641.0	7417.0
260	ok Av	53.67	0.61	1.00	33.7	59.5	1.270e+04	2.154e+04
261	ok Av	28.47	0.45	0.40	24.8	22.5	9323.7	8461.5
262	ok Av	21.29	0.43	0.03	24.1	1.8	9090.3	695.3
263	ok Av	21.27	0.43	3.48e-03	24.2	0.2	9099.3	72.7
264	ok Av	21.26	0.43	3.05e-04	24.1	1.69e-02	9095.4	6.4
265	ok Av	21.32	0.44	1.79e-03	24.2	9.92e-02	9120.0	37.4
266	ok Av	21.30	0.44	7.08e-04	24.2	3.93e-02	9110.5	14.8
267	ok Av	21.32	0.44	3.89e-03	24.2	0.2	9119.6	81.3
268	ok Av	21.36	0.44	0.04	24.2	2.0	9106.6	746.9
269	ok Av	29.44	0.45	0.43	24.9	24.0	9360.1	9039.1
270	ok Av	56.51	0.62	1.00	34.4	69.8	1.296e+04	2.298e+04
271	ok Av	25.77	0.37	0.38	20.3	21.1	7650.7	7940.0
288	ok Av	21.26	0.43	4.81e-04	24.1	2.67e-02	9094.0	10.1
289	ok Av	21.29	0.44	5.11e-04	24.2	2.84e-02	9109.4	10.7
290	ok Av	21.30	0.44	3.79e-03	24.2	0.2	9113.3	79.4
291	ok Av	21.35	0.44	4.22e-03	24.3	0.2	9135.2	88.2
292	ok Av	21.25	0.43	5.75e-04	24.1	3.19e-02	9089.6	12.0
293	ok Av	21.28	0.44	6.46e-04	24.2	3.59e-02	9104.3	13.5
294	ok Av	21.71	0.44	0.03	24.6	1.7	9267.7	651.1
295	ok Av	21.81	0.44	0.03	24.7	1.9	9304.7	706.2
296	ok Av	21.23	0.43	5.69e-04	24.1	3.16e-02	9083.7	11.9
297	ok Av	21.26	0.43	7.68e-04	24.2	4.26e-02	9096.6	16.1
298	ok Av	21.22	0.43	4.72e-04	24.1	2.62e-02	9078.6	9.9
299	ok Av	21.24	0.43	7.04e-04	24.1	3.91e-02	9088.1	14.7
300	ok Av	32.22	0.53	0.39	29.7	21.4	1.118e+04	8059.2
301	ok Av	33.29	0.54	0.41	30.1	22.9	1.134e+04	8613.7

302	ok Av	21.31	0.44	3.68e-03	24.2	0.2	9114.6	77.0
303	ok Av	21.36	0.44	4.24e-03	24.3	0.2	9136.5	88.8
304	ok Av	21.22	0.43	3.51e-04	24.1	1.95e-02	9075.8	7.3
305	ok Av	21.23	0.43	4.72e-04	24.1	2.62e-02	9080.8	9.9
306	ok Av	21.22	0.43	1.90e-04	24.1	1.06e-02	9076.5	4.0
307	ok Av	55.91	0.84	1.00	46.8	74.0	1.763e+04	2.348e+04
308	ok Av	58.76	0.87	1.00	48.4	88.4	1.821e+04	2.511e+04
309	ok Av	25.98	0.35	0.49	19.5	27.4	7350.6	1.033e+04
310	ok Av	28.39	0.40	0.53	22.5	29.5	8462.5	1.110e+04
311	ok Av	21.28	0.44	2.98e-03	24.2	0.2	9102.7	62.3
312	ok Av	21.33	0.44	3.60e-03	24.2	0.2	9123.5	75.2
313	ok Av	21.99	0.45	0.02	24.9	1.4	9393.8	520.3
314	ok Av	22.10	0.45	0.03	25.1	1.5	9441.2	575.5
317	ok Av	21.23	0.43	1.88e-03	24.1	0.1	9081.4	39.4
318	ok Av	21.27	0.43	2.46e-03	24.2	0.1	9099.3	51.5
319	ok Av	34.10	0.62	0.31	34.7	17.2	1.307e+04	6483.8
320	ok Av	35.25	0.64	0.33	35.5	18.5	1.337e+04	6977.0
323	ok Av	21.17	0.43	6.75e-04	24.0	3.75e-02	9056.9	14.1
324	ok Av	21.20	0.43	1.16e-03	24.1	6.43e-02	9070.0	24.2
325	ok Av	21.14	0.43	3.27e-04	24.0	1.82e-02	9042.9	6.8
326	ok Av	22.04	0.45	0.02	25.0	0.9	9426.0	331.2
327	ok Av	22.17	0.45	0.02	25.2	1.0	9480.9	382.2
330	ok Av	54.25	0.97	1.00	54.1	65.8	2.039e+04	2.242e+04
331	ok Av	57.85	1.00	1.00	57.6	79.3	2.125e+04	2.412e+04
334	ok Av	21.87	0.45	6.57e-03	24.8	0.4	9354.5	137.4
335	ok Av	22.01	0.45	8.48e-03	25.0	0.5	9414.1	177.4
338	ok Av	33.92	0.66	0.20	36.9	11.1	1.390e+04	4164.6
339	ok Av	35.12	0.68	0.22	38.0	12.1	1.432e+04	4561.8
340	ok Av	27.01	0.29	0.55	16.0	30.7	6023.0	1.155e+04
341	ok Av	29.33	0.34	0.60	19.0	33.2	7161.4	1.251e+04
342	ok Av	21.50	0.44	1.74e-03	24.4	9.69e-02	9199.7	36.5
343	ok Av	21.64	0.44	1.90e-03	24.6	0.1	9259.2	39.8
344	ok Av	21.17	0.43	3.29e-03	24.0	0.2	9056.0	68.9
351	ok Av	31.69	0.64	0.08	35.7	4.6	1.345e+04	1729.8
352	ok Av	32.94	0.67	0.10	37.0	5.3	1.395e+04	2005.8
353	ok Av	49.38	0.97	0.89	53.7	49.5	2.021e+04	1.864e+04
354	ok Av	53.20	1.00	0.97	58.0	53.9	2.129e+04	2.029e+04
358	ok Av	27.59	0.56	0.03	31.3	1.7	1.180e+04	638.3
359	ok Av	28.93	0.59	0.02	32.9	1.3	1.237e+04	491.6
363	ok Av	23.54	0.48	0.05	26.6	2.6	1.002e+04	986.8
364	ok Av	26.31	0.16	0.51	9.1	28.5	3412.7	1.073e+04
365	ok Av	28.51	0.20	0.56	10.9	31.3	4098.0	1.181e+04
368	ok Av	41.23	0.82	0.63	45.4	34.9	1.711e+04	1.313e+04
369	ok Av	45.08	0.88	0.70	48.7	38.8	1.834e+04	1.463e+04
378	ok Av	30.23	0.57	0.35	31.7	19.6	1.195e+04	7398.3
379	ok Av	34.05	0.63	0.41	35.1	22.9	1.321e+04	8643.6

384	ok Av	23.94	0.30	0.39	16.8	21.4	6312.5	8063.4
385	ok Av	25.99	0.30	0.44	16.6	24.4	6247.4	9197.5
386	ok Av	20.94	0.39	0.19	21.4	10.4	8060.7	3909.6
395	ok Av	20.11	0.36	0.20	19.8	11.3	7470.0	4265.8
396	ok Av	21.99	0.37	0.26	20.5	14.3	7711.6	5384.4
397	ok Av	16.90	0.34	0.07	18.8	3.7	7094.1	1384.1

Nodo		**Max tau**	**Ver V pr**	**Ver V sec**	**Af V pr**	**Af V sec**	**V pr**	**V sec**
	58.76	1.00	1.00	57.95	88.43	2.129e+04	2.511e+04	

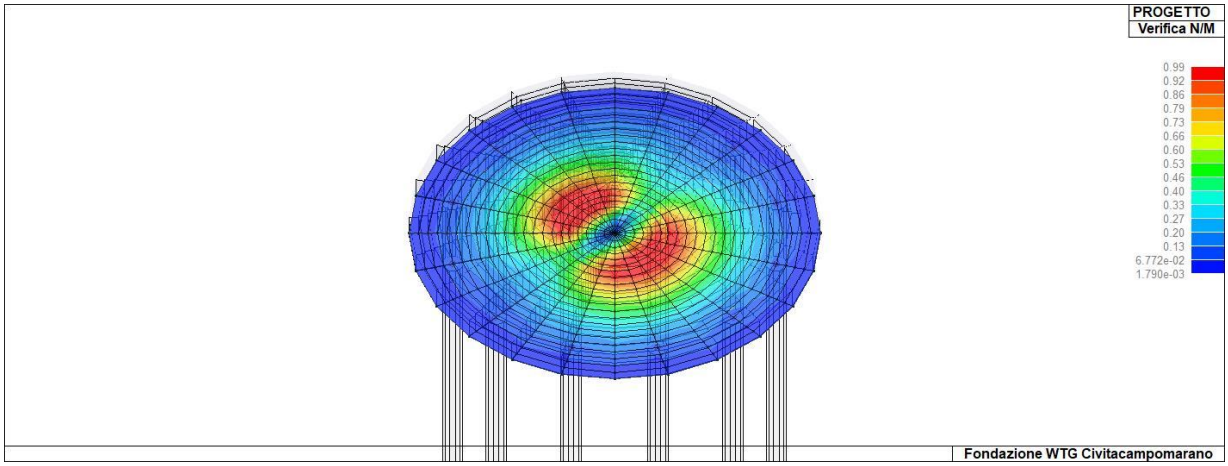

72_PRO_CA_D3_VER_NM

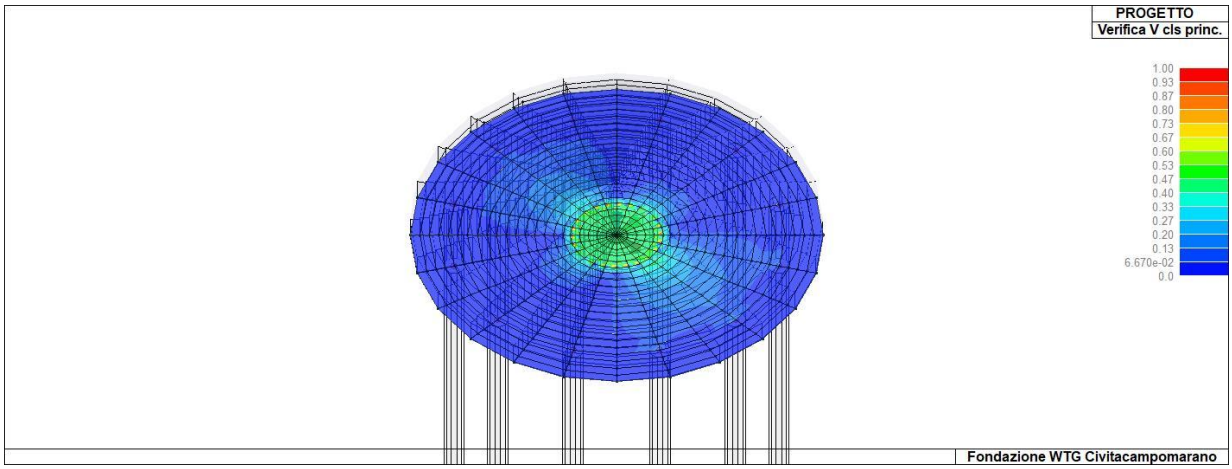

72_PRO_CA_D3_VER_VI

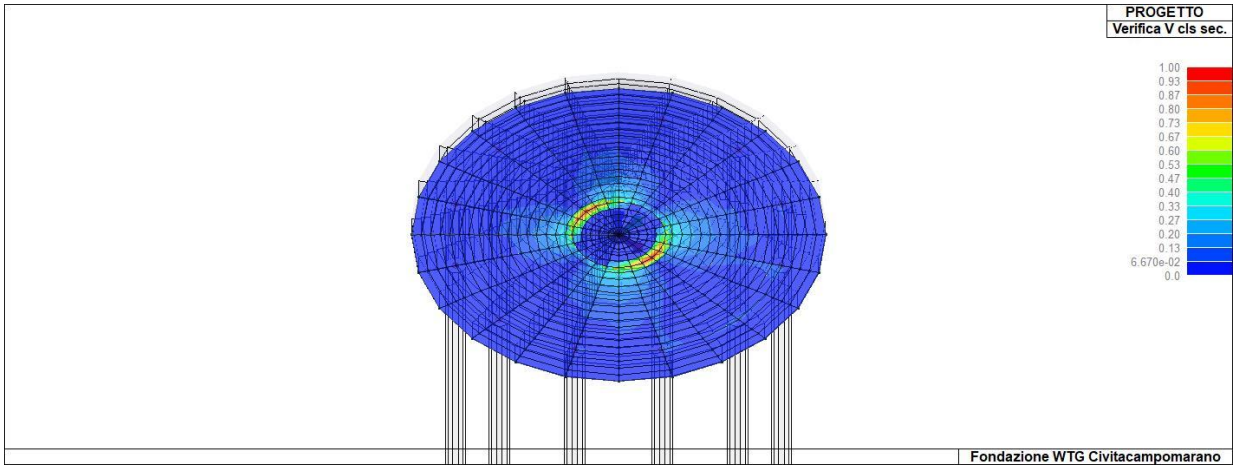

72_PRO_CA_D3_VER_VII

14. STATI LIMITE D' ESERCIZIO

14.1. LEGENDA TABELLA STATI LIMITE D' ESERCIZIO

In tabella vengono riportati i valori di interesse per il controllo degli stati limite d'esercizio.

In particolare vengono riportati, in relazione al tipo di elemento strutturale, i risultati relativi alle tre categorie di combinazione considerate:

- Combinazioni rare
- Combinazioni frequenti
- Combinazioni quasi permanenti.

I valori di interesse sono i seguenti:

rRfck	rapporto tra la massima compressione nel calcestruzzo e la tensione fck in combinazioni rare [*normalizzato a 1*]
rRfyk	rapporto tra la massima tensione nell'acciaio e la tensione fyk in combinazioni rare [*normalizzato a 1*]
rPfck	rapporto tra la massima compressione nel calcestruzzo e la tensione fck in combinazioni quasi permanenti [*normalizzato a 1*]
wR	apertura caratteristica delle fessure in combinazioni rare [*mm*]
wF	apertura caratteristica delle fessure in combinazioni frequenti [*mm*]
wP	apertura caratteristica delle fessure in combinazioni quasi permanenti [*mm*]
dR	massima deformazione in combinazioni rare
dF	massima deformazione in combinazioni frequenti
dP	massima deformazione in combinazioni quasi permanenti

Per ognuno dei nove valori soprariportati viene indicata (Rif.cmb) la combinazione in cui si è verificato.

In relazione al tipo di elemento strutturale i valori sono selezionati nel modo seguente:

pilastri	**rRfck**	**rRfyk**	**rPfck**	per sezioni significative
travi	**rRfck**	**rRfyk**	**rPfck**	per sezioni significative
	wR	**wF**	**wP**	per sezioni significative
	dR	**dF**	**dP**	massimi in campata
setti e gusci	**rRfck**	**rRfyk**	**rPfck**	massimi nei nodi dell'elemento
	wR	**wF**	**wP**	massimi nei nodi dell'elemento

Si precisa che i valori di massima deformazione per travi sono riferiti al piano verticale (piano locale 1-2 con momenti flettenti 3-3).

Guscio	rRfck	rRfyk	rPfck	Rif. cmb	wR	wF	wP	Rif. cmb
				mm	mm	mm		
10.0	0.0	0.0	0,0,0	0.0	0.0	0.0	0,0,0	
20.0	0.0	0.0	0,0,0	0.0	0.0	0.0	0,0,0	
30.0	0.0	0.0	0,0,0	0.0	0.0	0.0	0,0,0	
40.0	0.0	0.0	0,0,0	0.0	0.0	0.0	0,0,0	
50.0	0.0	0.0	0,0,0	0.0	0.0	0.0	0,0,0	
60.0	0.0	0.0	0,0,0	0.0	0.0	0.0	0,0,0	
70.0	0.0	0.0	0,0,0	0.0	0.0	0.0	0,0,0	
80.0	0.0	0.0	0,0,0	0.0	0.0	0.0	0,0,0	
90.0	0.0	0.0	0,0,0	0.0	0.0	0.0	0,0,0	
100.0	0.0	0.0	0,0,0	0.0	0.0	0.0	0,0,0	
110.0	0.0	0.0	0,0,0	0.0	0.0	0.0	0,0,0	
120.0	0.0	0.0	0,0,0	0.0	0.0	0.0	0,0,0	
130.0	0.0	0.0	0,0,0	0.0	0.0	0.0	0,0,0	
140.0	0.0	0.0	0,0,0	0.0	0.0	0.0	0,0,0	
150.0	0.0	0.0	0,0,0	0.0	0.0	0.0	0,0,0	
160.0	0.0	0.0	0,0,0	0.0	0.0	0.0	0,0,0	
170.0	0.0	0.0	0,0,0	0.0	0.0	0.0	0,0,0	
180.0	0.0	0.0	0,0,0	0.0	0.0	0.0	0,0,0	
190.0	0.0	0.0	0,0,0	0.0	0.0	0.0	0,0,0	
200.0	0.0	0.0	0,0,0	0.0	0.0	0.0	0,0,0	
210.0	0.0	0.0	0,0,0	0.0	0.0	0.0	0,0,0	
220.0	0.0	0.0	0,0,0	0.0	0.0	0.0	0,0,0	
230.0	0.0	0.0	0,0,0	0.0	0.0	0.0	0,0,0	
240.0	0.0	0.0	0,0,0	0.0	0.0	0.0	0,0,0	
250.0	0.0	0.0	0,0,0	0.0	0.0	0.0	0,0,0	
260.0	0.0	0.0	0,0,0	0.0	0.0	0.0	0,0,0	
270.0	0.0	0.0	0,0,0	0.0	0.0	0.0	0,0,0	
280.0	0.0	0.0	0,0,0	0.0	0.0	0.0	0,0,0	
290.0	0.0	0.0	0,0,0	0.0	0.0	0.0	0,0,0	
300.0	0.0	0.0	0,0,0	0.0	0.0	0.0	0,0,0	
310.0	0.0	0.0	0,0,0	0.0	0.0	0.0	0,0,0	
320.0	0.0	0.0	0,0,0	0.0	0.0	0.0	0,0,0	
330.0	0.0	0.0	0,0,0	0.0	0.0	0.0	0,0,0	
340.0	0.0	0.0	0,0,0	0.0	0.0	0.0	0,0,0	
350.0	0.0	0.0	0,0,0	0.0	0.0	0.0	0,0,0	
360.0	0.0	0.0	0,0,0	0.0	0.0	0.0	0,0,0	
370.0	0.0	0.0	0,0,0	0.0	0.0	0.0	0,0,0	
380.0	0.0	0.0	0,0,0	0.0	0.0	0.0	0,0,0	
390.0	0.0	0.0	0,0,0	0.0	0.0	0.0	0,0,0	
400.0	0.0	0.0	0,0,0	0.0	0.0	0.0	0,0,0	
410.0	0.0	0.0	0,0,0	0.0	0.0	0.0	0,0,0	
420.0	0.0	0.0	0,0,0	0.0	0.0	0.0	0,0,0	
430.0	0.0	0.0	0,0,0	0.0	0.0	0.0	0,0,0	

440.0	0.0	0.0	0,0,0	0.0	0.0	0.0	0,0,0
450.0	0.0	0.0	0,0,0	0.0	0.0	0.0	0,0,0
460.0	0.0	0.0	0,0,0	0.0	0.0	0.0	0,0,0
470.0	0.0	0.0	0,0,0	0.0	0.0	0.0	0,0,0
480.0	0.0	0.0	0,0,0	0.0	0.0	0.0	0,0,0
490.0	0.0	0.0	0,0,0	0.0	0.0	0.0	0,0,0
500.0	0.0	0.0	0,0,0	0.0	0.0	0.0	0,0,0
510.0	0.0	0.0	0,0,0	0.0	0.0	0.0	0,0,0
520.0	0.0	0.0	0,0,0	0.0	0.0	0.0	0,0,0
530.0	0.0	0.0	0,0,0	0.0	0.0	0.0	0,0,0
540.0	0.0	0.0	0,0,0	0.0	0.0	0.0	0,0,0
550.0	0.0	0.0	0,0,0	0.0	0.0	0.0	0,0,0
560.0	0.0	0.0	0,0,0	0.0	0.0	0.0	0,0,0
570.0	0.0	0.0	0,0,0	0.0	0.0	0.0	0,0,0
580.0	0.0	0.0	0,0,0	0.0	0.0	0.0	0,0,0
590.0	0.0	0.0	0,0,0	0.0	0.0	0.0	0,0,0
600.0	0.0	0.0	0,0,0	0.0	0.31	0.0	0,2,0
610.0	0.0	0.0	0,0,0	0.0	0.0	0.0	0,0,0
620.0	0.0	0.0	0,0,0	0.0	0.0	0.0	0,0,0
630.0	0.0	0.0	0,0,0	0.0	0.0	0.0	0,0,0
640.0	0.0	0.0	0,0,0	0.0	0.0	0.0	0,0,0
650.0	0.0	0.0	0,0,0	0.0	0.0	0.0	0,0,0
660.0	0.0	0.0	0,0,0	0.0	0.0	0.0	0,0,0
670.0	0.0	0.0	0,0,0	0.0	0.0	0.0	0,0,0
680.0	0.0	0.0	0,0,0	0.0	0.0	0.0	0,0,0
690.0	0.0	0.0	0,0,0	0.0	0.0	0.0	0,0,0
700.0	0.0	0.0	0,0,0	0.0	0.0	0.0	0,0,0
710.0	0.0	0.0	0,0,0	0.0	0.0	0.0	0,0,0
720.0	0.0	0.0	0,0,0	0.0	0.0	0.0	0,0,0
730.0	0.0	0.0	0,0,0	0.0	0.0	0.0	0,0,0
740.0	0.0	0.0	0,0,0	0.0	0.0	0.0	0,0,0
750.0	0.0	0.0	0,0,0	0.0	0.0	0.0	0,0,0
760.0	0.0	0.0	0,0,0	0.0	0.0	0.0	0,0,0
770.0	0.0	0.0	0,0,0	0.0	0.0	0.0	0,0,0
780.0	0.0	0.0	0,0,0	0.0	0.0	0.0	0,0,0
790.0	0.0	0.0	0,0,0	0.0	0.0	0.0	0,0,0
800.0	0.0	0.0	0,0,0	0.0	0.0	0.0	0,0,0
810.0	0.0	0.0	0,0,0	0.0	0.31	0.0	0,2,0
820.0	0.0	0.0	0,0,0	0.0	0.31	0.0	0,2,0
830.0	0.0	0.0	0,0,0	0.0	0.31	0.0	0,2,0
840.0	0.0	0.0	0,0,0	0.0	0.30	0.0	0,2,0
850.0	0.0	0.0	0,0,0	0.0	0.0	0.0	0,0,0
860.0	0.0	0.0	0,0,0	0.0	0.0	0.0	0,0,0
870.0	0.0	0.0	0,0,0	0.0	0.0	0.0	0,0,0
880.0	0.0	0.0	0,0,0	0.0	0.0	0.0	0,0,0
890.0	0.0	0.0	0,0,0	0.0	0.0	0.0	0,0,0

900.0	0.0	0.0	0,0,0	0.0	0.0	0.0	0,0,0	
910.0	0.0	0.0	0,0,0	0.0	0.0	0.0	0,0,0	
920.0	0.0	0.0	0,0,0	0.0	0.0	0.0	0,0,0	
930.0	0.0	0.0	0,0,0	0.0	0.0	0.0	0,0,0	
940.0	0.0	0.0	0,0,0	0.0	0.0	0.0	0,0,0	
950.0	0.0	0.0	0,0,0	0.0	0.0	0.0	0,0,0	
960.0	0.0	0.0	0,0,0	0.0	0.0	0.0	0,0,0	
970.0	0.0	0.0	0,0,0	0.0	0.0	0.0	0,0,0	
980.0	0.0	0.0	0,0,0	0.0	0.0	0.0	0,0,0	
990.0	0.0	0.0	0,0,0	0.0	0.0	0.0	0,0,0	
100	0.0	0.0	0.0	0,0,0	0.0	0.0	0.0	0,0,0
101	0.0	0.0	0.0	0,0,0	0.0	0.0	0.0	0,0,0
102	0.0	0.0	0.0	0,0,0	0.0	0.28	0.0	0,2,0
103	0.0	0.0	0.0	0,0,0	0.0	0.31	0.0	0,2,0
104	0.0	0.0	0.0	0,0,0	0.0	0.32	0.0	0,2,0
105	0.0	0.0	0.0	0,0,0	0.0	0.30	0.0	0,2,0
106	0.0	0.0	0.0	0,0,0	0.0	0.29	0.0	0,2,0
107	0.0	0.0	0.0	0,0,0	0.0	0.0	0.0	0,0,0
108	0.0	0.0	0.0	0,0,0	0.0	0.0	0.0	0,0,0
109	0.0	0.0	0.0	0,0,0	0.0	0.0	0.0	0,0,0
110	0.0	0.0	0.0	0,0,0	0.0	0.0	0.0	0,0,0
111	0.0	0.0	0.0	0,0,0	0.0	0.0	0.0	0,0,0
112	0.0	0.0	0.0	0,0,0	0.0	0.0	0.0	0,0,0
113	0.0	0.0	0.0	0,0,0	0.0	0.0	0.0	0,0,0
114	0.0	0.0	0.0	0,0,0	0.0	0.0	0.0	0,0,0
115	0.0	0.0	0.0	0,0,0	0.0	0.0	0.0	0,0,0
116	0.0	0.0	0.0	0,0,0	0.0	0.0	0.0	0,0,0
117	0.0	0.0	0.0	0,0,0	0.0	0.0	0.0	0,0,0
118	0.0	0.0	0.0	0,0,0	0.0	0.0	0.0	0,0,0
119	0.0	0.0	0.0	0,0,0	0.0	0.0	0.0	0,0,0
120	0.0	0.0	0.0	0,0,0	0.0	0.0	0.0	0,0,0
121	0.0	0.0	0.0	0,0,0	0.0	0.0	0.0	0,0,0
122	0.0	0.0	0.0	0,0,0	0.0	0.0	0.0	0,0,0
123	0.0	0.0	0.0	0,0,0	0.0	0.0	0.0	0,0,0
124	0.0	0.0	0.0	0,0,0	0.0	0.29	0.0	0,2,0
125	0.0	0.0	0.0	0,0,0	0.0	0.32	0.0	0,2,0
126	0.0	0.0	0.0	0,0,0	0.0	0.32	0.0	0,2,0
127	0.0	0.0	0.0	0,0,0	0.0	0.31	0.0	0,2,0
128	0.0	0.0	0.0	0,0,0	0.0	0.30	0.0	0,2,0
129	0.0	0.0	0.0	0,0,0	0.0	0.31	0.0	0,2,0
130	0.0	0.0	0.0	0,0,0	0.0	0.0	0.0	0,0,0
131	0.0	0.0	0.0	0,0,0	0.0	0.0	0.0	0,0,0
132	0.0	0.0	0.0	0,0,0	0.0	0.0	0.0	0,0,0
133	0.0	0.0	0.0	0,0,0	0.0	0.0	0.0	0,0,0
134	0.0	0.0	0.0	0,0,0	0.0	0.0	0.0	0,0,0
135	0.0	0.0	0.0	0,0,0	0.0	0.0	0.0	0,0,0

136	0.0	0.0	0.0	0,0,0	0.0	0.0	0.0	0,0,0
137	0.0	0.0	0.0	0,0,0	0.0	0.0	0.0	0,0,0
138	0.0	0.0	0.0	0,0,0	0.0	0.0	0.0	0,0,0
139	0.0	0.0	0.0	0,0,0	0.0	0.0	0.0	0,0,0
140	0.0	0.0	0.0	0,0,0	0.0	0.0	0.0	0,0,0
141	0.0	0.0	0.0	0,0,0	0.0	0.0	0.0	0,0,0
142	0.0	0.0	0.0	0,0,0	0.0	0.0	0.0	0,0,0
143	0.0	0.0	0.0	0,0,0	0.0	0.0	0.0	0,0,0
144	0.0	0.0	0.0	0,0,0	0.0	0.0	0.0	0,0,0
145	0.0	0.0	0.0	0,0,0	0.0	0.0	0.0	0,0,0
146	0.0	0.0	0.0	0,0,0	0.0	0.29	0.0	0,2,0
147	0.0	0.0	0.0	0,0,0	0.0	0.31	0.0	0,2,0
148	0.0	0.0	0.0	0,0,0	0.0	0.32	0.0	0,2,0
149	0.0	0.0	0.0	0,0,0	0.0	0.30	0.0	0,2,0
150	0.0	0.0	0.0	0,0,0	0.0	0.31	0.0	0,2,0
151	0.0	0.0	0.0	0,0,0	0.0	0.31	0.0	0,2,0
152	0.0	0.0	0.0	0,0,0	0.0	0.0	0.0	0,0,0
153	0.0	0.0	0.0	0,0,0	0.0	0.0	0.0	0,0,0
154	0.0	0.0	0.0	0,0,0	0.0	0.0	0.0	0,0,0
155	0.0	0.0	0.0	0,0,0	0.0	0.0	0.0	0,0,0
156	0.0	0.0	0.0	0,0,0	0.0	0.0	0.0	0,0,0
157	0.0	0.0	0.0	0,0,0	0.0	0.0	0.0	0,0,0
158	0.0	0.0	0.0	0,0,0	0.0	0.0	0.0	0,0,0
159	0.0	0.0	0.0	0,0,0	0.0	0.0	0.0	0,0,0
160	0.0	0.0	0.0	0,0,0	0.0	0.0	0.0	0,0,0
161	0.0	0.0	0.0	0,0,0	0.0	0.0	0.0	0,0,0
162	0.0	0.0	0.0	0,0,0	0.0	0.0	0.0	0,0,0
163	0.0	0.0	0.0	0,0,0	0.0	0.0	0.0	0,0,0
164	0.0	0.0	0.0	0,0,0	0.0	0.0	0.0	0,0,0
165	0.0	0.0	0.0	0,0,0	0.0	0.0	0.0	0,0,0
166	0.0	0.0	0.0	0,0,0	0.0	0.0	0.0	0,0,0
167	0.0	0.0	0.0	0,0,0	0.0	0.0	0.0	0,0,0
168	0.0	0.0	0.0	0,0,0	0.0	0.29	0.0	0,2,0
169	0.0	0.0	0.0	0,0,0	0.0	0.31	0.0	0,2,0
170	0.0	0.0	0.0	0,0,0	0.0	0.32	0.0	0,2,0
171	0.0	0.0	0.0	0,0,0	0.0	0.30	0.0	0,2,0
172	0.0	0.0	0.0	0,0,0	0.0	0.31	0.0	0,2,0
173	0.0	0.0	0.0	0,0,0	0.0	0.31	0.0	0,2,0
174	0.0	0.0	0.0	0,0,0	0.0	0.0	0.0	0,0,0
175	0.0	0.0	0.0	0,0,0	0.0	0.0	0.0	0,0,0
176	0.0	0.0	0.0	0,0,0	0.0	0.0	0.0	0,0,0
177	0.0	0.0	0.0	0,0,0	0.0	0.0	0.0	0,0,0
178	0.0	0.0	0.0	0,0,0	0.0	0.0	0.0	0,0,0
179	0.0	0.0	0.0	0,0,0	0.0	0.0	0.0	0,0,0
180	0.0	0.0	0.0	0,0,0	0.0	0.0	0.0	0,0,0
181	0.0	0.0	0.0	0,0,0	0.0	0.0	0.0	0,0,0

182	0.0	0.0	0.0	0,0,0	0.0	0.0	0.0	0,0,0
183	0.0	0.0	0.0	0,0,0	0.0	0.0	0.0	0,0,0
184	0.0	0.0	0.0	0,0,0	0.0	0.0	0.0	0,0,0
185	0.0	0.0	0.0	0,0,0	0.0	0.0	0.0	0,0,0
186	0.0	0.0	0.0	0,0,0	0.0	0.0	0.0	0,0,0
187	0.0	0.0	0.0	0,0,0	0.0	0.0	0.0	0,0,0
188	0.0	0.0	0.0	0,0,0	0.0	0.0	0.0	0,0,0
189	0.0	0.0	0.0	0,0,0	0.0	0.0	0.0	0,0,0
190	0.0	0.0	0.0	0,0,0	0.0	0.29	0.0	0,2,0
191	0.0	0.0	0.0	0,0,0	0.0	0.32	0.0	0,2,0
192	0.0	0.0	0.0	0,0,0	0.0	0.32	0.0	0,2,0
193	0.0	0.0	0.0	0,0,0	0.0	0.31	0.0	0,2,0
194	0.0	0.0	0.0	0,0,0	0.0	0.30	0.0	0,2,0
195	0.0	0.0	0.0	0,0,0	0.0	0.31	0.0	0,2,0
196	0.0	0.0	0.0	0,0,0	0.0	0.0	0.0	0,0,0
197	0.0	0.0	0.0	0,0,0	0.0	0.0	0.0	0,0,0
198	0.0	0.0	0.0	0,0,0	0.0	0.0	0.0	0,0,0
199	0.0	0.0	0.0	0,0,0	0.0	0.0	0.0	0,0,0
200	0.0	0.0	0.0	0,0,0	0.0	0.0	0.0	0,0,0
201	0.0	0.0	0.0	0,0,0	0.0	0.0	0.0	0,0,0
202	0.0	0.0	0.0	0,0,0	0.0	0.0	0.0	0,0,0
203	0.0	0.0	0.0	0,0,0	0.0	0.0	0.0	0,0,0
204	0.0	0.0	0.0	0,0,0	0.0	0.0	0.0	0,0,0
205	0.0	0.0	0.0	0,0,0	0.0	0.0	0.0	0,0,0
206	0.0	0.0	0.0	0,0,0	0.0	0.0	0.0	0,0,0
207	0.0	0.0	0.0	0,0,0	0.0	0.0	0.0	0,0,0
208	0.0	0.0	0.0	0,0,0	0.0	0.0	0.0	0,0,0
209	0.0	0.0	0.0	0,0,0	0.0	0.0	0.0	0,0,0
210	0.0	0.0	0.0	0,0,0	0.0	0.0	0.0	0,0,0
211	0.0	0.0	0.0	0,0,0	0.0	0.0	0.0	0,0,0
212	0.0	0.0	0.0	0,0,0	0.0	0.28	0.0	0,2,0
213	0.0	0.0	0.0	0,0,0	0.0	0.32	0.0	0,2,0
214	0.0	0.0	0.0	0,0,0	0.0	0.32	0.0	0,2,0
215	0.0	0.0	0.0	0,0,0	0.0	0.30	0.0	0,2,0
216	0.0	0.0	0.0	0,0,0	0.0	0.29	0.0	0,2,0
217	0.0	0.0	0.0	0,0,0	0.0	0.0	0.0	0,0,0
218	0.0	0.0	0.0	0,0,0	0.0	0.0	0.0	0,0,0
219	0.0	0.0	0.0	0,0,0	0.0	0.0	0.0	0,0,0
220	0.0	0.0	0.0	0,0,0	0.0	0.0	0.0	0,0,0
221	0.0	0.0	0.0	0,0,0	0.0	0.0	0.0	0,0,0
222	0.0	0.0	0.0	0,0,0	0.0	0.0	0.0	0,0,0
223	0.0	0.0	0.0	0,0,0	0.0	0.0	0.0	0,0,0
224	0.0	0.0	0.0	0,0,0	0.0	0.0	0.0	0,0,0
225	0.0	0.0	0.0	0,0,0	0.0	0.0	0.0	0,0,0
226	0.0	0.0	0.0	0,0,0	0.0	0.0	0.0	0,0,0
227	0.0	0.0	0.0	0,0,0	0.0	0.0	0.0	0,0,0

228	0.0	0.0	0.0	0,0,0	0.0	0.0	0.0	0,0,0
229	0.0	0.0	0.0	0,0,0	0.0	0.0	0.0	0,0,0
230	0.0	0.0	0.0	0,0,0	0.0	0.0	0.0	0,0,0
231	0.0	0.0	0.0	0,0,0	0.0	0.0	0.0	0,0,0
232	0.0	0.0	0.0	0,0,0	0.0	0.0	0.0	0,0,0
233	0.0	0.0	0.0	0,0,0	0.0	0.0	0.0	0,0,0
234	0.0	0.0	0.0	0,0,0	0.0	0.0	0.0	0,0,0
235	0.0	0.0	0.0	0,0,0	0.0	0.31	0.0	0,2,0
236	0.0	0.0	0.0	0,0,0	0.0	0.31	0.0	0,2,0
237	0.0	0.0	0.0	0,0,0	0.0	0.31	0.0	0,2,0
238	0.0	0.0	0.0	0,0,0	0.0	0.30	0.0	0,2,0
239	0.0	0.0	0.0	0,0,0	0.0	0.0	0.0	0,0,0
240	0.0	0.0	0.0	0,0,0	0.0	0.0	0.0	0,0,0
241	0.0	0.0	0.0	0,0,0	0.0	0.0	0.0	0,0,0
242	0.0	0.0	0.0	0,0,0	0.0	0.0	0.0	0,0,0
243	0.0	0.0	0.0	0,0,0	0.0	0.0	0.0	0,0,0
244	0.0	0.0	0.0	0,0,0	0.0	0.0	0.0	0,0,0
245	0.0	0.0	0.0	0,0,0	0.0	0.0	0.0	0,0,0
246	0.0	0.0	0.0	0,0,0	0.0	0.0	0.0	0,0,0
247	0.0	0.0	0.0	0,0,0	0.0	0.0	0.0	0,0,0
248	0.0	0.0	0.0	0,0,0	0.0	0.0	0.0	0,0,0
249	0.0	0.0	0.0	0,0,0	0.0	0.0	0.0	0,0,0
250	0.0	0.0	0.0	0,0,0	0.0	0.0	0.0	0,0,0
251	0.0	0.0	0.0	0,0,0	0.0	0.0	0.0	0,0,0
252	0.0	0.0	0.0	0,0,0	0.0	0.0	0.0	0,0,0
253	0.0	0.0	0.0	0,0,0	0.0	0.0	0.0	0,0,0
254	0.0	0.0	0.0	0,0,0	0.0	0.0	0.0	0,0,0
255	0.0	0.0	0.0	0,0,0	0.0	0.0	0.0	0,0,0
256	0.0	0.0	0.0	0,0,0	0.0	0.0	0.0	0,0,0
257	0.0	0.0	0.0	0,0,0	0.0	0.0	0.0	0,0,0
258	0.0	0.0	0.0	0,0,0	0.0	0.31	0.0	0,2,0
259	0.0	0.0	0.0	0,0,0	0.0	0.0	0.0	0,0,0
260	0.0	0.0	0.0	0,0,0	0.0	0.0	0.0	0,0,0
261	0.0	0.0	0.0	0,0,0	0.0	0.0	0.0	0,0,0
262	0.0	0.0	0.0	0,0,0	0.0	0.0	0.0	0,0,0
263	0.0	0.0	0.0	0,0,0	0.0	0.0	0.0	0,0,0
264	0.0	0.0	0.0	0,0,0	0.0	0.0	0.0	0,0,0
265	0.0	0.0	0.0	0,0,0	0.0	0.0	0.0	0,0,0
266	0.0	0.0	0.0	0,0,0	0.0	0.0	0.0	0,0,0
267	0.0	0.0	0.0	0,0,0	0.0	0.0	0.0	0,0,0
268	0.0	0.0	0.0	0,0,0	0.0	0.0	0.0	0,0,0
269	0.0	0.0	0.0	0,0,0	0.0	0.0	0.0	0,0,0
270	0.0	0.0	0.0	0,0,0	0.0	0.0	0.0	0,0,0
271	0.0	0.0	0.0	0,0,0	0.0	0.0	0.0	0,0,0
272	0.0	0.0	0.0	0,0,0	0.0	0.0	0.0	0,0,0
273	0.0	0.0	0.0	0,0,0	0.0	0.0	0.0	0,0,0

274	0.0	0.0	0.0	0,0,0	0.0	0.0	0.0	0,0,0
275	0.0	0.0	0.0	0,0,0	0.0	0.0	0.0	0,0,0
276	0.0	0.0	0.0	0,0,0	0.0	0.0	0.0	0,0,0
277	0.0	0.0	0.0	0,0,0	0.0	0.0	0.0	0,0,0
278	0.0	0.0	0.0	0,0,0	0.0	0.0	0.0	0,0,0
279	0.0	0.0	0.0	0,0,0	0.0	0.0	0.0	0,0,0
280	0.0	0.0	0.0	0,0,0	0.0	0.0	0.0	0,0,0
281	0.0	0.0	0.0	0,0,0	0.0	0.0	0.0	0,0,0
282	0.0	0.0	0.0	0,0,0	0.0	0.0	0.0	0,0,0
283	0.0	0.0	0.0	0,0,0	0.0	0.0	0.0	0,0,0
284	0.0	0.0	0.0	0,0,0	0.0	0.0	0.0	0,0,0
285	0.0	0.0	0.0	0,0,0	0.0	0.0	0.0	0,0,0
286	0.0	0.0	0.0	0,0,0	0.0	0.0	0.0	0,0,0
287	0.0	0.0	0.0	0,0,0	0.0	0.0	0.0	0,0,0
288	0.0	0.0	0.0	0,0,0	0.0	0.0	0.0	0,0,0
289	0.0	0.0	0.0	0,0,0	0.0	0.0	0.0	0,0,0
290	0.0	0.0	0.0	0,0,0	0.0	0.0	0.0	0,0,0
291	0.0	0.0	0.0	0,0,0	0.0	0.0	0.0	0,0,0
292	0.0	0.0	0.0	0,0,0	0.0	0.0	0.0	0,0,0
293	0.0	0.0	0.0	0,0,0	0.0	0.0	0.0	0,0,0
294	0.0	0.0	0.0	0,0,0	0.0	0.0	0.0	0,0,0
295	0.0	0.0	0.0	0,0,0	0.0	0.0	0.0	0,0,0
296	0.0	0.0	0.0	0,0,0	0.0	0.0	0.0	0,0,0
297	0.0	0.0	0.0	0,0,0	0.0	0.0	0.0	0,0,0
298	0.0	0.0	0.0	0,0,0	0.0	0.0	0.0	0,0,0
299	0.0	0.0	0.0	0,0,0	0.0	0.0	0.0	0,0,0
300	0.0	0.0	0.0	0,0,0	0.0	0.0	0.0	0,0,0
301	0.0	0.0	0.0	0,0,0	0.0	0.0	0.0	0,0,0
302	0.0	0.0	0.0	0,0,0	0.0	0.0	0.0	0,0,0
303	0.0	0.0	0.0	0,0,0	0.0	0.0	0.0	0,0,0
304	0.0	0.0	0.0	0,0,0	0.0	0.0	0.0	0,0,0
305	0.0	0.0	0.0	0,0,0	0.0	0.0	0.0	0,0,0
306	0.0	0.0	0.0	0,0,0	0.0	0.0	0.0	0,0,0
307	0.0	0.0	0.0	0,0,0	0.0	0.0	0.0	0,0,0
308	0.0	0.0	0.0	0,0,0	0.0	0.0	0.0	0,0,0
309	0.0	0.0	0.0	0,0,0	0.0	0.0	0.0	0,0,0
310	0.0	0.0	0.0	0,0,0	0.0	0.0	0.0	0,0,0
311	0.0	0.0	0.0	0,0,0	0.0	0.0	0.0	0,0,0
312	0.0	0.0	0.0	0,0,0	0.0	0.0	0.0	0,0,0
313	0.0	0.0	0.0	0,0,0	0.0	0.0	0.0	0,0,0
314	0.0	0.0	0.0	0,0,0	0.0	0.0	0.0	0,0,0
315	0.0	0.0	0.0	0,0,0	0.0	0.0	0.0	0,0,0
316	0.0	0.0	0.0	0,0,0	0.0	0.0	0.0	0,0,0
317	0.0	0.0	0.0	0,0,0	0.0	0.0	0.0	0,0,0
318	0.0	0.0	0.0	0,0,0	0.0	0.0	0.0	0,0,0
319	0.0	0.0	0.0	0,0,0	0.0	0.0	0.0	0,0,0

320	0.0	0.0	0.0	0,0,0	0.0	0.0	0.0	0,0,0
321	0.0	0.0	0.0	0,0,0	0.0	0.0	0.0	0,0,0
322	0.0	0.0	0.0	0,0,0	0.0	0.0	0.0	0,0,0
323	0.0	0.0	0.0	0,0,0	0.0	0.0	0.0	0,0,0
324	0.0	0.0	0.0	0,0,0	0.0	0.0	0.0	0,0,0
325	0.0	0.0	0.0	0,0,0	0.0	0.0	0.0	0,0,0
326	0.0	0.0	0.0	0,0,0	0.0	0.0	0.0	0,0,0
327	0.0	0.0	0.0	0,0,0	0.0	0.0	0.0	0,0,0
328	0.0	0.0	0.0	0,0,0	0.0	0.0	0.0	0,0,0
329	0.0	0.0	0.0	0,0,0	0.0	0.0	0.0	0,0,0
330	0.0	0.0	0.0	0,0,0	0.0	0.0	0.0	0,0,0
331	0.0	0.0	0.0	0,0,0	0.0	0.0	0.0	0,0,0
332	0.0	0.0	0.0	0,0,0	0.0	0.0	0.0	0,0,0
333	0.0	0.0	0.0	0,0,0	0.0	0.0	0.0	0,0,0
334	0.0	0.0	0.0	0,0,0	0.0	0.0	0.0	0,0,0
335	0.0	0.0	0.0	0,0,0	0.0	0.0	0.0	0,0,0
336	0.0	0.0	0.0	0,0,0	0.0	0.0	0.0	0,0,0
337	0.0	0.0	0.0	0,0,0	0.0	0.0	0.0	0,0,0
338	0.0	0.0	0.0	0,0,0	0.0	0.0	0.0	0,0,0
339	0.0	0.0	0.0	0,0,0	0.0	0.0	0.0	0,0,0
340	0.0	0.0	0.0	0,0,0	0.0	0.0	0.0	0,0,0
341	0.0	0.0	0.0	0,0,0	0.0	0.0	0.0	0,0,0
342	0.0	0.0	0.0	0,0,0	0.0	0.0	0.0	0,0,0
343	0.0	0.0	0.0	0,0,0	0.0	0.0	0.0	0,0,0
344	0.0	0.0	0.0	0,0,0	0.0	0.0	0.0	0,0,0
345	0.0	0.0	0.0	0,0,0	0.0	0.0	0.0	0,0,0
346	0.0	0.0	0.0	0,0,0	0.0	0.32	0.0	0,2,0
347	0.0	0.0	0.0	0,0,0	0.0	0.0	0.0	0,0,0
348	0.0	0.0	0.0	0,0,0	0.0	0.0	0.0	0,0,0
349	0.0	0.0	0.0	0,0,0	0.0	0.0	0.0	0,0,0
350	0.0	0.0	0.0	0,0,0	0.0	0.0	0.0	0,0,0
351	0.0	0.0	0.0	0,0,0	0.0	0.0	0.0	0,0,0
352	0.0	0.0	0.0	0,0,0	0.0	0.0	0.0	0,0,0
353	0.0	0.0	0.0	0,0,0	0.0	0.0	0.0	0,0,0
354	0.0	0.0	0.0	0,0,0	0.0	0.0	0.0	0,0,0
355	0.0	0.0	0.0	0,0,0	0.0	0.0	0.0	0,0,0
356	0.0	0.0	0.0	0,0,0	0.0	0.0	0.0	0,0,0
357	0.0	0.0	0.0	0,0,0	0.0	0.0	0.0	0,0,0
358	0.0	0.0	0.0	0,0,0	0.0	0.0	0.0	0,0,0
359	0.0	0.0	0.0	0,0,0	0.0	0.0	0.0	0,0,0
360	0.0	0.0	0.0	0,0,0	0.0	0.0	0.0	0,0,0
361	0.0	0.0	0.0	0,0,0	0.0	0.0	0.0	0,0,0
362	0.0	0.0	0.0	0,0,0	0.0	0.0	0.0	0,0,0
363	0.0	0.0	0.0	0,0,0	0.0	0.0	0.0	0,0,0
364	0.0	0.0	0.0	0,0,0	0.0	0.0	0.0	0,0,0
365	0.0	0.0	0.0	0,0,0	0.0	0.0	0.0	0,0,0

366	0.0	0.0	0.0	0,0,0	0.0	0.0	0.0	0,0,0
367	0.0	0.0	0.0	0,0,0	0.0	0.31	0.0	0,2,0
368	0.0	0.0	0.0	0,0,0	0.0	0.31	0.0	0,2,0
369	0.0	0.0	0.0	0,0,0	0.0	0.30	0.0	0,2,0
370	0.0	0.0	0.0	0,0,0	0.0	0.30	0.0	0,2,0
371	0.0	0.0	0.0	0,0,0	0.0	0.0	0.0	0,0,0
372	0.0	0.0	0.0	0,0,0	0.0	0.0	0.0	0,0,0
373	0.0	0.0	0.0	0,0,0	0.0	0.0	0.0	0,0,0
374	0.0	0.0	0.0	0,0,0	0.0	0.0	0.0	0,0,0
375	0.0	0.0	0.0	0,0,0	0.0	0.0	0.0	0,0,0
376	0.0	0.0	0.0	0,0,0	0.0	0.0	0.0	0,0,0
377	0.0	0.0	0.0	0,0,0	0.0	0.0	0.0	0,0,0
378	0.0	0.0	0.0	0,0,0	0.0	0.0	0.0	0,0,0
379	0.0	0.0	0.0	0,0,0	0.0	0.0	0.0	0,0,0
380	0.0	0.0	0.0	0,0,0	0.0	0.0	0.0	0,0,0
381	0.0	0.0	0.0	0,0,0	0.0	0.0	0.0	0,0,0
382	0.0	0.0	0.0	0,0,0	0.0	0.0	0.0	0,0,0
383	0.0	0.0	0.0	0,0,0	0.0	0.0	0.0	0,0,0
384	0.0	0.0	0.0	0,0,0	0.0	0.0	0.0	0,0,0
385	0.0	0.0	0.0	0,0,0	0.0	0.0	0.0	0,0,0
386	0.0	0.0	0.0	0,0,0	0.0	0.0	0.0	0,0,0
387	0.0	0.0	0.0	0,0,0	0.0	0.0	0.0	0,0,0
388	0.0	0.0	0.0	0,0,0	0.0	0.30	0.0	0,2,0
389	0.0	0.0	0.0	0,0,0	0.0	0.31	0.0	0,2,0
390	0.0	0.0	0.0	0,0,0	0.0	0.30	0.0	0,2,0
391	0.0	0.0	0.0	0,0,0	0.0	0.29	0.0	0,2,0
392	0.0	0.0	0.0	0,0,0	0.0	0.30	0.0	0,2,0
393	0.0	0.0	0.0	0,0,0	0.0	0.0	0.0	0,0,0
394	0.0	0.0	0.0	0,0,0	0.0	0.0	0.0	0,0,0
395	0.0	0.0	0.0	0,0,0	0.0	0.0	0.0	0,0,0
396	0.0	0.0	0.0	0,0,0	0.0	0.0	0.0	0,0,0
397	0.0	0.0	0.0	0,0,0	0.0	0.0	0.0	0,0,0
398	0.0	0.0	0.0	0,0,0	0.0	0.0	0.0	0,0,0
399	0.0	0.0	0.0	0,0,0	0.0	0.0	0.0	0,0,0
400	0.0	0.0	0.0	0,0,0	0.0	0.0	0.0	0,0,0
401	0.0	0.0	0.0	0,0,0	0.0	0.0	0.0	0,0,0
402	0.0	0.0	0.0	0,0,0	0.0	0.0	0.0	0,0,0
403	0.0	0.0	0.0	0,0,0	0.0	0.0	0.0	0,0,0
404	0.0	0.0	0.0	0,0,0	0.0	0.0	0.0	0,0,0
405	0.0	0.0	0.0	0,0,0	0.0	0.0	0.0	0,0,0
406	0.0	0.0	0.0	0,0,0	0.0	0.0	0.0	0,0,0
407	0.0	0.0	0.0	0,0,0	0.0	0.0	0.0	0,0,0
408	0.0	0.0	0.0	0,0,0	0.0	0.0	0.0	0,0,0
409	0.0	0.0	0.0	0,0,0	0.0	0.0	0.0	0,0,0
410	0.0	0.0	0.0	0,0,0	0.0	0.31	0.0	0,2,0
411	0.0	0.0	0.0	0,0,0	0.0	0.30	0.0	0,2,0

412	0.0	0.0	0.0	0,0,0	0.0	0.31	0.0	0,2,0
413	0.0	0.0	0.0	0,0,0	0.0	0.29	0.0	0,2,0
414	0.0	0.0	0.0	0,0,0	0.0	0.29	0.0	0,2,0
415	0.0	0.0	0.0	0,0,0	0.0	0.0	0.0	0,0,0
416	0.0	0.0	0.0	0,0,0	0.0	0.0	0.0	0,0,0
417	0.0	0.0	0.0	0,0,0	0.0	0.0	0.0	0,0,0
418	0.0	0.0	0.0	0,0,0	0.0	0.0	0.0	0,0,0
419	0.0	0.0	0.0	0,0,0	0.0	0.0	0.0	0,0,0
420	0.0	0.0	0.0	0,0,0	0.0	0.0	0.0	0,0,0
421	0.0	0.0	0.0	0,0,0	0.0	0.0	0.0	0,0,0
422	0.0	0.0	0.0	0,0,0	0.0	0.0	0.0	0,0,0
423	0.0	0.0	0.0	0,0,0	0.0	0.0	0.0	0,0,0
424	0.0	0.0	0.0	0,0,0	0.0	0.0	0.0	0,0,0
425	0.0	0.0	0.0	0,0,0	0.0	0.0	0.0	0,0,0
426	0.0	0.0	0.0	0,0,0	0.0	0.0	0.0	0,0,0
427	0.0	0.0	0.0	0,0,0	0.0	0.0	0.0	0,0,0
428	0.0	0.0	0.0	0,0,0	0.0	0.0	0.0	0,0,0
429	0.0	0.0	0.0	0,0,0	0.0	0.0	0.0	0,0,0
430	0.0	0.0	0.0	0,0,0	0.0	0.0	0.0	0,0,0
431	0.0	0.0	0.0	0,0,0	0.0	0.0	0.0	0,0,0
432	0.0	0.0	0.0	0,0,0	0.0	0.31	0.0	0,2,0
433	0.0	0.0	0.0	0,0,0	0.0	0.30	0.0	0,2,0
434	0.0	0.0	0.0	0,0,0	0.0	0.31	0.0	0,2,0
435	0.0	0.0	0.0	0,0,0	0.0	0.29	0.0	0,2,0
436	0.0	0.0	0.0	0,0,0	0.0	0.29	0.0	0,2,0
437	0.0	0.0	0.0	0,0,0	0.0	0.0	0.0	0,0,0
438	0.0	0.0	0.0	0,0,0	0.0	0.0	0.0	0,0,0
439	0.0	0.0	0.0	0,0,0	0.0	0.0	0.0	0,0,0
440	0.0	0.0	0.0	0,0,0	0.0	0.0	0.0	0,0,0
441	0.0	0.0	0.0	0,0,0	0.0	0.0	0.0	0,0,0
442	0.0	0.0	0.0	0,0,0	0.0	0.0	0.0	0,0,0
443	0.0	0.0	0.0	0,0,0	0.0	0.0	0.0	0,0,0
444	0.0	0.0	0.0	0,0,0	0.0	0.0	0.0	0,0,0
445	0.0	0.0	0.0	0,0,0	0.0	0.0	0.0	0,0,0
446	0.0	0.0	0.0	0,0,0	0.0	0.0	0.0	0,0,0
447	0.0	0.0	0.0	0,0,0	0.0	0.0	0.0	0,0,0
448	0.0	0.0	0.0	0,0,0	0.0	0.0	0.0	0,0,0
449	0.0	0.0	0.0	0,0,0	0.0	0.0	0.0	0,0,0
450	0.0	0.0	0.0	0,0,0	0.0	0.0	0.0	0,0,0
451	0.0	0.0	0.0	0,0,0	0.0	0.0	0.0	0,0,0
452	0.0	0.0	0.0	0,0,0	0.0	0.0	0.0	0,0,0
453	0.0	0.0	0.0	0,0,0	0.0	0.0	0.0	0,0,0
454	0.0	0.0	0.0	0,0,0	0.0	0.30	0.0	0,2,0
455	0.0	0.0	0.0	0,0,0	0.0	0.31	0.0	0,2,0
456	0.0	0.0	0.0	0,0,0	0.0	0.30	0.0	0,2,0
457	0.0	0.0	0.0	0,0,0	0.0	0.29	0.0	0,2,0

458	0.0	0.0	0.0	0,0,0	0.0	0.30	0.0	0,2,0
459	0.0	0.0	0.0	0,0,0	0.0	0.0	0.0	0,0,0
460	0.0	0.0	0.0	0,0,0	0.0	0.0	0.0	0,0,0
461	0.0	0.0	0.0	0,0,0	0.0	0.0	0.0	0,0,0
462	0.0	0.0	0.0	0,0,0	0.0	0.0	0.0	0,0,0
463	0.0	0.0	0.0	0,0,0	0.0	0.0	0.0	0,0,0
464	0.0	0.0	0.0	0,0,0	0.0	0.0	0.0	0,0,0
465	0.0	0.0	0.0	0,0,0	0.0	0.0	0.0	0,0,0
466	0.0	0.0	0.0	0,0,0	0.0	0.0	0.0	0,0,0
467	0.0	0.0	0.0	0,0,0	0.0	0.0	0.0	0,0,0
468	0.0	0.0	0.0	0,0,0	0.0	0.0	0.0	0,0,0
469	0.0	0.0	0.0	0,0,0	0.0	0.0	0.0	0,0,0
470	0.0	0.0	0.0	0,0,0	0.0	0.0	0.0	0,0,0
471	0.0	0.0	0.0	0,0,0	0.0	0.0	0.0	0,0,0
472	0.0	0.0	0.0	0,0,0	0.0	0.0	0.0	0,0,0
473	0.0	0.0	0.0	0,0,0	0.0	0.0	0.0	0,0,0
474	0.0	0.0	0.0	0,0,0	0.0	0.0	0.0	0,0,0
475	0.0	0.0	0.0	0,0,0	0.0	0.0	0.0	0,0,0
476	0.0	0.0	0.0	0,0,0	0.0	0.0	0.0	0,0,0
477	0.0	0.0	0.0	0,0,0	0.0	0.31	0.0	0,2,0
478	0.0	0.0	0.0	0,0,0	0.0	0.31	0.0	0,2,0
479	0.0	0.0	0.0	0,0,0	0.0	0.30	0.0	0,2,0
480	0.0	0.0	0.0	0,0,0	0.0	0.30	0.0	0,2,0
481	0.0	0.0	0.0	0,0,0	0.0	0.0	0.0	0,0,0
482	0.0	0.0	0.0	0,0,0	0.0	0.0	0.0	0,0,0
483	0.0	0.0	0.0	0,0,0	0.0	0.0	0.0	0,0,0
484	0.0	0.0	0.0	0,0,0	0.0	0.0	0.0	0,0,0
485	0.0	0.0	0.0	0,0,0	0.0	0.0	0.0	0,0,0
486	0.0	0.0	0.0	0,0,0	0.0	0.0	0.0	0,0,0
487	0.0	0.0	0.0	0,0,0	0.0	0.0	0.0	0,0,0
488	0.0	0.0	0.0	0,0,0	0.0	0.0	0.0	0,0,0
489	0.0	0.0	0.0	0,0,0	0.0	0.0	0.0	0,0,0
490	0.0	0.0	0.0	0,0,0	0.0	0.0	0.0	0,0,0
491	0.0	0.0	0.0	0,0,0	0.0	0.0	0.0	0,0,0
492	0.0	0.0	0.0	0,0,0	0.0	0.0	0.0	0,0,0
493	0.0	0.0	0.0	0,0,0	0.0	0.0	0.0	0,0,0
494	0.0	0.0	0.0	0,0,0	0.0	0.0	0.0	0,0,0
495	0.0	0.0	0.0	0,0,0	0.0	0.0	0.0	0,0,0
496	0.0	0.0	0.0	0,0,0	0.0	0.0	0.0	0,0,0
497	0.0	0.0	0.0	0,0,0	0.0	0.0	0.0	0,0,0
498	0.0	0.0	0.0	0,0,0	0.0	0.0	0.0	0,0,0
499	0.0	0.0	0.0	0,0,0	0.0	0.0	0.0	0,0,0
500	0.0	0.0	0.0	0,0,0	0.0	0.32	0.0	0,2,0
501	0.0	0.0	0.0	0,0,0	0.0	0.0	0.0	0,0,0
502	0.0	0.0	0.0	0,0,0	0.0	0.0	0.0	0,0,0
503	0.0	0.0	0.0	0,0,0	0.0	0.0	0.0	0,0,0

504	0.0	0.0	0.0	0,0,0	0.0	0.0	0.0	0,0,0
505	0.0	0.0	0.0	0,0,0	0.0	0.0	0.0	0,0,0
506	0.0	0.0	0.0	0,0,0	0.0	0.0	0.0	0,0,0
507	0.0	0.0	0.0	0,0,0	0.0	0.0	0.0	0,0,0
508	0.0	0.0	0.0	0,0,0	0.0	0.0	0.0	0,0,0
509	0.0	0.0	0.0	0,0,0	0.0	0.0	0.0	0,0,0
510	0.0	0.0	0.0	0,0,0	0.0	0.0	0.0	0,0,0
511	0.0	0.0	0.0	0,0,0	0.0	0.0	0.0	0,0,0
512	0.0	0.0	0.0	0,0,0	0.0	0.0	0.0	0,0,0
513	0.0	0.0	0.0	0,0,0	0.0	0.0	0.0	0,0,0
514	0.0	0.0	0.0	0,0,0	0.0	0.0	0.0	0,0,0
515	0.0	0.0	0.0	0,0,0	0.0	0.0	0.0	0,0,0
516	0.0	0.0	0.0	0,0,0	0.0	0.0	0.0	0,0,0
517	0.0	0.0	0.0	0,0,0	0.0	0.0	0.0	0,0,0
518	0.0	0.0	0.0	0,0,0	0.0	0.0	0.0	0,0,0
519	0.0	0.0	0.0	0,0,0	0.0	0.0	0.0	0,0,0
520	0.0	0.0	0.0	0,0,0	0.0	0.0	0.0	0,0,0
521	0.0	0.0	0.0	0,0,0	0.0	0.0	0.0	0,0,0
522	0.0	0.0	0.0	0,0,0	0.0	0.0	0.0	0,0,0
523	0.0	0.0	0.0	0,0,0	0.0	0.0	0.0	0,0,0
524	0.0	0.0	0.0	0,0,0	0.0	0.0	0.0	0,0,0
525	0.0	0.0	0.0	0,0,0	0.0	0.0	0.0	0,0,0
526	0.0	0.0	0.0	0,0,0	0.0	0.0	0.0	0,0,0
527	0.0	0.0	0.0	0,0,0	0.0	0.0	0.0	0,0,0
528	0.0	0.0	0.0	0,0,0	0.0	0.0	0.0	0,0,0

Guscio	**rRfck**	**rRfyk**	**rPfck**			**wR**	**wF**	**wP**
		0.0	0.0	0.0	0.0	0.32	0.0	

15. Conclusioni

Considerato quanto sopra la struttura è idonea allo scopo per cui è stata progettata. Si precisa ancora una volta che il calcolo ha carattere preliminare, dovrà essere verificato in fase esecutiva considerando i carichi effettivamente trasmessi dalla sovrastruttura e le indagini geognostiche eseguite.

ALLEGATO A - VERIFICHE GEOTECNICHE PRELIMINARI

NORMATIVE DI RIFERIMENTO

I calcoli relativi a quanto in oggetto sono stati condotti in accordo alle seguenti normative:

- **LEGGE n° 64 del 02/02/1974.** "Provvedimenti per le costruzioni, con particolari prescrizioni per le zone sismiche.";
- **D.M. LL.PP. del 11/03/1988.** "Norme tecniche riguardanti le indagini sui terreni e sulle rocce, la stabilità dei pendii naturali e delle scarpate, i criteri generali e le prescrizioni per la progettazione, l'esecuzione e il collaudo delle opere di sostegno delle terre e delle opere di fondazione.";
- **D.M. LL.PP. del 16/01/1996.** "Norme tecniche per le costruzioni in zone sismiche.";
- **Circolare Ministeriale LL.PP. n° 65/AA.GG. del 10/04/1997.** "Istruzioni per l'applicazione delle "Norme Tecniche per le costruzioni in zone sismiche" di cui al D.M. 16/01/1996.";
- **Eurocodice 1 - Parte 1 -** "Basi di calcolo ed azioni sulle strutture - Basi di calcolo -.";
- **Eurocodice 7 - Parte 1 -**"Progettazione geotecnica - Regole generali -.";
- **Eurocodice 8 - Parte 5 -**"Indicazioni progettuali per la resistenza sismica delle strutture - Fondazioni, strutture di contenimento ed aspetti geotecnici -.";
- **D.M. 17/01/2018 - NUOVE NORME TECNICHE PER LE COSTRUZIONI**
- **Circolare n. 7 del 21/01/2019**

MATERIALI

I materiali utilizzati per i pali sono:

- Calcestruzzo C25/30
- Acciaio B450C

CARATTERISTICHE GEOMETRICHE

La fondazione in esame è composta da un plinto in cemento armato a spessore variabile con un diametro di 23,70 metri eche poggia su un sistema di 12 pali trivellati in cemento armato di lunghezza pari a 25 metri e con un diametro pari ad 1,20 metri.

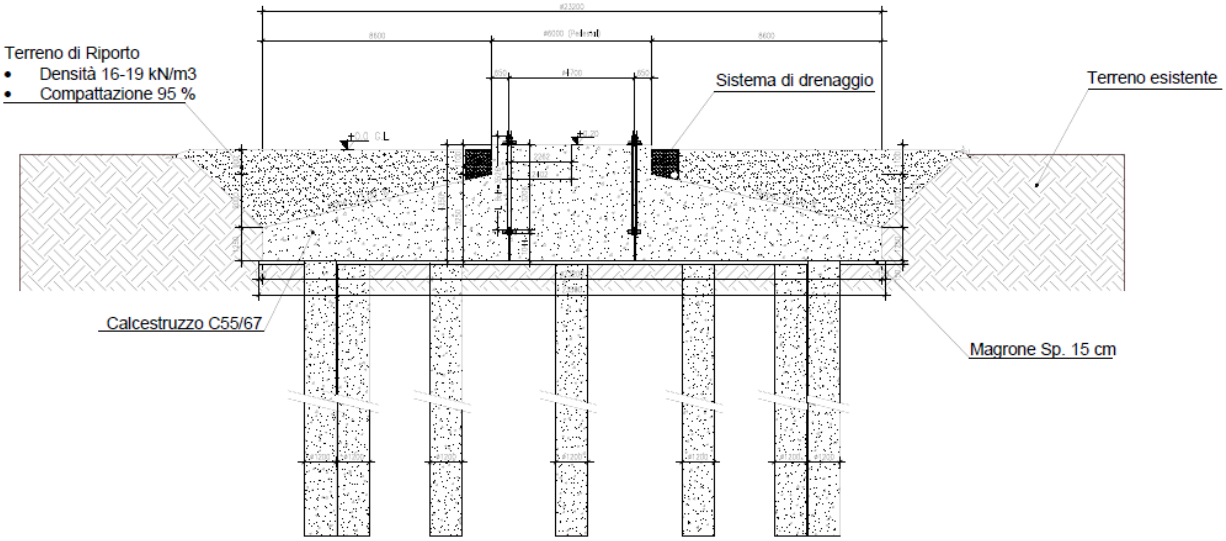

Figura 2: Sezione fofondazione

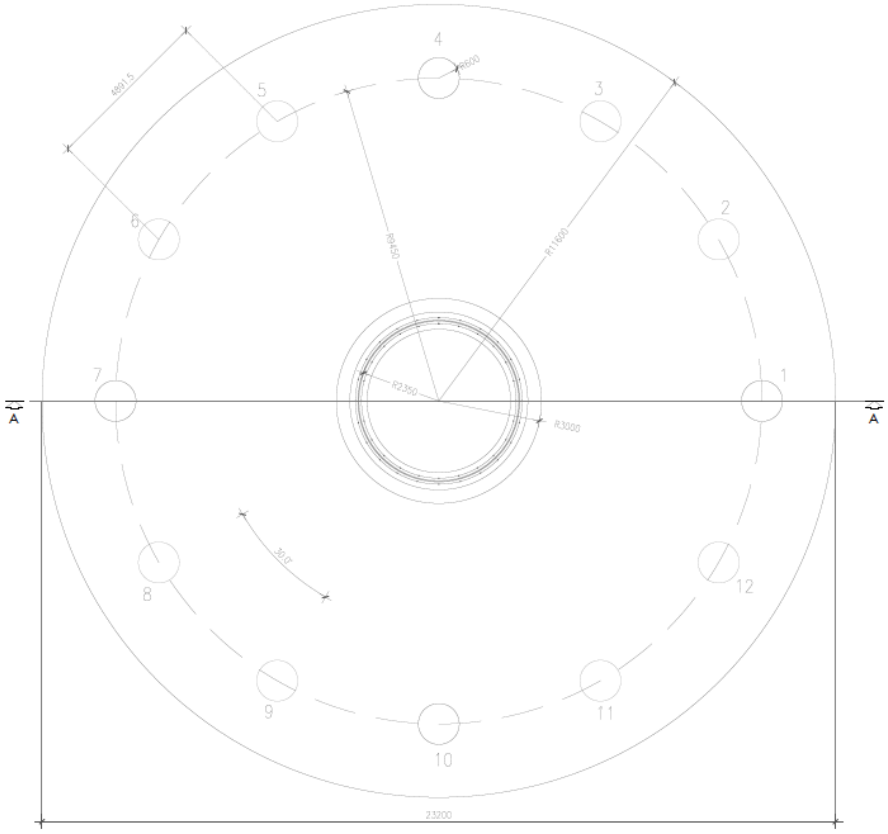

Figura 3: Pianta fondazione

DETERMINAZIONE DELLA PORTANZA VERTICALE DI FONDAZIONI PROFONDE

Per la determinazione della portanza verticale di fondazioni profonde si fa riferimento a due contributi: la "portanza di punta" e la "portanza per attrito laterale". Queste due componenti in genere sono calcolate in maniera autonoma dato che risulta molto difficoltoso, tranne che in poche situazioni, stabilire quanta parte del carico è assorbita dall'attrito laterale e quanta dalla resistenza alla punta. Nel seguito, ai fini del calcolo della portanza verticale, si assumeranno le seguenti espressioni generali valide per il caso di palo soggetto a compressione e per il caso di palo soggetto a trazione (nel calcolo della portanza verticale è possibile tenere in conto tutti o solo uno dei contributi su definiti):

$$Q_C = \frac{Q_P}{\eta_P} + \frac{Q_L}{\eta_L} - W_{\text{ATT.NEG.}} - W_P \quad \text{(caso di palo in compressione)} \qquad Q_T = \frac{Q_L}{\eta_L} + W_P \quad \text{(caso di palo in trazione)}$$

dove i simboli su riportati hanno il seguente significato:

- Q_C resistenza a compressione del palo
- Q_T resistenza a trazione del palo
- Q_P carico limite verticale alla punta del palo
- Q_L carico limite verticale lungo la superficie laterale del palo
- $W_{ATT.NEG.}$ attrito negativo agente sul palo
- W_P peso totale del palo
- η_Π coefficiente di sicurezza per carico limite verticale alla punta del palo
- η_Λ coefficiente di sicurezza per carico limite verticale lungo la superficie laterale del palo

I valori del carico limite verticale alla punta del palo "Q_P" e del carico limite verticale lungo la superficie laterale del palo "Q_L" sono determinati con le note "formule statiche". Queste esprimono i valori di cui sopra in funzione della geometria del palo, delle caratteristiche geotecniche del terreno in cui è immerso, della modalità esecutiva e dell'interfaccia palo-terreno.

Di seguito si illustrano le metodologie con le quali saranno determinati i valori prima citati; è necessario tenere presente che tali metodi sono riferiti al calcolo del "singolo palo" e per estendere tale modalità computazione al caso di "pali in gruppo" si farà ricorso ai "coefficienti d'efficienza", in questo modo si potrà tenere in debito conto l'interferenza reciproca che i pali esercitano.

CARICO LIMITE VERTICALE ALLA PUNTA DEL PALO

Il valore del carico limite verticale alla punta del palo, indipendentemente dal metodo utilizzato per la sua determinazione, è condizionato dalla modalità esecutiva. Esso varia notevolmente a seconda che il palo sia del tipo "infisso" o "trivellato" poiché le caratteristiche fisico-meccaniche del terreno circostante il palo variano in seguito alle operazioni d'installazione. Di conseguenza, per tenere conto della modalità esecutiva nel calcolo dei coefficienti di portanza, si propone di modificare il valore dell'angolo di resistenza a taglio secondo quanto suggerito da Kishida (1967):

$$\phi_{\text{cor}} = \frac{\phi + 40}{2} \quad \text{(per pali infissi)} \qquad \phi_{\text{cor}} = \phi - 3^\circ \quad \text{(per pali trivellati)}$$

Con la correzione di cui sopra si determineranno i fattori adimensionali di portanza che sono presenti nella relazione per la determinazione del carico limite verticale alla punta che assume la seguente espressione:

$$Q_P = A_P \cdot \left(q_P \cdot N_q^* + c \cdot N_c^*\right)$$

dove i simboli su riportati hanno il seguente significato:

- A_P superficie portante efficace della punta del palo
- q_P pressione del terreno presente alla punta del palo
- c coesione del terreno alla punta del palo (nel caso di condizione non drenata $c = c_u$)
- N^*_q, N^*_c fattori adimensionali di portanza funzione dell'angolo d'attrito interno $\varphi_{\chi o p}$ del terreno già corretti

In letteratura esistono diverse formulazioni per il calcolo dei fattori adimensionali di portanza, di seguito si riportano quelle che sono state implementate:

Formulazione di Meyerhof per base poggiante su terreni sciolti (1951)

- se $\varphi \neq 0$ (*condizione drenata*) si ha:

$$N_q = \mathrm{tg}^2\left(\frac{\pi}{4}+\frac{\phi}{2}\right)\cdot e^{\pi\cdot\mathrm{tg}(\phi)} \qquad N_c = (N_q - 1)\cdot \mathrm{ctg}(\phi)$$

$$s_q = 1 + 0.1\cdot \mathrm{tg}^2\left(\frac{\pi}{4}+\frac{\phi}{2}\right) \qquad s_c = 1 + 0.2\cdot \mathrm{tg}^2\left(\frac{\pi}{4}+\frac{\phi}{2}\right)$$ (fattori di forma)

$$d_q = 1 + 0.1\cdot\frac{L}{D}\cdot\sqrt{\mathrm{tg}^2\left(\frac{\pi}{4}+\frac{\phi}{2}\right)} \quad d_c = 1 + 0.2\cdot\frac{L}{D}\cdot\sqrt{\mathrm{tg}^2\left(\frac{\pi}{4}+\frac{\phi}{2}\right)}$$ (fattori d'approfondimento)

$$N^*_q = N_q\cdot s_q\cdot d_q \qquad N^*_c = N_c\cdot s_c\cdot d_c$$

se $\varphi = 0$ (*condizione non drenata*) si ha:

$$N_q = 1.00 \qquad N_c = \pi + 2$$

$$s_q = 1.00 \qquad s_c = 1.20$$ (fattori di forma)

$$d_q = 1.00 \qquad d_c = 1 + 0.2\cdot\frac{L}{D}$$ (fattori d'approfondimento)

$$N^*_q = N_q\cdot s_q\cdot d_q \qquad N^*_c = N_c\cdot s_c\cdot d_c$$

Formulazione di Hansen per base poggiante su terreni sciolti (1970)

se $\varphi \neq 0$ (*condizione drenata*) si ha:

$$N_q = \mathrm{tg}^2\left(\frac{\pi}{4}+\frac{\phi}{2}\right)\cdot e^{\pi\cdot\mathrm{tg}(\phi)} \qquad N_c = (N_q - 1)\cdot \mathrm{ctg}(\phi)$$

$$s_q = 1 + \mathrm{tg}(\phi) \qquad s_c = 1 + \frac{N_q}{N_c}$$ (fattori di forma)

$$d_q = 1 + 2\cdot\mathrm{tg}(\phi)\cdot\left(1 - \mathrm{sen}(\phi)\right)^2\cdot\Theta \qquad d_c = 1 + 0.4\cdot\Theta$$ (fattori d'approfondimento)

$$\text{dove: se } \frac{L}{D} \leq 1 \;\Rightarrow\; \Theta = \frac{L}{D}, \text{ se } \frac{L}{D} > 1 \;\Rightarrow\; \Theta = \mathrm{arctg}\left(\frac{L}{D}\right)$$

$$N^*_q = N_q\cdot s_q\cdot d_q \qquad N^*_c = N_c\cdot s_c\cdot d_c$$

se $\varphi = 0$ (*condizione non drenata*) si ha:

$$N_q = 1.00 \qquad N_c = \pi + 2$$

$$s_q = 1.00 \qquad s_c = 1.20$$ (fattori di forma)

$$d_q = 1.00 \qquad d_c = 1 + 0.4\cdot\Theta$$ (fattori d'approfondimento)

$$N^*_q = N_q\cdot s_q\cdot d_q \qquad N^*_c = N_c\cdot s_c\cdot d_c$$

Formulazione di Zeevaert per base poggiante su terreni sciolti (1972)

se $\varphi \neq 0$ (*condizione drenata*) si ha:

$$N_q^* = \frac{\cos^2(\phi)}{2\cdot\cos^2\left(\frac{\pi}{4}+\frac{\phi}{2}\right)} \cdot e^{\left(\frac{3\cdot\pi}{2}+\phi\right)\cdot \mathrm{tg}(\phi)} \qquad N_c^* = (N_q - 1)\cdot \mathrm{ctg}(\phi)$$

se $\varphi = 0$ (*condizione non drenata*) si ha:

$$N_q^* = 1.00 \qquad N_c^* = 9.00$$

Formulazione di Berezantzev per base poggiante su terreni sciolti (1970)

Berezantzev fa riferimento ad una superficie di scorrimento "alla Terzaghi" che si arresta sul piano della punta del palo. Inoltre considera il cilindro di terreno coassiale al palo (avente diametro pari all'estensione in sezione della superficie di scorrimento) in parte sostenuto da tensioni tangenziali dal rimanente terreno presente lungo la superficie laterale del cilindro. Conseguentemente il valore della pressione presente alla punta del palo è inferiore alla corrispondente pressione litostatica ed è influenzata dal rapporto tra la profondità alla quale è posta la punta "L" del palo e il diametro "D" dello stesso. Quindi il valore di N^*_q è influenzato da questo effetto "Silo". I valori che l'autore propone sono:

se φ ? 0 (*condizione drenata*) si ha:

Valori di N^*_q per pali di diametro fino a 80.0 cm.

Λ/Δ	8°	16°	18°	20°	22°	24°	26°	28°	30°	32°	34°	36°	38°	40°	42°	44°	46°	48°	50°
4	1.07	2.18	3.15	4.72	7.15	10.73	15.85	22.95	32.62	45.56	62.69	85.18	114.53	152.71	202.32	266.82	350.86	460.79	605.36
12	1.04	1.77	2.46	3.64	5.52	8.42	12.71	18.85	27.44	39.21	55.07	76.20	104.13	140.81	188.86	251.72	334.05	442.17	584.82
20	1.03	1.63	2.20	3.20	4.82	7.38	11.22	16.82	24.76	35.79	50.83	71.06	98.01	133.65	180.59	242.29	323.39	430.21	571.48
28	1.03	1.54	2.05	2.93	4.40	6.72	10.26	15.48	22.96	33.43	47.84	67.37	93.54	128.35	174.39	235.13	315.21	420.95	561.08
36	1.02	1.49	1.94	2.75	4.10	6.26	9.57	14.49	21.60	31.64	45.53	64.48	90.00	124.10	169.36	229.27	308.46	413.26	552.38
50	1.02	1.42	1.82	2.53	3.74	5.68	8.70	13.23	19.84	29.27	42.45	60.56	85.14	118.18	162.30	220.95	298.80	402.16	539.74
75	1.02	1.35	1.69	2.30	3.33	5.02	7.69	11.74	17.73	26.37	38.58	55.55	78.82	110.38	152.84	209.67	285.53	386.74	522.01
100	1.01	1.31	1.61	2.14	3.07	4.60	7.02	10.74	16.28	24.34	35.84	51.95	74.19	104.56	145.68	201.02	275.23	374.64	507.95
200	1.01	1.22	1.44	1.84	2.54	3.71	5.60	8.56	13.05	19.73	29.43	43.30	62.82	89.95	127.29	178.30	247.63	341.59	468.90
500	1.01	1.14	1.29	1.55	2.02	2.82	4.14	6.24	9.50	14.45	21.83	32.64	48.25	70.49	101.85	145.69	206.57	290.75	406.87

Valori di N^*_q per pali di diametro maggiore a 80.0 cm.

Λ/Δ	8°	16°	18°	20°	22°	24°	26°	28°	30°	32°	34°	36°	38°	40°	42°	44°	46°	48°	50°
4	1.16	3.09	3.95	5.04	6.44	8.22	10.50	13.41	17.12	21.87	27.92	35.65	45.53	58.14	74.24	94.80	121.05	154.57	197.38
12	1.21	3.14	3.98	5.05	6.42	8.14	10.34	13.13	16.68	21.18	26.90	34.17	43.41	55.15	70.07	89.03	113.13	143.77	182.72
20	1.26	3.18	4.01	5.06	6.39	8.06	10.18	12.85	16.23	20.49	25.88	32.69	41.29	52.16	65.89	83.26	105.21	132.97	168.06
28	1.30	3.22	4.04	5.07	6.36	7.99	10.02	12.57	15.78	19.81	24.86	31.20	39.17	49.16	61.72	77.49	97.29	122.16	153.40
36	1.35	3.27	4.07	5.08	6.34	7.91	9.86	12.30	15.33	19.12	23.84	29.72	37.04	46.17	57.55	71.72	89.38	111.36	138.75
44	1.39	3.31	4.10	5.09	6.31	7.83	9.70	12.02	14.88	18.43	22.81	28.23	34.92	43.18	53.38	65.95	81.46	100.56	124.09
52	1.44	3.35	4.14	5.10	6.29	7.75	9.54	11.74	14.44	17.74	21.79	26.75	32.80	40.19	49.21	60.18	73.54	89.76	109.43
56	1.46	3.37	4.15	5.10	6.27	7.71	9.46	11.60	14.21	17.40	21.28	26.00	31.74	38.70	47.12	57.30	69.58	84.36	102.10
60	1.49	3.39	4.17	5.11	6.26	7.67	9.38	11.46	13.99	17.06	20.77	25.26	30.68	37.20	45.03	54.42	65.62	78.96	94.77
65	1.51	3.42	4.19	5.12	6.25	7.62	9.28	11.29	13.71	16.63	20.13	24.33	29.35	35.33	42.43	50.81	60.67	72.21	85.61

$$N_c^* = (N_q - 1)\cdot \mathrm{ctg}(\phi)$$

se $\varphi = 0$ (*condizione non drenata*) si ha:

$$N_q^* = 1.00 \qquad N_c^* = 9.00$$

Formulazione di Vesic per base poggiante su terreni sciolti (1975)

se $\varphi \neq 0$ (*condizione drenata*) si ha:

$$N_q^* = \frac{3}{3-\mathrm{sen}(\phi)} \cdot \mathrm{tg}^2\left(\frac{\pi}{4}+\frac{\phi}{2}\right) \cdot I_{\mathrm{rr}}^{\frac{4\cdot\mathrm{sen}(\phi)}{3\cdot(1+\mathrm{sen}(\phi))}} \cdot e^{\left(\frac{\pi}{2}-\phi\right)\cdot\mathrm{tg}(\phi)} \qquad N_c^* = (N_q - 1)\cdot\mathrm{ctg}(\phi)$$

$$I_{\mathrm{rr}} = \frac{I_r}{1+\varepsilon_v\cdot I_r} \qquad \varepsilon_v = \frac{q_p\cdot\alpha}{E_t}\cdot\frac{(1+\nu)\cdot(1-2\cdot\nu)}{(1-\nu)} \qquad I_r = \frac{E_t}{2\cdot(1+\nu)\cdot(c+q_P\cdot\alpha\cdot\mathrm{tg}(\phi))}$$

se $\varphi = 0$ (*condizione non drenata*) si ha:

$$N_q^* = 1.00 \qquad N_c^* = \frac{4}{3}\cdot(\log_n(I_{\mathrm{rr}})+1)+\frac{\pi}{2}+1$$

dove i simboli su riportati hanno il seguente significato:

- E_t modulo elastico del terreno alla profondità della punta del palo
- ν coefficiente di Poisson del terreno alla profondità della punta del palo
- α coefficiente di riduzione della pressione del terreno presente alla profondità della punta del palo

Nel caso in cui si scelga di effettuare la riduzione della pressione del terreno presente alla profondità della punta del palo (cioè α ? 1) il coefficiente di riduzione "α" assume la seguente espressione:

$$\alpha = \frac{1+2\cdot K_0}{3} \qquad \text{dove: se } \phi \neq 0 \Rightarrow K_0 = 1-\mathrm{sen}(\phi); \qquad \text{se } \phi = 0 \Rightarrow K_0 = \frac{\nu}{1-\nu}$$

Formulazione di Janbu per base poggiante su terreni sciolti (1976)

se $\varphi \neq 0$ (*condizione drenata*) si ha:

$$N_q^* = \left(\mathrm{tg}(\phi)+\sqrt{1+\mathrm{tg}^2(\phi)}\right)^2 \cdot e^{2\cdot\vartheta\cdot\mathrm{tg}(\phi)} \qquad N_c^* = (N_q-1)\cdot\mathrm{ctg}(\phi)$$

$$\vartheta = 60 + 0.45\cdot\mathrm{Dr}$$

dove *"Dr"* è la densità relativa del terreno.

se $\varphi = 0$ (*condizione non drenata*) si ha:

$$N_q^* = 1.00 \qquad N_c^* = 5.74$$

Formulazione di Terzaghi per base poggiante su roccia (1943)

Per la determinazione del carico limite nel caso di presenza di ammasso roccioso bisogna valutare molto attentamente il grado di solidità della roccia stessa. Tale valutazione viene in genere eseguita stimando l'indice *RQD* (Rock Quality Designation) che rappresenta una misura della qualità di un ammasso roccioso. Tale indice può variare da un minimo di 0 (caso in cui la lunghezza dei pezzi di roccia estratti dal carotiere è inferiore a 100 mm) ad un massimo di 1 (caso in cui la carota risulta integra) ed è calcolato nel seguente modo:

$$\mathrm{RQD} = \frac{\sum \text{lunghezze dei pezzi di roccia intatta} > 100\text{mm}}{\text{lunghezza del carotiere}}.$$

Se il valore di *RQD* è molto basso la roccia è molto fratturata ed il calcolo della capacità portante dell'ammasso roccioso va condotto alla stregua di un terreno sciolto utilizzando tutte le formulazioni sopra descritte.

$$N_q = \frac{e^{2\cdot\left(\frac{3\cdot\pi}{4}-\frac{\phi}{2}\right)\cdot \mathrm{tg}(\phi)}}{2\cdot\cos^2\left(\frac{\pi}{4}+\frac{\phi}{2}\right)} \qquad N_c = (N_q - 1)\cdot \mathrm{ctg}(\phi) \qquad \text{se } \phi = 0 \Rightarrow N_c = \frac{3}{2}\cdot\pi + 1$$

$$s_q = 1.00 \qquad s_c = 1.30$$ (fattori di forma)

$$N_q^* = \mathrm{RQD}^2 \cdot N_q \cdot s_q \qquad N_c^* = \mathrm{RQD}^2 \cdot N_c \cdot s_c$$

Formulazione di Stagg-Zienkiewicz per base poggiante su roccia (1968)

$$N_q = \mathrm{tg}^6\left(\frac{90°+\phi}{2}\right) \qquad N_c = 5\cdot \mathrm{tg}^4\left(\frac{90°+\phi}{2}\right)$$

$$s_q = 1.00 \qquad s_c = 1.30$$ (fattori di forma)

$$N_q^* = \mathrm{RQD}^2 \cdot N_q \cdot s_q \qquad N_c^* = \mathrm{RQD}^2 \cdot N_c \cdot s_c$$

CARICO LIMITE VERTICALE LUNGO LA SUPERFICIE LATERALE DEL PALO

Il valore del carico limite verticale lungo la superficie laterale del palo è dato dall'integrale esteso a tutta la superficie laterale del palo delle tensioni tangenziali che si sviluppano all'interfaccia palo-terreno in condizioni limite:

$$Q_L = \int_\Gamma \tau_{\lim} \cdot d\Gamma = \int_0^L (c_a + \sigma_h \cdot \mathrm{tg}(\delta)) \cdot P_{\mathrm{lat}} \cdot \mathrm{dz}$$

dove i simboli sopra riportati hanno il seguente significato:

- χ_α adesione all'interfaccia terreno-palo alla generica profondità "z"
- σ_η tensione orizzontale alla generica profondità "z"
- δ angolo di resistenza a taglio all'interfaccia terreno-palo alla generica profondità "z"
- $\Pi_{\lambda\alpha\tau}$ perimetro della sezione trasversale del palo alla generica profondità "z"
- Λ sviluppo longitudinale del palo

Analogamente al carico limite alla punta, anche il valore del carico limite verticale lungo la superficie laterale del palo varia notevolmente a seconda che esso sia del tipo "infisso" o "trivellato" a causa del diverso comportamento del terreno circostante in palo. Conseguentemente i parametri sopra riportati possono essere correlati da leggi diverse in funzione delle modalità di esecuzione del palo. Di seguito si descrivono quelle che sono state implementate.

L'adesione "c_a" è correlata alla coesione "c" nel caso di condizioni drenate; oppure alla coesione non drenata "c_u" nel caso di condizioni non drenate, per mezzo del coefficiente d'adesione "ψ" secondo la seguente relazione:

$$c_a = c_* \cdot \psi \qquad \text{dove: } c_* = c \ \text{(in condizione drenata);}$$

$$c_* = c_u \text{(in condizione non drenata).}$$

Esprimendo il valore di "c_*" in N/cm^2, il coefficiente d'adesione "ψ" può assumere i seguenti valori:

Caquot-Kerisel (consigliato per pali trivellati)

$$\psi = \frac{100 + c_*^2}{100 + 7\cdot c_*^2}$$

Meyerhof-Murdock (consigliato per pali trivellati)

$$\text{se } c_* \leq 5.00\ \mathrm{N/cm^2} \quad \Rightarrow \quad \psi = 1.000 - 0.100 \cdot c_*$$
$$\text{se } c_* > 5.00\ \mathrm{N/cm^2} \quad \Rightarrow \quad \psi = 0.525 - 0.005 \cdot c_*$$

Whitaker-Cooke (consigliato per pali trivellati)

$$\text{se } c_* \leq 2.50\ \mathrm{N/cm^2} \quad \Rightarrow \quad \psi = 0.90$$
$$\text{se } 2.50 < c_* \leq 5.00\ \mathrm{N/cm^2} \quad \Rightarrow \quad \psi = 0.80$$
$$\text{se } 5.00 < c_* \leq 7.50\ \mathrm{N/cm^2} \quad \Rightarrow \quad \psi = 0.60$$
$$\text{se } c_* > 7.50\ \mathrm{N/cm^2} \quad \Rightarrow \quad \psi = 0.40$$

Woodward (consigliato per pali trivellati)

$$\text{se } c_* \leq 4.00\ \mathrm{N/cm^2} \quad \Rightarrow \quad \psi = 0.90$$
$$\text{se } 4.00 < c_* \leq 8.00\ \mathrm{N/cm^2} \quad \Rightarrow \quad \psi = 0.60$$
$$\text{se } 8.00 < c_* \leq 12.00\ \mathrm{N/cm^2} \quad \Rightarrow \quad \psi = 0.50$$
$$\text{se } 12.00 < c_* \leq 20.00\ \mathrm{N/cm^2} \quad \Rightarrow \quad \psi = 0.40$$
$$\text{se } c_* > 20.00\ \mathrm{N/cm^2} \quad \Rightarrow \quad \psi = 0.30$$

Viggiani e altri (consigliato per pali infissi)

$$\text{se } c_* \leq 5.00\ \mathrm{N/cm^2} \quad \Rightarrow \quad \psi = 1.00$$
$$\text{se } 5.00 < c_* \leq 10.00\ \mathrm{N/cm^2} \quad \Rightarrow \quad \psi = 0.70$$
$$\text{se } 10.00 < c_* \leq 15.00\ \mathrm{N/cm^2} \quad \Rightarrow \quad \text{ø} = 0.50$$
$$\text{se } 15.00 < c_* \leq 20.00\ \mathrm{N/cm^2} \quad \Rightarrow \quad \psi = 0.40$$
$$\text{se } c_* > 20.00\ \mathrm{N/cm^2} \quad \Rightarrow \quad \psi = 0.30$$

Il valore della tensione orizzontale "σ_η" è correlato al valore della pressione verticale "σ_ϖ" per mezzo del coefficiente di spinta orizzontale "K_s" secondo la seguente relazione:

$$\sigma_h = \sigma_v \cdot K_s$$

Il valore di "K_s" dipende essenzialmente dal tipo di terreno e dal suo stato d'addensamento nonché dalla tecnologia utilizzata per l'installazione.

Il programma permette di scegliere tra differenti teorie per il calcolo di K_s.

Opzione 1:

Metodo "Tomlinson (1971)"

K_s può variare da un limite inferiore pari al coefficiente di spinta a riposo "K_0" fino a valori prossimi al coefficiente di spinta passiva "K_p"; i valori proposti sono:

pali trivellati: $K_s = K_0 = 1 - sen(\Phi)$

pali infissi: K_s = variabile da: $K_p = 1 + tg^2(\Phi)$ in sommità fino a $K_0 = 1 - sen(\Phi)$ alla punta

Opzione 2:

Metodo di "Kulhavy (1983)"

pali trivellati: $K_s = \alpha K_0$ con α variabile tra 2/3 e 1

pali infissi: $K_s = \alpha K_0$ con α variabile da 3/4, per compattazione del terreno trascurabile, fino a 2, nel caso di compattazione significativa.

Il valore dell'angolo di resistenza al taglio all'interfaccia terreno-palo "δ" è funzione della scabrezza della superficie del palo e quindi della modalità esecutiva; i valori proposti sono:

$$\delta = \text{arctg}(\text{tg}(\phi)) \quad \text{(per pali trivellati)} \qquad \delta = \text{arctg}\left(\frac{3}{4} \cdot \text{tg}(\phi)\right) \quad \text{(per pali infissi)}$$

SIMBOLOGIA ADOTTATA NEI TABULATI DI CALCOLO

Per maggior chiarezza nella lettura dei tabulati di calcolo viene riportata la descrizione dei simboli principali utilizzati nella stesura degli stessi. Per comodità di lettura la legenda è suddivisa in paragrafi con la stessa modalità in cui sono stampati i tabulati di calcolo.

Dati geometrici degli elementi costituenti le fondazioni profonde

- X elem. — ascissa nel riferimento globale dell'elemento
- Y elem. — ordinata nel riferimento globale dell'elemento
- Profon. — profondità del piano di posa dell'elemento a partire dal piano campagna
- Base — larghezza della sezione trasversale dell'elemento
- Lungh. — dimensione dello sviluppo longitudinale dell'elemento
- Altez. — altezza della sezione trasversale dell'elemento
- Rotaz. — rotazione dell'elemento rispetto al suo baricentro
- Grup. ap. — nel caso cui l'elemento faccia parte di una palificata, rappresenta il numero identificativo della stessa
- Ind. Strat. — indice della stratigrafia associata all'elemento
- Tip. iniez. — tipologia d'iniezione dei micropali ai fini del calcolo della portanza secondo le raccomandazioni di Bustamante e Doix (No iniez. = assenza d'iniezione, Iniez.uni. = iniezione unica, Iniez.rip. = iniezione ripetuta)
- Tip. ter. — tipologia di terreno ai fini del calcolo della portanza secondo le raccomandazioni di Bustamante e Doix (Coes. = coesivo, Inc. = incoerente)
- Dia. P. — diametro fusto del palo
- Lun. P. — lunghezza totale del palo
- Lun. L. — lunghezza tratto del palo senza contributo di terreno
- Dis. P. — distanza del baricentro del palo dal bordo del plinto
- In. Px — interasse principale del palo
- In. Py — interasse secondario del palo
- Dia. B. — diametro bulbo del palo
- Lun. B. — lunghezza della sbulbatura del palo
- E.C.V. — coefficiente d'efficienza per carico limite verticale del singolo palo
- E.C.C. — coefficiente d'efficienza per carico critico verticale del singolo palo
- E.C.T. — coefficiente d'efficienza per carico limite trasversale del singolo palo
- Svin. testa — codice di svincolo alla rotazione in testa al palo (0 = non attivo, 1 = attivo)
- Vin. piede — codici di vincolo rispettivamente alla rotazione orizzontale, traslazione orizzontale e

traslazione verticale applicabili al piede del palo (0 = non attivo, 1 = attivo)

- Asc. X' — ascissa del baricentro del singolo palo dell'elemento nel riferimento locale con origine nel baricentro del plinto
- Asc. Y' — ordinata del baricentro del singolo palo dell'elemento nel riferimento locale con origine nel baricentro del plinto
- Peso spec. — peso specifico del palo
- Mod. El. Pa. — modulo elastico normale del palo

Dati di carico degli elementi costituenti le fondazioni profonde

- Cmb — numero della combinazione di carico
- Tipologia — tipologia della combinazione di carico
- Sismica — flag per l'applicazione della riduzione sismica alle caratteristiche meccaniche del terreno di fondazione per la combinazione di carico in esame
- S. Normale — sollecitazione normale agente alla quota del piano di fondazione dell'elemento (riferimento locale con origine nel baricentro del plinto)
- S. Tagliante X' — sollecitazione tagliante lungo l'asse X' agente alla quota del piano di fondazione dell'elemento (riferimento locale con origine nel baricentro del plinto)
- S. Tagliante Y' — sollecitazione tagliante lungo l'asse Y' agente alla quota del piano di fondazione dell'elemento (riferimento locale con origine nel baricentro del plinto)
- S. Flessionale X' — sollecitazione flessionale lungo l'asse X' agente alla quota del piano di fondazione dell'elemento (riferimento locale con origine nel baricentro del plinto)
- S. Flessionale Y' — sollecitazione flessionale lungo l'asse Y' agente alla quota del piano di fondazione dell'elemento (riferimento locale con origine nel baricentro del plinto)
- S. Torsionale — sollecitazione torsionale agente alla quota del piano di fondazione dell'elemento (riferimento locale con origine nel baricentro del plinto)

Valori di calcolo per le fondazioni profonde

- Port. punta — carico limite verticale alla punta del palo (valore su singolo palo corretto dal relativo coefficiente d'efficienza)
- Port. lat. — carico limite verticale lungo la superficie laterale del fusto del palo (valore su singolo palo corretto dal relativo coefficiente d'efficienza)
- Port. bulbo — carico limite verticale lungo la superficie laterale del bulbo del palo (valore su singolo palo corretto dal relativo coefficiente d'efficienza)
- C. Critico — carico critico per l'instabilità del palo (valore su singolo palo corretto dal relativo coefficiente d'efficienza)
- Attr. Neg. — attrito negativo agente sul palo (valore su singolo palo)
- Peso Palo — peso totale del singolo palo
- Cmb — numero e tipologia della combinazione di carico
- S. Norm. — sollecitazione normale agente alla testa del palo in esame
- V. V. Com. — resistenza a compressione del palo in esame (corretto dal relativo coefficiente di sicurezza)
- V. V. Tra. — resistenza a trazione del palo in esame (corretto dal relativo coefficiente di sicurezza)
- Ver. Com. — rapporto tra la sollecitazione normale agente alla testa del palo e la sua resistenza a

compressione (verifica positiva se il rapporto è < 1.0)

- Ver. Tra. rapporto tra la sollecitazione normale agente alla testa del palo e la sua resistenza a trazione (verifica positiva se il rapporto è < 1.0)
- S. Tagl. sollecitazione tagliante agente alla testa del palo
- S. Fles. sollecitazione flessionale agente alla testa del palo
- V. V. Trs. resistenza trasversale del palo in esame (corretto dal relativo coefficiente di sicurezza)
- Ver. Tra. rapporto tra la sollecitazione tagliante agente alla testa del palo e la sua resistenza trasversale (verifica positiva se il rapporto è < 1.0)
- Ced. V. cedimento verticale in corrispondenza della testa del palo
- Ced. H. cedimento orizzontale in corrispondenza della testa del palo

PARAMETRI DI CALCOLO

Modalità di calcolo della portanza verticale per fondazioni profonde:

Per elementi con pali: Portanza di punta e laterale

Per elementi con micropali: Portanza di punta e laterale

Metodi di calcolo della portanza di punta per fondazioni profonde:

Per terreni sciolti: Vesic

Riduzione della tensione litostatica: No

Per terreni lapidei: Terzaghi

Riduzione di Kishida per pali battuti o trivellati: Si

Metodo di calcolo del coefficiente di spinta orizzontale Ks: Tomlinson

Coefficienti parziali e totali di sicurezza per Tensioni Ammissibili e S.L.E. nel calcolo della portanza per fondazioni profonde:

Coeff. di sicurezza alla punta: 2,50

Coeff. di sicurezza lungo il fusto: 2,50

Coeff. di sicurezza lungo il bulbo: 2,50

Coeff. di sicurezza per palo in trazione: 2,50

Combinazioni di carico:

APPROCCIO PROGETTUALE TIPO 2 - Comb. (A1+M1+R3)

Coefficienti parziali e totali di sicurezza per S.L.U. nel calcolo della portanza per pali trivellati:

I coeff. A1 risultano combinati secondo lo schema presente nella relazione di calcolo della struttura.

- Coeff. M1 per Tan ϕ (statico): 1
- Coeff. M1 per c' (statico): 1
- Coeff. M1 per Cu (statico): 1
- Coeff. M1 per Tan ϕ (sismico): 1

- Coeff. M1 per c' (sismico): 1
- Coeff. M1 per Cu sismico): 1

- Coeff. R3 base: 1,35
- Coeff. R3 laterale in compressione: 1,15
- Coeff. R3 laterale in trazione: 1,25

Fattore di correlazione: 1,70

ARCHIVIO STRATIGRAFIE

Indice / Descrizione: 001 / Nuova stratigrafia n. 2

Numero strati: 1

Profondità falda: assente

Strato n. Neg.	Quota di riferimento	Spessore	Indice / Descrizione terreno	Attrito
1	da 0,0 a -5000,0 cm	5000,0 cm	002 / CONGLOMERATI-GHIAIE	Assente

ARCHIVIO TERRENI

Indice / Descrizione terreno: **002 / CONGLOMERATI-GHIAIE**

Comportamento del terreno: condizione drenata

Peso Spec.	P. Spec. Sat.	Angolo Res.	Coesione	Mod.Elast.	Mod.Edom.	Dens.Rel.	Poisson	C. Ades.
daN/cmc	daN/cmc	Gradi°	daN/cmq	daN/cmq	daN/cmq	%	%	
1,960 E-3	2,050 E-3	36,000	0,150	20000,000	32000,000	70,0	0,350	0,00

DATI GEOMETRICI DEGLI ELEMENTI COSTITUENTI LE FONDAZIONI PROFONDE

Elemento: 17 - Palo singolo - Tipologia pali: trivellati

X elem.	Y elem.	Prof.	Base	Lungh.	Altez.	Rot.	Grup.ap.	Ind.strat.
cm	cm cm	cm	cmcm	Gradi°	n.	n.		
0,0	-945,092,5	0,0	0,0170,0	0,00	17	001		

Dia. P.	Lun. P.	Lun. L.	Dist.P.	In. Px	In. Py	Dia. B.	Lun. B.	E.C.V.	E.C.C.	E.C.T.	Svin.testa	Vin.piede
cm	cm cm	cm	cmcm	cm	cm				codice	codice		
120,0	2500,0	0,0	0,00,0	0,0	0,0	0,0	1,00	1,00	1,00	0	0; 0; 0	

Palo	Asc. X'	Ord. Y'
n.	cm cm	
1	0,0 0,0	

Elemento: 30 - Palo singolo - Tipologia pali: trivellati

X elem.	Y elem.	Prof.	Base	Lungh.	Altez.	Rot.	Grup.ap.	Ind.strat.

cm	cm cm	cm	cmcm	Gradi°	n.	n.	
-472,5	-818,492,5	0,0	0,0170,0	0,00	30	001	

Dia. P.	Lun. P.	Lun. L.	Dist.P.	In. Px	In. Py	Dia. B.	Lun. B.	E.C.V.	E.C.C.	E.C.T.	Svin.testa	Vin.piede
cm	cm cm	cm	cmcm	cm	cm				codice	codice		
120,0	2500,0	0,0	0,00,0	0,0	0,0	0,0	1,00	1,00	1,00	0	0; 0; 0	

Palo	Asc. X'	Ord. Y'
n.	cm cm	
1	0,0 0,0	

Elemento: 31 - Palo singolo - Tipologia pali: trivellati

X elem.	Y elem.	Prof.	Base	Lungh.	Altez.	Rot.	Grup.ap.	Ind.strat.
cm	cm cm	cm	cmcm	Gradi°	n.	n.		
472,5	-818,492,5	0,0	0,0170,0	0,00	31	001		

Dia. P.	Lun. P.	Lun. L.	Dist.P.	In. Px	In. Py	Dia. B.	Lun. B.	E.C.V.	E.C.C.	E.C.T.	Svin.testa	Vin.piede
cm	cm cm	cm	cmcm	cm	cm				codice	codice		
120,0	2500,0	0,0	0,00,0	0,0	0,0	0,0	1,00	1,00	1,00	0	0; 0; 0	

Palo	Asc. X'	Ord. Y'
n.	cm cm	
1	0,0 0,0	

Elemento: 92 - Palo singolo - Tipologia pali: trivellati

X elem.	Y elem.	Prof.	Base	Lungh.	Altez.	Rot.	Grup.ap.	Ind.strat.
cm	cm cm	cm	cmcm	Gradi°	n.	n.		
-818,4	-472,592,5	0,0	0,0170,0	0,00	92	001		

Dia. P.	Lun. P.	Lun. L.	Dist.P.	In. Px	In. Py	Dia. B.	Lun. B.	E.C.V.	E.C.C.	E.C.T.	Svin.testa	Vin.piede
cm	cm cm	cm	cmcm	cm	cm				codice	codice		
120,0	2500,0	0,0	0,00,0	0,0	0,0	0,0	1,00	1,00	1,00	0	0; 0; 0	

Palo	Asc. X'	Ord. Y'
n.	cm cm	
1	0,0 0,0	

Elemento: 93 - Palo singolo - Tipologia pali: trivellati

X elem.	Y elem.	Prof.	Base	Lungh.	Altez.	Rot.	Grup.ap.	Ind.strat.
cm	cm cm	cm	cmcm	Gradi°	n.	n.		
818,4	-472,592,5	0,0	0,0170,0	0,00	93	001		

Dia. P.	Lun. P.	Lun. L.	Dist.P.	In. Px	In. Py	Dia. B.	Lun. B.	E.C.V.	E.C.C.	E.C.T.	Svin.testa	Vin.piede
cm	cm cm	cm	cmcm	cm	cm				codice	codice		
120,0	2500,0	0,0	0,00,0	0,0	0,0	0,0	1,00	1,00	1,00	0	0; 0; 0	

Palo	Asc. X'	Ord. Y'
n.	cm cm	
1	0,0 0,0	

Elemento: 247 - Palo singolo - Tipologia pali: trivellati

X elem.	Y elem.	Prof.	Base	Lungh.	Altez.	Rot.	Grup.ap.	Ind.strat.
cm	cm cm	cm	cmcm	Gradi°	n.	n.		
-945,0	0,0 92,5	0,0	0,0170,0	0,00	247	001		

Dia. P.	Lun. P.	Lun. L.	Dist.P.	In. Px	In. Py	Dia. B.	Lun. B.	E.C.V.	E.C.C.	E.C.T.	Svin.testa	Vin.piede
cm	cm cm	cm	cmcm	cm	cm				codice	codice		
120,0	2500,0	0,0	0,00,0	0,0	0,0	0,0	1,00	1,00	1,00	0	0; 0; 0	

Palo	Asc. X'	Ord. Y'
n.	cm cm	
1	0,0 0,0	

Elemento: 283 - Palo singolo - Tipologia pali: trivellati

X elem.	Y elem.	Prof.	Base	Lungh.	Altez.	Rot.	Grup.ap.	Ind.strat.
cm	cm cm	cm	cmcm	Gradi°	n.	n.		
945,0	0,0 92,5	0,0	0,0170,0	0,00	283	001		

Dia. P.	Lun. P.	Lun. L.	Dist.P.	In. Px	In. Py	Dia. B.	Lun. B.	E.C.V.	E.C.C.	E.C.T.	Svin.testa	Vin.piede
cm	cm cm	cm	cmcm	cm	cm				codice	codice		
120,0	2500,0	0,0	0,00,0	0,0	0,0	0,0	1,00	1,00	1,00	0	0; 0; 0	

Palo	Asc. X'	Ord. Y'
n.	cm cm	
1	0,0 0,0	

Elemento: 437 - Palo singolo - Tipologia pali: trivellati

X elem.	Y elem.	Prof.	Base	Lungh.	Altez.	Rot.	Grup.ap.	Ind.strat.
cm	cm cm	cm	cmcm	Gradi°	n.	n.		
-818,4	472,592,5	0,0	0,0170,0	0,00	437	001		

Dia. P.	Lun. P.	Lun. L.	Dist.P.	In. Px	In. Py	Dia. B.	Lun. B.	E.C.V.	E.C.C.	E.C.T.	Svin.testa	Vin.piede
cm	cm cm	cm	cmcm	cm	cm				codice	codice		
120,0	2500,0	0,0	0,00,0	0,0	0,0	0,0	1,00	1,00	1,00	0	0; 0; 0	

Palo	Asc. X'	Ord. Y'
n.	cm cm	
1	0,0 0,0	

Elemento: 438 - Palo singolo - Tipologia pali: trivellati

X elem.	Y elem.	Prof.	Base	Lungh.	Altez.	Rot.	Grup.ap.	Ind.strat.
cm	cm cm	cm	cmcm	Gradi°	n.	n.		
818,4	472,592,5	0,0	0,0170,0	0,00	438	001		

Dia. P.	Lun. P.	Lun. L.	Dist.P.	In. Px	In. Py	Dia. B.	Lun. B.	E.C.V.	E.C.C.	E.C.T.	Svin.testa	Vin.piede
cm	cm cm	cm	cmcm	cm	cm				codice	codice		
120,0	2500,0	0,0	0,00,0	0,0	0,0	0,0	1,00	1,00	1,00	0	0; 0; 0	

Palo	Asc. X'	Ord. Y'
n.	cm cm	

1	0,0	0,0

Elemento: 499 - Palo singolo - Tipologia pali: trivellati

X elem.	Y elem.	Prof.	Base	Lungh.	Altez.	Rot.	Grup.ap.	Ind.strat.
cm	cm cm	cm	cmcm	Gradi°	n.	n.		
-472,5	818,492,5	0,0	0,0170,0	0,00	499	001		

Dia. P.	Lun. P.	Lun. L.	Dist.P.	In. Px	In. Py	Dia. B.	Lun. B.	E.C.V.	E.C.C.	E.C.T.	Svin.testa	Vin.piede
cm	cm cm	cm	cmcm	cm	cm				codice	codice		
120,0	2500,0	0,0	0,00,0	0,0	0,0	0,0	1,00	1,00	1,00	0	0; 0; 0	

Palo	Asc. X'	Ord. Y'
n.	cm cm	
1	0,0 0,0	

Elemento: 500 - Palo singolo - Tipologia pali: trivellati

X elem.	Y elem.	Prof.	Base	Lungh.	Altez.	Rot.	Grup.ap.	Ind.strat.
cm	cm cm	cm	cmcm	Gradi°	n.	n.		
472,5	818,492,5	0,0	0,0170,0	0,00	500	001		

Dia. P.	Lun. P.	Lun. L.	Dist.P.	In. Px	In. Py	Dia. B.	Lun. B.	E.C.V.	E.C.C.	E.C.T.	Svin.testa	Vin.piede
cm	cm cm	cm	cmcm	cm	cm				codice	codice		
120,0	2500,0	0,0	0,00,0	0,0	0,0	0,0	1,00	1,00	1,00	0	0; 0; 0	

Palo	Asc. X'	Ord. Y'
n.	cm cm	
1	0,0 0,0	

Elemento: 513 - Palo singolo - Tipologia pali: trivellati

X elem.	Y elem.	Prof.	Base	Lungh.	Altez.	Rot.	Grup.ap.	Ind.strat.
cm	cm cm	cm	cmcm	Gradi°	n.	n.		
0,0	945,092,5	0,0	0,0170,0	0,00	513	001		

Dia. P.	Lun. P.	Lun. L.	Dist.P.	In. Px	In. Py	Dia. B.	Lun. B.	E.C.V.	E.C.C.	E.C.T.	Svin.testa	Vin.piede
cm	cm cm	cm	cmcm	cm	cm				codice	codice		
120,0	2500,0	0,0	0,00,0	0,0	0,0	0,0	1,00	1,00	1,00	0	0; 0; 0	

Palo	Asc. X'	Ord. Y'
n.	cm cm	
1	0,0 0,0	

Elemento: Palo n. 17

Cmb	Tipo	Sism.	N	Tx	Ty	Mx	My
n.			N	N	N	N mm	N mm
001	SLU STR	No	-423900.0	-71862.1	-47956.5	-110400000	350000000
002	SLE freq	No	-326100.0	-55278.5	-36889.6	-84910000	269300000
003	SLU STR	No	-326100.0	102300.0	-36889.6	-84910000	-175300000

Elemento: Palo n. 30

Cmb	Tipo	Sism.	N	Tx	Ty	Mx	My
n.			N	N	N	N mm	N mm
001	SLU STR	No	-62802.5	-30476.5	71952.4	171800000	251100000
002	SLE freq	No	-48309.6	-23443.5	55348.0	132200000	193100000
003	SLU STR	No	-364300.0	76105.4	-45235.0	-107200000	-113200000

Elemento: Palo n. 31

Cmb	Tipo	Sism.	N	Tx	Ty	Mx	My
n.			N	N	N	N mm	N mm
001	SLU STR	No	-785000.0	17468.1	-155000.0	-363000000	140700000
002	SLE freq	No	-603800.0	13437.0	-119200.0	-279200000	108200000
003	SLU STR	No	-287800.0	113000.0	-18652.4	-39830000	-198100000

Elemento: Palo n. 92

Cmb	Tipo	Sism.	N	Tx	Ty	Mx	My
n.			N	N	N	N mm	N mm
001	SLU STR	No	201500.0	82798.7	89924.5	212900000	-17040000
002	SLE freq	No	155000.0	63691.3	69172.7	163700000	-13100000
003	SLU STR	No	-392300.0	47096.9	-31410.3	-75670000	-42960000

Elemento: Palo n. 93

Cmb	Tipo	Sism.	N	Tx	Ty	Mx	My
n.			N	N	N	N mm	N mm
001	SLU STR	No	-1049000.0	165800.0	-137800.0	-323100000	-208200000
002	SLE freq	No	-807100.0	127600.0	-106000.0	-248600000	-160200000
003	SLU STR	No	-259800.0	111000.0	-5448.0	-9165000	-190000000

Elemento: Palo n. 247

Cmb	Tipo	Sism.	N	Tx	Ty	Mx	My
n.			N	N	N	N mm	N mm
001	SLU STR	No	298300.0	142100.0	1142.9	1689000	-157000000
002	SLE freq	No	229500.0	109300.0	879.2	1299000	-120700000
003	SLU STR	No	-402500.0	34676.0	879.2	1299000	-12380000

Elemento: Palo n. 283

Cmb	Tipo	Sism.	N	Tx	Ty	Mx	My
n.			N	N	N	N mm	N mm
001	SLU STR	No	-1146000.0	238100.0	-1062.6	-1472000	-377800000
002	SLE freq	No	-881500.0	183100.0	-817.4	-1132000	-290600000
003	SLU STR	No	-249400.0	108500.0	-817.4	-1132000	-182300000

Elemento: Palo n. 437

Cmb	Tipo	Sism.	N	Tx	Ty	Mx	My
n.			N	N	N	N mm	N mm
001	SLU STR	No	201600.0	83876.5	-87942.9	-209900000	-18440000
002	SLE freq	No	155100.0	64520.4	-67648.4	-161400000	-14180000

003	SLU STR	No	-392300.0	47926.0	32934.6	77960000	-44040000

Elemento: Palo n. 438

Cmb	Tipo	Sism.	N	Tx	Ty	Mx	My
n.			N	N	N	N mm	N mm
001	SLU STR	No	-1049000.0	167000.0	136000.0	320600000	-209900000
002	SLE freq	No	-807000.0	128500.0	104600.0	246600000	-161500000
003	SLU STR	No	-259600.0	111900.0	4030.5	7177000	-191400000

Elemento: Palo n. 499

Cmb	Tipo	Sism.	N	Tx	Ty	Mx	My
n.			N	N	N	N mm	N mm
001	SLU STR	No	-62797.0	-28450.1	-70874.6	-170200000	248100000
002	SLE freq	No	-48305.4	-21884.7	-54518.9	-130900000	190900000
003	SLU STR	No	-364300.0	77664.2	46064.1	108500000	-115400000

Elemento: Palo n. 500

Cmb	Tipo	Sism.	N	Tx	Ty	Mx	My
n.			N	N	N	N mm	N mm
001	SLU STR	No	-784700.0	19565.6	153900.0	361500000	137600000
002	SLE freq	No	-603600.0	15050.4	118400.0	278000000	105800000
003	SLU STR	No	-287600.0	114600.0	17825.3	38640000	-200500000

Elemento: Palo n. 513

Cmb	Tipo	Sism.	N	Tx	Ty	Mx	My
n.			N	N	N	N mm	N mm
001	SLU STR	No	-423800.0	-69410.4	47938.0	110400000	346400000
002	SLE freq	No	-326000.0	-53392.6	36875.4	84900000	266400000
003	SLU STR	No	-326000.0	104200.0	36875.4	84900000	-178100000

VALORI DI CALCOLO DELLA PORTANZA PER FONDAZIONI PROFONDE

Elemento: 17 - Palo singolo

Nq = 253.942, σpunta = 5.081, ϕ = 33.0, Nc = 389.496, c punta = 0.150

Port. lat. = 7427216.0 N, Port. punta = 152543300.0 N, P.P.Palo = 706858.4 N

Cmb.	Tipo	Palo	coord.X	coord.Y	N	N lim	Ver.N	Stato
n.	n.	mm	mm	N	N			
001	SLU STR	1	0.00	0.00	-423900.0	-69559900.0	0,006	Ok
003	SLU STR	1	0.00	0.00	-326100.0	-69559900.0	0,005	Ok

Situazione più gravosa in cmb n. 1

Elemento: 30 - Palo singolo

Nq = 253.942, σpunta = 5.081, ϕ = 33.0, Nc = 389.496, c punta = 0.150

Port. lat. = 7427216.0 N, Port. punta = 152543300.0 N, P.P.Palo = 706858.4 N

Cmb.	Tipo	Palo	coord.X	coord.Y	N	N lim	Ver.N	Stato
n.	n.	mm	mm	N	N			
001	SLU STR	1	0.00	0.00	-62802.5	-69559900.0	0,001	Ok
003	SLU STR	1	0.00	0.00	-364300.0	-69559900.0	0,005	Ok

Situazione più gravosa in cmb n. 3

Elemento: 31 - Palo singolo

Nq = 253.942, σpunta = 5.081, ϕ = 33.0, Nc = 389.496, c punta = 0.150

Port. lat. = 7427216.0 N, Port. punta = 152543300.0 N, P.P.Palo = 706858.4 N

Cmb.	Tipo	Palo	coord.X	coord.Y	N	N lim	Ver.N	Stato
n.	n.	mm	mm	N	N			
001	SLU STR	1	0.00	0.00	-785000.0	-69559900.0	0,011	Ok
003	SLU STR	1	0.00	0.00	-287800.0	-69559900.0	0,004	Ok

Situazione più gravosa in cmb n. 1

Elemento: 92 - Palo singolo

Nq = 253.942, σpunta = 5.081, ϕ = 33.0, Nc = 389.496, c punta = 0.150

Port. lat. = 7427216.0 N, Port. punta = 152543300.0 N, P.P.Palo = 706858.4 N

Cmb.	Tipo	Palo	coord.X	coord.Y	N	N lim	Ver.N	Stato
n.	n.	mm	mm	N	N			
001	SLU STR	1	0.00	0.00	201500.0	4202019.0	0,048	Ok
003	SLU STR	1	0.00	0.00	-392300.0	-69559900.0	0,006	Ok

Situazione più gravosa in cmb n. 1

Elemento: 93 - Palo singolo

Nq = 253.942, σpunta = 5.081, ϕ = 33.0, Nc = 389.496, c punta = 0.150

Port. lat. = 7427216.0 N, Port. punta = 152543300.0 N, P.P.Palo = 706858.4 N

Cmb.	Tipo	Palo	coord.X	coord.Y	N	N lim	Ver.N	Stato
n.	n.	mm	mm	N	N			
001	SLU STR	1	0.00	0.00	-1049000.0	-69559900.0	0,015	Ok
003	SLU STR	1	0.00	0.00	-259800.0	-69559900.0	0,004	Ok

Situazione più gravosa in cmb n. 1

Elemento: 247 - Palo singolo

Nq = 253.942, σpunta = 5.081, ϕ = 33.0, Nc = 389.496, c punta = 0.150

Port. lat. = 7427216.0 N, Port. punta = 152543300.0 N, P.P.Palo = 706858.4 N

Cmb.	Tipo	Palo	coord.X	coord.Y	N	N lim	Ver.N	Stato
n.	n.	mm	mm	N	N			
001	SLU STR	1	0.00	0.00	298300.0	4202019.0	0,071	Ok
003	SLU STR	1	0.00	0.00	-402500.0	-69559900.0	0,006	Ok

Situazione più gravosa in cmb n. 1

Elemento: 283 - Palo singolo

Nq = 253.942, σpunta = 5.081, ϕ = 33.0, Nc = 389.496, c punta = 0.150

Port. lat. = 7427216.0 N, Port. punta = 152543300.0 N, P.P.Palo = 706858.4 N

Cmb.	Tipo	Palo	coord.X	coord.Y	N	N lim	Ver.N	Stato
n.	n.	mm	mm	N	N			
001	SLU STR	1	0.00	0.00	-1146000.0	-69559900.0	0,016	Ok
003	SLU STR	1	0.00	0.00	-249400.0	-69559900.0	0,004	Ok

Situazione più gravosa in cmb n. 1

Elemento: 437 - Palo singolo

Nq = 253.942, σpunta = 5.081, ϕ = 33.0, Nc = 389.496, c punta = 0.150

Port. lat. = 7427216.0 N, Port. punta = 152543300.0 N, P.P.Palo = 706858.4 N

Cmb.	Tipo	Palo	coord.X	coord.Y	N	N lim	Ver.N	Stato
n.	n.	mm	mm	N	N			
001	SLU STR	1	0.00	0.00	201600.0	4202019.0	0,048	Ok
003	SLU STR	1	0.00	0.00	-392300.0	-69559900.0	0,006	Ok

Situazione più gravosa in cmb n. 1

Elemento: 438 - Palo singolo

Nq = 253.942, σpunta = 5.081, ϕ = 33.0, Nc = 389.496, c punta = 0.150

Port. lat. = 7427216.0 N, Port. punta = 152543300.0 N, P.P.Palo = 706858.4 N

Cmb.	Tipo	Palo	coord.X	coord.Y	N	N lim	Ver.N	Stato
n.	n.	mm	mm	N	N			
001	SLU STR	1	0.00	0.00	-1049000.0	-69559900.0	0,015	Ok
003	SLU STR	1	0.00	0.00	-259600.0	-69559900.0	0,004	Ok

Situazione più gravosa in cmb n. 1

Elemento: 499 - Palo singolo

Nq = 253.942, σpunta = 5.081, ϕ = 33.0, Nc = 389.496, c punta = 0.150

Port. lat. = 7427216.0 N, Port. punta = 152543300.0 N, P.P.Palo = 706858.4 N

Cmb.	Tipo	Palo	coord.X	coord.Y	N	N lim	Ver.N	Stato

n.	n.	mm	mm	N	N			
001	SLU STR	1	0.00	0.00	-62797.0	-69559900.0	0,001	Ok
003	SLU STR	1	0.00	0.00	-364300.0	-69559900.0	0,005	Ok

Situazione più gravosa in cmb n. 3

Elemento: 500 - Palo singolo

Nq = 253.942, σpunta = 5.081, ϕ = 33.0, Nc = 389.496, c punta = 0.150

Port. lat. = 7427216.0 N, Port. punta = 152543300.0 N, P.P.Palo = 706858.4 N

Cmb.	Tipo	Palo	coord.X	coord.Y	N	N lim	Ver.N	Stato
n.	n.	mm	mm	N	N			
001	SLU STR	1	0.00	0.00	-784700.0	-69559900.0	0,011	Ok
003	SLU STR	1	0.00	0.00	-287600.0	-69559900.0	0,004	Ok

Situazione più gravosa in cmb n. 1

Elemento: 513 - Palo singolo

Nq = 253.942, σpunta = 5.081, ϕ = 33.0, Nc = 389.496, c punta = 0.150

Port. lat. = 7427216.0 N, Port. punta = 152543300.0 N, P.P.Palo = 706858.4 N

Cmb.	Tipo	Palo	coord.X	coord.Y	N	N lim	Ver.N	Stato
n.	n.	mm	mm	N	N			
001	SLU STR	1	0.00	0.00	-423800.0	-69559900.0	0,006	Ok
003	SLU STR	1	0.00	0.00	-326000.0	-69559900.0	0,005	Ok

Situazione più gravosa in cmb n. 1

VALORI DI CALCOLO DEI CEDIMENTI PER FONDAZIONI PROFONDE

Elemento: 17 - Palo singolo

Cmb.	(Tipo)	Palo	coord.X	coord.Y	N	Ced.Vert
n.	n.	mm	mm	N	mm	
002	(SLE freq)	1	0.00	0.00	-326100.0	0.24

Elemento: 30 - Palo singolo

Cmb.	(Tipo)	Palo	coord.X	coord.Y	N	Ced.Vert
n.	n.	mm	mm	N	mm	
002	(SLE freq)	1	0.00	0.00	-48309.6	0.04

Elemento: 31 - Palo singolo

Cmb.	(Tipo)	Palo	coord.X	coord.Y	N	Ced.Vert
n.	n.	mm	mm	N	mm	

002	(SLE freq)	1	0.00	0.00	-603800.0	0.45

Elemento: 92 - Palo singolo

Cmb. (Tipo)		Palo	coord.X	coord.Y	N	Ced.Vert
n.	n.	mm	mm	N	mm	
002	(SLE freq)	1	0.00	0.00	155000.0	0.11

Elemento: 93 - Palo singolo

Cmb. (Tipo)		Palo	coord.X	coord.Y	N	Ced.Vert
n.	n.	mm	mm	N	mm	
002	(SLE freq)	1	0.00	0.00	-807100.0	0.60

Elemento: 247 - Palo singolo

Cmb. (Tipo)		Palo	coord.X	coord.Y	N	Ced.Vert
n.	n.	mm	mm	N	mm	
002	(SLE freq)	1	0.00	0.00	229500.0	0.17

Elemento: 283 - Palo singolo

Cmb. (Tipo)		Palo	coord.X	coord.Y	N	Ced.Vert
n.	n.	mm	mm	N	mm	
002	(SLE freq)	1	0.00	0.00	-881500.0	0.65

Elemento: 437 - Palo singolo

Cmb. (Tipo)		Palo	coord.X	coord.Y	N	Ced.Vert
n.	n.	mm	mm	N	mm	
002	(SLE freq)	1	0.00	0.00	155100.0	0.11

Elemento: 438 - Palo singolo

Cmb. (Tipo)		Palo	coord.X	coord.Y	N	Ced.Vert
n.	n.	mm	mm	N	mm	
002	(SLE freq)	1	0.00	0.00	-807000.0	0.60

Elemento: 499 - Palo singolo

Cmb. (Tipo)		Palo	coord.X	coord.Y	N	Ced.Vert
n.	n.	mm	mm	N	mm	
002	(SLE freq)	1	0.00	0.00	-48305.4	0.04

Elemento: 500 - Palo singolo

Cmb. (Tipo)		Palo	coord.X	coord.Y	N	Ced.Vert
n.	n.	mm	mm	N	mm	
002	(SLE freq)	1	0.00	0.00	-603600.0	0.45

Elemento: 513 - Palo singolo

Cmb. (Tipo)	Palo	coord.X	coord.Y	N	Ced.Vert

n.	n.	mm	mm	N	mm
002	(SLE freq)	1 0.00	0.00	-326000.0	0.24

CONCLUSIONI

Considerato quanto sopra la struttura è idonea allo scopo per cui è stata progettata. Si precisa ancora una volta che il calcolo ha carattere preliminare, dovrà essere verificato in fase esecutiva considerando i carichi effettivamente trasmessi dalla sovrastruttura e le indagini geognostiche eseguite.

Il Tecnico
Ing. Leonardo Sblendido