DWG. No: 23-0-50-100

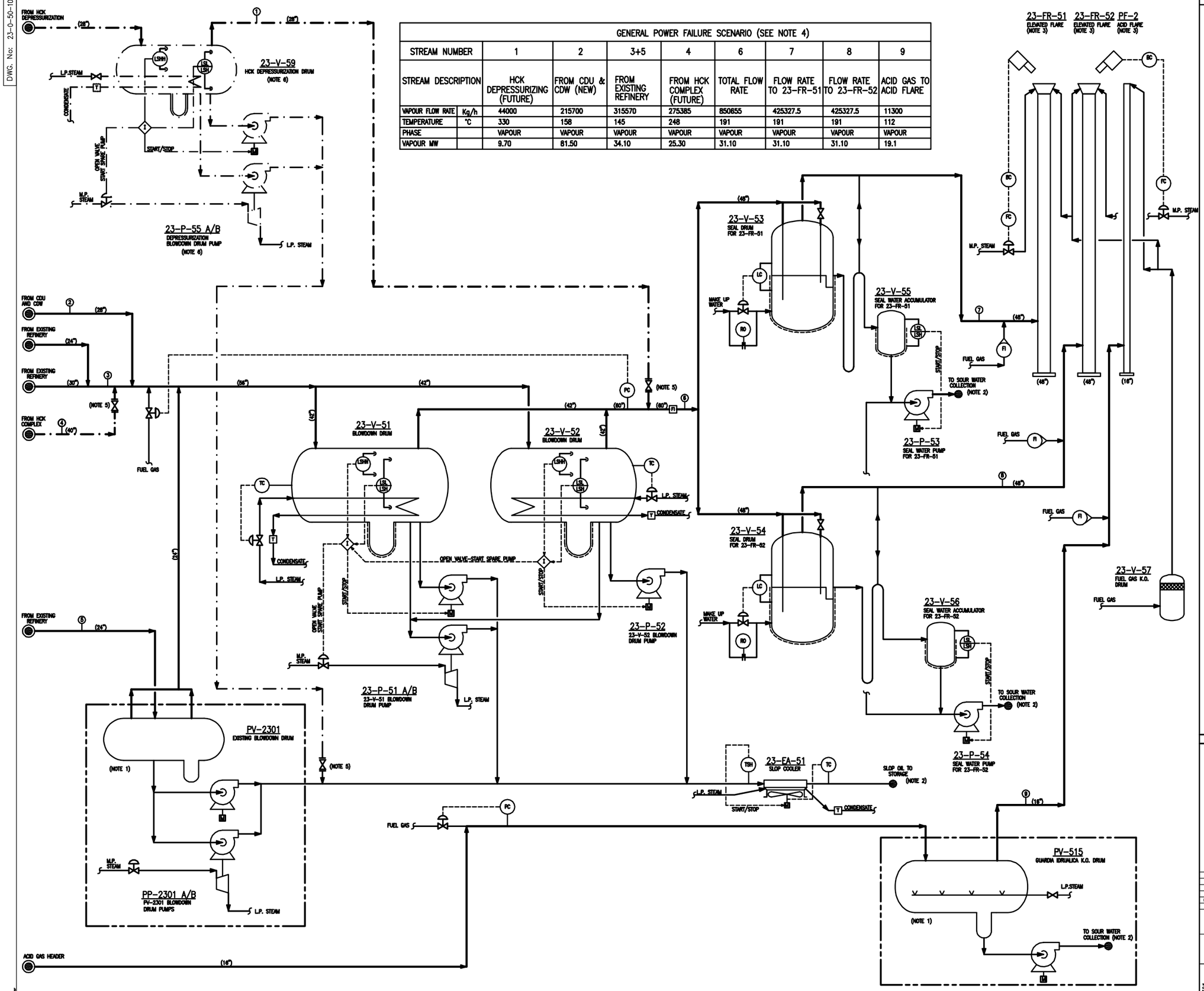

GENERAL POWER FAILURE SCENARIO (SEE NOTE 4)									
STREAM NUMBER		1	2	3+5	4	6	7	8	9
STREAM DESCRIPTION		HCK DEPRESSURIZING (FUTURE)	FROM CDU & CDW (NEW)	FROM EXISTING REFINERY	FROM HCK COMPLEX (FUTURE)	TOTAL FLOW RATE	FLOW RATE TO 23-FR-51	FLOW RATE TO 23-FR-52	ACID GAS TO ACID FLARE
VAPOUR FLOW RATE	Kg/h	44000	215700	315570	275385	850655	425327.5	425327.5	11300
TEMPERATURE	°C	330	158	145	248	191	191	191	112
PHASE		VAPOUR	VAPOUR	VAPOUR	VAPOUR	VAPOUR	VAPOUR	VAPOUR	VAPOUR
VAPOUR MW		9.70	81.50	34.10	25.30	31.10	31.10	31.10	19.1

GENERAL NOTES

1. EXISTING ARRANGEMENT TO BE RELISED AND MAINTAINED IN POSITION.
2. TAMOIL TO CONFIRM FOR THE DESTINATION.
3. THE FLARES (23-FR-51,52 AND PF-2) SHALL BE ARRANGED IN THE SAME ELEVATED STRUCTURE.
4. MATERIAL BALANCE WITH PRELIMINARY VALUES; IT WILL BE UPDATED DURING THE PROJECT DEVELOPEMENT.
5. TEMPORARY VALVE.
6. FUTURE EQUIPMENT.

ALL THE EQUIPMENT ARE NEW, UNLESS THE PV-2301, PV-515 AND PP-2301A/B

LEGEND

- STREAM NUMBERING
- PROCESS STREAM FROM B.L.
- TEMPERATURE, °C
- FUTURE EQUIPMENT/ARRANGEMENT
- PRESSURE, barg
- DUTY, MMKcal/h
- FLOW, kg/h
- PROCESS STREAM TO B.L.

REV.	DATE	DESCRIPTION	DRAW	F.B. BY	S.C. CHD	S.C. APP.
LOO	06/12/07	PRELIMINARY ISSUE FOR COMMENT				

REVISIONS

Tamoil Raffinazione S.p.A. Raffineria di Cremona — TAMOIL MIP PROJECT — CREMONA ITALY

APPROVED FOR CONSTRUCTION
DWG. REV. DATE
SIGNATURE

PROCESS FLOW DIAGRAM AND MATERIAL BALANCE
UNIT 23-FLARE SYSTEM

ORDER N°
SUPPLIER
CONTRACT N° 1-BD-0381A
FRAME N°
CLIENT DWG N°
SCALE
SHEET OF

FW DWG N° BD0381A-50-23-101 REV. LOO
SHEET 1 OF 1

THIS DRAWING IS THE PROPERTY OF FOSTER WHEELER ITALIANA AND IS LENT WITHOUT CONSIDERATION OTHER THAN THE BORROWER'S AGREEMENT THAT IT SHALL NOT BE REPRODUCED COPIED LENT OR DISPOSED OF DIRECTLY OR INDIRECTLY NOR USED FOR ANY PURPOSE OTHER THAN THAT FOR WHICH IT IS SPECIFICALLY FURNISHED THE APPARATUS SHOWN IN THE DRAWING IS COVERED BY PATENTS.

CAD FILE NAME: 23-0-50-100_DWG.

FORM: UNI A0 (841x1189)