1) Qualora il presente tratto di linea non dovra' superare i 3m di lunghezza;

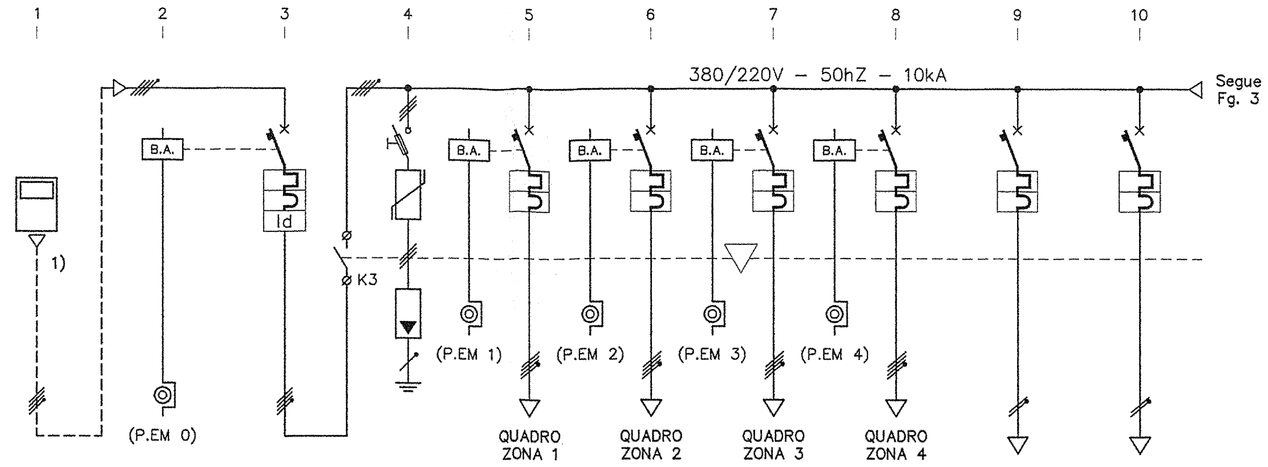

	DESCRIZIONE CIRCUITO	MISURATORE FISCALE	BOBINA DI APERTURA	GENERALE QUADRO	PROTEZIONE SCARICATORI	ALIMENTAZ. Q. ZONA 1	ALIMENTAZ. Q. ZONA 2	ALIMENTAZ. Q. ZONA 3	ALIMENTAZ. Q. ZONA 4	CIRCUITO LUCE CABINA	CIRCUITO EM. CABINA
CARICO	Carico di progetto (Kw)	---	---	---	---	---	---	---	---	---	---
	Coeff. cont./Util. (Kc/Ku) (A)	---	---	---	---	---	---	---	---	---	---
	Corrente Ib (A)	---	---	---	---	---	---	---	---	---	---
APPARECCHIO	Articolo	---	---	---	---	---	---	---	---	---	---
	Modulo differenziale	---	---	---	---	---	---	---	---	---	---
	Bobina apert./Relè	---	---	---	---	---	---	---	---	---	---
	Corrente nominale (A)	---	---	125	125	50	16	32	32	6	6
	Corr. diff. / ritardo diff. (A)	---	---	0,5	---	---	---	---	---	---	---
	N. poli	---	---	4	4	4	4	4	4	2	2
	Potere d' Interruzione (A)	---	---	10000	10000	10000	10000	10000	10000	10000	10000
LINEA	Sezione fase mmq.	95	---	---	---	16	4	16	25	1,5	1,5
	Sezione neutro mmq	95	---	---	---	16	4	16	25	1,5	1,5
	Sezione Pe mmq	95	---	---	---	16	4	16	25	1,5	1,5
	Tipo di cavo	N1VV-K	---	---	---	N1VV-K	N1VV-K	N1VV-K	N1VV-K	N07V-K	N07V-K
	Tipo di posa	---	---	---	---	---	---	---	---	---	---
	N. circuiti raggruppati	---	---	---	---	---	---	---	---	---	---
	Temperatura ambiente	---	---	---	---	---	---	---	---	---	---
	Portata cavo (Iz) (A)	---	---	---	---	---	---	---	---	---	---
	Lunghezza linea in metri	---	---	---	---	50m	45m	115m	160m	20m	20m
	C.d.T. max (V) / effettiva %	---	---	---	---	1%	1,9%	1,6%	1,6%	0,8%	0,8%
	Note:	---	---	---	---	---	---	---	---	---	---

1) Qualora il presente tratto di linea non dovra' superare i 3m di lunghezza;

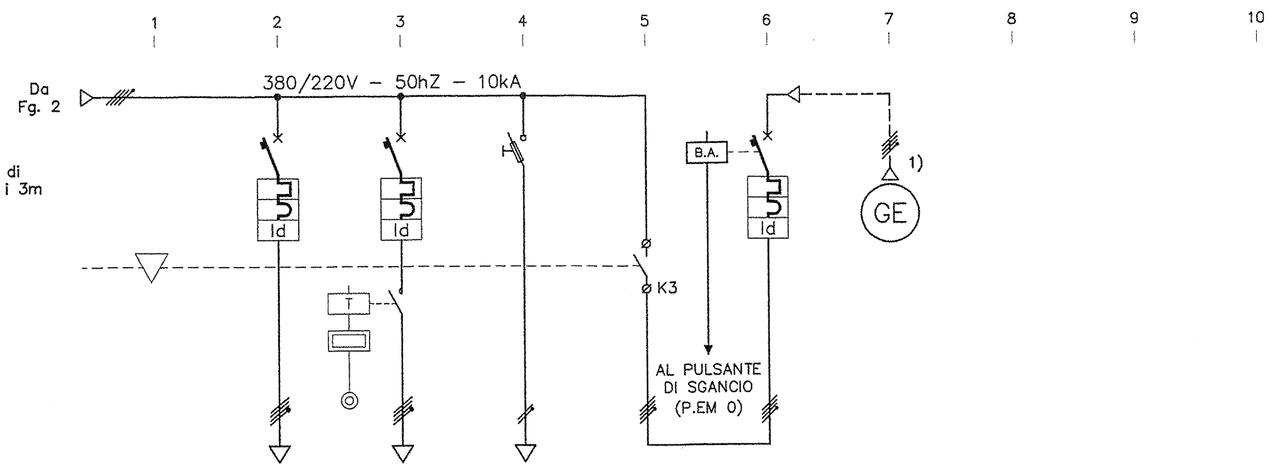

	DESCRIZIONE CIRCUITO		F. MOTRICE CABINA	ILLUMINAZIONE ESTERNA	ALIMENTAZ. AUX	CONTATTO DI SCAMBIO	GENERALE G.E.	GRUPPO ELETTROGENO			
CARICO	Carico di progetto (Kw)		---	---	---	---	---	---			
	Coeff. cont./Util. (Kc/Ku) (A)		---	---	---	---	---	---			
	Corrente Ib (A)		---	---	---	---	---	---			
APPARECCHIO	Articolo		---	---	---	---	---	---			
	Modulo differenziale		---	---	---	---	---	---			
	Bobina apert./Relè		---	---	---	---	---	---			
	Corrente nominale (A)		16	16	10	125	125	---			
	Corr. diff. / ritardo diff. (A)		0,03	0,03	---	---	0,5	---			
	N. poli		4	4	2	4	4	---			
	Potere d' Interruzione (A)		10000	10000	10000	---	10000	---			
LINEA	Sezione fase mmq.		2,5	16	---	---	---	95			
	Sezione neutro mmq		2,5	16	---	---	---	95			
	Sezione Pe mmq		2,5	16	---	---	---	95			
	Tipo di cavo		N07V-K	N1VV-K	---	---	---	N1VV-K			
	Tipo di posa		---	---	---	---	---	---			
	N. circuiti raggruppati		---	---	---	---	---	---			
	Temperatura ambiente		---	---	---	---	---	---			
	Portata cavo (Iz) (A)		---	---	---	---	---	---			
	Lunghezza linea in metri		20	200	---	---	---	---			
	C.d.T. max (V) / effettiva %		1,8	1,4	---	---	---	---			
	Note:		---	---	---	---	---	---			

CONSORZIO DI BONIFICA DELLA BARAGGIA BIELLESE E VERCELLESE

RIFACIMENTO INVASO SUL TORRENTE SESSERA IN SOSTITUZIONE DELL'ESISTENTE PER IL SUPERAMENTO DELLE CRISI IDRICHE RICORRENTI, IL MIGLIORAMENTO DELL'EFFICIENZA IDRICA DEGLI INVASI ESISTENTI SUI TORRENTI RAVASANELLA ED OSTOLA, LA VALORIZZAZIONE AMBIENTALE DEL COMPRENSORIO

DATA: APRILE 2010

AGGIORNAMENTO PROGETTO: -

ATTIVITA' DI PROGETTAZIONE:

CONSORZIO DI BONIFICA DELLA BARAGGIA BIELLESE E VERCELLESE
STECI s.r.l.
SOCIETA' DI INGEGNERIA
13100 VERCELLI – C.so Libertà, 162
Tel.(0161)211335–Fax(0161)259070–email: steci@steci.191.it

IL PROGETTISTA
(Dott. Ing. Domenico CASTELLI)

UTILIZZAZIONE IDROPOTABILE

SCHEMA UNIFILARE
QUADRO ELETTRICO GENERALE DI DISTRIBUZIONE
POTENZIAMENTO SISTEMA
DI POTABILIZZAZIONE ESISTENTE
SBARRAMENTO SUL T. OSTOLA

TAVOLA N.: DI 134

SCALA DISEGNO: -

PRATICA N 10131D
ARCH. N OI 181
FILE : 10131D-DI134

COLLABORAZIONE:

PROGETTO DEFINITIVO

REVISIONI ELABORATI	N°			
	DATA			
CONTROLLO		DISEGNATORE	CONTROLLO	APPROVAZIONE
	FIRMA	F.C.	M.P.	D.C.