LIVELLETTE: D=12.34 L=2174.72 P=0.57% — D=20.75 L=4150.16 P=0.50%

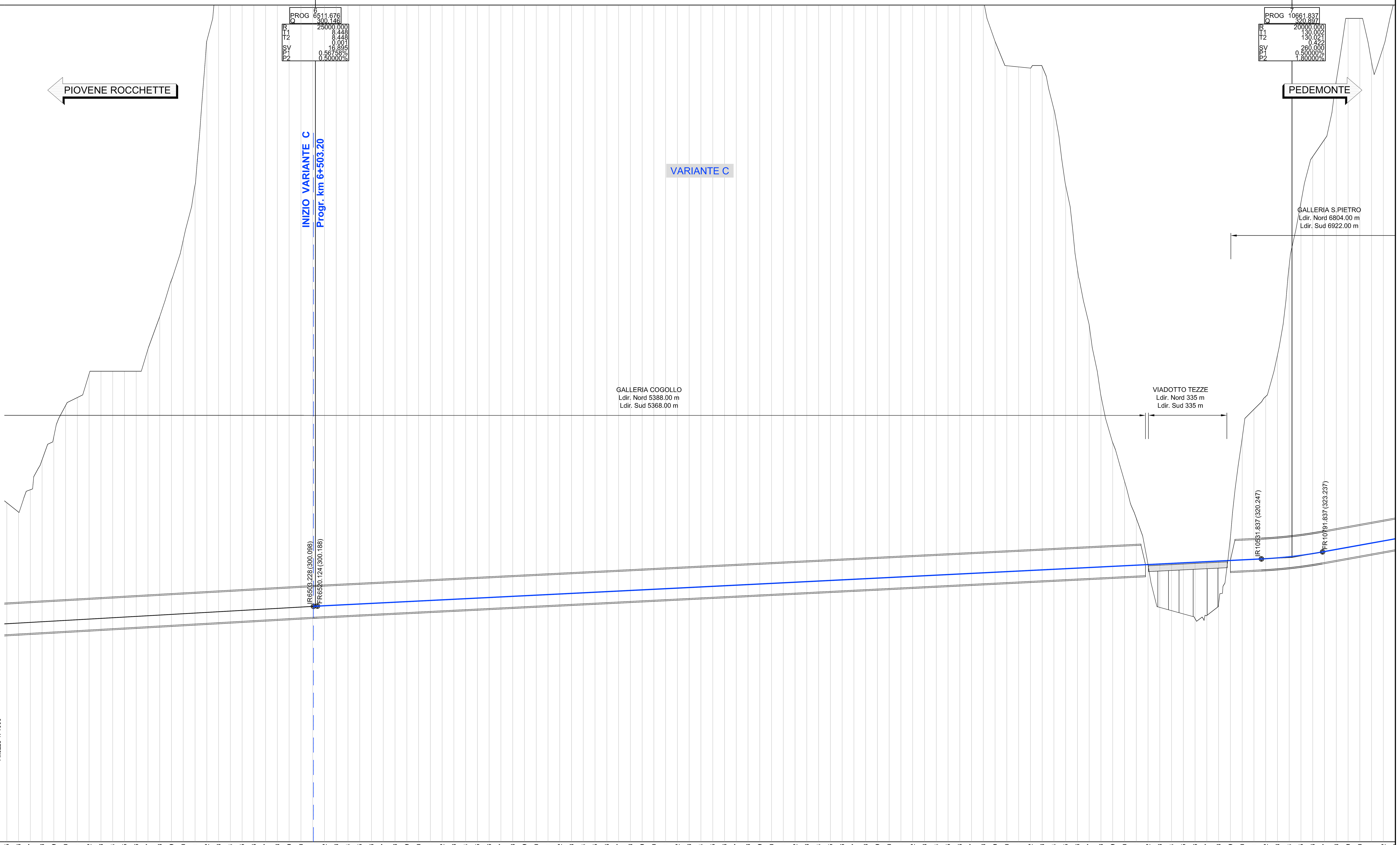

No. SEZIONI	DISTANZE PROGRESSIVE	DISTANZE PARZIALI	QUOTE TERRENO	QUOTE PROGETTO	DIFFERENZA QUOTE PROGETTO/TERRENO
105	5200.00	50.0	344.12	292.70	-51.42
106	5250.00	50.0	340.18	292.99	-47.19
107	5300.00	50.0	349.64	293.27	-56.38
108	5350.00	50.0	362.37	293.55	-68.82
109	5400.00	50.0	372.36	293.84	-78.52
110	5450.00	50.0	385.47	294.12	-91.35
111	5500.00	50.0	388.87	294.40	-94.46
112	5550.00	50.0	398.98	294.69	-104.29
113	5600.00	50.0	400.00	294.97	-105.03
114	5650.00	50.0	400.00	295.26	-104.74
115	5700.00	50.0	400.00	295.54	-104.46
116	5750.00	50.0	400.00	295.82	-104.18
117	5800.00	50.0	409.50	296.11	-113.39
118	5850.00	50.0	423.24	296.39	-126.85
119	5900.00	50.0	438.80	296.67	-142.12
120	5950.00	50.0	455.83	296.96	-158.87
121	6000.00	50.0	479.17	297.24	-181.93
122	6050.00	50.0	540.39	297.53	-242.87
123	6100.00	50.0	594.99	297.81	-297.18
124	6150.00	50.0	675.52	298.09	-377.43
125	6200.00	50.0	724.47	298.38	-426.09
126	6250.00	50.0	785.79	298.66	-487.13
127	6300.00	50.0	851.34	298.94	-552.39
128	6350.00	50.0	885.05	299.23	-585.82
129	6400.00	50.0	921.57	299.51	-622.05
130	6450.00	50.0	936.83	299.80	-637.03
131	6500.00	50.0	950.23	300.08	-650.15
132	6550.00	50.0	977.68	300.34	-677.34
133	6600.00	50.0	1017.96	300.59	-717.37
134	6650.00	50.0	1057.48	300.84	-756.64
135	6700.00	50.0	1091.25	301.09	-790.16
136	6750.00	50.0	1104.72	301.34	-803.39
137	6800.00	50.0	1129.28	301.59	-827.69
138	6850.00	50.0	1151.08	301.84	-849.24
139	6900.00	50.0	1186.22	302.09	-884.13
140	6950.00	50.0	1190.00	302.34	-887.66
141	7000.00	50.0	1194.34	302.59	-891.75
142	7050.00	50.0	1196.40	302.84	-893.56
143	7100.00	50.0	1170.00	303.09	-866.91
144	7150.00	50.0	1171.56	303.34	-868.23
145	7200.00	50.0	1225.18	303.59	-921.59
146	7250.00	50.0	1328.02	303.84	-1024.19
147	7300.00	50.0	1323.94	304.09	-1019.85
148	7350.00	50.0	1314.37	304.34	-1010.03
149	7400.00	50.0	1306.70	304.59	-1002.11
150	7450.00	50.0	1299.25	304.84	-994.41
151	7500.00	50.0	1288.60	305.09	-983.51
152	7550.00	50.0	1283.61	305.34	-978.27
153	7600.00	50.0	1277.65	305.59	-972.06
154	7650.00	50.0	1268.27	305.84	-962.43
155	7700.00	50.0	1255.39	306.09	-949.30
156	7750.00	50.0	1245.11	306.34	-938.77
157	7800.00	50.0	1231.48	306.59	-924.89
158	7850.00	50.0	1217.91	306.84	-911.07
159	7900.00	50.0	1209.01	307.09	-901.92
160	7950.00	50.0	1205.18	307.34	-897.85
161	8000.00	50.0	1201.36	307.59	-893.77
162	8050.00	50.0	1197.39	307.84	-889.55
163	8100.00	50.0	1193.35	308.09	-885.26
164	8150.00	50.0	1188.26	308.34	-879.92
165	8200.00	50.0	1179.22	308.59	-870.63
166	8250.00	50.0	1174.99	308.84	-866.15
167	8300.00	50.0	1170.76	309.09	-861.67
168	8350.00	50.0	1163.42	309.34	-854.08
169	8400.00	50.0	1145.15	309.59	-835.56
170	8450.00	50.0	1115.51	309.84	-805.68
171	8500.00	50.0	1067.49	310.09	-757.41
172	8550.00	50.0	1026.11	310.34	-715.78
173	8600.00	50.0	982.82	310.59	-672.23
174	8650.00	50.0	961.63	310.84	-650.80
175	8700.00	50.0	919.56	311.09	-608.47
176	8750.00	50.0	878.86	311.34	-567.52
177	8800.00	50.0	851.75	311.59	-540.17
178	8850.00	50.0	821.08	311.84	-509.24
179	8900.00	50.0	794.44	312.09	-482.35
180	8950.00	50.0	765.75	312.34	-453.42
181	9000.00	50.0	743.33	312.59	-430.75
182	9050.00	50.0	714.99	312.84	-402.15
183	9100.00	50.0	677.62	313.09	-364.54
184	9150.00	50.0	644.29	313.34	-330.95
185	9200.00	50.0	613.24	313.59	-299.65
186	9250.00	50.0	589.00	313.84	-275.17
187	9300.00	50.0	566.90	314.09	-252.81
188	9350.00	50.0	558.17	314.34	-243.83
189	9400.00	50.0	540.23	314.59	-225.64
190	9450.00	50.0	529.92	314.84	-215.08
191	9500.00	50.0	529.42	315.09	-214.33
192	9550.00	50.0	528.91	315.34	-213.58
193	9600.00	50.0	529.58	315.59	-214.00
194	9650.00	50.0	511.41	315.84	-195.57
195	9700.00	50.0	479.08	316.09	-162.99
196	9750.00	50.0	443.36	316.34	-127.02
197	9800.00	50.0	419.68	316.59	-103.09
198	9850.00	50.0	389.53	316.84	-72.69
199	9900.00	50.0	369.62	317.09	-52.54
200	9950.00	50.0	353.26	317.34	-35.93
201	10000.00	50.0	337.60	317.59	-20.01
202	10050.00	50.0	317.76	317.84	0.07
203	10100.00	50.0	299.66	318.09	18.43
204	10150.00	50.0	298.27	318.34	20.07
205	10200.00	50.0	296.87	318.59	21.71
206	10250.00	50.0	294.84	318.84	24.00
207	10300.00	50.0	296.22	319.09	22.87
208	10350.00	50.0	301.36	319.34	17.98
209	10400.00	50.0	329.40	319.59	-9.82
210	10450.00	50.0	371.55	319.84	-51.71
211	10500.00	50.0	383.84	320.09	-63.76
212	10550.00	50.0	389.30	320.35	-68.95
213	10600.00	50.0	406.91	320.70	-86.20
214	10650.00	50.0	445.07	321.19	-123.88
215	10700.00	50.0	471.89	321.79	-150.09
216	10750.00	50.0	491.32	322.53	-168.79
217	10800.00	50.0	498.54	323.38	-175.15
218	10850.00	50.0	523.61	324.28	-199.32
219	10900.00	50.0	550.00	325.18	-224.82
220	10950.00	50.0	550.00	326.08	-223.92
221	11000.00	50.0	531.47	326.98	-204.49
222	11050.00	50.0	537.92	327.88	-210.04

ETTOMETRICHE: 52 53 54 55 56 57 58 59 60 61 62 63 64 65 66 67 68 69 70 71 72 73 74 75 76 77 78 79 80 81 82 83 84 85 86 87 88 89 90 91 92 93 94 95 96 97 98 99 100 101 102 103 104 105 106 107 108 109 110

AND. PLAN.: R=3000.00 L=165.02 — A=1000.00 L=333.33 — L=1645.58 — A=1200.00 L=400.00 — L=1277.64 R=3600.00 — A=1200.00 L=400.00 — L=582.23 — A=1200.00 L=400.00

AND. CIGLI (Destro / Sinistro): 3.39% / -3.39% — 3.39% / -3.39% — 2.50% / -2.63% — 2.50% / -2.50% — -2.50% / -2.50% — 2.50% / -2.56% — 3.01% / -3.01% — 3.01% / -3.01% — 2.50% / -2.56% — 2.50% / -2.50% — -2.50% / -2.50% — 2.50% / -2.56% — 3.01% / -3.01% — 3.01% / -3.01%

QUADRO D'UNIONE

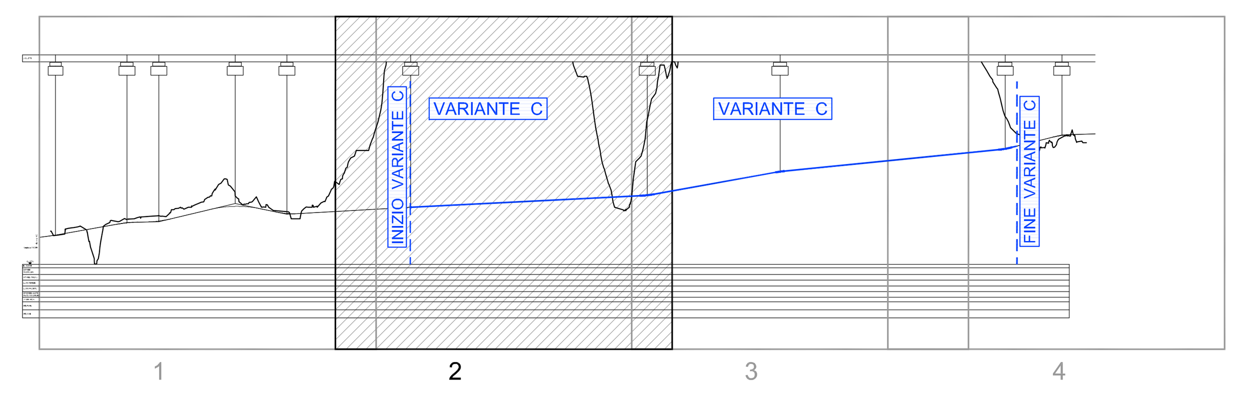

N.B. Il profilo è riferito all'asse generale

RINA — ISO 9001 - ISO 14001 — OHSAS 18001 - SA 8000 — BEST4 Certified Integrated Systems

Autostrada Brescia Verona Vicenza Padova S.p.A.
Via Flavio Gioia 71 37135 Verona
tel. 0458272222 Fax 0458200051 Casella Postale 460M www.autobspd.it
AREA COSTRUZIONI AUTOSTRADALI

AUTOSTRADA VALDASTICO A31 NORD

1° LOTTO FUNZIONALE: PIOVENE ROCCHETTE-VALLE DELL'ASTICO

VERIFICA DI FATTIBILITA' SOTTO IL PROFILO TECNICO ED IDROGEOLOGICO DELL'ALTERNATIVA PLANOALTIMETRICA DI CUI ALLA DELIBERA DEL C.C. DI VALDASTICO n.43/2012

CUP G19J1 00001 40005
COMMESSA 25 2005

COMMITTENTE
AUTOSTRADA BRESCIA VERONA VICENZA PADOVA S.p.A.
Area Costruzioni Autostradali
CAPO COMMESSA PER LA PROGETTAZIONE Dott. Ing. Sergio Mutti

PROGETTISTA
CONSORZIO RAETIA
CAPO PROGETTO: Dott. Ing. Massimo Raccosta
RESPONSABILE DELL'INTEGRAZIONE TRA LE PRESTAZIONI SPECIALISTICHE: Dott. Ing. Massimo Raccosta
RESPONSABILE DEL COORDINAMENTO: Dott. Ing. Andrea Renso

ELABORATO
TRACCIATO
Variante C
Profili longitudinali
Profilo longitudinale - Tav. 2

Progressivo 13 03 02 001 — Rev. 00

Rev.	Data	Descrizione	Redazione	Controllo	Approvazione
00	Maggio 2013	Prima Emissione	TECHNITAL	V. Reale	A. Renso

SCALA 1: 10000/1000
NOME FILE 2505_130302001_0204_0PP_00.dwg
CM 2505 ELAB. 130302001
Fg. 0204 LIV. 0PP REV. 00

IL PRESENTE DOCUMENTO NON POTRA' ESSERE COPIATO, RIPRODOTTO O ALTRIMENTI PUBBLICATO, IN TUTTO O IN PARTE, SENZA IL CONSENSO SCRITTO DELLA AUTOSTRADA BS-VR-VI-PD S.P.A.. OGNI UTILIZZO NON AUTORIZZATO SARA' PERSEGUITO A NORMA DI LEGGE.
THIS DOCUMENT MAY NOT BE COPIED, REPRODUCED OR PUBLISHED, EITHER IN PART OR IN ITS ENTIRETY, WITHOUT THE WRITTEN PERMISSION OF AUTOSTRADA BRESCIA-VERONA-VICENZA-PADOVA S.P.A.. UNAUTHORIZED USE WILL BE PROSECUTE BY LAW.