METANODOTTO
INTERCONNESSIONE TAP DN 1400(56"), DP 75 bar
TERMINALE SRG DI MELENDUGNO (LE)

POZZETTO PER PRESA CONTROLLO QUALITA'

TERMINALE SRG DI MELENDUGNO (LE)

RELAZIONE DI CALCOLO STRUTTURALE

Rev.	Descrizione	Elaborato	Verificato	Approvato Autorizzato	Data
0	Emissione per appalto	L.BELARDINELLI	M.BEGINI	H.D.AIUDI F. FERRINI	11/08/2017

Documento di proprietà **Snam Rete Gas**. La Società tutelerà i propri diritti in sede civile e penale a termini di legge.

INDICE

1. RELAZIONE DI CALCOLO DELLE STRUTTURE 3

1.1. Premessa 3

1.2. Documenti di riferimento 5

1.3. Normativa di riferimento 5

1.4. Analisi dei carichi 6

2. APPENDICE 9

RELAZIONE DI CALCOLO 10

Documento di proprietà **Snam Rete Gas**. La Società tutelerà i propri diritti in sede civile e penale a termini di legge.

1. RELAZIONE DI CALCOLO DELLE STRUTTURE

1.1. Premessa

La presente relazione, redatta su incarico di Snam Rete Gas S.p.A., ha come oggetto la realizzazione di un pozzetto in c.a. per ubicazione del sistema di controllo della qualità del gas, ubicato all'interno del nuovo impianto terminale di Melendugno (LE).
Il pozzetto in c.a. ha base quadrata di dimensioni esterne 350 x 350 cm e profondità interrata pari a – 4,00 m (quota di estradosso della platea di fondazione).
Le pareti laterali del pozzetto di spessore 25 cm emergono dal piano campagna di 20 cm.
La platea di base ha spessore di 40 cm ed è realizzata su un getto in calcestruzzo magro con spessore minimo di 10 cm.
Il pozzetto presenta 2 delle 4 pareti laterali forate per il passaggio del tubo DN1400 all'interno di due manicotti costituiti da tubi di protezione in acciaio DN 1600 annegati nel getto. Per consentire l'accesso al fondo del pozzetto agli addetti alla manutenzione è previsto l'ancoraggio a parete di due scale alla marinara.
Il pozzetto presenta copertura in cupola di vetroresina.

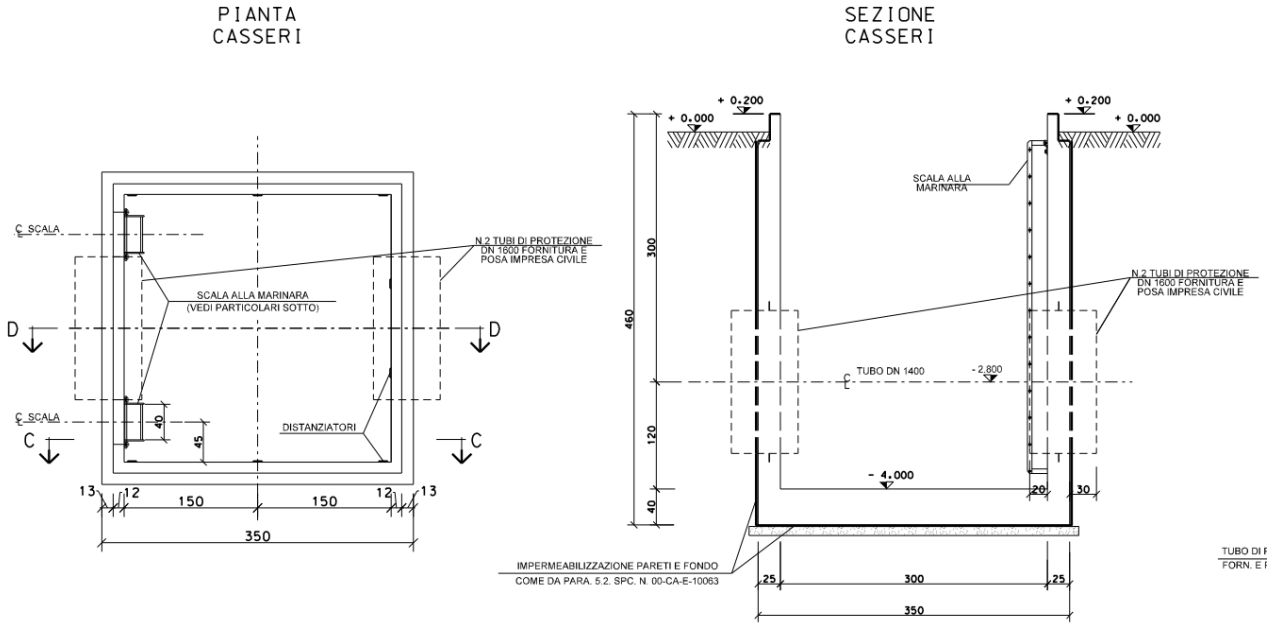

Per i dettagli si rimanda agli elaborati grafici allegati.

Di seguito un'immagine del modello di calcolo realizzato con software CDS.

Documento di proprietà **Snam Rete Gas**. La Società tutelerà i propri diritti in sede civile e penale a termini di legge.

vista dall'alto del modello di calcolo

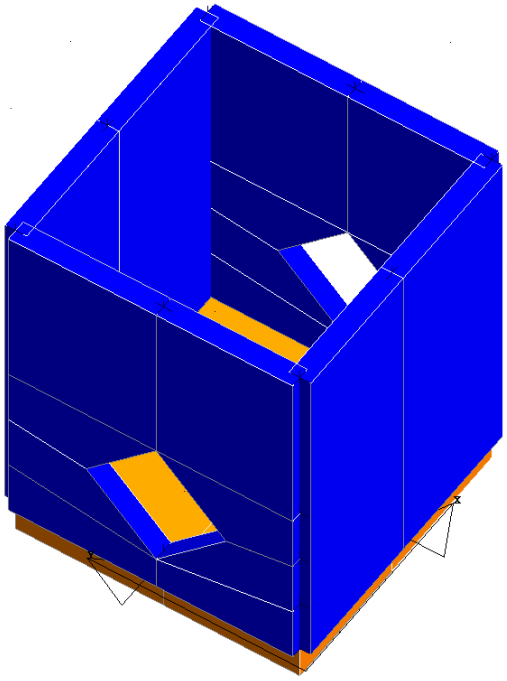

vista dal basso del modello di calcolo

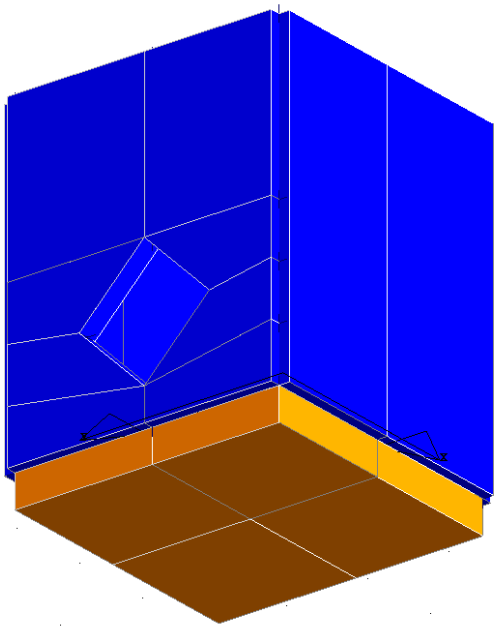

Documento di proprietà **Snam Rete Gas**. La Società tutelerà i propri diritti in sede civile e penale a termini di legge.

1.2. Documenti di riferimento

- REL. RE-GFN-112
  POZZETTO PER PRESA CONTROLLO QUALITA' - RELAZIONE GEOTECNICA E SULLE FONDAZIONI
- REL. RE-MAT-102
  RELAZIONE SUI MATERIALI

<u>Elaborati grafici di riferimento</u>

- DIS. CIV-106
  PLANIMETRIA FONDAZIONI
- DIS. CIV-112
  POZZETTO PER PRESA CONTROLLO QUALITA' - CASSERI ED ARMATURE

1.3. Normativa di riferimento

- Legge 5/11/1971 n.1086 – Norme per la disciplina delle opere in conglomerato cementizio armato, normale e precompresso, e a struttura metallica.
- Legge 2/02/1974 n. 64 – Provvedimenti per le costruzioni con particolari prescrizioni per le zone sismiche.
- Decreto del Presidente della Repubblica 6/06/2001 n.380 – Testo unico delle disposizioni legislative e regolamentari in materia edilizia e s.m.e i.
- Decreto Ministero delle Infrastrutture e dei Trasporti 14/01/2008 – Norme Tecniche per le Costruzioni.
- Circolare 2/02/2009 n. 617 -Istruzioni per l'applicazione delle 'Nuove norme tecniche per le costruzioni' di cui al D.M. 14/01/08.

Documento di proprietà **Snam Rete Gas**. La Società tutelerà i propri diritti in sede civile e penale a termini di legge.

1.4. Analisi dei carichi

Peso Proprio

Il peso proprio degli elementi strutturali è calcolato in automatico dal programma di calcolo in funzione della geometria modellata, congruente con quella prevista nei disegni di progetto. L'eventuale scostamento tra la volumetria modellata e quella effettiva di progetto è ritenuto trascurabile e comunque ampiamente coperto dal coefficiente parziale di sicurezza pari a 1,30.

Sovraccarichi permanenti portati e variabili

Sono costituiti da:
- peso della copertura in vetroresina;
- peso della tubazione DN900 passante all'interno dei manicotti di diametro nominale DN1050;
- peso valvola di regolazione;
- spinta del terreno a tergo delle pareti.

• La copertura, costituita da una cupola in vetroresina, è sostenuta da un telaio metallico in acciaio inox incernierato lungo un lato ed ancorato direttamente alle pareti del pozzetto; sono indicati a seguire con Pc il peso totale e pc il peso ripartito della copertura lungo il perimetro del pozzetto, comprensivo del peso dei profilati inox.

Pc peso copertura kN	perimetro m	peso copertura kN/m
3	12	0.25

• Il peso della tubazione DN1400 grava sulla parte inferiore delle 2 pareti contrapposte del pozzetto ed è valutato in funzione della lunghezza del tratto orizzontale all'interno del pozzetto più i tratti esterni di competenza, assunti pari a 5m ambo i lati del pozzetto (cautelativo).
Poiché in fase di collaudo la tubazione è riempita di acqua, se ne terrà conto nell'analisi dei carichi.
Si assumono cautelativamente i seguenti carichi complessivi:
peso tubazione DN1400: 2245Kg/m,
ovvero 2245Kg/m · 5m = 11225Kg, applicato su entrambe le pareti attraversate dal tubo.

• Il peso degli strumenti di misurazione è considerabile trascurabile.

• La spinta del terreno sulle quattro pareti laterali è stato considerato con presenza di sovraccarico verticale rappresentativo di un automezzo di tipo pesante in transito o in stazionamento, equiparato ad un sovraccarico uniformemente distribuito, assunto cautelativamente pari a 20 kN/m^2.
Si è considerato un terreno standard di riporto a tergo delle pareti, trattandosi di pozzetto realizzato su di uno scavo e successivamente riempito fino al livello 0.00 della quota impianto per l'appunto con materiale di riporto.

Documento di proprietà **Snam Rete Gas**. La Società tutelerà i propri diritti in sede civile e penale a termini di legge.

Per il terreno di riporto si assumono le seguenti caratteristiche meccaniche:

$\gamma = 18000\ N/m^3$
$\varphi = 30°$
$c' = 0$

Si considera la condizione di spinta a riposo in quanto trattandosi di pareti rigide si ritengono trascurabili gli spostamenti delle pareti. Il coefficiente di spinta a riposo vale:

$K_0 = 1 - \sin\varphi = 0{,}50$

La spinta orizzontale del terreno alla profondità generica z rispetto al piano campagna, comprensiva dell'effetto del sovraccarico verticale, vale pertanto:

$p_h(z) = K_0 \cdot \gamma \cdot z + K_0 \cdot q = 0{,}50 \cdot 18000\ N/m^3 \cdot z + 0{,}50 \cdot 20000\ N/m^2 = 9000\ N/m^3 \cdot z + 10000\ N/m^2$

Per z=0 si ha:

$p_h(z=0m) = 10000\ N/m^2$
$p_h(z=4{,}00m) = 46000\ N/m^2$

Si considera anche l'incremento sismico della spinta del terreno, con approccio pseudo-statico. Tale incremento è pari alla forza di inerzia del cuneo di spinta del terreno a tergo del muro di sostegno, applicato a metà altezza del muro stesso, trattandosi di muri che non subiscono spostamenti relativi significativi rispetto al terreno ($\beta_m = 1$) .
Si fa riferimento allo schema seguente per il calcolo dell'incremento sismico spinta terreno (misure in centimetri).

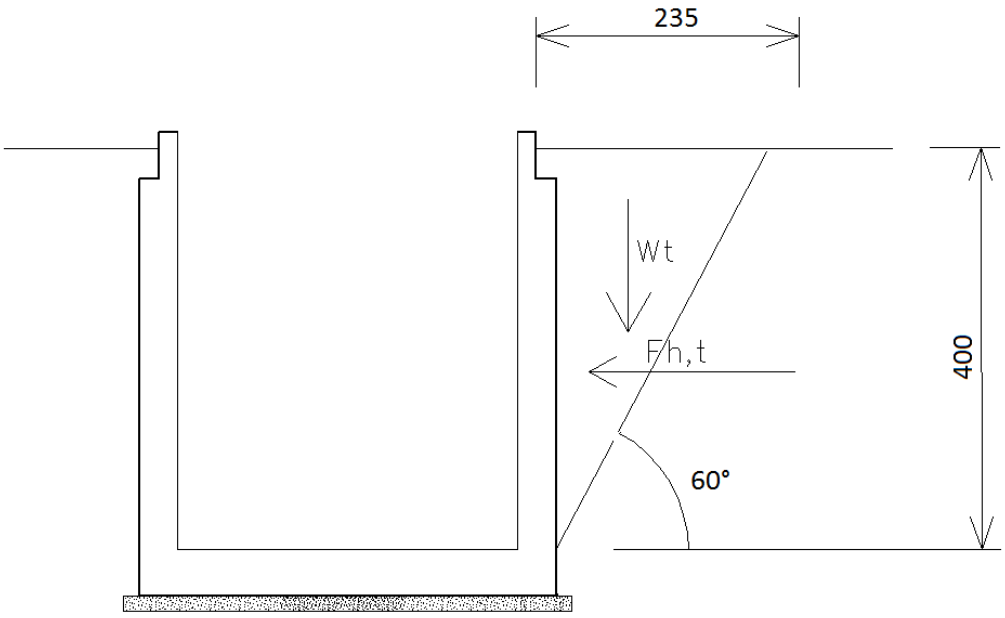

Documento di proprietà **Snam Rete Gas**. La Società tutelerà i propri diritti in sede civile e penale a termini di legge.

La componente orizzontale di forza di inerzia sismica del volume di spinta a tergo del muro vale:

$F_{h,t} = W_t \cdot K_h$

Con:

$K_h = \beta_m \cdot (a_{max} / g)$

$a_{max} = S_S \cdot S_T \cdot a_g$

Nel caso in questione si ha:

$W_t = (2{,}35m \cdot 4{,}00m / 2) \cdot 18000N/m^3 = 84600$ N

$a_{max} = 1{,}20 \cdot 1{,}00 \cdot 0{,}091 \cdot g = 0{,}109 \cdot g$

$K_h = 1 \cdot (0{,}109 \cdot g \ / g) = 0{,}109$

Pertanto: $F_{h,t} = 84600$ N $\cdot$ 0,109 = 9221 N

Ovvero, la pressione esercitata sulla parete verticale vale:

$p_h (z) = 9221$ N / 4,00 m = 2306 N/m^2

Azione del vento

L'azione del vento non è stata presa in considerazione in quanto trattasi di struttura interrata su cui il vento non produce effetti.

Azione della neve

Il carico della neve agisce sulla copertura del pozzetto.

Il carico di neve al suolo q_{sk} è valutato in conformità al DM 14-01-08 con la seguente espressione:
$q_s = \mu_i \cdot q_{sk} \cdot C_e \cdot C_t$
con q_{sk} valore caratteristico di riferimento del carico di neve al suolo per un periodo di ritorno di 50 anni dipendente dalla zona climatica del sito in oggetto e dall'altitudine as sul livello del mare:
-Zona I Alpina: q_{sk}=1.50 kN/mq per $a_s \leq 200$ m s.l.m.
$q_{sk}=1.39 (1+(a_s/728)^2)$ kN/mq per as>200 m s.l.m.;
-Zona I Mediterranea: q_{sk}=1.50 kN/mq per $a_s \leq 200$ m s.l.m.;
$q_{sk}=1.35 (1+(a_s/602)^2)$ kN/mq per a_s>200 m s.l.m.;
-Zona II: q_{sk}=1.00 kN/mq per $a_s \leq 200$ m s.l.m.;
$q_{sk}=0.85 (1+(a_s/481)^2)$ kN/mq per a_s>200 m s.l.m.;
-Zona III: q_{sk} =0.60 kN/mq per $a_s \leq 200$ m s.l.m.;

Documento di proprietà **Snam Rete Gas**. La Società tutelerà i propri diritti in sede civile e penale a termini di legge.

q_{sk} =0.51(1+(a_s/481)^2) kN/mq per a_s>200 m s.l.m.;

μ_i coefficiente di forma dipendente dall'angolo α di inclinazione della superficie esposta rispetto all'orizzontale:
- se la neve non risulta impedita di scivolare 0°≤α≤30° μ_i=0.8, per 30°<α<60° μ_i=0.8(60α)/30, per α>60° μi=0;
- se l'estremità della superficie termina con un parapetto o altra ostruzione μ_i =0.8 indipendentemente dal valore dell'angolo α;

C_e coefficiente di esposizione valutato in funzione delle diverse classi di topografia:
- per area "battuta dai venti" C_e=0.9;
- per area "normale" C_e=1.0;
- per area "riparata" C_e=1.1;

C_t coefficiente termico che si pone pari a 1.

L'altitudine a_s del sito in esame è pari a 5 m s.l.m e la zona climatica di appartenenza è la Zona III; il carico della neve corrispondente ai parametri reali del sito risulta q_{sk}=0,60 kN/mq per a_s<200 m s.l.m.;.
E' stato considerato il carico della neve agente sulla copertura delle cappe di insonorizzazione il cui angolo di inclinazione è α=0°.

Calcolo del carico della neve: $q_s = \mu_i \cdot q_{sk} \cdot C_e \cdot C_t$ = 0,8 · 0,60 · 1 · 1 = 0,48 kN/m^2

L'area su cui agisce il carico neve è pari alla dimensione in pianta della copertura, ovvero 3,50m x 3,50m = 12,25 m^2 , pertanto il carico unitario lineare sulle pareti vale:
0,48 kN/m^2 · 12,25 m^2 / (4 + 4 + 3,50 + 3,50) = 0,40 kN/m

Azione del sisma
Il calcolo dell'azione sismica di progetto è effettuato, in conformità al DM 14/01/2008, dal programma di calcolo.

Per il dettaglio sui carichi, sulle modalità e combinazioni di carico, si rimanda alla relazione di calcolo in appendice.

2. APPENDICE

Nella presente appendice è contenuto l'output del programma di calcolo CDS.

Nota sulle verifiche degli elementi strutturali presenti nel modello (piastre, pareti, travi, pilastri)
Nelle pagine seguenti sono riportati i quantitativi minimi di armatura richiesti dal programma di calcolo. Per questioni pratiche legate ad esigenze costruttive, potrà accadere che detti quantitativi non corrispondano esattamente a quanto riportato negli elaborati grafici di progetto. In ogni caso, i quantitativi prescritti negli elaborati grafici risulteranno sempre non inferiori a quelli minimi ottenuti dai calcoli di verifica.

Documento di proprietà **Snam Rete Gas**. La Società tutelerà i propri diritti in sede civile e penale a termini di legge.

RELAZIONE DI CALCOLO

Sono illustrati con la presente i risultati dei calcoli che riguardano il progetto delle armature, la verifica delle tensioni di lavoro dei materiali e del terreno.

• NORMATIVA DI RIFERIMENTO

I calcoli sono condotti nel pieno rispetto della normativa vigente e, in particolare, la normativa cui viene fatto riferimento nelle fasi di calcolo, verifica e progettazione è costituita dalle *Norme Tecniche per le Costruzioni*, emanate con il D.M. 14/01/2008 pubblicato nel suppl. 30 G.U. 29 del 4/02/2008, nonché la Circolare del Ministero Infrastrutture e Trasporti del 2 Febbraio 2009, n. 617 "*Istruzioni per l'applicazione delle nuove norme tecniche per le costruzioni*".

• METODI DI CALCOLO

I metodi di calcolo adottati per il calcolo sono i seguenti:

1) Per i carichi statici: *METODO DELLE DEFORMAZIONI*;

2) Per i carichi sismici: metodo dell'*ANALISI MODALE* o dell'*ANALISI SISMICA STATICA EQUIVALENTE*.

Per lo svolgimento del calcolo si è accettata l'ipotesi che, in corrispondenza dei piani sismici, i solai siano infinitamente rigidi nel loro
piano e che le masse ai fini del calcolo delle forze di piano siano concentrate alle loro quote.

• CALCOLO SPOSTAMENTI E CARATTERISTICHE

II calcolo degli spostamenti e delle caratteristiche viene effettuato con il metodo degli elementi finiti (**F.E.M.**).

Possono essere inseriti due tipi di elementi:

1) Elemento monodimensionale asta (*beam*) che unisce due nodi aventi ciascuno 6 gradi di libertà. Per maggiore precisione di calcolo, viene tenuta in conto anche la deformabilità a taglio e quella assiale di questi elementi. Queste aste, inoltre, non sono considerate flessibili da nodo a nodo ma hanno sulla parte iniziale e finale due tratti infinitamente rigidi formati dalla parte di trave inglobata nello spessore del pilastro; questi tratti rigidi forniscono al nodo una dimensione reale.

2) L'elemento bidimensionale shell (*quad*) che unisce quattro nodi nello spazio. Il suo comportamento è duplice, funziona da lastra per i carichi agenti sul suo piano, da piastra per i carichi ortogonali.

Assemblate tutte le matrici di rigidezza degli elementi in quella della struttura spaziale, la risoluzione del sistema viene perseguita tramite il *metodo di Cholesky*.

Ai fini della risoluzione della struttura, gli spostamenti X e Y e le rotazioni attorno l'asse verticale Z di tutti i nodi che giacciono su di un impalcato dichiarato rigido sono mutuamente vincolati.

Documento di proprietà **Snam Rete Gas**. La Società tutelerà i propri diritti in sede civile e penale a termini di legge.

- **RELAZIONE SUI MATERIALI**

Le caratteristiche meccaniche dei materiali sono descritti nei tabulati riportati nel seguito per ciascuna tipologia di materiale utilizzato.

- **ANALISI SISMICA DINAMICA A MASSE CONCENTRATE**

L'analisi sismica dinamica è stata svolta con il metodo dell'analisi modale; la ricerca dei modi e delle relative frequenze è stata perseguita con il metodo delle "*iterazioni nel sottospazio*".

I modi di vibrazione considerati sono in numero tale da assicurare l'eccitazione di più dell'85% della massa totale della struttura.

Per ciascuna direzione di ingresso del sisma si sono valutate le forze modali che vengono applicate su ciascun nodo spaziale (tre forze, in direzione X, Y e Z, e tre momenti).

Per la verifica della struttura si è fatto riferimento all'analisi modale, pertanto sono prima calcolate le sollecitazioni e gli spostamenti modali e poi viene calcolato il loro valore efficace.

I valori stampati nei tabulati finali allegati sono proprio i suddetti valori efficaci e pertanto l'equilibrio ai nodi perde di significato. I valori delle sollecitazioni sismiche sono combinate linearmente (in somma e in differenza) con quelle per carichi statici per ottenere le sollecitazioni per sisma nelle due direzioni di calcolo.

Gli angoli delle direzioni di ingresso dei sismi sono valutati rispetto all'asse X del sistema di riferimento globale.

- **VERIFICHE**

Le verifiche, svolte secondo il metodo degli stati limite ultimi e di esercizio, si ottengono inviluppando tutte le condizioni di carico prese in considerazione.

In fase di verifica è stato differenziato l'elemento trave dall'elemento pilastro. Nell'elemento trave le armature sono disposte in modo
asimmetrico, mentre nei pilastri sono sempre disposte simmetricamente.

Per l'elemento trave, l'armatura si determina suddividendola in cinque conci in cui l'armatura si mantiene costante, valutando per tali conci le massime aree di armatura superiore ed inferiore richieste in base ai momenti massimi riscontrati nelle varie combinazioni di carico esaminate. Lo stesso criterio è stato adottato per il calcolo delle staffe.

Anche l'elemento pilastro viene scomposto in cinque conci in cui l'armatura si mantiene costante. Vengono però riportate le armature massime richieste nella metà superiore (testa) e inferiore (piede).

La fondazione su travi rovesce è risolta contemporaneamente alla sovrastruttura tenendo in conto sia la rigidezza flettente che quella torcente, utilizzando per l'analisi agli elementi finiti l'elemento asta su suolo elastico alla *Winkler*.

Le travate possono incrociarsi con angoli qualsiasi e avere dei disassamenti rispetto ai pilastri su cui si appoggiano.

La ripartizione dei carichi, data la natura matriciale del calcolo, tiene automaticamente conto della rigidezza relativa delle varie travate
convergenti su ogni nodo.

Documento di proprietà **Snam Rete Gas**. La Società tutelerà i propri diritti in sede civile e penale a termini di legge.

Le verifiche per gli elementi bidimensionali (setti) vengono effettuate sovrapponendo lo stato tensionale del comportamento a lastra e di quello a piastra. Vengono calcolate le armature delle due facce dell'elemento bidimensionale disponendo i ferri in due direzioni ortogonali.

- **DIMENSIONAMENTO MINIMO DELLE ARMATURE.**

Per il calcolo delle armature sono stati rispettati i minimi di legge di seguito riportati:

TRAVI:

Area minima delle staffe pari a 1.5*b mmq/ml, essendo b lo spessore minimo dell'anima misurato in mm, con passo non maggiore di 0,8 dell'altezza utile e con un minimo di 3 staffe al metro. In prossimità degli appoggi o di carichi concentrati per una lunghezza pari all' altezza utile della sezione, il passo minimo sarà 12 volte il diametro minimo dell'armatura longitudinale.

Armatura longitudinale in zona tesa ≥ 0,15% della sezione di calcestruzzo. Alle estremità è disposta una armatura inferiore minima che possa assorbire, allo stato limite ultimo, uno sforzo di trazione uguale al taglio.

In zona sismica, nelle zone critiche il passo staffe è non superiore al minimo di:

- un quarto dell'altezza utile della sezione trasversale;
- 175 mm e 225 mm, rispettivamente per CDA e CDB;
- 6 volte e 8 volte il diametro minimo delle barre longitudinali considerate ai fini delle verifiche, rispettivamente per CDA e CDB;
- 24 volte il diametro delle armature trasversali.

Le zone critiche si estendono, per CDB e CDA, per una lunghezza pari rispettivamente a 1 e 1,5 volte l'altezza della sezione della trave, misurata a partire dalla faccia del nodo trave-pilastro. Nelle zone critiche della trave il rapporto fra l'armatura compressa e quella tesa è maggiore o uguale a 0,5.

PILASTRI:

Armatura longitudinale compresa fra 0,3% e 4% della sezione effettiva e non minore di 0,10*Ned/fyd;

Barre longitudinali con diametro ≥ 12 mm;

Diametro staffe ≥ 6 mm e comunque ≥ 1/4 del diametro max delle barre longitudinali, con interasse non maggiore di 30 cm.

In zona sismica l'armatura longitudinale è almeno pari all'1% della sezione effettiva; il passo delle staffe di contenimento è non superiore alla più piccola delle quantità seguenti:

- 1/3 e 1/2 del lato minore della sezione trasversale, rispettivamente per CDA e CDB;
- 125 mm e 175 mm, rispettivamente per CDA e CDB;
- 6 e 8 volte il diametro delle barre longitudinali che collegano, rispettivamente per CDA e CDB.

Documento di proprietà **Snam Rete Gas**. La Società tutelerà i propri diritti in sede civile e penale a termini di legge.

- **SISTEMI DI RIFERIMENTO**

1) SISTEMA GLOBALE DELLA STRUTTURA SPAZIALE

Il sistema di riferimento globale è costituito da una terna destra di assi cartesiani ortogonali (O-XYZ) dove l'asse Z rappresenta l'asse verticale rivolto verso l'alto. Le rotazioni sono considerate positive se concordi con gli assi vettori:

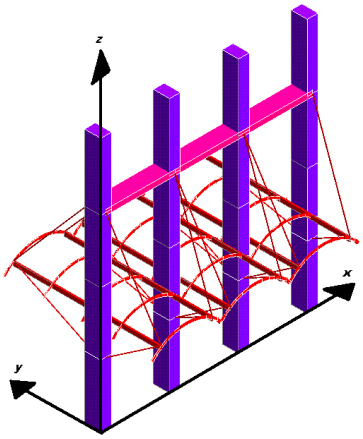

2) SISTEMA LOCALE DELLE ASTE

Il sistema di riferimento locale delle aste, inclinate o meno, è costituito da una terna destra di assi cartesiani ortogonali che ha l'asse Z coincidente con l'asse longitudinale dell'asta ed orientamento dal nodo iniziale al nodo finale, gli assi X ed Y sono orientati come nell'archivio delle sezioni:

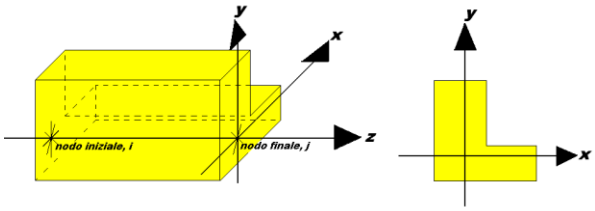

3) SISTEMA LOCALE DELL'ELEMENTO SHELL

Il sistema di riferimento locale dell'elemento shell è costituito da una terna destra di assi cartesiani ortogonali che ha l'asse X coincidente con la direzione fra il primo ed il secondo nodo di input, l'asse Y giacente nel piano dello shell e l'asse Z in direzione dello spessore:

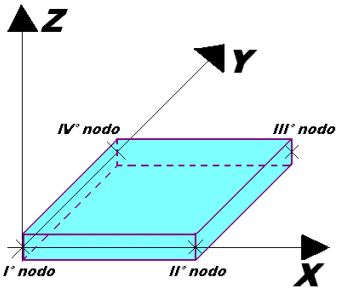

Documento di proprietà **Snam Rete Gas**. La Società tutelerà i propri diritti in sede civile e penale a termini di legge.

- **UNITÀ DI MISURA**

Si adottano le seguenti unità di misura:

[lunghezze]	= m
[forze]	= kgf / daN
[tempo]	= sec
[temperatura]	= °C

- **CONVENZIONI SUI SEGNI**

I carichi agenti sono:

1) Carichi e momenti distribuiti lungo gli assi coordinati;

2) Forze e coppie nodali concentrate sui nodi.

Le forze distribuite sono da ritenersi positive se concordi con il sistema di riferimento locale dell'asta, quelle concentrate sono positive se concordi con il sistema di riferimento globale.

I gradi di libertà nodali sono gli omologhi agli enti forza, e quindi sono definiti positivi se concordi a questi ultimi.

Documento di proprietà **Snam Rete Gas**. La Società tutelerà i propri diritti in sede civile e penale a termini di legge.

- **SPECIFICHE CAMPI TABELLA DI STAMPA**

Si riporta di seguito la spiegazione delle sigle usate nella tabella di stampa dell'archivio materiali.

Materiale N.ro : *Numero identificativo del materiale in esame*

Densità : *Peso specifico del materiale*

Ex * 1E3 : *Modulo elastico in direzione x moltiplicato per 10 al cubo*

Ni.x : *Coefficiente di Poisson in direzione x*

Alfa.x : *Coefficiente di dilatazione termica in direzione x*

Ey * 1E3 : *Modulo elastico in direzione y moltiplicato per 10 al cubo*

Ni.y : *Coefficiente di Poisson in direzione y*

Alfa.y : *Coefficiente di dilatazione termica in direzione y*

E11 * 1E3 : *Elemento della matrice elastica moltiplicato per 10 al cubo, 1a riga - 1a colonna*

E12 * 1E3 : *Elemento della matrice elastica moltiplicato per 10 al cubo, 1a riga - 2a colonna*

E13 * 1E3 : *Elemento della matrice elastica moltiplicato per 10 al cubo, 1a riga - 3a colonna*

E22 * 1E3 : *Elemento della matrice elastica moltiplicato per 10 al cubo, 2a riga - 2a colonna*

E23 * 1E3 : *Elemento della matrice elastica moltiplicato per 10 al cubo, 2a riga - 3a colonna*

E33 * 1E3 : *Elemento della matrice elastica moltiplicato per 10 al cubo, 3a riga - 3a colonna*

Documento di proprietà **Snam Rete Gas**. La Società tutelerà i propri diritti in sede civile e penale a termini di legge.

- **SPECIFICHE CAMPI TABELLA DI STAMPA**

Si riporta appresso la spiegazione delle sigle usate nelle tabelle riassuntive dei criteri di progetto per le aste in elevazione, per quelle di fondazione, per i pilastri e per i setti.

Crit.N.ro : *Numero indicativo del criterio di progetto*
Elem. : *Tipo di elemento strutturale*
%Rig.Tors. : *Percentuale di rigidezza torsionale*
Mod. E : *Modulo di elasticità normale*
Poisson : *Coefficiente di Poisson*
Sgmc : *Tensione massima di esercizio del calcestruzzo*
tauc0 : *Tensione tangenziale minima*
tauc1 : *Tensione tangenziale massima*
Sgmf : *Tensione massima di esercizio dell'acciaio*
Om. : *Coefficiente di omogeneizzazione*
Gamma : *Peso specifico del materiale*
Copristaffa : *Distanza tra il lembo esterno della staffa ed il lembo esterno della sezione in calcestruzzo*
Fi min. : *Diametro minimo utilizzabile per le armature longitudinali*
Fi st. : *Diametro delle staffe*
Lar. st. : *Larghezza massima delle staffe*
Psc : *Passo di scansione per i diagrammi delle caratteristiche*
Pos.pol. : *Numero di posizioni delle armature per la verifica di sezioni poligonali*
D arm. : *Passo di incremento dell'armatura per la verifica di sezioni poligonali*
Iteraz. : *Numero massimo di iterazioni per la verifica di sezioni poligonali*
Def. Tag. : *Deformabilità a taglio (si, no)*
%Scorr.Staf. : *Percentuale di scorrimento da far assorbire alle staffe*
P.max staffe : *Passo massimo delle staffe*
P.min.staffe : *Passo minimo delle staffe*
tMt min. : *Tensione di torsione minima al di sotto del quale non si arma a torsione*
Ferri parete : *Presenza di ferri di parete a taglio*
Ecc.lim. : *Eccentricità M/N limite oltre la quale la verifica viene effettuata a flessione pura*
Tipo ver. : *Tipo di verifica (0 = solo Mx; 1 = Mx e My separate; 2 = deviata)*
Fl.rett. : *Flessione retta forzata per sezioni dissimmetriche ma simmetrizzabili (0 = no; 1 = si)*
Den.X pos. : *Denominatore della quantità q*l*l per determinare il momento Mx minimo per la copertura del diagramma positivo*
Den.X neg. : *Denominatore della quantità q*l*l per determinare il momento Mx minimo per la copertura del diagramma negativo*
Den.Y pos. : *Denominatore della quantità q*l*l per determinare il momento My minimo per la copertura del diagramma positivo*
Den.Y neg. : *Denominatore della quantità q*l*l per determinare il momento My minimo per la copertura del diagramma negativo*
%Mag.car. : *Percentuale di maggiorazione dei carichi statici della prima combinazione di carico*
Linear. : *Coefficiente descrittivo del comportamento dell'asta:*
1 = comportamento lineare sia a trazione che a compressione
2 = comportamento non lineare sia a trazione che a compressione.
3 = comportamento lineare solo a trazione.
4 = comportamento non lineare solo a trazione.
5 = comportamento lineare solo a compressione.

Documento di proprietà **Snam Rete Gas**. La Società tutelerà i propri diritti in sede civile e penale a termini di legge.

6 = comportamento non lineare solo a compressione.

Appesi : *Flag di disposizione del carico sull'asta (1 = appeso, cioè applicato all'intradosso; 0 = non appeso, cioè applicato all'estradosso)*

Min. T/sigma : *Verifica minimo T/sigma (1 = si; 0 = no)*

Verif.Alette : *Verifica alette travi di fondazione (1 = si; 0 = no)*

Kwinkl. : *Costante di sottofondo del terreno*

Si riporta appresso la spiegazione delle sigle usate nelle tabelle riassuntive dei criteri di progetto per le verifiche agli stati limite.

Cri.Nro : *Numero identificativo del criterio di progetto*

Tipo Elem. : *Tipo di elemento: trave di elevazione, trave di fondazione, pilastro, setto, setto elastico ("SHela")*

fck : *Resistenza caratteristica del calcestruzzo*

fcd : *Resistenza di calcolo del calcestruzzo*

rcd : *Resistenza di calcolo a flessione del calcestruzzo (massimo del diagramma parabola rettangolo)*

fyk : *Resistenza caratteristica dell'acciaio*

fyd : *Resistenza di calcolo dell'acciaio*

Ey : *Modulo elastico dell'acciaio*

ec0 : *Deformazione limite del calcestruzzo in campo elastico*

ecu : *Deformazione ultima del calcestruzzo*

eyu : *Deformazione ultima dell'acciaio*

Ac/At : *Rapporto dell'incremento fra l'armatura compressa e quella tesa*

Mt/Mtu : *Rapporto fra il momento torcente di calcolo e il momento torcente resistente ultimo del calcestruzzo al di sotto del quale non si arma a torsione*

Wra : *Ampiezza limite della fessura per combinazioni rare*

Wfr : *Ampiezza limite della fessura per combinazioni frequenti*

Wpe : *Ampiezza limite della fessura per combinazioni permanenti*

σc Rara : *Sigma massima del calcestruzzo per combinazioni rare*

σc Perm : *Sigma massima del calcestruzzo per combinazioni permanenti*

σf Rara : *Sigma massima dell'acciaio per combinazioni rare*

SpRar : *Rapporto fra la lunghezza dell'elemento e lo spostamento massimo per combinazioni rare*

SpPer : *Rapporto fra la lunghezza dell'elemento e lo spostamento massimo per combinazioni permanenti*

Coef.Visc.: : *Coefficiente di viscosità*

- **SPECIFICHE CAMPI TABELLA DI STAMPA**

Si riporta appresso la spiegazione delle sigle usate nella tabella coordinate nodi.

Nodo3d : *Numero del nodo spaziale*

Coord.X : *Coordinata X del punto nel sistema di riferimento globale*

Coord.Y : *Coordinata Y del punto nel sistema di riferimento globale*

Documento di proprietà **Snam Rete Gas**. La Società tutelerà i propri diritti in sede civile e penale a termini di legge.

Coord.Z : *Coordinata Z del punto nel sistema di riferimento globale*

Filo : *Numero del filo per individuare le travate in c.a.*

Piano Sism. : *Numero del piano rigido di appartenenza del nodo*

Peso : *Peso sismico del nodo; ogni canale di carico è stato moltiplicato per il proprio coefficiente di riduzione del sovraccarico*

- **SPECIFICHE CAMPI TABELLA DI STAMPA**

Si riporta appresso la spiegazione delle sigle usate nella tabella dati di shell spaziale.

Shell : *Numero dello shell spaziale*

Filo 1 : *Numero del filo del primo nodo*

Filo 2 : *Numero del filo del secondo nodo*

Filo 3 : *Numero del filo del terzo nodo*

Filo 4 : *Numero del filo del quarto nodo*

Quota 1 : *Quota del primo nodo*

Quota 2 : *Quota del secondo nodo*

Quota 3 : *Quota del terzo nodo*

Quota 4 : *Quota del quarto nodo*

Nod3d 1 : *Numero del primo nodo*

Nod3d 2 : *Numero del secondo nodo*

Nod3d 3 : *Numero del terzo nodo*

Nod3d 4 : *Numero del quarto nodo*

Sez. N.ro : *Numero in archivio della sezione*

Spess : *Spessore dello shell*

Kwinkl : *Costante di Winkler del terreno se l'elemento è di fondazione; 0 se è di elevazione*

Tipo Mat. : *Numero dell'archivio per il tipo di materiale*

Mesh X : *Numero di suddivisioni del macro elemento sull'asse X locale*

Mesh Y : *Numero di suddivisioni del macro elemento sull'asse Y locale*

Documento di proprietà **Snam Rete Gas**. La Società tutelerà i propri diritti in sede civile e penale a termini di legge.

- **SPECIFICHE CAMPI TABELLA DI STAMPA**

Si riporta appresso la spiegazione delle sigle usate nella tabella vincoli nodali esterni:

- **Nodo3d** : Numero del nodo spaziale
- **Codice** : Codice esplicito per la determinazione del vincolo:

I = incastro
C = cerniera completa
W = *Winkler*
E = esplicito
P = plinto
U = Vincolo unilatero

- **Tx** : Rigidezza traslante in direzione X sul sistema di riferimento locale del vincolo (-1 spostamento impedito)
- **Ty** : Rigidezza traslante in direzione Y sul sistema di riferimento locale del vincolo (-1 spostamento impedito)
- **Tz** : Rigidezza traslante in direzione Z sul sistema di riferimento locale del vincolo (-1 spostamento impedito)
- **Rx** : Rigidezza rotazionale in direzione X sul sistema di riferimento locale del vincolo (-1 spostamento impedito)
- **Ry** : Rigidezza rotazionale in direzione Y sul sistema di riferimento locale del vincolo (-1 spostamento impedito)
- **Rz** : Rigidezza rotazionale in direzione Z sul sistema di riferimento locale del vincolo (-1 spostamento impedito)

SCOSTAMENTO PER I VINCOLI ELASTICI

- **Tr. X** : Scostamento in direzione X globale del sistema di riferimento locale del vincolo
- **Tr. Y** : Scostamento in direzione Y globale del sistema di riferimento locale del vincolo
- **Tr. Z** : Scostamento in direzione Z globale del sistema di riferimento locale del vincolo
- **Azim** : Angolo formato fra la proiezione dell'asse Z locale sul piano XY e l'asse X globale (azimut)
- **CoZe** : Angolo formato fra l'asse Z locale e l'asse Z globale (complemento allo zenit)
- **Ass.** : Rotazione attorno dell'asse Z locale del sistema di riferimento locale

ATTRIBUTO DI VERSO PER I VINCOLI UNILATERI

- **Tr. X** : Attributo sul verso dello spostamento impedito dal vincolo unilatero lungo la direzione X
- **Tr. Y** : Attributo sul verso dello spostamento impedito dal vincolo unilatero lungo la direzione Y
- **Tr. Z** : Attributo sul verso dello spostamento impedito dal vincolo unilatero lungo la direzione Z
- **Rot.X** : Attributo sul verso della rotazione impedita dal vincolo unilatero lungo l'asse vettore X
- **Rot.Y** : Attributo sul verso della rotazione impedita dal vincolo unilatero lungo l'asse vettore Y
- **Rot.Z** : Attributo sul verso della rotazione impedita dal vincolo unilatero lungo l'asse vettore Z

Gli attributi sul verso degli spostamenti e delle rotazioni possono assumere i seguenti valori:

1 = Impedisce gli spostamenti sia positivi che negativi
3 = Impedisce solo gli spostamenti positivi
5 = Impedisce solo gli spostamenti negativi

Documento di proprietà **Snam Rete Gas**. La Società tutelerà i propri diritti in sede civile e penale a termini di legge.

- **SPECIFICHE CAMPI TABELLA DI STAMPA**

Si riporta di seguito la spiegazione delle sigle usate nella tabella di stampa della composizione degli elementi bidimensionali e la numerazione dei vertici dei microelementi in cui questi vengono suddivisi.

Macro N.ro :
Col.1/2/3/4/5/6 :
Micro N.ro :
Macro N.ro :
Vert.1 :
Vert.2 :
Vert.3 : *Numero del terzo vertice del microelemento*

Vert.4 : *Numero del quarto vertice del microelemento*

Documento di proprietà **Snam Rete Gas**. La Società tutelerà i propri diritti in sede civile e penale a termini di legge.

ARCHIVIO MATERIALI PIASTRE: MATRICE ELASTICA

Materiale N.ro	Densita' N/mc	Ex*1E3 N/mmq	Ni.x	Alfa.x (*1E5)	Ey*1E3 N/mmq	Ni.y	Alfa.y (*1E5)	E11*1E3 N/mmq	E12*1E3 N/mmq	E13*1E3 N/mmq	E22*1E3 N/mmq	E23*1E3 N/mmq	E33*1E3 N/mmq
1	25000	33.3	0.20	1.00	33.3	0.20	1.00	34.7	6.9	0.0	34.7	0.0	13.9

MATERIALI SHELL IN C.A.

IDENT	%	CARATTERISTICHE					DURABILITA'			COPRIFERRO	
Mat. N.ro	Rig Fls	Classe CLS	Classe Acciaio	Mod. E N/mmq	Pois-son	Gamma N/mc	Tipo Ambiente	Tipo Armatura	Toll. Copr.	Setti (cm)	Piastre (cm)
1	100	C32/40	B450C	33345.7	0.20	25000	AGGR. CX4	POCO SENS.	0.00	4.5	4.5

MATERIALI SHELL IN C.A.

CRITERI PER IL CALCOLO AGLI STATI LIMITE ULTIMI E DI ESERCIZIO

Cri Nro	Tipo Elem	fck	fcd	rcd	fyk	ftk	fyd	Ey	ec0	ecu	eyu	At/ Ac	Mt/ Mtu	Wra mm	Wfr mm	Wpe mm	σcRar	σcPer	σfRar	Spo Rar	Spo Fre	Spo Per	Coe Vis	euk
			----------		N/mmq		----------										---	N/mmq	---					
1	SETTI	32.00	18.10	18.10	450.0	450.0	391.3	210000.0	0.20	0.35	1.00	50			0.3	0.2	19.20	14.40	360.0					

CRITERI DI PROGETTO GEOTECNICI - FONDAZIONI SUPERFICIALI E SU PALI

IDEN	COSTANTE WINKLER			IDEN	COSTANTE WINKLER			IDEN	COSTANTE WINKLER	
Crit N.ro	KwVert N/cmc	KwOriz. N/cmc		Crit N.ro	KwVert N/cmc	KwOriz. N/cmc		Crit N.ro	KwVert N/cmc	KwOriz. N/cmc
1	150.0	15.0		2	150.0	0.0		3	40.0	0.0

DATI GENERALI DI STRUTTURA

DATI GENERALI DI STRUTTURA			
Massima dimens. dir. X (m)	3.25	Altezza edificio (m)	4.00
Massima dimens. dir. Y (m)	3.25	Differenza temperatura(°C)	15
PARAMETRI SISMICI			
Vita Nominale (Anni)	100	Classe d' Uso	QUARTA
Longitudine Est (Grd)	18.31480	Latitudine Nord (Grd)	40.27694
Categoria Suolo	B	Coeff. Condiz. Topogr.	1.00000
Sistema Costruttivo Dir.1	Utente	Sistema Costruttivo Dir.2	Utente
Regolarita' in Altezza	SI (KR=1)	Regolarita' in Pianta	SI
Direzione Sisma (Grd)	0	Sisma Verticale	ASSENTE
Effetti P/Delta	NO	Quota di Zero Sismico (m)	0.00000
PARAMETRI SPETTRO ELASTICO - SISMA S.L.D.			
Probabilita' Pvr	0.63	Periodo di Ritorno Anni	201.00
Accelerazione Ag/g	0.04	Periodo T'c (sec.)	0.34
Fo	2.43	Fv	0.62
Fattore Stratigrafia'Ss'	1.20	Periodo TB (sec.)	0.15
Periodo TC (sec.)	0.46	Periodo TD (sec.)	1.74
PARAMETRI SPETTRO ELASTICO - SISMA S.L.V.			
Probabilita' Pvr	0.10	Periodo di Ritorno Anni	1898.00
Accelerazione Ag/g	0.09	Periodo T'c (sec.)	0.52
Fo	2.60	Fv	1.06
Fattore Stratigrafia'Ss'	1.20	Periodo TB (sec.)	0.22
Periodo TC (sec.)	0.65	Periodo TD (sec.)	1.97
PARAMETRI SPETTRO ELASTICO - SISMA S.L.C.			
Probabilita' Pvr	0.05	Periodo di Ritorno Anni	2475.00
Accelerazione Ag/g	0.10	Periodo T'c (sec.)	0.54
Fo	2.64	Fv	1.13
Fattore Stratigrafia'Ss'	1.20	Periodo TB (sec.)	0.22
Periodo TC (sec.)	0.67	Periodo TD (sec.)	2.00
PARAMETRI SISTEMA COSTRUTTIVO ESPLICITO - D I R. 1			
Fattore di struttura 'q'	1.00		
PARAMETRI SISTEMA COSTRUTTIVO ESPLICITO - D I R. 2			
Fattore di struttura 'q'	1.00		
COEFFICIENTI DI SICUREZZA PARZIALI DEI MATERIALI			
Acciaio per CLS armato	1.15	Calcestruzzo CLS armato	1.50
Legno per comb. eccez.	1.00	Legno per comb. fondament.:	1.30
Livello conoscenza	LC2		
FRP Collasso Tipo 'A'	1.10	FRP Delaminazione Tipo 'A'	1.20
FRP Collasso Tipo 'B'	1.25	FRP Delaminazione Tipo 'B'	1.50
FRP Resist. Press/Fless	1.00	FRP Resist. Taglio/Torsione	1.20
FRP Resist. Confinamento	1.10		

Documento di proprietà **Snam Rete Gas**. La Società tutelerà i propri diritti in sede civile e penale a termini di legge.

ATTRIBUTI TAMPONATURE SU PIANI SISMICI

IDENTIFICATIV		ATTRIBUTI	
Piano N.ro	Quota (m)	Irregol Pianta	Piano Soffice
1	4.00	NO	NO

COORDINATE DEI NODI

IDENT.	POSIZIONE NODO			ATTRIBUTI		
Nodo3d N.ro	Coord.X (m)	Coord.Y (m)	Coord.Z (m)	Filo N.ro	Piano Sism.	Peso (kN)
1	0.00	1.56	0.40	22	0	111.6
2	0.00	1.56	2.00	22	0	2.2
3	0.00	0.00	2.00	6	0	2.0
4	0.00	0.00	0.00	6	0	0.0
5	1.56	0.00	0.00	18	0	0.0
6	0.00	2.36	1.20	1	0	1.0
7	3.25	0.00	0.00	7	0	0.0
8	0.00	0.76	1.20	2	0	0.9
9	0.00	3.25	2.00	10	0	2.1
10	0.00	0.00	0.67	6	0	2.0
11	3.25	1.56	0.00	24	0	0.0
12	0.00	3.25	0.67	10	0	2.1
13	1.56	1.56	0.00	23	0	0.0
14	0.00	1.56	0.00	22	0	0.0
15	0.00	3.25	1.33	10	0	2.0
16	0.00	0.00	1.33	6	0	1.9
17	0.00	3.25	0.00	10	0	0.0
18	1.56	3.25	0.00	19	0	0.0
19	3.25	3.25	0.00	11	0	0.0
20	3.25	1.56	0.40	24	0	111.6
21	3.25	1.56	2.00	24	0	2.3
22	3.25	0.00	2.00	7	0	2.2
23	3.25	2.36	1.20	3	0	1.0
24	3.25	0.76	1.20	4	0	0.9
25	3.25	3.25	2.00	11	0	2.2
26	0.00	3.25	4.00	10	1	1.3
27	0.00	1.56	4.00	22	1	1.3
28	0.00	0.00	4.00	6	1	1.2
29	1.56	0.00	4.00	18	1	1.3
30	3.25	0.00	4.00	7	1	1.3
31	3.25	1.56	4.00	24	1	1.2
32	3.25	3.25	4.00	11	1	1.2
33	1.56	3.25	4.00	19	1	1.3
34	3.25	0.00	0.67	7	0	2.1
35	3.25	3.25	0.67	11	0	2.2
36	3.25	3.25	1.33	11	0	2.1
37	3.25	0.00	1.33	7	0	2.0

DATI SHELL SPAZIALI

IDENTIFICAZIONE													CARATTERISTICHE SEZIONE				SUDDIVIS.	
Shell N.ro	Filo 1	Filo 2	Filo 3	Filo 4	Quota1 (m)	Quota2 (m)	Quota3 (m)	Quota4 (m)	Nod3d 1	Nod3d 2	Nod3d 3	Nod3d 4	Sez. N.ro	Spess (cm)	Kwinkl N/cmc	Tipo Mat.	MeshX	MeshY
1	22	22	10	10	0.00	0.40	0.67	0.00	14	1	12	17	2	25.0	0.0	1	1	3
2	22	10	10	1	2.00	2.00	1.33	1.20	2	9	15	6	2	25.0	0.0	1	3	1
3	22	1	10	10	0.40	1.20	1.33	0.67	1	6	15	12	2	25.0	0.0	1	1	3
4	6	6	2	22	0.67	1.33	1.20	0.40	10	16	8	1	2	25.0	0.0	1	1	3
5	6	6	22	22	0.00	0.67	0.40	0.00	4	10	1	14	2	25.0	0.0	1	1	3
6	7	24	23	18	0.00	0.00	0.00	0.00	7	11	13	5	1	40.0	150.0	1	3	3
7	18	23	22	6	0.00	0.00	0.00	0.00	5	13	14	4	1	40.0	150.0	1	3	3
8	6	6	22	2	1.33	2.00	2.00	1.20	16	3	2	8	2	25.0	0.0	1	1	3
9	11	11	24	24	2.00	4.00	4.00	2.00	25	32	31	21	2	25.0	0.0	1	3	3
10	22	23	19	10	0.00	0.00	0.00	0.00	14	13	18	17	1	40.0	150.0	1	3	3
11	19	23	24	11	0.00	0.00	0.00	0.00	18	13	11	19	1	40.0	150.0	1	3	3
12	24	24	7	7	2.00	4.00	4.00	2.00	21	31	30	22	2	25.0	0.0	1	3	3
13	11	11	24	3	1.33	2.00	2.00	1.20	36	25	21	23	2	25.0	0.0	1	1	3
14	11	11	3	24	0.67	1.33	1.20	0.40	35	36	23	20	2	25.0	0.0	1	1	3
15	24	7	7	4	2.00	2.00	1.33	1.20	21	22	37	24	2	25.0	0.0	1	3	1
16	24	4	7	7	0.40	1.20	1.33	0.67	20	24	37	34	2	25.0	0.0	1	1	3
17	10	22	22	10	2.00	2.00	4.00	4.00	9	2	27	26	2	25.0	0.0	1	3	3
18	6	18	18	6	0.00	0.00	4.00	4.00	4	5	29	28	2	25.0	0.0	1	3	6
19	11	11	24	24	0.00	0.67	0.40	0.00	19	35	20	11	2	25.0	0.0	1	1	3
20	11	19	19	11	0.00	0.00	4.00	4.00	19	18	33	32	2	25.0	0.0	1	3	6

Documento di proprietà **Snam Rete Gas**. La Società tutelerà i propri diritti in sede civile e penale a termini di legge.

DATI SHELL SPAZIALI

IDENTIFICAZIONE													CARATTERISTICHE SEZIONE				SUDDIVIS.	
Shell N.ro	Filo 1	Filo 2	Filo 3	Filo 4	Quota1 (m)	Quota2 (m)	Quota3 (m)	Quota4 (m)	Nod3d 1	Nod3d 2	Nod3d 3	Nod3d 4	Sez. N.ro	Spess (cm)	Kwinkl N/cmc	Tipo Mat.	MeshX	MeshY
21	18	7	7	18	0.00	0.00	4.00	4.00	5	7	30	29	2	25.0	0.0	1	3	6
22	19	10	10	19	0.00	0.00	4.00	4.00	18	17	26	33	2	25.0	0.0	1	3	6
23	22	6	6	22	2.00	2.00	4.00	4.00	2	3	28	27	2	25.0	0.0	1	3	3
24	24	24	7	7	0.00	0.40	0.67	0.00	11	20	34	7	2	25.0	0.0	1	1	3

VINCOLI E CEDIMENTI NODALI

IDENTIFIC.		RIGIDEZZE TRASLANTI			RIGIDEZZE ROTAZIONALI			SCOSTAMENTI						VERSO SPOSTAMENTI UNILATERI					
Nodo3d N.ro	Codice	Tx kN/m	Ty kN/m	Tz kN/m	Rx kN*m	Ry kN*m	Rz kN*m	Tr.X cm	Tr.Y cm	Tr.Z cm	Azim Grd	CoZe Grd	Ass. Grd	Tr.X	Tr.Y	Tr.Z	RotX	RotY	RotZ
4	W	-10	-10	0	0	0	-10	0	0	0	0	0	0						
5	W	-10	-10	0	0	0	-10	0	0	0	0	0	0						
7	W	-10	-10	0	0	0	-10	0	0	0	0	0	0						
11	W	-10	-10	0	0	0	-10	0	0	0	0	0	0						
13	W	-10	-10	0	0	0	-10	0	0	0	0	0	0						
14	W	-10	-10	0	0	0	-10	0	0	0	0	0	0						
17	W	-10	-10	0	0	0	-10	0	0	0	0	0	0						
18	W	-10	-10	0	0	0	-10	0	0	0	0	0	0						
19	W	-10	-10	0	0	0	-10	0	0	0	0	0	0						

CARICHI TERMICI/DISTRIBUITI/CONCENTRATI

CONDIZIONE DI CARICO N.ro: 2 ALIQUOTA SISMICA:100

IDENTI	FORZE CONCENTRATE			MOMENTI CONCENTRATI		
Nodo3d N.ro	Fx (kN)	Fy (kN)	Fz (kN)	Mx kN*m	My kN*m	Mz kN*m
1	0.000	0.000	-110.000	0.000	0.000	0.000
20	0.000	0.000	-110.000	0.000	0.000	0.000

CARICHI SUGLI SHELL

CONDIZIONE DI CARICO N.ro: 2 ALIQUOTA SISMICA: 100

IDENT.	PRESSIONI					CARICHI PERIMETRALI			
Shell N.ro	Riferimento	P.a kN/mq	P.b kN/mq	P.c kN/mq	P.d kN/mq	Q.ab kN/m	Q.bc kN/m	Q.cd kN/m	Q.da kN/m
9	1	0.0	0.0	0.0	0.0	0.0	0.0	-0.3	0.0
12	1	0.0	0.0	0.0	0.0	0.0	0.0	-0.3	0.0
17	1	0.0	0.0	0.0	0.0	0.0	0.0	-0.3	0.0
18	1	0.0	0.0	0.0	0.0	0.0	0.0	-0.3	0.0
20	1	0.0	0.0	0.0	0.0	0.0	0.0	-0.3	0.0
21	1	0.0	0.0	0.0	0.0	0.0	0.0	-0.3	0.0
22	1	0.0	0.0	0.0	0.0	0.0	0.0	-0.3	0.0
23	1	0.0	0.0	0.0	0.0	0.0	0.0	-0.3	0.0

CARICHI SUGLI SHELL

CONDIZIONE DI CARICO N.ro: 3 ALIQUOTA SISMICA: 100

IDENT.	PRESSIONI					CARICHI PERIMETRALI			
Shell N.ro	Riferimento	P.a kN/mq	P.b kN/mq	P.c kN/mq	P.d kN/mq	Q.ab kN/m	Q.bc kN/m	Q.cd kN/m	Q.da kN/m
1	1	-46.0	-39.0	-39.0	-46.0	0.0	0.0	0.0	0.0
2	1	-23.0	-23.0	-31.0	-31.0	0.0	0.0	0.0	0.0
3	1	-39.0	-31.0	-31.0	-39.0	0.0	0.0	0.0	0.0
4	1	-39.0	-31.0	-31.0	-39.0	0.0	0.0	0.0	0.0
5	1	-46.0	-39.0	-39.0	-46.0	0.0	0.0	0.0	0.0
8	1	-31.0	-23.0	-23.0	-31.0	0.0	0.0	0.0	0.0
9	1	-23.0	-10.0	-10.0	-23.0	0.0	0.0	0.0	0.0
12	1	-23.0	-10.0	-10.0	-23.0	0.0	0.0	0.0	0.0
13	1	-31.0	-23.0	-23.0	-31.0	0.0	0.0	0.0	0.0
14	1	-39.0	-31.0	-31.0	-39.0	0.0	0.0	0.0	0.0
15	1	-23.0	-23.0	-31.0	-31.0	0.0	0.0	0.0	0.0
16	1	-39.0	-31.0	-31.0	-39.0	0.0	0.0	0.0	0.0
17	1	-23.0	-23.0	-10.0	-10.0	0.0	0.0	0.0	0.0
18	1	-46.0	-46.0	-10.0	-10.0	0.0	0.0	0.0	0.0
19	1	-46.0	-39.0	-39.0	-46.0	0.0	0.0	0.0	0.0
20	1	-46.0	-46.0	-10.0	-10.0	0.0	0.0	0.0	0.0
21	1	-46.0	-46.0	-10.0	-10.0	0.0	0.0	0.0	0.0
22	1	-46.0	-46.0	-10.0	-10.0	0.0	0.0	0.0	0.0
23	1	-23.0	-23.0	-10.0	-10.0	0.0	0.0	0.0	0.0
24	1	-46.0	-39.0	-39.0	-46.0	0.0	0.0	0.0	0.0

Documento di proprietà **Snam Rete Gas**. La Società tutelerà i propri diritti in sede civile e penale a termini di legge.

CARICHI SUGLI SHELL

CONDIZIONE DI CARICO N.ro: 4 — ALIQUOTA SISMICA: 100

IDENT.	PRESSIONI					CARICHI PERIMETRALI			
Shell N.ro	Riferimento	P.a kN/mq	P.b kN/mq	P.c kN/mq	P.d kN/mq	Q.ab kN/m	Q.bc kN/m	Q.cd kN/m	Q.da kN/m
1	1	-2.3	-2.3	-2.3	-2.3	0.0	0.0	0.0	0.0
2	1	-2.3	-2.3	-2.3	-2.3	0.0	0.0	0.0	0.0
3	1	-2.3	-2.3	-2.3	-2.3	0.0	0.0	0.0	0.0
4	1	-2.3	-2.3	-2.3	-2.3	0.0	0.0	0.0	0.0
5	1	-2.3	-2.3	-2.3	-2.3	0.0	0.0	0.0	0.0
8	1	-2.3	-2.3	-2.3	-2.3	0.0	0.0	0.0	0.0
9	1	-2.3	-2.3	-2.3	-2.3	0.0	0.0	0.0	0.0
12	1	-2.3	-2.3	-2.3	-2.3	0.0	0.0	0.0	0.0
13	1	-2.3	-2.3	-2.3	-2.3	0.0	0.0	0.0	0.0
14	1	-2.3	-2.3	-2.3	-2.3	0.0	0.0	0.0	0.0
15	1	-2.3	-2.3	-2.3	-2.3	0.0	0.0	0.0	0.0
16	1	-2.3	-2.3	-2.3	-2.3	0.0	0.0	0.0	0.0
17	1	-2.3	-2.3	-2.3	-2.3	0.0	0.0	0.0	0.0
18	1	-2.3	-2.3	-2.3	-2.3	0.0	0.0	0.0	0.0
19	1	-2.3	-2.3	-2.3	-2.3	0.0	0.0	0.0	0.0
20	1	-2.3	-2.3	-2.3	-2.3	0.0	0.0	0.0	0.0
21	1	-2.3	-2.3	-2.3	-2.3	0.0	0.0	0.0	0.0
22	1	-2.3	-2.3	-2.3	-2.3	0.0	0.0	0.0	0.0
23	1	-2.3	-2.3	-2.3	-2.3	0.0	0.0	0.0	0.0
24	1	-2.3	-2.3	-2.3	-2.3	0.0	0.0	0.0	0.0

CARICHI SUGLI SHELL

CONDIZIONE DI CARICO N.ro: 5 — ALIQUOTA SISMICA: 0

IDENT.	PRESSIONI					CARICHI PERIMETRALI			
Shell N.ro	Riferimento	P.a kN/mq	P.b kN/mq	P.c kN/mq	P.d kN/mq	Q.ab kN/m	Q.bc kN/m	Q.cd kN/m	Q.da kN/m
9	1	0.0	0.0	0.0	0.0	0.0	0.0	-0.4	0.0
12	1	0.0	0.0	0.0	0.0	0.0	0.0	-0.4	0.0
17	1	0.0	0.0	0.0	0.0	0.0	0.0	-0.4	0.0
18	1	0.0	0.0	0.0	0.0	0.0	0.0	-0.4	0.0
20	1	0.0	0.0	0.0	0.0	0.0	0.0	-0.4	0.0
21	1	0.0	0.0	0.0	0.0	0.0	0.0	-0.4	0.0
22	1	0.0	0.0	0.0	0.0	0.0	0.0	-0.4	0.0
23	1	0.0	0.0	0.0	0.0	0.0	0.0	-0.4	0.0

COMPOSIZIONE SHELL

Macro Nro	Col.1	Col.2	Col.3	Col.4	Col.5	Col.6		Macro Nro	Col.1	Col.2	Col.3	Col.4	Col.5	Col.6
1	1							2	2	27	28			
	25													
	26													
3	3							4	4					
	29								31					
	30								32					
5	5							6	6	35	36			
	33								37	38	39			
	34								40	41	42			
7	7	43	44					8	8					
	45	46	47						51					
	48	49	50						52					
9	9	53	54					10	10	61	62			
	55	56	57						63	64	65			
	58	59	60						66	67	68			

Documento di proprietà **Snam Rete Gas**. La Società tutelerà i propri diritti in sede civile e penale a termini di legge.

COMPOSIZIONE SHELL

Macro Nro	Col.1	Col.2	Col.3	Col.4	Col.5	Col.6		Macro Nro	Col.1	Col.2	Col.3	Col.4	Col.5	Col.6
11	11	69	70					12	12	77	78			
	71	72	73						79	80	81			
	74	75	76						82	83	84			
13	13							14	14					
	85								87					
	86								88					
15	15	89	90					16	16					
									91					
									92					
17	17	93	94					18	18	101	102			
	95	96	97						103	104	105			
	98	99	100						106	107	108			
									109	110	111			
									112	113	114			
									115	116	117			
19	19							20	20	120	121			
	118								122	123	124			
	119								125	126	127			
									128	129	130			
									131	132	133			
									134	135	136			
21	21	137	138					22	22	154	155			
	139	140	141						156	157	158			
	142	143	144						159	160	161			
	145	146	147						162	163	164			
	148	149	150						165	166	167			
	151	152	153						168	169	170			
23	23	171	172					24	24					
	173	174	175						179					
	176	177	178						180					

S.L.U. - AZIONI S.L.V. - NODI SHELL C.A. - QUOTA: 1 ELEMENTO: 1

Nodo 3d N.ro	X3d (m)	Y3d (m)	Z3d (m)		Nodo 3d N.ro	X3d (m)	Y3d (m)	Z3d (m)
4	0.00	0.00	0.00		6	0.00	2.36	1.20
8	0.00	0.76	1.20		16	0.00	0.00	1.33
38	0.00	2.13	0.00		44	0.00	2.66	1.24
49	0.00	0.51	1.24		51	0.00	1.04	0.00
120	0.00	3.25	2.67		139	0.00	0.00	2.67
193	0.00	0.52	3.33		194	0.00	1.04	4.00
195	0.00	0.52	4.00					

S.L.U. - AZIONI S.L.V. - NODI SHELL C.A. - QUOTA: 1 ELEMENTO: 2

Nodo 3d N.ro	X3d (m)	Y3d (m)	Z3d (m)		Nodo 3d N.ro	X3d (m)	Y3d (m)	Z3d (m)
7	3.25	0.00	0.00		23	3.25	2.36	1.20
24	3.25	0.76	1.20		37	3.25	0.00	1.33
74	3.25	3.25	2.67		101	3.25	2.13	0.00
110	3.25	0.00	2.67		113	3.25	2.66	1.24
115	3.25	2.13	0.49		116	3.25	0.51	1.24
117	3.25	0.25	1.29		118	3.25	1.04	0.49

Documento di proprietà **Snam Rete Gas**. La Società tutelerà i propri diritti in sede civile e penale a termini di legge.

S.L.U. - AZIONI S.L.V. - NODI SHELL C.A. - QUOTA: 1 ELEMENTO: 2

Nodo 3d N.ro	X3d (m)	Y3d (m)	Z3d (m)		Nodo 3d N.ro	X3d (m)	Y3d (m)	Z3d (m)
119	3.25	0.52	0.58					

S.L.U. - AZIONI S.L.V. - NODI SHELL C.A. - QUOTA: 1 ELEMENTO: 3

Nodo 3d N.ro	X3d (m)	Y3d (m)	Z3d (m)		Nodo 3d N.ro	X3d (m)	Y3d (m)	Z3d (m)
3	0.00	0.00	2.00		5	1.56	0.00	0.00
7	3.25	0.00	0.00		58	2.13	0.00	0.00
64	1.04	0.00	0.00		110	3.25	0.00	2.67
131	1.04	0.00	0.67		134	1.04	0.00	1.33
135	1.56	0.00	1.33		139	0.00	0.00	2.67
145	1.04	0.00	3.33		168	2.13	0.00	1.33
174	2.13	0.00	3.33					

S.L.U. - AZIONI S.L.V. - NODI SHELL C.A. - QUOTA: 1 ELEMENTO: 4

Nodo 3d N.ro	X3d (m)	Y3d (m)	Z3d (m)		Nodo 3d N.ro	X3d (m)	Y3d (m)	Z3d (m)
9	0.00	3.25	2.00		17	0.00	3.25	0.00
18	1.56	3.25	0.00		74	3.25	3.25	2.67
93	1.04	3.25	0.00		94	2.13	3.25	0.00
120	0.00	3.25	2.67		153	2.13	3.25	1.33
154	1.56	3.25	1.33		157	1.56	3.25	2.00
159	2.13	3.25	2.67		162	2.13	3.25	3.33
180	1.04	3.25	1.33		186	1.04	3.25	3.33

S.L.U. - AZIONI S.L.V. -NODI PIASTRA - QUOTA: 0 ELEMENTO: 1

Nodo 3d N.ro	X3d (m)	Y3d (m)	Z3d (m)		Nodo 3d N.ro	X3d (m)	Y3d (m)	Z3d (m)
5	1.56	0.00	0.00		7	3.25	0.00	0.00
11	3.25	1.56	0.00		13	1.56	1.56	0.00
14	0.00	1.56	0.00		18	1.56	3.25	0.00
38	0.00	2.13	0.00		58	2.13	0.00	0.00
60	2.13	1.04	0.00		64	1.04	0.00	0.00
87	1.04	2.13	0.00		94	2.13	3.25	0.00
96	2.13	2.13	0.00					

Documento di proprietà **Snam Rete Gas**. La Società tutelerà i propri diritti in sede civile e penale a termini di legge.

COMBINAZIONI CARICHI - S.L.V. - A1 / S.L.D.

DESCRIZIONI	1	2	3	4	5	6	7	8	9	10	11	12	13	14	15
Peso Strutturale	1.30	1.30	1.00	1.00	1.00	1.00	1.00	1.00	1.00	1.00	1.00	1.00	1.00	1.00	1.00
Perm.Non Strutturale	1.50	1.50	1.00	1.00	1.00	1.00	1.00	1.00	1.00	1.00	1.00	1.00	1.00	1.00	1.00
SPINTA TERR STATICA	1.50	1.50	1.00	1.00	1.00	1.00	1.00	1.00	1.00	1.00	1.00	1.00	1.00	1.00	1.00
SPINTA TERRENO SISMI	0.00	0.00	1.00	1.00	1.00	1.00	1.00	1.00	1.00	1.00	1.00	1.00	1.00	1.00	1.00
NEVE	0.00	1.50	0.00	0.00	0.00	0.00	0.00	0.00	0.00	0.00	0.00	0.00	0.00	0.00	0.00
Corr. Tors. dir. 0	0.00	0.00	1.00	-1.00	1.00	-1.00	1.00	-1.00	1.00	-1.00	-1.00	1.00	-1.00	1.00	-1.00
Corr. Tors. dir. 90	0.00	0.00	0.30	0.30	-0.30	-0.30	-0.30	-0.30	0.30	0.30	0.30	0.30	-0.30	-0.30	-0.30
Sisma direz. grd 0	0.00	0.00	1.00	1.00	1.00	1.00	1.00	1.00	1.00	1.00	-1.00	-1.00	-1.00	-1.00	-1.00
Sisma direz. grd 90	0.00	0.00	0.30	0.30	0.30	0.30	-0.30	-0.30	-0.30	-0.30	0.30	0.30	0.30	0.30	-0.30

COMBINAZIONI CARICHI - S.L.V. - A1 / S.L.D.

DESCRIZIONI	16	17	18	19	20	21	22	23	24	25	26	27	28	29	30
Peso Strutturale	1.00	1.00	1.00	1.00	1.00	1.00	1.00	1.00	1.00	1.00	1.00	1.00	1.00	1.00	1.00
Perm.Non Strutturale	1.00	1.00	1.00	1.00	1.00	1.00	1.00	1.00	1.00	1.00	1.00	1.00	1.00	1.00	1.00
SPINTA TERR STATICA	1.00	1.00	1.00	1.00	1.00	1.00	1.00	1.00	1.00	1.00	1.00	1.00	1.00	1.00	1.00
SPINTA TERRENO SISMI	1.00	1.00	1.00	1.00	1.00	1.00	1.00	1.00	1.00	1.00	1.00	1.00	1.00	1.00	1.00
NEVE	0.00	0.00	0.00	0.00	0.00	0.00	0.00	0.00	0.00	0.00	0.00	0.00	0.00	0.00	0.00
Corr. Tors. dir. 0	1.00	-1.00	1.00	0.30	-0.30	0.30	-0.30	0.30	-0.30	0.30	-0.30	-0.30	0.30	-0.30	0.30
Corr. Tors. dir. 90	-0.30	0.30	0.30	1.00	1.00	-1.00	-1.00	-1.00	-1.00	1.00	1.00	1.00	1.00	-1.00	-1.00
Sisma direz. grd 0	-1.00	-1.00	-1.00	0.30	0.30	0.30	0.30	0.30	0.30	0.30	0.30	-0.30	-0.30	-0.30	-0.30
Sisma direz. grd 90	-0.30	-0.30	-0.30	1.00	1.00	1.00	1.00	-1.00	-1.00	-1.00	-1.00	1.00	1.00	1.00	1.00

COMBINAZIONI CARICHI - S.L.V. - A1 / S.L.D.

DESCRIZIONI	31	32	33	34
Peso Strutturale	1.00	1.00	1.00	1.00
Perm.Non Strutturale	1.00	1.00	1.00	1.00
SPINTA TERR STATICA	1.00	1.00	1.00	1.00
SPINTA TERRENO SISMI	1.00	1.00	1.00	1.00
NEVE	0.00	0.00	0.00	0.00
Corr. Tors. dir. 0	-0.30	0.30	-0.30	0.30
Corr. Tors. dir. 90	-1.00	-1.00	1.00	1.00
Sisma direz. grd 0	-0.30	-0.30	-0.30	-0.30
Sisma direz. grd 90	-1.00	-1.00	-1.00	-1.00

COMBINAZIONI RARE - S.L.E.

DESCRIZIONI	1	2
Peso Strutturale	1.00	1.00
Perm.Non Strutturale	1.00	1.00
SPINTA TERR STATICA	1.00	1.00
SPINTA TERRENO SISMI	0.00	0.00
NEVE	0.50	1.00
Corr. Tors. dir. 0	0.00	0.00
Corr. Tors. dir. 90	0.00	0.00
Sisma direz. grd 0	0.00	0.00
Sisma direz. grd 90	0.00	0.00

COMBINAZIONI FREQUENTI - S.L.E.

DESCRIZIONI	1	2
Peso Strutturale	1.00	1.00
Perm.Non Strutturale	1.00	1.00
SPINTA TERR STATICA	1.00	1.00
SPINTA TERRENO SISMI	0.00	0.00
NEVE	0.00	0.20
Corr. Tors. dir. 0	0.00	0.00
Corr. Tors. dir. 90	0.00	0.00
Sisma direz. grd 0	0.00	0.00
Sisma direz. grd 90	0.00	0.00

COMBINAZIONI PERMANENTI - S.L.E.

DESCRIZIONI	1
Peso Strutturale	1.00
Perm.Non Strutturale	1.00
SPINTA TERR STATICA	1.00
SPINTA TERRENO SISMI	0.00
NEVE	0.00
Corr. Tors. dir. 0	0.00
Corr. Tors. dir. 90	0.00
Sisma direz. grd 0	0.00
Sisma direz. grd 90	0.00

Documento di proprietà **Snam Rete Gas**. La Società tutelerà i propri diritti in sede civile e penale a termini di legge.

- **SPECIFICHE CAMPI TABELLE DI STAMPA TRAVI**

Tratto : *Le aste adiacenti a setti e piastre vengono suddivise in sottoelementi per garantire la congruenza. Il numero di "TRATTO" identifica la posizione sequenziale del sottoelemento attuale a partire dall'estremo iniziale*
Filo in. : *Filo iniziale*
Filo fin. : *Filo finale*

Le altre grandezze descritte di seguito si riferiscono a ciascun estremo dell'asta:
Alt. : *Altezza dell'estremità dell'asta dallo spiccato di fondazione*
Tx : *Taglio lungo la direzione dell'asse 'X' del sistema di riferimento locale di asta (principale d'inerzia)*
Ty : *Taglio lungo la direzione dell'asse 'Y' del sistema di riferimento locale di asta*
N : *Sforzo assiale*
Mx : *Momento agente con asse vettore parallelo all'asse 'X' del sistema di riferimento locale di asta*
My : *Momento agente con asse vettore parallelo all'asse 'Y' del sistema di riferimento locale di asta*
Mt : *Momento torcente dell'asta (agente con asse vettore parallelo all'asse 'Z' locale)*

- **SPECIFICHE CAMPI TABELLE DI STAMPA SHELL**

SISTEMA DI RIFERIMENTO LOCALE (s.r.l.): Il sistema di riferimento locale dell'elemento shell è così definito:
Origine : *I° punto di inserimento dello shell*
Asse 1 : *Asse X nel s.r.l., definito dal punto origine e dal II° punto di inserimento, nel verso di quest'ultimo*
Piano12 : *Piano XY nel s.r.l., definito dai punti origine, II° e III° di inserimento*
Asse 2 : *Asse Y nel s.r.l., ottenuto nel piano 12 con una rotazione antioraria di 90° dell'asse X intorno al punto origine, in modo che l'asse I-II si sovrapponga all'asse I-III con un angolo<180°*
Asse 3 *Asse Z nel s.r.l., ortogonale al piano 12, in modo da formare una terna destra con gli assi 1 e 2*

Le tensioni di lastra (S) sono costanti lungo lo spessore. Le tensioni di piastra (M) variano linearmente lungo lo spessore, annullandosi in corrispondenza del piano medio (diagramma emisimmetrico o "a farfalla"). I valori del tensore degli sforzi sono riferiti alla faccia positiva (superiore nel s.r.l.) di normale 3 (esempio: Xij tensione X agente sulla faccia di normale i e diretta lungo j).
Le altre grandezze descritte di seguito si riferiscono a ciascun nodo dell'elemento bidimensionale:
Shell Nro : *numero dell'elemento bidimensionale*
nodo N.ro : *numero del nodo dell'elemento bidimensionale a cui sono riferite le tensioni S di lastra e M piastra*
S11 : *tensione normale di lastra*
S22 : *tensione normale di lastra*
S12 *tensione tangenziale di lastra (S12 = S21)*
M11 *tensione normale di piastra sulla faccia positiva*
M22 *tensione normale di piastra sulla faccia positiva*
M12 *tensione tangenziale di piastra sulla faccia positiva*

Tabulato di stampa dei carichi nodali equivalenti applicati nei nodi degli shell.

Documento di proprietà **Snam Rete Gas**. La Società tutelerà i propri diritti in sede civile e penale a termini di legge.

Shell Nro : *numero dell'elemento bidimensionale*
nodo N.ro : *numero del nodo dell'elemento bidimensionale a cui sono i carichi nodali degli shell*
Tx : *Forza nodale in direzione X del sistema di riferimento locale*
Ty : *Forza nodale in direzione Y del sistema di riferimento locale*
Tz : *Forza nodale in direzione X del sistema di riferimento locale*
Mx : *Momento nodale con asse vettore parallelo all'asse X del sistema di riferimento locale*
My : *Momento nodale con asse vettore parallelo all'asse Y del sistema di riferimento locale*
Mz : *Momento nodale con asse vettore parallelo all'asse Z del sistema di riferimento locale*

- **SPECIFICHE CAMPI TABELLE DI STAMPA TRAVI**

Tratto : *Le aste adiacenti a setti e piastre vengono suddivise in sottoelementi per garantire la congruenza. Il numero di "TRATTO" identifica la posizione sequenziale del sottoelemento attuale a partire dall'estremo iniziale*
Filo in. : *Filo iniziale*
Filo fin. : *Filo finale*

Le altre grandezze descritte di seguito si riferiscono a ciascun estremo dell'asta:
Alt. : *Altezza dell'estremità dell'asta dallo spiccato di fondazione*
Tx : *Taglio lungo la direzione dell'asse 'X' del sistema di riferimento locale di asta (principale d'inerzia)*
Ty : *Taglio lungo la direzione dell'asse 'Y' del sistema di riferimento locale di asta*
N : *Sforzo assiale*
Mx : *Momento agente con asse vettore parallelo all'asse 'X' del sistema di riferimento locale di asta*
My : *Momento agente con asse vettore parallelo all'asse 'Y' del sistema di riferimento locale di asta*
Mt : *Momento torcente dell'asta (agente con asse vettore parallelo all'asse 'Z' locale)*

- **SPECIFICHE CAMPI TABELLE DI STAMPA SHELL**

SISTEMA DI RIFERIMENTO LOCALE (s.r.l.): Il sistema di riferimento locale dell'elemento shell è così definito:
Origine : *I° punto di inserimento dello shell*
Asse 1 : *Asse X nel s.r.l., definito dal punto origine e dal II° punto di inserimento, nel verso di quest'ultimo*
Piano12 : *Piano XY nel s.r.l., definito dai punti origine, II° e III° di inserimento*
Asse 2 : *Asse Y nel s.r.l., ottenuto nel piano 12 con una rotazione antioraria di 90° dell'asse X intorno al punto origine, in modo che l'asse I-II si sovrapponga all'asse I-III con un angolo<180°*
Asse 3 *Asse Z nel s.r.l., ortogonale al piano 12, in modo da formare una terna destra con gli assi 1 e 2*

Le tensioni di lastra (S) sono costanti lungo lo spessore. Le tensioni di piastra (M) variano linearmente lungo lo spessore, annullandosi in corrispondenza del piano medio (diagramma emisimmetrico o "a farfalla"). I valori del tensore degli sforzi

Documento di proprietà **Snam Rete Gas**. La Società tutelerà i propri diritti in sede civile e penale a termini di legge.

sono riferiti alla faccia positiva (superiore nel s.r.l.) di normale 3 (esempio: Xij tensione X agente sulla faccia di normale i e diretta lungo j).
Le altre grandezze descritte di seguito si riferiscono a ciascun nodo dell'elemento bidimensionale:

Shell Nro : *numero dell'elemento bidimensionale*
nodo N.ro : *numero del nodo dell'elemento bidimensionale a cui sono riferite le tensioni S di lastra e M piastra*
S11 : *tensione normale di lastra*
S22 : *tensione normale di lastra*
S12 *tensione tangenziale di lastra (S12 = S21)*
M11 *tensione normale di piastra sulla faccia positiva*
M22 *tensione normale di piastra sulla faccia positiva*
M12 *tensione tangenziale di piastra sulla faccia positiva*

Tabulato di stampa dei carichi nodali equivalenti applicati nei nodi degli shell.

Shell Nro : *numero dell'elemento bidimensionale*
nodo N.ro : *numero del nodo dell'elemento bidimensionale a cui sono i carichi nodali degli shell*
Tx : *Forza nodale in direzione X del sistema di riferimento locale*
Ty : *Forza nodale in direzione Y del sistema di riferimento locale*
Tz : *Forza nodale in direzione X del sistema di riferimento locale*
Mx : *Momento nodale con asse vettore parallelo all'asse X del sistema di riferimento locale*
My : *Momento nodale con asse vettore parallelo all'asse Y del sistema di riferimento locale*
Mz : *Momento nodale con asse vettore parallelo all'asse Z del sistema di riferimento locale*

Documento di proprietà **Snam Rete Gas**. La Società tutelerà i propri diritti in sede civile e penale a termini di legge.

- **SPECIFICHE CAMPI TABELLE DI STAMPA TRAVI**

Tratto : *Le aste adiacenti a setti e piastre vengono suddivise in sottoelementi per garantire la congruenza. Il numero di "TRATTO" identifica la posizione sequenziale del sottoelemento attuale a partire dall'estremo iniziale*
Filo in. : *Filo iniziale*
Filo fin. : *Filo finale*

Le altre grandezze descritte di seguito si riferiscono a ciascun estremo dell'asta:

Alt. : *Altezza dell'estremità dell'asta dallo spiccato di fondazione*
Sx : *Spostamento lungo la direzione dell'asse 'X' del sistema di riferimento locale di asta*
Sy : *Spostamento lungo la direzione dell'asse 'Y' del sistema di riferimento locale di asta*
Sz : *Spostamento assiale*
Rx : *Rotazione agente con asse vettore parallelo all'asse 'X' del sistema di riferimento locale di asta*
Ry : *Rotazione agente con asse vettore parallelo all'asse 'Y' del sistema di riferimento locale di asta*
Rz : *Rotazione torcente dell'asta (agente con asse vettore parallelo all'asse 'Z' locale)*

- **SPECIFICHE CAMPI TABELLE DI STAMPA SHELL**

SISTEMA DI RIFERIMENTO LOCALE (s.r.l.): Il sistema di riferimento locale dell'elemento shell è così definito:
Origine : *I° punto di inserimento dello shell*
Asse 1 : *Asse X nel s.r.l., definito dal punto origine e dal II° punto di inserimento, nel verso di quest'ultimo*
Piano12 : *Piano XY nel s.r.l., definito dai punti origine, II° e III° di inserimento*
Asse 2 : *Asse Y nel s.r.l., ottenuto nel piano 12 con una rotazione antioraria di 90° dell'asse X intorno al punto origine, in modo che l'asse I-II si sovrapponga all'asse I-III con un angolo<180°*
Asse 3 : *Asse Z nel s.r.l., ortogonale al piano 12, in modo da formare una terna destra con gli assi 1 e 2*
Shell Nro : *numero dell'elemento bidimensionale*
nodo N.ro : *numero del nodo dell'elemento bidimensionale a cui sono riferite le tensioni S di lastra e M piastra*

Per ogni nodo dell'elemento bidimensionale:

Si : *spostamento in direzione i, s.r.l*
Ri : *rotazione con asse vettore i, s.r.l*

Documento di proprietà **Snam Rete Gas**. La Società tutelerà i propri diritti in sede civile e penale a termini di legge.

- **SPECIFICHE CAMPI TABELLA DI STAMPA**

Filo N.ro : *Numero del filo del nodo inferiore o superiore*

Quota inf/sup : *Quota del nodo inferiore e del nodo superiore*

Nodo inf/sup : *Numero dei nodi inferiore e superiore per la determinazione degli spostamenti sismici relativi*

Sisma N.ro : *Numero del sisma per cui è massimo il valore dello spostamento totale calcolato per lo S.L.D.*

Spostam. Calcolo : *valore dello spostamento totale calcolato per lo S.L.D.*

Spostam. Limite : *valore dello spostamento limite per lo S.L.D.*
Sisma N.ro : *Numero del sisma per cui è massimo il valore dello spostamento totale calcolato per lo S.L.O.*

Spostam. Calcolo : *valore dello spostamento totale calcolato per lo S.L.O.*

Spostam. Limite : *valore dello spostamento limite per lo S.L.O.*

Documento di proprietà **Snam Rete Gas**. La Società tutelerà i propri diritti in sede civile e penale a termini di legge.

- **SPECIFICHE CAMPI TABELLA DI STAMPA**

Si riporta di seguito la spiegazione delle sigle usate nella tabella di stampa della verifica degli elementi bidimensionali allo stato limite ultimo.

Quota N.ro: : *Quota a cui si trova l'elemento*
Perim. N.ro : *Numero identificativo del macroelemento il cui perimetro è stato definito prima di eseguire la verifica*
Nodo 3d N.ro : *Numero del nodo relativo alla suddivisione del macroelemento in microelementi*
Nx : *Sforzo sul piano dell'elemento bidimensionale diretto come l'asse x del sistema locale (il sistema di riferimento locale è quello delle armature)*
Ny : *Sforzo sul piano dell'elemento bidimensionale diretto come l'asse y del sistema locale*
Txy : *Sforzo tagliante sul piano dell'elemento con direzione y e agente sulla faccia di normale x del sistema locale (ovvero anche, per la simmetria delle tensioni tangenziali, sforzo tagliante sul piano dell'elemento con direzione x e agente sulla faccia di normale y del sistema locale)*
Mx : *Momento flettente agente sulla sezione di normale x del sistema locale. Per le verifiche è accoppiato allo sforzo normale Nx. Questo momento è incrementato per tenere in conto il valore del momento torcente Mxy*
My : *Momento flettente agente sulla sezione di normale y del sistema locale. Per le verifiche è accoppiato allo sforzo normale Ny. Questo momento è incrementato per tenere in conto il valore del momento torcente Mxy*
Mxy : *Momento torcente con asse vettore x e agente sulla sezione di normale x (ovvero anche, per la simmetria delle tensioni tangenziali momento torcente con asse vettore y e agente sulla sezione di normale y)*
εcx *10000 : *Deformazione del calcestruzzo nella faccia di normale x *10000 (Es. 0.35% = 35)*
εcy *10000 : *Deformazione del calcestruzzo nella faccia di normale y *10000 (Es. 0.35% = 35)*
εfx *10000 : *Deformazione dell'acciaio nella faccia di normale x *10000 (Es. 1% = 100)*
εfy *10000 : *Deformazione dell'acciaio nella faccia di normale y *10000 (Es. 1% = 100)*
Ax superiore : *Area totale armatura superiore diretta lungo x. Area totale è l'area della presso-flessione più l'area per il taglio riportata dopo)*
Ay superiore : *Area totale armatura superiore diretta lungo y*
Ax inferiore : *Area totale armatura inferiore diretta lungo x*
Ay inferiore : *Area totale armatura inferiore diretta lungo y*
Atag : *Area per il taglio su ciascuna faccia per le due direzioni*
σt : *Tensione massima di contatto con il terreno*
Eta : *Abbassamento verticale del nodo in esame*
Fpunz : *Forza di punzonamento determinata amplificando il massimo valore della forza punzonante (ottenuta dall'inviluppo fra le varie combinazioni di carico agenti) per un coefficiente beta raccomandato nell'eurocodice 2 (figura 6.21). Per le piastre di fondazione la forza di punzonamento è stata ridotta dell'effetto favorevole della pressione del suolo*
FpunzLi : *Resistenza al punzonamento ottenuta dall'applicazione dalla formula (6.47) dell'erurocodice 2, utilizzando il perimetro di base definito nelle figure 6.13 e 6.15*
Apunz : *Armatura di punzonamento calcolata dalla formula (6.51) dell' eurocodice 2*

Nel caso di stampa di riverifiche degli elementi con le armature effettivamente disposte sul disegno ferri le colonne delle ε vengono sostituite con:

Molt. : *Moltiplicatore delle sollecitazioni che porta a rottura la sezione, rispettivamente nelle direzioni X e Y*
x/d : *Posizione adimensionalizzata dell'asse neutro rispettivamente nelle direzioni X e Y*

Documento di proprietà **Snam Rete Gas**. La Società tutelerà i propri diritti in sede civile e penale a termini di legge.

- **SPECIFICHE CAMPI TABELLA DI STAMPA**

Si riporta di seguito la spiegazione delle sigle usate nella tabella di stampa delle verifiche agli stati limite di esercizio degli elementi bidimensionali.

Quota : *Quota a cui si trova l'elemento*
Perim. : *Numero identificativo del macro-elemento il cui perimetro è stato definito prima di eseguire la verifica*
Nodo : *Numero del nodo relativo alla suddivisione del macro-elemento in microelementi*
Comb Cari : *Indicatore della matrice di combinazione; la prima riga individua la matrice delle combinazioni rare, la seconda la matrice delle combinazioni frequenti, la terza quella permanenti*
Fes lim : *Fessura limite espressa in mm*
Fess. : *Fessura di calcolo espressa in mm; se sull'elemento non si aprono fessure tutta la riga sarà nulla*
Dist mm : *Distanza fra le fessure*
Combin : *Numero della combinazione ed in sequenza sollecitazioni per cui si è avuta la massima fessura*
Mf X : *Momento flettente agente sulla sezione di normale x del sistema locale. (Il sistema di riferimento locale è quello delle armature)*
N X : *Sforzo sul piano dell'elemento bidimensionale diretto come l'asse x del sistema locale*
Mf Y : *Momento flettente agente sulla sezione di normale y del sistema locale. (Il sistema di riferimento locale è quello delle armature)*
N Y : *Sforzo sul piano dell'elemento bidimensionale diretto come l'asse y del sistema locale*
Cos teta : *Coseno dell'angolo teta tra l'armatura in direzione X e la direzione della tensione principale di trazione*
Sin teta : *Seno dell'angolo teta*
Combina Carico : *Indicatore della matrice di combinazione; la prima riga individua la matrice delle combinazioni rare per la verifica della tensione sul cls, la seconda la matrice delle combinazioni rare per la verifica della tensione sull'acciaio, la terza la matrice delle combinazioni permanenti per la verifica della tensione sul cls*
s lim : *Valore della tensione limite in Kg/cmq*
s cal : *Valore della tensione di calcolo in Kg/cmq sulla faccia di normale x*
Conbin : *Numero della combinazione ed in sequenza sollecitazioni per cui si è avuta la massima tensione*
Mf X : *Momento flettente agente sulla sezione di normale x del sistema locale. (Il sistema di riferimento locale è quello delle armature)*
N X : *Sforzo sul piano dell'elemento bidimensionale diretto come l'asse x del sistema locale*
s cal : *Valore della tensione di calcolo in Kg/cmq sulla faccia di normale y*
Combin : *Numero della combinazione ed in sequenza sollecitazioni per cui si è avuta la massima tensione*
Mf Y : *Momento flettente agente sulla sezione di normale y del sistema locale*
N Y : *Sforzo sul piano dell'elemento bidimensionale diretto come l'asse y del sistema locale*

Documento di proprietà **Snam Rete Gas**. La Società tutelerà i propri diritti in sede civile e penale a termini di legge.

- **SPECIFICHE CAMPI TABELLA DI STAMPA**

Si riporta di seguito la spiegazione delle sigle usate nella tabella di stampa della verifica degli elementi bidimensionali allo stato limite ultimo.

Gruppo Quote : *Numero identificativo del gruppo di quote definito prima di eseguire la verifica*
Generatrice : *Numero identificativo della generatrice definita prima di eseguire la verifica*
Nodo 3d N.ro : *Numero del nodo relativo alla suddivisione del macroelemento in microelementi*
Nx : *Sforzo sul piano dell'elemento bidimensionale diretto come l'asse x del sistema locale. (Il sistema di riferimento locale ha l'asse x nella direzione del setto e l'asse y verticale)*
Ny : *Sforzo sul piano dell'elemento bidimensionale diretto come l'asse y del sistema locale*
Txy : *Sforzo tagliante sul piano dell'elemento con direzione y e agente sulla faccia di normale x del sistema locale.(Ovvero anche, per la simmetria delle tensioni tangenziali, sforzo tagliante sul piano dell'elemento con direzione x e agente sulla faccia di normale y del sistema locale)*
Mx : *Momento flettente agente sulla sezione di normale x del sistema locale. Per le verifiche è accoppiato allo sforzo normale Nx. Questo momento è incrementato per tenere in conto il valore del momento torcente Mxy*
My : *Momento flettente agente sulla sezione di normale y del sistema locale. Per le verifiche è accoppiato allo sforzo normale Ny. Questo momento è incrementato per tenere in conto il valore del momento torcente Mxy*
Mxy : *Momento torcente con asse vettore x e agente sulla sezione di normale x (ovvero anche, per la simmetria delle tensioni tangenziali, momento torcente con asse vettore y e agente sulla sezione di normale y)*
εcx* 10000 : *Deformazione del calcestruzzo nella faccia di normale x ×10000 (Es. 0.35% = 35)*
εcy* 10000 : *Deformazione del calcestruzzo nella faccia di normale y ×10000 (Es. 0.35% = 35)*
εfx* 10000 : *Deformazione dell'acciaio nella faccia di normale x ×10000 (Es. 1% = 100)*
εfy *10000 : *Deformazione dell'acciaio nella faccia di normale x ×10000 (Es. 1% = 100)*
Ax superiore : *Area totale armatura superiore diretta lungo x. (Area totale è l'area della presso-flessione più l'area per il taglio riportata dopo)*
Ay superiore : *Area totale armatura superiore diretta lungo y*
Ax inferiore : *Area totale armatura inferiore diretta lungo x*
Ay inferiore : *Area totale armatura inferiore diretta lungo y*
Atag : *Area per il taglio su ciascuna faccia per le due direzioni*
σt : *Tensione massima di contatto con il terreno*
Eta : *Abbassamento verticale del nodo in esame*

Nel caso di stampa di riverifiche degli elementi con le armature effettivamente disposte sul disegno ferri le colonne delle ε vengono sostituite con:

Molt. : *Moltiplicatore delle sollecitazioni che porta a rottura la sezione, rispettivamente nelle direzioni X e Y*

Documento di proprietà **Snam Rete Gas**. La Società tutelerà i propri diritti in sede civile e penale a termini di legge.

- **SPECIFICHE CAMPI TABELLA DI STAMPA**

Si riporta di seguito la spiegazione delle sigle usate nella tabella di stampa delle verifiche agli stati limite di esercizio degli elementi bidimensionali.

Gr.Q	:	*Numero identificativo del gruppo di quote definito prima di eseguire la verifica*
Gen	:	*Numero identificativo della generatrice definita prima di eseguire la verifica*
Nodo	:	*Numero del nodo relativo alla suddivisione del macro-elemento in microelementi*
Comb. Cari	:	*Indicatore della matrice di combinazione; la prima riga individua la matrice delle combinazioni rare, la seconda la matrice delle combinazioni frequenti, la terza quella permanenti*
Fes lim	:	*Fessura limite espressa in mm*
Fess.	:	*Fessura di calcolo espressa in mm; se sull'elemento non si aprono fessure tutta la riga sarà nulla*
Dist mm	:	*Distanza fra le fessure*
Combin	:	*Numero della combinazione ed in sequenza sollecitazioni per cui si è avuta la massima fessura*
Mf X	:	*Momento flettente agente sulla sezione di normale x del sistema locale. (Il sistema di riferimento locale è quello delle armature)*
N X	:	*Sforzo sul piano dell'elemento bidimensionale diretto come l'asse x del sistema locale*
Mf Y	:	*Momento flettente agente sulla sezione di normale y del sistema locale. (Il sistema di riferimento locale è quello delle armature)*
N Y	:	*Sforzo sul piano dell'elemento bidimensionale diretto come l'asse y del sistema locale*
Cos teta	:	*Coseno dell'angolo teta tra l'armatura in direzione X e la direzione della tensione principale di trazione*
Sin teta	:	*Seno dell'angolo teta*
Combina Carico	:	*Indicatore della matrice di combinazione; la prima riga individua la matrice delle combinazioni rare per la verifica della tensione sul cls, la seconda la matrice delle combinazioni rare per la verifica della tensione sull'acciaio, la terza la matrice delle combinazioni permanenti per la verifica della tensione sul cls*
s lim	:	*Valore della tensione limite in Kg/cmq*
s cal	:	*Valore della tensione di calcolo in Kg/cmq sulla faccia di normale x*
Conbin	:	*Numero della combinazione ed in sequenza sollecitazioni per cui si è avuta la massima tensione*
Mf X	:	*Momento flettente agente sulla sezione di normale x del sistema locale. (Il sistema di riferimento locale è quello delle armature)*
N X	:	*Sforzo sul piano dell'elemento bidimensionale diretto come l'asse x del sistema locale*
s cal	:	*Valore della tensione di calcolo in Kg/cmq sulla faccia di normale y*
Combin	:	*Numero della combinazione ed in sequenza sollecitazioni per cui si è avuta la massima tensione*
Mf Y	:	*Momento flettente agente sulla sezione di normale y del sistema locale*
N Y	:	*Sforzo sul piano dell'elemento bidimensionale diretto come l'asse y del sistema locale*

Documento di proprietà **Snam Rete Gas**. La Società tutelerà i propri diritti in sede civile e penale a termini di legge.

FREQUENZE E MASSE ECCITATE

									Eccitat Totale	SISMA N.ro 1 Massa 47.12	Perc. .92	SISMA N.ro 2 Massa 48.64	Perc. .95	SISMA N.ro 3 Massa	Perc.
Modo N.ro	Pulsazione (rad/sec)	Periodo (sec)	Smorz Mod(%)	Sd/g SLO	Sd/g SLD	Sd/g SLV X	Sd/g SLV Y	Sd/g SLV Z	Sd/g SLC	Massa Mod Ecc.(kN)	Perc.	Massa Mod Ecc.(kN)	Perc.	Massa Mod Ecc.(kN)	Perc.
1	86.278	0.07283	5.0		0.070	0.167	0.167		0.185	0.0	0.00	295.1	0.58		
2	86.654	0.07251	5.0		0.070	0.167	0.167		0.185	299.8	0.59	0.0	0.00		
3	425.040	0.01478	5.0		0.048	0.121	0.121		0.134	0.0	0.00	0.0	0.00		
4	495.770	0.01267	5.0		0.047	0.119	0.119		0.132	157.2	0.31	0.0	0.00		
5	541.210	0.01161	5.0		0.047	0.118	0.118		0.131	0.0	0.00	0.0	0.00		
6	618.225	0.01016	5.0		0.046	0.117	0.117		0.130	0.0	0.00	1.1	0.00		
7	667.255	0.00942	5.0		0.046	0.117	0.117		0.130	0.0	0.00	0.0	0.00		
8	720.325	0.00872	5.0		0.045	0.116	0.116		0.129	5.2	0.01	0.0	0.00		
9	730.621	0.00860	5.0		0.045	0.116	0.116		0.129	9.0	0.02	0.0	0.00		
10	930.309	0.00675	5.0		0.045	0.115	0.115		0.127	0.0	0.00	0.0	0.00		
11	958.046	0.00656	5.0		0.045	0.114	0.114		0.127	0.0	0.00	190.2	0.37		
12	1028.704	0.00611	5.0		0.044	0.114	0.114		0.127	0.0	0.00	0.1	0.00		

FORZE: SISMA 0°°: MODO1: SHELL

Shell Nro	Nodo N.ro	Tx (kN)	Ty (kN)	Tz (kN)	Mx (kN*m)	My (kN*m)	Mz (kN*m)	Nodo N.ro	Tx (kN)	Ty (kN)	Tz (kN)	Mx (kN*m)	My (kN*m)	Mz (kN*m)
1	38	0.0	0.0	0.0	0.0	0.0	0.0	39	0.0	0.0	0.0	0.0	0.0	0.0
	14	0.0	0.0	0.0	0.0	0.0	0.0	1	0.0	0.0	0.0	0.0	0.0	0.0
2	6	0.0	0.0	0.0	0.0	0.0	0.0	44	0.0	0.0	0.0	0.0	0.0	0.0
	2	0.0	0.0	0.0	0.0	0.0	0.0	42	0.0	0.0	0.0	0.0	0.0	0.0
3	39	0.0	0.0	0.0	0.0	0.0	0.0	44	0.0	0.0	0.0	0.0	0.0	0.0
	1	0.0	0.0	0.0	0.0	0.0	0.0	6	0.0	0.0	0.0	0.0	0.0	0.0
4	46	0.0	0.0	0.0	0.0	0.0	0.0	47	0.0	0.0	0.0	0.0	0.0	0.0
	10	0.0	0.0	0.0	0.0	0.0	0.0	16	0.0	0.0	0.0	0.0	0.0	0.0
5	50	0.0	0.0	0.0	0.0	0.0	0.0	46	0.0	0.0	0.0	0.0	0.0	0.0
	4	0.0	0.0	0.0	0.0	0.0	0.0	10	0.0	0.0	0.0	0.0	0.0	0.0
6	54	0.0	0.0	0.0	0.0	0.0	0.0	55	0.0	0.0	0.0	0.0	0.0	0.0
	7	0.0	0.0	0.0	0.0	0.0	0.0	52	0.0	0.0	0.0	0.0	0.0	0.0
7	64	0.0	0.0	0.0	0.0	0.0	0.0	65	0.0	0.0	0.0	0.0	0.0	0.0
	5	0.0	0.0	0.0	0.0	0.0	0.0	62	0.0	0.0	0.0	0.0	0.0	0.0
8	47	0.0	0.0	0.0	0.0	0.0	0.0	72	0.0	0.0	0.0	0.0	0.0	0.0
	16	0.0	0.0	0.0	0.0	0.0	0.0	3	0.0	0.0	0.0	0.0	0.0	0.0
9	76	0.0	0.0	0.0	0.0	0.0	0.0	77	0.0	0.0	0.0	0.0	0.0	0.0
	25	0.0	0.0	0.0	0.0	0.0	0.0	74	0.0	0.0	0.0	0.0	0.0	0.0
10	38	0.0	0.0	0.0	0.0	0.0	0.0	86	0.0	0.0	0.0	0.0	0.0	0.0
	14	0.0	0.0	0.0	0.0	0.0	0.0	71	0.0	0.0	0.0	0.0	0.0	0.0
11	94	0.0	0.0	0.0	0.0	0.0	0.0	95	0.0	0.0	0.0	0.0	0.0	0.0
	18	0.0	0.0	0.0	0.0	0.0	0.0	91	0.0	0.0	0.0	0.0	0.0	0.0
12	102	0.0	0.0	0.0	0.0	0.0	0.0	103	0.0	0.0	0.0	0.0	0.0	0.0
	21	0.0	0.0	0.0	0.0	0.0	0.0	84	0.0	0.0	0.0	0.0	0.0	0.0
13	112	0.0	0.0	0.0	0.0	0.0	0.0	76	0.0	0.0	0.0	0.0	0.0	0.0
	36	0.0	0.0	0.0	0.0	0.0	0.0	25	0.0	0.0	0.0	0.0	0.0	0.0
14	114	0.0	0.0	0.0	0.0	0.0	0.0	112	0.0	0.0	0.0	0.0	0.0	0.0
	35	0.0	0.0	0.0	0.0	0.0	0.0	36	0.0	0.0	0.0	0.0	0.0	0.0
15	24	0.0	0.0	0.0	0.0	0.0	0.0	116	0.0	0.0	0.0	0.0	0.0	0.0
	21	0.0	0.0	0.0	0.0	0.0	0.0	102	0.0	0.0	0.0	0.0	0.0	0.0
16	118	0.0	0.0	0.0	0.0	0.0	0.0	116	0.0	0.0	0.0	0.0	0.0	0.0
	20	0.0	0.0	0.0	0.0	0.0	0.0	24	0.0	0.0	0.0	0.0	0.0	0.0
17	120	0.0	0.0	0.0	0.0	0.0	0.0	121	0.0	0.0	0.0	0.0	0.0	0.0
	9	0.0	0.0	0.0	0.0	0.0	0.0	43	0.0	0.0	0.0	0.0	0.0	0.0
18	10	0.0	0.0	0.0	0.0	0.0	0.0	130	0.0	0.0	0.0	0.0	0.0	0.0
	4	0.0	0.0	0.0	0.0	0.0	0.0	68	0.0	0.0	0.0	0.0	0.0	0.0
19	100	0.0	0.0	0.0	0.0	0.0	0.0	114	0.0	0.0	0.0	0.0	0.0	0.0
	19	0.0	0.0	0.0	0.0	0.0	0.0	35	0.0	0.0	0.0	0.0	0.0	0.0
20	35	0.0	0.0	0.0	0.0	0.0	0.0	149	0.0	0.0	0.0	0.0	0.0	0.0
	19	0.0	0.0	0.0	0.0	0.0	0.0	97	0.0	0.0	0.0	0.0	0.0	0.0
21	132	0.0	0.0	0.0	0.0	0.0	0.0	166	0.0	0.0	0.0	0.0	0.0	0.0
	5	0.0	0.0	0.0	0.0	0.0	0.0	58	0.0	0.0	0.0	0.0	0.0	0.0
22	151	0.0	0.0	0.0	0.0	0.0	0.0	178	0.0	0.0	0.0	0.0	0.0	0.0
	18	0.0	0.0	0.0	0.0	0.0	0.0	93	0.0	0.0	0.0	0.0	0.0	0.0
23	123	0.0	0.0	0.0	0.0	0.0	0.0	190	0.0	0.0	0.0	0.0	0.0	0.0
	2	0.0	0.0	0.0	0.0	0.0	0.0	73	0.0	0.0	0.0	0.0	0.0	0.0
24	53	0.0	0.0	0.0	0.0	0.0	0.0	118	0.0	0.0	0.0	0.0	0.0	0.0
	11	0.0	0.0	0.0	0.0	0.0	0.0	20	0.0	0.0	0.0	0.0	0.0	0.0
25	40	0.0	0.0	0.0	0.0	0.0	0.0	41	0.0	0.0	0.0	0.0	0.0	0.0
	38	0.0	0.0	0.0	0.0	0.0	0.0	39	0.0	0.0	0.0	0.0	0.0	0.0
26	17	0.0	0.0	0.0	0.0	0.0	0.0	12	0.0	0.0	0.0	0.0	0.0	0.0
	40	0.0	0.0	0.0	0.0	0.0	0.0	41	0.0	0.0	0.0	0.0	0.0	0.0
27	44	0.0	0.0	0.0	0.0	0.0	0.0	45	0.0	0.0	0.0	0.0	0.0	0.0
	42	0.0	0.0	0.0	0.0	0.0	0.0	43	0.0	0.0	0.0	0.0	0.0	0.0
28	45	0.0	0.0	0.0	0.0	0.0	0.0	15	0.0	0.0	0.0	0.0	0.0	0.0
	43	0.0	0.0	0.0	0.0	0.0	0.0	9	0.0	0.0	0.0	0.0	0.0	0.0
29	41	0.0	0.0	0.0	0.0	0.0	0.0	45	0.0	0.0	0.0	0.0	0.0	0.0
	39	0.0	0.0	0.0	0.0	0.0	0.0	44	0.0	0.0	0.0	0.0	0.0	0.0

Documento di proprietà **Snam Rete Gas**. La Società tutelerà i propri diritti in sede civile e penale a termini di legge.

FORZE: SISMA 0°°: MODO1: SHELL

Shell Nro	Nodo N.ro	Tx (kN)	Ty (kN)	Tz (kN)	Mx (kN*m)	My (kN*m)	Mz (kN*m)	Nodo N.ro	Tx (kN)	Ty (kN)	Tz (kN)	Mx (kN*m)	My (kN*m)	Mz (kN*m)
30	12	0.0	0.0	0.0	0.0	0.0	0.0	15	0.0	0.0	0.0	0.0	0.0	0.0
	41	0.0	0.0	0.0	0.0	0.0	0.0	45	0.0	0.0	0.0	0.0	0.0	0.0
31	48	0.0	0.0	0.0	0.0	0.0	0.0	49	0.0	0.0	0.0	0.0	0.0	0.0
	46	0.0	0.0	0.0	0.0	0.0	0.0	47	0.0	0.0	0.0	0.0	0.0	0.0
32	1	0.0	0.0	0.0	0.0	0.0	0.0	8	0.0	0.0	0.0	0.0	0.0	0.0
	48	0.0	0.0	0.0	0.0	0.0	0.0	49	0.0	0.0	0.0	0.0	0.0	0.0
33	51	0.0	0.0	0.0	0.0	0.0	0.0	48	0.0	0.0	0.0	0.0	0.0	0.0
	50	0.0	0.0	0.0	0.0	0.0	0.0	46	0.0	0.0	0.0	0.0	0.0	0.0
34	14	0.0	0.0	0.0	0.0	0.0	0.0	1	0.0	0.0	0.0	0.0	0.0	0.0
	51	0.0	0.0	0.0	0.0	0.0	0.0	48	0.0	0.0	0.0	0.0	0.0	0.0
35	55	0.0	0.0	0.0	0.0	0.0	0.0	56	0.0	0.0	0.0	0.0	0.0	0.0
	52	0.0	0.0	0.0	0.0	0.0	0.0	53	0.0	0.0	0.0	0.0	0.0	0.0
36	56	0.0	0.0	0.0	0.0	0.0	0.0	57	0.0	0.0	0.0	0.0	0.0	0.0
	53	0.0	0.0	0.0	0.0	0.0	0.0	11	0.0	0.0	0.0	0.0	0.0	0.0
37	58	0.0	0.0	0.0	0.0	0.0	0.0	59	0.0	0.0	0.0	0.0	0.0	0.0
	54	0.0	0.0	0.0	0.0	0.0	0.0	55	0.0	0.0	0.0	0.0	0.0	0.0
38	59	0.0	0.0	0.0	0.0	0.0	0.0	60	0.0	0.0	0.0	0.0	0.0	0.0
	55	0.0	0.0	0.0	0.0	0.0	0.0	56	0.0	0.0	0.0	0.0	0.0	0.0
39	60	0.0	0.0	0.0	0.0	0.0	0.0	61	0.0	0.0	0.0	0.0	0.0	0.0
	56	0.0	0.0	0.0	0.0	0.0	0.0	57	0.0	0.0	0.0	0.0	0.0	0.0
40	5	0.0	0.0	0.0	0.0	0.0	0.0	62	0.0	0.0	0.0	0.0	0.0	0.0
	58	0.0	0.0	0.0	0.0	0.0	0.0	59	0.0	0.0	0.0	0.0	0.0	0.0
41	62	0.0	0.0	0.0	0.0	0.0	0.0	63	0.0	0.0	0.0	0.0	0.0	0.0
	59	0.0	0.0	0.0	0.0	0.0	0.0	60	0.0	0.0	0.0	0.0	0.0	0.0
42	63	0.0	0.0	0.0	0.0	0.0	0.0	13	0.0	0.0	0.0	0.0	0.0	0.0
	60	0.0	0.0	0.0	0.0	0.0	0.0	61	0.0	0.0	0.0	0.0	0.0	0.0
43	65	0.0	0.0	0.0	0.0	0.0	0.0	66	0.0	0.0	0.0	0.0	0.0	0.0
	62	0.0	0.0	0.0	0.0	0.0	0.0	63	0.0	0.0	0.0	0.0	0.0	0.0
44	66	0.0	0.0	0.0	0.0	0.0	0.0	67	0.0	0.0	0.0	0.0	0.0	0.0
	63	0.0	0.0	0.0	0.0	0.0	0.0	13	0.0	0.0	0.0	0.0	0.0	0.0
45	68	0.0	0.0	0.0	0.0	0.0	0.0	69	0.0	0.0	0.0	0.0	0.0	0.0
	64	0.0	0.0	0.0	0.0	0.0	0.0	65	0.0	0.0	0.0	0.0	0.0	0.0
46	69	0.0	0.0	0.0	0.0	0.0	0.0	70	0.0	0.0	0.0	0.0	0.0	0.0
	65	0.0	0.0	0.0	0.0	0.0	0.0	66	0.0	0.0	0.0	0.0	0.0	0.0
47	70	0.0	0.0	0.0	0.0	0.0	0.0	71	0.0	0.0	0.0	0.0	0.0	0.0
	66	0.0	0.0	0.0	0.0	0.0	0.0	67	0.0	0.0	0.0	0.0	0.0	0.0
48	4	0.0	0.0	0.0	0.0	0.0	0.0	50	0.0	0.0	0.0	0.0	0.0	0.0
	68	0.0	0.0	0.0	0.0	0.0	0.0	69	0.0	0.0	0.0	0.0	0.0	0.0
49	50	0.0	0.0	0.0	0.0	0.0	0.0	51	0.0	0.0	0.0	0.0	0.0	0.0
	69	0.0	0.0	0.0	0.0	0.0	0.0	70	0.0	0.0	0.0	0.0	0.0	0.0
50	51	0.0	0.0	0.0	0.0	0.0	0.0	14	0.0	0.0	0.0	0.0	0.0	0.0
	70	0.0	0.0	0.0	0.0	0.0	0.0	71	0.0	0.0	0.0	0.0	0.0	0.0
51	49	0.0	0.0	0.0	0.0	0.0	0.0	73	0.0	0.0	0.0	0.0	0.0	0.0
	47	0.0	0.0	0.0	0.0	0.0	0.0	72	0.0	0.0	0.0	0.0	0.0	0.0
52	8	0.0	0.0	0.0	0.0	0.0	0.0	2	0.0	0.0	0.0	0.0	0.0	0.0
	49	0.0	0.0	0.0	0.0	0.0	0.0	73	0.0	0.0	0.0	0.0	0.0	0.0
53	77	0.0	0.0	0.0	0.0	0.0	0.0	78	0.0	0.0	0.0	0.0	0.0	0.0
	74	0.0	0.0	0.0	0.0	0.0	0.0	75	0.0	0.0	0.0	0.0	0.0	0.0
54	78	0.0	0.0	0.0	0.0	0.0	0.0	79	0.0	0.0	0.0	0.0	0.0	0.0
	75	0.0	0.0	0.0	0.0	0.0	0.0	32	0.0	0.0	0.0	0.0	0.0	0.0
55	80	0.0	0.0	0.0	0.0	0.0	0.0	81	0.0	0.0	0.0	0.0	0.0	0.0
	76	0.0	0.0	0.0	0.0	0.0	0.0	77	0.0	0.0	0.0	0.0	0.0	0.0
56	81	0.0	0.0	0.0	0.0	0.0	0.0	82	0.0	0.0	0.0	0.0	0.0	0.0
	77	0.0	0.0	0.0	0.0	0.0	0.0	78	0.0	0.0	0.0	0.0	0.0	0.0
57	82	0.0	0.0	0.0	0.0	0.0	0.0	83	0.0	0.0	0.0	0.0	0.0	0.0
	78	0.0	0.0	0.0	0.0	0.0	0.0	79	0.0	0.0	0.0	0.0	0.0	0.0
58	21	0.0	0.0	0.0	0.0	0.0	0.0	84	0.0	0.0	0.0	0.0	0.0	0.0
	80	0.0	0.0	0.0	0.0	0.0	0.0	81	0.0	0.0	0.0	0.0	0.0	0.0
59	84	0.0	0.0	0.0	0.0	0.0	0.0	85	0.0	0.0	0.0	0.0	0.0	0.0
	81	0.0	0.0	0.0	0.0	0.0	0.0	82	0.0	0.0	0.0	0.0	0.0	0.0
60	85	0.0	0.0	0.0	0.0	0.0	0.0	31	0.0	0.0	0.0	0.0	0.0	0.0
	82	0.0	0.0	0.0	0.0	0.0	0.0	83	0.0	0.0	0.0	0.0	0.0	0.0
61	86	0.0	0.0	0.0	0.0	0.0	0.0	87	0.0	0.0	0.0	0.0	0.0	0.0
	71	0.0	0.0	0.0	0.0	0.0	0.0	67	0.0	0.0	0.0	0.0	0.0	0.0
62	87	0.0	0.0	0.0	0.0	0.0	0.0	88	0.0	0.0	0.0	0.0	0.0	0.0
	67	0.0	0.0	0.0	0.0	0.0	0.0	13	0.0	0.0	0.0	0.0	0.0	0.0
63	40	0.0	0.0	0.0	0.0	0.0	0.0	89	0.0	0.0	0.0	0.0	0.0	0.0
	38	0.0	0.0	0.0	0.0	0.0	0.0	86	0.0	0.0	0.0	0.0	0.0	0.0
64	89	0.0	0.0	0.0	0.0	0.0	0.0	90	0.0	0.0	0.0	0.0	0.0	0.0
	86	0.0	0.0	0.0	0.0	0.0	0.0	87	0.0	0.0	0.0	0.0	0.0	0.0
65	90	0.0	0.0	0.0	0.0	0.0	0.0	91	0.0	0.0	0.0	0.0	0.0	0.0
	87	0.0	0.0	0.0	0.0	0.0	0.0	88	0.0	0.0	0.0	0.0	0.0	0.0
66	17	0.0	0.0	0.0	0.0	0.0	0.0	92	0.0	0.0	0.0	0.0	0.0	0.0
	40	0.0	0.0	0.0	0.0	0.0	0.0	89	0.0	0.0	0.0	0.0	0.0	0.0
67	92	0.0	0.0	0.0	0.0	0.0	0.0	93	0.0	0.0	0.0	0.0	0.0	0.0
	89	0.0	0.0	0.0	0.0	0.0	0.0	90	0.0	0.0	0.0	0.0	0.0	0.0
68	93	0.0	0.0	0.0	0.0	0.0	0.0	18	0.0	0.0	0.0	0.0	0.0	0.0
	90	0.0	0.0	0.0	0.0	0.0	0.0	91	0.0	0.0	0.0	0.0	0.0	0.0
69	95	0.0	0.0	0.0	0.0	0.0	0.0	96	0.0	0.0	0.0	0.0	0.0	0.0
	91	0.0	0.0	0.0	0.0	0.0	0.0	88	0.0	0.0	0.0	0.0	0.0	0.0

Documento di proprietà **Snam Rete Gas**. La Società tutelerà i propri diritti in sede civile e penale a termini di legge.

FORZE: SISMA 0°°: MODO1: SHELL

Shell Nro	Nodo N.ro	Tx (kN)	Ty (kN)	Tz (kN)	Mx (kN*m)	My (kN*m)	Mz (kN*m)	Nodo N.ro	Tx (kN)	Ty (kN)	Tz (kN)	Mx (kN*m)	My (kN*m)	Mz (kN*m)
70	96	0.0	0.0	0.0	0.0	0.0	0.0	61	0.0	0.0	0.0	0.0	0.0	0.0
	88	0.0	0.0	0.0	0.0	0.0	0.0	13	0.0	0.0	0.0	0.0	0.0	0.0
71	97	0.0	0.0	0.0	0.0	0.0	0.0	98	0.0	0.0	0.0	0.0	0.0	0.0
	94	0.0	0.0	0.0	0.0	0.0	0.0	95	0.0	0.0	0.0	0.0	0.0	0.0
72	98	0.0	0.0	0.0	0.0	0.0	0.0	99	0.0	0.0	0.0	0.0	0.0	0.0
	95	0.0	0.0	0.0	0.0	0.0	0.0	96	0.0	0.0	0.0	0.0	0.0	0.0
73	99	0.0	0.0	0.0	0.0	0.0	0.0	57	0.0	0.0	0.0	0.0	0.0	0.0
	96	0.0	0.0	0.0	0.0	0.0	0.0	61	0.0	0.0	0.0	0.0	0.0	0.0
74	19	0.0	0.0	0.0	0.0	0.0	0.0	100	0.0	0.0	0.0	0.0	0.0	0.0
	97	0.0	0.0	0.0	0.0	0.0	0.0	98	0.0	0.0	0.0	0.0	0.0	0.0
75	100	0.0	0.0	0.0	0.0	0.0	0.0	101	0.0	0.0	0.0	0.0	0.0	0.0
	98	0.0	0.0	0.0	0.0	0.0	0.0	99	0.0	0.0	0.0	0.0	0.0	0.0
76	101	0.0	0.0	0.0	0.0	0.0	0.0	11	0.0	0.0	0.0	0.0	0.0	0.0
	99	0.0	0.0	0.0	0.0	0.0	0.0	57	0.0	0.0	0.0	0.0	0.0	0.0
77	103	0.0	0.0	0.0	0.0	0.0	0.0	104	0.0	0.0	0.0	0.0	0.0	0.0
	84	0.0	0.0	0.0	0.0	0.0	0.0	85	0.0	0.0	0.0	0.0	0.0	0.0
78	104	0.0	0.0	0.0	0.0	0.0	0.0	105	0.0	0.0	0.0	0.0	0.0	0.0
	85	0.0	0.0	0.0	0.0	0.0	0.0	31	0.0	0.0	0.0	0.0	0.0	0.0
79	106	0.0	0.0	0.0	0.0	0.0	0.0	107	0.0	0.0	0.0	0.0	0.0	0.0
	102	0.0	0.0	0.0	0.0	0.0	0.0	103	0.0	0.0	0.0	0.0	0.0	0.0
80	107	0.0	0.0	0.0	0.0	0.0	0.0	108	0.0	0.0	0.0	0.0	0.0	0.0
	103	0.0	0.0	0.0	0.0	0.0	0.0	104	0.0	0.0	0.0	0.0	0.0	0.0
81	108	0.0	0.0	0.0	0.0	0.0	0.0	109	0.0	0.0	0.0	0.0	0.0	0.0
	104	0.0	0.0	0.0	0.0	0.0	0.0	105	0.0	0.0	0.0	0.0	0.0	0.0
82	22	0.0	0.0	0.0	0.0	0.0	0.0	110	0.0	0.0	0.0	0.0	0.0	0.0
	106	0.0	0.0	0.0	0.0	0.0	0.0	107	0.0	0.0	0.0	0.0	0.0	0.0
83	110	0.0	0.0	0.0	0.0	0.0	0.0	111	0.0	0.0	0.0	0.0	0.0	0.0
	107	0.0	0.0	0.0	0.0	0.0	0.0	108	0.0	0.0	0.0	0.0	0.0	0.0
84	111	0.0	0.0	0.0	0.0	0.0	0.0	30	0.0	0.0	0.0	0.0	0.0	0.0
	108	0.0	0.0	0.0	0.0	0.0	0.0	109	0.0	0.0	0.0	0.0	0.0	0.0
85	113	0.0	0.0	0.0	0.0	0.0	0.0	80	0.0	0.0	0.0	0.0	0.0	0.0
	112	0.0	0.0	0.0	0.0	0.0	0.0	76	0.0	0.0	0.0	0.0	0.0	0.0
86	23	0.0	0.0	0.0	0.0	0.0	0.0	21	0.0	0.0	0.0	0.0	0.0	0.0
	113	0.0	0.0	0.0	0.0	0.0	0.0	80	0.0	0.0	0.0	0.0	0.0	0.0
87	115	0.0	0.0	0.0	0.0	0.0	0.0	113	0.0	0.0	0.0	0.0	0.0	0.0
	114	0.0	0.0	0.0	0.0	0.0	0.0	112	0.0	0.0	0.0	0.0	0.0	0.0
88	20	0.0	0.0	0.0	0.0	0.0	0.0	23	0.0	0.0	0.0	0.0	0.0	0.0
	115	0.0	0.0	0.0	0.0	0.0	0.0	113	0.0	0.0	0.0	0.0	0.0	0.0
89	116	0.0	0.0	0.0	0.0	0.0	0.0	117	0.0	0.0	0.0	0.0	0.0	0.0
	102	0.0	0.0	0.0	0.0	0.0	0.0	106	0.0	0.0	0.0	0.0	0.0	0.0
90	117	0.0	0.0	0.0	0.0	0.0	0.0	37	0.0	0.0	0.0	0.0	0.0	0.0
	106	0.0	0.0	0.0	0.0	0.0	0.0	22	0.0	0.0	0.0	0.0	0.0	0.0
91	119	0.0	0.0	0.0	0.0	0.0	0.0	117	0.0	0.0	0.0	0.0	0.0	0.0
	118	0.0	0.0	0.0	0.0	0.0	0.0	116	0.0	0.0	0.0	0.0	0.0	0.0
92	34	0.0	0.0	0.0	0.0	0.0	0.0	37	0.0	0.0	0.0	0.0	0.0	0.0
	119	0.0	0.0	0.0	0.0	0.0	0.0	117	0.0	0.0	0.0	0.0	0.0	0.0
93	121	0.0	0.0	0.0	0.0	0.0	0.0	122	0.0	0.0	0.0	0.0	0.0	0.0
	43	0.0	0.0	0.0	0.0	0.0	0.0	42	0.0	0.0	0.0	0.0	0.0	0.0
94	122	0.0	0.0	0.0	0.0	0.0	0.0	123	0.0	0.0	0.0	0.0	0.0	0.0
	42	0.0	0.0	0.0	0.0	0.0	0.0	2	0.0	0.0	0.0	0.0	0.0	0.0
95	124	0.0	0.0	0.0	0.0	0.0	0.0	125	0.0	0.0	0.0	0.0	0.0	0.0
	120	0.0	0.0	0.0	0.0	0.0	0.0	121	0.0	0.0	0.0	0.0	0.0	0.0
96	125	0.0	0.0	0.0	0.0	0.0	0.0	126	0.0	0.0	0.0	0.0	0.0	0.0
	121	0.0	0.0	0.0	0.0	0.0	0.0	122	0.0	0.0	0.0	0.0	0.0	0.0
97	126	0.0	0.0	0.0	0.0	0.0	0.0	127	0.0	0.0	0.0	0.0	0.0	0.0
	122	0.0	0.0	0.0	0.0	0.0	0.0	123	0.0	0.0	0.0	0.0	0.0	0.0
98	26	0.0	0.0	0.0	0.0	0.0	0.0	128	0.0	0.0	0.0	0.0	0.0	0.0
	124	0.0	0.0	0.0	0.0	0.0	0.0	125	0.0	0.0	0.0	0.0	0.0	0.0
99	128	0.0	0.0	0.0	0.0	0.0	0.0	129	0.0	0.0	0.0	0.0	0.0	0.0
	125	0.0	0.0	0.0	0.0	0.0	0.0	126	0.0	0.0	0.0	0.0	0.0	0.0
100	129	0.0	0.0	0.0	0.0	0.0	0.0	27	0.0	0.0	0.0	0.0	0.0	0.0
	126	0.0	0.0	0.0	0.0	0.0	0.0	127	0.0	0.0	0.0	0.0	0.0	0.0
101	130	0.0	0.0	0.0	0.0	0.0	0.0	131	0.0	0.0	0.0	0.0	0.0	0.0
	68	0.0	0.0	0.0	0.0	0.0	0.0	64	0.0	0.0	0.0	0.0	0.0	0.0
102	131	0.0	0.0	0.0	0.0	0.0	0.0	132	0.0	0.0	0.0	0.0	0.0	0.0
	64	0.0	0.0	0.0	0.0	0.0	0.0	5	0.0	0.0	0.0	0.0	0.0	0.0
103	16	0.0	0.0	0.0	0.0	0.0	0.0	133	0.0	0.0	0.0	0.0	0.0	0.0
	10	0.0	0.0	0.0	0.0	0.0	0.0	130	0.0	0.0	0.0	0.0	0.0	0.0
104	133	0.0	0.0	0.0	0.0	0.0	0.0	134	0.0	0.0	0.0	0.0	0.0	0.0
	130	0.0	0.0	0.0	0.0	0.0	0.0	131	0.0	0.0	0.0	0.0	0.0	0.0
105	134	0.0	0.0	0.0	0.0	0.0	0.0	135	0.0	0.0	0.0	0.0	0.0	0.0
	131	0.0	0.0	0.0	0.0	0.0	0.0	132	0.0	0.0	0.0	0.0	0.0	0.0
106	3	0.0	0.0	0.0	0.0	0.0	0.0	136	0.0	0.0	0.0	0.0	0.0	0.0
	16	0.0	0.0	0.0	0.0	0.0	0.0	133	0.0	0.0	0.0	0.0	0.0	0.0
107	136	0.0	0.0	0.0	0.0	0.0	0.0	137	0.0	0.0	0.0	0.0	0.0	0.0
	133	0.0	0.0	0.0	0.0	0.0	0.0	134	0.0	0.0	0.0	0.0	0.0	0.0
108	137	0.0	0.0	0.0	0.0	0.0	0.0	138	0.0	0.0	0.0	0.0	0.0	0.0
	134	0.0	0.0	0.0	0.0	0.0	0.0	135	0.0	0.0	0.0	0.0	0.0	0.0
109	139	0.0	0.0	0.0	0.0	0.0	0.0	140	0.0	0.0	0.0	0.0	0.0	0.0
	3	0.0	0.0	0.0	0.0	0.0	0.0	136	0.0	0.0	0.0	0.0	0.0	0.0

Documento di proprietà **Snam Rete Gas**. La Società tutelerà i propri diritti in sede civile e penale a termini di legge.

FORZE: SISMA 0°°: MODO1: SHELL

Shell Nro	Nodo N.ro	Tx (kN)	Ty (kN)	Tz (kN)	Mx (kN*m)	My (kN*m)	Mz (kN*m)	Nodo N.ro	Tx (kN)	Ty (kN)	Tz (kN)	Mx (kN*m)	My (kN*m)	Mz (kN*m)
110	140	0.0	0.0	0.0	0.0	0.0	0.0	141	0.0	0.0	0.0	0.0	0.0	0.0
	136	0.0	0.0	0.0	0.0	0.0	0.0	137	0.0	0.0	0.0	0.0	0.0	0.0
111	141	0.0	0.0	0.0	0.0	0.0	0.0	142	0.0	0.0	0.0	0.0	0.0	0.0
	137	0.0	0.0	0.0	0.0	0.0	0.0	138	0.0	0.0	0.0	0.0	0.0	0.0
112	143	0.0	0.0	0.0	0.0	0.0	0.0	144	0.0	0.0	0.0	0.0	0.0	0.0
	139	0.0	0.0	0.0	0.0	0.0	0.0	140	0.0	0.0	0.0	0.0	0.0	0.0
113	144	0.0	0.0	0.0	0.0	0.0	0.0	145	0.0	0.0	0.0	0.0	0.0	0.0
	140	0.0	0.0	0.0	0.0	0.0	0.0	141	0.0	0.0	0.0	0.0	0.0	0.0
114	145	0.0	0.0	0.0	0.0	0.0	0.0	146	0.0	0.0	0.0	0.0	0.0	0.0
	141	0.0	0.0	0.0	0.0	0.0	0.0	142	0.0	0.0	0.0	0.0	0.0	0.0
115	28	0.0	0.0	0.0	0.0	0.0	0.0	147	0.0	0.0	0.0	0.0	0.0	0.0
	143	0.0	0.0	0.0	0.0	0.0	0.0	144	0.0	0.0	0.0	0.0	0.0	0.0
116	147	0.0	0.0	0.0	0.0	0.0	0.0	148	0.0	0.0	0.0	0.0	0.0	0.0
	144	0.0	0.0	0.0	0.0	0.0	0.0	145	0.0	0.0	0.0	0.0	0.0	0.0
117	148	0.0	0.0	0.0	0.0	0.0	0.0	29	0.0	0.0	0.0	0.0	0.0	0.0
	145	0.0	0.0	0.0	0.0	0.0	0.0	146	0.0	0.0	0.0	0.0	0.0	0.0
118	101	0.0	0.0	0.0	0.0	0.0	0.0	115	0.0	0.0	0.0	0.0	0.0	0.0
	100	0.0	0.0	0.0	0.0	0.0	0.0	114	0.0	0.0	0.0	0.0	0.0	0.0
119	11	0.0	0.0	0.0	0.0	0.0	0.0	20	0.0	0.0	0.0	0.0	0.0	0.0
	101	0.0	0.0	0.0	0.0	0.0	0.0	115	0.0	0.0	0.0	0.0	0.0	0.0
120	149	0.0	0.0	0.0	0.0	0.0	0.0	150	0.0	0.0	0.0	0.0	0.0	0.0
	97	0.0	0.0	0.0	0.0	0.0	0.0	94	0.0	0.0	0.0	0.0	0.0	0.0
121	150	0.0	0.0	0.0	0.0	0.0	0.0	151	0.0	0.0	0.0	0.0	0.0	0.0
	94	0.0	0.0	0.0	0.0	0.0	0.0	18	0.0	0.0	0.0	0.0	0.0	0.0
122	36	0.0	0.0	0.0	0.0	0.0	0.0	152	0.0	0.0	0.0	0.0	0.0	0.0
	35	0.0	0.0	0.0	0.0	0.0	0.0	149	0.0	0.0	0.0	0.0	0.0	0.0
123	152	0.0	0.0	0.0	0.0	0.0	0.0	153	0.0	0.0	0.0	0.0	0.0	0.0
	149	0.0	0.0	0.0	0.0	0.0	0.0	150	0.0	0.0	0.0	0.0	0.0	0.0
124	153	0.0	0.0	0.0	0.0	0.0	0.0	154	0.0	0.0	0.0	0.0	0.0	0.0
	150	0.0	0.0	0.0	0.0	0.0	0.0	151	0.0	0.0	0.0	0.0	0.0	0.0
125	25	0.0	0.0	0.0	0.0	0.0	0.0	155	0.0	0.0	0.0	0.0	0.0	0.0
	36	0.0	0.0	0.0	0.0	0.0	0.0	152	0.0	0.0	0.0	0.0	0.0	0.0
126	155	0.0	0.0	0.0	0.0	0.0	0.0	156	0.0	0.0	0.0	0.0	0.0	0.0
	152	0.0	0.0	0.0	0.0	0.0	0.0	153	0.0	0.0	0.0	0.0	0.0	0.0
127	156	0.0	0.0	0.0	0.0	0.0	0.0	157	0.0	0.0	0.0	0.0	0.0	0.0
	153	0.0	0.0	0.0	0.0	0.0	0.0	154	0.0	0.0	0.0	0.0	0.0	0.0
128	74	0.0	0.0	0.0	0.0	0.0	0.0	158	0.0	0.0	0.0	0.0	0.0	0.0
	25	0.0	0.0	0.0	0.0	0.0	0.0	155	0.0	0.0	0.0	0.0	0.0	0.0
129	158	0.0	0.0	0.0	0.0	0.0	0.0	159	0.0	0.0	0.0	0.0	0.0	0.0
	155	0.0	0.0	0.0	0.0	0.0	0.0	156	0.0	0.0	0.0	0.0	0.0	0.0
130	159	0.0	0.0	0.0	0.0	0.0	0.0	160	0.0	0.0	0.0	0.0	0.0	0.0
	156	0.0	0.0	0.0	0.0	0.0	0.0	157	0.0	0.0	0.0	0.0	0.0	0.0
131	75	0.0	0.0	0.0	0.0	0.0	0.0	161	0.0	0.0	0.0	0.0	0.0	0.0
	74	0.0	0.0	0.0	0.0	0.0	0.0	158	0.0	0.0	0.0	0.0	0.0	0.0
132	161	0.0	0.0	0.0	0.0	0.0	0.0	162	0.0	0.0	0.0	0.0	0.0	0.0
	158	0.0	0.0	0.0	0.0	0.0	0.0	159	0.0	0.0	0.0	0.0	0.0	0.0
133	162	0.0	0.0	0.0	0.0	0.0	0.0	163	0.0	0.0	0.0	0.0	0.0	0.0
	159	0.0	0.0	0.0	0.0	0.0	0.0	160	0.0	0.0	0.0	0.0	0.0	0.0
134	32	0.0	0.0	0.0	0.0	0.0	0.0	164	0.0	0.0	0.0	0.0	0.0	0.0
	75	0.0	0.0	0.0	0.0	0.0	0.0	161	0.0	0.0	0.0	0.0	0.0	0.0
135	164	0.0	0.0	0.0	0.0	0.0	0.0	165	0.0	0.0	0.0	0.0	0.0	0.0
	161	0.0	0.0	0.0	0.0	0.0	0.0	162	0.0	0.0	0.0	0.0	0.0	0.0
136	165	0.0	0.0	0.0	0.0	0.0	0.0	33	0.0	0.0	0.0	0.0	0.0	0.0
	162	0.0	0.0	0.0	0.0	0.0	0.0	163	0.0	0.0	0.0	0.0	0.0	0.0
137	166	0.0	0.0	0.0	0.0	0.0	0.0	167	0.0	0.0	0.0	0.0	0.0	0.0
	58	0.0	0.0	0.0	0.0	0.0	0.0	54	0.0	0.0	0.0	0.0	0.0	0.0
138	167	0.0	0.0	0.0	0.0	0.0	0.0	34	0.0	0.0	0.0	0.0	0.0	0.0
	54	0.0	0.0	0.0	0.0	0.0	0.0	7	0.0	0.0	0.0	0.0	0.0	0.0
139	135	0.0	0.0	0.0	0.0	0.0	0.0	168	0.0	0.0	0.0	0.0	0.0	0.0
	132	0.0	0.0	0.0	0.0	0.0	0.0	166	0.0	0.0	0.0	0.0	0.0	0.0
140	168	0.0	0.0	0.0	0.0	0.0	0.0	169	0.0	0.0	0.0	0.0	0.0	0.0
	166	0.0	0.0	0.0	0.0	0.0	0.0	167	0.0	0.0	0.0	0.0	0.0	0.0
141	169	0.0	0.0	0.0	0.0	0.0	0.0	37	0.0	0.0	0.0	0.0	0.0	0.0
	167	0.0	0.0	0.0	0.0	0.0	0.0	34	0.0	0.0	0.0	0.0	0.0	0.0
142	138	0.0	0.0	0.0	0.0	0.0	0.0	170	0.0	0.0	0.0	0.0	0.0	0.0
	135	0.0	0.0	0.0	0.0	0.0	0.0	168	0.0	0.0	0.0	0.0	0.0	0.0
143	170	0.0	0.0	0.0	0.0	0.0	0.0	171	0.0	0.0	0.0	0.0	0.0	0.0
	168	0.0	0.0	0.0	0.0	0.0	0.0	169	0.0	0.0	0.0	0.0	0.0	0.0
144	171	0.0	0.0	0.0	0.0	0.0	0.0	22	0.0	0.0	0.0	0.0	0.0	0.0
	169	0.0	0.0	0.0	0.0	0.0	0.0	37	0.0	0.0	0.0	0.0	0.0	0.0
145	142	0.0	0.0	0.0	0.0	0.0	0.0	172	0.0	0.0	0.0	0.0	0.0	0.0
	138	0.0	0.0	0.0	0.0	0.0	0.0	170	0.0	0.0	0.0	0.0	0.0	0.0
146	172	0.0	0.0	0.0	0.0	0.0	0.0	173	0.0	0.0	0.0	0.0	0.0	0.0
	170	0.0	0.0	0.0	0.0	0.0	0.0	171	0.0	0.0	0.0	0.0	0.0	0.0
147	173	0.0	0.0	0.0	0.0	0.0	0.0	110	0.0	0.0	0.0	0.0	0.0	0.0
	171	0.0	0.0	0.0	0.0	0.0	0.0	22	0.0	0.0	0.0	0.0	0.0	0.0
148	146	0.0	0.0	0.0	0.0	0.0	0.0	174	0.0	0.0	0.0	0.0	0.0	0.0
	142	0.0	0.0	0.0	0.0	0.0	0.0	172	0.0	0.0	0.0	0.0	0.0	0.0
149	174	0.0	0.0	0.0	0.0	0.0	0.0	175	0.0	0.0	0.0	0.0	0.0	0.0
	172	0.0	0.0	0.0	0.0	0.0	0.0	173	0.0	0.0	0.0	0.0	0.0	0.0

Documento di proprietà **Snam Rete Gas**. La Società tutelerà i propri diritti in sede civile e penale a termini di legge.

FORZE: SISMA 0°°: MODO1: SHELL

Shell Nro	Nodo N.ro	Tx (kN)	Ty (kN)	Tz (kN)	Mx (kN*m)	My (kN*m)	Mz (kN*m)	Nodo N.ro	Tx (kN)	Ty (kN)	Tz (kN)	Mx (kN*m)	My (kN*m)	Mz (kN*m)
150	175	0.0	0.0	0.0	0.0	0.0	0.0	111	0.0	0.0	0.0	0.0	0.0	0.0
	173	0.0	0.0	0.0	0.0	0.0	0.0	110	0.0	0.0	0.0	0.0	0.0	0.0
151	29	0.0	0.0	0.0	0.0	0.0	0.0	176	0.0	0.0	0.0	0.0	0.0	0.0
	146	0.0	0.0	0.0	0.0	0.0	0.0	174	0.0	0.0	0.0	0.0	0.0	0.0
152	176	0.0	0.0	0.0	0.0	0.0	0.0	177	0.0	0.0	0.0	0.0	0.0	0.0
	174	0.0	0.0	0.0	0.0	0.0	0.0	175	0.0	0.0	0.0	0.0	0.0	0.0
153	177	0.0	0.0	0.0	0.0	0.0	0.0	30	0.0	0.0	0.0	0.0	0.0	0.0
	175	0.0	0.0	0.0	0.0	0.0	0.0	111	0.0	0.0	0.0	0.0	0.0	0.0
154	178	0.0	0.0	0.0	0.0	0.0	0.0	179	0.0	0.0	0.0	0.0	0.0	0.0
	93	0.0	0.0	0.0	0.0	0.0	0.0	92	0.0	0.0	0.0	0.0	0.0	0.0
155	179	0.0	0.0	0.0	0.0	0.0	0.0	12	0.0	0.0	0.0	0.0	0.0	0.0
	92	0.0	0.0	0.0	0.0	0.0	0.0	17	0.0	0.0	0.0	0.0	0.0	0.0
156	154	0.0	0.0	0.0	0.0	0.0	0.0	180	0.0	0.0	0.0	0.0	0.0	0.0
	151	0.0	0.0	0.0	0.0	0.0	0.0	178	0.0	0.0	0.0	0.0	0.0	0.0
157	180	0.0	0.0	0.0	0.0	0.0	0.0	181	0.0	0.0	0.0	0.0	0.0	0.0
	178	0.0	0.0	0.0	0.0	0.0	0.0	179	0.0	0.0	0.0	0.0	0.0	0.0
158	181	0.0	0.0	0.0	0.0	0.0	0.0	15	0.0	0.0	0.0	0.0	0.0	0.0
	179	0.0	0.0	0.0	0.0	0.0	0.0	12	0.0	0.0	0.0	0.0	0.0	0.0
159	157	0.0	0.0	0.0	0.0	0.0	0.0	182	0.0	0.0	0.0	0.0	0.0	0.0
	154	0.0	0.0	0.0	0.0	0.0	0.0	180	0.0	0.0	0.0	0.0	0.0	0.0
160	182	0.0	0.0	0.0	0.0	0.0	0.0	183	0.0	0.0	0.0	0.0	0.0	0.0
	180	0.0	0.0	0.0	0.0	0.0	0.0	181	0.0	0.0	0.0	0.0	0.0	0.0
161	183	0.0	0.0	0.0	0.0	0.0	0.0	9	0.0	0.0	0.0	0.0	0.0	0.0
	181	0.0	0.0	0.0	0.0	0.0	0.0	15	0.0	0.0	0.0	0.0	0.0	0.0
162	160	0.0	0.0	0.0	0.0	0.0	0.0	184	0.0	0.0	0.0	0.0	0.0	0.0
	157	0.0	0.0	0.0	0.0	0.0	0.0	182	0.0	0.0	0.0	0.0	0.0	0.0
163	184	0.0	0.0	0.0	0.0	0.0	0.0	185	0.0	0.0	0.0	0.0	0.0	0.0
	182	0.0	0.0	0.0	0.0	0.0	0.0	183	0.0	0.0	0.0	0.0	0.0	0.0
164	185	0.0	0.0	0.0	0.0	0.0	0.0	120	0.0	0.0	0.0	0.0	0.0	0.0
	183	0.0	0.0	0.0	0.0	0.0	0.0	9	0.0	0.0	0.0	0.0	0.0	0.0
165	163	0.0	0.0	0.0	0.0	0.0	0.0	186	0.0	0.0	0.0	0.0	0.0	0.0
	160	0.0	0.0	0.0	0.0	0.0	0.0	184	0.0	0.0	0.0	0.0	0.0	0.0
166	186	0.0	0.0	0.0	0.0	0.0	0.0	187	0.0	0.0	0.0	0.0	0.0	0.0
	184	0.0	0.0	0.0	0.0	0.0	0.0	185	0.0	0.0	0.0	0.0	0.0	0.0
167	187	0.0	0.0	0.0	0.0	0.0	0.0	124	0.0	0.0	0.0	0.0	0.0	0.0
	185	0.0	0.0	0.0	0.0	0.0	0.0	120	0.0	0.0	0.0	0.0	0.0	0.0
168	33	0.0	0.0	0.0	0.0	0.0	0.0	188	0.0	0.0	0.0	0.0	0.0	0.0
	163	0.0	0.0	0.0	0.0	0.0	0.0	186	0.0	0.0	0.0	0.0	0.0	0.0
169	188	0.0	0.0	0.0	0.0	0.0	0.0	189	0.0	0.0	0.0	0.0	0.0	0.0
	186	0.0	0.0	0.0	0.0	0.0	0.0	187	0.0	0.0	0.0	0.0	0.0	0.0
170	189	0.0	0.0	0.0	0.0	0.0	0.0	26	0.0	0.0	0.0	0.0	0.0	0.0
	187	0.0	0.0	0.0	0.0	0.0	0.0	124	0.0	0.0	0.0	0.0	0.0	0.0
171	190	0.0	0.0	0.0	0.0	0.0	0.0	191	0.0	0.0	0.0	0.0	0.0	0.0
	73	0.0	0.0	0.0	0.0	0.0	0.0	72	0.0	0.0	0.0	0.0	0.0	0.0
172	191	0.0	0.0	0.0	0.0	0.0	0.0	139	0.0	0.0	0.0	0.0	0.0	0.0
	72	0.0	0.0	0.0	0.0	0.0	0.0	3	0.0	0.0	0.0	0.0	0.0	0.0
173	127	0.0	0.0	0.0	0.0	0.0	0.0	192	0.0	0.0	0.0	0.0	0.0	0.0
	123	0.0	0.0	0.0	0.0	0.0	0.0	190	0.0	0.0	0.0	0.0	0.0	0.0
174	192	0.0	0.0	0.0	0.0	0.0	0.0	193	0.0	0.0	0.0	0.0	0.0	0.0
	190	0.0	0.0	0.0	0.0	0.0	0.0	191	0.0	0.0	0.0	0.0	0.0	0.0
175	193	0.0	0.0	0.0	0.0	0.0	0.0	143	0.0	0.0	0.0	0.0	0.0	0.0
	191	0.0	0.0	0.0	0.0	0.0	0.0	139	0.0	0.0	0.0	0.0	0.0	0.0
176	27	0.0	0.0	0.0	0.0	0.0	0.0	194	0.0	0.0	0.0	0.0	0.0	0.0
	127	0.0	0.0	0.0	0.0	0.0	0.0	192	0.0	0.0	0.0	0.0	0.0	0.0
177	194	0.0	0.0	0.0	0.0	0.0	0.0	195	0.0	0.0	0.0	0.0	0.0	0.0
	192	0.0	0.0	0.0	0.0	0.0	0.0	193	0.0	0.0	0.0	0.0	0.0	0.0
178	195	0.0	0.0	0.0	0.0	0.0	0.0	28	0.0	0.0	0.0	0.0	0.0	0.0
	193	0.0	0.0	0.0	0.0	0.0	0.0	143	0.0	0.0	0.0	0.0	0.0	0.0
179	52	0.0	0.0	0.0	0.0	0.0	0.0	119	0.0	0.0	0.0	0.0	0.0	0.0
	53	0.0	0.0	0.0	0.0	0.0	0.0	118	0.0	0.0	0.0	0.0	0.0	0.0
180	7	0.0	0.0	0.0	0.0	0.0	0.0	34	0.0	0.0	0.0	0.0	0.0	0.0
	52	0.0	0.0	0.0	0.0	0.0	0.0	119	0.0	0.0	0.0	0.0	0.0	0.0

FORZE: SISMA 0°°: MODO2: SHELL

Shell Nro	Nodo N.ro	Tx (kN)	Ty (kN)	Tz (kN)	Mx (kN*m)	My (kN*m)	Mz (kN*m)	Nodo N.ro	Tx (kN)	Ty (kN)	Tz (kN)	Mx (kN*m)	My (kN*m)	Mz (kN*m)
1	38	-1.9	-1.6	0.2	-0.1	-0.1	-0.3	39	3.9	0.7	-0.2	0.1	-0.1	0.3
	14	-2.2	-1.1	1.1	0.1	-0.2	0.2	1	0.2	1.9	-1.1	-0.1	-0.1	-0.1
2	6	-1.0	6.7	-0.1	0.1	0.1	-0.3	44	0.4	-3.5	0.2	-0.1	0.0	0.5
	2	1.2	0.5	-0.3	-0.1	0.3	-0.1	42	-0.6	-3.7	0.2	0.0	-0.1	-0.1
3	39	-5.2	1.7	0.5	-0.1	0.1	-0.3	44	-1.0	1.3	0.0	0.0	0.1	-0.3
	1	0.8	1.0	-0.5	-0.1	0.2	0.3	6	5.5	-4.0	0.0	0.0	-0.2	0.3
4	46	-1.9	0.4	0.1	0.0	0.0	-0.2	47	-0.4	-1.0	-0.4	-0.1	0.0	0.1
	10	0.5	1.2	0.0	0.1	-0.1	0.1	16	1.8	-0.7	0.3	0.1	0.0	0.0
5	50	-2.7	1.1	0.3	0.0	0.0	-0.1	46	0.3	-1.3	-0.3	0.0	0.0	0.1
	4	0.1	0.9	-0.2	0.0	0.0	0.1	10	2.3	-0.8	0.2	0.0	0.0	-0.1
6	54	0.0	0.0	-1.1	-0.2	0.2	0.0	55	0.0	0.0	2.3	-0.4	0.2	0.0
	7	0.0	0.0	-0.6	-0.1	0.2	0.0	52	0.0	0.0	-0.6	0.1	0.3	0.0
7	64	0.0	0.0	1.8	0.2	-0.1	0.0	65	0.0	0.0	-2.8	0.3	-0.1	0.0
	5	0.0	0.0	-1.0	0.1	-0.1	0.0	62	0.0	0.0	2.0	0.0	-0.1	0.0

Documento di proprietà **Snam Rete Gas**. La Società tutelerà i propri diritti in sede civile e penale a termini di legge.

FORZE: SISMA 0°°: MODO2: SHELL

Shell Nro	Nodo N.ro	Tx (kN)	Ty (kN)	Tz (kN)	Mx (kN*m)	My (kN*m)	Mz (kN*m)	Nodo N.ro	Tx (kN)	Ty (kN)	Tz (kN)	Mx (kN*m)	My (kN*m)	Mz (kN*m)
8	47	-2.9	1.2	-0.1	0.0	0.1	0.1	72	-1.2	-1.0	-0.5	0.0	-0.1	0.0
	16	1.6	0.7	0.2	0.1	-0.1	0.0	3	2.5	-1.0	0.4	0.1	0.0	-0.1
9	76	2.0	-0.5	0.3	0.0	0.0	0.1	77	0.2	1.2	0.4	0.0	0.0	-0.1
	25	-0.5	-1.3	-0.4	-0.1	0.0	-0.1	74	-1.6	0.6	-0.2	-0.1	0.0	0.1
10	38	0.0	0.0	1.5	0.1	0.1	0.0	86	0.0	0.0	-1.0	0.3	-0.8	0.0
	14	0.0	0.0	0.8	-0.3	0.2	0.0	71	0.0	0.0	-1.3	-0.4	-0.8	0.0
11	94	0.0	0.0	-1.7	-0.2	0.1	0.0	95	0.0	0.0	2.9	-0.3	0.1	0.0
	18	0.0	0.0	1.2	-0.1	0.0	0.0	91	0.0	0.0	-2.4	0.0	0.0	0.0
12	102	0.7	0.9	0.0	-0.2	0.0	0.1	103	-0.1	0.9	0.0	-0.1	0.1	-0.1
	21	-0.6	-1.3	-0.2	0.1	-0.1	-0.1	84	0.0	-0.5	0.1	0.1	0.1	0.1
13	112	2.8	-1.3	0.0	0.0	0.0	-0.1	76	1.1	1.0	0.5	-0.1	0.1	0.0
	36	-1.4	-0.8	-0.1	-0.1	0.1	0.0	25	-2.4	1.1	-0.4	-0.1	0.0	0.1
14	114	2.0	-0.5	-0.1	0.0	0.0	0.2	112	0.2	1.1	0.4	0.1	0.0	-0.1
	35	-0.4	-1.3	0.0	-0.1	0.1	-0.1	36	-1.8	0.7	-0.3	-0.1	0.0	0.0
15	24	1.1	-6.4	0.1	-0.1	-0.1	0.3	116	-0.3	3.9	-0.2	0.1	0.0	-0.5
	21	-1.5	-0.7	0.3	0.1	-0.3	0.0	102	0.7	3.2	-0.3	0.0	0.1	0.2
16	118	5.0	-1.4	-0.5	0.1	0.0	0.3	116	1.0	-1.4	0.0	0.0	-0.1	0.3
	20	-0.8	-0.9	0.5	0.1	-0.2	-0.3	24	-5.3	3.7	-0.1	0.0	0.2	-0.3
17	120	-0.6	1.6	0.2	0.0	-0.1	0.1	121	-1.2	-0.1	-0.4	0.0	0.0	-0.1
	9	1.3	0.5	0.4	0.0	-0.1	-0.1	43	0.5	-2.0	-0.3	0.0	0.0	0.1
18	10	1.1	-0.6	0.2	0.0	-0.1	0.0	130	1.0	2.8	0.1	0.0	0.0	-0.1
	4	-1.0	-2.1	0.0	-0.1	0.0	-0.1	68	-1.1	-0.1	-0.4	-0.2	0.0	0.2
19	100	2.9	-1.2	-0.3	0.0	0.0	0.1	114	-0.5	1.3	0.3	0.0	0.0	-0.1
	19	0.0	-1.0	0.1	0.0	0.0	-0.2	35	-2.4	0.9	-0.2	0.0	0.0	0.2
20	35	-1.2	0.5	-0.2	0.0	0.1	0.0	149	-1.2	-3.0	-0.2	0.0	0.0	0.1
	19	1.1	2.2	0.0	0.1	0.0	0.1	97	1.2	0.2	0.4	0.2	0.0	-0.2
21	132	2.5	-3.4	-0.2	0.0	0.0	-0.1	166	2.6	2.3	0.0	0.0	0.0	0.0
	5	-2.6	-2.7	0.1	0.0	0.0	0.1	58	-2.5	3.8	0.1	0.1	0.0	-0.1
22	151	-2.2	3.6	0.2	0.0	0.0	0.1	178	-2.4	-2.0	0.0	0.0	0.0	0.0
	18	2.4	2.3	-0.1	0.0	0.0	-0.1	93	2.3	-3.9	-0.1	-0.1	0.0	0.1
23	123	0.5	0.0	-0.1	0.1	0.1	0.1	190	-0.9	0.1	0.0	0.1	-0.1	-0.1
	2	1.3	0.6	0.1	-0.1	0.1	-0.1	73	-0.9	-0.7	0.0	0.0	-0.2	0.1
24	53	1.6	1.6	-0.2	0.1	0.1	0.3	118	-3.8	-0.8	0.1	-0.1	0.0	-0.2
	11	2.2	1.1	-1.1	-0.1	0.2	-0.2	20	0.0	-1.9	1.1	0.1	0.1	0.1
25	40	-2.0	-0.9	-0.3	0.0	0.0	-0.3	41	3.9	0.8	0.2	0.0	0.0	0.3
	38	-4.1	-1.2	0.6	0.0	-0.1	0.3	39	2.2	1.3	-0.5	0.0	0.0	-0.2
26	17	0.0	-1.0	-0.2	0.0	0.0	-0.2	12	2.3	0.8	0.2	0.0	0.0	0.2
	40	-2.8	-1.2	0.3	0.0	0.0	0.1	41	0.5	1.3	-0.3	0.0	0.0	-0.1
27	44	-1.6	4.6	0.0	0.1	0.1	-0.3	45	-0.1	-2.1	0.0	-0.1	0.0	0.2
	42	0.8	1.0	-0.5	-0.1	0.2	0.1	43	0.8	-3.5	0.4	0.0	0.0	0.0
28	45	-1.3	2.8	0.0	0.0	0.0	-0.1	15	-0.8	-1.4	0.2	-0.1	0.1	0.0
	43	1.0	1.0	-0.5	-0.1	0.1	0.0	9	1.0	-2.4	0.4	0.0	0.1	0.1
29	41	-3.0	0.1	-0.1	-0.1	0.0	-0.4	45	0.9	-0.3	0.3	0.0	0.1	0.1
	39	-0.7	1.0	0.1	0.0	0.0	0.3	44	2.8	-0.8	-0.3	0.0	-0.1	0.0
30	12	-0.1	-1.4	0.0	-0.1	0.0	-0.1	15	1.9	0.0	0.4	-0.1	0.1	0.0
	41	-2.0	0.3	0.1	0.0	0.0	0.2	45	0.2	1.1	-0.4	0.1	-0.1	-0.1
31	48	-0.9	-0.7	0.0	0.0	0.0	-0.3	49	2.6	-0.1	-0.3	-0.1	-0.1	0.0
	46	-2.6	0.8	0.0	0.1	0.0	0.4	47	1.0	0.0	0.3	0.1	0.1	0.0
32	1	0.6	-1.0	-0.6	0.1	0.2	-0.3	8	5.8	2.8	0.1	0.0	-0.2	-0.3
	48	-5.2	-0.5	0.5	0.1	0.0	0.3	49	-1.2	-1.2	-0.1	0.0	0.1	0.3
33	51	-4.0	1.2	0.6	0.0	-0.1	-0.2	48	1.8	-1.4	-0.5	0.0	0.0	0.2
	50	-1.6	1.0	-0.3	0.0	0.0	0.3	46	3.8	-0.8	0.2	0.0	0.0	-0.3
34	14	-2.2	1.1	1.1	-0.1	-0.2	-0.1	1	0.0	-1.9	-1.1	0.1	-0.1	0.1
	51	-1.6	1.6	0.2	0.1	-0.1	0.3	48	3.8	-0.8	-0.1	-0.1	-0.1	-0.2
35	55	0.0	0.0	0.2	-0.5	-0.2	0.0	56	0.0	0.0	1.8	-0.7	0.3	0.0
	52	0.0	0.0	-0.8	0.0	0.0	0.0	53	0.0	0.0	-1.2	0.1	0.2	0.0
36	56	0.0	0.0	0.8	-0.7	-0.3	0.0	57	0.0	0.0	1.2	-0.8	0.4	0.0
	53	0.0	0.0	-1.4	0.1	-0.2	0.0	11	0.0	0.0	-0.6	0.2	0.4	0.0
37	58	0.0	0.0	-0.3	0.0	0.2	0.0	59	0.0	0.0	-0.3	-0.3	0.2	0.0
	54	0.0	0.0	-1.1	0.2	0.2	0.0	55	0.0	0.0	1.8	0.5	0.2	0.0
38	59	0.0	0.0	0.1	-0.3	-0.2	0.0	60	0.0	0.0	-0.9	-0.5	0.3	0.0
	55	0.0	0.0	-0.4	0.5	-0.3	0.0	56	0.0	0.0	1.2	0.7	0.3	0.0
39	60	0.0	0.0	-0.2	-0.5	-0.3	0.0	61	0.0	0.0	-0.7	-0.5	0.3	0.0
	56	0.0	0.0	0.1	0.7	-0.3	0.0	57	0.0	0.0	0.8	0.8	0.4	0.0
40	5	0.0	0.0	1.3	0.1	0.0	0.0	62	0.0	0.0	-2.3	0.0	0.0	0.0
	58	0.0	0.0	-1.8	0.2	0.1	0.0	59	0.0	0.0	2.9	0.3	0.1	0.0
41	62	0.0	0.0	0.8	0.1	0.0	0.0	63	0.0	0.0	-2.3	0.0	0.0	0.0
	59	0.0	0.0	-0.9	0.3	-0.1	0.0	60	0.0	0.0	2.4	0.4	0.2	0.0
42	63	0.0	0.0	-0.4	0.1	0.0	0.0	13	0.0	0.0	-1.6	0.1	0.0	0.0
	60	0.0	0.0	0.4	0.5	-0.2	0.0	61	0.0	0.0	1.6	0.5	0.2	0.0
43	65	0.0	0.0	0.8	0.4	0.2	0.0	66	0.0	0.0	-2.3	0.5	-0.2	0.0
	62	0.0	0.0	-0.6	0.0	0.0	0.0	63	0.0	0.0	2.1	-0.1	-0.1	0.0
44	66	0.0	0.0	-0.4	0.5	0.2	0.0	67	0.0	0.0	-1.5	0.6	-0.2	0.0
	63	0.0	0.0	0.4	-0.1	0.1	0.0	13	0.0	0.0	1.5	-0.1	-0.1	0.0
45	68	0.0	0.0	0.9	0.2	-0.1	0.0	69	0.0	0.0	-1.5	0.4	-0.2	0.0
	64	0.0	0.0	0.5	0.0	-0.2	0.0	65	0.0	0.0	0.1	-0.3	-0.2	0.0
46	69	0.0	0.0	0.3	0.5	0.2	0.0	70	0.0	0.0	-0.9	0.7	-0.3	0.0
	65	0.0	0.0	0.0	-0.4	0.2	0.0	66	0.0	0.0	0.6	-0.5	-0.3	0.0
47	70	0.0	0.0	-0.1	0.7	0.3	0.0	71	0.0	0.0	-0.6	0.7	-0.4	0.0
	66	0.0	0.0	0.2	-0.5	0.3	0.0	67	0.0	0.0	0.5	-0.6	-0.3	0.0

Documento di proprietà **Snam Rete Gas**. La Società tutelerà i propri diritti in sede civile e penale a termini di legge.

FORZE: SISMA 0°°: MODO2: SHELL

Shell Nro	Nodo N.ro	Tx (kN)	Ty (kN)	Tz (kN)	Mx (kN*m)	My (kN*m)	Mz (kN*m)	Nodo N.ro	Tx (kN)	Ty (kN)	Tz (kN)	Mx (kN*m)	My (kN*m)	Mz (kN*m)
48	4	0.0	0.0	0.5	-0.1	-0.2	0.0	50	0.0	0.0	0.8	0.0	-0.2	0.0
	68	0.0	0.0	1.1	-0.2	-0.2	0.0	69	0.0	0.0	-2.4	-0.4	-0.2	0.0
49	50	0.0	0.0	0.8	0.0	0.0	0.0	51	0.0	0.0	1.3	0.1	-0.2	0.0
	69	0.0	0.0	-0.2	-0.5	0.2	0.0	70	0.0	0.0	-1.9	-0.7	-0.3	0.0
50	51	0.0	0.0	1.4	0.1	0.1	0.0	14	0.0	0.0	0.7	0.2	-0.3	0.0
	70	0.0	0.0	-0.8	-0.7	0.3	0.0	71	0.0	0.0	-1.3	-0.7	-0.4	0.0
51	49	-3.7	3.0	0.0	0.1	0.1	0.3	73	-1.5	-0.5	-0.5	0.2	-0.2	-0.1
	47	2.3	-0.8	0.1	0.0	-0.1	-0.2	72	2.9	-1.8	0.5	0.0	0.0	0.0
52	8	-4.5	4.5	-0.1	0.2	0.1	0.3	2	-1.4	-0.8	-0.3	0.2	-0.2	0.0
	49	3.0	-2.5	0.2	-0.1	-0.1	-0.5	73	3.0	-1.3	0.3	-0.1	0.1	0.2
53	77	1.0	-0.2	0.5	0.0	0.0	0.1	78	0.2	0.7	0.1	0.0	0.0	-0.1
	74	-0.4	-0.8	-0.6	-0.1	0.0	0.0	75	-0.8	0.3	-0.1	-0.1	0.0	0.0
54	78	0.5	-0.2	0.7	0.0	-0.1	0.0	79	0.3	0.4	-0.4	0.0	0.0	0.0
	75	-0.4	-0.5	-0.5	-0.1	0.0	0.0	32	-0.4	0.3	0.3	0.0	0.0	0.0
55	80	1.6	0.5	0.0	-0.1	0.0	0.2	81	-0.6	1.1	0.2	-0.1	0.1	-0.2
	76	0.4	-1.3	-0.1	0.1	0.0	-0.2	77	-1.4	-0.3	-0.1	0.0	0.0	0.2
56	81	0.5	0.4	0.4	-0.1	-0.1	0.1	82	-0.1	0.5	-0.1	-0.1	0.1	-0.1
	77	0.2	-0.7	-0.4	0.0	0.0	-0.1	78	-0.6	-0.2	0.1	0.0	0.1	0.1
57	82	0.3	0.0	0.6	-0.1	-0.1	0.0	83	0.1	0.2	-0.5	0.0	0.0	0.0
	78	-0.1	-0.4	-0.3	0.0	-0.1	0.0	79	-0.3	0.1	0.3	0.0	0.0	0.0
58	21	-0.6	1.5	-0.2	-0.1	-0.1	0.1	84	-0.3	0.4	0.1	-0.1	0.1	-0.1
	80	1.1	-0.8	0.1	0.2	-0.1	-0.2	81	-0.2	-1.1	0.0	0.1	0.1	0.2
59	84	0.1	0.4	0.1	-0.1	-0.1	0.1	85	-0.2	0.3	0.0	-0.1	0.1	-0.1
	81	0.3	-0.3	-0.1	0.1	-0.1	-0.1	82	-0.2	-0.3	0.0	0.1	0.1	0.1
60	85	0.1	0.1	0.3	-0.1	-0.1	0.0	31	0.0	0.1	-0.3	0.0	0.0	0.0
	82	0.0	-0.2	0.0	0.1	-0.1	0.0	83	-0.1	0.0	0.0	0.0	0.0	0.0
61	86	0.0	0.0	-0.1	0.3	0.8	0.0	87	0.0	0.0	0.2	0.3	-0.6	0.0
	71	0.0	0.0	-0.6	-0.4	0.8	0.0	67	0.0	0.0	0.5	-0.3	-0.6	0.0
62	87	0.0	0.0	-0.7	0.2	0.6	0.0	88	0.0	0.0	0.7	0.1	-0.1	0.0
	67	0.0	0.0	-1.4	-0.2	0.6	0.0	13	0.0	0.0	1.4	-0.1	-0.1	0.0
63	40	0.0	0.0	0.9	0.0	0.0	0.0	89	0.0	0.0	-0.4	0.2	-0.6	0.0
	38	0.0	0.0	1.5	-0.2	0.1	0.0	86	0.0	0.0	-2.0	-0.3	-0.7	0.0
64	89	0.0	0.0	0.2	0.3	0.6	0.0	90	0.0	0.0	0.0	0.2	-0.4	0.0
	86	0.0	0.0	-0.8	-0.3	0.7	0.0	87	0.0	0.0	0.6	-0.3	-0.6	0.0
65	90	0.0	0.0	0.6	0.2	0.4	0.0	91	0.0	0.0	-0.5	0.0	0.0	0.0
	87	0.0	0.0	-2.3	-0.2	0.6	0.0	88	0.0	0.0	2.1	-0.1	-0.1	0.0
66	17	0.0	0.0	0.5	-0.2	-0.1	0.0	92	0.0	0.0	1.1	-0.2	-0.2	0.0
	40	0.0	0.0	0.9	-0.3	0.1	0.0	89	0.0	0.0	-2.4	-0.2	-0.5	0.0
67	92	0.0	0.0	0.9	-0.1	0.2	0.0	93	0.0	0.0	0.5	-0.1	-0.1	0.0
	89	0.0	0.0	-1.4	-0.2	0.5	0.0	90	0.0	0.0	0.1	-0.2	-0.4	0.0
68	93	0.0	0.0	1.7	-0.1	0.2	0.0	18	0.0	0.0	-1.0	-0.1	0.1	0.0
	90	0.0	0.0	-2.8	-0.2	0.3	0.0	91	0.0	0.0	2.1	-0.1	-0.1	0.0
69	95	0.0	0.0	-0.6	-0.4	-0.1	0.0	96	0.0	0.0	2.4	-0.5	0.2	0.0
	91	0.0	0.0	0.5	-0.1	0.0	0.0	88	0.0	0.0	-2.3	-0.1	0.0	0.0
70	96	0.0	0.0	0.7	-0.5	-0.2	0.0	61	0.0	0.0	1.5	-0.6	0.2	0.0
	88	0.0	0.0	-0.7	-0.1	0.0	0.0	13	0.0	0.0	-1.5	-0.1	0.0	0.0
71	97	0.0	0.0	-1.0	-0.2	0.1	0.0	98	0.0	0.0	1.7	-0.5	0.2	0.0
	94	0.0	0.0	-0.3	0.0	0.1	0.0	95	0.0	0.0	-0.4	0.3	0.2	0.0
72	98	0.0	0.0	-0.3	-0.6	-0.3	0.0	99	0.0	0.0	1.1	-0.8	0.3	0.0
	95	0.0	0.0	0.1	0.4	-0.2	0.0	96	0.0	0.0	-0.9	0.5	0.3	0.0
73	99	0.0	0.0	0.2	-0.8	-0.3	0.0	57	0.0	0.0	0.7	-0.8	0.4	0.0
	96	0.0	0.0	-0.3	0.5	-0.3	0.0	61	0.0	0.0	-0.7	0.5	0.3	0.0
74	19	0.0	0.0	-0.6	0.1	0.2	0.0	100	0.0	0.0	-0.7	-0.1	0.3	0.0
	97	0.0	0.0	-1.1	0.2	0.2	0.0	98	0.0	0.0	2.3	0.5	0.2	0.0
75	100	0.0	0.0	-0.9	0.0	0.0	0.0	101	0.0	0.0	-1.3	-0.1	0.2	0.0
	98	0.0	0.0	0.4	0.6	-0.2	0.0	99	0.0	0.0	1.8	0.8	0.3	0.0
76	101	0.0	0.0	-1.5	-0.1	-0.2	0.0	11	0.0	0.0	-0.7	-0.2	0.3	0.0
	99	0.0	0.0	1.0	0.8	-0.3	0.0	57	0.0	0.0	1.2	0.8	0.4	0.0
77	103	0.1	0.4	-0.2	-0.1	-0.1	0.0	104	-0.2	0.2	0.1	-0.1	0.1	-0.1
	84	0.2	-0.3	0.2	0.1	-0.1	0.0	85	0.0	-0.3	0.0	0.1	0.1	0.0
78	104	0.0	0.2	-0.1	-0.1	-0.1	0.0	105	-0.1	0.0	0.0	0.0	0.0	0.0
	85	0.2	-0.1	0.3	0.1	-0.1	0.0	31	0.0	-0.1	-0.3	0.0	0.0	0.0
79	106	0.3	1.3	-0.1	-0.1	0.0	0.1	107	-1.2	0.3	-0.1	0.0	0.0	-0.1
	102	1.3	-0.6	0.0	0.1	0.0	-0.2	103	-0.4	-1.0	0.2	0.1	0.1	0.2
80	107	0.1	0.6	-0.4	0.0	0.0	0.1	108	-0.5	0.1	0.1	0.0	0.1	-0.1
	103	0.4	-0.3	0.4	0.1	-0.1	-0.1	104	0.0	-0.5	-0.1	0.1	0.1	0.1
81	108	-0.1	0.3	-0.4	0.0	0.0	0.0	109	-0.3	-0.1	0.3	0.0	0.0	0.0
	104	0.3	0.0	0.6	0.1	-0.1	0.0	105	0.1	-0.2	-0.5	0.0	0.0	0.0
82	22	-0.4	1.2	-0.4	0.2	0.0	0.1	110	-1.6	-0.5	-0.3	0.1	0.0	-0.1
	106	1.9	0.4	0.3	0.0	0.0	-0.1	107	0.2	-1.1	0.4	0.0	0.0	0.1
83	110	-0.4	0.7	-0.6	0.1	0.0	0.0	111	-0.8	-0.2	-0.1	0.1	0.0	0.0
	107	0.9	0.1	0.5	0.0	0.0	-0.1	108	0.2	-0.6	0.1	0.0	0.0	0.1
84	111	-0.4	0.4	-0.5	0.1	0.0	0.0	30	-0.4	-0.2	0.3	0.0	0.0	0.0
	108	0.4	0.2	0.7	0.0	0.0	0.0	109	0.3	-0.3	-0.4	0.0	0.0	0.0
85	113	3.7	-3.1	-0.1	-0.1	-0.1	-0.3	80	1.2	0.4	0.5	-0.2	0.2	0.1
	112	-2.0	0.7	0.0	0.0	0.1	0.2	76	-3.0	2.0	-0.4	0.0	0.0	0.0
86	23	4.9	-4.7	0.1	-0.1	-0.1	-0.3	21	1.1	0.7	0.3	-0.2	0.2	-0.1
	113	-2.7	2.3	-0.1	0.1	0.1	0.5	80	-3.3	1.6	-0.2	0.1	-0.1	-0.1
87	115	1.0	0.8	-0.1	0.0	0.0	0.3	113	-2.9	0.0	0.3	0.1	0.1	0.0
	114	2.9	-0.7	0.1	-0.1	0.0	-0.4	112	-1.0	-0.1	-0.3	-0.1	-0.1	0.1

Documento di proprietà **Snam Rete Gas**. La Società tutelerà i propri diritti in sede civile e penale a termini di legge.

FORZE: SISMA 0°°: MODO2: SHELL

Shell Nro	Nodo N.ro	Tx (kN)	Ty (kN)	Tz (kN)	Mx (kN*m)	My (kN*m)	Mz (kN*m)	Nodo N.ro	Tx (kN)	Ty (kN)	Tz (kN)	Mx (kN*m)	My (kN*m)	Mz (kN*m)
88	20	-0.6	1.1	0.5	-0.1	-0.2	0.3	23	-6.1	-3.0	0.0	0.0	0.2	0.3
	115	5.5	0.8	-0.5	-0.1	-0.1	-0.3	113	1.2	1.1	0.0	0.0	-0.1	-0.3
89	116	1.5	-4.5	0.0	-0.1	0.0	0.3	117	0.1	2.4	0.0	0.1	0.0	-0.2
	102	-0.9	-1.2	0.5	0.1	-0.2	-0.1	106	-0.7	3.4	-0.5	0.0	0.0	0.0
90	117	1.2	-2.9	0.1	-0.1	0.0	0.1	37	0.7	1.6	-0.2	0.1	-0.1	0.0
	106	-1.0	-1.2	0.5	0.1	0.0	0.0	22	-1.0	2.5	-0.4	0.0	-0.1	-0.1
91	119	2.8	0.0	0.0	0.1	0.0	0.4	117	-0.9	0.3	-0.3	0.0	-0.1	0.0
	118	0.6	-0.9	-0.1	0.0	0.0	-0.3	116	-2.5	0.6	0.3	-0.1	0.1	-0.1
92	34	-0.1	1.4	0.0	0.1	0.0	0.1	37	-1.9	0.0	-0.3	0.1	-0.1	0.0
	119	1.9	-0.3	-0.1	0.0	0.0	-0.2	117	0.0	-1.1	0.4	-0.1	0.1	0.1
93	121	0.3	1.4	0.1	0.0	0.0	0.2	122	-1.1	0.7	-0.2	0.1	-0.1	-0.2
	43	1.3	-0.5	0.1	0.0	0.1	-0.2	42	-0.5	-1.6	0.0	0.0	-0.1	0.2
94	122	1.1	0.2	0.0	0.1	0.1	0.2	123	-0.4	0.3	-0.1	0.1	-0.1	-0.1
	42	0.8	-1.1	-0.1	-0.1	0.2	-0.2	2	-1.5	0.6	0.2	-0.1	-0.1	0.1
95	124	-0.3	0.8	0.1	0.0	-0.1	0.0	125	-0.7	-0.2	-0.1	0.0	-0.1	-0.1
	120	0.8	0.4	0.6	0.0	-0.1	0.0	121	0.2	-1.0	-0.5	0.0	0.0	0.1
96	125	0.2	0.6	-0.1	0.1	0.0	0.1	126	-0.5	0.2	0.1	0.1	-0.1	-0.1
	121	0.7	-0.2	0.4	0.0	0.0	-0.1	122	-0.4	-0.5	-0.3	-0.1	-0.1	0.1
97	126	0.3	0.2	0.0	0.1	0.1	0.1	127	-0.2	0.2	0.0	0.1	-0.1	-0.1
	122	0.3	-0.3	0.1	-0.1	0.1	-0.1	123	-0.4	-0.1	-0.1	-0.1	-0.1	0.1
98	26	-0.3	0.4	-0.3	0.0	0.0	0.0	128	-0.4	-0.3	0.4	0.0	0.0	0.0
	124	0.5	0.4	0.5	0.0	-0.1	0.0	125	0.2	-0.5	-0.7	0.0	0.0	0.0
99	128	-0.1	0.3	-0.3	0.0	0.0	0.0	129	-0.2	-0.1	0.5	0.0	0.0	0.0
	125	0.4	0.1	0.3	-0.1	0.0	0.0	126	0.0	-0.3	-0.6	-0.1	-0.1	0.0
100	129	0.0	0.1	0.0	0.0	0.0	0.0	27	-0.1	0.0	0.3	0.0	0.0	0.0
	126	0.2	-0.1	0.0	-0.1	0.1	0.0	127	-0.1	-0.1	-0.3	-0.1	-0.1	0.0
101	130	1.9	-0.7	0.2	0.0	0.0	0.1	131	1.6	3.9	0.2	0.0	0.0	-0.1
	68	-1.6	-3.9	-0.2	-0.2	0.0	-0.2	64	-1.9	0.7	-0.2	-0.1	0.0	0.2
102	131	2.4	-2.0	0.0	0.0	0.0	0.0	132	2.2	3.6	0.2	0.0	0.0	-0.1
	64	-2.3	-3.9	-0.1	-0.1	0.0	-0.1	5	-2.4	2.3	-0.1	0.0	0.0	0.1
103	16	1.5	-1.1	0.0	0.0	-0.1	0.1	133	1.0	2.5	0.1	0.0	0.0	-0.1
	10	-0.8	-2.2	0.3	0.0	-0.1	-0.1	130	-1.8	0.8	-0.3	0.0	0.0	0.1
104	133	2.0	-1.3	0.1	0.0	0.0	0.1	134	1.3	2.9	0.0	0.0	0.0	-0.1
	130	-1.1	-2.9	0.0	0.0	0.0	-0.1	131	-2.2	1.2	-0.1	0.0	0.0	0.2
105	134	2.2	-2.0	0.1	0.0	0.0	0.0	135	1.8	2.9	-0.1	0.0	0.0	-0.1
	131	-1.7	-3.1	-0.2	0.0	0.0	-0.1	132	-2.3	2.2	0.1	0.0	0.0	0.1
106	3	1.7	-1.1	0.2	0.0	-0.1	0.1	136	0.9	2.2	-0.1	0.0	0.1	-0.1
	16	-0.9	-2.3	0.1	0.0	-0.1	-0.1	133	-1.8	1.2	-0.2	0.0	0.1	0.1
107	136	1.7	-1.3	0.1	0.0	-0.1	0.1	137	1.2	2.3	-0.1	0.0	0.0	-0.1
	133	-1.0	-2.4	0.0	0.0	-0.1	-0.1	134	-1.9	1.4	-0.1	0.0	0.0	0.1
108	137	1.7	-1.8	0.1	0.0	0.0	0.0	138	1.5	2.2	-0.1	0.0	0.0	0.0
	134	-1.4	-2.3	-0.1	0.0	0.0	0.0	135	-1.8	1.9	0.1	0.0	0.0	0.0
109	139	1.4	-0.8	0.2	0.0	-0.1	0.1	140	0.7	1.7	-0.2	0.0	0.1	-0.1
	3	-0.6	-1.9	0.1	0.0	-0.1	-0.1	136	-1.5	0.9	-0.1	0.0	0.1	0.1
110	140	1.4	-1.2	0.1	0.0	-0.1	0.0	141	0.9	1.8	-0.1	0.0	0.0	0.0
	136	-0.9	-1.8	0.1	0.0	-0.1	-0.1	137	-1.5	1.3	-0.1	0.0	0.0	0.1
111	141	1.3	-1.4	0.1	0.0	0.0	0.0	142	1.2	1.7	-0.1	0.0	0.0	0.0
	137	-1.1	-1.8	0.0	0.0	0.0	0.0	138	-1.4	1.5	0.0	0.0	0.0	0.0
112	143	1.1	-0.7	0.2	0.0	-0.1	0.1	144	0.3	1.1	-0.2	0.0	0.0	0.0
	139	-0.2	-1.1	0.0	0.0	-0.1	-0.1	140	-1.2	0.7	0.0	0.0	0.1	0.1
113	144	1.1	-0.8	0.0	0.0	0.0	0.0	145	0.6	1.2	-0.1	0.0	0.0	0.0
	140	-0.5	-1.3	0.1	0.0	-0.1	-0.1	141	-1.1	0.9	-0.1	0.0	0.0	0.0
114	145	1.0	-1.0	0.0	0.0	0.0	0.0	146	0.8	1.2	0.0	0.0	0.0	0.0
	141	-0.8	-1.2	0.1	0.0	0.0	0.0	142	-1.0	1.1	-0.1	0.0	0.0	0.0
115	28	0.5	-0.4	0.2	0.0	0.0	0.0	147	0.2	0.5	-0.2	0.0	0.0	0.0
	143	0.0	-0.4	-0.1	0.0	-0.1	0.0	144	-0.7	0.4	0.1	0.0	0.0	0.0
116	147	0.5	-0.5	0.0	0.0	0.0	0.0	148	0.4	0.6	0.0	0.0	0.0	0.0
	144	-0.2	-0.6	0.1	0.0	0.0	0.0	145	-0.6	0.5	0.0	0.0	0.0	0.0
117	148	0.5	-0.6	-0.1	0.0	0.0	0.0	29	0.5	0.6	0.1	0.0	0.0	0.0
	145	-0.4	-0.7	0.1	0.0	0.0	0.0	146	-0.6	0.6	-0.1	0.0	0.0	0.0
118	101	4.1	-1.2	-0.6	0.0	0.1	0.3	115	-2.2	1.3	0.5	0.0	0.0	-0.2
	100	2.0	-0.9	0.3	0.0	0.0	-0.3	114	-3.9	0.8	-0.2	0.0	0.0	0.3
119	11	2.2	-1.1	-1.1	0.1	0.2	0.2	20	-0.2	1.9	1.1	-0.1	0.1	-0.1
	101	1.9	-1.6	-0.2	-0.1	0.2	-0.3	115	-3.9	0.8	0.2	0.1	0.1	0.3
120	149	-2.1	0.7	-0.2	0.0	0.0	-0.1	150	-1.9	-4.0	-0.2	0.0	0.0	0.1
	97	1.9	4.0	0.2	0.2	0.0	0.2	94	2.1	-0.8	0.2	0.1	0.0	-0.2
121	150	-2.6	2.3	0.0	0.0	0.0	0.0	151	-2.5	-3.4	-0.2	0.0	0.0	0.1
	94	2.5	3.8	0.1	0.1	0.0	0.1	18	2.6	-2.7	0.1	0.0	0.0	-0.1
122	36	-1.6	1.0	0.0	0.0	0.1	-0.1	152	-1.2	-2.5	-0.1	0.0	0.0	0.1
	35	0.9	2.3	-0.3	0.0	0.1	0.1	149	1.9	-0.8	0.3	0.0	0.0	-0.2
123	152	-2.1	1.3	-0.1	0.0	0.0	-0.1	153	-1.5	-3.0	0.0	0.0	0.0	0.1
	149	1.3	3.0	0.0	0.0	0.0	0.1	150	2.4	-1.4	0.0	0.0	0.0	-0.2
124	153	-2.3	2.2	-0.1	0.0	0.0	0.0	154	-2.1	-2.8	0.1	0.0	0.0	0.0
	150	2.0	3.0	0.2	0.0	0.0	0.1	151	2.4	-2.5	-0.1	0.0	0.0	-0.1
125	25	-1.8	1.2	-0.1	0.0	0.1	-0.1	155	-1.0	-2.2	0.1	0.0	-0.1	0.1
	36	0.9	2.2	-0.1	0.0	0.1	0.1	152	1.9	-1.2	0.2	0.0	0.0	-0.1
126	155	-1.8	1.4	-0.1	0.0	0.1	-0.1	156	-1.3	-2.3	0.1	0.0	0.0	0.1
	152	1.2	2.4	0.0	0.0	0.0	0.1	153	2.0	-1.5	0.0	0.0	0.0	-0.1
127	156	-1.8	1.9	-0.1	0.0	0.0	0.0	157	-1.7	-2.2	0.1	0.0	0.0	0.0
	153	1.6	2.3	0.1	0.0	0.0	0.0	154	1.9	-2.0	-0.1	0.0	0.0	0.0

Documento di proprietà **Snam Rete Gas**. La Società tutelerà i propri diritti in sede civile e penale a termini di legge.

FORZE: SISMA 0°°: MODO2: SHELL

Shell Nro	Nodo N.ro	Tx (kN)	Ty (kN)	Tz (kN)	Mx (kN*m)	My (kN*m)	Mz (kN*m)	Nodo N.ro	Tx (kN)	Ty (kN)	Tz (kN)	Mx (kN*m)	My (kN*m)	Mz (kN*m)
128	74	-1.5	0.9	-0.2	0.0	0.1	-0.1	158	-0.8	-1.7	0.2	0.0	-0.1	0.1
	25	0.7	1.8	-0.1	0.0	0.1	0.1	155	1.6	-1.0	0.1	0.0	-0.1	-0.1
129	158	-1.5	1.2	-0.1	0.0	0.1	0.0	159	-1.0	-1.7	0.1	0.0	0.0	0.0
	155	1.0	1.8	-0.1	0.0	0.1	0.1	156	1.6	-1.3	0.1	0.0	0.0	-0.1
130	159	-1.4	1.5	-0.1	0.0	0.0	0.0	160	-1.3	-1.6	0.1	0.0	0.0	0.0
	156	1.3	1.7	0.0	0.0	0.0	0.0	157	1.5	-1.6	0.0	0.0	0.0	0.0
131	75	-1.2	0.7	-0.2	0.0	0.1	-0.1	161	-0.4	-1.1	0.2	0.0	0.0	0.0
	74	0.3	1.1	0.0	0.0	0.1	0.1	158	1.3	-0.8	0.0	0.0	-0.1	-0.1
132	161	-1.1	0.8	0.0	0.0	0.0	0.0	162	-0.7	-1.2	0.1	0.0	0.0	0.0
	158	0.6	1.3	-0.1	0.0	0.1	0.1	159	1.2	-0.9	0.1	0.0	0.0	0.0
133	162	-1.0	1.0	0.0	0.0	0.0	0.0	163	-0.9	-1.1	0.0	0.0	0.0	0.0
	159	0.9	1.2	-0.1	0.0	0.0	0.0	160	1.0	-1.1	0.1	0.0	0.0	0.0
134	32	-0.5	0.4	-0.2	0.0	0.0	0.0	164	-0.2	-0.5	0.2	0.0	0.0	0.0
	75	0.0	0.5	0.1	0.0	0.1	0.0	161	0.7	-0.4	-0.1	0.0	0.0	0.0
135	164	-0.5	0.5	0.0	0.0	0.0	0.0	165	-0.4	-0.6	0.0	0.0	0.0	0.0
	161	0.3	0.6	-0.1	0.0	0.0	0.0	162	0.7	-0.5	0.0	0.0	0.0	0.0
136	165	-0.5	0.6	0.1	0.0	0.0	0.0	33	-0.5	-0.6	-0.1	0.0	0.0	0.0
	162	0.5	0.7	-0.1	0.0	0.0	0.0	163	0.6	-0.6	0.1	0.0	0.0	0.0
137	166	1.9	-4.0	-0.2	0.0	0.0	-0.1	167	2.1	0.7	-0.2	0.0	0.0	0.1
	58	-2.1	-0.7	0.2	0.1	0.0	0.2	54	-1.9	4.1	0.2	0.2	0.0	-0.2
138	167	1.2	-3.0	-0.2	0.0	0.0	-0.1	34	1.2	0.5	-0.2	0.0	-0.1	0.0
	54	-1.2	0.2	0.4	0.2	0.0	0.2	7	-1.1	2.2	0.0	0.1	0.0	-0.1
139	135	2.1	-2.8	0.1	0.0	0.0	0.0	168	2.3	2.1	-0.1	0.0	0.0	0.0
	132	-2.4	-2.4	-0.1	0.0	0.0	0.1	166	-2.0	3.1	0.2	0.0	0.0	-0.1
140	168	1.5	-3.0	0.0	0.0	0.0	-0.1	169	2.1	1.3	-0.1	0.0	0.0	0.1
	166	-2.4	-1.3	0.0	0.0	0.0	0.2	167	-1.3	3.1	0.0	0.0	0.0	-0.2
141	169	1.2	-2.6	-0.1	0.0	0.0	-0.1	37	1.6	1.0	0.0	0.0	-0.1	0.1
	167	-1.9	-0.7	0.3	0.0	0.0	0.2	34	-0.9	2.3	-0.3	0.0	-0.1	-0.1
142	138	1.7	-2.2	0.1	0.0	0.0	0.0	170	1.8	1.8	-0.1	0.0	0.0	0.0
	135	-1.9	-2.0	-0.1	0.0	0.0	0.0	168	-1.6	2.3	0.1	0.0	0.0	0.0
143	170	1.3	-2.3	0.1	0.0	0.0	-0.1	171	1.8	1.4	-0.1	0.0	-0.1	0.1
	168	-2.0	-1.4	0.0	0.0	0.0	0.1	169	-1.2	2.4	0.0	0.0	0.0	-0.1
144	171	1.0	-2.3	0.1	0.0	0.1	-0.1	22	1.8	1.0	-0.2	0.0	-0.1	0.1
	169	-1.9	-1.1	0.2	0.0	0.0	0.1	37	-1.0	2.3	-0.1	0.0	-0.1	-0.1
145	142	1.3	-1.6	0.1	0.0	0.0	0.0	172	1.4	1.5	-0.1	0.0	0.0	0.0
	138	-1.5	-1.6	0.0	0.0	0.0	0.0	170	-1.2	1.8	0.0	0.0	0.0	0.0
146	172	1.0	-1.8	0.1	0.0	0.0	0.0	173	1.5	1.2	-0.1	0.0	-0.1	0.0
	170	-1.6	-1.3	0.1	0.0	0.0	0.1	171	-0.9	1.9	-0.1	0.0	-0.1	-0.1
147	173	0.8	-1.8	0.2	0.0	0.1	-0.1	110	1.5	0.8	-0.2	0.0	-0.2	0.1
	171	-1.6	-1.0	0.1	0.0	0.1	0.1	22	-0.7	1.9	-0.1	0.0	-0.1	-0.1
148	146	0.9	-1.1	0.0	0.0	0.0	0.0	174	1.0	1.0	0.0	0.0	0.0	0.0
	142	-1.0	-1.1	0.1	0.0	0.0	0.0	172	-0.9	1.2	-0.1	0.0	0.0	0.0
149	174	0.7	-1.2	0.1	0.0	0.0	0.0	175	1.1	0.8	0.0	0.0	0.0	0.0
	172	-1.2	-0.9	0.1	0.0	0.0	0.0	173	-0.6	1.3	-0.1	0.0	-0.1	-0.1
150	175	0.4	-1.1	0.2	0.0	0.0	0.0	111	1.2	0.7	-0.2	0.0	-0.1	0.1
	173	-1.3	-0.7	0.0	0.0	0.1	0.1	110	-0.2	1.1	0.0	0.0	-0.1	-0.1
151	29	0.5	-0.6	-0.1	0.0	0.0	0.0	176	0.6	0.6	0.1	0.0	0.0	0.0
	146	-0.6	-0.6	0.1	0.0	0.0	0.0	174	-0.5	0.7	-0.1	0.0	0.0	0.0
152	176	0.4	-0.6	0.0	0.0	0.0	0.0	177	0.5	0.5	0.1	0.0	0.0	0.0
	174	-0.7	-0.5	0.1	0.0	0.0	0.0	175	-0.3	0.6	-0.1	0.0	0.0	0.0
153	177	0.2	-0.5	0.2	0.0	0.0	0.0	30	0.5	0.4	-0.2	0.0	0.0	0.0
	175	-0.7	-0.4	-0.1	0.0	0.0	0.0	111	0.0	0.4	0.1	0.0	-0.1	0.0
154	178	-1.6	3.9	0.2	0.0	0.0	0.1	179	-1.9	-0.6	0.2	0.0	0.0	-0.1
	93	1.9	0.6	-0.2	-0.1	0.0	-0.2	92	1.6	-3.8	-0.2	-0.2	0.0	0.2
155	179	-1.0	2.8	0.1	0.0	0.0	0.1	12	-1.1	-0.6	0.2	0.0	0.1	0.0
	92	1.1	-0.1	-0.4	-0.2	0.0	-0.2	17	1.0	-2.1	0.0	-0.1	0.0	0.1
156	154	-1.8	2.9	-0.1	0.0	0.0	0.0	180	-2.2	-2.0	0.1	0.0	0.0	0.0
	151	2.3	2.2	0.1	0.0	0.0	-0.1	178	1.7	-3.1	-0.2	0.0	0.0	0.1
157	180	-1.3	2.9	0.0	0.0	0.0	0.1	181	-1.9	-1.3	0.1	0.0	0.0	-0.1
	178	2.2	1.2	-0.1	0.0	0.0	-0.2	179	1.1	-2.9	0.0	0.0	0.0	0.1
158	181	-1.0	2.4	0.1	0.0	0.0	0.1	15	-1.5	-1.0	0.0	0.0	0.1	-0.1
	179	1.7	0.8	-0.3	0.0	0.0	-0.1	12	0.8	-2.2	0.3	0.0	0.1	0.1
159	157	-1.5	2.2	-0.1	0.0	0.0	0.0	182	-1.7	-1.8	0.1	0.0	0.0	0.0
	154	1.8	1.9	0.0	0.0	0.0	0.0	180	1.4	-2.3	-0.1	0.0	0.0	0.0
160	182	-1.2	2.3	-0.1	0.0	0.0	0.1	183	-1.7	-1.4	0.1	0.0	0.1	-0.1
	180	1.9	1.4	-0.1	0.0	0.0	-0.1	181	1.0	-2.3	0.0	0.0	0.1	0.1
161	183	-0.9	2.1	-0.1	0.0	-0.1	0.1	9	-1.7	-1.1	0.1	0.0	0.1	-0.1
	181	1.7	1.2	-0.2	0.0	-0.1	-0.1	15	0.8	-2.1	0.1	0.0	0.1	0.1
162	160	-1.1	1.7	-0.1	0.0	0.0	0.0	184	-1.4	-1.4	0.1	0.0	0.0	0.0
	157	1.4	1.5	0.0	0.0	0.0	0.0	182	1.1	-1.8	0.0	0.0	0.0	0.0
163	184	-0.9	1.7	-0.1	0.0	0.0	0.0	185	-1.4	-1.2	0.1	0.0	0.1	0.0
	182	1.5	1.3	-0.1	0.0	0.0	-0.1	183	0.8	-1.8	0.1	0.0	0.1	0.1
164	185	-0.7	1.7	-0.2	0.0	-0.1	0.1	120	-1.4	-0.9	0.2	0.0	0.1	-0.1
	183	1.5	1.0	-0.1	0.0	-0.1	-0.1	9	0.6	-1.8	0.1	0.0	0.1	0.1
165	163	-0.8	1.1	0.0	0.0	0.0	0.0	186	-1.0	-1.0	0.0	0.0	0.0	0.0
	160	1.0	1.1	-0.1	0.0	0.0	0.0	184	0.7	-1.2	0.1	0.0	0.0	0.0
166	186	-0.6	1.2	-0.1	0.0	0.0	0.0	187	-1.1	-0.8	0.0	0.0	0.0	0.0
	184	1.1	0.9	-0.1	0.0	0.0	0.0	185	0.5	-1.2	0.1	0.0	0.1	0.1
167	187	-0.3	1.1	-0.2	0.0	0.0	0.0	124	-1.1	-0.7	0.3	0.0	0.1	-0.1
	185	1.2	0.8	0.0	0.0	-0.1	-0.1	120	0.2	-1.1	0.0	0.0	0.1	0.1

Documento di proprietà **Snam Rete Gas**. La Società tutelerà i propri diritti in sede civile e penale a termini di legge.

FORZE: SISMA 0°°: MODO2: SHELL

Shell Nro	Nodo N.ro	Tx (kN)	Ty (kN)	Tz (kN)	Mx (kN*m)	My (kN*m)	Mz (kN*m)	Nodo N.ro	Tx (kN)	Ty (kN)	Tz (kN)	Mx (kN*m)	My (kN*m)	Mz (kN*m)
168	33	-0.5	0.6	0.1	0.0	0.0	0.0	188	-0.5	-0.6	-0.1	0.0	0.0	0.0
	163	0.6	0.6	-0.1	0.0	0.0	0.0	186	0.4	-0.7	0.1	0.0	0.0	0.0
169	188	-0.4	0.6	0.0	0.0	0.0	0.0	189	-0.5	-0.5	0.0	0.0	0.0	0.0
	186	0.6	0.5	0.0	0.0	0.0	0.0	187	0.2	-0.6	0.1	0.0	0.0	0.0
170	189	-0.2	0.5	-0.2	0.0	0.0	0.0	26	-0.5	-0.4	0.2	0.0	0.0	0.0
	187	0.7	0.4	0.1	0.0	0.0	0.0	124	0.0	-0.5	-0.1	0.0	0.1	0.0
171	190	1.0	0.4	-0.2	0.1	0.1	0.2	191	-0.3	1.2	0.1	0.0	0.0	-0.1
	73	0.6	-1.3	0.0	0.0	0.1	-0.2	72	-1.3	-0.3	0.1	0.0	-0.1	0.1
172	191	1.1	-0.2	-0.4	0.0	0.0	0.1	139	0.5	1.6	0.3	0.0	0.1	-0.1
	72	-0.4	-1.9	-0.3	0.0	0.0	-0.1	3	-1.2	0.5	0.4	0.0	0.1	0.1
173	127	0.3	0.0	0.1	0.1	0.1	0.0	192	-0.2	0.2	-0.1	0.1	-0.1	-0.1
	123	0.3	-0.2	-0.2	-0.1	0.1	0.0	190	-0.4	-0.1	0.2	-0.1	-0.1	0.0
174	192	0.5	0.0	0.1	0.1	0.1	0.1	193	-0.1	0.5	-0.1	0.0	0.0	-0.1
	190	0.3	-0.4	-0.4	-0.1	0.1	-0.1	191	-0.6	-0.1	0.4	0.0	0.0	0.1
175	193	0.6	-0.2	-0.1	0.0	0.0	0.1	143	0.3	0.8	0.1	0.0	0.1	0.0
	191	-0.1	-0.9	-0.5	0.0	0.0	-0.1	139	-0.7	0.4	0.6	0.0	0.1	0.0
176	27	0.1	0.0	0.3	0.0	0.0	0.0	194	0.0	0.2	0.0	0.0	0.0	0.0
	127	0.1	-0.2	-0.3	-0.1	0.1	0.0	192	-0.2	0.0	0.1	-0.1	-0.1	0.0
177	194	0.2	-0.2	0.5	0.0	0.0	0.0	195	0.1	0.3	-0.3	0.0	0.0	0.0
	192	0.0	-0.3	-0.6	-0.1	0.1	0.0	193	-0.3	0.1	0.4	-0.1	0.0	0.0
178	195	0.3	-0.3	0.4	0.0	0.0	0.0	28	0.2	0.4	-0.3	0.0	0.0	0.0
	193	-0.2	-0.4	-0.7	0.0	0.0	0.0	143	-0.4	0.4	0.5	0.0	0.1	0.0
179	52	1.7	1.0	0.3	0.0	0.0	0.3	119	-3.8	-0.8	-0.2	0.0	0.0	-0.3
	53	4.0	1.2	-0.6	0.0	0.1	-0.2	118	-1.8	-1.4	0.5	0.0	0.0	0.2
180	7	-0.1	0.9	0.2	0.0	0.0	0.2	34	-2.3	-0.8	-0.2	0.0	0.0	-0.1
	52	2.7	1.1	-0.3	0.0	0.0	-0.1	119	-0.3	-1.3	0.3	0.0	0.0	0.1

FORZE: SISMA 0°°: MODO3: SHELL

Shell Nro	Nodo N.ro	Tx (kN)	Ty (kN)	Tz (kN)	Mx (kN*m)	My (kN*m)	Mz (kN*m)	Nodo N.ro	Tx (kN)	Ty (kN)	Tz (kN)	Mx (kN*m)	My (kN*m)	Mz (kN*m)
1	38	0.0	0.0	0.0	0.0	0.0	0.0	39	0.0	0.0	0.0	0.0	0.0	0.0
	14	0.0	0.0	0.0	0.0	0.0	0.0	1	0.0	0.0	0.0	0.0	0.0	0.0
2	6	0.0	0.0	0.0	0.0	0.0	0.0	44	0.0	0.0	0.0	0.0	0.0	0.0
	2	0.0	0.0	0.0	0.0	0.0	0.0	42	0.0	0.0	0.0	0.0	0.0	0.0
3	39	0.0	0.0	0.0	0.0	0.0	0.0	44	0.0	0.0	0.0	0.0	0.0	0.0
	1	0.0	0.0	0.0	0.0	0.0	0.0	6	0.0	0.0	0.0	0.0	0.0	0.0
4	46	0.0	0.0	0.0	0.0	0.0	0.0	47	0.0	0.0	0.0	0.0	0.0	0.0
	10	0.0	0.0	0.0	0.0	0.0	0.0	16	0.0	0.0	0.0	0.0	0.0	0.0
5	50	0.0	0.0	0.0	0.0	0.0	0.0	46	0.0	0.0	0.0	0.0	0.0	0.0
	4	0.0	0.0	0.0	0.0	0.0	0.0	10	0.0	0.0	0.0	0.0	0.0	0.0
6	54	0.0	0.0	0.0	0.0	0.0	0.0	55	0.0	0.0	0.0	0.0	0.0	0.0
	7	0.0	0.0	0.0	0.0	0.0	0.0	52	0.0	0.0	0.0	0.0	0.0	0.0
7	64	0.0	0.0	0.0	0.0	0.0	0.0	65	0.0	0.0	0.0	0.0	0.0	0.0
	5	0.0	0.0	0.0	0.0	0.0	0.0	62	0.0	0.0	0.0	0.0	0.0	0.0
8	47	0.0	0.0	0.0	0.0	0.0	0.0	72	0.0	0.0	0.0	0.0	0.0	0.0
	16	0.0	0.0	0.0	0.0	0.0	0.0	3	0.0	0.0	0.0	0.0	0.0	0.0
9	76	0.0	0.0	0.0	0.0	0.0	0.0	77	0.0	0.0	0.0	0.0	0.0	0.0
	25	0.0	0.0	0.0	0.0	0.0	0.0	74	0.0	0.0	0.0	0.0	0.0	0.0
10	38	0.0	0.0	0.0	0.0	0.0	0.0	86	0.0	0.0	0.0	0.0	0.0	0.0
	14	0.0	0.0	0.0	0.0	0.0	0.0	71	0.0	0.0	0.0	0.0	0.0	0.0
11	94	0.0	0.0	0.0	0.0	0.0	0.0	95	0.0	0.0	0.0	0.0	0.0	0.0
	18	0.0	0.0	0.0	0.0	0.0	0.0	91	0.0	0.0	0.0	0.0	0.0	0.0
12	102	0.0	0.0	0.0	0.0	0.0	0.0	103	0.0	0.0	0.0	0.0	0.0	0.0
	21	0.0	0.0	0.0	0.0	0.0	0.0	84	0.0	0.0	0.0	0.0	0.0	0.0
13	112	0.0	0.0	0.0	0.0	0.0	0.0	76	0.0	0.0	0.0	0.0	0.0	0.0
	36	0.0	0.0	0.0	0.0	0.0	0.0	25	0.0	0.0	0.0	0.0	0.0	0.0
14	114	0.0	0.0	0.0	0.0	0.0	0.0	112	0.0	0.0	0.0	0.0	0.0	0.0
	35	0.0	0.0	0.0	0.0	0.0	0.0	36	0.0	0.0	0.0	0.0	0.0	0.0
15	24	0.0	0.0	0.0	0.0	0.0	0.0	116	0.0	0.0	0.0	0.0	0.0	0.0
	21	0.0	0.0	0.0	0.0	0.0	0.0	102	0.0	0.0	0.0	0.0	0.0	0.0
16	118	0.0	0.0	0.0	0.0	0.0	0.0	116	0.0	0.0	0.0	0.0	0.0	0.0
	20	0.0	0.0	0.0	0.0	0.0	0.0	24	0.0	0.0	0.0	0.0	0.0	0.0
17	120	0.0	0.0	0.0	0.0	0.0	0.0	121	0.0	0.0	0.0	0.0	0.0	0.0
	9	0.0	0.0	0.0	0.0	0.0	0.0	43	0.0	0.0	0.0	0.0	0.0	0.0
18	10	0.0	0.0	0.0	0.0	0.0	0.0	130	0.0	0.0	0.0	0.0	0.0	0.0
	4	0.0	0.0	0.0	0.0	0.0	0.0	68	0.0	0.0	0.0	0.0	0.0	0.0
19	100	0.0	0.0	0.0	0.0	0.0	0.0	114	0.0	0.0	0.0	0.0	0.0	0.0
	19	0.0	0.0	0.0	0.0	0.0	0.0	35	0.0	0.0	0.0	0.0	0.0	0.0
20	35	0.0	0.0	0.0	0.0	0.0	0.0	149	0.0	0.0	0.0	0.0	0.0	0.0
	19	0.0	0.0	0.0	0.0	0.0	0.0	97	0.0	0.0	0.0	0.0	0.0	0.0
21	132	0.0	0.0	0.0	0.0	0.0	0.0	166	0.0	0.0	0.0	0.0	0.0	0.0
	5	0.0	0.0	0.0	0.0	0.0	0.0	58	0.0	0.0	0.0	0.0	0.0	0.0
22	151	0.0	0.0	0.0	0.0	0.0	0.0	178	0.0	0.0	0.0	0.0	0.0	0.0
	18	0.0	0.0	0.0	0.0	0.0	0.0	93	0.0	0.0	0.0	0.0	0.0	0.0
23	123	0.0	0.0	0.0	0.0	0.0	0.0	190	0.0	0.0	0.0	0.0	0.0	0.0
	2	0.0	0.0	0.0	0.0	0.0	0.0	73	0.0	0.0	0.0	0.0	0.0	0.0
24	53	0.0	0.0	0.0	0.0	0.0	0.0	118	0.0	0.0	0.0	0.0	0.0	0.0
	11	0.0	0.0	0.0	0.0	0.0	0.0	20	0.0	0.0	0.0	0.0	0.0	0.0
25	40	0.0	0.0	0.0	0.0	0.0	0.0	41	0.0	0.0	0.0	0.0	0.0	0.0
	38	0.0	0.0	0.0	0.0	0.0	0.0	39	0.0	0.0	0.0	0.0	0.0	0.0

Documento di proprietà **Snam Rete Gas**. La Società tutelerà i propri diritti in sede civile e penale a termini di legge.

FORZE: SISMA 0°°: MODO3: SHELL

Shell Nro	Nodo N.ro	Tx (kN)	Ty (kN)	Tz (kN)	Mx (kN*m)	My (kN*m)	Mz (kN*m)	Nodo N.ro	Tx (kN)	Ty (kN)	Tz (kN)	Mx (kN*m)	My (kN*m)	Mz (kN*m)
26	17	0.0	0.0	0.0	0.0	0.0	0.0	12	0.0	0.0	0.0	0.0	0.0	0.0
	40	0.0	0.0	0.0	0.0	0.0	0.0	41	0.0	0.0	0.0	0.0	0.0	0.0
27	44	0.0	0.0	0.0	0.0	0.0	0.0	45	0.0	0.0	0.0	0.0	0.0	0.0
	42	0.0	0.0	0.0	0.0	0.0	0.0	43	0.0	0.0	0.0	0.0	0.0	0.0
28	45	0.0	0.0	0.0	0.0	0.0	0.0	15	0.0	0.0	0.0	0.0	0.0	0.0
	43	0.0	0.0	0.0	0.0	0.0	0.0	9	0.0	0.0	0.0	0.0	0.0	0.0
29	41	0.0	0.0	0.0	0.0	0.0	0.0	45	0.0	0.0	0.0	0.0	0.0	0.0
	39	0.0	0.0	0.0	0.0	0.0	0.0	44	0.0	0.0	0.0	0.0	0.0	0.0
30	12	0.0	0.0	0.0	0.0	0.0	0.0	15	0.0	0.0	0.0	0.0	0.0	0.0
	41	0.0	0.0	0.0	0.0	0.0	0.0	45	0.0	0.0	0.0	0.0	0.0	0.0
31	48	0.0	0.0	0.0	0.0	0.0	0.0	49	0.0	0.0	0.0	0.0	0.0	0.0
	46	0.0	0.0	0.0	0.0	0.0	0.0	47	0.0	0.0	0.0	0.0	0.0	0.0
32	1	0.0	0.0	0.0	0.0	0.0	0.0	8	0.0	0.0	0.0	0.0	0.0	0.0
	48	0.0	0.0	0.0	0.0	0.0	0.0	49	0.0	0.0	0.0	0.0	0.0	0.0
33	51	0.0	0.0	0.0	0.0	0.0	0.0	48	0.0	0.0	0.0	0.0	0.0	0.0
	50	0.0	0.0	0.0	0.0	0.0	0.0	46	0.0	0.0	0.0	0.0	0.0	0.0
34	14	0.0	0.0	0.0	0.0	0.0	0.0	1	0.0	0.0	0.0	0.0	0.0	0.0
	51	0.0	0.0	0.0	0.0	0.0	0.0	48	0.0	0.0	0.0	0.0	0.0	0.0
35	55	0.0	0.0	0.0	0.0	0.0	0.0	56	0.0	0.0	0.0	0.0	0.0	0.0
	52	0.0	0.0	0.0	0.0	0.0	0.0	53	0.0	0.0	0.0	0.0	0.0	0.0
36	56	0.0	0.0	0.0	0.0	0.0	0.0	57	0.0	0.0	0.0	0.0	0.0	0.0
	53	0.0	0.0	0.0	0.0	0.0	0.0	11	0.0	0.0	0.0	0.0	0.0	0.0
37	58	0.0	0.0	0.0	0.0	0.0	0.0	59	0.0	0.0	0.0	0.0	0.0	0.0
	54	0.0	0.0	0.0	0.0	0.0	0.0	55	0.0	0.0	0.0	0.0	0.0	0.0
38	59	0.0	0.0	0.0	0.0	0.0	0.0	60	0.0	0.0	0.0	0.0	0.0	0.0
	55	0.0	0.0	0.0	0.0	0.0	0.0	56	0.0	0.0	0.0	0.0	0.0	0.0
39	60	0.0	0.0	0.0	0.0	0.0	0.0	61	0.0	0.0	0.0	0.0	0.0	0.0
	56	0.0	0.0	0.0	0.0	0.0	0.0	57	0.0	0.0	0.0	0.0	0.0	0.0
40	5	0.0	0.0	0.0	0.0	0.0	0.0	62	0.0	0.0	0.0	0.0	0.0	0.0
	58	0.0	0.0	0.0	0.0	0.0	0.0	59	0.0	0.0	0.0	0.0	0.0	0.0
41	62	0.0	0.0	0.0	0.0	0.0	0.0	63	0.0	0.0	0.0	0.0	0.0	0.0
	59	0.0	0.0	0.0	0.0	0.0	0.0	60	0.0	0.0	0.0	0.0	0.0	0.0
42	63	0.0	0.0	0.0	0.0	0.0	0.0	13	0.0	0.0	0.0	0.0	0.0	0.0
	60	0.0	0.0	0.0	0.0	0.0	0.0	61	0.0	0.0	0.0	0.0	0.0	0.0
43	65	0.0	0.0	0.0	0.0	0.0	0.0	66	0.0	0.0	0.0	0.0	0.0	0.0
	62	0.0	0.0	0.0	0.0	0.0	0.0	63	0.0	0.0	0.0	0.0	0.0	0.0
44	66	0.0	0.0	0.0	0.0	0.0	0.0	67	0.0	0.0	0.0	0.0	0.0	0.0
	63	0.0	0.0	0.0	0.0	0.0	0.0	13	0.0	0.0	0.0	0.0	0.0	0.0
45	68	0.0	0.0	0.0	0.0	0.0	0.0	69	0.0	0.0	0.0	0.0	0.0	0.0
	64	0.0	0.0	0.0	0.0	0.0	0.0	65	0.0	0.0	0.0	0.0	0.0	0.0
46	69	0.0	0.0	0.0	0.0	0.0	0.0	70	0.0	0.0	0.0	0.0	0.0	0.0
	65	0.0	0.0	0.0	0.0	0.0	0.0	66	0.0	0.0	0.0	0.0	0.0	0.0
47	70	0.0	0.0	0.0	0.0	0.0	0.0	71	0.0	0.0	0.0	0.0	0.0	0.0
	66	0.0	0.0	0.0	0.0	0.0	0.0	67	0.0	0.0	0.0	0.0	0.0	0.0
48	4	0.0	0.0	0.0	0.0	0.0	0.0	50	0.0	0.0	0.0	0.0	0.0	0.0
	68	0.0	0.0	0.0	0.0	0.0	0.0	69	0.0	0.0	0.0	0.0	0.0	0.0
49	50	0.0	0.0	0.0	0.0	0.0	0.0	51	0.0	0.0	0.0	0.0	0.0	0.0
	69	0.0	0.0	0.0	0.0	0.0	0.0	70	0.0	0.0	0.0	0.0	0.0	0.0
50	51	0.0	0.0	0.0	0.0	0.0	0.0	14	0.0	0.0	0.0	0.0	0.0	0.0
	70	0.0	0.0	0.0	0.0	0.0	0.0	71	0.0	0.0	0.0	0.0	0.0	0.0
51	49	0.0	0.0	0.0	0.0	0.0	0.0	73	0.0	0.0	0.0	0.0	0.0	0.0
	47	0.0	0.0	0.0	0.0	0.0	0.0	72	0.0	0.0	0.0	0.0	0.0	0.0
52	8	0.0	0.0	0.0	0.0	0.0	0.0	2	0.0	0.0	0.0	0.0	0.0	0.0
	49	0.0	0.0	0.0	0.0	0.0	0.0	73	0.0	0.0	0.0	0.0	0.0	0.0
53	77	0.0	0.0	0.0	0.0	0.0	0.0	78	0.0	0.0	0.0	0.0	0.0	0.0
	74	0.0	0.0	0.0	0.0	0.0	0.0	75	0.0	0.0	0.0	0.0	0.0	0.0
54	78	0.0	0.0	0.0	0.0	0.0	0.0	79	0.0	0.0	0.0	0.0	0.0	0.0
	75	0.0	0.0	0.0	0.0	0.0	0.0	32	0.0	0.0	0.0	0.0	0.0	0.0
55	80	0.0	0.0	0.0	0.0	0.0	0.0	81	0.0	0.0	0.0	0.0	0.0	0.0
	76	0.0	0.0	0.0	0.0	0.0	0.0	77	0.0	0.0	0.0	0.0	0.0	0.0
56	81	0.0	0.0	0.0	0.0	0.0	0.0	82	0.0	0.0	0.0	0.0	0.0	0.0
	77	0.0	0.0	0.0	0.0	0.0	0.0	78	0.0	0.0	0.0	0.0	0.0	0.0
57	82	0.0	0.0	0.0	0.0	0.0	0.0	83	0.0	0.0	0.0	0.0	0.0	0.0
	78	0.0	0.0	0.0	0.0	0.0	0.0	79	0.0	0.0	0.0	0.0	0.0	0.0
58	21	0.0	0.0	0.0	0.0	0.0	0.0	84	0.0	0.0	0.0	0.0	0.0	0.0
	80	0.0	0.0	0.0	0.0	0.0	0.0	81	0.0	0.0	0.0	0.0	0.0	0.0
59	84	0.0	0.0	0.0	0.0	0.0	0.0	85	0.0	0.0	0.0	0.0	0.0	0.0
	81	0.0	0.0	0.0	0.0	0.0	0.0	82	0.0	0.0	0.0	0.0	0.0	0.0
60	85	0.0	0.0	0.0	0.0	0.0	0.0	31	0.0	0.0	0.0	0.0	0.0	0.0
	82	0.0	0.0	0.0	0.0	0.0	0.0	83	0.0	0.0	0.0	0.0	0.0	0.0
61	86	0.0	0.0	0.0	0.0	0.0	0.0	87	0.0	0.0	0.0	0.0	0.0	0.0
	71	0.0	0.0	0.0	0.0	0.0	0.0	67	0.0	0.0	0.0	0.0	0.0	0.0
62	87	0.0	0.0	0.0	0.0	0.0	0.0	88	0.0	0.0	0.0	0.0	0.0	0.0
	67	0.0	0.0	0.0	0.0	0.0	0.0	13	0.0	0.0	0.0	0.0	0.0	0.0
63	40	0.0	0.0	0.0	0.0	0.0	0.0	89	0.0	0.0	0.0	0.0	0.0	0.0
	38	0.0	0.0	0.0	0.0	0.0	0.0	86	0.0	0.0	0.0	0.0	0.0	0.0
64	89	0.0	0.0	0.0	0.0	0.0	0.0	90	0.0	0.0	0.0	0.0	0.0	0.0
	86	0.0	0.0	0.0	0.0	0.0	0.0	87	0.0	0.0	0.0	0.0	0.0	0.0
65	90	0.0	0.0	0.0	0.0	0.0	0.0	91	0.0	0.0	0.0	0.0	0.0	0.0
	87	0.0	0.0	0.0	0.0	0.0	0.0	88	0.0	0.0	0.0	0.0	0.0	0.0

Documento di proprietà **Snam Rete Gas**. La Società tutelerà i propri diritti in sede civile e penale a termini di legge.

FORZE: SISMA 0°°: MODO3: SHELL

Shell Nro	Nodo N.ro	Tx (kN)	Ty (kN)	Tz (kN)	Mx (kN*m)	My (kN*m)	Mz (kN*m)	Nodo N.ro	Tx (kN)	Ty (kN)	Tz (kN)	Mx (kN*m)	My (kN*m)	Mz (kN*m)
66	17	0.0	0.0	0.0	0.0	0.0	0.0	92	0.0	0.0	0.0	0.0	0.0	0.0
	40	0.0	0.0	0.0	0.0	0.0	0.0	89	0.0	0.0	0.0	0.0	0.0	0.0
67	92	0.0	0.0	0.0	0.0	0.0	0.0	93	0.0	0.0	0.0	0.0	0.0	0.0
	89	0.0	0.0	0.0	0.0	0.0	0.0	90	0.0	0.0	0.0	0.0	0.0	0.0
68	93	0.0	0.0	0.0	0.0	0.0	0.0	18	0.0	0.0	0.0	0.0	0.0	0.0
	90	0.0	0.0	0.0	0.0	0.0	0.0	91	0.0	0.0	0.0	0.0	0.0	0.0
69	95	0.0	0.0	0.0	0.0	0.0	0.0	96	0.0	0.0	0.0	0.0	0.0	0.0
	91	0.0	0.0	0.0	0.0	0.0	0.0	88	0.0	0.0	0.0	0.0	0.0	0.0
70	96	0.0	0.0	0.0	0.0	0.0	0.0	61	0.0	0.0	0.0	0.0	0.0	0.0
	88	0.0	0.0	0.0	0.0	0.0	0.0	13	0.0	0.0	0.0	0.0	0.0	0.0
71	97	0.0	0.0	0.0	0.0	0.0	0.0	98	0.0	0.0	0.0	0.0	0.0	0.0
	94	0.0	0.0	0.0	0.0	0.0	0.0	95	0.0	0.0	0.0	0.0	0.0	0.0
72	98	0.0	0.0	0.0	0.0	0.0	0.0	99	0.0	0.0	0.0	0.0	0.0	0.0
	95	0.0	0.0	0.0	0.0	0.0	0.0	96	0.0	0.0	0.0	0.0	0.0	0.0
73	99	0.0	0.0	0.0	0.0	0.0	0.0	57	0.0	0.0	0.0	0.0	0.0	0.0
	96	0.0	0.0	0.0	0.0	0.0	0.0	61	0.0	0.0	0.0	0.0	0.0	0.0
74	19	0.0	0.0	0.0	0.0	0.0	0.0	100	0.0	0.0	0.0	0.0	0.0	0.0
	97	0.0	0.0	0.0	0.0	0.0	0.0	98	0.0	0.0	0.0	0.0	0.0	0.0
75	100	0.0	0.0	0.0	0.0	0.0	0.0	101	0.0	0.0	0.0	0.0	0.0	0.0
	98	0.0	0.0	0.0	0.0	0.0	0.0	99	0.0	0.0	0.0	0.0	0.0	0.0
76	101	0.0	0.0	0.0	0.0	0.0	0.0	11	0.0	0.0	0.0	0.0	0.0	0.0
	99	0.0	0.0	0.0	0.0	0.0	0.0	57	0.0	0.0	0.0	0.0	0.0	0.0
77	103	0.0	0.0	0.0	0.0	0.0	0.0	104	0.0	0.0	0.0	0.0	0.0	0.0
	84	0.0	0.0	0.0	0.0	0.0	0.0	85	0.0	0.0	0.0	0.0	0.0	0.0
78	104	0.0	0.0	0.0	0.0	0.0	0.0	105	0.0	0.0	0.0	0.0	0.0	0.0
	85	0.0	0.0	0.0	0.0	0.0	0.0	31	0.0	0.0	0.0	0.0	0.0	0.0
79	106	0.0	0.0	0.0	0.0	0.0	0.0	107	0.0	0.0	0.0	0.0	0.0	0.0
	102	0.0	0.0	0.0	0.0	0.0	0.0	103	0.0	0.0	0.0	0.0	0.0	0.0
80	107	0.0	0.0	0.0	0.0	0.0	0.0	108	0.0	0.0	0.0	0.0	0.0	0.0
	103	0.0	0.0	0.0	0.0	0.0	0.0	104	0.0	0.0	0.0	0.0	0.0	0.0
81	108	0.0	0.0	0.0	0.0	0.0	0.0	109	0.0	0.0	0.0	0.0	0.0	0.0
	104	0.0	0.0	0.0	0.0	0.0	0.0	105	0.0	0.0	0.0	0.0	0.0	0.0
82	22	0.0	0.0	0.0	0.0	0.0	0.0	110	0.0	0.0	0.0	0.0	0.0	0.0
	106	0.0	0.0	0.0	0.0	0.0	0.0	107	0.0	0.0	0.0	0.0	0.0	0.0
83	110	0.0	0.0	0.0	0.0	0.0	0.0	111	0.0	0.0	0.0	0.0	0.0	0.0
	107	0.0	0.0	0.0	0.0	0.0	0.0	108	0.0	0.0	0.0	0.0	0.0	0.0
84	111	0.0	0.0	0.0	0.0	0.0	0.0	30	0.0	0.0	0.0	0.0	0.0	0.0
	108	0.0	0.0	0.0	0.0	0.0	0.0	109	0.0	0.0	0.0	0.0	0.0	0.0
85	113	0.0	0.0	0.0	0.0	0.0	0.0	80	0.0	0.0	0.0	0.0	0.0	0.0
	112	0.0	0.0	0.0	0.0	0.0	0.0	76	0.0	0.0	0.0	0.0	0.0	0.0
86	23	0.0	0.0	0.0	0.0	0.0	0.0	21	0.0	0.0	0.0	0.0	0.0	0.0
	113	0.0	0.0	0.0	0.0	0.0	0.0	80	0.0	0.0	0.0	0.0	0.0	0.0
87	115	0.0	0.0	0.0	0.0	0.0	0.0	113	0.0	0.0	0.0	0.0	0.0	0.0
	114	0.0	0.0	0.0	0.0	0.0	0.0	112	0.0	0.0	0.0	0.0	0.0	0.0
88	20	0.0	0.0	0.0	0.0	0.0	0.0	23	0.0	0.0	0.0	0.0	0.0	0.0
	115	0.0	0.0	0.0	0.0	0.0	0.0	113	0.0	0.0	0.0	0.0	0.0	0.0
89	116	0.0	0.0	0.0	0.0	0.0	0.0	117	0.0	0.0	0.0	0.0	0.0	0.0
	102	0.0	0.0	0.0	0.0	0.0	0.0	106	0.0	0.0	0.0	0.0	0.0	0.0
90	117	0.0	0.0	0.0	0.0	0.0	0.0	37	0.0	0.0	0.0	0.0	0.0	0.0
	106	0.0	0.0	0.0	0.0	0.0	0.0	22	0.0	0.0	0.0	0.0	0.0	0.0
91	119	0.0	0.0	0.0	0.0	0.0	0.0	117	0.0	0.0	0.0	0.0	0.0	0.0
	118	0.0	0.0	0.0	0.0	0.0	0.0	116	0.0	0.0	0.0	0.0	0.0	0.0
92	34	0.0	0.0	0.0	0.0	0.0	0.0	37	0.0	0.0	0.0	0.0	0.0	0.0
	119	0.0	0.0	0.0	0.0	0.0	0.0	117	0.0	0.0	0.0	0.0	0.0	0.0
93	121	0.0	0.0	0.0	0.0	0.0	0.0	122	0.0	0.0	0.0	0.0	0.0	0.0
	43	0.0	0.0	0.0	0.0	0.0	0.0	42	0.0	0.0	0.0	0.0	0.0	0.0
94	122	0.0	0.0	0.0	0.0	0.0	0.0	123	0.0	0.0	0.0	0.0	0.0	0.0
	42	0.0	0.0	0.0	0.0	0.0	0.0	2	0.0	0.0	0.0	0.0	0.0	0.0
95	124	0.0	0.0	0.0	0.0	0.0	0.0	125	0.0	0.0	0.0	0.0	0.0	0.0
	120	0.0	0.0	0.0	0.0	0.0	0.0	121	0.0	0.0	0.0	0.0	0.0	0.0
96	125	0.0	0.0	0.0	0.0	0.0	0.0	126	0.0	0.0	0.0	0.0	0.0	0.0
	121	0.0	0.0	0.0	0.0	0.0	0.0	122	0.0	0.0	0.0	0.0	0.0	0.0
97	126	0.0	0.0	0.0	0.0	0.0	0.0	127	0.0	0.0	0.0	0.0	0.0	0.0
	122	0.0	0.0	0.0	0.0	0.0	0.0	123	0.0	0.0	0.0	0.0	0.0	0.0
98	26	0.0	0.0	0.0	0.0	0.0	0.0	128	0.0	0.0	0.0	0.0	0.0	0.0
	124	0.0	0.0	0.0	0.0	0.0	0.0	125	0.0	0.0	0.0	0.0	0.0	0.0
99	128	0.0	0.0	0.0	0.0	0.0	0.0	129	0.0	0.0	0.0	0.0	0.0	0.0
	125	0.0	0.0	0.0	0.0	0.0	0.0	126	0.0	0.0	0.0	0.0	0.0	0.0
100	129	0.0	0.0	0.0	0.0	0.0	0.0	27	0.0	0.0	0.0	0.0	0.0	0.0
	126	0.0	0.0	0.0	0.0	0.0	0.0	127	0.0	0.0	0.0	0.0	0.0	0.0
101	130	0.0	0.0	0.0	0.0	0.0	0.0	131	0.0	0.0	0.0	0.0	0.0	0.0
	68	0.0	0.0	0.0	0.0	0.0	0.0	64	0.0	0.0	0.0	0.0	0.0	0.0
102	131	0.0	0.0	0.0	0.0	0.0	0.0	132	0.0	0.0	0.0	0.0	0.0	0.0
	64	0.0	0.0	0.0	0.0	0.0	0.0	5	0.0	0.0	0.0	0.0	0.0	0.0
103	16	0.0	0.0	0.0	0.0	0.0	0.0	133	0.0	0.0	0.0	0.0	0.0	0.0
	10	0.0	0.0	0.0	0.0	0.0	0.0	130	0.0	0.0	0.0	0.0	0.0	0.0
104	133	0.0	0.0	0.0	0.0	0.0	0.0	134	0.0	0.0	0.0	0.0	0.0	0.0
	130	0.0	0.0	0.0	0.0	0.0	0.0	131	0.0	0.0	0.0	0.0	0.0	0.0
105	134	0.0	0.0	0.0	0.0	0.0	0.0	135	0.0	0.0	0.0	0.0	0.0	0.0
	131	0.0	0.0	0.0	0.0	0.0	0.0	132	0.0	0.0	0.0	0.0	0.0	0.0

Documento di proprietà **Snam Rete Gas**. La Società tutelerà i propri diritti in sede civile e penale a termini di legge.

FORZE: SISMA 0°°: MODO3: SHELL

Shell Nro	Nodo N.ro	Tx (kN)	Ty (kN)	Tz (kN)	Mx (kN*m)	My (kN*m)	Mz (kN*m)	Nodo N.ro	Tx (kN)	Ty (kN)	Tz (kN)	Mx (kN*m)	My (kN*m)	Mz (kN*m)
106	3	0.0	0.0	0.0	0.0	0.0	0.0	136	0.0	0.0	0.0	0.0	0.0	0.0
	16	0.0	0.0	0.0	0.0	0.0	0.0	133	0.0	0.0	0.0	0.0	0.0	0.0
107	136	0.0	0.0	0.0	0.0	0.0	0.0	137	0.0	0.0	0.0	0.0	0.0	0.0
	133	0.0	0.0	0.0	0.0	0.0	0.0	134	0.0	0.0	0.0	0.0	0.0	0.0
108	137	0.0	0.0	0.0	0.0	0.0	0.0	138	0.0	0.0	0.0	0.0	0.0	0.0
	134	0.0	0.0	0.0	0.0	0.0	0.0	135	0.0	0.0	0.0	0.0	0.0	0.0
109	139	0.0	0.0	0.0	0.0	0.0	0.0	140	0.0	0.0	0.0	0.0	0.0	0.0
	3	0.0	0.0	0.0	0.0	0.0	0.0	136	0.0	0.0	0.0	0.0	0.0	0.0
110	140	0.0	0.0	0.0	0.0	0.0	0.0	141	0.0	0.0	0.0	0.0	0.0	0.0
	136	0.0	0.0	0.0	0.0	0.0	0.0	137	0.0	0.0	0.0	0.0	0.0	0.0
111	141	0.0	0.0	0.0	0.0	0.0	0.0	142	0.0	0.0	0.0	0.0	0.0	0.0
	137	0.0	0.0	0.0	0.0	0.0	0.0	138	0.0	0.0	0.0	0.0	0.0	0.0
112	143	0.0	0.0	0.0	0.0	0.0	0.0	144	0.0	0.0	0.0	0.0	0.0	0.0
	139	0.0	0.0	0.0	0.0	0.0	0.0	140	0.0	0.0	0.0	0.0	0.0	0.0
113	144	0.0	0.0	0.0	0.0	0.0	0.0	145	0.0	0.0	0.0	0.0	0.0	0.0
	140	0.0	0.0	0.0	0.0	0.0	0.0	141	0.0	0.0	0.0	0.0	0.0	0.0
114	145	0.0	0.0	0.0	0.0	0.0	0.0	146	0.0	0.0	0.0	0.0	0.0	0.0
	141	0.0	0.0	0.0	0.0	0.0	0.0	142	0.0	0.0	0.0	0.0	0.0	0.0
115	28	0.0	0.0	0.0	0.0	0.0	0.0	147	0.0	0.0	0.0	0.0	0.0	0.0
	143	0.0	0.0	0.0	0.0	0.0	0.0	144	0.0	0.0	0.0	0.0	0.0	0.0
116	147	0.0	0.0	0.0	0.0	0.0	0.0	148	0.0	0.0	0.0	0.0	0.0	0.0
	144	0.0	0.0	0.0	0.0	0.0	0.0	145	0.0	0.0	0.0	0.0	0.0	0.0
117	148	0.0	0.0	0.0	0.0	0.0	0.0	29	0.0	0.0	0.0	0.0	0.0	0.0
	145	0.0	0.0	0.0	0.0	0.0	0.0	146	0.0	0.0	0.0	0.0	0.0	0.0
118	101	0.0	0.0	0.0	0.0	0.0	0.0	115	0.0	0.0	0.0	0.0	0.0	0.0
	100	0.0	0.0	0.0	0.0	0.0	0.0	114	0.0	0.0	0.0	0.0	0.0	0.0
119	11	0.0	0.0	0.0	0.0	0.0	0.0	20	0.0	0.0	0.0	0.0	0.0	0.0
	101	0.0	0.0	0.0	0.0	0.0	0.0	115	0.0	0.0	0.0	0.0	0.0	0.0
120	149	0.0	0.0	0.0	0.0	0.0	0.0	150	0.0	0.0	0.0	0.0	0.0	0.0
	97	0.0	0.0	0.0	0.0	0.0	0.0	94	0.0	0.0	0.0	0.0	0.0	0.0
121	150	0.0	0.0	0.0	0.0	0.0	0.0	151	0.0	0.0	0.0	0.0	0.0	0.0
	94	0.0	0.0	0.0	0.0	0.0	0.0	18	0.0	0.0	0.0	0.0	0.0	0.0
122	36	0.0	0.0	0.0	0.0	0.0	0.0	152	0.0	0.0	0.0	0.0	0.0	0.0
	35	0.0	0.0	0.0	0.0	0.0	0.0	149	0.0	0.0	0.0	0.0	0.0	0.0
123	152	0.0	0.0	0.0	0.0	0.0	0.0	153	0.0	0.0	0.0	0.0	0.0	0.0
	149	0.0	0.0	0.0	0.0	0.0	0.0	150	0.0	0.0	0.0	0.0	0.0	0.0
124	153	0.0	0.0	0.0	0.0	0.0	0.0	154	0.0	0.0	0.0	0.0	0.0	0.0
	150	0.0	0.0	0.0	0.0	0.0	0.0	151	0.0	0.0	0.0	0.0	0.0	0.0
125	25	0.0	0.0	0.0	0.0	0.0	0.0	155	0.0	0.0	0.0	0.0	0.0	0.0
	36	0.0	0.0	0.0	0.0	0.0	0.0	152	0.0	0.0	0.0	0.0	0.0	0.0
126	155	0.0	0.0	0.0	0.0	0.0	0.0	156	0.0	0.0	0.0	0.0	0.0	0.0
	152	0.0	0.0	0.0	0.0	0.0	0.0	153	0.0	0.0	0.0	0.0	0.0	0.0
127	156	0.0	0.0	0.0	0.0	0.0	0.0	157	0.0	0.0	0.0	0.0	0.0	0.0
	153	0.0	0.0	0.0	0.0	0.0	0.0	154	0.0	0.0	0.0	0.0	0.0	0.0
128	74	0.0	0.0	0.0	0.0	0.0	0.0	158	0.0	0.0	0.0	0.0	0.0	0.0
	25	0.0	0.0	0.0	0.0	0.0	0.0	155	0.0	0.0	0.0	0.0	0.0	0.0
129	158	0.0	0.0	0.0	0.0	0.0	0.0	159	0.0	0.0	0.0	0.0	0.0	0.0
	155	0.0	0.0	0.0	0.0	0.0	0.0	156	0.0	0.0	0.0	0.0	0.0	0.0
130	159	0.0	0.0	0.0	0.0	0.0	0.0	160	0.0	0.0	0.0	0.0	0.0	0.0
	156	0.0	0.0	0.0	0.0	0.0	0.0	157	0.0	0.0	0.0	0.0	0.0	0.0
131	75	0.0	0.0	0.0	0.0	0.0	0.0	161	0.0	0.0	0.0	0.0	0.0	0.0
	74	0.0	0.0	0.0	0.0	0.0	0.0	158	0.0	0.0	0.0	0.0	0.0	0.0
132	161	0.0	0.0	0.0	0.0	0.0	0.0	162	0.0	0.0	0.0	0.0	0.0	0.0
	158	0.0	0.0	0.0	0.0	0.0	0.0	159	0.0	0.0	0.0	0.0	0.0	0.0
133	162	0.0	0.0	0.0	0.0	0.0	0.0	163	0.0	0.0	0.0	0.0	0.0	0.0
	159	0.0	0.0	0.0	0.0	0.0	0.0	160	0.0	0.0	0.0	0.0	0.0	0.0
134	32	0.0	0.0	0.0	0.0	0.0	0.0	164	0.0	0.0	0.0	0.0	0.0	0.0
	75	0.0	0.0	0.0	0.0	0.0	0.0	161	0.0	0.0	0.0	0.0	0.0	0.0
135	164	0.0	0.0	0.0	0.0	0.0	0.0	165	0.0	0.0	0.0	0.0	0.0	0.0
	161	0.0	0.0	0.0	0.0	0.0	0.0	162	0.0	0.0	0.0	0.0	0.0	0.0
136	165	0.0	0.0	0.0	0.0	0.0	0.0	33	0.0	0.0	0.0	0.0	0.0	0.0
	162	0.0	0.0	0.0	0.0	0.0	0.0	163	0.0	0.0	0.0	0.0	0.0	0.0
137	166	0.0	0.0	0.0	0.0	0.0	0.0	167	0.0	0.0	0.0	0.0	0.0	0.0
	58	0.0	0.0	0.0	0.0	0.0	0.0	54	0.0	0.0	0.0	0.0	0.0	0.0
138	167	0.0	0.0	0.0	0.0	0.0	0.0	34	0.0	0.0	0.0	0.0	0.0	0.0
	54	0.0	0.0	0.0	0.0	0.0	0.0	7	0.0	0.0	0.0	0.0	0.0	0.0
139	135	0.0	0.0	0.0	0.0	0.0	0.0	168	0.0	0.0	0.0	0.0	0.0	0.0
	132	0.0	0.0	0.0	0.0	0.0	0.0	166	0.0	0.0	0.0	0.0	0.0	0.0
140	168	0.0	0.0	0.0	0.0	0.0	0.0	169	0.0	0.0	0.0	0.0	0.0	0.0
	166	0.0	0.0	0.0	0.0	0.0	0.0	167	0.0	0.0	0.0	0.0	0.0	0.0
141	169	0.0	0.0	0.0	0.0	0.0	0.0	37	0.0	0.0	0.0	0.0	0.0	0.0
	167	0.0	0.0	0.0	0.0	0.0	0.0	34	0.0	0.0	0.0	0.0	0.0	0.0
142	138	0.0	0.0	0.0	0.0	0.0	0.0	170	0.0	0.0	0.0	0.0	0.0	0.0
	135	0.0	0.0	0.0	0.0	0.0	0.0	168	0.0	0.0	0.0	0.0	0.0	0.0
143	170	0.0	0.0	0.0	0.0	0.0	0.0	171	0.0	0.0	0.0	0.0	0.0	0.0
	168	0.0	0.0	0.0	0.0	0.0	0.0	169	0.0	0.0	0.0	0.0	0.0	0.0
144	171	0.0	0.0	0.0	0.0	0.0	0.0	22	0.0	0.0	0.0	0.0	0.0	0.0
	169	0.0	0.0	0.0	0.0	0.0	0.0	37	0.0	0.0	0.0	0.0	0.0	0.0
145	142	0.0	0.0	0.0	0.0	0.0	0.0	172	0.0	0.0	0.0	0.0	0.0	0.0
	138	0.0	0.0	0.0	0.0	0.0	0.0	170	0.0	0.0	0.0	0.0	0.0	0.0

Documento di proprietà **Snam Rete Gas**. La Società tutelerà i propri diritti in sede civile e penale a termini di legge.

FORZE: SISMA 0°°: MODO3: SHELL

Shell Nro	Nodo N.ro	Tx (kN)	Ty (kN)	Tz (kN)	Mx (kN*m)	My (kN*m)	Mz (kN*m)	Nodo N.ro	Tx (kN)	Ty (kN)	Tz (kN)	Mx (kN*m)	My (kN*m)	Mz (kN*m)
146	172	0.0	0.0	0.0	0.0	0.0	0.0	173	0.0	0.0	0.0	0.0	0.0	0.0
	170	0.0	0.0	0.0	0.0	0.0	0.0	171	0.0	0.0	0.0	0.0	0.0	0.0
147	173	0.0	0.0	0.0	0.0	0.0	0.0	110	0.0	0.0	0.0	0.0	0.0	0.0
	171	0.0	0.0	0.0	0.0	0.0	0.0	22	0.0	0.0	0.0	0.0	0.0	0.0
148	146	0.0	0.0	0.0	0.0	0.0	0.0	174	0.0	0.0	0.0	0.0	0.0	0.0
	142	0.0	0.0	0.0	0.0	0.0	0.0	172	0.0	0.0	0.0	0.0	0.0	0.0
149	174	0.0	0.0	0.0	0.0	0.0	0.0	175	0.0	0.0	0.0	0.0	0.0	0.0
	172	0.0	0.0	0.0	0.0	0.0	0.0	173	0.0	0.0	0.0	0.0	0.0	0.0
150	175	0.0	0.0	0.0	0.0	0.0	0.0	111	0.0	0.0	0.0	0.0	0.0	0.0
	173	0.0	0.0	0.0	0.0	0.0	0.0	110	0.0	0.0	0.0	0.0	0.0	0.0
151	29	0.0	0.0	0.0	0.0	0.0	0.0	176	0.0	0.0	0.0	0.0	0.0	0.0
	146	0.0	0.0	0.0	0.0	0.0	0.0	174	0.0	0.0	0.0	0.0	0.0	0.0
152	176	0.0	0.0	0.0	0.0	0.0	0.0	177	0.0	0.0	0.0	0.0	0.0	0.0
	174	0.0	0.0	0.0	0.0	0.0	0.0	175	0.0	0.0	0.0	0.0	0.0	0.0
153	177	0.0	0.0	0.0	0.0	0.0	0.0	30	0.0	0.0	0.0	0.0	0.0	0.0
	175	0.0	0.0	0.0	0.0	0.0	0.0	111	0.0	0.0	0.0	0.0	0.0	0.0
154	178	0.0	0.0	0.0	0.0	0.0	0.0	179	0.0	0.0	0.0	0.0	0.0	0.0
	93	0.0	0.0	0.0	0.0	0.0	0.0	92	0.0	0.0	0.0	0.0	0.0	0.0
155	179	0.0	0.0	0.0	0.0	0.0	0.0	12	0.0	0.0	0.0	0.0	0.0	0.0
	92	0.0	0.0	0.0	0.0	0.0	0.0	17	0.0	0.0	0.0	0.0	0.0	0.0
156	154	0.0	0.0	0.0	0.0	0.0	0.0	180	0.0	0.0	0.0	0.0	0.0	0.0
	151	0.0	0.0	0.0	0.0	0.0	0.0	178	0.0	0.0	0.0	0.0	0.0	0.0
157	180	0.0	0.0	0.0	0.0	0.0	0.0	181	0.0	0.0	0.0	0.0	0.0	0.0
	178	0.0	0.0	0.0	0.0	0.0	0.0	179	0.0	0.0	0.0	0.0	0.0	0.0
158	181	0.0	0.0	0.0	0.0	0.0	0.0	15	0.0	0.0	0.0	0.0	0.0	0.0
	179	0.0	0.0	0.0	0.0	0.0	0.0	12	0.0	0.0	0.0	0.0	0.0	0.0
159	157	0.0	0.0	0.0	0.0	0.0	0.0	182	0.0	0.0	0.0	0.0	0.0	0.0
	154	0.0	0.0	0.0	0.0	0.0	0.0	180	0.0	0.0	0.0	0.0	0.0	0.0
160	182	0.0	0.0	0.0	0.0	0.0	0.0	183	0.0	0.0	0.0	0.0	0.0	0.0
	180	0.0	0.0	0.0	0.0	0.0	0.0	181	0.0	0.0	0.0	0.0	0.0	0.0
161	183	0.0	0.0	0.0	0.0	0.0	0.0	9	0.0	0.0	0.0	0.0	0.0	0.0
	181	0.0	0.0	0.0	0.0	0.0	0.0	15	0.0	0.0	0.0	0.0	0.0	0.0
162	160	0.0	0.0	0.0	0.0	0.0	0.0	184	0.0	0.0	0.0	0.0	0.0	0.0
	157	0.0	0.0	0.0	0.0	0.0	0.0	182	0.0	0.0	0.0	0.0	0.0	0.0
163	184	0.0	0.0	0.0	0.0	0.0	0.0	185	0.0	0.0	0.0	0.0	0.0	0.0
	182	0.0	0.0	0.0	0.0	0.0	0.0	183	0.0	0.0	0.0	0.0	0.0	0.0
164	185	0.0	0.0	0.0	0.0	0.0	0.0	120	0.0	0.0	0.0	0.0	0.0	0.0
	183	0.0	0.0	0.0	0.0	0.0	0.0	9	0.0	0.0	0.0	0.0	0.0	0.0
165	163	0.0	0.0	0.0	0.0	0.0	0.0	186	0.0	0.0	0.0	0.0	0.0	0.0
	160	0.0	0.0	0.0	0.0	0.0	0.0	184	0.0	0.0	0.0	0.0	0.0	0.0
166	186	0.0	0.0	0.0	0.0	0.0	0.0	187	0.0	0.0	0.0	0.0	0.0	0.0
	184	0.0	0.0	0.0	0.0	0.0	0.0	185	0.0	0.0	0.0	0.0	0.0	0.0
167	187	0.0	0.0	0.0	0.0	0.0	0.0	124	0.0	0.0	0.0	0.0	0.0	0.0
	185	0.0	0.0	0.0	0.0	0.0	0.0	120	0.0	0.0	0.0	0.0	0.0	0.0
168	33	0.0	0.0	0.0	0.0	0.0	0.0	188	0.0	0.0	0.0	0.0	0.0	0.0
	163	0.0	0.0	0.0	0.0	0.0	0.0	186	0.0	0.0	0.0	0.0	0.0	0.0
169	188	0.0	0.0	0.0	0.0	0.0	0.0	189	0.0	0.0	0.0	0.0	0.0	0.0
	186	0.0	0.0	0.0	0.0	0.0	0.0	187	0.0	0.0	0.0	0.0	0.0	0.0
170	189	0.0	0.0	0.0	0.0	0.0	0.0	26	0.0	0.0	0.0	0.0	0.0	0.0
	187	0.0	0.0	0.0	0.0	0.0	0.0	124	0.0	0.0	0.0	0.0	0.0	0.0
171	190	0.0	0.0	0.0	0.0	0.0	0.0	191	0.0	0.0	0.0	0.0	0.0	0.0
	73	0.0	0.0	0.0	0.0	0.0	0.0	72	0.0	0.0	0.0	0.0	0.0	0.0
172	191	0.0	0.0	0.0	0.0	0.0	0.0	139	0.0	0.0	0.0	0.0	0.0	0.0
	72	0.0	0.0	0.0	0.0	0.0	0.0	3	0.0	0.0	0.0	0.0	0.0	0.0
173	127	0.0	0.0	0.0	0.0	0.0	0.0	192	0.0	0.0	0.0	0.0	0.0	0.0
	123	0.0	0.0	0.0	0.0	0.0	0.0	190	0.0	0.0	0.0	0.0	0.0	0.0
174	192	0.0	0.0	0.0	0.0	0.0	0.0	193	0.0	0.0	0.0	0.0	0.0	0.0
	190	0.0	0.0	0.0	0.0	0.0	0.0	191	0.0	0.0	0.0	0.0	0.0	0.0
175	193	0.0	0.0	0.0	0.0	0.0	0.0	143	0.0	0.0	0.0	0.0	0.0	0.0
	191	0.0	0.0	0.0	0.0	0.0	0.0	139	0.0	0.0	0.0	0.0	0.0	0.0
176	27	0.0	0.0	0.0	0.0	0.0	0.0	194	0.0	0.0	0.0	0.0	0.0	0.0
	127	0.0	0.0	0.0	0.0	0.0	0.0	192	0.0	0.0	0.0	0.0	0.0	0.0
177	194	0.0	0.0	0.0	0.0	0.0	0.0	195	0.0	0.0	0.0	0.0	0.0	0.0
	192	0.0	0.0	0.0	0.0	0.0	0.0	193	0.0	0.0	0.0	0.0	0.0	0.0
178	195	0.0	0.0	0.0	0.0	0.0	0.0	28	0.0	0.0	0.0	0.0	0.0	0.0
	193	0.0	0.0	0.0	0.0	0.0	0.0	143	0.0	0.0	0.0	0.0	0.0	0.0
179	52	0.0	0.0	0.0	0.0	0.0	0.0	119	0.0	0.0	0.0	0.0	0.0	0.0
	53	0.0	0.0	0.0	0.0	0.0	0.0	118	0.0	0.0	0.0	0.0	0.0	0.0
180	7	0.0	0.0	0.0	0.0	0.0	0.0	34	0.0	0.0	0.0	0.0	0.0	0.0
	52	0.0	0.0	0.0	0.0	0.0	0.0	119	0.0	0.0	0.0	0.0	0.0	0.0

FORZE: SISMA 0°°: MODO4: SHELL

Shell Nro	Nodo N.ro	Tx (kN)	Ty (kN)	Tz (kN)	Mx (kN*m)	My (kN*m)	Mz (kN*m)	Nodo N.ro	Tx (kN)	Ty (kN)	Tz (kN)	Mx (kN*m)	My (kN*m)	Mz (kN*m)
1	38	0.2	0.2	0.9	-0.2	-0.4	0.0	39	-0.5	-0.2	-0.7	0.2	-0.2	0.0
	14	0.4	0.2	2.9	0.3	-0.6	0.0	1	-0.1	-0.2	-3.0	-0.3	-0.4	0.0
2	6	0.1	-0.6	-0.5	0.2	-0.1	0.0	44	-0.1	0.3	0.4	-0.1	0.1	0.0
	2	0.0	0.0	0.0	0.0	0.1	0.0	42	0.0	0.3	0.1	0.0	0.0	0.0
3	39	0.4	-0.1	1.8	-0.1	0.1	0.0	44	0.0	-0.1	-0.2	0.1	0.2	0.0
	1	0.0	-0.1	-2.0	-0.3	0.8	0.0	6	-0.5	0.3	0.4	-0.2	-0.1	0.0

Documento di proprietà **Snam Rete Gas**. La Società tutelerà i propri diritti in sede civile e penale a termini di legge.

FORZE: SISMA 0°°: MODO4: SHELL

Shell Nro	Nodo N.ro	Tx (kN)	Ty (kN)	Tz (kN)	Mx (kN*m)	My (kN*m)	Mz (kN*m)	Nodo N.ro	Tx (kN)	Ty (kN)	Tz (kN)	Mx (kN*m)	My (kN*m)	Mz (kN*m)
4	46	0.2	-0.2	-0.1	0.0	0.1	0.0	47	0.0	0.0	-0.3	-0.1	-0.1	0.0
	10	0.1	0.1	0.1	0.1	-0.1	0.0	16	-0.2	0.1	0.3	0.1	0.1	0.0
5	50	0.2	-0.2	0.6	0.0	-0.1	0.0	46	0.0	0.0	-0.5	-0.1	0.0	0.0
	4	0.0	0.0	-0.6	0.0	0.0	0.0	10	-0.2	0.2	0.4	0.0	0.0	0.0
6	54	0.0	0.0	-0.2	0.0	0.0	0.0	55	0.0	0.0	0.4	-0.1	0.0	0.0
	7	0.0	0.0	0.1	0.0	0.0	0.0	52	0.0	0.0	-0.3	0.1	0.0	0.0
7	64	0.0	0.0	0.2	0.0	0.0	0.0	65	0.0	0.0	-0.3	0.0	0.0	0.0
	5	0.0	0.0	-0.1	0.0	0.0	0.0	62	0.0	0.0	0.2	0.0	0.0	0.0
8	47	0.3	-0.2	0.0	-0.1	0.0	0.0	72	0.1	0.0	-0.2	0.0	-0.1	0.0
	16	-0.1	0.0	0.1	0.1	0.0	0.0	3	-0.3	0.1	0.1	0.1	0.0	0.0
9	76	-0.2	0.1	0.2	0.0	0.0	0.0	77	0.0	-0.1	0.0	0.0	0.0	0.0
	25	0.0	0.1	-0.2	-0.1	0.0	0.0	74	0.2	-0.1	0.1	-0.1	0.0	0.0
10	38	0.0	0.0	-0.8	0.1	0.4	0.0	86	0.0	0.0	0.8	0.1	-0.1	0.0
	14	0.0	0.0	-0.4	0.0	0.6	0.0	71	0.0	0.0	0.4	-0.1	-0.2	0.0
11	94	0.0	0.0	-0.2	0.0	0.0	0.0	95	0.0	0.0	0.3	0.0	0.0	0.0
	18	0.0	0.0	0.1	0.0	0.0	0.0	91	0.0	0.0	-0.2	0.0	0.0	0.0
12	102	-0.1	0.0	0.0	-0.1	0.0	0.0	103	0.0	0.0	0.0	-0.1	0.0	0.0
	21	0.0	0.0	0.1	0.1	0.0	0.0	84	0.0	0.0	-0.1	0.1	0.0	0.0
13	112	-0.3	0.2	0.0	0.1	0.0	0.0	76	-0.1	0.0	0.2	0.0	0.1	0.0
	36	0.1	0.0	-0.1	-0.1	0.0	0.0	25	0.2	-0.1	-0.1	-0.1	0.0	0.0
14	114	-0.2	0.1	0.0	0.0	-0.1	0.0	112	0.0	0.0	0.3	0.1	0.1	0.0
	35	0.0	0.0	0.0	-0.1	0.0	0.0	36	0.2	-0.1	-0.3	-0.1	-0.1	0.0
15	24	-0.1	0.5	0.6	-0.3	0.1	0.0	116	0.1	-0.3	-0.4	0.2	-0.1	0.0
	21	0.0	0.0	0.0	0.0	-0.1	0.0	102	0.0	-0.3	-0.2	0.0	0.0	0.0
16	118	-0.4	0.1	-1.9	0.1	-0.1	0.0	116	0.0	0.1	0.2	-0.1	-0.2	0.0
	20	0.0	0.1	2.1	0.3	-0.9	0.0	24	0.5	-0.3	-0.5	0.2	0.1	0.0
17	120	0.1	-0.2	-0.1	0.0	-0.1	0.0	121	0.1	0.0	0.0	0.0	0.0	0.0
	9	-0.1	0.0	0.3	0.0	-0.1	0.0	43	-0.1	0.2	-0.2	0.0	0.0	0.0
18	10	0.1	0.0	0.0	0.0	-0.1	0.0	130	-0.2	0.0	0.1	0.0	0.0	0.0
	4	0.1	0.1	0.1	0.0	0.0	0.0	68	0.0	-0.1	-0.2	0.0	0.0	0.0
19	100	-0.2	0.2	-0.6	0.0	0.1	0.0	114	0.0	0.0	0.4	0.1	0.0	0.0
	19	0.0	0.0	0.5	0.0	0.0	0.0	35	0.2	-0.2	-0.3	0.0	0.0	0.0
20	35	0.0	0.0	0.0	0.0	0.1	0.0	149	0.2	0.0	-0.1	0.0	0.0	0.0
	19	-0.1	-0.1	-0.1	0.0	0.0	0.0	97	0.0	0.1	0.2	0.0	0.0	0.0
21	132	0.1	-0.2	0.1	0.0	0.0	0.0	166	0.2	0.1	-0.1	0.0	0.0	0.0
	5	-0.1	-0.1	-0.1	0.0	0.0	0.0	58	-0.1	0.2	0.1	0.0	0.0	0.0
22	151	0.0	0.1	0.0	0.0	0.0	0.0	178	-0.1	0.0	0.1	0.0	0.0	0.0
	18	0.1	0.1	0.0	0.0	0.0	0.0	93	0.1	-0.2	-0.1	0.0	0.0	0.0
23	123	0.0	0.0	0.1	0.0	0.1	0.0	190	0.0	0.0	0.0	0.0	0.0	0.0
	2	0.0	0.0	-0.1	0.0	0.1	0.0	73	0.0	0.1	0.0	0.0	-0.1	0.0
24	53	-0.1	-0.2	-0.8	0.2	0.4	0.0	118	0.5	0.2	0.6	-0.2	0.2	0.0
	11	-0.4	-0.2	-2.7	-0.2	0.5	0.0	20	0.1	0.2	2.8	0.3	0.4	0.0
25	40	0.0	0.1	-0.4	0.0	-0.1	0.0	41	-0.3	-0.2	0.1	0.0	0.0	0.0
	38	0.4	0.2	1.2	0.1	-0.3	0.0	39	-0.1	-0.1	-0.9	0.0	0.0	0.0
26	17	0.0	0.0	-0.5	0.0	0.0	0.0	12	-0.2	-0.2	0.3	0.0	0.0	0.0
	40	0.2	0.2	0.6	0.0	-0.1	0.0	41	0.0	0.0	-0.4	0.1	0.0	0.0
27	44	0.2	-0.4	-0.1	0.1	-0.1	0.0	45	-0.1	0.1	0.1	-0.1	0.1	0.0
	42	0.0	-0.1	-0.2	-0.1	0.1	0.0	43	-0.1	0.3	0.2	0.0	0.0	0.0
28	45	0.2	-0.3	0.0	0.0	-0.1	0.0	15	0.0	0.1	0.1	0.0	0.1	0.0
	43	0.0	-0.1	-0.2	-0.1	0.0	0.0	9	-0.1	0.2	0.1	0.0	0.1	0.0
29	41	0.2	0.0	0.3	-0.1	0.0	0.0	45	-0.2	0.0	0.2	0.0	0.1	0.0
	39	0.2	0.0	-0.3	0.0	0.2	0.0	44	-0.2	0.1	-0.1	0.0	-0.2	0.0
30	12	0.0	0.0	0.0	-0.1	0.0	0.0	15	-0.2	-0.1	0.3	-0.1	0.1	0.0
	41	0.2	0.1	0.0	0.0	0.1	0.0	45	0.0	0.0	-0.3	0.1	-0.1	0.0
31	48	0.2	0.0	-0.4	0.0	0.2	0.0	49	-0.2	-0.1	-0.1	0.0	-0.2	0.0
	46	0.2	0.0	0.4	0.1	0.0	0.0	47	-0.1	0.1	0.1	0.1	0.2	0.0
32	1	0.0	0.1	-2.2	0.5	0.8	0.0	8	-0.5	-0.2	0.5	0.2	-0.1	0.0
	48	0.4	0.0	1.9	0.1	0.1	0.0	49	0.1	0.1	-0.2	-0.1	0.2	0.0
33	51	0.4	-0.2	1.3	-0.1	-0.3	0.0	48	0.0	0.1	-1.0	0.0	0.0	0.0
	50	0.0	-0.1	-0.5	0.0	-0.1	0.0	46	-0.4	0.2	0.1	0.0	0.0	0.0
34	14	0.4	-0.2	2.7	-0.2	-0.5	0.0	1	-0.1	0.2	-2.9	0.3	-0.4	0.0
	51	0.1	-0.2	0.8	0.2	-0.4	0.0	48	-0.5	0.2	-0.6	-0.2	-0.2	0.0
35	55	0.0	0.0	-0.6	-0.1	0.0	0.0	56	0.0	0.0	0.3	-0.2	0.1	0.0
	52	0.0	0.0	0.5	0.1	0.0	0.0	53	0.0	0.0	-0.2	0.3	0.0	0.0
36	56	0.0	0.0	-0.7	-0.1	-0.1	0.0	57	0.0	0.0	-0.4	-0.2	0.1	0.0
	53	0.0	0.0	0.7	0.3	-0.1	0.0	11	0.0	0.0	0.4	0.5	0.0	0.0
37	58	0.0	0.0	-0.1	0.0	0.0	0.0	59	0.0	0.0	0.0	0.0	0.0	0.0
	54	0.0	0.0	-0.1	0.0	0.1	0.0	55	0.0	0.0	0.2	0.1	0.0	0.0
38	59	0.0	0.0	-0.1	0.0	0.0	0.0	60	0.0	0.0	-0.2	0.0	0.0	0.0
	55	0.0	0.0	-0.1	0.1	0.0	0.0	56	0.0	0.0	0.4	0.1	0.1	0.0
39	60	0.0	0.0	-0.2	0.0	0.0	0.0	61	0.0	0.0	-0.2	-0.1	0.1	0.0
	56	0.0	0.0	0.0	0.1	0.0	0.0	57	0.0	0.0	0.4	0.2	0.1	0.0
40	5	0.0	0.0	0.1	0.0	0.0	0.0	62	0.0	0.0	-0.2	0.0	0.0	0.0
	58	0.0	0.0	-0.2	0.0	0.0	0.0	59	0.0	0.0	0.3	0.0	0.0	0.0
41	62	0.0	0.0	0.1	0.0	0.0	0.0	63	0.0	0.0	-0.3	0.0	0.0	0.0
	59	0.0	0.0	-0.2	0.0	0.0	0.0	60	0.0	0.0	0.3	0.0	0.0	0.0
42	63	0.0	0.0	0.0	0.0	0.0	0.0	13	0.0	0.0	-0.2	0.0	0.0	0.0
	60	0.0	0.0	0.0	0.0	0.0	0.0	61	0.0	0.0	0.2	0.0	0.0	0.0
43	65	0.0	0.0	0.2	0.0	0.0	0.0	66	0.0	0.0	-0.3	0.1	0.0	0.0
	62	0.0	0.0	-0.1	0.0	0.0	0.0	63	0.0	0.0	0.3	0.0	0.0	0.0

Documento di proprietà **Snam Rete Gas**. La Società tutelerà i propri diritti in sede civile e penale a termini di legge.

FORZE: SISMA 0°°: MODO4: SHELL

Shell Nro	Nodo N.ro	Tx (kN)	Ty (kN)	Tz (kN)	Mx (kN*m)	My (kN*m)	Mz (kN*m)	Nodo N.ro	Tx (kN)	Ty (kN)	Tz (kN)	Mx (kN*m)	My (kN*m)	Mz (kN*m)
44	66	0.0	0.0	0.0	0.1	0.0	0.0	67	0.0	0.0	-0.2	0.1	0.0	0.0
	63	0.0	0.0	0.0	0.0	0.0	0.0	13	0.0	0.0	0.2	0.0	0.0	0.0
45	68	0.0	0.0	0.1	0.0	-0.1	0.0	69	0.0	0.0	-0.2	0.1	0.0	0.0
	64	0.0	0.0	0.1	0.0	0.0	0.0	65	0.0	0.0	0.0	0.0	0.0	0.0
46	69	0.0	0.0	0.1	0.1	0.0	0.0	70	0.0	0.0	-0.3	0.1	-0.1	0.0
	65	0.0	0.0	0.1	0.0	0.0	0.0	66	0.0	0.0	0.2	-0.1	0.0	0.0
47	70	0.0	0.0	-0.1	0.2	0.0	0.0	71	0.0	0.0	-0.4	0.2	-0.1	0.0
	66	0.0	0.0	0.2	-0.1	0.0	0.0	67	0.0	0.0	0.2	-0.1	-0.1	0.0
48	4	0.0	0.0	-0.1	0.0	0.0	0.0	50	0.0	0.0	0.3	0.1	0.0	0.0
	68	0.0	0.0	0.2	0.0	0.0	0.0	69	0.0	0.0	-0.5	-0.1	0.0	0.0
49	50	0.0	0.0	-0.5	0.1	0.0	0.0	51	0.0	0.0	0.2	0.3	0.0	0.0
	69	0.0	0.0	0.6	-0.1	0.0	0.0	70	0.0	0.0	-0.3	-0.2	-0.1	0.0
50	51	0.0	0.0	-0.8	0.4	0.1	0.0	14	0.0	0.0	-0.4	0.5	0.0	0.0
	70	0.0	0.0	0.8	-0.1	0.1	0.0	71	0.0	0.0	0.4	-0.2	-0.1	0.0
51	49	0.3	-0.3	-0.2	0.0	0.2	0.0	73	0.1	0.0	-0.2	0.1	-0.1	0.0
	47	-0.1	0.1	0.2	0.1	-0.1	0.0	72	-0.3	0.2	0.2	0.1	0.0	0.0
52	8	0.4	-0.4	-0.6	0.1	0.3	0.0	2	0.0	0.0	0.0	0.1	-0.1	0.0
	49	-0.2	0.2	0.5	0.0	-0.2	0.0	73	-0.2	0.1	0.2	0.0	0.1	0.0
53	77	-0.1	0.1	0.2	0.0	0.0	0.0	78	0.0	-0.1	-0.1	0.0	0.0	0.0
	74	0.0	0.1	-0.2	0.0	0.0	0.0	75	0.1	-0.1	0.1	0.0	0.0	0.0
54	78	-0.1	0.0	0.1	0.0	0.0	0.0	79	0.0	-0.1	-0.1	0.0	0.0	0.0
	75	0.1	0.1	-0.2	0.0	0.0	0.0	32	0.1	0.0	0.1	0.0	0.0	0.0
55	80	-0.1	0.0	0.2	0.0	0.0	0.0	81	0.1	0.0	-0.1	0.0	0.0	0.0
	76	-0.1	0.0	-0.2	0.0	0.0	0.0	77	0.1	0.0	0.1	0.0	0.0	0.0
56	81	-0.1	0.0	0.3	0.0	0.0	0.0	82	0.0	0.0	-0.1	0.0	0.0	0.0
	77	0.0	0.0	-0.2	0.0	0.0	0.0	78	0.1	0.0	0.1	0.0	0.0	0.0
57	82	0.0	0.0	0.1	0.0	0.0	0.0	83	0.0	0.0	-0.1	0.0	0.0	0.0
	78	0.0	0.0	-0.2	0.0	0.0	0.0	79	0.0	0.0	0.1	0.0	0.0	0.0
58	21	0.0	0.0	0.1	-0.1	0.0	0.0	84	0.0	0.0	-0.1	-0.1	0.0	0.0
	80	-0.1	0.0	0.0	0.1	0.0	0.0	81	0.0	0.0	0.0	0.1	0.0	0.0
59	84	0.0	0.0	0.1	-0.1	0.0	0.0	85	0.0	0.0	0.0	0.0	0.0	0.0
	81	0.0	0.0	-0.1	0.0	0.0	0.0	82	0.0	0.0	0.0	0.0	0.0	0.0
60	85	0.0	0.0	0.0	0.0	0.0	0.0	31	0.0	0.0	0.0	0.0	0.0	0.0
	82	0.0	0.0	-0.1	0.0	0.0	0.0	83	0.0	0.0	0.1	0.0	0.0	0.0
61	86	0.0	0.0	-0.1	0.0	0.2	0.0	87	0.0	0.0	0.2	0.0	-0.1	0.0
	71	0.0	0.0	-0.4	-0.1	0.2	0.0	67	0.0	0.0	0.2	-0.1	-0.1	0.0
62	87	0.0	0.0	0.0	0.0	0.1	0.0	88	0.0	0.0	0.0	0.0	0.0	0.0
	67	0.0	0.0	-0.2	0.0	0.1	0.0	13	0.0	0.0	0.2	0.0	0.0	0.0
63	40	0.0	0.0	-0.5	0.0	0.1	0.0	89	0.0	0.0	0.6	0.0	-0.1	0.0
	38	0.0	0.0	0.2	0.0	0.3	0.0	86	0.0	0.0	-0.3	-0.1	-0.2	0.0
64	89	0.0	0.0	0.0	0.0	0.1	0.0	90	0.0	0.0	0.1	0.0	0.0	0.0
	86	0.0	0.0	-0.3	-0.1	0.2	0.0	87	0.0	0.0	0.2	0.0	-0.1	0.0
65	90	0.0	0.0	0.2	0.0	0.0	0.0	91	0.0	0.0	-0.1	0.0	0.0	0.0
	87	0.0	0.0	-0.3	0.0	0.1	0.0	88	0.0	0.0	0.3	0.0	0.0	0.0
66	17	0.0	0.0	-0.1	0.0	0.0	0.0	92	0.0	0.0	0.2	0.0	0.0	0.0
	40	0.0	0.0	0.3	0.0	0.1	0.0	89	0.0	0.0	-0.4	0.0	-0.1	0.0
67	92	0.0	0.0	0.1	0.0	0.0	0.0	93	0.0	0.0	0.1	0.0	0.0	0.0
	89	0.0	0.0	-0.2	0.0	0.1	0.0	90	0.0	0.0	0.0	0.0	0.0	0.0
68	93	0.0	0.0	0.2	0.0	0.0	0.0	18	0.0	0.0	-0.1	0.0	0.0	0.0
	90	0.0	0.0	-0.3	0.0	0.0	0.0	91	0.0	0.0	0.2	0.0	0.0	0.0
69	95	0.0	0.0	-0.2	0.0	0.0	0.0	96	0.0	0.0	0.3	0.0	0.0	0.0
	91	0.0	0.0	0.1	0.0	0.0	0.0	88	0.0	0.0	-0.3	0.0	0.0	0.0
70	96	0.0	0.0	0.0	-0.1	0.0	0.0	61	0.0	0.0	0.2	-0.1	0.0	0.0
	88	0.0	0.0	0.0	0.0	0.0	0.0	13	0.0	0.0	-0.2	0.0	0.0	0.0
71	97	0.0	0.0	-0.1	0.0	0.0	0.0	98	0.0	0.0	0.2	-0.1	0.0	0.0
	94	0.0	0.0	-0.1	0.0	0.0	0.0	95	0.0	0.0	0.0	0.0	0.0	0.0
72	98	0.0	0.0	-0.1	-0.1	0.0	0.0	99	0.0	0.0	0.3	-0.1	0.1	0.0
	95	0.0	0.0	-0.1	0.0	0.0	0.0	96	0.0	0.0	-0.2	0.1	0.0	0.0
73	99	0.0	0.0	0.1	-0.2	0.0	0.0	57	0.0	0.0	0.4	-0.2	0.1	0.0
	96	0.0	0.0	-0.2	0.0	0.0	0.0	61	0.0	0.0	-0.2	0.1	0.1	0.0
74	19	0.0	0.0	0.1	0.0	0.0	0.0	100	0.0	0.0	-0.3	-0.1	0.0	0.0
	97	0.0	0.0	-0.2	0.0	0.0	0.0	98	0.0	0.0	0.4	0.1	0.0	0.0
75	100	0.0	0.0	0.5	-0.1	0.0	0.0	101	0.0	0.0	-0.2	-0.3	0.0	0.0
	98	0.0	0.0	-0.6	0.1	0.0	0.0	99	0.0	0.0	0.3	0.2	0.1	0.0
76	101	0.0	0.0	0.7	-0.4	-0.1	0.0	11	0.0	0.0	0.4	-0.6	0.0	0.0
	99	0.0	0.0	-0.7	0.1	-0.1	0.0	57	0.0	0.0	-0.4	0.2	0.1	0.0
77	103	0.0	0.0	-0.1	0.0	0.0	0.0	104	0.0	0.0	0.0	0.0	0.0	0.0
	84	0.0	0.0	0.1	0.1	0.0	0.0	85	0.0	0.0	-0.1	0.0	0.0	0.0
78	104	0.0	0.0	-0.1	0.0	0.0	0.0	105	0.0	0.0	0.1	0.0	0.0	0.0
	85	0.0	0.0	0.1	0.0	0.0	0.0	31	0.0	0.0	0.0	0.0	0.0	0.0
79	106	-0.1	0.0	-0.2	0.0	0.0	0.0	107	0.1	0.0	0.1	0.0	0.0	0.0
	102	-0.1	0.0	0.2	0.0	0.0	0.0	103	0.1	0.0	-0.1	0.0	0.0	0.0
80	107	0.0	0.0	-0.2	0.0	0.0	0.0	108	0.1	0.0	0.1	0.0	0.0	0.0
	103	-0.1	0.0	0.3	0.0	0.0	0.0	104	0.0	0.0	-0.1	0.0	0.0	0.0
81	108	0.0	0.0	-0.2	0.0	0.0	0.0	109	0.0	0.0	0.1	0.0	0.0	0.0
	104	0.0	0.0	0.1	0.0	0.0	0.0	105	0.0	0.0	-0.1	0.0	0.0	0.0
82	22	0.0	-0.1	-0.3	0.1	0.0	0.0	110	0.2	0.1	0.1	0.1	0.0	0.0
	106	-0.2	-0.1	0.3	0.0	0.0	0.0	107	0.0	0.1	0.0	0.0	0.0	0.0
83	110	0.0	-0.1	-0.2	0.0	0.0	0.0	111	0.1	0.1	0.1	0.0	0.0	0.0
	107	-0.1	0.0	0.2	0.0	0.0	0.0	108	0.0	0.0	-0.1	0.0	0.0	0.0

Documento di proprietà **Snam Rete Gas**. La Società tutelerà i propri diritti in sede civile e penale a termini di legge.

FORZE: SISMA 0°°: MODO4: SHELL

Shell Nro	Nodo N.ro	Tx (kN)	Ty (kN)	Tz (kN)	Mx (kN*m)	My (kN*m)	Mz (kN*m)	Nodo N.ro	Tx (kN)	Ty (kN)	Tz (kN)	Mx (kN*m)	My (kN*m)	Mz (kN*m)
84	111	0.1	0.0	-0.2	0.0	0.0	0.0	30	0.1	0.0	0.1	0.0	0.0	0.0
	108	-0.1	0.0	0.1	0.0	0.0	0.0	109	0.0	0.0	-0.1	0.0	0.0	0.0
85	113	-0.3	0.3	0.1	0.0	-0.1	0.0	80	-0.1	0.0	0.2	-0.1	0.1	0.0
	112	0.1	-0.1	-0.1	0.0	0.1	0.0	76	0.2	-0.2	-0.2	-0.1	0.0	0.0
86	23	-0.4	0.4	0.5	-0.1	-0.3	0.0	21	0.0	0.0	0.0	-0.1	0.1	0.0
	113	0.2	-0.2	-0.4	0.0	0.2	0.0	80	0.2	-0.2	-0.1	0.0	0.0	0.0
87	115	-0.2	0.0	0.3	0.0	-0.2	0.0	113	0.2	0.1	0.1	0.0	0.2	0.0
	114	-0.1	0.0	-0.2	-0.1	0.0	0.0	112	0.1	-0.1	-0.2	-0.1	-0.1	0.0
88	20	0.0	-0.1	2.0	-0.5	-0.8	0.0	23	0.5	0.2	-0.4	-0.2	0.1	0.0
	115	-0.4	0.0	-1.8	-0.1	-0.1	0.0	113	0.0	-0.1	0.2	0.0	-0.2	0.0
89	116	-0.2	0.4	0.2	-0.1	0.1	0.0	117	0.1	-0.2	-0.2	0.1	-0.1	0.0
	102	0.0	0.1	0.2	0.1	-0.1	0.0	106	0.1	-0.3	-0.2	-0.1	0.0	0.0
90	117	-0.2	0.3	0.0	0.0	0.1	0.0	37	0.0	-0.1	-0.1	0.0	-0.1	0.0
	106	0.0	0.1	0.2	0.1	0.0	0.0	22	0.1	-0.3	-0.1	0.0	-0.1	0.0
91	119	-0.2	0.0	-0.4	0.2	0.0	0.0	117	0.2	0.1	-0.1	0.0	-0.2	0.0
	118	-0.2	0.0	0.4	0.0	-0.2	0.0	116	0.2	-0.1	0.1	0.0	0.2	0.0
92	34	0.0	0.1	-0.1	0.1	0.0	0.0	37	0.2	0.1	-0.3	0.1	-0.1	0.0
	119	-0.2	-0.1	0.1	0.0	-0.1	0.0	117	0.0	0.0	0.3	-0.1	0.1	0.0
93	121	0.0	-0.1	-0.1	0.0	0.0	0.0	122	0.0	-0.1	0.1	0.0	0.0	0.0
	43	-0.1	0.1	0.2	0.0	0.0	0.0	42	0.0	0.1	-0.2	0.0	0.0	0.0
94	122	0.0	0.0	0.0	0.0	0.1	0.0	123	0.0	0.0	0.1	0.0	-0.1	0.0
	42	0.0	0.1	0.0	0.0	0.1	0.0	2	0.0	0.0	-0.1	0.0	-0.1	0.0
95	124	0.1	-0.1	-0.1	0.0	0.0	0.0	125	0.1	0.0	0.1	0.0	0.0	0.0
	120	-0.1	0.0	0.2	0.0	0.0	0.0	121	0.0	0.1	-0.2	0.0	0.0	0.0
96	125	0.0	-0.1	-0.1	0.0	0.0	0.0	126	0.0	0.0	0.1	0.0	0.0	0.0
	121	0.0	0.0	0.2	0.0	0.0	0.0	122	0.0	0.1	-0.3	0.0	0.0	0.0
97	126	0.0	0.0	0.0	0.0	0.0	0.0	127	0.0	0.0	0.1	0.0	0.0	0.0
	122	0.0	0.0	0.1	0.0	0.0	0.0	123	0.0	0.0	-0.1	0.0	-0.1	0.0
98	26	0.0	-0.1	-0.1	0.0	0.0	0.0	128	0.1	0.1	0.1	0.0	0.0	0.0
	124	-0.1	-0.1	0.2	0.0	0.0	0.0	125	0.0	0.1	-0.1	0.0	0.0	0.0
99	128	0.0	-0.1	-0.1	0.0	0.0	0.0	129	0.0	0.0	0.1	0.0	0.0	0.0
	125	0.0	0.0	0.2	0.0	0.0	0.0	126	0.0	0.1	-0.1	0.0	0.0	0.0
100	129	0.0	0.0	-0.1	0.0	0.0	0.0	27	0.0	0.0	0.0	0.0	0.0	0.0
	126	0.0	0.0	0.1	0.0	0.0	0.0	127	0.0	0.0	0.0	0.0	0.0	0.0
101	130	0.2	0.1	0.2	0.0	0.0	0.0	131	-0.1	0.2	0.0	0.0	0.0	0.0
	68	0.0	-0.2	-0.1	-0.1	0.0	0.0	64	-0.1	-0.1	-0.1	0.0	0.0	0.0
102	131	0.2	0.0	0.1	0.0	0.0	0.0	132	0.1	0.2	0.0	0.0	0.0	0.0
	64	-0.1	-0.2	-0.1	0.0	0.0	0.0	5	-0.1	0.1	0.0	0.0	0.0	0.0
103	16	0.2	0.1	0.0	0.0	-0.1	0.0	133	-0.4	-0.2	0.0	0.0	0.0	0.0
	10	0.4	0.2	0.2	0.0	-0.1	0.0	130	-0.2	-0.1	-0.2	0.0	0.0	0.0
104	133	0.1	0.1	0.1	0.0	-0.1	0.0	134	-0.2	0.0	0.0	0.0	0.0	0.0
	130	0.2	0.0	0.0	0.0	0.0	0.0	131	-0.2	-0.1	-0.1	0.0	0.0	0.0
105	134	0.1	0.0	0.1	0.0	0.0	0.0	135	0.0	0.0	-0.1	0.0	0.0	0.0
	131	0.1	-0.1	-0.1	0.0	0.0	0.0	132	-0.1	0.0	0.0	0.0	0.0	0.0
106	3	0.1	0.0	0.1	0.0	-0.1	0.0	136	-0.3	-0.2	-0.1	0.0	0.1	0.0
	16	0.2	0.2	0.1	0.0	-0.1	0.0	133	-0.1	0.0	-0.1	0.0	0.1	0.0
107	136	0.0	0.1	0.0	0.0	-0.1	0.0	137	-0.2	-0.1	0.0	0.0	0.0	0.0
	133	0.2	0.1	0.1	0.0	-0.1	0.0	134	-0.1	-0.1	-0.1	0.0	0.0	0.0
108	137	0.0	0.1	0.1	0.0	0.0	0.0	138	-0.1	-0.1	-0.1	0.0	0.0	0.0
	134	0.1	0.1	0.0	0.0	0.0	0.0	135	0.0	-0.1	0.0	0.0	0.0	0.0
109	139	0.0	0.0	0.1	0.0	-0.1	0.0	140	-0.2	-0.2	-0.1	0.0	0.0	0.0
	3	0.2	0.3	0.0	0.0	-0.1	0.0	136	0.0	-0.1	0.0	0.0	0.1	0.0
110	140	-0.1	0.1	0.0	0.0	0.0	0.0	141	-0.2	-0.2	0.0	0.0	0.0	0.0
	136	0.2	0.2	0.1	0.0	-0.1	0.0	137	0.0	-0.1	0.0	0.0	0.0	0.0
111	141	-0.1	0.1	0.0	0.0	0.0	0.0	142	-0.1	-0.2	0.0	0.0	0.0	0.0
	137	0.2	0.2	0.1	0.0	0.0	0.0	138	0.1	-0.1	-0.1	0.0	0.0	0.0
112	143	-0.1	0.1	0.1	0.0	0.0	0.0	144	-0.1	-0.2	-0.1	0.0	0.0	0.0
	139	0.1	0.2	-0.1	0.0	0.0	0.0	140	0.1	-0.1	0.1	0.0	0.0	0.0
113	144	-0.1	0.1	0.0	0.0	0.0	0.0	145	-0.1	-0.2	0.0	0.0	0.0	0.0
	140	0.1	0.2	0.0	0.0	0.0	0.0	141	0.1	-0.1	0.0	0.0	0.0	0.0
114	145	-0.1	0.1	0.0	0.0	0.0	0.0	146	-0.1	-0.2	0.0	0.0	0.0	0.0
	141	0.1	0.2	0.1	0.0	0.0	0.0	142	0.1	-0.1	-0.1	0.0	0.0	0.0
115	28	-0.1	0.1	0.1	0.0	0.0	0.0	147	0.0	-0.1	-0.1	0.0	0.0	0.0
	143	0.1	0.1	-0.1	0.0	0.0	0.0	144	0.1	-0.1	0.1	0.0	0.0	0.0
116	147	-0.1	0.1	0.0	0.0	0.0	0.0	148	-0.1	-0.1	0.0	0.0	0.0	0.0
	144	0.1	0.1	0.0	0.0	0.0	0.0	145	0.1	-0.1	0.0	0.0	0.0	0.0
117	148	-0.1	0.1	0.0	0.0	0.0	0.0	29	-0.1	-0.1	0.0	0.0	0.0	0.0
	145	0.1	0.1	0.1	0.0	0.0	0.0	146	0.1	-0.1	-0.1	0.0	0.0	0.0
118	101	-0.4	0.2	-1.2	0.1	0.3	0.0	115	0.1	-0.1	0.9	0.0	0.0	0.0
	100	0.0	0.1	0.4	0.0	0.1	0.0	114	0.3	-0.2	-0.1	0.0	0.0	0.0
119	11	-0.4	0.2	-2.8	0.3	0.6	0.0	20	0.1	-0.2	3.0	-0.3	0.4	0.0
	101	-0.2	0.2	-0.9	-0.2	0.4	0.0	115	0.5	-0.2	0.7	0.2	0.2	0.0
120	149	-0.1	-0.1	-0.1	0.0	0.0	0.0	150	0.0	-0.2	0.0	0.0	0.0	0.0
	97	0.0	0.2	0.1	0.0	0.0	0.0	94	0.1	0.1	0.0	0.0	0.0	0.0
121	150	-0.1	0.0	-0.1	0.0	0.0	0.0	151	-0.1	-0.1	0.0	0.0	0.0	0.0
	94	0.1	0.2	0.1	0.0	0.0	0.0	18	0.1	-0.1	-0.1	0.0	0.0	0.0
122	36	-0.1	-0.1	0.0	0.0	0.1	0.0	152	0.3	0.1	0.0	0.0	0.0	0.0
	35	-0.3	-0.1	-0.2	0.0	0.1	0.0	149	0.1	0.1	0.2	0.0	0.0	0.0
123	152	-0.1	-0.1	-0.1	0.0	0.0	0.0	153	0.2	0.0	0.1	0.0	0.0	0.0
	149	-0.2	0.0	0.0	0.0	0.0	0.0	150	0.1	0.1	0.0	0.0	0.0	0.0

Documento di proprietà **Snam Rete Gas**. La Società tutelerà i propri diritti in sede civile e penale a termini di legge.

FORZE: SISMA 0°°: MODO4: SHELL

Shell Nro	Nodo N.ro	Tx (kN)	Ty (kN)	Tz (kN)	Mx (kN*m)	My (kN*m)	Mz (kN*m)	Nodo N.ro	Tx (kN)	Ty (kN)	Tz (kN)	Mx (kN*m)	My (kN*m)	Mz (kN*m)
124	153	-0.1	0.0	-0.1	0.0	0.0	0.0	154	0.0	0.0	0.1	0.0	0.0	0.0
	150	0.0	0.1	0.1	0.0	0.0	0.0	151	0.1	0.0	-0.1	0.0	0.0	0.0
125	25	-0.1	0.0	-0.1	0.0	0.1	0.0	155	0.3	0.2	0.1	0.0	0.0	0.0
	36	-0.3	-0.2	-0.1	0.0	0.1	0.0	152	0.1	0.1	0.1	0.0	0.0	0.0
126	155	0.0	-0.1	0.0	0.0	0.1	0.0	156	0.2	0.1	0.1	0.0	0.0	0.0
	152	-0.2	-0.1	-0.1	0.0	0.0	0.0	153	0.0	0.1	0.1	0.0	0.0	0.0
127	156	0.0	-0.1	-0.1	0.0	0.0	0.0	157	0.1	0.1	0.1	0.0	0.0	0.0
	153	-0.1	-0.1	0.0	0.0	0.0	0.0	154	0.0	0.1	0.0	0.0	0.0	0.0
128	74	0.0	-0.1	-0.1	0.0	0.1	0.0	158	0.2	0.2	0.1	0.0	0.0	0.0
	25	-0.2	-0.2	0.0	0.0	0.1	0.0	155	0.0	0.1	0.0	0.0	-0.1	0.0
129	158	0.1	-0.1	0.0	0.0	0.0	0.0	159	0.2	0.2	0.0	0.0	0.0	0.0
	155	-0.2	-0.2	-0.1	0.0	0.0	0.0	156	0.0	0.1	0.1	0.0	0.0	0.0
130	159	0.1	-0.1	0.0	0.0	0.0	0.0	160	0.1	0.1	0.0	0.0	0.0	0.0
	156	-0.1	-0.1	-0.1	0.0	0.0	0.0	157	-0.1	0.1	0.1	0.0	0.0	0.0
131	75	0.1	-0.1	-0.1	0.0	0.0	0.0	161	0.1	0.1	0.1	0.0	0.0	0.0
	74	-0.1	-0.2	0.0	0.0	0.0	0.0	158	-0.1	0.1	0.0	0.0	0.0	0.0
132	161	0.1	-0.1	0.0	0.0	0.0	0.0	162	0.1	0.2	0.0	0.0	0.0	0.0
	158	-0.1	-0.2	-0.1	0.0	0.0	0.0	159	-0.1	0.1	0.0	0.0	0.0	0.0
133	162	0.1	-0.1	0.0	0.0	0.0	0.0	163	0.1	0.1	0.0	0.0	0.0	0.0
	159	-0.1	-0.2	-0.1	0.0	0.0	0.0	160	-0.1	0.1	0.1	0.0	0.0	0.0
134	32	0.1	-0.1	-0.1	0.0	0.0	0.0	164	0.0	0.1	0.1	0.0	0.0	0.0
	75	-0.1	-0.1	0.0	0.0	0.0	0.0	161	-0.1	0.1	-0.1	0.0	0.0	0.0
135	164	0.1	-0.1	0.0	0.0	0.0	0.0	165	0.1	0.1	0.0	0.0	0.0	0.0
	161	-0.1	-0.1	0.0	0.0	0.0	0.0	162	-0.1	0.1	0.0	0.0	0.0	0.0
136	165	0.1	-0.1	0.1	0.0	0.0	0.0	33	0.1	0.1	0.0	0.0	0.0	0.0
	162	-0.1	-0.1	-0.1	0.0	0.0	0.0	163	-0.1	0.1	0.1	0.0	0.0	0.0
137	166	0.0	-0.2	0.0	0.0	0.0	0.0	167	0.2	-0.1	-0.2	0.0	0.0	0.0
	58	-0.1	0.0	0.0	0.0	0.0	0.0	54	0.0	0.2	0.1	0.1	0.0	0.0
138	167	-0.2	0.0	-0.1	0.0	0.0	0.0	34	0.1	0.0	0.0	0.0	-0.1	0.0
	54	0.0	0.1	0.2	0.0	0.0	0.0	7	0.1	-0.1	-0.1	0.0	0.0	0.0
139	135	0.0	0.0	0.1	0.0	0.0	0.0	168	0.1	0.0	-0.1	0.0	0.0	0.0
	132	-0.1	0.0	-0.1	0.0	0.0	0.0	166	0.0	0.1	0.1	0.0	0.0	0.0
140	168	-0.2	0.0	0.1	0.0	0.0	0.0	169	0.1	-0.1	-0.1	0.0	0.0	0.0
	166	-0.2	0.0	0.0	0.0	0.0	0.0	167	0.2	0.0	0.0	0.0	0.0	0.0
141	169	-0.3	0.2	0.0	0.0	0.0	0.0	37	0.2	-0.1	-0.1	0.0	-0.1	0.0
	167	-0.2	0.1	0.2	0.0	0.0	0.0	34	0.4	-0.2	-0.2	0.0	-0.1	0.0
142	138	-0.1	0.1	0.1	0.0	0.0	0.0	170	0.0	-0.1	-0.1	0.0	0.0	0.0
	135	0.0	0.1	0.0	0.0	0.0	0.0	168	0.1	-0.1	0.0	0.0	0.0	0.0
143	170	-0.2	0.1	0.1	0.0	0.0	0.0	171	0.0	-0.1	0.0	0.0	-0.1	0.0
	168	0.0	0.1	0.1	0.0	0.0	0.0	169	0.2	-0.1	-0.1	0.0	-0.1	0.0
144	171	-0.3	0.2	0.1	0.0	0.1	0.0	22	0.1	0.0	-0.1	0.0	-0.1	0.0
	169	0.0	0.0	0.1	0.0	0.1	0.0	37	0.2	-0.2	-0.1	0.0	-0.1	0.0
145	142	-0.1	0.2	0.0	0.0	0.0	0.0	172	-0.1	-0.1	0.0	0.0	0.0	0.0
	138	0.1	0.1	0.1	0.0	0.0	0.0	170	0.2	-0.2	-0.1	0.0	0.0	0.0
146	172	-0.2	0.2	0.0	0.0	0.0	0.0	173	-0.1	-0.1	0.0	0.0	0.0	0.0
	170	0.1	0.1	0.1	0.0	0.0	0.0	171	0.2	-0.2	-0.1	0.0	-0.1	0.0
147	173	-0.2	0.2	0.1	0.0	0.0	0.0	110	-0.1	0.0	-0.1	0.0	-0.1	0.0
	171	0.0	0.1	0.0	0.0	0.1	0.0	22	0.3	-0.3	0.0	0.0	-0.1	0.0
148	146	-0.1	0.2	0.0	0.0	0.0	0.0	174	-0.1	-0.1	0.0	0.0	0.0	0.0
	142	0.1	0.1	0.1	0.0	0.0	0.0	172	0.1	-0.2	-0.1	0.0	0.0	0.0
149	174	-0.1	0.2	0.0	0.0	0.0	0.0	175	-0.1	-0.1	0.0	0.0	0.0	0.0
	172	0.1	0.1	0.0	0.0	0.0	0.0	173	0.2	-0.2	-0.1	0.0	0.0	0.0
150	175	-0.1	0.2	0.1	0.0	0.0	0.0	111	-0.1	-0.1	-0.1	0.0	0.0	0.0
	173	0.1	0.1	-0.1	0.0	0.0	0.0	110	0.1	-0.2	0.0	0.0	0.0	0.0
151	29	-0.1	0.1	0.0	0.0	0.0	0.0	176	-0.1	-0.1	0.1	0.0	0.0	0.0
	146	0.1	0.1	0.1	0.0	0.0	0.0	174	0.1	-0.1	-0.1	0.0	0.0	0.0
152	176	-0.1	0.1	0.0	0.0	0.0	0.0	177	-0.1	-0.1	0.0	0.0	0.0	0.0
	174	0.1	0.1	0.0	0.0	0.0	0.0	175	0.1	-0.1	0.0	0.0	0.0	0.0
153	177	0.0	0.1	0.1	0.0	0.0	0.0	30	-0.1	-0.1	-0.1	0.0	0.0	0.0
	175	0.1	0.1	-0.1	0.0	0.0	0.0	111	0.1	-0.1	0.1	0.0	0.0	0.0
154	178	0.1	0.1	0.0	0.0	0.0	0.0	179	-0.1	0.1	0.1	0.0	0.0	0.0
	93	0.1	-0.1	-0.1	0.0	0.0	0.0	92	0.0	-0.2	-0.1	0.0	0.0	0.0
155	179	0.2	0.0	0.1	0.0	0.0	0.0	12	0.0	0.0	0.0	0.0	0.1	0.0
	92	0.0	-0.1	-0.2	0.0	0.0	0.0	17	-0.1	0.1	0.1	0.0	0.0	0.0
156	154	0.1	0.0	-0.1	0.0	0.0	0.0	180	-0.1	0.0	0.1	0.0	0.0	0.0
	151	0.1	0.0	0.0	0.0	0.0	0.0	178	-0.1	-0.1	-0.1	0.0	0.0	0.0
157	180	0.2	0.0	0.0	0.0	0.0	0.0	181	-0.1	0.1	0.1	0.0	0.0	0.0
	178	0.1	-0.1	-0.1	0.0	0.0	0.0	179	-0.2	0.0	0.0	0.0	0.0	0.0
158	181	0.3	-0.1	0.0	0.0	0.0	0.0	15	-0.1	0.1	0.0	0.0	0.1	0.0
	179	0.1	-0.1	-0.2	0.0	0.0	0.0	12	-0.3	0.1	0.2	0.0	0.1	0.0
159	157	0.1	-0.1	-0.1	0.0	0.0	0.0	182	0.0	0.1	0.1	0.0	0.0	0.0
	154	0.0	-0.1	0.0	0.0	0.0	0.0	180	-0.1	0.1	0.0	0.0	0.0	0.0
160	182	0.2	-0.1	0.0	0.0	0.0	0.0	183	0.0	0.1	0.0	0.0	0.1	0.0
	180	0.0	-0.1	-0.1	0.0	0.0	0.0	181	-0.2	0.1	0.1	0.0	0.1	0.0
161	183	0.3	-0.2	-0.1	0.0	-0.1	0.0	9	-0.1	0.0	0.1	0.0	0.1	0.0
	181	0.1	-0.1	-0.1	0.0	-0.1	0.0	15	-0.3	0.2	0.1	0.0	0.1	0.0
162	160	0.1	-0.2	0.0	0.0	0.0	0.0	184	0.1	0.1	0.0	0.0	0.0	0.0
	157	-0.1	-0.1	-0.1	0.0	0.0	0.0	182	-0.1	0.1	0.1	0.0	0.0	0.0
163	184	0.2	-0.2	0.0	0.0	0.0	0.0	185	0.1	0.1	0.0	0.0	0.0	0.0
	182	0.0	-0.1	0.0	0.0	0.0	0.0	183	-0.2	0.2	0.1	0.0	0.1	0.0

Documento di proprietà **Snam Rete Gas**. La Società tutelerà i propri diritti in sede civile e penale a termini di legge.

FORZE: SISMA 0°°: MODO4: SHELL

Shell Nro	Nodo N.ro	Tx (kN)	Ty (kN)	Tz (kN)	Mx (kN*m)	My (kN*m)	Mz (kN*m)	Nodo N.ro	Tx (kN)	Ty (kN)	Tz (kN)	Mx (kN*m)	My (kN*m)	Mz (kN*m)
164	185	0.2	-0.2	-0.1	0.0	0.0	0.0	120	0.0	0.1	0.1	0.0	0.1	0.0
	183	0.0	-0.1	0.0	0.0	-0.1	0.0	9	-0.2	0.2	0.0	0.0	0.1	0.0
165	163	0.1	-0.1	0.0	0.0	0.0	0.0	186	0.1	0.1	0.0	0.0	0.0	0.0
	160	-0.1	-0.1	-0.1	0.0	0.0	0.0	184	-0.1	0.2	0.1	0.0	0.0	0.0
166	186	0.1	-0.2	0.0	0.0	0.0	0.0	187	0.1	0.1	0.0	0.0	0.0	0.0
	184	-0.1	-0.1	0.0	0.0	0.0	0.0	185	-0.1	0.2	0.0	0.0	0.0	0.0
167	187	0.1	-0.1	-0.1	0.0	0.0	0.0	124	0.1	0.1	0.1	0.0	0.0	0.0
	185	-0.1	-0.1	0.1	0.0	0.0	0.0	120	-0.1	0.1	0.0	0.0	0.0	0.0
168	33	0.1	-0.1	0.0	0.0	0.0	0.0	188	0.1	0.1	0.0	0.0	0.0	0.0
	163	-0.1	-0.1	-0.1	0.0	0.0	0.0	186	-0.1	0.1	0.1	0.0	0.0	0.0
169	188	0.1	-0.1	0.0	0.0	0.0	0.0	189	0.1	0.1	0.0	0.0	0.0	0.0
	186	-0.1	-0.1	0.0	0.0	0.0	0.0	187	-0.1	0.1	0.0	0.0	0.0	0.0
170	189	0.0	-0.1	-0.1	0.0	0.0	0.0	26	0.1	0.1	0.1	0.0	0.0	0.0
	187	0.0	-0.1	0.1	0.0	0.0	0.0	124	0.0	0.1	-0.1	0.0	0.0	0.0
171	190	0.0	-0.1	0.1	0.0	0.0	0.0	191	0.0	-0.1	-0.1	0.0	0.0	0.0
	73	0.0	0.1	-0.2	0.0	0.0	0.0	72	0.0	0.1	0.2	0.0	0.0	0.0
172	191	-0.1	0.0	0.1	0.0	0.0	0.0	139	-0.1	-0.2	-0.1	0.0	0.1	0.0
	72	0.1	0.2	-0.3	0.0	0.0	0.0	3	0.1	0.0	0.3	0.0	0.1	0.0
173	127	0.0	0.0	0.1	0.0	0.0	0.0	192	0.0	0.0	0.0	0.0	0.0	0.0
	123	0.0	0.0	-0.1	0.0	0.1	0.0	190	0.0	0.0	0.1	0.0	0.0	0.0
174	192	0.0	0.0	0.1	0.0	0.0	0.0	193	0.0	-0.1	-0.1	0.0	0.0	0.0
	190	0.0	0.1	-0.3	0.0	0.0	0.0	191	0.0	0.0	0.2	0.0	0.0	0.0
175	193	-0.1	0.0	0.1	0.0	0.0	0.0	143	0.0	-0.1	-0.1	0.0	0.0	0.0
	191	0.0	0.1	-0.2	0.0	0.0	0.0	139	0.1	0.0	0.2	0.0	0.0	0.0
176	27	0.0	0.0	0.1	0.0	0.0	0.0	194	0.0	0.0	-0.1	0.0	0.0	0.0
	127	0.0	0.0	-0.1	0.0	0.0	0.0	192	0.0	0.0	0.1	0.0	0.0	0.0
177	194	0.0	0.0	0.1	0.0	0.0	0.0	195	0.0	0.0	-0.1	0.0	0.0	0.0
	192	0.0	0.0	-0.2	0.0	0.0	0.0	193	0.0	0.0	0.2	0.0	0.0	0.0
178	195	0.0	0.0	0.1	0.0	0.0	0.0	28	0.0	-0.1	-0.1	0.0	0.0	0.0
	193	0.0	0.1	-0.1	0.0	0.0	0.0	143	0.1	-0.1	0.2	0.0	0.0	0.0
179	52	0.0	-0.1	0.5	0.0	0.1	0.0	119	0.4	0.2	-0.1	0.0	0.0	0.0
	53	-0.4	-0.2	-1.3	-0.1	0.3	0.0	118	0.0	0.1	1.0	0.0	0.0	0.0
180	7	0.0	0.0	0.6	0.0	0.0	0.0	34	0.2	0.2	-0.4	0.0	0.0	0.0
	52	-0.2	-0.2	-0.6	0.0	0.1	0.0	119	0.0	0.0	0.4	-0.1	0.0	0.0

FORZE: SISMA 0°°: MODO5: SHELL

Shell Nro	Nodo N.ro	Tx (kN)	Ty (kN)	Tz (kN)	Mx (kN*m)	My (kN*m)	Mz (kN*m)	Nodo N.ro	Tx (kN)	Ty (kN)	Tz (kN)	Mx (kN*m)	My (kN*m)	Mz (kN*m)
1	38	0.0	0.0	0.0	0.0	0.0	0.0	39	0.0	0.0	0.0	0.0	0.0	0.0
	14	0.0	0.0	0.0	0.0	0.0	0.0	1	0.0	0.0	0.0	0.0	0.0	0.0
2	6	0.0	0.0	0.0	0.0	0.0	0.0	44	0.0	0.0	0.0	0.0	0.0	0.0
	2	0.0	0.0	0.0	0.0	0.0	0.0	42	0.0	0.0	0.0	0.0	0.0	0.0
3	39	0.0	0.0	0.0	0.0	0.0	0.0	44	0.0	0.0	0.0	0.0	0.0	0.0
	1	0.0	0.0	0.0	0.0	0.0	0.0	6	0.0	0.0	0.0	0.0	0.0	0.0
4	46	0.0	0.0	0.0	0.0	0.0	0.0	47	0.0	0.0	0.0	0.0	0.0	0.0
	10	0.0	0.0	0.0	0.0	0.0	0.0	16	0.0	0.0	0.0	0.0	0.0	0.0
5	50	0.0	0.0	0.0	0.0	0.0	0.0	46	0.0	0.0	0.0	0.0	0.0	0.0
	4	0.0	0.0	0.0	0.0	0.0	0.0	10	0.0	0.0	0.0	0.0	0.0	0.0
6	54	0.0	0.0	0.0	0.0	0.0	0.0	55	0.0	0.0	0.0	0.0	0.0	0.0
	7	0.0	0.0	0.0	0.0	0.0	0.0	52	0.0	0.0	0.0	0.0	0.0	0.0
7	64	0.0	0.0	0.0	0.0	0.0	0.0	65	0.0	0.0	0.0	0.0	0.0	0.0
	5	0.0	0.0	0.0	0.0	0.0	0.0	62	0.0	0.0	0.0	0.0	0.0	0.0
8	47	0.0	0.0	0.0	0.0	0.0	0.0	72	0.0	0.0	0.0	0.0	0.0	0.0
	16	0.0	0.0	0.0	0.0	0.0	0.0	3	0.0	0.0	0.0	0.0	0.0	0.0
9	76	0.0	0.0	0.0	0.0	0.0	0.0	77	0.0	0.0	0.0	0.0	0.0	0.0
	25	0.0	0.0	0.0	0.0	0.0	0.0	74	0.0	0.0	0.0	0.0	0.0	0.0
10	38	0.0	0.0	0.0	0.0	0.0	0.0	86	0.0	0.0	0.0	0.0	0.0	0.0
	14	0.0	0.0	0.0	0.0	0.0	0.0	71	0.0	0.0	0.0	0.0	0.0	0.0
11	94	0.0	0.0	0.0	0.0	0.0	0.0	95	0.0	0.0	0.0	0.0	0.0	0.0
	18	0.0	0.0	0.0	0.0	0.0	0.0	91	0.0	0.0	0.0	0.0	0.0	0.0
12	102	0.0	0.0	0.0	0.0	0.0	0.0	103	0.0	0.0	0.0	0.0	0.0	0.0
	21	0.0	0.0	0.0	0.0	0.0	0.0	84	0.0	0.0	0.0	0.0	0.0	0.0
13	112	0.0	0.0	0.0	0.0	0.0	0.0	76	0.0	0.0	0.0	0.0	0.0	0.0
	36	0.0	0.0	0.0	0.0	0.0	0.0	25	0.0	0.0	0.0	0.0	0.0	0.0
14	114	0.0	0.0	0.0	0.0	0.0	0.0	112	0.0	0.0	0.0	0.0	0.0	0.0
	35	0.0	0.0	0.0	0.0	0.0	0.0	36	0.0	0.0	0.0	0.0	0.0	0.0
15	24	0.0	0.0	0.0	0.0	0.0	0.0	116	0.0	0.0	0.0	0.0	0.0	0.0
	21	0.0	0.0	0.0	0.0	0.0	0.0	102	0.0	0.0	0.0	0.0	0.0	0.0
16	118	0.0	0.0	0.0	0.0	0.0	0.0	116	0.0	0.0	0.0	0.0	0.0	0.0
	20	0.0	0.0	0.0	0.0	0.0	0.0	24	0.0	0.0	0.0	0.0	0.0	0.0
17	120	0.0	0.0	0.0	0.0	0.0	0.0	121	0.0	0.0	0.0	0.0	0.0	0.0
	9	0.0	0.0	0.0	0.0	0.0	0.0	43	0.0	0.0	0.0	0.0	0.0	0.0
18	10	0.0	0.0	0.0	0.0	0.0	0.0	130	0.0	0.0	0.0	0.0	0.0	0.0
	4	0.0	0.0	0.0	0.0	0.0	0.0	68	0.0	0.0	0.0	0.0	0.0	0.0
19	100	0.0	0.0	0.0	0.0	0.0	0.0	114	0.0	0.0	0.0	0.0	0.0	0.0
	19	0.0	0.0	0.0	0.0	0.0	0.0	35	0.0	0.0	0.0	0.0	0.0	0.0
20	35	0.0	0.0	0.0	0.0	0.0	0.0	149	0.0	0.0	0.0	0.0	0.0	0.0
	19	0.0	0.0	0.0	0.0	0.0	0.0	97	0.0	0.0	0.0	0.0	0.0	0.0
21	132	0.0	0.0	0.0	0.0	0.0	0.0	166	0.0	0.0	0.0	0.0	0.0	0.0
	5	0.0	0.0	0.0	0.0	0.0	0.0	58	0.0	0.0	0.0	0.0	0.0	0.0

Documento di proprietà **Snam Rete Gas**. La Società tutelerà i propri diritti in sede civile e penale a termini di legge.

FORZE: SISMA 0°°: MODO5: SHELL

Shell Nro	Nodo N.ro	Tx (kN)	Ty (kN)	Tz (kN)	Mx (kN*m)	My (kN*m)	Mz (kN*m)	Nodo N.ro	Tx (kN)	Ty (kN)	Tz (kN)	Mx (kN*m)	My (kN*m)	Mz (kN*m)
22	151	0.0	0.0	0.0	0.0	0.0	0.0	178	0.0	0.0	0.0	0.0	0.0	0.0
	18	0.0	0.0	0.0	0.0	0.0	0.0	93	0.0	0.0	0.0	0.0	0.0	0.0
23	123	0.0	0.0	0.0	0.0	0.0	0.0	190	0.0	0.0	0.0	0.0	0.0	0.0
	2	0.0	0.0	0.0	0.0	0.0	0.0	73	0.0	0.0	0.0	0.0	0.0	0.0
24	53	0.0	0.0	0.0	0.0	0.0	0.0	118	0.0	0.0	0.0	0.0	0.0	0.0
	11	0.0	0.0	0.0	0.0	0.0	0.0	20	0.0	0.0	0.0	0.0	0.0	0.0
25	40	0.0	0.0	0.0	0.0	0.0	0.0	41	0.0	0.0	0.0	0.0	0.0	0.0
	38	0.0	0.0	0.0	0.0	0.0	0.0	39	0.0	0.0	0.0	0.0	0.0	0.0
26	17	0.0	0.0	0.0	0.0	0.0	0.0	12	0.0	0.0	0.0	0.0	0.0	0.0
	40	0.0	0.0	0.0	0.0	0.0	0.0	41	0.0	0.0	0.0	0.0	0.0	0.0
27	44	0.0	0.0	0.0	0.0	0.0	0.0	45	0.0	0.0	0.0	0.0	0.0	0.0
	42	0.0	0.0	0.0	0.0	0.0	0.0	43	0.0	0.0	0.0	0.0	0.0	0.0
28	45	0.0	0.0	0.0	0.0	0.0	0.0	15	0.0	0.0	0.0	0.0	0.0	0.0
	43	0.0	0.0	0.0	0.0	0.0	0.0	9	0.0	0.0	0.0	0.0	0.0	0.0
29	41	0.0	0.0	0.0	0.0	0.0	0.0	45	0.0	0.0	0.0	0.0	0.0	0.0
	39	0.0	0.0	0.0	0.0	0.0	0.0	44	0.0	0.0	0.0	0.0	0.0	0.0
30	12	0.0	0.0	0.0	0.0	0.0	0.0	15	0.0	0.0	0.0	0.0	0.0	0.0
	41	0.0	0.0	0.0	0.0	0.0	0.0	45	0.0	0.0	0.0	0.0	0.0	0.0
31	48	0.0	0.0	0.0	0.0	0.0	0.0	49	0.0	0.0	0.0	0.0	0.0	0.0
	46	0.0	0.0	0.0	0.0	0.0	0.0	47	0.0	0.0	0.0	0.0	0.0	0.0
32	1	0.0	0.0	0.0	0.0	0.0	0.0	8	0.0	0.0	0.0	0.0	0.0	0.0
	48	0.0	0.0	0.0	0.0	0.0	0.0	49	0.0	0.0	0.0	0.0	0.0	0.0
33	51	0.0	0.0	0.0	0.0	0.0	0.0	48	0.0	0.0	0.0	0.0	0.0	0.0
	50	0.0	0.0	0.0	0.0	0.0	0.0	46	0.0	0.0	0.0	0.0	0.0	0.0
34	14	0.0	0.0	0.0	0.0	0.0	0.0	1	0.0	0.0	0.0	0.0	0.0	0.0
	51	0.0	0.0	0.0	0.0	0.0	0.0	48	0.0	0.0	0.0	0.0	0.0	0.0
35	55	0.0	0.0	0.0	0.0	0.0	0.0	56	0.0	0.0	0.0	0.0	0.0	0.0
	52	0.0	0.0	0.0	0.0	0.0	0.0	53	0.0	0.0	0.0	0.0	0.0	0.0
36	56	0.0	0.0	0.0	0.0	0.0	0.0	57	0.0	0.0	0.0	0.0	0.0	0.0
	53	0.0	0.0	0.0	0.0	0.0	0.0	11	0.0	0.0	0.0	0.0	0.0	0.0
37	58	0.0	0.0	0.0	0.0	0.0	0.0	59	0.0	0.0	0.0	0.0	0.0	0.0
	54	0.0	0.0	0.0	0.0	0.0	0.0	55	0.0	0.0	0.0	0.0	0.0	0.0
38	59	0.0	0.0	0.0	0.0	0.0	0.0	60	0.0	0.0	0.0	0.0	0.0	0.0
	55	0.0	0.0	0.0	0.0	0.0	0.0	56	0.0	0.0	0.0	0.0	0.0	0.0
39	60	0.0	0.0	0.0	0.0	0.0	0.0	61	0.0	0.0	0.0	0.0	0.0	0.0
	56	0.0	0.0	0.0	0.0	0.0	0.0	57	0.0	0.0	0.0	0.0	0.0	0.0
40	5	0.0	0.0	0.0	0.0	0.0	0.0	62	0.0	0.0	0.0	0.0	0.0	0.0
	58	0.0	0.0	0.0	0.0	0.0	0.0	59	0.0	0.0	0.0	0.0	0.0	0.0
41	62	0.0	0.0	0.0	0.0	0.0	0.0	63	0.0	0.0	0.0	0.0	0.0	0.0
	59	0.0	0.0	0.0	0.0	0.0	0.0	60	0.0	0.0	0.0	0.0	0.0	0.0
42	63	0.0	0.0	0.0	0.0	0.0	0.0	13	0.0	0.0	0.0	0.0	0.0	0.0
	60	0.0	0.0	0.0	0.0	0.0	0.0	61	0.0	0.0	0.0	0.0	0.0	0.0
43	65	0.0	0.0	0.0	0.0	0.0	0.0	66	0.0	0.0	0.0	0.0	0.0	0.0
	62	0.0	0.0	0.0	0.0	0.0	0.0	63	0.0	0.0	0.0	0.0	0.0	0.0
44	66	0.0	0.0	0.0	0.0	0.0	0.0	67	0.0	0.0	0.0	0.0	0.0	0.0
	63	0.0	0.0	0.0	0.0	0.0	0.0	13	0.0	0.0	0.0	0.0	0.0	0.0
45	68	0.0	0.0	0.0	0.0	0.0	0.0	69	0.0	0.0	0.0	0.0	0.0	0.0
	64	0.0	0.0	0.0	0.0	0.0	0.0	65	0.0	0.0	0.0	0.0	0.0	0.0
46	69	0.0	0.0	0.0	0.0	0.0	0.0	70	0.0	0.0	0.0	0.0	0.0	0.0
	65	0.0	0.0	0.0	0.0	0.0	0.0	66	0.0	0.0	0.0	0.0	0.0	0.0
47	70	0.0	0.0	0.0	0.0	0.0	0.0	71	0.0	0.0	0.0	0.0	0.0	0.0
	66	0.0	0.0	0.0	0.0	0.0	0.0	67	0.0	0.0	0.0	0.0	0.0	0.0
48	4	0.0	0.0	0.0	0.0	0.0	0.0	50	0.0	0.0	0.0	0.0	0.0	0.0
	68	0.0	0.0	0.0	0.0	0.0	0.0	69	0.0	0.0	0.0	0.0	0.0	0.0
49	50	0.0	0.0	0.0	0.0	0.0	0.0	51	0.0	0.0	0.0	0.0	0.0	0.0
	69	0.0	0.0	0.0	0.0	0.0	0.0	70	0.0	0.0	0.0	0.0	0.0	0.0
50	51	0.0	0.0	0.0	0.0	0.0	0.0	14	0.0	0.0	0.0	0.0	0.0	0.0
	70	0.0	0.0	0.0	0.0	0.0	0.0	71	0.0	0.0	0.0	0.0	0.0	0.0
51	49	0.0	0.0	0.0	0.0	0.0	0.0	73	0.0	0.0	0.0	0.0	0.0	0.0
	47	0.0	0.0	0.0	0.0	0.0	0.0	72	0.0	0.0	0.0	0.0	0.0	0.0
52	8	0.0	0.0	0.0	0.0	0.0	0.0	2	0.0	0.0	0.0	0.0	0.0	0.0
	49	0.0	0.0	0.0	0.0	0.0	0.0	73	0.0	0.0	0.0	0.0	0.0	0.0
53	77	0.0	0.0	0.0	0.0	0.0	0.0	78	0.0	0.0	0.0	0.0	0.0	0.0
	74	0.0	0.0	0.0	0.0	0.0	0.0	75	0.0	0.0	0.0	0.0	0.0	0.0
54	78	0.0	0.0	0.0	0.0	0.0	0.0	79	0.0	0.0	0.0	0.0	0.0	0.0
	75	0.0	0.0	0.0	0.0	0.0	0.0	32	0.0	0.0	0.0	0.0	0.0	0.0
55	80	0.0	0.0	0.0	0.0	0.0	0.0	81	0.0	0.0	0.0	0.0	0.0	0.0
	76	0.0	0.0	0.0	0.0	0.0	0.0	77	0.0	0.0	0.0	0.0	0.0	0.0
56	81	0.0	0.0	0.0	0.0	0.0	0.0	82	0.0	0.0	0.0	0.0	0.0	0.0
	77	0.0	0.0	0.0	0.0	0.0	0.0	78	0.0	0.0	0.0	0.0	0.0	0.0
57	82	0.0	0.0	0.0	0.0	0.0	0.0	83	0.0	0.0	0.0	0.0	0.0	0.0
	78	0.0	0.0	0.0	0.0	0.0	0.0	79	0.0	0.0	0.0	0.0	0.0	0.0
58	21	0.0	0.0	0.0	0.0	0.0	0.0	84	0.0	0.0	0.0	0.0	0.0	0.0
	80	0.0	0.0	0.0	0.0	0.0	0.0	81	0.0	0.0	0.0	0.0	0.0	0.0
59	84	0.0	0.0	0.0	0.0	0.0	0.0	85	0.0	0.0	0.0	0.0	0.0	0.0
	81	0.0	0.0	0.0	0.0	0.0	0.0	82	0.0	0.0	0.0	0.0	0.0	0.0
60	85	0.0	0.0	0.0	0.0	0.0	0.0	31	0.0	0.0	0.0	0.0	0.0	0.0
	82	0.0	0.0	0.0	0.0	0.0	0.0	83	0.0	0.0	0.0	0.0	0.0	0.0
61	86	0.0	0.0	0.0	0.0	0.0	0.0	87	0.0	0.0	0.0	0.0	0.0	0.0
	71	0.0	0.0	0.0	0.0	0.0	0.0	67	0.0	0.0	0.0	0.0	0.0	0.0

Documento di proprietà **Snam Rete Gas**. La Società tutelerà i propri diritti in sede civile e penale a termini di legge.

FORZE: SISMA 0°°: MODO5: SHELL

Shell Nro	Nodo N.ro	Tx (kN)	Ty (kN)	Tz (kN)	Mx (kN*m)	My (kN*m)	Mz (kN*m)	Nodo N.ro	Tx (kN)	Ty (kN)	Tz (kN)	Mx (kN*m)	My (kN*m)	Mz (kN*m)
62	87	0.0	0.0	0.0	0.0	0.0	0.0	88	0.0	0.0	0.0	0.0	0.0	0.0
	67	0.0	0.0	0.0	0.0	0.0	0.0	13	0.0	0.0	0.0	0.0	0.0	0.0
63	40	0.0	0.0	0.0	0.0	0.0	0.0	89	0.0	0.0	0.0	0.0	0.0	0.0
	38	0.0	0.0	0.0	0.0	0.0	0.0	86	0.0	0.0	0.0	0.0	0.0	0.0
64	89	0.0	0.0	0.0	0.0	0.0	0.0	90	0.0	0.0	0.0	0.0	0.0	0.0
	86	0.0	0.0	0.0	0.0	0.0	0.0	87	0.0	0.0	0.0	0.0	0.0	0.0
65	90	0.0	0.0	0.0	0.0	0.0	0.0	91	0.0	0.0	0.0	0.0	0.0	0.0
	87	0.0	0.0	0.0	0.0	0.0	0.0	88	0.0	0.0	0.0	0.0	0.0	0.0
66	17	0.0	0.0	0.0	0.0	0.0	0.0	92	0.0	0.0	0.0	0.0	0.0	0.0
	40	0.0	0.0	0.0	0.0	0.0	0.0	89	0.0	0.0	0.0	0.0	0.0	0.0
67	92	0.0	0.0	0.0	0.0	0.0	0.0	93	0.0	0.0	0.0	0.0	0.0	0.0
	89	0.0	0.0	0.0	0.0	0.0	0.0	90	0.0	0.0	0.0	0.0	0.0	0.0
68	93	0.0	0.0	0.0	0.0	0.0	0.0	18	0.0	0.0	0.0	0.0	0.0	0.0
	90	0.0	0.0	0.0	0.0	0.0	0.0	91	0.0	0.0	0.0	0.0	0.0	0.0
69	95	0.0	0.0	0.0	0.0	0.0	0.0	96	0.0	0.0	0.0	0.0	0.0	0.0
	91	0.0	0.0	0.0	0.0	0.0	0.0	88	0.0	0.0	0.0	0.0	0.0	0.0
70	96	0.0	0.0	0.0	0.0	0.0	0.0	61	0.0	0.0	0.0	0.0	0.0	0.0
	88	0.0	0.0	0.0	0.0	0.0	0.0	13	0.0	0.0	0.0	0.0	0.0	0.0
71	97	0.0	0.0	0.0	0.0	0.0	0.0	98	0.0	0.0	0.0	0.0	0.0	0.0
	94	0.0	0.0	0.0	0.0	0.0	0.0	95	0.0	0.0	0.0	0.0	0.0	0.0
72	98	0.0	0.0	0.0	0.0	0.0	0.0	99	0.0	0.0	0.0	0.0	0.0	0.0
	95	0.0	0.0	0.0	0.0	0.0	0.0	96	0.0	0.0	0.0	0.0	0.0	0.0
73	99	0.0	0.0	0.0	0.0	0.0	0.0	57	0.0	0.0	0.0	0.0	0.0	0.0
	96	0.0	0.0	0.0	0.0	0.0	0.0	61	0.0	0.0	0.0	0.0	0.0	0.0
74	19	0.0	0.0	0.0	0.0	0.0	0.0	100	0.0	0.0	0.0	0.0	0.0	0.0
	97	0.0	0.0	0.0	0.0	0.0	0.0	98	0.0	0.0	0.0	0.0	0.0	0.0
75	100	0.0	0.0	0.0	0.0	0.0	0.0	101	0.0	0.0	0.0	0.0	0.0	0.0
	98	0.0	0.0	0.0	0.0	0.0	0.0	99	0.0	0.0	0.0	0.0	0.0	0.0
76	101	0.0	0.0	0.0	0.0	0.0	0.0	11	0.0	0.0	0.0	0.0	0.0	0.0
	99	0.0	0.0	0.0	0.0	0.0	0.0	57	0.0	0.0	0.0	0.0	0.0	0.0
77	103	0.0	0.0	0.0	0.0	0.0	0.0	104	0.0	0.0	0.0	0.0	0.0	0.0
	84	0.0	0.0	0.0	0.0	0.0	0.0	85	0.0	0.0	0.0	0.0	0.0	0.0
78	104	0.0	0.0	0.0	0.0	0.0	0.0	105	0.0	0.0	0.0	0.0	0.0	0.0
	85	0.0	0.0	0.0	0.0	0.0	0.0	31	0.0	0.0	0.0	0.0	0.0	0.0
79	106	0.0	0.0	0.0	0.0	0.0	0.0	107	0.0	0.0	0.0	0.0	0.0	0.0
	102	0.0	0.0	0.0	0.0	0.0	0.0	103	0.0	0.0	0.0	0.0	0.0	0.0
80	107	0.0	0.0	0.0	0.0	0.0	0.0	108	0.0	0.0	0.0	0.0	0.0	0.0
	103	0.0	0.0	0.0	0.0	0.0	0.0	104	0.0	0.0	0.0	0.0	0.0	0.0
81	108	0.0	0.0	0.0	0.0	0.0	0.0	109	0.0	0.0	0.0	0.0	0.0	0.0
	104	0.0	0.0	0.0	0.0	0.0	0.0	105	0.0	0.0	0.0	0.0	0.0	0.0
82	22	0.0	0.0	0.0	0.0	0.0	0.0	110	0.0	0.0	0.0	0.0	0.0	0.0
	106	0.0	0.0	0.0	0.0	0.0	0.0	107	0.0	0.0	0.0	0.0	0.0	0.0
83	110	0.0	0.0	0.0	0.0	0.0	0.0	111	0.0	0.0	0.0	0.0	0.0	0.0
	107	0.0	0.0	0.0	0.0	0.0	0.0	108	0.0	0.0	0.0	0.0	0.0	0.0
84	111	0.0	0.0	0.0	0.0	0.0	0.0	30	0.0	0.0	0.0	0.0	0.0	0.0
	108	0.0	0.0	0.0	0.0	0.0	0.0	109	0.0	0.0	0.0	0.0	0.0	0.0
85	113	0.0	0.0	0.0	0.0	0.0	0.0	80	0.0	0.0	0.0	0.0	0.0	0.0
	112	0.0	0.0	0.0	0.0	0.0	0.0	76	0.0	0.0	0.0	0.0	0.0	0.0
86	23	0.0	0.0	0.0	0.0	0.0	0.0	21	0.0	0.0	0.0	0.0	0.0	0.0
	113	0.0	0.0	0.0	0.0	0.0	0.0	80	0.0	0.0	0.0	0.0	0.0	0.0
87	115	0.0	0.0	0.0	0.0	0.0	0.0	113	0.0	0.0	0.0	0.0	0.0	0.0
	114	0.0	0.0	0.0	0.0	0.0	0.0	112	0.0	0.0	0.0	0.0	0.0	0.0
88	20	0.0	0.0	0.0	0.0	0.0	0.0	23	0.0	0.0	0.0	0.0	0.0	0.0
	115	0.0	0.0	0.0	0.0	0.0	0.0	113	0.0	0.0	0.0	0.0	0.0	0.0
89	116	0.0	0.0	0.0	0.0	0.0	0.0	117	0.0	0.0	0.0	0.0	0.0	0.0
	102	0.0	0.0	0.0	0.0	0.0	0.0	106	0.0	0.0	0.0	0.0	0.0	0.0
90	117	0.0	0.0	0.0	0.0	0.0	0.0	37	0.0	0.0	0.0	0.0	0.0	0.0
	106	0.0	0.0	0.0	0.0	0.0	0.0	22	0.0	0.0	0.0	0.0	0.0	0.0
91	119	0.0	0.0	0.0	0.0	0.0	0.0	117	0.0	0.0	0.0	0.0	0.0	0.0
	118	0.0	0.0	0.0	0.0	0.0	0.0	116	0.0	0.0	0.0	0.0	0.0	0.0
92	34	0.0	0.0	0.0	0.0	0.0	0.0	37	0.0	0.0	0.0	0.0	0.0	0.0
	119	0.0	0.0	0.0	0.0	0.0	0.0	117	0.0	0.0	0.0	0.0	0.0	0.0
93	121	0.0	0.0	0.0	0.0	0.0	0.0	122	0.0	0.0	0.0	0.0	0.0	0.0
	43	0.0	0.0	0.0	0.0	0.0	0.0	42	0.0	0.0	0.0	0.0	0.0	0.0
94	122	0.0	0.0	0.0	0.0	0.0	0.0	123	0.0	0.0	0.0	0.0	0.0	0.0
	42	0.0	0.0	0.0	0.0	0.0	0.0	2	0.0	0.0	0.0	0.0	0.0	0.0
95	124	0.0	0.0	0.0	0.0	0.0	0.0	125	0.0	0.0	0.0	0.0	0.0	0.0
	120	0.0	0.0	0.0	0.0	0.0	0.0	121	0.0	0.0	0.0	0.0	0.0	0.0
96	125	0.0	0.0	0.0	0.0	0.0	0.0	126	0.0	0.0	0.0	0.0	0.0	0.0
	121	0.0	0.0	0.0	0.0	0.0	0.0	122	0.0	0.0	0.0	0.0	0.0	0.0
97	126	0.0	0.0	0.0	0.0	0.0	0.0	127	0.0	0.0	0.0	0.0	0.0	0.0
	122	0.0	0.0	0.0	0.0	0.0	0.0	123	0.0	0.0	0.0	0.0	0.0	0.0
98	26	0.0	0.0	0.0	0.0	0.0	0.0	128	0.0	0.0	0.0	0.0	0.0	0.0
	124	0.0	0.0	0.0	0.0	0.0	0.0	125	0.0	0.0	0.0	0.0	0.0	0.0
99	128	0.0	0.0	0.0	0.0	0.0	0.0	129	0.0	0.0	0.0	0.0	0.0	0.0
	125	0.0	0.0	0.0	0.0	0.0	0.0	126	0.0	0.0	0.0	0.0	0.0	0.0
100	129	0.0	0.0	0.0	0.0	0.0	0.0	27	0.0	0.0	0.0	0.0	0.0	0.0
	126	0.0	0.0	0.0	0.0	0.0	0.0	127	0.0	0.0	0.0	0.0	0.0	0.0
101	130	0.0	0.0	0.0	0.0	0.0	0.0	131	0.0	0.0	0.0	0.0	0.0	0.0
	68	0.0	0.0	0.0	0.0	0.0	0.0	64	0.0	0.0	0.0	0.0	0.0	0.0

Documento di proprietà **Snam Rete Gas**. La Società tutelerà i propri diritti in sede civile e penale a termini di legge.

FORZE: SISMA 0°°: MODO5: SHELL

Shell Nro	Nodo N.ro	Tx (kN)	Ty (kN)	Tz (kN)	Mx (kN*m)	My (kN*m)	Mz (kN*m)	Nodo N.ro	Tx (kN)	Ty (kN)	Tz (kN)	Mx (kN*m)	My (kN*m)	Mz (kN*m)
102	131	0.0	0.0	0.0	0.0	0.0	0.0	132	0.0	0.0	0.0	0.0	0.0	0.0
	64	0.0	0.0	0.0	0.0	0.0	0.0	5	0.0	0.0	0.0	0.0	0.0	0.0
103	16	0.0	0.0	0.0	0.0	0.0	0.0	133	0.0	0.0	0.0	0.0	0.0	0.0
	10	0.0	0.0	0.0	0.0	0.0	0.0	130	0.0	0.0	0.0	0.0	0.0	0.0
104	133	0.0	0.0	0.0	0.0	0.0	0.0	134	0.0	0.0	0.0	0.0	0.0	0.0
	130	0.0	0.0	0.0	0.0	0.0	0.0	131	0.0	0.0	0.0	0.0	0.0	0.0
105	134	0.0	0.0	0.0	0.0	0.0	0.0	135	0.0	0.0	0.0	0.0	0.0	0.0
	131	0.0	0.0	0.0	0.0	0.0	0.0	132	0.0	0.0	0.0	0.0	0.0	0.0
106	3	0.0	0.0	0.0	0.0	0.0	0.0	136	0.0	0.0	0.0	0.0	0.0	0.0
	16	0.0	0.0	0.0	0.0	0.0	0.0	133	0.0	0.0	0.0	0.0	0.0	0.0
107	136	0.0	0.0	0.0	0.0	0.0	0.0	137	0.0	0.0	0.0	0.0	0.0	0.0
	133	0.0	0.0	0.0	0.0	0.0	0.0	134	0.0	0.0	0.0	0.0	0.0	0.0
108	137	0.0	0.0	0.0	0.0	0.0	0.0	138	0.0	0.0	0.0	0.0	0.0	0.0
	134	0.0	0.0	0.0	0.0	0.0	0.0	135	0.0	0.0	0.0	0.0	0.0	0.0
109	139	0.0	0.0	0.0	0.0	0.0	0.0	140	0.0	0.0	0.0	0.0	0.0	0.0
	3	0.0	0.0	0.0	0.0	0.0	0.0	136	0.0	0.0	0.0	0.0	0.0	0.0
110	140	0.0	0.0	0.0	0.0	0.0	0.0	141	0.0	0.0	0.0	0.0	0.0	0.0
	136	0.0	0.0	0.0	0.0	0.0	0.0	137	0.0	0.0	0.0	0.0	0.0	0.0
111	141	0.0	0.0	0.0	0.0	0.0	0.0	142	0.0	0.0	0.0	0.0	0.0	0.0
	137	0.0	0.0	0.0	0.0	0.0	0.0	138	0.0	0.0	0.0	0.0	0.0	0.0
112	143	0.0	0.0	0.0	0.0	0.0	0.0	144	0.0	0.0	0.0	0.0	0.0	0.0
	139	0.0	0.0	0.0	0.0	0.0	0.0	140	0.0	0.0	0.0	0.0	0.0	0.0
113	144	0.0	0.0	0.0	0.0	0.0	0.0	145	0.0	0.0	0.0	0.0	0.0	0.0
	140	0.0	0.0	0.0	0.0	0.0	0.0	141	0.0	0.0	0.0	0.0	0.0	0.0
114	145	0.0	0.0	0.0	0.0	0.0	0.0	146	0.0	0.0	0.0	0.0	0.0	0.0
	141	0.0	0.0	0.0	0.0	0.0	0.0	142	0.0	0.0	0.0	0.0	0.0	0.0
115	28	0.0	0.0	0.0	0.0	0.0	0.0	147	0.0	0.0	0.0	0.0	0.0	0.0
	143	0.0	0.0	0.0	0.0	0.0	0.0	144	0.0	0.0	0.0	0.0	0.0	0.0
116	147	0.0	0.0	0.0	0.0	0.0	0.0	148	0.0	0.0	0.0	0.0	0.0	0.0
	144	0.0	0.0	0.0	0.0	0.0	0.0	145	0.0	0.0	0.0	0.0	0.0	0.0
117	148	0.0	0.0	0.0	0.0	0.0	0.0	29	0.0	0.0	0.0	0.0	0.0	0.0
	145	0.0	0.0	0.0	0.0	0.0	0.0	146	0.0	0.0	0.0	0.0	0.0	0.0
118	101	0.0	0.0	0.0	0.0	0.0	0.0	115	0.0	0.0	0.0	0.0	0.0	0.0
	100	0.0	0.0	0.0	0.0	0.0	0.0	114	0.0	0.0	0.0	0.0	0.0	0.0
119	11	0.0	0.0	0.0	0.0	0.0	0.0	20	0.0	0.0	0.0	0.0	0.0	0.0
	101	0.0	0.0	0.0	0.0	0.0	0.0	115	0.0	0.0	0.0	0.0	0.0	0.0
120	149	0.0	0.0	0.0	0.0	0.0	0.0	150	0.0	0.0	0.0	0.0	0.0	0.0
	97	0.0	0.0	0.0	0.0	0.0	0.0	94	0.0	0.0	0.0	0.0	0.0	0.0
121	150	0.0	0.0	0.0	0.0	0.0	0.0	151	0.0	0.0	0.0	0.0	0.0	0.0
	94	0.0	0.0	0.0	0.0	0.0	0.0	18	0.0	0.0	0.0	0.0	0.0	0.0
122	36	0.0	0.0	0.0	0.0	0.0	0.0	152	0.0	0.0	0.0	0.0	0.0	0.0
	35	0.0	0.0	0.0	0.0	0.0	0.0	149	0.0	0.0	0.0	0.0	0.0	0.0
123	152	0.0	0.0	0.0	0.0	0.0	0.0	153	0.0	0.0	0.0	0.0	0.0	0.0
	149	0.0	0.0	0.0	0.0	0.0	0.0	150	0.0	0.0	0.0	0.0	0.0	0.0
124	153	0.0	0.0	0.0	0.0	0.0	0.0	154	0.0	0.0	0.0	0.0	0.0	0.0
	150	0.0	0.0	0.0	0.0	0.0	0.0	151	0.0	0.0	0.0	0.0	0.0	0.0
125	25	0.0	0.0	0.0	0.0	0.0	0.0	155	0.0	0.0	0.0	0.0	0.0	0.0
	36	0.0	0.0	0.0	0.0	0.0	0.0	152	0.0	0.0	0.0	0.0	0.0	0.0
126	155	0.0	0.0	0.0	0.0	0.0	0.0	156	0.0	0.0	0.0	0.0	0.0	0.0
	152	0.0	0.0	0.0	0.0	0.0	0.0	153	0.0	0.0	0.0	0.0	0.0	0.0
127	156	0.0	0.0	0.0	0.0	0.0	0.0	157	0.0	0.0	0.0	0.0	0.0	0.0
	153	0.0	0.0	0.0	0.0	0.0	0.0	154	0.0	0.0	0.0	0.0	0.0	0.0
128	74	0.0	0.0	0.0	0.0	0.0	0.0	158	0.0	0.0	0.0	0.0	0.0	0.0
	25	0.0	0.0	0.0	0.0	0.0	0.0	155	0.0	0.0	0.0	0.0	0.0	0.0
129	158	0.0	0.0	0.0	0.0	0.0	0.0	159	0.0	0.0	0.0	0.0	0.0	0.0
	155	0.0	0.0	0.0	0.0	0.0	0.0	156	0.0	0.0	0.0	0.0	0.0	0.0
130	159	0.0	0.0	0.0	0.0	0.0	0.0	160	0.0	0.0	0.0	0.0	0.0	0.0
	156	0.0	0.0	0.0	0.0	0.0	0.0	157	0.0	0.0	0.0	0.0	0.0	0.0
131	75	0.0	0.0	0.0	0.0	0.0	0.0	161	0.0	0.0	0.0	0.0	0.0	0.0
	74	0.0	0.0	0.0	0.0	0.0	0.0	158	0.0	0.0	0.0	0.0	0.0	0.0
132	161	0.0	0.0	0.0	0.0	0.0	0.0	162	0.0	0.0	0.0	0.0	0.0	0.0
	158	0.0	0.0	0.0	0.0	0.0	0.0	159	0.0	0.0	0.0	0.0	0.0	0.0
133	162	0.0	0.0	0.0	0.0	0.0	0.0	163	0.0	0.0	0.0	0.0	0.0	0.0
	159	0.0	0.0	0.0	0.0	0.0	0.0	160	0.0	0.0	0.0	0.0	0.0	0.0
134	32	0.0	0.0	0.0	0.0	0.0	0.0	164	0.0	0.0	0.0	0.0	0.0	0.0
	75	0.0	0.0	0.0	0.0	0.0	0.0	161	0.0	0.0	0.0	0.0	0.0	0.0
135	164	0.0	0.0	0.0	0.0	0.0	0.0	165	0.0	0.0	0.0	0.0	0.0	0.0
	161	0.0	0.0	0.0	0.0	0.0	0.0	162	0.0	0.0	0.0	0.0	0.0	0.0
136	165	0.0	0.0	0.0	0.0	0.0	0.0	33	0.0	0.0	0.0	0.0	0.0	0.0
	162	0.0	0.0	0.0	0.0	0.0	0.0	163	0.0	0.0	0.0	0.0	0.0	0.0
137	166	0.0	0.0	0.0	0.0	0.0	0.0	167	0.0	0.0	0.0	0.0	0.0	0.0
	58	0.0	0.0	0.0	0.0	0.0	0.0	54	0.0	0.0	0.0	0.0	0.0	0.0
138	167	0.0	0.0	0.0	0.0	0.0	0.0	34	0.0	0.0	0.0	0.0	0.0	0.0
	54	0.0	0.0	0.0	0.0	0.0	0.0	7	0.0	0.0	0.0	0.0	0.0	0.0
139	135	0.0	0.0	0.0	0.0	0.0	0.0	168	0.0	0.0	0.0	0.0	0.0	0.0
	132	0.0	0.0	0.0	0.0	0.0	0.0	166	0.0	0.0	0.0	0.0	0.0	0.0
140	168	0.0	0.0	0.0	0.0	0.0	0.0	169	0.0	0.0	0.0	0.0	0.0	0.0
	166	0.0	0.0	0.0	0.0	0.0	0.0	167	0.0	0.0	0.0	0.0	0.0	0.0
141	169	0.0	0.0	0.0	0.0	0.0	0.0	37	0.0	0.0	0.0	0.0	0.0	0.0
	167	0.0	0.0	0.0	0.0	0.0	0.0	34	0.0	0.0	0.0	0.0	0.0	0.0

Documento di proprietà **Snam Rete Gas**. La Società tutelerà i propri diritti in sede civile e penale a termini di legge.

FORZE: SISMA 0°°: MODO5: SHELL

Shell Nro	Nodo N.ro	Tx (kN)	Ty (kN)	Tz (kN)	Mx (kN*m)	My (kN*m)	Mz (kN*m)	Nodo N.ro	Tx (kN)	Ty (kN)	Tz (kN)	Mx (kN*m)	My (kN*m)	Mz (kN*m)
142	138	0.0	0.0	0.0	0.0	0.0	0.0	170	0.0	0.0	0.0	0.0	0.0	0.0
	135	0.0	0.0	0.0	0.0	0.0	0.0	168	0.0	0.0	0.0	0.0	0.0	0.0
143	170	0.0	0.0	0.0	0.0	0.0	0.0	171	0.0	0.0	0.0	0.0	0.0	0.0
	168	0.0	0.0	0.0	0.0	0.0	0.0	169	0.0	0.0	0.0	0.0	0.0	0.0
144	171	0.0	0.0	0.0	0.0	0.0	0.0	22	0.0	0.0	0.0	0.0	0.0	0.0
	169	0.0	0.0	0.0	0.0	0.0	0.0	37	0.0	0.0	0.0	0.0	0.0	0.0
145	142	0.0	0.0	0.0	0.0	0.0	0.0	172	0.0	0.0	0.0	0.0	0.0	0.0
	138	0.0	0.0	0.0	0.0	0.0	0.0	170	0.0	0.0	0.0	0.0	0.0	0.0
146	172	0.0	0.0	0.0	0.0	0.0	0.0	173	0.0	0.0	0.0	0.0	0.0	0.0
	170	0.0	0.0	0.0	0.0	0.0	0.0	171	0.0	0.0	0.0	0.0	0.0	0.0
147	173	0.0	0.0	0.0	0.0	0.0	0.0	110	0.0	0.0	0.0	0.0	0.0	0.0
	171	0.0	0.0	0.0	0.0	0.0	0.0	22	0.0	0.0	0.0	0.0	0.0	0.0
148	146	0.0	0.0	0.0	0.0	0.0	0.0	174	0.0	0.0	0.0	0.0	0.0	0.0
	142	0.0	0.0	0.0	0.0	0.0	0.0	172	0.0	0.0	0.0	0.0	0.0	0.0
149	174	0.0	0.0	0.0	0.0	0.0	0.0	175	0.0	0.0	0.0	0.0	0.0	0.0
	172	0.0	0.0	0.0	0.0	0.0	0.0	173	0.0	0.0	0.0	0.0	0.0	0.0
150	175	0.0	0.0	0.0	0.0	0.0	0.0	111	0.0	0.0	0.0	0.0	0.0	0.0
	173	0.0	0.0	0.0	0.0	0.0	0.0	110	0.0	0.0	0.0	0.0	0.0	0.0
151	29	0.0	0.0	0.0	0.0	0.0	0.0	176	0.0	0.0	0.0	0.0	0.0	0.0
	146	0.0	0.0	0.0	0.0	0.0	0.0	174	0.0	0.0	0.0	0.0	0.0	0.0
152	176	0.0	0.0	0.0	0.0	0.0	0.0	177	0.0	0.0	0.0	0.0	0.0	0.0
	174	0.0	0.0	0.0	0.0	0.0	0.0	175	0.0	0.0	0.0	0.0	0.0	0.0
153	177	0.0	0.0	0.0	0.0	0.0	0.0	30	0.0	0.0	0.0	0.0	0.0	0.0
	175	0.0	0.0	0.0	0.0	0.0	0.0	111	0.0	0.0	0.0	0.0	0.0	0.0
154	178	0.0	0.0	0.0	0.0	0.0	0.0	179	0.0	0.0	0.0	0.0	0.0	0.0
	93	0.0	0.0	0.0	0.0	0.0	0.0	92	0.0	0.0	0.0	0.0	0.0	0.0
155	179	0.0	0.0	0.0	0.0	0.0	0.0	12	0.0	0.0	0.0	0.0	0.0	0.0
	92	0.0	0.0	0.0	0.0	0.0	0.0	17	0.0	0.0	0.0	0.0	0.0	0.0
156	154	0.0	0.0	0.0	0.0	0.0	0.0	180	0.0	0.0	0.0	0.0	0.0	0.0
	151	0.0	0.0	0.0	0.0	0.0	0.0	178	0.0	0.0	0.0	0.0	0.0	0.0
157	180	0.0	0.0	0.0	0.0	0.0	0.0	181	0.0	0.0	0.0	0.0	0.0	0.0
	178	0.0	0.0	0.0	0.0	0.0	0.0	179	0.0	0.0	0.0	0.0	0.0	0.0
158	181	0.0	0.0	0.0	0.0	0.0	0.0	15	0.0	0.0	0.0	0.0	0.0	0.0
	179	0.0	0.0	0.0	0.0	0.0	0.0	12	0.0	0.0	0.0	0.0	0.0	0.0
159	157	0.0	0.0	0.0	0.0	0.0	0.0	182	0.0	0.0	0.0	0.0	0.0	0.0
	154	0.0	0.0	0.0	0.0	0.0	0.0	180	0.0	0.0	0.0	0.0	0.0	0.0
160	182	0.0	0.0	0.0	0.0	0.0	0.0	183	0.0	0.0	0.0	0.0	0.0	0.0
	180	0.0	0.0	0.0	0.0	0.0	0.0	181	0.0	0.0	0.0	0.0	0.0	0.0
161	183	0.0	0.0	0.0	0.0	0.0	0.0	9	0.0	0.0	0.0	0.0	0.0	0.0
	181	0.0	0.0	0.0	0.0	0.0	0.0	15	0.0	0.0	0.0	0.0	0.0	0.0
162	160	0.0	0.0	0.0	0.0	0.0	0.0	184	0.0	0.0	0.0	0.0	0.0	0.0
	157	0.0	0.0	0.0	0.0	0.0	0.0	182	0.0	0.0	0.0	0.0	0.0	0.0
163	184	0.0	0.0	0.0	0.0	0.0	0.0	185	0.0	0.0	0.0	0.0	0.0	0.0
	182	0.0	0.0	0.0	0.0	0.0	0.0	183	0.0	0.0	0.0	0.0	0.0	0.0
164	185	0.0	0.0	0.0	0.0	0.0	0.0	120	0.0	0.0	0.0	0.0	0.0	0.0
	183	0.0	0.0	0.0	0.0	0.0	0.0	9	0.0	0.0	0.0	0.0	0.0	0.0
165	163	0.0	0.0	0.0	0.0	0.0	0.0	186	0.0	0.0	0.0	0.0	0.0	0.0
	160	0.0	0.0	0.0	0.0	0.0	0.0	184	0.0	0.0	0.0	0.0	0.0	0.0
166	186	0.0	0.0	0.0	0.0	0.0	0.0	187	0.0	0.0	0.0	0.0	0.0	0.0
	184	0.0	0.0	0.0	0.0	0.0	0.0	185	0.0	0.0	0.0	0.0	0.0	0.0
167	187	0.0	0.0	0.0	0.0	0.0	0.0	124	0.0	0.0	0.0	0.0	0.0	0.0
	185	0.0	0.0	0.0	0.0	0.0	0.0	120	0.0	0.0	0.0	0.0	0.0	0.0
168	33	0.0	0.0	0.0	0.0	0.0	0.0	188	0.0	0.0	0.0	0.0	0.0	0.0
	163	0.0	0.0	0.0	0.0	0.0	0.0	186	0.0	0.0	0.0	0.0	0.0	0.0
169	188	0.0	0.0	0.0	0.0	0.0	0.0	189	0.0	0.0	0.0	0.0	0.0	0.0
	186	0.0	0.0	0.0	0.0	0.0	0.0	187	0.0	0.0	0.0	0.0	0.0	0.0
170	189	0.0	0.0	0.0	0.0	0.0	0.0	26	0.0	0.0	0.0	0.0	0.0	0.0
	187	0.0	0.0	0.0	0.0	0.0	0.0	124	0.0	0.0	0.0	0.0	0.0	0.0
171	190	0.0	0.0	0.0	0.0	0.0	0.0	191	0.0	0.0	0.0	0.0	0.0	0.0
	73	0.0	0.0	0.0	0.0	0.0	0.0	72	0.0	0.0	0.0	0.0	0.0	0.0
172	191	0.0	0.0	0.0	0.0	0.0	0.0	139	0.0	0.0	0.0	0.0	0.0	0.0
	72	0.0	0.0	0.0	0.0	0.0	0.0	3	0.0	0.0	0.0	0.0	0.0	0.0
173	127	0.0	0.0	0.0	0.0	0.0	0.0	192	0.0	0.0	0.0	0.0	0.0	0.0
	123	0.0	0.0	0.0	0.0	0.0	0.0	190	0.0	0.0	0.0	0.0	0.0	0.0
174	192	0.0	0.0	0.0	0.0	0.0	0.0	193	0.0	0.0	0.0	0.0	0.0	0.0
	190	0.0	0.0	0.0	0.0	0.0	0.0	191	0.0	0.0	0.0	0.0	0.0	0.0
175	193	0.0	0.0	0.0	0.0	0.0	0.0	143	0.0	0.0	0.0	0.0	0.0	0.0
	191	0.0	0.0	0.0	0.0	0.0	0.0	139	0.0	0.0	0.0	0.0	0.0	0.0
176	27	0.0	0.0	0.0	0.0	0.0	0.0	194	0.0	0.0	0.0	0.0	0.0	0.0
	127	0.0	0.0	0.0	0.0	0.0	0.0	192	0.0	0.0	0.0	0.0	0.0	0.0
177	194	0.0	0.0	0.0	0.0	0.0	0.0	195	0.0	0.0	0.0	0.0	0.0	0.0
	192	0.0	0.0	0.0	0.0	0.0	0.0	193	0.0	0.0	0.0	0.0	0.0	0.0
178	195	0.0	0.0	0.0	0.0	0.0	0.0	28	0.0	0.0	0.0	0.0	0.0	0.0
	193	0.0	0.0	0.0	0.0	0.0	0.0	143	0.0	0.0	0.0	0.0	0.0	0.0
179	52	0.0	0.0	0.0	0.0	0.0	0.0	119	0.0	0.0	0.0	0.0	0.0	0.0
	53	0.0	0.0	0.0	0.0	0.0	0.0	118	0.0	0.0	0.0	0.0	0.0	0.0
180	7	0.0	0.0	0.0	0.0	0.0	0.0	34	0.0	0.0	0.0	0.0	0.0	0.0
	52	0.0	0.0	0.0	0.0	0.0	0.0	119	0.0	0.0	0.0	0.0	0.0	0.0

FORZE: SISMA 0°°: MODO7: SHELL

Documento di proprietà **Snam Rete Gas**. La Società tutelerà i propri diritti in sede civile e penale a termini di legge.

Shell Nro	Nodo N.ro	Tx (kN)	Ty (kN)	Tz (kN)	Mx (kN*m)	My (kN*m)	Mz (kN*m)	Nodo N.ro	Tx (kN)	Ty (kN)	Tz (kN)	Mx (kN*m)	My (kN*m)	Mz (kN*m)
1	38	0.0	0.0	0.0	0.0	0.0	0.0	39	0.0	0.0	0.0	0.0	0.0	0.0
	14	0.0	0.0	0.0	0.0	0.0	0.0	1	0.0	0.0	0.0	0.0	0.0	0.0
2	6	0.0	0.0	0.0	0.0	0.0	0.0	44	0.0	0.0	0.0	0.0	0.0	0.0
	2	0.0	0.0	0.0	0.0	0.0	0.0	42	0.0	0.0	0.0	0.0	0.0	0.0
3	39	0.0	0.0	0.0	0.0	0.0	0.0	44	0.0	0.0	0.0	0.0	0.0	0.0
	1	0.0	0.0	0.0	0.0	0.0	0.0	6	0.0	0.0	0.0	0.0	0.0	0.0
4	46	0.0	0.0	0.0	0.0	0.0	0.0	47	0.0	0.0	0.0	0.0	0.0	0.0
	10	0.0	0.0	0.0	0.0	0.0	0.0	16	0.0	0.0	0.0	0.0	0.0	0.0
5	50	0.0	0.0	0.0	0.0	0.0	0.0	46	0.0	0.0	0.0	0.0	0.0	0.0
	4	0.0	0.0	0.0	0.0	0.0	0.0	10	0.0	0.0	0.0	0.0	0.0	0.0
6	54	0.0	0.0	0.0	0.0	0.0	0.0	55	0.0	0.0	0.0	0.0	0.0	0.0
	7	0.0	0.0	0.0	0.0	0.0	0.0	52	0.0	0.0	0.0	0.0	0.0	0.0
7	64	0.0	0.0	0.0	0.0	0.0	0.0	65	0.0	0.0	0.0	0.0	0.0	0.0
	5	0.0	0.0	0.0	0.0	0.0	0.0	62	0.0	0.0	0.0	0.0	0.0	0.0
8	47	0.0	0.0	0.0	0.0	0.0	0.0	72	0.0	0.0	0.0	0.0	0.0	0.0
	16	0.0	0.0	0.0	0.0	0.0	0.0	3	0.0	0.0	0.0	0.0	0.0	0.0
9	76	0.0	0.0	0.0	0.0	0.0	0.0	77	0.0	0.0	0.0	0.0	0.0	0.0
	25	0.0	0.0	0.0	0.0	0.0	0.0	74	0.0	0.0	0.0	0.0	0.0	0.0
10	38	0.0	0.0	0.0	0.0	0.0	0.0	86	0.0	0.0	0.0	0.0	0.0	0.0
	14	0.0	0.0	0.0	0.0	0.0	0.0	71	0.0	0.0	0.0	0.0	0.0	0.0
11	94	0.0	0.0	0.0	0.0	0.0	0.0	95	0.0	0.0	0.0	0.0	0.0	0.0
	18	0.0	0.0	0.0	0.0	0.0	0.0	91	0.0	0.0	0.0	0.0	0.0	0.0
12	102	0.0	0.0	0.0	0.0	0.0	0.0	103	0.0	0.0	0.0	0.0	0.0	0.0
	21	0.0	0.0	0.0	0.0	0.0	0.0	84	0.0	0.0	0.0	0.0	0.0	0.0
13	112	0.0	0.0	0.0	0.0	0.0	0.0	76	0.0	0.0	0.0	0.0	0.0	0.0
	36	0.0	0.0	0.0	0.0	0.0	0.0	25	0.0	0.0	0.0	0.0	0.0	0.0
14	114	0.0	0.0	0.0	0.0	0.0	0.0	112	0.0	0.0	0.0	0.0	0.0	0.0
	35	0.0	0.0	0.0	0.0	0.0	0.0	36	0.0	0.0	0.0	0.0	0.0	0.0
15	24	0.0	0.0	0.0	0.0	0.0	0.0	116	0.0	0.0	0.0	0.0	0.0	0.0
	21	0.0	0.0	0.0	0.0	0.0	0.0	102	0.0	0.0	0.0	0.0	0.0	0.0
16	118	0.0	0.0	0.0	0.0	0.0	0.0	116	0.0	0.0	0.0	0.0	0.0	0.0
	20	0.0	0.0	0.0	0.0	0.0	0.0	24	0.0	0.0	0.0	0.0	0.0	0.0
17	120	0.0	0.0	0.0	0.0	0.0	0.0	121	0.0	0.0	0.0	0.0	0.0	0.0
	9	0.0	0.0	0.0	0.0	0.0	0.0	43	0.0	0.0	0.0	0.0	0.0	0.0
18	10	0.0	0.0	0.0	0.0	0.0	0.0	130	0.0	0.0	0.0	0.0	0.0	0.0
	4	0.0	0.0	0.0	0.0	0.0	0.0	68	0.0	0.0	0.0	0.0	0.0	0.0
19	100	0.0	0.0	0.0	0.0	0.0	0.0	114	0.0	0.0	0.0	0.0	0.0	0.0
	19	0.0	0.0	0.0	0.0	0.0	0.0	35	0.0	0.0	0.0	0.0	0.0	0.0
20	35	0.0	0.0	0.0	0.0	0.0	0.0	149	0.0	0.0	0.0	0.0	0.0	0.0
	19	0.0	0.0	0.0	0.0	0.0	0.0	97	0.0	0.0	0.0	0.0	0.0	0.0
21	132	0.0	0.0	0.0	0.0	0.0	0.0	166	0.0	0.0	0.0	0.0	0.0	0.0
	5	0.0	0.0	0.0	0.0	0.0	0.0	58	0.0	0.0	0.0	0.0	0.0	0.0
22	151	0.0	0.0	0.0	0.0	0.0	0.0	178	0.0	0.0	0.0	0.0	0.0	0.0
	18	0.0	0.0	0.0	0.0	0.0	0.0	93	0.0	0.0	0.0	0.0	0.0	0.0
23	123	0.0	0.0	0.0	0.0	0.0	0.0	190	0.0	0.0	0.0	0.0	0.0	0.0
	2	0.0	0.0	0.0	0.0	0.0	0.0	73	0.0	0.0	0.0	0.0	0.0	0.0
24	53	0.0	0.0	0.0	0.0	0.0	0.0	118	0.0	0.0	0.0	0.0	0.0	0.0
	11	0.0	0.0	0.0	0.0	0.0	0.0	20	0.0	0.0	0.0	0.0	0.0	0.0
25	40	0.0	0.0	0.0	0.0	0.0	0.0	41	0.0	0.0	0.0	0.0	0.0	0.0
	38	0.0	0.0	0.0	0.0	0.0	0.0	39	0.0	0.0	0.0	0.0	0.0	0.0
26	17	0.0	0.0	0.0	0.0	0.0	0.0	12	0.0	0.0	0.0	0.0	0.0	0.0
	40	0.0	0.0	0.0	0.0	0.0	0.0	41	0.0	0.0	0.0	0.0	0.0	0.0
27	44	0.0	0.0	0.0	0.0	0.0	0.0	45	0.0	0.0	0.0	0.0	0.0	0.0
	42	0.0	0.0	0.0	0.0	0.0	0.0	43	0.0	0.0	0.0	0.0	0.0	0.0
28	45	0.0	0.0	0.0	0.0	0.0	0.0	15	0.0	0.0	0.0	0.0	0.0	0.0
	43	0.0	0.0	0.0	0.0	0.0	0.0	9	0.0	0.0	0.0	0.0	0.0	0.0
29	41	0.0	0.0	0.0	0.0	0.0	0.0	45	0.0	0.0	0.0	0.0	0.0	0.0
	39	0.0	0.0	0.0	0.0	0.0	0.0	44	0.0	0.0	0.0	0.0	0.0	0.0
30	12	0.0	0.0	0.0	0.0	0.0	0.0	15	0.0	0.0	0.0	0.0	0.0	0.0
	41	0.0	0.0	0.0	0.0	0.0	0.0	45	0.0	0.0	0.0	0.0	0.0	0.0
31	48	0.0	0.0	0.0	0.0	0.0	0.0	49	0.0	0.0	0.0	0.0	0.0	0.0
	46	0.0	0.0	0.0	0.0	0.0	0.0	47	0.0	0.0	0.0	0.0	0.0	0.0
32	1	0.0	0.0	0.0	0.0	0.0	0.0	8	0.0	0.0	0.0	0.0	0.0	0.0
	48	0.0	0.0	0.0	0.0	0.0	0.0	49	0.0	0.0	0.0	0.0	0.0	0.0
33	51	0.0	0.0	0.0	0.0	0.0	0.0	48	0.0	0.0	0.0	0.0	0.0	0.0
	50	0.0	0.0	0.0	0.0	0.0	0.0	46	0.0	0.0	0.0	0.0	0.0	0.0
34	14	0.0	0.0	0.0	0.0	0.0	0.0	1	0.0	0.0	0.0	0.0	0.0	0.0
	51	0.0	0.0	0.0	0.0	0.0	0.0	48	0.0	0.0	0.0	0.0	0.0	0.0
35	55	0.0	0.0	0.0	0.0	0.0	0.0	56	0.0	0.0	0.0	0.0	0.0	0.0
	52	0.0	0.0	0.0	0.0	0.0	0.0	53	0.0	0.0	0.0	0.0	0.0	0.0
36	56	0.0	0.0	0.0	0.0	0.0	0.0	57	0.0	0.0	0.0	0.0	0.0	0.0
	53	0.0	0.0	0.0	0.0	0.0	0.0	11	0.0	0.0	0.0	0.0	0.0	0.0
37	58	0.0	0.0	0.0	0.0	0.0	0.0	59	0.0	0.0	0.0	0.0	0.0	0.0
	54	0.0	0.0	0.0	0.0	0.0	0.0	55	0.0	0.0	0.0	0.0	0.0	0.0
38	59	0.0	0.0	0.0	0.0	0.0	0.0	60	0.0	0.0	0.0	0.0	0.0	0.0
	55	0.0	0.0	0.0	0.0	0.0	0.0	56	0.0	0.0	0.0	0.0	0.0	0.0
39	60	0.0	0.0	0.0	0.0	0.0	0.0	61	0.0	0.0	0.0	0.0	0.0	0.0
	56	0.0	0.0	0.0	0.0	0.0	0.0	57	0.0	0.0	0.0	0.0	0.0	0.0
40	5	0.0	0.0	0.0	0.0	0.0	0.0	62	0.0	0.0	0.0	0.0	0.0	0.0
	58	0.0	0.0	0.0	0.0	0.0	0.0	59	0.0	0.0	0.0	0.0	0.0	0.0
41	62	0.0	0.0	0.0	0.0	0.0	0.0	63	0.0	0.0	0.0	0.0	0.0	0.0
	59	0.0	0.0	0.0	0.0	0.0	0.0	60	0.0	0.0	0.0	0.0	0.0	0.0

Documento di proprietà **Snam Rete Gas**. La Società tutelerà i propri diritti in sede civile e penale a termini di legge.

FORZE: SISMA 0°°: MODO7: SHELL

Shell Nro	Nodo N.ro	Tx (kN)	Ty (kN)	Tz (kN)	Mx (kN*m)	My (kN*m)	Mz (kN*m)	Nodo N.ro	Tx (kN)	Ty (kN)	Tz (kN)	Mx (kN*m)	My (kN*m)	Mz (kN*m)
42	63	0.0	0.0	0.0	0.0	0.0	0.0	13	0.0	0.0	0.0	0.0	0.0	0.0
	60	0.0	0.0	0.0	0.0	0.0	0.0	61	0.0	0.0	0.0	0.0	0.0	0.0
43	65	0.0	0.0	0.0	0.0	0.0	0.0	66	0.0	0.0	0.0	0.0	0.0	0.0
	62	0.0	0.0	0.0	0.0	0.0	0.0	63	0.0	0.0	0.0	0.0	0.0	0.0
44	66	0.0	0.0	0.0	0.0	0.0	0.0	67	0.0	0.0	0.0	0.0	0.0	0.0
	63	0.0	0.0	0.0	0.0	0.0	0.0	13	0.0	0.0	0.0	0.0	0.0	0.0
45	68	0.0	0.0	0.0	0.0	0.0	0.0	69	0.0	0.0	0.0	0.0	0.0	0.0
	64	0.0	0.0	0.0	0.0	0.0	0.0	65	0.0	0.0	0.0	0.0	0.0	0.0
46	69	0.0	0.0	0.0	0.0	0.0	0.0	70	0.0	0.0	0.0	0.0	0.0	0.0
	65	0.0	0.0	0.0	0.0	0.0	0.0	66	0.0	0.0	0.0	0.0	0.0	0.0
47	70	0.0	0.0	0.0	0.0	0.0	0.0	71	0.0	0.0	0.0	0.0	0.0	0.0
	66	0.0	0.0	0.0	0.0	0.0	0.0	67	0.0	0.0	0.0	0.0	0.0	0.0
48	4	0.0	0.0	0.0	0.0	0.0	0.0	50	0.0	0.0	0.0	0.0	0.0	0.0
	68	0.0	0.0	0.0	0.0	0.0	0.0	69	0.0	0.0	0.0	0.0	0.0	0.0
49	50	0.0	0.0	0.0	0.0	0.0	0.0	51	0.0	0.0	0.0	0.0	0.0	0.0
	69	0.0	0.0	0.0	0.0	0.0	0.0	70	0.0	0.0	0.0	0.0	0.0	0.0
50	51	0.0	0.0	0.0	0.0	0.0	0.0	14	0.0	0.0	0.0	0.0	0.0	0.0
	70	0.0	0.0	0.0	0.0	0.0	0.0	71	0.0	0.0	0.0	0.0	0.0	0.0
51	49	0.0	0.0	0.0	0.0	0.0	0.0	73	0.0	0.0	0.0	0.0	0.0	0.0
	47	0.0	0.0	0.0	0.0	0.0	0.0	72	0.0	0.0	0.0	0.0	0.0	0.0
52	8	0.0	0.0	0.0	0.0	0.0	0.0	2	0.0	0.0	0.0	0.0	0.0	0.0
	49	0.0	0.0	0.0	0.0	0.0	0.0	73	0.0	0.0	0.0	0.0	0.0	0.0
53	77	0.0	0.0	0.0	0.0	0.0	0.0	78	0.0	0.0	0.0	0.0	0.0	0.0
	74	0.0	0.0	0.0	0.0	0.0	0.0	75	0.0	0.0	0.0	0.0	0.0	0.0
54	78	0.0	0.0	0.0	0.0	0.0	0.0	79	0.0	0.0	0.0	0.0	0.0	0.0
	75	0.0	0.0	0.0	0.0	0.0	0.0	32	0.0	0.0	0.0	0.0	0.0	0.0
55	80	0.0	0.0	0.0	0.0	0.0	0.0	81	0.0	0.0	0.0	0.0	0.0	0.0
	76	0.0	0.0	0.0	0.0	0.0	0.0	77	0.0	0.0	0.0	0.0	0.0	0.0
56	81	0.0	0.0	0.0	0.0	0.0	0.0	82	0.0	0.0	0.0	0.0	0.0	0.0
	77	0.0	0.0	0.0	0.0	0.0	0.0	78	0.0	0.0	0.0	0.0	0.0	0.0
57	82	0.0	0.0	0.0	0.0	0.0	0.0	83	0.0	0.0	0.0	0.0	0.0	0.0
	78	0.0	0.0	0.0	0.0	0.0	0.0	79	0.0	0.0	0.0	0.0	0.0	0.0
58	21	0.0	0.0	0.0	0.0	0.0	0.0	84	0.0	0.0	0.0	0.0	0.0	0.0
	80	0.0	0.0	0.0	0.0	0.0	0.0	81	0.0	0.0	0.0	0.0	0.0	0.0
59	84	0.0	0.0	0.0	0.0	0.0	0.0	85	0.0	0.0	0.0	0.0	0.0	0.0
	81	0.0	0.0	0.0	0.0	0.0	0.0	82	0.0	0.0	0.0	0.0	0.0	0.0
60	85	0.0	0.0	0.0	0.0	0.0	0.0	31	0.0	0.0	0.0	0.0	0.0	0.0
	82	0.0	0.0	0.0	0.0	0.0	0.0	83	0.0	0.0	0.0	0.0	0.0	0.0
61	86	0.0	0.0	0.0	0.0	0.0	0.0	87	0.0	0.0	0.0	0.0	0.0	0.0
	71	0.0	0.0	0.0	0.0	0.0	0.0	67	0.0	0.0	0.0	0.0	0.0	0.0
62	87	0.0	0.0	0.0	0.0	0.0	0.0	88	0.0	0.0	0.0	0.0	0.0	0.0
	67	0.0	0.0	0.0	0.0	0.0	0.0	13	0.0	0.0	0.0	0.0	0.0	0.0
63	40	0.0	0.0	0.0	0.0	0.0	0.0	89	0.0	0.0	0.0	0.0	0.0	0.0
	38	0.0	0.0	0.0	0.0	0.0	0.0	86	0.0	0.0	0.0	0.0	0.0	0.0
64	89	0.0	0.0	0.0	0.0	0.0	0.0	90	0.0	0.0	0.0	0.0	0.0	0.0
	86	0.0	0.0	0.0	0.0	0.0	0.0	87	0.0	0.0	0.0	0.0	0.0	0.0
65	90	0.0	0.0	0.0	0.0	0.0	0.0	91	0.0	0.0	0.0	0.0	0.0	0.0
	87	0.0	0.0	0.0	0.0	0.0	0.0	88	0.0	0.0	0.0	0.0	0.0	0.0
66	17	0.0	0.0	0.0	0.0	0.0	0.0	92	0.0	0.0	0.0	0.0	0.0	0.0
	40	0.0	0.0	0.0	0.0	0.0	0.0	89	0.0	0.0	0.0	0.0	0.0	0.0
67	92	0.0	0.0	0.0	0.0	0.0	0.0	93	0.0	0.0	0.0	0.0	0.0	0.0
	89	0.0	0.0	0.0	0.0	0.0	0.0	90	0.0	0.0	0.0	0.0	0.0	0.0
68	93	0.0	0.0	0.0	0.0	0.0	0.0	18	0.0	0.0	0.0	0.0	0.0	0.0
	90	0.0	0.0	0.0	0.0	0.0	0.0	91	0.0	0.0	0.0	0.0	0.0	0.0
69	95	0.0	0.0	0.0	0.0	0.0	0.0	96	0.0	0.0	0.0	0.0	0.0	0.0
	91	0.0	0.0	0.0	0.0	0.0	0.0	88	0.0	0.0	0.0	0.0	0.0	0.0
70	96	0.0	0.0	0.0	0.0	0.0	0.0	61	0.0	0.0	0.0	0.0	0.0	0.0
	88	0.0	0.0	0.0	0.0	0.0	0.0	13	0.0	0.0	0.0	0.0	0.0	0.0
71	97	0.0	0.0	0.0	0.0	0.0	0.0	98	0.0	0.0	0.0	0.0	0.0	0.0
	94	0.0	0.0	0.0	0.0	0.0	0.0	95	0.0	0.0	0.0	0.0	0.0	0.0
72	98	0.0	0.0	0.0	0.0	0.0	0.0	99	0.0	0.0	0.0	0.0	0.0	0.0
	95	0.0	0.0	0.0	0.0	0.0	0.0	96	0.0	0.0	0.0	0.0	0.0	0.0
73	99	0.0	0.0	0.0	0.0	0.0	0.0	57	0.0	0.0	0.0	0.0	0.0	0.0
	96	0.0	0.0	0.0	0.0	0.0	0.0	61	0.0	0.0	0.0	0.0	0.0	0.0
74	19	0.0	0.0	0.0	0.0	0.0	0.0	100	0.0	0.0	0.0	0.0	0.0	0.0
	97	0.0	0.0	0.0	0.0	0.0	0.0	98	0.0	0.0	0.0	0.0	0.0	0.0
75	100	0.0	0.0	0.0	0.0	0.0	0.0	101	0.0	0.0	0.0	0.0	0.0	0.0
	98	0.0	0.0	0.0	0.0	0.0	0.0	99	0.0	0.0	0.0	0.0	0.0	0.0
76	101	0.0	0.0	0.0	0.0	0.0	0.0	11	0.0	0.0	0.0	0.0	0.0	0.0
	99	0.0	0.0	0.0	0.0	0.0	0.0	57	0.0	0.0	0.0	0.0	0.0	0.0
77	103	0.0	0.0	0.0	0.0	0.0	0.0	104	0.0	0.0	0.0	0.0	0.0	0.0
	84	0.0	0.0	0.0	0.0	0.0	0.0	85	0.0	0.0	0.0	0.0	0.0	0.0
78	104	0.0	0.0	0.0	0.0	0.0	0.0	105	0.0	0.0	0.0	0.0	0.0	0.0
	85	0.0	0.0	0.0	0.0	0.0	0.0	31	0.0	0.0	0.0	0.0	0.0	0.0
79	106	0.0	0.0	0.0	0.0	0.0	0.0	107	0.0	0.0	0.0	0.0	0.0	0.0
	102	0.0	0.0	0.0	0.0	0.0	0.0	103	0.0	0.0	0.0	0.0	0.0	0.0
80	107	0.0	0.0	0.0	0.0	0.0	0.0	108	0.0	0.0	0.0	0.0	0.0	0.0
	103	0.0	0.0	0.0	0.0	0.0	0.0	104	0.0	0.0	0.0	0.0	0.0	0.0
81	108	0.0	0.0	0.0	0.0	0.0	0.0	109	0.0	0.0	0.0	0.0	0.0	0.0
	104	0.0	0.0	0.0	0.0	0.0	0.0	105	0.0	0.0	0.0	0.0	0.0	0.0

Documento di proprietà **Snam Rete Gas**. La Società tutelerà i propri diritti in sede civile e penale a termini di legge.

FORZE: SISMA 0°°: MODO7: SHELL

Shell Nro	Nodo N.ro	Tx (kN)	Ty (kN)	Tz (kN)	Mx (kN*m)	My (kN*m)	Mz (kN*m)	Nodo N.ro	Tx (kN)	Ty (kN)	Tz (kN)	Mx (kN*m)	My (kN*m)	Mz (kN*m)
82	22	0.0	0.0	0.0	0.0	0.0	0.0	110	0.0	0.0	0.0	0.0	0.0	0.0
	106	0.0	0.0	0.0	0.0	0.0	0.0	107	0.0	0.0	0.0	0.0	0.0	0.0
83	110	0.0	0.0	0.0	0.0	0.0	0.0	111	0.0	0.0	0.0	0.0	0.0	0.0
	107	0.0	0.0	0.0	0.0	0.0	0.0	108	0.0	0.0	0.0	0.0	0.0	0.0
84	111	0.0	0.0	0.0	0.0	0.0	0.0	30	0.0	0.0	0.0	0.0	0.0	0.0
	108	0.0	0.0	0.0	0.0	0.0	0.0	109	0.0	0.0	0.0	0.0	0.0	0.0
85	113	0.0	0.0	0.0	0.0	0.0	0.0	80	0.0	0.0	0.0	0.0	0.0	0.0
	112	0.0	0.0	0.0	0.0	0.0	0.0	76	0.0	0.0	0.0	0.0	0.0	0.0
86	23	0.0	0.0	0.0	0.0	0.0	0.0	21	0.0	0.0	0.0	0.0	0.0	0.0
	113	0.0	0.0	0.0	0.0	0.0	0.0	80	0.0	0.0	0.0	0.0	0.0	0.0
87	115	0.0	0.0	0.0	0.0	0.0	0.0	113	0.0	0.0	0.0	0.0	0.0	0.0
	114	0.0	0.0	0.0	0.0	0.0	0.0	112	0.0	0.0	0.0	0.0	0.0	0.0
88	20	0.0	0.0	0.0	0.0	0.0	0.0	23	0.0	0.0	0.0	0.0	0.0	0.0
	115	0.0	0.0	0.0	0.0	0.0	0.0	113	0.0	0.0	0.0	0.0	0.0	0.0
89	116	0.0	0.0	0.0	0.0	0.0	0.0	117	0.0	0.0	0.0	0.0	0.0	0.0
	102	0.0	0.0	0.0	0.0	0.0	0.0	106	0.0	0.0	0.0	0.0	0.0	0.0
90	117	0.0	0.0	0.0	0.0	0.0	0.0	37	0.0	0.0	0.0	0.0	0.0	0.0
	106	0.0	0.0	0.0	0.0	0.0	0.0	22	0.0	0.0	0.0	0.0	0.0	0.0
91	119	0.0	0.0	0.0	0.0	0.0	0.0	117	0.0	0.0	0.0	0.0	0.0	0.0
	118	0.0	0.0	0.0	0.0	0.0	0.0	116	0.0	0.0	0.0	0.0	0.0	0.0
92	34	0.0	0.0	0.0	0.0	0.0	0.0	37	0.0	0.0	0.0	0.0	0.0	0.0
	119	0.0	0.0	0.0	0.0	0.0	0.0	117	0.0	0.0	0.0	0.0	0.0	0.0
93	121	0.0	0.0	0.0	0.0	0.0	0.0	122	0.0	0.0	0.0	0.0	0.0	0.0
	43	0.0	0.0	0.0	0.0	0.0	0.0	42	0.0	0.0	0.0	0.0	0.0	0.0
94	122	0.0	0.0	0.0	0.0	0.0	0.0	123	0.0	0.0	0.0	0.0	0.0	0.0
	42	0.0	0.0	0.0	0.0	0.0	0.0	2	0.0	0.0	0.0	0.0	0.0	0.0
95	124	0.0	0.0	0.0	0.0	0.0	0.0	125	0.0	0.0	0.0	0.0	0.0	0.0
	120	0.0	0.0	0.0	0.0	0.0	0.0	121	0.0	0.0	0.0	0.0	0.0	0.0
96	125	0.0	0.0	0.0	0.0	0.0	0.0	126	0.0	0.0	0.0	0.0	0.0	0.0
	121	0.0	0.0	0.0	0.0	0.0	0.0	122	0.0	0.0	0.0	0.0	0.0	0.0
97	126	0.0	0.0	0.0	0.0	0.0	0.0	127	0.0	0.0	0.0	0.0	0.0	0.0
	122	0.0	0.0	0.0	0.0	0.0	0.0	123	0.0	0.0	0.0	0.0	0.0	0.0
98	26	0.0	0.0	0.0	0.0	0.0	0.0	128	0.0	0.0	0.0	0.0	0.0	0.0
	124	0.0	0.0	0.0	0.0	0.0	0.0	125	0.0	0.0	0.0	0.0	0.0	0.0
99	128	0.0	0.0	0.0	0.0	0.0	0.0	129	0.0	0.0	0.0	0.0	0.0	0.0
	125	0.0	0.0	0.0	0.0	0.0	0.0	126	0.0	0.0	0.0	0.0	0.0	0.0
100	129	0.0	0.0	0.0	0.0	0.0	0.0	27	0.0	0.0	0.0	0.0	0.0	0.0
	126	0.0	0.0	0.0	0.0	0.0	0.0	127	0.0	0.0	0.0	0.0	0.0	0.0
101	130	0.0	0.0	0.0	0.0	0.0	0.0	131	0.0	0.0	0.0	0.0	0.0	0.0
	68	0.0	0.0	0.0	0.0	0.0	0.0	64	0.0	0.0	0.0	0.0	0.0	0.0
102	131	0.0	0.0	0.0	0.0	0.0	0.0	132	0.0	0.0	0.0	0.0	0.0	0.0
	64	0.0	0.0	0.0	0.0	0.0	0.0	5	0.0	0.0	0.0	0.0	0.0	0.0
103	16	0.0	0.0	0.0	0.0	0.0	0.0	133	0.0	0.0	0.0	0.0	0.0	0.0
	10	0.0	0.0	0.0	0.0	0.0	0.0	130	0.0	0.0	0.0	0.0	0.0	0.0
104	133	0.0	0.0	0.0	0.0	0.0	0.0	134	0.0	0.0	0.0	0.0	0.0	0.0
	130	0.0	0.0	0.0	0.0	0.0	0.0	131	0.0	0.0	0.0	0.0	0.0	0.0
105	134	0.0	0.0	0.0	0.0	0.0	0.0	135	0.0	0.0	0.0	0.0	0.0	0.0
	131	0.0	0.0	0.0	0.0	0.0	0.0	132	0.0	0.0	0.0	0.0	0.0	0.0
106	3	0.0	0.0	0.0	0.0	0.0	0.0	136	0.0	0.0	0.0	0.0	0.0	0.0
	16	0.0	0.0	0.0	0.0	0.0	0.0	133	0.0	0.0	0.0	0.0	0.0	0.0
107	136	0.0	0.0	0.0	0.0	0.0	0.0	137	0.0	0.0	0.0	0.0	0.0	0.0
	133	0.0	0.0	0.0	0.0	0.0	0.0	134	0.0	0.0	0.0	0.0	0.0	0.0
108	137	0.0	0.0	0.0	0.0	0.0	0.0	138	0.0	0.0	0.0	0.0	0.0	0.0
	134	0.0	0.0	0.0	0.0	0.0	0.0	135	0.0	0.0	0.0	0.0	0.0	0.0
109	139	0.0	0.0	0.0	0.0	0.0	0.0	140	0.0	0.0	0.0	0.0	0.0	0.0
	3	0.0	0.0	0.0	0.0	0.0	0.0	136	0.0	0.0	0.0	0.0	0.0	0.0
110	140	0.0	0.0	0.0	0.0	0.0	0.0	141	0.0	0.0	0.0	0.0	0.0	0.0
	136	0.0	0.0	0.0	0.0	0.0	0.0	137	0.0	0.0	0.0	0.0	0.0	0.0
111	141	0.0	0.0	0.0	0.0	0.0	0.0	142	0.0	0.0	0.0	0.0	0.0	0.0
	137	0.0	0.0	0.0	0.0	0.0	0.0	138	0.0	0.0	0.0	0.0	0.0	0.0
112	143	0.0	0.0	0.0	0.0	0.0	0.0	144	0.0	0.0	0.0	0.0	0.0	0.0
	139	0.0	0.0	0.0	0.0	0.0	0.0	140	0.0	0.0	0.0	0.0	0.0	0.0
113	144	0.0	0.0	0.0	0.0	0.0	0.0	145	0.0	0.0	0.0	0.0	0.0	0.0
	140	0.0	0.0	0.0	0.0	0.0	0.0	141	0.0	0.0	0.0	0.0	0.0	0.0
114	145	0.0	0.0	0.0	0.0	0.0	0.0	146	0.0	0.0	0.0	0.0	0.0	0.0
	141	0.0	0.0	0.0	0.0	0.0	0.0	142	0.0	0.0	0.0	0.0	0.0	0.0
115	28	0.0	0.0	0.0	0.0	0.0	0.0	147	0.0	0.0	0.0	0.0	0.0	0.0
	143	0.0	0.0	0.0	0.0	0.0	0.0	144	0.0	0.0	0.0	0.0	0.0	0.0
116	147	0.0	0.0	0.0	0.0	0.0	0.0	148	0.0	0.0	0.0	0.0	0.0	0.0
	144	0.0	0.0	0.0	0.0	0.0	0.0	145	0.0	0.0	0.0	0.0	0.0	0.0
117	148	0.0	0.0	0.0	0.0	0.0	0.0	29	0.0	0.0	0.0	0.0	0.0	0.0
	145	0.0	0.0	0.0	0.0	0.0	0.0	146	0.0	0.0	0.0	0.0	0.0	0.0
118	101	0.0	0.0	0.0	0.0	0.0	0.0	115	0.0	0.0	0.0	0.0	0.0	0.0
	100	0.0	0.0	0.0	0.0	0.0	0.0	114	0.0	0.0	0.0	0.0	0.0	0.0
119	11	0.0	0.0	0.0	0.0	0.0	0.0	20	0.0	0.0	0.0	0.0	0.0	0.0
	101	0.0	0.0	0.0	0.0	0.0	0.0	115	0.0	0.0	0.0	0.0	0.0	0.0
120	149	0.0	0.0	0.0	0.0	0.0	0.0	150	0.0	0.0	0.0	0.0	0.0	0.0
	97	0.0	0.0	0.0	0.0	0.0	0.0	94	0.0	0.0	0.0	0.0	0.0	0.0
121	150	0.0	0.0	0.0	0.0	0.0	0.0	151	0.0	0.0	0.0	0.0	0.0	0.0
	94	0.0	0.0	0.0	0.0	0.0	0.0	18	0.0	0.0	0.0	0.0	0.0	0.0

Documento di proprietà **Snam Rete Gas**. La Società tutelerà i propri diritti in sede civile e penale a termini di legge.

FORZE: SISMA 0°°: MODO7: SHELL

Shell Nro	Nodo N.ro	Tx (kN)	Ty (kN)	Tz (kN)	Mx (kN*m)	My (kN*m)	Mz (kN*m)	Nodo N.ro	Tx (kN)	Ty (kN)	Tz (kN)	Mx (kN*m)	My (kN*m)	Mz (kN*m)
122	36	0.0	0.0	0.0	0.0	0.0	0.0	152	0.0	0.0	0.0	0.0	0.0	0.0
	35	0.0	0.0	0.0	0.0	0.0	0.0	149	0.0	0.0	0.0	0.0	0.0	0.0
123	152	0.0	0.0	0.0	0.0	0.0	0.0	153	0.0	0.0	0.0	0.0	0.0	0.0
	149	0.0	0.0	0.0	0.0	0.0	0.0	150	0.0	0.0	0.0	0.0	0.0	0.0
124	153	0.0	0.0	0.0	0.0	0.0	0.0	154	0.0	0.0	0.0	0.0	0.0	0.0
	150	0.0	0.0	0.0	0.0	0.0	0.0	151	0.0	0.0	0.0	0.0	0.0	0.0
125	25	0.0	0.0	0.0	0.0	0.0	0.0	155	0.0	0.0	0.0	0.0	0.0	0.0
	36	0.0	0.0	0.0	0.0	0.0	0.0	152	0.0	0.0	0.0	0.0	0.0	0.0
126	155	0.0	0.0	0.0	0.0	0.0	0.0	156	0.0	0.0	0.0	0.0	0.0	0.0
	152	0.0	0.0	0.0	0.0	0.0	0.0	153	0.0	0.0	0.0	0.0	0.0	0.0
127	156	0.0	0.0	0.0	0.0	0.0	0.0	157	0.0	0.0	0.0	0.0	0.0	0.0
	153	0.0	0.0	0.0	0.0	0.0	0.0	154	0.0	0.0	0.0	0.0	0.0	0.0
128	74	0.0	0.0	0.0	0.0	0.0	0.0	158	0.0	0.0	0.0	0.0	0.0	0.0
	25	0.0	0.0	0.0	0.0	0.0	0.0	155	0.0	0.0	0.0	0.0	0.0	0.0
129	158	0.0	0.0	0.0	0.0	0.0	0.0	159	0.0	0.0	0.0	0.0	0.0	0.0
	155	0.0	0.0	0.0	0.0	0.0	0.0	156	0.0	0.0	0.0	0.0	0.0	0.0
130	159	0.0	0.0	0.0	0.0	0.0	0.0	160	0.0	0.0	0.0	0.0	0.0	0.0
	156	0.0	0.0	0.0	0.0	0.0	0.0	157	0.0	0.0	0.0	0.0	0.0	0.0
131	75	0.0	0.0	0.0	0.0	0.0	0.0	161	0.0	0.0	0.0	0.0	0.0	0.0
	74	0.0	0.0	0.0	0.0	0.0	0.0	158	0.0	0.0	0.0	0.0	0.0	0.0
132	161	0.0	0.0	0.0	0.0	0.0	0.0	162	0.0	0.0	0.0	0.0	0.0	0.0
	158	0.0	0.0	0.0	0.0	0.0	0.0	159	0.0	0.0	0.0	0.0	0.0	0.0
133	162	0.0	0.0	0.0	0.0	0.0	0.0	163	0.0	0.0	0.0	0.0	0.0	0.0
	159	0.0	0.0	0.0	0.0	0.0	0.0	160	0.0	0.0	0.0	0.0	0.0	0.0
134	32	0.0	0.0	0.0	0.0	0.0	0.0	164	0.0	0.0	0.0	0.0	0.0	0.0
	75	0.0	0.0	0.0	0.0	0.0	0.0	161	0.0	0.0	0.0	0.0	0.0	0.0
135	164	0.0	0.0	0.0	0.0	0.0	0.0	165	0.0	0.0	0.0	0.0	0.0	0.0
	161	0.0	0.0	0.0	0.0	0.0	0.0	162	0.0	0.0	0.0	0.0	0.0	0.0
136	165	0.0	0.0	0.0	0.0	0.0	0.0	33	0.0	0.0	0.0	0.0	0.0	0.0
	162	0.0	0.0	0.0	0.0	0.0	0.0	163	0.0	0.0	0.0	0.0	0.0	0.0
137	166	0.0	0.0	0.0	0.0	0.0	0.0	167	0.0	0.0	0.0	0.0	0.0	0.0
	58	0.0	0.0	0.0	0.0	0.0	0.0	54	0.0	0.0	0.0	0.0	0.0	0.0
138	167	0.0	0.0	0.0	0.0	0.0	0.0	34	0.0	0.0	0.0	0.0	0.0	0.0
	54	0.0	0.0	0.0	0.0	0.0	0.0	7	0.0	0.0	0.0	0.0	0.0	0.0
139	135	0.0	0.0	0.0	0.0	0.0	0.0	168	0.0	0.0	0.0	0.0	0.0	0.0
	132	0.0	0.0	0.0	0.0	0.0	0.0	166	0.0	0.0	0.0	0.0	0.0	0.0
140	168	0.0	0.0	0.0	0.0	0.0	0.0	169	0.0	0.0	0.0	0.0	0.0	0.0
	166	0.0	0.0	0.0	0.0	0.0	0.0	167	0.0	0.0	0.0	0.0	0.0	0.0
141	169	0.0	0.0	0.0	0.0	0.0	0.0	37	0.0	0.0	0.0	0.0	0.0	0.0
	167	0.0	0.0	0.0	0.0	0.0	0.0	34	0.0	0.0	0.0	0.0	0.0	0.0
142	138	0.0	0.0	0.0	0.0	0.0	0.0	170	0.0	0.0	0.0	0.0	0.0	0.0
	135	0.0	0.0	0.0	0.0	0.0	0.0	168	0.0	0.0	0.0	0.0	0.0	0.0
143	170	0.0	0.0	0.0	0.0	0.0	0.0	171	0.0	0.0	0.0	0.0	0.0	0.0
	168	0.0	0.0	0.0	0.0	0.0	0.0	169	0.0	0.0	0.0	0.0	0.0	0.0
144	171	0.0	0.0	0.0	0.0	0.0	0.0	22	0.0	0.0	0.0	0.0	0.0	0.0
	169	0.0	0.0	0.0	0.0	0.0	0.0	37	0.0	0.0	0.0	0.0	0.0	0.0
145	142	0.0	0.0	0.0	0.0	0.0	0.0	172	0.0	0.0	0.0	0.0	0.0	0.0
	138	0.0	0.0	0.0	0.0	0.0	0.0	170	0.0	0.0	0.0	0.0	0.0	0.0
146	172	0.0	0.0	0.0	0.0	0.0	0.0	173	0.0	0.0	0.0	0.0	0.0	0.0
	170	0.0	0.0	0.0	0.0	0.0	0.0	171	0.0	0.0	0.0	0.0	0.0	0.0
147	173	0.0	0.0	0.0	0.0	0.0	0.0	110	0.0	0.0	0.0	0.0	0.0	0.0
	171	0.0	0.0	0.0	0.0	0.0	0.0	22	0.0	0.0	0.0	0.0	0.0	0.0
148	146	0.0	0.0	0.0	0.0	0.0	0.0	174	0.0	0.0	0.0	0.0	0.0	0.0
	142	0.0	0.0	0.0	0.0	0.0	0.0	172	0.0	0.0	0.0	0.0	0.0	0.0
149	174	0.0	0.0	0.0	0.0	0.0	0.0	175	0.0	0.0	0.0	0.0	0.0	0.0
	172	0.0	0.0	0.0	0.0	0.0	0.0	173	0.0	0.0	0.0	0.0	0.0	0.0
150	175	0.0	0.0	0.0	0.0	0.0	0.0	111	0.0	0.0	0.0	0.0	0.0	0.0
	173	0.0	0.0	0.0	0.0	0.0	0.0	110	0.0	0.0	0.0	0.0	0.0	0.0
151	29	0.0	0.0	0.0	0.0	0.0	0.0	176	0.0	0.0	0.0	0.0	0.0	0.0
	146	0.0	0.0	0.0	0.0	0.0	0.0	174	0.0	0.0	0.0	0.0	0.0	0.0
152	176	0.0	0.0	0.0	0.0	0.0	0.0	177	0.0	0.0	0.0	0.0	0.0	0.0
	174	0.0	0.0	0.0	0.0	0.0	0.0	175	0.0	0.0	0.0	0.0	0.0	0.0
153	177	0.0	0.0	0.0	0.0	0.0	0.0	30	0.0	0.0	0.0	0.0	0.0	0.0
	175	0.0	0.0	0.0	0.0	0.0	0.0	111	0.0	0.0	0.0	0.0	0.0	0.0
154	178	0.0	0.0	0.0	0.0	0.0	0.0	179	0.0	0.0	0.0	0.0	0.0	0.0
	93	0.0	0.0	0.0	0.0	0.0	0.0	92	0.0	0.0	0.0	0.0	0.0	0.0
155	179	0.0	0.0	0.0	0.0	0.0	0.0	12	0.0	0.0	0.0	0.0	0.0	0.0
	92	0.0	0.0	0.0	0.0	0.0	0.0	17	0.0	0.0	0.0	0.0	0.0	0.0
156	154	0.0	0.0	0.0	0.0	0.0	0.0	180	0.0	0.0	0.0	0.0	0.0	0.0
	151	0.0	0.0	0.0	0.0	0.0	0.0	178	0.0	0.0	0.0	0.0	0.0	0.0
157	180	0.0	0.0	0.0	0.0	0.0	0.0	181	0.0	0.0	0.0	0.0	0.0	0.0
	178	0.0	0.0	0.0	0.0	0.0	0.0	179	0.0	0.0	0.0	0.0	0.0	0.0
158	181	0.0	0.0	0.0	0.0	0.0	0.0	15	0.0	0.0	0.0	0.0	0.0	0.0
	179	0.0	0.0	0.0	0.0	0.0	0.0	12	0.0	0.0	0.0	0.0	0.0	0.0
159	157	0.0	0.0	0.0	0.0	0.0	0.0	182	0.0	0.0	0.0	0.0	0.0	0.0
	154	0.0	0.0	0.0	0.0	0.0	0.0	180	0.0	0.0	0.0	0.0	0.0	0.0
160	182	0.0	0.0	0.0	0.0	0.0	0.0	183	0.0	0.0	0.0	0.0	0.0	0.0
	180	0.0	0.0	0.0	0.0	0.0	0.0	181	0.0	0.0	0.0	0.0	0.0	0.0
161	183	0.0	0.0	0.0	0.0	0.0	0.0	9	0.0	0.0	0.0	0.0	0.0	0.0
	181	0.0	0.0	0.0	0.0	0.0	0.0	15	0.0	0.0	0.0	0.0	0.0	0.0

Documento di proprietà **Snam Rete Gas**. La Società tutelerà i propri diritti in sede civile e penale a termini di legge.

FORZE: SISMA 0°°: MODO7: SHELL

Shell Nro	Nodo N.ro	Tx (kN)	Ty (kN)	Tz (kN)	Mx (kN*m)	My (kN*m)	Mz (kN*m)	Nodo N.ro	Tx (kN)	Ty (kN)	Tz (kN)	Mx (kN*m)	My (kN*m)	Mz (kN*m)
162	160	0.0	0.0	0.0	0.0	0.0	0.0	184	0.0	0.0	0.0	0.0	0.0	0.0
	157	0.0	0.0	0.0	0.0	0.0	0.0	182	0.0	0.0	0.0	0.0	0.0	0.0
163	184	0.0	0.0	0.0	0.0	0.0	0.0	185	0.0	0.0	0.0	0.0	0.0	0.0
	182	0.0	0.0	0.0	0.0	0.0	0.0	183	0.0	0.0	0.0	0.0	0.0	0.0
164	185	0.0	0.0	0.0	0.0	0.0	0.0	120	0.0	0.0	0.0	0.0	0.0	0.0
	183	0.0	0.0	0.0	0.0	0.0	0.0	9	0.0	0.0	0.0	0.0	0.0	0.0
165	163	0.0	0.0	0.0	0.0	0.0	0.0	186	0.0	0.0	0.0	0.0	0.0	0.0
	160	0.0	0.0	0.0	0.0	0.0	0.0	184	0.0	0.0	0.0	0.0	0.0	0.0
166	186	0.0	0.0	0.0	0.0	0.0	0.0	187	0.0	0.0	0.0	0.0	0.0	0.0
	184	0.0	0.0	0.0	0.0	0.0	0.0	185	0.0	0.0	0.0	0.0	0.0	0.0
167	187	0.0	0.0	0.0	0.0	0.0	0.0	124	0.0	0.0	0.0	0.0	0.0	0.0
	185	0.0	0.0	0.0	0.0	0.0	0.0	120	0.0	0.0	0.0	0.0	0.0	0.0
168	33	0.0	0.0	0.0	0.0	0.0	0.0	188	0.0	0.0	0.0	0.0	0.0	0.0
	163	0.0	0.0	0.0	0.0	0.0	0.0	186	0.0	0.0	0.0	0.0	0.0	0.0
169	188	0.0	0.0	0.0	0.0	0.0	0.0	189	0.0	0.0	0.0	0.0	0.0	0.0
	186	0.0	0.0	0.0	0.0	0.0	0.0	187	0.0	0.0	0.0	0.0	0.0	0.0
170	189	0.0	0.0	0.0	0.0	0.0	0.0	26	0.0	0.0	0.0	0.0	0.0	0.0
	187	0.0	0.0	0.0	0.0	0.0	0.0	124	0.0	0.0	0.0	0.0	0.0	0.0
171	190	0.0	0.0	0.0	0.0	0.0	0.0	191	0.0	0.0	0.0	0.0	0.0	0.0
	73	0.0	0.0	0.0	0.0	0.0	0.0	72	0.0	0.0	0.0	0.0	0.0	0.0
172	191	0.0	0.0	0.0	0.0	0.0	0.0	139	0.0	0.0	0.0	0.0	0.0	0.0
	72	0.0	0.0	0.0	0.0	0.0	0.0	3	0.0	0.0	0.0	0.0	0.0	0.0
173	127	0.0	0.0	0.0	0.0	0.0	0.0	192	0.0	0.0	0.0	0.0	0.0	0.0
	123	0.0	0.0	0.0	0.0	0.0	0.0	190	0.0	0.0	0.0	0.0	0.0	0.0
174	192	0.0	0.0	0.0	0.0	0.0	0.0	193	0.0	0.0	0.0	0.0	0.0	0.0
	190	0.0	0.0	0.0	0.0	0.0	0.0	191	0.0	0.0	0.0	0.0	0.0	0.0
175	193	0.0	0.0	0.0	0.0	0.0	0.0	143	0.0	0.0	0.0	0.0	0.0	0.0
	191	0.0	0.0	0.0	0.0	0.0	0.0	139	0.0	0.0	0.0	0.0	0.0	0.0
176	27	0.0	0.0	0.0	0.0	0.0	0.0	194	0.0	0.0	0.0	0.0	0.0	0.0
	127	0.0	0.0	0.0	0.0	0.0	0.0	192	0.0	0.0	0.0	0.0	0.0	0.0
177	194	0.0	0.0	0.0	0.0	0.0	0.0	195	0.0	0.0	0.0	0.0	0.0	0.0
	192	0.0	0.0	0.0	0.0	0.0	0.0	193	0.0	0.0	0.0	0.0	0.0	0.0
178	195	0.0	0.0	0.0	0.0	0.0	0.0	28	0.0	0.0	0.0	0.0	0.0	0.0
	193	0.0	0.0	0.0	0.0	0.0	0.0	143	0.0	0.0	0.0	0.0	0.0	0.0
179	52	0.0	0.0	0.0	0.0	0.0	0.0	119	0.0	0.0	0.0	0.0	0.0	0.0
	53	0.0	0.0	0.0	0.0	0.0	0.0	118	0.0	0.0	0.0	0.0	0.0	0.0
180	7	0.0	0.0	0.0	0.0	0.0	0.0	34	0.0	0.0	0.0	0.0	0.0	0.0
	52	0.0	0.0	0.0	0.0	0.0	0.0	119	0.0	0.0	0.0	0.0	0.0	0.0

FORZE: SISMA 0°°: MODO8: SHELL

Shell Nro	Nodo N.ro	Tx (kN)	Ty (kN)	Tz (kN)	Mx (kN*m)	My (kN*m)	Mz (kN*m)	Nodo N.ro	Tx (kN)	Ty (kN)	Tz (kN)	Mx (kN*m)	My (kN*m)	Mz (kN*m)
1	38	0.0	0.0	0.0	0.0	0.0	0.0	39	0.0	0.0	0.0	0.0	0.0	0.0
	14	0.0	0.0	0.0	0.0	0.0	0.0	1	0.0	0.0	0.0	0.0	0.0	0.0
2	6	0.0	0.0	0.0	0.0	0.0	0.0	44	0.0	0.0	0.0	0.0	0.0	0.0
	2	0.0	0.0	0.0	0.0	0.0	0.0	42	0.0	0.0	0.0	0.0	0.0	0.0
3	39	0.0	0.0	0.0	0.0	0.0	0.0	44	0.0	0.0	0.0	0.0	0.0	0.0
	1	0.0	0.0	0.0	0.0	0.0	0.0	6	0.0	0.0	0.0	0.0	0.0	0.0
4	46	0.0	0.0	0.0	0.0	0.0	0.0	47	0.0	0.0	0.0	0.0	0.0	0.0
	10	0.0	0.0	0.0	0.0	0.0	0.0	16	0.0	0.0	0.0	0.0	0.0	0.0
5	50	0.0	0.0	0.0	0.0	0.0	0.0	46	0.0	0.0	0.0	0.0	0.0	0.0
	4	0.0	0.0	0.0	0.0	0.0	0.0	10	0.0	0.0	0.0	0.0	0.0	0.0
6	54	0.0	0.0	0.0	0.0	0.0	0.0	55	0.0	0.0	0.0	0.0	0.0	0.0
	7	0.0	0.0	0.0	0.0	0.0	0.0	52	0.0	0.0	0.0	0.0	0.0	0.0
7	64	0.0	0.0	0.0	0.0	0.0	0.0	65	0.0	0.0	0.0	0.0	0.0	0.0
	5	0.0	0.0	0.0	0.0	0.0	0.0	62	0.0	0.0	0.0	0.0	0.0	0.0
8	47	0.0	0.0	0.0	0.0	0.0	0.0	72	0.0	0.0	0.0	0.0	0.0	0.0
	16	0.0	0.0	0.0	0.0	0.0	0.0	3	0.0	0.0	0.0	0.0	0.0	0.0
9	76	0.0	0.0	0.0	0.0	0.0	0.0	77	0.0	0.0	-0.1	0.0	0.0	0.0
	25	0.0	0.0	0.0	0.0	0.0	0.0	74	0.0	0.0	0.1	0.0	0.0	0.0
10	38	0.0	0.0	0.0	0.0	0.0	0.0	86	0.0	0.0	0.0	0.0	0.0	0.0
	14	0.0	0.0	0.0	0.0	0.0	0.0	71	0.0	0.0	0.0	0.0	0.0	0.0
11	94	0.0	0.0	0.0	0.0	0.0	0.0	95	0.0	0.0	0.0	0.0	0.0	0.0
	18	0.0	0.0	0.0	0.0	0.0	0.0	91	0.0	0.0	0.0	0.0	0.0	0.0
12	102	0.0	0.0	0.0	0.0	0.0	0.0	103	0.0	0.0	0.0	0.0	0.0	0.0
	21	0.0	0.1	0.1	0.0	0.0	0.0	84	0.0	0.0	0.0	0.0	0.0	0.0
13	112	0.0	0.0	0.0	0.0	0.0	0.0	76	0.0	0.0	-0.1	0.0	0.0	0.0
	36	0.0	0.0	0.0	0.0	0.0	0.0	25	0.0	0.0	0.1	0.0	0.0	0.0
14	114	0.0	0.0	0.1	0.0	0.0	0.0	112	0.0	0.0	-0.1	0.0	0.0	0.0
	35	0.0	0.0	0.0	0.0	0.0	0.0	36	0.0	0.0	0.0	0.0	0.0	0.0
15	24	0.0	0.1	0.1	0.0	0.0	0.0	116	0.0	0.0	0.0	0.0	0.0	0.0
	21	0.0	0.0	-0.1	0.0	0.1	0.0	102	0.0	0.0	0.1	0.0	0.0	0.0
16	118	0.0	0.0	-0.2	0.0	0.0	0.0	116	0.0	0.0	0.0	0.0	0.0	0.0
	20	0.0	0.0	0.2	0.0	-0.1	0.0	24	0.0	0.0	-0.1	0.0	0.0	0.0
17	120	0.0	0.0	0.0	0.0	0.0	0.0	121	0.0	0.0	0.0	0.0	0.0	0.0
	9	0.0	0.0	0.0	0.0	0.0	0.0	43	0.0	0.0	0.0	0.0	0.0	0.0
18	10	0.0	0.0	0.0	0.0	0.0	0.0	130	0.0	0.0	0.0	0.0	0.0	0.0
	4	0.0	0.0	0.0	0.0	0.0	0.0	68	0.0	0.0	0.0	0.0	0.0	0.0
19	100	0.0	0.0	0.0	0.0	0.0	0.0	114	0.0	0.0	0.0	0.0	0.0	0.0
	19	0.0	0.0	0.0	0.0	0.0	0.0	35	0.0	0.0	0.0	0.0	0.0	0.0

Documento di proprietà **Snam Rete Gas**. La Società tutelerà i propri diritti in sede civile e penale a termini di legge.

FORZE: SISMA 0°°: MODO8: SHELL

Shell Nro	Nodo N.ro	Tx (kN)	Ty (kN)	Tz (kN)	Mx (kN*m)	My (kN*m)	Mz (kN*m)	Nodo N.ro	Tx (kN)	Ty (kN)	Tz (kN)	Mx (kN*m)	My (kN*m)	Mz (kN*m)
20	35	0.0	0.0	0.0	0.0	0.0	0.0	149	0.0	0.0	0.0	0.0	0.0	0.0
	19	0.0	0.0	0.0	0.0	0.0	0.0	97	0.0	0.0	0.0	0.0	0.0	0.0
21	132	0.0	0.0	0.0	0.0	0.0	0.0	166	0.0	0.0	0.0	0.0	0.0	0.0
	5	0.0	0.0	0.0	0.0	0.0	0.0	58	0.0	0.0	0.0	0.0	0.0	0.0
22	151	0.0	0.0	0.0	0.0	0.0	0.0	178	0.0	0.0	0.0	0.0	0.0	0.0
	18	0.0	0.0	0.0	0.0	0.0	0.0	93	0.0	0.0	0.0	0.0	0.0	0.0
23	123	0.0	0.0	0.0	0.0	0.0	0.0	190	0.0	0.0	0.0	0.0	0.0	0.0
	2	0.1	0.0	0.0	0.0	0.0	0.0	73	0.0	0.0	0.0	0.0	0.0	0.0
24	53	0.0	0.0	-0.1	0.0	0.0	0.0	118	0.0	0.0	0.1	0.0	0.0	0.0
	11	0.0	0.0	-0.2	0.0	0.0	0.0	20	0.0	0.0	0.2	0.0	0.0	0.0
25	40	0.0	0.0	0.0	0.0	0.0	0.0	41	0.0	0.0	0.0	0.0	0.0	0.0
	38	0.0	0.0	0.0	0.0	0.0	0.0	39	0.0	0.0	0.0	0.0	0.0	0.0
26	17	0.0	0.0	0.0	0.0	0.0	0.0	12	0.0	0.0	0.0	0.0	0.0	0.0
	40	0.0	0.0	0.0	0.0	0.0	0.0	41	0.0	0.0	0.0	0.0	0.0	0.0
27	44	0.0	0.0	0.0	0.0	0.0	0.0	45	0.0	0.0	0.0	0.0	0.0	0.0
	42	0.0	0.0	0.0	0.0	0.0	0.0	43	0.0	0.0	0.0	0.0	0.0	0.0
28	45	0.0	0.0	0.0	0.0	0.0	0.0	15	0.0	0.0	0.0	0.0	0.0	0.0
	43	0.0	0.0	0.0	0.0	0.0	0.0	9	0.0	0.0	0.0	0.0	0.0	0.0
29	41	0.0	0.0	0.0	0.0	0.0	0.0	45	0.0	0.0	0.0	0.0	0.0	0.0
	39	0.0	0.0	0.0	0.0	0.0	0.0	44	0.0	0.0	0.0	0.0	0.0	0.0
30	12	0.0	0.0	0.0	0.0	0.0	0.0	15	0.0	0.0	0.0	0.0	0.0	0.0
	41	0.0	0.0	0.0	0.0	0.0	0.0	45	0.0	0.0	0.0	0.0	0.0	0.0
31	48	0.0	0.0	0.0	0.0	0.0	0.0	49	0.0	0.0	0.0	0.0	0.0	0.0
	46	0.0	0.0	0.0	0.0	0.0	0.0	47	0.0	0.0	0.0	0.0	0.0	0.0
32	1	0.0	0.0	0.0	0.0	0.0	0.0	8	0.0	0.0	0.0	0.0	0.0	0.0
	48	0.0	0.0	0.0	0.0	0.0	0.0	49	0.0	0.0	0.0	0.0	0.0	0.0
33	51	0.0	0.0	0.0	0.0	0.0	0.0	48	0.0	0.0	0.0	0.0	0.0	0.0
	50	0.0	0.0	0.0	0.0	0.0	0.0	46	0.0	0.0	0.0	0.0	0.0	0.0
34	14	0.0	0.0	0.0	0.0	0.0	0.0	1	0.0	0.0	0.0	0.0	0.0	0.0
	51	0.0	0.0	0.0	0.0	0.0	0.0	48	0.0	0.0	0.0	0.0	0.0	0.0
35	55	0.0	0.0	0.0	0.0	0.0	0.0	56	0.0	0.0	0.0	0.0	0.0	0.0
	52	0.0	0.0	0.0	0.0	0.0	0.0	53	0.0	0.0	0.0	0.0	0.0	0.0
36	56	0.0	0.0	0.0	0.0	0.0	0.0	57	0.0	0.0	0.0	0.0	0.0	0.0
	53	0.0	0.0	0.0	0.0	0.0	0.0	11	0.0	0.0	0.0	0.0	0.0	0.0
37	58	0.0	0.0	0.0	0.0	0.0	0.0	59	0.0	0.0	0.0	0.0	0.0	0.0
	54	0.0	0.0	0.0	0.0	0.0	0.0	55	0.0	0.0	0.0	0.0	0.0	0.0
38	59	0.0	0.0	0.0	0.0	0.0	0.0	60	0.0	0.0	0.0	0.0	0.0	0.0
	55	0.0	0.0	0.0	0.0	0.0	0.0	56	0.0	0.0	0.0	0.0	0.0	0.0
39	60	0.0	0.0	0.0	0.0	0.0	0.0	61	0.0	0.0	0.0	0.0	0.0	0.0
	56	0.0	0.0	0.0	0.0	0.0	0.0	57	0.0	0.0	0.0	0.0	0.0	0.0
40	5	0.0	0.0	0.0	0.0	0.0	0.0	62	0.0	0.0	0.0	0.0	0.0	0.0
	58	0.0	0.0	0.0	0.0	0.0	0.0	59	0.0	0.0	0.0	0.0	0.0	0.0
41	62	0.0	0.0	0.0	0.0	0.0	0.0	63	0.0	0.0	0.0	0.0	0.0	0.0
	59	0.0	0.0	0.0	0.0	0.0	0.0	60	0.0	0.0	0.0	0.0	0.0	0.0
42	63	0.0	0.0	0.0	0.0	0.0	0.0	13	0.0	0.0	0.0	0.0	0.0	0.0
	60	0.0	0.0	0.0	0.0	0.0	0.0	61	0.0	0.0	0.0	0.0	0.0	0.0
43	65	0.0	0.0	0.0	0.0	0.0	0.0	66	0.0	0.0	0.0	0.0	0.0	0.0
	62	0.0	0.0	0.0	0.0	0.0	0.0	63	0.0	0.0	0.0	0.0	0.0	0.0
44	66	0.0	0.0	0.0	0.0	0.0	0.0	67	0.0	0.0	0.0	0.0	0.0	0.0
	63	0.0	0.0	0.0	0.0	0.0	0.0	13	0.0	0.0	0.0	0.0	0.0	0.0
45	68	0.0	0.0	0.0	0.0	0.0	0.0	69	0.0	0.0	0.0	0.0	0.0	0.0
	64	0.0	0.0	0.0	0.0	0.0	0.0	65	0.0	0.0	0.0	0.0	0.0	0.0
46	69	0.0	0.0	0.0	0.0	0.0	0.0	70	0.0	0.0	0.0	0.0	0.0	0.0
	65	0.0	0.0	0.0	0.0	0.0	0.0	66	0.0	0.0	0.0	0.0	0.0	0.0
47	70	0.0	0.0	0.0	0.0	0.0	0.0	71	0.0	0.0	0.0	0.0	0.0	0.0
	66	0.0	0.0	0.0	0.0	0.0	0.0	67	0.0	0.0	0.0	0.0	0.0	0.0
48	4	0.0	0.0	0.0	0.0	0.0	0.0	50	0.0	0.0	0.0	0.0	0.0	0.0
	68	0.0	0.0	0.0	0.0	0.0	0.0	69	0.0	0.0	0.0	0.0	0.0	0.0
49	50	0.0	0.0	0.0	0.0	0.0	0.0	51	0.0	0.0	0.0	0.0	0.0	0.0
	69	0.0	0.0	0.0	0.0	0.0	0.0	70	0.0	0.0	0.0	0.0	0.0	0.0
50	51	0.0	0.0	0.0	0.0	0.0	0.0	14	0.0	0.0	0.0	0.0	0.0	0.0
	70	0.0	0.0	0.0	0.0	0.0	0.0	71	0.0	0.0	0.0	0.0	0.0	0.0
51	49	0.0	0.0	0.0	0.0	0.0	0.0	73	0.0	0.0	0.0	0.0	0.0	0.0
	47	0.0	0.0	0.0	0.0	0.0	0.0	72	0.0	0.0	0.0	0.0	0.0	0.0
52	8	0.0	0.0	0.0	0.0	0.0	0.0	2	0.0	0.0	0.0	0.0	0.0	0.0
	49	0.0	0.0	0.0	0.0	0.0	0.0	73	0.0	0.0	0.0	0.0	0.0	0.0
53	77	0.0	0.0	-0.1	0.0	0.0	0.0	78	0.0	0.0	0.0	0.0	0.0	0.0
	74	0.0	0.0	0.1	0.0	0.0	0.0	75	0.0	0.0	0.0	0.0	0.0	0.0
54	78	0.0	0.0	-0.1	0.0	0.0	0.0	79	0.0	0.0	0.1	0.0	0.0	0.0
	75	0.0	0.0	0.1	0.0	0.0	0.0	32	0.0	0.0	-0.1	0.0	0.0	0.0
55	80	0.0	0.0	0.0	0.0	0.0	0.0	81	0.0	0.0	-0.1	0.0	0.0	0.0
	76	0.0	0.0	0.0	0.0	0.0	0.0	77	0.0	0.0	0.0	0.0	0.0	0.0
56	81	0.0	0.0	-0.1	0.0	0.0	0.0	82	0.0	0.0	0.0	0.0	0.0	0.0
	77	0.0	0.0	0.1	0.0	0.0	0.0	78	0.0	0.0	0.0	0.0	0.0	0.0
57	82	0.0	0.0	-0.1	0.0	0.0	0.0	83	0.0	0.0	0.1	0.0	0.0	0.0
	78	0.0	0.0	0.1	0.0	0.0	0.0	79	0.0	0.0	-0.1	0.0	0.0	0.0
58	21	0.0	-0.1	0.1	0.0	0.0	0.0	84	0.0	0.0	0.0	0.0	0.0	0.0
	80	0.0	0.0	0.0	0.0	0.0	0.0	81	0.0	0.0	0.0	0.0	0.0	0.0
59	84	0.0	0.0	0.0	0.0	0.0	0.0	85	0.0	0.0	0.0	0.0	0.0	0.0
	81	0.0	0.0	0.0	0.0	0.0	0.0	82	0.0	0.0	0.0	0.0	0.0	0.0

Documento di proprietà **Snam Rete Gas**. La Società tutelerà i propri diritti in sede civile e penale a termini di legge.

FORZE: SISMA 0°°: MODO8: SHELL

Shell Nro	Nodo N.ro	Tx (kN)	Ty (kN)	Tz (kN)	Mx (kN*m)	My (kN*m)	Mz (kN*m)	Nodo N.ro	Tx (kN)	Ty (kN)	Tz (kN)	Mx (kN*m)	My (kN*m)	Mz (kN*m)
60	85	0.0	0.0	-0.1	0.0	0.0	0.0	31	0.0	0.0	0.0	0.0	0.0	0.0
	82	0.0	0.0	0.0	0.0	0.0	0.0	83	0.0	0.0	0.0	0.0	0.0	0.0
61	86	0.0	0.0	0.0	0.0	0.0	0.0	87	0.0	0.0	0.0	0.0	0.0	0.0
	71	0.0	0.0	0.0	0.0	0.0	0.0	67	0.0	0.0	0.0	0.0	0.0	0.0
62	87	0.0	0.0	0.0	0.0	0.0	0.0	88	0.0	0.0	0.0	0.0	0.0	0.0
	67	0.0	0.0	0.0	0.0	0.0	0.0	13	0.0	0.0	0.0	0.0	0.0	0.0
63	40	0.0	0.0	0.0	0.0	0.0	0.0	89	0.0	0.0	0.0	0.0	0.0	0.0
	38	0.0	0.0	0.0	0.0	0.0	0.0	86	0.0	0.0	0.0	0.0	0.0	0.0
64	89	0.0	0.0	0.0	0.0	0.0	0.0	90	0.0	0.0	0.0	0.0	0.0	0.0
	86	0.0	0.0	0.0	0.0	0.0	0.0	87	0.0	0.0	0.0	0.0	0.0	0.0
65	90	0.0	0.0	0.0	0.0	0.0	0.0	91	0.0	0.0	0.0	0.0	0.0	0.0
	87	0.0	0.0	0.0	0.0	0.0	0.0	88	0.0	0.0	0.0	0.0	0.0	0.0
66	17	0.0	0.0	0.0	0.0	0.0	0.0	92	0.0	0.0	0.0	0.0	0.0	0.0
	40	0.0	0.0	0.0	0.0	0.0	0.0	89	0.0	0.0	0.0	0.0	0.0	0.0
67	92	0.0	0.0	0.0	0.0	0.0	0.0	93	0.0	0.0	0.0	0.0	0.0	0.0
	89	0.0	0.0	0.0	0.0	0.0	0.0	90	0.0	0.0	0.0	0.0	0.0	0.0
68	93	0.0	0.0	0.0	0.0	0.0	0.0	18	0.0	0.0	0.0	0.0	0.0	0.0
	90	0.0	0.0	0.0	0.0	0.0	0.0	91	0.0	0.0	0.0	0.0	0.0	0.0
69	95	0.0	0.0	0.0	0.0	0.0	0.0	96	0.0	0.0	0.0	0.0	0.0	0.0
	91	0.0	0.0	0.0	0.0	0.0	0.0	88	0.0	0.0	0.0	0.0	0.0	0.0
70	96	0.0	0.0	0.0	0.0	0.0	0.0	61	0.0	0.0	0.0	0.0	0.0	0.0
	88	0.0	0.0	0.0	0.0	0.0	0.0	13	0.0	0.0	0.0	0.0	0.0	0.0
71	97	0.0	0.0	0.0	0.0	0.0	0.0	98	0.0	0.0	0.0	0.0	0.0	0.0
	94	0.0	0.0	0.0	0.0	0.0	0.0	95	0.0	0.0	0.0	0.0	0.0	0.0
72	98	0.0	0.0	0.0	0.0	0.0	0.0	99	0.0	0.0	0.0	0.0	0.0	0.0
	95	0.0	0.0	0.0	0.0	0.0	0.0	96	0.0	0.0	0.0	0.0	0.0	0.0
73	99	0.0	0.0	0.0	0.0	0.0	0.0	57	0.0	0.0	0.0	0.0	0.0	0.0
	96	0.0	0.0	0.0	0.0	0.0	0.0	61	0.0	0.0	0.0	0.0	0.0	0.0
74	19	0.0	0.0	0.0	0.0	0.0	0.0	100	0.0	0.0	0.0	0.0	0.0	0.0
	97	0.0	0.0	0.0	0.0	0.0	0.0	98	0.0	0.0	0.0	0.0	0.0	0.0
75	100	0.0	0.0	0.0	0.0	0.0	0.0	101	0.0	0.0	0.0	0.0	0.0	0.0
	98	0.0	0.0	0.0	0.0	0.0	0.0	99	0.0	0.0	0.0	0.0	0.0	0.0
76	101	0.0	0.0	0.0	0.0	0.0	0.0	11	0.0	0.0	0.0	0.0	0.0	0.0
	99	0.0	0.0	0.0	0.0	0.0	0.0	57	0.0	0.0	0.0	0.0	0.0	0.0
77	103	0.0	0.0	0.0	0.0	0.0	0.0	104	0.0	0.0	0.0	0.0	0.0	0.0
	84	0.0	0.0	-0.1	0.0	0.0	0.0	85	0.0	0.0	0.0	0.0	0.0	0.0
78	104	0.0	0.0	0.0	0.0	0.0	0.0	105	0.0	0.0	0.0	0.0	0.0	0.0
	85	0.0	0.0	-0.1	0.0	0.0	0.0	31	0.0	0.0	0.1	0.0	0.0	0.0
79	106	0.0	0.0	0.0	0.0	0.0	0.0	107	0.0	0.0	0.1	0.0	0.0	0.0
	102	0.0	0.0	0.0	0.0	0.0	0.0	103	0.0	0.0	-0.1	0.0	0.0	0.0
80	107	0.0	0.0	0.1	0.0	0.0	0.0	108	0.0	0.0	0.0	0.0	0.0	0.0
	103	0.0	0.0	-0.1	0.0	0.0	0.0	104	0.0	0.0	0.0	0.0	0.0	0.0
81	108	0.0	0.0	0.1	0.0	0.0	0.0	109	0.0	0.0	-0.1	0.0	0.0	0.0
	104	0.0	0.0	-0.1	0.0	0.0	0.0	105	0.0	0.0	0.1	0.0	0.0	0.0
82	22	0.0	0.0	0.0	0.0	0.0	0.0	110	0.0	0.0	0.1	0.0	0.0	0.0
	106	0.0	0.0	0.0	0.0	0.0	0.0	107	0.0	0.0	-0.1	0.0	0.0	0.0
83	110	0.0	0.0	0.1	0.0	0.0	0.0	111	0.0	0.0	0.0	0.0	0.0	0.0
	107	0.0	0.0	-0.1	0.0	0.0	0.0	108	0.0	0.0	0.0	0.0	0.0	0.0
84	111	0.0	0.0	0.1	0.0	0.0	0.0	30	0.0	0.0	0.0	0.0	0.0	0.0
	108	0.0	0.0	-0.1	0.0	0.0	0.0	109	0.0	0.0	0.1	0.0	0.0	0.0
85	113	0.0	0.0	0.1	0.0	0.0	0.0	80	0.0	0.0	-0.1	0.0	0.0	0.0
	112	0.0	0.0	0.0	0.0	0.0	0.0	76	0.0	0.0	0.1	0.0	0.0	0.0
86	23	0.0	0.0	0.1	0.0	0.0	0.0	21	0.0	0.0	-0.1	0.0	0.0	0.0
	113	0.0	0.0	0.0	0.0	0.0	0.0	80	0.0	0.0	0.1	0.0	0.0	0.0
87	115	0.0	0.0	0.1	0.0	0.0	0.0	113	0.0	0.0	-0.1	0.0	0.0	0.0
	114	0.0	0.0	-0.1	0.0	0.0	0.0	112	0.0	0.0	0.1	0.0	0.0	0.0
88	20	0.0	0.0	0.2	0.0	-0.1	0.0	23	0.0	0.0	-0.1	0.0	0.0	0.0
	115	0.0	0.0	-0.2	0.0	0.0	0.0	113	0.0	0.0	0.0	0.0	0.0	0.0
89	116	0.0	0.0	0.1	0.0	0.0	0.0	117	0.0	0.0	0.0	0.0	0.0	0.0
	102	0.0	0.0	-0.1	0.0	0.0	0.0	106	0.0	0.0	0.1	0.0	0.0	0.0
90	117	0.0	0.0	0.0	0.0	0.0	0.0	37	0.0	0.0	0.0	0.0	0.0	0.0
	106	0.0	0.0	-0.1	0.0	0.0	0.0	22	0.0	0.0	0.1	0.0	0.0	0.0
91	119	0.0	0.0	-0.1	0.0	0.0	0.0	117	0.0	0.0	0.1	0.0	0.0	0.0
	118	0.0	0.0	0.1	0.0	0.0	0.0	116	0.0	0.0	-0.1	0.0	0.0	0.0
92	34	0.0	0.0	-0.1	0.0	0.0	0.0	37	0.0	0.0	0.0	0.0	0.0	0.0
	119	0.0	0.0	0.1	0.0	0.0	0.0	117	0.0	0.0	0.0	0.0	0.0	0.0
93	121	0.0	0.0	0.0	0.0	0.0	0.0	122	0.0	0.0	0.0	0.0	0.0	0.0
	43	0.0	0.0	0.0	0.0	0.0	0.0	42	0.0	0.0	0.0	0.0	0.0	0.0
94	122	0.0	0.0	0.0	0.0	0.0	0.0	123	0.0	0.0	0.0	0.0	0.0	0.0
	42	0.0	0.0	0.0	0.0	0.0	0.0	2	0.0	0.0	0.0	0.0	0.0	0.0
95	124	0.0	0.0	0.0	0.0	0.0	0.0	125	0.0	0.0	0.0	0.0	0.0	0.0
	120	0.0	0.0	0.0	0.0	0.0	0.0	121	0.0	0.0	0.0	0.0	0.0	0.0
96	125	0.0	0.0	0.0	0.0	0.0	0.0	126	0.0	0.0	0.0	0.0	0.0	0.0
	121	0.0	0.0	0.0	0.0	0.0	0.0	122	0.0	0.0	0.0	0.0	0.0	0.0
97	126	0.0	0.0	0.0	0.0	0.0	0.0	127	0.0	0.0	0.0	0.0	0.0	0.0
	122	0.0	0.0	0.0	0.0	0.0	0.0	123	0.0	0.0	0.0	0.0	0.0	0.0
98	26	0.0	0.0	0.0	0.0	0.0	0.0	128	0.0	0.0	0.0	0.0	0.0	0.0
	124	0.0	0.0	0.0	0.0	0.0	0.0	125	0.0	0.0	0.0	0.0	0.0	0.0
99	128	0.0	0.0	0.0	0.0	0.0	0.0	129	0.0	0.0	0.0	0.0	0.0	0.0
	125	0.0	0.0	0.0	0.0	0.0	0.0	126	0.0	0.0	0.0	0.0	0.0	0.0

Documento di proprietà **Snam Rete Gas**. La Società tutelerà i propri diritti in sede civile e penale a termini di legge.

FORZE: SISMA 0°°: MODO8: SHELL

Shell Nro	Nodo N.ro	Tx (kN)	Ty (kN)	Tz (kN)	Mx (kN*m)	My (kN*m)	Mz (kN*m)	Nodo N.ro	Tx (kN)	Ty (kN)	Tz (kN)	Mx (kN*m)	My (kN*m)	Mz (kN*m)
100	129	0.0	0.0	0.0	0.0	0.0	0.0	27	0.0	0.0	0.0	0.0	0.0	0.0
	126	0.0	0.0	0.0	0.0	0.0	0.0	127	0.0	0.0	0.0	0.0	0.0	0.0
101	130	0.0	0.0	0.0	0.0	0.0	0.0	131	0.0	0.0	0.0	0.0	0.0	0.0
	68	0.0	0.0	0.0	0.0	0.0	0.0	64	0.0	0.0	0.0	0.0	0.0	0.0
102	131	0.0	0.0	0.0	0.0	0.0	0.0	132	0.0	0.0	0.0	0.0	0.0	0.0
	64	0.0	0.0	0.0	0.0	0.0	0.0	5	0.0	0.0	0.0	0.0	0.0	0.0
103	16	0.0	0.0	0.0	0.0	0.0	0.0	133	0.0	0.0	0.0	0.0	0.0	0.0
	10	0.0	0.0	0.0	0.0	0.0	0.0	130	0.0	0.0	0.0	0.0	0.0	0.0
104	133	0.0	0.0	0.0	0.0	0.0	0.0	134	0.0	0.0	0.0	0.0	0.0	0.0
	130	0.0	0.0	0.0	0.0	0.0	0.0	131	0.0	0.0	0.0	0.0	0.0	0.0
105	134	0.0	0.0	0.0	0.0	0.0	0.0	135	0.0	0.0	0.0	0.0	0.0	0.0
	131	0.0	0.0	0.0	0.0	0.0	0.0	132	0.0	0.0	0.0	0.0	0.0	0.0
106	3	0.0	0.0	0.0	0.0	0.0	0.0	136	0.0	0.0	0.0	0.0	0.0	0.0
	16	0.0	0.0	0.0	0.0	0.0	0.0	133	0.0	0.0	0.0	0.0	0.0	0.0
107	136	0.0	0.0	0.0	0.0	0.0	0.0	137	0.0	0.0	0.0	0.0	0.0	0.0
	133	0.0	0.0	0.0	0.0	0.0	0.0	134	0.0	0.0	0.0	0.0	0.0	0.0
108	137	0.0	0.0	0.0	0.0	0.0	0.0	138	0.0	0.0	0.0	0.0	0.0	0.0
	134	0.0	0.0	0.0	0.0	0.0	0.0	135	0.0	0.0	0.0	0.0	0.0	0.0
109	139	0.0	0.0	0.0	0.0	0.0	0.0	140	0.0	0.0	0.0	0.0	0.0	0.0
	3	0.0	0.0	0.0	0.0	0.0	0.0	136	0.0	0.0	0.0	0.0	0.0	0.0
110	140	0.0	0.0	0.0	0.0	0.0	0.0	141	0.0	0.0	0.0	0.0	0.0	0.0
	136	0.0	0.0	0.0	0.0	0.0	0.0	137	0.0	0.0	0.0	0.0	0.0	0.0
111	141	0.0	0.0	0.0	0.0	0.0	0.0	142	0.0	0.0	0.0	0.0	0.0	0.0
	137	0.0	0.0	0.0	0.0	0.0	0.0	138	0.0	0.0	0.0	0.0	0.0	0.0
112	143	0.0	0.0	0.0	0.0	0.0	0.0	144	0.0	0.0	0.0	0.0	0.0	0.0
	139	0.0	0.0	0.0	0.0	0.0	0.0	140	0.0	0.0	0.0	0.0	0.0	0.0
113	144	0.0	0.0	0.0	0.0	0.0	0.0	145	0.0	0.0	0.0	0.0	0.0	0.0
	140	0.0	0.0	0.0	0.0	0.0	0.0	141	0.0	0.0	0.0	0.0	0.0	0.0
114	145	0.0	0.0	0.0	0.0	0.0	0.0	146	0.0	0.0	0.0	0.0	0.0	0.0
	141	0.0	0.0	0.0	0.0	0.0	0.0	142	0.0	0.0	0.0	0.0	0.0	0.0
115	28	0.0	0.0	0.0	0.0	0.0	0.0	147	0.0	0.0	0.0	0.0	0.0	0.0
	143	0.0	0.0	0.0	0.0	0.0	0.0	144	0.0	0.0	0.0	0.0	0.0	0.0
116	147	0.0	0.0	0.0	0.0	0.0	0.0	148	0.0	0.0	0.0	0.0	0.0	0.0
	144	0.0	0.0	0.0	0.0	0.0	0.0	145	0.0	0.0	0.0	0.0	0.0	0.0
117	148	0.0	0.0	0.0	0.0	0.0	0.0	29	0.0	0.0	0.0	0.0	0.0	0.0
	145	0.0	0.0	0.0	0.0	0.0	0.0	146	0.0	0.0	0.0	0.0	0.0	0.0
118	101	0.0	0.0	0.0	0.0	0.0	0.0	115	0.0	0.0	0.0	0.0	0.0	0.0
	100	0.0	0.0	0.0	0.0	0.0	0.0	114	0.0	0.0	0.0	0.0	0.0	0.0
119	11	0.0	0.0	-0.2	0.0	0.0	0.0	20	0.0	0.0	0.2	0.0	0.0	0.0
	101	0.0	0.0	-0.1	0.0	0.0	0.0	115	0.0	0.0	0.1	0.0	0.0	0.0
120	149	0.0	0.0	0.0	0.0	0.0	0.0	150	0.0	0.0	0.0	0.0	0.0	0.0
	97	0.0	0.0	0.0	0.0	0.0	0.0	94	0.0	0.0	0.0	0.0	0.0	0.0
121	150	0.0	0.0	0.0	0.0	0.0	0.0	151	0.0	0.0	0.0	0.0	0.0	0.0
	94	0.0	0.0	0.0	0.0	0.0	0.0	18	0.0	0.0	0.0	0.0	0.0	0.0
122	36	0.0	0.0	0.0	0.0	0.0	0.0	152	0.0	0.0	0.0	0.0	0.0	0.0
	35	0.0	0.0	0.0	0.0	0.0	0.0	149	0.0	0.0	0.0	0.0	0.0	0.0
123	152	0.0	0.0	0.0	0.0	0.0	0.0	153	0.0	0.0	0.0	0.0	0.0	0.0
	149	0.0	0.0	0.0	0.0	0.0	0.0	150	0.0	0.0	0.0	0.0	0.0	0.0
124	153	0.0	0.0	0.0	0.0	0.0	0.0	154	0.0	0.0	0.0	0.0	0.0	0.0
	150	0.0	0.0	0.0	0.0	0.0	0.0	151	0.0	0.0	0.0	0.0	0.0	0.0
125	25	0.1	0.0	0.0	0.0	0.0	0.0	155	-0.1	0.0	0.0	0.0	0.0	0.0
	36	0.0	0.0	0.0	0.0	0.0	0.0	152	-0.1	0.0	0.0	0.0	0.0	0.0
126	155	0.1	0.0	0.0	0.0	0.0	0.0	156	0.0	0.0	0.0	0.0	0.0	0.0
	152	0.0	0.0	0.0	0.0	0.0	0.0	153	0.0	0.0	0.0	0.0	0.0	0.0
127	156	0.0	0.0	0.0	0.0	0.0	0.0	157	0.0	0.0	0.0	0.0	0.0	0.0
	153	0.0	0.0	0.0	0.0	0.0	0.0	154	0.0	0.0	0.0	0.0	0.0	0.0
128	74	0.1	0.0	0.0	0.0	0.0	0.0	158	-0.1	0.0	0.0	0.0	0.0	0.0
	25	0.1	0.0	0.0	0.0	0.0	0.0	155	-0.1	0.0	0.0	0.0	0.0	0.0
129	158	0.1	0.0	0.0	0.0	0.0	0.0	159	-0.1	0.0	0.0	0.0	0.0	0.0
	155	0.1	0.0	0.0	0.0	0.0	0.0	156	-0.1	0.0	0.0	0.0	0.0	0.0
130	159	0.0	0.0	0.0	0.0	0.0	0.0	160	0.0	0.0	0.0	0.0	0.0	0.0
	156	0.0	0.0	0.0	0.0	0.0	0.0	157	0.0	0.0	0.0	0.0	0.0	0.0
131	75	0.1	0.0	0.0	0.0	0.0	0.0	161	-0.1	0.0	0.0	0.0	0.0	0.0
	74	0.1	0.0	0.0	0.0	0.0	0.0	158	-0.1	0.0	0.0	0.0	0.0	0.0
132	161	0.0	0.0	0.0	0.0	0.0	0.0	162	-0.1	0.0	0.0	0.0	0.0	0.0
	158	0.1	0.0	0.0	0.0	0.0	0.0	159	0.0	0.0	0.0	0.0	0.0	0.0
133	162	0.0	0.0	0.0	0.0	0.0	0.0	163	0.0	0.0	0.0	0.0	0.0	0.0
	159	0.0	0.0	0.0	0.0	0.0	0.0	160	0.0	0.0	0.0	0.0	0.0	0.0
134	32	0.0	0.0	0.0	0.0	0.0	0.0	164	0.0	0.0	0.0	0.0	0.0	0.0
	75	0.0	0.0	0.0	0.0	0.0	0.0	161	0.0	0.0	0.0	0.0	0.0	0.0
135	164	0.0	0.0	0.0	0.0	0.0	0.0	165	0.0	0.0	0.0	0.0	0.0	0.0
	161	0.0	0.0	0.0	0.0	0.0	0.0	162	0.0	0.0	0.0	0.0	0.0	0.0
136	165	0.0	0.0	0.0	0.0	0.0	0.0	33	0.0	0.0	0.0	0.0	0.0	0.0
	162	0.0	0.0	0.0	0.0	0.0	0.0	163	0.0	0.0	0.0	0.0	0.0	0.0
137	166	0.0	0.0	0.0	0.0	0.0	0.0	167	0.0	0.0	0.0	0.0	0.0	0.0
	58	0.0	0.0	0.0	0.0	0.0	0.0	54	0.0	0.0	0.0	0.0	0.0	0.0
138	167	0.0	0.0	0.0	0.0	0.0	0.0	34	0.0	0.0	0.0	0.0	0.0	0.0
	54	0.0	0.0	0.0	0.0	0.0	0.0	7	0.0	0.0	0.0	0.0	0.0	0.0
139	135	0.0	0.0	0.0	0.0	0.0	0.0	168	0.0	0.0	0.0	0.0	0.0	0.0
	132	0.0	0.0	0.0	0.0	0.0	0.0	166	0.0	0.0	0.0	0.0	0.0	0.0

Documento di proprietà **Snam Rete Gas**. La Società tutelerà i propri diritti in sede civile e penale a termini di legge.

FORZE: SISMA 0°°: MODO8: SHELL

Shell Nro	Nodo N.ro	Tx (kN)	Ty (kN)	Tz (kN)	Mx (kN*m)	My (kN*m)	Mz (kN*m)	Nodo N.ro	Tx (kN)	Ty (kN)	Tz (kN)	Mx (kN*m)	My (kN*m)	Mz (kN*m)
140	168	0.0	0.0	0.0	0.0	0.0	0.0	169	0.0	0.0	0.0	0.0	0.0	0.0
	166	0.0	0.0	0.0	0.0	0.0	0.0	167	0.0	0.0	0.0	0.0	0.0	0.0
141	169	0.0	0.0	0.0	0.0	0.0	0.0	37	0.0	0.0	0.0	0.0	0.0	0.0
	167	0.0	0.0	0.0	0.0	0.0	0.0	34	0.0	0.0	0.0	0.0	0.0	0.0
142	138	0.0	0.0	0.0	0.0	0.0	0.0	170	0.0	0.0	0.0	0.0	0.0	0.0
	135	0.0	0.0	0.0	0.0	0.0	0.0	168	0.0	0.0	0.0	0.0	0.0	0.0
143	170	0.0	0.0	0.0	0.0	0.0	0.0	171	-0.1	0.0	0.0	0.0	0.0	0.0
	168	0.0	0.0	0.0	0.0	0.0	0.0	169	0.0	0.0	0.0	0.0	0.0	0.0
144	171	0.0	0.0	0.0	0.0	0.0	0.0	22	-0.1	0.0	0.0	0.0	0.0	0.0
	169	0.1	0.0	0.0	0.0	0.0	0.0	37	0.0	0.0	0.0	0.0	0.0	0.0
145	142	0.0	0.0	0.0	0.0	0.0	0.0	172	0.0	0.0	0.0	0.0	0.0	0.0
	138	0.0	0.0	0.0	0.0	0.0	0.0	170	0.0	0.0	0.0	0.0	0.0	0.0
146	172	0.1	0.0	0.0	0.0	0.0	0.0	173	-0.1	0.0	0.0	0.0	0.0	0.0
	170	0.1	0.0	0.0	0.0	0.0	0.0	171	0.0	0.0	0.0	0.0	0.0	0.0
147	173	0.1	0.0	0.0	0.0	0.0	0.0	110	-0.1	0.0	0.0	0.0	0.0	0.0
	171	0.1	0.0	0.0	0.0	0.0	0.0	22	-0.1	0.0	0.0	0.0	0.0	0.0
148	146	0.0	0.0	0.0	0.0	0.0	0.0	174	0.0	0.0	0.0	0.0	0.0	0.0
	142	0.0	0.0	0.0	0.0	0.0	0.0	172	0.0	0.0	0.0	0.0	0.0	0.0
149	174	0.0	0.0	0.0	0.0	0.0	0.0	175	0.0	0.0	0.0	0.0	0.0	0.0
	172	0.0	0.0	0.0	0.0	0.0	0.0	173	-0.1	0.0	0.0	0.0	0.0	0.0
150	175	0.1	0.0	0.0	0.0	0.0	0.0	111	-0.1	0.0	0.0	0.0	0.0	0.0
	173	0.1	0.0	0.0	0.0	0.0	0.0	110	-0.1	0.0	0.0	0.0	0.0	0.0
151	29	0.0	0.0	0.0	0.0	0.0	0.0	176	0.0	0.0	0.0	0.0	0.0	0.0
	146	0.0	0.0	0.0	0.0	0.0	0.0	174	0.0	0.0	0.0	0.0	0.0	0.0
152	176	0.0	0.0	0.0	0.0	0.0	0.0	177	0.0	0.0	0.0	0.0	0.0	0.0
	174	0.0	0.0	0.0	0.0	0.0	0.0	175	0.0	0.0	0.0	0.0	0.0	0.0
153	177	0.0	0.0	0.0	0.0	0.0	0.0	30	0.0	0.0	0.0	0.0	0.0	0.0
	175	0.0	0.0	0.0	0.0	0.0	0.0	111	0.0	0.0	0.0	0.0	0.0	0.0
154	178	0.0	0.0	0.0	0.0	0.0	0.0	179	0.0	0.0	0.0	0.0	0.0	0.0
	93	0.0	0.0	0.0	0.0	0.0	0.0	92	0.0	0.0	0.0	0.0	0.0	0.0
155	179	0.0	0.0	0.0	0.0	0.0	0.0	12	0.0	0.0	0.0	0.0	0.0	0.0
	92	0.0	0.0	0.0	0.0	0.0	0.0	17	0.0	0.0	0.0	0.0	0.0	0.0
156	154	0.0	0.0	0.0	0.0	0.0	0.0	180	0.0	0.0	0.0	0.0	0.0	0.0
	151	0.0	0.0	0.0	0.0	0.0	0.0	178	0.0	0.0	0.0	0.0	0.0	0.0
157	180	0.0	0.0	0.0	0.0	0.0	0.0	181	0.0	0.0	0.0	0.0	0.0	0.0
	178	0.0	0.0	0.0	0.0	0.0	0.0	179	0.0	0.0	0.0	0.0	0.0	0.0
158	181	0.0	0.0	0.0	0.0	0.0	0.0	15	0.0	0.0	0.0	0.0	0.0	0.0
	179	0.0	0.0	0.0	0.0	0.0	0.0	12	0.0	0.0	0.0	0.0	0.0	0.0
159	157	0.0	0.0	0.0	0.0	0.0	0.0	182	0.0	0.0	0.0	0.0	0.0	0.0
	154	0.0	0.0	0.0	0.0	0.0	0.0	180	0.0	0.0	0.0	0.0	0.0	0.0
160	182	0.0	0.0	0.0	0.0	0.0	0.0	183	0.0	0.0	0.0	0.0	0.0	0.0
	180	0.0	0.0	0.0	0.0	0.0	0.0	181	0.0	0.0	0.0	0.0	0.0	0.0
161	183	0.0	0.0	0.0	0.0	0.0	0.0	9	0.0	0.0	0.0	0.0	0.0	0.0
	181	0.0	0.0	0.0	0.0	0.0	0.0	15	0.0	0.0	0.0	0.0	0.0	0.0
162	160	0.0	0.0	0.0	0.0	0.0	0.0	184	0.0	0.0	0.0	0.0	0.0	0.0
	157	0.0	0.0	0.0	0.0	0.0	0.0	182	0.0	0.0	0.0	0.0	0.0	0.0
163	184	0.0	0.0	0.0	0.0	0.0	0.0	185	0.0	0.0	0.0	0.0	0.0	0.0
	182	0.0	0.0	0.0	0.0	0.0	0.0	183	0.0	0.0	0.0	0.0	0.0	0.0
164	185	0.0	0.0	0.0	0.0	0.0	0.0	120	0.0	0.0	0.0	0.0	0.0	0.0
	183	0.0	0.0	0.0	0.0	0.0	0.0	9	0.0	0.0	0.0	0.0	0.0	0.0
165	163	0.0	0.0	0.0	0.0	0.0	0.0	186	0.0	0.0	0.0	0.0	0.0	0.0
	160	0.0	0.0	0.0	0.0	0.0	0.0	184	0.0	0.0	0.0	0.0	0.0	0.0
166	186	0.0	0.0	0.0	0.0	0.0	0.0	187	0.0	0.0	0.0	0.0	0.0	0.0
	184	0.0	0.0	0.0	0.0	0.0	0.0	185	0.0	0.0	0.0	0.0	0.0	0.0
167	187	0.0	0.0	0.0	0.0	0.0	0.0	124	0.0	0.0	0.0	0.0	0.0	0.0
	185	0.0	0.0	0.0	0.0	0.0	0.0	120	0.0	0.0	0.0	0.0	0.0	0.0
168	33	0.0	0.0	0.0	0.0	0.0	0.0	188	0.0	0.0	0.0	0.0	0.0	0.0
	163	0.0	0.0	0.0	0.0	0.0	0.0	186	0.0	0.0	0.0	0.0	0.0	0.0
169	188	0.0	0.0	0.0	0.0	0.0	0.0	189	0.0	0.0	0.0	0.0	0.0	0.0
	186	0.0	0.0	0.0	0.0	0.0	0.0	187	0.0	0.0	0.0	0.0	0.0	0.0
170	189	0.0	0.0	0.0	0.0	0.0	0.0	26	0.0	0.0	0.0	0.0	0.0	0.0
	187	0.0	0.0	0.0	0.0	0.0	0.0	124	0.0	0.0	0.0	0.0	0.0	0.0
171	190	0.0	0.0	0.0	0.0	0.0	0.0	191	0.0	0.0	0.0	0.0	0.0	0.0
	73	0.0	0.0	0.0	0.0	0.0	0.0	72	0.0	0.0	0.0	0.0	0.0	0.0
172	191	0.0	0.0	0.0	0.0	0.0	0.0	139	0.0	0.0	0.0	0.0	0.0	0.0
	72	0.0	0.0	0.0	0.0	0.0	0.0	3	0.0	0.0	0.0	0.0	0.0	0.0
173	127	0.0	0.0	0.0	0.0	0.0	0.0	192	0.0	0.0	0.0	0.0	0.0	0.0
	123	0.0	0.0	0.0	0.0	0.0	0.0	190	0.0	0.0	0.0	0.0	0.0	0.0
174	192	0.0	0.0	0.0	0.0	0.0	0.0	193	0.0	0.0	0.0	0.0	0.0	0.0
	190	0.0	0.0	0.0	0.0	0.0	0.0	191	0.0	0.0	0.0	0.0	0.0	0.0
175	193	0.0	0.0	0.0	0.0	0.0	0.0	143	0.0	0.0	0.0	0.0	0.0	0.0
	191	0.0	0.0	0.0	0.0	0.0	0.0	139	0.0	0.0	0.0	0.0	0.0	0.0
176	27	0.0	0.0	0.0	0.0	0.0	0.0	194	0.0	0.0	0.0	0.0	0.0	0.0
	127	0.0	0.0	0.0	0.0	0.0	0.0	192	0.0	0.0	0.0	0.0	0.0	0.0
177	194	0.0	0.0	0.0	0.0	0.0	0.0	195	0.0	0.0	0.0	0.0	0.0	0.0
	192	0.0	0.0	0.0	0.0	0.0	0.0	193	0.0	0.0	0.0	0.0	0.0	0.0
178	195	0.0	0.0	0.0	0.0	0.0	0.0	28	0.0	0.0	0.0	0.0	0.0	0.0
	193	0.0	0.0	0.0	0.0	0.0	0.0	143	0.0	0.0	0.0	0.0	0.0	0.0
179	52	0.0	0.0	0.0	0.0	0.0	0.0	119	0.0	0.0	0.0	0.0	0.0	0.0
	53	0.0	0.0	-0.1	0.0	0.0	0.0	118	0.0	0.0	0.0	0.0	0.0	0.0

Documento di proprietà **Snam Rete Gas**. La Società tutelerà i propri diritti in sede civile e penale a termini di legge.

FORZE: SISMA 0°°: MODO8: SHELL

Shell Nro	Nodo N.ro	Tx (kN)	Ty (kN)	Tz (kN)	Mx (kN*m)	My (kN*m)	Mz (kN*m)	Nodo N.ro	Tx (kN)	Ty (kN)	Tz (kN)	Mx (kN*m)	My (kN*m)	Mz (kN*m)
180	7	0.0	0.0	0.0	0.0	0.0	0.0	34	0.0	0.0	0.0	0.0	0.0	0.0
	52	0.0	0.0	0.0	0.0	0.0	0.0	119	0.0	0.0	0.0	0.0	0.0	0.0

FORZE: SISMA 0°°: MODO9: SHELL

Shell Nro	Nodo N.ro	Tx (kN)	Ty (kN)	Tz (kN)	Mx (kN*m)	My (kN*m)	Mz (kN*m)	Nodo N.ro	Tx (kN)	Ty (kN)	Tz (kN)	Mx (kN*m)	My (kN*m)	Mz (kN*m)
1	38	0.0	0.0	0.1	0.0	0.0	0.0	39	0.0	0.0	-0.1	0.0	0.0	0.0
	14	0.0	0.0	0.2	0.0	0.0	0.0	1	0.0	0.0	-0.3	0.0	-0.1	0.0
2	6	0.0	0.0	-0.1	0.0	-0.1	0.0	44	0.0	0.0	0.0	0.0	0.0	0.0
	2	0.0	0.0	0.1	0.0	-0.1	0.0	42	0.0	0.0	-0.1	0.0	0.0	0.0
3	39	0.0	0.0	0.2	0.0	0.0	0.0	44	0.0	0.0	-0.1	0.0	0.0	0.0
	1	0.0	0.0	-0.3	0.0	0.1	0.0	6	0.0	0.0	0.1	0.0	0.0	0.0
4	46	0.0	0.0	-0.1	0.0	0.0	0.0	47	0.0	0.0	0.1	0.0	0.0	0.0
	10	0.0	0.0	0.1	0.0	0.0	0.0	16	0.0	0.0	0.0	0.0	0.0	0.0
5	50	0.0	0.0	0.0	0.0	0.0	0.0	46	0.0	0.0	0.0	0.0	0.0	0.0
	4	0.0	0.0	0.0	0.0	0.0	0.0	10	0.0	0.0	0.0	0.0	0.0	0.0
6	54	0.0	0.0	0.0	0.0	0.0	0.0	55	0.0	0.0	0.0	0.0	0.0	0.0
	7	0.0	0.0	0.0	0.0	0.0	0.0	52	0.0	0.0	0.0	0.0	0.0	0.0
7	64	0.0	0.0	0.0	0.0	0.0	0.0	65	0.0	0.0	0.0	0.0	0.0	0.0
	5	0.0	0.0	0.0	0.0	0.0	0.0	62	0.0	0.0	0.0	0.0	0.0	0.0
8	47	0.0	0.0	0.0	0.0	0.0	0.0	72	0.0	0.0	0.1	0.0	0.0	0.0
	16	0.0	0.0	0.0	0.0	0.0	0.0	3	0.0	0.0	-0.1	0.0	0.0	0.0
9	76	0.0	0.0	0.0	0.0	0.0	0.0	77	0.0	0.0	0.0	0.0	0.0	0.0
	25	0.0	0.0	0.0	0.0	0.0	0.0	74	0.0	0.0	0.0	0.0	0.0	0.0
10	38	0.0	0.0	0.0	0.0	0.0	0.0	86	0.0	0.0	0.0	0.0	0.0	0.0
	14	0.0	0.0	0.0	0.0	0.0	0.0	71	0.0	0.0	0.0	0.0	0.0	0.0
11	94	0.0	0.0	0.0	0.0	0.0	0.0	95	0.0	0.0	0.0	0.0	0.0	0.0
	18	0.0	0.0	0.0	0.0	0.0	0.0	91	0.0	0.0	0.0	0.0	0.0	0.0
12	102	0.0	0.0	0.0	0.0	0.0	0.0	103	0.0	0.0	0.0	0.0	0.0	0.0
	21	0.0	0.0	0.0	0.0	0.0	0.0	84	0.0	0.0	0.0	0.0	0.0	0.0
13	112	0.0	0.0	0.0	0.0	0.0	0.0	76	0.0	0.0	0.0	0.0	0.0	0.0
	36	0.0	0.0	0.0	0.0	0.0	0.0	25	0.0	0.0	0.0	0.0	0.0	0.0
14	114	0.0	0.0	0.0	0.0	0.0	0.0	112	0.0	0.0	0.0	0.0	0.0	0.0
	35	0.0	0.0	0.0	0.0	0.0	0.0	36	0.0	0.0	0.0	0.0	0.0	0.0
15	24	0.0	0.0	0.0	0.0	0.0	0.0	116	0.0	0.0	0.0	0.0	0.0	0.0
	21	0.0	0.0	0.0	0.0	0.0	0.0	102	0.0	0.0	0.0	0.0	0.0	0.0
16	118	0.0	0.0	-0.1	0.0	0.0	0.0	116	0.0	0.0	0.0	0.0	0.0	0.0
	20	0.0	0.0	0.1	0.0	0.0	0.0	24	0.0	0.0	0.0	0.0	0.0	0.0
17	120	0.0	0.0	-0.1	0.0	0.0	0.0	121	0.0	0.0	0.1	0.0	0.0	0.0
	9	0.0	0.0	-0.1	0.0	0.0	0.0	43	0.0	0.0	0.0	0.0	0.0	0.0
18	10	0.0	0.0	0.0	0.0	0.0	0.0	130	0.0	0.0	0.0	0.0	0.0	0.0
	4	0.0	0.0	0.0	0.0	0.0	0.0	68	0.0	0.0	0.0	0.0	0.0	0.0
19	100	0.0	0.0	0.0	0.0	0.0	0.0	114	0.0	0.0	0.0	0.0	0.0	0.0
	19	0.0	0.0	0.0	0.0	0.0	0.0	35	0.0	0.0	0.0	0.0	0.0	0.0
20	35	0.0	0.0	0.0	0.0	0.0	0.0	149	0.0	0.0	0.0	0.0	0.0	0.0
	19	0.0	0.0	0.0	0.0	0.0	0.0	97	0.0	0.0	0.0	0.0	0.0	0.0
21	132	0.0	0.0	0.0	0.0	0.0	0.0	166	0.0	0.0	0.0	0.0	0.0	0.0
	5	0.0	0.0	0.0	0.0	0.0	0.0	58	0.0	0.0	0.0	0.0	0.0	0.0
22	151	0.0	0.0	0.0	0.0	0.0	0.0	178	0.0	0.0	0.0	0.0	0.0	0.0
	18	0.0	0.0	0.0	0.0	0.0	0.0	93	0.0	0.0	0.0	0.0	0.0	0.0
23	123	0.0	0.0	0.0	0.0	0.0	0.0	190	0.0	0.0	0.0	0.0	0.0	0.0
	2	0.0	0.0	-0.1	0.0	0.0	0.0	73	0.0	0.0	0.0	0.0	0.0	0.0
24	53	0.0	0.0	0.0	0.0	0.0	0.0	118	0.0	0.0	0.0	0.0	0.0	0.0
	11	0.0	0.0	-0.1	0.0	0.0	0.0	20	0.0	0.0	0.1	0.0	0.0	0.0
25	40	0.0	0.0	0.0	0.0	0.0	0.0	41	0.0	0.0	0.0	0.0	0.0	0.0
	38	0.0	0.0	0.1	0.0	0.0	0.0	39	0.0	0.0	0.0	0.0	0.0	0.0
26	17	0.0	0.0	0.0	0.0	0.0	0.0	12	0.0	0.0	0.0	0.0	0.0	0.0
	40	0.0	0.0	0.0	0.0	0.0	0.0	41	0.0	0.0	0.0	0.0	0.0	0.0
27	44	0.0	0.0	-0.1	0.0	0.0	0.0	45	0.0	0.0	0.0	0.0	0.0	0.0
	42	0.0	0.0	0.2	0.0	-0.1	0.0	43	0.0	0.0	-0.1	0.0	0.0	0.0
28	45	0.0	0.0	0.0	0.0	0.0	0.0	15	0.0	0.0	0.0	0.0	0.0	0.0
	43	0.0	0.0	0.1	0.0	0.0	0.0	9	0.0	0.0	-0.1	0.0	0.0	0.0
29	41	0.0	0.0	0.1	0.0	0.0	0.0	45	0.0	0.0	-0.1	0.0	0.0	0.0
	39	0.0	0.0	-0.1	0.0	0.0	0.0	44	0.0	0.0	0.1	0.0	0.0	0.0
30	12	0.0	0.0	0.1	0.0	0.0	0.0	15	0.0	0.0	-0.1	0.0	0.0	0.0
	41	0.0	0.0	-0.1	0.0	0.0	0.0	45	0.0	0.0	0.1	0.0	0.0	0.0
31	48	0.0	0.0	-0.1	0.0	0.0	0.0	49	0.0	0.0	0.1	0.0	0.0	0.0
	46	0.0	0.0	0.1	0.0	0.0	0.0	47	0.0	0.0	-0.1	0.0	0.0	0.0
32	1	0.0	0.0	-0.3	0.1	0.1	0.0	8	0.0	0.0	0.1	0.1	0.0	0.0
	48	0.0	0.0	0.2	0.0	0.0	0.0	49	0.0	0.0	-0.1	0.0	0.0	0.0
33	51	0.0	0.0	0.1	0.0	0.0	0.0	48	0.0	0.0	0.0	0.0	0.0	0.0
	50	0.0	0.0	0.0	0.0	0.0	0.0	46	0.0	0.0	0.0	0.0	0.0	0.0
34	14	0.0	0.0	0.2	0.0	0.0	0.0	1	0.0	0.0	-0.2	0.0	-0.1	0.0
	51	0.0	0.0	0.1	0.0	0.0	0.0	48	0.0	0.0	-0.1	0.0	0.0	0.0
35	55	0.0	0.0	0.0	0.0	0.0	0.0	56	0.0	0.0	0.0	0.0	0.0	0.0
	52	0.0	0.0	0.0	0.0	0.0	0.0	53	0.0	0.0	0.0	0.0	0.0	0.0
36	56	0.0	0.0	0.0	0.0	0.0	0.0	57	0.0	0.0	0.0	0.0	0.0	0.0
	53	0.0	0.0	0.0	0.0	0.0	0.0	11	0.0	0.0	0.0	0.0	0.0	0.0
37	58	0.0	0.0	0.0	0.0	0.0	0.0	59	0.0	0.0	0.0	0.0	0.0	0.0
	54	0.0	0.0	0.0	0.0	0.0	0.0	55	0.0	0.0	0.0	0.0	0.0	0.0

Documento di proprietà **Snam Rete Gas**. La Società tutelerà i propri diritti in sede civile e penale a termini di legge.

FORZE: SISMA 0°°: MODO9: SHELL

Shell Nro	Nodo N.ro	Tx (kN)	Ty (kN)	Tz (kN)	Mx (kN*m)	My (kN*m)	Mz (kN*m)	Nodo N.ro	Tx (kN)	Ty (kN)	Tz (kN)	Mx (kN*m)	My (kN*m)	Mz (kN*m)
38	59	0.0	0.0	0.0	0.0	0.0	0.0	60	0.0	0.0	0.0	0.0	0.0	0.0
	55	0.0	0.0	0.0	0.0	0.0	0.0	56	0.0	0.0	0.0	0.0	0.0	0.0
39	60	0.0	0.0	0.0	0.0	0.0	0.0	61	0.0	0.0	0.0	0.0	0.0	0.0
	56	0.0	0.0	0.0	0.0	0.0	0.0	57	0.0	0.0	0.0	0.0	0.0	0.0
40	5	0.0	0.0	0.0	0.0	0.0	0.0	62	0.0	0.0	0.0	0.0	0.0	0.0
	58	0.0	0.0	0.0	0.0	0.0	0.0	59	0.0	0.0	0.0	0.0	0.0	0.0
41	62	0.0	0.0	0.0	0.0	0.0	0.0	63	0.0	0.0	0.0	0.0	0.0	0.0
	59	0.0	0.0	0.0	0.0	0.0	0.0	60	0.0	0.0	0.0	0.0	0.0	0.0
42	63	0.0	0.0	0.0	0.0	0.0	0.0	13	0.0	0.0	0.0	0.0	0.0	0.0
	60	0.0	0.0	0.0	0.0	0.0	0.0	61	0.0	0.0	0.0	0.0	0.0	0.0
43	65	0.0	0.0	0.0	0.0	0.0	0.0	66	0.0	0.0	0.0	0.0	0.0	0.0
	62	0.0	0.0	0.0	0.0	0.0	0.0	63	0.0	0.0	0.0	0.0	0.0	0.0
44	66	0.0	0.0	0.0	0.0	0.0	0.0	67	0.0	0.0	0.0	0.0	0.0	0.0
	63	0.0	0.0	0.0	0.0	0.0	0.0	13	0.0	0.0	0.0	0.0	0.0	0.0
45	68	0.0	0.0	0.0	0.0	0.0	0.0	69	0.0	0.0	0.0	0.0	0.0	0.0
	64	0.0	0.0	0.0	0.0	0.0	0.0	65	0.0	0.0	0.0	0.0	0.0	0.0
46	69	0.0	0.0	0.0	0.0	0.0	0.0	70	0.0	0.0	0.0	0.0	0.0	0.0
	65	0.0	0.0	0.0	0.0	0.0	0.0	66	0.0	0.0	0.0	0.0	0.0	0.0
47	70	0.0	0.0	0.0	0.0	0.0	0.0	71	0.0	0.0	0.0	0.0	0.0	0.0
	66	0.0	0.0	0.0	0.0	0.0	0.0	67	0.0	0.0	0.0	0.0	0.0	0.0
48	4	0.0	0.0	0.0	0.0	0.0	0.0	50	0.0	0.0	0.0	0.0	0.0	0.0
	68	0.0	0.0	0.0	0.0	0.0	0.0	69	0.0	0.0	0.0	0.0	0.0	0.0
49	50	0.0	0.0	0.0	0.0	0.0	0.0	51	0.0	0.0	0.0	0.0	0.0	0.0
	69	0.0	0.0	0.0	0.0	0.0	0.0	70	0.0	0.0	0.0	0.0	0.0	0.0
50	51	0.0	0.0	0.0	0.0	0.0	0.0	14	0.0	0.0	0.0	0.0	0.0	0.0
	70	0.0	0.0	0.0	0.0	0.0	0.0	71	0.0	0.0	0.0	0.0	0.0	0.0
51	49	0.0	0.0	-0.1	0.0	0.0	0.0	73	0.0	0.0	0.2	0.0	0.0	0.0
	47	0.0	0.0	0.0	0.0	0.0	0.0	72	0.0	0.0	-0.1	0.0	0.0	0.0
52	8	0.0	0.0	-0.1	0.0	0.0	0.0	2	0.0	0.0	0.2	-0.1	0.1	0.0
	49	0.0	0.0	0.1	0.0	0.0	0.0	73	0.0	0.0	-0.1	0.0	0.0	0.0
53	77	0.0	0.0	0.0	0.0	0.0	0.0	78	0.0	0.0	0.0	0.0	0.0	0.0
	74	0.0	0.0	0.0	0.0	0.0	0.0	75	0.0	0.0	0.0	0.0	0.0	0.0
54	78	0.0	0.0	0.0	0.0	0.0	0.0	79	0.0	0.0	0.0	0.0	0.0	0.0
	75	0.0	0.0	0.0	0.0	0.0	0.0	32	0.0	0.0	0.0	0.0	0.0	0.0
55	80	0.0	0.0	0.0	0.0	0.0	0.0	81	0.0	0.0	0.0	0.0	0.0	0.0
	76	0.0	0.0	0.0	0.0	0.0	0.0	77	0.0	0.0	0.0	0.0	0.0	0.0
56	81	0.0	0.0	0.0	0.0	0.0	0.0	82	0.0	0.0	0.0	0.0	0.0	0.0
	77	0.0	0.0	0.0	0.0	0.0	0.0	78	0.0	0.0	0.0	0.0	0.0	0.0
57	82	0.0	0.0	0.0	0.0	0.0	0.0	83	0.0	0.0	0.0	0.0	0.0	0.0
	78	0.0	0.0	0.0	0.0	0.0	0.0	79	0.0	0.0	0.0	0.0	0.0	0.0
58	21	0.0	0.0	0.0	0.0	0.0	0.0	84	0.0	0.0	0.0	0.0	0.0	0.0
	80	0.0	0.0	0.0	0.0	0.0	0.0	81	0.0	0.0	0.0	0.0	0.0	0.0
59	84	0.0	0.0	0.0	0.0	0.0	0.0	85	0.0	0.0	0.0	0.0	0.0	0.0
	81	0.0	0.0	0.0	0.0	0.0	0.0	82	0.0	0.0	0.0	0.0	0.0	0.0
60	85	0.0	0.0	0.0	0.0	0.0	0.0	31	0.0	0.0	0.0	0.0	0.0	0.0
	82	0.0	0.0	0.0	0.0	0.0	0.0	83	0.0	0.0	0.0	0.0	0.0	0.0
61	86	0.0	0.0	0.0	0.0	0.0	0.0	87	0.0	0.0	0.0	0.0	0.0	0.0
	71	0.0	0.0	0.0	0.0	0.0	0.0	67	0.0	0.0	0.0	0.0	0.0	0.0
62	87	0.0	0.0	0.0	0.0	0.0	0.0	88	0.0	0.0	0.0	0.0	0.0	0.0
	67	0.0	0.0	0.0	0.0	0.0	0.0	13	0.0	0.0	0.0	0.0	0.0	0.0
63	40	0.0	0.0	0.0	0.0	0.0	0.0	89	0.0	0.0	0.0	0.0	0.0	0.0
	38	0.0	0.0	0.0	0.0	0.0	0.0	86	0.0	0.0	0.0	0.0	0.0	0.0
64	89	0.0	0.0	0.0	0.0	0.0	0.0	90	0.0	0.0	0.0	0.0	0.0	0.0
	86	0.0	0.0	0.0	0.0	0.0	0.0	87	0.0	0.0	0.0	0.0	0.0	0.0
65	90	0.0	0.0	0.0	0.0	0.0	0.0	91	0.0	0.0	0.0	0.0	0.0	0.0
	87	0.0	0.0	0.0	0.0	0.0	0.0	88	0.0	0.0	0.0	0.0	0.0	0.0
66	17	0.0	0.0	0.0	0.0	0.0	0.0	92	0.0	0.0	0.0	0.0	0.0	0.0
	40	0.0	0.0	0.0	0.0	0.0	0.0	89	0.0	0.0	0.0	0.0	0.0	0.0
67	92	0.0	0.0	0.0	0.0	0.0	0.0	93	0.0	0.0	0.0	0.0	0.0	0.0
	89	0.0	0.0	0.0	0.0	0.0	0.0	90	0.0	0.0	0.0	0.0	0.0	0.0
68	93	0.0	0.0	0.0	0.0	0.0	0.0	18	0.0	0.0	0.0	0.0	0.0	0.0
	90	0.0	0.0	0.0	0.0	0.0	0.0	91	0.0	0.0	0.0	0.0	0.0	0.0
69	95	0.0	0.0	0.0	0.0	0.0	0.0	96	0.0	0.0	0.0	0.0	0.0	0.0
	91	0.0	0.0	0.0	0.0	0.0	0.0	88	0.0	0.0	0.0	0.0	0.0	0.0
70	96	0.0	0.0	0.0	0.0	0.0	0.0	61	0.0	0.0	0.0	0.0	0.0	0.0
	88	0.0	0.0	0.0	0.0	0.0	0.0	13	0.0	0.0	0.0	0.0	0.0	0.0
71	97	0.0	0.0	0.0	0.0	0.0	0.0	98	0.0	0.0	0.0	0.0	0.0	0.0
	94	0.0	0.0	0.0	0.0	0.0	0.0	95	0.0	0.0	0.0	0.0	0.0	0.0
72	98	0.0	0.0	0.0	0.0	0.0	0.0	99	0.0	0.0	0.0	0.0	0.0	0.0
	95	0.0	0.0	0.0	0.0	0.0	0.0	96	0.0	0.0	0.0	0.0	0.0	0.0
73	99	0.0	0.0	0.0	0.0	0.0	0.0	57	0.0	0.0	0.0	0.0	0.0	0.0
	96	0.0	0.0	0.0	0.0	0.0	0.0	61	0.0	0.0	0.0	0.0	0.0	0.0
74	19	0.0	0.0	0.0	0.0	0.0	0.0	100	0.0	0.0	0.0	0.0	0.0	0.0
	97	0.0	0.0	0.0	0.0	0.0	0.0	98	0.0	0.0	0.0	0.0	0.0	0.0
75	100	0.0	0.0	0.0	0.0	0.0	0.0	101	0.0	0.0	0.0	0.0	0.0	0.0
	98	0.0	0.0	0.0	0.0	0.0	0.0	99	0.0	0.0	0.0	0.0	0.0	0.0
76	101	0.0	0.0	0.0	0.0	0.0	0.0	11	0.0	0.0	0.0	0.0	0.0	0.0
	99	0.0	0.0	0.0	0.0	0.0	0.0	57	0.0	0.0	0.0	0.0	0.0	0.0
77	103	0.0	0.0	0.0	0.0	0.0	0.0	104	0.0	0.0	0.0	0.0	0.0	0.0
	84	0.0	0.0	0.0	0.0	0.0	0.0	85	0.0	0.0	0.0	0.0	0.0	0.0

Documento di proprietà **Snam Rete Gas**. La Società tutelerà i propri diritti in sede civile e penale a termini di legge.

FORZE: SISMA 0°°: MODO9: SHELL

Shell Nro	Nodo N.ro	Tx (kN)	Ty (kN)	Tz (kN)	Mx (kN*m)	My (kN*m)	Mz (kN*m)	Nodo N.ro	Tx (kN)	Ty (kN)	Tz (kN)	Mx (kN*m)	My (kN*m)	Mz (kN*m)
78	104	0.0	0.0	0.0	0.0	0.0	0.0	105	0.0	0.0	0.0	0.0	0.0	0.0
	85	0.0	0.0	0.0	0.0	0.0	0.0	31	0.0	0.0	0.0	0.0	0.0	0.0
79	106	0.0	0.0	0.0	0.0	0.0	0.0	107	0.0	0.0	0.0	0.0	0.0	0.0
	102	0.0	0.0	0.0	0.0	0.0	0.0	103	0.0	0.0	0.0	0.0	0.0	0.0
80	107	0.0	0.0	0.0	0.0	0.0	0.0	108	0.0	0.0	0.0	0.0	0.0	0.0
	103	0.0	0.0	0.0	0.0	0.0	0.0	104	0.0	0.0	0.0	0.0	0.0	0.0
81	108	0.0	0.0	0.0	0.0	0.0	0.0	109	0.0	0.0	0.0	0.0	0.0	0.0
	104	0.0	0.0	0.0	0.0	0.0	0.0	105	0.0	0.0	0.0	0.0	0.0	0.0
82	22	0.0	0.0	0.0	0.0	0.0	0.0	110	0.0	0.0	0.0	0.0	0.0	0.0
	106	0.0	0.0	0.0	0.0	0.0	0.0	107	0.0	0.0	0.0	0.0	0.0	0.0
83	110	0.0	0.0	0.0	0.0	0.0	0.0	111	0.0	0.0	0.0	0.0	0.0	0.0
	107	0.0	0.0	0.0	0.0	0.0	0.0	108	0.0	0.0	0.0	0.0	0.0	0.0
84	111	0.0	0.0	0.0	0.0	0.0	0.0	30	0.0	0.0	0.0	0.0	0.0	0.0
	108	0.0	0.0	0.0	0.0	0.0	0.0	109	0.0	0.0	0.0	0.0	0.0	0.0
85	113	0.0	0.0	0.0	0.0	0.0	0.0	80	0.0	0.0	0.0	0.0	0.0	0.0
	112	0.0	0.0	0.0	0.0	0.0	0.0	76	0.0	0.0	0.0	0.0	0.0	0.0
86	23	0.0	0.0	0.0	0.0	0.0	0.0	21	0.0	0.0	0.0	0.0	0.0	0.0
	113	0.0	0.0	0.0	0.0	0.0	0.0	80	0.0	0.0	0.0	0.0	0.0	0.0
87	115	0.0	0.0	0.0	0.0	0.0	0.0	113	0.0	0.0	0.0	0.0	0.0	0.0
	114	0.0	0.0	0.0	0.0	0.0	0.0	112	0.0	0.0	0.0	0.0	0.0	0.0
88	20	0.0	0.0	0.1	0.0	0.0	0.0	23	0.0	0.0	0.0	0.0	0.0	0.0
	115	0.0	0.0	-0.1	0.0	0.0	0.0	113	0.0	0.0	0.0	0.0	0.0	0.0
89	116	0.0	0.0	0.0	0.0	0.0	0.0	117	0.0	0.0	0.0	0.0	0.0	0.0
	102	0.0	0.0	0.0	0.0	0.0	0.0	106	0.0	0.0	0.0	0.0	0.0	0.0
90	117	0.0	0.0	0.0	0.0	0.0	0.0	37	0.0	0.0	0.0	0.0	0.0	0.0
	106	0.0	0.0	0.0	0.0	0.0	0.0	22	0.0	0.0	0.0	0.0	0.0	0.0
91	119	0.0	0.0	0.0	0.0	0.0	0.0	117	0.0	0.0	0.0	0.0	0.0	0.0
	118	0.0	0.0	0.0	0.0	0.0	0.0	116	0.0	0.0	0.0	0.0	0.0	0.0
92	34	0.0	0.0	0.0	0.0	0.0	0.0	37	0.0	0.0	0.0	0.0	0.0	0.0
	119	0.0	0.0	0.0	0.0	0.0	0.0	117	0.0	0.0	0.0	0.0	0.0	0.0
93	121	0.0	0.0	-0.1	0.0	0.0	0.0	122	0.0	0.0	0.1	0.0	0.0	0.0
	43	0.0	0.0	0.0	0.0	0.0	0.0	42	0.0	0.0	0.0	0.0	0.0	0.0
94	122	0.0	0.0	0.0	0.0	0.0	0.0	123	0.0	0.0	0.0	0.0	0.0	0.0
	42	0.0	0.0	0.0	0.0	0.0	0.0	2	0.1	0.0	-0.1	0.0	0.0	0.0
95	124	0.0	0.0	0.0	0.0	0.0	0.0	125	0.0	0.0	0.0	0.0	0.0	0.0
	120	0.0	0.0	-0.1	0.0	0.0	0.0	121	0.0	0.0	0.1	0.0	0.0	0.0
96	125	0.0	0.0	0.0	0.0	0.0	0.0	126	0.0	0.0	0.0	0.0	0.0	0.0
	121	0.0	0.0	-0.1	0.0	0.0	0.0	122	0.0	0.0	0.1	0.0	0.0	0.0
97	126	0.0	0.0	0.0	0.0	0.0	0.0	127	0.0	0.0	0.0	0.0	0.0	0.0
	122	0.0	0.0	0.0	0.0	0.0	0.0	123	0.0	0.0	0.0	0.0	0.0	0.0
98	26	0.0	0.0	0.1	0.0	0.0	0.0	128	0.0	0.0	-0.1	0.0	0.0	0.0
	124	0.0	0.0	-0.1	0.0	0.0	0.0	125	0.0	0.0	0.1	0.0	0.0	0.0
99	128	0.0	0.0	0.1	0.0	0.0	0.0	129	0.0	0.0	-0.1	0.0	0.0	0.0
	125	0.0	0.0	-0.1	0.0	0.0	0.0	126	0.0	0.0	0.1	0.0	0.0	0.0
100	129	0.0	0.0	0.0	0.0	0.0	0.0	27	0.0	0.0	-0.1	0.0	0.0	0.0
	126	0.0	0.0	0.0	0.0	0.0	0.0	127	0.0	0.0	0.1	0.0	0.0	0.0
101	130	0.0	0.0	0.0	0.0	0.0	0.0	131	0.0	0.0	0.0	0.0	0.0	0.0
	68	0.0	0.0	0.0	0.0	0.0	0.0	64	0.0	0.0	0.0	0.0	0.0	0.0
102	131	0.0	0.0	0.0	0.0	0.0	0.0	132	0.0	0.0	0.0	0.0	0.0	0.0
	64	0.0	0.0	0.0	0.0	0.0	0.0	5	0.0	0.0	0.0	0.0	0.0	0.0
103	16	0.0	0.0	0.0	0.0	0.0	0.0	133	0.0	0.0	0.0	0.0	0.0	0.0
	10	0.1	0.0	0.0	0.0	0.0	0.0	130	0.0	0.0	0.0	0.0	0.0	0.0
104	133	0.0	0.0	0.0	0.0	0.0	0.0	134	0.0	0.0	0.0	0.0	0.0	0.0
	130	0.0	0.0	0.0	0.0	0.0	0.0	131	0.0	0.0	0.0	0.0	0.0	0.0
105	134	0.0	0.0	0.0	0.0	0.0	0.0	135	0.0	0.0	0.0	0.0	0.0	0.0
	131	0.0	0.0	0.0	0.0	0.0	0.0	132	0.0	0.0	0.0	0.0	0.0	0.0
106	3	-0.1	0.0	0.0	0.0	0.0	0.0	136	0.1	0.0	0.0	0.0	0.0	0.0
	16	0.0	0.0	0.0	0.0	0.0	0.0	133	0.1	0.0	0.0	0.0	0.0	0.0
107	136	-0.1	0.0	0.0	0.0	0.0	0.0	137	0.0	0.0	0.0	0.0	0.0	0.0
	133	0.0	0.0	0.0	0.0	0.0	0.0	134	0.1	0.0	0.0	0.0	0.0	0.0
108	137	-0.1	0.0	0.0	0.0	0.0	0.0	138	0.0	0.0	0.0	0.0	0.0	0.0
	134	0.0	0.0	0.0	0.0	0.0	0.0	135	0.0	0.0	0.0	0.0	0.0	0.0
109	139	-0.1	0.0	0.0	0.0	0.0	0.0	140	0.1	0.0	0.0	0.0	0.0	0.0
	3	-0.1	0.0	0.0	0.0	0.0	0.0	136	0.1	0.0	0.0	0.0	0.0	0.0
110	140	-0.1	0.0	0.0	0.0	0.0	0.0	141	0.1	0.0	0.0	0.0	0.0	0.0
	136	-0.1	0.0	0.0	0.0	0.0	0.0	137	0.1	0.0	0.0	0.0	0.0	0.0
111	141	-0.1	0.0	0.0	0.0	0.0	0.0	142	0.0	0.0	0.0	0.0	0.0	0.0
	137	0.0	0.0	0.0	0.0	0.0	0.0	138	0.0	0.0	0.0	0.0	0.0	0.0
112	143	-0.1	0.0	0.0	0.0	0.0	0.0	144	0.1	0.0	0.0	0.0	0.0	0.0
	139	-0.1	0.0	0.0	0.0	0.0	0.0	140	0.1	0.0	0.0	0.0	0.0	0.0
113	144	0.0	0.0	0.0	0.0	0.0	0.0	145	0.1	0.0	0.0	0.0	0.0	0.0
	140	-0.1	0.0	0.0	0.0	0.0	0.0	141	0.1	0.0	0.0	0.0	0.0	0.0
114	145	0.0	0.0	0.0	0.0	0.0	0.0	146	0.0	0.0	0.0	0.0	0.0	0.0
	141	-0.1	0.0	0.0	0.0	0.0	0.0	142	0.0	0.0	0.0	0.0	0.0	0.0
115	28	0.0	0.0	0.0	0.0	0.0	0.0	147	0.0	0.0	0.0	0.0	0.0	0.0
	143	-0.1	0.0	0.0	0.0	0.0	0.0	144	0.0	0.0	0.0	0.0	0.0	0.0
116	147	0.0	0.0	0.0	0.0	0.0	0.0	148	0.0	0.0	0.0	0.0	0.0	0.0
	144	0.0	0.0	0.0	0.0	0.0	0.0	145	0.0	0.0	0.0	0.0	0.0	0.0
117	148	0.0	0.0	0.0	0.0	0.0	0.0	29	0.0	0.0	0.0	0.0	0.0	0.0
	145	0.0	0.0	0.0	0.0	0.0	0.0	146	0.0	0.0	0.0	0.0	0.0	0.0

Documento di proprietà **Snam Rete Gas**. La Società tutelerà i propri diritti in sede civile e penale a termini di legge.

FORZE: SISMA 0°°: MODO9: SHELL

Shell Nro	Nodo N.ro	Tx (kN)	Ty (kN)	Tz (kN)	Mx (kN*m)	My (kN*m)	Mz (kN*m)	Nodo N.ro	Tx (kN)	Ty (kN)	Tz (kN)	Mx (kN*m)	My (kN*m)	Mz (kN*m)
118	101	0.0	0.0	0.0	0.0	0.0	0.0	115	0.0	0.0	0.0	0.0	0.0	0.0
	100	0.0	0.0	0.0	0.0	0.0	0.0	114	0.0	0.0	0.0	0.0	0.0	0.0
119	11	0.0	0.0	-0.1	0.0	0.0	0.0	20	0.0	0.0	0.1	0.0	0.0	0.0
	101	0.0	0.0	0.0	0.0	0.0	0.0	115	0.0	0.0	0.0	0.0	0.0	0.0
120	149	0.0	0.0	0.0	0.0	0.0	0.0	150	0.0	0.0	0.0	0.0	0.0	0.0
	97	0.0	0.0	0.0	0.0	0.0	0.0	94	0.0	0.0	0.0	0.0	0.0	0.0
121	150	0.0	0.0	0.0	0.0	0.0	0.0	151	0.0	0.0	0.0	0.0	0.0	0.0
	94	0.0	0.0	0.0	0.0	0.0	0.0	18	0.0	0.0	0.0	0.0	0.0	0.0
122	36	0.0	0.0	0.0	0.0	0.0	0.0	152	0.0	0.0	0.0	0.0	0.0	0.0
	35	0.0	0.0	0.0	0.0	0.0	0.0	149	0.0	0.0	0.0	0.0	0.0	0.0
123	152	0.0	0.0	0.0	0.0	0.0	0.0	153	0.0	0.0	0.0	0.0	0.0	0.0
	149	0.0	0.0	0.0	0.0	0.0	0.0	150	0.0	0.0	0.0	0.0	0.0	0.0
124	153	0.0	0.0	0.0	0.0	0.0	0.0	154	0.0	0.0	0.0	0.0	0.0	0.0
	150	0.0	0.0	0.0	0.0	0.0	0.0	151	0.0	0.0	0.0	0.0	0.0	0.0
125	25	0.0	0.0	0.0	0.0	0.0	0.0	155	0.0	0.0	0.0	0.0	0.0	0.0
	36	0.0	0.0	0.0	0.0	0.0	0.0	152	0.0	0.0	0.0	0.0	0.0	0.0
126	155	0.0	0.0	0.0	0.0	0.0	0.0	156	0.0	0.0	0.0	0.0	0.0	0.0
	152	0.0	0.0	0.0	0.0	0.0	0.0	153	0.0	0.0	0.0	0.0	0.0	0.0
127	156	0.0	0.0	0.0	0.0	0.0	0.0	157	0.0	0.0	0.0	0.0	0.0	0.0
	153	0.0	0.0	0.0	0.0	0.0	0.0	154	0.0	0.0	0.0	0.0	0.0	0.0
128	74	0.0	0.0	0.0	0.0	0.0	0.0	158	0.0	0.0	0.0	0.0	0.0	0.0
	25	0.0	0.0	0.0	0.0	0.0	0.0	155	0.0	0.0	0.0	0.0	0.0	0.0
129	158	0.0	0.0	0.0	0.0	0.0	0.0	159	0.0	0.0	0.0	0.0	0.0	0.0
	155	0.0	0.0	0.0	0.0	0.0	0.0	156	0.0	0.0	0.0	0.0	0.0	0.0
130	159	0.0	0.0	0.0	0.0	0.0	0.0	160	0.0	0.0	0.0	0.0	0.0	0.0
	156	0.0	0.0	0.0	0.0	0.0	0.0	157	0.0	0.0	0.0	0.0	0.0	0.0
131	75	0.0	0.0	0.0	0.0	0.0	0.0	161	0.0	0.0	0.0	0.0	0.0	0.0
	74	0.0	0.0	0.0	0.0	0.0	0.0	158	0.0	0.0	0.0	0.0	0.0	0.0
132	161	0.0	0.0	0.0	0.0	0.0	0.0	162	0.0	0.0	0.0	0.0	0.0	0.0
	158	0.0	0.0	0.0	0.0	0.0	0.0	159	0.0	0.0	0.0	0.0	0.0	0.0
133	162	0.0	0.0	0.0	0.0	0.0	0.0	163	0.0	0.0	0.0	0.0	0.0	0.0
	159	0.0	0.0	0.0	0.0	0.0	0.0	160	0.0	0.0	0.0	0.0	0.0	0.0
134	32	0.0	0.0	0.0	0.0	0.0	0.0	164	0.0	0.0	0.0	0.0	0.0	0.0
	75	0.0	0.0	0.0	0.0	0.0	0.0	161	0.0	0.0	0.0	0.0	0.0	0.0
135	164	0.0	0.0	0.0	0.0	0.0	0.0	165	0.0	0.0	0.0	0.0	0.0	0.0
	161	0.0	0.0	0.0	0.0	0.0	0.0	162	0.0	0.0	0.0	0.0	0.0	0.0
136	165	0.0	0.0	0.0	0.0	0.0	0.0	33	0.0	0.0	0.0	0.0	0.0	0.0
	162	0.0	0.0	0.0	0.0	0.0	0.0	163	0.0	0.0	0.0	0.0	0.0	0.0
137	166	0.0	0.0	0.0	0.0	0.0	0.0	167	0.0	0.0	0.0	0.0	0.0	0.0
	58	0.0	0.0	0.0	0.0	0.0	0.0	54	0.0	0.0	0.0	0.0	0.0	0.0
138	167	0.0	0.0	0.0	0.0	0.0	0.0	34	0.0	0.0	0.0	0.0	0.0	0.0
	54	0.0	0.0	0.0	0.0	0.0	0.0	7	0.0	0.0	0.0	0.0	0.0	0.0
139	135	0.0	0.0	0.0	0.0	0.0	0.0	168	0.0	0.0	0.0	0.0	0.0	0.0
	132	0.0	0.0	0.0	0.0	0.0	0.0	166	0.0	0.0	0.0	0.0	0.0	0.0
140	168	0.0	0.0	0.0	0.0	0.0	0.0	169	0.0	0.0	0.0	0.0	0.0	0.0
	166	0.0	0.0	0.0	0.0	0.0	0.0	167	0.0	0.0	0.0	0.0	0.0	0.0
141	169	0.0	0.0	0.0	0.0	0.0	0.0	37	0.0	0.0	0.0	0.0	0.0	0.0
	167	0.0	0.0	0.0	0.0	0.0	0.0	34	0.0	0.0	0.0	0.0	0.0	0.0
142	138	0.0	0.0	0.0	0.0	0.0	0.0	170	0.0	0.0	0.0	0.0	0.0	0.0
	135	0.0	0.0	0.0	0.0	0.0	0.0	168	0.0	0.0	0.0	0.0	0.0	0.0
143	170	0.0	0.0	0.0	0.0	0.0	0.0	171	0.0	0.0	0.0	0.0	0.0	0.0
	168	0.0	0.0	0.0	0.0	0.0	0.0	169	0.0	0.0	0.0	0.0	0.0	0.0
144	171	0.0	0.0	0.0	0.0	0.0	0.0	22	0.0	0.0	0.0	0.0	0.0	0.0
	169	0.0	0.0	0.0	0.0	0.0	0.0	37	0.0	0.0	0.0	0.0	0.0	0.0
145	142	0.0	0.0	0.0	0.0	0.0	0.0	172	0.0	0.0	0.0	0.0	0.0	0.0
	138	0.0	0.0	0.0	0.0	0.0	0.0	170	0.0	0.0	0.0	0.0	0.0	0.0
146	172	0.0	0.0	0.0	0.0	0.0	0.0	173	0.0	0.0	0.0	0.0	0.0	0.0
	170	0.0	0.0	0.0	0.0	0.0	0.0	171	0.0	0.0	0.0	0.0	0.0	0.0
147	173	0.0	0.0	0.0	0.0	0.0	0.0	110	0.0	0.0	0.0	0.0	0.0	0.0
	171	0.0	0.0	0.0	0.0	0.0	0.0	22	0.0	0.0	0.0	0.0	0.0	0.0
148	146	0.0	0.0	0.0	0.0	0.0	0.0	174	0.0	0.0	0.0	0.0	0.0	0.0
	142	0.0	0.0	0.0	0.0	0.0	0.0	172	0.0	0.0	0.0	0.0	0.0	0.0
149	174	0.0	0.0	0.0	0.0	0.0	0.0	175	0.0	0.0	0.0	0.0	0.0	0.0
	172	0.0	0.0	0.0	0.0	0.0	0.0	173	0.0	0.0	0.0	0.0	0.0	0.0
150	175	0.0	0.0	0.0	0.0	0.0	0.0	111	0.0	0.0	0.0	0.0	0.0	0.0
	173	0.0	0.0	0.0	0.0	0.0	0.0	110	0.0	0.0	0.0	0.0	0.0	0.0
151	29	0.0	0.0	0.0	0.0	0.0	0.0	176	0.0	0.0	0.0	0.0	0.0	0.0
	146	0.0	0.0	0.0	0.0	0.0	0.0	174	0.0	0.0	0.0	0.0	0.0	0.0
152	176	0.0	0.0	0.0	0.0	0.0	0.0	177	0.0	0.0	0.0	0.0	0.0	0.0
	174	0.0	0.0	0.0	0.0	0.0	0.0	175	0.0	0.0	0.0	0.0	0.0	0.0
153	177	0.0	0.0	0.0	0.0	0.0	0.0	30	0.0	0.0	0.0	0.0	0.0	0.0
	175	0.0	0.0	0.0	0.0	0.0	0.0	111	0.0	0.0	0.0	0.0	0.0	0.0
154	178	0.0	0.0	0.0	0.0	0.0	0.0	179	0.0	0.0	0.0	0.0	0.0	0.0
	93	0.0	0.0	0.0	0.0	0.0	0.0	92	0.0	0.0	0.0	0.0	0.0	0.0
155	179	0.0	0.0	0.0	0.0	0.0	0.0	12	0.0	0.0	0.0	0.0	0.0	0.0
	92	0.0	0.0	0.0	0.0	0.0	0.0	17	0.0	0.0	0.0	0.0	0.0	0.0
156	154	0.0	0.0	0.0	0.0	0.0	0.0	180	0.0	0.0	0.0	0.0	0.0	0.0
	151	0.0	0.0	0.0	0.0	0.0	0.0	178	0.0	0.0	0.0	0.0	0.0	0.0
157	180	0.0	0.0	0.0	0.0	0.0	0.0	181	0.0	0.0	0.0	0.0	0.0	0.0
	178	0.0	0.0	0.0	0.0	0.0	0.0	179	0.0	0.0	0.0	0.0	0.0	0.0

Documento di proprietà **Snam Rete Gas**. La Società tutelerà i propri diritti in sede civile e penale a termini di legge.

FORZE: SISMA 0°°: MODO9: SHELL

Shell Nro	Nodo N.ro	Tx (kN)	Ty (kN)	Tz (kN)	Mx (kN*m)	My (kN*m)	Mz (kN*m)	Nodo N.ro	Tx (kN)	Ty (kN)	Tz (kN)	Mx (kN*m)	My (kN*m)	Mz (kN*m)
158	181	0.0	0.0	0.0	0.0	0.0	0.0	15	0.0	0.0	0.0	0.0	0.0	0.0
	179	0.0	0.0	0.0	0.0	0.0	0.0	12	0.0	0.0	0.0	0.0	0.0	0.0
159	157	0.0	0.0	0.0	0.0	0.0	0.0	182	0.1	0.0	0.0	0.0	0.0	0.0
	154	0.0	0.0	0.0	0.0	0.0	0.0	180	0.0	0.0	0.0	0.0	0.0	0.0
160	182	0.0	0.0	0.0	0.0	0.0	0.0	183	0.1	0.0	0.0	0.0	0.0	0.0
	180	-0.1	0.0	0.0	0.0	0.0	0.0	181	0.0	0.0	0.0	0.0	0.0	0.0
161	183	-0.1	0.0	0.0	0.0	0.0	0.0	9	0.1	0.0	0.0	0.0	0.0	0.0
	181	-0.1	0.0	0.0	0.0	0.0	0.0	15	0.0	0.0	0.0	0.0	0.0	0.0
162	160	-0.1	0.0	0.0	0.0	0.0	0.0	184	0.0	0.0	0.0	0.0	0.0	0.0
	157	0.0	0.0	0.0	0.0	0.0	0.0	182	0.0	0.0	0.0	0.0	0.0	0.0
163	184	-0.1	0.0	0.0	0.0	0.0	0.0	185	0.1	0.0	0.0	0.0	0.0	0.0
	182	-0.1	0.0	0.0	0.0	0.0	0.0	183	0.1	0.0	0.0	0.0	0.0	0.0
164	185	-0.1	0.0	0.0	0.0	0.0	0.0	120	0.1	0.0	0.0	0.0	0.0	0.0
	183	-0.1	0.0	0.0	0.0	0.0	0.0	9	0.1	0.0	0.0	0.0	0.0	0.0
165	163	0.0	0.0	0.0	0.0	0.0	0.0	186	0.0	0.0	0.0	0.0	0.0	0.0
	160	0.0	0.0	0.0	0.0	0.0	0.0	184	0.1	0.0	0.0	0.0	0.0	0.0
166	186	-0.1	0.0	0.0	0.0	0.0	0.0	187	0.0	0.0	0.0	0.0	0.0	0.0
	184	-0.1	0.0	0.0	0.0	0.0	0.0	185	0.1	0.0	0.0	0.0	0.0	0.0
167	187	-0.1	0.0	0.0	0.0	0.0	0.0	124	0.1	0.0	0.0	0.0	0.0	0.0
	185	-0.1	0.0	0.0	0.0	0.0	0.0	120	0.1	0.0	0.0	0.0	0.0	0.0
168	33	0.0	0.0	0.0	0.0	0.0	0.0	188	0.0	0.0	0.0	0.0	0.0	0.0
	163	0.0	0.0	0.0	0.0	0.0	0.0	186	0.0	0.0	0.0	0.0	0.0	0.0
169	188	0.0	0.0	0.0	0.0	0.0	0.0	189	0.0	0.0	0.0	0.0	0.0	0.0
	186	0.0	0.0	0.0	0.0	0.0	0.0	187	0.0	0.0	0.0	0.0	0.0	0.0
170	189	0.0	0.0	0.0	0.0	0.0	0.0	26	0.0	0.0	0.0	0.0	0.0	0.0
	187	0.0	0.0	0.0	0.0	0.0	0.0	124	0.1	0.0	0.0	0.0	0.0	0.0
171	190	0.0	0.0	0.1	0.0	0.0	0.0	191	0.0	0.0	-0.1	0.0	0.0	0.0
	73	0.0	0.0	0.0	0.0	0.0	0.0	72	0.0	0.0	0.0	0.0	0.0	0.0
172	191	0.0	0.0	0.1	0.0	0.0	0.0	139	0.0	0.0	-0.1	0.0	0.0	0.0
	72	0.0	0.0	0.0	0.0	0.0	0.0	3	0.0	0.0	-0.1	0.0	0.0	0.0
173	127	0.0	0.0	0.0	0.0	0.0	0.0	192	0.0	0.0	0.0	0.0	0.0	0.0
	123	0.0	0.0	0.1	0.0	0.0	0.0	190	0.0	0.0	0.0	0.0	0.0	0.0
174	192	0.0	0.0	0.0	0.0	0.0	0.0	193	0.0	0.0	0.0	0.0	0.0	0.0
	190	0.0	0.0	0.1	0.0	0.0	0.0	191	0.0	0.0	-0.1	0.0	0.0	0.0
175	193	0.0	0.0	0.0	0.0	0.0	0.0	143	0.0	0.0	0.0	0.0	0.0	0.0
	191	0.0	0.0	0.1	0.0	0.0	0.0	139	0.0	0.0	-0.1	0.0	0.0	0.0
176	27	0.0	0.0	-0.1	0.0	0.0	0.0	194	0.0	0.0	0.0	0.0	0.0	0.0
	127	0.0	0.0	0.1	0.0	0.0	0.0	192	0.0	0.0	0.0	0.0	0.0	0.0
177	194	0.0	0.0	-0.1	0.0	0.0	0.0	195	0.0	0.0	0.1	0.0	0.0	0.0
	192	0.0	0.0	0.1	0.0	0.0	0.0	193	0.0	0.0	-0.1	0.0	0.0	0.0
178	195	0.0	0.0	-0.1	0.0	0.0	0.0	28	0.0	0.0	0.1	0.0	0.0	0.0
	193	0.0	0.0	0.1	0.0	0.0	0.0	143	0.0	0.0	-0.1	0.0	0.0	0.0
179	52	0.0	0.0	0.0	0.0	0.0	0.0	119	0.0	0.0	0.0	0.0	0.0	0.0
	53	0.0	0.0	0.0	0.0	0.0	0.0	118	0.0	0.0	0.0	0.0	0.0	0.0
180	7	0.0	0.0	0.0	0.0	0.0	0.0	34	0.0	0.0	0.0	0.0	0.0	0.0
	52	0.0	0.0	0.0	0.0	0.0	0.0	119	0.0	0.0	0.0	0.0	0.0	0.0

FORZE: SISMA 0°°: MODO10: SHELL

Shell Nro	Nodo N.ro	Tx (kN)	Ty (kN)	Tz (kN)	Mx (kN*m)	My (kN*m)	Mz (kN*m)	Nodo N.ro	Tx (kN)	Ty (kN)	Tz (kN)	Mx (kN*m)	My (kN*m)	Mz (kN*m)
1	38	0.0	0.0	0.0	0.0	0.0	0.0	39	0.0	0.0	0.0	0.0	0.0	0.0
	14	0.0	0.0	0.0	0.0	0.0	0.0	1	0.0	0.0	0.0	0.0	0.0	0.0
2	6	0.0	0.0	0.0	0.0	0.0	0.0	44	0.0	0.0	0.0	0.0	0.0	0.0
	2	0.0	0.0	0.0	0.0	0.0	0.0	42	0.0	0.0	0.0	0.0	0.0	0.0
3	39	0.0	0.0	0.0	0.0	0.0	0.0	44	0.0	0.0	0.0	0.0	0.0	0.0
	1	0.0	0.0	0.0	0.0	0.0	0.0	6	0.0	0.0	0.0	0.0	0.0	0.0
4	46	0.0	0.0	0.0	0.0	0.0	0.0	47	0.0	0.0	0.0	0.0	0.0	0.0
	10	0.0	0.0	0.0	0.0	0.0	0.0	16	0.0	0.0	0.0	0.0	0.0	0.0
5	50	0.0	0.0	0.0	0.0	0.0	0.0	46	0.0	0.0	0.0	0.0	0.0	0.0
	4	0.0	0.0	0.0	0.0	0.0	0.0	10	0.0	0.0	0.0	0.0	0.0	0.0
6	54	0.0	0.0	0.0	0.0	0.0	0.0	55	0.0	0.0	0.0	0.0	0.0	0.0
	7	0.0	0.0	0.0	0.0	0.0	0.0	52	0.0	0.0	0.0	0.0	0.0	0.0
7	64	0.0	0.0	0.0	0.0	0.0	0.0	65	0.0	0.0	0.0	0.0	0.0	0.0
	5	0.0	0.0	0.0	0.0	0.0	0.0	62	0.0	0.0	0.0	0.0	0.0	0.0
8	47	0.0	0.0	0.0	0.0	0.0	0.0	72	0.0	0.0	0.0	0.0	0.0	0.0
	16	0.0	0.0	0.0	0.0	0.0	0.0	3	0.0	0.0	0.0	0.0	0.0	0.0
9	76	0.0	0.0	0.0	0.0	0.0	0.0	77	0.0	0.0	0.0	0.0	0.0	0.0
	25	0.0	0.0	0.0	0.0	0.0	0.0	74	0.0	0.0	0.0	0.0	0.0	0.0
10	38	0.0	0.0	0.0	0.0	0.0	0.0	86	0.0	0.0	0.0	0.0	0.0	0.0
	14	0.0	0.0	0.0	0.0	0.0	0.0	71	0.0	0.0	0.0	0.0	0.0	0.0
11	94	0.0	0.0	0.0	0.0	0.0	0.0	95	0.0	0.0	0.0	0.0	0.0	0.0
	18	0.0	0.0	0.0	0.0	0.0	0.0	91	0.0	0.0	0.0	0.0	0.0	0.0
12	102	0.0	0.0	0.0	0.0	0.0	0.0	103	0.0	0.0	0.0	0.0	0.0	0.0
	21	0.0	0.0	0.0	0.0	0.0	0.0	84	0.0	0.0	0.0	0.0	0.0	0.0
13	112	0.0	0.0	0.0	0.0	0.0	0.0	76	0.0	0.0	0.0	0.0	0.0	0.0
	36	0.0	0.0	0.0	0.0	0.0	0.0	25	0.0	0.0	0.0	0.0	0.0	0.0
14	114	0.0	0.0	0.0	0.0	0.0	0.0	112	0.0	0.0	0.0	0.0	0.0	0.0
	35	0.0	0.0	0.0	0.0	0.0	0.0	36	0.0	0.0	0.0	0.0	0.0	0.0
15	24	0.0	0.0	0.0	0.0	0.0	0.0	116	0.0	0.0	0.0	0.0	0.0	0.0
	21	0.0	0.0	0.0	0.0	0.0	0.0	102	0.0	0.0	0.0	0.0	0.0	0.0

Documento di proprietà **Snam Rete Gas**. La Società tutelerà i propri diritti in sede civile e penale a termini di legge.

FORZE: SISMA 0°°: MODO10: SHELL

Shell Nro	Nodo N.ro	Tx (kN)	Ty (kN)	Tz (kN)	Mx (kN*m)	My (kN*m)	Mz (kN*m)	Nodo N.ro	Tx (kN)	Ty (kN)	Tz (kN)	Mx (kN*m)	My (kN*m)	Mz (kN*m)
16	118	0.0	0.0	0.0	0.0	0.0	0.0	116	0.0	0.0	0.0	0.0	0.0	0.0
	20	0.0	0.0	0.0	0.0	0.0	0.0	24	0.0	0.0	0.0	0.0	0.0	0.0
17	120	0.0	0.0	0.0	0.0	0.0	0.0	121	0.0	0.0	0.0	0.0	0.0	0.0
	9	0.0	0.0	0.0	0.0	0.0	0.0	43	0.0	0.0	0.0	0.0	0.0	0.0
18	10	0.0	0.0	0.0	0.0	0.0	0.0	130	0.0	0.0	0.0	0.0	0.0	0.0
	4	0.0	0.0	0.0	0.0	0.0	0.0	68	0.0	0.0	0.0	0.0	0.0	0.0
19	100	0.0	0.0	0.0	0.0	0.0	0.0	114	0.0	0.0	0.0	0.0	0.0	0.0
	19	0.0	0.0	0.0	0.0	0.0	0.0	35	0.0	0.0	0.0	0.0	0.0	0.0
20	35	0.0	0.0	0.0	0.0	0.0	0.0	149	0.0	0.0	0.0	0.0	0.0	0.0
	19	0.0	0.0	0.0	0.0	0.0	0.0	97	0.0	0.0	0.0	0.0	0.0	0.0
21	132	0.0	0.0	0.0	0.0	0.0	0.0	166	0.0	0.0	0.0	0.0	0.0	0.0
	5	0.0	0.0	0.0	0.0	0.0	0.0	58	0.0	0.0	0.0	0.0	0.0	0.0
22	151	0.0	0.0	0.0	0.0	0.0	0.0	178	0.0	0.0	0.0	0.0	0.0	0.0
	18	0.0	0.0	0.0	0.0	0.0	0.0	93	0.0	0.0	0.0	0.0	0.0	0.0
23	123	0.0	0.0	0.0	0.0	0.0	0.0	190	0.0	0.0	0.0	0.0	0.0	0.0
	2	0.0	0.0	0.0	0.0	0.0	0.0	73	0.0	0.0	0.0	0.0	0.0	0.0
24	53	0.0	0.0	0.0	0.0	0.0	0.0	118	0.0	0.0	0.0	0.0	0.0	0.0
	11	0.0	0.0	0.0	0.0	0.0	0.0	20	0.0	0.0	0.0	0.0	0.0	0.0
25	40	0.0	0.0	0.0	0.0	0.0	0.0	41	0.0	0.0	0.0	0.0	0.0	0.0
	38	0.0	0.0	0.0	0.0	0.0	0.0	39	0.0	0.0	0.0	0.0	0.0	0.0
26	17	0.0	0.0	0.0	0.0	0.0	0.0	12	0.0	0.0	0.0	0.0	0.0	0.0
	40	0.0	0.0	0.0	0.0	0.0	0.0	41	0.0	0.0	0.0	0.0	0.0	0.0
27	44	0.0	0.0	0.0	0.0	0.0	0.0	45	0.0	0.0	0.0	0.0	0.0	0.0
	42	0.0	0.0	0.0	0.0	0.0	0.0	43	0.0	0.0	0.0	0.0	0.0	0.0
28	45	0.0	0.0	0.0	0.0	0.0	0.0	15	0.0	0.0	0.0	0.0	0.0	0.0
	43	0.0	0.0	0.0	0.0	0.0	0.0	9	0.0	0.0	0.0	0.0	0.0	0.0
29	41	0.0	0.0	0.0	0.0	0.0	0.0	45	0.0	0.0	0.0	0.0	0.0	0.0
	39	0.0	0.0	0.0	0.0	0.0	0.0	44	0.0	0.0	0.0	0.0	0.0	0.0
30	12	0.0	0.0	0.0	0.0	0.0	0.0	15	0.0	0.0	0.0	0.0	0.0	0.0
	41	0.0	0.0	0.0	0.0	0.0	0.0	45	0.0	0.0	0.0	0.0	0.0	0.0
31	48	0.0	0.0	0.0	0.0	0.0	0.0	49	0.0	0.0	0.0	0.0	0.0	0.0
	46	0.0	0.0	0.0	0.0	0.0	0.0	47	0.0	0.0	0.0	0.0	0.0	0.0
32	1	0.0	0.0	0.0	0.0	0.0	0.0	8	0.0	0.0	0.0	0.0	0.0	0.0
	48	0.0	0.0	0.0	0.0	0.0	0.0	49	0.0	0.0	0.0	0.0	0.0	0.0
33	51	0.0	0.0	0.0	0.0	0.0	0.0	48	0.0	0.0	0.0	0.0	0.0	0.0
	50	0.0	0.0	0.0	0.0	0.0	0.0	46	0.0	0.0	0.0	0.0	0.0	0.0
34	14	0.0	0.0	0.0	0.0	0.0	0.0	1	0.0	0.0	0.0	0.0	0.0	0.0
	51	0.0	0.0	0.0	0.0	0.0	0.0	48	0.0	0.0	0.0	0.0	0.0	0.0
35	55	0.0	0.0	0.0	0.0	0.0	0.0	56	0.0	0.0	0.0	0.0	0.0	0.0
	52	0.0	0.0	0.0	0.0	0.0	0.0	53	0.0	0.0	0.0	0.0	0.0	0.0
36	56	0.0	0.0	0.0	0.0	0.0	0.0	57	0.0	0.0	0.0	0.0	0.0	0.0
	53	0.0	0.0	0.0	0.0	0.0	0.0	11	0.0	0.0	0.0	0.0	0.0	0.0
37	58	0.0	0.0	0.0	0.0	0.0	0.0	59	0.0	0.0	0.0	0.0	0.0	0.0
	54	0.0	0.0	0.0	0.0	0.0	0.0	55	0.0	0.0	0.0	0.0	0.0	0.0
38	59	0.0	0.0	0.0	0.0	0.0	0.0	60	0.0	0.0	0.0	0.0	0.0	0.0
	55	0.0	0.0	0.0	0.0	0.0	0.0	56	0.0	0.0	0.0	0.0	0.0	0.0
39	60	0.0	0.0	0.0	0.0	0.0	0.0	61	0.0	0.0	0.0	0.0	0.0	0.0
	56	0.0	0.0	0.0	0.0	0.0	0.0	57	0.0	0.0	0.0	0.0	0.0	0.0
40	5	0.0	0.0	0.0	0.0	0.0	0.0	62	0.0	0.0	0.0	0.0	0.0	0.0
	58	0.0	0.0	0.0	0.0	0.0	0.0	59	0.0	0.0	0.0	0.0	0.0	0.0
41	62	0.0	0.0	0.0	0.0	0.0	0.0	63	0.0	0.0	0.0	0.0	0.0	0.0
	59	0.0	0.0	0.0	0.0	0.0	0.0	60	0.0	0.0	0.0	0.0	0.0	0.0
42	63	0.0	0.0	0.0	0.0	0.0	0.0	13	0.0	0.0	0.0	0.0	0.0	0.0
	60	0.0	0.0	0.0	0.0	0.0	0.0	61	0.0	0.0	0.0	0.0	0.0	0.0
43	65	0.0	0.0	0.0	0.0	0.0	0.0	66	0.0	0.0	0.0	0.0	0.0	0.0
	62	0.0	0.0	0.0	0.0	0.0	0.0	63	0.0	0.0	0.0	0.0	0.0	0.0
44	66	0.0	0.0	0.0	0.0	0.0	0.0	67	0.0	0.0	0.0	0.0	0.0	0.0
	63	0.0	0.0	0.0	0.0	0.0	0.0	13	0.0	0.0	0.0	0.0	0.0	0.0
45	68	0.0	0.0	0.0	0.0	0.0	0.0	69	0.0	0.0	0.0	0.0	0.0	0.0
	64	0.0	0.0	0.0	0.0	0.0	0.0	65	0.0	0.0	0.0	0.0	0.0	0.0
46	69	0.0	0.0	0.0	0.0	0.0	0.0	70	0.0	0.0	0.0	0.0	0.0	0.0
	65	0.0	0.0	0.0	0.0	0.0	0.0	66	0.0	0.0	0.0	0.0	0.0	0.0
47	70	0.0	0.0	0.0	0.0	0.0	0.0	71	0.0	0.0	0.0	0.0	0.0	0.0
	66	0.0	0.0	0.0	0.0	0.0	0.0	67	0.0	0.0	0.0	0.0	0.0	0.0
48	4	0.0	0.0	0.0	0.0	0.0	0.0	50	0.0	0.0	0.0	0.0	0.0	0.0
	68	0.0	0.0	0.0	0.0	0.0	0.0	69	0.0	0.0	0.0	0.0	0.0	0.0
49	50	0.0	0.0	0.0	0.0	0.0	0.0	51	0.0	0.0	0.0	0.0	0.0	0.0
	69	0.0	0.0	0.0	0.0	0.0	0.0	70	0.0	0.0	0.0	0.0	0.0	0.0
50	51	0.0	0.0	0.0	0.0	0.0	0.0	14	0.0	0.0	0.0	0.0	0.0	0.0
	70	0.0	0.0	0.0	0.0	0.0	0.0	71	0.0	0.0	0.0	0.0	0.0	0.0
51	49	0.0	0.0	0.0	0.0	0.0	0.0	73	0.0	0.0	0.0	0.0	0.0	0.0
	47	0.0	0.0	0.0	0.0	0.0	0.0	72	0.0	0.0	0.0	0.0	0.0	0.0
52	8	0.0	0.0	0.0	0.0	0.0	0.0	2	0.0	0.0	0.0	0.0	0.0	0.0
	49	0.0	0.0	0.0	0.0	0.0	0.0	73	0.0	0.0	0.0	0.0	0.0	0.0
53	77	0.0	0.0	0.0	0.0	0.0	0.0	78	0.0	0.0	0.0	0.0	0.0	0.0
	74	0.0	0.0	0.0	0.0	0.0	0.0	75	0.0	0.0	0.0	0.0	0.0	0.0
54	78	0.0	0.0	0.0	0.0	0.0	0.0	79	0.0	0.0	0.0	0.0	0.0	0.0
	75	0.0	0.0	0.0	0.0	0.0	0.0	32	0.0	0.0	0.0	0.0	0.0	0.0
55	80	0.0	0.0	0.0	0.0	0.0	0.0	81	0.0	0.0	0.0	0.0	0.0	0.0
	76	0.0	0.0	0.0	0.0	0.0	0.0	77	0.0	0.0	0.0	0.0	0.0	0.0

Documento di proprietà **Snam Rete Gas**. La Società tutelerà i propri diritti in sede civile e penale a termini di legge.

FORZE: SISMA 0°°: MODO10: SHELL

Shell Nro	Nodo N.ro	Tx (kN)	Ty (kN)	Tz (kN)	Mx (kN*m)	My (kN*m)	Mz (kN*m)	Nodo N.ro	Tx (kN)	Ty (kN)	Tz (kN)	Mx (kN*m)	My (kN*m)	Mz (kN*m)
56	81	0.0	0.0	0.0	0.0	0.0	0.0	82	0.0	0.0	0.0	0.0	0.0	0.0
	77	0.0	0.0	0.0	0.0	0.0	0.0	78	0.0	0.0	0.0	0.0	0.0	0.0
57	82	0.0	0.0	0.0	0.0	0.0	0.0	83	0.0	0.0	0.0	0.0	0.0	0.0
	78	0.0	0.0	0.0	0.0	0.0	0.0	79	0.0	0.0	0.0	0.0	0.0	0.0
58	21	0.0	0.0	0.0	0.0	0.0	0.0	84	0.0	0.0	0.0	0.0	0.0	0.0
	80	0.0	0.0	0.0	0.0	0.0	0.0	81	0.0	0.0	0.0	0.0	0.0	0.0
59	84	0.0	0.0	0.0	0.0	0.0	0.0	85	0.0	0.0	0.0	0.0	0.0	0.0
	81	0.0	0.0	0.0	0.0	0.0	0.0	82	0.0	0.0	0.0	0.0	0.0	0.0
60	85	0.0	0.0	0.0	0.0	0.0	0.0	31	0.0	0.0	0.0	0.0	0.0	0.0
	82	0.0	0.0	0.0	0.0	0.0	0.0	83	0.0	0.0	0.0	0.0	0.0	0.0
61	86	0.0	0.0	0.0	0.0	0.0	0.0	87	0.0	0.0	0.0	0.0	0.0	0.0
	71	0.0	0.0	0.0	0.0	0.0	0.0	67	0.0	0.0	0.0	0.0	0.0	0.0
62	87	0.0	0.0	0.0	0.0	0.0	0.0	88	0.0	0.0	0.0	0.0	0.0	0.0
	67	0.0	0.0	0.0	0.0	0.0	0.0	13	0.0	0.0	0.0	0.0	0.0	0.0
63	40	0.0	0.0	0.0	0.0	0.0	0.0	89	0.0	0.0	0.0	0.0	0.0	0.0
	38	0.0	0.0	0.0	0.0	0.0	0.0	86	0.0	0.0	0.0	0.0	0.0	0.0
64	89	0.0	0.0	0.0	0.0	0.0	0.0	90	0.0	0.0	0.0	0.0	0.0	0.0
	86	0.0	0.0	0.0	0.0	0.0	0.0	87	0.0	0.0	0.0	0.0	0.0	0.0
65	90	0.0	0.0	0.0	0.0	0.0	0.0	91	0.0	0.0	0.0	0.0	0.0	0.0
	87	0.0	0.0	0.0	0.0	0.0	0.0	88	0.0	0.0	0.0	0.0	0.0	0.0
66	17	0.0	0.0	0.0	0.0	0.0	0.0	92	0.0	0.0	0.0	0.0	0.0	0.0
	40	0.0	0.0	0.0	0.0	0.0	0.0	89	0.0	0.0	0.0	0.0	0.0	0.0
67	92	0.0	0.0	0.0	0.0	0.0	0.0	93	0.0	0.0	0.0	0.0	0.0	0.0
	89	0.0	0.0	0.0	0.0	0.0	0.0	90	0.0	0.0	0.0	0.0	0.0	0.0
68	93	0.0	0.0	0.0	0.0	0.0	0.0	18	0.0	0.0	0.0	0.0	0.0	0.0
	90	0.0	0.0	0.0	0.0	0.0	0.0	91	0.0	0.0	0.0	0.0	0.0	0.0
69	95	0.0	0.0	0.0	0.0	0.0	0.0	96	0.0	0.0	0.0	0.0	0.0	0.0
	91	0.0	0.0	0.0	0.0	0.0	0.0	88	0.0	0.0	0.0	0.0	0.0	0.0
70	96	0.0	0.0	0.0	0.0	0.0	0.0	61	0.0	0.0	0.0	0.0	0.0	0.0
	88	0.0	0.0	0.0	0.0	0.0	0.0	13	0.0	0.0	0.0	0.0	0.0	0.0
71	97	0.0	0.0	0.0	0.0	0.0	0.0	98	0.0	0.0	0.0	0.0	0.0	0.0
	94	0.0	0.0	0.0	0.0	0.0	0.0	95	0.0	0.0	0.0	0.0	0.0	0.0
72	98	0.0	0.0	0.0	0.0	0.0	0.0	99	0.0	0.0	0.0	0.0	0.0	0.0
	95	0.0	0.0	0.0	0.0	0.0	0.0	96	0.0	0.0	0.0	0.0	0.0	0.0
73	99	0.0	0.0	0.0	0.0	0.0	0.0	57	0.0	0.0	0.0	0.0	0.0	0.0
	96	0.0	0.0	0.0	0.0	0.0	0.0	61	0.0	0.0	0.0	0.0	0.0	0.0
74	19	0.0	0.0	0.0	0.0	0.0	0.0	100	0.0	0.0	0.0	0.0	0.0	0.0
	97	0.0	0.0	0.0	0.0	0.0	0.0	98	0.0	0.0	0.0	0.0	0.0	0.0
75	100	0.0	0.0	0.0	0.0	0.0	0.0	101	0.0	0.0	0.0	0.0	0.0	0.0
	98	0.0	0.0	0.0	0.0	0.0	0.0	99	0.0	0.0	0.0	0.0	0.0	0.0
76	101	0.0	0.0	0.0	0.0	0.0	0.0	11	0.0	0.0	0.0	0.0	0.0	0.0
	99	0.0	0.0	0.0	0.0	0.0	0.0	57	0.0	0.0	0.0	0.0	0.0	0.0
77	103	0.0	0.0	0.0	0.0	0.0	0.0	104	0.0	0.0	0.0	0.0	0.0	0.0
	84	0.0	0.0	0.0	0.0	0.0	0.0	85	0.0	0.0	0.0	0.0	0.0	0.0
78	104	0.0	0.0	0.0	0.0	0.0	0.0	105	0.0	0.0	0.0	0.0	0.0	0.0
	85	0.0	0.0	0.0	0.0	0.0	0.0	31	0.0	0.0	0.0	0.0	0.0	0.0
79	106	0.0	0.0	0.0	0.0	0.0	0.0	107	0.0	0.0	0.0	0.0	0.0	0.0
	102	0.0	0.0	0.0	0.0	0.0	0.0	103	0.0	0.0	0.0	0.0	0.0	0.0
80	107	0.0	0.0	0.0	0.0	0.0	0.0	108	0.0	0.0	0.0	0.0	0.0	0.0
	103	0.0	0.0	0.0	0.0	0.0	0.0	104	0.0	0.0	0.0	0.0	0.0	0.0
81	108	0.0	0.0	0.0	0.0	0.0	0.0	109	0.0	0.0	0.0	0.0	0.0	0.0
	104	0.0	0.0	0.0	0.0	0.0	0.0	105	0.0	0.0	0.0	0.0	0.0	0.0
82	22	0.0	0.0	0.0	0.0	0.0	0.0	110	0.0	0.0	0.0	0.0	0.0	0.0
	106	0.0	0.0	0.0	0.0	0.0	0.0	107	0.0	0.0	0.0	0.0	0.0	0.0
83	110	0.0	0.0	0.0	0.0	0.0	0.0	111	0.0	0.0	0.0	0.0	0.0	0.0
	107	0.0	0.0	0.0	0.0	0.0	0.0	108	0.0	0.0	0.0	0.0	0.0	0.0
84	111	0.0	0.0	0.0	0.0	0.0	0.0	30	0.0	0.0	0.0	0.0	0.0	0.0
	108	0.0	0.0	0.0	0.0	0.0	0.0	109	0.0	0.0	0.0	0.0	0.0	0.0
85	113	0.0	0.0	0.0	0.0	0.0	0.0	80	0.0	0.0	0.0	0.0	0.0	0.0
	112	0.0	0.0	0.0	0.0	0.0	0.0	76	0.0	0.0	0.0	0.0	0.0	0.0
86	23	0.0	0.0	0.0	0.0	0.0	0.0	21	0.0	0.0	0.0	0.0	0.0	0.0
	113	0.0	0.0	0.0	0.0	0.0	0.0	80	0.0	0.0	0.0	0.0	0.0	0.0
87	115	0.0	0.0	0.0	0.0	0.0	0.0	113	0.0	0.0	0.0	0.0	0.0	0.0
	114	0.0	0.0	0.0	0.0	0.0	0.0	112	0.0	0.0	0.0	0.0	0.0	0.0
88	20	0.0	0.0	0.0	0.0	0.0	0.0	23	0.0	0.0	0.0	0.0	0.0	0.0
	115	0.0	0.0	0.0	0.0	0.0	0.0	113	0.0	0.0	0.0	0.0	0.0	0.0
89	116	0.0	0.0	0.0	0.0	0.0	0.0	117	0.0	0.0	0.0	0.0	0.0	0.0
	102	0.0	0.0	0.0	0.0	0.0	0.0	106	0.0	0.0	0.0	0.0	0.0	0.0
90	117	0.0	0.0	0.0	0.0	0.0	0.0	37	0.0	0.0	0.0	0.0	0.0	0.0
	106	0.0	0.0	0.0	0.0	0.0	0.0	22	0.0	0.0	0.0	0.0	0.0	0.0
91	119	0.0	0.0	0.0	0.0	0.0	0.0	117	0.0	0.0	0.0	0.0	0.0	0.0
	118	0.0	0.0	0.0	0.0	0.0	0.0	116	0.0	0.0	0.0	0.0	0.0	0.0
92	34	0.0	0.0	0.0	0.0	0.0	0.0	37	0.0	0.0	0.0	0.0	0.0	0.0
	119	0.0	0.0	0.0	0.0	0.0	0.0	117	0.0	0.0	0.0	0.0	0.0	0.0
93	121	0.0	0.0	0.0	0.0	0.0	0.0	122	0.0	0.0	0.0	0.0	0.0	0.0
	43	0.0	0.0	0.0	0.0	0.0	0.0	42	0.0	0.0	0.0	0.0	0.0	0.0
94	122	0.0	0.0	0.0	0.0	0.0	0.0	123	0.0	0.0	0.0	0.0	0.0	0.0
	42	0.0	0.0	0.0	0.0	0.0	0.0	2	0.0	0.0	0.0	0.0	0.0	0.0
95	124	0.0	0.0	0.0	0.0	0.0	0.0	125	0.0	0.0	0.0	0.0	0.0	0.0
	120	0.0	0.0	0.0	0.0	0.0	0.0	121	0.0	0.0	0.0	0.0	0.0	0.0

Documento di proprietà **Snam Rete Gas**. La Società tutelerà i propri diritti in sede civile e penale a termini di legge.

FORZE: SISMA 0°°: MODO10: SHELL

Shell Nro	Nodo N.ro	Tx (kN)	Ty (kN)	Tz (kN)	Mx (kN*m)	My (kN*m)	Mz (kN*m)	Nodo N.ro	Tx (kN)	Ty (kN)	Tz (kN)	Mx (kN*m)	My (kN*m)	Mz (kN*m)
96	125	0.0	0.0	0.0	0.0	0.0	0.0	126	0.0	0.0	0.0	0.0	0.0	0.0
	121	0.0	0.0	0.0	0.0	0.0	0.0	122	0.0	0.0	0.0	0.0	0.0	0.0
97	126	0.0	0.0	0.0	0.0	0.0	0.0	127	0.0	0.0	0.0	0.0	0.0	0.0
	122	0.0	0.0	0.0	0.0	0.0	0.0	123	0.0	0.0	0.0	0.0	0.0	0.0
98	26	0.0	0.0	0.0	0.0	0.0	0.0	128	0.0	0.0	0.0	0.0	0.0	0.0
	124	0.0	0.0	0.0	0.0	0.0	0.0	125	0.0	0.0	0.0	0.0	0.0	0.0
99	128	0.0	0.0	0.0	0.0	0.0	0.0	129	0.0	0.0	0.0	0.0	0.0	0.0
	125	0.0	0.0	0.0	0.0	0.0	0.0	126	0.0	0.0	0.0	0.0	0.0	0.0
100	129	0.0	0.0	0.0	0.0	0.0	0.0	27	0.0	0.0	0.0	0.0	0.0	0.0
	126	0.0	0.0	0.0	0.0	0.0	0.0	127	0.0	0.0	0.0	0.0	0.0	0.0
101	130	0.0	0.0	0.0	0.0	0.0	0.0	131	0.0	0.0	0.0	0.0	0.0	0.0
	68	0.0	0.0	0.0	0.0	0.0	0.0	64	0.0	0.0	0.0	0.0	0.0	0.0
102	131	0.0	0.0	0.0	0.0	0.0	0.0	132	0.0	0.0	0.0	0.0	0.0	0.0
	64	0.0	0.0	0.0	0.0	0.0	0.0	5	0.0	0.0	0.0	0.0	0.0	0.0
103	16	0.0	0.0	0.0	0.0	0.0	0.0	133	0.0	0.0	0.0	0.0	0.0	0.0
	10	0.0	0.0	0.0	0.0	0.0	0.0	130	0.0	0.0	0.0	0.0	0.0	0.0
104	133	0.0	0.0	0.0	0.0	0.0	0.0	134	0.0	0.0	0.0	0.0	0.0	0.0
	130	0.0	0.0	0.0	0.0	0.0	0.0	131	0.0	0.0	0.0	0.0	0.0	0.0
105	134	0.0	0.0	0.0	0.0	0.0	0.0	135	0.0	0.0	0.0	0.0	0.0	0.0
	131	0.0	0.0	0.0	0.0	0.0	0.0	132	0.0	0.0	0.0	0.0	0.0	0.0
106	3	0.0	0.0	0.0	0.0	0.0	0.0	136	0.0	0.0	0.0	0.0	0.0	0.0
	16	0.0	0.0	0.0	0.0	0.0	0.0	133	0.0	0.0	0.0	0.0	0.0	0.0
107	136	0.0	0.0	0.0	0.0	0.0	0.0	137	0.0	0.0	0.0	0.0	0.0	0.0
	133	0.0	0.0	0.0	0.0	0.0	0.0	134	0.0	0.0	0.0	0.0	0.0	0.0
108	137	0.0	0.0	0.0	0.0	0.0	0.0	138	0.0	0.0	0.0	0.0	0.0	0.0
	134	0.0	0.0	0.0	0.0	0.0	0.0	135	0.0	0.0	0.0	0.0	0.0	0.0
109	139	0.0	0.0	0.0	0.0	0.0	0.0	140	0.0	0.0	0.0	0.0	0.0	0.0
	3	0.0	0.0	0.0	0.0	0.0	0.0	136	0.0	0.0	0.0	0.0	0.0	0.0
110	140	0.0	0.0	0.0	0.0	0.0	0.0	141	0.0	0.0	0.0	0.0	0.0	0.0
	136	0.0	0.0	0.0	0.0	0.0	0.0	137	0.0	0.0	0.0	0.0	0.0	0.0
111	141	0.0	0.0	0.0	0.0	0.0	0.0	142	0.0	0.0	0.0	0.0	0.0	0.0
	137	0.0	0.0	0.0	0.0	0.0	0.0	138	0.0	0.0	0.0	0.0	0.0	0.0
112	143	0.0	0.0	0.0	0.0	0.0	0.0	144	0.0	0.0	0.0	0.0	0.0	0.0
	139	0.0	0.0	0.0	0.0	0.0	0.0	140	0.0	0.0	0.0	0.0	0.0	0.0
113	144	0.0	0.0	0.0	0.0	0.0	0.0	145	0.0	0.0	0.0	0.0	0.0	0.0
	140	0.0	0.0	0.0	0.0	0.0	0.0	141	0.0	0.0	0.0	0.0	0.0	0.0
114	145	0.0	0.0	0.0	0.0	0.0	0.0	146	0.0	0.0	0.0	0.0	0.0	0.0
	141	0.0	0.0	0.0	0.0	0.0	0.0	142	0.0	0.0	0.0	0.0	0.0	0.0
115	28	0.0	0.0	0.0	0.0	0.0	0.0	147	0.0	0.0	0.0	0.0	0.0	0.0
	143	0.0	0.0	0.0	0.0	0.0	0.0	144	0.0	0.0	0.0	0.0	0.0	0.0
116	147	0.0	0.0	0.0	0.0	0.0	0.0	148	0.0	0.0	0.0	0.0	0.0	0.0
	144	0.0	0.0	0.0	0.0	0.0	0.0	145	0.0	0.0	0.0	0.0	0.0	0.0
117	148	0.0	0.0	0.0	0.0	0.0	0.0	29	0.0	0.0	0.0	0.0	0.0	0.0
	145	0.0	0.0	0.0	0.0	0.0	0.0	146	0.0	0.0	0.0	0.0	0.0	0.0
118	101	0.0	0.0	0.0	0.0	0.0	0.0	115	0.0	0.0	0.0	0.0	0.0	0.0
	100	0.0	0.0	0.0	0.0	0.0	0.0	114	0.0	0.0	0.0	0.0	0.0	0.0
119	11	0.0	0.0	0.0	0.0	0.0	0.0	20	0.0	0.0	0.0	0.0	0.0	0.0
	101	0.0	0.0	0.0	0.0	0.0	0.0	115	0.0	0.0	0.0	0.0	0.0	0.0
120	149	0.0	0.0	0.0	0.0	0.0	0.0	150	0.0	0.0	0.0	0.0	0.0	0.0
	97	0.0	0.0	0.0	0.0	0.0	0.0	94	0.0	0.0	0.0	0.0	0.0	0.0
121	150	0.0	0.0	0.0	0.0	0.0	0.0	151	0.0	0.0	0.0	0.0	0.0	0.0
	94	0.0	0.0	0.0	0.0	0.0	0.0	18	0.0	0.0	0.0	0.0	0.0	0.0
122	36	0.0	0.0	0.0	0.0	0.0	0.0	152	0.0	0.0	0.0	0.0	0.0	0.0
	35	0.0	0.0	0.0	0.0	0.0	0.0	149	0.0	0.0	0.0	0.0	0.0	0.0
123	152	0.0	0.0	0.0	0.0	0.0	0.0	153	0.0	0.0	0.0	0.0	0.0	0.0
	149	0.0	0.0	0.0	0.0	0.0	0.0	150	0.0	0.0	0.0	0.0	0.0	0.0
124	153	0.0	0.0	0.0	0.0	0.0	0.0	154	0.0	0.0	0.0	0.0	0.0	0.0
	150	0.0	0.0	0.0	0.0	0.0	0.0	151	0.0	0.0	0.0	0.0	0.0	0.0
125	25	0.0	0.0	0.0	0.0	0.0	0.0	155	0.0	0.0	0.0	0.0	0.0	0.0
	36	0.0	0.0	0.0	0.0	0.0	0.0	152	0.0	0.0	0.0	0.0	0.0	0.0
126	155	0.0	0.0	0.0	0.0	0.0	0.0	156	0.0	0.0	0.0	0.0	0.0	0.0
	152	0.0	0.0	0.0	0.0	0.0	0.0	153	0.0	0.0	0.0	0.0	0.0	0.0
127	156	0.0	0.0	0.0	0.0	0.0	0.0	157	0.0	0.0	0.0	0.0	0.0	0.0
	153	0.0	0.0	0.0	0.0	0.0	0.0	154	0.0	0.0	0.0	0.0	0.0	0.0
128	74	0.0	0.0	0.0	0.0	0.0	0.0	158	0.0	0.0	0.0	0.0	0.0	0.0
	25	0.0	0.0	0.0	0.0	0.0	0.0	155	0.0	0.0	0.0	0.0	0.0	0.0
129	158	0.0	0.0	0.0	0.0	0.0	0.0	159	0.0	0.0	0.0	0.0	0.0	0.0
	155	0.0	0.0	0.0	0.0	0.0	0.0	156	0.0	0.0	0.0	0.0	0.0	0.0
130	159	0.0	0.0	0.0	0.0	0.0	0.0	160	0.0	0.0	0.0	0.0	0.0	0.0
	156	0.0	0.0	0.0	0.0	0.0	0.0	157	0.0	0.0	0.0	0.0	0.0	0.0
131	75	0.0	0.0	0.0	0.0	0.0	0.0	161	0.0	0.0	0.0	0.0	0.0	0.0
	74	0.0	0.0	0.0	0.0	0.0	0.0	158	0.0	0.0	0.0	0.0	0.0	0.0
132	161	0.0	0.0	0.0	0.0	0.0	0.0	162	0.0	0.0	0.0	0.0	0.0	0.0
	158	0.0	0.0	0.0	0.0	0.0	0.0	159	0.0	0.0	0.0	0.0	0.0	0.0
133	162	0.0	0.0	0.0	0.0	0.0	0.0	163	0.0	0.0	0.0	0.0	0.0	0.0
	159	0.0	0.0	0.0	0.0	0.0	0.0	160	0.0	0.0	0.0	0.0	0.0	0.0
134	32	0.0	0.0	0.0	0.0	0.0	0.0	164	0.0	0.0	0.0	0.0	0.0	0.0
	75	0.0	0.0	0.0	0.0	0.0	0.0	161	0.0	0.0	0.0	0.0	0.0	0.0
135	164	0.0	0.0	0.0	0.0	0.0	0.0	165	0.0	0.0	0.0	0.0	0.0	0.0
	161	0.0	0.0	0.0	0.0	0.0	0.0	162	0.0	0.0	0.0	0.0	0.0	0.0

Documento di proprietà **Snam Rete Gas**. La Società tutelerà i propri diritti in sede civile e penale a termini di legge.

FORZE: SISMA 0°°: MODO10: SHELL

Shell Nro	Nodo N.ro	Tx (kN)	Ty (kN)	Tz (kN)	Mx (kN*m)	My (kN*m)	Mz (kN*m)	Nodo N.ro	Tx (kN)	Ty (kN)	Tz (kN)	Mx (kN*m)	My (kN*m)	Mz (kN*m)
136	165	0.0	0.0	0.0	0.0	0.0	0.0	33	0.0	0.0	0.0	0.0	0.0	0.0
	162	0.0	0.0	0.0	0.0	0.0	0.0	163	0.0	0.0	0.0	0.0	0.0	0.0
137	166	0.0	0.0	0.0	0.0	0.0	0.0	167	0.0	0.0	0.0	0.0	0.0	0.0
	58	0.0	0.0	0.0	0.0	0.0	0.0	54	0.0	0.0	0.0	0.0	0.0	0.0
138	167	0.0	0.0	0.0	0.0	0.0	0.0	34	0.0	0.0	0.0	0.0	0.0	0.0
	54	0.0	0.0	0.0	0.0	0.0	0.0	7	0.0	0.0	0.0	0.0	0.0	0.0
139	135	0.0	0.0	0.0	0.0	0.0	0.0	168	0.0	0.0	0.0	0.0	0.0	0.0
	132	0.0	0.0	0.0	0.0	0.0	0.0	166	0.0	0.0	0.0	0.0	0.0	0.0
140	168	0.0	0.0	0.0	0.0	0.0	0.0	169	0.0	0.0	0.0	0.0	0.0	0.0
	166	0.0	0.0	0.0	0.0	0.0	0.0	167	0.0	0.0	0.0	0.0	0.0	0.0
141	169	0.0	0.0	0.0	0.0	0.0	0.0	37	0.0	0.0	0.0	0.0	0.0	0.0
	167	0.0	0.0	0.0	0.0	0.0	0.0	34	0.0	0.0	0.0	0.0	0.0	0.0
142	138	0.0	0.0	0.0	0.0	0.0	0.0	170	0.0	0.0	0.0	0.0	0.0	0.0
	135	0.0	0.0	0.0	0.0	0.0	0.0	168	0.0	0.0	0.0	0.0	0.0	0.0
143	170	0.0	0.0	0.0	0.0	0.0	0.0	171	0.0	0.0	0.0	0.0	0.0	0.0
	168	0.0	0.0	0.0	0.0	0.0	0.0	169	0.0	0.0	0.0	0.0	0.0	0.0
144	171	0.0	0.0	0.0	0.0	0.0	0.0	22	0.0	0.0	0.0	0.0	0.0	0.0
	169	0.0	0.0	0.0	0.0	0.0	0.0	37	0.0	0.0	0.0	0.0	0.0	0.0
145	142	0.0	0.0	0.0	0.0	0.0	0.0	172	0.0	0.0	0.0	0.0	0.0	0.0
	138	0.0	0.0	0.0	0.0	0.0	0.0	170	0.0	0.0	0.0	0.0	0.0	0.0
146	172	0.0	0.0	0.0	0.0	0.0	0.0	173	0.0	0.0	0.0	0.0	0.0	0.0
	170	0.0	0.0	0.0	0.0	0.0	0.0	171	0.0	0.0	0.0	0.0	0.0	0.0
147	173	0.0	0.0	0.0	0.0	0.0	0.0	110	0.0	0.0	0.0	0.0	0.0	0.0
	171	0.0	0.0	0.0	0.0	0.0	0.0	22	0.0	0.0	0.0	0.0	0.0	0.0
148	146	0.0	0.0	0.0	0.0	0.0	0.0	174	0.0	0.0	0.0	0.0	0.0	0.0
	142	0.0	0.0	0.0	0.0	0.0	0.0	172	0.0	0.0	0.0	0.0	0.0	0.0
149	174	0.0	0.0	0.0	0.0	0.0	0.0	175	0.0	0.0	0.0	0.0	0.0	0.0
	172	0.0	0.0	0.0	0.0	0.0	0.0	173	0.0	0.0	0.0	0.0	0.0	0.0
150	175	0.0	0.0	0.0	0.0	0.0	0.0	111	0.0	0.0	0.0	0.0	0.0	0.0
	173	0.0	0.0	0.0	0.0	0.0	0.0	110	0.0	0.0	0.0	0.0	0.0	0.0
151	29	0.0	0.0	0.0	0.0	0.0	0.0	176	0.0	0.0	0.0	0.0	0.0	0.0
	146	0.0	0.0	0.0	0.0	0.0	0.0	174	0.0	0.0	0.0	0.0	0.0	0.0
152	176	0.0	0.0	0.0	0.0	0.0	0.0	177	0.0	0.0	0.0	0.0	0.0	0.0
	174	0.0	0.0	0.0	0.0	0.0	0.0	175	0.0	0.0	0.0	0.0	0.0	0.0
153	177	0.0	0.0	0.0	0.0	0.0	0.0	30	0.0	0.0	0.0	0.0	0.0	0.0
	175	0.0	0.0	0.0	0.0	0.0	0.0	111	0.0	0.0	0.0	0.0	0.0	0.0
154	178	0.0	0.0	0.0	0.0	0.0	0.0	179	0.0	0.0	0.0	0.0	0.0	0.0
	93	0.0	0.0	0.0	0.0	0.0	0.0	92	0.0	0.0	0.0	0.0	0.0	0.0
155	179	0.0	0.0	0.0	0.0	0.0	0.0	12	0.0	0.0	0.0	0.0	0.0	0.0
	92	0.0	0.0	0.0	0.0	0.0	0.0	17	0.0	0.0	0.0	0.0	0.0	0.0
156	154	0.0	0.0	0.0	0.0	0.0	0.0	180	0.0	0.0	0.0	0.0	0.0	0.0
	151	0.0	0.0	0.0	0.0	0.0	0.0	178	0.0	0.0	0.0	0.0	0.0	0.0
157	180	0.0	0.0	0.0	0.0	0.0	0.0	181	0.0	0.0	0.0	0.0	0.0	0.0
	178	0.0	0.0	0.0	0.0	0.0	0.0	179	0.0	0.0	0.0	0.0	0.0	0.0
158	181	0.0	0.0	0.0	0.0	0.0	0.0	15	0.0	0.0	0.0	0.0	0.0	0.0
	179	0.0	0.0	0.0	0.0	0.0	0.0	12	0.0	0.0	0.0	0.0	0.0	0.0
159	157	0.0	0.0	0.0	0.0	0.0	0.0	182	0.0	0.0	0.0	0.0	0.0	0.0
	154	0.0	0.0	0.0	0.0	0.0	0.0	180	0.0	0.0	0.0	0.0	0.0	0.0
160	182	0.0	0.0	0.0	0.0	0.0	0.0	183	0.0	0.0	0.0	0.0	0.0	0.0
	180	0.0	0.0	0.0	0.0	0.0	0.0	181	0.0	0.0	0.0	0.0	0.0	0.0
161	183	0.0	0.0	0.0	0.0	0.0	0.0	9	0.0	0.0	0.0	0.0	0.0	0.0
	181	0.0	0.0	0.0	0.0	0.0	0.0	15	0.0	0.0	0.0	0.0	0.0	0.0
162	160	0.0	0.0	0.0	0.0	0.0	0.0	184	0.0	0.0	0.0	0.0	0.0	0.0
	157	0.0	0.0	0.0	0.0	0.0	0.0	182	0.0	0.0	0.0	0.0	0.0	0.0
163	184	0.0	0.0	0.0	0.0	0.0	0.0	185	0.0	0.0	0.0	0.0	0.0	0.0
	182	0.0	0.0	0.0	0.0	0.0	0.0	183	0.0	0.0	0.0	0.0	0.0	0.0
164	185	0.0	0.0	0.0	0.0	0.0	0.0	120	0.0	0.0	0.0	0.0	0.0	0.0
	183	0.0	0.0	0.0	0.0	0.0	0.0	9	0.0	0.0	0.0	0.0	0.0	0.0
165	163	0.0	0.0	0.0	0.0	0.0	0.0	186	0.0	0.0	0.0	0.0	0.0	0.0
	160	0.0	0.0	0.0	0.0	0.0	0.0	184	0.0	0.0	0.0	0.0	0.0	0.0
166	186	0.0	0.0	0.0	0.0	0.0	0.0	187	0.0	0.0	0.0	0.0	0.0	0.0
	184	0.0	0.0	0.0	0.0	0.0	0.0	185	0.0	0.0	0.0	0.0	0.0	0.0
167	187	0.0	0.0	0.0	0.0	0.0	0.0	124	0.0	0.0	0.0	0.0	0.0	0.0
	185	0.0	0.0	0.0	0.0	0.0	0.0	120	0.0	0.0	0.0	0.0	0.0	0.0
168	33	0.0	0.0	0.0	0.0	0.0	0.0	188	0.0	0.0	0.0	0.0	0.0	0.0
	163	0.0	0.0	0.0	0.0	0.0	0.0	186	0.0	0.0	0.0	0.0	0.0	0.0
169	188	0.0	0.0	0.0	0.0	0.0	0.0	189	0.0	0.0	0.0	0.0	0.0	0.0
	186	0.0	0.0	0.0	0.0	0.0	0.0	187	0.0	0.0	0.0	0.0	0.0	0.0
170	189	0.0	0.0	0.0	0.0	0.0	0.0	26	0.0	0.0	0.0	0.0	0.0	0.0
	187	0.0	0.0	0.0	0.0	0.0	0.0	124	0.0	0.0	0.0	0.0	0.0	0.0
171	190	0.0	0.0	0.0	0.0	0.0	0.0	191	0.0	0.0	0.0	0.0	0.0	0.0
	73	0.0	0.0	0.0	0.0	0.0	0.0	72	0.0	0.0	0.0	0.0	0.0	0.0
172	191	0.0	0.0	0.0	0.0	0.0	0.0	139	0.0	0.0	0.0	0.0	0.0	0.0
	72	0.0	0.0	0.0	0.0	0.0	0.0	3	0.0	0.0	0.0	0.0	0.0	0.0
173	127	0.0	0.0	0.0	0.0	0.0	0.0	192	0.0	0.0	0.0	0.0	0.0	0.0
	123	0.0	0.0	0.0	0.0	0.0	0.0	190	0.0	0.0	0.0	0.0	0.0	0.0
174	192	0.0	0.0	0.0	0.0	0.0	0.0	193	0.0	0.0	0.0	0.0	0.0	0.0
	190	0.0	0.0	0.0	0.0	0.0	0.0	191	0.0	0.0	0.0	0.0	0.0	0.0
175	193	0.0	0.0	0.0	0.0	0.0	0.0	143	0.0	0.0	0.0	0.0	0.0	0.0
	191	0.0	0.0	0.0	0.0	0.0	0.0	139	0.0	0.0	0.0	0.0	0.0	0.0

Documento di proprietà **Snam Rete Gas**. La Società tutelerà i propri diritti in sede civile e penale a termini di legge.

FORZE: SISMA 0°°: MODO10: SHELL

Shell Nro	Nodo N.ro	Tx (kN)	Ty (kN)	Tz (kN)	Mx (kN*m)	My (kN*m)	Mz (kN*m)	Nodo N.ro	Tx (kN)	Ty (kN)	Tz (kN)	Mx (kN*m)	My (kN*m)	Mz (kN*m)
176	27	0.0	0.0	0.0	0.0	0.0	0.0	194	0.0	0.0	0.0	0.0	0.0	0.0
	127	0.0	0.0	0.0	0.0	0.0	0.0	192	0.0	0.0	0.0	0.0	0.0	0.0
177	194	0.0	0.0	0.0	0.0	0.0	0.0	195	0.0	0.0	0.0	0.0	0.0	0.0
	192	0.0	0.0	0.0	0.0	0.0	0.0	193	0.0	0.0	0.0	0.0	0.0	0.0
178	195	0.0	0.0	0.0	0.0	0.0	0.0	28	0.0	0.0	0.0	0.0	0.0	0.0
	193	0.0	0.0	0.0	0.0	0.0	0.0	143	0.0	0.0	0.0	0.0	0.0	0.0
179	52	0.0	0.0	0.0	0.0	0.0	0.0	119	0.0	0.0	0.0	0.0	0.0	0.0
	53	0.0	0.0	0.0	0.0	0.0	0.0	118	0.0	0.0	0.0	0.0	0.0	0.0
180	7	0.0	0.0	0.0	0.0	0.0	0.0	34	0.0	0.0	0.0	0.0	0.0	0.0
	52	0.0	0.0	0.0	0.0	0.0	0.0	119	0.0	0.0	0.0	0.0	0.0	0.0

FORZE: SISMA 90°°: MODO1: SHELL

Shell Nro	Nodo N.ro	Tx (kN)	Ty (kN)	Tz (kN)	Mx (kN*m)	My (kN*m)	Mz (kN*m)	Nodo N.ro	Tx (kN)	Ty (kN)	Tz (kN)	Mx (kN*m)	My (kN*m)	Mz (kN*m)
1	38	2.4	-3.7	0.1	0.0	-0.1	0.0	39	4.0	3.5	0.1	0.0	0.0	0.1
	14	-3.8	-4.5	0.0	0.0	0.0	0.0	1	-2.6	4.7	-0.2	0.0	0.0	-0.1
2	6	-2.0	-2.4	-0.1	0.0	0.0	0.1	44	-2.0	-2.3	0.1	0.0	0.0	0.1
	2	2.6	2.3	0.1	0.0	0.0	0.2	42	1.3	2.5	-0.1	0.0	0.0	-0.4
3	39	0.0	-1.3	0.1	0.0	0.0	-0.3	44	4.3	-1.6	-0.1	0.0	-0.1	0.4
	1	-4.0	-0.2	0.0	0.0	0.0	0.1	6	-0.2	3.2	0.1	0.0	0.0	-0.1
4	46	1.6	-2.0	-0.3	0.0	0.0	-0.1	47	4.6	1.8	-0.1	0.0	0.0	-0.1
	10	-4.0	-0.9	0.2	0.1	0.0	0.2	16	-2.2	1.1	0.2	0.1	0.1	0.0
5	50	-1.0	-0.9	-0.4	0.1	0.2	-0.2	46	2.7	-0.2	0.1	0.0	0.0	0.2
	4	-2.0	-0.3	0.1	0.0	0.0	0.2	10	0.4	1.5	0.3	0.1	0.1	-0.2
6	54	0.0	0.0	0.9	0.2	0.0	0.0	55	0.0	0.0	-2.3	0.2	-0.5	0.0
	7	0.0	0.0	0.8	0.2	-0.1	0.0	52	0.0	0.0	0.6	0.2	-0.3	0.0
7	64	0.0	0.0	1.1	0.1	0.0	0.0	65	0.0	0.0	-1.1	0.2	-0.7	0.0
	5	0.0	0.0	1.5	-0.1	0.1	0.0	62	0.0	0.0	-1.5	-0.2	-0.7	0.0
8	47	1.9	-1.7	0.0	-0.1	0.0	-0.2	72	2.1	0.9	0.0	-0.1	0.0	0.1
	16	-2.3	-0.6	-0.1	0.1	0.0	0.1	3	-1.8	1.4	0.1	0.1	0.0	0.0
9	76	-0.7	0.9	0.2	0.0	0.0	0.0	77	-1.2	-0.4	0.1	0.1	0.0	0.0
	25	0.9	0.7	-0.1	-0.1	0.0	-0.1	74	1.0	-1.1	-0.2	-0.1	0.0	0.1
10	38	0.0	0.0	-0.7	-0.4	0.0	0.0	86	0.0	0.0	2.3	-0.4	0.1	0.0
	14	0.0	0.0	0.4	-0.1	0.0	0.0	71	0.0	0.0	-1.9	0.0	0.0	0.0
11	94	0.0	0.0	-1.2	-0.1	0.0	0.0	95	0.0	0.0	1.2	-0.2	0.8	0.0
	18	0.0	0.0	-1.5	0.1	-0.1	0.0	91	0.0	0.0	1.5	0.2	0.8	0.0
12	102	-4.3	1.8	0.0	0.0	0.0	-0.2	103	-0.9	-2.3	0.1	0.0	0.0	0.1
	21	1.8	2.3	0.0	0.0	0.0	0.2	84	3.4	-1.8	-0.1	0.0	0.0	-0.1
13	112	-2.0	2.0	0.1	0.1	0.0	0.2	76	-2.2	-1.1	0.0	0.1	0.0	-0.2
	36	2.4	0.7	0.0	-0.1	0.0	-0.1	25	1.9	-1.6	-0.1	-0.1	0.0	0.0
14	114	-1.5	2.1	0.3	0.0	0.0	0.1	112	-4.5	-1.9	0.1	0.0	0.0	0.1
	35	4.0	1.1	-0.2	-0.1	0.0	-0.3	36	2.0	-1.2	-0.2	-0.1	-0.1	0.0
15	24	1.7	2.8	0.0	0.0	0.0	-0.1	116	1.9	1.8	-0.1	0.0	0.0	0.0
	21	-2.2	-2.0	-0.1	0.0	0.0	-0.2	102	-1.4	-2.6	0.1	0.0	0.0	0.3
16	118	-0.3	1.0	-0.1	0.0	0.0	0.3	116	-4.2	1.8	0.1	0.0	0.1	-0.3
	20	3.8	0.4	0.0	0.0	0.0	-0.1	24	0.7	-3.2	0.0	0.0	0.0	0.1
17	120	-1.2	1.0	-0.2	0.0	0.1	-0.1	121	-0.4	-1.2	0.1	0.0	-0.1	0.0
	9	0.7	0.9	-0.1	0.0	0.1	0.1	43	0.9	-0.7	0.2	0.0	0.0	0.0
18	10	-1.0	3.2	0.3	0.0	-0.1	0.2	130	-1.3	0.1	-0.4	0.0	0.0	-0.1
	4	1.0	-0.2	-0.1	0.0	0.0	-0.2	68	1.4	-3.1	0.2	0.0	0.0	0.1
19	100	1.1	1.1	0.4	-0.1	-0.2	0.3	114	-3.0	-0.1	-0.1	0.0	0.0	-0.3
	19	2.3	0.5	0.0	0.0	0.0	-0.2	35	-0.4	-1.6	-0.3	-0.1	-0.1	0.2
20	35	1.1	-3.3	-0.2	0.0	0.1	-0.2	149	1.4	-0.2	0.4	0.0	0.0	0.1
	19	-1.1	0.2	0.1	-0.1	0.0	0.2	97	-1.5	3.3	-0.2	0.0	0.0	-0.1
21	132	0.1	2.4	-0.2	0.0	0.0	0.2	166	0.4	3.0	0.0	0.0	0.0	-0.2
	5	-0.5	-3.0	0.2	0.1	0.0	-0.2	58	0.0	-2.4	0.0	0.0	0.0	0.3
22	151	-0.2	-2.1	0.2	0.0	0.0	-0.2	178	-0.4	-3.0	0.0	0.0	0.0	0.2
	18	0.5	2.9	-0.2	-0.1	0.0	0.2	93	0.1	2.1	0.0	0.0	0.0	-0.2
23	123	-1.7	3.4	-0.1	0.0	0.0	0.1	190	-2.3	-0.9	0.1	0.0	0.0	-0.1
	2	2.3	1.8	0.0	0.0	0.0	-0.2	73	1.8	-4.3	0.0	0.0	0.0	0.2
24	53	-2.6	3.3	-0.1	0.0	0.1	0.0	118	-3.7	-3.2	0.0	0.0	0.0	-0.1
	11	3.4	4.1	0.0	0.0	0.0	0.1	20	2.8	-4.3	0.2	0.0	0.0	0.1
25	40	2.9	-0.6	0.2	0.0	-0.1	0.2	41	0.2	2.7	-0.1	0.0	0.0	-0.2
	38	-0.7	-2.4	0.1	0.0	-0.1	-0.2	39	-2.3	0.3	-0.3	0.0	0.0	0.2
26	17	2.3	-0.5	0.0	0.0	-0.1	0.2	12	-0.4	1.6	-0.3	0.1	-0.1	-0.2
	40	1.1	-1.1	0.4	0.1	-0.2	-0.3	41	-3.0	0.1	-0.1	0.0	0.0	0.3
27	44	-1.9	1.0	0.0	0.0	0.1	-0.2	45	-1.0	-2.9	0.0	0.0	-0.1	0.1
	42	1.5	2.5	0.1	0.0	0.0	0.3	43	1.5	-0.7	-0.1	0.0	-0.1	-0.3
28	45	-2.0	2.0	0.1	0.0	0.1	-0.2	15	-0.7	-2.4	0.0	0.0	-0.1	0.1
	43	1.1	2.2	0.0	0.0	0.1	0.2	9	1.6	-1.9	-0.1	0.0	-0.1	0.0
29	41	3.2	-3.0	0.0	0.0	0.0	0.0	45	3.7	-1.1	-0.1	0.0	-0.1	0.2
	39	-3.7	-0.8	0.1	0.0	-0.1	0.1	44	-3.2	4.9	0.1	0.0	0.0	-0.2
30	12	3.4	-2.4	-0.2	0.1	0.0	0.3	15	2.3	0.4	-0.2	0.1	-0.1	0.0
	41	-2.2	-1.4	0.3	0.0	0.0	-0.1	45	-3.6	3.4	0.1	0.0	0.0	-0.1
31	48	3.3	-1.7	-0.2	0.0	0.1	0.0	49	4.4	3.7	-0.1	0.0	0.0	-0.2
	46	-3.8	-1.6	0.1	0.0	0.0	0.0	47	-4.0	-0.3	0.1	0.0	0.1	0.2
32	1	3.7	-1.0	0.0	0.0	0.0	0.1	8	1.3	3.0	0.0	0.0	0.0	-0.1
	48	-0.5	-0.9	-0.1	0.0	0.0	-0.3	49	-4.5	-1.1	0.1	0.0	0.1	0.3
33	51	0.7	-2.2	-0.1	0.0	0.1	-0.2	48	2.1	0.1	0.3	0.0	0.0	0.1
	50	-2.6	-0.4	-0.2	0.0	0.1	0.2	46	-0.2	2.5	0.1	0.0	0.0	-0.2

Documento di proprietà **Snam Rete Gas**. La Società tutelerà i propri diritti in sede civile e penale a termini di legge.

FORZE: SISMA 90°°: MODO1: SHELL

Shell Nro	Nodo N.ro	Tx (kN)	Ty (kN)	Tz (kN)	Mx (kN*m)	My (kN*m)	Mz (kN*m)	Nodo N.ro	Tx (kN)	Ty (kN)	Tz (kN)	Mx (kN*m)	My (kN*m)	Mz (kN*m)
34	14	3.4	-4.1	0.0	0.0	0.0	-0.1	1	2.8	4.2	0.2	0.0	0.0	-0.1
	51	-2.6	-3.3	-0.1	0.0	0.1	0.0	48	-3.6	3.2	0.0	0.0	0.0	0.1
35	55	0.0	0.0	-1.2	0.2	0.5	0.0	56	0.0	0.0	0.0	0.2	-0.5	0.0
	52	0.0	0.0	1.0	0.1	0.3	0.0	53	0.0	0.0	0.2	0.1	-0.3	0.0
36	56	0.0	0.0	-2.2	0.1	0.5	0.0	57	0.0	0.0	1.7	0.1	-0.1	0.0
	53	0.0	0.0	0.6	0.1	0.4	0.0	11	0.0	0.0	-0.1	0.0	0.0	0.0
37	58	0.0	0.0	1.6	0.2	0.1	0.0	59	0.0	0.0	-1.9	0.2	-0.7	0.0
	54	0.0	0.0	0.8	-0.1	0.0	0.0	55	0.0	0.0	-0.6	-0.2	-0.6	0.0
38	59	0.0	0.0	-0.5	0.3	0.7	0.0	60	0.0	0.0	0.4	0.2	-0.6	0.0
	55	0.0	0.0	0.1	-0.2	0.6	0.0	56	0.0	0.0	0.1	-0.2	-0.5	0.0
39	60	0.0	0.0	-1.9	0.2	0.6	0.0	61	0.0	0.0	1.8	0.1	-0.1	0.0
	56	0.0	0.0	0.1	-0.1	0.5	0.0	57	0.0	0.0	0.0	0.0	-0.1	0.0
40	5	0.0	0.0	1.6	0.1	0.1	0.0	62	0.0	0.0	-1.6	0.2	-0.8	0.0
	58	0.0	0.0	1.3	-0.1	0.0	0.0	59	0.0	0.0	-1.3	-0.2	-0.8	0.0
41	62	0.0	0.0	-0.4	0.3	0.8	0.0	63	0.0	0.0	0.4	0.2	-0.6	0.0
	59	0.0	0.0	-0.3	-0.3	0.8	0.0	60	0.0	0.0	0.3	-0.2	-0.6	0.0
42	63	0.0	0.0	-1.3	0.2	0.6	0.0	13	0.0	0.0	1.3	0.1	-0.1	0.0
	60	0.0	0.0	-0.8	-0.2	0.6	0.0	61	0.0	0.0	0.8	-0.1	-0.1	0.0
43	65	0.0	0.0	-0.2	0.3	0.7	0.0	66	0.0	0.0	0.2	0.2	-0.5	0.0
	62	0.0	0.0	-0.3	-0.3	0.7	0.0	63	0.0	0.0	0.4	-0.2	-0.6	0.0
44	66	0.0	0.0	-0.6	0.2	0.6	0.0	67	0.0	0.0	0.6	0.1	-0.1	0.0
	63	0.0	0.0	-1.3	-0.2	0.6	0.0	13	0.0	0.0	1.3	-0.1	-0.1	0.0
45	68	0.0	0.0	0.7	0.1	0.0	0.0	69	0.0	0.0	-0.4	0.2	-0.5	0.0
	64	0.0	0.0	1.5	-0.2	0.1	0.0	65	0.0	0.0	-1.8	-0.2	-0.7	0.0
46	69	0.0	0.0	0.2	0.2	0.5	0.0	70	0.0	0.0	0.0	0.2	-0.4	0.0
	65	0.0	0.0	-0.6	-0.3	0.7	0.0	66	0.0	0.0	0.4	-0.2	-0.5	0.0
47	70	0.0	0.0	0.3	0.1	0.4	0.0	71	0.0	0.0	-0.1	0.0	-0.1	0.0
	66	0.0	0.0	-1.9	-0.2	0.5	0.0	67	0.0	0.0	1.7	-0.1	-0.1	0.0
48	4	0.0	0.0	0.8	-0.2	-0.1	0.0	50	0.0	0.0	0.7	-0.2	-0.3	0.0
	68	0.0	0.0	0.8	-0.2	0.0	0.0	69	0.0	0.0	-2.3	-0.2	-0.5	0.0
49	50	0.0	0.0	1.0	-0.1	0.3	0.0	51	0.0	0.0	0.2	-0.1	-0.2	0.0
	69	0.0	0.0	-1.2	-0.2	0.5	0.0	70	0.0	0.0	0.0	-0.2	-0.4	0.0
50	51	0.0	0.0	0.7	-0.1	0.4	0.0	14	0.0	0.0	-0.1	0.0	0.0	0.0
	70	0.0	0.0	-2.2	-0.1	0.4	0.0	71	0.0	0.0	1.6	-0.1	0.0	0.0
51	49	0.1	-1.7	0.0	-0.1	0.0	-0.1	73	2.6	0.5	-0.1	0.0	0.0	0.2
	47	-2.8	0.0	0.0	0.1	0.0	0.1	72	0.2	1.2	0.1	0.1	0.0	-0.2
52	8	-3.2	0.3	0.0	0.0	0.0	0.1	2	2.8	0.6	-0.1	0.0	0.0	0.2
	49	-2.6	-0.5	-0.1	0.0	0.0	0.0	73	2.9	-0.4	0.1	0.0	0.0	-0.3
53	77	-0.3	1.0	0.0	0.1	0.0	0.1	78	-0.7	0.1	0.2	0.0	0.0	-0.1
	74	0.4	-0.1	0.0	-0.1	0.0	-0.1	75	0.6	-1.0	-0.2	-0.1	0.0	0.1
54	78	-0.2	0.6	-0.1	0.0	0.0	0.0	79	-0.3	0.0	0.2	0.0	0.0	0.0
	75	0.2	-0.2	0.1	-0.1	0.0	0.0	32	0.3	-0.4	-0.2	0.0	0.0	0.0
55	80	0.6	0.5	0.1	0.0	0.0	0.1	81	-2.7	-0.8	0.1	0.0	0.0	-0.1
	76	2.3	1.3	-0.1	-0.1	0.0	-0.1	77	-0.1	-1.0	-0.1	-0.1	0.0	0.1
56	81	-0.2	1.5	0.1	0.0	0.0	0.1	82	-1.6	-0.3	0.0	0.0	0.0	-0.1
	77	1.6	0.1	-0.1	-0.1	0.0	-0.2	78	0.3	-1.2	0.0	0.0	0.0	0.1
57	82	-0.3	0.8	0.1	0.0	0.0	0.1	83	-0.6	-0.3	0.0	0.0	0.0	0.0
	78	0.7	0.0	-0.1	0.0	0.0	-0.1	79	0.3	-0.5	0.0	0.0	0.0	0.0
58	21	-1.5	2.2	0.0	0.0	0.0	0.2	84	-3.5	-2.1	0.1	0.0	0.0	-0.1
	80	4.4	2.1	0.0	0.0	0.0	-0.2	81	0.7	-2.2	0.0	0.0	0.0	0.1
59	84	-1.4	1.7	0.1	0.0	0.0	0.1	85	-1.8	-1.2	0.0	0.0	0.0	0.0
	81	2.3	1.1	-0.1	0.0	0.0	-0.1	82	0.9	-1.5	0.0	0.0	0.0	0.1
60	85	-0.8	0.8	0.1	0.0	0.0	0.0	31	-0.8	-0.7	-0.1	0.0	0.0	0.0
	82	1.0	0.5	-0.1	0.0	0.0	0.0	83	0.6	-0.7	0.1	0.0	0.0	0.0
61	86	0.0	0.0	-0.3	-0.4	-0.1	0.0	87	0.0	0.0	2.0	-0.5	0.1	0.0
	71	0.0	0.0	0.2	0.0	0.0	0.0	67	0.0	0.0	-1.9	-0.1	0.0	0.0
62	87	0.0	0.0	0.6	-0.5	-0.2	0.0	88	0.0	0.0	1.5	-0.5	0.2	0.0
	67	0.0	0.0	-0.6	-0.1	0.0	0.0	13	0.0	0.0	-1.4	-0.1	0.0	0.0
63	40	0.0	0.0	-1.2	-0.3	0.1	0.0	89	0.0	0.0	1.5	-0.5	0.2	0.0
	38	0.0	0.0	-0.1	0.2	0.1	0.0	86	0.0	0.0	-0.3	0.4	0.2	0.0
64	89	0.0	0.0	-0.2	-0.5	-0.2	0.0	90	0.0	0.0	0.8	-0.7	0.3	0.0
	86	0.0	0.0	0.1	0.4	-0.2	0.0	87	0.0	0.0	-0.6	0.5	0.2	0.0
65	90	0.0	0.0	0.3	-0.7	-0.3	0.0	91	0.0	0.0	0.5	-0.8	0.3	0.0
	87	0.0	0.0	-0.3	0.5	-0.2	0.0	88	0.0	0.0	-0.5	0.5	0.2	0.0
66	17	0.0	0.0	-0.8	0.1	0.2	0.0	92	0.0	0.0	-0.6	0.0	0.2	0.0
	40	0.0	0.0	-0.8	0.2	0.2	0.0	89	0.0	0.0	2.2	0.5	0.2	0.0
67	92	0.0	0.0	-0.6	0.0	-0.1	0.0	93	0.0	0.0	-1.4	-0.1	0.2	0.0
	89	0.0	0.0	0.4	0.5	-0.2	0.0	90	0.0	0.0	1.7	0.7	0.3	0.0
68	93	0.0	0.0	-1.1	0.0	-0.1	0.0	18	0.0	0.0	-1.4	-0.1	0.2	0.0
	90	0.0	0.0	1.0	0.7	-0.2	0.0	91	0.0	0.0	1.4	0.8	0.2	0.0
69	95	0.0	0.0	0.4	-0.3	-0.8	0.0	96	0.0	0.0	-0.3	-0.2	0.5	0.0
	91	0.0	0.0	0.5	0.3	-0.8	0.0	88	0.0	0.0	-0.5	0.2	0.6	0.0
70	96	0.0	0.0	0.9	-0.2	-0.6	0.0	61	0.0	0.0	-0.9	0.0	-0.1	0.0
	88	0.0	0.0	1.4	0.2	-0.6	0.0	13	0.0	0.0	-1.4	0.0	-0.1	0.0
71	97	0.0	0.0	-0.8	-0.1	0.0	0.0	98	0.0	0.0	0.6	-0.2	0.6	0.0
	94	0.0	0.0	-1.5	0.2	-0.1	0.0	95	0.0	0.0	1.7	0.3	0.7	0.0
72	98	0.0	0.0	-0.1	-0.3	-0.6	0.0	99	0.0	0.0	0.0	-0.2	0.4	0.0
	95	0.0	0.0	0.8	0.3	-0.7	0.0	96	0.0	0.0	-0.7	0.2	0.5	0.0
73	99	0.0	0.0	-0.1	-0.1	-0.4	0.0	57	0.0	0.0	0.0	0.0	-0.1	0.0
	96	0.0	0.0	2.0	0.2	-0.5	0.0	61	0.0	0.0	-1.9	0.0	-0.1	0.0

Documento di proprietà **Snam Rete Gas**. La Società tutelerà i propri diritti in sede civile e penale a termini di legge.

FORZE: SISMA 90°°: MODO1: SHELL

Shell Nro	Nodo N.ro	Tx (kN)	Ty (kN)	Tz (kN)	Mx (kN*m)	My (kN*m)	Mz (kN*m)	Nodo N.ro	Tx (kN)	Ty (kN)	Tz (kN)	Mx (kN*m)	My (kN*m)	Mz (kN*m)
74	19	0.0	0.0	-0.9	0.2	0.1	0.0	100	0.0	0.0	-0.7	0.2	0.3	0.0
	97	0.0	0.0	-0.6	0.2	0.0	0.0	98	0.0	0.0	2.2	0.2	0.5	0.0
75	100	0.0	0.0	-1.1	0.1	-0.3	0.0	101	0.0	0.0	0.0	0.1	0.2	0.0
	98	0.0	0.0	1.5	0.2	-0.5	0.0	99	0.0	0.0	-0.3	0.2	0.4	0.0
76	101	0.0	0.0	-0.6	0.0	-0.4	0.0	11	0.0	0.0	0.3	0.0	-0.1	0.0
	99	0.0	0.0	2.3	0.1	-0.4	0.0	57	0.0	0.0	-2.0	0.0	0.0	0.0
77	103	-2.2	0.9	0.1	0.0	0.0	-0.1	104	-1.0	-1.5	0.0	0.0	0.0	0.1
	84	1.5	1.7	-0.1	0.0	0.0	0.1	85	1.8	-1.0	0.0	0.0	0.0	0.0
78	104	-1.0	0.5	0.1	0.0	0.0	0.0	105	-0.7	-0.7	-0.1	0.0	0.0	0.0
	85	0.8	0.9	-0.1	0.0	0.0	0.0	31	0.8	-0.6	0.1	0.0	0.0	0.0
79	106	-2.3	1.0	0.1	-0.1	0.0	-0.1	107	0.1	-1.2	0.1	-0.1	0.0	0.1
	102	-0.6	0.7	-0.1	0.0	0.0	0.1	103	2.8	-0.5	-0.1	0.0	0.0	-0.1
80	107	-1.6	-0.1	0.1	-0.1	0.0	-0.2	108	-0.4	-1.3	0.0	0.0	0.0	0.1
	103	0.4	1.6	-0.1	0.0	0.0	0.1	104	1.6	-0.2	-0.1	0.0	0.0	-0.1
81	108	-0.7	0.0	0.1	0.0	0.0	-0.1	109	-0.4	-0.6	0.0	0.0	0.0	0.0
	104	0.4	0.9	0.0	0.0	0.0	0.1	105	0.7	-0.3	0.0	0.0	0.0	0.0
82	22	-0.8	0.5	0.1	-0.1	0.0	-0.1	110	-0.8	-1.1	0.2	-0.1	0.0	0.1
	106	0.5	0.8	-0.2	0.1	0.0	0.0	107	1.2	-0.2	-0.1	0.1	0.0	0.0
83	110	-0.5	-0.2	0.0	-0.1	0.0	-0.1	111	-0.6	-1.0	0.2	-0.1	0.0	0.1
	107	0.3	1.0	0.0	0.1	0.0	0.1	108	0.8	0.2	-0.2	0.0	0.0	-0.1
84	111	-0.3	-0.1	-0.1	-0.1	0.0	0.0	30	-0.4	-0.5	0.2	0.0	0.0	0.0
	108	0.3	0.7	0.1	0.0	0.0	0.0	109	0.4	-0.1	-0.2	0.0	0.0	0.0
85	113	-0.2	2.2	0.0	0.1	0.0	0.2	80	-2.9	-0.6	0.1	0.0	0.0	-0.3
	112	3.1	0.0	0.0	-0.1	0.0	-0.1	76	0.1	-1.6	-0.1	-0.1	0.0	0.3
86	23	3.1	0.2	-0.1	0.0	0.0	-0.1	21	-3.4	-0.8	0.1	0.0	0.0	-0.2
	113	3.0	0.3	0.1	0.0	0.0	-0.1	80	-2.8	0.3	-0.1	0.0	0.0	0.4
87	115	-3.4	1.7	0.1	0.0	0.0	-0.1	113	-4.4	-4.0	0.1	0.0	0.0	0.2
	114	3.9	2.1	0.0	0.0	0.0	0.0	112	3.9	0.1	-0.1	0.0	-0.1	-0.2
88	20	-3.9	0.9	0.0	0.0	0.0	-0.1	23	-0.8	-3.1	0.1	0.0	0.0	0.1
	115	0.2	1.3	0.1	0.0	0.0	0.3	113	4.5	0.9	-0.1	0.0	-0.1	-0.4
89	116	1.5	-0.7	0.0	0.0	-0.1	0.1	117	1.0	2.7	0.0	0.0	0.1	-0.1
	102	-1.4	-2.3	-0.1	0.0	0.0	-0.2	106	-1.2	0.3	0.1	0.0	0.1	0.2
90	117	1.7	-1.9	0.0	0.0	-0.1	0.2	37	0.6	2.3	-0.1	0.0	0.1	-0.1
	106	-0.9	-2.1	0.0	0.0	-0.1	-0.1	22	-1.4	1.8	0.1	0.0	0.1	0.0
91	119	-3.2	2.5	0.1	0.0	0.0	0.0	117	-3.8	1.3	0.1	0.0	0.1	-0.2
	118	3.7	0.8	-0.2	0.0	0.1	0.0	116	3.3	-4.7	-0.1	0.0	0.0	0.2
92	34	-3.5	2.2	0.2	-0.1	0.0	-0.2	37	-2.4	-0.2	0.2	-0.1	0.1	0.0
	119	2.2	1.3	-0.3	0.0	0.0	0.1	117	3.7	-3.3	-0.1	0.0	0.0	0.1
93	121	-1.0	-0.1	-0.1	0.0	0.1	-0.1	122	-0.8	-2.7	0.1	0.0	0.0	0.1
	43	1.3	2.3	-0.1	0.0	0.1	0.1	42	0.5	0.6	0.1	0.0	0.0	-0.1
94	122	-2.2	0.7	0.0	0.0	0.0	-0.1	123	-2.1	-3.5	0.1	0.0	0.0	0.1
	42	2.1	4.4	0.0	0.0	0.0	0.2	2	2.2	-1.5	0.0	0.0	0.0	-0.2
95	124	-1.0	0.6	-0.2	0.0	0.1	-0.1	125	0.1	-0.8	0.2	0.0	0.0	0.1
	120	-0.1	0.4	0.0	0.0	0.1	0.1	121	1.0	-0.3	0.0	0.0	-0.1	-0.1
96	125	-1.2	0.3	0.0	0.0	0.0	-0.1	126	-0.3	-1.6	0.1	0.0	0.0	0.1
	121	0.1	1.6	-0.1	0.0	0.1	0.2	122	1.5	-0.2	0.1	0.0	0.0	-0.1
97	126	-1.5	0.9	0.0	0.0	0.0	-0.1	127	-1.2	-1.8	0.0	0.0	0.0	0.0
	122	1.1	2.3	-0.1	0.0	0.0	0.1	123	1.7	-1.4	0.1	0.0	0.0	-0.1
98	26	-0.4	0.3	-0.2	0.0	0.0	0.0	128	0.0	-0.3	0.2	0.0	0.0	0.0
	124	-0.2	0.2	0.1	0.0	0.1	0.0	125	0.6	-0.2	-0.1	0.0	0.0	0.0
99	128	-0.5	0.3	0.0	0.0	0.0	0.0	129	-0.3	-0.6	0.0	0.0	0.0	0.0
	125	0.0	0.7	-0.1	0.0	0.0	0.1	126	0.8	-0.3	0.0	0.0	0.0	-0.1
100	129	-0.7	0.6	0.1	0.0	0.0	0.0	27	-0.7	-0.9	-0.1	0.0	0.0	0.0
	126	0.5	1.0	-0.1	0.0	0.0	0.0	127	0.9	-0.8	0.1	0.0	0.0	0.0
101	130	-0.9	3.3	0.3	0.0	0.0	0.2	131	-0.8	1.1	-0.3	0.0	0.0	-0.1
	68	0.7	-1.2	-0.2	0.0	0.0	-0.2	64	1.0	-3.3	0.3	0.0	0.0	0.2
102	131	-0.4	2.9	0.0	0.0	0.0	0.2	132	-0.2	2.1	-0.2	0.0	0.0	-0.2
	64	0.1	-2.1	0.0	0.0	0.0	-0.2	5	0.5	-2.9	0.2	0.1	0.0	0.2
103	16	-1.3	3.0	0.2	0.0	-0.1	0.1	133	-1.4	-0.5	-0.5	0.0	0.0	-0.1
	10	1.5	0.4	0.2	0.1	-0.1	-0.1	130	1.2	-3.0	0.1	0.0	0.0	0.1
104	133	-0.5	2.5	0.3	0.0	0.0	0.2	134	-1.1	0.6	-0.4	0.0	-0.1	-0.2
	130	1.1	-0.5	-0.1	0.0	0.0	-0.2	131	0.5	-2.6	0.2	0.0	0.0	0.2
105	134	0.1	2.2	0.1	0.0	0.1	0.2	135	-0.7	1.5	-0.2	0.0	-0.1	-0.2
	131	0.7	-1.4	0.0	0.0	0.0	-0.2	132	-0.1	-2.3	0.1	0.0	-0.1	0.2
106	3	-0.8	1.4	0.3	0.0	-0.1	0.0	136	-1.4	-0.9	-0.4	0.0	0.0	-0.1
	16	1.4	1.5	0.1	0.0	-0.1	0.0	133	0.8	-2.0	0.0	0.0	0.0	0.1
107	136	-0.1	1.7	0.3	0.0	0.0	0.1	137	-1.2	0.2	-0.3	0.1	-0.1	-0.1
	133	1.1	0.0	0.0	0.0	0.0	-0.1	134	0.2	-1.9	0.0	0.0	-0.1	0.1
108	137	0.3	1.5	0.1	0.1	0.1	0.2	138	-0.8	1.0	-0.2	0.1	-0.1	-0.2
	134	0.9	-0.9	0.0	0.0	0.1	-0.2	135	-0.4	-1.6	0.1	0.0	-0.1	0.2
109	139	-0.4	0.6	0.4	0.0	-0.1	0.0	140	-1.0	-0.8	-0.4	0.0	0.0	-0.1
	3	1.0	1.2	0.3	0.0	-0.1	0.0	136	0.4	-1.1	-0.3	0.0	0.0	0.0
110	140	0.0	1.1	0.2	0.1	0.0	0.1	141	-1.0	0.0	-0.2	0.1	-0.1	-0.1
	136	1.1	0.3	0.1	0.0	0.0	-0.1	137	-0.1	-1.3	-0.1	-0.1	-0.1	0.1
111	141	0.4	1.0	0.0	0.1	0.1	0.1	142	-0.8	0.6	-0.1	0.1	-0.1	-0.1
	137	0.9	-0.5	0.1	-0.1	0.1	-0.1	138	-0.5	-1.1	0.0	-0.1	-0.1	0.1
112	143	-0.3	0.4	0.1	0.0	-0.1	0.0	144	-0.6	-0.5	-0.1	0.0	0.0	0.0
	139	0.6	0.7	0.5	0.0	-0.1	0.0	140	0.3	-0.6	-0.5	0.0	0.0	0.0
113	144	-0.1	0.6	-0.1	0.1	0.0	0.0	145	-0.7	-0.2	0.1	0.1	-0.1	-0.1
	140	0.8	0.3	0.3	-0.1	0.0	-0.1	141	0.0	-0.8	-0.3	-0.1	-0.1	0.1

Documento di proprietà **Snam Rete Gas**. La Società tutelerà i propri diritti in sede civile e penale a termini di legge.

FORZE: SISMA 90°°: MODO1: SHELL

Shell Nro	Nodo N.ro	Tx (kN)	Ty (kN)	Tz (kN)	Mx (kN*m)	My (kN*m)	Mz (kN*m)	Nodo N.ro	Tx (kN)	Ty (kN)	Tz (kN)	Mx (kN*m)	My (kN*m)	Mz (kN*m)
114	145	0.2	0.6	0.0	0.1	0.1	0.1	146	-0.5	0.2	0.1	0.1	-0.1	-0.1
	141	0.7	-0.2	0.1	-0.1	0.1	-0.1	142	-0.3	-0.6	-0.1	-0.1	-0.1	0.1
115	28	-0.3	0.4	-0.2	0.0	0.0	0.0	147	-0.4	-0.4	0.4	0.0	0.0	0.0
	143	0.4	0.5	0.5	0.0	-0.1	0.0	144	0.3	-0.4	-0.7	0.0	0.0	0.0
116	147	-0.2	0.4	-0.3	0.0	0.0	0.0	148	-0.4	-0.3	0.5	0.0	0.0	0.0
	144	0.5	0.3	0.4	-0.1	0.0	0.0	145	0.1	-0.5	-0.6	-0.1	-0.1	0.0
117	148	-0.1	0.3	0.0	0.0	0.0	0.0	29	-0.2	0.0	0.3	0.0	0.0	0.0
	145	0.4	0.1	0.0	-0.1	0.1	0.0	146	-0.1	-0.3	-0.3	-0.1	-0.1	0.0
118	101	-0.7	2.4	0.1	0.0	-0.1	0.2	115	-2.3	-0.3	-0.3	0.0	0.0	-0.2
	100	2.9	0.6	0.2	0.0	-0.1	-0.2	114	0.1	-2.7	-0.1	0.0	0.0	0.2
119	11	-3.8	4.5	0.0	0.0	0.0	0.0	20	-2.6	-4.7	-0.2	0.0	0.0	0.1
	101	2.4	3.6	0.1	0.0	-0.1	0.0	115	4.0	-3.5	0.1	0.0	0.0	-0.1
120	149	1.0	-3.5	-0.2	0.0	0.0	-0.2	150	0.8	-1.4	0.3	0.0	0.0	0.2
	97	-0.7	1.4	0.2	0.0	0.0	0.3	94	-1.0	3.5	-0.3	0.0	0.0	-0.2
121	150	0.4	-3.0	0.0	0.0	0.0	-0.2	151	0.1	-2.5	0.2	0.0	0.0	0.2
	94	0.0	2.5	0.0	-0.1	0.0	0.3	18	-0.5	3.0	-0.2	-0.1	0.0	-0.2
122	36	1.4	-3.0	-0.2	0.0	0.1	-0.1	152	1.5	0.4	0.5	0.0	0.0	0.1
	35	-1.6	-0.4	-0.1	-0.1	0.1	0.1	149	-1.3	3.0	-0.1	0.0	0.0	-0.1
123	152	0.5	-2.6	-0.2	0.0	0.0	-0.2	153	1.1	-0.8	0.3	0.0	0.1	0.2
	149	-1.1	0.7	0.1	0.0	0.0	0.2	150	-0.5	2.7	-0.2	0.0	0.0	-0.2
124	153	-0.2	-2.3	0.0	0.0	-0.1	-0.2	154	0.6	-1.8	0.2	0.0	0.1	0.2
	150	-0.6	1.7	0.0	0.0	0.0	0.2	151	0.2	2.3	-0.1	0.0	0.1	-0.2
125	25	0.9	-1.5	-0.3	0.0	0.1	0.0	155	1.5	0.8	0.4	0.0	0.0	0.1
	36	-1.5	-1.4	-0.1	0.0	0.1	0.0	152	-0.8	2.0	0.0	0.0	0.0	-0.1
126	155	0.1	-1.7	-0.2	-0.1	0.0	-0.1	156	1.2	-0.4	0.3	-0.1	0.1	0.2
	152	-1.2	0.2	0.0	0.0	0.0	0.2	153	-0.1	2.0	-0.1	0.0	0.1	-0.2
127	156	-0.4	-1.6	0.0	-0.1	-0.1	-0.2	157	0.8	-1.2	0.1	-0.1	0.1	0.2
	153	-0.8	1.1	-0.1	0.0	-0.1	0.2	154	0.5	1.6	-0.1	0.0	0.1	-0.2
128	74	0.5	-0.6	-0.3	0.0	0.1	0.0	158	1.1	0.8	0.4	-0.1	0.0	0.1
	25	-1.1	-1.3	-0.3	0.0	0.1	0.0	155	-0.5	1.1	0.3	0.0	0.0	0.0
129	158	0.0	-1.1	-0.1	-0.1	0.0	-0.1	159	1.0	-0.1	0.2	-0.1	0.1	0.1
	155	-1.1	-0.1	-0.1	0.1	0.0	0.1	156	0.1	1.3	0.1	0.1	0.1	-0.1
130	159	-0.4	-1.0	0.0	-0.1	-0.1	-0.1	160	0.7	-0.7	0.1	-0.1	0.1	0.1
	156	-0.8	0.7	-0.1	0.1	-0.1	0.2	157	0.6	1.1	0.0	0.1	0.1	-0.2
131	75	0.3	-0.3	-0.1	0.0	0.1	0.0	161	0.7	0.5	0.1	-0.1	0.1	0.0
	74	-0.7	-0.8	-0.5	0.0	0.1	0.0	158	-0.3	0.6	0.5	0.1	0.0	0.0
132	161	0.1	-0.6	0.1	-0.1	0.0	-0.1	162	0.7	0.1	-0.1	-0.1	0.1	0.1
	158	-0.8	-0.3	-0.3	0.1	0.0	0.1	159	0.1	0.8	0.3	0.1	0.1	-0.1
133	162	-0.3	-0.6	0.0	-0.1	-0.1	-0.1	163	0.5	-0.3	-0.1	-0.1	0.1	0.1
	159	-0.7	0.3	-0.1	0.1	-0.1	0.1	160	0.4	0.6	0.1	0.1	0.1	-0.1
134	32	0.2	-0.3	0.2	0.0	0.0	0.0	164	0.4	0.4	-0.4	0.0	0.0	0.0
	75	-0.4	-0.5	-0.5	0.0	0.1	0.0	161	-0.2	0.4	0.7	0.1	0.0	0.0
135	164	0.2	-0.4	0.2	0.0	0.0	0.0	165	0.4	0.2	-0.5	0.0	0.0	0.0
	161	-0.5	-0.3	-0.3	0.1	0.0	0.0	162	-0.1	0.4	0.6	0.1	0.1	0.0
136	165	0.0	-0.2	-0.1	0.0	0.0	0.0	33	0.2	0.0	-0.3	0.0	0.0	0.0
	162	-0.4	0.0	0.0	0.1	-0.1	0.0	163	0.2	0.3	0.3	0.1	0.1	0.0
137	166	0.8	1.4	-0.3	0.0	0.0	0.2	167	1.0	3.5	0.3	0.0	0.0	-0.2
	58	-1.0	-3.5	0.3	0.0	0.0	-0.2	54	-0.7	-1.4	-0.2	0.0	0.0	0.3
138	167	1.4	0.3	-0.4	0.0	0.0	0.1	34	1.1	3.3	0.3	0.0	0.1	-0.2
	54	-1.5	-3.3	0.2	0.0	0.0	-0.1	7	-1.0	-0.3	-0.1	0.0	0.0	0.2
139	135	0.6	1.8	-0.2	0.0	0.1	0.2	168	-0.2	2.3	0.0	0.0	-0.1	-0.2
	132	0.2	-2.3	0.1	0.0	0.1	-0.2	166	-0.6	-1.7	0.0	0.0	0.0	0.2
140	168	1.1	0.8	-0.3	0.0	0.1	0.2	169	0.5	2.6	0.2	0.0	0.0	-0.2
	166	-0.5	-2.7	0.2	0.0	0.1	-0.2	167	-1.1	-0.7	-0.1	0.0	0.0	0.2
141	169	1.5	-0.4	-0.5	0.0	0.0	0.1	37	1.4	3.1	0.2	0.0	0.1	-0.1
	167	-1.3	-3.1	0.1	0.0	0.0	-0.1	34	-1.6	0.3	0.2	0.1	0.1	0.1
142	138	0.8	1.2	-0.1	0.1	0.1	0.2	170	-0.4	1.6	0.0	0.1	-0.1	-0.2
	135	0.5	-1.6	0.1	0.0	0.1	-0.2	168	-0.8	-1.1	0.1	0.0	-0.1	0.2
143	170	1.2	0.4	-0.3	0.1	0.1	0.2	171	0.1	1.8	0.2	0.1	0.0	-0.2
	168	-0.1	-2.0	0.1	0.0	0.1	-0.2	169	-1.2	-0.2	0.0	0.0	0.0	0.2
144	171	1.5	-0.8	-0.4	0.0	0.0	0.1	22	0.9	1.4	0.3	0.0	0.1	0.0
	169	-0.8	-2.0	0.0	0.0	0.0	-0.1	37	-1.5	1.4	0.1	0.0	0.1	0.0
145	142	0.7	0.7	-0.1	0.1	0.1	0.1	172	-0.4	1.0	0.0	0.1	-0.1	-0.1
	138	0.5	-1.1	0.0	-0.1	0.1	-0.2	170	-0.8	-0.7	0.1	-0.1	-0.1	0.2
146	172	1.0	0.1	-0.2	0.1	0.1	0.1	173	0.0	1.1	0.1	0.1	0.0	-0.1
	170	0.1	-1.3	-0.1	-0.1	0.1	-0.1	171	-1.1	0.1	0.1	-0.1	0.0	0.1
147	173	1.1	-0.7	-0.4	0.1	0.0	0.1	110	0.5	0.6	0.4	0.0	0.1	0.0
	171	-0.5	-1.1	-0.3	0.0	0.0	0.0	22	-1.1	1.2	0.3	0.0	0.1	0.0
148	146	0.5	0.3	0.1	0.1	0.1	0.1	174	-0.2	0.6	0.0	0.1	-0.1	-0.1
	142	0.4	-0.6	-0.1	-0.1	0.1	-0.1	172	-0.6	-0.3	0.1	-0.1	-0.1	0.1
149	174	0.7	-0.1	0.1	0.1	0.1	0.1	175	0.1	0.7	-0.1	0.1	0.0	-0.1
	172	0.0	-0.8	-0.3	-0.1	0.1	-0.1	173	-0.8	0.3	0.3	-0.1	0.0	0.1
150	175	0.7	-0.5	-0.1	0.1	0.1	0.0	111	0.3	0.4	0.1	0.0	0.1	0.0
	173	-0.3	-0.6	-0.5	-0.1	0.0	0.0	110	-0.7	0.7	0.5	0.0	0.1	0.0
151	29	0.2	0.0	0.3	0.0	0.0	0.0	176	0.0	0.2	0.0	0.0	0.0	0.0
	146	0.2	-0.3	-0.3	-0.1	0.1	0.0	174	-0.3	0.0	0.0	-0.1	-0.1	0.0
152	176	0.4	-0.2	0.5	0.0	0.0	0.0	177	0.2	0.4	-0.2	0.0	0.0	0.0
	174	-0.1	-0.5	-0.6	-0.1	0.1	0.0	175	-0.5	0.3	0.3	-0.1	0.0	0.0
153	177	0.4	-0.4	0.4	0.0	0.0	0.0	30	0.3	0.4	-0.2	0.0	0.0	0.0
	175	-0.3	-0.4	-0.7	-0.1	0.0	0.0	111	-0.4	0.5	0.5	0.0	0.1	0.0

Documento di proprietà **Snam Rete Gas**. La Società tutelerà i propri diritti in sede civile e penale a termini di legge.

FORZE: SISMA 90°°: MODO1: SHELL

Shell Nro	Nodo N.ro	Tx (kN)	Ty (kN)	Tz (kN)	Mx (kN*m)	My (kN*m)	Mz (kN*m)	Nodo N.ro	Tx (kN)	Ty (kN)	Tz (kN)	Mx (kN*m)	My (kN*m)	Mz (kN*m)
154	178	-0.8	-1.1	0.3	0.0	0.0	-0.1	179	-0.9	-3.4	-0.3	0.0	0.0	0.2
	93	1.0	3.4	-0.3	0.0	0.0	0.2	92	0.7	1.1	0.2	0.0	0.0	-0.2
155	179	-1.4	0.0	0.4	0.0	0.0	-0.1	12	-1.0	-3.2	-0.2	0.0	-0.1	0.2
	92	1.4	3.1	-0.2	0.0	0.0	0.1	17	1.0	0.1	0.1	-0.1	0.0	-0.2
156	154	-0.7	-1.5	0.2	0.0	-0.1	-0.2	180	0.1	-2.2	-0.1	0.0	0.1	0.2
	151	-0.1	2.3	-0.1	0.0	-0.1	0.2	178	0.7	1.4	0.0	0.0	0.0	-0.2
157	180	-1.1	-0.5	0.4	0.0	-0.1	-0.2	181	-0.5	-2.5	-0.3	0.0	0.0	0.2
	178	0.5	2.7	-0.2	0.0	0.0	0.2	179	1.1	0.4	0.1	0.0	0.0	-0.2
158	181	-1.4	0.5	0.5	0.0	0.0	-0.1	15	-1.3	-3.0	-0.2	0.0	-0.1	0.1
	179	1.2	3.0	-0.1	0.0	0.0	0.1	12	1.5	-0.5	-0.1	-0.1	-0.1	-0.1
159	157	-0.9	-0.9	0.2	-0.1	-0.1	-0.2	182	0.3	-1.5	-0.1	-0.1	0.1	0.2
	154	-0.4	1.6	-0.1	0.0	-0.1	0.2	180	0.9	0.9	0.0	0.0	0.1	-0.2
160	182	-1.2	-0.2	0.3	-0.1	-0.1	-0.1	183	-0.1	-1.7	-0.2	0.0	0.0	0.1
	180	0.2	1.9	0.0	0.0	-0.1	0.1	181	1.2	0.0	0.0	0.0	0.0	-0.1
161	183	-1.4	0.9	0.4	0.0	0.0	-0.1	9	-0.9	-1.5	-0.3	0.0	-0.1	0.0
	181	0.8	2.0	0.0	0.0	0.0	0.1	15	1.5	-1.4	-0.1	0.0	-0.1	0.0
162	160	-0.8	-0.5	0.1	-0.1	-0.1	-0.1	184	0.4	-1.0	0.0	-0.1	0.1	0.1
	157	-0.5	1.1	0.0	0.1	-0.1	0.1	182	0.9	0.5	-0.1	0.1	0.1	-0.1
163	184	-1.0	0.1	0.2	-0.1	-0.1	-0.1	185	0.0	-1.0	-0.2	-0.1	0.0	0.1
	182	-0.1	1.3	0.1	0.1	-0.1	0.1	183	1.1	-0.3	-0.2	0.0	0.0	-0.1
164	185	-1.0	0.8	0.4	0.0	0.0	0.0	120	-0.4	-0.6	-0.3	0.0	-0.1	0.0
	183	0.4	1.1	0.3	0.0	0.0	0.0	9	1.0	-1.3	-0.3	0.0	-0.1	0.0
165	163	-0.5	-0.2	-0.1	-0.1	-0.1	-0.1	186	0.2	-0.6	0.0	-0.1	0.1	0.1
	160	-0.4	0.6	0.1	0.1	-0.1	0.1	184	0.7	0.2	-0.1	0.1	0.1	-0.1
166	186	-0.7	0.2	-0.1	-0.1	-0.1	-0.1	187	-0.1	-0.6	0.1	-0.1	0.0	0.1
	184	-0.1	0.8	0.3	0.1	-0.1	0.1	185	0.8	-0.3	-0.3	0.1	0.0	-0.1
167	187	-0.7	0.6	0.1	0.0	0.0	0.0	124	-0.2	-0.3	-0.1	0.0	-0.1	0.0
	185	0.3	0.6	0.5	0.0	0.0	0.0	120	0.6	-0.8	-0.5	0.0	-0.1	0.0
168	33	-0.2	0.0	-0.3	0.0	0.0	0.0	188	-0.1	-0.3	0.0	0.0	0.0	0.0
	163	-0.1	0.3	0.3	0.1	-0.1	0.0	186	0.4	-0.1	0.0	0.1	0.1	0.0
169	188	-0.4	0.3	-0.5	0.0	0.0	0.0	189	-0.2	-0.4	0.3	0.0	0.0	0.0
	186	0.1	0.5	0.6	0.1	-0.1	0.0	187	0.5	-0.3	-0.4	0.1	0.0	0.0
170	189	-0.4	0.4	-0.4	0.0	0.0	0.0	26	-0.2	-0.3	0.2	0.0	0.0	0.0
	187	0.2	0.4	0.7	0.0	0.0	0.0	124	0.4	-0.5	-0.5	0.0	-0.1	0.0
171	190	-0.5	2.8	-0.1	0.0	0.0	0.1	191	-1.2	0.1	0.1	0.0	0.1	-0.1
	73	0.7	-0.6	-0.1	0.0	0.0	-0.1	72	1.0	-2.3	0.1	0.0	0.1	0.1
172	191	-0.2	1.2	-0.1	0.0	-0.1	0.0	139	-1.1	-0.8	0.2	0.0	0.1	-0.1
	72	0.8	0.5	-0.2	0.0	-0.1	0.0	3	0.5	-0.9	0.1	0.0	0.1	0.1
173	127	-1.0	1.8	0.0	0.0	0.0	0.0	192	-1.6	-1.1	0.0	0.0	0.0	-0.1
	123	1.7	1.5	-0.1	0.0	0.0	-0.1	190	0.9	-2.3	0.1	0.0	0.0	0.1
174	192	-0.2	1.6	-0.1	0.0	0.0	0.1	193	-1.3	-0.4	0.0	0.0	0.0	-0.1
	190	1.6	0.4	-0.1	0.0	0.0	-0.1	191	-0.1	-1.6	0.1	0.0	0.1	0.2
175	193	0.1	0.9	-0.2	0.0	0.0	0.1	143	-1.0	-0.6	0.2	0.0	0.1	-0.1
	191	1.0	0.3	0.0	0.0	-0.1	-0.1	139	-0.2	-0.5	0.0	0.0	0.1	0.1
176	27	-0.6	0.9	0.1	0.0	0.0	0.0	194	-0.7	-0.7	-0.1	0.0	0.0	0.0
	127	0.9	0.8	-0.1	0.0	0.0	0.0	192	0.5	-1.0	0.1	0.0	0.0	0.0
177	194	-0.3	0.7	0.0	0.0	0.0	0.0	195	-0.6	-0.4	0.0	0.0	0.0	0.0
	192	0.9	0.4	0.0	0.0	0.0	-0.1	193	0.0	-0.7	0.1	0.0	0.0	0.1
178	195	-0.1	0.4	-0.2	0.0	0.0	0.0	28	-0.5	-0.4	0.2	0.0	0.0	0.0
	193	0.7	0.3	0.1	0.0	0.0	0.0	143	-0.1	-0.3	-0.1	0.0	0.1	0.0
179	52	-2.6	0.4	-0.2	0.0	0.1	-0.2	119	-0.2	-2.5	0.1	0.0	0.0	0.2
	53	0.7	2.2	-0.1	0.0	0.1	0.2	118	2.1	-0.1	0.3	0.0	0.0	-0.1
180	7	-2.1	0.3	0.1	0.0	0.0	-0.2	34	0.4	-1.5	0.3	-0.1	0.1	0.2
	52	-1.0	0.9	-0.4	-0.1	0.2	0.2	119	2.7	0.2	0.1	0.0	0.0	-0.2

FORZE: SISMA 90°°: MODO2: SHELL

Shell Nro	Nodo N.ro	Tx (kN)	Ty (kN)	Tz (kN)	Mx (kN*m)	My (kN*m)	Mz (kN*m)	Nodo N.ro	Tx (kN)	Ty (kN)	Tz (kN)	Mx (kN*m)	My (kN*m)	Mz (kN*m)
1	38	0.0	0.0	0.0	0.0	0.0	0.0	39	0.0	0.0	0.0	0.0	0.0	0.0
	14	0.0	0.0	0.0	0.0	0.0	0.0	1	0.0	0.0	0.0	0.0	0.0	0.0
2	6	0.0	0.0	0.0	0.0	0.0	0.0	44	0.0	0.0	0.0	0.0	0.0	0.0
	2	0.0	0.0	0.0	0.0	0.0	0.0	42	0.0	0.0	0.0	0.0	0.0	0.0
3	39	0.0	0.0	0.0	0.0	0.0	0.0	44	0.0	0.0	0.0	0.0	0.0	0.0
	1	0.0	0.0	0.0	0.0	0.0	0.0	6	0.0	0.0	0.0	0.0	0.0	0.0
4	46	0.0	0.0	0.0	0.0	0.0	0.0	47	0.0	0.0	0.0	0.0	0.0	0.0
	10	0.0	0.0	0.0	0.0	0.0	0.0	16	0.0	0.0	0.0	0.0	0.0	0.0
5	50	0.0	0.0	0.0	0.0	0.0	0.0	46	0.0	0.0	0.0	0.0	0.0	0.0
	4	0.0	0.0	0.0	0.0	0.0	0.0	10	0.0	0.0	0.0	0.0	0.0	0.0
6	54	0.0	0.0	0.0	0.0	0.0	0.0	55	0.0	0.0	0.0	0.0	0.0	0.0
	7	0.0	0.0	0.0	0.0	0.0	0.0	52	0.0	0.0	0.0	0.0	0.0	0.0
7	64	0.0	0.0	0.0	0.0	0.0	0.0	65	0.0	0.0	0.0	0.0	0.0	0.0
	5	0.0	0.0	0.0	0.0	0.0	0.0	62	0.0	0.0	0.0	0.0	0.0	0.0
8	47	0.0	0.0	0.0	0.0	0.0	0.0	72	0.0	0.0	0.0	0.0	0.0	0.0
	16	0.0	0.0	0.0	0.0	0.0	0.0	3	0.0	0.0	0.0	0.0	0.0	0.0
9	76	0.0	0.0	0.0	0.0	0.0	0.0	77	0.0	0.0	0.0	0.0	0.0	0.0
	25	0.0	0.0	0.0	0.0	0.0	0.0	74	0.0	0.0	0.0	0.0	0.0	0.0
10	38	0.0	0.0	0.0	0.0	0.0	0.0	86	0.0	0.0	0.0	0.0	0.0	0.0
	14	0.0	0.0	0.0	0.0	0.0	0.0	71	0.0	0.0	0.0	0.0	0.0	0.0
11	94	0.0	0.0	0.0	0.0	0.0	0.0	95	0.0	0.0	0.0	0.0	0.0	0.0
	18	0.0	0.0	0.0	0.0	0.0	0.0	91	0.0	0.0	0.0	0.0	0.0	0.0

Documento di proprietà **Snam Rete Gas**. La Società tutelerà i propri diritti in sede civile e penale a termini di legge.

FORZE: SISMA 90°°: MODO2: SHELL

Shell Nro	Nodo N.ro	Tx (kN)	Ty (kN)	Tz (kN)	Mx (kN*m)	My (kN*m)	Mz (kN*m)	Nodo N.ro	Tx (kN)	Ty (kN)	Tz (kN)	Mx (kN*m)	My (kN*m)	Mz (kN*m)
12	102	0.0	0.0	0.0	0.0	0.0	0.0	103	0.0	0.0	0.0	0.0	0.0	0.0
	21	0.0	0.0	0.0	0.0	0.0	0.0	84	0.0	0.0	0.0	0.0	0.0	0.0
13	112	0.0	0.0	0.0	0.0	0.0	0.0	76	0.0	0.0	0.0	0.0	0.0	0.0
	36	0.0	0.0	0.0	0.0	0.0	0.0	25	0.0	0.0	0.0	0.0	0.0	0.0
14	114	0.0	0.0	0.0	0.0	0.0	0.0	112	0.0	0.0	0.0	0.0	0.0	0.0
	35	0.0	0.0	0.0	0.0	0.0	0.0	36	0.0	0.0	0.0	0.0	0.0	0.0
15	24	0.0	0.0	0.0	0.0	0.0	0.0	116	0.0	0.0	0.0	0.0	0.0	0.0
	21	0.0	0.0	0.0	0.0	0.0	0.0	102	0.0	0.0	0.0	0.0	0.0	0.0
16	118	0.0	0.0	0.0	0.0	0.0	0.0	116	0.0	0.0	0.0	0.0	0.0	0.0
	20	0.0	0.0	0.0	0.0	0.0	0.0	24	0.0	0.0	0.0	0.0	0.0	0.0
17	120	0.0	0.0	0.0	0.0	0.0	0.0	121	0.0	0.0	0.0	0.0	0.0	0.0
	9	0.0	0.0	0.0	0.0	0.0	0.0	43	0.0	0.0	0.0	0.0	0.0	0.0
18	10	0.0	0.0	0.0	0.0	0.0	0.0	130	0.0	0.0	0.0	0.0	0.0	0.0
	4	0.0	0.0	0.0	0.0	0.0	0.0	68	0.0	0.0	0.0	0.0	0.0	0.0
19	100	0.0	0.0	0.0	0.0	0.0	0.0	114	0.0	0.0	0.0	0.0	0.0	0.0
	19	0.0	0.0	0.0	0.0	0.0	0.0	35	0.0	0.0	0.0	0.0	0.0	0.0
20	35	0.0	0.0	0.0	0.0	0.0	0.0	149	0.0	0.0	0.0	0.0	0.0	0.0
	19	0.0	0.0	0.0	0.0	0.0	0.0	97	0.0	0.0	0.0	0.0	0.0	0.0
21	132	0.0	0.0	0.0	0.0	0.0	0.0	166	0.0	0.0	0.0	0.0	0.0	0.0
	5	0.0	0.0	0.0	0.0	0.0	0.0	58	0.0	0.0	0.0	0.0	0.0	0.0
22	151	0.0	0.0	0.0	0.0	0.0	0.0	178	0.0	0.0	0.0	0.0	0.0	0.0
	18	0.0	0.0	0.0	0.0	0.0	0.0	93	0.0	0.0	0.0	0.0	0.0	0.0
23	123	0.0	0.0	0.0	0.0	0.0	0.0	190	0.0	0.0	0.0	0.0	0.0	0.0
	2	0.0	0.0	0.0	0.0	0.0	0.0	73	0.0	0.0	0.0	0.0	0.0	0.0
24	53	0.0	0.0	0.0	0.0	0.0	0.0	118	0.0	0.0	0.0	0.0	0.0	0.0
	11	0.0	0.0	0.0	0.0	0.0	0.0	20	0.0	0.0	0.0	0.0	0.0	0.0
25	40	0.0	0.0	0.0	0.0	0.0	0.0	41	0.0	0.0	0.0	0.0	0.0	0.0
	38	0.0	0.0	0.0	0.0	0.0	0.0	39	0.0	0.0	0.0	0.0	0.0	0.0
26	17	0.0	0.0	0.0	0.0	0.0	0.0	12	0.0	0.0	0.0	0.0	0.0	0.0
	40	0.0	0.0	0.0	0.0	0.0	0.0	41	0.0	0.0	0.0	0.0	0.0	0.0
27	44	0.0	0.0	0.0	0.0	0.0	0.0	45	0.0	0.0	0.0	0.0	0.0	0.0
	42	0.0	0.0	0.0	0.0	0.0	0.0	43	0.0	0.0	0.0	0.0	0.0	0.0
28	45	0.0	0.0	0.0	0.0	0.0	0.0	15	0.0	0.0	0.0	0.0	0.0	0.0
	43	0.0	0.0	0.0	0.0	0.0	0.0	9	0.0	0.0	0.0	0.0	0.0	0.0
29	41	0.0	0.0	0.0	0.0	0.0	0.0	45	0.0	0.0	0.0	0.0	0.0	0.0
	39	0.0	0.0	0.0	0.0	0.0	0.0	44	0.0	0.0	0.0	0.0	0.0	0.0
30	12	0.0	0.0	0.0	0.0	0.0	0.0	15	0.0	0.0	0.0	0.0	0.0	0.0
	41	0.0	0.0	0.0	0.0	0.0	0.0	45	0.0	0.0	0.0	0.0	0.0	0.0
31	48	0.0	0.0	0.0	0.0	0.0	0.0	49	0.0	0.0	0.0	0.0	0.0	0.0
	46	0.0	0.0	0.0	0.0	0.0	0.0	47	0.0	0.0	0.0	0.0	0.0	0.0
32	1	0.0	0.0	0.0	0.0	0.0	0.0	8	0.0	0.0	0.0	0.0	0.0	0.0
	48	0.0	0.0	0.0	0.0	0.0	0.0	49	0.0	0.0	0.0	0.0	0.0	0.0
33	51	0.0	0.0	0.0	0.0	0.0	0.0	48	0.0	0.0	0.0	0.0	0.0	0.0
	50	0.0	0.0	0.0	0.0	0.0	0.0	46	0.0	0.0	0.0	0.0	0.0	0.0
34	14	0.0	0.0	0.0	0.0	0.0	0.0	1	0.0	0.0	0.0	0.0	0.0	0.0
	51	0.0	0.0	0.0	0.0	0.0	0.0	48	0.0	0.0	0.0	0.0	0.0	0.0
35	55	0.0	0.0	0.0	0.0	0.0	0.0	56	0.0	0.0	0.0	0.0	0.0	0.0
	52	0.0	0.0	0.0	0.0	0.0	0.0	53	0.0	0.0	0.0	0.0	0.0	0.0
36	56	0.0	0.0	0.0	0.0	0.0	0.0	57	0.0	0.0	0.0	0.0	0.0	0.0
	53	0.0	0.0	0.0	0.0	0.0	0.0	11	0.0	0.0	0.0	0.0	0.0	0.0
37	58	0.0	0.0	0.0	0.0	0.0	0.0	59	0.0	0.0	0.0	0.0	0.0	0.0
	54	0.0	0.0	0.0	0.0	0.0	0.0	55	0.0	0.0	0.0	0.0	0.0	0.0
38	59	0.0	0.0	0.0	0.0	0.0	0.0	60	0.0	0.0	0.0	0.0	0.0	0.0
	55	0.0	0.0	0.0	0.0	0.0	0.0	56	0.0	0.0	0.0	0.0	0.0	0.0
39	60	0.0	0.0	0.0	0.0	0.0	0.0	61	0.0	0.0	0.0	0.0	0.0	0.0
	56	0.0	0.0	0.0	0.0	0.0	0.0	57	0.0	0.0	0.0	0.0	0.0	0.0
40	5	0.0	0.0	0.0	0.0	0.0	0.0	62	0.0	0.0	0.0	0.0	0.0	0.0
	58	0.0	0.0	0.0	0.0	0.0	0.0	59	0.0	0.0	0.0	0.0	0.0	0.0
41	62	0.0	0.0	0.0	0.0	0.0	0.0	63	0.0	0.0	0.0	0.0	0.0	0.0
	59	0.0	0.0	0.0	0.0	0.0	0.0	60	0.0	0.0	0.0	0.0	0.0	0.0
42	63	0.0	0.0	0.0	0.0	0.0	0.0	13	0.0	0.0	0.0	0.0	0.0	0.0
	60	0.0	0.0	0.0	0.0	0.0	0.0	61	0.0	0.0	0.0	0.0	0.0	0.0
43	65	0.0	0.0	0.0	0.0	0.0	0.0	66	0.0	0.0	0.0	0.0	0.0	0.0
	62	0.0	0.0	0.0	0.0	0.0	0.0	63	0.0	0.0	0.0	0.0	0.0	0.0
44	66	0.0	0.0	0.0	0.0	0.0	0.0	67	0.0	0.0	0.0	0.0	0.0	0.0
	63	0.0	0.0	0.0	0.0	0.0	0.0	13	0.0	0.0	0.0	0.0	0.0	0.0
45	68	0.0	0.0	0.0	0.0	0.0	0.0	69	0.0	0.0	0.0	0.0	0.0	0.0
	64	0.0	0.0	0.0	0.0	0.0	0.0	65	0.0	0.0	0.0	0.0	0.0	0.0
46	69	0.0	0.0	0.0	0.0	0.0	0.0	70	0.0	0.0	0.0	0.0	0.0	0.0
	65	0.0	0.0	0.0	0.0	0.0	0.0	66	0.0	0.0	0.0	0.0	0.0	0.0
47	70	0.0	0.0	0.0	0.0	0.0	0.0	71	0.0	0.0	0.0	0.0	0.0	0.0
	66	0.0	0.0	0.0	0.0	0.0	0.0	67	0.0	0.0	0.0	0.0	0.0	0.0
48	4	0.0	0.0	0.0	0.0	0.0	0.0	50	0.0	0.0	0.0	0.0	0.0	0.0
	68	0.0	0.0	0.0	0.0	0.0	0.0	69	0.0	0.0	0.0	0.0	0.0	0.0
49	50	0.0	0.0	0.0	0.0	0.0	0.0	51	0.0	0.0	0.0	0.0	0.0	0.0
	69	0.0	0.0	0.0	0.0	0.0	0.0	70	0.0	0.0	0.0	0.0	0.0	0.0
50	51	0.0	0.0	0.0	0.0	0.0	0.0	14	0.0	0.0	0.0	0.0	0.0	0.0
	70	0.0	0.0	0.0	0.0	0.0	0.0	71	0.0	0.0	0.0	0.0	0.0	0.0
51	49	0.0	0.0	0.0	0.0	0.0	0.0	73	0.0	0.0	0.0	0.0	0.0	0.0
	47	0.0	0.0	0.0	0.0	0.0	0.0	72	0.0	0.0	0.0	0.0	0.0	0.0

Documento di proprietà **Snam Rete Gas**. La Società tutelerà i propri diritti in sede civile e penale a termini di legge.

FORZE: SISMA 90°°: MODO2: SHELL

Shell Nro	Nodo N.ro	Tx (kN)	Ty (kN)	Tz (kN)	Mx (kN*m)	My (kN*m)	Mz (kN*m)	Nodo N.ro	Tx (kN)	Ty (kN)	Tz (kN)	Mx (kN*m)	My (kN*m)	Mz (kN*m)
52	8	0.0	0.0	0.0	0.0	0.0	0.0	2	0.0	0.0	0.0	0.0	0.0	0.0
	49	0.0	0.0	0.0	0.0	0.0	0.0	73	0.0	0.0	0.0	0.0	0.0	0.0
53	77	0.0	0.0	0.0	0.0	0.0	0.0	78	0.0	0.0	0.0	0.0	0.0	0.0
	74	0.0	0.0	0.0	0.0	0.0	0.0	75	0.0	0.0	0.0	0.0	0.0	0.0
54	78	0.0	0.0	0.0	0.0	0.0	0.0	79	0.0	0.0	0.0	0.0	0.0	0.0
	75	0.0	0.0	0.0	0.0	0.0	0.0	32	0.0	0.0	0.0	0.0	0.0	0.0
55	80	0.0	0.0	0.0	0.0	0.0	0.0	81	0.0	0.0	0.0	0.0	0.0	0.0
	76	0.0	0.0	0.0	0.0	0.0	0.0	77	0.0	0.0	0.0	0.0	0.0	0.0
56	81	0.0	0.0	0.0	0.0	0.0	0.0	82	0.0	0.0	0.0	0.0	0.0	0.0
	77	0.0	0.0	0.0	0.0	0.0	0.0	78	0.0	0.0	0.0	0.0	0.0	0.0
57	82	0.0	0.0	0.0	0.0	0.0	0.0	83	0.0	0.0	0.0	0.0	0.0	0.0
	78	0.0	0.0	0.0	0.0	0.0	0.0	79	0.0	0.0	0.0	0.0	0.0	0.0
58	21	0.0	0.0	0.0	0.0	0.0	0.0	84	0.0	0.0	0.0	0.0	0.0	0.0
	80	0.0	0.0	0.0	0.0	0.0	0.0	81	0.0	0.0	0.0	0.0	0.0	0.0
59	84	0.0	0.0	0.0	0.0	0.0	0.0	85	0.0	0.0	0.0	0.0	0.0	0.0
	81	0.0	0.0	0.0	0.0	0.0	0.0	82	0.0	0.0	0.0	0.0	0.0	0.0
60	85	0.0	0.0	0.0	0.0	0.0	0.0	31	0.0	0.0	0.0	0.0	0.0	0.0
	82	0.0	0.0	0.0	0.0	0.0	0.0	83	0.0	0.0	0.0	0.0	0.0	0.0
61	86	0.0	0.0	0.0	0.0	0.0	0.0	87	0.0	0.0	0.0	0.0	0.0	0.0
	71	0.0	0.0	0.0	0.0	0.0	0.0	67	0.0	0.0	0.0	0.0	0.0	0.0
62	87	0.0	0.0	0.0	0.0	0.0	0.0	88	0.0	0.0	0.0	0.0	0.0	0.0
	67	0.0	0.0	0.0	0.0	0.0	0.0	13	0.0	0.0	0.0	0.0	0.0	0.0
63	40	0.0	0.0	0.0	0.0	0.0	0.0	89	0.0	0.0	0.0	0.0	0.0	0.0
	38	0.0	0.0	0.0	0.0	0.0	0.0	86	0.0	0.0	0.0	0.0	0.0	0.0
64	89	0.0	0.0	0.0	0.0	0.0	0.0	90	0.0	0.0	0.0	0.0	0.0	0.0
	86	0.0	0.0	0.0	0.0	0.0	0.0	87	0.0	0.0	0.0	0.0	0.0	0.0
65	90	0.0	0.0	0.0	0.0	0.0	0.0	91	0.0	0.0	0.0	0.0	0.0	0.0
	87	0.0	0.0	0.0	0.0	0.0	0.0	88	0.0	0.0	0.0	0.0	0.0	0.0
66	17	0.0	0.0	0.0	0.0	0.0	0.0	92	0.0	0.0	0.0	0.0	0.0	0.0
	40	0.0	0.0	0.0	0.0	0.0	0.0	89	0.0	0.0	0.0	0.0	0.0	0.0
67	92	0.0	0.0	0.0	0.0	0.0	0.0	93	0.0	0.0	0.0	0.0	0.0	0.0
	89	0.0	0.0	0.0	0.0	0.0	0.0	90	0.0	0.0	0.0	0.0	0.0	0.0
68	93	0.0	0.0	0.0	0.0	0.0	0.0	18	0.0	0.0	0.0	0.0	0.0	0.0
	90	0.0	0.0	0.0	0.0	0.0	0.0	91	0.0	0.0	0.0	0.0	0.0	0.0
69	95	0.0	0.0	0.0	0.0	0.0	0.0	96	0.0	0.0	0.0	0.0	0.0	0.0
	91	0.0	0.0	0.0	0.0	0.0	0.0	88	0.0	0.0	0.0	0.0	0.0	0.0
70	96	0.0	0.0	0.0	0.0	0.0	0.0	61	0.0	0.0	0.0	0.0	0.0	0.0
	88	0.0	0.0	0.0	0.0	0.0	0.0	13	0.0	0.0	0.0	0.0	0.0	0.0
71	97	0.0	0.0	0.0	0.0	0.0	0.0	98	0.0	0.0	0.0	0.0	0.0	0.0
	94	0.0	0.0	0.0	0.0	0.0	0.0	95	0.0	0.0	0.0	0.0	0.0	0.0
72	98	0.0	0.0	0.0	0.0	0.0	0.0	99	0.0	0.0	0.0	0.0	0.0	0.0
	95	0.0	0.0	0.0	0.0	0.0	0.0	96	0.0	0.0	0.0	0.0	0.0	0.0
73	99	0.0	0.0	0.0	0.0	0.0	0.0	57	0.0	0.0	0.0	0.0	0.0	0.0
	96	0.0	0.0	0.0	0.0	0.0	0.0	61	0.0	0.0	0.0	0.0	0.0	0.0
74	19	0.0	0.0	0.0	0.0	0.0	0.0	100	0.0	0.0	0.0	0.0	0.0	0.0
	97	0.0	0.0	0.0	0.0	0.0	0.0	98	0.0	0.0	0.0	0.0	0.0	0.0
75	100	0.0	0.0	0.0	0.0	0.0	0.0	101	0.0	0.0	0.0	0.0	0.0	0.0
	98	0.0	0.0	0.0	0.0	0.0	0.0	99	0.0	0.0	0.0	0.0	0.0	0.0
76	101	0.0	0.0	0.0	0.0	0.0	0.0	11	0.0	0.0	0.0	0.0	0.0	0.0
	99	0.0	0.0	0.0	0.0	0.0	0.0	57	0.0	0.0	0.0	0.0	0.0	0.0
77	103	0.0	0.0	0.0	0.0	0.0	0.0	104	0.0	0.0	0.0	0.0	0.0	0.0
	84	0.0	0.0	0.0	0.0	0.0	0.0	85	0.0	0.0	0.0	0.0	0.0	0.0
78	104	0.0	0.0	0.0	0.0	0.0	0.0	105	0.0	0.0	0.0	0.0	0.0	0.0
	85	0.0	0.0	0.0	0.0	0.0	0.0	31	0.0	0.0	0.0	0.0	0.0	0.0
79	106	0.0	0.0	0.0	0.0	0.0	0.0	107	0.0	0.0	0.0	0.0	0.0	0.0
	102	0.0	0.0	0.0	0.0	0.0	0.0	103	0.0	0.0	0.0	0.0	0.0	0.0
80	107	0.0	0.0	0.0	0.0	0.0	0.0	108	0.0	0.0	0.0	0.0	0.0	0.0
	103	0.0	0.0	0.0	0.0	0.0	0.0	104	0.0	0.0	0.0	0.0	0.0	0.0
81	108	0.0	0.0	0.0	0.0	0.0	0.0	109	0.0	0.0	0.0	0.0	0.0	0.0
	104	0.0	0.0	0.0	0.0	0.0	0.0	105	0.0	0.0	0.0	0.0	0.0	0.0
82	22	0.0	0.0	0.0	0.0	0.0	0.0	110	0.0	0.0	0.0	0.0	0.0	0.0
	106	0.0	0.0	0.0	0.0	0.0	0.0	107	0.0	0.0	0.0	0.0	0.0	0.0
83	110	0.0	0.0	0.0	0.0	0.0	0.0	111	0.0	0.0	0.0	0.0	0.0	0.0
	107	0.0	0.0	0.0	0.0	0.0	0.0	108	0.0	0.0	0.0	0.0	0.0	0.0
84	111	0.0	0.0	0.0	0.0	0.0	0.0	30	0.0	0.0	0.0	0.0	0.0	0.0
	108	0.0	0.0	0.0	0.0	0.0	0.0	109	0.0	0.0	0.0	0.0	0.0	0.0
85	113	0.0	0.0	0.0	0.0	0.0	0.0	80	0.0	0.0	0.0	0.0	0.0	0.0
	112	0.0	0.0	0.0	0.0	0.0	0.0	76	0.0	0.0	0.0	0.0	0.0	0.0
86	23	0.0	0.0	0.0	0.0	0.0	0.0	21	0.0	0.0	0.0	0.0	0.0	0.0
	113	0.0	0.0	0.0	0.0	0.0	0.0	80	0.0	0.0	0.0	0.0	0.0	0.0
87	115	0.0	0.0	0.0	0.0	0.0	0.0	113	0.0	0.0	0.0	0.0	0.0	0.0
	114	0.0	0.0	0.0	0.0	0.0	0.0	112	0.0	0.0	0.0	0.0	0.0	0.0
88	20	0.0	0.0	0.0	0.0	0.0	0.0	23	0.0	0.0	0.0	0.0	0.0	0.0
	115	0.0	0.0	0.0	0.0	0.0	0.0	113	0.0	0.0	0.0	0.0	0.0	0.0
89	116	0.0	0.0	0.0	0.0	0.0	0.0	117	0.0	0.0	0.0	0.0	0.0	0.0
	102	0.0	0.0	0.0	0.0	0.0	0.0	106	0.0	0.0	0.0	0.0	0.0	0.0
90	117	0.0	0.0	0.0	0.0	0.0	0.0	37	0.0	0.0	0.0	0.0	0.0	0.0
	106	0.0	0.0	0.0	0.0	0.0	0.0	22	0.0	0.0	0.0	0.0	0.0	0.0
91	119	0.0	0.0	0.0	0.0	0.0	0.0	117	0.0	0.0	0.0	0.0	0.0	0.0
	118	0.0	0.0	0.0	0.0	0.0	0.0	116	0.0	0.0	0.0	0.0	0.0	0.0

Documento di proprietà **Snam Rete Gas**. La Società tutelerà i propri diritti in sede civile e penale a termini di legge.

FORZE: SISMA 90°°: MODO2: SHELL

Shell Nro	Nodo N.ro	Tx (kN)	Ty (kN)	Tz (kN)	Mx (kN*m)	My (kN*m)	Mz (kN*m)	Nodo N.ro	Tx (kN)	Ty (kN)	Tz (kN)	Mx (kN*m)	My (kN*m)	Mz (kN*m)
92	34	0.0	0.0	0.0	0.0	0.0	0.0	37	0.0	0.0	0.0	0.0	0.0	0.0
	119	0.0	0.0	0.0	0.0	0.0	0.0	117	0.0	0.0	0.0	0.0	0.0	0.0
93	121	0.0	0.0	0.0	0.0	0.0	0.0	122	0.0	0.0	0.0	0.0	0.0	0.0
	43	0.0	0.0	0.0	0.0	0.0	0.0	42	0.0	0.0	0.0	0.0	0.0	0.0
94	122	0.0	0.0	0.0	0.0	0.0	0.0	123	0.0	0.0	0.0	0.0	0.0	0.0
	42	0.0	0.0	0.0	0.0	0.0	0.0	2	0.0	0.0	0.0	0.0	0.0	0.0
95	124	0.0	0.0	0.0	0.0	0.0	0.0	125	0.0	0.0	0.0	0.0	0.0	0.0
	120	0.0	0.0	0.0	0.0	0.0	0.0	121	0.0	0.0	0.0	0.0	0.0	0.0
96	125	0.0	0.0	0.0	0.0	0.0	0.0	126	0.0	0.0	0.0	0.0	0.0	0.0
	121	0.0	0.0	0.0	0.0	0.0	0.0	122	0.0	0.0	0.0	0.0	0.0	0.0
97	126	0.0	0.0	0.0	0.0	0.0	0.0	127	0.0	0.0	0.0	0.0	0.0	0.0
	122	0.0	0.0	0.0	0.0	0.0	0.0	123	0.0	0.0	0.0	0.0	0.0	0.0
98	26	0.0	0.0	0.0	0.0	0.0	0.0	128	0.0	0.0	0.0	0.0	0.0	0.0
	124	0.0	0.0	0.0	0.0	0.0	0.0	125	0.0	0.0	0.0	0.0	0.0	0.0
99	128	0.0	0.0	0.0	0.0	0.0	0.0	129	0.0	0.0	0.0	0.0	0.0	0.0
	125	0.0	0.0	0.0	0.0	0.0	0.0	126	0.0	0.0	0.0	0.0	0.0	0.0
100	129	0.0	0.0	0.0	0.0	0.0	0.0	27	0.0	0.0	0.0	0.0	0.0	0.0
	126	0.0	0.0	0.0	0.0	0.0	0.0	127	0.0	0.0	0.0	0.0	0.0	0.0
101	130	0.0	0.0	0.0	0.0	0.0	0.0	131	0.0	0.0	0.0	0.0	0.0	0.0
	68	0.0	0.0	0.0	0.0	0.0	0.0	64	0.0	0.0	0.0	0.0	0.0	0.0
102	131	0.0	0.0	0.0	0.0	0.0	0.0	132	0.0	0.0	0.0	0.0	0.0	0.0
	64	0.0	0.0	0.0	0.0	0.0	0.0	5	0.0	0.0	0.0	0.0	0.0	0.0
103	16	0.0	0.0	0.0	0.0	0.0	0.0	133	0.0	0.0	0.0	0.0	0.0	0.0
	10	0.0	0.0	0.0	0.0	0.0	0.0	130	0.0	0.0	0.0	0.0	0.0	0.0
104	133	0.0	0.0	0.0	0.0	0.0	0.0	134	0.0	0.0	0.0	0.0	0.0	0.0
	130	0.0	0.0	0.0	0.0	0.0	0.0	131	0.0	0.0	0.0	0.0	0.0	0.0
105	134	0.0	0.0	0.0	0.0	0.0	0.0	135	0.0	0.0	0.0	0.0	0.0	0.0
	131	0.0	0.0	0.0	0.0	0.0	0.0	132	0.0	0.0	0.0	0.0	0.0	0.0
106	3	0.0	0.0	0.0	0.0	0.0	0.0	136	0.0	0.0	0.0	0.0	0.0	0.0
	16	0.0	0.0	0.0	0.0	0.0	0.0	133	0.0	0.0	0.0	0.0	0.0	0.0
107	136	0.0	0.0	0.0	0.0	0.0	0.0	137	0.0	0.0	0.0	0.0	0.0	0.0
	133	0.0	0.0	0.0	0.0	0.0	0.0	134	0.0	0.0	0.0	0.0	0.0	0.0
108	137	0.0	0.0	0.0	0.0	0.0	0.0	138	0.0	0.0	0.0	0.0	0.0	0.0
	134	0.0	0.0	0.0	0.0	0.0	0.0	135	0.0	0.0	0.0	0.0	0.0	0.0
109	139	0.0	0.0	0.0	0.0	0.0	0.0	140	0.0	0.0	0.0	0.0	0.0	0.0
	3	0.0	0.0	0.0	0.0	0.0	0.0	136	0.0	0.0	0.0	0.0	0.0	0.0
110	140	0.0	0.0	0.0	0.0	0.0	0.0	141	0.0	0.0	0.0	0.0	0.0	0.0
	136	0.0	0.0	0.0	0.0	0.0	0.0	137	0.0	0.0	0.0	0.0	0.0	0.0
111	141	0.0	0.0	0.0	0.0	0.0	0.0	142	0.0	0.0	0.0	0.0	0.0	0.0
	137	0.0	0.0	0.0	0.0	0.0	0.0	138	0.0	0.0	0.0	0.0	0.0	0.0
112	143	0.0	0.0	0.0	0.0	0.0	0.0	144	0.0	0.0	0.0	0.0	0.0	0.0
	139	0.0	0.0	0.0	0.0	0.0	0.0	140	0.0	0.0	0.0	0.0	0.0	0.0
113	144	0.0	0.0	0.0	0.0	0.0	0.0	145	0.0	0.0	0.0	0.0	0.0	0.0
	140	0.0	0.0	0.0	0.0	0.0	0.0	141	0.0	0.0	0.0	0.0	0.0	0.0
114	145	0.0	0.0	0.0	0.0	0.0	0.0	146	0.0	0.0	0.0	0.0	0.0	0.0
	141	0.0	0.0	0.0	0.0	0.0	0.0	142	0.0	0.0	0.0	0.0	0.0	0.0
115	28	0.0	0.0	0.0	0.0	0.0	0.0	147	0.0	0.0	0.0	0.0	0.0	0.0
	143	0.0	0.0	0.0	0.0	0.0	0.0	144	0.0	0.0	0.0	0.0	0.0	0.0
116	147	0.0	0.0	0.0	0.0	0.0	0.0	148	0.0	0.0	0.0	0.0	0.0	0.0
	144	0.0	0.0	0.0	0.0	0.0	0.0	145	0.0	0.0	0.0	0.0	0.0	0.0
117	148	0.0	0.0	0.0	0.0	0.0	0.0	29	0.0	0.0	0.0	0.0	0.0	0.0
	145	0.0	0.0	0.0	0.0	0.0	0.0	146	0.0	0.0	0.0	0.0	0.0	0.0
118	101	0.0	0.0	0.0	0.0	0.0	0.0	115	0.0	0.0	0.0	0.0	0.0	0.0
	100	0.0	0.0	0.0	0.0	0.0	0.0	114	0.0	0.0	0.0	0.0	0.0	0.0
119	11	0.0	0.0	0.0	0.0	0.0	0.0	20	0.0	0.0	0.0	0.0	0.0	0.0
	101	0.0	0.0	0.0	0.0	0.0	0.0	115	0.0	0.0	0.0	0.0	0.0	0.0
120	149	0.0	0.0	0.0	0.0	0.0	0.0	150	0.0	0.0	0.0	0.0	0.0	0.0
	97	0.0	0.0	0.0	0.0	0.0	0.0	94	0.0	0.0	0.0	0.0	0.0	0.0
121	150	0.0	0.0	0.0	0.0	0.0	0.0	151	0.0	0.0	0.0	0.0	0.0	0.0
	94	0.0	0.0	0.0	0.0	0.0	0.0	18	0.0	0.0	0.0	0.0	0.0	0.0
122	36	0.0	0.0	0.0	0.0	0.0	0.0	152	0.0	0.0	0.0	0.0	0.0	0.0
	35	0.0	0.0	0.0	0.0	0.0	0.0	149	0.0	0.0	0.0	0.0	0.0	0.0
123	152	0.0	0.0	0.0	0.0	0.0	0.0	153	0.0	0.0	0.0	0.0	0.0	0.0
	149	0.0	0.0	0.0	0.0	0.0	0.0	150	0.0	0.0	0.0	0.0	0.0	0.0
124	153	0.0	0.0	0.0	0.0	0.0	0.0	154	0.0	0.0	0.0	0.0	0.0	0.0
	150	0.0	0.0	0.0	0.0	0.0	0.0	151	0.0	0.0	0.0	0.0	0.0	0.0
125	25	0.0	0.0	0.0	0.0	0.0	0.0	155	0.0	0.0	0.0	0.0	0.0	0.0
	36	0.0	0.0	0.0	0.0	0.0	0.0	152	0.0	0.0	0.0	0.0	0.0	0.0
126	155	0.0	0.0	0.0	0.0	0.0	0.0	156	0.0	0.0	0.0	0.0	0.0	0.0
	152	0.0	0.0	0.0	0.0	0.0	0.0	153	0.0	0.0	0.0	0.0	0.0	0.0
127	156	0.0	0.0	0.0	0.0	0.0	0.0	157	0.0	0.0	0.0	0.0	0.0	0.0
	153	0.0	0.0	0.0	0.0	0.0	0.0	154	0.0	0.0	0.0	0.0	0.0	0.0
128	74	0.0	0.0	0.0	0.0	0.0	0.0	158	0.0	0.0	0.0	0.0	0.0	0.0
	25	0.0	0.0	0.0	0.0	0.0	0.0	155	0.0	0.0	0.0	0.0	0.0	0.0
129	158	0.0	0.0	0.0	0.0	0.0	0.0	159	0.0	0.0	0.0	0.0	0.0	0.0
	155	0.0	0.0	0.0	0.0	0.0	0.0	156	0.0	0.0	0.0	0.0	0.0	0.0
130	159	0.0	0.0	0.0	0.0	0.0	0.0	160	0.0	0.0	0.0	0.0	0.0	0.0
	156	0.0	0.0	0.0	0.0	0.0	0.0	157	0.0	0.0	0.0	0.0	0.0	0.0
131	75	0.0	0.0	0.0	0.0	0.0	0.0	161	0.0	0.0	0.0	0.0	0.0	0.0
	74	0.0	0.0	0.0	0.0	0.0	0.0	158	0.0	0.0	0.0	0.0	0.0	0.0

Documento di proprietà **Snam Rete Gas**. La Società tutelerà i propri diritti in sede civile e penale a termini di legge.

FORZE: SISMA 90°°: MODO2: SHELL

Shell Nro	Nodo N.ro	Tx (kN)	Ty (kN)	Tz (kN)	Mx (kN*m)	My (kN*m)	Mz (kN*m)	Nodo N.ro	Tx (kN)	Ty (kN)	Tz (kN)	Mx (kN*m)	My (kN*m)	Mz (kN*m)
132	161	0.0	0.0	0.0	0.0	0.0	0.0	162	0.0	0.0	0.0	0.0	0.0	0.0
	158	0.0	0.0	0.0	0.0	0.0	0.0	159	0.0	0.0	0.0	0.0	0.0	0.0
133	162	0.0	0.0	0.0	0.0	0.0	0.0	163	0.0	0.0	0.0	0.0	0.0	0.0
	159	0.0	0.0	0.0	0.0	0.0	0.0	160	0.0	0.0	0.0	0.0	0.0	0.0
134	32	0.0	0.0	0.0	0.0	0.0	0.0	164	0.0	0.0	0.0	0.0	0.0	0.0
	75	0.0	0.0	0.0	0.0	0.0	0.0	161	0.0	0.0	0.0	0.0	0.0	0.0
135	164	0.0	0.0	0.0	0.0	0.0	0.0	165	0.0	0.0	0.0	0.0	0.0	0.0
	161	0.0	0.0	0.0	0.0	0.0	0.0	162	0.0	0.0	0.0	0.0	0.0	0.0
136	165	0.0	0.0	0.0	0.0	0.0	0.0	33	0.0	0.0	0.0	0.0	0.0	0.0
	162	0.0	0.0	0.0	0.0	0.0	0.0	163	0.0	0.0	0.0	0.0	0.0	0.0
137	166	0.0	0.0	0.0	0.0	0.0	0.0	167	0.0	0.0	0.0	0.0	0.0	0.0
	58	0.0	0.0	0.0	0.0	0.0	0.0	54	0.0	0.0	0.0	0.0	0.0	0.0
138	167	0.0	0.0	0.0	0.0	0.0	0.0	34	0.0	0.0	0.0	0.0	0.0	0.0
	54	0.0	0.0	0.0	0.0	0.0	0.0	7	0.0	0.0	0.0	0.0	0.0	0.0
139	135	0.0	0.0	0.0	0.0	0.0	0.0	168	0.0	0.0	0.0	0.0	0.0	0.0
	132	0.0	0.0	0.0	0.0	0.0	0.0	166	0.0	0.0	0.0	0.0	0.0	0.0
140	168	0.0	0.0	0.0	0.0	0.0	0.0	169	0.0	0.0	0.0	0.0	0.0	0.0
	166	0.0	0.0	0.0	0.0	0.0	0.0	167	0.0	0.0	0.0	0.0	0.0	0.0
141	169	0.0	0.0	0.0	0.0	0.0	0.0	37	0.0	0.0	0.0	0.0	0.0	0.0
	167	0.0	0.0	0.0	0.0	0.0	0.0	34	0.0	0.0	0.0	0.0	0.0	0.0
142	138	0.0	0.0	0.0	0.0	0.0	0.0	170	0.0	0.0	0.0	0.0	0.0	0.0
	135	0.0	0.0	0.0	0.0	0.0	0.0	168	0.0	0.0	0.0	0.0	0.0	0.0
143	170	0.0	0.0	0.0	0.0	0.0	0.0	171	0.0	0.0	0.0	0.0	0.0	0.0
	168	0.0	0.0	0.0	0.0	0.0	0.0	169	0.0	0.0	0.0	0.0	0.0	0.0
144	171	0.0	0.0	0.0	0.0	0.0	0.0	22	0.0	0.0	0.0	0.0	0.0	0.0
	169	0.0	0.0	0.0	0.0	0.0	0.0	37	0.0	0.0	0.0	0.0	0.0	0.0
145	142	0.0	0.0	0.0	0.0	0.0	0.0	172	0.0	0.0	0.0	0.0	0.0	0.0
	138	0.0	0.0	0.0	0.0	0.0	0.0	170	0.0	0.0	0.0	0.0	0.0	0.0
146	172	0.0	0.0	0.0	0.0	0.0	0.0	173	0.0	0.0	0.0	0.0	0.0	0.0
	170	0.0	0.0	0.0	0.0	0.0	0.0	171	0.0	0.0	0.0	0.0	0.0	0.0
147	173	0.0	0.0	0.0	0.0	0.0	0.0	110	0.0	0.0	0.0	0.0	0.0	0.0
	171	0.0	0.0	0.0	0.0	0.0	0.0	22	0.0	0.0	0.0	0.0	0.0	0.0
148	146	0.0	0.0	0.0	0.0	0.0	0.0	174	0.0	0.0	0.0	0.0	0.0	0.0
	142	0.0	0.0	0.0	0.0	0.0	0.0	172	0.0	0.0	0.0	0.0	0.0	0.0
149	174	0.0	0.0	0.0	0.0	0.0	0.0	175	0.0	0.0	0.0	0.0	0.0	0.0
	172	0.0	0.0	0.0	0.0	0.0	0.0	173	0.0	0.0	0.0	0.0	0.0	0.0
150	175	0.0	0.0	0.0	0.0	0.0	0.0	111	0.0	0.0	0.0	0.0	0.0	0.0
	173	0.0	0.0	0.0	0.0	0.0	0.0	110	0.0	0.0	0.0	0.0	0.0	0.0
151	29	0.0	0.0	0.0	0.0	0.0	0.0	176	0.0	0.0	0.0	0.0	0.0	0.0
	146	0.0	0.0	0.0	0.0	0.0	0.0	174	0.0	0.0	0.0	0.0	0.0	0.0
152	176	0.0	0.0	0.0	0.0	0.0	0.0	177	0.0	0.0	0.0	0.0	0.0	0.0
	174	0.0	0.0	0.0	0.0	0.0	0.0	175	0.0	0.0	0.0	0.0	0.0	0.0
153	177	0.0	0.0	0.0	0.0	0.0	0.0	30	0.0	0.0	0.0	0.0	0.0	0.0
	175	0.0	0.0	0.0	0.0	0.0	0.0	111	0.0	0.0	0.0	0.0	0.0	0.0
154	178	0.0	0.0	0.0	0.0	0.0	0.0	179	0.0	0.0	0.0	0.0	0.0	0.0
	93	0.0	0.0	0.0	0.0	0.0	0.0	92	0.0	0.0	0.0	0.0	0.0	0.0
155	179	0.0	0.0	0.0	0.0	0.0	0.0	12	0.0	0.0	0.0	0.0	0.0	0.0
	92	0.0	0.0	0.0	0.0	0.0	0.0	17	0.0	0.0	0.0	0.0	0.0	0.0
156	154	0.0	0.0	0.0	0.0	0.0	0.0	180	0.0	0.0	0.0	0.0	0.0	0.0
	151	0.0	0.0	0.0	0.0	0.0	0.0	178	0.0	0.0	0.0	0.0	0.0	0.0
157	180	0.0	0.0	0.0	0.0	0.0	0.0	181	0.0	0.0	0.0	0.0	0.0	0.0
	178	0.0	0.0	0.0	0.0	0.0	0.0	179	0.0	0.0	0.0	0.0	0.0	0.0
158	181	0.0	0.0	0.0	0.0	0.0	0.0	15	0.0	0.0	0.0	0.0	0.0	0.0
	179	0.0	0.0	0.0	0.0	0.0	0.0	12	0.0	0.0	0.0	0.0	0.0	0.0
159	157	0.0	0.0	0.0	0.0	0.0	0.0	182	0.0	0.0	0.0	0.0	0.0	0.0
	154	0.0	0.0	0.0	0.0	0.0	0.0	180	0.0	0.0	0.0	0.0	0.0	0.0
160	182	0.0	0.0	0.0	0.0	0.0	0.0	183	0.0	0.0	0.0	0.0	0.0	0.0
	180	0.0	0.0	0.0	0.0	0.0	0.0	181	0.0	0.0	0.0	0.0	0.0	0.0
161	183	0.0	0.0	0.0	0.0	0.0	0.0	9	0.0	0.0	0.0	0.0	0.0	0.0
	181	0.0	0.0	0.0	0.0	0.0	0.0	15	0.0	0.0	0.0	0.0	0.0	0.0
162	160	0.0	0.0	0.0	0.0	0.0	0.0	184	0.0	0.0	0.0	0.0	0.0	0.0
	157	0.0	0.0	0.0	0.0	0.0	0.0	182	0.0	0.0	0.0	0.0	0.0	0.0
163	184	0.0	0.0	0.0	0.0	0.0	0.0	185	0.0	0.0	0.0	0.0	0.0	0.0
	182	0.0	0.0	0.0	0.0	0.0	0.0	183	0.0	0.0	0.0	0.0	0.0	0.0
164	185	0.0	0.0	0.0	0.0	0.0	0.0	120	0.0	0.0	0.0	0.0	0.0	0.0
	183	0.0	0.0	0.0	0.0	0.0	0.0	9	0.0	0.0	0.0	0.0	0.0	0.0
165	163	0.0	0.0	0.0	0.0	0.0	0.0	186	0.0	0.0	0.0	0.0	0.0	0.0
	160	0.0	0.0	0.0	0.0	0.0	0.0	184	0.0	0.0	0.0	0.0	0.0	0.0
166	186	0.0	0.0	0.0	0.0	0.0	0.0	187	0.0	0.0	0.0	0.0	0.0	0.0
	184	0.0	0.0	0.0	0.0	0.0	0.0	185	0.0	0.0	0.0	0.0	0.0	0.0
167	187	0.0	0.0	0.0	0.0	0.0	0.0	124	0.0	0.0	0.0	0.0	0.0	0.0
	185	0.0	0.0	0.0	0.0	0.0	0.0	120	0.0	0.0	0.0	0.0	0.0	0.0
168	33	0.0	0.0	0.0	0.0	0.0	0.0	188	0.0	0.0	0.0	0.0	0.0	0.0
	163	0.0	0.0	0.0	0.0	0.0	0.0	186	0.0	0.0	0.0	0.0	0.0	0.0
169	188	0.0	0.0	0.0	0.0	0.0	0.0	189	0.0	0.0	0.0	0.0	0.0	0.0
	186	0.0	0.0	0.0	0.0	0.0	0.0	187	0.0	0.0	0.0	0.0	0.0	0.0
170	189	0.0	0.0	0.0	0.0	0.0	0.0	26	0.0	0.0	0.0	0.0	0.0	0.0
	187	0.0	0.0	0.0	0.0	0.0	0.0	124	0.0	0.0	0.0	0.0	0.0	0.0
171	190	0.0	0.0	0.0	0.0	0.0	0.0	191	0.0	0.0	0.0	0.0	0.0	0.0
	73	0.0	0.0	0.0	0.0	0.0	0.0	72	0.0	0.0	0.0	0.0	0.0	0.0

Documento di proprietà **Snam Rete Gas**. La Società tutelerà i propri diritti in sede civile e penale a termini di legge.

FORZE: SISMA 90°°: MODO2: SHELL

Shell Nro	Nodo N.ro	Tx (kN)	Ty (kN)	Tz (kN)	Mx (kN*m)	My (kN*m)	Mz (kN*m)	Nodo N.ro	Tx (kN)	Ty (kN)	Tz (kN)	Mx (kN*m)	My (kN*m)	Mz (kN*m)
172	191	0.0	0.0	0.0	0.0	0.0	0.0	139	0.0	0.0	0.0	0.0	0.0	0.0
	72	0.0	0.0	0.0	0.0	0.0	0.0	3	0.0	0.0	0.0	0.0	0.0	0.0
173	127	0.0	0.0	0.0	0.0	0.0	0.0	192	0.0	0.0	0.0	0.0	0.0	0.0
	123	0.0	0.0	0.0	0.0	0.0	0.0	190	0.0	0.0	0.0	0.0	0.0	0.0
174	192	0.0	0.0	0.0	0.0	0.0	0.0	193	0.0	0.0	0.0	0.0	0.0	0.0
	190	0.0	0.0	0.0	0.0	0.0	0.0	191	0.0	0.0	0.0	0.0	0.0	0.0
175	193	0.0	0.0	0.0	0.0	0.0	0.0	143	0.0	0.0	0.0	0.0	0.0	0.0
	191	0.0	0.0	0.0	0.0	0.0	0.0	139	0.0	0.0	0.0	0.0	0.0	0.0
176	27	0.0	0.0	0.0	0.0	0.0	0.0	194	0.0	0.0	0.0	0.0	0.0	0.0
	127	0.0	0.0	0.0	0.0	0.0	0.0	192	0.0	0.0	0.0	0.0	0.0	0.0
177	194	0.0	0.0	0.0	0.0	0.0	0.0	195	0.0	0.0	0.0	0.0	0.0	0.0
	192	0.0	0.0	0.0	0.0	0.0	0.0	193	0.0	0.0	0.0	0.0	0.0	0.0
178	195	0.0	0.0	0.0	0.0	0.0	0.0	28	0.0	0.0	0.0	0.0	0.0	0.0
	193	0.0	0.0	0.0	0.0	0.0	0.0	143	0.0	0.0	0.0	0.0	0.0	0.0
179	52	0.0	0.0	0.0	0.0	0.0	0.0	119	0.0	0.0	0.0	0.0	0.0	0.0
	53	0.0	0.0	0.0	0.0	0.0	0.0	118	0.0	0.0	0.0	0.0	0.0	0.0
180	7	0.0	0.0	0.0	0.0	0.0	0.0	34	0.0	0.0	0.0	0.0	0.0	0.0
	52	0.0	0.0	0.0	0.0	0.0	0.0	119	0.0	0.0	0.0	0.0	0.0	0.0

FORZE: SISMA 90°°: MODO6: SHELL

Shell Nro	Nodo N.ro	Tx (kN)	Ty (kN)	Tz (kN)	Mx (kN*m)	My (kN*m)	Mz (kN*m)	Nodo N.ro	Tx (kN)	Ty (kN)	Tz (kN)	Mx (kN*m)	My (kN*m)	Mz (kN*m)
1	38	0.0	0.0	0.0	0.0	0.0	0.0	39	0.0	0.0	0.0	0.0	0.0	0.0
	14	0.0	0.0	0.0	0.0	0.0	0.0	1	0.0	0.0	0.0	0.0	0.0	0.0
2	6	0.0	0.0	0.0	0.0	0.0	0.0	44	0.0	0.0	0.0	0.0	0.0	0.0
	2	0.0	0.0	0.0	0.0	0.0	0.0	42	0.0	0.0	0.0	0.0	0.0	0.0
3	39	0.0	0.0	0.0	0.0	0.0	0.0	44	0.0	0.0	0.0	0.0	0.0	0.0
	1	0.0	0.0	0.0	0.0	0.0	0.0	6	0.0	0.0	0.0	0.0	0.0	0.0
4	46	0.0	0.0	0.0	0.0	0.0	0.0	47	0.0	0.0	0.0	0.0	0.0	0.0
	10	0.0	0.0	0.0	0.0	0.0	0.0	16	0.0	0.0	0.0	0.0	0.0	0.0
5	50	0.0	0.0	0.0	0.0	0.0	0.0	46	0.0	0.0	0.0	0.0	0.0	0.0
	4	0.0	0.0	0.0	0.0	0.0	0.0	10	0.0	0.0	0.0	0.0	0.0	0.0
6	54	0.0	0.0	0.0	0.0	0.0	0.0	55	0.0	0.0	0.0	0.0	0.0	0.0
	7	0.0	0.0	0.0	0.0	0.0	0.0	52	0.0	0.0	0.0	0.0	0.0	0.0
7	64	0.0	0.0	0.0	0.0	0.0	0.0	65	0.0	0.0	0.0	0.0	0.0	0.0
	5	0.0	0.0	0.0	0.0	0.0	0.0	62	0.0	0.0	0.0	0.0	0.0	0.0
8	47	0.0	0.0	0.0	0.0	0.0	0.0	72	0.0	0.0	0.0	0.0	0.0	0.0
	16	0.0	0.0	0.0	0.0	0.0	0.0	3	0.0	0.0	0.0	0.0	0.0	0.0
9	76	0.0	0.0	0.0	0.0	0.0	0.0	77	0.0	0.0	0.0	0.0	0.0	0.0
	25	0.0	0.0	0.0	0.0	0.0	0.0	74	0.0	0.0	0.0	0.0	0.0	0.0
10	38	0.0	0.0	0.0	0.0	0.0	0.0	86	0.0	0.0	0.0	0.0	0.0	0.0
	14	0.0	0.0	0.0	0.0	0.0	0.0	71	0.0	0.0	0.0	0.0	0.0	0.0
11	94	0.0	0.0	0.0	0.0	0.0	0.0	95	0.0	0.0	0.0	0.0	0.0	0.0
	18	0.0	0.0	0.0	0.0	0.0	0.0	91	0.0	0.0	0.0	0.0	0.0	0.0
12	102	0.0	0.0	0.0	0.0	0.0	0.0	103	0.0	0.0	0.0	0.0	0.0	0.0
	21	0.0	0.0	0.0	0.0	0.0	0.0	84	0.0	0.0	0.0	0.0	0.0	0.0
13	112	0.0	0.0	0.0	0.0	0.0	0.0	76	0.0	0.0	0.0	0.0	0.0	0.0
	36	0.0	0.0	0.0	0.0	0.0	0.0	25	0.0	0.0	0.0	0.0	0.0	0.0
14	114	0.0	0.0	0.0	0.0	0.0	0.0	112	0.0	0.0	0.0	0.0	0.0	0.0
	35	0.0	0.0	0.0	0.0	0.0	0.0	36	0.0	0.0	0.0	0.0	0.0	0.0
15	24	0.0	0.0	0.0	0.0	0.0	0.0	116	0.0	0.0	0.0	0.0	0.0	0.0
	21	0.0	0.0	0.0	0.0	0.0	0.0	102	0.0	0.0	0.0	0.0	0.0	0.0
16	118	0.0	0.0	0.0	0.0	0.0	0.0	116	0.0	0.0	0.0	0.0	0.0	0.0
	20	0.0	0.0	0.0	0.0	0.0	0.0	24	0.0	0.0	0.0	0.0	0.0	0.0
17	120	0.0	0.0	0.0	0.0	0.0	0.0	121	0.0	0.0	0.0	0.0	0.0	0.0
	9	0.0	0.0	0.0	0.0	0.0	0.0	43	0.0	0.0	0.0	0.0	0.0	0.0
18	10	0.0	0.0	0.0	0.0	0.0	0.0	130	0.0	0.0	0.0	0.0	0.0	0.0
	4	0.0	0.0	0.0	0.0	0.0	0.0	68	0.0	0.0	0.0	0.0	0.0	0.0
19	100	0.0	0.0	0.0	0.0	0.0	0.0	114	0.0	0.0	0.0	0.0	0.0	0.0
	19	0.0	0.0	0.0	0.0	0.0	0.0	35	0.0	0.0	0.0	0.0	0.0	0.0
20	35	0.0	0.0	0.0	0.0	0.0	0.0	149	0.0	0.0	0.0	0.0	0.0	0.0
	19	0.0	0.0	0.0	0.0	0.0	0.0	97	0.0	0.0	0.0	0.0	0.0	0.0
21	132	0.0	0.0	0.0	0.0	0.0	0.0	166	0.0	0.0	0.0	0.0	0.0	0.0
	5	0.0	0.0	0.0	0.0	0.0	0.0	58	0.0	0.0	0.0	0.0	0.0	0.0
22	151	0.0	0.0	0.0	0.0	0.0	0.0	178	0.0	0.0	0.0	0.0	0.0	0.0
	18	0.0	0.0	0.0	0.0	0.0	0.0	93	0.0	0.0	0.0	0.0	0.0	0.0
23	123	0.0	0.0	0.0	0.0	0.0	0.0	190	0.0	0.0	0.0	0.0	0.0	0.0
	2	0.0	0.0	0.0	0.0	0.0	0.0	73	0.0	0.0	0.0	0.0	0.0	0.0
24	53	0.0	0.0	0.0	0.0	0.0	0.0	118	0.0	0.0	0.0	0.0	0.0	0.0
	11	0.0	0.0	0.0	0.0	0.0	0.0	20	0.0	0.0	0.0	0.0	0.0	0.0
25	40	0.0	0.0	0.0	0.0	0.0	0.0	41	0.0	0.0	0.0	0.0	0.0	0.0
	38	0.0	0.0	0.0	0.0	0.0	0.0	39	0.0	0.0	0.0	0.0	0.0	0.0
26	17	0.0	0.0	0.0	0.0	0.0	0.0	12	0.0	0.0	0.0	0.0	0.0	0.0
	40	0.0	0.0	0.0	0.0	0.0	0.0	41	0.0	0.0	0.0	0.0	0.0	0.0
27	44	0.0	0.0	0.0	0.0	0.0	0.0	45	0.0	0.0	0.0	0.0	0.0	0.0
	42	0.0	0.0	0.0	0.0	0.0	0.0	43	0.0	0.0	0.0	0.0	0.0	0.0
28	45	0.0	0.0	0.0	0.0	0.0	0.0	15	0.0	0.0	0.0	0.0	0.0	0.0
	43	0.0	0.0	0.0	0.0	0.0	0.0	9	0.0	0.0	0.0	0.0	0.0	0.0
29	41	0.0	0.0	0.0	0.0	0.0	0.0	45	0.0	0.0	0.0	0.0	0.0	0.0
	39	0.0	0.0	0.0	0.0	0.0	0.0	44	0.0	0.0	0.0	0.0	0.0	0.0

Documento di proprietà **Snam Rete Gas**. La Società tutelerà i propri diritti in sede civile e penale a termini di legge.

FORZE: SISMA 90°°: MODO6: SHELL

Shell Nro	Nodo N.ro	Tx (kN)	Ty (kN)	Tz (kN)	Mx (kN*m)	My (kN*m)	Mz (kN*m)	Nodo N.ro	Tx (kN)	Ty (kN)	Tz (kN)	Mx (kN*m)	My (kN*m)	Mz (kN*m)
30	12	0.0	0.0	0.0	0.0	0.0	0.0	15	0.0	0.0	0.0	0.0	0.0	0.0
	41	0.0	0.0	0.0	0.0	0.0	0.0	45	0.0	0.0	0.0	0.0	0.0	0.0
31	48	0.0	0.0	0.0	0.0	0.0	0.0	49	0.0	0.0	0.0	0.0	0.0	0.0
	46	0.0	0.0	0.0	0.0	0.0	0.0	47	0.0	0.0	0.0	0.0	0.0	0.0
32	1	0.0	0.0	0.0	0.0	0.0	0.0	8	0.0	0.0	0.0	0.0	0.0	0.0
	48	0.0	0.0	0.0	0.0	0.0	0.0	49	0.0	0.0	0.0	0.0	0.0	0.0
33	51	0.0	0.0	0.0	0.0	0.0	0.0	48	0.0	0.0	0.0	0.0	0.0	0.0
	50	0.0	0.0	0.0	0.0	0.0	0.0	46	0.0	0.0	0.0	0.0	0.0	0.0
34	14	0.0	0.0	0.0	0.0	0.0	0.0	1	0.0	0.0	0.0	0.0	0.0	0.0
	51	0.0	0.0	0.0	0.0	0.0	0.0	48	0.0	0.0	0.0	0.0	0.0	0.0
35	55	0.0	0.0	0.0	0.0	0.0	0.0	56	0.0	0.0	0.0	0.0	0.0	0.0
	52	0.0	0.0	0.0	0.0	0.0	0.0	53	0.0	0.0	0.0	0.0	0.0	0.0
36	56	0.0	0.0	0.0	0.0	0.0	0.0	57	0.0	0.0	0.0	0.0	0.0	0.0
	53	0.0	0.0	0.0	0.0	0.0	0.0	11	0.0	0.0	0.0	0.0	0.0	0.0
37	58	0.0	0.0	0.0	0.0	0.0	0.0	59	0.0	0.0	0.0	0.0	0.0	0.0
	54	0.0	0.0	0.0	0.0	0.0	0.0	55	0.0	0.0	0.0	0.0	0.0	0.0
38	59	0.0	0.0	0.0	0.0	0.0	0.0	60	0.0	0.0	0.0	0.0	0.0	0.0
	55	0.0	0.0	0.0	0.0	0.0	0.0	56	0.0	0.0	0.0	0.0	0.0	0.0
39	60	0.0	0.0	0.0	0.0	0.0	0.0	61	0.0	0.0	0.0	0.0	0.0	0.0
	56	0.0	0.0	0.0	0.0	0.0	0.0	57	0.0	0.0	0.0	0.0	0.0	0.0
40	5	0.0	0.0	0.0	0.0	0.0	0.0	62	0.0	0.0	0.0	0.0	0.0	0.0
	58	0.0	0.0	0.0	0.0	0.0	0.0	59	0.0	0.0	0.0	0.0	0.0	0.0
41	62	0.0	0.0	0.0	0.0	0.0	0.0	63	0.0	0.0	0.0	0.0	0.0	0.0
	59	0.0	0.0	0.0	0.0	0.0	0.0	60	0.0	0.0	0.0	0.0	0.0	0.0
42	63	0.0	0.0	0.0	0.0	0.0	0.0	13	0.0	0.0	0.0	0.0	0.0	0.0
	60	0.0	0.0	0.0	0.0	0.0	0.0	61	0.0	0.0	0.0	0.0	0.0	0.0
43	65	0.0	0.0	0.0	0.0	0.0	0.0	66	0.0	0.0	0.0	0.0	0.0	0.0
	62	0.0	0.0	0.0	0.0	0.0	0.0	63	0.0	0.0	0.0	0.0	0.0	0.0
44	66	0.0	0.0	0.0	0.0	0.0	0.0	67	0.0	0.0	0.0	0.0	0.0	0.0
	63	0.0	0.0	0.0	0.0	0.0	0.0	13	0.0	0.0	0.0	0.0	0.0	0.0
45	68	0.0	0.0	0.0	0.0	0.0	0.0	69	0.0	0.0	0.0	0.0	0.0	0.0
	64	0.0	0.0	0.0	0.0	0.0	0.0	65	0.0	0.0	0.0	0.0	0.0	0.0
46	69	0.0	0.0	0.0	0.0	0.0	0.0	70	0.0	0.0	0.0	0.0	0.0	0.0
	65	0.0	0.0	0.0	0.0	0.0	0.0	66	0.0	0.0	0.0	0.0	0.0	0.0
47	70	0.0	0.0	0.0	0.0	0.0	0.0	71	0.0	0.0	0.0	0.0	0.0	0.0
	66	0.0	0.0	0.0	0.0	0.0	0.0	67	0.0	0.0	0.0	0.0	0.0	0.0
48	4	0.0	0.0	0.0	0.0	0.0	0.0	50	0.0	0.0	0.0	0.0	0.0	0.0
	68	0.0	0.0	0.0	0.0	0.0	0.0	69	0.0	0.0	0.0	0.0	0.0	0.0
49	50	0.0	0.0	0.0	0.0	0.0	0.0	51	0.0	0.0	0.0	0.0	0.0	0.0
	69	0.0	0.0	0.0	0.0	0.0	0.0	70	0.0	0.0	0.0	0.0	0.0	0.0
50	51	0.0	0.0	0.0	0.0	0.0	0.0	14	0.0	0.0	0.0	0.0	0.0	0.0
	70	0.0	0.0	0.0	0.0	0.0	0.0	71	0.0	0.0	0.0	0.0	0.0	0.0
51	49	0.0	0.0	0.0	0.0	0.0	0.0	73	0.0	0.0	0.0	0.0	0.0	0.0
	47	0.0	0.0	0.0	0.0	0.0	0.0	72	0.0	0.0	0.0	0.0	0.0	0.0
52	8	0.0	0.0	0.0	0.0	0.0	0.0	2	0.0	0.0	0.0	0.0	0.0	0.0
	49	0.0	0.0	0.0	0.0	0.0	0.0	73	0.0	0.0	0.0	0.0	0.0	0.0
53	77	0.0	0.0	0.0	0.0	0.0	0.0	78	0.0	0.0	0.0	0.0	0.0	0.0
	74	0.0	0.0	0.0	0.0	0.0	0.0	75	0.0	0.0	0.0	0.0	0.0	0.0
54	78	0.0	0.0	0.0	0.0	0.0	0.0	79	0.0	0.0	0.0	0.0	0.0	0.0
	75	0.0	0.0	0.0	0.0	0.0	0.0	32	0.0	0.0	0.0	0.0	0.0	0.0
55	80	0.0	0.0	0.0	0.0	0.0	0.0	81	0.0	0.0	0.0	0.0	0.0	0.0
	76	0.0	0.0	0.0	0.0	0.0	0.0	77	0.0	0.0	0.0	0.0	0.0	0.0
56	81	0.0	0.0	0.0	0.0	0.0	0.0	82	0.0	0.0	0.0	0.0	0.0	0.0
	77	0.0	0.0	0.0	0.0	0.0	0.0	78	0.0	0.0	0.0	0.0	0.0	0.0
57	82	0.0	0.0	0.0	0.0	0.0	0.0	83	0.0	0.0	0.0	0.0	0.0	0.0
	78	0.0	0.0	0.0	0.0	0.0	0.0	79	0.0	0.0	0.0	0.0	0.0	0.0
58	21	0.0	0.0	0.0	0.0	0.0	0.0	84	0.0	0.0	0.0	0.0	0.0	0.0
	80	0.0	0.0	0.0	0.0	0.0	0.0	81	0.0	0.0	0.0	0.0	0.0	0.0
59	84	0.0	0.0	0.0	0.0	0.0	0.0	85	0.0	0.0	0.0	0.0	0.0	0.0
	81	0.0	0.0	0.0	0.0	0.0	0.0	82	0.0	0.0	0.0	0.0	0.0	0.0
60	85	0.0	0.0	0.0	0.0	0.0	0.0	31	0.0	0.0	0.0	0.0	0.0	0.0
	82	0.0	0.0	0.0	0.0	0.0	0.0	83	0.0	0.0	0.0	0.0	0.0	0.0
61	86	0.0	0.0	0.0	0.0	0.0	0.0	87	0.0	0.0	0.0	0.0	0.0	0.0
	71	0.0	0.0	0.0	0.0	0.0	0.0	67	0.0	0.0	0.0	0.0	0.0	0.0
62	87	0.0	0.0	0.0	0.0	0.0	0.0	88	0.0	0.0	0.0	0.0	0.0	0.0
	67	0.0	0.0	0.0	0.0	0.0	0.0	13	0.0	0.0	0.0	0.0	0.0	0.0
63	40	0.0	0.0	0.0	0.0	0.0	0.0	89	0.0	0.0	0.0	0.0	0.0	0.0
	38	0.0	0.0	0.0	0.0	0.0	0.0	86	0.0	0.0	0.0	0.0	0.0	0.0
64	89	0.0	0.0	0.0	0.0	0.0	0.0	90	0.0	0.0	0.0	0.0	0.0	0.0
	86	0.0	0.0	0.0	0.0	0.0	0.0	87	0.0	0.0	0.0	0.0	0.0	0.0
65	90	0.0	0.0	0.0	0.0	0.0	0.0	91	0.0	0.0	0.0	0.0	0.0	0.0
	87	0.0	0.0	0.0	0.0	0.0	0.0	88	0.0	0.0	0.0	0.0	0.0	0.0
66	17	0.0	0.0	0.0	0.0	0.0	0.0	92	0.0	0.0	0.0	0.0	0.0	0.0
	40	0.0	0.0	0.0	0.0	0.0	0.0	89	0.0	0.0	0.0	0.0	0.0	0.0
67	92	0.0	0.0	0.0	0.0	0.0	0.0	93	0.0	0.0	0.0	0.0	0.0	0.0
	89	0.0	0.0	0.0	0.0	0.0	0.0	90	0.0	0.0	0.0	0.0	0.0	0.0
68	93	0.0	0.0	0.0	0.0	0.0	0.0	18	0.0	0.0	0.0	0.0	0.0	0.0
	90	0.0	0.0	0.0	0.0	0.0	0.0	91	0.0	0.0	0.0	0.0	0.0	0.0
69	95	0.0	0.0	0.0	0.0	0.0	0.0	96	0.0	0.0	0.0	0.0	0.0	0.0
	91	0.0	0.0	0.0	0.0	0.0	0.0	88	0.0	0.0	0.0	0.0	0.0	0.0

Documento di proprietà **Snam Rete Gas**. La Società tutelerà i propri diritti in sede civile e penale a termini di legge.

FORZE: SISMA 90°°: MODO6: SHELL

Shell Nro	Nodo N.ro	Tx (kN)	Ty (kN)	Tz (kN)	Mx (kN*m)	My (kN*m)	Mz (kN*m)	Nodo N.ro	Tx (kN)	Ty (kN)	Tz (kN)	Mx (kN*m)	My (kN*m)	Mz (kN*m)
70	96	0.0	0.0	0.0	0.0	0.0	0.0	61	0.0	0.0	0.0	0.0	0.0	0.0
	88	0.0	0.0	0.0	0.0	0.0	0.0	13	0.0	0.0	0.0	0.0	0.0	0.0
71	97	0.0	0.0	0.0	0.0	0.0	0.0	98	0.0	0.0	0.0	0.0	0.0	0.0
	94	0.0	0.0	0.0	0.0	0.0	0.0	95	0.0	0.0	0.0	0.0	0.0	0.0
72	98	0.0	0.0	0.0	0.0	0.0	0.0	99	0.0	0.0	0.0	0.0	0.0	0.0
	95	0.0	0.0	0.0	0.0	0.0	0.0	96	0.0	0.0	0.0	0.0	0.0	0.0
73	99	0.0	0.0	0.0	0.0	0.0	0.0	57	0.0	0.0	0.0	0.0	0.0	0.0
	96	0.0	0.0	0.0	0.0	0.0	0.0	61	0.0	0.0	0.0	0.0	0.0	0.0
74	19	0.0	0.0	0.0	0.0	0.0	0.0	100	0.0	0.0	0.0	0.0	0.0	0.0
	97	0.0	0.0	0.0	0.0	0.0	0.0	98	0.0	0.0	0.0	0.0	0.0	0.0
75	100	0.0	0.0	0.0	0.0	0.0	0.0	101	0.0	0.0	0.0	0.0	0.0	0.0
	98	0.0	0.0	0.0	0.0	0.0	0.0	99	0.0	0.0	0.0	0.0	0.0	0.0
76	101	0.0	0.0	0.0	0.0	0.0	0.0	11	0.0	0.0	0.0	0.0	0.0	0.0
	99	0.0	0.0	0.0	0.0	0.0	0.0	57	0.0	0.0	0.0	0.0	0.0	0.0
77	103	0.0	0.0	0.0	0.0	0.0	0.0	104	0.0	0.0	0.0	0.0	0.0	0.0
	84	0.0	0.0	0.0	0.0	0.0	0.0	85	0.0	0.0	0.0	0.0	0.0	0.0
78	104	0.0	0.0	0.0	0.0	0.0	0.0	105	0.0	0.0	0.0	0.0	0.0	0.0
	85	0.0	0.0	0.0	0.0	0.0	0.0	31	0.0	0.0	0.0	0.0	0.0	0.0
79	106	0.0	0.0	0.0	0.0	0.0	0.0	107	0.0	0.0	0.0	0.0	0.0	0.0
	102	0.0	0.0	0.0	0.0	0.0	0.0	103	0.0	0.0	0.0	0.0	0.0	0.0
80	107	0.0	0.0	0.0	0.0	0.0	0.0	108	0.0	0.0	0.0	0.0	0.0	0.0
	103	0.0	0.0	0.0	0.0	0.0	0.0	104	0.0	0.0	0.0	0.0	0.0	0.0
81	108	0.0	0.0	0.0	0.0	0.0	0.0	109	0.0	0.0	0.0	0.0	0.0	0.0
	104	0.0	0.0	0.0	0.0	0.0	0.0	105	0.0	0.0	0.0	0.0	0.0	0.0
82	22	0.0	0.0	0.0	0.0	0.0	0.0	110	0.0	0.0	0.0	0.0	0.0	0.0
	106	0.0	0.0	0.0	0.0	0.0	0.0	107	0.0	0.0	0.0	0.0	0.0	0.0
83	110	0.0	0.0	0.0	0.0	0.0	0.0	111	0.0	0.0	0.0	0.0	0.0	0.0
	107	0.0	0.0	0.0	0.0	0.0	0.0	108	0.0	0.0	0.0	0.0	0.0	0.0
84	111	0.0	0.0	0.0	0.0	0.0	0.0	30	0.0	0.0	0.0	0.0	0.0	0.0
	108	0.0	0.0	0.0	0.0	0.0	0.0	109	0.0	0.0	0.0	0.0	0.0	0.0
85	113	0.0	0.0	0.0	0.0	0.0	0.0	80	0.0	0.0	0.0	0.0	0.0	0.0
	112	0.0	0.0	0.0	0.0	0.0	0.0	76	0.0	0.0	0.0	0.0	0.0	0.0
86	23	0.0	0.0	0.0	0.0	0.0	0.0	21	0.0	0.0	0.0	0.0	0.0	0.0
	113	0.0	0.0	0.0	0.0	0.0	0.0	80	0.0	0.0	0.0	0.0	0.0	0.0
87	115	0.0	0.0	0.0	0.0	0.0	0.0	113	0.0	0.0	0.0	0.0	0.0	0.0
	114	0.0	0.0	0.0	0.0	0.0	0.0	112	0.0	0.0	0.0	0.0	0.0	0.0
88	20	0.0	0.0	0.0	0.0	0.0	0.0	23	0.0	0.0	0.0	0.0	0.0	0.0
	115	0.0	0.0	0.0	0.0	0.0	0.0	113	0.0	0.0	0.0	0.0	0.0	0.0
89	116	0.0	0.0	0.0	0.0	0.0	0.0	117	0.0	0.0	0.0	0.0	0.0	0.0
	102	0.0	0.0	0.0	0.0	0.0	0.0	106	0.0	0.0	0.0	0.0	0.0	0.0
90	117	0.0	0.0	0.0	0.0	0.0	0.0	37	0.0	0.0	0.0	0.0	0.0	0.0
	106	0.0	0.0	0.0	0.0	0.0	0.0	22	0.0	0.0	0.0	0.0	0.0	0.0
91	119	0.0	0.0	0.0	0.0	0.0	0.0	117	0.0	0.0	0.0	0.0	0.0	0.0
	118	0.0	0.0	0.0	0.0	0.0	0.0	116	0.0	0.0	0.0	0.0	0.0	0.0
92	34	0.0	0.0	0.0	0.0	0.0	0.0	37	0.0	0.0	0.0	0.0	0.0	0.0
	119	0.0	0.0	0.0	0.0	0.0	0.0	117	0.0	0.0	0.0	0.0	0.0	0.0
93	121	0.0	0.0	0.0	0.0	0.0	0.0	122	0.0	0.0	0.0	0.0	0.0	0.0
	43	0.0	0.0	0.0	0.0	0.0	0.0	42	0.0	0.0	0.0	0.0	0.0	0.0
94	122	0.0	0.0	0.0	0.0	0.0	0.0	123	0.0	0.0	0.0	0.0	0.0	0.0
	42	0.0	0.0	0.0	0.0	0.0	0.0	2	0.0	0.0	0.0	0.0	0.0	0.0
95	124	0.0	0.0	0.0	0.0	0.0	0.0	125	0.0	0.0	0.0	0.0	0.0	0.0
	120	0.0	0.0	0.0	0.0	0.0	0.0	121	0.0	0.0	0.0	0.0	0.0	0.0
96	125	0.0	0.0	0.0	0.0	0.0	0.0	126	0.0	0.0	0.0	0.0	0.0	0.0
	121	0.0	0.0	0.0	0.0	0.0	0.0	122	0.0	0.0	0.0	0.0	0.0	0.0
97	126	0.0	0.0	0.0	0.0	0.0	0.0	127	0.0	0.0	0.0	0.0	0.0	0.0
	122	0.0	0.0	0.0	0.0	0.0	0.0	123	0.0	0.0	0.0	0.0	0.0	0.0
98	26	0.0	0.0	0.0	0.0	0.0	0.0	128	0.0	0.0	0.0	0.0	0.0	0.0
	124	0.0	0.0	0.0	0.0	0.0	0.0	125	0.0	0.0	0.0	0.0	0.0	0.0
99	128	0.0	0.0	0.0	0.0	0.0	0.0	129	0.0	0.0	0.0	0.0	0.0	0.0
	125	0.0	0.0	0.0	0.0	0.0	0.0	126	0.0	0.0	0.0	0.0	0.0	0.0
100	129	0.0	0.0	0.0	0.0	0.0	0.0	27	0.0	0.0	0.0	0.0	0.0	0.0
	126	0.0	0.0	0.0	0.0	0.0	0.0	127	0.0	0.0	0.0	0.0	0.0	0.0
101	130	0.0	0.0	0.0	0.0	0.0	0.0	131	0.0	0.0	0.0	0.0	0.0	0.0
	68	0.0	0.0	0.0	0.0	0.0	0.0	64	0.0	0.0	0.0	0.0	0.0	0.0
102	131	0.0	0.0	0.0	0.0	0.0	0.0	132	0.0	0.0	0.0	0.0	0.0	0.0
	64	0.0	0.0	0.0	0.0	0.0	0.0	5	0.0	0.0	0.0	0.0	0.0	0.0
103	16	0.0	0.0	0.0	0.0	0.0	0.0	133	0.0	0.0	0.0	0.0	0.0	0.0
	10	0.0	0.0	0.0	0.0	0.0	0.0	130	0.0	0.0	0.0	0.0	0.0	0.0
104	133	0.0	0.0	0.0	0.0	0.0	0.0	134	0.0	0.0	0.0	0.0	0.0	0.0
	130	0.0	0.0	0.0	0.0	0.0	0.0	131	0.0	0.0	0.0	0.0	0.0	0.0
105	134	0.0	0.0	0.0	0.0	0.0	0.0	135	0.0	0.0	0.0	0.0	0.0	0.0
	131	0.0	0.0	0.0	0.0	0.0	0.0	132	0.0	0.0	0.0	0.0	0.0	0.0
106	3	0.0	0.0	0.0	0.0	0.0	0.0	136	0.0	0.0	0.0	0.0	0.0	0.0
	16	0.0	0.0	0.0	0.0	0.0	0.0	133	0.0	0.0	0.0	0.0	0.0	0.0
107	136	0.0	0.0	0.0	0.0	0.0	0.0	137	0.0	0.0	0.0	0.0	0.0	0.0
	133	0.0	0.0	0.0	0.0	0.0	0.0	134	0.0	0.0	0.0	0.0	0.0	0.0
108	137	0.0	0.0	0.0	0.0	0.0	0.0	138	0.0	0.0	0.0	0.0	0.0	0.0
	134	0.0	0.0	0.0	0.0	0.0	0.0	135	0.0	0.0	0.0	0.0	0.0	0.0
109	139	0.0	0.0	0.0	0.0	0.0	0.0	140	0.0	0.0	0.0	0.0	0.0	0.0
	3	0.0	0.0	0.0	0.0	0.0	0.0	136	0.0	0.0	0.0	0.0	0.0	0.0

Documento di proprietà **Snam Rete Gas**. La Società tutelerà i propri diritti in sede civile e penale a termini di legge.

FORZE: SISMA 90°°: MODO6: SHELL

Shell Nro	Nodo N.ro	Tx (kN)	Ty (kN)	Tz (kN)	Mx (kN*m)	My (kN*m)	Mz (kN*m)	Nodo N.ro	Tx (kN)	Ty (kN)	Tz (kN)	Mx (kN*m)	My (kN*m)	Mz (kN*m)
110	140	0.0	0.0	0.0	0.0	0.0	0.0	141	0.0	0.0	0.0	0.0	0.0	0.0
	136	0.0	0.0	0.0	0.0	0.0	0.0	137	0.0	0.0	0.0	0.0	0.0	0.0
111	141	0.0	0.0	0.0	0.0	0.0	0.0	142	0.0	0.0	0.0	0.0	0.0	0.0
	137	0.0	0.0	0.0	0.0	0.0	0.0	138	0.0	0.0	0.0	0.0	0.0	0.0
112	143	0.0	0.0	0.0	0.0	0.0	0.0	144	0.0	0.0	0.0	0.0	0.0	0.0
	139	0.0	0.0	0.0	0.0	0.0	0.0	140	0.0	0.0	0.0	0.0	0.0	0.0
113	144	0.0	0.0	0.0	0.0	0.0	0.0	145	0.0	0.0	0.0	0.0	0.0	0.0
	140	0.0	0.0	0.0	0.0	0.0	0.0	141	0.0	0.0	0.0	0.0	0.0	0.0
114	145	0.0	0.0	0.0	0.0	0.0	0.0	146	0.0	0.0	0.0	0.0	0.0	0.0
	141	0.0	0.0	0.0	0.0	0.0	0.0	142	0.0	0.0	0.0	0.0	0.0	0.0
115	28	0.0	0.0	0.0	0.0	0.0	0.0	147	0.0	0.0	0.0	0.0	0.0	0.0
	143	0.0	0.0	0.0	0.0	0.0	0.0	144	0.0	0.0	0.0	0.0	0.0	0.0
116	147	0.0	0.0	0.0	0.0	0.0	0.0	148	0.0	0.0	0.0	0.0	0.0	0.0
	144	0.0	0.0	0.0	0.0	0.0	0.0	145	0.0	0.0	0.0	0.0	0.0	0.0
117	148	0.0	0.0	0.0	0.0	0.0	0.0	29	0.0	0.0	0.0	0.0	0.0	0.0
	145	0.0	0.0	0.0	0.0	0.0	0.0	146	0.0	0.0	0.0	0.0	0.0	0.0
118	101	0.0	0.0	0.0	0.0	0.0	0.0	115	0.0	0.0	0.0	0.0	0.0	0.0
	100	0.0	0.0	0.0	0.0	0.0	0.0	114	0.0	0.0	0.0	0.0	0.0	0.0
119	11	0.0	0.0	0.0	0.0	0.0	0.0	20	0.0	0.0	0.0	0.0	0.0	0.0
	101	0.0	0.0	0.0	0.0	0.0	0.0	115	0.0	0.0	0.0	0.0	0.0	0.0
120	149	0.0	0.0	0.0	0.0	0.0	0.0	150	0.0	0.0	0.0	0.0	0.0	0.0
	97	0.0	0.0	0.0	0.0	0.0	0.0	94	0.0	0.0	0.0	0.0	0.0	0.0
121	150	0.0	0.0	0.0	0.0	0.0	0.0	151	0.0	0.0	0.0	0.0	0.0	0.0
	94	0.0	0.0	0.0	0.0	0.0	0.0	18	0.0	0.0	0.0	0.0	0.0	0.0
122	36	0.0	0.0	0.0	0.0	0.0	0.0	152	0.0	0.0	0.0	0.0	0.0	0.0
	35	0.0	0.0	0.0	0.0	0.0	0.0	149	0.0	0.0	0.0	0.0	0.0	0.0
123	152	0.0	0.0	0.0	0.0	0.0	0.0	153	0.0	0.0	0.0	0.0	0.0	0.0
	149	0.0	0.0	0.0	0.0	0.0	0.0	150	0.0	0.0	0.0	0.0	0.0	0.0
124	153	0.0	0.0	0.0	0.0	0.0	0.0	154	0.0	0.0	0.0	0.0	0.0	0.0
	150	0.0	0.0	0.0	0.0	0.0	0.0	151	0.0	0.0	0.0	0.0	0.0	0.0
125	25	0.0	0.0	0.0	0.0	0.0	0.0	155	0.0	0.0	0.0	0.0	0.0	0.0
	36	0.0	0.0	0.0	0.0	0.0	0.0	152	0.0	0.0	0.0	0.0	0.0	0.0
126	155	0.0	0.0	0.0	0.0	0.0	0.0	156	0.0	0.0	0.0	0.0	0.0	0.0
	152	0.0	0.0	0.0	0.0	0.0	0.0	153	0.0	0.0	0.0	0.0	0.0	0.0
127	156	0.0	0.0	0.0	0.0	0.0	0.0	157	0.0	0.0	0.0	0.0	0.0	0.0
	153	0.0	0.0	0.0	0.0	0.0	0.0	154	0.0	0.0	0.0	0.0	0.0	0.0
128	74	0.0	0.0	0.0	0.0	0.0	0.0	158	0.0	0.0	0.0	0.0	0.0	0.0
	25	0.0	0.0	0.0	0.0	0.0	0.0	155	0.0	0.0	0.0	0.0	0.0	0.0
129	158	0.0	0.0	0.0	0.0	0.0	0.0	159	0.0	0.0	0.0	0.0	0.0	0.0
	155	0.0	0.0	0.0	0.0	0.0	0.0	156	0.0	0.0	0.0	0.0	0.0	0.0
130	159	0.0	0.0	0.0	0.0	0.0	0.0	160	0.0	0.0	0.0	0.0	0.0	0.0
	156	0.0	0.0	0.0	0.0	0.0	0.0	157	0.0	0.0	0.0	0.0	0.0	0.0
131	75	0.0	0.0	0.0	0.0	0.0	0.0	161	0.0	0.0	0.0	0.0	0.0	0.0
	74	0.0	0.0	0.0	0.0	0.0	0.0	158	0.0	0.0	0.0	0.0	0.0	0.0
132	161	0.0	0.0	0.0	0.0	0.0	0.0	162	0.0	0.0	0.0	0.0	0.0	0.0
	158	0.0	0.0	0.0	0.0	0.0	0.0	159	0.0	0.0	0.0	0.0	0.0	0.0
133	162	0.0	0.0	0.0	0.0	0.0	0.0	163	0.0	0.0	0.0	0.0	0.0	0.0
	159	0.0	0.0	0.0	0.0	0.0	0.0	160	0.0	0.0	0.0	0.0	0.0	0.0
134	32	0.0	0.0	0.0	0.0	0.0	0.0	164	0.0	0.0	0.0	0.0	0.0	0.0
	75	0.0	0.0	0.0	0.0	0.0	0.0	161	0.0	0.0	0.0	0.0	0.0	0.0
135	164	0.0	0.0	0.0	0.0	0.0	0.0	165	0.0	0.0	0.0	0.0	0.0	0.0
	161	0.0	0.0	0.0	0.0	0.0	0.0	162	0.0	0.0	0.0	0.0	0.0	0.0
136	165	0.0	0.0	0.0	0.0	0.0	0.0	33	0.0	0.0	0.0	0.0	0.0	0.0
	162	0.0	0.0	0.0	0.0	0.0	0.0	163	0.0	0.0	0.0	0.0	0.0	0.0
137	166	0.0	0.0	0.0	0.0	0.0	0.0	167	0.0	0.0	0.0	0.0	0.0	0.0
	58	0.0	0.0	0.0	0.0	0.0	0.0	54	0.0	0.0	0.0	0.0	0.0	0.0
138	167	0.0	0.0	0.0	0.0	0.0	0.0	34	0.0	0.0	0.0	0.0	0.0	0.0
	54	0.0	0.0	0.0	0.0	0.0	0.0	7	0.0	0.0	0.0	0.0	0.0	0.0
139	135	0.0	0.0	0.0	0.0	0.0	0.0	168	0.0	0.0	0.0	0.0	0.0	0.0
	132	0.0	0.0	0.0	0.0	0.0	0.0	166	0.0	0.0	0.0	0.0	0.0	0.0
140	168	0.0	0.0	0.0	0.0	0.0	0.0	169	0.0	0.0	0.0	0.0	0.0	0.0
	166	0.0	0.0	0.0	0.0	0.0	0.0	167	0.0	0.0	0.0	0.0	0.0	0.0
141	169	0.0	0.0	0.0	0.0	0.0	0.0	37	0.0	0.0	0.0	0.0	0.0	0.0
	167	0.0	0.0	0.0	0.0	0.0	0.0	34	0.0	0.0	0.0	0.0	0.0	0.0
142	138	0.0	0.0	0.0	0.0	0.0	0.0	170	0.0	0.0	0.0	0.0	0.0	0.0
	135	0.0	0.0	0.0	0.0	0.0	0.0	168	0.0	0.0	0.0	0.0	0.0	0.0
143	170	0.0	0.0	0.0	0.0	0.0	0.0	171	0.0	0.0	0.0	0.0	0.0	0.0
	168	0.0	0.0	0.0	0.0	0.0	0.0	169	0.0	0.0	0.0	0.0	0.0	0.0
144	171	0.0	0.0	0.0	0.0	0.0	0.0	22	0.0	0.0	0.0	0.0	0.0	0.0
	169	0.0	0.0	0.0	0.0	0.0	0.0	37	0.0	0.0	0.0	0.0	0.0	0.0
145	142	0.0	0.0	0.0	0.0	0.0	0.0	172	0.0	0.0	0.0	0.0	0.0	0.0
	138	0.0	0.0	0.0	0.0	0.0	0.0	170	0.0	0.0	0.0	0.0	0.0	0.0
146	172	0.0	0.0	0.0	0.0	0.0	0.0	173	0.0	0.0	0.0	0.0	0.0	0.0
	170	0.0	0.0	0.0	0.0	0.0	0.0	171	0.0	0.0	0.0	0.0	0.0	0.0
147	173	0.0	0.0	0.0	0.0	0.0	0.0	110	0.0	0.0	0.0	0.0	0.0	0.0
	171	0.0	0.0	0.0	0.0	0.0	0.0	22	0.0	0.0	0.0	0.0	0.0	0.0
148	146	0.0	0.0	0.0	0.0	0.0	0.0	174	0.0	0.0	0.0	0.0	0.0	0.0
	142	0.0	0.0	0.0	0.0	0.0	0.0	172	0.0	0.0	0.0	0.0	0.0	0.0
149	174	0.0	0.0	0.0	0.0	0.0	0.0	175	0.0	0.0	0.0	0.0	0.0	0.0
	172	0.0	0.0	0.0	0.0	0.0	0.0	173	0.0	0.0	0.0	0.0	0.0	0.0

Documento di proprietà **Snam Rete Gas**. La Società tutelerà i propri diritti in sede civile e penale a termini di legge.

FORZE: SISMA 90°°: MODO6: SHELL

Shell Nro	Nodo N.ro	Tx (kN)	Ty (kN)	Tz (kN)	Mx (kN*m)	My (kN*m)	Mz (kN*m)	Nodo N.ro	Tx (kN)	Ty (kN)	Tz (kN)	Mx (kN*m)	My (kN*m)	Mz (kN*m)
150	175	0.0	0.0	0.0	0.0	0.0	0.0	111	0.0	0.0	0.0	0.0	0.0	0.0
	173	0.0	0.0	0.0	0.0	0.0	0.0	110	0.0	0.0	0.0	0.0	0.0	0.0
151	29	0.0	0.0	0.0	0.0	0.0	0.0	176	0.0	0.0	0.0	0.0	0.0	0.0
	146	0.0	0.0	0.0	0.0	0.0	0.0	174	0.0	0.0	0.0	0.0	0.0	0.0
152	176	0.0	0.0	0.0	0.0	0.0	0.0	177	0.0	0.0	0.0	0.0	0.0	0.0
	174	0.0	0.0	0.0	0.0	0.0	0.0	175	0.0	0.0	0.0	0.0	0.0	0.0
153	177	0.0	0.0	0.0	0.0	0.0	0.0	30	0.0	0.0	0.0	0.0	0.0	0.0
	175	0.0	0.0	0.0	0.0	0.0	0.0	111	0.0	0.0	0.0	0.0	0.0	0.0
154	178	0.0	0.0	0.0	0.0	0.0	0.0	179	0.0	0.0	0.0	0.0	0.0	0.0
	93	0.0	0.0	0.0	0.0	0.0	0.0	92	0.0	0.0	0.0	0.0	0.0	0.0
155	179	0.0	0.0	0.0	0.0	0.0	0.0	12	0.0	0.0	0.0	0.0	0.0	0.0
	92	0.0	0.0	0.0	0.0	0.0	0.0	17	0.0	0.0	0.0	0.0	0.0	0.0
156	154	0.0	0.0	0.0	0.0	0.0	0.0	180	0.0	0.0	0.0	0.0	0.0	0.0
	151	0.0	0.0	0.0	0.0	0.0	0.0	178	0.0	0.0	0.0	0.0	0.0	0.0
157	180	0.0	0.0	0.0	0.0	0.0	0.0	181	0.0	0.0	0.0	0.0	0.0	0.0
	178	0.0	0.0	0.0	0.0	0.0	0.0	179	0.0	0.0	0.0	0.0	0.0	0.0
158	181	0.0	0.0	0.0	0.0	0.0	0.0	15	0.0	0.0	0.0	0.0	0.0	0.0
	179	0.0	0.0	0.0	0.0	0.0	0.0	12	0.0	0.0	0.0	0.0	0.0	0.0
159	157	0.0	0.0	0.0	0.0	0.0	0.0	182	0.0	0.0	0.0	0.0	0.0	0.0
	154	0.0	0.0	0.0	0.0	0.0	0.0	180	0.0	0.0	0.0	0.0	0.0	0.0
160	182	0.0	0.0	0.0	0.0	0.0	0.0	183	0.0	0.0	0.0	0.0	0.0	0.0
	180	0.0	0.0	0.0	0.0	0.0	0.0	181	0.0	0.0	0.0	0.0	0.0	0.0
161	183	0.0	0.0	0.0	0.0	0.0	0.0	9	0.0	0.0	0.0	0.0	0.0	0.0
	181	0.0	0.0	0.0	0.0	0.0	0.0	15	0.0	0.0	0.0	0.0	0.0	0.0
162	160	0.0	0.0	0.0	0.0	0.0	0.0	184	0.0	0.0	0.0	0.0	0.0	0.0
	157	0.0	0.0	0.0	0.0	0.0	0.0	182	0.0	0.0	0.0	0.0	0.0	0.0
163	184	0.0	0.0	0.0	0.0	0.0	0.0	185	0.0	0.0	0.0	0.0	0.0	0.0
	182	0.0	0.0	0.0	0.0	0.0	0.0	183	0.0	0.0	0.0	0.0	0.0	0.0
164	185	0.0	0.0	0.0	0.0	0.0	0.0	120	0.0	0.0	0.0	0.0	0.0	0.0
	183	0.0	0.0	0.0	0.0	0.0	0.0	9	0.0	0.0	0.0	0.0	0.0	0.0
165	163	0.0	0.0	0.0	0.0	0.0	0.0	186	0.0	0.0	0.0	0.0	0.0	0.0
	160	0.0	0.0	0.0	0.0	0.0	0.0	184	0.0	0.0	0.0	0.0	0.0	0.0
166	186	0.0	0.0	0.0	0.0	0.0	0.0	187	0.0	0.0	0.0	0.0	0.0	0.0
	184	0.0	0.0	0.0	0.0	0.0	0.0	185	0.0	0.0	0.0	0.0	0.0	0.0
167	187	0.0	0.0	0.0	0.0	0.0	0.0	124	0.0	0.0	0.0	0.0	0.0	0.0
	185	0.0	0.0	0.0	0.0	0.0	0.0	120	0.0	0.0	0.0	0.0	0.0	0.0
168	33	0.0	0.0	0.0	0.0	0.0	0.0	188	0.0	0.0	0.0	0.0	0.0	0.0
	163	0.0	0.0	0.0	0.0	0.0	0.0	186	0.0	0.0	0.0	0.0	0.0	0.0
169	188	0.0	0.0	0.0	0.0	0.0	0.0	189	0.0	0.0	0.0	0.0	0.0	0.0
	186	0.0	0.0	0.0	0.0	0.0	0.0	187	0.0	0.0	0.0	0.0	0.0	0.0
170	189	0.0	0.0	0.0	0.0	0.0	0.0	26	0.0	0.0	0.0	0.0	0.0	0.0
	187	0.0	0.0	0.0	0.0	0.0	0.0	124	0.0	0.0	0.0	0.0	0.0	0.0
171	190	0.0	0.0	0.0	0.0	0.0	0.0	191	0.0	0.0	0.0	0.0	0.0	0.0
	73	0.0	0.0	0.0	0.0	0.0	0.0	72	0.0	0.0	0.0	0.0	0.0	0.0
172	191	0.0	0.0	0.0	0.0	0.0	0.0	139	0.0	0.0	0.0	0.0	0.0	0.0
	72	0.0	0.0	0.0	0.0	0.0	0.0	3	0.0	0.0	0.0	0.0	0.0	0.0
173	127	0.0	0.0	0.0	0.0	0.0	0.0	192	0.0	0.0	0.0	0.0	0.0	0.0
	123	0.0	0.0	0.0	0.0	0.0	0.0	190	0.0	0.0	0.0	0.0	0.0	0.0
174	192	0.0	0.0	0.0	0.0	0.0	0.0	193	0.0	0.0	0.0	0.0	0.0	0.0
	190	0.0	0.0	0.0	0.0	0.0	0.0	191	0.0	0.0	0.0	0.0	0.0	0.0
175	193	0.0	0.0	0.0	0.0	0.0	0.0	143	0.0	0.0	0.0	0.0	0.0	0.0
	191	0.0	0.0	0.0	0.0	0.0	0.0	139	0.0	0.0	0.0	0.0	0.0	0.0
176	27	0.0	0.0	0.0	0.0	0.0	0.0	194	0.0	0.0	0.0	0.0	0.0	0.0
	127	0.0	0.0	0.0	0.0	0.0	0.0	192	0.0	0.0	0.0	0.0	0.0	0.0
177	194	0.0	0.0	0.0	0.0	0.0	0.0	195	0.0	0.0	0.0	0.0	0.0	0.0
	192	0.0	0.0	0.0	0.0	0.0	0.0	193	0.0	0.0	0.0	0.0	0.0	0.0
178	195	0.0	0.0	0.0	0.0	0.0	0.0	28	0.0	0.0	0.0	0.0	0.0	0.0
	193	0.0	0.0	0.0	0.0	0.0	0.0	143	0.0	0.0	0.0	0.0	0.0	0.0
179	52	0.0	0.0	0.0	0.0	0.0	0.0	119	0.0	0.0	0.0	0.0	0.0	0.0
	53	0.0	0.0	0.0	0.0	0.0	0.0	118	0.0	0.0	0.0	0.0	0.0	0.0
180	7	0.0	0.0	0.0	0.0	0.0	0.0	34	0.0	0.0	0.0	0.0	0.0	0.0
	52	0.0	0.0	0.0	0.0	0.0	0.0	119	0.0	0.0	0.0	0.0	0.0	0.0

FORZE: SISMA 90°°: MODO7: SHELL

Shell Nro	Nodo N.ro	Tx (kN)	Ty (kN)	Tz (kN)	Mx (kN*m)	My (kN*m)	Mz (kN*m)	Nodo N.ro	Tx (kN)	Ty (kN)	Tz (kN)	Mx (kN*m)	My (kN*m)	Mz (kN*m)
1	38	0.0	0.0	0.0	0.0	0.0	0.0	39	0.0	0.0	0.0	0.0	0.0	0.0
	14	0.0	0.0	0.0	0.0	0.0	0.0	1	0.0	0.0	0.0	0.0	0.0	0.0
2	6	0.0	0.0	0.0	0.0	0.0	0.0	44	0.0	0.0	0.0	0.0	0.0	0.0
	2	0.0	0.0	0.0	0.0	0.0	0.0	42	0.0	0.0	0.0	0.0	0.0	0.0
3	39	0.0	0.0	0.0	0.0	0.0	0.0	44	0.0	0.0	0.0	0.0	0.0	0.0
	1	0.0	0.0	0.0	0.0	0.0	0.0	6	0.0	0.0	0.0	0.0	0.0	0.0
4	46	0.0	0.0	0.0	0.0	0.0	0.0	47	0.0	0.0	0.0	0.0	0.0	0.0
	10	0.0	0.0	0.0	0.0	0.0	0.0	16	0.0	0.0	0.0	0.0	0.0	0.0
5	50	0.0	0.0	0.0	0.0	0.0	0.0	46	0.0	0.0	0.0	0.0	0.0	0.0
	4	0.0	0.0	0.0	0.0	0.0	0.0	10	0.0	0.0	0.0	0.0	0.0	0.0
6	54	0.0	0.0	0.0	0.0	0.0	0.0	55	0.0	0.0	0.0	0.0	0.0	0.0
	7	0.0	0.0	0.0	0.0	0.0	0.0	52	0.0	0.0	0.0	0.0	0.0	0.0
7	64	0.0	0.0	0.0	0.0	0.0	0.0	65	0.0	0.0	0.0	0.0	0.0	0.0
	5	0.0	0.0	0.0	0.0	0.0	0.0	62	0.0	0.0	0.0	0.0	0.0	0.0

Documento di proprietà **Snam Rete Gas**. La Società tutelerà i propri diritti in sede civile e penale a termini di legge.

FORZE: SISMA 90°°: MODO7: SHELL

Shell Nro	Nodo N.ro	Tx (kN)	Ty (kN)	Tz (kN)	Mx (kN*m)	My (kN*m)	Mz (kN*m)	Nodo N.ro	Tx (kN)	Ty (kN)	Tz (kN)	Mx (kN*m)	My (kN*m)	Mz (kN*m)
8	47	0.0	0.0	0.0	0.0	0.0	0.0	72	0.0	0.0	0.0	0.0	0.0	0.0
	16	0.0	0.0	0.0	0.0	0.0	0.0	3	0.0	0.0	0.0	0.0	0.0	0.0
9	76	0.0	0.0	0.0	0.0	0.0	0.0	77	0.0	0.0	0.0	0.0	0.0	0.0
	25	0.0	0.0	0.0	0.0	0.0	0.0	74	0.0	0.0	0.0	0.0	0.0	0.0
10	38	0.0	0.0	0.0	0.0	0.0	0.0	86	0.0	0.0	0.0	0.0	0.0	0.0
	14	0.0	0.0	0.0	0.0	0.0	0.0	71	0.0	0.0	0.0	0.0	0.0	0.0
11	94	0.0	0.0	0.0	0.0	0.0	0.0	95	0.0	0.0	0.0	0.0	0.0	0.0
	18	0.0	0.0	0.0	0.0	0.0	0.0	91	0.0	0.0	0.0	0.0	0.0	0.0
12	102	0.0	0.0	0.0	0.0	0.0	0.0	103	0.0	0.0	0.0	0.0	0.0	0.0
	21	0.0	0.0	0.0	0.0	0.0	0.0	84	0.0	0.0	0.0	0.0	0.0	0.0
13	112	0.0	0.0	0.0	0.0	0.0	0.0	76	0.0	0.0	0.0	0.0	0.0	0.0
	36	0.0	0.0	0.0	0.0	0.0	0.0	25	0.0	0.0	0.0	0.0	0.0	0.0
14	114	0.0	0.0	0.0	0.0	0.0	0.0	112	0.0	0.0	0.0	0.0	0.0	0.0
	35	0.0	0.0	0.0	0.0	0.0	0.0	36	0.0	0.0	0.0	0.0	0.0	0.0
15	24	0.0	0.0	0.0	0.0	0.0	0.0	116	0.0	0.0	0.0	0.0	0.0	0.0
	21	0.0	0.0	0.0	0.0	0.0	0.0	102	0.0	0.0	0.0	0.0	0.0	0.0
16	118	0.0	0.0	0.0	0.0	0.0	0.0	116	0.0	0.0	0.0	0.0	0.0	0.0
	20	0.0	0.0	0.0	0.0	0.0	0.0	24	0.0	0.0	0.0	0.0	0.0	0.0
17	120	0.0	0.0	0.0	0.0	0.0	0.0	121	0.0	0.0	0.0	0.0	0.0	0.0
	9	0.0	0.0	0.0	0.0	0.0	0.0	43	0.0	0.0	0.0	0.0	0.0	0.0
18	10	0.0	0.0	0.0	0.0	0.0	0.0	130	0.0	0.0	0.0	0.0	0.0	0.0
	4	0.0	0.0	0.0	0.0	0.0	0.0	68	0.0	0.0	0.0	0.0	0.0	0.0
19	100	0.0	0.0	0.0	0.0	0.0	0.0	114	0.0	0.0	0.0	0.0	0.0	0.0
	19	0.0	0.0	0.0	0.0	0.0	0.0	35	0.0	0.0	0.0	0.0	0.0	0.0
20	35	0.0	0.0	0.0	0.0	0.0	0.0	149	0.0	0.0	0.0	0.0	0.0	0.0
	19	0.0	0.0	0.0	0.0	0.0	0.0	97	0.0	0.0	0.0	0.0	0.0	0.0
21	132	0.0	0.0	0.0	0.0	0.0	0.0	166	0.0	0.0	0.0	0.0	0.0	0.0
	5	0.0	0.0	0.0	0.0	0.0	0.0	58	0.0	0.0	0.0	0.0	0.0	0.0
22	151	0.0	0.0	0.0	0.0	0.0	0.0	178	0.0	0.0	0.0	0.0	0.0	0.0
	18	0.0	0.0	0.0	0.0	0.0	0.0	93	0.0	0.0	0.0	0.0	0.0	0.0
23	123	0.0	0.0	0.0	0.0	0.0	0.0	190	0.0	0.0	0.0	0.0	0.0	0.0
	2	0.0	0.0	0.0	0.0	0.0	0.0	73	0.0	0.0	0.0	0.0	0.0	0.0
24	53	0.0	0.0	0.0	0.0	0.0	0.0	118	0.0	0.0	0.0	0.0	0.0	0.0
	11	0.0	0.0	0.0	0.0	0.0	0.0	20	0.0	0.0	0.0	0.0	0.0	0.0
25	40	0.0	0.0	0.0	0.0	0.0	0.0	41	0.0	0.0	0.0	0.0	0.0	0.0
	38	0.0	0.0	0.0	0.0	0.0	0.0	39	0.0	0.0	0.0	0.0	0.0	0.0
26	17	0.0	0.0	0.0	0.0	0.0	0.0	12	0.0	0.0	0.0	0.0	0.0	0.0
	40	0.0	0.0	0.0	0.0	0.0	0.0	41	0.0	0.0	0.0	0.0	0.0	0.0
27	44	0.0	0.0	0.0	0.0	0.0	0.0	45	0.0	0.0	0.0	0.0	0.0	0.0
	42	0.0	0.0	0.0	0.0	0.0	0.0	43	0.0	0.0	0.0	0.0	0.0	0.0
28	45	0.0	0.0	0.0	0.0	0.0	0.0	15	0.0	0.0	0.0	0.0	0.0	0.0
	43	0.0	0.0	0.0	0.0	0.0	0.0	9	0.0	0.0	0.0	0.0	0.0	0.0
29	41	0.0	0.0	0.0	0.0	0.0	0.0	45	0.0	0.0	0.0	0.0	0.0	0.0
	39	0.0	0.0	0.0	0.0	0.0	0.0	44	0.0	0.0	0.0	0.0	0.0	0.0
30	12	0.0	0.0	0.0	0.0	0.0	0.0	15	0.0	0.0	0.0	0.0	0.0	0.0
	41	0.0	0.0	0.0	0.0	0.0	0.0	45	0.0	0.0	0.0	0.0	0.0	0.0
31	48	0.0	0.0	0.0	0.0	0.0	0.0	49	0.0	0.0	0.0	0.0	0.0	0.0
	46	0.0	0.0	0.0	0.0	0.0	0.0	47	0.0	0.0	0.0	0.0	0.0	0.0
32	1	0.0	0.0	0.0	0.0	0.0	0.0	8	0.0	0.0	0.0	0.0	0.0	0.0
	48	0.0	0.0	0.0	0.0	0.0	0.0	49	0.0	0.0	0.0	0.0	0.0	0.0
33	51	0.0	0.0	0.0	0.0	0.0	0.0	48	0.0	0.0	0.0	0.0	0.0	0.0
	50	0.0	0.0	0.0	0.0	0.0	0.0	46	0.0	0.0	0.0	0.0	0.0	0.0
34	14	0.0	0.0	0.0	0.0	0.0	0.0	1	0.0	0.0	0.0	0.0	0.0	0.0
	51	0.0	0.0	0.0	0.0	0.0	0.0	48	0.0	0.0	0.0	0.0	0.0	0.0
35	55	0.0	0.0	0.0	0.0	0.0	0.0	56	0.0	0.0	0.0	0.0	0.0	0.0
	52	0.0	0.0	0.0	0.0	0.0	0.0	53	0.0	0.0	0.0	0.0	0.0	0.0
36	56	0.0	0.0	0.0	0.0	0.0	0.0	57	0.0	0.0	0.0	0.0	0.0	0.0
	53	0.0	0.0	0.0	0.0	0.0	0.0	11	0.0	0.0	0.0	0.0	0.0	0.0
37	58	0.0	0.0	0.0	0.0	0.0	0.0	59	0.0	0.0	0.0	0.0	0.0	0.0
	54	0.0	0.0	0.0	0.0	0.0	0.0	55	0.0	0.0	0.0	0.0	0.0	0.0
38	59	0.0	0.0	0.0	0.0	0.0	0.0	60	0.0	0.0	0.0	0.0	0.0	0.0
	55	0.0	0.0	0.0	0.0	0.0	0.0	56	0.0	0.0	0.0	0.0	0.0	0.0
39	60	0.0	0.0	0.0	0.0	0.0	0.0	61	0.0	0.0	0.0	0.0	0.0	0.0
	56	0.0	0.0	0.0	0.0	0.0	0.0	57	0.0	0.0	0.0	0.0	0.0	0.0
40	5	0.0	0.0	0.0	0.0	0.0	0.0	62	0.0	0.0	0.0	0.0	0.0	0.0
	58	0.0	0.0	0.0	0.0	0.0	0.0	59	0.0	0.0	0.0	0.0	0.0	0.0
41	62	0.0	0.0	0.0	0.0	0.0	0.0	63	0.0	0.0	0.0	0.0	0.0	0.0
	59	0.0	0.0	0.0	0.0	0.0	0.0	60	0.0	0.0	0.0	0.0	0.0	0.0
42	63	0.0	0.0	0.0	0.0	0.0	0.0	13	0.0	0.0	0.0	0.0	0.0	0.0
	60	0.0	0.0	0.0	0.0	0.0	0.0	61	0.0	0.0	0.0	0.0	0.0	0.0
43	65	0.0	0.0	0.0	0.0	0.0	0.0	66	0.0	0.0	0.0	0.0	0.0	0.0
	62	0.0	0.0	0.0	0.0	0.0	0.0	63	0.0	0.0	0.0	0.0	0.0	0.0
44	66	0.0	0.0	0.0	0.0	0.0	0.0	67	0.0	0.0	0.0	0.0	0.0	0.0
	63	0.0	0.0	0.0	0.0	0.0	0.0	13	0.0	0.0	0.0	0.0	0.0	0.0
45	68	0.0	0.0	0.0	0.0	0.0	0.0	69	0.0	0.0	0.0	0.0	0.0	0.0
	64	0.0	0.0	0.0	0.0	0.0	0.0	65	0.0	0.0	0.0	0.0	0.0	0.0
46	69	0.0	0.0	0.0	0.0	0.0	0.0	70	0.0	0.0	0.0	0.0	0.0	0.0
	65	0.0	0.0	0.0	0.0	0.0	0.0	66	0.0	0.0	0.0	0.0	0.0	0.0
47	70	0.0	0.0	0.0	0.0	0.0	0.0	71	0.0	0.0	0.0	0.0	0.0	0.0
	66	0.0	0.0	0.0	0.0	0.0	0.0	67	0.0	0.0	0.0	0.0	0.0	0.0

Documento di proprietà **Snam Rete Gas**. La Società tutelerà i propri diritti in sede civile e penale a termini di legge.

FORZE: SISMA 90°°: MODO7: SHELL

Shell Nro	Nodo N.ro	Tx (kN)	Ty (kN)	Tz (kN)	Mx (kN*m)	My (kN*m)	Mz (kN*m)	Nodo N.ro	Tx (kN)	Ty (kN)	Tz (kN)	Mx (kN*m)	My (kN*m)	Mz (kN*m)
48	4	0.0	0.0	0.0	0.0	0.0	0.0	50	0.0	0.0	0.0	0.0	0.0	0.0
	68	0.0	0.0	0.0	0.0	0.0	0.0	69	0.0	0.0	0.0	0.0	0.0	0.0
49	50	0.0	0.0	0.0	0.0	0.0	0.0	51	0.0	0.0	0.0	0.0	0.0	0.0
	69	0.0	0.0	0.0	0.0	0.0	0.0	70	0.0	0.0	0.0	0.0	0.0	0.0
50	51	0.0	0.0	0.0	0.0	0.0	0.0	14	0.0	0.0	0.0	0.0	0.0	0.0
	70	0.0	0.0	0.0	0.0	0.0	0.0	71	0.0	0.0	0.0	0.0	0.0	0.0
51	49	0.0	0.0	0.0	0.0	0.0	0.0	73	0.0	0.0	0.0	0.0	0.0	0.0
	47	0.0	0.0	0.0	0.0	0.0	0.0	72	0.0	0.0	0.0	0.0	0.0	0.0
52	8	0.0	0.0	0.0	0.0	0.0	0.0	2	0.0	0.0	0.0	0.0	0.0	0.0
	49	0.0	0.0	0.0	0.0	0.0	0.0	73	0.0	0.0	0.0	0.0	0.0	0.0
53	77	0.0	0.0	0.0	0.0	0.0	0.0	78	0.0	0.0	0.0	0.0	0.0	0.0
	74	0.0	0.0	0.0	0.0	0.0	0.0	75	0.0	0.0	0.0	0.0	0.0	0.0
54	78	0.0	0.0	0.0	0.0	0.0	0.0	79	0.0	0.0	0.0	0.0	0.0	0.0
	75	0.0	0.0	0.0	0.0	0.0	0.0	32	0.0	0.0	0.0	0.0	0.0	0.0
55	80	0.0	0.0	0.0	0.0	0.0	0.0	81	0.0	0.0	0.0	0.0	0.0	0.0
	76	0.0	0.0	0.0	0.0	0.0	0.0	77	0.0	0.0	0.0	0.0	0.0	0.0
56	81	0.0	0.0	0.0	0.0	0.0	0.0	82	0.0	0.0	0.0	0.0	0.0	0.0
	77	0.0	0.0	0.0	0.0	0.0	0.0	78	0.0	0.0	0.0	0.0	0.0	0.0
57	82	0.0	0.0	0.0	0.0	0.0	0.0	83	0.0	0.0	0.0	0.0	0.0	0.0
	78	0.0	0.0	0.0	0.0	0.0	0.0	79	0.0	0.0	0.0	0.0	0.0	0.0
58	21	0.0	0.0	0.0	0.0	0.0	0.0	84	0.0	0.0	0.0	0.0	0.0	0.0
	80	0.0	0.0	0.0	0.0	0.0	0.0	81	0.0	0.0	0.0	0.0	0.0	0.0
59	84	0.0	0.0	0.0	0.0	0.0	0.0	85	0.0	0.0	0.0	0.0	0.0	0.0
	81	0.0	0.0	0.0	0.0	0.0	0.0	82	0.0	0.0	0.0	0.0	0.0	0.0
60	85	0.0	0.0	0.0	0.0	0.0	0.0	31	0.0	0.0	0.0	0.0	0.0	0.0
	82	0.0	0.0	0.0	0.0	0.0	0.0	83	0.0	0.0	0.0	0.0	0.0	0.0
61	86	0.0	0.0	0.0	0.0	0.0	0.0	87	0.0	0.0	0.0	0.0	0.0	0.0
	71	0.0	0.0	0.0	0.0	0.0	0.0	67	0.0	0.0	0.0	0.0	0.0	0.0
62	87	0.0	0.0	0.0	0.0	0.0	0.0	88	0.0	0.0	0.0	0.0	0.0	0.0
	67	0.0	0.0	0.0	0.0	0.0	0.0	13	0.0	0.0	0.0	0.0	0.0	0.0
63	40	0.0	0.0	0.0	0.0	0.0	0.0	89	0.0	0.0	0.0	0.0	0.0	0.0
	38	0.0	0.0	0.0	0.0	0.0	0.0	86	0.0	0.0	0.0	0.0	0.0	0.0
64	89	0.0	0.0	0.0	0.0	0.0	0.0	90	0.0	0.0	0.0	0.0	0.0	0.0
	86	0.0	0.0	0.0	0.0	0.0	0.0	87	0.0	0.0	0.0	0.0	0.0	0.0
65	90	0.0	0.0	0.0	0.0	0.0	0.0	91	0.0	0.0	0.0	0.0	0.0	0.0
	87	0.0	0.0	0.0	0.0	0.0	0.0	88	0.0	0.0	0.0	0.0	0.0	0.0
66	17	0.0	0.0	0.0	0.0	0.0	0.0	92	0.0	0.0	0.0	0.0	0.0	0.0
	40	0.0	0.0	0.0	0.0	0.0	0.0	89	0.0	0.0	0.0	0.0	0.0	0.0
67	92	0.0	0.0	0.0	0.0	0.0	0.0	93	0.0	0.0	0.0	0.0	0.0	0.0
	89	0.0	0.0	0.0	0.0	0.0	0.0	90	0.0	0.0	0.0	0.0	0.0	0.0
68	93	0.0	0.0	0.0	0.0	0.0	0.0	18	0.0	0.0	0.0	0.0	0.0	0.0
	90	0.0	0.0	0.0	0.0	0.0	0.0	91	0.0	0.0	0.0	0.0	0.0	0.0
69	95	0.0	0.0	0.0	0.0	0.0	0.0	96	0.0	0.0	0.0	0.0	0.0	0.0
	91	0.0	0.0	0.0	0.0	0.0	0.0	88	0.0	0.0	0.0	0.0	0.0	0.0
70	96	0.0	0.0	0.0	0.0	0.0	0.0	61	0.0	0.0	0.0	0.0	0.0	0.0
	88	0.0	0.0	0.0	0.0	0.0	0.0	13	0.0	0.0	0.0	0.0	0.0	0.0
71	97	0.0	0.0	0.0	0.0	0.0	0.0	98	0.0	0.0	0.0	0.0	0.0	0.0
	94	0.0	0.0	0.0	0.0	0.0	0.0	95	0.0	0.0	0.0	0.0	0.0	0.0
72	98	0.0	0.0	0.0	0.0	0.0	0.0	99	0.0	0.0	0.0	0.0	0.0	0.0
	95	0.0	0.0	0.0	0.0	0.0	0.0	96	0.0	0.0	0.0	0.0	0.0	0.0
73	99	0.0	0.0	0.0	0.0	0.0	0.0	57	0.0	0.0	0.0	0.0	0.0	0.0
	96	0.0	0.0	0.0	0.0	0.0	0.0	61	0.0	0.0	0.0	0.0	0.0	0.0
74	19	0.0	0.0	0.0	0.0	0.0	0.0	100	0.0	0.0	0.0	0.0	0.0	0.0
	97	0.0	0.0	0.0	0.0	0.0	0.0	98	0.0	0.0	0.0	0.0	0.0	0.0
75	100	0.0	0.0	0.0	0.0	0.0	0.0	101	0.0	0.0	0.0	0.0	0.0	0.0
	98	0.0	0.0	0.0	0.0	0.0	0.0	99	0.0	0.0	0.0	0.0	0.0	0.0
76	101	0.0	0.0	0.0	0.0	0.0	0.0	11	0.0	0.0	0.0	0.0	0.0	0.0
	99	0.0	0.0	0.0	0.0	0.0	0.0	57	0.0	0.0	0.0	0.0	0.0	0.0
77	103	0.0	0.0	0.0	0.0	0.0	0.0	104	0.0	0.0	0.0	0.0	0.0	0.0
	84	0.0	0.0	0.0	0.0	0.0	0.0	85	0.0	0.0	0.0	0.0	0.0	0.0
78	104	0.0	0.0	0.0	0.0	0.0	0.0	105	0.0	0.0	0.0	0.0	0.0	0.0
	85	0.0	0.0	0.0	0.0	0.0	0.0	31	0.0	0.0	0.0	0.0	0.0	0.0
79	106	0.0	0.0	0.0	0.0	0.0	0.0	107	0.0	0.0	0.0	0.0	0.0	0.0
	102	0.0	0.0	0.0	0.0	0.0	0.0	103	0.0	0.0	0.0	0.0	0.0	0.0
80	107	0.0	0.0	0.0	0.0	0.0	0.0	108	0.0	0.0	0.0	0.0	0.0	0.0
	103	0.0	0.0	0.0	0.0	0.0	0.0	104	0.0	0.0	0.0	0.0	0.0	0.0
81	108	0.0	0.0	0.0	0.0	0.0	0.0	109	0.0	0.0	0.0	0.0	0.0	0.0
	104	0.0	0.0	0.0	0.0	0.0	0.0	105	0.0	0.0	0.0	0.0	0.0	0.0
82	22	0.0	0.0	0.0	0.0	0.0	0.0	110	0.0	0.0	0.0	0.0	0.0	0.0
	106	0.0	0.0	0.0	0.0	0.0	0.0	107	0.0	0.0	0.0	0.0	0.0	0.0
83	110	0.0	0.0	0.0	0.0	0.0	0.0	111	0.0	0.0	0.0	0.0	0.0	0.0
	107	0.0	0.0	0.0	0.0	0.0	0.0	108	0.0	0.0	0.0	0.0	0.0	0.0
84	111	0.0	0.0	0.0	0.0	0.0	0.0	30	0.0	0.0	0.0	0.0	0.0	0.0
	108	0.0	0.0	0.0	0.0	0.0	0.0	109	0.0	0.0	0.0	0.0	0.0	0.0
85	113	0.0	0.0	0.0	0.0	0.0	0.0	80	0.0	0.0	0.0	0.0	0.0	0.0
	112	0.0	0.0	0.0	0.0	0.0	0.0	76	0.0	0.0	0.0	0.0	0.0	0.0
86	23	0.0	0.0	0.0	0.0	0.0	0.0	21	0.0	0.0	0.0	0.0	0.0	0.0
	113	0.0	0.0	0.0	0.0	0.0	0.0	80	0.0	0.0	0.0	0.0	0.0	0.0
87	115	0.0	0.0	0.0	0.0	0.0	0.0	113	0.0	0.0	0.0	0.0	0.0	0.0
	114	0.0	0.0	0.0	0.0	0.0	0.0	112	0.0	0.0	0.0	0.0	0.0	0.0

Documento di proprietà **Snam Rete Gas**. La Società tutelerà i propri diritti in sede civile e penale a termini di legge.

FORZE: SISMA 90°°: MODO7: SHELL

Shell Nro	Nodo N.ro	Tx (kN)	Ty (kN)	Tz (kN)	Mx (kN*m)	My (kN*m)	Mz (kN*m)	Nodo N.ro	Tx (kN)	Ty (kN)	Tz (kN)	Mx (kN*m)	My (kN*m)	Mz (kN*m)
88	20	0.0	0.0	0.0	0.0	0.0	0.0	23	0.0	0.0	0.0	0.0	0.0	0.0
	115	0.0	0.0	0.0	0.0	0.0	0.0	113	0.0	0.0	0.0	0.0	0.0	0.0
89	116	0.0	0.0	0.0	0.0	0.0	0.0	117	0.0	0.0	0.0	0.0	0.0	0.0
	102	0.0	0.0	0.0	0.0	0.0	0.0	106	0.0	0.0	0.0	0.0	0.0	0.0
90	117	0.0	0.0	0.0	0.0	0.0	0.0	37	0.0	0.0	0.0	0.0	0.0	0.0
	106	0.0	0.0	0.0	0.0	0.0	0.0	22	0.0	0.0	0.0	0.0	0.0	0.0
91	119	0.0	0.0	0.0	0.0	0.0	0.0	117	0.0	0.0	0.0	0.0	0.0	0.0
	118	0.0	0.0	0.0	0.0	0.0	0.0	116	0.0	0.0	0.0	0.0	0.0	0.0
92	34	0.0	0.0	0.0	0.0	0.0	0.0	37	0.0	0.0	0.0	0.0	0.0	0.0
	119	0.0	0.0	0.0	0.0	0.0	0.0	117	0.0	0.0	0.0	0.0	0.0	0.0
93	121	0.0	0.0	0.0	0.0	0.0	0.0	122	0.0	0.0	0.0	0.0	0.0	0.0
	43	0.0	0.0	0.0	0.0	0.0	0.0	42	0.0	0.0	0.0	0.0	0.0	0.0
94	122	0.0	0.0	0.0	0.0	0.0	0.0	123	0.0	0.0	0.0	0.0	0.0	0.0
	42	0.0	0.0	0.0	0.0	0.0	0.0	2	0.0	0.0	0.0	0.0	0.0	0.0
95	124	0.0	0.0	0.0	0.0	0.0	0.0	125	0.0	0.0	0.0	0.0	0.0	0.0
	120	0.0	0.0	0.0	0.0	0.0	0.0	121	0.0	0.0	0.0	0.0	0.0	0.0
96	125	0.0	0.0	0.0	0.0	0.0	0.0	126	0.0	0.0	0.0	0.0	0.0	0.0
	121	0.0	0.0	0.0	0.0	0.0	0.0	122	0.0	0.0	0.0	0.0	0.0	0.0
97	126	0.0	0.0	0.0	0.0	0.0	0.0	127	0.0	0.0	0.0	0.0	0.0	0.0
	122	0.0	0.0	0.0	0.0	0.0	0.0	123	0.0	0.0	0.0	0.0	0.0	0.0
98	26	0.0	0.0	0.0	0.0	0.0	0.0	128	0.0	0.0	0.0	0.0	0.0	0.0
	124	0.0	0.0	0.0	0.0	0.0	0.0	125	0.0	0.0	0.0	0.0	0.0	0.0
99	128	0.0	0.0	0.0	0.0	0.0	0.0	129	0.0	0.0	0.0	0.0	0.0	0.0
	125	0.0	0.0	0.0	0.0	0.0	0.0	126	0.0	0.0	0.0	0.0	0.0	0.0
100	129	0.0	0.0	0.0	0.0	0.0	0.0	27	0.0	0.0	0.0	0.0	0.0	0.0
	126	0.0	0.0	0.0	0.0	0.0	0.0	127	0.0	0.0	0.0	0.0	0.0	0.0
101	130	0.0	0.0	0.0	0.0	0.0	0.0	131	0.0	0.0	0.0	0.0	0.0	0.0
	68	0.0	0.0	0.0	0.0	0.0	0.0	64	0.0	0.0	0.0	0.0	0.0	0.0
102	131	0.0	0.0	0.0	0.0	0.0	0.0	132	0.0	0.0	0.0	0.0	0.0	0.0
	64	0.0	0.0	0.0	0.0	0.0	0.0	5	0.0	0.0	0.0	0.0	0.0	0.0
103	16	0.0	0.0	0.0	0.0	0.0	0.0	133	0.0	0.0	0.0	0.0	0.0	0.0
	10	0.0	0.0	0.0	0.0	0.0	0.0	130	0.0	0.0	0.0	0.0	0.0	0.0
104	133	0.0	0.0	0.0	0.0	0.0	0.0	134	0.0	0.0	0.0	0.0	0.0	0.0
	130	0.0	0.0	0.0	0.0	0.0	0.0	131	0.0	0.0	0.0	0.0	0.0	0.0
105	134	0.0	0.0	0.0	0.0	0.0	0.0	135	0.0	0.0	0.0	0.0	0.0	0.0
	131	0.0	0.0	0.0	0.0	0.0	0.0	132	0.0	0.0	0.0	0.0	0.0	0.0
106	3	0.0	0.0	0.0	0.0	0.0	0.0	136	0.0	0.0	0.0	0.0	0.0	0.0
	16	0.0	0.0	0.0	0.0	0.0	0.0	133	0.0	0.0	0.0	0.0	0.0	0.0
107	136	0.0	0.0	0.0	0.0	0.0	0.0	137	0.0	0.0	0.0	0.0	0.0	0.0
	133	0.0	0.0	0.0	0.0	0.0	0.0	134	0.0	0.0	0.0	0.0	0.0	0.0
108	137	0.0	0.0	0.0	0.0	0.0	0.0	138	0.0	0.0	0.0	0.0	0.0	0.0
	134	0.0	0.0	0.0	0.0	0.0	0.0	135	0.0	0.0	0.0	0.0	0.0	0.0
109	139	0.0	0.0	0.0	0.0	0.0	0.0	140	0.0	0.0	0.0	0.0	0.0	0.0
	3	0.0	0.0	0.0	0.0	0.0	0.0	136	0.0	0.0	0.0	0.0	0.0	0.0
110	140	0.0	0.0	0.0	0.0	0.0	0.0	141	0.0	0.0	0.0	0.0	0.0	0.0
	136	0.0	0.0	0.0	0.0	0.0	0.0	137	0.0	0.0	0.0	0.0	0.0	0.0
111	141	0.0	0.0	0.0	0.0	0.0	0.0	142	0.0	0.0	0.0	0.0	0.0	0.0
	137	0.0	0.0	0.0	0.0	0.0	0.0	138	0.0	0.0	0.0	0.0	0.0	0.0
112	143	0.0	0.0	0.0	0.0	0.0	0.0	144	0.0	0.0	0.0	0.0	0.0	0.0
	139	0.0	0.0	0.0	0.0	0.0	0.0	140	0.0	0.0	0.0	0.0	0.0	0.0
113	144	0.0	0.0	0.0	0.0	0.0	0.0	145	0.0	0.0	0.0	0.0	0.0	0.0
	140	0.0	0.0	0.0	0.0	0.0	0.0	141	0.0	0.0	0.0	0.0	0.0	0.0
114	145	0.0	0.0	0.0	0.0	0.0	0.0	146	0.0	0.0	0.0	0.0	0.0	0.0
	141	0.0	0.0	0.0	0.0	0.0	0.0	142	0.0	0.0	0.0	0.0	0.0	0.0
115	28	0.0	0.0	0.0	0.0	0.0	0.0	147	0.0	0.0	0.0	0.0	0.0	0.0
	143	0.0	0.0	0.0	0.0	0.0	0.0	144	0.0	0.0	0.0	0.0	0.0	0.0
116	147	0.0	0.0	0.0	0.0	0.0	0.0	148	0.0	0.0	0.0	0.0	0.0	0.0
	144	0.0	0.0	0.0	0.0	0.0	0.0	145	0.0	0.0	0.0	0.0	0.0	0.0
117	148	0.0	0.0	0.0	0.0	0.0	0.0	29	0.0	0.0	0.0	0.0	0.0	0.0
	145	0.0	0.0	0.0	0.0	0.0	0.0	146	0.0	0.0	0.0	0.0	0.0	0.0
118	101	0.0	0.0	0.0	0.0	0.0	0.0	115	0.0	0.0	0.0	0.0	0.0	0.0
	100	0.0	0.0	0.0	0.0	0.0	0.0	114	0.0	0.0	0.0	0.0	0.0	0.0
119	11	0.0	0.0	0.0	0.0	0.0	0.0	20	0.0	0.0	0.0	0.0	0.0	0.0
	101	0.0	0.0	0.0	0.0	0.0	0.0	115	0.0	0.0	0.0	0.0	0.0	0.0
120	149	0.0	0.0	0.0	0.0	0.0	0.0	150	0.0	0.0	0.0	0.0	0.0	0.0
	97	0.0	0.0	0.0	0.0	0.0	0.0	94	0.0	0.0	0.0	0.0	0.0	0.0
121	150	0.0	0.0	0.0	0.0	0.0	0.0	151	0.0	0.0	0.0	0.0	0.0	0.0
	94	0.0	0.0	0.0	0.0	0.0	0.0	18	0.0	0.0	0.0	0.0	0.0	0.0
122	36	0.0	0.0	0.0	0.0	0.0	0.0	152	0.0	0.0	0.0	0.0	0.0	0.0
	35	0.0	0.0	0.0	0.0	0.0	0.0	149	0.0	0.0	0.0	0.0	0.0	0.0
123	152	0.0	0.0	0.0	0.0	0.0	0.0	153	0.0	0.0	0.0	0.0	0.0	0.0
	149	0.0	0.0	0.0	0.0	0.0	0.0	150	0.0	0.0	0.0	0.0	0.0	0.0
124	153	0.0	0.0	0.0	0.0	0.0	0.0	154	0.0	0.0	0.0	0.0	0.0	0.0
	150	0.0	0.0	0.0	0.0	0.0	0.0	151	0.0	0.0	0.0	0.0	0.0	0.0
125	25	0.0	0.0	0.0	0.0	0.0	0.0	155	0.0	0.0	0.0	0.0	0.0	0.0
	36	0.0	0.0	0.0	0.0	0.0	0.0	152	0.0	0.0	0.0	0.0	0.0	0.0
126	155	0.0	0.0	0.0	0.0	0.0	0.0	156	0.0	0.0	0.0	0.0	0.0	0.0
	152	0.0	0.0	0.0	0.0	0.0	0.0	153	0.0	0.0	0.0	0.0	0.0	0.0
127	156	0.0	0.0	0.0	0.0	0.0	0.0	157	0.0	0.0	0.0	0.0	0.0	0.0
	153	0.0	0.0	0.0	0.0	0.0	0.0	154	0.0	0.0	0.0	0.0	0.0	0.0

Documento di proprietà **Snam Rete Gas**. La Società tutelerà i propri diritti in sede civile e penale a termini di legge.

FORZE: SISMA 90°°: MODO7: SHELL

Shell Nro	Nodo N.ro	Tx (kN)	Ty (kN)	Tz (kN)	Mx (kN*m)	My (kN*m)	Mz (kN*m)	Nodo N.ro	Tx (kN)	Ty (kN)	Tz (kN)	Mx (kN*m)	My (kN*m)	Mz (kN*m)
128	74	0.0	0.0	0.0	0.0	0.0	0.0	158	0.0	0.0	0.0	0.0	0.0	0.0
	25	0.0	0.0	0.0	0.0	0.0	0.0	155	0.0	0.0	0.0	0.0	0.0	0.0
129	158	0.0	0.0	0.0	0.0	0.0	0.0	159	0.0	0.0	0.0	0.0	0.0	0.0
	155	0.0	0.0	0.0	0.0	0.0	0.0	156	0.0	0.0	0.0	0.0	0.0	0.0
130	159	0.0	0.0	0.0	0.0	0.0	0.0	160	0.0	0.0	0.0	0.0	0.0	0.0
	156	0.0	0.0	0.0	0.0	0.0	0.0	157	0.0	0.0	0.0	0.0	0.0	0.0
131	75	0.0	0.0	0.0	0.0	0.0	0.0	161	0.0	0.0	0.0	0.0	0.0	0.0
	74	0.0	0.0	0.0	0.0	0.0	0.0	158	0.0	0.0	0.0	0.0	0.0	0.0
132	161	0.0	0.0	0.0	0.0	0.0	0.0	162	0.0	0.0	0.0	0.0	0.0	0.0
	158	0.0	0.0	0.0	0.0	0.0	0.0	159	0.0	0.0	0.0	0.0	0.0	0.0
133	162	0.0	0.0	0.0	0.0	0.0	0.0	163	0.0	0.0	0.0	0.0	0.0	0.0
	159	0.0	0.0	0.0	0.0	0.0	0.0	160	0.0	0.0	0.0	0.0	0.0	0.0
134	32	0.0	0.0	0.0	0.0	0.0	0.0	164	0.0	0.0	0.0	0.0	0.0	0.0
	75	0.0	0.0	0.0	0.0	0.0	0.0	161	0.0	0.0	0.0	0.0	0.0	0.0
135	164	0.0	0.0	0.0	0.0	0.0	0.0	165	0.0	0.0	0.0	0.0	0.0	0.0
	161	0.0	0.0	0.0	0.0	0.0	0.0	162	0.0	0.0	0.0	0.0	0.0	0.0
136	165	0.0	0.0	0.0	0.0	0.0	0.0	33	0.0	0.0	0.0	0.0	0.0	0.0
	162	0.0	0.0	0.0	0.0	0.0	0.0	163	0.0	0.0	0.0	0.0	0.0	0.0
137	166	0.0	0.0	0.0	0.0	0.0	0.0	167	0.0	0.0	0.0	0.0	0.0	0.0
	58	0.0	0.0	0.0	0.0	0.0	0.0	54	0.0	0.0	0.0	0.0	0.0	0.0
138	167	0.0	0.0	0.0	0.0	0.0	0.0	34	0.0	0.0	0.0	0.0	0.0	0.0
	54	0.0	0.0	0.0	0.0	0.0	0.0	7	0.0	0.0	0.0	0.0	0.0	0.0
139	135	0.0	0.0	0.0	0.0	0.0	0.0	168	0.0	0.0	0.0	0.0	0.0	0.0
	132	0.0	0.0	0.0	0.0	0.0	0.0	166	0.0	0.0	0.0	0.0	0.0	0.0
140	168	0.0	0.0	0.0	0.0	0.0	0.0	169	0.0	0.0	0.0	0.0	0.0	0.0
	166	0.0	0.0	0.0	0.0	0.0	0.0	167	0.0	0.0	0.0	0.0	0.0	0.0
141	169	0.0	0.0	0.0	0.0	0.0	0.0	37	0.0	0.0	0.0	0.0	0.0	0.0
	167	0.0	0.0	0.0	0.0	0.0	0.0	34	0.0	0.0	0.0	0.0	0.0	0.0
142	138	0.0	0.0	0.0	0.0	0.0	0.0	170	0.0	0.0	0.0	0.0	0.0	0.0
	135	0.0	0.0	0.0	0.0	0.0	0.0	168	0.0	0.0	0.0	0.0	0.0	0.0
143	170	0.0	0.0	0.0	0.0	0.0	0.0	171	0.0	0.0	0.0	0.0	0.0	0.0
	168	0.0	0.0	0.0	0.0	0.0	0.0	169	0.0	0.0	0.0	0.0	0.0	0.0
144	171	0.0	0.0	0.0	0.0	0.0	0.0	22	0.0	0.0	0.0	0.0	0.0	0.0
	169	0.0	0.0	0.0	0.0	0.0	0.0	37	0.0	0.0	0.0	0.0	0.0	0.0
145	142	0.0	0.0	0.0	0.0	0.0	0.0	172	0.0	0.0	0.0	0.0	0.0	0.0
	138	0.0	0.0	0.0	0.0	0.0	0.0	170	0.0	0.0	0.0	0.0	0.0	0.0
146	172	0.0	0.0	0.0	0.0	0.0	0.0	173	0.0	0.0	0.0	0.0	0.0	0.0
	170	0.0	0.0	0.0	0.0	0.0	0.0	171	0.0	0.0	0.0	0.0	0.0	0.0
147	173	0.0	0.0	0.0	0.0	0.0	0.0	110	0.0	0.0	0.0	0.0	0.0	0.0
	171	0.0	0.0	0.0	0.0	0.0	0.0	22	0.0	0.0	0.0	0.0	0.0	0.0
148	146	0.0	0.0	0.0	0.0	0.0	0.0	174	0.0	0.0	0.0	0.0	0.0	0.0
	142	0.0	0.0	0.0	0.0	0.0	0.0	172	0.0	0.0	0.0	0.0	0.0	0.0
149	174	0.0	0.0	0.0	0.0	0.0	0.0	175	0.0	0.0	0.0	0.0	0.0	0.0
	172	0.0	0.0	0.0	0.0	0.0	0.0	173	0.0	0.0	0.0	0.0	0.0	0.0
150	175	0.0	0.0	0.0	0.0	0.0	0.0	111	0.0	0.0	0.0	0.0	0.0	0.0
	173	0.0	0.0	0.0	0.0	0.0	0.0	110	0.0	0.0	0.0	0.0	0.0	0.0
151	29	0.0	0.0	0.0	0.0	0.0	0.0	176	0.0	0.0	0.0	0.0	0.0	0.0
	146	0.0	0.0	0.0	0.0	0.0	0.0	174	0.0	0.0	0.0	0.0	0.0	0.0
152	176	0.0	0.0	0.0	0.0	0.0	0.0	177	0.0	0.0	0.0	0.0	0.0	0.0
	174	0.0	0.0	0.0	0.0	0.0	0.0	175	0.0	0.0	0.0	0.0	0.0	0.0
153	177	0.0	0.0	0.0	0.0	0.0	0.0	30	0.0	0.0	0.0	0.0	0.0	0.0
	175	0.0	0.0	0.0	0.0	0.0	0.0	111	0.0	0.0	0.0	0.0	0.0	0.0
154	178	0.0	0.0	0.0	0.0	0.0	0.0	179	0.0	0.0	0.0	0.0	0.0	0.0
	93	0.0	0.0	0.0	0.0	0.0	0.0	92	0.0	0.0	0.0	0.0	0.0	0.0
155	179	0.0	0.0	0.0	0.0	0.0	0.0	12	0.0	0.0	0.0	0.0	0.0	0.0
	92	0.0	0.0	0.0	0.0	0.0	0.0	17	0.0	0.0	0.0	0.0	0.0	0.0
156	154	0.0	0.0	0.0	0.0	0.0	0.0	180	0.0	0.0	0.0	0.0	0.0	0.0
	151	0.0	0.0	0.0	0.0	0.0	0.0	178	0.0	0.0	0.0	0.0	0.0	0.0
157	180	0.0	0.0	0.0	0.0	0.0	0.0	181	0.0	0.0	0.0	0.0	0.0	0.0
	178	0.0	0.0	0.0	0.0	0.0	0.0	179	0.0	0.0	0.0	0.0	0.0	0.0
158	181	0.0	0.0	0.0	0.0	0.0	0.0	15	0.0	0.0	0.0	0.0	0.0	0.0
	179	0.0	0.0	0.0	0.0	0.0	0.0	12	0.0	0.0	0.0	0.0	0.0	0.0
159	157	0.0	0.0	0.0	0.0	0.0	0.0	182	0.0	0.0	0.0	0.0	0.0	0.0
	154	0.0	0.0	0.0	0.0	0.0	0.0	180	0.0	0.0	0.0	0.0	0.0	0.0
160	182	0.0	0.0	0.0	0.0	0.0	0.0	183	0.0	0.0	0.0	0.0	0.0	0.0
	180	0.0	0.0	0.0	0.0	0.0	0.0	181	0.0	0.0	0.0	0.0	0.0	0.0
161	183	0.0	0.0	0.0	0.0	0.0	0.0	9	0.0	0.0	0.0	0.0	0.0	0.0
	181	0.0	0.0	0.0	0.0	0.0	0.0	15	0.0	0.0	0.0	0.0	0.0	0.0
162	160	0.0	0.0	0.0	0.0	0.0	0.0	184	0.0	0.0	0.0	0.0	0.0	0.0
	157	0.0	0.0	0.0	0.0	0.0	0.0	182	0.0	0.0	0.0	0.0	0.0	0.0
163	184	0.0	0.0	0.0	0.0	0.0	0.0	185	0.0	0.0	0.0	0.0	0.0	0.0
	182	0.0	0.0	0.0	0.0	0.0	0.0	183	0.0	0.0	0.0	0.0	0.0	0.0
164	185	0.0	0.0	0.0	0.0	0.0	0.0	120	0.0	0.0	0.0	0.0	0.0	0.0
	183	0.0	0.0	0.0	0.0	0.0	0.0	9	0.0	0.0	0.0	0.0	0.0	0.0
165	163	0.0	0.0	0.0	0.0	0.0	0.0	186	0.0	0.0	0.0	0.0	0.0	0.0
	160	0.0	0.0	0.0	0.0	0.0	0.0	184	0.0	0.0	0.0	0.0	0.0	0.0
166	186	0.0	0.0	0.0	0.0	0.0	0.0	187	0.0	0.0	0.0	0.0	0.0	0.0
	184	0.0	0.0	0.0	0.0	0.0	0.0	185	0.0	0.0	0.0	0.0	0.0	0.0
167	187	0.0	0.0	0.0	0.0	0.0	0.0	124	0.0	0.0	0.0	0.0	0.0	0.0
	185	0.0	0.0	0.0	0.0	0.0	0.0	120	0.0	0.0	0.0	0.0	0.0	0.0

Documento di proprietà **Snam Rete Gas**. La Società tutelerà i propri diritti in sede civile e penale a termini di legge.

FORZE: SISMA 90°°: MODO7: SHELL

Shell Nro	Nodo N.ro	Tx (kN)	Ty (kN)	Tz (kN)	Mx (kN*m)	My (kN*m)	Mz (kN*m)	Nodo N.ro	Tx (kN)	Ty (kN)	Tz (kN)	Mx (kN*m)	My (kN*m)	Mz (kN*m)
168	33	0.0	0.0	0.0	0.0	0.0	0.0	188	0.0	0.0	0.0	0.0	0.0	0.0
	163	0.0	0.0	0.0	0.0	0.0	0.0	186	0.0	0.0	0.0	0.0	0.0	0.0
169	188	0.0	0.0	0.0	0.0	0.0	0.0	189	0.0	0.0	0.0	0.0	0.0	0.0
	186	0.0	0.0	0.0	0.0	0.0	0.0	187	0.0	0.0	0.0	0.0	0.0	0.0
170	189	0.0	0.0	0.0	0.0	0.0	0.0	26	0.0	0.0	0.0	0.0	0.0	0.0
	187	0.0	0.0	0.0	0.0	0.0	0.0	124	0.0	0.0	0.0	0.0	0.0	0.0
171	190	0.0	0.0	0.0	0.0	0.0	0.0	191	0.0	0.0	0.0	0.0	0.0	0.0
	73	0.0	0.0	0.0	0.0	0.0	0.0	72	0.0	0.0	0.0	0.0	0.0	0.0
172	191	0.0	0.0	0.0	0.0	0.0	0.0	139	0.0	0.0	0.0	0.0	0.0	0.0
	72	0.0	0.0	0.0	0.0	0.0	0.0	3	0.0	0.0	0.0	0.0	0.0	0.0
173	127	0.0	0.0	0.0	0.0	0.0	0.0	192	0.0	0.0	0.0	0.0	0.0	0.0
	123	0.0	0.0	0.0	0.0	0.0	0.0	190	0.0	0.0	0.0	0.0	0.0	0.0
174	192	0.0	0.0	0.0	0.0	0.0	0.0	193	0.0	0.0	0.0	0.0	0.0	0.0
	190	0.0	0.0	0.0	0.0	0.0	0.0	191	0.0	0.0	0.0	0.0	0.0	0.0
175	193	0.0	0.0	0.0	0.0	0.0	0.0	143	0.0	0.0	0.0	0.0	0.0	0.0
	191	0.0	0.0	0.0	0.0	0.0	0.0	139	0.0	0.0	0.0	0.0	0.0	0.0
176	27	0.0	0.0	0.0	0.0	0.0	0.0	194	0.0	0.0	0.0	0.0	0.0	0.0
	127	0.0	0.0	0.0	0.0	0.0	0.0	192	0.0	0.0	0.0	0.0	0.0	0.0
177	194	0.0	0.0	0.0	0.0	0.0	0.0	195	0.0	0.0	0.0	0.0	0.0	0.0
	192	0.0	0.0	0.0	0.0	0.0	0.0	193	0.0	0.0	0.0	0.0	0.0	0.0
178	195	0.0	0.0	0.0	0.0	0.0	0.0	28	0.0	0.0	0.0	0.0	0.0	0.0
	193	0.0	0.0	0.0	0.0	0.0	0.0	143	0.0	0.0	0.0	0.0	0.0	0.0
179	52	0.0	0.0	0.0	0.0	0.0	0.0	119	0.0	0.0	0.0	0.0	0.0	0.0
	53	0.0	0.0	0.0	0.0	0.0	0.0	118	0.0	0.0	0.0	0.0	0.0	0.0
180	7	0.0	0.0	0.0	0.0	0.0	0.0	34	0.0	0.0	0.0	0.0	0.0	0.0
	52	0.0	0.0	0.0	0.0	0.0	0.0	119	0.0	0.0	0.0	0.0	0.0	0.0

FORZE: SISMA 90°°: MODO10: SHELL

Shell Nro	Nodo N.ro	Tx (kN)	Ty (kN)	Tz (kN)	Mx (kN*m)	My (kN*m)	Mz (kN*m)	Nodo N.ro	Tx (kN)	Ty (kN)	Tz (kN)	Mx (kN*m)	My (kN*m)	Mz (kN*m)
1	38	0.0	0.0	0.0	0.0	0.0	0.0	39	0.0	0.0	0.0	0.0	0.0	0.0
	14	0.0	0.0	0.0	0.0	0.0	0.0	1	0.0	0.0	0.0	0.0	0.0	0.0
2	6	0.0	0.0	0.0	0.0	0.0	0.0	44	0.0	0.0	0.0	0.0	0.0	0.0
	2	0.0	0.0	0.0	0.0	0.0	0.0	42	0.0	0.0	0.0	0.0	0.0	0.0
3	39	0.0	0.0	0.0	0.0	0.0	0.0	44	0.0	0.0	0.0	0.0	0.0	0.0
	1	0.0	0.0	0.0	0.0	0.0	0.0	6	0.0	0.0	0.0	0.0	0.0	0.0
4	46	0.0	0.0	0.0	0.0	0.0	0.0	47	0.0	0.0	0.0	0.0	0.0	0.0
	10	0.0	0.0	0.0	0.0	0.0	0.0	16	0.0	0.0	0.0	0.0	0.0	0.0
5	50	0.0	0.0	0.0	0.0	0.0	0.0	46	0.0	0.0	0.0	0.0	0.0	0.0
	4	0.0	0.0	0.0	0.0	0.0	0.0	10	0.0	0.0	0.0	0.0	0.0	0.0
6	54	0.0	0.0	0.0	0.0	0.0	0.0	55	0.0	0.0	0.0	0.0	0.0	0.0
	7	0.0	0.0	0.0	0.0	0.0	0.0	52	0.0	0.0	0.0	0.0	0.0	0.0
7	64	0.0	0.0	0.0	0.0	0.0	0.0	65	0.0	0.0	0.0	0.0	0.0	0.0
	5	0.0	0.0	0.0	0.0	0.0	0.0	62	0.0	0.0	0.0	0.0	0.0	0.0
8	47	0.0	0.0	0.0	0.0	0.0	0.0	72	0.0	0.0	0.0	0.0	0.0	0.0
	16	0.0	0.0	0.0	0.0	0.0	0.0	3	0.0	0.0	0.0	0.0	0.0	0.0
9	76	0.0	0.0	0.0	0.0	0.0	0.0	77	0.0	0.0	0.0	0.0	0.0	0.0
	25	0.0	0.0	0.0	0.0	0.0	0.0	74	0.0	0.0	0.0	0.0	0.0	0.0
10	38	0.0	0.0	0.0	0.0	0.0	0.0	86	0.0	0.0	0.0	0.0	0.0	0.0
	14	0.0	0.0	0.0	0.0	0.0	0.0	71	0.0	0.0	0.0	0.0	0.0	0.0
11	94	0.0	0.0	0.0	0.0	0.0	0.0	95	0.0	0.0	0.0	0.0	0.0	0.0
	18	0.0	0.0	0.0	0.0	0.0	0.0	91	0.0	0.0	0.0	0.0	0.0	0.0
12	102	0.0	0.0	0.0	0.0	0.0	0.0	103	0.0	0.0	0.0	0.0	0.0	0.0
	21	0.0	0.0	0.0	0.0	0.0	0.0	84	0.0	0.0	0.0	0.0	0.0	0.0
13	112	0.0	0.0	0.0	0.0	0.0	0.0	76	0.0	0.0	0.0	0.0	0.0	0.0
	36	0.0	0.0	0.0	0.0	0.0	0.0	25	0.0	0.0	0.0	0.0	0.0	0.0
14	114	0.0	0.0	0.0	0.0	0.0	0.0	112	0.0	0.0	0.0	0.0	0.0	0.0
	35	0.0	0.0	0.0	0.0	0.0	0.0	36	0.0	0.0	0.0	0.0	0.0	0.0
15	24	0.0	0.0	0.0	0.0	0.0	0.0	116	0.0	0.0	0.0	0.0	0.0	0.0
	21	0.0	0.0	0.0	0.0	0.0	0.0	102	0.0	0.0	0.0	0.0	0.0	0.0
16	118	0.0	0.0	0.0	0.0	0.0	0.0	116	0.0	0.0	0.0	0.0	0.0	0.0
	20	0.0	0.0	0.0	0.0	0.0	0.0	24	0.0	0.0	0.0	0.0	0.0	0.0
17	120	0.0	0.0	0.0	0.0	0.0	0.0	121	0.0	0.0	0.0	0.0	0.0	0.0
	9	0.0	0.0	0.0	0.0	0.0	0.0	43	0.0	0.0	0.0	0.0	0.0	0.0
18	10	0.0	0.0	0.0	0.0	0.0	0.0	130	0.0	0.0	0.0	0.0	0.0	0.0
	4	0.0	0.0	0.0	0.0	0.0	0.0	68	0.0	0.0	0.0	0.0	0.0	0.0
19	100	0.0	0.0	0.0	0.0	0.0	0.0	114	0.0	0.0	0.0	0.0	0.0	0.0
	19	0.0	0.0	0.0	0.0	0.0	0.0	35	0.0	0.0	0.0	0.0	0.0	0.0
20	35	0.0	0.0	0.0	0.0	0.0	0.0	149	0.0	0.0	0.0	0.0	0.0	0.0
	19	0.0	0.0	0.0	0.0	0.0	0.0	97	0.0	0.0	0.0	0.0	0.0	0.0
21	132	0.0	0.0	0.0	0.0	0.0	0.0	166	0.0	0.0	0.0	0.0	0.0	0.0
	5	0.0	0.0	0.0	0.0	0.0	0.0	58	0.0	0.0	0.0	0.0	0.0	0.0
22	151	0.0	0.0	0.0	0.0	0.0	0.0	178	0.0	0.0	0.0	0.0	0.0	0.0
	18	0.0	0.0	0.0	0.0	0.0	0.0	93	0.0	0.0	0.0	0.0	0.0	0.0
23	123	0.0	0.0	0.0	0.0	0.0	0.0	190	0.0	0.0	0.0	0.0	0.0	0.0
	2	0.0	0.0	0.0	0.0	0.0	0.0	73	0.0	0.0	0.0	0.0	0.0	0.0
24	53	0.0	0.0	0.0	0.0	0.0	0.0	118	0.0	0.0	0.0	0.0	0.0	0.0
	11	0.0	0.0	0.0	0.0	0.0	0.0	20	0.0	0.0	0.0	0.0	0.0	0.0
25	40	0.0	0.0	0.0	0.0	0.0	0.0	41	0.0	0.0	0.0	0.0	0.0	0.0
	38	0.0	0.0	0.0	0.0	0.0	0.0	39	0.0	0.0	0.0	0.0	0.0	0.0

Documento di proprietà **Snam Rete Gas**. La Società tutelerà i propri diritti in sede civile e penale a termini di legge.

FORZE: SISMA 90°°: MODO10: SHELL

Shell Nro	Nodo N.ro	Tx (kN)	Ty (kN)	Tz (kN)	Mx (kN*m)	My (kN*m)	Mz (kN*m)	Nodo N.ro	Tx (kN)	Ty (kN)	Tz (kN)	Mx (kN*m)	My (kN*m)	Mz (kN*m)
26	17	0.0	0.0	0.0	0.0	0.0	0.0	12	0.0	0.0	0.0	0.0	0.0	0.0
	40	0.0	0.0	0.0	0.0	0.0	0.0	41	0.0	0.0	0.0	0.0	0.0	0.0
27	44	0.0	0.0	0.0	0.0	0.0	0.0	45	0.0	0.0	0.0	0.0	0.0	0.0
	42	0.0	0.0	0.0	0.0	0.0	0.0	43	0.0	0.0	0.0	0.0	0.0	0.0
28	45	0.0	0.0	0.0	0.0	0.0	0.0	15	0.0	0.0	0.0	0.0	0.0	0.0
	43	0.0	0.0	0.0	0.0	0.0	0.0	9	0.0	0.0	0.0	0.0	0.0	0.0
29	41	0.0	0.0	0.0	0.0	0.0	0.0	45	0.0	0.0	0.0	0.0	0.0	0.0
	39	0.0	0.0	0.0	0.0	0.0	0.0	44	0.0	0.0	0.0	0.0	0.0	0.0
30	12	0.0	0.0	0.0	0.0	0.0	0.0	15	0.0	0.0	0.0	0.0	0.0	0.0
	41	0.0	0.0	0.0	0.0	0.0	0.0	45	0.0	0.0	0.0	0.0	0.0	0.0
31	48	0.0	0.0	0.0	0.0	0.0	0.0	49	0.0	0.0	0.0	0.0	0.0	0.0
	46	0.0	0.0	0.0	0.0	0.0	0.0	47	0.0	0.0	0.0	0.0	0.0	0.0
32	1	0.0	0.0	0.0	0.0	0.0	0.0	8	0.0	0.0	0.0	0.0	0.0	0.0
	48	0.0	0.0	0.0	0.0	0.0	0.0	49	0.0	0.0	0.0	0.0	0.0	0.0
33	51	0.0	0.0	0.0	0.0	0.0	0.0	48	0.0	0.0	0.0	0.0	0.0	0.0
	50	0.0	0.0	0.0	0.0	0.0	0.0	46	0.0	0.0	0.0	0.0	0.0	0.0
34	14	0.0	0.0	0.0	0.0	0.0	0.0	1	0.0	0.0	0.0	0.0	0.0	0.0
	51	0.0	0.0	0.0	0.0	0.0	0.0	48	0.0	0.0	0.0	0.0	0.0	0.0
35	55	0.0	0.0	0.0	0.0	0.0	0.0	56	0.0	0.0	0.0	0.0	0.0	0.0
	52	0.0	0.0	0.0	0.0	0.0	0.0	53	0.0	0.0	0.0	0.0	0.0	0.0
36	56	0.0	0.0	0.0	0.0	0.0	0.0	57	0.0	0.0	0.0	0.0	0.0	0.0
	53	0.0	0.0	0.0	0.0	0.0	0.0	11	0.0	0.0	0.0	0.0	0.0	0.0
37	58	0.0	0.0	0.0	0.0	0.0	0.0	59	0.0	0.0	0.0	0.0	0.0	0.0
	54	0.0	0.0	0.0	0.0	0.0	0.0	55	0.0	0.0	0.0	0.0	0.0	0.0
38	59	0.0	0.0	0.0	0.0	0.0	0.0	60	0.0	0.0	0.0	0.0	0.0	0.0
	55	0.0	0.0	0.0	0.0	0.0	0.0	56	0.0	0.0	0.0	0.0	0.0	0.0
39	60	0.0	0.0	0.0	0.0	0.0	0.0	61	0.0	0.0	0.0	0.0	0.0	0.0
	56	0.0	0.0	0.0	0.0	0.0	0.0	57	0.0	0.0	0.0	0.0	0.0	0.0
40	5	0.0	0.0	0.0	0.0	0.0	0.0	62	0.0	0.0	0.0	0.0	0.0	0.0
	58	0.0	0.0	0.0	0.0	0.0	0.0	59	0.0	0.0	0.0	0.0	0.0	0.0
41	62	0.0	0.0	0.0	0.0	0.0	0.0	63	0.0	0.0	0.0	0.0	0.0	0.0
	59	0.0	0.0	0.0	0.0	0.0	0.0	60	0.0	0.0	0.0	0.0	0.0	0.0
42	63	0.0	0.0	0.0	0.0	0.0	0.0	13	0.0	0.0	0.0	0.0	0.0	0.0
	60	0.0	0.0	0.0	0.0	0.0	0.0	61	0.0	0.0	0.0	0.0	0.0	0.0
43	65	0.0	0.0	0.0	0.0	0.0	0.0	66	0.0	0.0	0.0	0.0	0.0	0.0
	62	0.0	0.0	0.0	0.0	0.0	0.0	63	0.0	0.0	0.0	0.0	0.0	0.0
44	66	0.0	0.0	0.0	0.0	0.0	0.0	67	0.0	0.0	0.0	0.0	0.0	0.0
	63	0.0	0.0	0.0	0.0	0.0	0.0	13	0.0	0.0	0.0	0.0	0.0	0.0
45	68	0.0	0.0	0.0	0.0	0.0	0.0	69	0.0	0.0	0.0	0.0	0.0	0.0
	64	0.0	0.0	0.0	0.0	0.0	0.0	65	0.0	0.0	0.0	0.0	0.0	0.0
46	69	0.0	0.0	0.0	0.0	0.0	0.0	70	0.0	0.0	0.0	0.0	0.0	0.0
	65	0.0	0.0	0.0	0.0	0.0	0.0	66	0.0	0.0	0.0	0.0	0.0	0.0
47	70	0.0	0.0	0.0	0.0	0.0	0.0	71	0.0	0.0	0.0	0.0	0.0	0.0
	66	0.0	0.0	0.0	0.0	0.0	0.0	67	0.0	0.0	0.0	0.0	0.0	0.0
48	4	0.0	0.0	0.0	0.0	0.0	0.0	50	0.0	0.0	0.0	0.0	0.0	0.0
	68	0.0	0.0	0.0	0.0	0.0	0.0	69	0.0	0.0	0.0	0.0	0.0	0.0
49	50	0.0	0.0	0.0	0.0	0.0	0.0	51	0.0	0.0	0.0	0.0	0.0	0.0
	69	0.0	0.0	0.0	0.0	0.0	0.0	70	0.0	0.0	0.0	0.0	0.0	0.0
50	51	0.0	0.0	0.0	0.0	0.0	0.0	14	0.0	0.0	0.0	0.0	0.0	0.0
	70	0.0	0.0	0.0	0.0	0.0	0.0	71	0.0	0.0	0.0	0.0	0.0	0.0
51	49	0.0	0.0	0.0	0.0	0.0	0.0	73	0.0	0.0	0.0	0.0	0.0	0.0
	47	0.0	0.0	0.0	0.0	0.0	0.0	72	0.0	0.0	0.0	0.0	0.0	0.0
52	8	0.0	0.0	0.0	0.0	0.0	0.0	2	0.0	0.0	0.0	0.0	0.0	0.0
	49	0.0	0.0	0.0	0.0	0.0	0.0	73	0.0	0.0	0.0	0.0	0.0	0.0
53	77	0.0	0.0	0.0	0.0	0.0	0.0	78	0.0	0.0	0.0	0.0	0.0	0.0
	74	0.0	0.0	0.0	0.0	0.0	0.0	75	0.0	0.0	0.0	0.0	0.0	0.0
54	78	0.0	0.0	0.0	0.0	0.0	0.0	79	0.0	0.0	0.0	0.0	0.0	0.0
	75	0.0	0.0	0.0	0.0	0.0	0.0	32	0.0	0.0	0.0	0.0	0.0	0.0
55	80	0.0	0.0	0.0	0.0	0.0	0.0	81	0.0	0.0	0.0	0.0	0.0	0.0
	76	0.0	0.0	0.0	0.0	0.0	0.0	77	0.0	0.0	0.0	0.0	0.0	0.0
56	81	0.0	0.0	0.0	0.0	0.0	0.0	82	0.0	0.0	0.0	0.0	0.0	0.0
	77	0.0	0.0	0.0	0.0	0.0	0.0	78	0.0	0.0	0.0	0.0	0.0	0.0
57	82	0.0	0.0	0.0	0.0	0.0	0.0	83	0.0	0.0	0.0	0.0	0.0	0.0
	78	0.0	0.0	0.0	0.0	0.0	0.0	79	0.0	0.0	0.0	0.0	0.0	0.0
58	21	0.0	0.0	0.0	0.0	0.0	0.0	84	0.0	0.0	0.0	0.0	0.0	0.0
	80	0.0	0.0	0.0	0.0	0.0	0.0	81	0.0	0.0	0.0	0.0	0.0	0.0
59	84	0.0	0.0	0.0	0.0	0.0	0.0	85	0.0	0.0	0.0	0.0	0.0	0.0
	81	0.0	0.0	0.0	0.0	0.0	0.0	82	0.0	0.0	0.0	0.0	0.0	0.0
60	85	0.0	0.0	0.0	0.0	0.0	0.0	31	0.0	0.0	0.0	0.0	0.0	0.0
	82	0.0	0.0	0.0	0.0	0.0	0.0	83	0.0	0.0	0.0	0.0	0.0	0.0
61	86	0.0	0.0	0.0	0.0	0.0	0.0	87	0.0	0.0	0.0	0.0	0.0	0.0
	71	0.0	0.0	0.0	0.0	0.0	0.0	67	0.0	0.0	0.0	0.0	0.0	0.0
62	87	0.0	0.0	0.0	0.0	0.0	0.0	88	0.0	0.0	0.0	0.0	0.0	0.0
	67	0.0	0.0	0.0	0.0	0.0	0.0	13	0.0	0.0	0.0	0.0	0.0	0.0
63	40	0.0	0.0	0.0	0.0	0.0	0.0	89	0.0	0.0	0.0	0.0	0.0	0.0
	38	0.0	0.0	0.0	0.0	0.0	0.0	86	0.0	0.0	0.0	0.0	0.0	0.0
64	89	0.0	0.0	0.0	0.0	0.0	0.0	90	0.0	0.0	0.0	0.0	0.0	0.0
	86	0.0	0.0	0.0	0.0	0.0	0.0	87	0.0	0.0	0.0	0.0	0.0	0.0
65	90	0.0	0.0	0.0	0.0	0.0	0.0	91	0.0	0.0	0.0	0.0	0.0	0.0
	87	0.0	0.0	0.0	0.0	0.0	0.0	88	0.0	0.0	0.0	0.0	0.0	0.0

Documento di proprietà **Snam Rete Gas**. La Società tutelerà i propri diritti in sede civile e penale a termini di legge.

FORZE: SISMA 90°°: MODO10: SHELL

Shell Nro	Nodo N.ro	Tx (kN)	Ty (kN)	Tz (kN)	Mx (kN*m)	My (kN*m)	Mz (kN*m)	Nodo N.ro	Tx (kN)	Ty (kN)	Tz (kN)	Mx (kN*m)	My (kN*m)	Mz (kN*m)
66	17	0.0	0.0	0.0	0.0	0.0	0.0	92	0.0	0.0	0.0	0.0	0.0	0.0
	40	0.0	0.0	0.0	0.0	0.0	0.0	89	0.0	0.0	0.0	0.0	0.0	0.0
67	92	0.0	0.0	0.0	0.0	0.0	0.0	93	0.0	0.0	0.0	0.0	0.0	0.0
	89	0.0	0.0	0.0	0.0	0.0	0.0	90	0.0	0.0	0.0	0.0	0.0	0.0
68	93	0.0	0.0	0.0	0.0	0.0	0.0	18	0.0	0.0	0.0	0.0	0.0	0.0
	90	0.0	0.0	0.0	0.0	0.0	0.0	91	0.0	0.0	0.0	0.0	0.0	0.0
69	95	0.0	0.0	0.0	0.0	0.0	0.0	96	0.0	0.0	0.0	0.0	0.0	0.0
	91	0.0	0.0	0.0	0.0	0.0	0.0	88	0.0	0.0	0.0	0.0	0.0	0.0
70	96	0.0	0.0	0.0	0.0	0.0	0.0	61	0.0	0.0	0.0	0.0	0.0	0.0
	88	0.0	0.0	0.0	0.0	0.0	0.0	13	0.0	0.0	0.0	0.0	0.0	0.0
71	97	0.0	0.0	0.0	0.0	0.0	0.0	98	0.0	0.0	0.0	0.0	0.0	0.0
	94	0.0	0.0	0.0	0.0	0.0	0.0	95	0.0	0.0	0.0	0.0	0.0	0.0
72	98	0.0	0.0	0.0	0.0	0.0	0.0	99	0.0	0.0	0.0	0.0	0.0	0.0
	95	0.0	0.0	0.0	0.0	0.0	0.0	96	0.0	0.0	0.0	0.0	0.0	0.0
73	99	0.0	0.0	0.0	0.0	0.0	0.0	57	0.0	0.0	0.0	0.0	0.0	0.0
	96	0.0	0.0	0.0	0.0	0.0	0.0	61	0.0	0.0	0.0	0.0	0.0	0.0
74	19	0.0	0.0	0.0	0.0	0.0	0.0	100	0.0	0.0	0.0	0.0	0.0	0.0
	97	0.0	0.0	0.0	0.0	0.0	0.0	98	0.0	0.0	0.0	0.0	0.0	0.0
75	100	0.0	0.0	0.0	0.0	0.0	0.0	101	0.0	0.0	0.0	0.0	0.0	0.0
	98	0.0	0.0	0.0	0.0	0.0	0.0	99	0.0	0.0	0.0	0.0	0.0	0.0
76	101	0.0	0.0	0.0	0.0	0.0	0.0	11	0.0	0.0	0.0	0.0	0.0	0.0
	99	0.0	0.0	0.0	0.0	0.0	0.0	57	0.0	0.0	0.0	0.0	0.0	0.0
77	103	0.0	0.0	0.0	0.0	0.0	0.0	104	0.0	0.0	0.0	0.0	0.0	0.0
	84	0.0	0.0	0.0	0.0	0.0	0.0	85	0.0	0.0	0.0	0.0	0.0	0.0
78	104	0.0	0.0	0.0	0.0	0.0	0.0	105	0.0	0.0	0.0	0.0	0.0	0.0
	85	0.0	0.0	0.0	0.0	0.0	0.0	31	0.0	0.0	0.0	0.0	0.0	0.0
79	106	0.0	0.0	0.0	0.0	0.0	0.0	107	0.0	0.0	0.0	0.0	0.0	0.0
	102	0.0	0.0	0.0	0.0	0.0	0.0	103	0.0	0.0	0.0	0.0	0.0	0.0
80	107	0.0	0.0	0.0	0.0	0.0	0.0	108	0.0	0.0	0.0	0.0	0.0	0.0
	103	0.0	0.0	0.0	0.0	0.0	0.0	104	0.0	0.0	0.0	0.0	0.0	0.0
81	108	0.0	0.0	0.0	0.0	0.0	0.0	109	0.0	0.0	0.0	0.0	0.0	0.0
	104	0.0	0.0	0.0	0.0	0.0	0.0	105	0.0	0.0	0.0	0.0	0.0	0.0
82	22	0.0	0.0	0.0	0.0	0.0	0.0	110	0.0	0.0	0.0	0.0	0.0	0.0
	106	0.0	0.0	0.0	0.0	0.0	0.0	107	0.0	0.0	0.0	0.0	0.0	0.0
83	110	0.0	0.0	0.0	0.0	0.0	0.0	111	0.0	0.0	0.0	0.0	0.0	0.0
	107	0.0	0.0	0.0	0.0	0.0	0.0	108	0.0	0.0	0.0	0.0	0.0	0.0
84	111	0.0	0.0	0.0	0.0	0.0	0.0	30	0.0	0.0	0.0	0.0	0.0	0.0
	108	0.0	0.0	0.0	0.0	0.0	0.0	109	0.0	0.0	0.0	0.0	0.0	0.0
85	113	0.0	0.0	0.0	0.0	0.0	0.0	80	0.0	0.0	0.0	0.0	0.0	0.0
	112	0.0	0.0	0.0	0.0	0.0	0.0	76	0.0	0.0	0.0	0.0	0.0	0.0
86	23	0.0	0.0	0.0	0.0	0.0	0.0	21	0.0	0.0	0.0	0.0	0.0	0.0
	113	0.0	0.0	0.0	0.0	0.0	0.0	80	0.0	0.0	0.0	0.0	0.0	0.0
87	115	0.0	0.0	0.0	0.0	0.0	0.0	113	0.0	0.0	0.0	0.0	0.0	0.0
	114	0.0	0.0	0.0	0.0	0.0	0.0	112	0.0	0.0	0.0	0.0	0.0	0.0
88	20	0.0	0.0	0.0	0.0	0.0	0.0	23	0.0	0.0	0.0	0.0	0.0	0.0
	115	0.0	0.0	0.0	0.0	0.0	0.0	113	0.0	0.0	0.0	0.0	0.0	0.0
89	116	0.0	0.0	0.0	0.0	0.0	0.0	117	0.0	0.0	0.0	0.0	0.0	0.0
	102	0.0	0.0	0.0	0.0	0.0	0.0	106	0.0	0.0	0.0	0.0	0.0	0.0
90	117	0.0	0.0	0.0	0.0	0.0	0.0	37	0.0	0.0	0.0	0.0	0.0	0.0
	106	0.0	0.0	0.0	0.0	0.0	0.0	22	0.0	0.0	0.0	0.0	0.0	0.0
91	119	0.0	0.0	0.0	0.0	0.0	0.0	117	0.0	0.0	0.0	0.0	0.0	0.0
	118	0.0	0.0	0.0	0.0	0.0	0.0	116	0.0	0.0	0.0	0.0	0.0	0.0
92	34	0.0	0.0	0.0	0.0	0.0	0.0	37	0.0	0.0	0.0	0.0	0.0	0.0
	119	0.0	0.0	0.0	0.0	0.0	0.0	117	0.0	0.0	0.0	0.0	0.0	0.0
93	121	0.0	0.0	0.0	0.0	0.0	0.0	122	0.0	0.0	0.0	0.0	0.0	0.0
	43	0.0	0.0	0.0	0.0	0.0	0.0	42	0.0	0.0	0.0	0.0	0.0	0.0
94	122	0.0	0.0	0.0	0.0	0.0	0.0	123	0.0	0.0	0.0	0.0	0.0	0.0
	42	0.0	0.0	0.0	0.0	0.0	0.0	2	0.0	0.0	0.0	0.0	0.0	0.0
95	124	0.0	0.0	0.0	0.0	0.0	0.0	125	0.0	0.0	0.0	0.0	0.0	0.0
	120	0.0	0.0	0.0	0.0	0.0	0.0	121	0.0	0.0	0.0	0.0	0.0	0.0
96	125	0.0	0.0	0.0	0.0	0.0	0.0	126	0.0	0.0	0.0	0.0	0.0	0.0
	121	0.0	0.0	0.0	0.0	0.0	0.0	122	0.0	0.0	0.0	0.0	0.0	0.0
97	126	0.0	0.0	0.0	0.0	0.0	0.0	127	0.0	0.0	0.0	0.0	0.0	0.0
	122	0.0	0.0	0.0	0.0	0.0	0.0	123	0.0	0.0	0.0	0.0	0.0	0.0
98	26	0.0	0.0	0.0	0.0	0.0	0.0	128	0.0	0.0	0.0	0.0	0.0	0.0
	124	0.0	0.0	0.0	0.0	0.0	0.0	125	0.0	0.0	0.0	0.0	0.0	0.0
99	128	0.0	0.0	0.0	0.0	0.0	0.0	129	0.0	0.0	0.0	0.0	0.0	0.0
	125	0.0	0.0	0.0	0.0	0.0	0.0	126	0.0	0.0	0.0	0.0	0.0	0.0
100	129	0.0	0.0	0.0	0.0	0.0	0.0	27	0.0	0.0	0.0	0.0	0.0	0.0
	126	0.0	0.0	0.0	0.0	0.0	0.0	127	0.0	0.0	0.0	0.0	0.0	0.0
101	130	0.0	0.0	0.0	0.0	0.0	0.0	131	0.0	0.0	0.0	0.0	0.0	0.0
	68	0.0	0.0	0.0	0.0	0.0	0.0	64	0.0	0.0	0.0	0.0	0.0	0.0
102	131	0.0	0.0	0.0	0.0	0.0	0.0	132	0.0	0.0	0.0	0.0	0.0	0.0
	64	0.0	0.0	0.0	0.0	0.0	0.0	5	0.0	0.0	0.0	0.0	0.0	0.0
103	16	0.0	0.0	0.0	0.0	0.0	0.0	133	0.0	0.0	0.0	0.0	0.0	0.0
	10	0.0	0.0	0.0	0.0	0.0	0.0	130	0.0	0.0	0.0	0.0	0.0	0.0
104	133	0.0	0.0	0.0	0.0	0.0	0.0	134	0.0	0.0	0.0	0.0	0.0	0.0
	130	0.0	0.0	0.0	0.0	0.0	0.0	131	0.0	0.0	0.0	0.0	0.0	0.0
105	134	0.0	0.0	0.0	0.0	0.0	0.0	135	0.0	0.0	0.0	0.0	0.0	0.0
	131	0.0	0.0	0.0	0.0	0.0	0.0	132	0.0	0.0	0.0	0.0	0.0	0.0

Documento di proprietà **Snam Rete Gas**. La Società tutelerà i propri diritti in sede civile e penale a termini di legge.

FORZE: SISMA 90°°: MODO10: SHELL

Shell Nro	Nodo N.ro	Tx (kN)	Ty (kN)	Tz (kN)	Mx (kN*m)	My (kN*m)	Mz (kN*m)	Nodo N.ro	Tx (kN)	Ty (kN)	Tz (kN)	Mx (kN*m)	My (kN*m)	Mz (kN*m)
106	3	0.0	0.0	0.0	0.0	0.0	0.0	136	0.0	0.0	0.0	0.0	0.0	0.0
	16	0.0	0.0	0.0	0.0	0.0	0.0	133	0.0	0.0	0.0	0.0	0.0	0.0
107	136	0.0	0.0	0.0	0.0	0.0	0.0	137	0.0	0.0	0.0	0.0	0.0	0.0
	133	0.0	0.0	0.0	0.0	0.0	0.0	134	0.0	0.0	0.0	0.0	0.0	0.0
108	137	0.0	0.0	0.0	0.0	0.0	0.0	138	0.0	0.0	0.0	0.0	0.0	0.0
	134	0.0	0.0	0.0	0.0	0.0	0.0	135	0.0	0.0	0.0	0.0	0.0	0.0
109	139	0.0	0.0	0.0	0.0	0.0	0.0	140	0.0	0.0	0.0	0.0	0.0	0.0
	3	0.0	0.0	0.0	0.0	0.0	0.0	136	0.0	0.0	0.0	0.0	0.0	0.0
110	140	0.0	0.0	0.0	0.0	0.0	0.0	141	0.0	0.0	0.0	0.0	0.0	0.0
	136	0.0	0.0	0.0	0.0	0.0	0.0	137	0.0	0.0	0.0	0.0	0.0	0.0
111	141	0.0	0.0	0.0	0.0	0.0	0.0	142	0.0	0.0	0.0	0.0	0.0	0.0
	137	0.0	0.0	0.0	0.0	0.0	0.0	138	0.0	0.0	0.0	0.0	0.0	0.0
112	143	0.0	0.0	0.0	0.0	0.0	0.0	144	0.0	0.0	0.0	0.0	0.0	0.0
	139	0.0	0.0	0.0	0.0	0.0	0.0	140	0.0	0.0	0.0	0.0	0.0	0.0
113	144	0.0	0.0	0.0	0.0	0.0	0.0	145	0.0	0.0	0.0	0.0	0.0	0.0
	140	0.0	0.0	0.0	0.0	0.0	0.0	141	0.0	0.0	0.0	0.0	0.0	0.0
114	145	0.0	0.0	0.0	0.0	0.0	0.0	146	0.0	0.0	0.0	0.0	0.0	0.0
	141	0.0	0.0	0.0	0.0	0.0	0.0	142	0.0	0.0	0.0	0.0	0.0	0.0
115	28	0.0	0.0	0.0	0.0	0.0	0.0	147	0.0	0.0	0.0	0.0	0.0	0.0
	143	0.0	0.0	0.0	0.0	0.0	0.0	144	0.0	0.0	0.0	0.0	0.0	0.0
116	147	0.0	0.0	0.0	0.0	0.0	0.0	148	0.0	0.0	0.0	0.0	0.0	0.0
	144	0.0	0.0	0.0	0.0	0.0	0.0	145	0.0	0.0	0.0	0.0	0.0	0.0
117	148	0.0	0.0	0.0	0.0	0.0	0.0	29	0.0	0.0	0.0	0.0	0.0	0.0
	145	0.0	0.0	0.0	0.0	0.0	0.0	146	0.0	0.0	0.0	0.0	0.0	0.0
118	101	0.0	0.0	0.0	0.0	0.0	0.0	115	0.0	0.0	0.0	0.0	0.0	0.0
	100	0.0	0.0	0.0	0.0	0.0	0.0	114	0.0	0.0	0.0	0.0	0.0	0.0
119	11	0.0	0.0	0.0	0.0	0.0	0.0	20	0.0	0.0	0.0	0.0	0.0	0.0
	101	0.0	0.0	0.0	0.0	0.0	0.0	115	0.0	0.0	0.0	0.0	0.0	0.0
120	149	0.0	0.0	0.0	0.0	0.0	0.0	150	0.0	0.0	0.0	0.0	0.0	0.0
	97	0.0	0.0	0.0	0.0	0.0	0.0	94	0.0	0.0	0.0	0.0	0.0	0.0
121	150	0.0	0.0	0.0	0.0	0.0	0.0	151	0.0	0.0	0.0	0.0	0.0	0.0
	94	0.0	0.0	0.0	0.0	0.0	0.0	18	0.0	0.0	0.0	0.0	0.0	0.0
122	36	0.0	0.0	0.0	0.0	0.0	0.0	152	0.0	0.0	0.0	0.0	0.0	0.0
	35	0.0	0.0	0.0	0.0	0.0	0.0	149	0.0	0.0	0.0	0.0	0.0	0.0
123	152	0.0	0.0	0.0	0.0	0.0	0.0	153	0.0	0.0	0.0	0.0	0.0	0.0
	149	0.0	0.0	0.0	0.0	0.0	0.0	150	0.0	0.0	0.0	0.0	0.0	0.0
124	153	0.0	0.0	0.0	0.0	0.0	0.0	154	0.0	0.0	0.0	0.0	0.0	0.0
	150	0.0	0.0	0.0	0.0	0.0	0.0	151	0.0	0.0	0.0	0.0	0.0	0.0
125	25	0.0	0.0	0.0	0.0	0.0	0.0	155	0.0	0.0	0.0	0.0	0.0	0.0
	36	0.0	0.0	0.0	0.0	0.0	0.0	152	0.0	0.0	0.0	0.0	0.0	0.0
126	155	0.0	0.0	0.0	0.0	0.0	0.0	156	0.0	0.0	0.0	0.0	0.0	0.0
	152	0.0	0.0	0.0	0.0	0.0	0.0	153	0.0	0.0	0.0	0.0	0.0	0.0
127	156	0.0	0.0	0.0	0.0	0.0	0.0	157	0.0	0.0	0.0	0.0	0.0	0.0
	153	0.0	0.0	0.0	0.0	0.0	0.0	154	0.0	0.0	0.0	0.0	0.0	0.0
128	74	0.0	0.0	0.0	0.0	0.0	0.0	158	0.0	0.0	0.0	0.0	0.0	0.0
	25	0.0	0.0	0.0	0.0	0.0	0.0	155	0.0	0.0	0.0	0.0	0.0	0.0
129	158	0.0	0.0	0.0	0.0	0.0	0.0	159	0.0	0.0	0.0	0.0	0.0	0.0
	155	0.0	0.0	0.0	0.0	0.0	0.0	156	0.0	0.0	0.0	0.0	0.0	0.0
130	159	0.0	0.0	0.0	0.0	0.0	0.0	160	0.0	0.0	0.0	0.0	0.0	0.0
	156	0.0	0.0	0.0	0.0	0.0	0.0	157	0.0	0.0	0.0	0.0	0.0	0.0
131	75	0.0	0.0	0.0	0.0	0.0	0.0	161	0.0	0.0	0.0	0.0	0.0	0.0
	74	0.0	0.0	0.0	0.0	0.0	0.0	158	0.0	0.0	0.0	0.0	0.0	0.0
132	161	0.0	0.0	0.0	0.0	0.0	0.0	162	0.0	0.0	0.0	0.0	0.0	0.0
	158	0.0	0.0	0.0	0.0	0.0	0.0	159	0.0	0.0	0.0	0.0	0.0	0.0
133	162	0.0	0.0	0.0	0.0	0.0	0.0	163	0.0	0.0	0.0	0.0	0.0	0.0
	159	0.0	0.0	0.0	0.0	0.0	0.0	160	0.0	0.0	0.0	0.0	0.0	0.0
134	32	0.0	0.0	0.0	0.0	0.0	0.0	164	0.0	0.0	0.0	0.0	0.0	0.0
	75	0.0	0.0	0.0	0.0	0.0	0.0	161	0.0	0.0	0.0	0.0	0.0	0.0
135	164	0.0	0.0	0.0	0.0	0.0	0.0	165	0.0	0.0	0.0	0.0	0.0	0.0
	161	0.0	0.0	0.0	0.0	0.0	0.0	162	0.0	0.0	0.0	0.0	0.0	0.0
136	165	0.0	0.0	0.0	0.0	0.0	0.0	33	0.0	0.0	0.0	0.0	0.0	0.0
	162	0.0	0.0	0.0	0.0	0.0	0.0	163	0.0	0.0	0.0	0.0	0.0	0.0
137	166	0.0	0.0	0.0	0.0	0.0	0.0	167	0.0	0.0	0.0	0.0	0.0	0.0
	58	0.0	0.0	0.0	0.0	0.0	0.0	54	0.0	0.0	0.0	0.0	0.0	0.0
138	167	0.0	0.0	0.0	0.0	0.0	0.0	34	0.0	0.0	0.0	0.0	0.0	0.0
	54	0.0	0.0	0.0	0.0	0.0	0.0	7	0.0	0.0	0.0	0.0	0.0	0.0
139	135	0.0	0.0	0.0	0.0	0.0	0.0	168	0.0	0.0	0.0	0.0	0.0	0.0
	132	0.0	0.0	0.0	0.0	0.0	0.0	166	0.0	0.0	0.0	0.0	0.0	0.0
140	168	0.0	0.0	0.0	0.0	0.0	0.0	169	0.0	0.0	0.0	0.0	0.0	0.0
	166	0.0	0.0	0.0	0.0	0.0	0.0	167	0.0	0.0	0.0	0.0	0.0	0.0
141	169	0.0	0.0	0.0	0.0	0.0	0.0	37	0.0	0.0	0.0	0.0	0.0	0.0
	167	0.0	0.0	0.0	0.0	0.0	0.0	34	0.0	0.0	0.0	0.0	0.0	0.0
142	138	0.0	0.0	0.0	0.0	0.0	0.0	170	0.0	0.0	0.0	0.0	0.0	0.0
	135	0.0	0.0	0.0	0.0	0.0	0.0	168	0.0	0.0	0.0	0.0	0.0	0.0
143	170	0.0	0.0	0.0	0.0	0.0	0.0	171	0.0	0.0	0.0	0.0	0.0	0.0
	168	0.0	0.0	0.0	0.0	0.0	0.0	169	0.0	0.0	0.0	0.0	0.0	0.0
144	171	0.0	0.0	0.0	0.0	0.0	0.0	22	0.0	0.0	0.0	0.0	0.0	0.0
	169	0.0	0.0	0.0	0.0	0.0	0.0	37	0.0	0.0	0.0	0.0	0.0	0.0
145	142	0.0	0.0	0.0	0.0	0.0	0.0	172	0.0	0.0	0.0	0.0	0.0	0.0
	138	0.0	0.0	0.0	0.0	0.0	0.0	170	0.0	0.0	0.0	0.0	0.0	0.0

Documento di proprietà **Snam Rete Gas**. La Società tutelerà i propri diritti in sede civile e penale a termini di legge.

FORZE: SISMA 90°°: MODO10: SHELL

Shell Nro	Nodo N.ro	Tx (kN)	Ty (kN)	Tz (kN)	Mx (kN*m)	My (kN*m)	Mz (kN*m)	Nodo N.ro	Tx (kN)	Ty (kN)	Tz (kN)	Mx (kN*m)	My (kN*m)	Mz (kN*m)
146	172	0.0	0.0	0.0	0.0	0.0	0.0	173	0.0	0.0	0.0	0.0	0.0	0.0
	170	0.0	0.0	0.0	0.0	0.0	0.0	171	0.0	0.0	0.0	0.0	0.0	0.0
147	173	0.0	0.0	0.0	0.0	0.0	0.0	110	0.0	0.0	0.0	0.0	0.0	0.0
	171	0.0	0.0	0.0	0.0	0.0	0.0	22	0.0	0.0	0.0	0.0	0.0	0.0
148	146	0.0	0.0	0.0	0.0	0.0	0.0	174	0.0	0.0	0.0	0.0	0.0	0.0
	142	0.0	0.0	0.0	0.0	0.0	0.0	172	0.0	0.0	0.0	0.0	0.0	0.0
149	174	0.0	0.0	0.0	0.0	0.0	0.0	175	0.0	0.0	0.0	0.0	0.0	0.0
	172	0.0	0.0	0.0	0.0	0.0	0.0	173	0.0	0.0	0.0	0.0	0.0	0.0
150	175	0.0	0.0	0.0	0.0	0.0	0.0	111	0.0	0.0	0.0	0.0	0.0	0.0
	173	0.0	0.0	0.0	0.0	0.0	0.0	110	0.0	0.0	0.0	0.0	0.0	0.0
151	29	0.0	0.0	0.0	0.0	0.0	0.0	176	0.0	0.0	0.0	0.0	0.0	0.0
	146	0.0	0.0	0.0	0.0	0.0	0.0	174	0.0	0.0	0.0	0.0	0.0	0.0
152	176	0.0	0.0	0.0	0.0	0.0	0.0	177	0.0	0.0	0.0	0.0	0.0	0.0
	174	0.0	0.0	0.0	0.0	0.0	0.0	175	0.0	0.0	0.0	0.0	0.0	0.0
153	177	0.0	0.0	0.0	0.0	0.0	0.0	30	0.0	0.0	0.0	0.0	0.0	0.0
	175	0.0	0.0	0.0	0.0	0.0	0.0	111	0.0	0.0	0.0	0.0	0.0	0.0
154	178	0.0	0.0	0.0	0.0	0.0	0.0	179	0.0	0.0	0.0	0.0	0.0	0.0
	93	0.0	0.0	0.0	0.0	0.0	0.0	92	0.0	0.0	0.0	0.0	0.0	0.0
155	179	0.0	0.0	0.0	0.0	0.0	0.0	12	0.0	0.0	0.0	0.0	0.0	0.0
	92	0.0	0.0	0.0	0.0	0.0	0.0	17	0.0	0.0	0.0	0.0	0.0	0.0
156	154	0.0	0.0	0.0	0.0	0.0	0.0	180	0.0	0.0	0.0	0.0	0.0	0.0
	151	0.0	0.0	0.0	0.0	0.0	0.0	178	0.0	0.0	0.0	0.0	0.0	0.0
157	180	0.0	0.0	0.0	0.0	0.0	0.0	181	0.0	0.0	0.0	0.0	0.0	0.0
	178	0.0	0.0	0.0	0.0	0.0	0.0	179	0.0	0.0	0.0	0.0	0.0	0.0
158	181	0.0	0.0	0.0	0.0	0.0	0.0	15	0.0	0.0	0.0	0.0	0.0	0.0
	179	0.0	0.0	0.0	0.0	0.0	0.0	12	0.0	0.0	0.0	0.0	0.0	0.0
159	157	0.0	0.0	0.0	0.0	0.0	0.0	182	0.0	0.0	0.0	0.0	0.0	0.0
	154	0.0	0.0	0.0	0.0	0.0	0.0	180	0.0	0.0	0.0	0.0	0.0	0.0
160	182	0.0	0.0	0.0	0.0	0.0	0.0	183	0.0	0.0	0.0	0.0	0.0	0.0
	180	0.0	0.0	0.0	0.0	0.0	0.0	181	0.0	0.0	0.0	0.0	0.0	0.0
161	183	0.0	0.0	0.0	0.0	0.0	0.0	9	0.0	0.0	0.0	0.0	0.0	0.0
	181	0.0	0.0	0.0	0.0	0.0	0.0	15	0.0	0.0	0.0	0.0	0.0	0.0
162	160	0.0	0.0	0.0	0.0	0.0	0.0	184	0.0	0.0	0.0	0.0	0.0	0.0
	157	0.0	0.0	0.0	0.0	0.0	0.0	182	0.0	0.0	0.0	0.0	0.0	0.0
163	184	0.0	0.0	0.0	0.0	0.0	0.0	185	0.0	0.0	0.0	0.0	0.0	0.0
	182	0.0	0.0	0.0	0.0	0.0	0.0	183	0.0	0.0	0.0	0.0	0.0	0.0
164	185	0.0	0.0	0.0	0.0	0.0	0.0	120	0.0	0.0	0.0	0.0	0.0	0.0
	183	0.0	0.0	0.0	0.0	0.0	0.0	9	0.0	0.0	0.0	0.0	0.0	0.0
165	163	0.0	0.0	0.0	0.0	0.0	0.0	186	0.0	0.0	0.0	0.0	0.0	0.0
	160	0.0	0.0	0.0	0.0	0.0	0.0	184	0.0	0.0	0.0	0.0	0.0	0.0
166	186	0.0	0.0	0.0	0.0	0.0	0.0	187	0.0	0.0	0.0	0.0	0.0	0.0
	184	0.0	0.0	0.0	0.0	0.0	0.0	185	0.0	0.0	0.0	0.0	0.0	0.0
167	187	0.0	0.0	0.0	0.0	0.0	0.0	124	0.0	0.0	0.0	0.0	0.0	0.0
	185	0.0	0.0	0.0	0.0	0.0	0.0	120	0.0	0.0	0.0	0.0	0.0	0.0
168	33	0.0	0.0	0.0	0.0	0.0	0.0	188	0.0	0.0	0.0	0.0	0.0	0.0
	163	0.0	0.0	0.0	0.0	0.0	0.0	186	0.0	0.0	0.0	0.0	0.0	0.0
169	188	0.0	0.0	0.0	0.0	0.0	0.0	189	0.0	0.0	0.0	0.0	0.0	0.0
	186	0.0	0.0	0.0	0.0	0.0	0.0	187	0.0	0.0	0.0	0.0	0.0	0.0
170	189	0.0	0.0	0.0	0.0	0.0	0.0	26	0.0	0.0	0.0	0.0	0.0	0.0
	187	0.0	0.0	0.0	0.0	0.0	0.0	124	0.0	0.0	0.0	0.0	0.0	0.0
171	190	0.0	0.0	0.0	0.0	0.0	0.0	191	0.0	0.0	0.0	0.0	0.0	0.0
	73	0.0	0.0	0.0	0.0	0.0	0.0	72	0.0	0.0	0.0	0.0	0.0	0.0
172	191	0.0	0.0	0.0	0.0	0.0	0.0	139	0.0	0.0	0.0	0.0	0.0	0.0
	72	0.0	0.0	0.0	0.0	0.0	0.0	3	0.0	0.0	0.0	0.0	0.0	0.0
173	127	0.0	0.0	0.0	0.0	0.0	0.0	192	0.0	0.0	0.0	0.0	0.0	0.0
	123	0.0	0.0	0.0	0.0	0.0	0.0	190	0.0	0.0	0.0	0.0	0.0	0.0
174	192	0.0	0.0	0.0	0.0	0.0	0.0	193	0.0	0.0	0.0	0.0	0.0	0.0
	190	0.0	0.0	0.0	0.0	0.0	0.0	191	0.0	0.0	0.0	0.0	0.0	0.0
175	193	0.0	0.0	0.0	0.0	0.0	0.0	143	0.0	0.0	0.0	0.0	0.0	0.0
	191	0.0	0.0	0.0	0.0	0.0	0.0	139	0.0	0.0	0.0	0.0	0.0	0.0
176	27	0.0	0.0	0.0	0.0	0.0	0.0	194	0.0	0.0	0.0	0.0	0.0	0.0
	127	0.0	0.0	0.0	0.0	0.0	0.0	192	0.0	0.0	0.0	0.0	0.0	0.0
177	194	0.0	0.0	0.0	0.0	0.0	0.0	195	0.0	0.0	0.0	0.0	0.0	0.0
	192	0.0	0.0	0.0	0.0	0.0	0.0	193	0.0	0.0	0.0	0.0	0.0	0.0
178	195	0.0	0.0	0.0	0.0	0.0	0.0	28	0.0	0.0	0.0	0.0	0.0	0.0
	193	0.0	0.0	0.0	0.0	0.0	0.0	143	0.0	0.0	0.0	0.0	0.0	0.0
179	52	0.0	0.0	0.0	0.0	0.0	0.0	119	0.0	0.0	0.0	0.0	0.0	0.0
	53	0.0	0.0	0.0	0.0	0.0	0.0	118	0.0	0.0	0.0	0.0	0.0	0.0
180	7	0.0	0.0	0.0	0.0	0.0	0.0	34	0.0	0.0	0.0	0.0	0.0	0.0
	52	0.0	0.0	0.0	0.0	0.0	0.0	119	0.0	0.0	0.0	0.0	0.0	0.0

FORZE: SISMA 90°°: MODO11: SHELL

Shell Nro	Nodo N.ro	Tx (kN)	Ty (kN)	Tz (kN)	Mx (kN*m)	My (kN*m)	Mz (kN*m)	Nodo N.ro	Tx (kN)	Ty (kN)	Tz (kN)	Mx (kN*m)	My (kN*m)	Mz (kN*m)
1	38	1.2	-2.1	0.0	0.0	0.0	0.0	39	0.9	-0.5	0.0	0.0	0.0	0.1
	14	-0.8	-1.0	0.0	0.0	0.0	0.0	1	-1.3	3.5	0.0	0.0	0.0	-0.1
2	6	0.1	0.4	0.0	0.0	0.0	0.0	44	0.2	0.1	0.0	0.0	0.0	0.0
	2	-0.1	-0.2	0.0	0.0	0.0	0.0	42	-0.2	-0.2	0.0	0.0	0.0	0.0
3	39	-1.6	-0.7	0.0	0.0	0.0	-0.1	44	-0.5	0.0	0.0	0.0	0.0	0.1
	1	1.9	1.0	0.0	0.0	0.0	0.1	6	0.2	-0.3	0.0	0.0	0.0	0.0

Documento di proprietà **Snam Rete Gas**. La Società tutelerà i propri diritti in sede civile e penale a termini di legge.

FORZE: SISMA 90°°: MODO11: SHELL

Shell Nro	Nodo N.ro	Tx (kN)	Ty (kN)	Tz (kN)	Mx (kN*m)	My (kN*m)	Mz (kN*m)	Nodo N.ro	Tx (kN)	Ty (kN)	Tz (kN)	Mx (kN*m)	My (kN*m)	Mz (kN*m)
4	46	0.1	0.1	0.0	0.0	0.0	0.0	47	-0.4	-0.1	0.0	0.0	0.0	0.0
	10	0.4	-0.1	0.0	0.0	0.0	0.0	16	0.0	0.0	0.0	0.0	0.0	0.0
5	50	0.6	-0.3	0.0	0.0	0.0	0.0	46	0.2	0.7	0.0	0.0	0.0	0.0
	4	-0.2	-0.4	0.0	0.0	0.0	0.0	10	-0.6	0.1	0.0	0.0	0.0	0.0
6	54	0.0	0.0	-0.1	0.0	0.0	0.0	55	0.0	0.0	0.0	0.0	0.0	0.0
	7	0.0	0.0	-0.1	0.0	0.0	0.0	52	0.0	0.0	0.1	0.0	0.0	0.0
7	64	0.0	0.0	-0.1	0.0	0.0	0.0	65	0.0	0.0	0.1	0.0	0.0	0.0
	5	0.0	0.0	0.0	0.0	0.0	0.0	62	0.0	0.0	0.0	0.0	0.0	0.0
8	47	-0.1	0.0	0.0	0.0	0.0	0.0	72	-0.2	-0.2	0.0	0.0	0.0	0.0
	16	0.3	0.2	0.0	0.0	0.0	0.0	3	0.1	0.0	0.0	0.0	0.0	0.0
9	76	0.0	-0.1	0.0	0.0	0.0	0.0	77	0.2	0.1	0.0	0.0	0.0	0.0
	25	-0.1	-0.1	0.0	0.0	0.0	0.0	74	0.0	0.1	0.0	0.0	0.0	0.0
10	38	0.0	0.0	-0.3	0.1	0.0	0.0	86	0.0	0.0	0.1	0.0	0.0	0.0
	14	0.0	0.0	0.2	0.0	0.0	0.0	71	0.0	0.0	-0.1	0.0	0.0	0.0
11	94	0.0	0.0	0.1	0.0	0.0	0.0	95	0.0	0.0	-0.1	0.0	0.0	0.0
	18	0.0	0.0	0.0	0.0	0.0	0.0	91	0.0	0.0	0.0	0.0	0.0	0.0
12	102	0.4	-0.3	0.0	0.0	0.0	0.0	103	0.1	0.2	0.0	0.0	0.0	0.0
	21	-0.1	-0.1	0.0	0.0	0.0	0.0	84	-0.3	0.2	0.0	0.0	0.0	0.0
13	112	0.1	-0.1	0.0	0.0	0.0	0.0	76	0.2	0.2	0.0	0.0	0.0	0.0
	36	-0.3	-0.1	0.0	0.0	0.0	0.0	25	0.0	0.0	0.0	0.0	0.0	0.0
14	114	-0.1	-0.1	0.0	0.0	0.0	0.0	112	0.3	0.0	0.0	0.0	0.0	0.0
	35	-0.3	0.1	0.0	0.0	0.0	0.0	36	0.1	0.0	0.0	0.0	0.0	0.0
15	24	-0.1	-0.3	0.0	0.0	0.0	0.0	116	-0.2	-0.1	0.0	0.0	0.0	0.0
	21	0.1	0.2	0.0	0.0	0.0	0.0	102	0.2	0.2	0.0	0.0	0.0	0.0
16	118	1.6	0.7	0.0	0.0	0.0	0.1	116	0.5	-0.1	0.0	0.0	0.0	-0.1
	20	-1.9	-0.9	0.0	0.0	0.0	-0.1	24	-0.1	0.3	0.0	0.0	0.0	0.0
17	120	0.1	0.0	0.0	0.0	0.0	0.0	121	0.1	0.2	0.0	0.0	0.0	0.0
	9	-0.1	-0.1	0.0	0.0	0.0	0.0	43	-0.1	0.0	0.0	0.0	0.0	0.0
18	10	0.0	-0.1	0.0	0.0	0.0	0.0	130	-0.1	-0.2	-0.1	0.0	0.0	0.0
	4	0.1	0.3	0.0	0.0	0.0	0.0	68	0.0	0.1	0.1	0.0	0.0	0.0
19	100	-0.5	0.3	0.0	0.0	0.0	0.0	114	-0.2	-0.6	0.0	0.0	0.0	0.0
	19	0.2	0.4	0.0	0.0	0.0	0.0	35	0.5	-0.1	0.0	0.0	0.0	0.0
20	35	0.0	0.1	0.0	0.0	0.0	0.0	149	0.1	0.2	0.1	0.0	0.0	0.0
	19	-0.1	-0.3	0.0	0.0	0.0	0.0	97	0.0	-0.1	-0.1	0.0	0.0	0.0
21	132	0.1	0.0	-0.1	0.0	0.0	0.0	166	-0.1	0.0	-0.1	0.0	0.0	0.0
	5	0.0	0.0	0.1	0.0	0.0	0.0	58	0.0	0.0	0.1	0.0	0.0	0.0
22	151	-0.1	0.0	0.1	0.0	0.0	0.0	178	0.1	0.0	0.0	0.0	0.0	0.0
	18	0.0	0.0	-0.1	0.0	0.0	0.0	93	0.0	0.0	0.0	0.0	0.0	0.0
23	123	0.2	-0.3	0.0	0.0	0.0	0.0	190	0.2	0.1	0.0	0.0	0.0	0.0
	2	-0.1	-0.1	0.0	0.0	0.0	0.0	73	-0.3	0.4	0.0	0.0	0.0	0.0
24	53	-1.3	2.1	0.0	0.0	0.0	0.0	118	-0.9	0.5	0.0	0.0	0.0	-0.1
	11	0.9	0.8	0.0	0.0	0.0	0.0	20	1.3	-3.5	0.0	0.0	0.0	0.1
25	40	0.5	-0.9	0.0	0.0	0.0	0.0	41	0.7	-0.1	0.0	0.0	0.0	0.1
	38	-0.8	-0.4	0.0	0.0	0.0	0.0	39	-0.4	1.4	0.0	0.0	0.0	-0.1
26	17	0.2	-0.4	0.0	0.0	0.0	0.0	12	0.5	0.1	0.0	0.0	0.0	0.0
	40	-0.5	-0.3	0.0	0.0	0.0	0.0	41	-0.2	0.6	0.0	0.0	0.0	0.0
27	44	0.0	0.0	0.0	0.0	0.0	0.0	45	0.2	0.3	0.0	0.0	0.0	0.0
	42	-0.2	-0.1	0.0	0.0	0.0	0.0	43	0.0	-0.1	0.0	0.0	0.0	0.0
28	45	0.1	-0.1	0.0	0.0	0.0	0.0	15	0.1	0.3	0.0	0.0	0.0	0.0
	43	-0.2	-0.2	0.0	0.0	0.0	0.0	9	0.0	0.0	0.0	0.0	0.0	0.0
29	41	-0.7	-0.3	0.0	0.0	0.0	0.0	45	-0.3	-0.1	0.0	0.0	0.0	0.0
	39	0.5	0.5	0.0	0.0	0.0	0.1	44	0.4	-0.1	0.0	0.0	0.0	0.0
30	12	-0.3	0.0	0.0	0.0	0.0	0.0	15	0.1	0.0	0.0	0.0	0.0	0.0
	41	-0.1	0.1	0.0	0.0	0.0	0.0	45	0.3	-0.1	0.0	0.0	0.0	0.0
31	48	-0.4	0.6	0.0	0.0	0.0	0.1	49	-0.4	-0.1	0.0	0.0	0.0	0.0
	46	0.5	-0.5	0.0	0.0	0.0	0.0	47	0.3	-0.1	0.0	0.0	0.0	0.0
32	1	-1.7	1.2	0.0	0.0	0.0	0.1	8	-0.2	-0.3	0.0	0.0	0.0	0.0
	48	1.4	-1.0	0.0	0.0	0.0	-0.1	49	0.5	0.0	0.0	0.0	0.0	0.1
33	51	0.8	-0.4	0.0	0.0	0.0	0.0	48	0.5	1.5	0.0	0.0	0.0	-0.1
	50	-0.6	-1.0	0.0	0.0	0.0	0.0	46	-0.7	-0.1	0.0	0.0	0.0	0.1
34	14	0.9	-0.8	0.0	0.0	0.0	0.0	1	1.3	3.5	0.0	0.0	0.0	-0.1
	51	-1.3	-2.1	0.0	0.0	0.0	0.0	48	-0.9	-0.5	0.0	0.0	0.0	0.1
35	55	0.0	0.0	-0.1	0.0	0.0	0.0	56	0.0	0.0	0.0	0.0	0.0	0.0
	52	0.0	0.0	-0.1	0.0	0.0	0.0	53	0.0	0.0	0.2	0.0	0.1	0.0
36	56	0.0	0.0	-0.1	0.0	0.0	0.0	57	0.0	0.0	0.1	0.0	0.0	0.0
	53	0.0	0.0	0.3	0.0	-0.1	0.0	11	0.0	0.0	-0.3	0.0	0.0	0.0
37	58	0.0	0.0	0.0	0.0	0.0	0.0	59	0.0	0.0	0.0	0.0	0.0	0.0
	54	0.0	0.0	-0.1	0.0	0.0	0.0	55	0.0	0.0	0.1	0.0	0.0	0.0
38	59	0.0	0.0	0.0	0.0	0.0	0.0	60	0.0	0.0	0.0	0.0	0.0	0.0
	55	0.0	0.0	0.0	0.0	0.0	0.0	56	0.0	0.0	0.0	0.0	0.0	0.0
39	60	0.0	0.0	-0.1	0.0	0.0	0.0	61	0.0	0.0	0.1	0.0	0.0	0.0
	56	0.0	0.0	0.1	0.0	0.0	0.0	57	0.0	0.0	-0.1	0.0	0.0	0.0
40	5	0.0	0.0	0.0	0.0	0.0	0.0	62	0.0	0.0	0.0	0.0	0.0	0.0
	58	0.0	0.0	-0.1	0.0	0.0	0.0	59	0.0	0.0	0.1	0.0	0.0	0.0
41	62	0.0	0.0	0.0	0.0	0.0	0.0	63	0.0	0.0	0.0	0.0	0.0	0.0
	59	0.0	0.0	0.0	0.0	0.0	0.0	60	0.0	0.0	0.0	0.0	0.0	0.0
42	63	0.0	0.0	0.0	0.0	0.0	0.0	13	0.0	0.0	0.0	0.0	0.0	0.0
	60	0.0	0.0	0.0	0.0	0.0	0.0	61	0.0	0.0	0.0	0.0	0.0	0.0
43	65	0.0	0.0	0.0	0.0	0.0	0.0	66	0.0	0.0	0.0	0.0	0.0	0.0
	62	0.0	0.0	0.0	0.0	0.0	0.0	63	0.0	0.0	0.0	0.0	0.0	0.0

Documento di proprietà **Snam Rete Gas**. La Società tutelerà i propri diritti in sede civile e penale a termini di legge.

FORZE: SISMA 90°°: MODO11: SHELL

Shell Nro	Nodo N.ro	Tx (kN)	Ty (kN)	Tz (kN)	Mx (kN*m)	My (kN*m)	Mz (kN*m)	Nodo N.ro	Tx (kN)	Ty (kN)	Tz (kN)	Mx (kN*m)	My (kN*m)	Mz (kN*m)
44	66	0.0	0.0	0.0	0.0	0.0	0.0	67	0.0	0.0	0.0	0.0	0.0	0.0
	63	0.0	0.0	0.0	0.0	0.0	0.0	13	0.0	0.0	0.0	0.0	0.0	0.0
45	68	0.0	0.0	-0.1	0.0	0.0	0.0	69	0.0	0.0	0.1	0.0	0.0	0.0
	64	0.0	0.0	0.0	0.0	0.0	0.0	65	0.0	0.0	0.0	0.0	0.0	0.0
46	69	0.0	0.0	0.0	0.0	0.0	0.0	70	0.0	0.0	0.0	0.0	0.0	0.0
	65	0.0	0.0	0.0	0.0	0.0	0.0	66	0.0	0.0	0.0	0.0	0.0	0.0
47	70	0.0	0.0	0.1	0.0	0.0	0.0	71	0.0	0.0	-0.1	0.0	0.0	0.0
	66	0.0	0.0	-0.1	0.0	0.0	0.0	67	0.0	0.0	0.1	0.0	0.0	0.0
48	4	0.0	0.0	0.0	0.0	0.0	0.0	50	0.0	0.0	0.1	0.0	0.0	0.0
	68	0.0	0.0	-0.1	0.0	0.0	0.0	69	0.0	0.0	0.0	0.0	0.0	0.0
49	50	0.0	0.0	-0.1	0.0	0.0	0.0	51	0.0	0.0	0.2	0.0	0.1	0.0
	69	0.0	0.0	-0.1	0.0	0.0	0.0	70	0.0	0.0	0.0	0.0	0.0	0.0
50	51	0.0	0.0	0.3	0.0	-0.1	0.0	14	0.0	0.0	-0.3	0.0	0.0	0.0
	70	0.0	0.0	-0.1	0.0	0.0	0.0	71	0.0	0.0	0.1	0.0	0.0	0.0
51	49	-0.1	0.0	0.0	0.0	0.0	0.0	73	-0.2	-0.1	0.0	0.0	0.0	0.0
	47	0.3	0.1	0.0	0.0	0.0	0.0	72	-0.1	0.0	0.0	0.0	0.0	0.0
52	8	0.3	-0.1	0.0	0.0	0.0	0.0	2	-0.3	0.0	0.0	0.0	0.0	0.0
	49	0.2	0.1	0.0	0.0	0.0	0.0	73	-0.2	-0.1	0.0	0.0	0.0	0.0
53	77	0.0	-0.1	0.0	0.0	0.0	0.0	78	0.1	0.0	0.0	0.0	0.0	0.0
	74	-0.1	0.0	0.0	0.0	0.0	0.0	75	-0.1	0.1	0.0	0.0	0.0	0.0
54	78	0.0	-0.1	0.0	0.0	0.0	0.0	79	0.0	0.0	0.0	0.0	0.0	0.0
	75	0.0	0.0	0.0	0.0	0.0	0.0	32	0.0	0.0	0.0	0.0	0.0	0.0
55	80	0.0	-0.1	0.0	0.0	0.0	0.0	81	0.3	0.1	0.0	0.0	0.0	0.0
	76	-0.3	-0.1	0.0	0.0	0.0	0.0	77	0.0	0.1	0.0	0.0	0.0	0.0
56	81	0.0	-0.2	0.0	0.0	0.0	0.0	82	0.2	0.1	0.0	0.0	0.0	0.0
	77	-0.2	0.0	0.0	0.0	0.0	0.0	78	0.0	0.1	0.0	0.0	0.0	0.0
57	82	0.1	-0.1	0.0	0.0	0.0	0.0	83	0.1	0.1	0.0	0.0	0.0	0.0
	78	-0.1	0.0	0.0	0.0	0.0	0.0	79	0.0	0.1	0.0	0.0	0.0	0.0
58	21	0.2	-0.2	0.0	0.0	0.0	0.0	84	0.3	0.2	0.0	0.0	0.0	0.0
	80	-0.4	-0.2	0.0	0.0	0.0	0.0	81	-0.1	0.2	0.0	0.0	0.0	0.0
59	84	0.2	-0.2	0.0	0.0	0.0	0.0	85	0.2	0.1	0.0	0.0	0.0	0.0
	81	-0.2	-0.1	0.0	0.0	0.0	0.0	82	-0.1	0.2	0.0	0.0	0.0	0.0
60	85	0.1	-0.1	0.0	0.0	0.0	0.0	31	0.1	0.1	0.0	0.0	0.0	0.0
	82	-0.1	-0.1	0.0	0.0	0.0	0.0	83	-0.1	0.1	0.0	0.0	0.0	0.0
61	86	0.0	0.0	-0.1	0.0	0.0	0.0	87	0.0	0.0	0.1	0.0	0.0	0.0
	71	0.0	0.0	0.1	0.0	0.0	0.0	67	0.0	0.0	-0.1	0.0	0.0	0.0
62	87	0.0	0.0	0.0	0.0	0.0	0.0	88	0.0	0.0	0.0	0.0	0.0	0.0
	67	0.0	0.0	0.0	0.0	0.0	0.0	13	0.0	0.0	0.0	0.0	0.0	0.0
63	40	0.0	0.0	0.1	0.0	0.0	0.0	89	0.0	0.0	0.1	0.0	0.0	0.0
	38	0.0	0.0	-0.2	0.0	0.0	0.0	86	0.0	0.0	0.0	0.0	0.0	0.0
64	89	0.0	0.0	0.0	0.0	0.0	0.0	90	0.0	0.0	0.0	0.0	0.0	0.0
	86	0.0	0.0	0.0	0.0	0.0	0.0	87	0.0	0.0	0.0	0.0	0.0	0.0
65	90	0.0	0.0	0.0	0.0	0.0	0.0	91	0.0	0.0	0.0	0.0	0.0	0.0
	87	0.0	0.0	0.0	0.0	0.0	0.0	88	0.0	0.0	0.0	0.0	0.0	0.0
66	17	0.0	0.0	0.0	0.0	0.0	0.0	92	0.0	0.0	0.1	0.0	0.0	0.0
	40	0.0	0.0	-0.1	0.0	0.0	0.0	89	0.0	0.0	0.0	0.0	0.0	0.0
67	92	0.0	0.0	0.1	0.0	0.0	0.0	93	0.0	0.0	0.0	0.0	0.0	0.0
	89	0.0	0.0	-0.1	0.0	0.0	0.0	90	0.0	0.0	0.0	0.0	0.0	0.0
68	93	0.0	0.0	0.1	0.0	0.0	0.0	18	0.0	0.0	0.0	0.0	0.0	0.0
	90	0.0	0.0	-0.1	0.0	0.0	0.0	91	0.0	0.0	0.0	0.0	0.0	0.0
69	95	0.0	0.0	0.0	0.0	0.0	0.0	96	0.0	0.0	0.0	0.0	0.0	0.0
	91	0.0	0.0	0.0	0.0	0.0	0.0	88	0.0	0.0	0.0	0.0	0.0	0.0
70	96	0.0	0.0	0.0	0.0	0.0	0.0	61	0.0	0.0	0.0	0.0	0.0	0.0
	88	0.0	0.0	0.0	0.0	0.0	0.0	13	0.0	0.0	0.0	0.0	0.0	0.0
71	97	0.0	0.0	0.1	0.0	0.0	0.0	98	0.0	0.0	-0.1	0.0	0.0	0.0
	94	0.0	0.0	0.0	0.0	0.0	0.0	95	0.0	0.0	0.0	0.0	0.0	0.0
72	98	0.0	0.0	0.0	0.0	0.0	0.0	99	0.0	0.0	0.0	0.0	0.0	0.0
	95	0.0	0.0	0.0	0.0	0.0	0.0	96	0.0	0.0	0.0	0.0	0.0	0.0
73	99	0.0	0.0	-0.1	0.0	0.0	0.0	57	0.0	0.0	0.1	0.0	0.0	0.0
	96	0.0	0.0	0.1	0.0	0.0	0.0	61	0.0	0.0	-0.1	0.0	0.0	0.0
74	19	0.0	0.0	0.0	0.0	0.0	0.0	100	0.0	0.0	-0.1	0.0	0.0	0.0
	97	0.0	0.0	0.1	0.0	0.0	0.0	98	0.0	0.0	0.0	0.0	0.0	0.0
75	100	0.0	0.0	0.1	0.0	0.0	0.0	101	0.0	0.0	-0.2	0.0	-0.1	0.0
	98	0.0	0.0	0.1	0.0	0.0	0.0	99	0.0	0.0	0.0	0.0	0.0	0.0
76	101	0.0	0.0	-0.3	0.0	0.1	0.0	11	0.0	0.0	0.2	0.0	0.0	0.0
	99	0.0	0.0	0.1	0.0	0.0	0.0	57	0.0	0.0	-0.1	0.0	0.0	0.0
77	103	0.2	-0.1	0.0	0.0	0.0	0.0	104	0.1	0.2	0.0	0.0	0.0	0.0
	84	-0.2	-0.2	0.0	0.0	0.0	0.0	85	-0.2	0.1	0.0	0.0	0.0	0.0
78	104	0.1	-0.1	0.0	0.0	0.0	0.0	105	0.1	0.1	0.0	0.0	0.0	0.0
	85	-0.1	-0.1	0.0	0.0	0.0	0.0	31	-0.1	0.1	0.0	0.0	0.0	0.0
79	106	0.3	-0.1	0.0	0.0	0.0	0.0	107	0.0	0.1	0.0	0.0	0.0	0.0
	102	0.0	-0.1	0.0	0.0	0.0	0.0	103	-0.3	0.1	0.0	0.0	0.0	0.0
80	107	0.2	0.0	0.0	0.0	0.0	0.0	108	0.1	0.1	0.0	0.0	0.0	0.0
	103	0.0	-0.2	0.0	0.0	0.0	0.0	104	-0.2	0.0	0.0	0.0	0.0	0.0
81	108	0.1	0.0	0.0	0.0	0.0	0.0	109	0.0	0.1	0.0	0.0	0.0	0.0
	104	0.0	-0.1	0.0	0.0	0.0	0.0	105	-0.1	0.0	0.0	0.0	0.0	0.0
82	22	0.1	-0.1	0.0	0.0	0.0	0.0	110	0.1	0.1	0.0	0.0	0.0	0.0
	106	0.0	-0.1	0.0	0.0	0.0	0.0	107	-0.2	0.1	0.0	0.0	0.0	0.0
83	110	0.1	0.0	0.0	0.0	0.0	0.0	111	0.1	0.1	0.0	0.0	0.0	0.0
	107	0.0	-0.1	0.0	0.0	0.0	0.0	108	-0.1	0.0	0.0	0.0	0.0	0.0

Documento di proprietà **Snam Rete Gas**. La Società tutelerà i propri diritti in sede civile e penale a termini di legge.

FORZE: SISMA 90°°: MODO11: SHELL

Shell Nro	Nodo N.ro	Tx (kN)	Ty (kN)	Tz (kN)	Mx (kN*m)	My (kN*m)	Mz (kN*m)	Nodo N.ro	Tx (kN)	Ty (kN)	Tz (kN)	Mx (kN*m)	My (kN*m)	Mz (kN*m)
84	111	0.0	0.0	0.0	0.0	0.0	0.0	30	0.0	0.1	0.0	0.0	0.0	0.0
	108	0.0	-0.1	0.0	0.0	0.0	0.0	109	0.0	0.0	0.0	0.0	0.0	0.0
85	113	0.0	0.0	0.0	0.0	0.0	0.0	80	0.2	0.1	0.0	0.0	0.0	0.0
	112	-0.3	-0.1	0.0	0.0	0.0	0.0	76	0.1	0.0	0.0	0.0	0.0	0.0
86	23	-0.4	0.1	0.0	0.0	0.0	0.0	21	0.3	0.0	0.0	0.0	0.0	0.0
	113	-0.2	-0.2	0.0	0.0	0.0	0.0	80	0.3	0.0	0.0	0.0	0.0	0.0
87	115	0.4	-0.6	0.0	0.0	0.0	-0.1	113	0.4	0.0	0.0	0.0	0.0	0.0
	114	-0.6	0.5	0.0	0.0	0.0	0.0	112	-0.3	0.1	0.0	0.0	0.0	0.0
88	20	1.7	-1.3	0.0	0.0	0.0	-0.1	23	0.3	0.3	0.0	0.0	0.0	0.0
	115	-1.5	1.0	0.0	0.0	0.0	0.1	113	-0.5	0.0	0.0	0.0	0.0	-0.1
89	116	0.0	0.1	0.0	0.0	0.0	0.0	117	-0.2	-0.3	0.0	0.0	0.0	0.0
	102	0.2	0.2	0.0	0.0	0.0	0.0	106	0.0	0.1	0.0	0.0	0.0	0.0
90	117	0.0	0.1	0.0	0.0	0.0	0.0	37	-0.2	-0.3	0.0	0.0	0.0	0.0
	106	0.2	0.2	0.0	0.0	0.0	0.0	22	0.0	-0.1	0.0	0.0	0.0	0.0
91	119	0.7	0.3	0.0	0.0	0.0	0.0	117	0.3	0.0	0.0	0.0	0.0	0.0
	118	-0.6	-0.5	0.0	0.0	0.0	-0.1	116	-0.4	0.2	0.0	0.0	0.0	0.0
92	34	0.4	-0.1	0.0	0.0	0.0	0.0	37	0.0	0.0	0.0	0.0	0.0	0.0
	119	0.0	-0.2	0.0	0.0	0.0	0.0	117	-0.3	0.2	0.0	0.0	0.0	0.0
93	121	0.1	0.0	0.0	0.0	0.0	0.0	122	0.1	0.3	0.0	0.0	0.0	0.0
	43	-0.1	-0.3	0.0	0.0	0.0	0.0	42	-0.1	0.0	0.0	0.0	0.0	0.0
94	122	0.2	-0.1	0.0	0.0	0.0	0.0	123	0.2	0.3	0.0	0.0	0.0	0.0
	42	-0.2	-0.4	0.0	0.0	0.0	0.0	2	-0.2	0.2	0.0	0.0	0.0	0.0
95	124	0.1	-0.1	0.0	0.0	0.0	0.0	125	0.0	0.1	0.0	0.0	0.0	0.0
	120	0.0	-0.1	0.0	0.0	0.0	0.0	121	-0.1	0.0	0.0	0.0	0.0	0.0
96	125	0.1	0.0	0.0	0.0	0.0	0.0	126	0.1	0.2	0.0	0.0	0.0	0.0
	121	0.0	-0.2	0.0	0.0	0.0	0.0	122	-0.2	0.0	0.0	0.0	0.0	0.0
97	126	0.2	-0.1	0.0	0.0	0.0	0.0	127	0.1	0.2	0.0	0.0	0.0	0.0
	122	-0.1	-0.2	0.0	0.0	0.0	0.0	123	-0.2	0.2	0.0	0.0	0.0	0.0
98	26	0.1	0.0	0.0	0.0	0.0	0.0	128	0.0	0.0	0.0	0.0	0.0	0.0
	124	0.0	0.0	0.0	0.0	0.0	0.0	125	-0.1	0.0	0.0	0.0	0.0	0.0
99	128	0.1	0.0	0.0	0.0	0.0	0.0	129	0.1	0.1	0.0	0.0	0.0	0.0
	125	0.0	-0.1	0.0	0.0	0.0	0.0	126	-0.1	0.1	0.0	0.0	0.0	0.0
100	129	0.1	-0.1	0.0	0.0	0.0	0.0	27	0.1	0.1	0.0	0.0	0.0	0.0
	126	-0.1	-0.1	0.0	0.0	0.0	0.0	127	-0.1	0.1	0.0	0.0	0.0	0.0
101	130	0.1	-0.1	0.0	0.0	0.0	0.0	131	-0.1	-0.1	-0.1	0.0	0.0	0.0
	68	0.1	0.1	0.0	0.0	0.0	0.0	64	0.0	0.0	0.1	0.0	0.0	0.0
102	131	0.1	0.0	0.0	0.0	0.0	0.0	132	-0.1	0.0	-0.1	0.0	0.0	0.0
	64	0.0	0.0	0.0	0.0	0.0	0.0	5	0.0	0.0	0.1	0.0	0.0	0.0
103	16	0.1	-0.3	0.1	0.0	0.0	0.0	133	-0.1	-0.2	-0.1	0.0	0.0	0.0
	10	0.1	0.3	0.0	0.0	0.0	0.0	130	-0.1	0.2	0.0	0.0	0.0	0.0
104	133	0.1	-0.1	0.0	0.0	0.0	0.0	134	-0.1	-0.1	-0.1	0.0	0.0	0.0
	130	0.1	0.1	0.0	0.0	0.0	0.0	131	-0.1	0.0	0.0	0.0	0.0	0.0
105	134	0.1	0.0	0.0	0.0	0.0	0.0	135	-0.1	0.0	0.0	0.0	0.0	0.0
	131	0.1	0.1	0.0	0.0	0.0	0.0	132	-0.1	0.0	0.0	0.0	0.0	0.0
106	3	0.1	-0.2	0.0	0.0	0.0	0.0	136	0.0	0.0	0.0	0.0	0.0	0.0
	16	0.0	0.0	0.1	0.0	0.0	0.0	133	0.0	0.2	-0.1	0.0	0.0	0.0
107	136	0.0	-0.1	0.0	0.0	0.0	0.0	137	0.0	-0.1	0.0	0.0	0.0	0.0
	133	0.1	0.1	0.0	0.0	0.0	0.0	134	-0.1	0.1	-0.1	0.0	0.0	0.0
108	137	0.0	0.0	0.0	0.0	0.0	0.0	138	-0.1	-0.1	0.0	0.0	0.0	0.0
	134	0.1	0.1	0.0	0.0	0.0	0.0	135	-0.1	0.0	-0.1	0.0	0.0	0.0
109	139	0.0	-0.1	-0.1	0.0	0.0	0.0	140	0.1	0.0	0.1	0.0	0.0	0.0
	3	-0.1	0.0	0.1	0.0	0.0	0.0	136	0.0	0.1	-0.1	0.0	0.0	0.0
110	140	0.0	-0.1	0.0	0.0	0.0	0.0	141	0.0	0.0	0.1	0.0	0.0	0.0
	136	0.0	0.0	0.0	0.0	0.0	0.0	137	0.0	0.1	-0.1	0.0	0.0	0.0
111	141	0.0	-0.1	0.0	0.0	0.0	0.0	142	0.0	0.0	0.1	0.0	0.0	0.0
	137	0.0	0.0	0.0	0.0	0.0	0.0	138	0.0	0.1	-0.1	0.0	0.0	0.0
112	143	0.0	0.0	-0.1	0.0	0.0	0.0	144	0.1	0.0	0.1	0.0	0.0	0.0
	139	-0.1	-0.1	0.0	0.0	0.0	0.0	140	0.0	0.1	0.0	0.0	0.0	0.0
113	144	0.0	-0.1	0.0	0.0	0.0	0.0	145	0.0	0.0	0.0	0.0	0.0	0.0
	140	0.0	0.0	0.0	0.0	0.0	0.0	141	0.0	0.1	0.0	0.0	0.0	0.0
114	145	0.0	0.0	0.0	0.0	0.0	0.0	146	0.0	0.0	0.0	0.0	0.0	0.0
	141	0.0	0.0	0.0	0.0	0.0	0.0	142	0.0	0.0	0.0	0.0	0.0	0.0
115	28	0.0	0.0	0.0	0.0	0.0	0.0	147	0.0	0.0	0.0	0.0	0.0	0.0
	143	0.0	-0.1	-0.1	0.0	0.0	0.0	144	0.0	0.1	0.1	0.0	0.0	0.0
116	147	0.0	0.0	0.0	0.0	0.0	0.0	148	0.0	0.0	-0.1	0.0	0.0	0.0
	144	0.0	0.0	0.0	0.0	0.0	0.0	145	0.0	0.1	0.1	0.0	0.0	0.0
117	148	0.0	0.0	0.0	0.0	0.0	0.0	29	0.0	0.0	-0.1	0.0	0.0	0.0
	145	0.0	0.0	0.0	0.0	0.0	0.0	146	0.0	0.0	0.1	0.0	0.0	0.0
118	101	-0.8	0.4	0.0	0.0	0.0	0.0	115	-0.4	-1.4	0.0	0.0	0.0	0.1
	100	0.5	1.0	0.0	0.0	0.0	0.0	114	0.7	0.1	0.0	0.0	0.0	-0.1
119	11	-0.8	1.0	0.0	0.0	0.0	0.0	20	-1.3	-3.6	0.0	0.0	0.0	0.1
	101	1.2	2.2	0.0	0.0	0.0	0.0	115	0.9	0.5	0.0	0.0	0.0	-0.1
120	149	-0.1	0.0	0.0	0.0	0.0	0.0	150	0.1	0.1	0.1	0.0	0.0	0.0
	97	-0.1	-0.1	0.0	0.0	0.0	0.0	94	0.0	0.0	-0.1	0.0	0.0	0.0
121	150	-0.1	0.0	0.1	0.0	0.0	0.0	151	0.1	0.0	0.1	0.0	0.0	0.0
	94	0.0	0.0	-0.1	0.0	0.0	0.0	18	0.0	0.0	-0.1	0.0	0.0	0.0
122	36	-0.1	0.3	0.0	0.0	0.0	0.0	152	0.1	0.2	0.1	0.0	0.0	0.0
	35	-0.1	-0.3	0.0	0.0	0.0	0.0	149	0.1	-0.2	0.0	0.0	0.0	0.0
123	152	-0.1	0.1	0.0	0.0	0.0	0.0	153	0.1	0.1	0.1	0.0	0.0	0.0
	149	-0.1	-0.1	0.0	0.0	0.0	0.0	150	0.1	0.0	0.0	0.0	0.0	0.0

Documento di proprietà **Snam Rete Gas**. La Società tutelerà i propri diritti in sede civile e penale a termini di legge.

FORZE: SISMA 90°°: MODO11: SHELL

Shell Nro	Nodo N.ro	Tx (kN)	Ty (kN)	Tz (kN)	Mx (kN*m)	My (kN*m)	Mz (kN*m)	Nodo N.ro	Tx (kN)	Ty (kN)	Tz (kN)	Mx (kN*m)	My (kN*m)	Mz (kN*m)
124	153	-0.1	0.0	0.0	0.0	0.0	0.0	154	0.1	0.0	0.0	0.0	0.0	0.0
	150	-0.1	0.0	0.0	0.0	0.0	0.0	151	0.1	0.0	0.0	0.0	0.0	0.0
125	25	-0.1	0.2	0.0	0.0	0.0	0.0	155	0.0	0.1	0.0	0.0	0.0	0.0
	36	0.0	-0.1	0.0	0.0	0.0	0.0	152	0.0	-0.1	0.1	0.0	0.0	0.0
126	155	0.0	0.1	0.0	0.0	0.0	0.0	156	0.0	0.1	0.0	0.0	0.0	0.0
	152	-0.1	-0.1	0.0	0.0	0.0	0.0	153	0.1	-0.1	0.1	0.0	0.0	0.0
127	156	0.0	0.0	0.0	0.0	0.0	0.0	157	0.1	0.0	0.0	0.0	0.0	0.0
	153	-0.1	-0.1	0.0	0.0	0.0	0.0	154	0.1	0.0	0.0	0.0	0.0	0.0
128	74	0.0	0.1	0.1	0.0	0.0	0.0	158	0.0	0.0	-0.1	0.0	0.0	0.0
	25	0.0	0.0	-0.1	0.0	0.0	0.0	155	0.0	-0.1	0.1	0.0	0.0	0.0
129	158	0.0	0.1	0.0	0.0	0.0	0.0	159	0.0	0.0	-0.1	0.0	0.0	0.0
	155	0.0	0.0	0.0	0.0	0.0	0.0	156	0.0	-0.1	0.1	0.0	0.0	0.0
130	159	0.0	0.1	0.0	0.0	0.0	0.0	160	0.0	0.0	-0.1	0.0	0.0	0.0
	156	0.0	0.0	0.0	0.0	0.0	0.0	157	0.0	0.0	0.1	0.0	0.0	0.0
131	75	0.0	0.0	0.0	0.0	0.0	0.0	161	-0.1	0.0	-0.1	0.0	0.0	0.0
	74	0.1	0.0	0.0	0.0	0.0	0.0	158	0.0	-0.1	0.0	0.0	0.0	0.0
132	161	0.0	0.1	0.0	0.0	0.0	0.0	162	0.0	0.0	0.0	0.0	0.0	0.0
	158	0.0	0.0	0.0	0.0	0.0	0.0	159	0.0	-0.1	0.0	0.0	0.0	0.0
133	162	0.0	0.0	0.0	0.0	0.0	0.0	163	0.0	0.0	0.0	0.0	0.0	0.0
	159	0.0	0.0	0.0	0.0	0.0	0.0	160	0.0	0.0	0.0	0.0	0.0	0.0
134	32	0.0	0.0	0.0	0.0	0.0	0.0	164	0.0	0.0	0.0	0.0	0.0	0.0
	75	0.0	0.1	0.1	0.0	0.0	0.0	161	0.0	0.0	-0.1	0.0	0.0	0.0
135	164	0.0	0.0	0.0	0.0	0.0	0.0	165	0.0	0.0	0.1	0.0	0.0	0.0
	161	0.0	0.0	0.0	0.0	0.0	0.0	162	0.0	0.0	-0.1	0.0	0.0	0.0
136	165	0.0	0.0	0.0	0.0	0.0	0.0	33	0.0	0.0	0.0	0.0	0.0	0.0
	162	0.0	0.0	0.0	0.0	0.0	0.0	163	0.0	0.0	0.0	0.0	0.0	0.0
137	166	0.1	-0.1	-0.1	0.0	0.0	0.0	167	-0.1	-0.1	0.0	0.0	0.0	0.0
	58	0.0	0.0	0.1	0.0	0.0	0.0	54	-0.1	0.1	0.0	0.0	0.0	0.0
138	167	0.1	-0.2	-0.1	0.0	0.0	0.0	34	0.0	-0.1	-0.1	0.0	0.0	0.0
	54	0.0	0.1	0.1	0.0	0.0	0.0	7	-0.1	0.3	0.0	0.0	0.0	0.0
139	135	0.1	0.0	0.0	0.0	0.0	0.0	168	-0.1	0.0	0.0	0.0	0.0	0.0
	132	0.1	0.0	0.0	0.0	0.0	0.0	166	-0.1	0.0	0.0	0.0	0.0	0.0
140	168	0.1	-0.1	-0.1	0.0	0.0	0.0	169	-0.1	-0.1	0.0	0.0	0.0	0.0
	166	0.1	0.0	0.0	0.0	0.0	0.0	167	-0.1	0.1	0.0	0.0	0.0	0.0
141	169	0.1	-0.2	-0.1	0.0	0.0	0.0	37	-0.1	-0.3	0.1	0.0	0.0	0.0
	167	0.1	0.2	0.0	0.0	0.0	0.0	34	-0.1	0.3	0.0	0.0	0.0	0.0
142	138	0.1	-0.1	0.0	0.0	0.0	0.0	170	0.0	-0.1	0.0	0.0	0.0	0.0
	135	0.1	0.0	0.0	0.0	0.0	0.0	168	-0.1	0.1	0.0	0.0	0.0	0.0
143	170	0.0	-0.1	0.0	0.0	0.0	0.0	171	0.0	-0.1	0.0	0.0	0.0	0.0
	168	0.1	0.1	-0.1	0.0	0.0	0.0	169	-0.1	0.1	0.0	0.0	0.0	0.0
144	171	0.0	-0.1	0.0	0.0	0.0	0.0	22	-0.1	-0.2	0.0	0.0	0.0	0.0
	169	0.0	0.2	-0.1	0.0	0.0	0.0	37	0.0	0.1	0.1	0.0	0.0	0.0
145	142	0.0	-0.1	0.1	0.0	0.0	0.0	172	0.0	-0.1	0.0	0.0	0.0	0.0
	138	0.0	0.1	-0.1	0.0	0.0	0.0	170	0.0	0.1	0.0	0.0	0.0	0.0
146	172	0.0	0.0	0.1	0.0	0.0	0.0	173	0.0	-0.1	0.0	0.0	0.0	0.0
	170	0.0	0.1	-0.1	0.0	0.0	0.0	171	0.0	0.0	0.0	0.0	0.0	0.0
147	173	-0.1	0.0	0.1	0.0	0.0	0.0	110	0.0	-0.1	-0.1	0.0	0.0	0.0
	171	0.0	0.1	-0.1	0.0	0.0	0.0	22	0.1	0.0	0.1	0.0	0.0	0.0
148	146	0.0	0.0	0.0	0.0	0.0	0.0	174	0.0	0.0	0.0	0.0	0.0	0.0
	142	0.0	0.0	0.0	0.0	0.0	0.0	172	0.0	0.0	0.0	0.0	0.0	0.0
149	174	0.0	0.0	0.0	0.0	0.0	0.0	175	0.0	-0.1	0.0	0.0	0.0	0.0
	172	0.0	0.1	0.0	0.0	0.0	0.0	173	0.0	0.0	0.0	0.0	0.0	0.0
150	175	-0.1	0.0	0.1	0.0	0.0	0.0	111	0.0	0.0	0.0	0.0	0.0	0.0
	173	0.0	0.1	0.0	0.0	0.0	0.0	110	0.1	-0.1	0.0	0.0	0.0	0.0
151	29	0.0	0.0	-0.1	0.0	0.0	0.0	176	0.0	0.0	0.0	0.0	0.0	0.0
	146	0.0	0.0	0.1	0.0	0.0	0.0	174	0.0	0.0	0.0	0.0	0.0	0.0
152	176	0.0	0.0	-0.1	0.0	0.0	0.0	177	0.0	0.0	0.0	0.0	0.0	0.0
	174	0.0	0.0	0.1	0.0	0.0	0.0	175	0.0	0.0	0.0	0.0	0.0	0.0
153	177	0.0	0.0	-0.1	0.0	0.0	0.0	30	0.0	0.0	0.0	0.0	0.0	0.0
	175	0.0	0.1	0.1	0.0	0.0	0.0	111	0.1	-0.1	-0.1	0.0	0.0	0.0
154	178	-0.1	0.1	0.1	0.0	0.0	0.0	179	0.1	0.0	0.0	0.0	0.0	0.0
	93	0.0	0.0	-0.1	0.0	0.0	0.0	92	0.1	-0.1	0.0	0.0	0.0	0.0
155	179	-0.1	0.2	0.1	0.0	0.0	0.0	12	0.0	0.1	0.0	0.0	0.0	0.0
	92	0.0	0.0	-0.1	0.0	0.0	0.0	17	0.1	-0.2	0.0	0.0	0.0	0.0
156	154	-0.1	0.0	0.0	0.0	0.0	0.0	180	0.1	0.0	0.0	0.0	0.0	0.0
	151	-0.1	0.0	0.0	0.0	0.0	0.0	178	0.1	0.0	0.0	0.0	0.0	0.0
157	180	-0.1	0.1	0.1	0.0	0.0	0.0	181	0.1	0.1	0.0	0.0	0.0	0.0
	178	-0.1	0.0	0.0	0.0	0.0	0.0	179	0.1	-0.1	0.0	0.0	0.0	0.0
158	181	-0.1	0.2	0.1	0.0	0.0	0.0	15	0.1	0.3	-0.1	0.0	0.0	0.0
	179	0.0	-0.1	0.0	0.0	0.0	0.0	12	0.1	-0.3	0.0	0.0	0.0	0.0
159	157	-0.1	0.0	0.0	0.0	0.0	0.0	182	0.0	0.0	0.0	0.0	0.0	0.0
	154	-0.1	0.0	0.0	0.0	0.0	0.0	180	0.1	-0.1	0.0	0.0	0.0	0.0
160	182	0.0	0.1	0.0	0.0	0.0	0.0	183	0.0	0.1	0.0	0.0	0.0	0.0
	180	-0.1	-0.1	0.1	0.0	0.0	0.0	181	0.1	-0.1	0.0	0.0	0.0	0.0
161	183	0.0	0.0	0.0	0.0	0.0	0.0	9	0.1	0.2	0.0	0.0	0.0	0.0
	181	0.0	-0.1	0.1	0.0	0.0	0.0	15	0.0	-0.1	-0.1	0.0	0.0	0.0
162	160	0.0	0.0	-0.1	0.0	0.0	0.0	184	0.0	0.1	0.0	0.0	0.0	0.0
	157	0.0	0.0	0.1	0.0	0.0	0.0	182	0.0	0.0	0.0	0.0	0.0	0.0
163	184	0.0	0.0	-0.1	0.0	0.0	0.0	185	0.0	0.1	0.0	0.0	0.0	0.0
	182	0.0	-0.1	0.1	0.0	0.0	0.0	183	0.0	0.0	0.0	0.0	0.0	0.0

Documento di proprietà **Snam Rete Gas**. La Società tutelerà i propri diritti in sede civile e penale a termini di legge.

FORZE: SISMA 90°°: MODO11: SHELL

Shell Nro	Nodo N.ro	Tx (kN)	Ty (kN)	Tz (kN)	Mx (kN*m)	My (kN*m)	Mz (kN*m)	Nodo N.ro	Tx (kN)	Ty (kN)	Tz (kN)	Mx (kN*m)	My (kN*m)	Mz (kN*m)
164	185	0.0	0.0	-0.1	0.0	0.0	0.0	120	0.0	0.1	0.1	0.0	0.0	0.0
	183	0.0	-0.1	0.1	0.0	0.0	0.0	9	0.0	0.0	-0.1	0.0	0.0	0.0
165	163	0.0	0.0	0.0	0.0	0.0	0.0	186	0.0	0.0	0.0	0.0	0.0	0.0
	160	0.0	0.0	0.0	0.0	0.0	0.0	184	0.0	0.0	0.0	0.0	0.0	0.0
166	186	0.0	0.0	0.0	0.0	0.0	0.0	187	0.0	0.1	0.0	0.0	0.0	0.0
	184	0.0	-0.1	0.0	0.0	0.0	0.0	185	0.0	0.0	0.0	0.0	0.0	0.0
167	187	0.0	0.0	-0.1	0.0	0.0	0.0	124	0.0	0.0	0.0	0.0	0.0	0.0
	185	0.0	-0.1	0.0	0.0	0.0	0.0	120	0.0	0.1	0.0	0.0	0.0	0.0
168	33	0.0	0.0	0.0	0.0	0.0	0.0	188	0.0	0.0	0.0	0.0	0.0	0.0
	163	0.0	0.0	-0.1	0.0	0.0	0.0	186	0.0	0.0	0.0	0.0	0.0	0.0
169	188	0.0	0.0	0.1	0.0	0.0	0.0	189	0.0	0.0	0.0	0.0	0.0	0.0
	186	0.0	0.0	-0.1	0.0	0.0	0.0	187	0.0	0.0	0.0	0.0	0.0	0.0
170	189	0.0	0.0	0.0	0.0	0.0	0.0	26	0.0	0.0	0.0	0.0	0.0	0.0
	187	0.0	0.0	-0.1	0.0	0.0	0.0	124	0.0	0.1	0.1	0.0	0.0	0.0
171	190	0.1	-0.3	0.0	0.0	0.0	0.0	191	0.1	0.0	0.0	0.0	0.0	0.0
	73	-0.1	0.0	0.0	0.0	0.0	0.0	72	-0.1	0.3	0.0	0.0	0.0	0.0
172	191	0.1	-0.2	0.0	0.0	0.0	0.0	139	0.1	0.1	0.0	0.0	0.0	0.0
	72	-0.1	0.0	0.0	0.0	0.0	0.0	3	-0.1	0.1	0.0	0.0	0.0	0.0
173	127	0.1	-0.2	0.0	0.0	0.0	0.0	192	0.2	0.1	0.0	0.0	0.0	0.0
	123	-0.2	-0.2	0.0	0.0	0.0	0.0	190	-0.1	0.2	0.0	0.0	0.0	0.0
174	192	0.0	-0.2	0.0	0.0	0.0	0.0	193	0.1	0.1	0.0	0.0	0.0	0.0
	190	-0.2	0.0	0.0	0.0	0.0	0.0	191	0.0	0.2	0.0	0.0	0.0	0.0
175	193	0.0	-0.1	0.0	0.0	0.0	0.0	143	0.1	0.1	0.0	0.0	0.0	0.0
	191	-0.1	0.0	0.0	0.0	0.0	0.0	139	0.0	0.1	0.0	0.0	0.0	0.0
176	27	0.1	-0.1	0.0	0.0	0.0	0.0	194	0.1	0.1	0.0	0.0	0.0	0.0
	127	-0.1	-0.1	0.0	0.0	0.0	0.0	192	-0.1	0.1	0.0	0.0	0.0	0.0
177	194	0.0	-0.1	0.0	0.0	0.0	0.0	195	0.1	0.0	0.0	0.0	0.0	0.0
	192	-0.1	0.0	0.0	0.0	0.0	0.0	193	0.0	0.1	0.0	0.0	0.0	0.0
178	195	0.0	0.0	0.0	0.0	0.0	0.0	28	0.1	0.0	0.0	0.0	0.0	0.0
	193	-0.1	0.0	0.0	0.0	0.0	0.0	143	0.0	0.0	0.0	0.0	0.0	0.0
179	52	-0.6	1.0	0.0	0.0	0.0	0.0	119	-0.7	0.1	0.0	0.0	0.0	-0.1
	53	0.8	0.4	0.0	0.0	0.0	0.0	118	0.5	-1.5	0.0	0.0	0.0	0.1
180	7	-0.2	0.4	0.0	0.0	0.0	0.0	34	-0.6	0.0	0.0	0.0	0.0	0.0
	52	0.6	0.3	0.0	0.0	0.0	0.0	119	0.2	-0.7	0.0	0.0	0.0	0.0

FORZE: SISMA 90°°: MODO12: SHELL

Shell Nro	Nodo N.ro	Tx (kN)	Ty (kN)	Tz (kN)	Mx (kN*m)	My (kN*m)	Mz (kN*m)	Nodo N.ro	Tx (kN)	Ty (kN)	Tz (kN)	Mx (kN*m)	My (kN*m)	Mz (kN*m)
1	38	0.0	0.0	0.0	0.0	0.0	0.0	39	0.0	0.0	0.0	0.0	0.0	0.0
	14	0.0	0.0	0.0	0.0	0.0	0.0	1	0.0	0.0	0.0	0.0	0.0	0.0
2	6	0.0	0.0	0.0	0.0	0.0	0.0	44	0.0	0.0	0.0	0.0	0.0	0.0
	2	0.0	0.0	0.0	0.0	0.0	0.0	42	0.0	0.0	0.0	0.0	0.0	0.0
3	39	0.0	0.0	0.0	0.0	0.0	0.0	44	0.0	0.0	0.0	0.0	0.0	0.0
	1	0.0	0.0	0.0	0.0	0.0	0.0	6	0.0	0.0	0.0	0.0	0.0	0.0
4	46	0.0	0.0	0.0	0.0	0.0	0.0	47	0.0	0.0	0.0	0.0	0.0	0.0
	10	0.0	0.0	0.0	0.0	0.0	0.0	16	0.0	0.0	0.0	0.0	0.0	0.0
5	50	0.0	0.0	0.0	0.0	0.0	0.0	46	0.0	0.0	0.0	0.0	0.0	0.0
	4	0.0	0.0	0.0	0.0	0.0	0.0	10	0.0	0.0	0.0	0.0	0.0	0.0
6	54	0.0	0.0	0.0	0.0	0.0	0.0	55	0.0	0.0	0.0	0.0	0.0	0.0
	7	0.0	0.0	0.0	0.0	0.0	0.0	52	0.0	0.0	0.0	0.0	0.0	0.0
7	64	0.0	0.0	0.0	0.0	0.0	0.0	65	0.0	0.0	0.0	0.0	0.0	0.0
	5	0.0	0.0	0.0	0.0	0.0	0.0	62	0.0	0.0	0.0	0.0	0.0	0.0
8	47	0.0	0.0	0.0	0.0	0.0	0.0	72	0.0	0.0	0.0	0.0	0.0	0.0
	16	0.0	0.0	0.0	0.0	0.0	0.0	3	0.0	0.0	0.0	0.0	0.0	0.0
9	76	0.0	0.0	0.0	0.0	0.0	0.0	77	0.0	0.0	0.0	0.0	0.0	0.0
	25	0.0	0.0	0.0	0.0	0.0	0.0	74	0.0	0.0	0.0	0.0	0.0	0.0
10	38	0.0	0.0	0.0	0.0	0.0	0.0	86	0.0	0.0	0.0	0.0	0.0	0.0
	14	0.0	0.0	0.0	0.0	0.0	0.0	71	0.0	0.0	0.0	0.0	0.0	0.0
11	94	0.0	0.0	0.0	0.0	0.0	0.0	95	0.0	0.0	0.0	0.0	0.0	0.0
	18	0.0	0.0	0.0	0.0	0.0	0.0	91	0.0	0.0	0.0	0.0	0.0	0.0
12	102	0.0	0.0	0.0	0.0	0.0	0.0	103	0.0	0.0	0.0	0.0	0.0	0.0
	21	0.0	0.0	0.0	0.0	0.0	0.0	84	0.0	0.0	0.0	0.0	0.0	0.0
13	112	0.0	0.0	0.0	0.0	0.0	0.0	76	0.0	0.0	0.0	0.0	0.0	0.0
	36	0.0	0.0	0.0	0.0	0.0	0.0	25	0.0	0.0	0.0	0.0	0.0	0.0
14	114	0.0	0.0	0.0	0.0	0.0	0.0	112	0.0	0.0	0.0	0.0	0.0	0.0
	35	0.0	0.0	0.0	0.0	0.0	0.0	36	0.0	0.0	0.0	0.0	0.0	0.0
15	24	0.0	0.0	0.0	0.0	0.0	0.0	116	0.0	0.0	0.0	0.0	0.0	0.0
	21	0.0	0.0	0.0	0.0	0.0	0.0	102	0.0	0.0	0.0	0.0	0.0	0.0
16	118	0.0	0.0	0.0	0.0	0.0	0.0	116	0.0	0.0	0.0	0.0	0.0	0.0
	20	0.0	0.0	0.0	0.0	0.0	0.0	24	0.0	0.0	0.0	0.0	0.0	0.0
17	120	0.0	0.0	0.0	0.0	0.0	0.0	121	0.0	0.0	0.0	0.0	0.0	0.0
	9	0.0	0.0	0.0	0.0	0.0	0.0	43	0.0	0.0	0.0	0.0	0.0	0.0
18	10	0.0	0.0	0.0	0.0	0.0	0.0	130	0.0	0.0	0.0	0.0	0.0	0.0
	4	0.0	0.0	0.0	0.0	0.0	0.0	68	0.0	0.0	0.0	0.0	0.0	0.0
19	100	0.0	0.0	0.0	0.0	0.0	0.0	114	0.0	0.0	0.0	0.0	0.0	0.0
	19	0.0	0.0	0.0	0.0	0.0	0.0	35	0.0	0.0	0.0	0.0	0.0	0.0
20	35	0.0	0.0	0.0	0.0	0.0	0.0	149	0.0	0.0	0.0	0.0	0.0	0.0
	19	0.0	0.0	0.0	0.0	0.0	0.0	97	0.0	0.0	0.0	0.0	0.0	0.0
21	132	0.0	0.0	0.0	0.0	0.0	0.0	166	0.0	0.0	0.0	0.0	0.0	0.0
	5	0.0	0.0	0.0	0.0	0.0	0.0	58	0.0	0.0	0.0	0.0	0.0	0.0

Documento di proprietà **Snam Rete Gas**. La Società tutelerà i propri diritti in sede civile e penale a termini di legge.

FORZE: SISMA 90°°: MODO12: SHELL

Shell Nro	Nodo N.ro	Tx (kN)	Ty (kN)	Tz (kN)	Mx (kN*m)	My (kN*m)	Mz (kN*m)	Nodo N.ro	Tx (kN)	Ty (kN)	Tz (kN)	Mx (kN*m)	My (kN*m)	Mz (kN*m)
22	151	0.0	0.0	0.0	0.0	0.0	0.0	178	0.0	0.0	0.0	0.0	0.0	0.0
	18	0.0	0.0	0.0	0.0	0.0	0.0	93	0.0	0.0	0.0	0.0	0.0	0.0
23	123	0.0	0.0	0.0	0.0	0.0	0.0	190	0.0	0.0	0.0	0.0	0.0	0.0
	2	0.0	0.0	0.0	0.0	0.0	0.0	73	0.0	0.0	0.0	0.0	0.0	0.0
24	53	0.0	0.0	0.0	0.0	0.0	0.0	118	0.0	0.0	0.0	0.0	0.0	0.0
	11	0.0	0.0	0.0	0.0	0.0	0.0	20	0.0	0.0	0.0	0.0	0.0	0.0
25	40	0.0	0.0	0.0	0.0	0.0	0.0	41	0.0	0.0	0.0	0.0	0.0	0.0
	38	0.0	0.0	0.0	0.0	0.0	0.0	39	0.0	0.0	0.0	0.0	0.0	0.0
26	17	0.0	0.0	0.0	0.0	0.0	0.0	12	0.0	0.0	0.0	0.0	0.0	0.0
	40	0.0	0.0	0.0	0.0	0.0	0.0	41	0.0	0.0	0.0	0.0	0.0	0.0
27	44	0.0	0.0	0.0	0.0	0.0	0.0	45	0.0	0.0	0.0	0.0	0.0	0.0
	42	0.0	0.0	0.0	0.0	0.0	0.0	43	0.0	0.0	0.0	0.0	0.0	0.0
28	45	0.0	0.0	0.0	0.0	0.0	0.0	15	0.0	0.0	0.0	0.0	0.0	0.0
	43	0.0	0.0	0.0	0.0	0.0	0.0	9	0.0	0.0	0.0	0.0	0.0	0.0
29	41	0.0	0.0	0.0	0.0	0.0	0.0	45	0.0	0.0	0.0	0.0	0.0	0.0
	39	0.0	0.0	0.0	0.0	0.0	0.0	44	0.0	0.0	0.0	0.0	0.0	0.0
30	12	0.0	0.0	0.0	0.0	0.0	0.0	15	0.0	0.0	0.0	0.0	0.0	0.0
	41	0.0	0.0	0.0	0.0	0.0	0.0	45	0.0	0.0	0.0	0.0	0.0	0.0
31	48	0.0	0.0	0.0	0.0	0.0	0.0	49	0.0	0.0	0.0	0.0	0.0	0.0
	46	0.0	0.0	0.0	0.0	0.0	0.0	47	0.0	0.0	0.0	0.0	0.0	0.0
32	1	0.0	0.0	0.0	0.0	0.0	0.0	8	0.0	0.0	0.0	0.0	0.0	0.0
	48	0.0	0.0	0.0	0.0	0.0	0.0	49	0.0	0.0	0.0	0.0	0.0	0.0
33	51	0.0	0.0	0.0	0.0	0.0	0.0	48	0.0	0.0	0.0	0.0	0.0	0.0
	50	0.0	0.0	0.0	0.0	0.0	0.0	46	0.0	0.0	0.0	0.0	0.0	0.0
34	14	0.0	0.0	0.0	0.0	0.0	0.0	1	0.0	0.0	0.0	0.0	0.0	0.0
	51	0.0	0.0	0.0	0.0	0.0	0.0	48	0.0	0.0	0.0	0.0	0.0	0.0
35	55	0.0	0.0	0.0	0.0	0.0	0.0	56	0.0	0.0	0.0	0.0	0.0	0.0
	52	0.0	0.0	0.0	0.0	0.0	0.0	53	0.0	0.0	0.0	0.0	0.0	0.0
36	56	0.0	0.0	0.0	0.0	0.0	0.0	57	0.0	0.0	0.0	0.0	0.0	0.0
	53	0.0	0.0	0.0	0.0	0.0	0.0	11	0.0	0.0	0.0	0.0	0.0	0.0
37	58	0.0	0.0	0.0	0.0	0.0	0.0	59	0.0	0.0	0.0	0.0	0.0	0.0
	54	0.0	0.0	0.0	0.0	0.0	0.0	55	0.0	0.0	0.0	0.0	0.0	0.0
38	59	0.0	0.0	0.0	0.0	0.0	0.0	60	0.0	0.0	0.0	0.0	0.0	0.0
	55	0.0	0.0	0.0	0.0	0.0	0.0	56	0.0	0.0	0.0	0.0	0.0	0.0
39	60	0.0	0.0	0.0	0.0	0.0	0.0	61	0.0	0.0	0.0	0.0	0.0	0.0
	56	0.0	0.0	0.0	0.0	0.0	0.0	57	0.0	0.0	0.0	0.0	0.0	0.0
40	5	0.0	0.0	0.0	0.0	0.0	0.0	62	0.0	0.0	0.0	0.0	0.0	0.0
	58	0.0	0.0	0.0	0.0	0.0	0.0	59	0.0	0.0	0.0	0.0	0.0	0.0
41	62	0.0	0.0	0.0	0.0	0.0	0.0	63	0.0	0.0	0.0	0.0	0.0	0.0
	59	0.0	0.0	0.0	0.0	0.0	0.0	60	0.0	0.0	0.0	0.0	0.0	0.0
42	63	0.0	0.0	0.0	0.0	0.0	0.0	13	0.0	0.0	0.0	0.0	0.0	0.0
	60	0.0	0.0	0.0	0.0	0.0	0.0	61	0.0	0.0	0.0	0.0	0.0	0.0
43	65	0.0	0.0	0.0	0.0	0.0	0.0	66	0.0	0.0	0.0	0.0	0.0	0.0
	62	0.0	0.0	0.0	0.0	0.0	0.0	63	0.0	0.0	0.0	0.0	0.0	0.0
44	66	0.0	0.0	0.0	0.0	0.0	0.0	67	0.0	0.0	0.0	0.0	0.0	0.0
	63	0.0	0.0	0.0	0.0	0.0	0.0	13	0.0	0.0	0.0	0.0	0.0	0.0
45	68	0.0	0.0	0.0	0.0	0.0	0.0	69	0.0	0.0	0.0	0.0	0.0	0.0
	64	0.0	0.0	0.0	0.0	0.0	0.0	65	0.0	0.0	0.0	0.0	0.0	0.0
46	69	0.0	0.0	0.0	0.0	0.0	0.0	70	0.0	0.0	0.0	0.0	0.0	0.0
	65	0.0	0.0	0.0	0.0	0.0	0.0	66	0.0	0.0	0.0	0.0	0.0	0.0
47	70	0.0	0.0	0.0	0.0	0.0	0.0	71	0.0	0.0	0.0	0.0	0.0	0.0
	66	0.0	0.0	0.0	0.0	0.0	0.0	67	0.0	0.0	0.0	0.0	0.0	0.0
48	4	0.0	0.0	0.0	0.0	0.0	0.0	50	0.0	0.0	0.0	0.0	0.0	0.0
	68	0.0	0.0	0.0	0.0	0.0	0.0	69	0.0	0.0	0.0	0.0	0.0	0.0
49	50	0.0	0.0	0.0	0.0	0.0	0.0	51	0.0	0.0	0.0	0.0	0.0	0.0
	69	0.0	0.0	0.0	0.0	0.0	0.0	70	0.0	0.0	0.0	0.0	0.0	0.0
50	51	0.0	0.0	0.0	0.0	0.0	0.0	14	0.0	0.0	0.0	0.0	0.0	0.0
	70	0.0	0.0	0.0	0.0	0.0	0.0	71	0.0	0.0	0.0	0.0	0.0	0.0
51	49	0.0	0.0	0.0	0.0	0.0	0.0	73	0.0	0.0	0.0	0.0	0.0	0.0
	47	0.0	0.0	0.0	0.0	0.0	0.0	72	0.0	0.0	0.0	0.0	0.0	0.0
52	8	0.0	0.0	0.0	0.0	0.0	0.0	2	0.0	0.0	0.0	0.0	0.0	0.0
	49	0.0	0.0	0.0	0.0	0.0	0.0	73	0.0	0.0	0.0	0.0	0.0	0.0
53	77	0.0	0.0	0.0	0.0	0.0	0.0	78	0.0	0.0	0.0	0.0	0.0	0.0
	74	0.0	0.0	0.0	0.0	0.0	0.0	75	0.0	0.0	0.0	0.0	0.0	0.0
54	78	0.0	0.0	0.0	0.0	0.0	0.0	79	0.0	0.0	0.0	0.0	0.0	0.0
	75	0.0	0.0	0.0	0.0	0.0	0.0	32	0.0	0.0	0.0	0.0	0.0	0.0
55	80	0.0	0.0	0.0	0.0	0.0	0.0	81	0.0	0.0	0.0	0.0	0.0	0.0
	76	0.0	0.0	0.0	0.0	0.0	0.0	77	0.0	0.0	0.0	0.0	0.0	0.0
56	81	0.0	0.0	0.0	0.0	0.0	0.0	82	0.0	0.0	0.0	0.0	0.0	0.0
	77	0.0	0.0	0.0	0.0	0.0	0.0	78	0.0	0.0	0.0	0.0	0.0	0.0
57	82	0.0	0.0	0.0	0.0	0.0	0.0	83	0.0	0.0	0.0	0.0	0.0	0.0
	78	0.0	0.0	0.0	0.0	0.0	0.0	79	0.0	0.0	0.0	0.0	0.0	0.0
58	21	0.0	0.0	0.0	0.0	0.0	0.0	84	0.0	0.0	0.0	0.0	0.0	0.0
	80	0.0	0.0	0.0	0.0	0.0	0.0	81	0.0	0.0	0.0	0.0	0.0	0.0
59	84	0.0	0.0	0.0	0.0	0.0	0.0	85	0.0	0.0	0.0	0.0	0.0	0.0
	81	0.0	0.0	0.0	0.0	0.0	0.0	82	0.0	0.0	0.0	0.0	0.0	0.0
60	85	0.0	0.0	0.0	0.0	0.0	0.0	31	0.0	0.0	0.0	0.0	0.0	0.0
	82	0.0	0.0	0.0	0.0	0.0	0.0	83	0.0	0.0	0.0	0.0	0.0	0.0
61	86	0.0	0.0	0.0	0.0	0.0	0.0	87	0.0	0.0	0.0	0.0	0.0	0.0
	71	0.0	0.0	0.0	0.0	0.0	0.0	67	0.0	0.0	0.0	0.0	0.0	0.0

Documento di proprietà **Snam Rete Gas**. La Società tutelerà i propri diritti in sede civile e penale a termini di legge.

FORZE: SISMA 90°°: MODO12: SHELL

Shell Nro	Nodo N.ro	Tx (kN)	Ty (kN)	Tz (kN)	Mx (kN*m)	My (kN*m)	Mz (kN*m)	Nodo N.ro	Tx (kN)	Ty (kN)	Tz (kN)	Mx (kN*m)	My (kN*m)	Mz (kN*m)
62	87	0.0	0.0	0.0	0.0	0.0	0.0	88	0.0	0.0	0.0	0.0	0.0	0.0
	67	0.0	0.0	0.0	0.0	0.0	0.0	13	0.0	0.0	0.0	0.0	0.0	0.0
63	40	0.0	0.0	0.0	0.0	0.0	0.0	89	0.0	0.0	0.0	0.0	0.0	0.0
	38	0.0	0.0	0.0	0.0	0.0	0.0	86	0.0	0.0	0.0	0.0	0.0	0.0
64	89	0.0	0.0	0.0	0.0	0.0	0.0	90	0.0	0.0	0.0	0.0	0.0	0.0
	86	0.0	0.0	0.0	0.0	0.0	0.0	87	0.0	0.0	0.0	0.0	0.0	0.0
65	90	0.0	0.0	0.0	0.0	0.0	0.0	91	0.0	0.0	0.0	0.0	0.0	0.0
	87	0.0	0.0	0.0	0.0	0.0	0.0	88	0.0	0.0	0.0	0.0	0.0	0.0
66	17	0.0	0.0	0.0	0.0	0.0	0.0	92	0.0	0.0	0.0	0.0	0.0	0.0
	40	0.0	0.0	0.0	0.0	0.0	0.0	89	0.0	0.0	0.0	0.0	0.0	0.0
67	92	0.0	0.0	0.0	0.0	0.0	0.0	93	0.0	0.0	0.0	0.0	0.0	0.0
	89	0.0	0.0	0.0	0.0	0.0	0.0	90	0.0	0.0	0.0	0.0	0.0	0.0
68	93	0.0	0.0	0.0	0.0	0.0	0.0	18	0.0	0.0	0.0	0.0	0.0	0.0
	90	0.0	0.0	0.0	0.0	0.0	0.0	91	0.0	0.0	0.0	0.0	0.0	0.0
69	95	0.0	0.0	0.0	0.0	0.0	0.0	96	0.0	0.0	0.0	0.0	0.0	0.0
	91	0.0	0.0	0.0	0.0	0.0	0.0	88	0.0	0.0	0.0	0.0	0.0	0.0
70	96	0.0	0.0	0.0	0.0	0.0	0.0	61	0.0	0.0	0.0	0.0	0.0	0.0
	88	0.0	0.0	0.0	0.0	0.0	0.0	13	0.0	0.0	0.0	0.0	0.0	0.0
71	97	0.0	0.0	0.0	0.0	0.0	0.0	98	0.0	0.0	0.0	0.0	0.0	0.0
	94	0.0	0.0	0.0	0.0	0.0	0.0	95	0.0	0.0	0.0	0.0	0.0	0.0
72	98	0.0	0.0	0.0	0.0	0.0	0.0	99	0.0	0.0	0.0	0.0	0.0	0.0
	95	0.0	0.0	0.0	0.0	0.0	0.0	96	0.0	0.0	0.0	0.0	0.0	0.0
73	99	0.0	0.0	0.0	0.0	0.0	0.0	57	0.0	0.0	0.0	0.0	0.0	0.0
	96	0.0	0.0	0.0	0.0	0.0	0.0	61	0.0	0.0	0.0	0.0	0.0	0.0
74	19	0.0	0.0	0.0	0.0	0.0	0.0	100	0.0	0.0	0.0	0.0	0.0	0.0
	97	0.0	0.0	0.0	0.0	0.0	0.0	98	0.0	0.0	0.0	0.0	0.0	0.0
75	100	0.0	0.0	0.0	0.0	0.0	0.0	101	0.0	0.0	0.0	0.0	0.0	0.0
	98	0.0	0.0	0.0	0.0	0.0	0.0	99	0.0	0.0	0.0	0.0	0.0	0.0
76	101	0.0	0.0	0.0	0.0	0.0	0.0	11	0.0	0.0	0.0	0.0	0.0	0.0
	99	0.0	0.0	0.0	0.0	0.0	0.0	57	0.0	0.0	0.0	0.0	0.0	0.0
77	103	0.0	0.0	0.0	0.0	0.0	0.0	104	0.0	0.0	0.0	0.0	0.0	0.0
	84	0.0	0.0	0.0	0.0	0.0	0.0	85	0.0	0.0	0.0	0.0	0.0	0.0
78	104	0.0	0.0	0.0	0.0	0.0	0.0	105	0.0	0.0	0.0	0.0	0.0	0.0
	85	0.0	0.0	0.0	0.0	0.0	0.0	31	0.0	0.0	0.0	0.0	0.0	0.0
79	106	0.0	0.0	0.0	0.0	0.0	0.0	107	0.0	0.0	0.0	0.0	0.0	0.0
	102	0.0	0.0	0.0	0.0	0.0	0.0	103	0.0	0.0	0.0	0.0	0.0	0.0
80	107	0.0	0.0	0.0	0.0	0.0	0.0	108	0.0	0.0	0.0	0.0	0.0	0.0
	103	0.0	0.0	0.0	0.0	0.0	0.0	104	0.0	0.0	0.0	0.0	0.0	0.0
81	108	0.0	0.0	0.0	0.0	0.0	0.0	109	0.0	0.0	0.0	0.0	0.0	0.0
	104	0.0	0.0	0.0	0.0	0.0	0.0	105	0.0	0.0	0.0	0.0	0.0	0.0
82	22	0.0	0.0	0.0	0.0	0.0	0.0	110	0.0	0.0	0.0	0.0	0.0	0.0
	106	0.0	0.0	0.0	0.0	0.0	0.0	107	0.0	0.0	0.0	0.0	0.0	0.0
83	110	0.0	0.0	0.0	0.0	0.0	0.0	111	0.0	0.0	0.0	0.0	0.0	0.0
	107	0.0	0.0	0.0	0.0	0.0	0.0	108	0.0	0.0	0.0	0.0	0.0	0.0
84	111	0.0	0.0	0.0	0.0	0.0	0.0	30	0.0	0.0	0.0	0.0	0.0	0.0
	108	0.0	0.0	0.0	0.0	0.0	0.0	109	0.0	0.0	0.0	0.0	0.0	0.0
85	113	0.0	0.0	0.0	0.0	0.0	0.0	80	0.0	0.0	0.0	0.0	0.0	0.0
	112	0.0	0.0	0.0	0.0	0.0	0.0	76	0.0	0.0	0.0	0.0	0.0	0.0
86	23	0.0	0.0	0.0	0.0	0.0	0.0	21	0.0	0.0	0.0	0.0	0.0	0.0
	113	0.0	0.0	0.0	0.0	0.0	0.0	80	0.0	0.0	0.0	0.0	0.0	0.0
87	115	0.0	0.0	0.0	0.0	0.0	0.0	113	0.0	0.0	0.0	0.0	0.0	0.0
	114	0.0	0.0	0.0	0.0	0.0	0.0	112	0.0	0.0	0.0	0.0	0.0	0.0
88	20	0.0	0.0	0.0	0.0	0.0	0.0	23	0.0	0.0	0.0	0.0	0.0	0.0
	115	0.0	0.0	0.0	0.0	0.0	0.0	113	0.0	0.0	0.0	0.0	0.0	0.0
89	116	0.0	0.0	0.0	0.0	0.0	0.0	117	0.0	0.0	0.0	0.0	0.0	0.0
	102	0.0	0.0	0.0	0.0	0.0	0.0	106	0.0	0.0	0.0	0.0	0.0	0.0
90	117	0.0	0.0	0.0	0.0	0.0	0.0	37	0.0	0.0	0.0	0.0	0.0	0.0
	106	0.0	0.0	0.0	0.0	0.0	0.0	22	0.0	0.0	0.0	0.0	0.0	0.0
91	119	0.0	0.0	0.0	0.0	0.0	0.0	117	0.0	0.0	0.0	0.0	0.0	0.0
	118	0.0	0.0	0.0	0.0	0.0	0.0	116	0.0	0.0	0.0	0.0	0.0	0.0
92	34	0.0	0.0	0.0	0.0	0.0	0.0	37	0.0	0.0	0.0	0.0	0.0	0.0
	119	0.0	0.0	0.0	0.0	0.0	0.0	117	0.0	0.0	0.0	0.0	0.0	0.0
93	121	0.0	0.0	0.0	0.0	0.0	0.0	122	0.0	0.0	0.0	0.0	0.0	0.0
	43	0.0	0.0	0.0	0.0	0.0	0.0	42	0.0	0.0	0.0	0.0	0.0	0.0
94	122	0.0	0.0	0.0	0.0	0.0	0.0	123	0.0	0.0	0.0	0.0	0.0	0.0
	42	0.0	0.0	0.0	0.0	0.0	0.0	2	0.0	0.0	0.0	0.0	0.0	0.0
95	124	0.0	0.0	0.0	0.0	0.0	0.0	125	0.0	0.0	0.0	0.0	0.0	0.0
	120	0.0	0.0	0.0	0.0	0.0	0.0	121	0.0	0.0	0.0	0.0	0.0	0.0
96	125	0.0	0.0	0.0	0.0	0.0	0.0	126	0.0	0.0	0.0	0.0	0.0	0.0
	121	0.0	0.0	0.0	0.0	0.0	0.0	122	0.0	0.0	0.0	0.0	0.0	0.0
97	126	0.0	0.0	0.0	0.0	0.0	0.0	127	0.0	0.0	0.0	0.0	0.0	0.0
	122	0.0	0.0	0.0	0.0	0.0	0.0	123	0.0	0.0	0.0	0.0	0.0	0.0
98	26	0.0	0.0	0.0	0.0	0.0	0.0	128	0.0	0.0	0.0	0.0	0.0	0.0
	124	0.0	0.0	0.0	0.0	0.0	0.0	125	0.0	0.0	0.0	0.0	0.0	0.0
99	128	0.0	0.0	0.0	0.0	0.0	0.0	129	0.0	0.0	0.0	0.0	0.0	0.0
	125	0.0	0.0	0.0	0.0	0.0	0.0	126	0.0	0.0	0.0	0.0	0.0	0.0
100	129	0.0	0.0	0.0	0.0	0.0	0.0	27	0.0	0.0	0.0	0.0	0.0	0.0
	126	0.0	0.0	0.0	0.0	0.0	0.0	127	0.0	0.0	0.0	0.0	0.0	0.0
101	130	0.0	0.0	0.0	0.0	0.0	0.0	131	0.0	0.0	0.0	0.0	0.0	0.0
	68	0.0	0.0	0.0	0.0	0.0	0.0	64	0.0	0.0	0.0	0.0	0.0	0.0

Documento di proprietà **Snam Rete Gas**. La Società tutelerà i propri diritti in sede civile e penale a termini di legge.

FORZE: SISMA 90°°: MODO12: SHELL

Shell Nro	Nodo N.ro	Tx (kN)	Ty (kN)	Tz (kN)	Mx (kN*m)	My (kN*m)	Mz (kN*m)	Nodo N.ro	Tx (kN)	Ty (kN)	Tz (kN)	Mx (kN*m)	My (kN*m)	Mz (kN*m)
102	131	0.0	0.0	0.0	0.0	0.0	0.0	132	0.0	0.0	0.0	0.0	0.0	0.0
	64	0.0	0.0	0.0	0.0	0.0	0.0	5	0.0	0.0	0.0	0.0	0.0	0.0
103	16	0.0	0.0	0.0	0.0	0.0	0.0	133	0.0	0.0	0.0	0.0	0.0	0.0
	10	0.0	0.0	0.0	0.0	0.0	0.0	130	0.0	0.0	0.0	0.0	0.0	0.0
104	133	0.0	0.0	0.0	0.0	0.0	0.0	134	0.0	0.0	0.0	0.0	0.0	0.0
	130	0.0	0.0	0.0	0.0	0.0	0.0	131	0.0	0.0	0.0	0.0	0.0	0.0
105	134	0.0	0.0	0.0	0.0	0.0	0.0	135	0.0	0.0	0.0	0.0	0.0	0.0
	131	0.0	0.0	0.0	0.0	0.0	0.0	132	0.0	0.0	0.0	0.0	0.0	0.0
106	3	0.0	0.0	0.0	0.0	0.0	0.0	136	0.0	0.0	0.0	0.0	0.0	0.0
	16	0.0	0.0	0.0	0.0	0.0	0.0	133	0.0	0.0	0.0	0.0	0.0	0.0
107	136	0.0	0.0	0.0	0.0	0.0	0.0	137	0.0	0.0	0.0	0.0	0.0	0.0
	133	0.0	0.0	0.0	0.0	0.0	0.0	134	0.0	0.0	0.0	0.0	0.0	0.0
108	137	0.0	0.0	0.0	0.0	0.0	0.0	138	0.0	0.0	0.0	0.0	0.0	0.0
	134	0.0	0.0	0.0	0.0	0.0	0.0	135	0.0	0.0	0.0	0.0	0.0	0.0
109	139	0.0	0.0	0.0	0.0	0.0	0.0	140	0.0	0.0	0.0	0.0	0.0	0.0
	3	0.0	0.0	0.0	0.0	0.0	0.0	136	0.0	0.0	0.0	0.0	0.0	0.0
110	140	0.0	0.0	0.0	0.0	0.0	0.0	141	0.0	0.0	0.0	0.0	0.0	0.0
	136	0.0	0.0	0.0	0.0	0.0	0.0	137	0.0	0.0	0.0	0.0	0.0	0.0
111	141	0.0	0.0	0.0	0.0	0.0	0.0	142	0.0	0.0	0.0	0.0	0.0	0.0
	137	0.0	0.0	0.0	0.0	0.0	0.0	138	0.0	0.0	0.0	0.0	0.0	0.0
112	143	0.0	0.0	0.0	0.0	0.0	0.0	144	0.0	0.0	0.0	0.0	0.0	0.0
	139	0.0	0.0	0.0	0.0	0.0	0.0	140	0.0	0.0	0.0	0.0	0.0	0.0
113	144	0.0	0.0	0.0	0.0	0.0	0.0	145	0.0	0.0	0.0	0.0	0.0	0.0
	140	0.0	0.0	0.0	0.0	0.0	0.0	141	0.0	0.0	0.0	0.0	0.0	0.0
114	145	0.0	0.0	0.0	0.0	0.0	0.0	146	0.0	0.0	0.0	0.0	0.0	0.0
	141	0.0	0.0	0.0	0.0	0.0	0.0	142	0.0	0.0	0.0	0.0	0.0	0.0
115	28	0.0	0.0	0.0	0.0	0.0	0.0	147	0.0	0.0	0.0	0.0	0.0	0.0
	143	0.0	0.0	0.0	0.0	0.0	0.0	144	0.0	0.0	0.0	0.0	0.0	0.0
116	147	0.0	0.0	0.0	0.0	0.0	0.0	148	0.0	0.0	0.0	0.0	0.0	0.0
	144	0.0	0.0	0.0	0.0	0.0	0.0	145	0.0	0.0	0.0	0.0	0.0	0.0
117	148	0.0	0.0	0.0	0.0	0.0	0.0	29	0.0	0.0	0.0	0.0	0.0	0.0
	145	0.0	0.0	0.0	0.0	0.0	0.0	146	0.0	0.0	0.0	0.0	0.0	0.0
118	101	0.0	0.0	0.0	0.0	0.0	0.0	115	0.0	0.0	0.0	0.0	0.0	0.0
	100	0.0	0.0	0.0	0.0	0.0	0.0	114	0.0	0.0	0.0	0.0	0.0	0.0
119	11	0.0	0.0	0.0	0.0	0.0	0.0	20	0.0	0.0	0.0	0.0	0.0	0.0
	101	0.0	0.0	0.0	0.0	0.0	0.0	115	0.0	0.0	0.0	0.0	0.0	0.0
120	149	0.0	0.0	0.0	0.0	0.0	0.0	150	0.0	0.0	0.0	0.0	0.0	0.0
	97	0.0	0.0	0.0	0.0	0.0	0.0	94	0.0	0.0	0.0	0.0	0.0	0.0
121	150	0.0	0.0	0.0	0.0	0.0	0.0	151	0.0	0.0	0.0	0.0	0.0	0.0
	94	0.0	0.0	0.0	0.0	0.0	0.0	18	0.0	0.0	0.0	0.0	0.0	0.0
122	36	0.0	0.0	0.0	0.0	0.0	0.0	152	0.0	0.0	0.0	0.0	0.0	0.0
	35	0.0	0.0	0.0	0.0	0.0	0.0	149	0.0	0.0	0.0	0.0	0.0	0.0
123	152	0.0	0.0	0.0	0.0	0.0	0.0	153	0.0	0.0	0.0	0.0	0.0	0.0
	149	0.0	0.0	0.0	0.0	0.0	0.0	150	0.0	0.0	0.0	0.0	0.0	0.0
124	153	0.0	0.0	0.0	0.0	0.0	0.0	154	0.0	0.0	0.0	0.0	0.0	0.0
	150	0.0	0.0	0.0	0.0	0.0	0.0	151	0.0	0.0	0.0	0.0	0.0	0.0
125	25	0.0	0.0	0.0	0.0	0.0	0.0	155	0.0	0.0	0.0	0.0	0.0	0.0
	36	0.0	0.0	0.0	0.0	0.0	0.0	152	0.0	0.0	0.0	0.0	0.0	0.0
126	155	0.0	0.0	0.0	0.0	0.0	0.0	156	0.0	0.0	0.0	0.0	0.0	0.0
	152	0.0	0.0	0.0	0.0	0.0	0.0	153	0.0	0.0	0.0	0.0	0.0	0.0
127	156	0.0	0.0	0.0	0.0	0.0	0.0	157	0.0	0.0	0.0	0.0	0.0	0.0
	153	0.0	0.0	0.0	0.0	0.0	0.0	154	0.0	0.0	0.0	0.0	0.0	0.0
128	74	0.0	0.0	0.0	0.0	0.0	0.0	158	0.0	0.0	0.0	0.0	0.0	0.0
	25	0.0	0.0	0.0	0.0	0.0	0.0	155	0.0	0.0	0.0	0.0	0.0	0.0
129	158	0.0	0.0	0.0	0.0	0.0	0.0	159	0.0	0.0	0.0	0.0	0.0	0.0
	155	0.0	0.0	0.0	0.0	0.0	0.0	156	0.0	0.0	0.0	0.0	0.0	0.0
130	159	0.0	0.0	0.0	0.0	0.0	0.0	160	0.0	0.0	0.0	0.0	0.0	0.0
	156	0.0	0.0	0.0	0.0	0.0	0.0	157	0.0	0.0	0.0	0.0	0.0	0.0
131	75	0.0	0.0	0.0	0.0	0.0	0.0	161	0.0	0.0	0.0	0.0	0.0	0.0
	74	0.0	0.0	0.0	0.0	0.0	0.0	158	0.0	0.0	0.0	0.0	0.0	0.0
132	161	0.0	0.0	0.0	0.0	0.0	0.0	162	0.0	0.0	0.0	0.0	0.0	0.0
	158	0.0	0.0	0.0	0.0	0.0	0.0	159	0.0	0.0	0.0	0.0	0.0	0.0
133	162	0.0	0.0	0.0	0.0	0.0	0.0	163	0.0	0.0	0.0	0.0	0.0	0.0
	159	0.0	0.0	0.0	0.0	0.0	0.0	160	0.0	0.0	0.0	0.0	0.0	0.0
134	32	0.0	0.0	0.0	0.0	0.0	0.0	164	0.0	0.0	0.0	0.0	0.0	0.0
	75	0.0	0.0	0.0	0.0	0.0	0.0	161	0.0	0.0	0.0	0.0	0.0	0.0
135	164	0.0	0.0	0.0	0.0	0.0	0.0	165	0.0	0.0	0.0	0.0	0.0	0.0
	161	0.0	0.0	0.0	0.0	0.0	0.0	162	0.0	0.0	0.0	0.0	0.0	0.0
136	165	0.0	0.0	0.0	0.0	0.0	0.0	33	0.0	0.0	0.0	0.0	0.0	0.0
	162	0.0	0.0	0.0	0.0	0.0	0.0	163	0.0	0.0	0.0	0.0	0.0	0.0
137	166	0.0	0.0	0.0	0.0	0.0	0.0	167	0.0	0.0	0.0	0.0	0.0	0.0
	58	0.0	0.0	0.0	0.0	0.0	0.0	54	0.0	0.0	0.0	0.0	0.0	0.0
138	167	0.0	0.0	0.0	0.0	0.0	0.0	34	0.0	0.0	0.0	0.0	0.0	0.0
	54	0.0	0.0	0.0	0.0	0.0	0.0	7	0.0	0.0	0.0	0.0	0.0	0.0
139	135	0.0	0.0	0.0	0.0	0.0	0.0	168	0.0	0.0	0.0	0.0	0.0	0.0
	132	0.0	0.0	0.0	0.0	0.0	0.0	166	0.0	0.0	0.0	0.0	0.0	0.0
140	168	0.0	0.0	0.0	0.0	0.0	0.0	169	0.0	0.0	0.0	0.0	0.0	0.0
	166	0.0	0.0	0.0	0.0	0.0	0.0	167	0.0	0.0	0.0	0.0	0.0	0.0
141	169	0.0	0.0	0.0	0.0	0.0	0.0	37	0.0	0.0	0.0	0.0	0.0	0.0
	167	0.0	0.0	0.0	0.0	0.0	0.0	34	0.0	0.0	0.0	0.0	0.0	0.0

Documento di proprietà **Snam Rete Gas**. La Società tutelerà i propri diritti in sede civile e penale a termini di legge.

FORZE: SISMA 90°°: MODO12: SHELL

Shell Nro	Nodo N.ro	Tx (kN)	Ty (kN)	Tz (kN)	Mx (kN*m)	My (kN*m)	Mz (kN*m)	Nodo N.ro	Tx (kN)	Ty (kN)	Tz (kN)	Mx (kN*m)	My (kN*m)	Mz (kN*m)
142	138	0.0	0.0	0.0	0.0	0.0	0.0	170	0.0	0.0	0.0	0.0	0.0	0.0
	135	0.0	0.0	0.0	0.0	0.0	0.0	168	0.0	0.0	0.0	0.0	0.0	0.0
143	170	0.0	0.0	0.0	0.0	0.0	0.0	171	0.0	0.0	0.0	0.0	0.0	0.0
	168	0.0	0.0	0.0	0.0	0.0	0.0	169	0.0	0.0	0.0	0.0	0.0	0.0
144	171	0.0	0.0	0.0	0.0	0.0	0.0	22	0.0	0.0	0.0	0.0	0.0	0.0
	169	0.0	0.0	0.0	0.0	0.0	0.0	37	0.0	0.0	0.0	0.0	0.0	0.0
145	142	0.0	0.0	0.0	0.0	0.0	0.0	172	0.0	0.0	0.0	0.0	0.0	0.0
	138	0.0	0.0	0.0	0.0	0.0	0.0	170	0.0	0.0	0.0	0.0	0.0	0.0
146	172	0.0	0.0	0.0	0.0	0.0	0.0	173	0.0	0.0	0.0	0.0	0.0	0.0
	170	0.0	0.0	0.0	0.0	0.0	0.0	171	0.0	0.0	0.0	0.0	0.0	0.0
147	173	0.0	0.0	0.0	0.0	0.0	0.0	110	0.0	0.0	0.0	0.0	0.0	0.0
	171	0.0	0.0	0.0	0.0	0.0	0.0	22	0.0	0.0	0.0	0.0	0.0	0.0
148	146	0.0	0.0	0.0	0.0	0.0	0.0	174	0.0	0.0	0.0	0.0	0.0	0.0
	142	0.0	0.0	0.0	0.0	0.0	0.0	172	0.0	0.0	0.0	0.0	0.0	0.0
149	174	0.0	0.0	0.0	0.0	0.0	0.0	175	0.0	0.0	0.0	0.0	0.0	0.0
	172	0.0	0.0	0.0	0.0	0.0	0.0	173	0.0	0.0	0.0	0.0	0.0	0.0
150	175	0.0	0.0	0.0	0.0	0.0	0.0	111	0.0	0.0	0.0	0.0	0.0	0.0
	173	0.0	0.0	0.0	0.0	0.0	0.0	110	0.0	0.0	0.0	0.0	0.0	0.0
151	29	0.0	0.0	0.0	0.0	0.0	0.0	176	0.0	0.0	0.0	0.0	0.0	0.0
	146	0.0	0.0	0.0	0.0	0.0	0.0	174	0.0	0.0	0.0	0.0	0.0	0.0
152	176	0.0	0.0	0.0	0.0	0.0	0.0	177	0.0	0.0	0.0	0.0	0.0	0.0
	174	0.0	0.0	0.0	0.0	0.0	0.0	175	0.0	0.0	0.0	0.0	0.0	0.0
153	177	0.0	0.0	0.0	0.0	0.0	0.0	30	0.0	0.0	0.0	0.0	0.0	0.0
	175	0.0	0.0	0.0	0.0	0.0	0.0	111	0.0	0.0	0.0	0.0	0.0	0.0
154	178	0.0	0.0	0.0	0.0	0.0	0.0	179	0.0	0.0	0.0	0.0	0.0	0.0
	93	0.0	0.0	0.0	0.0	0.0	0.0	92	0.0	0.0	0.0	0.0	0.0	0.0
155	179	0.0	0.0	0.0	0.0	0.0	0.0	12	0.0	0.0	0.0	0.0	0.0	0.0
	92	0.0	0.0	0.0	0.0	0.0	0.0	17	0.0	0.0	0.0	0.0	0.0	0.0
156	154	0.0	0.0	0.0	0.0	0.0	0.0	180	0.0	0.0	0.0	0.0	0.0	0.0
	151	0.0	0.0	0.0	0.0	0.0	0.0	178	0.0	0.0	0.0	0.0	0.0	0.0
157	180	0.0	0.0	0.0	0.0	0.0	0.0	181	0.0	0.0	0.0	0.0	0.0	0.0
	178	0.0	0.0	0.0	0.0	0.0	0.0	179	0.0	0.0	0.0	0.0	0.0	0.0
158	181	0.0	0.0	0.0	0.0	0.0	0.0	15	0.0	0.0	0.0	0.0	0.0	0.0
	179	0.0	0.0	0.0	0.0	0.0	0.0	12	0.0	0.0	0.0	0.0	0.0	0.0
159	157	0.0	0.0	0.0	0.0	0.0	0.0	182	0.0	0.0	0.0	0.0	0.0	0.0
	154	0.0	0.0	0.0	0.0	0.0	0.0	180	0.0	0.0	0.0	0.0	0.0	0.0
160	182	0.0	0.0	0.0	0.0	0.0	0.0	183	0.0	0.0	0.0	0.0	0.0	0.0
	180	0.0	0.0	0.0	0.0	0.0	0.0	181	0.0	0.0	0.0	0.0	0.0	0.0
161	183	0.0	0.0	0.0	0.0	0.0	0.0	9	0.0	0.0	0.0	0.0	0.0	0.0
	181	0.0	0.0	0.0	0.0	0.0	0.0	15	0.0	0.0	0.0	0.0	0.0	0.0
162	160	0.0	0.0	0.0	0.0	0.0	0.0	184	0.0	0.0	0.0	0.0	0.0	0.0
	157	0.0	0.0	0.0	0.0	0.0	0.0	182	0.0	0.0	0.0	0.0	0.0	0.0
163	184	0.0	0.0	0.0	0.0	0.0	0.0	185	0.0	0.0	0.0	0.0	0.0	0.0
	182	0.0	0.0	0.0	0.0	0.0	0.0	183	0.0	0.0	0.0	0.0	0.0	0.0
164	185	0.0	0.0	0.0	0.0	0.0	0.0	120	0.0	0.0	0.0	0.0	0.0	0.0
	183	0.0	0.0	0.0	0.0	0.0	0.0	9	0.0	0.0	0.0	0.0	0.0	0.0
165	163	0.0	0.0	0.0	0.0	0.0	0.0	186	0.0	0.0	0.0	0.0	0.0	0.0
	160	0.0	0.0	0.0	0.0	0.0	0.0	184	0.0	0.0	0.0	0.0	0.0	0.0
166	186	0.0	0.0	0.0	0.0	0.0	0.0	187	0.0	0.0	0.0	0.0	0.0	0.0
	184	0.0	0.0	0.0	0.0	0.0	0.0	185	0.0	0.0	0.0	0.0	0.0	0.0
167	187	0.0	0.0	0.0	0.0	0.0	0.0	124	0.0	0.0	0.0	0.0	0.0	0.0
	185	0.0	0.0	0.0	0.0	0.0	0.0	120	0.0	0.0	0.0	0.0	0.0	0.0
168	33	0.0	0.0	0.0	0.0	0.0	0.0	188	0.0	0.0	0.0	0.0	0.0	0.0
	163	0.0	0.0	0.0	0.0	0.0	0.0	186	0.0	0.0	0.0	0.0	0.0	0.0
169	188	0.0	0.0	0.0	0.0	0.0	0.0	189	0.0	0.0	0.0	0.0	0.0	0.0
	186	0.0	0.0	0.0	0.0	0.0	0.0	187	0.0	0.0	0.0	0.0	0.0	0.0
170	189	0.0	0.0	0.0	0.0	0.0	0.0	26	0.0	0.0	0.0	0.0	0.0	0.0
	187	0.0	0.0	0.0	0.0	0.0	0.0	124	0.0	0.0	0.0	0.0	0.0	0.0
171	190	0.0	0.0	0.0	0.0	0.0	0.0	191	0.0	0.0	0.0	0.0	0.0	0.0
	73	0.0	0.0	0.0	0.0	0.0	0.0	72	0.0	0.0	0.0	0.0	0.0	0.0
172	191	0.0	0.0	0.0	0.0	0.0	0.0	139	0.0	0.0	0.0	0.0	0.0	0.0
	72	0.0	0.0	0.0	0.0	0.0	0.0	3	0.0	0.0	0.0	0.0	0.0	0.0
173	127	0.0	0.0	0.0	0.0	0.0	0.0	192	0.0	0.0	0.0	0.0	0.0	0.0
	123	0.0	0.0	0.0	0.0	0.0	0.0	190	0.0	0.0	0.0	0.0	0.0	0.0
174	192	0.0	0.0	0.0	0.0	0.0	0.0	193	0.0	0.0	0.0	0.0	0.0	0.0
	190	0.0	0.0	0.0	0.0	0.0	0.0	191	0.0	0.0	0.0	0.0	0.0	0.0
175	193	0.0	0.0	0.0	0.0	0.0	0.0	143	0.0	0.0	0.0	0.0	0.0	0.0
	191	0.0	0.0	0.0	0.0	0.0	0.0	139	0.0	0.0	0.0	0.0	0.0	0.0
176	27	0.0	0.0	0.0	0.0	0.0	0.0	194	0.0	0.0	0.0	0.0	0.0	0.0
	127	0.0	0.0	0.0	0.0	0.0	0.0	192	0.0	0.0	0.0	0.0	0.0	0.0
177	194	0.0	0.0	0.0	0.0	0.0	0.0	195	0.0	0.0	0.0	0.0	0.0	0.0
	192	0.0	0.0	0.0	0.0	0.0	0.0	193	0.0	0.0	0.0	0.0	0.0	0.0
178	195	0.0	0.0	0.0	0.0	0.0	0.0	28	0.0	0.0	0.0	0.0	0.0	0.0
	193	0.0	0.0	0.0	0.0	0.0	0.0	143	0.0	0.0	0.0	0.0	0.0	0.0
179	52	0.0	0.0	0.0	0.0	0.0	0.0	119	0.0	0.0	0.0	0.0	0.0	0.0
	53	0.0	0.0	0.0	0.0	0.0	0.0	118	0.0	0.0	0.0	0.0	0.0	0.0
180	7	0.0	0.0	0.0	0.0	0.0	0.0	34	0.0	0.0	0.0	0.0	0.0	0.0
	52	0.0	0.0	0.0	0.0	0.0	0.0	119	0.0	0.0	0.0	0.0	0.0	0.0

FORZE PESO PROPRIO: SHELL

Documento di proprietà **Snam Rete Gas**. La Società tutelerà i propri diritti in sede civile e penale a termini di legge.

Shell Nro	Nodo N.ro	Tx (kN)	Ty (kN)	Tz (kN)	Mx (kN*m)	My (kN*m)	Mz (kN*m)	Nodo N.ro	Tx (kN)	Ty (kN)	Tz (kN)	Mx (kN*m)	My (kN*m)	Mz (kN*m)
1	38	7.1	5.4	1.0	-0.2	-0.9	1.1	39	-12.8	-1.8	-0.7	-0.3	0.6	-0.9
	14	8.3	3.4	0.9	0.2	-1.0	-0.7	1	-0.9	-7.0	-1.2	0.1	0.6	0.5
2	6	2.9	-24.5	1.2	-0.4	0.3	1.1	44	-1.0	11.4	-0.8	0.2	-0.2	-1.7
	2	-5.0	-2.1	-0.4	0.0	0.0	0.3	42	3.0	13.0	0.0	-0.1	0.0	0.2
3	39	18.8	-5.8	-0.2	-0.4	-0.1	1.1	44	5.2	-6.2	0.3	-0.2	-0.2	1.2
	1	-3.4	-4.5	1.2	0.2	-0.9	-1.2	6	-19.4	15.3	-1.2	0.4	0.1	-1.1
4	46	3.1	1.0	1.7	-0.1	-0.4	0.4	47	-1.4	1.2	0.7	0.2	0.2	-0.2
	10	0.8	-2.6	-1.6	-0.6	0.2	-0.3	16	-0.9	0.4	-0.8	-0.5	-0.3	0.1
5	50	5.1	-0.1	1.0	-0.4	-0.9	0.2	46	-1.1	4.1	1.1	0.0	0.2	-0.3
	4	-1.6	-2.8	0.5	-0.2	-0.1	-0.3	10	-0.4	-1.2	-2.6	-0.6	-0.3	0.4
6	54	0.0	0.0	-10.3	-0.7	0.7	0.0	55	0.0	0.0	16.2	-0.8	0.7	0.0
	7	0.0	0.0	6.7	-0.4	0.6	0.0	52	0.0	0.0	-9.7	-0.6	0.7	0.0
7	64	0.0	0.0	-0.8	-0.2	1.1	0.0	65	0.0	0.0	1.9	-1.1	1.4	0.0
	5	0.0	0.0	-7.8	0.2	1.2	0.0	62	0.0	0.0	9.4	1.2	1.5	0.0
8	47	6.5	-1.5	0.3	0.4	0.0	-0.2	72	1.2	2.0	0.1	0.1	0.0	-0.1
	16	-0.9	-1.3	-0.4	-0.4	0.1	-0.1	3	-5.1	0.8	0.0	-0.2	-0.1	0.4
9	76	5.6	0.0	0.4	0.1	0.0	0.5	77	-2.7	1.4	-0.1	0.0	0.0	-0.5
	25	3.2	-1.6	-0.4	-0.2	0.0	-0.4	74	-3.8	0.1	0.0	-0.1	-0.1	0.4
10	38	0.0	0.0	-3.7	-0.2	1.1	0.0	86	0.0	0.0	3.3	-1.3	1.5	0.0
	14	0.0	0.0	-4.7	0.8	1.0	0.0	71	0.0	0.0	8.0	1.7	1.5	0.0
11	94	0.0	0.0	-2.0	-0.2	1.2	0.0	95	0.0	0.0	3.5	-1.3	1.7	0.0
	18	0.0	0.0	-7.0	0.2	1.3	0.0	91	0.0	0.0	8.6	1.4	1.8	0.0
12	102	3.9	2.6	-0.3	-0.1	0.0	0.5	103	0.7	3.7	0.1	0.0	0.0	-0.5
	21	-2.5	-5.4	0.3	0.1	0.0	-0.2	84	0.0	-0.9	-0.1	0.1	0.0	0.2
13	112	6.3	-1.6	0.4	0.3	0.0	-0.2	76	0.9	1.9	0.0	0.1	0.0	-0.2
	36	-0.5	-1.3	-0.5	-0.4	0.1	-0.1	25	-4.9	1.0	0.0	-0.2	-0.1	0.4
14	114	3.5	0.9	1.6	-0.1	-0.4	0.5	112	-1.8	1.5	0.6	0.1	0.2	-0.2
	35	1.1	-2.7	-1.4	-0.6	0.1	-0.4	36	-0.9	0.3	-0.8	-0.5	-0.2	0.1
15	24	2.9	-23.0	1.3	-0.4	0.3	1.1	116	-0.8	12.4	-1.0	0.2	-0.2	-1.6
	21	-5.6	-2.7	-0.3	0.0	0.0	0.2	102	3.5	11.4	0.0	-0.1	0.0	0.3
16	118	17.9	-4.5	-0.4	-0.3	0.1	1.0	116	5.4	-6.6	0.4	-0.3	-0.3	1.2
	20	-3.9	-4.3	1.3	0.2	-1.0	-1.1	24	-18.3	14.2	-1.3	0.5	0.1	-1.1
17	120	0.1	-3.8	0.0	0.1	0.1	-0.4	121	1.4	-2.7	-0.1	0.0	0.0	0.5
	9	-1.5	3.2	-0.4	0.0	0.2	0.4	43	0.0	5.6	0.4	0.0	-0.1	-0.5
18	10	-1.4	-0.3	-2.2	0.0	0.6	-0.3	130	4.1	0.0	1.1	-0.2	0.1	0.3
	4	-3.0	-2.1	0.3	0.2	0.1	0.3	68	0.3	4.6	0.8	0.7	0.2	-0.3
19	100	5.6	-0.2	1.0	-0.4	-0.9	0.3	114	-1.7	3.9	0.9	0.0	0.2	-0.3
	19	-1.3	-2.7	0.7	-0.1	-0.1	-0.4	35	-0.4	-1.1	-2.6	-0.6	-0.3	0.4
20	35	-1.1	-0.6	-2.2	0.0	0.5	-0.4	149	4.2	-0.5	1.0	-0.2	0.1	0.4
	19	-3.1	-1.9	0.4	0.2	0.1	0.3	97	0.0	5.3	0.7	0.8	0.2	-0.3
21	132	-1.1	-9.0	-0.8	-0.4	-0.3	-0.9	166	0.5	-9.5	-1.6	-0.4	0.3	0.9
	5	0.9	10.8	0.9	1.3	-0.3	0.9	58	-0.3	10.0	1.5	1.2	0.2	-1.0
22	151	-1.3	-8.2	-0.5	-0.4	-0.3	-0.8	178	0.6	-8.9	-1.7	-0.3	0.3	0.8
	18	0.7	10.2	0.7	1.2	-0.3	0.8	93	0.0	9.0	1.5	1.0	0.2	-0.9
23	123	-0.9	0.0	-0.1	0.0	-0.1	-0.2	190	3.7	0.7	0.1	0.0	0.0	0.5
	2	-5.4	-2.5	0.3	0.0	-0.1	0.2	73	2.6	3.9	-0.3	0.0	0.1	-0.5
24	53	6.0	5.3	1.2	-0.2	-0.9	1.0	118	-12.1	-1.7	-0.9	-0.3	0.5	-0.8
	11	7.7	3.2	0.9	0.2	-1.0	-0.5	20	-0.2	-6.8	-1.2	0.0	0.5	0.3
25	40	7.6	2.3	1.6	-0.1	-0.7	1.1	41	-11.1	-0.6	-1.7	-0.1	0.2	-1.1
	38	13.3	2.6	0.6	0.3	-1.1	-0.9	39	-7.9	-4.4	-0.5	0.0	0.3	0.9
26	17	-1.4	2.7	0.7	0.1	-0.2	0.4	12	-0.3	1.1	-2.6	0.6	-0.3	-0.4
	40	5.6	0.2	1.0	0.4	-0.9	-0.3	41	-1.7	-4.0	0.9	0.0	0.2	0.3
27	44	3.6	-14.2	0.8	-0.1	0.3	0.7	45	0.5	4.6	-0.6	0.1	-0.2	-0.4
	42	-2.9	-2.8	-0.2	0.0	0.0	-0.1	43	-1.2	10.4	0.1	-0.1	-0.2	-0.2
28	45	1.6	-6.3	0.4	0.0	0.3	0.2	15	1.3	0.5	-0.5	0.1	-0.4	0.1
	43	-1.9	-0.9	0.0	0.0	0.1	0.2	9	-1.0	4.9	0.0	-0.1	-0.2	-0.4
29	41	10.7	-0.9	-0.8	0.0	0.0	1.3	45	-0.3	-0.5	-0.4	0.0	-0.3	0.0
	39	1.1	-4.4	1.4	0.1	-0.8	-1.1	44	-10.0	4.7	-0.2	0.3	0.1	-0.2
30	12	1.9	2.2	-1.4	0.6	-0.1	0.4	15	-1.0	0.0	-0.8	0.4	-0.4	-0.1
	41	2.9	-2.1	1.7	0.0	-0.4	-0.5	45	-2.2	-0.7	0.6	0.0	0.2	0.2
31	48	1.6	3.8	1.6	-0.3	-0.8	0.9	49	-9.9	-1.9	-0.2	-0.2	0.3	0.3
	46	9.8	-2.2	-1.1	-0.1	0.1	-1.1	47	0.1	0.8	-0.3	-0.1	-0.4	-0.1
32	1	-3.1	4.9	1.3	-0.3	-1.0	1.1	8	-20.5	-10.9	-1.4	-0.5	0.2	1.1
	48	18.4	1.4	-0.4	0.4	0.1	-1.0	49	6.5	5.6	0.4	0.2	-0.4	-1.2
33	51	12.4	-2.5	0.5	-0.3	-1.0	0.8	48	-6.6	4.8	-0.3	0.0	0.3	-0.7
	50	6.4	-2.6	1.5	0.1	-0.6	-1.0	46	-10.4	0.3	-1.7	0.1	0.1	1.0
34	14	7.7	-3.2	0.9	-0.2	-1.0	0.5	1	-0.2	6.8	-1.2	0.0	0.5	-0.3
	51	5.9	-5.3	1.2	0.2	-0.9	-1.0	48	-12.0	1.7	-0.9	0.3	0.5	0.8
35	55	0.0	0.0	-5.0	-1.1	-0.9	0.0	56	0.0	0.0	13.8	-1.3	1.4	0.0
	52	0.0	0.0	4.3	-0.8	0.1	0.0	53	0.0	0.0	-10.2	-0.9	0.6	0.0
36	56	0.0	0.0	1.3	-1.5	-1.4	0.0	57	0.0	0.0	8.8	-1.5	1.8	0.0
	53	0.0	0.0	-2.1	-0.9	-0.3	0.0	11	0.0	0.0	-5.2	-1.0	1.0	0.0
37	58	0.0	0.0	-11.7	-0.3	1.1	0.0	59	0.0	0.0	14.0	-1.2	1.3	0.0
	54	0.0	0.0	4.5	0.1	1.0	0.0	55	0.0	0.0	-3.8	0.9	1.1	0.0
38	59	0.0	0.0	-6.5	-1.5	-1.5	0.0	60	0.0	0.0	9.9	-2.1	2.4	0.0
	55	0.0	0.0	4.5	1.0	-1.0	0.0	56	0.0	0.0	-5.0	1.4	1.8	0.0
39	60	0.0	0.0	-0.8	-2.3	-2.5	0.0	61	0.0	0.0	5.5	-2.5	2.7	0.0
	56	0.0	0.0	1.2	1.4	-1.8	0.0	57	0.0	0.0	-3.0	1.5	2.1	0.0
40	5	0.0	0.0	-7.2	-0.1	1.3	0.0	62	0.0	0.0	8.7	-1.2	1.6	0.0
	58	0.0	0.0	-2.3	0.1	1.3	0.0	59	0.0	0.0	3.7	1.2	1.6	0.0
41	62	0.0	0.0	-3.3	-1.5	-1.6	0.0	63	0.0	0.0	5.2	-2.3	2.8	0.0
	59	0.0	0.0	0.2	1.4	-1.5	0.0	60	0.0	0.0	0.9	2.1	2.6	0.0

Documento di proprietà **Snam Rete Gas**. La Società tutelerà i propri diritti in sede civile e penale a termini di legge.

FORZE PESO PROPRIO: SHELL

Shell Nro	Nodo N.ro	Tx (kN)	Ty (kN)	Tz (kN)	Mx (kN*m)	My (kN*m)	Mz (kN*m)	Nodo N.ro	Tx (kN)	Ty (kN)	Tz (kN)	Mx (kN*m)	My (kN*m)	Mz (kN*m)
42	63	0.0	0.0	-0.4	-2.4	-2.8	0.0	13	0.0	0.0	2.5	-2.7	3.1	0.0
	60	0.0	0.0	0.6	2.2	-2.6	0.0	61	0.0	0.0	0.3	2.5	2.9	0.0
43	65	0.0	0.0	1.2	-1.4	-1.3	0.0	66	0.0	0.0	-0.4	-2.1	2.4	0.0
	62	0.0	0.0	-4.0	1.5	-1.5	0.0	63	0.0	0.0	5.9	2.2	2.6	0.0
44	66	0.0	0.0	0.8	-2.2	-2.3	0.0	67	0.0	0.0	-0.4	-2.4	2.6	0.0
	63	0.0	0.0	-0.6	2.4	-2.6	0.0	13	0.0	0.0	3.0	2.7	2.9	0.0
45	68	0.0	0.0	5.5	-0.2	0.8	0.0	69	0.0	0.0	-5.0	-0.8	1.0	0.0
	64	0.0	0.0	-11.8	0.3	1.0	0.0	65	0.0	0.0	14.0	1.1	1.2	0.0
46	69	0.0	0.0	4.9	-0.9	-0.9	0.0	70	0.0	0.0	-5.9	-1.3	1.6	0.0
	65	0.0	0.0	-6.5	1.5	-1.3	0.0	66	0.0	0.0	10.2	2.0	2.2	0.0
47	70	0.0	0.0	1.1	-1.3	-1.6	0.0	71	0.0	0.0	-3.4	-1.4	1.8	0.0
	66	0.0	0.0	-0.7	2.2	-2.2	0.0	67	0.0	0.0	5.7	2.4	2.5	0.0
48	4	0.0	0.0	6.6	0.4	0.5	0.0	50	0.0	0.0	-9.9	0.6	0.7	0.0
	68	0.0	0.0	-10.1	0.7	0.6	0.0	69	0.0	0.0	16.0	0.7	0.7	0.0
49	50	0.0	0.0	4.1	0.8	0.1	0.0	51	0.0	0.0	-10.3	0.9	0.5	0.0
	69	0.0	0.0	-4.9	1.0	-0.7	0.0	70	0.0	0.0	13.8	1.2	1.3	0.0
50	51	0.0	0.0	-2.3	1.0	-0.2	0.0	14	0.0	0.0	-5.4	1.0	0.9	0.0
	70	0.0	0.0	1.5	1.4	-1.2	0.0	71	0.0	0.0	8.9	1.4	1.6	0.0
51	49	11.8	-8.0	0.8	0.3	-0.3	-0.7	73	4.1	1.8	-0.1	0.0	0.0	0.1
	47	-5.2	1.4	-0.6	-0.2	0.2	0.4	72	-9.1	4.1	0.0	-0.2	-0.1	0.1
52	8	17.1	-15.6	1.4	0.0	-0.5	-1.1	2	5.5	3.0	-0.3	0.0	0.0	-0.2
	49	-9.7	7.8	-1.0	-0.1	0.3	1.6	73	-11.3	3.7	-0.1	-0.1	-0.1	-0.3
53	77	2.7	0.9	0.2	0.0	0.0	0.3	78	-2.2	-0.2	-0.1	0.0	0.0	-0.3
	74	3.4	-0.2	0.0	-0.1	0.0	-0.3	75	-1.5	-0.4	-0.1	0.0	-0.1	0.2
54	78	0.5	1.0	0.1	0.0	0.0	0.1	79	-1.0	-0.8	0.0	0.0	0.0	0.0
	75	2.3	0.4	0.1	0.0	0.0	-0.1	32	0.5	-0.5	-0.1	0.0	-0.1	0.0
55	80	5.2	2.6	0.5	-0.1	0.1	0.8	81	-3.5	2.2	-0.1	0.0	0.0	-0.7
	76	3.9	-3.1	-0.6	0.0	0.0	-0.6	77	-3.3	-1.7	0.2	0.0	0.0	0.5
56	81	1.0	2.2	0.2	0.0	0.0	0.3	82	-1.7	-0.3	-0.1	0.0	0.0	-0.2
	77	3.3	-0.6	-0.3	0.0	0.0	-0.3	78	-0.3	-1.3	0.2	0.0	0.0	0.2
57	82	0.1	1.0	0.1	0.0	0.0	0.1	83	-0.7	-0.8	0.0	0.0	0.0	0.0
	78	2.1	0.5	-0.2	0.0	0.0	-0.1	79	1.0	-0.8	0.1	0.0	0.0	0.0
58	21	-2.4	6.0	0.3	-0.2	0.0	0.3	84	-0.7	0.6	-0.1	-0.1	-0.1	-0.3
	80	5.0	-2.4	-0.3	0.1	0.0	-0.6	81	0.4	-4.2	0.0	0.0	0.0	0.5
59	84	0.3	1.3	0.1	-0.1	0.1	0.1	85	-0.4	-0.1	0.0	0.0	0.0	-0.1
	81	2.1	-0.2	-0.1	0.0	0.0	-0.1	82	0.4	-1.0	0.1	0.0	0.0	0.2
60	85	0.4	0.4	0.0	0.0	0.0	0.0	31	0.0	-0.3	0.0	0.0	0.0	0.0
	82	1.2	0.2	-0.1	0.0	0.0	0.0	83	0.7	-0.4	0.1	0.0	0.0	0.0
61	86	0.0	0.0	0.0	-1.6	-1.4	0.0	87	0.0	0.0	0.7	-2.3	2.5	0.0
	71	0.0	0.0	-2.7	1.8	-1.5	0.0	67	0.0	0.0	4.9	2.5	2.6	0.0
62	87	0.0	0.0	0.5	-2.4	-2.4	0.0	88	0.0	0.0	0.1	-2.7	2.7	0.0
	67	0.0	0.0	-0.2	2.6	-2.6	0.0	13	0.0	0.0	2.5	2.9	2.9	0.0
63	40	0.0	0.0	3.3	0.1	1.0	0.0	89	0.0	0.0	-3.7	-0.8	1.2	0.0
	38	0.0	0.0	-10.5	0.4	1.0	0.0	86	0.0	0.0	13.8	1.3	1.3	0.0
64	89	0.0	0.0	4.5	-1.0	-1.0	0.0	90	0.0	0.0	-5.6	-1.4	1.7	0.0
	86	0.0	0.0	-5.8	1.6	-1.4	0.0	87	0.0	0.0	9.9	2.3	2.2	0.0
65	90	0.0	0.0	1.3	-1.4	-1.6	0.0	91	0.0	0.0	-3.4	-1.6	1.8	0.0
	87	0.0	0.0	-0.5	2.4	-2.3	0.0	88	0.0	0.0	5.6	2.7	2.5	0.0
66	17	0.0	0.0	6.7	0.5	0.5	0.0	92	0.0	0.0	-9.9	0.6	0.7	0.0
	40	0.0	0.0	-10.2	0.7	0.6	0.0	89	0.0	0.0	16.3	0.7	0.8	0.0
67	92	0.0	0.0	5.8	0.8	-0.2	0.0	93	0.0	0.0	-11.6	1.0	0.4	0.0
	89	0.0	0.0	-5.2	1.0	-0.9	0.0	90	0.0	0.0	14.0	1.3	1.2	0.0
68	93	0.0	0.0	-0.5	1.1	-0.2	0.0	18	0.0	0.0	-7.6	1.1	0.3	0.0
	90	0.0	0.0	1.8	1.5	-1.3	0.0	91	0.0	0.0	9.3	1.6	1.3	0.0
69	95	0.0	0.0	0.4	-1.7	-1.6	0.0	96	0.0	0.0	0.7	-2.4	2.7	0.0
	91	0.0	0.0	-2.8	1.8	-1.7	0.0	88	0.0	0.0	4.8	2.5	2.9	0.0
70	96	0.0	0.0	0.6	-2.5	-2.7	0.0	61	0.0	0.0	0.3	-2.7	2.9	0.0
	88	0.0	0.0	0.2	2.7	-2.9	0.0	13	0.0	0.0	2.1	2.9	3.1	0.0
71	97	0.0	0.0	4.7	-0.2	0.9	0.0	98	0.0	0.0	-4.1	-1.0	1.2	0.0
	94	0.0	0.0	-11.4	0.4	1.1	0.0	95	0.0	0.0	13.9	1.3	1.5	0.0
72	98	0.0	0.0	4.3	-1.2	-1.1	0.0	99	0.0	0.0	-5.0	-1.6	1.8	0.0
	95	0.0	0.0	-5.6	1.7	-1.6	0.0	96	0.0	0.0	9.5	2.3	2.5	0.0
73	99	0.0	0.0	0.3	-1.6	-1.9	0.0	57	0.0	0.0	-2.3	-1.6	2.1	0.0
	96	0.0	0.0	0.5	2.5	-2.6	0.0	61	0.0	0.0	4.6	2.7	2.8	0.0
74	19	0.0	0.0	6.6	0.5	0.6	0.0	100	0.0	0.0	-10.0	0.7	0.7	0.0
	97	0.0	0.0	-10.0	0.8	0.7	0.0	98	0.0	0.0	16.6	0.9	0.8	0.0
75	100	0.0	0.0	3.5	0.9	0.1	0.0	101	0.0	0.0	-10.1	1.0	0.5	0.0
	98	0.0	0.0	-4.0	1.2	-0.9	0.0	99	0.0	0.0	13.7	1.5	1.5	0.0
76	101	0.0	0.0	-3.5	1.0	-0.3	0.0	11	0.0	0.0	-4.5	1.0	0.9	0.0
	99	0.0	0.0	3.2	1.7	-1.4	0.0	57	0.0	0.0	8.0	1.6	1.8	0.0
77	103	1.6	0.3	-0.2	0.0	0.0	0.1	104	0.4	0.8	0.1	0.0	0.0	-0.1
	84	0.4	-1.0	0.1	0.1	0.0	-0.1	85	-0.2	0.0	0.0	0.0	0.0	0.1
78	104	1.1	-0.3	-0.1	0.0	0.0	0.0	105	0.7	0.4	0.1	0.0	0.0	0.0
	85	0.3	-0.4	0.0	0.0	0.0	0.0	31	0.0	0.3	0.0	0.0	0.0	0.0
79	106	3.5	3.0	-0.6	0.0	0.0	0.5	107	-2.6	1.9	0.2	0.0	0.0	-0.5
	102	4.2	-2.9	0.5	0.1	0.1	-0.7	103	-2.9	-2.0	-0.1	0.0	0.0	0.6
80	107	3.1	0.3	-0.3	0.0	0.0	0.2	108	0.0	1.2	0.2	0.0	0.0	-0.2
	103	0.6	-1.9	0.3	0.0	0.0	-0.2	104	-1.5	0.4	-0.1	0.0	0.0	0.2
81	108	2.0	-0.6	-0.2	0.0	0.0	0.1	109	1.0	0.8	0.1	0.0	0.0	0.0
	104	-0.1	-0.9	0.1	0.0	0.0	0.0	105	-0.7	0.7	0.0	0.0	0.0	0.0

Documento di proprietà **Snam Rete Gas**. La Società tutelerà i propri diritti in sede civile e penale a termini di legge.

FORZE PESO PROPRIO: SHELL

Shell Nro	Nodo N.ro	Tx (kN)	Ty (kN)	Tz (kN)	Mx (kN*m)	My (kN*m)	Mz (kN*m)	Nodo N.ro	Tx (kN)	Ty (kN)	Tz (kN)	Mx (kN*m)	My (kN*m)	Mz (kN*m)
82	22	3.2	1.5	-0.4	0.2	0.0	0.3	110	-3.6	0.1	0.0	0.1	-0.1	-0.3
	106	5.2	-0.3	0.5	-0.1	0.0	-0.5	107	-2.7	-1.3	0.0	0.0	0.0	0.5
83	110	3.5	0.0	0.0	0.1	0.0	0.2	111	-1.2	0.5	-0.1	0.1	-0.1	-0.2
	107	2.2	-0.9	0.2	0.0	0.0	-0.3	108	-2.2	0.4	0.0	0.0	0.0	0.2
84	111	2.3	-0.5	0.1	0.0	0.0	0.1	30	0.7	0.6	-0.1	0.0	-0.1	0.0
	108	0.3	-0.9	0.1	0.0	0.0	-0.1	109	-1.0	0.8	0.0	0.0	0.0	0.0
85	113	12.1	-8.3	0.7	0.2	-0.2	-0.7	80	3.6	1.7	-0.2	0.0	0.0	0.1
	112	-4.4	1.2	-0.6	-0.2	0.2	0.4	76	-9.4	4.7	0.1	-0.2	-0.1	0.2
86	23	18.3	-16.5	1.2	0.0	-0.5	-1.1	21	4.6	2.8	-0.4	0.0	0.0	-0.3
	113	-8.8	7.4	-0.8	0.0	0.3	1.7	80	-12.4	5.0	0.0	-0.1	-0.1	-0.2
87	115	2.1	3.9	1.4	-0.3	-0.7	1.1	113	-10.9	-2.0	-0.2	-0.2	0.2	0.2
	114	10.6	-1.8	-0.8	0.0	0.0	-1.3	112	-0.2	0.5	-0.4	-0.1	-0.3	0.0
88	20	-2.6	5.0	1.2	-0.4	-0.8	1.2	23	-21.6	-11.7	-1.2	-0.4	0.2	1.1
	115	19.5	2.6	-0.2	0.4	-0.1	-1.1	113	6.2	5.2	0.2	0.2	-0.3	-1.2
89	116	3.3	-13.9	0.8	-0.2	0.3	0.7	117	0.5	5.4	-0.6	0.1	-0.3	-0.4
	102	-3.1	-3.3	-0.1	0.0	0.0	-0.1	106	-0.6	9.9	0.0	-0.1	-0.2	-0.1
90	117	1.5	-6.5	0.3	0.0	0.4	0.2	37	1.3	0.9	-0.4	0.1	-0.4	0.1
	106	-2.0	-1.2	0.1	0.0	0.1	0.1	22	-0.8	5.1	0.0	-0.1	-0.2	-0.4
91	119	10.0	-0.4	-1.1	0.1	0.1	1.1	117	-0.2	-0.8	-0.3	0.0	-0.4	0.1
	118	0.6	-4.1	1.6	0.1	-0.8	-0.9	116	-9.1	4.3	-0.2	0.2	0.2	-0.3
92	34	1.7	2.2	-1.6	0.6	-0.1	0.3	37	-1.0	0.0	-0.8	0.4	-0.4	-0.1
	119	2.6	-2.0	1.7	0.0	-0.4	-0.4	117	-1.8	-0.7	0.7	-0.1	0.3	0.2
93	121	-1.7	-3.3	0.2	0.0	0.0	-0.5	122	2.2	-3.5	-0.1	0.0	0.0	0.7
	43	-3.1	3.9	-0.6	0.0	0.0	0.6	42	2.6	5.2	0.5	-0.1	0.1	-0.8
94	122	-4.2	0.4	0.0	0.0	0.0	-0.5	123	0.6	-0.6	-0.1	0.1	0.1	0.3
	42	-2.5	5.0	-0.3	0.0	-0.1	0.6	2	6.0	-2.4	0.3	0.0	0.2	-0.3
95	124	-0.4	-1.5	-0.1	0.1	0.0	-0.2	125	-0.2	-2.2	-0.1	0.0	0.0	0.3
	120	-0.2	3.4	0.0	0.0	0.1	0.3	121	0.9	2.7	0.2	0.0	0.0	-0.3
96	125	-1.3	-0.3	0.2	0.0	0.0	-0.2	126	-0.3	-1.7	-0.1	0.0	0.0	0.2
	121	-0.6	3.3	-0.3	0.0	0.0	0.3	122	2.2	1.0	0.2	0.0	0.0	-0.3
97	126	-1.0	0.4	0.1	0.0	0.0	-0.2	127	-0.1	-0.4	0.0	0.0	0.0	0.1
	122	-0.2	2.1	-0.1	0.0	0.0	0.1	123	1.3	0.3	0.1	0.0	0.1	-0.1
98	26	-0.5	0.5	-0.1	0.1	0.0	0.0	128	-0.8	-1.0	0.0	0.0	0.0	0.0
	124	0.4	2.3	0.1	0.0	0.0	0.1	125	1.0	0.5	0.1	0.0	0.0	-0.1
99	128	-0.8	1.0	0.1	0.0	0.0	0.0	129	-0.8	-0.7	0.0	0.0	0.0	0.0
	125	0.5	2.1	-0.2	0.0	0.0	0.1	126	1.0	0.1	0.1	0.0	0.0	-0.1
100	129	-0.4	0.7	0.1	0.0	0.0	0.0	27	-0.3	0.0	0.0	0.0	0.0	0.0
	126	0.2	1.2	-0.1	0.0	0.0	0.0	127	0.4	0.4	0.0	0.0	0.0	0.0
101	130	-0.6	-7.3	-2.4	-0.1	-0.1	-0.7	131	2.7	-5.6	0.4	-0.4	0.3	0.7
	68	-1.4	5.8	1.8	0.8	-0.1	0.8	64	-0.7	9.3	0.3	1.1	0.3	-0.7
102	131	-0.6	-8.8	-1.7	-0.3	-0.3	-0.8	132	1.3	-8.2	-0.5	-0.4	0.3	0.8
	64	0.0	9.0	1.5	1.0	-0.2	0.8	5	-0.7	10.2	0.7	1.2	0.3	-0.8
103	16	-0.9	-1.3	-0.5	0.0	0.5	-0.4	133	2.9	-0.7	0.5	0.0	0.0	0.5
	10	-2.8	-0.1	-1.7	0.0	0.7	0.2	130	0.8	4.3	1.7	0.1	0.0	-0.3
104	133	-0.7	-5.8	-0.5	0.0	0.1	-0.7	134	3.7	-3.1	-0.1	-0.1	0.2	0.7
	130	-4.3	3.0	-0.4	0.2	0.0	0.7	131	1.3	8.1	1.1	0.3	0.2	-0.8
105	134	-1.7	-6.9	-0.6	0.0	-0.2	-0.8	135	3.0	-5.6	-0.4	-0.1	0.2	0.8
	131	-3.4	6.3	0.3	0.3	-0.2	0.9	132	2.1	8.4	0.7	0.4	0.3	-0.9
106	3	-0.5	-2.2	-0.4	0.1	0.3	-0.3	136	0.6	-2.5	0.1	0.1	-0.1	0.4
	16	-0.2	3.1	-0.5	0.0	0.4	0.2	133	0.1	3.7	0.7	0.0	-0.1	-0.2
107	136	0.0	-4.0	0.0	0.0	0.1	-0.4	137	1.8	-2.4	-0.2	0.0	0.1	0.5
	133	-2.4	2.8	-0.6	0.0	0.1	0.4	134	0.6	5.7	0.8	0.0	0.1	-0.5
108	137	-0.8	-4.5	-0.1	0.0	-0.1	-0.5	138	1.8	-3.6	-0.2	0.0	0.1	0.6
	134	-2.6	4.3	-0.2	0.1	-0.1	0.6	135	1.7	5.9	0.5	0.1	0.2	-0.6
109	139	0.0	-2.9	-0.2	0.1	0.1	-0.3	140	-0.2	-2.6	0.0	0.0	0.0	0.3
	3	0.1	4.1	-0.3	0.0	0.2	0.3	136	0.0	3.5	0.4	0.0	-0.1	-0.2
110	140	0.3	-2.6	0.1	0.0	0.0	-0.3	141	0.3	-1.9	-0.1	0.0	0.0	0.3
	136	-0.6	2.9	-0.5	0.0	0.1	0.3	137	0.1	3.7	0.5	0.0	0.0	-0.3
111	141	-0.1	-2.5	0.0	0.0	0.0	-0.3	142	0.4	-2.2	-0.1	0.0	0.1	0.3
	137	-1.0	3.1	-0.2	0.0	-0.1	0.3	138	0.7	3.7	0.2	0.0	0.1	-0.3
112	143	0.3	-2.1	-0.1	0.1	0.1	-0.2	144	-0.1	-1.4	0.0	0.0	0.0	0.2
	139	-0.1	2.9	0.0	0.0	0.1	0.2	140	-0.1	2.8	0.1	0.0	0.0	-0.2
113	144	0.3	-1.4	0.1	0.0	0.0	-0.1	145	-0.2	-1.1	-0.1	0.0	0.0	0.1
	140	0.0	2.3	-0.3	0.0	0.0	0.1	141	-0.1	2.3	0.2	0.0	0.0	-0.1
114	145	0.2	-1.1	0.1	0.0	0.0	-0.1	146	-0.1	-1.0	0.0	0.0	0.0	0.1
	141	-0.1	2.2	-0.1	0.0	0.0	0.2	142	0.1	2.2	0.1	0.0	0.0	-0.1
115	28	0.4	-0.7	-0.1	0.0	0.0	-0.1	147	0.1	0.1	0.0	0.0	0.0	0.0
	143	-0.3	1.1	0.1	0.0	0.0	0.1	144	-0.2	1.6	0.0	0.0	0.0	-0.1
116	147	0.1	-0.1	0.1	0.0	0.0	0.0	148	-0.1	0.0	0.0	0.0	0.0	0.0
	144	0.0	1.2	-0.2	0.0	0.0	0.1	145	-0.1	1.1	0.1	0.0	0.0	0.0
117	148	0.1	0.0	0.1	0.0	0.0	0.0	29	-0.1	0.0	0.0	0.0	0.0	0.0
	145	0.1	1.1	-0.1	0.0	0.0	0.0	146	0.0	1.0	0.0	0.0	0.0	0.0
118	101	13.2	-2.6	0.6	-0.3	-1.1	0.9	115	-7.9	4.4	-0.5	0.0	0.3	-0.9
	100	7.6	-2.3	1.6	0.1	-0.7	-1.1	114	-11.1	0.6	-1.7	0.1	0.2	1.1
119	11	8.3	-3.4	0.9	-0.2	-1.0	0.6	20	-0.9	7.0	-1.2	-0.1	0.6	-0.5
	101	7.0	-5.4	1.0	0.2	-0.9	-1.1	115	-12.8	1.8	-0.7	0.3	0.6	0.9
120	149	-0.4	-8.1	-2.4	-0.1	-0.1	-0.8	150	2.6	-6.5	0.2	-0.4	0.3	0.8
	97	-1.3	6.7	1.9	0.9	-0.1	0.9	94	-0.9	10.2	0.4	1.2	0.3	-0.8
121	150	-0.5	-9.6	-1.6	-0.4	-0.3	-0.9	151	1.1	-9.0	-0.8	-0.4	0.3	0.9
	94	0.2	10.0	1.5	1.2	-0.2	1.0	18	-0.9	10.9	0.9	1.2	0.3	-0.9

Documento di proprietà **Snam Rete Gas**. La Società tutelerà i propri diritti in sede civile e penale a termini di legge.

FORZE PESO PROPRIO: SHELL

Shell Nro	Nodo N.ro	Tx (kN)	Ty (kN)	Tz (kN)	Mx (kN*m)	My (kN*m)	Mz (kN*m)	Nodo N.ro	Tx (kN)	Ty (kN)	Tz (kN)	Mx (kN*m)	My (kN*m)	Mz (kN*m)
122	36	-0.7	-1.6	-0.5	0.0	0.5	-0.4	152	3.1	-0.9	0.4	0.0	0.0	0.5
	35	-2.9	0.0	-1.6	0.0	0.6	0.2	149	0.5	4.9	1.7	0.1	0.1	-0.3
123	152	-0.6	-6.4	-0.6	0.0	0.0	-0.7	153	3.7	-3.8	-0.2	-0.1	0.2	0.8
	149	-4.4	3.8	-0.3	0.2	0.0	0.8	150	1.2	8.7	1.0	0.4	0.3	-0.9
124	153	-1.8	-7.3	-0.6	-0.1	-0.2	-0.9	154	2.8	-6.4	-0.5	-0.1	0.2	0.9
	150	-3.3	7.3	0.4	0.4	-0.2	1.0	151	2.2	8.8	0.7	0.4	0.3	-1.0
125	25	-0.4	-2.3	-0.3	0.1	0.2	-0.4	155	0.8	-2.4	0.1	0.0	0.0	0.4
	36	-0.6	3.0	-0.5	0.0	0.4	0.2	152	0.1	4.1	0.7	0.0	-0.1	-0.3
126	155	0.0	-4.3	0.0	0.0	0.1	-0.5	156	1.9	-2.7	-0.2	0.0	0.1	0.5
	152	-2.6	3.2	-0.6	0.0	0.0	0.5	153	0.7	6.1	0.8	0.0	0.1	-0.6
127	156	-1.0	-4.7	-0.1	0.0	-0.1	-0.6	157	1.7	-4.1	-0.2	0.0	0.1	0.6
	153	-2.7	5.0	-0.1	0.1	-0.2	0.7	154	1.9	6.1	0.4	0.1	0.2	-0.7
128	74	0.0	-2.8	-0.1	0.1	0.1	-0.3	158	-0.1	-2.5	0.0	0.0	0.0	0.3
	25	0.0	4.1	-0.2	0.0	0.2	0.3	155	0.1	3.6	0.4	0.0	-0.1	-0.3
129	158	0.2	-2.7	0.1	0.0	0.0	-0.3	159	0.4	-2.0	-0.1	0.0	0.0	0.3
	155	-0.8	3.1	-0.4	0.0	0.0	0.3	156	0.2	4.0	0.4	0.0	0.1	-0.3
130	159	-0.2	-2.7	0.0	0.0	0.0	-0.3	160	0.5	-2.4	-0.1	0.0	0.1	0.3
	156	-1.2	3.5	-0.1	0.0	-0.1	0.4	157	0.9	3.9	0.2	0.0	0.1	-0.4
131	75	0.3	-2.0	-0.1	0.1	0.0	-0.2	161	-0.2	-1.5	0.0	0.0	0.0	0.2
	74	0.0	3.1	0.0	0.0	0.1	0.2	158	-0.1	2.8	0.2	0.0	0.0	-0.2
132	161	0.2	-1.3	0.1	0.0	0.0	-0.2	162	-0.2	-1.1	-0.1	0.0	0.0	0.1
	158	0.0	2.4	-0.3	0.0	0.0	0.2	159	0.0	2.4	0.2	0.0	0.0	-0.2
133	162	0.1	-1.2	0.1	0.0	0.0	-0.1	163	-0.1	-1.1	0.0	0.0	0.0	0.1
	159	-0.2	2.3	-0.1	0.0	0.0	0.2	160	0.2	2.3	0.1	0.0	0.0	-0.2
134	32	0.4	-0.5	-0.1	0.0	0.0	-0.1	164	0.0	0.0	0.0	0.0	0.0	0.0
	75	-0.3	1.3	0.1	0.0	0.0	0.1	161	-0.1	1.6	0.1	0.0	0.0	-0.1
135	164	0.1	0.0	0.1	0.0	0.0	0.0	165	-0.2	0.0	0.0	0.0	0.0	0.0
	161	0.0	1.3	-0.2	0.0	0.0	0.1	162	0.0	1.1	0.1	0.0	0.0	-0.1
136	165	0.1	0.0	0.1	0.0	0.0	0.0	33	-0.1	0.0	0.0	0.0	0.0	0.0
	162	0.0	1.2	-0.1	0.0	0.0	0.1	163	0.0	1.1	0.0	0.0	0.0	-0.1
137	166	-2.5	-6.6	0.2	-0.4	-0.3	-0.8	167	0.5	-8.1	-2.4	-0.1	0.1	0.8
	58	0.8	10.2	0.4	1.2	-0.3	0.8	54	1.2	6.8	1.9	0.9	0.1	-0.9
138	167	-4.2	-0.6	1.0	-0.2	-0.1	-0.4	34	1.2	-0.5	-2.2	0.0	-0.5	0.4
	54	-0.1	5.2	0.8	0.8	-0.2	0.3	7	3.1	-1.9	0.4	0.2	-0.1	-0.3
139	135	-2.8	-6.4	-0.5	-0.1	-0.2	-0.9	168	1.8	-7.4	-0.6	-0.1	0.2	0.9
	132	-2.2	8.8	0.7	0.4	-0.3	1.0	166	3.2	7.4	0.4	0.4	0.2	-1.0
140	168	-3.7	-3.9	-0.2	-0.1	-0.2	-0.8	169	0.6	-6.4	-0.6	0.0	0.0	0.7
	166	-1.2	8.7	1.0	0.4	-0.3	0.9	167	4.4	3.8	-0.3	0.2	0.0	-0.8
141	169	-3.1	-1.0	0.4	0.0	0.0	-0.5	37	0.8	-1.5	-0.5	0.0	-0.5	0.4
	167	-0.7	4.8	1.7	0.1	-0.1	0.3	34	2.9	0.0	-1.6	0.0	-0.6	-0.2
142	138	-1.7	-4.1	-0.2	0.0	-0.1	-0.6	170	0.9	-4.7	-0.1	0.0	0.1	0.6
	135	-1.9	6.2	0.4	0.1	-0.2	0.7	168	2.6	5.0	0.0	0.1	0.2	-0.7
143	170	-1.9	-2.8	-0.2	0.0	-0.1	-0.5	171	0.0	-4.3	0.0	0.0	-0.1	0.5
	168	-0.7	6.2	0.8	0.1	-0.1	0.6	169	2.6	3.3	-0.6	0.0	-0.1	-0.5
144	171	-0.7	-2.6	0.1	0.1	0.0	-0.5	22	0.5	-2.4	-0.4	0.1	-0.3	0.4
	169	-0.1	4.1	0.8	0.0	0.1	0.3	37	0.3	3.3	-0.5	0.0	-0.4	-0.2
145	142	-0.4	-2.4	-0.1	0.0	-0.1	-0.3	172	0.1	-2.7	0.0	0.0	0.0	0.3
	138	-0.8	3.9	0.2	0.0	-0.1	0.4	170	1.1	3.5	-0.1	0.0	0.1	-0.4
146	172	-0.3	-2.1	-0.1	0.0	0.0	-0.3	173	-0.3	-2.8	0.1	0.0	0.0	0.3
	170	-0.1	4.0	0.4	0.0	-0.1	0.3	171	0.7	3.2	-0.5	0.0	0.0	-0.3
147	173	0.1	-2.7	0.0	0.1	0.0	-0.3	110	-0.1	-3.1	-0.1	0.1	-0.1	0.3
	171	0.0	3.8	0.4	0.0	0.1	0.3	22	-0.1	4.3	-0.3	0.0	-0.2	-0.3
148	146	0.1	-1.1	0.0	0.0	0.0	-0.1	174	-0.2	-1.2	0.1	0.0	0.0	0.1
	142	-0.1	2.4	0.1	0.0	0.0	0.2	172	0.2	2.3	-0.1	0.0	0.0	-0.2
149	174	0.2	-1.2	-0.1	0.0	0.0	-0.1	175	-0.3	-1.4	0.1	0.0	0.0	0.2
	172	0.1	2.5	0.2	-0.1	0.0	0.2	173	0.0	2.5	-0.3	0.0	0.0	-0.2
150	175	0.1	-1.5	0.0	0.0	0.0	-0.2	111	-0.4	-2.3	-0.1	0.1	0.0	0.2
	173	0.1	3.0	0.2	0.0	0.0	0.2	110	0.1	3.2	0.0	0.0	-0.1	-0.2
151	29	0.1	0.0	0.0	0.0	0.0	0.0	176	-0.1	0.0	0.1	0.0	0.0	0.0
	146	0.0	1.1	0.0	0.0	0.0	0.1	174	0.0	1.2	-0.1	0.0	0.0	-0.1
152	176	0.1	0.0	0.0	0.0	0.0	0.0	177	-0.2	-0.1	0.1	0.0	0.0	0.0
	174	0.0	1.2	0.1	0.0	0.0	0.1	175	0.0	1.3	-0.2	0.0	0.0	-0.1
153	177	-0.1	0.1	0.0	0.0	0.0	0.0	30	-0.5	-0.7	-0.1	0.0	0.0	0.1
	175	0.2	1.7	0.0	0.0	0.0	0.1	111	0.4	1.2	0.1	0.0	0.0	-0.1
154	178	-2.8	-5.5	0.4	-0.3	-0.3	-0.7	179	0.6	-7.4	-2.4	-0.1	0.1	0.7
	93	0.7	9.4	0.3	1.1	-0.3	0.7	92	1.5	5.7	1.8	0.7	0.1	-0.8
155	179	-4.2	0.1	1.1	-0.2	-0.1	-0.3	12	1.3	-0.5	-2.1	0.0	-0.5	0.4
	92	-0.2	4.7	0.7	0.7	-0.2	0.3	17	3.1	-2.2	0.3	0.1	-0.1	-0.3
156	154	-3.0	-5.6	-0.4	-0.1	-0.2	-0.8	180	1.7	-6.9	-0.6	0.0	0.2	0.8
	151	-2.1	8.4	0.7	0.4	-0.3	0.9	178	3.4	6.3	0.3	0.3	0.2	-0.9
157	180	-3.7	-3.0	-0.1	-0.1	-0.2	-0.7	181	0.6	-5.8	-0.5	0.0	-0.1	0.7
	178	-1.2	8.1	1.0	0.3	-0.2	0.8	179	4.3	3.0	-0.4	0.2	0.0	-0.7
158	181	-2.9	-0.6	0.5	0.0	0.0	-0.5	15	0.8	-1.4	-0.5	0.0	-0.5	0.4
	179	-0.6	4.4	1.7	0.1	0.0	0.3	12	2.8	-0.2	-1.7	0.0	-0.7	-0.2
159	157	-1.9	-3.5	-0.2	0.0	-0.1	-0.6	182	0.9	-4.4	-0.1	0.0	0.1	0.5
	154	-1.7	5.9	0.5	0.1	-0.2	0.6	180	2.7	4.3	-0.2	0.1	0.1	-0.6
160	182	-1.9	-2.3	-0.2	0.0	-0.1	-0.5	183	0.1	-3.9	0.0	0.0	-0.1	0.4
	180	-0.7	5.7	0.8	0.0	-0.1	0.5	181	2.5	2.7	-0.7	0.0	-0.1	-0.4
161	183	-0.7	-2.2	0.1	0.0	0.1	-0.4	9	0.4	-2.1	-0.3	0.1	-0.2	0.3
	181	-0.2	3.7	0.7	0.0	0.1	0.3	15	0.5	2.8	-0.5	0.0	-0.4	-0.2

Documento di proprietà **Snam Rete Gas**. La Società tutelerà i propri diritti in sede civile e penale a termini di legge.

FORZE PESO PROPRIO: SHELL

Shell Nro	Nodo N.ro	Tx (kN)	Ty (kN)	Tz (kN)	Mx (kN*m)	My (kN*m)	Mz (kN*m)	Nodo N.ro	Tx (kN)	Ty (kN)	Tz (kN)	Mx (kN*m)	My (kN*m)	Mz (kN*m)
162	160	-0.5	-2.1	-0.1	0.0	-0.1	-0.3	184	0.1	-2.5	0.0	0.0	0.0	0.3
	157	-0.8	3.7	0.2	0.0	-0.1	0.3	182	1.1	3.1	-0.2	0.0	0.1	-0.3
163	184	-0.4	-1.8	-0.1	0.0	0.0	-0.3	185	-0.2	-2.5	0.1	0.0	0.0	0.3
	182	-0.2	3.7	0.5	0.0	0.0	0.3	183	0.7	2.8	-0.5	0.0	-0.1	-0.3
164	185	0.1	-2.4	0.0	0.0	0.0	-0.3	120	0.1	-2.6	-0.1	0.1	-0.1	0.3
	183	-0.1	3.3	0.4	0.0	0.1	0.2	9	-0.1	3.8	-0.2	0.0	-0.2	-0.2
165	163	0.1	-1.0	0.0	0.0	0.0	-0.1	186	-0.1	-1.1	0.1	0.0	0.0	0.1
	160	-0.1	2.2	0.1	0.0	0.0	0.2	184	0.2	2.1	-0.1	0.0	0.0	-0.2
166	186	0.2	-1.1	-0.1	0.0	0.0	-0.1	187	-0.2	-1.3	0.1	0.0	0.0	0.1
	184	0.1	2.2	0.2	0.0	0.0	0.1	185	0.0	2.3	-0.3	0.0	0.0	-0.1
167	187	0.2	-1.4	0.0	0.0	0.0	-0.2	124	-0.2	-1.9	-0.1	0.1	-0.1	0.2
	185	0.1	2.6	0.1	0.0	0.0	0.2	120	0.0	2.9	0.0	0.0	-0.1	-0.2
168	33	0.1	0.0	0.0	0.0	0.0	0.0	188	-0.1	0.0	0.1	0.0	0.0	0.0
	163	0.0	1.0	0.0	0.0	0.0	0.0	186	0.0	1.1	-0.1	0.0	0.0	0.0
169	188	0.1	0.0	0.0	0.0	0.0	0.0	189	-0.1	0.0	0.1	0.0	0.0	0.0
	186	0.0	1.1	0.1	0.0	0.0	0.0	187	-0.1	1.2	-0.2	0.0	0.0	-0.1
170	189	0.0	0.0	0.0	0.0	0.0	0.0	26	-0.3	-0.5	-0.1	0.0	0.0	0.1
	187	0.1	1.5	0.0	0.0	0.0	0.1	124	0.2	1.2	0.1	0.0	0.0	-0.1
171	190	-2.0	-2.9	-0.1	0.0	0.0	-0.6	191	1.9	-2.6	0.2	0.0	-0.1	0.5
	73	-2.9	4.2	0.5	-0.1	-0.1	0.7	72	3.0	3.5	-0.6	0.0	0.0	-0.5
172	191	-1.3	-2.7	0.0	0.0	0.0	-0.5	139	0.1	-3.6	0.0	0.1	-0.1	0.3
	72	-0.4	5.2	0.5	0.0	0.1	0.5	3	1.5	3.2	-0.4	0.0	-0.2	-0.3
173	127	0.0	-0.2	0.0	0.0	0.0	-0.1	192	0.8	0.4	0.1	0.0	0.0	0.1
	123	-1.0	0.3	0.1	0.0	-0.1	0.1	190	0.2	1.6	-0.2	0.0	0.0	-0.1
174	192	0.4	-1.5	-0.1	0.0	0.0	-0.2	193	1.2	0.0	0.2	0.0	0.0	0.2
	190	-1.9	0.6	0.2	0.0	0.0	0.2	191	0.3	3.1	-0.3	0.0	0.0	-0.2
175	193	0.4	-2.3	0.0	0.0	0.0	-0.2	143	0.5	-1.2	-0.1	0.1	-0.1	0.2
	191	-0.9	2.2	0.2	0.0	0.0	0.3	139	0.0	3.5	0.0	0.0	-0.1	-0.2
176	27	0.3	0.0	0.0	0.0	0.0	0.0	194	0.4	0.8	0.1	0.0	0.0	0.0
	127	-0.4	0.3	0.0	0.0	0.0	0.0	192	-0.3	1.1	-0.1	0.0	0.0	0.0
177	194	0.8	-0.8	0.0	0.0	0.0	0.0	195	0.8	1.0	0.1	0.0	0.0	0.0
	192	-0.9	-0.1	0.1	0.0	0.0	0.0	193	-0.6	2.0	-0.2	0.0	0.0	-0.1
178	195	0.9	-1.0	0.0	0.0	0.0	0.0	28	0.6	0.7	-0.1	0.1	0.0	0.0
	193	-1.0	0.3	0.1	0.0	0.0	0.1	143	-0.5	2.3	0.1	0.0	0.0	-0.1
179	52	6.5	2.7	1.5	-0.1	-0.6	1.0	119	-10.5	-0.3	-1.7	-0.1	0.1	-1.0
	53	12.4	2.5	0.5	0.3	-1.0	-0.8	118	-6.6	-4.8	-0.3	0.0	0.3	0.7
180	7	-1.6	2.8	0.5	0.2	-0.1	0.4	34	-0.4	1.2	-2.6	0.6	-0.3	-0.4
	52	5.1	0.1	1.0	0.4	-0.9	-0.2	119	-1.1	-4.1	1.1	0.0	0.2	0.2

FORZE SOVRACCARICO PERMAN.: SHELL

Shell Nro	Nodo N.ro	Tx (kN)	Ty (kN)	Tz (kN)	Mx (kN*m)	My (kN*m)	Mz (kN*m)	Nodo N.ro	Tx (kN)	Ty (kN)	Tz (kN)	Mx (kN*m)	My (kN*m)	Mz (kN*m)
1	38	17.3	-22.1	0.6	-0.1	-0.8	-0.1	39	7.0	7.5	-0.8	-0.2	0.5	-0.2
	14	16.7	-10.4	1.6	0.3	-1.2	-1.9	1	-41.0	25.1	-1.4	0.1	0.6	2.3
2	6	-1.6	19.8	1.1	-0.4	0.3	0.5	44	-1.4	-14.5	-0.8	0.2	-0.2	1.8
	2	8.7	-1.3	-0.3	0.0	0.0	-1.4	42	-5.7	-3.9	0.0	-0.1	0.0	-0.9
3	39	-7.6	-11.0	-0.6	-0.4	0.0	-0.9	44	0.8	12.5	0.2	-0.2	-0.2	-2.6
	1	-8.3	11.3	1.4	0.3	-0.9	4.1	6	15.1	-12.8	-1.1	0.4	0.1	-0.5
4	46	-2.9	2.3	1.5	-0.1	-0.4	-0.1	47	-1.8	1.6	0.9	0.2	0.2	-0.5
	10	2.0	0.2	-1.3	-0.6	0.2	0.3	16	2.7	-4.1	-1.1	-0.5	-0.3	0.4
5	50	-1.4	3.0	0.4	-0.3	-0.6	0.3	46	-1.7	0.7	1.1	0.1	0.1	-0.4
	4	-0.3	-0.7	0.8	-0.1	-0.1	0.1	10	3.4	-3.0	-2.4	-0.5	-0.3	0.0
6	54	0.0	0.0	-7.8	-0.6	0.3	0.0	55	0.0	0.0	11.6	-0.6	0.6	0.0
	7	0.0	0.0	5.2	-0.4	0.0	0.0	52	0.0	0.0	-9.0	-0.5	0.4	0.0
7	64	0.0	0.0	-0.4	-0.2	0.7	0.0	65	0.0	0.0	0.0	-0.9	0.9	0.0
	5	0.0	0.0	-6.0	0.3	0.7	0.0	62	0.0	0.0	6.4	1.0	0.9	0.0
8	47	-7.9	3.8	0.1	0.3	0.0	0.2	72	-4.2	-3.4	0.1	0.1	0.1	-0.2
	16	6.5	2.2	-0.1	-0.3	0.0	0.0	3	5.6	-2.6	-0.1	-0.2	-0.1	0.0
9	76	-3.9	0.2	0.3	0.1	0.0	-0.5	77	0.1	-2.1	-0.1	0.0	0.0	0.3
	25	1.2	3.0	-0.2	-0.1	0.0	0.2	74	2.6	-1.1	0.1	-0.1	0.0	0.0
10	38	0.0	0.0	5.5	-0.2	1.0	0.0	86	0.0	0.0	1.3	-0.7	1.1	0.0
	14	0.0	0.0	-14.7	-2.4	1.2	0.0	71	0.0	0.0	7.8	-0.5	1.4	0.0
11	94	0.0	0.0	-1.2	-0.2	0.7	0.0	95	0.0	0.0	1.0	-1.0	1.0	0.0
	18	0.0	0.0	-5.0	0.2	0.8	0.0	91	0.0	0.0	5.2	1.1	1.0	0.0
12	102	1.7	-1.6	-0.3	-0.1	0.0	0.2	103	-0.2	-1.2	0.1	0.0	0.0	0.2
	21	-1.4	0.4	0.3	0.1	0.0	0.0	84	-0.2	2.4	-0.1	0.1	0.0	-0.5
13	112	-6.9	3.9	0.2	0.3	0.0	0.2	76	-3.9	-3.1	0.1	0.1	0.0	-0.3
	36	5.8	2.1	-0.2	-0.3	0.0	0.0	25	4.9	-2.9	-0.1	-0.2	-0.1	0.0
14	114	-2.4	2.3	1.3	-0.1	-0.3	-0.1	112	-1.5	1.5	0.8	0.1	0.2	-0.5
	35	1.9	0.1	-1.1	-0.5	0.1	0.3	36	2.0	-3.8	-1.0	-0.5	-0.3	0.3
15	24	-1.2	19.1	1.2	-0.4	0.3	0.5	116	-1.9	-15.5	-1.0	0.2	-0.2	1.6
	21	9.4	-1.1	-0.3	0.0	0.0	-1.4	102	-6.3	-2.5	0.0	-0.1	0.0	-0.8
16	118	-7.0	-12.6	-0.6	-0.3	0.1	-1.0	116	0.3	13.1	0.4	-0.3	-0.3	-2.6
	20	-7.6	12.1	1.5	0.2	-1.0	4.1	24	14.4	-12.7	-1.2	0.5	0.1	-0.5
17	120	-1.1	2.6	0.1	0.0	0.1	0.0	121	-2.1	0.1	-0.1	0.0	0.0	-0.3
	9	3.0	1.2	-0.2	0.0	0.1	-0.2	43	0.2	-3.9	0.3	0.0	-0.1	0.5
18	10	0.4	-3.6	-2.0	0.2	0.5	-0.4	130	4.9	1.7	0.9	0.0	0.0	0.3
	4	-3.7	-3.2	0.5	0.1	0.1	0.3	68	-1.6	5.1	0.6	0.4	0.1	-0.1
19	100	-0.4	2.4	0.3	-0.3	-0.6	0.3	114	-1.5	1.3	1.0	0.1	0.1	-0.4
	19	-0.6	-1.0	0.9	-0.1	-0.1	0.1	35	2.5	-2.7	-2.2	-0.5	-0.3	0.0

Documento di proprietà **Snam Rete Gas**. La Società tutelerà i propri diritti in sede civile e penale a termini di legge.

FORZE SOVRACCARICO PERMAN.: SHELL

Shell Nro	Nodo N.ro	Tx (kN)	Ty (kN)	Tz (kN)	Mx (kN*m)	My (kN*m)	Mz (kN*m)	Nodo N.ro	Tx (kN)	Ty (kN)	Tz (kN)	Mx (kN*m)	My (kN*m)	Mz (kN*m)
20	35	0.4	-3.2	-2.0	0.2	0.5	-0.4	149	4.5	1.0	0.8	0.0	0.0	0.3
	19	-3.4	-2.6	0.6	0.1	0.1	0.3	97	-1.5	4.8	0.6	0.5	0.1	-0.1
21	132	-1.1	-6.1	-0.6	-0.2	-0.2	-0.6	166	-0.2	-7.5	-1.2	-0.1	0.2	0.6
	5	0.8	7.6	0.7	0.8	-0.2	0.7	58	0.4	6.1	1.1	0.7	0.1	-0.7
22	151	-1.2	-4.8	-0.3	-0.2	-0.2	-0.4	178	-0.3	-6.6	-1.2	-0.1	0.2	0.5
	18	0.8	6.6	0.5	0.7	-0.2	0.5	93	0.6	4.7	1.1	0.6	0.1	-0.6
23	123	2.4	-0.2	-0.1	0.0	-0.1	0.5	190	-1.2	-0.2	0.1	0.0	0.0	-0.2
	2	0.4	-1.4	0.3	0.0	-0.1	0.0	73	-1.5	1.7	-0.3	0.0	0.1	-0.2
24	53	18.4	-21.5	0.8	-0.1	-0.7	-0.2	118	6.5	6.9	-0.9	-0.2	0.4	-0.2
	11	16.3	-9.4	1.5	0.3	-1.2	-1.8	20	-41.2	24.0	-1.4	0.1	0.5	2.2
25	40	4.1	-4.9	1.2	0.0	-0.4	-0.5	41	7.0	4.7	-1.5	-0.1	0.1	0.5
	38	-5.8	-7.0	0.2	0.3	-0.9	-0.4	39	-5.4	7.3	0.1	0.0	0.3	0.3
26	17	-0.7	1.1	0.9	0.1	-0.2	-0.1	12	2.5	2.8	-2.2	0.5	-0.3	0.0
	40	-0.4	-2.4	0.3	0.3	-0.6	-0.3	41	-1.5	-1.4	1.0	-0.1	0.1	0.4
27	44	-4.7	13.0	0.6	-0.1	0.3	-0.2	45	-0.6	-8.0	-0.5	0.1	-0.2	0.6
	42	4.4	2.6	-0.2	0.0	0.0	0.1	43	0.9	-7.6	0.1	-0.1	-0.1	-0.5
28	45	-3.9	6.9	0.2	0.0	0.3	-0.2	15	-2.1	-5.8	-0.2	0.0	-0.3	0.0
	43	3.1	3.8	0.1	0.0	0.1	0.3	9	2.9	-4.9	-0.1	-0.1	-0.2	0.0
29	41	-3.2	1.0	-0.8	0.1	0.0	-1.0	45	3.8	4.7	-0.4	0.0	-0.3	-0.8
	39	-4.2	1.0	1.3	0.1	-0.7	0.8	44	3.6	-6.7	-0.1	0.2	0.2	1.0
30	12	1.7	-0.7	-1.1	0.5	-0.1	-0.3	15	3.2	2.9	-1.0	0.3	-0.4	-0.3
	41	-3.1	-1.3	1.3	0.0	-0.3	0.1	45	-1.9	-0.9	0.8	-0.1	0.2	0.5
31	48	-4.2	-0.1	1.5	-0.3	-0.7	-0.8	49	5.4	5.7	0.0	-0.1	0.3	-1.1
	46	-4.0	0.0	-1.0	-0.1	0.1	1.1	47	2.7	-5.7	-0.4	-0.1	-0.4	0.8
32	1	-9.6	-10.6	1.5	-0.4	-1.0	-4.1	8	16.4	10.0	-1.3	-0.5	0.2	0.5
	48	-4.9	13.6	-0.6	0.3	0.1	1.0	49	-2.0	-13.0	0.4	0.2	-0.4	2.6
33	51	-6.2	7.1	0.3	-0.3	-0.9	0.3	48	-6.5	-8.3	0.1	0.0	0.3	-0.3
	50	4.5	5.7	1.2	0.0	-0.4	0.5	46	8.3	-4.5	-1.6	0.1	0.1	-0.5
34	14	16.2	9.5	1.6	-0.3	-1.2	1.8	1	-41.2	-24.0	-1.5	-0.1	0.5	-2.2
	51	18.4	21.5	0.8	0.1	-0.7	0.2	48	6.6	-6.9	-0.9	0.2	0.4	0.2
35	55	0.0	0.0	-5.3	-0.7	-1.0	0.0	56	0.0	0.0	10.4	-1.0	0.3	0.0
	52	0.0	0.0	9.6	-0.5	-1.3	0.0	53	0.0	0.0	-14.8	-0.7	-0.4	0.0
36	56	0.0	0.0	0.9	-1.1	-0.7	0.0	57	0.0	0.0	7.4	-1.4	-0.5	0.0
	53	0.0	0.0	6.3	-1.0	-0.2	0.0	11	0.0	0.0	-14.6	-1.1	-2.3	0.0
37	58	0.0	0.0	-9.2	-0.3	0.7	0.0	59	0.0	0.0	10.2	-1.0	0.9	0.0
	54	0.0	0.0	3.0	0.1	0.6	0.0	55	0.0	0.0	-4.0	0.6	1.0	0.0
38	59	0.0	0.0	-5.7	-1.2	-1.0	0.0	60	0.0	0.0	7.8	-1.8	1.3	0.0
	55	0.0	0.0	4.5	0.6	-0.7	0.0	56	0.0	0.0	-6.6	1.1	1.0	0.0
39	60	0.0	0.0	-1.3	-1.8	-1.3	0.0	61	0.0	0.0	3.7	-2.1	1.2	0.0
	56	0.0	0.0	1.8	1.1	-0.6	0.0	57	0.0	0.0	-4.2	1.4	0.4	0.0
40	5	0.0	0.0	-5.5	-0.2	0.8	0.0	62	0.0	0.0	5.7	-1.1	1.0	0.0
	58	0.0	0.0	-1.5	0.2	0.8	0.0	59	0.0	0.0	1.3	1.0	1.0	0.0
41	62	0.0	0.0	-2.7	-1.2	-1.0	0.0	63	0.0	0.0	3.1	-1.9	1.6	0.0
	59	0.0	0.0	0.6	1.1	-1.0	0.0	60	0.0	0.0	-1.0	1.8	1.4	0.0
42	63	0.0	0.0	-0.6	-1.9	-1.6	0.0	13	0.0	0.0	1.1	-2.2	1.7	0.0
	60	0.0	0.0	0.4	1.8	-1.4	0.0	61	0.0	0.0	-0.9	2.1	1.5	0.0
43	65	0.0	0.0	1.5	-1.1	-0.9	0.0	66	0.0	0.0	-2.1	-1.7	1.3	0.0
	62	0.0	0.0	-3.3	1.3	-1.0	0.0	63	0.0	0.0	3.9	1.9	1.5	0.0
44	66	0.0	0.0	0.7	-1.8	-1.2	0.0	67	0.0	0.0	-1.4	-2.0	1.2	0.0
	63	0.0	0.0	-0.8	2.0	-1.5	0.0	13	0.0	0.0	1.6	2.2	1.5	0.0
45	68	0.0	0.0	3.7	-0.1	0.5	0.0	69	0.0	0.0	-4.8	-0.6	0.9	0.0
	64	0.0	0.0	-9.2	0.3	0.6	0.0	65	0.0	0.0	10.3	0.9	0.8	0.0
46	69	0.0	0.0	4.9	-0.6	-0.6	0.0	70	0.0	0.0	-7.3	-1.0	0.8	0.0
	65	0.0	0.0	-5.8	1.2	-0.9	0.0	66	0.0	0.0	8.2	1.7	1.1	0.0
47	70	0.0	0.0	1.9	-1.0	-0.5	0.0	71	0.0	0.0	-4.8	-1.3	0.2	0.0
	66	0.0	0.0	-1.2	1.8	-1.2	0.0	67	0.0	0.0	4.1	2.0	1.1	0.0
48	4	0.0	0.0	5.2	0.4	-0.1	0.0	50	0.0	0.0	-9.2	0.5	0.4	0.0
	68	0.0	0.0	-7.6	0.6	0.3	0.0	69	0.0	0.0	11.5	0.5	0.6	0.0
49	50	0.0	0.0	9.5	0.5	-1.2	0.0	51	0.0	0.0	-14.7	0.7	-0.4	0.0
	69	0.0	0.0	-5.3	0.6	-0.8	0.0	70	0.0	0.0	10.6	0.9	0.3	0.0
50	51	0.0	0.0	6.0	1.0	-0.2	0.0	14	0.0	0.0	-14.7	1.2	-2.3	0.0
	70	0.0	0.0	0.9	1.0	-0.6	0.0	71	0.0	0.0	7.8	1.3	-0.5	0.0
51	49	-11.3	8.6	0.6	0.3	-0.2	0.1	73	-4.4	-3.7	-0.1	0.0	0.0	-0.1
	47	8.9	-2.4	-0.6	-0.2	0.2	-0.6	72	6.8	-2.6	0.1	-0.2	0.0	0.5
52	8	-15.0	12.1	1.3	0.0	-0.5	-0.5	2	-4.6	-8.3	-0.3	0.0	0.0	1.4
	49	13.8	-7.5	-1.0	-0.1	0.3	-1.7	73	5.7	3.7	0.0	-0.1	-0.1	0.8
53	77	-1.4	0.0	0.2	0.0	0.0	-0.2	78	0.1	-0.6	-0.1	0.0	0.0	0.1
	74	0.2	1.1	-0.1	0.0	0.0	0.1	75	1.1	-0.5	0.1	0.0	0.0	0.0
54	78	-0.6	0.1	0.1	0.0	0.0	-0.1	79	-0.1	-0.3	-0.1	0.0	0.0	0.0
	75	0.2	0.5	-0.1	0.0	0.0	0.0	32	0.5	-0.3	0.1	0.0	0.0	0.0
55	80	-2.1	-2.8	0.4	-0.1	0.0	-0.6	81	0.8	-2.2	-0.2	0.0	0.0	0.5
	76	0.1	3.8	-0.5	0.0	0.0	0.3	77	1.1	1.2	0.2	0.0	0.0	-0.1
56	81	-0.9	-0.4	0.2	0.0	0.0	-0.2	82	0.3	-0.7	-0.1	0.0	0.0	0.2
	77	0.2	0.9	-0.3	0.0	0.0	0.0	78	0.4	0.2	0.1	0.0	0.0	0.0
57	82	-0.2	-0.1	0.1	0.0	0.0	0.0	83	0.1	-0.2	-0.1	0.0	0.0	0.0
	78	0.0	0.3	-0.1	0.0	0.0	0.0	79	0.1	0.0	0.1	0.0	0.0	0.0
58	21	-1.0	-1.0	0.3	-0.2	0.0	-0.1	84	0.5	-2.2	-0.1	-0.1	0.0	0.5
	80	0.7	1.5	-0.3	0.1	0.0	-0.2	81	-0.2	1.7	0.1	0.0	0.0	-0.3
59	84	-0.2	-0.8	0.1	-0.1	0.0	-0.1	85	0.0	-0.8	0.0	0.0	0.0	0.2
	81	0.3	0.9	-0.1	0.0	0.0	0.0	82	-0.1	0.7	0.1	0.0	0.0	-0.1

Documento di proprietà **Snam Rete Gas**. La Società tutelerà i propri diritti in sede civile e penale a termini di legge.

FORZE SOVRACCARICO PERMAN.: SHELL

Shell Nro	Nodo N.ro	Tx (kN)	Ty (kN)	Tz (kN)	Mx (kN*m)	My (kN*m)	Mz (kN*m)	Nodo N.ro	Tx (kN)	Ty (kN)	Tz (kN)	Mx (kN*m)	My (kN*m)	Mz (kN*m)
60	85	0.0	-0.2	0.0	0.0	0.0	0.0	31	0.0	-0.2	0.0	0.0	0.0	0.1
	82	0.0	0.2	-0.1	0.0	0.0	0.0	83	-0.1	0.2	0.1	0.0	0.0	0.0
61	86	0.0	0.0	1.5	-0.5	-1.0	0.0	87	0.0	0.0	-0.8	-1.2	1.9	0.0
	71	0.0	0.0	-4.7	0.2	-1.4	0.0	67	0.0	0.0	4.0	1.1	2.2	0.0
62	87	0.0	0.0	0.4	-1.2	-1.9	0.0	88	0.0	0.0	-0.7	-1.4	2.1	0.0
	67	0.0	0.0	-1.3	1.2	-2.2	0.0	13	0.0	0.0	1.5	1.5	2.4	0.0
63	40	0.0	0.0	8.2	-1.1	0.5	0.0	89	0.0	0.0	-5.0	-0.8	0.7	0.0
	38	0.0	0.0	-13.6	-0.2	0.6	0.0	86	0.0	0.0	10.4	0.4	0.9	0.0
64	89	0.0	0.0	4.5	-0.6	-0.6	0.0	90	0.0	0.0	-5.3	-0.9	1.3	0.0
	86	0.0	0.0	-7.2	0.8	-1.1	0.0	87	0.0	0.0	8.0	1.1	1.8	0.0
65	90	0.0	0.0	1.4	-0.8	-1.2	0.0	91	0.0	0.0	-3.0	-0.9	1.4	0.0
	87	0.0	0.0	-2.1	1.2	-1.8	0.0	88	0.0	0.0	3.7	1.4	2.0	0.0
66	17	0.0	0.0	5.0	0.0	0.4	0.0	92	0.0	0.0	-7.3	0.3	0.5	0.0
	40	0.0	0.0	-8.7	0.4	0.5	0.0	89	0.0	0.0	11.0	0.6	0.5	0.0
67	92	0.0	0.0	3.7	0.5	-0.1	0.0	93	0.0	0.0	-8.7	0.6	0.3	0.0
	89	0.0	0.0	-4.7	0.9	-0.6	0.0	90	0.0	0.0	9.7	0.8	0.9	0.0
68	93	0.0	0.0	-0.1	0.7	-0.2	0.0	18	0.0	0.0	-5.5	0.7	0.3	0.0
	90	0.0	0.0	-0.2	0.9	-1.0	0.0	91	0.0	0.0	5.9	0.9	1.1	0.0
69	95	0.0	0.0	0.6	-1.2	-0.9	0.0	96	0.0	0.0	-1.1	-1.9	1.4	0.0
	91	0.0	0.0	-2.5	1.3	-1.0	0.0	88	0.0	0.0	2.9	2.0	1.6	0.0
70	96	0.0	0.0	0.2	-2.0	-1.4	0.0	61	0.0	0.0	-0.8	-2.2	1.4	0.0
	88	0.0	0.0	-0.6	2.1	-1.5	0.0	13	0.0	0.0	1.1	2.4	1.7	0.0
71	97	0.0	0.0	3.0	-0.1	0.6	0.0	98	0.0	0.0	-4.0	-0.6	0.9	0.0
	94	0.0	0.0	-8.5	0.3	0.7	0.0	95	0.0	0.0	9.5	1.0	0.9	0.0
72	98	0.0	0.0	4.2	-0.7	-0.7	0.0	99	0.0	0.0	-6.5	-1.1	0.9	0.0
	95	0.0	0.0	-5.2	1.3	-0.9	0.0	96	0.0	0.0	7.6	1.9	1.3	0.0
73	99	0.0	0.0	1.4	-1.1	-0.6	0.0	57	0.0	0.0	-4.1	-1.5	0.4	0.0
	96	0.0	0.0	-0.9	2.0	-1.3	0.0	61	0.0	0.0	3.6	2.2	1.2	0.0
74	19	0.0	0.0	4.8	0.4	0.0	0.0	100	0.0	0.0	-8.6	0.5	0.4	0.0
	97	0.0	0.0	-7.4	0.6	0.4	0.0	98	0.0	0.0	11.2	0.6	0.6	0.0
75	100	0.0	0.0	8.3	0.5	-1.2	0.0	101	0.0	0.0	-13.5	0.6	-0.2	0.0
	98	0.0	0.0	-5.0	0.8	-0.9	0.0	99	0.0	0.0	10.3	1.1	0.4	0.0
76	101	0.0	0.0	5.7	1.0	-0.3	0.0	11	0.0	0.0	-14.6	1.2	-2.5	0.0
	99	0.0	0.0	1.4	1.2	-0.8	0.0	57	0.0	0.0	7.5	1.5	-0.5	0.0
77	103	0.6	-0.9	-0.2	0.0	0.0	0.1	104	-0.1	-0.5	0.1	0.0	0.0	0.1
	84	-0.3	0.5	0.1	0.1	0.0	0.0	85	-0.2	0.9	0.0	0.0	0.0	-0.2
78	104	0.1	-0.2	-0.1	0.0	0.0	0.0	105	0.0	-0.2	0.1	0.0	0.0	0.0
	85	0.0	0.1	0.0	0.0	0.0	0.0	31	-0.1	0.2	0.0	0.0	0.0	-0.1
79	106	0.4	-3.7	-0.5	0.0	0.0	-0.2	107	0.6	-1.2	0.2	0.0	0.0	0.1
	102	-1.4	2.9	0.4	0.1	0.0	0.5	103	0.4	2.0	-0.2	0.0	0.0	-0.4
80	107	0.4	-0.6	-0.3	0.0	0.0	0.0	108	0.3	-0.1	0.1	0.0	0.0	0.0
	103	-0.8	0.1	0.2	0.0	0.0	0.1	104	0.1	0.6	-0.1	0.0	0.0	-0.2
81	108	0.1	-0.2	-0.1	0.0	0.0	0.0	109	0.1	0.0	0.1	0.0	0.0	0.0
	104	-0.2	0.0	0.1	0.0	0.0	0.0	105	0.0	0.1	-0.1	0.0	0.0	0.0
82	22	0.9	-2.9	-0.2	0.1	0.0	-0.2	110	2.5	0.8	0.1	0.1	0.0	0.0
	106	-3.6	0.2	0.3	-0.1	0.0	0.5	107	0.2	1.8	-0.2	0.0	0.0	-0.3
83	110	0.1	-0.8	-0.2	0.0	0.0	-0.1	111	0.9	0.4	0.1	0.0	0.0	0.0
	107	-1.2	0.1	0.2	0.0	0.0	0.2	108	0.2	0.4	-0.1	0.0	0.0	-0.1
84	111	0.2	-0.3	-0.1	0.0	0.0	0.0	30	0.4	0.2	0.1	0.0	0.0	0.0
	108	-0.5	-0.1	0.1	0.0	0.0	0.1	109	-0.1	0.2	-0.1	0.0	0.0	0.0
85	113	-10.5	8.9	0.6	0.2	-0.2	0.2	80	-4.0	-3.2	-0.2	0.0	0.0	-0.1
	112	7.7	-2.2	-0.5	-0.2	0.2	-0.6	76	6.8	-3.5	0.1	-0.2	0.0	0.5
86	23	-15.2	12.7	1.1	0.0	-0.4	-0.5	21	-4.0	-7.9	-0.3	0.0	0.0	1.4
	113	12.7	-7.3	-0.8	0.0	0.3	-1.8	80	6.5	2.4	0.0	-0.1	-0.1	0.9
87	115	-4.3	0.1	1.2	-0.3	-0.6	-0.8	113	5.1	5.5	-0.1	-0.2	0.2	-1.0
	114	-3.3	-0.1	-0.8	-0.1	0.0	1.0	112	2.5	-5.5	-0.4	-0.1	-0.3	0.8
88	20	-10.1	-9.7	1.4	-0.4	-0.9	-4.1	23	17.1	10.0	-1.1	-0.4	0.1	0.5
	115	-5.6	12.2	-0.5	0.3	-0.1	0.9	113	-1.3	-12.5	0.2	0.2	-0.3	2.6
89	116	-4.1	13.5	0.6	-0.1	0.3	-0.1	117	-0.9	-9.1	-0.6	0.1	-0.3	0.6
	102	5.0	2.9	-0.1	0.0	0.0	0.1	106	0.0	-7.3	0.1	-0.1	-0.1	-0.5
90	117	-3.7	7.9	0.0	0.0	0.3	-0.2	37	-2.2	-6.5	0.0	0.0	-0.3	0.0
	106	3.4	4.2	0.1	0.1	0.1	0.2	22	2.6	-5.5	-0.1	-0.1	-0.2	0.0
91	119	-3.8	1.0	-1.0	0.1	0.1	-1.1	117	4.0	4.8	-0.4	0.0	-0.4	-0.8
	118	-4.0	1.1	1.4	0.1	-0.7	0.8	116	3.8	-6.9	0.0	0.2	0.3	1.1
92	34	1.8	-0.9	-1.3	0.6	0.0	-0.3	37	3.9	3.0	-1.1	0.4	-0.5	-0.4
	119	-3.5	-1.1	1.4	0.0	-0.4	0.1	117	-2.2	-0.9	0.9	-0.1	0.3	0.5
93	121	1.2	1.1	0.2	0.0	0.0	0.1	122	-2.2	0.9	-0.2	0.0	0.0	-0.5
	43	3.8	0.1	-0.5	0.0	0.0	-0.3	42	-2.8	-2.1	0.4	0.0	0.1	0.6
94	122	1.7	-0.2	0.1	0.0	0.0	0.3	123	-2.1	0.5	-0.1	0.0	0.1	-0.5
	42	1.5	0.7	-0.3	0.0	-0.1	0.2	2	-1.1	-1.0	0.3	0.0	0.2	0.1
95	124	-0.5	1.1	0.1	0.0	0.0	0.0	125	-0.6	0.1	-0.1	0.0	0.0	-0.1
	120	1.1	0.2	-0.1	0.0	0.0	-0.1	121	0.0	-1.4	0.2	0.0	0.0	0.2
96	125	0.2	0.4	0.1	0.0	0.0	0.0	126	-0.7	0.3	-0.1	0.0	0.0	-0.2
	121	0.9	0.2	-0.3	0.0	0.0	0.0	122	-0.4	-0.9	0.2	0.0	0.0	0.2
97	126	0.7	-0.2	0.1	0.0	0.0	0.1	127	-0.8	0.0	0.0	0.0	0.0	-0.2
	122	0.9	0.2	-0.1	0.0	0.0	0.0	123	-0.8	-0.1	0.1	0.0	0.1	0.1
98	26	-0.3	0.5	0.1	0.0	0.0	0.0	128	-0.3	-0.2	-0.1	0.0	0.0	0.0
	124	0.5	0.3	-0.1	0.0	0.0	0.0	125	0.1	-0.6	0.1	0.0	0.0	0.1
99	128	0.0	0.0	0.1	0.0	0.0	0.0	129	-0.2	0.0	-0.1	0.0	0.0	0.0
	125	0.3	0.1	-0.1	0.0	0.0	0.0	126	-0.1	-0.1	0.1	0.0	0.0	0.0

Documento di proprietà **Snam Rete Gas**. La Società tutelerà i propri diritti in sede civile e penale a termini di legge.

FORZE SOVRACCARICO PERMAN.: SHELL

Shell Nro	Nodo N.ro	Tx (kN)	Ty (kN)	Tz (kN)	Mx (kN*m)	My (kN*m)	Mz (kN*m)	Nodo N.ro	Tx (kN)	Ty (kN)	Tz (kN)	Mx (kN*m)	My (kN*m)	Mz (kN*m)
100	129	0.3	-0.2	0.1	0.0	0.0	0.0	27	-0.2	0.0	0.0	0.0	0.0	-0.1
	126	0.1	0.0	-0.1	0.0	0.0	0.0	127	-0.2	0.1	0.0	0.0	0.0	0.0
101	130	1.2	-7.6	-1.9	0.1	0.0	-0.5	131	3.0	-2.4	0.4	-0.1	0.2	0.4
	68	-2.4	2.2	1.3	0.4	0.0	0.6	64	-1.8	7.7	0.2	0.7	0.2	-0.5
102	131	0.3	-7.2	-1.3	-0.1	-0.2	-0.5	132	1.3	-5.3	-0.4	-0.2	0.2	0.5
	64	-0.7	5.2	1.1	0.7	-0.1	0.6	5	-0.9	7.3	0.5	0.8	0.2	-0.6
103	16	2.1	-6.0	-1.2	0.4	0.5	-0.4	133	4.0	1.9	0.5	0.1	0.0	0.3
	10	-4.1	-1.8	-0.8	0.0	0.6	0.3	130	-2.0	5.9	1.5	0.0	0.0	-0.2
104	133	0.8	-5.8	-0.3	0.1	0.1	-0.4	134	3.7	-0.6	-0.1	0.0	0.1	0.4
	130	-4.1	0.0	-0.5	0.0	0.0	0.5	131	-0.5	6.4	0.8	0.1	0.2	-0.5
105	134	-0.8	-5.4	-0.4	0.1	-0.1	-0.6	135	2.6	-3.4	-0.3	0.0	0.2	0.6
	131	-2.8	3.1	0.1	0.1	-0.1	0.6	132	1.0	5.7	0.5	0.2	0.2	-0.6
106	3	2.0	-3.4	0.1	0.1	0.2	-0.1	136	3.1	2.2	0.0	0.0	-0.1	0.2
	16	-3.3	-3.1	-0.7	0.0	0.3	0.1	133	-1.8	4.3	0.7	-0.1	-0.1	-0.2
107	136	0.3	-3.7	0.4	0.0	0.1	-0.3	137	3.0	-0.2	-0.2	0.0	0.0	0.3
	133	-3.0	-0.4	-0.9	-0.1	0.1	0.3	134	-0.2	4.3	0.7	-0.1	0.1	-0.3
108	137	-1.0	-3.5	0.1	0.0	0.0	-0.4	138	2.4	-2.0	-0.1	0.0	0.1	0.4
	134	-2.7	1.8	-0.3	0.0	-0.1	0.5	135	1.3	3.7	0.3	0.0	0.1	-0.5
109	139	1.0	-1.0	-0.2	0.0	0.1	0.0	140	2.2	1.9	-0.1	0.0	0.0	0.1
	3	-2.3	-3.1	0.2	0.1	0.1	0.0	136	-0.9	2.2	0.1	0.0	-0.1	-0.1
110	140	0.0	-2.2	0.2	0.0	0.0	-0.2	141	2.2	0.2	-0.1	0.0	0.0	0.2
	136	-2.5	-0.7	-0.4	0.0	0.1	0.2	137	0.2	2.7	0.3	0.0	0.0	-0.3
111	141	-0.9	-2.1	0.1	0.0	0.0	-0.3	142	1.8	-1.1	0.0	0.0	0.0	0.3
	137	-2.1	0.9	-0.2	0.0	0.0	0.3	138	1.2	2.3	0.1	-0.1	0.0	-0.3
112	143	0.5	-0.5	-0.2	0.0	0.0	0.0	144	1.1	1.1	0.0	0.0	0.0	0.1
	139	-1.1	-1.6	0.2	0.1	0.0	0.0	140	-0.6	1.0	-0.1	0.0	0.0	0.0
113	144	0.1	-1.2	0.0	0.0	0.0	-0.1	145	1.4	0.4	0.0	0.0	0.0	0.1
	140	-1.7	-0.8	-0.1	0.0	0.0	0.1	141	0.1	1.6	0.0	0.0	0.0	-0.1
114	145	-0.5	-1.2	0.0	0.0	0.0	-0.2	146	1.1	-0.5	0.0	0.0	0.0	0.2
	141	-1.5	0.4	-0.1	0.0	0.0	0.2	142	0.8	1.3	0.0	0.0	0.0	-0.2
115	28	0.4	-0.5	-0.2	0.0	0.0	0.0	147	0.6	0.6	0.1	0.0	0.0	0.0
	143	-0.5	-0.7	0.2	0.0	0.0	0.0	144	-0.5	0.7	-0.1	0.0	0.0	0.0
116	147	0.4	-0.7	0.0	0.0	0.0	0.0	148	0.6	0.4	0.0	0.0	0.0	0.0
	144	-0.8	-0.6	0.0	0.0	0.0	0.0	145	-0.2	0.9	0.0	0.0	0.0	0.0
117	148	0.1	-0.6	0.0	0.0	0.0	0.0	29	0.4	0.0	0.0	0.0	0.0	0.0
	145	-0.7	0.0	0.0	0.0	0.0	0.1	146	0.3	0.6	0.0	0.0	0.0	-0.1
118	101	-5.8	7.0	0.2	-0.3	-0.9	0.4	115	-5.4	-7.3	0.1	0.0	0.3	-0.3
	100	4.1	4.9	1.2	0.0	-0.4	0.5	114	7.0	-4.7	-1.5	0.1	0.1	-0.5
119	11	16.7	10.4	1.5	-0.3	-1.2	1.9	20	-41.0	-25.0	-1.4	-0.1	0.6	-2.3
	101	17.3	22.1	0.6	0.1	-0.8	0.1	115	7.0	-7.5	-0.8	0.2	0.5	0.2
120	149	1.1	-7.1	-1.8	0.0	-0.1	-0.5	150	2.6	-3.0	0.2	-0.2	0.2	0.4
	97	-2.0	2.8	1.3	0.5	-0.1	0.6	94	-1.7	7.4	0.2	0.7	0.2	-0.5
121	150	0.2	-6.8	-1.2	-0.1	-0.2	-0.6	151	0.9	-5.6	-0.6	-0.2	0.2	0.5
	94	-0.3	5.5	1.1	0.7	-0.1	0.7	18	-0.8	6.9	0.7	0.8	0.2	-0.6
122	36	2.0	-5.5	-1.1	0.3	0.5	-0.4	152	3.7	1.2	0.4	0.1	0.0	0.3
	35	-3.7	-1.2	-0.7	0.0	0.5	0.3	149	-2.0	5.5	1.4	0.0	0.0	-0.2
123	152	0.8	-5.5	-0.3	0.1	0.0	-0.5	153	3.3	-1.3	-0.1	0.0	0.1	0.4
	149	-3.6	0.7	-0.4	0.0	0.0	0.5	150	-0.5	6.1	0.7	0.1	0.2	-0.5
124	153	-0.9	-5.1	-0.4	0.1	-0.1	-0.6	154	2.1	-3.8	-0.3	0.0	0.2	0.5
	150	-2.3	3.7	0.2	0.2	-0.2	0.6	151	1.1	5.2	0.4	0.2	0.2	-0.6
125	25	2.0	-3.5	0.0	0.1	0.2	-0.1	155	2.9	1.6	0.0	0.0	-0.1	0.2
	36	-3.1	-2.3	-0.6	0.0	0.3	0.1	152	-1.7	4.2	0.7	-0.1	-0.1	-0.2
126	155	0.3	-3.6	0.3	0.0	0.1	-0.3	156	2.6	-0.7	-0.2	0.0	0.0	0.3
	152	-2.7	0.2	-0.8	-0.1	0.1	0.3	153	-0.2	4.1	0.6	-0.1	0.1	-0.4
127	156	-1.0	-3.3	0.0	0.1	0.0	-0.4	157	1.9	-2.4	-0.1	0.1	0.1	0.4
	153	-2.2	2.2	-0.1	0.0	-0.1	0.5	154	1.3	3.4	0.2	0.0	0.1	-0.5
128	74	1.1	-1.2	-0.2	0.0	0.1	0.0	158	2.2	1.6	-0.1	0.0	0.0	0.1
	25	-2.3	-2.6	0.1	0.1	0.1	0.0	155	-1.0	2.3	0.1	0.0	-0.1	-0.1
129	158	0.1	-2.2	0.2	0.0	0.0	-0.2	159	2.0	-0.2	-0.1	0.0	0.0	0.2
	155	-2.2	-0.3	-0.4	0.0	0.1	0.2	156	0.2	2.6	0.3	-0.1	0.0	-0.3
130	159	-0.9	-2.0	0.1	0.0	0.0	-0.3	160	1.5	-1.4	0.0	0.0	0.0	0.3
	156	-1.8	1.3	-0.2	0.0	0.0	0.3	157	1.2	2.1	0.1	-0.1	0.1	-0.3
131	75	0.6	-0.6	-0.2	0.0	0.0	0.0	161	1.2	1.0	0.0	0.0	0.0	0.1
	74	-1.2	-1.6	0.2	0.1	0.0	0.0	158	-0.6	1.1	0.0	0.0	0.0	0.0
132	161	0.2	-1.2	0.0	0.0	0.0	-0.1	162	1.3	0.2	0.0	0.0	0.0	0.1
	158	-1.6	-0.5	-0.1	0.0	0.0	0.1	159	0.1	1.6	0.1	0.0	0.0	-0.2
133	162	-0.5	-1.1	0.0	0.0	0.0	-0.2	163	0.9	-0.7	0.0	0.0	0.0	0.2
	159	-1.3	0.6	-0.1	0.0	0.0	0.2	160	0.8	1.2	0.0	0.0	0.0	-0.2
134	32	0.5	-0.5	-0.2	0.0	0.0	0.0	164	0.6	0.6	0.1	0.0	0.0	0.0
	75	-0.6	-0.8	0.2	0.0	0.0	0.0	161	-0.5	0.7	-0.1	0.0	0.0	0.0
135	164	0.4	-0.8	0.0	0.0	0.0	0.0	165	0.6	0.4	0.0	0.0	0.0	0.0
	161	-0.9	-0.5	0.0	0.0	0.0	0.0	162	-0.2	0.9	0.0	0.0	0.0	-0.1
136	165	0.1	-0.5	0.0	0.0	0.0	0.0	33	0.3	-0.1	0.0	0.0	0.0	0.0
	162	-0.6	0.1	0.0	0.0	0.0	0.1	163	0.3	0.5	0.0	0.0	0.0	-0.1
137	166	-2.9	-3.2	0.2	-0.2	-0.2	-0.5	167	-1.3	-8.0	-1.9	0.0	0.1	0.6
	58	1.9	8.2	0.3	0.7	-0.2	0.6	54	2.3	2.9	1.4	0.5	0.1	-0.7
138	167	-5.1	1.3	0.8	0.0	0.0	-0.3	34	-0.7	-3.8	-2.0	0.3	-0.5	0.4
	54	1.9	5.5	0.6	0.5	-0.2	0.2	7	3.9	-3.0	0.6	0.1	-0.1	-0.3
139	135	-2.4	-4.1	-0.3	0.0	-0.2	-0.6	168	1.0	-5.6	-0.4	0.1	0.1	0.6
	132	-1.3	5.7	0.5	0.2	-0.2	0.7	166	2.6	4.0	0.2	0.2	0.2	-0.7

Documento di proprietà **Snam Rete Gas**. La Società tutelerà i propri diritti in sede civile e penale a termini di legge.

FORZE SOVRACCARICO PERMAN.: SHELL

Shell Nro	Nodo N.ro	Tx (kN)	Ty (kN)	Tz (kN)	Mx (kN*m)	My (kN*m)	Mz (kN*m)	Nodo N.ro	Tx (kN)	Ty (kN)	Tz (kN)	Mx (kN*m)	My (kN*m)	Mz (kN*m)
140	168	-3.8	-1.3	-0.1	0.0	-0.1	-0.5	169	-0.8	-6.1	-0.3	0.1	-0.1	0.5
	166	0.5	6.7	0.8	0.1	-0.2	0.6	167	4.1	0.6	-0.4	0.0	0.0	-0.6
141	169	-4.2	1.6	0.4	0.1	0.0	-0.3	37	-2.3	-6.1	-1.2	0.4	-0.5	0.4
	167	2.2	6.1	1.5	0.0	0.0	0.2	34	4.3	-1.6	-0.8	0.0	-0.6	-0.3
142	138	-2.2	-2.6	-0.1	0.1	-0.1	-0.5	170	1.2	-3.5	0.0	0.1	0.0	0.5
	135	-1.6	3.8	0.2	0.0	-0.1	0.5	168	2.6	2.3	-0.2	0.0	0.1	-0.5
143	170	-3.0	-0.6	-0.2	0.0	0.0	-0.4	171	-0.3	-3.9	0.4	0.0	-0.1	0.3
	168	0.1	4.5	0.7	-0.1	-0.1	0.4	169	3.1	0.0	-0.9	-0.1	-0.1	-0.4
144	171	-3.3	2.0	0.0	0.0	0.1	-0.2	22	-2.1	-3.5	0.1	0.1	-0.2	0.1
	169	1.9	4.5	0.7	-0.1	0.1	0.2	37	3.5	-3.0	-0.7	0.0	-0.3	-0.1
145	142	-1.7	-1.5	0.0	0.0	0.0	-0.3	172	1.0	-2.1	0.1	0.0	0.0	0.3
	138	-1.4	2.3	0.1	-0.1	-0.1	0.4	170	2.1	1.3	-0.2	0.0	0.0	-0.4
146	172	-2.3	-0.1	-0.1	0.0	0.0	-0.3	173	0.0	-2.3	0.2	0.0	0.0	0.2
	170	-0.2	2.8	0.3	-0.1	0.0	0.3	171	2.5	-0.4	-0.4	0.0	-0.1	-0.2
147	173	-2.4	1.8	-0.1	0.0	0.0	-0.1	110	-1.1	-1.1	-0.2	0.0	-0.1	0.0
	171	1.0	2.3	0.1	0.0	0.1	0.1	22	2.5	-3.1	0.2	0.1	-0.1	0.0
148	146	-1.0	-0.7	0.0	0.0	0.0	-0.2	174	0.5	-1.2	0.0	0.0	0.0	0.2
	142	-0.9	1.3	0.0	0.0	0.0	0.2	172	1.4	0.6	-0.1	0.0	0.0	-0.2
149	174	-1.4	0.2	0.0	0.0	0.0	-0.1	175	-0.2	-1.3	0.0	0.0	0.0	0.1
	172	-0.2	1.6	0.0	0.0	0.0	0.2	173	1.8	-0.6	-0.1	0.0	0.0	-0.1
150	175	-1.2	1.1	0.0	0.0	0.0	-0.1	111	-0.6	-0.5	-0.2	0.0	0.0	0.0
	173	0.7	1.1	0.0	0.0	0.0	0.0	110	1.2	-1.6	0.2	0.1	0.0	0.0
151	29	-0.3	-0.1	0.0	0.0	0.0	0.0	176	-0.1	-0.5	0.0	0.0	0.0	0.0
	146	-0.3	0.6	0.0	0.0	0.0	0.1	174	0.7	0.1	0.0	0.0	0.0	-0.1
152	176	-0.6	0.4	0.0	0.0	0.0	0.0	177	-0.4	-0.8	0.0	0.0	0.0	0.0
	174	0.2	0.9	0.0	0.0	0.0	0.1	175	0.9	-0.5	0.0	0.0	0.0	0.0
153	177	-0.6	0.6	0.1	0.0	0.0	0.0	30	-0.5	-0.5	-0.2	0.0	0.0	0.0
	175	0.5	0.7	-0.1	0.0	0.0	0.0	111	0.6	-0.8	0.2	0.0	0.0	0.0
154	178	-2.7	-2.2	0.3	-0.1	-0.2	-0.4	179	-1.0	-6.8	-1.8	0.0	0.0	0.5
	93	1.6	7.0	0.2	0.6	-0.2	0.4	92	2.1	2.1	1.3	0.4	0.0	-0.5
155	179	-4.4	1.4	0.8	0.0	0.0	-0.2	12	-0.2	-3.1	-2.0	0.2	-0.5	0.4
	92	1.3	4.5	0.6	0.4	-0.1	0.1	17	3.3	-2.8	0.5	0.1	-0.1	-0.3
156	154	-2.3	-3.1	-0.2	0.0	-0.2	-0.5	180	0.7	-5.0	-0.4	0.1	0.1	0.5
	151	-0.9	5.2	0.5	0.2	-0.2	0.6	178	2.5	2.9	0.1	0.1	0.1	-0.6
157	180	-3.3	-0.7	0.0	0.0	-0.1	-0.4	181	-0.8	-5.3	-0.3	0.1	-0.1	0.4
	178	0.5	5.9	0.8	0.1	-0.2	0.4	179	3.6	0.1	-0.5	0.0	0.0	-0.4
158	181	-3.5	1.4	0.5	0.1	0.0	-0.3	15	-1.8	-5.4	-1.1	0.3	-0.5	0.3
	179	1.8	5.3	1.4	0.0	0.0	0.2	12	3.5	-1.3	-0.8	0.0	-0.5	-0.2
159	157	-2.1	-1.9	-0.1	0.0	-0.1	-0.4	182	0.8	-3.2	0.1	0.0	0.0	0.4
	154	-1.1	3.5	0.3	0.0	-0.1	0.4	180	2.3	1.6	-0.2	0.0	0.1	-0.4
160	182	-2.6	-0.3	-0.2	0.0	0.0	-0.3	183	-0.3	-3.5	0.3	0.0	-0.1	0.3
	180	0.3	4.0	0.7	-0.1	-0.1	0.3	181	2.6	-0.2	-0.8	-0.1	-0.1	-0.3
161	183	-2.7	1.8	0.0	0.0	0.1	-0.2	9	-1.9	-3.5	-0.1	0.1	-0.2	0.1
	181	1.6	4.1	0.6	-0.1	0.1	0.2	15	2.9	-2.4	-0.6	0.0	-0.3	-0.1
162	160	-1.6	-1.1	0.0	0.0	0.0	-0.3	184	0.7	-2.0	0.1	0.0	0.0	0.3
	157	-1.0	2.1	0.1	0.0	-0.1	0.3	182	1.9	0.9	-0.2	0.0	0.0	-0.3
163	184	-2.0	0.1	-0.1	0.0	0.0	-0.2	185	-0.1	-2.1	0.2	0.0	0.0	0.2
	182	-0.1	2.6	0.3	0.0	0.0	0.2	183	2.2	-0.5	-0.4	0.0	-0.1	-0.2
164	185	-2.1	1.7	-0.1	0.0	0.0	-0.1	120	-1.0	-1.3	-0.2	0.0	-0.1	0.0
	183	0.9	2.3	0.1	0.0	0.1	0.1	9	2.2	-2.6	0.2	0.1	-0.1	0.0
165	163	-1.0	-0.5	0.0	0.0	0.0	-0.2	186	0.4	-1.2	0.0	0.0	0.0	0.1
	160	-0.7	1.3	0.0	0.0	0.0	0.2	184	1.3	0.4	-0.1	0.0	0.0	-0.2
166	186	-1.3	0.3	0.0	0.0	0.0	-0.1	187	-0.2	-1.2	0.0	0.0	0.0	0.1
	184	-0.1	1.5	0.1	0.0	0.0	0.1	185	1.5	-0.6	-0.1	0.0	0.0	-0.1
167	187	-1.1	1.1	0.0	0.0	0.0	-0.1	124	-0.6	-0.6	-0.2	0.0	0.0	0.0
	185	0.6	1.1	0.0	0.0	0.0	0.0	120	1.1	-1.6	0.2	0.1	0.0	0.0
168	33	-0.4	0.0	0.0	0.0	0.0	0.0	188	-0.1	-0.6	0.0	0.0	0.0	0.0
	163	-0.2	0.6	0.0	0.0	0.0	0.1	186	0.7	0.0	0.0	0.0	0.0	-0.1
169	188	-0.6	0.4	0.0	0.0	0.0	0.0	189	-0.4	-0.8	0.0	0.0	0.0	0.0
	186	0.2	0.9	0.0	0.0	0.0	0.0	187	0.8	-0.6	0.0	0.0	0.0	0.0
170	189	-0.6	0.6	0.1	0.0	0.0	0.0	26	-0.4	-0.6	-0.2	0.0	0.0	0.0
	187	0.5	0.7	-0.1	0.0	0.0	0.0	124	0.6	-0.8	0.2	0.0	0.0	0.0
171	190	2.0	0.4	-0.2	0.0	0.0	0.4	191	-1.2	0.6	0.2	0.0	0.0	-0.1
	73	2.9	-1.4	0.4	0.0	-0.1	-0.5	72	-3.7	0.4	-0.5	0.0	0.0	0.2
172	191	1.8	0.2	-0.2	0.0	0.0	0.3	139	0.9	2.5	0.1	0.0	-0.1	0.0
	72	0.2	-3.6	0.3	0.0	0.1	-0.5	3	-2.9	0.9	-0.2	0.0	-0.1	0.2
173	127	0.9	-0.2	0.0	0.0	0.0	0.2	192	-0.5	-0.1	0.1	0.0	0.0	-0.1
	123	0.5	-0.3	0.1	0.0	-0.1	0.0	190	-0.9	0.6	-0.2	0.0	0.0	-0.1
174	192	0.7	0.1	-0.1	0.0	0.0	0.1	193	-0.1	0.2	0.1	0.0	0.0	0.0
	190	0.1	-0.8	0.2	0.0	0.0	-0.1	191	-0.6	0.4	-0.3	0.0	0.0	0.0
175	193	0.4	0.1	-0.1	0.0	0.0	0.1	143	0.4	1.0	0.1	0.0	0.0	0.0
	191	0.0	-1.2	0.2	0.0	0.0	-0.2	139	-0.9	0.1	-0.2	0.0	0.0	0.1
176	27	0.2	-0.1	0.0	0.0	0.0	0.1	194	-0.2	-0.1	0.1	0.0	0.0	0.0
	127	0.1	0.1	0.0	0.0	0.0	0.0	192	-0.2	0.1	-0.1	0.0	0.0	0.0
177	194	0.2	0.0	-0.1	0.0	0.0	0.0	195	0.0	0.0	0.1	0.0	0.0	0.0
	192	0.0	-0.1	0.1	0.0	0.0	0.0	193	-0.2	0.1	-0.1	0.0	0.0	0.0
178	195	0.2	-0.2	-0.1	0.0	0.0	0.0	28	0.3	0.4	0.1	0.0	0.0	0.0
	193	-0.1	-0.5	0.1	0.0	0.0	-0.1	143	-0.4	0.3	-0.1	0.0	0.0	0.0
179	52	4.5	-5.7	1.2	0.0	-0.4	-0.5	119	8.3	4.4	-1.6	-0.1	0.1	0.5
	53	-6.2	-7.0	0.3	0.3	-0.9	-0.3	118	-6.5	8.3	0.1	0.0	0.3	0.3

Documento di proprietà **Snam Rete Gas**. La Società tutelerà i propri diritti in sede civile e penale a termini di legge.

FORZE SOVRACCARICO PERMAN.: SHELL

Shell Nro	Nodo N.ro	Tx (kN)	Ty (kN)	Tz (kN)	Mx (kN*m)	My (kN*m)	Mz (kN*m)	Nodo N.ro	Tx (kN)	Ty (kN)	Tz (kN)	Mx (kN*m)	My (kN*m)	Mz (kN*m)
180	7	-0.3	0.7	0.8	0.1	-0.1	-0.1	34	3.4	3.0	-2.4	0.5	-0.3	0.0
	52	-1.4	-3.0	0.4	0.3	-0.6	-0.3	119	-1.7	-0.7	1.1	-0.1	0.1	0.4

FORZE SPINTA TERR STATICA: SHELL

Shell Nro	Nodo N.ro	Tx (kN)	Ty (kN)	Tz (kN)	Mx (kN*m)	My (kN*m)	Mz (kN*m)	Nodo N.ro	Tx (kN)	Ty (kN)	Tz (kN)	Mx (kN*m)	My (kN*m)	Mz (kN*m)
1	38	-0.4	-5.9	6.5	-0.7	-1.6	-0.6	39	3.4	-4.9	-1.7	1.0	-0.8	0.6
	14	0.9	0.6	10.1	0.9	-2.1	0.1	1	-3.9	10.2	-4.2	-1.0	-0.3	-0.2
2	6	0.9	26.8	0.3	1.7	1.5	-0.8	44	-8.8	-17.2	4.5	-1.1	-0.1	1.0
	2	23.3	5.6	-2.1	-0.8	3.8	-1.7	42	-15.4	-15.2	6.7	0.2	-2.1	1.5
3	39	-18.2	2.8	1.3	-0.1	0.7	-0.5	44	-12.7	9.1	4.6	0.2	1.0	-1.7
	1	12.6	7.7	4.5	0.0	-0.4	1.5	6	18.3	-19.6	-0.3	-0.2	-2.3	0.8
4	46	4.2	-11.6	-4.7	0.3	1.4	-1.0	47	-1.8	-11.7	-10.8	-2.1	-1.2	1.0
	10	2.8	11.3	9.9	3.8	-1.1	1.2	16	-5.2	11.9	14.6	5.0	1.8	-1.2
5	50	1.0	-5.0	5.0	0.2	0.2	-0.5	46	3.6	-5.1	-2.1	-0.5	0.1	0.5
	4	-0.1	2.1	1.1	0.2	0.1	0.5	10	-4.5	8.0	9.8	2.2	0.7	-0.5
6	54	0.0	0.0	4.9	1.1	1.5	0.0	55	0.0	0.0	-9.7	1.1	-1.4	0.0
	7	0.0	0.0	-2.9	0.4	-0.1	0.0	52	0.0	0.0	7.6	0.1	-1.0	0.0
7	64	0.0	0.0	-5.9	0.8	3.4	0.0	65	0.0	0.0	6.0	1.2	-1.8	0.0
	5	0.0	0.0	-0.6	-0.7	4.0	0.0	62	0.0	0.0	0.5	-1.3	-2.1	0.0
8	47	-2.6	-10.9	-6.5	-2.7	0.9	-1.4	72	-6.2	-19.3	-8.2	-0.9	-1.1	1.5
	16	8.2	17.4	10.8	5.5	-1.4	1.5	3	0.6	12.7	11.2	5.4	1.5	-1.6
9	76	-3.8	-12.7	-8.1	-0.4	-0.3	-1.7	77	-1.7	-16.9	-6.5	-0.3	0.2	1.8
	25	4.3	17.3	12.9	5.9	-1.0	1.4	74	1.1	12.3	9.5	5.2	0.5	-1.5
10	38	0.0	0.0	-0.6	0.6	1.7	0.0	86	0.0	0.0	2.1	1.0	-1.2	0.0
	14	0.0	0.0	-2.0	-1.1	2.1	0.0	71	0.0	0.0	0.5	-1.3	-1.3	0.0
11	94	0.0	0.0	-5.2	0.8	3.8	0.0	95	0.0	0.0	5.4	1.3	-1.9	0.0
	18	0.0	0.0	-1.9	-0.8	4.3	0.0	91	0.0	0.0	1.8	-1.4	-2.1	0.0
12	102	-2.9	-21.6	0.8	1.8	0.6	-2.4	103	-1.7	-19.8	2.5	1.4	-0.6	2.3
	21	6.0	25.2	2.9	-1.3	0.9	2.0	84	-1.5	16.3	1.1	-1.7	-0.9	-1.9
13	112	-1.9	-11.0	-7.0	-2.3	1.0	-1.4	76	-5.8	-19.1	-7.8	-0.6	-1.1	1.4
	36	7.9	17.5	11.7	5.6	-1.5	1.5	25	-0.2	12.6	11.2	5.5	1.5	-1.5
14	114	3.9	-11.4	-3.6	0.3	1.3	-1.0	112	-2.0	-12.2	-10.7	-1.8	-1.1	1.0
	35	3.4	11.3	9.0	3.7	-1.1	1.2	36	-5.3	12.2	15.3	5.1	1.8	-1.2
15	24	0.9	26.2	0.1	1.8	1.5	-0.8	116	-8.6	-18.4	4.5	-1.4	0.3	0.9
	21	23.8	6.3	-4.0	-1.1	4.1	-1.6	102	-16.0	-14.1	7.9	0.6	-1.9	1.4
16	118	-18.2	1.2	1.6	-0.3	0.2	-0.5	116	-13.3	10.1	4.6	0.2	1.7	-1.7
	20	13.6	7.8	2.9	0.2	0.5	1.5	24	17.9	-19.1	-0.1	-0.2	-2.3	0.8
17	120	12.3	1.1	9.5	-0.5	-5.2	1.5	121	-16.9	-1.7	-6.5	-0.2	0.3	-1.9
	9	17.4	4.4	12.9	1.0	-5.9	-1.4	43	-12.7	-3.8	-8.1	0.3	0.4	1.7
18	10	8.0	-4.3	12.9	0.3	-2.3	0.5	130	-6.5	-2.0	-8.5	0.1	0.3	-0.3
	4	3.1	2.4	0.3	0.3	-0.8	-0.4	68	-4.6	4.0	10.2	1.3	-0.2	0.2
19	100	1.2	-5.3	5.8	0.2	0.1	-0.4	114	3.7	-4.3	-2.3	-0.4	0.1	0.4
	19	0.0	1.7	0.9	0.1	0.1	0.5	35	-4.9	7.9	10.5	2.3	0.8	-0.5
20	35	8.1	-4.6	13.0	0.3	-2.4	0.5	149	-6.5	-2.1	-8.5	0.2	0.2	-0.3
	19	3.1	2.7	0.5	0.4	-0.7	-0.4	97	-4.7	4.0	11.1	1.5	-0.2	0.1
21	132	5.8	0.6	-6.5	1.3	1.0	0.6	166	-7.1	-0.7	-1.6	1.4	-1.0	-0.6
	5	3.5	0.9	14.5	4.3	-0.4	-0.4	58	-2.2	-0.8	9.7	3.8	0.4	0.4
22	151	5.7	1.0	-7.1	1.1	1.0	0.6	178	-7.4	-1.0	0.1	1.3	-1.0	-0.6
	18	3.8	1.3	14.5	3.9	-0.4	-0.4	93	-2.1	-1.2	7.5	3.3	0.4	0.5
23	123	16.3	-1.5	1.1	0.9	1.7	1.9	190	-19.9	-1.7	2.5	0.6	-1.3	-2.3
	2	25.2	6.0	2.9	-0.9	1.3	-2.1	73	-21.7	-2.9	0.7	-0.5	-1.8	2.5
24	53	-0.4	-5.4	4.2	-0.4	-1.3	-0.6	118	2.4	-5.5	-0.9	0.9	-0.8	0.6
	11	1.6	1.5	9.8	0.8	-1.9	0.1	20	-3.6	9.3	-3.2	-0.4	0.0	-0.1
25	40	-6.7	-0.8	1.1	-0.1	-0.4	-0.8	41	2.4	-8.6	3.4	0.8	-0.7	1.1
	38	-3.2	4.2	11.0	0.6	-1.4	0.7	39	7.6	5.2	-2.7	-0.3	-0.3	-0.9
26	17	0.0	-1.7	1.0	-0.1	0.1	-0.5	12	-4.9	-7.9	10.4	-2.3	0.8	0.5
	40	1.2	5.2	5.7	-0.2	0.1	0.4	41	3.7	4.3	-2.2	0.4	0.1	-0.4
27	44	6.6	12.4	-2.0	1.5	0.5	0.7	45	-14.9	-8.5	6.1	-1.1	1.8	-1.0
	42	19.9	5.4	-6.5	-1.4	3.0	-1.4	43	-11.6	-9.3	11.1	1.2	0.8	1.8
28	45	11.0	1.9	-7.0	1.0	-2.3	1.4	15	-17.6	-8.0	11.8	-1.5	5.6	-1.5
	43	19.1	5.9	-7.8	-1.1	-0.6	-1.4	9	-12.6	0.2	11.1	1.5	5.5	1.5
29	41	-12.3	-0.1	2.5	-1.1	-0.1	-1.6	45	-8.5	-4.2	11.6	-1.2	2.4	0.6
	39	9.3	6.5	3.1	0.2	0.7	0.9	44	11.5	-2.3	-7.1	0.1	-1.6	0.1
30	12	-0.8	-11.8	9.1	-3.9	0.3	-1.2	15	-9.2	-9.6	15.3	-4.2	3.5	1.2
	41	7.7	9.3	-3.7	0.1	1.3	1.0	45	2.4	12.1	-10.7	1.3	-1.7	-1.0
31	48	8.2	-8.9	1.4	0.1	1.1	-0.8	49	11.7	-0.4	-7.0	-0.8	-1.9	-0.1
	46	-12.2	3.7	3.4	1.2	-0.5	1.6	47	-7.7	5.5	11.2	1.9	2.4	-0.6
32	1	12.1	-10.0	2.9	-0.1	0.6	-1.5	8	21.0	15.8	-0.1	-0.2	-2.3	-0.8
	48	-18.2	1.9	1.6	0.3	0.2	0.5	49	-14.8	-7.7	4.6	0.1	1.7	1.7
33	51	-3.0	-4.3	10.3	-0.5	-1.2	-0.7	48	6.8	-6.4	-2.0	0.0	-0.2	0.9
	50	-6.1	1.8	0.1	-0.1	-0.2	0.9	46	2.3	8.9	3.4	-0.7	-0.6	-1.1
34	14	1.6	-1.5	9.7	-0.8	-1.9	-0.1	1	-3.6	-9.4	-3.2	0.4	0.0	0.1
	51	-0.4	5.4	4.2	0.4	-1.3	0.6	48	2.4	5.5	-0.9	-0.9	-0.8	-0.6
35	55	0.0	0.0	2.9	0.8	1.2	0.0	56	0.0	0.0	-4.4	1.2	-1.2	0.0
	52	0.0	0.0	-2.9	-0.1	0.6	0.0	53	0.0	0.0	4.4	-1.1	-0.7	0.0
36	56	0.0	0.0	2.4	1.0	1.1	0.0	57	0.0	0.0	-0.4	1.2	-1.3	0.0
	53	0.0	0.0	-1.2	-1.4	0.8	0.0	11	0.0	0.0	-0.8	-1.9	-1.2	0.0
37	58	0.0	0.0	3.3	0.8	3.5	0.0	59	0.0	0.0	-3.9	1.2	-2.1	0.0
	54	0.0	0.0	-7.7	-0.7	2.1	0.0	55	0.0	0.0	8.3	-1.0	-1.2	0.0

Documento di proprietà **Snam Rete Gas**. La Società tutelerà i propri diritti in sede civile e penale a termini di legge.

FORZE SPINTA TERR STATICA: SHELL

Shell Nro	Nodo N.ro	Tx (kN)	Ty (kN)	Tz (kN)	Mx (kN*m)	My (kN*m)	Mz (kN*m)	Nodo N.ro	Tx (kN)	Ty (kN)	Tz (kN)	Mx (kN*m)	My (kN*m)	Mz (kN*m)
38	59	0.0	0.0	0.3	1.1	2.0	0.0	60	0.0	0.0	-0.9	1.3	-1.4	0.0
	55	0.0	0.0	-1.7	-0.9	1.4	0.0	56	0.0	0.0	2.3	-1.1	-1.2	0.0
39	60	0.0	0.0	0.0	1.2	1.4	0.0	61	0.0	0.0	-0.1	1.2	-1.3	0.0
	56	0.0	0.0	-0.2	-1.1	1.2	0.0	57	0.0	0.0	0.3	-1.2	-1.3	0.0
40	5	0.0	0.0	-1.9	0.8	4.3	0.0	62	0.0	0.0	1.8	1.3	-2.3	0.0
	58	0.0	0.0	-5.4	-0.7	3.8	0.0	59	0.0	0.0	5.5	-1.3	-2.0	0.0
41	62	0.0	0.0	-1.2	1.2	2.3	0.0	63	0.0	0.0	1.0	1.3	-1.5	0.0
	59	0.0	0.0	-1.7	-1.1	2.1	0.0	60	0.0	0.0	1.9	-1.2	-1.4	0.0
42	63	0.0	0.0	-0.5	1.2	1.5	0.0	13	0.0	0.0	0.3	1.2	-1.3	0.0
	60	0.0	0.0	-0.4	-1.2	1.5	0.0	61	0.0	0.0	0.5	-1.2	-1.2	0.0
43	65	0.0	0.0	-1.7	1.1	1.9	0.0	66	0.0	0.0	2.0	1.2	-1.3	0.0
	62	0.0	0.0	-0.9	-1.2	2.1	0.0	63	0.0	0.0	0.6	-1.3	-1.4	0.0
44	66	0.0	0.0	-0.4	1.2	1.3	0.0	67	0.0	0.0	0.5	1.2	-1.2	0.0
	63	0.0	0.0	-0.4	-1.2	1.4	0.0	13	0.0	0.0	0.2	-1.2	-1.2	0.0
45	68	0.0	0.0	-7.7	0.7	1.8	0.0	69	0.0	0.0	8.4	0.9	-1.0	0.0
	64	0.0	0.0	4.0	-0.8	3.0	0.0	65	0.0	0.0	-4.8	-1.2	-1.9	0.0
46	69	0.0	0.0	-1.7	0.9	1.3	0.0	70	0.0	0.0	2.4	1.1	-1.1	0.0
	65	0.0	0.0	0.5	-1.1	1.7	0.0	66	0.0	0.0	-1.2	-1.2	-1.3	0.0
47	70	0.0	0.0	-0.2	1.1	1.1	0.0	71	0.0	0.0	0.3	1.2	-1.2	0.0
	66	0.0	0.0	0.1	-1.2	1.3	0.0	67	0.0	0.0	-0.2	-1.2	-1.2	0.0
48	4	0.0	0.0	-2.5	-0.5	-0.2	0.0	50	0.0	0.0	7.7	-0.1	-0.9	0.0
	68	0.0	0.0	4.9	-1.1	1.2	0.0	69	0.0	0.0	-10.0	-1.0	-1.3	0.0
49	50	0.0	0.0	-2.9	0.1	0.5	0.0	51	0.0	0.0	4.4	1.0	-0.6	0.0
	69	0.0	0.0	3.0	-0.8	1.1	0.0	70	0.0	0.0	-4.6	-1.2	-1.1	0.0
50	51	0.0	0.0	-1.3	1.4	0.7	0.0	14	0.0	0.0	-0.8	1.9	-1.1	0.0
	70	0.0	0.0	2.5	-1.0	1.0	0.0	71	0.0	0.0	-0.4	-1.2	-1.3	0.0
51	49	-14.1	-1.5	-2.1	0.5	1.4	-0.6	73	-12.8	-16.8	-7.6	2.1	-2.3	1.4
	47	14.1	10.3	6.0	1.6	-1.9	1.0	72	12.8	8.0	11.6	1.5	0.9	-1.7
52	8	-21.9	14.4	0.1	2.2	0.6	0.8	2	-18.9	-15.8	-4.0	2.6	-3.3	1.6
	49	20.1	-3.6	4.6	-0.5	-1.3	-0.9	73	20.8	5.0	7.9	-1.2	1.6	-1.4
53	77	-1.0	-11.3	-6.3	-0.6	-0.2	-1.3	78	-0.1	-10.1	-3.4	-0.1	0.0	1.2
	74	1.6	12.2	9.6	4.5	-0.5	1.1	75	-0.5	9.2	6.3	3.4	0.4	-1.1
54	78	0.0	-5.6	-4.3	-0.4	0.1	-0.5	79	-0.1	-2.5	1.7	0.2	0.1	0.4
	75	0.5	5.6	6.2	2.3	-0.1	0.5	32	-0.4	2.4	1.0	0.7	0.2	-0.3
55	80	-6.1	-16.9	-0.7	1.2	0.5	-2.5	81	2.1	-18.5	-1.3	1.5	-0.6	2.4
	76	0.3	20.3	4.8	0.2	0.2	2.1	77	3.7	15.1	5.0	0.4	-0.1	-2.0
56	81	0.1	-13.7	-4.6	1.4	0.6	-1.4	82	0.7	-9.7	1.7	1.1	-0.5	1.2
	77	-1.0	13.0	7.8	0.5	0.1	1.4	78	0.3	10.3	1.3	0.4	-0.3	-1.3
57	82	0.0	-5.6	-5.2	0.7	0.5	-0.5	83	0.1	-2.3	5.4	0.2	0.0	0.4
	78	-0.2	5.5	6.5	0.1	0.2	0.5	79	0.1	2.4	-2.1	0.1	-0.1	-0.4
58	21	5.9	-25.7	3.2	1.6	1.0	-2.2	84	-0.8	-16.0	1.4	1.7	-0.9	1.9
	80	-3.8	21.4	0.5	-2.2	0.7	2.5	81	-1.4	20.3	2.6	-1.6	-0.7	-2.3
59	84	1.2	-12.9	-0.6	1.8	0.9	-1.2	85	0.0	-9.1	2.1	1.3	-0.7	1.1
	81	-0.7	11.9	3.2	-1.3	0.7	1.3	82	-0.5	10.2	1.5	-1.0	-0.6	-1.2
60	85	0.2	-5.3	-1.7	1.0	0.7	-0.5	31	0.1	-2.1	3.5	0.2	0.0	0.3
	82	-0.2	5.1	2.0	-0.8	0.6	0.5	83	-0.1	2.4	0.7	-0.1	0.0	-0.4
61	86	0.0	0.0	0.1	1.1	1.3	0.0	87	0.0	0.0	0.0	1.2	-1.3	0.0
	71	0.0	0.0	-0.1	-1.1	1.3	0.0	67	0.0	0.0	0.0	-1.2	-1.3	0.0
62	87	0.0	0.0	-0.1	1.3	1.3	0.0	88	0.0	0.0	-0.3	1.3	-1.3	0.0
	67	0.0	0.0	0.3	-1.2	1.3	0.0	13	0.0	0.0	0.1	-1.2	-1.3	0.0
63	40	0.0	0.0	-2.9	0.5	0.3	0.0	89	0.0	0.0	2.9	1.1	-0.9	0.0
	38	0.0	0.0	4.1	-0.5	1.3	0.0	86	0.0	0.0	-4.1	-1.1	-1.3	0.0
64	89	0.0	0.0	-1.3	1.2	1.0	0.0	90	0.0	0.0	0.3	1.7	-1.3	0.0
	86	0.0	0.0	2.1	-1.0	1.2	0.0	87	0.0	0.0	-1.1	-1.3	-1.3	0.0
65	90	0.0	0.0	-1.4	1.8	1.2	0.0	91	0.0	0.0	-0.9	2.0	-1.3	0.0
	87	0.0	0.0	1.8	-1.2	1.3	0.0	88	0.0	0.0	0.5	-1.3	-1.4	0.0
66	17	0.0	0.0	-2.7	-0.1	-0.5	0.0	92	0.0	0.0	4.6	1.2	-1.2	0.0
	40	0.0	0.0	8.1	-0.9	0.0	0.0	89	0.0	0.0	-9.9	-1.3	-1.1	0.0
67	92	0.0	0.0	-7.5	1.7	0.7	0.0	93	0.0	0.0	4.0	3.1	-0.9	0.0
	89	0.0	0.0	8.2	-1.0	1.0	0.0	90	0.0	0.0	-4.7	-1.8	-1.3	0.0
68	93	0.0	0.0	-5.8	3.3	0.8	0.0	18	0.0	0.0	-0.6	3.9	-0.8	0.0
	90	0.0	0.0	5.9	-1.6	1.3	0.0	91	0.0	0.0	0.5	-2.0	-1.4	0.0
69	95	0.0	0.0	-1.5	1.2	2.0	0.0	96	0.0	0.0	1.7	1.3	-1.3	0.0
	91	0.0	0.0	-1.1	-1.3	2.2	0.0	88	0.0	0.0	0.9	-1.4	-1.4	0.0
70	96	0.0	0.0	-0.2	1.3	1.4	0.0	61	0.0	0.0	0.3	1.3	-1.2	0.0
	88	0.0	0.0	-0.3	-1.3	1.4	0.0	13	0.0	0.0	0.2	-1.3	-1.3	0.0
71	97	0.0	0.0	-7.4	0.7	2.1	0.0	98	0.0	0.0	8.1	1.1	-1.1	0.0
	94	0.0	0.0	3.2	-0.8	3.5	0.0	95	0.0	0.0	-3.8	-1.3	-2.0	0.0
72	98	0.0	0.0	-1.4	1.0	1.4	0.0	99	0.0	0.0	2.0	1.2	-1.1	0.0
	95	0.0	0.0	0.1	-1.3	1.9	0.0	96	0.0	0.0	-0.7	-1.4	-1.4	0.0
73	99	0.0	0.0	0.1	1.3	1.2	0.0	57	0.0	0.0	0.0	1.3	-1.2	0.0
	96	0.0	0.0	-0.1	-1.3	1.3	0.0	61	0.0	0.0	0.0	-1.3	-1.3	0.0
74	19	0.0	0.0	-2.9	-0.5	0.0	0.0	100	0.0	0.0	8.0	0.0	-1.0	0.0
	97	0.0	0.0	4.6	-1.2	1.4	0.0	98	0.0	0.0	-9.7	-1.2	-1.4	0.0
75	100	0.0	0.0	-2.8	0.3	0.5	0.0	101	0.0	0.0	3.9	1.3	-0.5	0.0
	98	0.0	0.0	2.8	-0.9	1.2	0.0	99	0.0	0.0	-3.9	-1.4	-1.1	0.0
76	101	0.0	0.0	-0.5	1.7	0.6	0.0	11	0.0	0.0	-2.0	2.1	-1.2	0.0
	99	0.0	0.0	2.0	-1.2	1.1	0.0	57	0.0	0.0	0.5	-1.3	-1.4	0.0
77	103	-0.2	-12.1	4.3	1.0	0.6	-1.3	104	-0.5	-9.9	1.2	0.8	-0.5	1.2
	84	1.0	12.6	-1.9	-1.8	0.9	1.2	85	-0.3	9.3	2.1	-1.4	-0.6	-1.1

Documento di proprietà **Snam Rete Gas**. La Società tutelerà i propri diritti in sede civile e penale a termini di legge.

FORZE SPINTA TERR STATICA: SHELL

Shell Nro	Nodo N.ro	Tx (kN)	Ty (kN)	Tz (kN)	Mx (kN*m)	My (kN*m)	Mz (kN*m)	Nodo N.ro	Tx (kN)	Ty (kN)	Tz (kN)	Mx (kN*m)	My (kN*m)	Mz (kN*m)
78	104	0.1	-5.1	2.9	0.7	0.5	-0.5	105	0.0	-2.2	-0.1	0.1	0.0	0.4
	85	0.1	5.1	-2.6	-0.9	0.7	0.5	31	-0.1	2.3	4.0	-0.2	0.0	-0.3
79	106	0.8	-20.4	4.9	-0.5	0.0	-2.0	107	3.0	-15.5	5.2	-0.7	-0.1	2.0
	102	-5.1	17.5	-1.0	-1.0	0.3	2.4	103	1.4	18.5	-1.9	-1.2	-0.5	-2.3
80	107	-0.8	-12.7	8.1	-0.7	0.0	-1.4	108	-0.1	-10.2	1.4	-0.6	-0.2	1.2
	103	0.5	13.4	-5.0	-1.2	0.5	1.3	104	0.3	9.5	1.3	-0.9	-0.4	-1.2
81	108	-0.1	-5.3	6.7	-0.3	0.1	-0.5	109	0.0	-2.4	-2.3	-0.1	-0.1	0.4
	104	0.1	5.5	-5.4	-0.5	0.5	0.5	105	0.0	2.3	5.3	-0.2	0.0	-0.4
82	22	4.1	-17.3	12.8	-5.9	-1.0	-1.4	110	1.3	-12.5	9.6	-5.2	0.5	1.5
	106	-3.8	13.1	-8.3	0.7	-0.4	1.8	107	-1.6	16.8	-7.0	0.6	0.2	-1.9
83	110	1.2	-12.0	9.4	-4.5	-0.5	-1.1	111	-0.6	-9.4	6.5	-3.4	0.4	1.1
	107	-0.6	11.5	-6.3	0.8	-0.2	1.3	108	0.0	9.9	-3.9	0.3	0.1	-1.2
84	111	0.3	-5.5	5.9	-2.3	-0.1	-0.5	30	-0.6	-2.5	1.2	-0.7	0.2	0.3
	108	0.3	5.7	-4.2	0.5	0.1	0.5	109	0.0	2.3	1.3	-0.1	0.1	-0.4
85	113	-13.9	-1.8	-1.9	1.0	1.2	-0.7	80	-12.0	-16.7	-6.6	2.3	-2.4	1.4
	112	13.1	11.0	6.1	1.3	-1.6	1.0	76	12.8	7.5	11.1	1.2	0.9	-1.8
86	23	-22.4	14.7	0.3	2.2	0.5	0.8	21	-18.0	-15.8	-2.1	2.7	-2.8	1.7
	113	19.1	-2.7	4.4	-0.7	-0.9	-1.0	80	21.3	3.8	6.7	-1.6	1.4	-1.5
87	115	7.3	-8.6	3.2	-0.1	0.7	-0.9	113	11.7	-0.7	-7.2	-0.5	-1.6	-0.1
	114	-11.9	3.2	2.4	1.0	-0.3	1.6	112	-7.1	6.2	11.6	1.7	2.0	-0.6
88	20	11.1	-9.7	4.5	-0.1	-0.4	-1.5	23	21.3	16.2	-0.3	-0.2	-2.3	-0.8
	115	-18.3	0.4	1.3	0.2	0.7	0.5	113	-14.0	-6.8	4.7	0.0	1.1	1.7
89	116	6.4	12.7	-2.1	1.5	0.0	0.6	117	-14.6	-9.6	6.0	-1.2	2.2	-1.0
	102	20.2	6.1	-7.6	-1.5	2.8	-1.4	106	-11.9	-9.2	11.6	1.4	1.1	1.7
90	117	10.8	2.5	-6.4	0.9	-2.7	1.4	37	-17.4	-8.1	10.7	-1.4	5.5	-1.5
	106	19.3	6.2	-8.2	-1.1	-0.9	-1.4	22	-12.7	-0.6	11.3	1.5	5.4	1.6
91	119	-12.7	-0.6	3.3	-1.3	-0.1	-1.6	117	-8.8	-3.4	11.3	-1.2	2.8	0.6
	118	10.1	6.5	1.5	0.2	1.1	0.8	116	11.4	-2.6	-7.1	0.3	-2.0	0.2
92	34	-1.4	-11.5	9.8	-3.9	0.3	-1.2	37	-9.0	-9.3	14.7	-4.1	3.4	1.2
	119	8.0	9.4	-4.7	0.2	1.3	1.0	117	2.4	11.5	-10.8	1.5	-1.9	-1.0
93	121	15.2	3.7	5.0	0.1	-0.5	2.0	122	-18.6	2.1	-1.2	0.6	-1.4	-2.4
	43	20.3	0.3	4.8	-0.1	-0.2	-2.1	42	-16.9	-6.1	-0.7	-0.5	-1.2	2.5
94	122	20.4	-1.4	2.6	0.7	1.6	2.3	123	-16.0	-0.8	1.5	0.9	-1.7	-1.9
	42	21.4	-3.8	0.5	-0.7	2.1	-2.5	2	-25.8	5.9	3.2	-1.0	-1.6	2.2
95	124	9.2	-0.5	6.3	-0.5	-3.4	1.1	125	-10.2	-0.1	-3.5	0.0	0.1	-1.2
	120	12.2	1.6	9.6	0.5	-4.5	-1.1	121	-11.3	-1.0	-6.2	0.2	0.6	1.3
96	125	10.3	0.3	1.3	0.2	-0.4	1.3	126	-9.7	0.7	1.6	0.5	-1.1	-1.2
	121	13.1	-1.0	7.8	-0.1	-0.5	-1.4	122	-13.7	0.0	-4.6	-0.6	-1.4	1.4
97	126	10.2	-0.5	1.5	0.6	0.9	1.2	127	-9.1	0.0	2.2	0.7	-1.3	-1.1
	122	11.9	-0.7	3.2	-0.7	1.3	-1.3	123	-12.9	1.2	-0.6	-0.9	-1.8	1.2
98	26	2.4	-0.4	1.0	-0.3	-0.6	0.3	128	-2.4	-0.1	1.6	0.0	-0.3	-0.4
	124	5.7	0.5	6.1	0.1	-2.3	-0.5	125	-5.6	0.1	-4.2	0.0	0.5	0.5
99	128	2.4	0.1	-2.1	0.0	-0.2	0.4	129	-2.2	0.1	5.3	0.0	-0.3	-0.4
	125	5.5	-0.2	6.4	-0.2	-0.1	-0.5	126	-5.6	0.0	-5.1	-0.5	-0.6	0.5
100	129	2.4	-0.1	0.8	0.0	0.1	0.4	27	-2.1	0.1	3.5	0.0	-0.2	-0.3
	126	5.1	-0.2	2.0	-0.6	0.8	-0.5	127	-5.3	0.2	-1.7	-0.7	-1.0	0.5
101	130	8.8	-2.5	7.9	0.9	0.2	0.7	131	-5.6	1.4	-9.9	0.7	-0.7	-0.5
	68	2.2	-1.5	0.8	1.7	-0.4	-0.6	64	-5.4	2.7	16.1	3.1	0.2	0.4
102	131	7.3	-1.1	0.1	1.3	1.0	0.6	132	-5.6	0.9	-7.1	1.1	-1.0	-0.6
	64	2.0	-1.1	7.5	3.3	-0.4	-0.5	5	-3.8	1.3	14.5	4.0	0.4	0.4
103	16	14.1	-7.0	17.6	-0.2	-4.9	1.1	133	-13.4	-3.6	-11.7	0.5	0.1	-1.1
	10	11.8	6.0	6.4	0.4	-3.7	-0.9	130	-12.5	4.6	0.6	-0.4	-0.6	0.8
104	133	13.3	-1.5	13.4	0.8	0.2	1.4	134	-12.1	0.5	-8.2	1.6	-2.2	-1.3
	130	10.2	0.0	0.0	-0.6	0.0	-1.2	131	-11.4	1.0	7.6	-1.0	-1.7	1.1
105	134	12.2	0.6	6.3	1.8	2.4	1.4	135	-11.6	1.4	-2.6	2.1	-3.0	-1.4
	131	9.7	-1.3	2.2	-0.9	1.4	-1.2	132	-10.3	-0.6	6.9	-1.1	-1.9	1.2
106	3	14.7	-6.1	15.7	-0.7	-5.7	1.3	136	-13.0	-1.7	-9.5	0.2	0.0	-1.4
	16	11.3	4.0	11.8	0.4	-5.6	-0.8	133	-13.0	3.9	-7.2	-0.5	-0.2	0.9
107	136	12.6	-0.8	10.6	0.5	-0.1	1.4	137	-13.0	-0.2	-4.3	1.4	-2.7	-1.5
	133	13.0	1.3	5.5	-0.8	-0.1	-1.3	134	-12.6	-0.3	-1.0	-1.7	-2.7	1.4
108	137	12.4	1.1	6.0	1.4	2.7	1.5	138	-12.7	1.1	0.3	1.8	-3.6	-1.5
	134	12.6	-0.8	2.9	-1.7	2.5	-1.4	135	-12.4	-1.4	1.6	-2.1	-3.4	1.4
109	139	10.4	-3.0	10.5	-0.8	-5.2	0.9	140	-9.1	0.1	-5.6	0.1	0.0	-1.2
	3	9.4	1.4	14.4	0.5	-5.6	-0.7	136	-10.7	1.6	-10.6	-0.2	0.2	1.1
110	140	9.9	-0.5	5.3	0.3	-0.3	1.1	141	-10.3	0.1	-0.1	1.0	-2.5	-1.2
	136	11.0	0.9	9.6	-0.5	-0.1	-1.0	137	-10.7	-0.5	-6.1	-1.3	-2.6	1.2
111	141	10.0	0.8	3.5	1.0	2.3	1.2	142	-10.3	0.7	2.2	1.3	-3.2	-1.3
	137	11.3	-0.4	4.4	-1.5	2.7	-1.2	138	-11.0	-1.2	-1.4	-1.8	-3.6	1.3
112	143	7.4	-0.8	4.4	-0.6	-3.5	0.8	144	-7.1	0.0	-0.7	0.1	-0.2	-0.8
	139	8.7	0.5	14.1	0.4	-4.5	-0.9	140	-8.9	0.3	-11.1	-0.1	0.3	0.9
113	144	6.5	0.2	-0.4	0.3	-0.3	0.8	145	-6.8	0.2	4.2	0.7	-1.7	-0.8
	140	8.1	0.2	11.4	-0.3	0.0	-0.8	141	-7.8	-0.6	-8.5	-0.9	-2.0	0.9
114	145	6.2	0.7	0.8	0.7	1.4	0.8	146	-6.5	0.4	3.8	0.9	-2.1	-0.8
	141	8.1	-0.3	5.1	-1.1	2.2	-0.9	142	-7.8	-0.8	-3.1	-1.3	-2.9	0.9
115	28	1.2	0.6	-2.6	-0.3	-0.7	0.3	147	-2.6	-0.9	5.6	0.0	-0.3	-0.3
	143	5.1	1.1	10.5	0.0	-2.2	-0.4	144	-3.8	-0.8	-9.0	-0.1	0.4	0.4
116	147	1.1	0.9	-5.1	0.0	-0.2	0.3	148	-2.2	-0.6	8.6	0.0	-0.4	-0.3
	144	4.4	0.6	10.2	-0.3	0.1	-0.4	145	-3.3	-0.9	-9.1	-0.6	-0.9	0.4
117	148	1.3	0.6	-0.9	0.0	0.1	0.3	29	-1.8	-0.1	5.6	0.0	-0.3	-0.3
	145	3.8	0.1	4.1	-0.7	1.2	-0.3	146	-3.3	-0.6	-4.3	-0.9	-1.5	0.3

Documento di proprietà **Snam Rete Gas**. La Società tutelerà i propri diritti in sede civile e penale a termini di legge.

FORZE SPINTA TERR STATICA: SHELL

Shell Nro	Nodo N.ro	Tx (kN)	Ty (kN)	Tz (kN)	Mx (kN*m)	My (kN*m)	Mz (kN*m)	Nodo N.ro	Tx (kN)	Ty (kN)	Tz (kN)	Mx (kN*m)	My (kN*m)	Mz (kN*m)
118	101	-3.2	-4.2	11.0	-0.6	-1.4	-0.7	115	7.5	-5.1	-2.8	0.3	-0.3	0.9
	100	-6.7	0.8	1.1	0.1	-0.4	0.8	114	2.4	8.5	3.4	-0.8	-0.7	-1.1
119	11	0.9	-0.6	10.1	-0.9	-2.1	-0.1	20	-3.9	-10.2	-4.3	1.0	-0.3	0.2
	101	-0.4	5.9	6.5	0.7	-1.7	0.6	115	3.4	4.9	-1.7	-1.0	-0.8	-0.6
120	149	8.9	-2.3	7.1	1.0	0.3	0.7	150	-5.5	1.5	-9.9	0.8	-0.8	-0.5
	97	2.0	-1.7	2.0	2.0	-0.3	-0.6	94	-5.3	2.5	16.9	3.4	0.2	0.4
121	150	7.2	-0.7	-1.5	1.4	1.0	0.6	151	-5.9	0.7	-6.5	1.3	-1.0	-0.6
	94	2.2	-0.8	9.6	3.8	-0.4	-0.4	18	-3.5	0.9	14.5	4.3	0.4	0.4
122	36	14.7	-7.5	17.9	-0.2	-5.0	1.1	152	-13.5	-3.3	-11.4	0.6	-0.2	-1.1
	35	11.3	6.1	6.2	0.4	-3.6	-0.8	149	-12.5	4.7	1.2	-0.5	-0.7	0.8
123	152	13.5	-1.3	12.9	1.0	0.5	1.4	153	-12.2	0.8	-7.4	1.8	-2.4	-1.4
	149	10.1	-0.3	0.3	-0.7	0.2	-1.2	150	-11.4	0.7	8.1	-1.1	-1.8	1.2
124	153	12.3	0.9	5.0	2.0	2.6	1.4	154	-11.8	1.5	-1.0	2.3	-3.0	-1.4
	150	9.8	-1.5	3.3	-1.1	1.6	-1.3	151	-10.3	-1.0	6.7	-1.2	-1.9	1.2
125	25	14.5	-6.0	15.6	-0.7	-5.7	1.2	155	-13.5	-2.3	-9.1	0.3	-0.3	-1.4
	36	12.4	4.8	11.9	0.5	-5.7	-0.8	152	-13.4	3.5	-6.8	-0.6	-0.5	1.0
126	155	12.8	-0.4	10.2	0.7	0.2	1.5	156	-13.3	0.0	-3.4	1.5	-3.0	-1.5
	152	13.4	1.1	5.3	-1.0	0.2	-1.3	153	-12.8	-0.7	-0.4	-1.8	-2.9	1.4
127	156	12.7	1.3	5.3	1.7	3.0	1.6	157	-12.9	1.3	1.5	1.9	-3.6	-1.6
	153	12.8	-1.1	2.8	-2.0	2.7	-1.5	154	-12.6	-1.5	2.0	-2.3	-3.3	1.5
128	74	10.6	-3.3	10.4	-0.8	-5.2	0.9	158	-9.3	-0.3	-5.1	0.1	-0.3	-1.2
	25	9.5	1.9	14.3	0.5	-5.6	-0.7	155	-10.8	1.7	-10.2	-0.3	-0.1	1.0
129	158	10.0	-0.4	5.2	0.5	0.0	1.1	159	-10.6	0.1	0.5	1.1	-2.7	-1.3
	155	11.4	1.0	9.1	-0.7	0.2	-1.1	156	-10.9	-0.7	-5.4	-1.5	-2.9	1.2
130	159	10.2	0.9	3.5	1.2	2.5	1.3	160	-10.5	0.9	2.7	1.4	-3.2	-1.3
	156	11.6	-0.6	3.6	-1.7	2.9	-1.3	157	-11.3	-1.2	-0.4	-1.9	-3.6	1.3
131	75	7.4	-1.0	4.2	-0.6	-3.4	0.8	161	-7.1	0.0	-0.3	0.1	-0.4	-0.8
	74	8.6	0.6	14.1	0.4	-4.5	-0.8	158	-9.0	0.5	-10.9	-0.1	0.1	0.9
132	161	6.5	0.2	-0.3	0.4	-0.1	0.8	162	-6.8	0.2	4.5	0.8	-1.8	-0.9
	158	8.3	0.2	10.8	-0.5	0.2	-0.8	159	-7.9	-0.6	-7.8	-1.1	-2.3	0.9
133	162	6.3	0.7	1.4	0.8	1.5	0.8	163	-6.6	0.6	3.6	0.9	-2.0	-0.9
	159	8.2	-0.4	3.8	-1.3	2.4	-0.9	160	-8.0	-0.8	-1.7	-1.4	-2.9	0.9
134	32	1.2	0.4	-2.7	-0.3	-0.7	0.2	164	-2.5	-0.8	5.9	0.0	-0.4	-0.3
	75	5.0	1.0	10.7	0.0	-2.3	-0.4	161	-3.8	-0.7	-9.0	-0.1	0.2	0.4
135	164	1.1	0.8	-4.7	0.0	-0.2	0.3	165	-2.1	-0.4	8.6	0.0	-0.4	-0.3
	161	4.4	0.5	9.6	-0.3	0.2	-0.4	162	-3.3	-0.8	-8.7	-0.7	-1.1	0.4
136	165	1.4	0.4	0.3	0.0	0.1	0.3	33	-1.7	0.1	4.9	0.0	-0.3	-0.3
	162	3.8	0.0	2.7	-0.9	1.3	-0.4	163	-3.5	-0.5	-3.0	-0.9	-1.5	0.4
137	166	5.5	1.4	-9.9	0.8	0.8	0.5	167	-8.8	-2.3	7.0	1.0	-0.3	-0.7
	58	5.3	2.5	17.0	3.5	-0.2	-0.4	54	-2.0	-1.7	2.0	2.0	0.3	0.6
138	167	6.4	-2.1	-8.6	0.2	-0.2	0.2	34	-8.0	-4.6	13.0	0.3	2.4	-0.5
	54	4.6	4.0	11.1	1.5	0.2	-0.1	7	-3.0	2.6	0.5	0.4	0.7	0.4
139	135	11.6	1.5	-1.1	2.3	3.0	1.4	168	-12.1	0.9	5.0	2.0	-2.6	-1.4
	132	10.1	-0.9	6.7	-1.2	1.9	-1.2	166	-9.6	-1.4	3.3	-1.1	-1.6	1.2
140	168	12.0	0.8	-7.4	1.8	2.4	1.3	169	-13.3	-1.3	12.9	1.0	-0.5	-1.4
	166	11.3	0.7	8.2	-1.1	1.8	-1.1	167	-10.0	-0.2	0.3	-0.7	-0.2	1.2
141	169	13.3	-3.6	-11.3	0.6	0.2	1.0	37	-14.1	-7.3	17.6	-0.1	5.0	-1.1
	167	12.5	4.6	1.3	-0.5	0.7	-0.8	34	-11.7	6.3	6.3	0.4	3.6	0.8
142	138	12.6	1.3	1.5	1.9	3.6	1.6	170	-12.4	1.2	5.3	1.7	-3.0	-1.5
	135	12.4	-1.5	2.1	-2.3	3.3	-1.5	168	-12.5	-1.1	2.8	-2.0	-2.7	1.5
143	170	13.0	0.1	-3.5	1.5	3.0	1.5	171	-12.6	-0.5	10.2	0.7	-0.3	-1.4
	168	12.6	-0.6	-0.3	-1.9	2.9	-1.4	169	-13.0	1.1	5.2	-1.0	-0.2	1.3
144	171	13.1	-1.8	-9.0	0.3	0.3	1.4	22	-14.7	-6.3	15.7	-0.7	5.7	-1.2
	169	13.0	3.8	-6.7	-0.6	0.5	-0.9	37	-11.3	4.3	11.6	0.4	5.6	0.7
145	142	10.3	0.9	2.7	1.4	3.2	1.3	172	-10.0	0.9	3.5	1.2	-2.5	-1.3
	138	11.0	-1.2	-0.4	-2.0	3.6	-1.3	170	-11.3	-0.6	3.5	-1.7	-2.9	1.2
146	172	10.3	0.2	0.5	1.1	2.7	1.3	173	-9.9	-0.3	5.2	0.5	0.0	-1.1
	170	10.7	-0.7	-5.4	-1.5	2.9	-1.2	171	-11.1	0.8	9.1	-0.7	-0.2	1.1
147	173	9.1	-0.1	-5.1	0.1	0.3	1.2	110	-10.4	-3.1	10.4	-0.8	5.2	-0.9
	171	10.6	1.5	-10.2	-0.3	0.2	-1.0	22	-9.4	1.6	14.3	0.5	5.6	0.7
148	146	6.4	0.6	3.6	0.9	2.0	0.8	174	-6.2	0.7	1.4	0.8	-1.5	-0.8
	142	7.8	-0.8	-1.7	-1.4	2.9	-0.9	172	-8.0	-0.4	3.8	-1.3	-2.4	0.9
149	174	6.7	0.2	4.5	0.8	1.8	0.8	175	-6.4	0.3	-0.3	0.4	0.1	-0.8
	172	7.7	-0.7	-7.8	-1.1	2.3	-0.9	173	-8.1	0.1	10.8	-0.4	-0.2	0.8
150	175	7.1	0.0	-0.3	0.1	0.4	0.8	111	-7.3	-0.8	4.2	-0.6	3.4	-0.8
	173	8.9	0.2	-10.9	-0.1	-0.1	-0.9	110	-8.6	0.5	14.1	0.4	4.5	0.9
151	29	1.7	0.1	4.9	0.0	0.3	0.3	176	-1.4	0.5	0.3	0.0	-0.1	-0.3
	146	3.4	-0.5	-3.1	-0.9	1.5	-0.4	174	-3.7	-0.1	2.7	-0.8	-1.3	0.3
152	176	2.2	-0.5	8.6	0.0	0.4	0.3	177	-1.0	0.8	-4.7	0.0	0.2	-0.3
	174	3.2	-0.9	-8.7	-0.7	1.1	-0.4	175	-4.4	0.5	9.6	-0.3	-0.2	0.4
153	177	2.5	-0.8	5.9	0.0	0.4	0.3	30	-1.1	0.6	-2.7	-0.3	0.7	-0.2
	175	3.7	-0.8	-9.0	-0.1	-0.2	-0.4	111	-5.1	1.1	10.7	0.0	2.3	0.4
154	178	5.7	1.4	-9.9	0.7	0.7	0.5	179	-8.9	-2.5	8.0	0.9	-0.2	-0.7
	93	5.4	2.6	16.1	3.0	-0.2	-0.5	92	-2.3	-1.5	0.7	1.6	0.4	0.6
155	179	6.7	-2.2	-8.4	0.1	-0.3	0.3	12	-8.1	-4.3	12.8	0.3	2.3	-0.6
	92	4.7	4.0	10.2	1.3	0.2	-0.1	17	-3.2	2.5	0.3	0.3	0.8	0.4
156	154	11.8	1.4	-2.6	2.1	3.0	1.4	180	-12.4	0.6	6.3	1.8	-2.4	-1.4
	151	10.5	-0.7	6.9	-1.1	2.0	-1.2	178	-9.9	-1.3	2.2	-0.9	-1.4	1.3
157	180	12.4	0.6	-8.2	1.6	2.2	1.3	181	-13.6	-1.5	13.5	0.8	-0.2	-1.4
	178	11.6	1.0	7.6	-1.0	1.7	-1.2	179	-10.3	-0.1	0.0	-0.6	0.0	1.2

Documento di proprietà **Snam Rete Gas**. La Società tutelerà i propri diritti in sede civile e penale a termini di legge.

FORZE SPINTA TERR STATICA: SHELL

Shell Nro	Nodo N.ro	Tx (kN)	Ty (kN)	Tz (kN)	Mx (kN*m)	My (kN*m)	Mz (kN*m)	Nodo N.ro	Tx (kN)	Ty (kN)	Tz (kN)	Mx (kN*m)	My (kN*m)	Mz (kN*m)
158	181	13.6	-3.3	-11.7	0.5	-0.1	1.1	15	-14.7	-7.2	17.8	-0.2	5.0	-1.1
	179	12.5	4.7	0.4	-0.4	0.6	-0.8	12	-11.4	5.8	6.4	0.4	3.7	0.9
159	157	12.9	1.1	0.3	1.8	3.6	1.6	182	-12.7	1.1	6.0	1.4	-2.7	-1.5
	154	12.6	-1.4	1.5	-2.1	3.4	-1.5	180	-12.9	-0.8	2.9	-1.7	-2.5	1.5
160	182	13.3	-0.3	-4.3	1.3	2.7	1.5	183	-12.8	-0.7	10.5	0.5	0.1	-1.4
	180	12.9	-0.4	-1.0	-1.6	2.7	-1.4	181	-13.4	1.3	5.6	-0.8	0.1	1.3
161	183	13.4	-2.2	-9.6	0.2	0.0	1.4	9	-14.5	-5.9	15.7	-0.7	5.8	-1.3
	181	13.5	3.5	-7.3	-0.5	0.2	-1.0	15	-12.4	4.5	12.0	0.5	5.7	0.9
162	160	10.5	0.7	2.2	1.3	3.2	1.3	184	-10.2	0.8	3.5	1.0	-2.3	-1.3
	157	11.2	-1.2	-1.4	-1.8	3.6	-1.3	182	-11.6	-0.3	4.4	-1.5	-2.6	1.2
163	184	10.5	0.0	-0.1	1.0	2.5	1.3	185	-10.1	-0.6	5.3	0.3	0.3	-1.1
	182	10.9	-0.5	-6.1	-1.3	2.6	-1.2	183	-11.3	1.1	9.6	-0.5	0.1	1.1
164	185	9.3	-0.2	-5.6	0.1	0.0	1.2	120	-10.5	-3.2	10.5	-0.7	5.2	-0.9
	183	10.8	1.7	-10.5	-0.2	-0.2	-1.1	9	-9.5	1.7	14.3	0.5	5.6	0.7
165	163	6.6	0.4	3.8	0.9	2.1	0.8	186	-6.3	0.6	0.8	0.7	-1.4	-0.8
	160	8.0	-0.8	-3.1	-1.3	2.9	-0.9	184	-8.3	-0.3	5.1	-1.1	-2.2	0.9
166	186	6.9	0.1	4.1	0.7	1.6	0.8	187	-6.6	0.1	-0.4	0.3	0.3	-0.8
	184	8.0	-0.5	-8.5	-0.9	2.0	-0.9	185	-8.2	0.2	11.3	-0.3	0.0	0.8
167	187	7.1	0.0	-0.8	0.1	0.2	0.8	124	-7.5	-1.0	4.4	-0.6	3.5	-0.8
	185	9.0	0.5	-11.1	-0.1	-0.3	-0.9	120	-8.7	0.5	14.1	0.4	4.5	0.9
168	33	1.8	-0.1	5.6	0.0	0.3	0.3	188	-1.3	0.5	-0.9	0.0	-0.1	-0.3
	163	3.4	-0.5	-4.3	-0.9	1.5	-0.3	186	-3.9	0.1	4.1	-0.7	-1.2	0.3
169	188	2.2	-0.5	8.6	0.0	0.4	0.3	189	-1.1	0.8	-5.1	0.0	0.2	-0.3
	186	3.4	-0.8	-9.1	-0.6	0.9	-0.4	187	-4.4	0.6	10.1	-0.3	-0.1	0.4
170	189	2.5	-0.8	5.5	0.0	0.3	0.3	26	-1.3	0.4	-2.6	-0.3	0.7	-0.3
	187	3.8	-0.7	-8.9	-0.1	-0.4	-0.4	124	-5.0	1.0	10.5	0.0	2.2	0.4
171	190	18.5	1.4	-1.8	0.5	1.2	2.3	191	-15.6	3.0	5.2	0.0	0.7	-2.0
	73	17.5	-5.2	-1.1	-0.4	0.9	-2.4	72	-20.5	0.8	4.9	0.0	0.5	2.0
172	191	16.8	-1.6	-7.0	-0.2	-0.6	1.9	139	-12.6	1.3	9.7	-0.5	5.2	-1.5
	72	13.1	-3.8	-8.3	0.3	-0.7	-1.8	3	-17.4	4.1	12.9	1.0	5.9	1.4
173	127	9.4	-0.3	2.1	0.6	1.3	1.1	192	-9.9	-0.5	1.2	0.5	-0.7	-1.2
	123	12.7	1.0	-1.9	-0.9	1.8	-1.2	190	-12.1	-0.2	4.3	-0.6	-1.0	1.3
174	192	9.6	0.3	1.2	0.5	1.0	1.2	193	-10.3	-0.1	1.4	0.2	0.6	-1.2
	190	13.5	0.5	-5.0	-0.5	1.2	-1.3	191	-12.8	-0.7	8.1	0.0	0.7	1.4
175	193	9.9	0.0	-4.0	0.0	-0.3	1.2	143	-9.4	-0.6	6.6	-0.5	3.4	-1.1
	191	11.5	-0.6	-6.2	0.2	-0.8	-1.3	139	-12.0	1.2	9.4	0.5	4.5	1.1
176	27	2.3	-0.1	4.0	0.0	0.2	0.3	194	-2.2	0.0	0.0	0.0	-0.1	-0.4
	127	5.1	0.1	-2.6	-0.6	0.9	-0.5	192	-5.1	0.1	2.9	-0.5	-0.7	0.5
177	194	2.3	0.0	5.2	0.0	0.3	0.4	195	-2.4	0.0	-2.3	0.0	0.2	-0.4
	192	5.5	0.1	-5.4	-0.4	0.5	-0.5	193	-5.4	-0.1	6.7	-0.1	0.2	0.5
178	195	2.3	0.0	1.2	0.0	0.2	0.4	28	-2.6	-0.6	1.2	-0.3	0.6	-0.3
	193	5.7	0.3	-4.1	0.0	-0.6	-0.5	143	-5.5	0.3	5.9	0.1	2.3	0.5
179	52	-6.1	-1.9	0.1	0.1	-0.2	-0.9	119	2.3	-8.9	3.5	0.7	-0.6	1.1
	53	-3.0	4.3	10.4	0.5	-1.2	0.7	118	6.8	6.4	-2.1	0.0	-0.2	-0.9
180	7	0.0	-2.2	1.0	-0.2	0.1	-0.5	34	-4.6	-8.0	9.9	-2.2	0.7	0.5
	52	1.0	5.1	5.0	-0.2	0.2	0.5	119	3.6	5.1	-2.1	0.5	0.1	-0.5

FORZE SPINTA TERRENO SISMI: SHELL

Shell Nro	Nodo N.ro	Tx (kN)	Ty (kN)	Tz (kN)	Mx (kN*m)	My (kN*m)	Mz (kN*m)	Nodo N.ro	Tx (kN)	Ty (kN)	Tz (kN)	Mx (kN*m)	My (kN*m)	Mz (kN*m)
1	38	0.0	-0.4	0.4	-0.1	-0.1	0.0	39	0.2	-0.3	-0.1	0.1	0.0	0.0
	14	0.1	0.1	0.7	0.1	-0.2	0.0	1	-0.3	0.7	-0.4	-0.1	0.0	0.0
2	6	0.1	1.8	0.2	0.1	0.2	0.0	44	-0.7	-1.2	0.3	-0.1	0.0	0.0
	2	1.8	0.4	-0.4	-0.1	0.4	-0.1	42	-1.3	-1.1	0.7	0.0	-0.2	0.1
3	39	-1.2	0.1	0.0	-0.1	0.1	0.0	44	-0.9	0.7	0.4	0.0	0.1	-0.1
	1	0.9	0.6	0.5	0.0	-0.1	0.1	6	1.2	-1.4	-0.2	0.0	-0.2	0.0
4	46	0.3	-0.7	-0.2	0.0	0.1	-0.1	47	-0.1	-0.7	-0.9	-0.2	-0.1	0.1
	10	0.1	0.7	0.5	0.3	-0.1	0.1	16	-0.3	0.8	1.2	0.4	0.1	-0.1
5	50	0.0	-0.3	0.3	0.0	0.0	0.0	46	0.2	-0.3	-0.2	0.0	0.0	0.0
	4	0.0	0.1	-0.1	0.0	0.0	0.0	10	-0.3	0.5	0.7	0.2	0.1	0.0
6	54	0.0	0.0	0.4	0.1	0.1	0.0	55	0.0	0.0	-0.7	0.1	-0.1	0.0
	7	0.0	0.0	-0.2	0.0	0.0	0.0	52	0.0	0.0	0.5	0.0	-0.1	0.0
7	64	0.0	0.0	-0.4	0.1	0.2	0.0	65	0.0	0.0	0.4	0.1	-0.1	0.0
	5	0.0	0.0	0.0	-0.1	0.3	0.0	62	0.0	0.0	0.0	-0.1	-0.1	0.0
8	47	-0.1	-0.9	-0.4	-0.2	0.1	-0.1	72	-0.4	-1.5	-0.9	0.0	-0.1	0.1
	16	0.6	1.3	0.8	0.5	-0.1	0.1	3	0.0	1.1	1.1	0.5	0.1	-0.1
9	76	-0.2	-1.2	-0.7	0.0	0.0	-0.2	77	-0.1	-1.5	-0.8	0.0	0.0	0.2
	25	0.4	1.4	1.2	0.5	-0.1	0.1	74	-0.1	1.2	1.1	0.5	0.0	-0.1
10	38	0.0	0.0	-0.1	0.0	0.1	0.0	86	0.0	0.0	0.2	0.1	-0.1	0.0
	14	0.0	0.0	-0.2	-0.1	0.2	0.0	71	0.0	0.0	0.1	-0.1	-0.1	0.0
11	94	0.0	0.0	-0.3	0.1	0.2	0.0	95	0.0	0.0	0.3	0.1	-0.1	0.0
	18	0.0	0.0	-0.1	-0.1	0.3	0.0	91	0.0	0.0	0.1	-0.1	-0.1	0.0
12	102	-0.3	-1.8	0.1	0.2	0.1	-0.2	103	-0.1	-1.7	0.3	0.2	-0.1	0.2
	21	0.4	2.1	0.4	-0.2	0.1	0.2	84	0.0	1.4	0.0	-0.2	-0.1	-0.2
13	112	-0.1	-0.9	-0.4	-0.2	0.1	-0.1	76	-0.4	-1.5	-0.9	0.0	-0.1	0.1
	36	0.5	1.3	0.8	0.5	-0.1	0.1	25	-0.1	1.1	1.1	0.5	0.1	-0.1
14	114	0.3	-0.7	-0.1	0.0	0.1	-0.1	112	-0.1	-0.8	-0.9	-0.2	-0.1	0.1
	35	0.1	0.7	0.5	0.3	-0.1	0.1	36	-0.3	0.8	1.2	0.4	0.1	-0.1
15	24	0.1	1.8	0.1	0.1	0.2	0.0	116	-0.7	-1.3	0.3	-0.1	0.0	0.0
	21	1.9	0.4	-0.5	-0.1	0.5	-0.1	102	-1.3	-1.0	0.8	0.0	-0.2	0.1

Documento di proprietà **Snam Rete Gas**. La Società tutelerà i propri diritti in sede civile e penale a termini di legge.

FORZE SPINTA TERRENO SISMI: SHELL

Shell Nro	Nodo N.ro	Tx (kN)	Ty (kN)	Tz (kN)	Mx (kN*m)	My (kN*m)	Mz (kN*m)	Nodo N.ro	Tx (kN)	Ty (kN)	Tz (kN)	Mx (kN*m)	My (kN*m)	Mz (kN*m)
16	118	-1.2	0.0	0.0	-0.1	0.0	0.0	116	-0.9	0.8	0.4	0.0	0.2	-0.1
	20	1.0	0.6	0.3	0.0	0.0	0.1	24	1.2	-1.4	-0.1	0.0	-0.2	0.0
17	120	1.2	-0.1	1.1	0.0	-0.5	0.1	121	-1.5	-0.1	-0.8	0.0	0.0	-0.2
	9	1.5	0.4	1.2	0.1	-0.6	-0.1	43	-1.2	-0.2	-0.7	0.0	0.0	0.2
18	10	0.4	-0.2	0.8	0.0	-0.2	0.0	130	-0.4	-0.2	-0.5	0.0	0.0	0.0
	4	0.2	0.2	0.0	0.0	0.0	0.0	68	-0.2	0.2	0.6	0.1	0.0	0.0
19	100	0.1	-0.3	0.4	0.0	0.0	0.0	114	0.3	-0.3	-0.2	0.0	0.0	0.0
	19	0.0	0.1	-0.1	0.0	0.0	0.0	35	-0.3	0.5	0.7	0.2	0.1	0.0
20	35	0.5	-0.2	0.8	0.0	-0.2	0.0	149	-0.5	-0.2	-0.6	0.0	0.0	0.0
	19	0.2	0.2	0.0	0.0	0.0	0.0	97	-0.2	0.2	0.6	0.1	0.0	0.0
21	132	0.4	0.0	-0.5	0.1	0.1	0.0	166	-0.5	0.0	-0.1	0.1	-0.1	0.0
	5	0.2	0.1	0.9	0.3	0.0	0.0	58	-0.2	-0.1	0.5	0.2	0.0	0.0
22	151	0.4	0.1	-0.5	0.1	0.1	0.0	178	-0.5	-0.1	0.0	0.1	-0.1	0.0
	18	0.3	0.1	0.9	0.3	0.0	0.0	93	-0.2	-0.1	0.4	0.2	0.0	0.0
23	123	1.4	0.0	0.0	0.1	0.2	0.2	190	-1.7	-0.1	0.3	0.1	-0.2	-0.2
	2	2.1	0.4	0.4	-0.1	0.1	-0.2	73	-1.8	-0.3	0.1	-0.1	-0.2	0.2
24	53	0.0	-0.4	0.2	0.0	-0.1	0.0	118	0.1	-0.4	0.0	0.1	0.0	0.0
	11	0.1	0.1	0.7	0.1	-0.2	0.0	20	-0.2	0.6	-0.3	0.0	0.0	0.0
25	40	-0.4	-0.1	-0.1	0.0	0.0	-0.1	41	0.1	-0.6	0.3	0.0	0.0	0.1
	38	-0.2	0.3	0.8	0.0	-0.1	0.0	39	0.5	0.4	-0.3	0.0	0.0	-0.1
26	17	0.0	-0.1	-0.1	0.0	0.0	0.0	12	-0.3	-0.5	0.7	-0.2	0.1	0.0
	40	0.1	0.3	0.4	0.0	0.0	0.0	41	0.3	0.3	-0.2	0.0	0.0	0.0
27	44	0.6	0.8	0.0	0.1	0.1	0.1	45	-1.1	-0.5	0.4	-0.1	0.1	-0.1
	42	1.6	0.3	-0.8	-0.1	0.4	-0.1	43	-1.0	-0.6	1.1	0.1	0.0	0.1
28	45	0.9	0.1	-0.4	0.1	-0.2	0.1	15	-1.3	-0.5	0.9	-0.1	0.5	-0.1
	43	1.5	0.4	-0.9	-0.1	0.0	-0.1	9	-1.1	0.1	1.1	0.1	0.5	0.1
29	41	-0.8	0.1	0.0	-0.1	0.0	-0.1	45	-0.6	-0.2	1.0	-0.1	0.2	0.0
	39	0.7	0.4	0.4	0.0	0.0	0.0	44	0.8	-0.2	-0.7	0.1	-0.1	0.0
30	12	-0.1	-0.7	0.5	-0.3	0.0	-0.1	15	-0.6	-0.7	1.2	-0.3	0.3	0.1
	41	0.5	0.6	-0.1	0.0	0.1	0.1	45	0.2	0.8	-0.9	0.1	-0.1	-0.1
31	48	0.6	-0.6	0.3	0.0	0.0	0.0	49	0.8	0.1	-0.7	-0.1	-0.1	0.0
	46	-0.8	0.2	0.1	0.1	0.0	0.1	47	-0.6	0.3	0.9	0.2	0.2	0.0
32	1	0.9	-0.7	0.3	0.0	0.0	-0.1	8	1.4	1.2	-0.1	-0.1	-0.2	0.0
	48	-1.2	0.2	0.0	0.1	0.0	0.0	49	-1.1	-0.6	0.4	0.0	0.1	0.1
33	51	-0.2	-0.3	0.8	0.0	-0.1	0.0	48	0.4	-0.5	-0.3	0.0	0.0	0.1
	50	-0.4	0.1	-0.1	0.0	0.0	0.1	46	0.1	0.6	0.3	0.0	0.0	-0.1
34	14	0.1	-0.1	0.7	-0.1	-0.2	0.0	1	-0.2	-0.6	-0.3	0.0	0.0	0.0
	51	0.0	0.4	0.2	0.0	-0.1	0.0	48	0.1	0.4	0.0	-0.1	0.0	0.0
35	55	0.0	0.0	0.3	0.1	0.1	0.0	56	0.0	0.0	-0.3	0.1	-0.1	0.0
	52	0.0	0.0	-0.2	0.0	0.0	0.0	53	0.0	0.0	0.3	-0.1	-0.1	0.0
36	56	0.0	0.0	0.2	0.1	0.1	0.0	57	0.0	0.0	0.0	0.1	-0.1	0.0
	53	0.0	0.0	-0.1	-0.1	0.1	0.0	11	0.0	0.0	-0.1	-0.2	-0.1	0.0
37	58	0.0	0.0	0.2	0.1	0.2	0.0	59	0.0	0.0	-0.3	0.1	-0.1	0.0
	54	0.0	0.0	-0.5	0.0	0.1	0.0	55	0.0	0.0	0.5	-0.1	-0.1	0.0
38	59	0.0	0.0	0.0	0.1	0.1	0.0	60	0.0	0.0	-0.1	0.1	-0.1	0.0
	55	0.0	0.0	-0.1	-0.1	0.1	0.0	56	0.0	0.0	0.1	-0.1	-0.1	0.0
39	60	0.0	0.0	0.0	0.1	0.1	0.0	61	0.0	0.0	0.0	0.1	-0.1	0.0
	56	0.0	0.0	0.0	-0.1	0.1	0.0	57	0.0	0.0	0.0	-0.1	-0.1	0.0
40	5	0.0	0.0	-0.1	0.1	0.3	0.0	62	0.0	0.0	0.1	0.1	-0.2	0.0
	58	0.0	0.0	-0.3	0.0	0.2	0.0	59	0.0	0.0	0.4	-0.1	-0.1	0.0
41	62	0.0	0.0	-0.1	0.1	0.2	0.0	63	0.0	0.0	0.1	0.1	-0.1	0.0
	59	0.0	0.0	-0.1	-0.1	0.1	0.0	60	0.0	0.0	0.1	-0.1	-0.1	0.0
42	63	0.0	0.0	0.0	0.1	0.1	0.0	13	0.0	0.0	0.0	0.1	-0.1	0.0
	60	0.0	0.0	0.0	-0.1	0.1	0.0	61	0.0	0.0	0.0	-0.1	-0.1	0.0
43	65	0.0	0.0	-0.1	0.1	0.1	0.0	66	0.0	0.0	0.1	0.1	-0.1	0.0
	62	0.0	0.0	-0.1	-0.1	0.1	0.0	63	0.0	0.0	0.0	-0.1	-0.1	0.0
44	66	0.0	0.0	0.0	0.1	0.1	0.0	67	0.0	0.0	0.0	0.1	-0.1	0.0
	63	0.0	0.0	0.0	-0.1	0.1	0.0	13	0.0	0.0	0.0	-0.1	-0.1	0.0
45	68	0.0	0.0	-0.5	0.0	0.1	0.0	69	0.0	0.0	0.5	0.1	-0.1	0.0
	64	0.0	0.0	0.3	-0.1	0.2	0.0	65	0.0	0.0	-0.3	-0.1	-0.1	0.0
46	69	0.0	0.0	-0.1	0.1	0.1	0.0	70	0.0	0.0	0.1	0.1	-0.1	0.0
	65	0.0	0.0	0.1	-0.1	0.1	0.0	66	0.0	0.0	-0.1	-0.1	-0.1	0.0
47	70	0.0	0.0	0.0	0.1	0.1	0.0	71	0.0	0.0	0.0	0.1	-0.1	0.0
	66	0.0	0.0	0.0	-0.1	0.1	0.0	67	0.0	0.0	0.0	-0.1	-0.1	0.0
48	4	0.0	0.0	-0.2	0.0	0.0	0.0	50	0.0	0.0	0.5	0.0	-0.1	0.0
	68	0.0	0.0	0.3	-0.1	0.1	0.0	69	0.0	0.0	-0.7	-0.1	-0.1	0.0
49	50	0.0	0.0	-0.2	0.0	0.0	0.0	51	0.0	0.0	0.3	0.1	0.0	0.0
	69	0.0	0.0	0.3	-0.1	0.1	0.0	70	0.0	0.0	-0.3	-0.1	-0.1	0.0
50	51	0.0	0.0	-0.2	0.1	0.1	0.0	14	0.0	0.0	-0.1	0.2	-0.1	0.0
	70	0.0	0.0	0.2	-0.1	0.1	0.0	71	0.0	0.0	0.0	-0.1	-0.1	0.0
51	49	-1.0	-0.2	0.0	0.1	0.1	-0.1	73	-0.9	-1.4	-0.9	0.3	-0.3	0.1
	47	1.0	0.8	0.4	0.1	-0.2	0.1	72	0.9	0.8	1.2	0.1	0.1	-0.1
52	8	-1.6	0.9	0.1	0.2	0.0	0.0	2	-1.4	-1.3	-0.5	0.3	-0.4	0.1
	49	1.4	-0.2	0.3	-0.1	-0.1	0.0	73	1.6	0.5	0.8	-0.2	0.2	-0.1
53	77	0.0	-1.2	-0.7	0.0	0.0	-0.1	78	0.0	-1.1	-0.4	0.0	0.0	0.1
	74	0.3	1.2	1.2	0.5	-0.1	0.1	75	-0.2	1.1	0.8	0.4	0.0	-0.1
54	78	0.0	-0.6	-0.7	0.0	0.0	-0.1	79	-0.1	-0.4	0.5	0.0	0.0	0.0
	75	0.2	0.7	1.0	0.3	0.0	0.1	32	0.0	0.2	0.1	0.1	0.0	0.0
55	80	-0.4	-1.5	0.1	0.1	0.1	-0.2	81	0.2	-1.6	-0.2	0.2	-0.1	0.2
	76	0.0	1.6	0.4	0.0	0.0	0.2	77	0.2	1.4	0.6	0.0	0.0	-0.2

Documento di proprietà **Snam Rete Gas**. La Società tutelerà i propri diritti in sede civile e penale a termini di legge.

FORZE SPINTA TERRENO SISMI: SHELL

Shell Nro	Nodo N.ro	Tx (kN)	Ty (kN)	Tz (kN)	Mx (kN*m)	My (kN*m)	Mz (kN*m)	Nodo N.ro	Tx (kN)	Ty (kN)	Tz (kN)	Mx (kN*m)	My (kN*m)	Mz (kN*m)
56	81	0.0	-1.3	-0.4	0.2	0.1	-0.1	82	0.1	-1.0	0.2	0.1	-0.1	0.1
	77	-0.1	1.3	0.9	0.0	0.0	0.1	78	0.0	1.0	0.2	0.0	-0.1	-0.1
57	82	-0.1	-0.5	-0.7	0.1	0.1	-0.1	83	-0.1	-0.3	0.9	0.0	0.0	0.0
	78	0.0	0.7	0.9	0.0	0.1	0.1	79	0.1	0.2	-0.2	0.0	0.0	0.0
58	21	0.4	-2.1	0.5	0.2	0.1	-0.2	84	0.0	-1.4	0.1	0.2	-0.1	0.2
	80	-0.3	1.8	0.1	-0.3	0.1	0.2	81	-0.1	1.8	0.3	-0.2	-0.1	-0.2
59	84	0.0	-1.2	0.0	0.2	0.1	-0.1	85	0.1	-0.9	0.3	0.2	-0.1	0.1
	81	-0.1	1.1	0.4	-0.2	0.1	0.1	82	0.0	1.0	0.2	-0.1	-0.1	-0.1
60	85	0.0	-0.5	-0.2	0.1	0.1	-0.1	31	0.0	-0.2	0.6	0.0	0.0	0.0
	82	0.0	0.6	0.3	-0.1	0.1	0.1	83	0.1	0.2	0.2	0.0	0.0	0.0
61	86	0.0	0.0	0.0	0.1	0.1	0.0	87	0.0	0.0	0.0	0.1	-0.1	0.0
	71	0.0	0.0	0.0	-0.1	0.1	0.0	67	0.0	0.0	0.0	-0.1	-0.1	0.0
62	87	0.0	0.0	0.0	0.1	0.1	0.0	88	0.0	0.0	0.0	0.1	-0.1	0.0
	67	0.0	0.0	0.0	-0.1	0.1	0.0	13	0.0	0.0	0.0	-0.1	-0.1	0.0
63	40	0.0	0.0	-0.2	0.0	0.0	0.0	89	0.0	0.0	0.3	0.1	-0.1	0.0
	38	0.0	0.0	0.3	0.0	0.1	0.0	86	0.0	0.0	-0.3	-0.1	-0.1	0.0
64	89	0.0	0.0	-0.1	0.1	0.1	0.0	90	0.0	0.0	0.0	0.1	-0.1	0.0
	86	0.0	0.0	0.1	-0.1	0.1	0.0	87	0.0	0.0	-0.1	-0.1	-0.1	0.0
65	90	0.0	0.0	-0.1	0.1	0.1	0.0	91	0.0	0.0	0.0	0.1	-0.1	0.0
	87	0.0	0.0	0.1	-0.1	0.1	0.0	88	0.0	0.0	0.0	-0.1	-0.1	0.0
66	17	0.0	0.0	-0.2	0.0	0.0	0.0	92	0.0	0.0	0.3	0.1	-0.1	0.0
	40	0.0	0.0	0.6	-0.1	0.0	0.0	89	0.0	0.0	-0.7	-0.1	-0.1	0.0
67	92	0.0	0.0	-0.5	0.1	0.0	0.0	93	0.0	0.0	0.3	0.2	-0.1	0.0
	89	0.0	0.0	0.5	-0.1	0.1	0.0	90	0.0	0.0	-0.3	-0.1	-0.1	0.0
68	93	0.0	0.0	-0.4	0.2	0.1	0.0	18	0.0	0.0	0.0	0.3	-0.1	0.0
	90	0.0	0.0	0.4	-0.1	0.1	0.0	91	0.0	0.0	0.0	-0.1	-0.1	0.0
69	95	0.0	0.0	-0.1	0.1	0.1	0.0	96	0.0	0.0	0.1	0.1	-0.1	0.0
	91	0.0	0.0	-0.1	-0.1	0.1	0.0	88	0.0	0.0	0.1	-0.1	-0.1	0.0
70	96	0.0	0.0	0.0	0.1	0.1	0.0	61	0.0	0.0	0.0	0.1	-0.1	0.0
	88	0.0	0.0	0.0	-0.1	0.1	0.0	13	0.0	0.0	0.0	-0.1	-0.1	0.0
71	97	0.0	0.0	-0.5	0.0	0.1	0.0	98	0.0	0.0	0.5	0.1	-0.1	0.0
	94	0.0	0.0	0.2	-0.1	0.2	0.0	95	0.0	0.0	-0.3	-0.1	-0.1	0.0
72	98	0.0	0.0	-0.1	0.1	0.1	0.0	99	0.0	0.0	0.1	0.1	-0.1	0.0
	95	0.0	0.0	0.0	-0.1	0.1	0.0	96	0.0	0.0	-0.1	-0.1	-0.1	0.0
73	99	0.0	0.0	0.0	0.1	0.1	0.0	57	0.0	0.0	0.0	0.1	-0.1	0.0
	96	0.0	0.0	0.0	-0.1	0.1	0.0	61	0.0	0.0	0.0	-0.1	-0.1	0.0
74	19	0.0	0.0	-0.2	0.0	0.0	0.0	100	0.0	0.0	0.6	0.0	-0.1	0.0
	97	0.0	0.0	0.3	-0.1	0.1	0.0	98	0.0	0.0	-0.7	-0.1	-0.1	0.0
75	100	0.0	0.0	-0.2	0.0	0.0	0.0	101	0.0	0.0	0.3	0.1	0.0	0.0
	98	0.0	0.0	0.3	-0.1	0.1	0.0	99	0.0	0.0	-0.3	-0.1	-0.1	0.0
76	101	0.0	0.0	-0.1	0.1	0.1	0.0	11	0.0	0.0	-0.2	0.2	-0.1	0.0
	99	0.0	0.0	0.2	-0.1	0.1	0.0	57	0.0	0.0	0.1	-0.1	-0.1	0.0
77	103	-0.1	-1.2	0.5	0.1	0.1	-0.1	104	0.0	-1.0	0.1	0.1	-0.1	0.1
	84	0.0	1.2	-0.1	-0.2	0.1	0.1	85	0.0	0.9	0.3	-0.2	-0.1	-0.1
78	104	0.0	-0.6	0.4	0.1	0.1	-0.1	105	0.1	-0.2	0.1	0.0	0.0	0.0
	85	-0.1	0.5	-0.3	-0.1	0.1	0.1	31	0.0	0.3	0.6	0.0	0.0	0.0
79	106	0.0	-1.7	0.4	0.0	0.0	-0.2	107	0.2	-1.5	0.6	0.0	0.0	0.2
	102	-0.3	1.5	0.1	-0.1	0.0	0.2	103	0.2	1.6	-0.3	-0.2	-0.1	-0.2
80	107	-0.1	-1.2	0.9	0.0	0.0	-0.1	108	0.0	-1.1	0.2	0.0	-0.1	0.1
	103	0.0	1.3	-0.5	-0.2	0.1	0.1	104	0.1	1.0	0.2	-0.1	-0.1	-0.1
81	108	0.1	-0.7	0.9	0.0	0.0	-0.1	109	0.1	-0.2	-0.2	0.0	0.0	0.0
	104	-0.1	0.5	-0.7	-0.1	0.1	0.1	105	-0.1	0.3	0.8	0.0	0.0	0.0
82	22	0.3	-1.5	1.2	-0.6	-0.1	-0.1	110	-0.1	-1.3	1.1	-0.5	0.0	0.1
	106	-0.2	1.2	-0.7	0.0	0.0	0.2	107	-0.1	1.5	-0.8	0.0	0.0	-0.2
83	110	0.2	-1.2	1.2	-0.5	0.0	-0.1	111	-0.2	-1.1	0.8	-0.4	0.0	0.1
	107	0.0	1.2	-0.8	0.0	0.0	0.1	108	0.0	1.1	-0.4	0.0	0.0	-0.1
84	111	0.2	-0.7	1.0	-0.3	0.0	-0.1	30	0.0	-0.3	0.1	-0.1	0.0	0.0
	108	0.0	0.6	-0.7	0.0	0.0	0.1	109	-0.1	0.4	0.4	0.0	0.0	0.0
85	113	-0.9	-0.3	0.0	0.1	0.1	-0.1	80	-0.8	-1.4	-0.8	0.3	-0.3	0.1
	112	0.9	0.9	0.4	0.1	-0.1	0.1	76	0.9	0.8	1.1	0.1	0.1	-0.1
86	23	-1.6	0.9	0.2	0.2	0.0	0.0	21	-1.4	-1.3	-0.4	0.3	-0.3	0.1
	113	1.4	-0.1	0.3	-0.1	-0.1	0.0	80	1.6	0.4	0.7	-0.2	0.1	-0.1
87	115	0.5	-0.6	0.4	0.0	0.0	0.0	113	0.8	0.0	-0.7	-0.1	-0.1	0.0
	114	-0.8	0.1	0.0	0.1	0.0	0.1	112	-0.5	0.4	1.0	0.2	0.2	0.0
88	20	0.8	-0.7	0.5	0.0	-0.1	-0.1	23	1.4	1.2	-0.2	-0.1	-0.2	0.0
	115	-1.2	0.1	0.0	0.1	0.1	0.0	113	-1.0	-0.5	0.4	0.0	0.1	0.1
89	116	0.6	0.8	0.0	0.1	0.1	0.1	117	-1.1	-0.6	0.4	-0.1	0.2	-0.1
	102	1.6	0.4	-0.9	-0.1	0.3	-0.1	106	-1.1	-0.6	1.2	0.1	0.1	0.1
90	117	0.9	0.1	-0.4	0.1	-0.2	0.1	37	-1.3	-0.6	0.8	-0.1	0.5	-0.1
	106	1.5	0.4	-0.9	-0.1	0.0	-0.1	22	-1.1	0.0	1.2	0.1	0.5	0.1
91	119	-0.8	0.0	0.1	-0.1	0.0	-0.1	117	-0.6	-0.2	0.9	-0.1	0.2	0.0
	118	0.7	0.4	0.3	0.0	0.0	0.0	116	0.7	-0.3	-0.7	0.1	-0.2	0.0
92	34	-0.1	-0.7	0.5	-0.3	0.0	-0.1	37	-0.6	-0.6	1.2	-0.3	0.2	0.1
	119	0.6	0.6	-0.2	0.0	0.1	0.1	117	0.2	0.7	-0.9	0.2	-0.1	-0.1
93	121	1.4	0.2	0.6	0.0	0.0	0.2	122	-1.6	0.2	-0.2	0.1	-0.2	-0.2
	43	1.6	0.0	0.4	0.0	0.0	-0.2	42	-1.5	-0.4	0.1	-0.1	-0.1	0.2
94	122	1.8	-0.1	0.3	0.1	0.2	0.2	123	-1.4	0.0	0.1	0.1	-0.2	-0.2
	42	1.8	-0.3	0.1	-0.1	0.2	-0.2	2	-2.1	0.4	0.5	-0.1	-0.2	0.2
95	124	1.1	-0.2	0.8	0.0	-0.4	0.1	125	-1.1	0.0	-0.4	0.0	0.0	-0.1
	120	1.3	0.3	1.2	0.1	-0.5	-0.1	121	-1.2	0.0	-0.7	0.0	0.0	0.1

Documento di proprietà **Snam Rete Gas**. La Società tutelerà i propri diritti in sede civile e penale a termini di legge.

FORZE SPINTA TERRENO SISMI: SHELL

Shell Nro	Nodo N.ro	Tx (kN)	Ty (kN)	Tz (kN)	Mx (kN*m)	My (kN*m)	Mz (kN*m)	Nodo N.ro	Tx (kN)	Ty (kN)	Tz (kN)	Mx (kN*m)	My (kN*m)	Mz (kN*m)
96	125	1.0	0.0	0.2	0.1	0.0	0.1	126	-1.0	0.1	0.2	0.1	-0.1	-0.1
	121	1.3	-0.1	0.9	0.0	0.0	-0.1	122	-1.3	0.0	-0.4	-0.1	-0.2	0.1
97	126	1.0	0.0	0.2	0.1	0.1	0.1	127	-0.9	0.1	0.3	0.1	-0.2	-0.1
	122	1.1	-0.1	0.4	-0.1	0.2	-0.1	123	-1.2	0.0	0.0	-0.1	-0.2	0.1
98	26	0.2	0.0	0.1	0.0	-0.1	0.0	128	-0.4	-0.1	0.4	0.0	0.0	0.0
	124	0.7	0.2	1.0	0.0	-0.3	-0.1	125	-0.6	0.0	-0.7	0.0	0.0	0.1
99	128	0.2	0.1	-0.2	0.0	0.0	0.0	129	-0.3	-0.1	0.9	0.0	0.0	0.0
	125	0.7	0.0	0.9	-0.1	0.0	-0.1	126	-0.5	-0.1	-0.7	-0.1	-0.1	0.1
100	129	0.2	0.1	0.2	0.0	0.0	0.0	27	-0.2	0.0	0.6	0.0	0.0	0.0
	126	0.6	0.0	0.3	-0.1	0.1	-0.1	127	-0.5	0.0	-0.2	-0.1	-0.1	0.1
101	130	0.6	-0.1	0.6	0.0	0.0	0.0	131	-0.4	0.1	-0.7	0.0	0.0	0.0
	68	0.2	-0.1	-0.1	0.1	0.0	0.0	64	-0.3	0.1	1.0	0.2	0.0	0.0
102	131	0.5	-0.1	0.0	0.1	0.1	0.0	132	-0.4	0.1	-0.5	0.1	-0.1	0.0
	64	0.2	-0.1	0.4	0.2	0.0	0.0	5	-0.3	0.1	0.9	0.3	0.0	0.0
103	16	1.0	-0.4	1.2	0.0	-0.4	0.1	133	-0.9	-0.2	-0.9	0.0	0.0	-0.1
	10	0.8	0.4	0.4	0.0	-0.3	-0.1	130	-0.8	0.3	0.0	0.0	0.0	0.1
104	133	1.0	-0.1	1.0	0.0	0.0	0.1	134	-0.9	0.1	-0.7	0.1	-0.2	-0.1
	130	0.7	0.0	-0.1	0.0	0.0	-0.1	131	-0.8	0.1	0.5	0.0	-0.1	0.1
105	134	1.0	0.0	0.5	0.1	0.2	0.1	135	-0.9	0.1	-0.3	0.1	-0.2	-0.1
	131	0.7	-0.1	0.1	0.0	0.1	-0.1	132	-0.8	0.0	0.5	-0.1	-0.1	0.1
106	3	1.4	-0.5	1.3	-0.1	-0.5	0.1	136	-1.2	-0.1	-0.9	0.0	0.0	-0.1
	16	0.9	0.2	0.9	0.0	-0.5	-0.1	133	-1.2	0.4	-0.5	0.0	0.0	0.1
107	136	1.2	-0.1	0.9	0.0	0.0	0.1	137	-1.1	0.1	-0.5	0.1	-0.2	-0.1
	133	1.0	0.0	0.4	0.0	0.0	-0.1	134	-1.1	0.0	0.0	-0.1	-0.2	0.1
108	137	1.2	0.1	0.5	0.1	0.2	0.1	138	-1.1	0.1	-0.1	0.1	-0.3	-0.1
	134	1.1	-0.1	0.2	-0.1	0.2	-0.1	135	-1.1	-0.1	0.2	-0.1	-0.3	0.1
109	139	1.2	-0.4	1.1	-0.1	-0.5	0.1	140	-1.0	0.0	-0.7	0.0	0.0	-0.1
	3	1.0	0.2	1.2	0.1	-0.5	-0.1	136	-1.1	0.2	-0.8	0.0	0.0	0.1
110	140	1.2	-0.1	0.6	0.0	0.0	0.1	141	-1.1	0.1	-0.2	0.1	-0.2	-0.1
	136	1.1	0.0	0.8	0.0	0.0	-0.1	137	-1.2	0.0	-0.4	-0.1	-0.2	0.1
111	141	1.1	0.1	0.3	0.1	0.2	0.1	142	-1.1	0.1	0.1	0.1	-0.3	-0.1
	137	1.1	-0.1	0.4	-0.1	0.2	-0.1	138	-1.1	-0.1	0.0	-0.1	-0.3	0.1
112	143	1.0	-0.2	0.7	-0.1	-0.4	0.1	144	-1.0	-0.1	-0.3	0.0	0.0	-0.1
	139	1.1	0.2	1.4	0.0	-0.5	-0.1	140	-1.1	0.1	-1.0	0.0	0.0	0.1
113	144	0.8	0.1	0.1	0.0	0.0	0.1	145	-0.9	0.0	0.3	0.1	-0.2	-0.1
	140	1.0	0.0	1.1	0.0	0.0	-0.1	141	-1.0	-0.1	-0.6	-0.1	-0.2	0.1
114	145	0.8	0.1	0.1	0.1	0.1	0.1	146	-0.8	0.1	0.3	0.1	-0.2	-0.1
	141	1.0	-0.1	0.5	-0.1	0.2	-0.1	142	-0.9	-0.1	-0.2	-0.1	-0.3	0.1
115	28	0.2	0.1	-0.1	0.0	-0.1	0.0	147	-0.4	-0.2	0.6	0.0	0.0	0.0
	143	0.8	0.3	1.1	0.0	-0.3	-0.1	144	-0.5	-0.1	-0.8	0.0	0.0	0.1
116	147	0.1	0.2	-0.4	0.0	0.0	0.0	148	-0.4	-0.1	1.0	0.0	0.0	0.0
	144	0.7	0.1	1.0	0.0	0.0	-0.1	145	-0.4	-0.2	-0.8	-0.1	-0.1	0.1
117	148	0.1	0.1	0.1	0.0	0.0	0.0	29	-0.3	0.0	0.7	0.0	0.0	0.0
	145	0.5	0.0	0.4	-0.1	0.1	0.0	146	-0.4	-0.1	-0.4	-0.1	-0.1	0.0
118	101	-0.2	-0.3	0.8	0.0	-0.1	0.0	115	0.5	-0.4	-0.3	0.0	0.0	0.1
	100	-0.4	0.1	-0.1	0.0	0.0	0.1	114	0.1	0.6	0.3	0.0	0.0	-0.1
119	11	0.1	-0.1	0.7	-0.1	-0.2	0.0	20	-0.3	-0.7	-0.4	0.1	0.0	0.0
	101	0.0	0.4	0.4	0.1	-0.1	0.0	115	0.2	0.3	-0.1	-0.1	0.0	0.0
120	149	0.6	-0.1	0.5	0.1	0.0	0.0	150	-0.4	0.1	-0.7	0.0	-0.1	0.0
	97	0.2	-0.1	0.0	0.1	0.0	0.0	94	-0.3	0.1	1.0	0.2	0.0	0.0
121	150	0.5	0.0	-0.1	0.1	0.1	0.0	151	-0.4	0.0	-0.5	0.1	-0.1	0.0
	94	0.2	-0.1	0.5	0.2	0.0	0.0	18	-0.2	0.1	0.9	0.3	0.0	0.0
122	36	1.0	-0.5	1.2	0.0	-0.4	0.1	152	-0.9	-0.2	-0.8	0.0	0.0	-0.1
	35	0.7	0.4	0.4	0.0	-0.3	-0.1	149	-0.8	0.3	0.1	0.0	0.0	0.1
123	152	1.1	-0.1	1.0	0.1	0.0	0.1	153	-0.9	0.1	-0.6	0.1	-0.2	-0.1
	149	0.7	0.0	0.0	0.0	0.0	-0.1	150	-0.8	0.1	0.6	-0.1	-0.1	0.1
124	153	1.0	0.0	0.3	0.1	0.2	0.1	154	-0.9	0.1	-0.1	0.1	-0.2	-0.1
	150	0.7	-0.1	0.2	0.0	0.1	-0.1	151	-0.8	-0.1	0.5	-0.1	-0.1	0.1
125	25	1.4	-0.5	1.3	-0.1	-0.5	0.1	155	-1.2	-0.1	-0.8	0.0	0.0	-0.1
	36	1.0	0.3	0.9	0.0	-0.5	-0.1	152	-1.2	0.3	-0.5	0.0	0.0	0.1
126	155	1.2	-0.1	0.9	0.0	0.0	0.1	156	-1.2	0.1	-0.4	0.1	-0.2	-0.1
	152	1.1	0.0	0.4	-0.1	0.0	-0.1	153	-1.1	0.0	0.1	-0.1	-0.2	0.1
127	156	1.2	0.1	0.4	0.1	0.2	0.1	157	-1.2	0.2	0.0	0.1	-0.3	-0.1
	153	1.1	-0.1	0.2	-0.1	0.2	-0.1	154	-1.1	-0.1	0.2	-0.1	-0.3	0.1
128	74	1.2	-0.4	1.1	-0.1	-0.5	0.1	158	-1.1	0.0	-0.7	0.0	0.0	-0.1
	25	1.0	0.2	1.2	0.1	-0.5	-0.1	155	-1.2	0.2	-0.8	0.0	0.0	0.1
129	158	1.2	-0.1	0.6	0.0	0.0	0.1	159	-1.1	0.1	-0.1	0.1	-0.2	-0.1
	155	1.1	0.0	0.7	0.0	0.0	-0.1	156	-1.2	-0.1	-0.3	-0.1	-0.2	0.1
130	159	1.1	0.1	0.3	0.1	0.2	0.1	160	-1.1	0.2	0.1	0.1	-0.3	-0.1
	156	1.1	-0.1	0.4	-0.1	0.2	-0.1	157	-1.1	-0.2	0.1	-0.1	-0.3	0.1
131	75	1.0	-0.2	0.7	-0.1	-0.4	0.1	161	-1.0	-0.1	-0.2	0.0	0.0	-0.1
	74	1.1	0.2	1.4	0.0	-0.5	-0.1	158	-1.1	0.1	-0.9	0.0	0.0	0.1
132	161	0.8	0.1	0.1	0.1	0.0	0.1	162	-0.9	0.1	0.3	0.1	-0.2	-0.1
	158	1.0	0.0	1.0	0.0	0.0	-0.1	159	-1.0	-0.1	-0.6	-0.1	-0.2	0.1
133	162	0.8	0.1	0.2	0.1	0.2	0.1	163	-0.8	0.1	0.3	0.1	-0.2	-0.1
	159	1.0	-0.1	0.4	-0.1	0.2	-0.1	160	-0.9	-0.2	0.0	-0.2	-0.3	0.1
134	32	0.2	0.0	-0.1	0.0	-0.1	0.0	164	-0.4	-0.2	0.6	0.0	0.0	0.0
	75	0.8	0.3	1.2	0.0	-0.3	-0.1	161	-0.5	-0.1	-0.8	0.0	0.0	0.1
135	164	0.1	0.2	-0.3	0.0	0.0	0.0	165	-0.3	-0.1	1.0	0.0	0.0	0.0
	161	0.6	0.1	1.0	-0.1	0.0	-0.1	162	-0.4	-0.2	-0.8	-0.1	-0.1	0.1

Documento di proprietà **Snam Rete Gas**. La Società tutelerà i propri diritti in sede civile e penale a termini di legge.

FORZE SPINTA TERRENO SISMI: SHELL

Shell Nro	Nodo N.ro	Tx (kN)	Ty (kN)	Tz (kN)	Mx (kN*m)	My (kN*m)	Mz (kN*m)	Nodo N.ro	Tx (kN)	Ty (kN)	Tz (kN)	Mx (kN*m)	My (kN*m)	Mz (kN*m)
136	165	0.2	0.1	0.2	0.0	0.0	0.0	33	-0.2	0.0	0.6	0.0	0.0	0.0
	162	0.5	0.0	0.3	-0.1	0.1	0.0	163	-0.4	-0.1	-0.3	-0.1	-0.2	0.0
137	166	0.4	0.1	-0.7	0.0	0.1	0.0	167	-0.6	-0.1	0.5	0.1	0.0	0.0
	58	0.3	0.1	1.0	0.2	0.0	0.0	54	-0.2	-0.1	0.0	0.1	0.0	0.0
138	167	0.4	-0.2	-0.6	0.0	0.0	0.0	34	-0.4	-0.2	0.8	0.0	0.2	0.0
	54	0.2	0.2	0.6	0.1	0.0	0.0	7	-0.2	0.2	0.0	0.0	0.0	0.0
139	135	0.9	0.1	-0.1	0.1	0.2	0.1	168	-1.0	0.0	0.3	0.1	-0.2	-0.1
	132	0.8	-0.1	0.5	-0.1	0.1	-0.1	166	-0.7	-0.1	0.2	0.0	-0.1	0.1
140	168	0.9	0.1	-0.6	0.1	0.2	0.1	169	-1.0	-0.1	1.0	0.1	0.0	-0.1
	166	0.8	0.1	0.6	-0.1	0.1	-0.1	167	-0.7	0.0	0.0	0.0	0.0	0.1
141	169	0.9	-0.2	-0.8	0.0	0.0	0.1	37	-1.0	-0.5	1.2	0.0	0.4	-0.1
	167	0.8	0.3	0.1	0.0	0.0	-0.1	34	-0.7	0.4	0.4	0.0	0.3	0.1
142	138	1.1	0.1	0.0	0.1	0.3	0.1	170	-1.2	0.1	0.4	0.1	-0.2	-0.1
	135	1.1	-0.1	0.2	-0.1	0.3	-0.1	168	-1.1	-0.1	0.2	-0.1	-0.2	0.1
143	170	1.1	0.1	-0.4	0.1	0.2	0.1	171	-1.2	-0.1	0.9	0.0	0.0	-0.1
	168	1.1	0.0	0.1	-0.1	0.2	-0.1	169	-1.0	0.0	0.3	-0.1	0.0	0.1
144	171	1.2	-0.1	-0.8	0.0	0.0	0.1	22	-1.4	-0.5	1.3	-0.1	0.5	-0.1
	169	1.2	0.3	-0.5	0.0	0.0	-0.1	37	-0.9	0.3	0.9	0.0	0.5	0.1
145	142	1.1	0.2	0.1	0.1	0.3	0.1	172	-1.1	0.1	0.3	0.1	-0.2	-0.1
	138	1.1	-0.2	0.1	-0.1	0.3	-0.1	170	-1.1	-0.1	0.4	-0.1	-0.2	0.1
146	172	1.1	0.1	-0.1	0.1	0.2	0.1	173	-1.1	0.0	0.6	0.0	0.0	-0.1
	170	1.2	-0.1	-0.3	-0.1	0.2	-0.1	171	-1.1	0.0	0.7	0.0	0.0	0.1
147	173	1.0	0.0	-0.7	0.0	0.0	0.1	110	-1.2	-0.4	1.1	-0.1	0.5	-0.1
	171	1.1	0.2	-0.8	0.0	0.0	-0.1	22	-1.0	0.2	1.2	0.1	0.5	0.1
148	146	0.8	0.1	0.3	0.1	0.2	0.1	174	-0.8	0.1	0.2	0.1	-0.2	-0.1
	142	0.9	-0.2	0.0	-0.2	0.3	-0.1	172	-0.9	-0.1	0.4	-0.1	-0.2	0.1
149	174	0.9	0.1	0.3	0.1	0.2	0.1	175	-0.8	0.1	0.1	0.1	0.0	-0.1
	172	0.9	-0.1	-0.6	-0.1	0.2	-0.1	173	-1.0	0.0	1.0	0.0	0.0	0.1
150	175	1.0	-0.1	-0.2	0.0	0.0	0.1	111	-1.0	-0.2	0.7	-0.1	0.4	-0.1
	173	1.1	0.1	-0.9	0.0	0.0	-0.1	110	-1.1	0.2	1.4	0.0	0.5	0.1
151	29	0.2	0.0	0.6	0.0	0.0	0.0	176	-0.2	0.1	0.2	0.0	0.0	0.0
	146	0.4	-0.1	-0.3	-0.1	0.2	0.0	174	-0.5	0.0	0.3	-0.1	-0.1	0.0
152	176	0.3	-0.1	1.0	0.0	0.0	0.0	177	-0.1	0.2	-0.3	0.0	0.0	0.0
	174	0.4	-0.2	-0.8	-0.1	0.1	-0.1	175	-0.6	0.1	1.0	-0.1	0.0	0.1
153	177	0.4	-0.2	0.6	0.0	0.0	0.0	30	-0.1	0.0	-0.1	0.0	0.1	0.0
	175	0.5	-0.1	-0.8	0.0	0.0	-0.1	111	-0.8	0.3	1.2	0.0	0.3	0.1
154	178	0.4	0.1	-0.7	0.0	0.0	0.0	179	-0.6	-0.1	0.6	0.0	0.0	0.0
	93	0.3	0.1	1.0	0.2	0.0	0.0	92	-0.2	-0.1	-0.1	0.1	0.0	0.0
155	179	0.5	-0.2	-0.5	0.0	0.0	0.0	12	-0.5	-0.2	0.8	0.0	0.2	0.0
	92	0.2	0.2	0.6	0.1	0.0	0.0	17	-0.2	0.2	0.0	0.0	0.0	0.0
156	154	0.9	0.1	-0.3	0.1	0.2	0.1	180	-1.0	0.0	0.5	0.1	-0.2	-0.1
	151	0.8	0.0	0.5	-0.1	0.1	-0.1	178	-0.7	-0.1	0.1	0.0	-0.1	0.1
157	180	0.9	0.1	-0.7	0.1	0.2	0.1	181	-1.0	-0.1	1.0	0.0	0.0	-0.1
	178	0.8	0.1	0.5	0.0	0.1	-0.1	179	-0.7	0.0	-0.1	0.0	0.0	0.1
158	181	0.9	-0.2	-0.9	0.0	0.0	0.1	15	-1.0	-0.5	1.2	0.0	0.4	-0.1
	179	0.8	0.3	0.0	0.0	0.0	-0.1	12	-0.7	0.3	0.4	0.0	0.3	0.1
159	157	1.2	0.1	-0.1	0.1	0.3	0.1	182	-1.2	0.1	0.5	0.1	-0.2	-0.1
	154	1.1	-0.1	0.2	-0.1	0.3	-0.1	180	-1.1	-0.1	0.2	-0.1	-0.2	0.1
160	182	1.2	0.1	-0.5	0.1	0.2	0.1	183	-1.2	-0.1	0.9	0.0	0.0	-0.1
	180	1.1	0.0	0.0	-0.1	0.2	-0.1	181	-1.1	0.0	0.4	0.0	0.0	0.1
161	183	1.2	-0.1	-0.9	0.0	0.0	0.1	9	-1.4	-0.5	1.3	-0.1	0.5	-0.1
	181	1.2	0.3	-0.5	0.0	0.0	-0.1	15	-1.0	0.3	0.9	0.0	0.5	0.1
162	160	1.1	0.1	0.1	0.1	0.3	0.1	184	-1.1	0.1	0.3	0.1	-0.2	-0.1
	157	1.2	-0.1	0.0	-0.1	0.3	-0.1	182	-1.1	-0.1	0.4	-0.1	-0.2	0.1
163	184	1.1	0.1	-0.2	0.1	0.2	0.1	185	-1.2	-0.1	0.6	0.0	0.0	-0.1
	182	1.2	0.0	-0.4	-0.1	0.2	-0.1	183	-1.1	0.0	0.8	0.0	0.0	0.1
164	185	1.0	0.0	-0.7	0.0	0.0	0.1	120	-1.2	-0.4	1.1	-0.1	0.5	-0.1
	183	1.2	0.2	-0.8	0.0	0.0	-0.1	9	-1.0	0.2	1.2	0.1	0.5	0.1
165	163	0.8	0.1	0.3	0.1	0.2	0.1	186	-0.8	0.1	0.1	0.1	-0.1	-0.1
	160	0.9	-0.1	-0.2	-0.1	0.3	-0.1	184	-1.0	-0.1	0.5	-0.1	-0.2	0.1
166	186	0.9	0.0	0.3	0.1	0.2	0.1	187	-0.8	0.1	0.1	0.0	0.0	-0.1
	184	1.0	-0.1	-0.6	-0.1	0.2	-0.1	185	-1.0	0.0	1.1	0.0	0.0	0.1
167	187	1.0	-0.1	-0.3	0.0	0.0	0.1	124	-1.0	-0.2	0.7	-0.1	0.4	-0.1
	185	1.1	0.1	-1.0	0.0	0.0	-0.1	120	-1.1	0.2	1.4	0.0	0.5	0.1
168	33	0.3	0.0	0.7	0.0	0.0	0.0	188	-0.1	0.1	0.1	0.0	0.0	0.0
	163	0.4	-0.1	-0.4	-0.1	0.1	0.0	186	-0.5	0.0	0.4	-0.1	-0.1	0.0
169	188	0.3	-0.1	1.0	0.0	0.0	0.0	189	-0.1	0.2	-0.4	0.0	0.0	0.0
	186	0.4	-0.2	-0.8	-0.1	0.1	-0.1	187	-0.7	0.1	1.0	0.0	0.0	0.1
170	189	0.4	-0.2	0.6	0.0	0.0	0.0	26	-0.2	0.0	-0.1	0.0	0.1	0.0
	187	0.5	-0.1	-0.8	0.0	0.0	-0.1	124	-0.7	0.3	1.1	0.0	0.3	0.1
171	190	1.6	0.2	-0.3	0.1	0.2	0.2	191	-1.5	0.2	0.6	0.0	0.0	-0.2
	73	1.5	-0.3	0.1	0.0	0.1	-0.2	72	-1.7	0.0	0.4	0.0	0.0	0.2
172	191	1.5	-0.1	-0.8	0.0	0.0	0.2	139	-1.3	-0.1	1.1	0.0	0.5	-0.1
	72	1.2	-0.2	-0.7	0.0	0.0	-0.2	3	-1.5	0.3	1.2	0.1	0.6	0.1
173	127	0.9	0.0	0.3	0.1	0.2	0.1	192	-1.0	0.0	0.2	0.1	-0.1	-0.1
	123	1.2	0.0	-0.1	-0.1	0.2	-0.1	190	-1.2	-0.1	0.5	-0.1	-0.1	0.1
174	192	1.0	0.1	0.2	0.1	0.1	0.1	193	-1.1	0.0	0.2	0.0	0.0	-0.1
	190	1.3	0.0	-0.5	-0.1	0.2	-0.1	191	-1.3	-0.1	0.9	0.0	0.0	0.1
175	193	1.1	0.0	-0.4	0.0	0.0	0.1	143	-1.1	-0.2	0.8	0.0	0.4	-0.1
	191	1.2	0.0	-0.8	0.0	0.0	-0.1	139	-1.2	0.2	1.2	0.1	0.5	0.1

Documento di proprietà **Snam Rete Gas**. La Società tutelerà i propri diritti in sede civile e penale a termini di legge.

FORZE SPINTA TERRENO SISMI: SHELL

Shell Nro	Nodo N.ro	Tx (kN)	Ty (kN)	Tz (kN)	Mx (kN*m)	My (kN*m)	Mz (kN*m)	Nodo N.ro	Tx (kN)	Ty (kN)	Tz (kN)	Mx (kN*m)	My (kN*m)	Mz (kN*m)
176	27	0.3	0.0	0.6	0.0	0.0	0.0	194	-0.2	0.1	0.1	0.0	0.0	0.0
	127	0.5	-0.1	-0.3	-0.1	0.1	-0.1	192	-0.6	0.0	0.4	-0.1	-0.1	0.1
177	194	0.3	-0.1	0.8	0.0	0.0	0.0	195	-0.2	0.1	-0.2	0.0	0.0	0.0
	192	0.5	-0.1	-0.7	-0.1	0.1	-0.1	193	-0.7	0.1	0.9	0.0	0.0	0.1
178	195	0.4	-0.1	0.4	0.0	0.0	0.0	28	-0.3	-0.1	0.1	0.0	0.1	0.0
	193	0.6	0.0	-0.7	0.0	0.0	-0.1	143	-0.7	0.2	1.0	0.0	0.3	0.1
179	52	-0.4	-0.1	-0.1	0.0	0.0	-0.1	119	0.1	-0.6	0.3	0.0	0.0	0.1
	53	-0.2	0.3	0.8	0.0	-0.1	0.0	118	0.4	0.5	-0.3	0.0	0.0	-0.1
180	7	0.0	-0.1	-0.1	0.0	0.0	0.0	34	-0.3	-0.5	0.7	-0.2	0.1	0.0
	52	0.0	0.3	0.4	0.0	0.0	0.0	119	0.2	0.3	-0.2	0.0	0.0	0.0

FORZE NEVE: SHELL

Shell Nro	Nodo N.ro	Tx (kN)	Ty (kN)	Tz (kN)	Mx (kN*m)	My (kN*m)	Mz (kN*m)	Nodo N.ro	Tx (kN)	Ty (kN)	Tz (kN)	Mx (kN*m)	My (kN*m)	Mz (kN*m)
1	38	0.1	0.1	0.0	0.0	0.0	0.0	39	-0.3	-0.1	0.0	0.0	0.0	0.0
	14	0.2	0.1	0.0	0.0	0.0	0.0	1	0.0	-0.2	0.0	0.0	0.0	0.0
2	6	0.1	-0.5	0.0	0.0	0.0	0.0	44	0.0	0.3	0.0	0.0	0.0	0.0
	2	-0.1	0.0	0.0	0.0	0.0	0.0	42	0.1	0.3	0.0	0.0	0.0	0.0
3	39	0.4	-0.1	0.0	0.0	0.0	0.0	44	0.1	-0.1	0.0	0.0	0.0	0.0
	1	0.0	-0.1	0.0	0.0	0.0	0.0	6	-0.4	0.3	0.0	0.0	0.0	0.0
4	46	0.0	0.0	0.0	0.0	0.0	0.0	47	-0.1	0.0	0.0	0.0	0.0	0.0
	10	0.1	0.0	0.0	0.0	0.0	0.0	16	0.0	0.0	0.0	0.0	0.0	0.0
5	50	0.1	0.0	0.0	0.0	0.0	0.0	46	-0.1	0.1	0.0	0.0	0.0	0.0
	4	0.0	0.0	0.0	0.0	0.0	0.0	10	0.0	0.0	0.0	0.0	0.0	0.0
6	54	0.0	0.0	-0.2	0.0	0.0	0.0	55	0.0	0.0	0.3	0.0	0.0	0.0
	7	0.0	0.0	0.1	0.0	0.0	0.0	52	0.0	0.0	-0.2	0.0	0.0	0.0
7	64	0.0	0.0	0.0	0.0	0.0	0.0	65	0.0	0.0	0.0	0.0	0.0	0.0
	5	0.0	0.0	-0.2	0.0	0.0	0.0	62	0.0	0.0	0.2	0.0	0.0	0.0
8	47	0.2	0.0	0.0	0.0	0.0	0.0	72	0.0	0.0	0.0	0.0	0.0	0.0
	16	0.0	0.0	0.0	0.0	0.0	0.0	3	-0.1	0.0	0.0	0.0	0.0	0.0
9	76	0.1	0.0	0.0	0.0	0.0	0.0	77	-0.1	0.0	0.0	0.0	0.0	0.0
	25	0.1	0.0	0.0	0.0	0.0	0.0	74	-0.1	0.0	0.0	0.0	0.0	0.0
10	38	0.0	0.0	-0.1	0.0	0.0	0.0	86	0.0	0.0	0.0	0.0	0.0	0.0
	14	0.0	0.0	-0.1	0.0	0.0	0.0	71	0.0	0.0	0.1	0.0	0.0	0.0
11	94	0.0	0.0	0.0	0.0	0.0	0.0	95	0.0	0.0	0.0	0.0	0.0	0.0
	18	0.0	0.0	-0.1	0.0	0.0	0.0	91	0.0	0.0	0.1	0.0	0.0	0.0
12	102	0.2	0.0	0.0	0.0	0.0	0.0	103	0.0	0.1	0.0	0.0	0.0	0.0
	21	-0.1	-0.1	0.0	0.0	0.0	0.0	84	-0.1	0.0	0.0	0.0	0.0	0.0
13	112	0.1	0.0	0.0	0.0	0.0	0.0	76	0.0	0.0	0.0	0.0	0.0	0.0
	36	0.0	0.0	0.0	0.0	0.0	0.0	25	-0.1	0.0	0.0	0.0	0.0	0.0
14	114	0.0	0.0	0.0	0.0	0.0	0.0	112	-0.1	0.0	0.0	0.0	0.0	0.0
	35	0.0	0.0	0.0	0.0	0.0	0.0	36	0.0	0.0	0.0	0.0	0.0	0.0
15	24	0.1	-0.6	0.0	0.0	0.0	0.0	116	0.0	0.3	0.0	0.0	0.0	0.0
	21	-0.1	0.0	0.0	0.0	0.0	0.0	102	0.1	0.3	0.0	0.0	0.0	0.0
16	118	0.4	-0.1	0.0	0.0	0.0	0.0	116	0.1	-0.2	0.0	0.0	0.0	0.0
	20	-0.1	-0.1	0.0	0.0	0.0	0.0	24	-0.5	0.4	0.0	0.0	0.0	0.0
17	120	0.0	-0.1	0.0	0.0	0.0	0.0	121	0.0	-0.1	0.0	0.0	0.0	0.0
	9	0.0	0.1	0.0	0.0	0.0	0.0	43	0.0	0.2	0.0	0.0	0.0	0.0
18	10	0.0	0.0	0.0	0.0	0.0	0.0	130	0.1	0.0	0.0	0.0	0.0	0.0
	4	-0.1	0.0	0.0	0.0	0.0	0.0	68	0.0	0.1	0.0	0.0	0.0	0.0
19	100	0.1	0.0	0.0	0.0	0.0	0.0	114	-0.1	0.1	0.0	0.0	0.0	0.0
	19	0.0	0.0	0.0	0.0	0.0	0.0	35	0.0	0.0	0.0	0.0	0.0	0.0
20	35	0.0	0.0	0.0	0.0	0.0	0.0	149	0.1	0.0	0.0	0.0	0.0	0.0
	19	-0.1	0.0	0.0	0.0	0.0	0.0	97	0.0	0.1	0.0	0.0	0.0	0.0
21	132	0.0	-0.2	0.0	0.0	0.0	0.0	166	0.0	-0.3	0.0	0.0	0.0	0.0
	5	0.0	0.3	0.0	0.0	0.0	0.0	58	0.0	0.2	0.0	0.0	0.0	0.0
22	151	0.0	-0.1	0.0	0.0	0.0	0.0	178	0.0	-0.2	0.0	0.0	0.0	0.0
	18	0.0	0.2	0.0	0.0	0.0	0.0	93	0.0	0.1	0.0	0.0	0.0	0.0
23	123	0.0	-0.1	0.0	0.0	0.0	0.0	190	0.1	0.0	0.0	0.0	0.0	0.0
	2	-0.1	0.0	0.0	0.0	0.0	0.0	73	0.0	0.2	0.0	0.0	0.0	0.0
24	53	0.1	0.1	0.0	0.0	0.0	0.0	118	-0.3	-0.1	0.0	0.0	0.0	0.0
	11	0.2	0.1	0.0	0.0	0.0	0.0	20	0.0	-0.2	0.0	0.0	0.0	0.0
25	40	0.1	0.0	0.0	0.0	0.0	0.0	41	-0.2	0.0	0.0	0.0	0.0	0.0
	38	0.2	0.1	0.0	0.0	0.0	0.0	39	-0.1	-0.1	0.0	0.0	0.0	0.0
26	17	0.0	0.0	0.0	0.0	0.0	0.0	12	0.0	0.0	0.0	0.0	0.0	0.0
	40	0.1	0.0	0.0	0.0	0.0	0.0	41	0.0	-0.1	0.0	0.0	0.0	0.0
27	44	0.1	-0.3	0.0	0.0	0.0	0.0	45	0.0	0.1	0.0	0.0	0.0	0.0
	42	-0.1	0.0	0.0	0.0	0.0	0.0	43	0.0	0.3	0.0	0.0	0.0	0.0
28	45	0.0	-0.2	0.0	0.0	0.0	0.0	15	0.0	0.0	0.0	0.0	0.0	0.0
	43	0.0	0.0	0.0	0.0	0.0	0.0	9	0.0	0.1	0.0	0.0	0.0	0.0
29	41	0.2	0.0	0.0	0.0	0.0	0.0	45	0.0	0.0	0.0	0.0	0.0	0.0
	39	0.0	-0.1	0.0	0.0	0.0	0.0	44	-0.2	0.1	0.0	0.0	0.0	0.0
30	12	0.0	0.0	0.0	0.0	0.0	0.0	15	0.0	0.0	0.0	0.0	0.0	0.0
	41	0.1	0.0	0.0	0.0	0.0	0.0	45	0.0	0.0	0.0	0.0	0.0	0.0
31	48	0.0	0.1	0.0	0.0	0.0	0.0	49	-0.3	-0.1	0.0	0.0	0.0	0.0
	46	0.2	0.0	0.0	0.0	0.0	0.0	47	0.0	0.0	0.0	0.0	0.0	0.0
32	1	-0.1	0.1	0.0	0.0	0.0	0.0	8	-0.5	-0.3	0.0	0.0	0.0	0.0
	48	0.4	0.0	0.0	0.0	0.0	0.0	49	0.2	0.1	0.0	0.0	0.0	0.0
33	51	0.2	0.0	0.0	0.0	0.0	0.0	48	-0.2	0.1	0.0	0.0	0.0	0.0
	50	0.1	-0.1	0.0	0.0	0.0	0.0	46	-0.2	0.0	0.0	0.0	0.0	0.0

Documento di proprietà **Snam Rete Gas**. La Società tutelerà i propri diritti in sede civile e penale a termini di legge.

FORZE NEVE: SHELL

Shell Nro	Nodo N.ro	Tx (kN)	Ty (kN)	Tz (kN)	Mx (kN*m)	My (kN*m)	Mz (kN*m)	Nodo N.ro	Tx (kN)	Ty (kN)	Tz (kN)	Mx (kN*m)	My (kN*m)	Mz (kN*m)
34	14	0.1	0.0	0.0	0.0	0.0	0.0	1	0.0	0.1	0.0	0.0	0.0	0.0
	51	0.1	-0.1	0.0	0.0	0.0	0.0	48	-0.2	0.0	0.0	0.0	0.0	0.0
35	55	0.0	0.0	-0.1	0.0	0.0	0.0	56	0.0	0.0	0.3	0.0	0.0	0.0
	52	0.0	0.0	0.1	0.0	0.0	0.0	53	0.0	0.0	-0.2	0.0	0.0	0.0
36	56	0.0	0.0	0.0	0.0	0.0	0.0	57	0.0	0.0	0.1	0.0	0.0	0.0
	53	0.0	0.0	-0.1	0.0	0.0	0.0	11	0.0	0.0	-0.1	0.0	0.0	0.0
37	58	0.0	0.0	-0.3	0.0	0.0	0.0	59	0.0	0.0	0.3	0.0	0.0	0.0
	54	0.0	0.0	0.1	0.0	0.0	0.0	55	0.0	0.0	-0.1	0.0	0.0	0.0
38	59	0.0	0.0	-0.1	0.0	0.0	0.0	60	0.0	0.0	0.2	0.0	0.1	0.0
	55	0.0	0.0	0.1	0.0	0.0	0.0	56	0.0	0.0	-0.1	0.0	0.0	0.0
39	60	0.0	0.0	0.0	0.0	-0.1	0.0	61	0.0	0.0	0.1	0.0	0.1	0.0
	56	0.0	0.0	0.0	0.0	0.0	0.0	57	0.0	0.0	-0.1	0.0	0.0	0.0
40	5	0.0	0.0	-0.2	0.0	0.0	0.0	62	0.0	0.0	0.2	0.0	0.0	0.0
	58	0.0	0.0	-0.1	0.0	0.0	0.0	59	0.0	0.0	0.1	0.0	0.0	0.0
41	62	0.0	0.0	-0.1	0.0	0.0	0.0	63	0.0	0.0	0.1	0.0	0.1	0.0
	59	0.0	0.0	0.0	0.0	0.0	0.0	60	0.0	0.0	0.0	0.0	0.1	0.0
42	63	0.0	0.0	0.0	0.0	-0.1	0.0	13	0.0	0.0	0.0	-0.1	0.1	0.0
	60	0.0	0.0	0.0	0.0	-0.1	0.0	61	0.0	0.0	0.0	0.0	0.1	0.0
43	65	0.0	0.0	0.0	0.0	0.0	0.0	66	0.0	0.0	0.0	0.0	0.0	0.0
	62	0.0	0.0	-0.1	0.0	0.0	0.0	63	0.0	0.0	0.1	0.0	0.1	0.0
44	66	0.0	0.0	0.0	0.0	0.0	0.0	67	0.0	0.0	0.0	0.0	0.0	0.0
	63	0.0	0.0	0.0	0.0	-0.1	0.0	13	0.0	0.0	0.0	0.1	0.1	0.0
45	68	0.0	0.0	0.1	0.0	0.0	0.0	69	0.0	0.0	-0.1	0.0	0.0	0.0
	64	0.0	0.0	-0.3	0.0	0.0	0.0	65	0.0	0.0	0.3	0.0	0.0	0.0
46	69	0.0	0.0	0.1	0.0	0.0	0.0	70	0.0	0.0	-0.1	0.0	0.0	0.0
	65	0.0	0.0	-0.1	0.0	0.0	0.0	66	0.0	0.0	0.2	0.0	0.0	0.0
47	70	0.0	0.0	0.0	0.0	0.0	0.0	71	0.0	0.0	-0.1	0.0	0.0	0.0
	66	0.0	0.0	0.0	0.0	0.0	0.0	67	0.0	0.0	0.1	0.0	0.0	0.0
48	4	0.0	0.0	0.1	0.0	0.0	0.0	50	0.0	0.0	-0.2	0.0	0.0	0.0
	68	0.0	0.0	-0.2	0.0	0.0	0.0	69	0.0	0.0	0.3	0.0	0.0	0.0
49	50	0.0	0.0	0.1	0.0	0.0	0.0	51	0.0	0.0	-0.2	0.0	0.0	0.0
	69	0.0	0.0	-0.1	0.0	0.0	0.0	70	0.0	0.0	0.2	0.0	0.0	0.0
50	51	0.0	0.0	-0.1	0.0	0.0	0.0	14	0.0	0.0	-0.1	0.0	0.0	0.0
	70	0.0	0.0	0.0	0.0	0.0	0.0	71	0.0	0.0	0.1	0.0	0.0	0.0
51	49	0.3	-0.2	0.0	0.0	0.0	0.0	73	0.0	0.0	0.0	0.0	0.0	0.0
	47	-0.1	0.0	0.0	0.0	0.0	0.0	72	-0.2	0.1	0.0	0.0	0.0	0.0
52	8	0.4	-0.3	0.0	0.0	0.0	0.0	2	0.1	0.1	0.0	0.0	0.0	0.0
	49	-0.2	0.2	0.0	0.0	0.0	0.0	73	-0.3	0.1	0.0	0.0	0.0	0.0
53	77	0.1	0.0	0.0	0.0	0.0	0.0	78	-0.1	0.0	0.0	0.0	0.0	0.0
	74	0.1	0.0	0.0	0.0	0.0	0.0	75	-0.1	0.0	0.0	0.0	0.0	0.0
54	78	0.0	0.0	0.0	0.0	0.0	0.0	79	0.0	0.0	0.0	0.0	0.0	0.0
	75	0.0	0.0	0.0	0.0	0.0	0.0	32	-0.1	0.0	0.0	0.0	0.0	0.0
55	80	0.1	0.1	0.0	0.0	0.0	0.0	81	-0.1	0.0	0.0	0.0	0.0	0.0
	76	0.1	0.0	0.0	0.0	0.0	0.0	77	-0.1	0.0	0.0	0.0	0.0	0.0
56	81	0.0	0.1	0.0	0.0	0.0	0.0	82	-0.1	0.0	0.0	0.0	0.0	0.0
	77	0.1	0.0	0.0	0.0	0.0	0.0	78	0.0	0.0	0.0	0.0	0.0	0.0
57	82	0.0	0.0	0.0	0.0	0.0	0.0	83	-0.1	0.0	0.0	0.0	0.0	0.0
	78	0.1	0.0	0.0	0.0	0.0	0.0	79	0.0	0.0	0.0	0.0	0.0	0.0
58	21	-0.1	0.2	0.0	0.0	0.0	0.0	84	-0.1	-0.1	0.0	0.0	0.0	0.0
	80	0.2	0.0	0.0	0.0	0.0	0.0	81	0.0	-0.1	0.0	0.0	0.0	0.0
59	84	0.0	0.1	0.0	0.0	0.0	0.0	85	-0.1	-0.1	0.0	0.0	0.0	0.0
	81	0.1	0.1	0.0	0.0	0.0	0.0	82	0.0	-0.1	0.0	0.0	0.0	0.0
60	85	-0.1	0.0	0.0	0.0	0.0	0.0	31	-0.1	-0.1	0.0	0.0	0.0	0.0
	82	0.1	0.1	0.0	0.0	0.0	0.0	83	0.1	0.0	0.0	0.0	0.0	0.0
61	86	0.0	0.0	0.0	0.0	0.0	0.0	87	0.0	0.0	0.0	0.0	0.0	0.0
	71	0.0	0.0	-0.1	0.0	0.0	0.0	67	0.0	0.0	0.1	0.0	0.0	0.0
62	87	0.0	0.0	0.0	0.0	0.0	0.0	88	0.0	0.0	0.0	0.0	0.0	0.0
	67	0.0	0.0	0.0	0.0	0.0	0.0	13	0.0	0.0	0.1	0.1	0.1	0.0
63	40	0.0	0.0	0.1	0.0	0.0	0.0	89	0.0	0.0	-0.1	0.0	0.0	0.0
	38	0.0	0.0	-0.2	0.0	0.0	0.0	86	0.0	0.0	0.2	0.0	0.0	0.0
64	89	0.0	0.0	0.1	0.0	0.0	0.0	90	0.0	0.0	-0.1	0.0	0.0	0.0
	86	0.0	0.0	-0.1	0.0	0.0	0.0	87	0.0	0.0	0.2	0.0	0.0	0.0
65	90	0.0	0.0	0.0	0.0	0.0	0.0	91	0.0	0.0	-0.1	0.0	0.0	0.0
	87	0.0	0.0	0.0	0.0	0.0	0.0	88	0.0	0.0	0.1	0.0	0.0	0.0
66	17	0.0	0.0	0.1	0.0	0.0	0.0	92	0.0	0.0	-0.2	0.0	0.0	0.0
	40	0.0	0.0	-0.2	0.0	0.0	0.0	89	0.0	0.0	0.3	0.0	0.0	0.0
67	92	0.0	0.0	0.1	0.0	0.0	0.0	93	0.0	0.0	-0.2	0.0	0.0	0.0
	89	0.0	0.0	-0.1	0.0	0.0	0.0	90	0.0	0.0	0.2	0.0	0.0	0.0
68	93	0.0	0.0	0.0	0.0	0.0	0.0	18	0.0	0.0	-0.1	0.0	0.0	0.0
	90	0.0	0.0	0.0	0.0	0.0	0.0	91	0.0	0.0	0.2	0.0	0.0	0.0
69	95	0.0	0.0	0.0	0.0	0.0	0.0	96	0.0	0.0	0.0	0.0	0.0	0.0
	91	0.0	0.0	-0.1	0.0	0.0	0.0	88	0.0	0.0	0.1	0.0	0.0	0.0
70	96	0.0	0.0	0.0	0.0	0.0	0.0	61	0.0	0.0	0.0	-0.1	0.1	0.0
	88	0.0	0.0	0.0	0.0	0.0	0.0	13	0.0	0.0	0.0	0.1	0.1	0.0
71	97	0.0	0.0	0.1	0.0	0.0	0.0	98	0.0	0.0	-0.1	0.0	0.0	0.0
	94	0.0	0.0	-0.2	0.0	0.0	0.0	95	0.0	0.0	0.2	0.0	0.0	0.0
72	98	0.0	0.0	0.1	0.0	0.0	0.0	99	0.0	0.0	-0.1	0.0	0.0	0.0
	95	0.0	0.0	-0.1	0.0	0.0	0.0	96	0.0	0.0	0.2	0.0	0.0	0.0
73	99	0.0	0.0	0.0	0.0	0.0	0.0	57	0.0	0.0	-0.1	0.0	0.0	0.0
	96	0.0	0.0	0.0	0.0	0.0	0.0	61	0.0	0.0	0.1	0.1	0.1	0.0

Documento di proprietà **Snam Rete Gas**. La Società tutelerà i propri diritti in sede civile e penale a termini di legge.

FORZE NEVE: SHELL

Shell Nro	Nodo N.ro	Tx (kN)	Ty (kN)	Tz (kN)	Mx (kN*m)	My (kN*m)	Mz (kN*m)	Nodo N.ro	Tx (kN)	Ty (kN)	Tz (kN)	Mx (kN*m)	My (kN*m)	Mz (kN*m)
74	19	0.0	0.0	0.1	0.0	0.0	0.0	100	0.0	0.0	-0.2	0.0	0.0	0.0
	97	0.0	0.0	-0.2	0.0	0.0	0.0	98	0.0	0.0	0.3	0.0	0.0	0.0
75	100	0.0	0.0	0.1	0.0	0.0	0.0	101	0.0	0.0	-0.2	0.0	0.0	0.0
	98	0.0	0.0	-0.1	0.0	0.0	0.0	99	0.0	0.0	0.2	0.0	0.0	0.0
76	101	0.0	0.0	-0.1	0.0	0.0	0.0	11	0.0	0.0	-0.1	0.0	0.0	0.0
	99	0.0	0.0	0.0	0.0	0.0	0.0	57	0.0	0.0	0.2	0.0	0.0	0.0
77	103	0.1	0.0	0.0	0.0	0.0	0.0	104	0.0	0.0	0.0	0.0	0.0	0.0
	84	0.0	0.0	0.0	0.0	0.0	0.0	85	-0.1	0.1	0.0	0.0	0.0	0.0
78	104	0.1	-0.1	0.0	0.0	0.0	0.0	105	0.0	0.0	0.0	0.0	0.0	0.0
	85	0.0	0.0	0.0	0.0	0.0	0.0	31	-0.1	0.0	0.0	0.0	0.0	0.0
79	106	0.1	0.0	0.0	0.0	0.0	0.0	107	-0.1	0.0	0.0	0.0	0.0	0.0
	102	0.1	-0.1	0.0	0.0	0.0	0.0	103	-0.1	0.0	0.0	0.0	0.0	0.0
80	107	0.1	0.0	0.0	0.0	0.0	0.0	108	-0.1	0.0	0.0	0.0	0.0	0.0
	103	0.0	0.0	0.0	0.0	0.0	0.0	104	-0.1	0.0	0.0	0.0	0.0	0.0
81	108	0.0	0.0	0.0	0.0	0.0	0.0	109	0.0	0.0	0.0	0.0	0.0	0.0
	104	0.0	0.0	0.0	0.0	0.0	0.0	105	0.0	0.0	0.0	0.0	0.0	0.0
82	22	0.1	0.0	0.0	0.0	0.0	0.0	110	-0.2	0.0	0.0	0.0	0.0	0.0
	106	0.2	0.0	0.0	0.0	0.0	0.0	107	-0.1	0.0	0.0	0.0	0.0	0.0
83	110	0.1	0.0	0.0	0.0	0.0	0.0	111	-0.2	0.0	0.0	0.0	0.0	0.0
	107	0.1	0.0	0.0	0.0	0.0	0.0	108	-0.1	0.0	0.0	0.0	0.0	0.0
84	111	0.0	0.0	0.0	0.0	0.0	0.0	30	-0.1	-0.1	0.0	0.0	0.0	0.0
	108	0.1	0.0	0.0	0.0	0.0	0.0	109	0.0	0.0	0.0	0.0	0.0	0.0
85	113	0.3	-0.2	0.0	0.0	0.0	0.0	80	0.0	0.0	0.0	0.0	0.0	0.0
	112	-0.1	0.0	0.0	0.0	0.0	0.0	76	-0.2	0.1	0.0	0.0	0.0	0.0
86	23	0.5	-0.4	0.0	0.0	0.0	0.0	21	0.0	0.1	0.0	0.0	0.0	0.0
	113	-0.2	0.2	0.0	0.0	0.0	0.0	80	-0.3	0.1	0.0	0.0	0.0	0.0
87	115	0.0	0.1	0.0	0.0	0.0	0.0	113	-0.3	-0.1	0.0	0.0	0.0	0.0
	114	0.2	0.0	0.0	0.0	0.0	0.0	112	0.0	0.0	0.0	0.0	0.0	0.0
88	20	-0.1	0.1	0.0	0.0	0.0	0.0	23	-0.5	-0.3	0.0	0.0	0.0	0.0
	115	0.4	0.1	0.0	0.0	0.0	0.0	113	0.2	0.1	0.0	0.0	0.0	0.0
89	116	0.1	-0.4	0.0	0.0	0.0	0.0	117	0.0	0.1	0.0	0.0	0.0	0.0
	102	-0.1	-0.1	0.0	0.0	0.0	0.0	106	0.0	0.3	0.0	0.0	0.0	0.0
90	117	0.1	-0.3	0.0	0.0	0.0	0.0	37	0.0	0.0	0.0	0.0	0.0	0.0
	106	0.0	0.0	0.0	0.0	0.0	0.0	22	0.0	0.3	0.0	0.0	0.0	0.0
91	119	0.3	-0.1	0.0	0.0	0.0	0.0	117	0.0	0.0	0.0	0.0	0.0	0.0
	118	0.0	-0.1	0.0	0.0	0.0	0.0	116	-0.3	0.2	0.0	0.0	0.0	0.0
92	34	0.1	0.0	0.0	0.0	0.0	0.0	37	-0.1	0.0	0.0	0.0	0.0	0.0
	119	0.1	0.0	0.0	0.0	0.0	0.0	117	-0.1	0.0	0.0	0.0	0.0	0.0
93	121	0.0	-0.1	0.0	0.0	0.0	0.0	122	0.0	-0.1	0.0	0.0	0.0	0.0
	43	-0.1	0.1	0.0	0.0	0.0	0.0	42	0.1	0.1	0.0	0.0	0.0	0.0
94	122	-0.1	-0.1	0.0	0.0	0.0	0.0	123	0.0	-0.1	0.0	0.0	0.0	0.0
	42	-0.1	0.1	0.0	0.0	0.0	0.0	2	0.1	0.0	0.0	0.0	0.0	0.0
95	124	0.0	-0.1	0.0	0.0	0.0	0.0	125	0.0	-0.1	0.0	0.0	0.0	0.0
	120	0.0	0.1	0.0	0.0	0.0	0.0	121	0.0	0.1	0.0	0.0	0.0	0.0
96	125	0.0	-0.1	0.0	0.0	0.0	0.0	126	0.0	-0.1	0.0	0.0	0.0	0.0
	121	0.0	0.1	0.0	0.0	0.0	0.0	122	0.0	0.1	0.0	0.0	0.0	0.0
97	126	0.0	-0.1	0.0	0.0	0.0	0.0	127	0.0	-0.1	0.0	0.0	0.0	0.0
	122	0.0	0.1	0.0	0.0	0.0	0.0	123	0.0	0.1	0.0	0.0	0.0	0.0
98	26	0.0	-0.1	0.0	0.0	0.0	0.0	128	0.0	-0.1	0.0	0.0	0.0	0.0
	124	0.0	0.1	0.0	0.0	0.0	0.0	125	0.0	0.1	0.0	0.0	0.0	0.0
99	128	0.0	-0.1	0.0	0.0	0.0	0.0	129	0.0	-0.1	0.0	0.0	0.0	0.0
	125	0.0	0.1	0.0	0.0	0.0	0.0	126	0.0	0.1	0.0	0.0	0.0	0.0
100	129	0.0	-0.1	0.0	0.0	0.0	0.0	27	0.0	-0.1	0.0	0.0	0.0	0.0
	126	0.0	0.1	0.0	0.0	0.0	0.0	127	0.0	0.1	0.0	0.0	0.0	0.0
101	130	0.0	-0.2	0.0	0.0	0.0	0.0	131	0.0	-0.1	0.0	0.0	0.0	0.0
	68	0.0	0.1	0.0	0.0	0.0	0.0	64	0.0	0.2	0.0	0.0	0.0	0.0
102	131	0.0	-0.2	0.0	0.0	0.0	0.0	132	0.0	-0.2	0.0	0.0	0.0	0.0
	64	0.0	0.2	0.0	0.0	0.0	0.0	5	0.0	0.2	0.0	0.0	0.0	0.0
103	16	0.0	-0.1	0.0	0.0	0.0	0.0	133	0.1	-0.1	0.0	0.0	0.0	0.0
	10	-0.1	0.0	0.0	0.0	0.0	0.0	130	0.0	0.1	0.0	0.0	0.0	0.0
104	133	0.0	-0.2	0.0	0.0	0.0	0.0	134	0.1	-0.1	0.0	0.0	0.0	0.0
	130	-0.1	0.1	0.0	0.0	0.0	0.0	131	0.0	0.2	0.0	0.0	0.0	0.0
105	134	0.0	-0.2	0.0	0.0	0.0	0.0	135	0.0	-0.2	0.0	0.0	0.0	0.0
	131	-0.1	0.2	0.0	0.0	0.0	0.0	132	0.0	0.2	0.0	0.0	0.0	0.0
106	3	0.0	-0.1	0.0	0.0	0.0	0.0	136	0.0	-0.1	0.0	0.0	0.0	0.0
	16	0.0	0.1	0.0	0.0	0.0	0.0	133	0.0	0.1	0.0	0.0	0.0	0.0
107	136	0.0	-0.1	0.0	0.0	0.0	0.0	137	0.0	-0.1	0.0	0.0	0.0	0.0
	133	0.0	0.1	0.0	0.0	0.0	0.0	134	0.0	0.2	0.0	0.0	0.0	0.0
108	137	0.0	-0.2	0.0	0.0	0.0	0.0	138	0.0	-0.1	0.0	0.0	0.0	0.0
	134	0.0	0.1	0.0	0.0	0.0	0.0	135	0.0	0.2	0.0	0.0	0.0	0.0
109	139	0.0	-0.1	0.0	0.0	0.0	0.0	140	0.0	-0.1	0.0	0.0	0.0	0.0
	3	0.0	0.1	0.0	0.0	0.0	0.0	136	0.0	0.1	0.0	0.0	0.0	0.0
110	140	0.0	-0.1	0.0	0.0	0.0	0.0	141	0.0	-0.1	0.0	0.0	0.0	0.0
	136	0.0	0.1	0.0	0.0	0.0	0.0	137	0.0	0.1	0.0	0.0	0.0	0.0
111	141	0.0	-0.1	0.0	0.0	0.0	0.0	142	0.0	-0.1	0.0	0.0	0.0	0.0
	137	0.0	0.1	0.0	0.0	0.0	0.0	138	0.0	0.1	0.0	0.0	0.0	0.0
112	143	0.0	-0.1	0.0	0.0	0.0	0.0	144	0.0	-0.1	0.0	0.0	0.0	0.0
	139	0.0	0.1	0.0	0.0	0.0	0.0	140	0.0	0.1	0.0	0.0	0.0	0.0
113	144	0.0	-0.1	0.0	0.0	0.0	0.0	145	0.0	-0.1	0.0	0.0	0.0	0.0
	140	0.0	0.1	0.0	0.0	0.0	0.0	141	0.0	0.1	0.0	0.0	0.0	0.0

Documento di proprietà **Snam Rete Gas**. La Società tutelerà i propri diritti in sede civile e penale a termini di legge.

FORZE NEVE: SHELL

Shell Nro	Nodo N.ro	Tx (kN)	Ty (kN)	Tz (kN)	Mx (kN*m)	My (kN*m)	Mz (kN*m)	Nodo N.ro	Tx (kN)	Ty (kN)	Tz (kN)	Mx (kN*m)	My (kN*m)	Mz (kN*m)
114	145	0.0	-0.1	0.0	0.0	0.0	0.0	146	0.0	-0.1	0.0	0.0	0.0	0.0
	141	0.0	0.1	0.0	0.0	0.0	0.0	142	0.0	0.1	0.0	0.0	0.0	0.0
115	28	0.1	-0.1	0.0	0.0	0.0	0.0	147	0.0	-0.1	0.0	0.0	0.0	0.0
	143	0.0	0.1	0.0	0.0	0.0	0.0	144	0.0	0.1	0.0	0.0	0.0	0.0
116	147	0.0	-0.1	0.0	0.0	0.0	0.0	148	0.0	-0.1	0.0	0.0	0.0	0.0
	144	0.0	0.1	0.0	0.0	0.0	0.0	145	0.0	0.1	0.0	0.0	0.0	0.0
117	148	0.0	-0.1	0.0	0.0	0.0	0.0	29	0.0	-0.1	0.0	0.0	0.0	0.0
	145	0.0	0.1	0.0	0.0	0.0	0.0	146	0.0	0.1	0.0	0.0	0.0	0.0
118	101	0.2	0.0	0.0	0.0	0.0	0.0	115	-0.2	0.1	0.0	0.0	0.0	0.0
	100	0.1	0.0	0.0	0.0	0.0	0.0	114	-0.2	0.0	0.0	0.0	0.0	0.0
119	11	0.1	-0.1	0.0	0.0	0.0	0.0	20	0.0	0.2	0.0	0.0	0.0	0.0
	101	0.1	-0.1	0.0	0.0	0.0	0.0	115	-0.3	0.0	0.0	0.0	0.0	0.0
120	149	0.0	-0.1	0.0	0.0	0.0	0.0	150	0.0	-0.1	0.0	0.0	0.0	0.0
	97	0.0	0.1	0.0	0.0	0.0	0.0	94	0.0	0.1	0.0	0.0	0.0	0.0
121	150	0.0	-0.1	0.0	0.0	0.0	0.0	151	0.0	-0.2	0.0	0.0	0.0	0.0
	94	0.0	0.2	0.0	0.0	0.0	0.0	18	0.0	0.2	0.0	0.0	0.0	0.0
122	36	0.0	0.0	0.0	0.0	0.0	0.0	152	0.0	0.0	0.0	0.0	0.0	0.0
	35	0.0	0.0	0.0	0.0	0.0	0.0	149	0.0	0.1	0.0	0.0	0.0	0.0
123	152	0.0	-0.1	0.0	0.0	0.0	0.0	153	0.1	-0.1	0.0	0.0	0.0	0.0
	149	-0.1	0.1	0.0	0.0	0.0	0.0	150	0.0	0.1	0.0	0.0	0.0	0.0
124	153	-0.1	-0.1	0.0	0.0	0.0	0.0	154	0.0	-0.1	0.0	0.0	0.0	0.0
	150	0.0	0.1	0.0	0.0	0.0	0.0	151	0.1	0.1	0.0	0.0	0.0	0.0
125	25	0.0	0.0	0.0	0.0	0.0	0.0	155	0.0	-0.1	0.0	0.0	0.0	0.0
	36	0.0	0.1	0.0	0.0	0.0	0.0	152	0.0	0.1	0.0	0.0	0.0	0.0
126	155	0.0	-0.1	0.0	0.0	0.0	0.0	156	0.0	-0.1	0.0	0.0	0.0	0.0
	152	0.0	0.1	0.0	0.0	0.0	0.0	153	0.0	0.1	0.0	0.0	0.0	0.0
127	156	0.0	-0.1	0.0	0.0	0.0	0.0	157	0.0	-0.1	0.0	0.0	0.0	0.0
	153	0.0	0.1	0.0	0.0	0.0	0.0	154	0.0	0.1	0.0	0.0	0.0	0.0
128	74	0.0	-0.1	0.0	0.0	0.0	0.0	158	0.0	-0.1	0.0	0.0	0.0	0.0
	25	0.0	0.1	0.0	0.0	0.0	0.0	155	0.0	0.1	0.0	0.0	0.0	0.0
129	158	0.0	-0.1	0.0	0.0	0.0	0.0	159	0.0	-0.1	0.0	0.0	0.0	0.0
	155	0.0	0.1	0.0	0.0	0.0	0.0	156	0.0	0.1	0.0	0.0	0.0	0.0
130	159	0.0	-0.1	0.0	0.0	0.0	0.0	160	0.0	-0.1	0.0	0.0	0.0	0.0
	156	0.0	0.1	0.0	0.0	0.0	0.0	157	0.0	0.1	0.0	0.0	0.0	0.0
131	75	0.0	-0.1	0.0	0.0	0.0	0.0	161	0.0	-0.1	0.0	0.0	0.0	0.0
	74	0.0	0.1	0.0	0.0	0.0	0.0	158	0.0	0.1	0.0	0.0	0.0	0.0
132	161	0.0	-0.1	0.0	0.0	0.0	0.0	162	0.0	-0.1	0.0	0.0	0.0	0.0
	158	0.0	0.1	0.0	0.0	0.0	0.0	159	0.0	0.1	0.0	0.0	0.0	0.0
133	162	0.0	-0.1	0.0	0.0	0.0	0.0	163	0.0	-0.1	0.0	0.0	0.0	0.0
	159	0.0	0.1	0.0	0.0	0.0	0.0	160	0.0	0.1	0.0	0.0	0.0	0.0
134	32	0.0	-0.1	0.0	0.0	0.0	0.0	164	0.0	-0.1	0.0	0.0	0.0	0.0
	75	0.0	0.1	0.0	0.0	0.0	0.0	161	0.0	0.1	0.0	0.0	0.0	0.0
135	164	0.0	-0.1	0.0	0.0	0.0	0.0	165	0.0	-0.1	0.0	0.0	0.0	0.0
	161	0.0	0.1	0.0	0.0	0.0	0.0	162	0.0	0.1	0.0	0.0	0.0	0.0
136	165	0.0	-0.1	0.0	0.0	0.0	0.0	33	0.0	-0.1	0.0	0.0	0.0	0.0
	162	0.0	0.1	0.0	0.0	0.0	0.0	163	0.0	0.1	0.0	0.0	0.0	0.0
137	166	-0.1	-0.2	0.0	0.0	0.0	0.0	167	0.0	-0.2	0.0	0.0	0.0	0.0
	58	0.0	0.2	0.0	0.0	0.0	0.0	54	0.0	0.2	0.0	0.0	0.0	0.0
138	167	-0.1	0.0	0.0	0.0	0.0	0.0	34	0.0	-0.1	0.0	0.0	0.0	0.0
	54	0.0	0.1	0.0	0.0	0.0	0.0	7	0.1	0.0	0.0	0.0	0.0	0.0
139	135	-0.1	-0.2	0.0	0.0	0.0	0.0	168	0.0	-0.2	0.0	0.0	0.0	0.0
	132	0.0	0.2	0.0	0.0	0.0	0.0	166	0.1	0.2	0.0	0.0	0.0	0.0
140	168	-0.1	-0.1	0.0	0.0	0.0	0.0	169	0.0	-0.2	0.0	0.0	0.0	0.0
	166	0.0	0.2	0.0	0.0	0.0	0.0	167	0.1	0.1	0.0	0.0	0.0	0.0
141	169	-0.1	-0.1	0.0	0.0	0.0	0.0	37	0.0	-0.1	0.0	0.0	0.0	0.0
	167	0.0	0.2	0.0	0.0	0.0	0.0	34	0.1	0.0	0.0	0.0	0.0	0.0
142	138	0.0	-0.2	0.0	0.0	0.0	0.0	170	0.0	-0.2	0.0	0.0	0.0	0.0
	135	0.0	0.2	0.0	0.0	0.0	0.0	168	0.1	0.2	0.0	0.0	0.0	0.0
143	170	0.0	-0.1	0.0	0.0	0.0	0.0	171	0.0	-0.2	0.0	0.0	0.0	0.0
	168	0.0	0.2	0.0	0.0	0.0	0.0	169	0.1	0.1	0.0	0.0	0.0	0.0
144	171	0.0	-0.1	0.0	0.0	0.0	0.0	22	0.0	-0.2	0.0	0.0	0.0	0.0
	169	0.0	0.2	0.0	0.0	0.0	0.0	37	0.0	0.2	0.0	0.0	0.0	0.0
145	142	0.0	-0.1	0.0	0.0	0.0	0.0	172	0.0	-0.2	0.0	0.0	0.0	0.0
	138	0.0	0.2	0.0	0.0	0.0	0.0	170	0.0	0.1	0.0	0.0	0.0	0.0
146	172	0.0	-0.1	0.0	0.0	0.0	0.0	173	0.0	-0.2	0.0	0.0	0.0	0.0
	170	0.0	0.2	0.0	0.0	0.0	0.0	171	0.0	0.1	0.0	0.0	0.0	0.0
147	173	0.0	-0.1	0.0	0.0	0.0	0.0	110	0.0	-0.2	0.0	0.0	0.0	0.0
	171	0.0	0.2	0.0	0.0	0.0	0.0	22	0.0	0.2	0.0	0.0	0.0	0.0
148	146	0.0	-0.1	0.0	0.0	0.0	0.0	174	0.0	-0.1	0.0	0.0	0.0	0.0
	142	0.0	0.1	0.0	0.0	0.0	0.0	172	0.0	0.1	0.0	0.0	0.0	0.0
149	174	0.0	-0.1	0.0	0.0	0.0	0.0	175	0.0	-0.2	0.0	0.0	0.0	0.0
	172	0.0	0.2	0.0	0.0	0.0	0.0	173	0.0	0.1	0.0	0.0	0.0	0.0
150	175	0.0	-0.1	0.0	0.0	0.0	0.0	111	0.0	-0.2	0.0	0.0	0.0	0.0
	173	0.0	0.2	0.0	0.0	0.0	0.0	110	0.0	0.1	0.0	0.0	0.0	0.0
151	29	0.0	-0.1	0.0	0.0	0.0	0.0	176	0.0	-0.1	0.0	0.0	0.0	0.0
	146	0.0	0.1	0.0	0.0	0.0	0.0	174	0.0	0.1	0.0	0.0	0.0	0.0
152	176	0.0	-0.1	0.0	0.0	0.0	0.0	177	-0.1	-0.2	0.0	0.0	0.0	0.0
	174	0.0	0.2	0.0	0.0	0.0	0.0	175	0.0	0.1	0.0	0.0	0.0	0.0
153	177	0.0	-0.1	0.0	0.0	0.0	0.0	30	-0.1	-0.1	0.0	0.0	0.0	0.0
	175	0.0	0.2	0.0	0.0	0.0	0.0	111	0.0	0.0	0.0	0.0	0.0	0.0

Documento di proprietà **Snam Rete Gas**. La Società tutelerà i propri diritti in sede civile e penale a termini di legge.

FORZE NEVE: SHELL

Shell Nro	Nodo N.ro	Tx (kN)	Ty (kN)	Tz (kN)	Mx (kN*m)	My (kN*m)	Mz (kN*m)	Nodo N.ro	Tx (kN)	Ty (kN)	Tz (kN)	Mx (kN*m)	My (kN*m)	Mz (kN*m)
154	178	-0.1	-0.1	0.0	0.0	0.0	0.0	179	0.0	-0.1	0.0	0.0	0.0	0.0
	93	0.0	0.1	0.0	0.0	0.0	0.0	92	0.0	0.1	0.0	0.0	0.0	0.0
155	179	-0.1	0.0	0.0	0.0	0.0	0.0	12	0.0	0.0	0.0	0.0	0.0	0.0
	92	0.0	0.1	0.0	0.0	0.0	0.0	17	0.1	-0.1	0.0	0.0	0.0	0.0
156	154	-0.1	-0.1	0.0	0.0	0.0	0.0	180	0.0	-0.2	0.0	0.0	0.0	0.0
	151	0.0	0.2	0.0	0.0	0.0	0.0	178	0.1	0.1	0.0	0.0	0.0	0.0
157	180	-0.1	-0.1	0.0	0.0	0.0	0.0	181	0.0	-0.1	0.0	0.0	0.0	0.0
	178	0.0	0.1	0.0	0.0	0.0	0.0	179	0.1	0.0	0.0	0.0	0.0	0.0
158	181	-0.1	0.0	0.0	0.0	0.0	0.0	15	0.0	0.0	0.0	0.0	0.0	0.0
	179	0.0	0.1	0.0	0.0	0.0	0.0	12	0.0	0.0	0.0	0.0	0.0	0.0
159	157	0.0	-0.1	0.0	0.0	0.0	0.0	182	0.0	-0.1	0.0	0.0	0.0	0.0
	154	0.0	0.1	0.0	0.0	0.0	0.0	180	0.1	0.1	0.0	0.0	0.0	0.0
160	182	0.0	-0.1	0.0	0.0	0.0	0.0	183	0.0	-0.1	0.0	0.0	0.0	0.0
	180	0.0	0.1	0.0	0.0	0.0	0.0	181	0.0	0.1	0.0	0.0	0.0	0.0
161	183	0.0	-0.1	0.0	0.0	0.0	0.0	9	0.0	-0.1	0.0	0.0	0.0	0.0
	181	0.0	0.1	0.0	0.0	0.0	0.0	15	0.0	0.1	0.0	0.0	0.0	0.0
162	160	0.0	-0.1	0.0	0.0	0.0	0.0	184	0.0	-0.1	0.0	0.0	0.0	0.0
	157	0.0	0.1	0.0	0.0	0.0	0.0	182	0.0	0.1	0.0	0.0	0.0	0.0
163	184	0.0	-0.1	0.0	0.0	0.0	0.0	185	0.0	-0.1	0.0	0.0	0.0	0.0
	182	0.0	0.1	0.0	0.0	0.0	0.0	183	0.0	0.1	0.0	0.0	0.0	0.0
164	185	0.0	-0.1	0.0	0.0	0.0	0.0	120	0.0	-0.1	0.0	0.0	0.0	0.0
	183	0.0	0.1	0.0	0.0	0.0	0.0	9	0.0	0.1	0.0	0.0	0.0	0.0
165	163	0.0	-0.1	0.0	0.0	0.0	0.0	186	0.0	-0.1	0.0	0.0	0.0	0.0
	160	0.0	0.1	0.0	0.0	0.0	0.0	184	0.0	0.1	0.0	0.0	0.0	0.0
166	186	0.0	-0.1	0.0	0.0	0.0	0.0	187	0.0	-0.1	0.0	0.0	0.0	0.0
	184	0.0	0.1	0.0	0.0	0.0	0.0	185	0.0	0.1	0.0	0.0	0.0	0.0
167	187	0.0	-0.1	0.0	0.0	0.0	0.0	124	0.0	-0.1	0.0	0.0	0.0	0.0
	185	0.0	0.1	0.0	0.0	0.0	0.0	120	0.0	0.1	0.0	0.0	0.0	0.0
168	33	0.0	-0.1	0.0	0.0	0.0	0.0	188	0.0	-0.1	0.0	0.0	0.0	0.0
	163	0.0	0.1	0.0	0.0	0.0	0.0	186	0.0	0.1	0.0	0.0	0.0	0.0
169	188	0.0	-0.1	0.0	0.0	0.0	0.0	189	0.0	-0.1	0.0	0.0	0.0	0.0
	186	0.0	0.1	0.0	0.0	0.0	0.0	187	0.0	0.1	0.0	0.0	0.0	0.0
170	189	0.0	-0.1	0.0	0.0	0.0	0.0	26	0.0	-0.1	0.0	0.0	0.0	0.0
	187	0.0	0.1	0.0	0.0	0.0	0.0	124	0.0	0.1	0.0	0.0	0.0	0.0
171	190	0.0	-0.2	0.0	0.0	0.0	0.0	191	0.1	-0.1	0.0	0.0	0.0	0.0
	73	-0.1	0.1	0.0	0.0	0.0	0.0	72	0.0	0.1	0.0	0.0	0.0	0.0
172	191	0.0	-0.1	0.0	0.0	0.0	0.0	139	0.0	-0.1	0.0	0.0	0.0	0.0
	72	0.0	0.1	0.0	0.0	0.0	0.0	3	0.0	0.1	0.0	0.0	0.0	0.0
173	127	0.0	-0.1	0.0	0.0	0.0	0.0	192	0.0	-0.1	0.0	0.0	0.0	0.0
	123	0.0	0.1	0.0	0.0	0.0	0.0	190	0.0	0.1	0.0	0.0	0.0	0.0
174	192	0.0	-0.1	0.0	0.0	0.0	0.0	193	0.0	-0.1	0.0	0.0	0.0	0.0
	190	0.0	0.1	0.0	0.0	0.0	0.0	191	0.0	0.1	0.0	0.0	0.0	0.0
175	193	0.0	-0.1	0.0	0.0	0.0	0.0	143	0.0	-0.1	0.0	0.0	0.0	0.0
	191	0.0	0.1	0.0	0.0	0.0	0.0	139	0.0	0.1	0.0	0.0	0.0	0.0
176	27	0.0	-0.1	0.0	0.0	0.0	0.0	194	0.0	-0.1	0.0	0.0	0.0	0.0
	127	0.0	0.1	0.0	0.0	0.0	0.0	192	0.0	0.1	0.0	0.0	0.0	0.0
177	194	0.0	-0.1	0.0	0.0	0.0	0.0	195	0.0	-0.1	0.0	0.0	0.0	0.0
	192	0.0	0.1	0.0	0.0	0.0	0.0	193	0.0	0.1	0.0	0.0	0.0	0.0
178	195	0.1	-0.1	0.0	0.0	0.0	0.0	28	0.0	-0.1	0.0	0.0	0.0	0.0
	193	0.0	0.1	0.0	0.0	0.0	0.0	143	0.0	0.1	0.0	0.0	0.0	0.0
179	52	0.2	0.1	0.0	0.0	0.0	0.0	119	-0.3	0.0	0.0	0.0	0.0	0.0
	53	0.3	0.1	0.0	0.0	0.0	0.0	118	-0.2	-0.1	0.0	0.0	0.0	0.0
180	7	0.0	0.1	0.0	0.0	0.0	0.0	34	0.0	0.0	0.0	0.0	0.0	0.0
	52	0.1	0.0	0.0	0.0	0.0	0.0	119	-0.1	-0.1	0.0	0.0	0.0	0.0

FORZE Corr. Tors. dir. 0: SHELL

Shell Nro	Nodo N.ro	Tx (kN)	Ty (kN)	Tz (kN)	Mx (kN*m)	My (kN*m)	Mz (kN*m)	Nodo N.ro	Tx (kN)	Ty (kN)	Tz (kN)	Mx (kN*m)	My (kN*m)	Mz (kN*m)
1	38	0.0	0.0	0.0	0.0	0.0	0.0	39	0.0	0.0	0.0	0.0	0.0	0.0
	14	0.0	0.0	0.0	0.0	0.0	0.0	1	0.0	0.0	0.0	0.0	0.0	0.0
2	6	0.0	0.0	0.0	0.0	0.0	0.0	44	0.0	0.0	0.0	0.0	0.0	0.0
	2	0.0	0.0	0.0	0.0	0.0	0.0	42	0.0	0.0	0.0	0.0	0.0	0.0
3	39	0.0	0.0	0.0	0.0	0.0	0.0	44	0.0	0.0	0.0	0.0	0.0	0.0
	1	0.0	0.0	0.0	0.0	0.0	0.0	6	0.0	0.0	0.0	0.0	0.0	0.0
4	46	0.0	0.0	0.0	0.0	0.0	0.0	47	0.0	0.0	0.0	0.0	0.0	0.0
	10	0.0	0.0	0.0	0.0	0.0	0.0	16	0.0	0.0	0.0	0.0	0.0	0.0
5	50	0.0	0.0	0.0	0.0	0.0	0.0	46	0.0	0.0	0.0	0.0	0.0	0.0
	4	0.0	0.0	0.0	0.0	0.0	0.0	10	0.0	0.0	0.0	0.0	0.0	0.0
6	54	0.0	0.0	0.0	0.0	0.0	0.0	55	0.0	0.0	0.0	0.0	0.0	0.0
	7	0.0	0.0	0.0	0.0	0.0	0.0	52	0.0	0.0	0.0	0.0	0.0	0.0
7	64	0.0	0.0	0.0	0.0	0.0	0.0	65	0.0	0.0	0.0	0.0	0.0	0.0
	5	0.0	0.0	0.0	0.0	0.0	0.0	62	0.0	0.0	0.0	0.0	0.0	0.0
8	47	0.0	0.0	0.0	0.0	0.0	0.0	72	0.0	0.0	0.0	0.0	0.0	0.0
	16	0.0	0.0	0.0	0.0	0.0	0.0	3	0.0	0.0	0.0	0.0	0.0	0.0
9	76	0.0	0.0	0.0	0.0	0.0	0.0	77	0.0	0.0	0.0	0.0	0.0	0.0
	25	0.0	0.0	0.0	0.0	0.0	0.0	74	0.0	0.0	0.0	0.0	0.0	0.0
10	38	0.0	0.0	0.0	0.0	0.0	0.0	86	0.0	0.0	0.0	0.0	0.0	0.0
	14	0.0	0.0	0.0	0.0	0.0	0.0	71	0.0	0.0	0.0	0.0	0.0	0.0
11	94	0.0	0.0	0.0	0.0	0.0	0.0	95	0.0	0.0	0.0	0.0	0.0	0.0
	18	0.0	0.0	0.0	0.0	0.0	0.0	91	0.0	0.0	0.0	0.0	0.0	0.0

Documento di proprietà **Snam Rete Gas**. La Società tutelerà i propri diritti in sede civile e penale a termini di legge.

FORZE Corr. Tors. dir. 0: SHELL

Shell Nro	Nodo N.ro	Tx (kN)	Ty (kN)	Tz (kN)	Mx (kN*m)	My (kN*m)	Mz (kN*m)	Nodo N.ro	Tx (kN)	Ty (kN)	Tz (kN)	Mx (kN*m)	My (kN*m)	Mz (kN*m)
12	102	0.0	0.0	0.0	0.0	0.0	0.0	103	0.0	0.0	0.0	0.0	0.0	0.0
	21	0.0	0.0	0.0	0.0	0.0	0.0	84	0.0	0.0	0.0	0.0	0.0	0.0
13	112	0.0	0.0	0.0	0.0	0.0	0.0	76	0.0	0.0	0.0	0.0	0.0	0.0
	36	0.0	0.0	0.0	0.0	0.0	0.0	25	0.0	0.0	0.0	0.0	0.0	0.0
14	114	0.0	0.0	0.0	0.0	0.0	0.0	112	0.0	0.0	0.0	0.0	0.0	0.0
	35	0.0	0.0	0.0	0.0	0.0	0.0	36	0.0	0.0	0.0	0.0	0.0	0.0
15	24	0.0	0.0	0.0	0.0	0.0	0.0	116	0.0	0.0	0.0	0.0	0.0	0.0
	21	0.0	0.0	0.0	0.0	0.0	0.0	102	0.0	0.0	0.0	0.0	0.0	0.0
16	118	0.0	0.0	0.0	0.0	0.0	0.0	116	0.0	0.0	0.0	0.0	0.0	0.0
	20	0.0	0.0	0.0	0.0	0.0	0.0	24	0.0	0.0	0.0	0.0	0.0	0.0
17	120	0.0	0.0	0.0	0.0	0.0	0.0	121	0.0	0.0	0.0	0.0	0.0	0.0
	9	0.0	0.0	0.0	0.0	0.0	0.0	43	0.0	0.0	0.0	0.0	0.0	0.0
18	10	0.0	0.0	0.0	0.0	0.0	0.0	130	0.0	0.0	0.0	0.0	0.0	0.0
	4	0.0	0.0	0.0	0.0	0.0	0.0	68	0.0	0.0	0.0	0.0	0.0	0.0
19	100	0.0	0.0	0.0	0.0	0.0	0.0	114	0.0	0.0	0.0	0.0	0.0	0.0
	19	0.0	0.0	0.0	0.0	0.0	0.0	35	0.0	0.0	0.0	0.0	0.0	0.0
20	35	0.0	0.0	0.0	0.0	0.0	0.0	149	0.0	0.0	0.0	0.0	0.0	0.0
	19	0.0	0.0	0.0	0.0	0.0	0.0	97	0.0	0.0	0.0	0.0	0.0	0.0
21	132	0.0	0.0	0.0	0.0	0.0	0.0	166	0.0	0.0	0.0	0.0	0.0	0.0
	5	0.0	0.0	0.0	0.0	0.0	0.0	58	0.0	0.0	0.0	0.0	0.0	0.0
22	151	0.0	0.0	0.0	0.0	0.0	0.0	178	0.0	0.0	0.0	0.0	0.0	0.0
	18	0.0	0.0	0.0	0.0	0.0	0.0	93	0.0	0.0	0.0	0.0	0.0	0.0
23	123	0.0	0.0	0.0	0.0	0.0	0.0	190	0.0	0.0	0.0	0.0	0.0	0.0
	2	0.0	0.0	0.0	0.0	0.0	0.0	73	0.0	0.0	0.0	0.0	0.0	0.0
24	53	0.0	0.0	0.0	0.0	0.0	0.0	118	0.0	0.0	0.0	0.0	0.0	0.0
	11	0.0	0.0	0.0	0.0	0.0	0.0	20	0.0	0.0	0.0	0.0	0.0	0.0
25	40	0.0	0.0	0.0	0.0	0.0	0.0	41	0.0	0.0	0.0	0.0	0.0	0.0
	38	0.0	0.0	0.0	0.0	0.0	0.0	39	0.0	0.0	0.0	0.0	0.0	0.0
26	17	0.0	0.0	0.0	0.0	0.0	0.0	12	0.0	0.0	0.0	0.0	0.0	0.0
	40	0.0	0.0	0.0	0.0	0.0	0.0	41	0.0	0.0	0.0	0.0	0.0	0.0
27	44	0.0	0.0	0.0	0.0	0.0	0.0	45	0.0	0.0	0.0	0.0	0.0	0.0
	42	0.0	0.0	0.0	0.0	0.0	0.0	43	0.0	0.0	0.0	0.0	0.0	0.0
28	45	0.0	0.0	0.0	0.0	0.0	0.0	15	0.0	0.0	0.0	0.0	0.0	0.0
	43	0.0	0.0	0.0	0.0	0.0	0.0	9	0.0	0.0	0.0	0.0	0.0	0.0
29	41	0.0	0.0	0.0	0.0	0.0	0.0	45	0.0	0.0	0.0	0.0	0.0	0.0
	39	0.0	0.0	0.0	0.0	0.0	0.0	44	0.0	0.0	0.0	0.0	0.0	0.0
30	12	0.0	0.0	0.0	0.0	0.0	0.0	15	0.0	0.0	0.0	0.0	0.0	0.0
	41	0.0	0.0	0.0	0.0	0.0	0.0	45	0.0	0.0	0.0	0.0	0.0	0.0
31	48	0.0	0.0	0.0	0.0	0.0	0.0	49	0.0	0.0	0.0	0.0	0.0	0.0
	46	0.0	0.0	0.0	0.0	0.0	0.0	47	0.0	0.0	0.0	0.0	0.0	0.0
32	1	0.0	0.0	0.0	0.0	0.0	0.0	8	0.0	0.0	0.0	0.0	0.0	0.0
	48	0.0	0.0	0.0	0.0	0.0	0.0	49	0.0	0.0	0.0	0.0	0.0	0.0
33	51	0.0	0.0	0.0	0.0	0.0	0.0	48	0.0	0.0	0.0	0.0	0.0	0.0
	50	0.0	0.0	0.0	0.0	0.0	0.0	46	0.0	0.0	0.0	0.0	0.0	0.0
34	14	0.0	0.0	0.0	0.0	0.0	0.0	1	0.0	0.0	0.0	0.0	0.0	0.0
	51	0.0	0.0	0.0	0.0	0.0	0.0	48	0.0	0.0	0.0	0.0	0.0	0.0
35	55	0.0	0.0	0.0	0.0	0.0	0.0	56	0.0	0.0	0.0	0.0	0.0	0.0
	52	0.0	0.0	0.0	0.0	0.0	0.0	53	0.0	0.0	0.0	0.0	0.0	0.0
36	56	0.0	0.0	0.0	0.0	0.0	0.0	57	0.0	0.0	0.0	0.0	0.0	0.0
	53	0.0	0.0	0.0	0.0	0.0	0.0	11	0.0	0.0	0.0	0.0	0.0	0.0
37	58	0.0	0.0	0.0	0.0	0.0	0.0	59	0.0	0.0	0.0	0.0	0.0	0.0
	54	0.0	0.0	0.0	0.0	0.0	0.0	55	0.0	0.0	0.0	0.0	0.0	0.0
38	59	0.0	0.0	0.0	0.0	0.0	0.0	60	0.0	0.0	0.0	0.0	0.0	0.0
	55	0.0	0.0	0.0	0.0	0.0	0.0	56	0.0	0.0	0.0	0.0	0.0	0.0
39	60	0.0	0.0	0.0	0.0	0.0	0.0	61	0.0	0.0	0.0	0.0	0.0	0.0
	56	0.0	0.0	0.0	0.0	0.0	0.0	57	0.0	0.0	0.0	0.0	0.0	0.0
40	5	0.0	0.0	0.0	0.0	0.0	0.0	62	0.0	0.0	0.0	0.0	0.0	0.0
	58	0.0	0.0	0.0	0.0	0.0	0.0	59	0.0	0.0	0.0	0.0	0.0	0.0
41	62	0.0	0.0	0.0	0.0	0.0	0.0	63	0.0	0.0	0.0	0.0	0.0	0.0
	59	0.0	0.0	0.0	0.0	0.0	0.0	60	0.0	0.0	0.0	0.0	0.0	0.0
42	63	0.0	0.0	0.0	0.0	0.0	0.0	13	0.0	0.0	0.0	0.0	0.0	0.0
	60	0.0	0.0	0.0	0.0	0.0	0.0	61	0.0	0.0	0.0	0.0	0.0	0.0
43	65	0.0	0.0	0.0	0.0	0.0	0.0	66	0.0	0.0	0.0	0.0	0.0	0.0
	62	0.0	0.0	0.0	0.0	0.0	0.0	63	0.0	0.0	0.0	0.0	0.0	0.0
44	66	0.0	0.0	0.0	0.0	0.0	0.0	67	0.0	0.0	0.0	0.0	0.0	0.0
	63	0.0	0.0	0.0	0.0	0.0	0.0	13	0.0	0.0	0.0	0.0	0.0	0.0
45	68	0.0	0.0	0.0	0.0	0.0	0.0	69	0.0	0.0	0.0	0.0	0.0	0.0
	64	0.0	0.0	0.0	0.0	0.0	0.0	65	0.0	0.0	0.0	0.0	0.0	0.0
46	69	0.0	0.0	0.0	0.0	0.0	0.0	70	0.0	0.0	0.0	0.0	0.0	0.0
	65	0.0	0.0	0.0	0.0	0.0	0.0	66	0.0	0.0	0.0	0.0	0.0	0.0
47	70	0.0	0.0	0.0	0.0	0.0	0.0	71	0.0	0.0	0.0	0.0	0.0	0.0
	66	0.0	0.0	0.0	0.0	0.0	0.0	67	0.0	0.0	0.0	0.0	0.0	0.0
48	4	0.0	0.0	0.0	0.0	0.0	0.0	50	0.0	0.0	0.0	0.0	0.0	0.0
	68	0.0	0.0	0.0	0.0	0.0	0.0	69	0.0	0.0	0.0	0.0	0.0	0.0
49	50	0.0	0.0	0.0	0.0	0.0	0.0	51	0.0	0.0	0.0	0.0	0.0	0.0
	69	0.0	0.0	0.0	0.0	0.0	0.0	70	0.0	0.0	0.0	0.0	0.0	0.0
50	51	0.0	0.0	0.0	0.0	0.0	0.0	14	0.0	0.0	0.0	0.0	0.0	0.0
	70	0.0	0.0	0.0	0.0	0.0	0.0	71	0.0	0.0	0.0	0.0	0.0	0.0
51	49	0.0	0.0	0.0	0.0	0.0	0.0	73	0.0	0.0	0.0	0.0	0.0	0.0
	47	0.0	0.0	0.0	0.0	0.0	0.0	72	0.0	0.0	0.0	0.0	0.0	0.0

Documento di proprietà **Snam Rete Gas**. La Società tutelerà i propri diritti in sede civile e penale a termini di legge.

FORZE Corr. Tors. dir. 0: SHELL

Shell Nro	Nodo N.ro	Tx (kN)	Ty (kN)	Tz (kN)	Mx (kN*m)	My (kN*m)	Mz (kN*m)	Nodo N.ro	Tx (kN)	Ty (kN)	Tz (kN)	Mx (kN*m)	My (kN*m)	Mz (kN*m)
52	8	0.0	0.0	0.0	0.0	0.0	0.0	2	0.0	0.0	0.0	0.0	0.0	0.0
	49	0.0	0.0	0.0	0.0	0.0	0.0	73	0.0	0.0	0.0	0.0	0.0	0.0
53	77	0.0	0.0	0.0	0.0	0.0	0.0	78	0.0	0.0	0.0	0.0	0.0	0.0
	74	0.0	0.0	0.0	0.0	0.0	0.0	75	0.0	0.0	0.0	0.0	0.0	0.0
54	78	0.0	0.0	0.0	0.0	0.0	0.0	79	0.0	0.0	0.0	0.0	0.0	0.0
	75	0.0	0.0	0.0	0.0	0.0	0.0	32	0.0	0.0	0.0	0.0	0.0	0.0
55	80	0.0	0.0	0.0	0.0	0.0	0.0	81	0.0	0.0	0.0	0.0	0.0	0.0
	76	0.0	0.0	0.0	0.0	0.0	0.0	77	0.0	0.0	0.0	0.0	0.0	0.0
56	81	0.0	0.0	0.0	0.0	0.0	0.0	82	0.0	0.0	0.0	0.0	0.0	0.0
	77	0.0	0.0	0.0	0.0	0.0	0.0	78	0.0	0.0	0.0	0.0	0.0	0.0
57	82	0.0	0.0	0.0	0.0	0.0	0.0	83	0.0	0.0	0.0	0.0	0.0	0.0
	78	0.0	0.0	0.0	0.0	0.0	0.0	79	0.0	0.0	0.0	0.0	0.0	0.0
58	21	0.0	0.0	0.0	0.0	0.0	0.0	84	0.0	0.0	0.0	0.0	0.0	0.0
	80	0.0	0.0	0.0	0.0	0.0	0.0	81	0.0	0.0	0.0	0.0	0.0	0.0
59	84	0.0	0.0	0.0	0.0	0.0	0.0	85	0.0	0.0	0.0	0.0	0.0	0.0
	81	0.0	0.0	0.0	0.0	0.0	0.0	82	0.0	0.0	0.0	0.0	0.0	0.0
60	85	0.0	0.0	0.0	0.0	0.0	0.0	31	0.0	0.0	0.0	0.0	0.0	0.0
	82	0.0	0.0	0.0	0.0	0.0	0.0	83	0.0	0.0	0.0	0.0	0.0	0.0
61	86	0.0	0.0	0.0	0.0	0.0	0.0	87	0.0	0.0	0.0	0.0	0.0	0.0
	71	0.0	0.0	0.0	0.0	0.0	0.0	67	0.0	0.0	0.0	0.0	0.0	0.0
62	87	0.0	0.0	0.0	0.0	0.0	0.0	88	0.0	0.0	0.0	0.0	0.0	0.0
	67	0.0	0.0	0.0	0.0	0.0	0.0	13	0.0	0.0	0.0	0.0	0.0	0.0
63	40	0.0	0.0	0.0	0.0	0.0	0.0	89	0.0	0.0	0.0	0.0	0.0	0.0
	38	0.0	0.0	0.0	0.0	0.0	0.0	86	0.0	0.0	0.0	0.0	0.0	0.0
64	89	0.0	0.0	0.0	0.0	0.0	0.0	90	0.0	0.0	0.0	0.0	0.0	0.0
	86	0.0	0.0	0.0	0.0	0.0	0.0	87	0.0	0.0	0.0	0.0	0.0	0.0
65	90	0.0	0.0	0.0	0.0	0.0	0.0	91	0.0	0.0	0.0	0.0	0.0	0.0
	87	0.0	0.0	0.0	0.0	0.0	0.0	88	0.0	0.0	0.0	0.0	0.0	0.0
66	17	0.0	0.0	0.0	0.0	0.0	0.0	92	0.0	0.0	0.0	0.0	0.0	0.0
	40	0.0	0.0	0.0	0.0	0.0	0.0	89	0.0	0.0	0.0	0.0	0.0	0.0
67	92	0.0	0.0	0.0	0.0	0.0	0.0	93	0.0	0.0	0.0	0.0	0.0	0.0
	89	0.0	0.0	0.0	0.0	0.0	0.0	90	0.0	0.0	0.0	0.0	0.0	0.0
68	93	0.0	0.0	0.0	0.0	0.0	0.0	18	0.0	0.0	0.0	0.0	0.0	0.0
	90	0.0	0.0	0.0	0.0	0.0	0.0	91	0.0	0.0	0.0	0.0	0.0	0.0
69	95	0.0	0.0	0.0	0.0	0.0	0.0	96	0.0	0.0	0.0	0.0	0.0	0.0
	91	0.0	0.0	0.0	0.0	0.0	0.0	88	0.0	0.0	0.0	0.0	0.0	0.0
70	96	0.0	0.0	0.0	0.0	0.0	0.0	61	0.0	0.0	0.0	0.0	0.0	0.0
	88	0.0	0.0	0.0	0.0	0.0	0.0	13	0.0	0.0	0.0	0.0	0.0	0.0
71	97	0.0	0.0	0.0	0.0	0.0	0.0	98	0.0	0.0	0.0	0.0	0.0	0.0
	94	0.0	0.0	0.0	0.0	0.0	0.0	95	0.0	0.0	0.0	0.0	0.0	0.0
72	98	0.0	0.0	0.0	0.0	0.0	0.0	99	0.0	0.0	0.0	0.0	0.0	0.0
	95	0.0	0.0	0.0	0.0	0.0	0.0	96	0.0	0.0	0.0	0.0	0.0	0.0
73	99	0.0	0.0	0.0	0.0	0.0	0.0	57	0.0	0.0	0.0	0.0	0.0	0.0
	96	0.0	0.0	0.0	0.0	0.0	0.0	61	0.0	0.0	0.0	0.0	0.0	0.0
74	19	0.0	0.0	0.0	0.0	0.0	0.0	100	0.0	0.0	0.0	0.0	0.0	0.0
	97	0.0	0.0	0.0	0.0	0.0	0.0	98	0.0	0.0	0.0	0.0	0.0	0.0
75	100	0.0	0.0	0.0	0.0	0.0	0.0	101	0.0	0.0	0.0	0.0	0.0	0.0
	98	0.0	0.0	0.0	0.0	0.0	0.0	99	0.0	0.0	0.0	0.0	0.0	0.0
76	101	0.0	0.0	0.0	0.0	0.0	0.0	11	0.0	0.0	0.0	0.0	0.0	0.0
	99	0.0	0.0	0.0	0.0	0.0	0.0	57	0.0	0.0	0.0	0.0	0.0	0.0
77	103	0.0	0.0	0.0	0.0	0.0	0.0	104	0.0	0.0	0.0	0.0	0.0	0.0
	84	0.0	0.0	0.0	0.0	0.0	0.0	85	0.0	0.0	0.0	0.0	0.0	0.0
78	104	0.0	0.0	0.0	0.0	0.0	0.0	105	0.0	0.0	0.0	0.0	0.0	0.0
	85	0.0	0.0	0.0	0.0	0.0	0.0	31	0.0	0.0	0.0	0.0	0.0	0.0
79	106	0.0	0.0	0.0	0.0	0.0	0.0	107	0.0	0.0	0.0	0.0	0.0	0.0
	102	0.0	0.0	0.0	0.0	0.0	0.0	103	0.0	0.0	0.0	0.0	0.0	0.0
80	107	0.0	0.0	0.0	0.0	0.0	0.0	108	0.0	0.0	0.0	0.0	0.0	0.0
	103	0.0	0.0	0.0	0.0	0.0	0.0	104	0.0	0.0	0.0	0.0	0.0	0.0
81	108	0.0	0.0	0.0	0.0	0.0	0.0	109	0.0	0.0	0.0	0.0	0.0	0.0
	104	0.0	0.0	0.0	0.0	0.0	0.0	105	0.0	0.0	0.0	0.0	0.0	0.0
82	22	0.0	0.0	0.0	0.0	0.0	0.0	110	0.0	0.0	0.0	0.0	0.0	0.0
	106	0.0	0.0	0.0	0.0	0.0	0.0	107	0.0	0.0	0.0	0.0	0.0	0.0
83	110	0.0	0.0	0.0	0.0	0.0	0.0	111	0.0	0.0	0.0	0.0	0.0	0.0
	107	0.0	0.0	0.0	0.0	0.0	0.0	108	0.0	0.0	0.0	0.0	0.0	0.0
84	111	0.0	0.0	0.0	0.0	0.0	0.0	30	0.0	0.0	0.0	0.0	0.0	0.0
	108	0.0	0.0	0.0	0.0	0.0	0.0	109	0.0	0.0	0.0	0.0	0.0	0.0
85	113	0.0	0.0	0.0	0.0	0.0	0.0	80	0.0	0.0	0.0	0.0	0.0	0.0
	112	0.0	0.0	0.0	0.0	0.0	0.0	76	0.0	0.0	0.0	0.0	0.0	0.0
86	23	0.0	0.0	0.0	0.0	0.0	0.0	21	0.0	0.0	0.0	0.0	0.0	0.0
	113	0.0	0.0	0.0	0.0	0.0	0.0	80	0.0	0.0	0.0	0.0	0.0	0.0
87	115	0.0	0.0	0.0	0.0	0.0	0.0	113	0.0	0.0	0.0	0.0	0.0	0.0
	114	0.0	0.0	0.0	0.0	0.0	0.0	112	0.0	0.0	0.0	0.0	0.0	0.0
88	20	0.0	0.0	0.0	0.0	0.0	0.0	23	0.0	0.0	0.0	0.0	0.0	0.0
	115	0.0	0.0	0.0	0.0	0.0	0.0	113	0.0	0.0	0.0	0.0	0.0	0.0
89	116	0.0	0.0	0.0	0.0	0.0	0.0	117	0.0	0.0	0.0	0.0	0.0	0.0
	102	0.0	0.0	0.0	0.0	0.0	0.0	106	0.0	0.0	0.0	0.0	0.0	0.0
90	117	0.0	0.0	0.0	0.0	0.0	0.0	37	0.0	0.0	0.0	0.0	0.0	0.0
	106	0.0	0.0	0.0	0.0	0.0	0.0	22	0.0	0.0	0.0	0.0	0.0	0.0
91	119	0.0	0.0	0.0	0.0	0.0	0.0	117	0.0	0.0	0.0	0.0	0.0	0.0
	118	0.0	0.0	0.0	0.0	0.0	0.0	116	0.0	0.0	0.0	0.0	0.0	0.0

Documento di proprietà **Snam Rete Gas**. La Società tutelerà i propri diritti in sede civile e penale a termini di legge.

FORZE Corr. Tors. dir. 0: SHELL

Shell Nro	Nodo N.ro	Tx (kN)	Ty (kN)	Tz (kN)	Mx (kN*m)	My (kN*m)	Mz (kN*m)	Nodo N.ro	Tx (kN)	Ty (kN)	Tz (kN)	Mx (kN*m)	My (kN*m)	Mz (kN*m)
92	34	0.0	0.0	0.0	0.0	0.0	0.0	37	0.0	0.0	0.0	0.0	0.0	0.0
	119	0.0	0.0	0.0	0.0	0.0	0.0	117	0.0	0.0	0.0	0.0	0.0	0.0
93	121	0.0	0.0	0.0	0.0	0.0	0.0	122	0.0	0.0	0.0	0.0	0.0	0.0
	43	0.0	0.0	0.0	0.0	0.0	0.0	42	0.0	0.0	0.0	0.0	0.0	0.0
94	122	0.0	0.0	0.0	0.0	0.0	0.0	123	0.0	0.0	0.0	0.0	0.0	0.0
	42	0.0	0.0	0.0	0.0	0.0	0.0	2	0.0	0.0	0.0	0.0	0.0	0.0
95	124	0.0	0.0	0.0	0.0	0.0	0.0	125	0.0	0.0	0.0	0.0	0.0	0.0
	120	0.0	0.0	0.0	0.0	0.0	0.0	121	0.0	0.0	0.0	0.0	0.0	0.0
96	125	0.0	0.0	0.0	0.0	0.0	0.0	126	0.0	0.0	0.0	0.0	0.0	0.0
	121	0.0	0.0	0.0	0.0	0.0	0.0	122	0.0	0.0	0.0	0.0	0.0	0.0
97	126	0.0	0.0	0.0	0.0	0.0	0.0	127	0.0	0.0	0.0	0.0	0.0	0.0
	122	0.0	0.0	0.0	0.0	0.0	0.0	123	0.0	0.0	0.0	0.0	0.0	0.0
98	26	0.0	0.0	0.0	0.0	0.0	0.0	128	0.0	0.0	0.0	0.0	0.0	0.0
	124	0.0	0.0	0.0	0.0	0.0	0.0	125	0.0	0.0	0.0	0.0	0.0	0.0
99	128	0.0	0.0	0.0	0.0	0.0	0.0	129	0.0	0.0	0.0	0.0	0.0	0.0
	125	0.0	0.0	0.0	0.0	0.0	0.0	126	0.0	0.0	0.0	0.0	0.0	0.0
100	129	0.0	0.0	0.0	0.0	0.0	0.0	27	0.0	0.0	0.0	0.0	0.0	0.0
	126	0.0	0.0	0.0	0.0	0.0	0.0	127	0.0	0.0	0.0	0.0	0.0	0.0
101	130	0.0	0.0	0.0	0.0	0.0	0.0	131	0.0	0.0	0.0	0.0	0.0	0.0
	68	0.0	0.0	0.0	0.0	0.0	0.0	64	0.0	0.0	0.0	0.0	0.0	0.0
102	131	0.0	0.0	0.0	0.0	0.0	0.0	132	0.0	0.0	0.0	0.0	0.0	0.0
	64	0.0	0.0	0.0	0.0	0.0	0.0	5	0.0	0.0	0.0	0.0	0.0	0.0
103	16	0.0	0.0	0.0	0.0	0.0	0.0	133	0.0	0.0	0.0	0.0	0.0	0.0
	10	0.0	0.0	0.0	0.0	0.0	0.0	130	0.0	0.0	0.0	0.0	0.0	0.0
104	133	0.0	0.0	0.0	0.0	0.0	0.0	134	0.0	0.0	0.0	0.0	0.0	0.0
	130	0.0	0.0	0.0	0.0	0.0	0.0	131	0.0	0.0	0.0	0.0	0.0	0.0
105	134	0.0	0.0	0.0	0.0	0.0	0.0	135	0.0	0.0	0.0	0.0	0.0	0.0
	131	0.0	0.0	0.0	0.0	0.0	0.0	132	0.0	0.0	0.0	0.0	0.0	0.0
106	3	0.0	0.0	0.0	0.0	0.0	0.0	136	0.0	0.0	0.0	0.0	0.0	0.0
	16	0.0	0.0	0.0	0.0	0.0	0.0	133	0.0	0.0	0.0	0.0	0.0	0.0
107	136	0.0	0.0	0.0	0.0	0.0	0.0	137	0.0	0.0	0.0	0.0	0.0	0.0
	133	0.0	0.0	0.0	0.0	0.0	0.0	134	0.0	0.0	0.0	0.0	0.0	0.0
108	137	0.0	0.0	0.0	0.0	0.0	0.0	138	0.0	0.0	0.0	0.0	0.0	0.0
	134	0.0	0.0	0.0	0.0	0.0	0.0	135	0.0	0.0	0.0	0.0	0.0	0.0
109	139	0.0	0.0	0.0	0.0	0.0	0.0	140	0.0	0.0	0.0	0.0	0.0	0.0
	3	0.0	0.0	0.0	0.0	0.0	0.0	136	0.0	0.0	0.0	0.0	0.0	0.0
110	140	0.0	0.0	0.0	0.0	0.0	0.0	141	0.0	0.0	0.0	0.0	0.0	0.0
	136	0.0	0.0	0.0	0.0	0.0	0.0	137	0.0	0.0	0.0	0.0	0.0	0.0
111	141	0.0	0.0	0.0	0.0	0.0	0.0	142	0.0	0.0	0.0	0.0	0.0	0.0
	137	0.0	0.0	0.0	0.0	0.0	0.0	138	0.0	0.0	0.0	0.0	0.0	0.0
112	143	0.0	0.0	0.0	0.0	0.0	0.0	144	0.0	0.0	0.0	0.0	0.0	0.0
	139	0.0	0.0	0.0	0.0	0.0	0.0	140	0.0	0.0	0.0	0.0	0.0	0.0
113	144	0.0	0.0	0.0	0.0	0.0	0.0	145	0.0	0.0	0.0	0.0	0.0	0.0
	140	0.0	0.0	0.0	0.0	0.0	0.0	141	0.0	0.0	0.0	0.0	0.0	0.0
114	145	0.0	0.0	0.0	0.0	0.0	0.0	146	0.0	0.0	0.0	0.0	0.0	0.0
	141	0.0	0.0	0.0	0.0	0.0	0.0	142	0.0	0.0	0.0	0.0	0.0	0.0
115	28	0.0	0.0	0.0	0.0	0.0	0.0	147	0.0	0.0	0.0	0.0	0.0	0.0
	143	0.0	0.0	0.0	0.0	0.0	0.0	144	0.0	0.0	0.0	0.0	0.0	0.0
116	147	0.0	0.0	0.0	0.0	0.0	0.0	148	0.0	0.0	0.0	0.0	0.0	0.0
	144	0.0	0.0	0.0	0.0	0.0	0.0	145	0.0	0.0	0.0	0.0	0.0	0.0
117	148	0.0	0.0	0.0	0.0	0.0	0.0	29	0.0	0.0	0.0	0.0	0.0	0.0
	145	0.0	0.0	0.0	0.0	0.0	0.0	146	0.0	0.0	0.0	0.0	0.0	0.0
118	101	0.0	0.0	0.0	0.0	0.0	0.0	115	0.0	0.0	0.0	0.0	0.0	0.0
	100	0.0	0.0	0.0	0.0	0.0	0.0	114	0.0	0.0	0.0	0.0	0.0	0.0
119	11	0.0	0.0	0.0	0.0	0.0	0.0	20	0.0	0.0	0.0	0.0	0.0	0.0
	101	0.0	0.0	0.0	0.0	0.0	0.0	115	0.0	0.0	0.0	0.0	0.0	0.0
120	149	0.0	0.0	0.0	0.0	0.0	0.0	150	0.0	0.0	0.0	0.0	0.0	0.0
	97	0.0	0.0	0.0	0.0	0.0	0.0	94	0.0	0.0	0.0	0.0	0.0	0.0
121	150	0.0	0.0	0.0	0.0	0.0	0.0	151	0.0	0.0	0.0	0.0	0.0	0.0
	94	0.0	0.0	0.0	0.0	0.0	0.0	18	0.0	0.0	0.0	0.0	0.0	0.0
122	36	0.0	0.0	0.0	0.0	0.0	0.0	152	0.0	0.0	0.0	0.0	0.0	0.0
	35	0.0	0.0	0.0	0.0	0.0	0.0	149	0.0	0.0	0.0	0.0	0.0	0.0
123	152	0.0	0.0	0.0	0.0	0.0	0.0	153	0.0	0.0	0.0	0.0	0.0	0.0
	149	0.0	0.0	0.0	0.0	0.0	0.0	150	0.0	0.0	0.0	0.0	0.0	0.0
124	153	0.0	0.0	0.0	0.0	0.0	0.0	154	0.0	0.0	0.0	0.0	0.0	0.0
	150	0.0	0.0	0.0	0.0	0.0	0.0	151	0.0	0.0	0.0	0.0	0.0	0.0
125	25	0.0	0.0	0.0	0.0	0.0	0.0	155	0.0	0.0	0.0	0.0	0.0	0.0
	36	0.0	0.0	0.0	0.0	0.0	0.0	152	0.0	0.0	0.0	0.0	0.0	0.0
126	155	0.0	0.0	0.0	0.0	0.0	0.0	156	0.0	0.0	0.0	0.0	0.0	0.0
	152	0.0	0.0	0.0	0.0	0.0	0.0	153	0.0	0.0	0.0	0.0	0.0	0.0
127	156	0.0	0.0	0.0	0.0	0.0	0.0	157	0.0	0.0	0.0	0.0	0.0	0.0
	153	0.0	0.0	0.0	0.0	0.0	0.0	154	0.0	0.0	0.0	0.0	0.0	0.0
128	74	0.0	0.0	0.0	0.0	0.0	0.0	158	0.0	0.0	0.0	0.0	0.0	0.0
	25	0.0	0.0	0.0	0.0	0.0	0.0	155	0.0	0.0	0.0	0.0	0.0	0.0
129	158	0.0	0.0	0.0	0.0	0.0	0.0	159	0.0	0.0	0.0	0.0	0.0	0.0
	155	0.0	0.0	0.0	0.0	0.0	0.0	156	0.0	0.0	0.0	0.0	0.0	0.0
130	159	0.0	0.0	0.0	0.0	0.0	0.0	160	0.0	0.0	0.0	0.0	0.0	0.0
	156	0.0	0.0	0.0	0.0	0.0	0.0	157	0.0	0.0	0.0	0.0	0.0	0.0
131	75	0.0	0.0	0.0	0.0	0.0	0.0	161	0.0	0.0	0.0	0.0	0.0	0.0
	74	0.0	0.0	0.0	0.0	0.0	0.0	158	0.0	0.0	0.0	0.0	0.0	0.0

Documento di proprietà **Snam Rete Gas**. La Società tutelerà i propri diritti in sede civile e penale a termini di legge.

FORZE Corr. Tors. dir. 0: SHELL

Shell Nro	Nodo N.ro	Tx (kN)	Ty (kN)	Tz (kN)	Mx (kN*m)	My (kN*m)	Mz (kN*m)	Nodo N.ro	Tx (kN)	Ty (kN)	Tz (kN)	Mx (kN*m)	My (kN*m)	Mz (kN*m)
132	161	0.0	0.0	0.0	0.0	0.0	0.0	162	0.0	0.0	0.0	0.0	0.0	0.0
	158	0.0	0.0	0.0	0.0	0.0	0.0	159	0.0	0.0	0.0	0.0	0.0	0.0
133	162	0.0	0.0	0.0	0.0	0.0	0.0	163	0.0	0.0	0.0	0.0	0.0	0.0
	159	0.0	0.0	0.0	0.0	0.0	0.0	160	0.0	0.0	0.0	0.0	0.0	0.0
134	32	0.0	0.0	0.0	0.0	0.0	0.0	164	0.0	0.0	0.0	0.0	0.0	0.0
	75	0.0	0.0	0.0	0.0	0.0	0.0	161	0.0	0.0	0.0	0.0	0.0	0.0
135	164	0.0	0.0	0.0	0.0	0.0	0.0	165	0.0	0.0	0.0	0.0	0.0	0.0
	161	0.0	0.0	0.0	0.0	0.0	0.0	162	0.0	0.0	0.0	0.0	0.0	0.0
136	165	0.0	0.0	0.0	0.0	0.0	0.0	33	0.0	0.0	0.0	0.0	0.0	0.0
	162	0.0	0.0	0.0	0.0	0.0	0.0	163	0.0	0.0	0.0	0.0	0.0	0.0
137	166	0.0	0.0	0.0	0.0	0.0	0.0	167	0.0	0.0	0.0	0.0	0.0	0.0
	58	0.0	0.0	0.0	0.0	0.0	0.0	54	0.0	0.0	0.0	0.0	0.0	0.0
138	167	0.0	0.0	0.0	0.0	0.0	0.0	34	0.0	0.0	0.0	0.0	0.0	0.0
	54	0.0	0.0	0.0	0.0	0.0	0.0	7	0.0	0.0	0.0	0.0	0.0	0.0
139	135	0.0	0.0	0.0	0.0	0.0	0.0	168	0.0	0.0	0.0	0.0	0.0	0.0
	132	0.0	0.0	0.0	0.0	0.0	0.0	166	0.0	0.0	0.0	0.0	0.0	0.0
140	168	0.0	0.0	0.0	0.0	0.0	0.0	169	0.0	0.0	0.0	0.0	0.0	0.0
	166	0.0	0.0	0.0	0.0	0.0	0.0	167	0.0	0.0	0.0	0.0	0.0	0.0
141	169	0.0	0.0	0.0	0.0	0.0	0.0	37	0.0	0.0	0.0	0.0	0.0	0.0
	167	0.0	0.0	0.0	0.0	0.0	0.0	34	0.0	0.0	0.0	0.0	0.0	0.0
142	138	0.0	0.0	0.0	0.0	0.0	0.0	170	0.0	0.0	0.0	0.0	0.0	0.0
	135	0.0	0.0	0.0	0.0	0.0	0.0	168	0.0	0.0	0.0	0.0	0.0	0.0
143	170	0.0	0.0	0.0	0.0	0.0	0.0	171	0.0	0.0	0.0	0.0	0.0	0.0
	168	0.0	0.0	0.0	0.0	0.0	0.0	169	0.0	0.0	0.0	0.0	0.0	0.0
144	171	0.0	0.0	0.0	0.0	0.0	0.0	22	0.0	0.0	0.0	0.0	0.0	0.0
	169	0.0	0.0	0.0	0.0	0.0	0.0	37	0.0	0.0	0.0	0.0	0.0	0.0
145	142	0.0	0.0	0.0	0.0	0.0	0.0	172	0.0	0.0	0.0	0.0	0.0	0.0
	138	0.0	0.0	0.0	0.0	0.0	0.0	170	0.0	0.0	0.0	0.0	0.0	0.0
146	172	0.0	0.0	0.0	0.0	0.0	0.0	173	0.0	0.0	0.0	0.0	0.0	0.0
	170	0.0	0.0	0.0	0.0	0.0	0.0	171	0.0	0.0	0.0	0.0	0.0	0.0
147	173	0.0	0.0	0.0	0.0	0.0	0.0	110	0.0	0.0	0.0	0.0	0.0	0.0
	171	0.0	0.0	0.0	0.0	0.0	0.0	22	0.0	0.0	0.0	0.0	0.0	0.0
148	146	0.0	0.0	0.0	0.0	0.0	0.0	174	0.0	0.0	0.0	0.0	0.0	0.0
	142	0.0	0.0	0.0	0.0	0.0	0.0	172	0.0	0.0	0.0	0.0	0.0	0.0
149	174	0.0	0.0	0.0	0.0	0.0	0.0	175	0.0	0.0	0.0	0.0	0.0	0.0
	172	0.0	0.0	0.0	0.0	0.0	0.0	173	0.0	0.0	0.0	0.0	0.0	0.0
150	175	0.0	0.0	0.0	0.0	0.0	0.0	111	0.0	0.0	0.0	0.0	0.0	0.0
	173	0.0	0.0	0.0	0.0	0.0	0.0	110	0.0	0.0	0.0	0.0	0.0	0.0
151	29	0.0	0.0	0.0	0.0	0.0	0.0	176	0.0	0.0	0.0	0.0	0.0	0.0
	146	0.0	0.0	0.0	0.0	0.0	0.0	174	0.0	0.0	0.0	0.0	0.0	0.0
152	176	0.0	0.0	0.0	0.0	0.0	0.0	177	0.0	0.0	0.0	0.0	0.0	0.0
	174	0.0	0.0	0.0	0.0	0.0	0.0	175	0.0	0.0	0.0	0.0	0.0	0.0
153	177	0.0	0.0	0.0	0.0	0.0	0.0	30	0.0	0.0	0.0	0.0	0.0	0.0
	175	0.0	0.0	0.0	0.0	0.0	0.0	111	0.0	0.0	0.0	0.0	0.0	0.0
154	178	0.0	0.0	0.0	0.0	0.0	0.0	179	0.0	0.0	0.0	0.0	0.0	0.0
	93	0.0	0.0	0.0	0.0	0.0	0.0	92	0.0	0.0	0.0	0.0	0.0	0.0
155	179	0.0	0.0	0.0	0.0	0.0	0.0	12	0.0	0.0	0.0	0.0	0.0	0.0
	92	0.0	0.0	0.0	0.0	0.0	0.0	17	0.0	0.0	0.0	0.0	0.0	0.0
156	154	0.0	0.0	0.0	0.0	0.0	0.0	180	0.0	0.0	0.0	0.0	0.0	0.0
	151	0.0	0.0	0.0	0.0	0.0	0.0	178	0.0	0.0	0.0	0.0	0.0	0.0
157	180	0.0	0.0	0.0	0.0	0.0	0.0	181	0.0	0.0	0.0	0.0	0.0	0.0
	178	0.0	0.0	0.0	0.0	0.0	0.0	179	0.0	0.0	0.0	0.0	0.0	0.0
158	181	0.0	0.0	0.0	0.0	0.0	0.0	15	0.0	0.0	0.0	0.0	0.0	0.0
	179	0.0	0.0	0.0	0.0	0.0	0.0	12	0.0	0.0	0.0	0.0	0.0	0.0
159	157	0.0	0.0	0.0	0.0	0.0	0.0	182	0.0	0.0	0.0	0.0	0.0	0.0
	154	0.0	0.0	0.0	0.0	0.0	0.0	180	0.0	0.0	0.0	0.0	0.0	0.0
160	182	0.0	0.0	0.0	0.0	0.0	0.0	183	0.0	0.0	0.0	0.0	0.0	0.0
	180	0.0	0.0	0.0	0.0	0.0	0.0	181	0.0	0.0	0.0	0.0	0.0	0.0
161	183	0.0	0.0	0.0	0.0	0.0	0.0	9	0.0	0.0	0.0	0.0	0.0	0.0
	181	0.0	0.0	0.0	0.0	0.0	0.0	15	0.0	0.0	0.0	0.0	0.0	0.0
162	160	0.0	0.0	0.0	0.0	0.0	0.0	184	0.0	0.0	0.0	0.0	0.0	0.0
	157	0.0	0.0	0.0	0.0	0.0	0.0	182	0.0	0.0	0.0	0.0	0.0	0.0
163	184	0.0	0.0	0.0	0.0	0.0	0.0	185	0.0	0.0	0.0	0.0	0.0	0.0
	182	0.0	0.0	0.0	0.0	0.0	0.0	183	0.0	0.0	0.0	0.0	0.0	0.0
164	185	0.0	0.0	0.0	0.0	0.0	0.0	120	0.0	0.0	0.0	0.0	0.0	0.0
	183	0.0	0.0	0.0	0.0	0.0	0.0	9	0.0	0.0	0.0	0.0	0.0	0.0
165	163	0.0	0.0	0.0	0.0	0.0	0.0	186	0.0	0.0	0.0	0.0	0.0	0.0
	160	0.0	0.0	0.0	0.0	0.0	0.0	184	0.0	0.0	0.0	0.0	0.0	0.0
166	186	0.0	0.0	0.0	0.0	0.0	0.0	187	0.0	0.0	0.0	0.0	0.0	0.0
	184	0.0	0.0	0.0	0.0	0.0	0.0	185	0.0	0.0	0.0	0.0	0.0	0.0
167	187	0.0	0.0	0.0	0.0	0.0	0.0	124	0.0	0.0	0.0	0.0	0.0	0.0
	185	0.0	0.0	0.0	0.0	0.0	0.0	120	0.0	0.0	0.0	0.0	0.0	0.0
168	33	0.0	0.0	0.0	0.0	0.0	0.0	188	0.0	0.0	0.0	0.0	0.0	0.0
	163	0.0	0.0	0.0	0.0	0.0	0.0	186	0.0	0.0	0.0	0.0	0.0	0.0
169	188	0.0	0.0	0.0	0.0	0.0	0.0	189	0.0	0.0	0.0	0.0	0.0	0.0
	186	0.0	0.0	0.0	0.0	0.0	0.0	187	0.0	0.0	0.0	0.0	0.0	0.0
170	189	0.0	0.0	0.0	0.0	0.0	0.0	26	0.0	0.0	0.0	0.0	0.0	0.0
	187	0.0	0.0	0.0	0.0	0.0	0.0	124	0.0	0.0	0.0	0.0	0.0	0.0
171	190	0.0	0.0	0.0	0.0	0.0	0.0	191	0.0	0.0	0.0	0.0	0.0	0.0
	73	0.0	0.0	0.0	0.0	0.0	0.0	72	0.0	0.0	0.0	0.0	0.0	0.0

Documento di proprietà **Snam Rete Gas**. La Società tutelerà i propri diritti in sede civile e penale a termini di legge.

FORZE Corr. Tors. dir. 0: SHELL

Shell Nro	Nodo N.ro	Tx (kN)	Ty (kN)	Tz (kN)	Mx (kN*m)	My (kN*m)	Mz (kN*m)	Nodo N.ro	Tx (kN)	Ty (kN)	Tz (kN)	Mx (kN*m)	My (kN*m)	Mz (kN*m)
172	191	0.0	0.0	0.0	0.0	0.0	0.0	139	0.0	0.0	0.0	0.0	0.0	0.0
	72	0.0	0.0	0.0	0.0	0.0	0.0	3	0.0	0.0	0.0	0.0	0.0	0.0
173	127	0.0	0.0	0.0	0.0	0.0	0.0	192	0.0	0.0	0.0	0.0	0.0	0.0
	123	0.0	0.0	0.0	0.0	0.0	0.0	190	0.0	0.0	0.0	0.0	0.0	0.0
174	192	0.0	0.0	0.0	0.0	0.0	0.0	193	0.0	0.0	0.0	0.0	0.0	0.0
	190	0.0	0.0	0.0	0.0	0.0	0.0	191	0.0	0.0	0.0	0.0	0.0	0.0
175	193	0.0	0.0	0.0	0.0	0.0	0.0	143	0.0	0.0	0.0	0.0	0.0	0.0
	191	0.0	0.0	0.0	0.0	0.0	0.0	139	0.0	0.0	0.0	0.0	0.0	0.0
176	27	0.0	0.0	0.0	0.0	0.0	0.0	194	0.0	0.0	0.0	0.0	0.0	0.0
	127	0.0	0.0	0.0	0.0	0.0	0.0	192	0.0	0.0	0.0	0.0	0.0	0.0
177	194	0.0	0.0	0.0	0.0	0.0	0.0	195	0.0	0.0	0.0	0.0	0.0	0.0
	192	0.0	0.0	0.0	0.0	0.0	0.0	193	0.0	0.0	0.0	0.0	0.0	0.0
178	195	0.0	0.0	0.0	0.0	0.0	0.0	28	0.0	0.0	0.0	0.0	0.0	0.0
	193	0.0	0.0	0.0	0.0	0.0	0.0	143	0.0	0.0	0.0	0.0	0.0	0.0
179	52	0.0	0.0	0.0	0.0	0.0	0.0	119	0.0	0.0	0.0	0.0	0.0	0.0
	53	0.0	0.0	0.0	0.0	0.0	0.0	118	0.0	0.0	0.0	0.0	0.0	0.0
180	7	0.0	0.0	0.0	0.0	0.0	0.0	34	0.0	0.0	0.0	0.0	0.0	0.0
	52	0.0	0.0	0.0	0.0	0.0	0.0	119	0.0	0.0	0.0	0.0	0.0	0.0

FORZE Corr. Tors. dir. 90: SHELL

Shell Nro	Nodo N.ro	Tx (kN)	Ty (kN)	Tz (kN)	Mx (kN*m)	My (kN*m)	Mz (kN*m)	Nodo N.ro	Tx (kN)	Ty (kN)	Tz (kN)	Mx (kN*m)	My (kN*m)	Mz (kN*m)
1	38	0.0	0.0	0.0	0.0	0.0	0.0	39	0.0	0.0	0.0	0.0	0.0	0.0
	14	0.0	0.0	0.0	0.0	0.0	0.0	1	0.0	0.0	0.0	0.0	0.0	0.0
2	6	0.0	0.0	0.0	0.0	0.0	0.0	44	0.0	0.0	0.0	0.0	0.0	0.0
	2	0.0	0.0	0.0	0.0	0.0	0.0	42	0.0	0.0	0.0	0.0	0.0	0.0
3	39	0.0	0.0	0.0	0.0	0.0	0.0	44	0.0	0.0	0.0	0.0	0.0	0.0
	1	0.0	0.0	0.0	0.0	0.0	0.0	6	0.0	0.0	0.0	0.0	0.0	0.0
4	46	0.0	0.0	0.0	0.0	0.0	0.0	47	0.0	0.0	0.0	0.0	0.0	0.0
	10	0.0	0.0	0.0	0.0	0.0	0.0	16	0.0	0.0	0.0	0.0	0.0	0.0
5	50	0.0	0.0	0.0	0.0	0.0	0.0	46	0.0	0.0	0.0	0.0	0.0	0.0
	4	0.0	0.0	0.0	0.0	0.0	0.0	10	0.0	0.0	0.0	0.0	0.0	0.0
6	54	0.0	0.0	0.0	0.0	0.0	0.0	55	0.0	0.0	0.0	0.0	0.0	0.0
	7	0.0	0.0	0.0	0.0	0.0	0.0	52	0.0	0.0	0.0	0.0	0.0	0.0
7	64	0.0	0.0	0.0	0.0	0.0	0.0	65	0.0	0.0	0.0	0.0	0.0	0.0
	5	0.0	0.0	0.0	0.0	0.0	0.0	62	0.0	0.0	0.0	0.0	0.0	0.0
8	47	0.0	0.0	0.0	0.0	0.0	0.0	72	0.0	0.0	0.0	0.0	0.0	0.0
	16	0.0	0.0	0.0	0.0	0.0	0.0	3	0.0	0.0	0.0	0.0	0.0	0.0
9	76	0.0	0.0	0.0	0.0	0.0	0.0	77	0.0	0.0	0.0	0.0	0.0	0.0
	25	0.0	0.0	0.0	0.0	0.0	0.0	74	0.0	0.0	0.0	0.0	0.0	0.0
10	38	0.0	0.0	0.0	0.0	0.0	0.0	86	0.0	0.0	0.0	0.0	0.0	0.0
	14	0.0	0.0	0.0	0.0	0.0	0.0	71	0.0	0.0	0.0	0.0	0.0	0.0
11	94	0.0	0.0	0.0	0.0	0.0	0.0	95	0.0	0.0	0.0	0.0	0.0	0.0
	18	0.0	0.0	0.0	0.0	0.0	0.0	91	0.0	0.0	0.0	0.0	0.0	0.0
12	102	0.0	0.0	0.0	0.0	0.0	0.0	103	0.0	0.0	0.0	0.0	0.0	0.0
	21	0.0	0.0	0.0	0.0	0.0	0.0	84	0.0	0.0	0.0	0.0	0.0	0.0
13	112	0.0	0.0	0.0	0.0	0.0	0.0	76	0.0	0.0	0.0	0.0	0.0	0.0
	36	0.0	0.0	0.0	0.0	0.0	0.0	25	0.0	0.0	0.0	0.0	0.0	0.0
14	114	0.0	0.0	0.0	0.0	0.0	0.0	112	0.0	0.0	0.0	0.0	0.0	0.0
	35	0.0	0.0	0.0	0.0	0.0	0.0	36	0.0	0.0	0.0	0.0	0.0	0.0
15	24	0.0	0.0	0.0	0.0	0.0	0.0	116	0.0	0.0	0.0	0.0	0.0	0.0
	21	0.0	0.0	0.0	0.0	0.0	0.0	102	0.0	0.0	0.0	0.0	0.0	0.0
16	118	0.0	0.0	0.0	0.0	0.0	0.0	116	0.0	0.0	0.0	0.0	0.0	0.0
	20	0.0	0.0	0.0	0.0	0.0	0.0	24	0.0	0.0	0.0	0.0	0.0	0.0
17	120	0.0	0.0	0.0	0.0	0.0	0.0	121	0.0	0.0	0.0	0.0	0.0	0.0
	9	0.0	0.0	0.0	0.0	0.0	0.0	43	0.0	0.0	0.0	0.0	0.0	0.0
18	10	0.0	0.0	0.0	0.0	0.0	0.0	130	0.0	0.0	0.0	0.0	0.0	0.0
	4	0.0	0.0	0.0	0.0	0.0	0.0	68	0.0	0.0	0.0	0.0	0.0	0.0
19	100	0.0	0.0	0.0	0.0	0.0	0.0	114	0.0	0.0	0.0	0.0	0.0	0.0
	19	0.0	0.0	0.0	0.0	0.0	0.0	35	0.0	0.0	0.0	0.0	0.0	0.0
20	35	0.0	0.0	0.0	0.0	0.0	0.0	149	0.0	0.0	0.0	0.0	0.0	0.0
	19	0.0	0.0	0.0	0.0	0.0	0.0	97	0.0	0.0	0.0	0.0	0.0	0.0
21	132	0.0	0.0	0.0	0.0	0.0	0.0	166	0.0	0.0	0.0	0.0	0.0	0.0
	5	0.0	0.0	0.0	0.0	0.0	0.0	58	0.0	0.0	0.0	0.0	0.0	0.0
22	151	0.0	0.0	0.0	0.0	0.0	0.0	178	0.0	0.0	0.0	0.0	0.0	0.0
	18	0.0	0.0	0.0	0.0	0.0	0.0	93	0.0	0.0	0.0	0.0	0.0	0.0
23	123	0.0	0.0	0.0	0.0	0.0	0.0	190	0.0	0.0	0.0	0.0	0.0	0.0
	2	0.0	0.0	0.0	0.0	0.0	0.0	73	0.0	0.0	0.0	0.0	0.0	0.0
24	53	0.0	0.0	0.0	0.0	0.0	0.0	118	0.0	0.0	0.0	0.0	0.0	0.0
	11	0.0	0.0	0.0	0.0	0.0	0.0	20	0.0	0.0	0.0	0.0	0.0	0.0
25	40	0.0	0.0	0.0	0.0	0.0	0.0	41	0.0	0.0	0.0	0.0	0.0	0.0
	38	0.0	0.0	0.0	0.0	0.0	0.0	39	0.0	0.0	0.0	0.0	0.0	0.0
26	17	0.0	0.0	0.0	0.0	0.0	0.0	12	0.0	0.0	0.0	0.0	0.0	0.0
	40	0.0	0.0	0.0	0.0	0.0	0.0	41	0.0	0.0	0.0	0.0	0.0	0.0
27	44	0.0	0.0	0.0	0.0	0.0	0.0	45	0.0	0.0	0.0	0.0	0.0	0.0
	42	0.0	0.0	0.0	0.0	0.0	0.0	43	0.0	0.0	0.0	0.0	0.0	0.0
28	45	0.0	0.0	0.0	0.0	0.0	0.0	15	0.0	0.0	0.0	0.0	0.0	0.0
	43	0.0	0.0	0.0	0.0	0.0	0.0	9	0.0	0.0	0.0	0.0	0.0	0.0
29	41	0.0	0.0	0.0	0.0	0.0	0.0	45	0.0	0.0	0.0	0.0	0.0	0.0
	39	0.0	0.0	0.0	0.0	0.0	0.0	44	0.0	0.0	0.0	0.0	0.0	0.0

Documento di proprietà **Snam Rete Gas**. La Società tutelerà i propri diritti in sede civile e penale a termini di legge.

FORZE Corr. Tors. dir. 90: SHELL

Shell Nro	Nodo N.ro	Tx (kN)	Ty (kN)	Tz (kN)	Mx (kN*m)	My (kN*m)	Mz (kN*m)	Nodo N.ro	Tx (kN)	Ty (kN)	Tz (kN)	Mx (kN*m)	My (kN*m)	Mz (kN*m)
30	12	0.0	0.0	0.0	0.0	0.0	0.0	15	0.0	0.0	0.0	0.0	0.0	0.0
	41	0.0	0.0	0.0	0.0	0.0	0.0	45	0.0	0.0	0.0	0.0	0.0	0.0
31	48	0.0	0.0	0.0	0.0	0.0	0.0	49	0.0	0.0	0.0	0.0	0.0	0.0
	46	0.0	0.0	0.0	0.0	0.0	0.0	47	0.0	0.0	0.0	0.0	0.0	0.0
32	1	0.0	0.0	0.0	0.0	0.0	0.0	8	0.0	0.0	0.0	0.0	0.0	0.0
	48	0.0	0.0	0.0	0.0	0.0	0.0	49	0.0	0.0	0.0	0.0	0.0	0.0
33	51	0.0	0.0	0.0	0.0	0.0	0.0	48	0.0	0.0	0.0	0.0	0.0	0.0
	50	0.0	0.0	0.0	0.0	0.0	0.0	46	0.0	0.0	0.0	0.0	0.0	0.0
34	14	0.0	0.0	0.0	0.0	0.0	0.0	1	0.0	0.0	0.0	0.0	0.0	0.0
	51	0.0	0.0	0.0	0.0	0.0	0.0	48	0.0	0.0	0.0	0.0	0.0	0.0
35	55	0.0	0.0	0.0	0.0	0.0	0.0	56	0.0	0.0	0.0	0.0	0.0	0.0
	52	0.0	0.0	0.0	0.0	0.0	0.0	53	0.0	0.0	0.0	0.0	0.0	0.0
36	56	0.0	0.0	0.0	0.0	0.0	0.0	57	0.0	0.0	0.0	0.0	0.0	0.0
	53	0.0	0.0	0.0	0.0	0.0	0.0	11	0.0	0.0	0.0	0.0	0.0	0.0
37	58	0.0	0.0	0.0	0.0	0.0	0.0	59	0.0	0.0	0.0	0.0	0.0	0.0
	54	0.0	0.0	0.0	0.0	0.0	0.0	55	0.0	0.0	0.0	0.0	0.0	0.0
38	59	0.0	0.0	0.0	0.0	0.0	0.0	60	0.0	0.0	0.0	0.0	0.0	0.0
	55	0.0	0.0	0.0	0.0	0.0	0.0	56	0.0	0.0	0.0	0.0	0.0	0.0
39	60	0.0	0.0	0.0	0.0	0.0	0.0	61	0.0	0.0	0.0	0.0	0.0	0.0
	56	0.0	0.0	0.0	0.0	0.0	0.0	57	0.0	0.0	0.0	0.0	0.0	0.0
40	5	0.0	0.0	0.0	0.0	0.0	0.0	62	0.0	0.0	0.0	0.0	0.0	0.0
	58	0.0	0.0	0.0	0.0	0.0	0.0	59	0.0	0.0	0.0	0.0	0.0	0.0
41	62	0.0	0.0	0.0	0.0	0.0	0.0	63	0.0	0.0	0.0	0.0	0.0	0.0
	59	0.0	0.0	0.0	0.0	0.0	0.0	60	0.0	0.0	0.0	0.0	0.0	0.0
42	63	0.0	0.0	0.0	0.0	0.0	0.0	13	0.0	0.0	0.0	0.0	0.0	0.0
	60	0.0	0.0	0.0	0.0	0.0	0.0	61	0.0	0.0	0.0	0.0	0.0	0.0
43	65	0.0	0.0	0.0	0.0	0.0	0.0	66	0.0	0.0	0.0	0.0	0.0	0.0
	62	0.0	0.0	0.0	0.0	0.0	0.0	63	0.0	0.0	0.0	0.0	0.0	0.0
44	66	0.0	0.0	0.0	0.0	0.0	0.0	67	0.0	0.0	0.0	0.0	0.0	0.0
	63	0.0	0.0	0.0	0.0	0.0	0.0	13	0.0	0.0	0.0	0.0	0.0	0.0
45	68	0.0	0.0	0.0	0.0	0.0	0.0	69	0.0	0.0	0.0	0.0	0.0	0.0
	64	0.0	0.0	0.0	0.0	0.0	0.0	65	0.0	0.0	0.0	0.0	0.0	0.0
46	69	0.0	0.0	0.0	0.0	0.0	0.0	70	0.0	0.0	0.0	0.0	0.0	0.0
	65	0.0	0.0	0.0	0.0	0.0	0.0	66	0.0	0.0	0.0	0.0	0.0	0.0
47	70	0.0	0.0	0.0	0.0	0.0	0.0	71	0.0	0.0	0.0	0.0	0.0	0.0
	66	0.0	0.0	0.0	0.0	0.0	0.0	67	0.0	0.0	0.0	0.0	0.0	0.0
48	4	0.0	0.0	0.0	0.0	0.0	0.0	50	0.0	0.0	0.0	0.0	0.0	0.0
	68	0.0	0.0	0.0	0.0	0.0	0.0	69	0.0	0.0	0.0	0.0	0.0	0.0
49	50	0.0	0.0	0.0	0.0	0.0	0.0	51	0.0	0.0	0.0	0.0	0.0	0.0
	69	0.0	0.0	0.0	0.0	0.0	0.0	70	0.0	0.0	0.0	0.0	0.0	0.0
50	51	0.0	0.0	0.0	0.0	0.0	0.0	14	0.0	0.0	0.0	0.0	0.0	0.0
	70	0.0	0.0	0.0	0.0	0.0	0.0	71	0.0	0.0	0.0	0.0	0.0	0.0
51	49	0.0	0.0	0.0	0.0	0.0	0.0	73	0.0	0.0	0.0	0.0	0.0	0.0
	47	0.0	0.0	0.0	0.0	0.0	0.0	72	0.0	0.0	0.0	0.0	0.0	0.0
52	8	0.0	0.0	0.0	0.0	0.0	0.0	2	0.0	0.0	0.0	0.0	0.0	0.0
	49	0.0	0.0	0.0	0.0	0.0	0.0	73	0.0	0.0	0.0	0.0	0.0	0.0
53	77	0.0	0.0	0.0	0.0	0.0	0.0	78	0.0	0.0	0.0	0.0	0.0	0.0
	74	0.0	0.0	0.0	0.0	0.0	0.0	75	0.0	0.0	0.0	0.0	0.0	0.0
54	78	0.0	0.0	0.0	0.0	0.0	0.0	79	0.0	0.0	0.0	0.0	0.0	0.0
	75	0.0	0.0	0.0	0.0	0.0	0.0	32	0.0	0.0	0.0	0.0	0.0	0.0
55	80	0.0	0.0	0.0	0.0	0.0	0.0	81	0.0	0.0	0.0	0.0	0.0	0.0
	76	0.0	0.0	0.0	0.0	0.0	0.0	77	0.0	0.0	0.0	0.0	0.0	0.0
56	81	0.0	0.0	0.0	0.0	0.0	0.0	82	0.0	0.0	0.0	0.0	0.0	0.0
	77	0.0	0.0	0.0	0.0	0.0	0.0	78	0.0	0.0	0.0	0.0	0.0	0.0
57	82	0.0	0.0	0.0	0.0	0.0	0.0	83	0.0	0.0	0.0	0.0	0.0	0.0
	78	0.0	0.0	0.0	0.0	0.0	0.0	79	0.0	0.0	0.0	0.0	0.0	0.0
58	21	0.0	0.0	0.0	0.0	0.0	0.0	84	0.0	0.0	0.0	0.0	0.0	0.0
	80	0.0	0.0	0.0	0.0	0.0	0.0	81	0.0	0.0	0.0	0.0	0.0	0.0
59	84	0.0	0.0	0.0	0.0	0.0	0.0	85	0.0	0.0	0.0	0.0	0.0	0.0
	81	0.0	0.0	0.0	0.0	0.0	0.0	82	0.0	0.0	0.0	0.0	0.0	0.0
60	85	0.0	0.0	0.0	0.0	0.0	0.0	31	0.0	0.0	0.0	0.0	0.0	0.0
	82	0.0	0.0	0.0	0.0	0.0	0.0	83	0.0	0.0	0.0	0.0	0.0	0.0
61	86	0.0	0.0	0.0	0.0	0.0	0.0	87	0.0	0.0	0.0	0.0	0.0	0.0
	71	0.0	0.0	0.0	0.0	0.0	0.0	67	0.0	0.0	0.0	0.0	0.0	0.0
62	87	0.0	0.0	0.0	0.0	0.0	0.0	88	0.0	0.0	0.0	0.0	0.0	0.0
	67	0.0	0.0	0.0	0.0	0.0	0.0	13	0.0	0.0	0.0	0.0	0.0	0.0
63	40	0.0	0.0	0.0	0.0	0.0	0.0	89	0.0	0.0	0.0	0.0	0.0	0.0
	38	0.0	0.0	0.0	0.0	0.0	0.0	86	0.0	0.0	0.0	0.0	0.0	0.0
64	89	0.0	0.0	0.0	0.0	0.0	0.0	90	0.0	0.0	0.0	0.0	0.0	0.0
	86	0.0	0.0	0.0	0.0	0.0	0.0	87	0.0	0.0	0.0	0.0	0.0	0.0
65	90	0.0	0.0	0.0	0.0	0.0	0.0	91	0.0	0.0	0.0	0.0	0.0	0.0
	87	0.0	0.0	0.0	0.0	0.0	0.0	88	0.0	0.0	0.0	0.0	0.0	0.0
66	17	0.0	0.0	0.0	0.0	0.0	0.0	92	0.0	0.0	0.0	0.0	0.0	0.0
	40	0.0	0.0	0.0	0.0	0.0	0.0	89	0.0	0.0	0.0	0.0	0.0	0.0
67	92	0.0	0.0	0.0	0.0	0.0	0.0	93	0.0	0.0	0.0	0.0	0.0	0.0
	89	0.0	0.0	0.0	0.0	0.0	0.0	90	0.0	0.0	0.0	0.0	0.0	0.0
68	93	0.0	0.0	0.0	0.0	0.0	0.0	18	0.0	0.0	0.0	0.0	0.0	0.0
	90	0.0	0.0	0.0	0.0	0.0	0.0	91	0.0	0.0	0.0	0.0	0.0	0.0
69	95	0.0	0.0	0.0	0.0	0.0	0.0	96	0.0	0.0	0.0	0.0	0.0	0.0
	91	0.0	0.0	0.0	0.0	0.0	0.0	88	0.0	0.0	0.0	0.0	0.0	0.0

Documento di proprietà **Snam Rete Gas**. La Società tutelerà i propri diritti in sede civile e penale a termini di legge.

FORZE Corr. Tors. dir. 90: SHELL

Shell Nro	Nodo N.ro	Tx (kN)	Ty (kN)	Tz (kN)	Mx (kN*m)	My (kN*m)	Mz (kN*m)	Nodo N.ro	Tx (kN)	Ty (kN)	Tz (kN)	Mx (kN*m)	My (kN*m)	Mz (kN*m)
70	96	0.0	0.0	0.0	0.0	0.0	0.0	61	0.0	0.0	0.0	0.0	0.0	0.0
	88	0.0	0.0	0.0	0.0	0.0	0.0	13	0.0	0.0	0.0	0.0	0.0	0.0
71	97	0.0	0.0	0.0	0.0	0.0	0.0	98	0.0	0.0	0.0	0.0	0.0	0.0
	94	0.0	0.0	0.0	0.0	0.0	0.0	95	0.0	0.0	0.0	0.0	0.0	0.0
72	98	0.0	0.0	0.0	0.0	0.0	0.0	99	0.0	0.0	0.0	0.0	0.0	0.0
	95	0.0	0.0	0.0	0.0	0.0	0.0	96	0.0	0.0	0.0	0.0	0.0	0.0
73	99	0.0	0.0	0.0	0.0	0.0	0.0	57	0.0	0.0	0.0	0.0	0.0	0.0
	96	0.0	0.0	0.0	0.0	0.0	0.0	61	0.0	0.0	0.0	0.0	0.0	0.0
74	19	0.0	0.0	0.0	0.0	0.0	0.0	100	0.0	0.0	0.0	0.0	0.0	0.0
	97	0.0	0.0	0.0	0.0	0.0	0.0	98	0.0	0.0	0.0	0.0	0.0	0.0
75	100	0.0	0.0	0.0	0.0	0.0	0.0	101	0.0	0.0	0.0	0.0	0.0	0.0
	98	0.0	0.0	0.0	0.0	0.0	0.0	99	0.0	0.0	0.0	0.0	0.0	0.0
76	101	0.0	0.0	0.0	0.0	0.0	0.0	11	0.0	0.0	0.0	0.0	0.0	0.0
	99	0.0	0.0	0.0	0.0	0.0	0.0	57	0.0	0.0	0.0	0.0	0.0	0.0
77	103	0.0	0.0	0.0	0.0	0.0	0.0	104	0.0	0.0	0.0	0.0	0.0	0.0
	84	0.0	0.0	0.0	0.0	0.0	0.0	85	0.0	0.0	0.0	0.0	0.0	0.0
78	104	0.0	0.0	0.0	0.0	0.0	0.0	105	0.0	0.0	0.0	0.0	0.0	0.0
	85	0.0	0.0	0.0	0.0	0.0	0.0	31	0.0	0.0	0.0	0.0	0.0	0.0
79	106	0.0	0.0	0.0	0.0	0.0	0.0	107	0.0	0.0	0.0	0.0	0.0	0.0
	102	0.0	0.0	0.0	0.0	0.0	0.0	103	0.0	0.0	0.0	0.0	0.0	0.0
80	107	0.0	0.0	0.0	0.0	0.0	0.0	108	0.0	0.0	0.0	0.0	0.0	0.0
	103	0.0	0.0	0.0	0.0	0.0	0.0	104	0.0	0.0	0.0	0.0	0.0	0.0
81	108	0.0	0.0	0.0	0.0	0.0	0.0	109	0.0	0.0	0.0	0.0	0.0	0.0
	104	0.0	0.0	0.0	0.0	0.0	0.0	105	0.0	0.0	0.0	0.0	0.0	0.0
82	22	0.0	0.0	0.0	0.0	0.0	0.0	110	0.0	0.0	0.0	0.0	0.0	0.0
	106	0.0	0.0	0.0	0.0	0.0	0.0	107	0.0	0.0	0.0	0.0	0.0	0.0
83	110	0.0	0.0	0.0	0.0	0.0	0.0	111	0.0	0.0	0.0	0.0	0.0	0.0
	107	0.0	0.0	0.0	0.0	0.0	0.0	108	0.0	0.0	0.0	0.0	0.0	0.0
84	111	0.0	0.0	0.0	0.0	0.0	0.0	30	0.0	0.0	0.0	0.0	0.0	0.0
	108	0.0	0.0	0.0	0.0	0.0	0.0	109	0.0	0.0	0.0	0.0	0.0	0.0
85	113	0.0	0.0	0.0	0.0	0.0	0.0	80	0.0	0.0	0.0	0.0	0.0	0.0
	112	0.0	0.0	0.0	0.0	0.0	0.0	76	0.0	0.0	0.0	0.0	0.0	0.0
86	23	0.0	0.0	0.0	0.0	0.0	0.0	21	0.0	0.0	0.0	0.0	0.0	0.0
	113	0.0	0.0	0.0	0.0	0.0	0.0	80	0.0	0.0	0.0	0.0	0.0	0.0
87	115	0.0	0.0	0.0	0.0	0.0	0.0	113	0.0	0.0	0.0	0.0	0.0	0.0
	114	0.0	0.0	0.0	0.0	0.0	0.0	112	0.0	0.0	0.0	0.0	0.0	0.0
88	20	0.0	0.0	0.0	0.0	0.0	0.0	23	0.0	0.0	0.0	0.0	0.0	0.0
	115	0.0	0.0	0.0	0.0	0.0	0.0	113	0.0	0.0	0.0	0.0	0.0	0.0
89	116	0.0	0.0	0.0	0.0	0.0	0.0	117	0.0	0.0	0.0	0.0	0.0	0.0
	102	0.0	0.0	0.0	0.0	0.0	0.0	106	0.0	0.0	0.0	0.0	0.0	0.0
90	117	0.0	0.0	0.0	0.0	0.0	0.0	37	0.0	0.0	0.0	0.0	0.0	0.0
	106	0.0	0.0	0.0	0.0	0.0	0.0	22	0.0	0.0	0.0	0.0	0.0	0.0
91	119	0.0	0.0	0.0	0.0	0.0	0.0	117	0.0	0.0	0.0	0.0	0.0	0.0
	118	0.0	0.0	0.0	0.0	0.0	0.0	116	0.0	0.0	0.0	0.0	0.0	0.0
92	34	0.0	0.0	0.0	0.0	0.0	0.0	37	0.0	0.0	0.0	0.0	0.0	0.0
	119	0.0	0.0	0.0	0.0	0.0	0.0	117	0.0	0.0	0.0	0.0	0.0	0.0
93	121	0.0	0.0	0.0	0.0	0.0	0.0	122	0.0	0.0	0.0	0.0	0.0	0.0
	43	0.0	0.0	0.0	0.0	0.0	0.0	42	0.0	0.0	0.0	0.0	0.0	0.0
94	122	0.0	0.0	0.0	0.0	0.0	0.0	123	0.0	0.0	0.0	0.0	0.0	0.0
	42	0.0	0.0	0.0	0.0	0.0	0.0	2	0.0	0.0	0.0	0.0	0.0	0.0
95	124	0.0	0.0	0.0	0.0	0.0	0.0	125	0.0	0.0	0.0	0.0	0.0	0.0
	120	0.0	0.0	0.0	0.0	0.0	0.0	121	0.0	0.0	0.0	0.0	0.0	0.0
96	125	0.0	0.0	0.0	0.0	0.0	0.0	126	0.0	0.0	0.0	0.0	0.0	0.0
	121	0.0	0.0	0.0	0.0	0.0	0.0	122	0.0	0.0	0.0	0.0	0.0	0.0
97	126	0.0	0.0	0.0	0.0	0.0	0.0	127	0.0	0.0	0.0	0.0	0.0	0.0
	122	0.0	0.0	0.0	0.0	0.0	0.0	123	0.0	0.0	0.0	0.0	0.0	0.0
98	26	0.0	0.0	0.0	0.0	0.0	0.0	128	0.0	0.0	0.0	0.0	0.0	0.0
	124	0.0	0.0	0.0	0.0	0.0	0.0	125	0.0	0.0	0.0	0.0	0.0	0.0
99	128	0.0	0.0	0.0	0.0	0.0	0.0	129	0.0	0.0	0.0	0.0	0.0	0.0
	125	0.0	0.0	0.0	0.0	0.0	0.0	126	0.0	0.0	0.0	0.0	0.0	0.0
100	129	0.0	0.0	0.0	0.0	0.0	0.0	27	0.0	0.0	0.0	0.0	0.0	0.0
	126	0.0	0.0	0.0	0.0	0.0	0.0	127	0.0	0.0	0.0	0.0	0.0	0.0
101	130	0.0	0.0	0.0	0.0	0.0	0.0	131	0.0	0.0	0.0	0.0	0.0	0.0
	68	0.0	0.0	0.0	0.0	0.0	0.0	64	0.0	0.0	0.0	0.0	0.0	0.0
102	131	0.0	0.0	0.0	0.0	0.0	0.0	132	0.0	0.0	0.0	0.0	0.0	0.0
	64	0.0	0.0	0.0	0.0	0.0	0.0	5	0.0	0.0	0.0	0.0	0.0	0.0
103	16	0.0	0.0	0.0	0.0	0.0	0.0	133	0.0	0.0	0.0	0.0	0.0	0.0
	10	0.0	0.0	0.0	0.0	0.0	0.0	130	0.0	0.0	0.0	0.0	0.0	0.0
104	133	0.0	0.0	0.0	0.0	0.0	0.0	134	0.0	0.0	0.0	0.0	0.0	0.0
	130	0.0	0.0	0.0	0.0	0.0	0.0	131	0.0	0.0	0.0	0.0	0.0	0.0
105	134	0.0	0.0	0.0	0.0	0.0	0.0	135	0.0	0.0	0.0	0.0	0.0	0.0
	131	0.0	0.0	0.0	0.0	0.0	0.0	132	0.0	0.0	0.0	0.0	0.0	0.0
106	3	0.0	0.0	0.0	0.0	0.0	0.0	136	0.0	0.0	0.0	0.0	0.0	0.0
	16	0.0	0.0	0.0	0.0	0.0	0.0	133	0.0	0.0	0.0	0.0	0.0	0.0
107	136	0.0	0.0	0.0	0.0	0.0	0.0	137	0.0	0.0	0.0	0.0	0.0	0.0
	133	0.0	0.0	0.0	0.0	0.0	0.0	134	0.0	0.0	0.0	0.0	0.0	0.0
108	137	0.0	0.0	0.0	0.0	0.0	0.0	138	0.0	0.0	0.0	0.0	0.0	0.0
	134	0.0	0.0	0.0	0.0	0.0	0.0	135	0.0	0.0	0.0	0.0	0.0	0.0
109	139	0.0	0.0	0.0	0.0	0.0	0.0	140	0.0	0.0	0.0	0.0	0.0	0.0
	3	0.0	0.0	0.0	0.0	0.0	0.0	136	0.0	0.0	0.0	0.0	0.0	0.0

Documento di proprietà **Snam Rete Gas**. La Società tutelerà i propri diritti in sede civile e penale a termini di legge.

FORZE Corr. Tors. dir. 90: SHELL

Shell Nro	Nodo N.ro	Tx (kN)	Ty (kN)	Tz (kN)	Mx (kN*m)	My (kN*m)	Mz (kN*m)	Nodo N.ro	Tx (kN)	Ty (kN)	Tz (kN)	Mx (kN*m)	My (kN*m)	Mz (kN*m)
110	140	0.0	0.0	0.0	0.0	0.0	0.0	141	0.0	0.0	0.0	0.0	0.0	0.0
	136	0.0	0.0	0.0	0.0	0.0	0.0	137	0.0	0.0	0.0	0.0	0.0	0.0
111	141	0.0	0.0	0.0	0.0	0.0	0.0	142	0.0	0.0	0.0	0.0	0.0	0.0
	137	0.0	0.0	0.0	0.0	0.0	0.0	138	0.0	0.0	0.0	0.0	0.0	0.0
112	143	0.0	0.0	0.0	0.0	0.0	0.0	144	0.0	0.0	0.0	0.0	0.0	0.0
	139	0.0	0.0	0.0	0.0	0.0	0.0	140	0.0	0.0	0.0	0.0	0.0	0.0
113	144	0.0	0.0	0.0	0.0	0.0	0.0	145	0.0	0.0	0.0	0.0	0.0	0.0
	140	0.0	0.0	0.0	0.0	0.0	0.0	141	0.0	0.0	0.0	0.0	0.0	0.0
114	145	0.0	0.0	0.0	0.0	0.0	0.0	146	0.0	0.0	0.0	0.0	0.0	0.0
	141	0.0	0.0	0.0	0.0	0.0	0.0	142	0.0	0.0	0.0	0.0	0.0	0.0
115	28	0.0	0.0	0.0	0.0	0.0	0.0	147	0.0	0.0	0.0	0.0	0.0	0.0
	143	0.0	0.0	0.0	0.0	0.0	0.0	144	0.0	0.0	0.0	0.0	0.0	0.0
116	147	0.0	0.0	0.0	0.0	0.0	0.0	148	0.0	0.0	0.0	0.0	0.0	0.0
	144	0.0	0.0	0.0	0.0	0.0	0.0	145	0.0	0.0	0.0	0.0	0.0	0.0
117	148	0.0	0.0	0.0	0.0	0.0	0.0	29	0.0	0.0	0.0	0.0	0.0	0.0
	145	0.0	0.0	0.0	0.0	0.0	0.0	146	0.0	0.0	0.0	0.0	0.0	0.0
118	101	0.0	0.0	0.0	0.0	0.0	0.0	115	0.0	0.0	0.0	0.0	0.0	0.0
	100	0.0	0.0	0.0	0.0	0.0	0.0	114	0.0	0.0	0.0	0.0	0.0	0.0
119	11	0.0	0.0	0.0	0.0	0.0	0.0	20	0.0	0.0	0.0	0.0	0.0	0.0
	101	0.0	0.0	0.0	0.0	0.0	0.0	115	0.0	0.0	0.0	0.0	0.0	0.0
120	149	0.0	0.0	0.0	0.0	0.0	0.0	150	0.0	0.0	0.0	0.0	0.0	0.0
	97	0.0	0.0	0.0	0.0	0.0	0.0	94	0.0	0.0	0.0	0.0	0.0	0.0
121	150	0.0	0.0	0.0	0.0	0.0	0.0	151	0.0	0.0	0.0	0.0	0.0	0.0
	94	0.0	0.0	0.0	0.0	0.0	0.0	18	0.0	0.0	0.0	0.0	0.0	0.0
122	36	0.0	0.0	0.0	0.0	0.0	0.0	152	0.0	0.0	0.0	0.0	0.0	0.0
	35	0.0	0.0	0.0	0.0	0.0	0.0	149	0.0	0.0	0.0	0.0	0.0	0.0
123	152	0.0	0.0	0.0	0.0	0.0	0.0	153	0.0	0.0	0.0	0.0	0.0	0.0
	149	0.0	0.0	0.0	0.0	0.0	0.0	150	0.0	0.0	0.0	0.0	0.0	0.0
124	153	0.0	0.0	0.0	0.0	0.0	0.0	154	0.0	0.0	0.0	0.0	0.0	0.0
	150	0.0	0.0	0.0	0.0	0.0	0.0	151	0.0	0.0	0.0	0.0	0.0	0.0
125	25	0.0	0.0	0.0	0.0	0.0	0.0	155	0.0	0.0	0.0	0.0	0.0	0.0
	36	0.0	0.0	0.0	0.0	0.0	0.0	152	0.0	0.0	0.0	0.0	0.0	0.0
126	155	0.0	0.0	0.0	0.0	0.0	0.0	156	0.0	0.0	0.0	0.0	0.0	0.0
	152	0.0	0.0	0.0	0.0	0.0	0.0	153	0.0	0.0	0.0	0.0	0.0	0.0
127	156	0.0	0.0	0.0	0.0	0.0	0.0	157	0.0	0.0	0.0	0.0	0.0	0.0
	153	0.0	0.0	0.0	0.0	0.0	0.0	154	0.0	0.0	0.0	0.0	0.0	0.0
128	74	0.0	0.0	0.0	0.0	0.0	0.0	158	0.0	0.0	0.0	0.0	0.0	0.0
	25	0.0	0.0	0.0	0.0	0.0	0.0	155	0.0	0.0	0.0	0.0	0.0	0.0
129	158	0.0	0.0	0.0	0.0	0.0	0.0	159	0.0	0.0	0.0	0.0	0.0	0.0
	155	0.0	0.0	0.0	0.0	0.0	0.0	156	0.0	0.0	0.0	0.0	0.0	0.0
130	159	0.0	0.0	0.0	0.0	0.0	0.0	160	0.0	0.0	0.0	0.0	0.0	0.0
	156	0.0	0.0	0.0	0.0	0.0	0.0	157	0.0	0.0	0.0	0.0	0.0	0.0
131	75	0.0	0.0	0.0	0.0	0.0	0.0	161	0.0	0.0	0.0	0.0	0.0	0.0
	74	0.0	0.0	0.0	0.0	0.0	0.0	158	0.0	0.0	0.0	0.0	0.0	0.0
132	161	0.0	0.0	0.0	0.0	0.0	0.0	162	0.0	0.0	0.0	0.0	0.0	0.0
	158	0.0	0.0	0.0	0.0	0.0	0.0	159	0.0	0.0	0.0	0.0	0.0	0.0
133	162	0.0	0.0	0.0	0.0	0.0	0.0	163	0.0	0.0	0.0	0.0	0.0	0.0
	159	0.0	0.0	0.0	0.0	0.0	0.0	160	0.0	0.0	0.0	0.0	0.0	0.0
134	32	0.0	0.0	0.0	0.0	0.0	0.0	164	0.0	0.0	0.0	0.0	0.0	0.0
	75	0.0	0.0	0.0	0.0	0.0	0.0	161	0.0	0.0	0.0	0.0	0.0	0.0
135	164	0.0	0.0	0.0	0.0	0.0	0.0	165	0.0	0.0	0.0	0.0	0.0	0.0
	161	0.0	0.0	0.0	0.0	0.0	0.0	162	0.0	0.0	0.0	0.0	0.0	0.0
136	165	0.0	0.0	0.0	0.0	0.0	0.0	33	0.0	0.0	0.0	0.0	0.0	0.0
	162	0.0	0.0	0.0	0.0	0.0	0.0	163	0.0	0.0	0.0	0.0	0.0	0.0
137	166	0.0	0.0	0.0	0.0	0.0	0.0	167	0.0	0.0	0.0	0.0	0.0	0.0
	58	0.0	0.0	0.0	0.0	0.0	0.0	54	0.0	0.0	0.0	0.0	0.0	0.0
138	167	0.0	0.0	0.0	0.0	0.0	0.0	34	0.0	0.0	0.0	0.0	0.0	0.0
	54	0.0	0.0	0.0	0.0	0.0	0.0	7	0.0	0.0	0.0	0.0	0.0	0.0
139	135	0.0	0.0	0.0	0.0	0.0	0.0	168	0.0	0.0	0.0	0.0	0.0	0.0
	132	0.0	0.0	0.0	0.0	0.0	0.0	166	0.0	0.0	0.0	0.0	0.0	0.0
140	168	0.0	0.0	0.0	0.0	0.0	0.0	169	0.0	0.0	0.0	0.0	0.0	0.0
	166	0.0	0.0	0.0	0.0	0.0	0.0	167	0.0	0.0	0.0	0.0	0.0	0.0
141	169	0.0	0.0	0.0	0.0	0.0	0.0	37	0.0	0.0	0.0	0.0	0.0	0.0
	167	0.0	0.0	0.0	0.0	0.0	0.0	34	0.0	0.0	0.0	0.0	0.0	0.0
142	138	0.0	0.0	0.0	0.0	0.0	0.0	170	0.0	0.0	0.0	0.0	0.0	0.0
	135	0.0	0.0	0.0	0.0	0.0	0.0	168	0.0	0.0	0.0	0.0	0.0	0.0
143	170	0.0	0.0	0.0	0.0	0.0	0.0	171	0.0	0.0	0.0	0.0	0.0	0.0
	168	0.0	0.0	0.0	0.0	0.0	0.0	169	0.0	0.0	0.0	0.0	0.0	0.0
144	171	0.0	0.0	0.0	0.0	0.0	0.0	22	0.0	0.0	0.0	0.0	0.0	0.0
	169	0.0	0.0	0.0	0.0	0.0	0.0	37	0.0	0.0	0.0	0.0	0.0	0.0
145	142	0.0	0.0	0.0	0.0	0.0	0.0	172	0.0	0.0	0.0	0.0	0.0	0.0
	138	0.0	0.0	0.0	0.0	0.0	0.0	170	0.0	0.0	0.0	0.0	0.0	0.0
146	172	0.0	0.0	0.0	0.0	0.0	0.0	173	0.0	0.0	0.0	0.0	0.0	0.0
	170	0.0	0.0	0.0	0.0	0.0	0.0	171	0.0	0.0	0.0	0.0	0.0	0.0
147	173	0.0	0.0	0.0	0.0	0.0	0.0	110	0.0	0.0	0.0	0.0	0.0	0.0
	171	0.0	0.0	0.0	0.0	0.0	0.0	22	0.0	0.0	0.0	0.0	0.0	0.0
148	146	0.0	0.0	0.0	0.0	0.0	0.0	174	0.0	0.0	0.0	0.0	0.0	0.0
	142	0.0	0.0	0.0	0.0	0.0	0.0	172	0.0	0.0	0.0	0.0	0.0	0.0
149	174	0.0	0.0	0.0	0.0	0.0	0.0	175	0.0	0.0	0.0	0.0	0.0	0.0
	172	0.0	0.0	0.0	0.0	0.0	0.0	173	0.0	0.0	0.0	0.0	0.0	0.0

Documento di proprietà **Snam Rete Gas**. La Società tutelerà i propri diritti in sede civile e penale a termini di legge.

FORZE Corr. Tors. dir. 90: SHELL

Shell Nro	Nodo N.ro	Tx (kN)	Ty (kN)	Tz (kN)	Mx (kN*m)	My (kN*m)	Mz (kN*m)	Nodo N.ro	Tx (kN)	Ty (kN)	Tz (kN)	Mx (kN*m)	My (kN*m)	Mz (kN*m)
150	175	0.0	0.0	0.0	0.0	0.0	0.0	111	0.0	0.0	0.0	0.0	0.0	0.0
	173	0.0	0.0	0.0	0.0	0.0	0.0	110	0.0	0.0	0.0	0.0	0.0	0.0
151	29	0.0	0.0	0.0	0.0	0.0	0.0	176	0.0	0.0	0.0	0.0	0.0	0.0
	146	0.0	0.0	0.0	0.0	0.0	0.0	174	0.0	0.0	0.0	0.0	0.0	0.0
152	176	0.0	0.0	0.0	0.0	0.0	0.0	177	0.0	0.0	0.0	0.0	0.0	0.0
	174	0.0	0.0	0.0	0.0	0.0	0.0	175	0.0	0.0	0.0	0.0	0.0	0.0
153	177	0.0	0.0	0.0	0.0	0.0	0.0	30	0.0	0.0	0.0	0.0	0.0	0.0
	175	0.0	0.0	0.0	0.0	0.0	0.0	111	0.0	0.0	0.0	0.0	0.0	0.0
154	178	0.0	0.0	0.0	0.0	0.0	0.0	179	0.0	0.0	0.0	0.0	0.0	0.0
	93	0.0	0.0	0.0	0.0	0.0	0.0	92	0.0	0.0	0.0	0.0	0.0	0.0
155	179	0.0	0.0	0.0	0.0	0.0	0.0	12	0.0	0.0	0.0	0.0	0.0	0.0
	92	0.0	0.0	0.0	0.0	0.0	0.0	17	0.0	0.0	0.0	0.0	0.0	0.0
156	154	0.0	0.0	0.0	0.0	0.0	0.0	180	0.0	0.0	0.0	0.0	0.0	0.0
	151	0.0	0.0	0.0	0.0	0.0	0.0	178	0.0	0.0	0.0	0.0	0.0	0.0
157	180	0.0	0.0	0.0	0.0	0.0	0.0	181	0.0	0.0	0.0	0.0	0.0	0.0
	178	0.0	0.0	0.0	0.0	0.0	0.0	179	0.0	0.0	0.0	0.0	0.0	0.0
158	181	0.0	0.0	0.0	0.0	0.0	0.0	15	0.0	0.0	0.0	0.0	0.0	0.0
	179	0.0	0.0	0.0	0.0	0.0	0.0	12	0.0	0.0	0.0	0.0	0.0	0.0
159	157	0.0	0.0	0.0	0.0	0.0	0.0	182	0.0	0.0	0.0	0.0	0.0	0.0
	154	0.0	0.0	0.0	0.0	0.0	0.0	180	0.0	0.0	0.0	0.0	0.0	0.0
160	182	0.0	0.0	0.0	0.0	0.0	0.0	183	0.0	0.0	0.0	0.0	0.0	0.0
	180	0.0	0.0	0.0	0.0	0.0	0.0	181	0.0	0.0	0.0	0.0	0.0	0.0
161	183	0.0	0.0	0.0	0.0	0.0	0.0	9	0.0	0.0	0.0	0.0	0.0	0.0
	181	0.0	0.0	0.0	0.0	0.0	0.0	15	0.0	0.0	0.0	0.0	0.0	0.0
162	160	0.0	0.0	0.0	0.0	0.0	0.0	184	0.0	0.0	0.0	0.0	0.0	0.0
	157	0.0	0.0	0.0	0.0	0.0	0.0	182	0.0	0.0	0.0	0.0	0.0	0.0
163	184	0.0	0.0	0.0	0.0	0.0	0.0	185	0.0	0.0	0.0	0.0	0.0	0.0
	182	0.0	0.0	0.0	0.0	0.0	0.0	183	0.0	0.0	0.0	0.0	0.0	0.0
164	185	0.0	0.0	0.0	0.0	0.0	0.0	120	0.0	0.0	0.0	0.0	0.0	0.0
	183	0.0	0.0	0.0	0.0	0.0	0.0	9	0.0	0.0	0.0	0.0	0.0	0.0
165	163	0.0	0.0	0.0	0.0	0.0	0.0	186	0.0	0.0	0.0	0.0	0.0	0.0
	160	0.0	0.0	0.0	0.0	0.0	0.0	184	0.0	0.0	0.0	0.0	0.0	0.0
166	186	0.0	0.0	0.0	0.0	0.0	0.0	187	0.0	0.0	0.0	0.0	0.0	0.0
	184	0.0	0.0	0.0	0.0	0.0	0.0	185	0.0	0.0	0.0	0.0	0.0	0.0
167	187	0.0	0.0	0.0	0.0	0.0	0.0	124	0.0	0.0	0.0	0.0	0.0	0.0
	185	0.0	0.0	0.0	0.0	0.0	0.0	120	0.0	0.0	0.0	0.0	0.0	0.0
168	33	0.0	0.0	0.0	0.0	0.0	0.0	188	0.0	0.0	0.0	0.0	0.0	0.0
	163	0.0	0.0	0.0	0.0	0.0	0.0	186	0.0	0.0	0.0	0.0	0.0	0.0
169	188	0.0	0.0	0.0	0.0	0.0	0.0	189	0.0	0.0	0.0	0.0	0.0	0.0
	186	0.0	0.0	0.0	0.0	0.0	0.0	187	0.0	0.0	0.0	0.0	0.0	0.0
170	189	0.0	0.0	0.0	0.0	0.0	0.0	26	0.0	0.0	0.0	0.0	0.0	0.0
	187	0.0	0.0	0.0	0.0	0.0	0.0	124	0.0	0.0	0.0	0.0	0.0	0.0
171	190	0.0	0.0	0.0	0.0	0.0	0.0	191	0.0	0.0	0.0	0.0	0.0	0.0
	73	0.0	0.0	0.0	0.0	0.0	0.0	72	0.0	0.0	0.0	0.0	0.0	0.0
172	191	0.0	0.0	0.0	0.0	0.0	0.0	139	0.0	0.0	0.0	0.0	0.0	0.0
	72	0.0	0.0	0.0	0.0	0.0	0.0	3	0.0	0.0	0.0	0.0	0.0	0.0
173	127	0.0	0.0	0.0	0.0	0.0	0.0	192	0.0	0.0	0.0	0.0	0.0	0.0
	123	0.0	0.0	0.0	0.0	0.0	0.0	190	0.0	0.0	0.0	0.0	0.0	0.0
174	192	0.0	0.0	0.0	0.0	0.0	0.0	193	0.0	0.0	0.0	0.0	0.0	0.0
	190	0.0	0.0	0.0	0.0	0.0	0.0	191	0.0	0.0	0.0	0.0	0.0	0.0
175	193	0.0	0.0	0.0	0.0	0.0	0.0	143	0.0	0.0	0.0	0.0	0.0	0.0
	191	0.0	0.0	0.0	0.0	0.0	0.0	139	0.0	0.0	0.0	0.0	0.0	0.0
176	27	0.0	0.0	0.0	0.0	0.0	0.0	194	0.0	0.0	0.0	0.0	0.0	0.0
	127	0.0	0.0	0.0	0.0	0.0	0.0	192	0.0	0.0	0.0	0.0	0.0	0.0
177	194	0.0	0.0	0.0	0.0	0.0	0.0	195	0.0	0.0	0.0	0.0	0.0	0.0
	192	0.0	0.0	0.0	0.0	0.0	0.0	193	0.0	0.0	0.0	0.0	0.0	0.0
178	195	0.0	0.0	0.0	0.0	0.0	0.0	28	0.0	0.0	0.0	0.0	0.0	0.0
	193	0.0	0.0	0.0	0.0	0.0	0.0	143	0.0	0.0	0.0	0.0	0.0	0.0
179	52	0.0	0.0	0.0	0.0	0.0	0.0	119	0.0	0.0	0.0	0.0	0.0	0.0
	53	0.0	0.0	0.0	0.0	0.0	0.0	118	0.0	0.0	0.0	0.0	0.0	0.0
180	7	0.0	0.0	0.0	0.0	0.0	0.0	34	0.0	0.0	0.0	0.0	0.0	0.0
	52	0.0	0.0	0.0	0.0	0.0	0.0	119	0.0	0.0	0.0	0.0	0.0	0.0

SPOST. PESO PROPRIO: SHELL

Shell Nro	Nodo N.ro	S1 (mm)	S2 (mm)	S3 (mm)	R1 (rad)	R2 (rad)	R3 (rad)	Nodo N.ro	S1 (mm)	S2 (mm)	S3 (mm)	R1 (rad)	R2 (rad)	R3 (rad)
1	38	-0.28	0.00	0.00	0.00000	-.00004	0.00001	39	-0.28	0.00	0.01	-.00001	-.00001	0.00000
	14	-0.28	0.00	0.00	0.00000	-.00004	0.00000	1	-0.28	0.00	0.01	0.00000	-.00002	0.00000
2	6	0.01	0.29	0.01	0.00000	0.00001	0.00000	44	0.01	0.29	0.01	0.00000	0.00001	0.00000
	2	0.00	0.29	0.01	0.00001	0.00000	0.00000	42	0.00	0.29	0.01	0.00001	0.00000	0.00000
3	39	-0.20	0.20	0.01	-.00001	0.00000	0.00000	44	-0.20	0.21	0.01	-.00001	0.00001	0.00000
	1	-0.20	0.20	0.01	-.00001	-.00001	0.00000	6	-0.20	0.21	0.01	-.00001	0.00001	0.00000
4	46	-0.29	0.00	0.01	0.00001	0.00000	0.00000	47	-0.29	0.00	0.00	0.00001	0.00000	0.00000
	10	-0.29	0.00	0.00	0.00000	0.00000	0.00000	16	-0.29	0.00	0.00	0.00000	0.00000	0.00000
5	50	-0.28	0.00	0.00	0.00000	-.00002	-.00001	46	-0.29	0.00	0.01	0.00001	0.00000	0.00000
	4	-0.29	0.00	0.00	0.00000	-.00001	-.00001	10	-0.29	0.00	0.00	0.00000	0.00000	0.00000
6	54	0.00	0.00	-0.28	0.00000	-.00003	0.00000	55	0.00	0.00	-0.27	0.00002	-.00003	0.00000
	7	0.00	0.00	-0.29	0.00001	-.00001	0.00000	52	0.00	0.00	-0.28	0.00002	-.00001	0.00000
7	64	0.00	0.00	-0.28	0.00000	-.00004	0.00000	65	0.00	0.00	-0.26	-.00001	-.00004	0.00000
	5	0.00	0.00	-0.28	0.00000	-.00005	0.00000	62	0.00	0.00	-0.26	0.00000	-.00005	0.00000

Documento di proprietà **Snam Rete Gas**. La Società tutelerà i propri diritti in sede civile e penale a termini di legge.

SPOST. PESO PROPRIO: SHELL

Shell Nro	Nodo N.ro	S1 (mm)	S2 (mm)	S3 (mm)	R1 (rad)	R2 (rad)	R3 (rad)	Nodo N.ro	S1 (mm)	S2 (mm)	S3 (mm)	R1 (rad)	R2 (rad)	R3 (rad)
8	47	-0.29	0.00	0.00	0.00001	0.00000	0.00000	72	-0.29	0.00	0.00	0.00001	0.00000	0.00000
	16	-0.29	0.00	0.00	0.00000	0.00000	0.00000	3	-0.29	0.00	0.00	0.00000	0.00000	0.00000
9	76	-0.29	0.00	0.00	0.00001	0.00000	0.00000	77	-0.29	0.00	0.00	0.00000	0.00000	0.00000
	25	-0.29	0.00	0.00	0.00000	0.00000	0.00000	74	-0.29	0.00	0.00	0.00000	0.00000	0.00000
10	38	0.00	0.00	-0.28	-.00001	-.00004	0.00000	86	0.00	0.00	-0.26	-.00002	-.00004	0.00000
	14	0.00	0.00	-0.28	0.00000	-.00004	0.00000	71	0.00	0.00	-0.25	0.00000	-.00004	0.00000
11	94	0.00	0.00	-0.28	0.00000	-.00004	0.00000	95	0.00	0.00	-0.26	-.00001	-.00004	0.00000
	18	0.00	0.00	-0.28	0.00000	-.00005	0.00000	91	0.00	0.00	-0.26	0.00000	-.00005	0.00000
12	102	-0.29	0.00	0.01	0.00000	0.00001	0.00000	103	-0.29	0.00	0.00	0.00000	0.00000	0.00000
	21	-0.29	0.00	0.01	0.00000	0.00001	0.00000	84	-0.29	0.00	0.00	0.00000	0.00000	0.00000
13	112	-0.29	-0.01	0.00	0.00001	0.00000	0.00000	76	-0.29	0.00	0.00	0.00001	0.00000	0.00000
	36	-0.29	-0.01	0.00	0.00000	0.00000	0.00000	25	-0.29	0.00	0.00	0.00000	0.00000	0.00000
14	114	-0.29	0.00	0.01	0.00001	0.00000	0.00000	112	-0.29	-0.01	0.00	0.00001	0.00000	0.00000
	35	-0.29	0.00	0.00	0.00000	0.00000	0.00000	36	-0.29	-0.01	0.00	0.00000	0.00000	0.00000
15	24	0.00	0.29	0.01	0.00000	0.00001	0.00000	116	0.00	0.29	0.01	0.00000	0.00001	0.00000
	21	0.00	0.29	0.01	0.00001	0.00000	0.00000	102	0.00	0.29	0.01	0.00001	0.00000	0.00000
16	118	-0.20	0.20	0.01	-.00001	0.00000	0.00000	116	-0.20	0.21	0.01	-.00001	0.00001	0.00000
	20	-0.20	0.20	0.01	-.00001	-.00001	0.00000	24	-0.20	0.21	0.01	-.00001	0.00001	0.00000
17	120	0.00	-0.29	0.00	0.00000	0.00000	0.00000	121	0.00	-0.29	0.00	0.00000	0.00000	0.00000
	9	0.00	-0.29	0.00	0.00000	0.00000	0.00000	43	0.00	-0.29	0.00	0.00000	-.00001	0.00000
18	10	0.00	-0.29	0.00	0.00000	0.00000	0.00000	130	0.00	-0.29	0.01	0.00000	-.00001	0.00000
	4	0.00	-0.29	0.00	0.00001	0.00000	0.00001	68	0.00	-0.29	0.00	0.00003	0.00000	0.00001
19	100	-0.28	0.00	0.00	0.00000	-.00002	-.00001	114	-0.29	0.00	0.01	0.00001	0.00000	0.00000
	19	-0.29	0.00	0.00	0.00000	-.00001	-.00001	35	-0.29	0.00	0.00	0.00000	0.00000	0.00000
20	35	0.00	-0.29	0.00	0.00000	0.00000	0.00000	149	0.00	-0.29	0.01	0.00000	-.00001	0.00000
	19	0.00	-0.29	0.00	0.00001	0.00000	0.00001	97	0.00	-0.29	0.00	0.00003	0.00000	0.00000
21	132	0.00	-0.29	0.01	0.00000	0.00000	0.00000	166	0.00	-0.29	0.01	0.00000	0.00001	0.00000
	5	0.00	-0.28	0.00	0.00005	0.00000	0.00000	58	0.00	-0.28	0.00	0.00004	0.00000	0.00000
22	151	0.00	-0.29	0.02	0.00000	0.00000	0.00000	178	0.00	-0.29	0.01	0.00000	0.00001	0.00000
	18	0.00	-0.28	0.00	0.00005	0.00000	0.00000	93	0.00	-0.28	0.00	0.00004	0.00000	0.00000
23	123	0.00	-0.29	0.00	0.00000	0.00000	0.00000	190	0.00	-0.29	0.00	0.00000	0.00000	0.00000
	2	0.00	-0.29	0.01	-.00001	0.00000	0.00000	73	0.00	-0.29	0.01	-.00001	0.00000	0.00000
24	53	-0.28	0.00	0.00	0.00000	-.00004	0.00001	118	-0.28	0.00	0.01	-.00001	-.00001	0.00000
	11	-0.28	0.00	0.00	0.00000	-.00004	0.00000	20	-0.28	0.00	0.01	0.00000	-.00002	0.00000
25	40	-0.28	0.00	0.00	0.00000	-.00003	0.00001	41	-0.29	0.00	0.01	-.00001	0.00000	0.00000
	38	-0.28	0.00	0.00	0.00000	-.00004	0.00001	39	-0.28	0.00	0.01	-.00001	-.00001	0.00000
26	17	-0.29	0.00	0.00	0.00000	-.00001	0.00001	12	-0.29	0.00	0.00	0.00000	0.00000	0.00000
	40	-0.28	0.00	0.00	0.00000	-.00003	0.00001	41	-0.29	0.00	0.01	-.00001	0.00000	0.00000
27	44	0.01	0.29	0.01	0.00000	0.00001	0.00000	45	0.01	0.29	0.00	0.00000	0.00001	0.00000
	42	0.00	0.29	0.01	0.00001	0.00000	0.00000	43	0.00	0.29	0.00	0.00000	0.00001	0.00000
28	45	0.01	0.29	0.00	0.00000	0.00001	0.00000	15	0.01	0.29	0.00	0.00000	0.00000	0.00000
	43	0.00	0.29	0.00	0.00000	0.00001	0.00000	9	0.00	0.29	0.00	0.00000	0.00000	0.00000
29	41	-0.23	0.17	0.01	-.00001	0.00000	0.00000	45	-0.23	0.17	0.00	-.00001	0.00001	0.00000
	39	-0.23	0.16	0.01	-.00001	0.00000	0.00000	44	-0.23	0.17	0.01	-.00001	0.00001	0.00000
30	12	-0.27	0.11	0.00	0.00000	0.00000	0.00000	15	-0.27	0.11	0.00	0.00000	0.00000	0.00000
	41	-0.27	0.10	0.01	-.00001	0.00000	0.00000	45	-0.27	0.11	0.00	-.00001	0.00001	0.00000
31	48	-0.26	-0.10	0.01	0.00001	-.00001	0.00000	49	-0.27	-0.10	0.01	0.00001	0.00001	0.00000
	46	-0.27	-0.10	0.01	0.00001	0.00000	0.00000	47	-0.27	-0.10	0.00	0.00001	0.00001	0.00000
32	1	-0.23	-0.16	0.01	0.00001	-.00001	0.00000	8	-0.23	-0.17	0.01	0.00001	0.00001	0.00000
	48	-0.23	-0.16	0.01	0.00001	0.00000	0.00000	49	-0.23	-0.17	0.01	0.00001	0.00001	0.00000
33	51	-0.28	0.00	0.00	0.00000	-.00004	-.00001	48	-0.28	0.00	0.01	0.00001	-.00001	0.00000
	50	-0.28	0.00	0.00	0.00000	-.00002	-.00001	46	-0.29	0.00	0.01	0.00001	0.00000	0.00000
34	14	-0.28	0.00	0.00	0.00000	-.00004	0.00000	1	-0.28	0.00	0.01	0.00000	-.00002	0.00000
	51	-0.28	0.00	0.00	0.00000	-.00004	-.00001	48	-0.28	0.00	0.01	0.00001	-.00001	0.00000
35	55	0.00	0.00	-0.27	0.00002	-.00003	0.00000	56	0.00	0.00	-0.26	0.00004	-.00002	0.00000
	52	0.00	0.00	-0.28	0.00002	-.00001	0.00000	53	0.00	0.00	-0.28	0.00004	-.00001	0.00000
36	56	0.00	0.00	-0.26	0.00004	-.00002	0.00000	57	0.00	0.00	-0.25	0.00004	0.00000	0.00000
	53	0.00	0.00	-0.28	0.00004	-.00001	0.00000	11	0.00	0.00	-0.28	0.00004	0.00000	0.00000
37	58	0.00	0.00	-0.28	0.00000	-.00004	0.00000	59	0.00	0.00	-0.26	0.00001	-.00004	0.00000
	54	0.00	0.00	-0.28	0.00000	-.00003	0.00000	55	0.00	0.00	-0.27	0.00002	-.00003	0.00000
38	59	0.00	0.00	-0.26	0.00001	-.00004	0.00000	60	0.00	0.00	-0.24	0.00002	-.00003	0.00000
	55	0.00	0.00	-0.27	0.00002	-.00003	0.00000	56	0.00	0.00	-0.26	0.00004	-.00002	0.00000
39	60	0.00	0.00	-0.24	0.00002	-.00003	0.00000	61	0.00	0.00	-0.23	0.00002	0.00000	0.00000
	56	0.00	0.00	-0.26	0.00004	-.00002	0.00000	57	0.00	0.00	-0.25	0.00004	0.00000	0.00000
40	5	0.00	0.00	-0.28	0.00000	-.00005	0.00000	62	0.00	0.00	-0.26	0.00000	-.00005	0.00000
	58	0.00	0.00	-0.28	0.00000	-.00004	0.00000	59	0.00	0.00	-0.26	0.00001	-.00004	0.00000
41	62	0.00	0.00	-0.26	0.00000	-.00005	0.00000	63	0.00	0.00	-0.24	0.00000	-.00003	0.00000
	59	0.00	0.00	-0.26	0.00001	-.00004	0.00000	60	0.00	0.00	-0.24	0.00002	-.00003	0.00000
42	63	0.00	0.00	-0.24	0.00000	-.00003	0.00000	13	0.00	0.00	-0.23	0.00000	0.00000	0.00000
	60	0.00	0.00	-0.24	0.00002	-.00003	0.00000	61	0.00	0.00	-0.23	0.00002	0.00000	0.00000
43	65	0.00	0.00	-0.26	-.00001	-.00004	0.00000	66	0.00	0.00	-0.24	-.00002	-.00002	0.00000
	62	0.00	0.00	-0.26	0.00000	-.00005	0.00000	63	0.00	0.00	-0.24	0.00000	-.00003	0.00000
44	66	0.00	0.00	-0.24	-.00002	-.00002	0.00000	67	0.00	0.00	-0.24	-.00003	0.00000	0.00000
	63	0.00	0.00	-0.24	0.00000	-.00003	0.00000	13	0.00	0.00	-0.23	0.00000	0.00000	0.00000
45	68	0.00	0.00	-0.29	-.00001	-.00003	0.00000	69	0.00	0.00	-0.27	-.00002	-.00003	0.00000
	64	0.00	0.00	-0.28	0.00000	-.00004	0.00000	65	0.00	0.00	-0.26	-.00001	-.00004	0.00000
46	69	0.00	0.00	-0.27	-.00002	-.00003	0.00000	70	0.00	0.00	-0.26	-.00004	-.00002	0.00000
	65	0.00	0.00	-0.26	-.00001	-.00004	0.00000	66	0.00	0.00	-0.24	-.00002	-.00002	0.00000
47	70	0.00	0.00	-0.26	-.00004	-.00002	0.00000	71	0.00	0.00	-0.25	-.00004	0.00000	0.00000
	66	0.00	0.00	-0.24	-.00002	-.00002	0.00000	67	0.00	0.00	-0.24	-.00003	0.00000	0.00000

Documento di proprietà **Snam Rete Gas**. La Società tutelerà i propri diritti in sede civile e penale a termini di legge.

SPOST. PESO PROPRIO: SHELL

Shell Nro	Nodo N.ro	S1 (mm)	S2 (mm)	S3 (mm)	R1 (rad)	R2 (rad)	R3 (rad)	Nodo N.ro	S1 (mm)	S2 (mm)	S3 (mm)	R1 (rad)	R2 (rad)	R3 (rad)
48	4	0.00	0.00	-0.29	-.00001	-.00001	0.00000	50	0.00	0.00	-0.28	-.00002	-.00001	0.00000
	68	0.00	0.00	-0.29	-.00001	-.00003	0.00000	69	0.00	0.00	-0.27	-.00002	-.00003	0.00000
49	50	0.00	0.00	-0.28	-.00002	-.00001	0.00000	51	0.00	0.00	-0.28	-.00004	-.00001	0.00000
	69	0.00	0.00	-0.27	-.00002	-.00003	0.00000	70	0.00	0.00	-0.26	-.00004	-.00002	0.00000
50	51	0.00	0.00	-0.28	-.00004	-.00001	0.00000	14	0.00	0.00	-0.28	-.00004	0.00000	0.00000
	70	0.00	0.00	-0.26	-.00004	-.00002	0.00000	71	0.00	0.00	-0.25	-.00004	0.00000	0.00000
51	49	-0.27	0.10	0.01	0.00001	0.00000	0.00000	73	-0.27	0.10	0.01	0.00001	0.00000	0.00000
	47	-0.27	0.10	0.00	0.00001	0.00000	0.00000	72	-0.27	0.10	0.00	0.00001	0.00000	0.00000
52	8	-0.24	0.16	0.01	0.00001	0.00000	0.00000	2	-0.24	0.17	0.01	0.00000	0.00001	0.00000
	49	-0.24	0.16	0.01	0.00001	0.00000	0.00000	73	-0.24	0.17	0.01	0.00001	0.00000	0.00000
53	77	-0.29	0.00	0.00	0.00000	0.00000	0.00000	78	-0.29	0.00	0.00	0.00000	0.00000	0.00000
	74	-0.29	0.00	0.00	0.00000	0.00000	0.00000	75	-0.29	0.00	0.00	0.00000	0.00000	0.00000
54	78	-0.29	0.00	0.00	0.00000	0.00000	0.00000	79	-0.29	0.00	0.00	0.00000	0.00000	0.00000
	75	-0.29	0.00	0.00	0.00000	0.00000	0.00000	32	-0.29	0.00	0.00	0.00000	0.00000	0.00000
55	80	-0.29	0.00	0.01	0.00000	0.00001	0.00000	81	-0.29	0.00	0.00	0.00000	0.00000	0.00000
	76	-0.29	0.00	0.00	0.00001	0.00000	0.00000	77	-0.29	0.00	0.00	0.00000	0.00000	0.00000
56	81	-0.29	0.00	0.00	0.00000	0.00000	0.00000	82	-0.29	0.00	0.00	0.00000	0.00000	0.00000
	77	-0.29	0.00	0.00	0.00000	0.00000	0.00000	78	-0.29	0.00	0.00	0.00000	0.00000	0.00000
57	82	-0.29	0.00	0.00	0.00000	0.00000	0.00000	83	-0.29	0.00	0.00	0.00000	0.00000	0.00000
	78	-0.29	0.00	0.00	0.00000	0.00000	0.00000	79	-0.29	0.00	0.00	0.00000	0.00000	0.00000
58	21	-0.29	0.00	0.01	0.00000	0.00001	0.00000	84	-0.29	0.00	0.00	0.00000	0.00000	0.00000
	80	-0.29	0.00	0.01	0.00000	0.00001	0.00000	81	-0.29	0.00	0.00	0.00000	0.00000	0.00000
59	84	-0.29	0.00	0.00	0.00000	0.00000	0.00000	85	-0.29	0.00	0.00	0.00000	0.00000	0.00000
	81	-0.29	0.00	0.00	0.00000	0.00000	0.00000	82	-0.29	0.00	0.00	0.00000	0.00000	0.00000
60	85	-0.29	0.00	0.00	0.00000	0.00000	0.00000	31	-0.29	0.00	0.00	0.00000	0.00000	0.00000
	82	-0.29	0.00	0.00	0.00000	0.00000	0.00000	83	-0.29	0.00	0.00	0.00000	0.00000	0.00000
61	86	0.00	0.00	-0.26	-.00002	-.00004	0.00000	87	0.00	0.00	-0.24	-.00002	-.00002	0.00000
	71	0.00	0.00	-0.25	0.00000	-.00004	0.00000	67	0.00	0.00	-0.24	0.00000	-.00003	0.00000
62	87	0.00	0.00	-0.24	-.00002	-.00002	0.00000	88	0.00	0.00	-0.24	-.00003	0.00000	0.00000
	67	0.00	0.00	-0.24	0.00000	-.00003	0.00000	13	0.00	0.00	-0.23	0.00000	0.00000	0.00000
63	40	0.00	0.00	-0.28	-.00001	-.00003	0.00000	89	0.00	0.00	-0.27	-.00003	-.00003	0.00000
	38	0.00	0.00	-0.28	-.00001	-.00004	0.00000	86	0.00	0.00	-0.26	-.00002	-.00004	0.00000
64	89	0.00	0.00	-0.27	-.00003	-.00003	0.00000	90	0.00	0.00	-0.26	-.00004	-.00001	0.00000
	86	0.00	0.00	-0.26	-.00002	-.00004	0.00000	87	0.00	0.00	-0.24	-.00002	-.00002	0.00000
65	90	0.00	0.00	-0.26	-.00004	-.00001	0.00000	91	0.00	0.00	-0.26	-.00005	0.00000	0.00000
	87	0.00	0.00	-0.24	-.00002	-.00002	0.00000	88	0.00	0.00	-0.24	-.00003	0.00000	0.00000
66	17	0.00	0.00	-0.29	-.00001	-.00001	0.00000	92	0.00	0.00	-0.29	-.00003	-.00001	0.00000
	40	0.00	0.00	-0.28	-.00001	-.00003	0.00000	89	0.00	0.00	-0.27	-.00003	-.00003	0.00000
67	92	0.00	0.00	-0.29	-.00003	-.00001	0.00000	93	0.00	0.00	-0.28	-.00004	0.00000	0.00000
	89	0.00	0.00	-0.27	-.00003	-.00003	0.00000	90	0.00	0.00	-0.26	-.00004	-.00001	0.00000
68	93	0.00	0.00	-0.28	-.00004	0.00000	0.00000	18	0.00	0.00	-0.28	-.00005	0.00000	0.00000
	90	0.00	0.00	-0.26	-.00004	-.00001	0.00000	91	0.00	0.00	-0.26	-.00005	0.00000	0.00000
69	95	0.00	0.00	-0.26	-.00001	-.00004	0.00000	96	0.00	0.00	-0.24	-.00002	-.00002	0.00000
	91	0.00	0.00	-0.26	0.00000	-.00005	0.00000	88	0.00	0.00	-0.24	0.00000	-.00003	0.00000
70	96	0.00	0.00	-0.24	-.00002	-.00002	0.00000	61	0.00	0.00	-0.23	-.00002	0.00000	0.00000
	88	0.00	0.00	-0.24	0.00000	-.00003	0.00000	13	0.00	0.00	-0.23	0.00000	0.00000	0.00000
71	97	0.00	0.00	-0.29	0.00000	-.00003	0.00000	98	0.00	0.00	-0.27	-.00002	-.00003	0.00000
	94	0.00	0.00	-0.28	0.00000	-.00004	0.00000	95	0.00	0.00	-0.26	-.00001	-.00004	0.00000
72	98	0.00	0.00	-0.27	-.00002	-.00003	0.00000	99	0.00	0.00	-0.26	-.00004	-.00002	0.00000
	95	0.00	0.00	-0.26	-.00001	-.00004	0.00000	96	0.00	0.00	-0.24	-.00002	-.00002	0.00000
73	99	0.00	0.00	-0.26	-.00004	-.00002	0.00000	57	0.00	0.00	-0.25	-.00004	0.00000	0.00000
	96	0.00	0.00	-0.24	-.00002	-.00002	0.00000	61	0.00	0.00	-0.23	-.00002	0.00000	0.00000
74	19	0.00	0.00	-0.29	-.00001	-.00001	0.00000	100	0.00	0.00	-0.28	-.00002	-.00001	0.00000
	97	0.00	0.00	-0.29	0.00000	-.00003	0.00000	98	0.00	0.00	-0.27	-.00002	-.00003	0.00000
75	100	0.00	0.00	-0.28	-.00002	-.00001	0.00000	101	0.00	0.00	-0.28	-.00004	-.00001	0.00000
	98	0.00	0.00	-0.27	-.00002	-.00003	0.00000	99	0.00	0.00	-0.26	-.00004	-.00002	0.00000
76	101	0.00	0.00	-0.28	-.00004	-.00001	0.00000	11	0.00	0.00	-0.28	-.00004	0.00000	0.00000
	99	0.00	0.00	-0.26	-.00004	-.00002	0.00000	57	0.00	0.00	-0.25	-.00004	0.00000	0.00000
77	103	-0.29	0.00	0.00	0.00000	0.00000	0.00000	104	-0.29	0.00	0.00	0.00000	0.00000	0.00000
	84	-0.29	0.00	0.00	0.00000	0.00000	0.00000	85	-0.29	0.00	0.00	0.00000	0.00000	0.00000
78	104	-0.29	0.00	0.00	0.00000	0.00000	0.00000	105	-0.29	0.00	0.00	0.00000	0.00000	0.00000
	85	-0.29	0.00	0.00	0.00000	0.00000	0.00000	31	-0.29	0.00	0.00	0.00000	0.00000	0.00000
79	106	-0.29	0.00	0.00	-.00001	0.00000	0.00000	107	-0.29	0.00	0.00	0.00000	0.00000	0.00000
	102	-0.29	0.00	0.01	0.00000	0.00001	0.00000	103	-0.29	0.00	0.00	0.00000	0.00000	0.00000
80	107	-0.29	0.00	0.00	0.00000	0.00000	0.00000	108	-0.29	0.00	0.00	0.00000	0.00000	0.00000
	103	-0.29	0.00	0.00	0.00000	0.00000	0.00000	104	-0.29	0.00	0.00	0.00000	0.00000	0.00000
81	108	-0.29	0.00	0.00	0.00000	0.00000	0.00000	109	-0.29	0.00	0.00	0.00000	0.00000	0.00000
	104	-0.29	0.00	0.00	0.00000	0.00000	0.00000	105	-0.29	0.00	0.00	0.00000	0.00000	0.00000
82	22	-0.29	0.00	0.00	0.00000	0.00000	0.00000	110	-0.29	0.00	0.00	0.00000	0.00000	0.00000
	106	-0.29	0.00	0.00	-.00001	0.00000	0.00000	107	-0.29	0.00	0.00	0.00000	0.00000	0.00000
83	110	-0.29	0.00	0.00	0.00000	0.00000	0.00000	111	-0.29	0.00	0.00	0.00000	0.00000	0.00000
	107	-0.29	0.00	0.00	0.00000	0.00000	0.00000	108	-0.29	0.00	0.00	0.00000	0.00000	0.00000
84	111	-0.29	0.00	0.00	0.00000	0.00000	0.00000	30	-0.29	0.00	0.00	0.00000	0.00000	0.00000
	108	-0.29	0.00	0.00	0.00000	0.00000	0.00000	109	-0.29	0.00	0.00	0.00000	0.00000	0.00000
85	113	-0.27	0.10	0.01	0.00001	0.00000	0.00000	80	-0.27	0.10	0.01	0.00001	0.00000	0.00000
	112	-0.27	0.10	0.00	0.00001	0.00000	0.00000	76	-0.27	0.10	0.00	0.00001	0.00000	0.00000
86	23	-0.24	0.16	0.01	0.00001	0.00000	0.00000	21	-0.24	0.17	0.01	0.00000	0.00001	0.00000
	113	-0.24	0.16	0.01	0.00001	0.00000	0.00000	80	-0.24	0.17	0.01	0.00001	0.00000	0.00000
87	115	-0.26	-0.10	0.01	0.00001	-.00001	0.00000	113	-0.27	-0.11	0.01	0.00001	0.00001	0.00000
	114	-0.27	-0.10	0.01	0.00001	0.00000	0.00000	112	-0.27	-0.11	0.00	0.00001	0.00001	0.00000

Documento di proprietà **Snam Rete Gas**. La Società tutelerà i propri diritti in sede civile e penale a termini di legge.

SPOST. PESO PROPRIO: SHELL

Shell Nro	Nodo N.ro	S1 (mm)	S2 (mm)	S3 (mm)	R1 (rad)	R2 (rad)	R3 (rad)	Nodo N.ro	S1 (mm)	S2 (mm)	S3 (mm)	R1 (rad)	R2 (rad)	R3 (rad)
88	20	-0.23	-0.16	0.01	0.00001	-.00001	0.00000	23	-0.23	-0.17	0.01	0.00001	0.00001	0.00000
	115	-0.23	-0.16	0.01	0.00001	0.00000	0.00000	113	-0.23	-0.17	0.01	0.00001	0.00001	0.00000
89	116	0.00	0.29	0.01	0.00000	0.00001	0.00000	117	0.00	0.29	0.00	0.00000	0.00001	0.00000
	102	0.00	0.29	0.01	0.00001	0.00000	0.00000	106	0.00	0.29	0.00	0.00000	0.00001	0.00000
90	117	0.00	0.29	0.00	0.00000	0.00001	0.00000	37	0.00	0.29	0.00	0.00000	0.00000	0.00000
	106	0.00	0.29	0.00	0.00000	0.00001	0.00000	22	0.00	0.29	0.00	0.00000	0.00000	0.00000
91	119	-0.23	0.17	0.01	-.00001	0.00000	0.00000	117	-0.23	0.17	0.00	-.00001	0.00001	0.00000
	118	-0.23	0.16	0.01	-.00001	0.00000	0.00000	116	-0.23	0.17	0.01	-.00001	0.00001	0.00000
92	34	-0.27	0.10	0.00	0.00000	0.00000	0.00000	37	-0.27	0.10	0.00	0.00000	0.00000	0.00000
	119	-0.27	0.10	0.01	-.00001	0.00000	0.00000	117	-0.27	0.10	0.00	-.00001	0.00001	0.00000
93	121	0.00	-0.29	0.00	0.00000	0.00000	0.00000	122	0.00	-0.29	0.00	0.00000	0.00000	0.00000
	43	0.00	-0.29	0.00	0.00000	-.00001	0.00000	42	0.00	-0.29	0.01	-.00001	0.00000	0.00000
94	122	0.00	-0.29	0.00	0.00000	0.00000	0.00000	123	0.00	-0.29	0.00	0.00000	0.00000	0.00000
	42	0.00	-0.29	0.01	-.00001	0.00000	0.00000	2	0.00	-0.29	0.01	-.00001	0.00000	0.00000
95	124	0.00	-0.29	0.00	0.00000	0.00000	0.00000	125	0.00	-0.29	0.00	0.00000	0.00000	0.00000
	120	0.00	-0.29	0.00	0.00000	0.00000	0.00000	121	0.00	-0.29	0.00	0.00000	0.00000	0.00000
96	125	0.00	-0.29	0.00	0.00000	0.00000	0.00000	126	0.00	-0.29	0.00	0.00000	0.00000	0.00000
	121	0.00	-0.29	0.00	0.00000	0.00000	0.00000	122	0.00	-0.29	0.00	0.00000	0.00000	0.00000
97	126	0.00	-0.29	0.00	0.00000	0.00000	0.00000	127	0.00	-0.29	0.00	0.00000	0.00000	0.00000
	122	0.00	-0.29	0.00	0.00000	0.00000	0.00000	123	0.00	-0.29	0.00	0.00000	0.00000	0.00000
98	26	0.00	-0.29	0.00	0.00000	0.00000	0.00000	128	0.00	-0.29	0.00	0.00000	0.00000	0.00000
	124	0.00	-0.29	0.00	0.00000	0.00000	0.00000	125	0.00	-0.29	0.00	0.00000	0.00000	0.00000
99	128	0.00	-0.29	0.00	0.00000	0.00000	0.00000	129	0.00	-0.29	0.00	0.00000	0.00000	0.00000
	125	0.00	-0.29	0.00	0.00000	0.00000	0.00000	126	0.00	-0.29	0.00	0.00000	0.00000	0.00000
100	129	0.00	-0.29	0.00	0.00000	0.00000	0.00000	27	0.00	-0.29	0.00	0.00000	0.00000	0.00000
	126	0.00	-0.29	0.00	0.00000	0.00000	0.00000	127	0.00	-0.29	0.00	0.00000	0.00000	0.00000
101	130	0.00	-0.29	0.01	0.00000	-.00001	0.00000	131	0.00	-0.29	0.01	0.00000	-.00001	0.00000
	68	0.00	-0.29	0.00	0.00003	0.00000	0.00001	64	0.00	-0.28	0.00	0.00004	0.00000	0.00000
102	131	0.00	-0.29	0.01	0.00000	-.00001	0.00000	132	0.00	-0.29	0.01	0.00000	0.00000	0.00000
	64	0.00	-0.28	0.00	0.00004	0.00000	0.00000	5	0.00	-0.28	0.00	0.00005	0.00000	0.00000
103	16	0.00	-0.29	0.00	0.00000	0.00000	0.00000	133	0.00	-0.29	0.01	0.00000	-.00001	0.00000
	10	0.00	-0.29	0.00	0.00000	0.00000	0.00000	130	0.00	-0.29	0.01	0.00000	-.00001	0.00000
104	133	0.00	-0.29	0.01	0.00000	-.00001	0.00000	134	0.00	-0.29	0.01	-.00001	-.00001	0.00000
	130	0.00	-0.29	0.01	0.00000	-.00001	0.00000	131	0.00	-0.29	0.01	0.00000	-.00001	0.00000
105	134	0.00	-0.29	0.01	-.00001	-.00001	0.00000	135	0.00	-0.29	0.01	-.00001	0.00000	0.00000
	131	0.00	-0.29	0.01	0.00000	-.00001	0.00000	132	0.00	-0.29	0.01	0.00000	0.00000	0.00000
106	3	0.00	-0.29	0.00	0.00000	0.00000	0.00000	136	0.00	-0.29	0.00	0.00000	0.00000	0.00000
	16	0.00	-0.29	0.00	0.00000	0.00000	0.00000	133	0.00	-0.29	0.01	0.00000	-.00001	0.00000
107	136	0.00	-0.29	0.00	0.00000	0.00000	0.00000	137	0.00	-0.29	0.00	-.00001	0.00000	0.00000
	133	0.00	-0.29	0.01	0.00000	-.00001	0.00000	134	0.00	-0.29	0.01	-.00001	-.00001	0.00000
108	137	0.00	-0.29	0.00	-.00001	0.00000	0.00000	138	0.00	-0.29	0.01	-.00001	0.00000	0.00000
	134	0.00	-0.29	0.01	-.00001	-.00001	0.00000	135	0.00	-0.29	0.01	-.00001	0.00000	0.00000
109	139	0.00	-0.29	0.00	0.00000	0.00000	0.00000	140	0.00	-0.29	0.00	0.00000	0.00000	0.00000
	3	0.00	-0.29	0.00	0.00000	0.00000	0.00000	136	0.00	-0.29	0.00	0.00000	0.00000	0.00000
110	140	0.00	-0.29	0.00	0.00000	0.00000	0.00000	141	0.00	-0.29	0.00	0.00000	0.00000	0.00000
	136	0.00	-0.29	0.00	0.00000	0.00000	0.00000	137	0.00	-0.29	0.00	-.00001	0.00000	0.00000
111	141	0.00	-0.29	0.00	0.00000	0.00000	0.00000	142	0.00	-0.29	0.00	-.00001	0.00000	0.00000
	137	0.00	-0.29	0.00	-.00001	0.00000	0.00000	138	0.00	-0.29	0.01	-.00001	0.00000	0.00000
112	143	0.00	-0.29	0.00	0.00000	0.00000	0.00000	144	0.00	-0.29	0.00	0.00000	0.00000	0.00000
	139	0.00	-0.29	0.00	0.00000	0.00000	0.00000	140	0.00	-0.29	0.00	0.00000	0.00000	0.00000
113	144	0.00	-0.29	0.00	0.00000	0.00000	0.00000	145	0.00	-0.29	0.00	0.00000	0.00000	0.00000
	140	0.00	-0.29	0.00	0.00000	0.00000	0.00000	141	0.00	-0.29	0.00	0.00000	0.00000	0.00000
114	145	0.00	-0.29	0.00	0.00000	0.00000	0.00000	146	0.00	-0.29	0.00	0.00000	0.00000	0.00000
	141	0.00	-0.29	0.00	0.00000	0.00000	0.00000	142	0.00	-0.29	0.00	-.00001	0.00000	0.00000
115	28	0.00	-0.29	0.00	0.00000	0.00000	0.00000	147	0.00	-0.29	0.00	0.00000	0.00000	0.00000
	143	0.00	-0.29	0.00	0.00000	0.00000	0.00000	144	0.00	-0.29	0.00	0.00000	0.00000	0.00000
116	147	0.00	-0.29	0.00	0.00000	0.00000	0.00000	148	0.00	-0.29	0.00	0.00000	0.00000	0.00000
	144	0.00	-0.29	0.00	0.00000	0.00000	0.00000	145	0.00	-0.29	0.00	0.00000	0.00000	0.00000
117	148	0.00	-0.29	0.00	0.00000	0.00000	0.00000	29	0.00	-0.29	0.00	0.00000	0.00000	0.00000
	145	0.00	-0.29	0.00	0.00000	0.00000	0.00000	146	0.00	-0.29	0.00	0.00000	0.00000	0.00000
118	101	-0.28	0.00	0.00	0.00000	-.00004	-.00001	115	-0.28	0.00	0.01	0.00001	-.00001	0.00000
	100	-0.28	0.00	0.00	0.00000	-.00002	-.00001	114	-0.29	0.00	0.01	0.00001	0.00000	0.00000
119	11	-0.28	0.00	0.00	0.00000	-.00004	0.00000	20	-0.28	0.00	0.01	0.00000	-.00002	0.00000
	101	-0.28	0.00	0.00	0.00000	-.00004	-.00001	115	-0.28	0.00	0.01	0.00001	-.00001	0.00000
120	149	0.00	-0.29	0.01	0.00000	-.00001	0.00000	150	0.00	-0.29	0.01	0.00000	-.00001	0.00000
	97	0.00	-0.29	0.00	0.00003	0.00000	0.00000	94	0.00	-0.28	0.00	0.00004	0.00000	0.00000
121	150	0.00	-0.29	0.01	0.00000	-.00001	0.00000	151	0.00	-0.29	0.02	0.00000	0.00000	0.00000
	94	0.00	-0.28	0.00	0.00004	0.00000	0.00000	18	0.00	-0.28	0.00	0.00005	0.00000	0.00000
122	36	0.00	-0.29	0.01	0.00000	0.00000	0.00000	152	0.00	-0.29	0.01	0.00000	-.00001	0.00000
	35	0.00	-0.29	0.00	0.00000	0.00000	0.00000	149	0.00	-0.29	0.01	0.00000	-.00001	0.00000
123	152	0.00	-0.29	0.01	0.00000	-.00001	0.00000	153	0.00	-0.29	0.01	-.00001	-.00001	0.00000
	149	0.00	-0.29	0.01	0.00000	-.00001	0.00000	150	0.00	-0.29	0.01	0.00000	-.00001	0.00000
124	153	0.00	-0.29	0.01	-.00001	-.00001	0.00000	154	0.00	-0.29	0.01	-.00001	0.00000	0.00000
	150	0.00	-0.29	0.01	0.00000	-.00001	0.00000	151	0.00	-0.29	0.02	0.00000	0.00000	0.00000
125	25	0.00	-0.29	0.00	0.00000	0.00000	0.00000	155	0.00	-0.29	0.01	0.00000	0.00000	0.00000
	36	0.00	-0.29	0.01	0.00000	0.00000	0.00000	152	0.00	-0.29	0.01	0.00000	-.00001	0.00000
126	155	0.00	-0.29	0.01	0.00000	0.00000	0.00000	156	0.00	-0.29	0.01	-.00001	0.00000	0.00000
	152	0.00	-0.29	0.01	0.00000	-.00001	0.00000	153	0.00	-0.29	0.01	-.00001	-.00001	0.00000
127	156	0.00	-0.29	0.01	-.00001	0.00000	0.00000	157	0.00	-0.29	0.01	-.00001	0.00000	0.00000
	153	0.00	-0.29	0.01	-.00001	-.00001	0.00000	154	0.00	-0.29	0.01	-.00001	0.00000	0.00000

Documento di proprietà **Snam Rete Gas**. La Società tutelerà i propri diritti in sede civile e penale a termini di legge.

SPOST. PESO PROPRIO: SHELL

Shell Nro	Nodo N.ro	S1 (mm)	S2 (mm)	S3 (mm)	R1 (rad)	R2 (rad)	R3 (rad)	Nodo N.ro	S1 (mm)	S2 (mm)	S3 (mm)	R1 (rad)	R2 (rad)	R3 (rad)
128	74	0.00	-0.29	0.00	0.00000	0.00000	0.00000	158	0.00	-0.29	0.00	0.00000	0.00000	0.00000
	25	0.00	-0.29	0.00	0.00000	0.00000	0.00000	155	0.00	-0.29	0.01	0.00000	0.00000	0.00000
129	158	0.00	-0.29	0.00	0.00000	0.00000	0.00000	159	0.00	-0.29	0.00	0.00000	0.00000	0.00000
	155	0.00	-0.29	0.01	0.00000	0.00000	0.00000	156	0.00	-0.29	0.01	-.00001	0.00000	0.00000
130	159	0.00	-0.29	0.00	0.00000	0.00000	0.00000	160	0.00	-0.29	0.00	0.00000	0.00000	0.00000
	156	0.00	-0.29	0.01	-.00001	0.00000	0.00000	157	0.00	-0.29	0.01	-.00001	0.00000	0.00000
131	75	0.00	-0.29	0.00	0.00000	0.00000	0.00000	161	0.00	-0.29	0.00	0.00000	0.00000	0.00000
	74	0.00	-0.29	0.00	0.00000	0.00000	0.00000	158	0.00	-0.29	0.00	0.00000	0.00000	0.00000
132	161	0.00	-0.29	0.00	0.00000	0.00000	0.00000	162	0.00	-0.29	0.00	0.00000	0.00000	0.00000
	158	0.00	-0.29	0.00	0.00000	0.00000	0.00000	159	0.00	-0.29	0.00	0.00000	0.00000	0.00000
133	162	0.00	-0.29	0.00	0.00000	0.00000	0.00000	163	0.00	-0.29	0.00	0.00000	0.00000	0.00000
	159	0.00	-0.29	0.00	0.00000	0.00000	0.00000	160	0.00	-0.29	0.00	0.00000	0.00000	0.00000
134	32	0.00	-0.29	0.00	0.00000	0.00000	0.00000	164	0.00	-0.29	0.00	0.00000	0.00000	0.00000
	75	0.00	-0.29	0.00	0.00000	0.00000	0.00000	161	0.00	-0.29	0.00	0.00000	0.00000	0.00000
135	164	0.00	-0.29	0.00	0.00000	0.00000	0.00000	165	0.00	-0.29	0.00	0.00000	0.00000	0.00000
	161	0.00	-0.29	0.00	0.00000	0.00000	0.00000	162	0.00	-0.29	0.00	0.00000	0.00000	0.00000
136	165	0.00	-0.29	0.00	0.00000	0.00000	0.00000	33	0.00	-0.29	0.00	0.00000	0.00000	0.00000
	162	0.00	-0.29	0.00	0.00000	0.00000	0.00000	163	0.00	-0.29	0.00	0.00000	0.00000	0.00000
137	166	0.00	-0.29	0.01	0.00000	0.00001	0.00000	167	0.00	-0.29	0.01	0.00000	0.00001	0.00000
	58	0.00	-0.28	0.00	0.00004	0.00000	0.00000	54	0.00	-0.28	0.00	0.00003	0.00000	0.00000
138	167	0.00	-0.29	0.01	0.00000	0.00001	0.00000	34	0.00	-0.29	0.00	0.00000	0.00000	0.00000
	54	0.00	-0.28	0.00	0.00003	0.00000	0.00000	7	0.00	-0.29	0.00	0.00001	0.00000	-.00001
139	135	0.00	-0.29	0.01	-.00001	0.00000	0.00000	168	0.00	-0.29	0.01	-.00001	0.00001	0.00000
	132	0.00	-0.29	0.01	0.00000	0.00000	0.00000	166	0.00	-0.29	0.01	0.00000	0.00001	0.00000
140	168	0.00	-0.29	0.01	-.00001	0.00001	0.00000	169	0.00	-0.29	0.01	0.00000	0.00001	0.00000
	166	0.00	-0.29	0.01	0.00000	0.00001	0.00000	167	0.00	-0.29	0.01	0.00000	0.00001	0.00000
141	169	0.00	-0.29	0.01	0.00000	0.00001	0.00000	37	0.00	-0.29	0.00	0.00000	0.00000	0.00000
	167	0.00	-0.29	0.01	0.00000	0.00001	0.00000	34	0.00	-0.29	0.00	0.00000	0.00000	0.00000
142	138	0.00	-0.29	0.01	-.00001	0.00000	0.00000	170	0.00	-0.29	0.01	-.00001	0.00000	0.00000
	135	0.00	-0.29	0.01	-.00001	0.00000	0.00000	168	0.00	-0.29	0.01	-.00001	0.00001	0.00000
143	170	0.00	-0.29	0.01	-.00001	0.00000	0.00000	171	0.00	-0.29	0.00	0.00000	0.00000	0.00000
	168	0.00	-0.29	0.01	-.00001	0.00001	0.00000	169	0.00	-0.29	0.01	0.00000	0.00001	0.00000
144	171	0.00	-0.29	0.00	0.00000	0.00000	0.00000	22	0.00	-0.29	0.00	0.00000	0.00000	0.00000
	169	0.00	-0.29	0.01	0.00000	0.00001	0.00000	37	0.00	-0.29	0.00	0.00000	0.00000	0.00000
145	142	0.00	-0.29	0.00	-.00001	0.00000	0.00000	172	0.00	-0.29	0.00	0.00000	0.00000	0.00000
	138	0.00	-0.29	0.01	-.00001	0.00000	0.00000	170	0.00	-0.29	0.01	-.00001	0.00000	0.00000
146	172	0.00	-0.29	0.00	0.00000	0.00000	0.00000	173	0.00	-0.29	0.00	0.00000	0.00000	0.00000
	170	0.00	-0.29	0.01	-.00001	0.00000	0.00000	171	0.00	-0.29	0.00	0.00000	0.00000	0.00000
147	173	0.00	-0.29	0.00	0.00000	0.00000	0.00000	110	0.00	-0.29	0.00	0.00000	0.00000	0.00000
	171	0.00	-0.29	0.00	0.00000	0.00000	0.00000	22	0.00	-0.29	0.00	0.00000	0.00000	0.00000
148	146	0.00	-0.29	0.00	0.00000	0.00000	0.00000	174	0.00	-0.29	0.00	0.00000	0.00000	0.00000
	142	0.00	-0.29	0.00	-.00001	0.00000	0.00000	172	0.00	-0.29	0.00	0.00000	0.00000	0.00000
149	174	0.00	-0.29	0.00	0.00000	0.00000	0.00000	175	0.00	-0.29	0.00	0.00000	0.00000	0.00000
	172	0.00	-0.29	0.00	0.00000	0.00000	0.00000	173	0.00	-0.29	0.00	0.00000	0.00000	0.00000
150	175	0.00	-0.29	0.00	0.00000	0.00000	0.00000	111	0.00	-0.29	0.00	0.00000	0.00000	0.00000
	173	0.00	-0.29	0.00	0.00000	0.00000	0.00000	110	0.00	-0.29	0.00	0.00000	0.00000	0.00000
151	29	0.00	-0.29	0.00	0.00000	0.00000	0.00000	176	0.00	-0.29	0.00	0.00000	0.00000	0.00000
	146	0.00	-0.29	0.00	0.00000	0.00000	0.00000	174	0.00	-0.29	0.00	0.00000	0.00000	0.00000
152	176	0.00	-0.29	0.00	0.00000	0.00000	0.00000	177	0.00	-0.29	0.00	0.00000	0.00000	0.00000
	174	0.00	-0.29	0.00	0.00000	0.00000	0.00000	175	0.00	-0.29	0.00	0.00000	0.00000	0.00000
153	177	0.00	-0.29	0.00	0.00000	0.00000	0.00000	30	0.00	-0.29	0.00	0.00000	0.00000	0.00000
	175	0.00	-0.29	0.00	0.00000	0.00000	0.00000	111	0.00	-0.29	0.00	0.00000	0.00000	0.00000
154	178	0.00	-0.29	0.01	0.00000	0.00001	0.00000	179	0.00	-0.29	0.01	0.00000	0.00001	0.00000
	93	0.00	-0.28	0.00	0.00004	0.00000	0.00000	92	0.00	-0.29	0.00	0.00003	0.00000	-.00001
155	179	0.00	-0.29	0.01	0.00000	0.00001	0.00000	12	0.00	-0.29	0.00	0.00000	0.00000	0.00000
	92	0.00	-0.29	0.00	0.00003	0.00000	-.00001	17	0.00	-0.29	0.00	0.00001	0.00000	-.00001
156	154	0.00	-0.29	0.01	-.00001	0.00000	0.00000	180	0.00	-0.29	0.01	-.00001	0.00001	0.00000
	151	0.00	-0.29	0.02	0.00000	0.00000	0.00000	178	0.00	-0.29	0.01	0.00000	0.00001	0.00000
157	180	0.00	-0.29	0.01	-.00001	0.00001	0.00000	181	0.00	-0.29	0.01	0.00000	0.00001	0.00000
	178	0.00	-0.29	0.01	0.00000	0.00001	0.00000	179	0.00	-0.29	0.01	0.00000	0.00001	0.00000
158	181	0.00	-0.29	0.01	0.00000	0.00001	0.00000	15	0.00	-0.29	0.01	0.00000	0.00000	0.00000
	179	0.00	-0.29	0.01	0.00000	0.00001	0.00000	12	0.00	-0.29	0.00	0.00000	0.00000	0.00000
159	157	0.00	-0.29	0.01	-.00001	0.00000	0.00000	182	0.00	-0.29	0.01	-.00001	0.00000	0.00000
	154	0.00	-0.29	0.01	-.00001	0.00000	0.00000	180	0.00	-0.29	0.01	-.00001	0.00001	0.00000
160	182	0.00	-0.29	0.01	-.00001	0.00000	0.00000	183	0.00	-0.29	0.00	0.00000	0.00000	0.00000
	180	0.00	-0.29	0.01	-.00001	0.00001	0.00000	181	0.00	-0.29	0.01	0.00000	0.00001	0.00000
161	183	0.00	-0.29	0.00	0.00000	0.00000	0.00000	9	0.00	-0.29	0.00	0.00000	0.00000	0.00000
	181	0.00	-0.29	0.01	0.00000	0.00001	0.00000	15	0.00	-0.29	0.01	0.00000	0.00000	0.00000
162	160	0.00	-0.29	0.00	0.00000	0.00000	0.00000	184	0.00	-0.29	0.00	0.00000	0.00000	0.00000
	157	0.00	-0.29	0.01	-.00001	0.00000	0.00000	182	0.00	-0.29	0.01	-.00001	0.00000	0.00000
163	184	0.00	-0.29	0.00	0.00000	0.00000	0.00000	185	0.00	-0.29	0.00	0.00000	0.00000	0.00000
	182	0.00	-0.29	0.01	-.00001	0.00000	0.00000	183	0.00	-0.29	0.00	0.00000	0.00000	0.00000
164	185	0.00	-0.29	0.00	0.00000	0.00000	0.00000	120	0.00	-0.29	0.00	0.00000	0.00000	0.00000
	183	0.00	-0.29	0.00	0.00000	0.00000	0.00000	9	0.00	-0.29	0.00	0.00000	0.00000	0.00000
165	163	0.00	-0.29	0.00	0.00000	0.00000	0.00000	186	0.00	-0.29	0.00	0.00000	0.00000	0.00000
	160	0.00	-0.29	0.00	0.00000	0.00000	0.00000	184	0.00	-0.29	0.00	0.00000	0.00000	0.00000
166	186	0.00	-0.29	0.00	0.00000	0.00000	0.00000	187	0.00	-0.29	0.00	0.00000	0.00000	0.00000
	184	0.00	-0.29	0.00	0.00000	0.00000	0.00000	185	0.00	-0.29	0.00	0.00000	0.00000	0.00000
167	187	0.00	-0.29	0.00	0.00000	0.00000	0.00000	124	0.00	-0.29	0.00	0.00000	0.00000	0.00000
	185	0.00	-0.29	0.00	0.00000	0.00000	0.00000	120	0.00	-0.29	0.00	0.00000	0.00000	0.00000

Documento di proprietà **Snam Rete Gas**. La Società tutelerà i propri diritti in sede civile e penale a termini di legge.

SPOST. PESO PROPRIO: SHELL

Shell Nro	Nodo N.ro	S1 (mm)	S2 (mm)	S3 (mm)	R1 (rad)	R2 (rad)	R3 (rad)	Nodo N.ro	S1 (mm)	S2 (mm)	S3 (mm)	R1 (rad)	R2 (rad)	R3 (rad)
168	33	0.00	-0.29	0.00	0.00000	0.00000	0.00000	188	0.00	-0.29	0.00	0.00000	0.00000	0.00000
	163	0.00	-0.29	0.00	0.00000	0.00000	0.00000	186	0.00	-0.29	0.00	0.00000	0.00000	0.00000
169	188	0.00	-0.29	0.00	0.00000	0.00000	0.00000	189	0.00	-0.29	0.00	0.00000	0.00000	0.00000
	186	0.00	-0.29	0.00	0.00000	0.00000	0.00000	187	0.00	-0.29	0.00	0.00000	0.00000	0.00000
170	189	0.00	-0.29	0.00	0.00000	0.00000	0.00000	26	0.00	-0.29	0.00	0.00000	0.00000	0.00000
	187	0.00	-0.29	0.00	0.00000	0.00000	0.00000	124	0.00	-0.29	0.00	0.00000	0.00000	0.00000
171	190	0.00	-0.29	0.00	0.00000	0.00000	0.00000	191	0.00	-0.29	0.00	0.00000	0.00000	0.00000
	73	0.00	-0.29	0.01	-.00001	0.00000	0.00000	72	0.00	-0.29	0.00	0.00000	0.00001	0.00000
172	191	0.00	-0.29	0.00	0.00000	0.00000	0.00000	139	0.00	-0.29	0.00	0.00000	0.00000	0.00000
	72	0.00	-0.29	0.00	0.00000	0.00001	0.00000	3	0.00	-0.29	0.00	0.00000	0.00000	0.00000
173	127	0.00	-0.29	0.00	0.00000	0.00000	0.00000	192	0.00	-0.29	0.00	0.00000	0.00000	0.00000
	123	0.00	-0.29	0.00	0.00000	0.00000	0.00000	190	0.00	-0.29	0.00	0.00000	0.00000	0.00000
174	192	0.00	-0.29	0.00	0.00000	0.00000	0.00000	193	0.00	-0.29	0.00	0.00000	0.00000	0.00000
	190	0.00	-0.29	0.00	0.00000	0.00000	0.00000	191	0.00	-0.29	0.00	0.00000	0.00000	0.00000
175	193	0.00	-0.29	0.00	0.00000	0.00000	0.00000	143	0.00	-0.29	0.00	0.00000	0.00000	0.00000
	191	0.00	-0.29	0.00	0.00000	0.00000	0.00000	139	0.00	-0.29	0.00	0.00000	0.00000	0.00000
176	27	0.00	-0.29	0.00	0.00000	0.00000	0.00000	194	0.00	-0.29	0.00	0.00000	0.00000	0.00000
	127	0.00	-0.29	0.00	0.00000	0.00000	0.00000	192	0.00	-0.29	0.00	0.00000	0.00000	0.00000
177	194	0.00	-0.29	0.00	0.00000	0.00000	0.00000	195	0.00	-0.29	0.00	0.00000	0.00000	0.00000
	192	0.00	-0.29	0.00	0.00000	0.00000	0.00000	193	0.00	-0.29	0.00	0.00000	0.00000	0.00000
178	195	0.00	-0.29	0.00	0.00000	0.00000	0.00000	28	0.00	-0.29	0.00	0.00000	0.00000	0.00000
	193	0.00	-0.29	0.00	0.00000	0.00000	0.00000	143	0.00	-0.29	0.00	0.00000	0.00000	0.00000
179	52	-0.28	0.00	0.00	0.00000	-.00002	0.00001	119	-0.29	0.00	0.01	-.00001	0.00000	0.00000
	53	-0.28	0.00	0.00	0.00000	-.00004	0.00001	118	-0.28	0.00	0.01	-.00001	-.00001	0.00000
180	7	-0.29	0.00	0.00	0.00000	-.00001	0.00001	34	-0.29	0.00	0.00	0.00000	0.00000	0.00000
	52	-0.28	0.00	0.00	0.00000	-.00002	0.00001	119	-0.29	0.00	0.01	-.00001	0.00000	0.00000

SPOST. SOVRACCARICO PERMAN.: SHELL

Shell Nro	Nodo N.ro	S1 (mm)	S2 (mm)	S3 (mm)	R1 (rad)	R2 (rad)	R3 (rad)	Nodo N.ro	S1 (mm)	S2 (mm)	S3 (mm)	R1 (rad)	R2 (rad)	R3 (rad)
1	38	-0.16	0.00	0.00	0.00000	-.00003	-.00002	39	-0.16	-0.01	0.01	-.00001	-.00001	-.00001
	14	-0.17	0.00	0.00	0.00000	-.00004	-.00001	1	-0.17	0.00	0.01	0.00000	-.00001	-.00001
2	6	-0.02	0.15	0.01	0.00000	0.00001	0.00001	44	-0.02	0.14	0.01	0.00000	0.00001	0.00000
	2	-0.02	0.15	0.01	0.00001	0.00000	-.00001	42	-0.02	0.15	0.01	0.00001	0.00000	0.00000
3	39	-0.11	0.11	0.01	-.00001	0.00000	-.00001	44	-0.11	0.09	0.01	-.00001	0.00001	0.00000
	1	-0.13	0.12	0.01	-.00001	-.00001	-.00001	6	-0.12	0.09	0.01	-.00001	0.00001	0.00001
4	46	-0.17	0.00	0.01	0.00001	0.00000	-.00001	47	-0.17	-0.01	0.00	0.00001	0.00000	-.00002
	10	-0.17	0.00	0.00	0.00000	0.00000	-.00001	16	-0.17	-0.01	0.00	0.00000	0.00000	-.00001
5	50	-0.17	0.00	0.00	0.00000	-.00002	0.00000	46	-0.17	0.00	0.01	0.00001	0.00000	-.00001
	4	-0.17	0.00	0.00	0.00000	-.00001	-.00001	10	-0.17	0.00	0.00	0.00000	0.00000	-.00001
6	54	0.00	0.00	-0.17	0.00001	-.00002	0.00000	55	0.00	0.00	-0.16	0.00002	-.00002	0.00000
	7	0.00	0.00	-0.17	0.00001	-.00001	0.00000	52	0.00	0.00	-0.17	0.00002	0.00000	0.00000
7	64	0.00	0.00	-0.16	0.00000	-.00003	0.00000	65	0.00	0.00	-0.15	-.00001	-.00003	0.00000
	5	0.00	0.00	-0.16	0.00000	-.00003	0.00000	62	0.00	0.00	-0.14	0.00000	-.00003	0.00000
8	47	-0.17	-0.01	0.00	0.00001	0.00000	-.00002	72	-0.16	-0.02	0.00	0.00001	0.00000	-.00002
	16	-0.17	-0.01	0.00	0.00000	0.00000	-.00001	3	-0.17	-0.02	0.00	0.00000	0.00000	-.00001
9	76	-0.14	0.02	0.00	0.00001	0.00000	0.00000	77	-0.14	0.03	0.00	0.00000	0.00000	0.00001
	25	-0.14	0.02	0.00	0.00000	0.00000	0.00001	74	-0.14	0.03	0.00	0.00000	0.00000	0.00001
10	38	0.00	0.00	-0.16	0.00002	-.00003	0.00000	86	0.00	0.00	-0.14	0.00001	-.00003	0.00000
	14	0.00	0.00	-0.17	0.00001	-.00004	0.00000	71	0.00	0.00	-0.14	0.00001	-.00004	0.00000
11	94	0.00	0.00	-0.13	0.00000	-.00001	0.00000	95	0.00	0.00	-0.13	-.00001	-.00001	0.00000
	18	0.00	0.00	-0.13	0.00000	-.00001	0.00000	91	0.00	0.00	-0.12	0.00000	-.00001	0.00000
12	102	-0.16	0.02	0.01	0.00000	0.00001	0.00002	103	-0.16	0.03	0.00	0.00000	0.00000	0.00001
	21	-0.15	0.02	0.01	0.00000	0.00001	0.00001	84	-0.15	0.03	0.00	0.00000	0.00000	0.00001
13	112	-0.14	0.02	0.00	0.00001	0.00000	0.00000	76	-0.14	0.02	0.00	0.00001	0.00000	0.00000
	36	-0.14	0.02	0.00	0.00000	0.00000	0.00001	25	-0.14	0.02	0.00	0.00000	0.00000	0.00001
14	114	-0.14	0.01	0.01	0.00001	0.00000	0.00001	112	-0.14	0.02	0.00	0.00001	0.00000	0.00000
	35	-0.14	0.01	0.00	0.00000	0.00000	0.00001	36	-0.14	0.02	0.00	0.00000	0.00000	0.00001
15	24	0.01	0.16	0.01	0.00000	0.00001	0.00003	116	0.01	0.17	0.01	0.00000	0.00001	0.00002
	21	0.02	0.15	0.01	0.00001	0.00000	0.00001	102	0.02	0.16	0.01	0.00001	0.00000	0.00002
16	118	-0.12	0.12	0.01	-.00001	0.00000	0.00001	116	-0.11	0.12	0.01	-.00001	0.00001	0.00002
	20	-0.12	0.13	0.01	-.00001	-.00001	0.00001	24	-0.11	0.12	0.01	-.00001	0.00001	0.00003
17	120	0.03	-0.14	0.00	0.00000	0.00000	-.00001	121	0.03	-0.14	0.00	0.00000	0.00000	-.00001
	9	0.02	-0.14	0.00	0.00000	0.00000	-.00001	43	0.02	-0.14	0.00	0.00000	-.00001	0.00000
18	10	0.00	-0.17	0.00	0.00001	0.00000	0.00000	130	0.00	-0.17	0.01	0.00001	-.00001	0.00000
	4	0.00	-0.17	0.00	0.00001	0.00000	0.00001	68	0.00	-0.17	0.00	0.00002	0.00000	0.00001
19	100	-0.14	0.00	0.00	0.00000	-.00002	0.00002	114	-0.14	0.01	0.01	0.00001	0.00000	0.00001
	19	-0.14	0.00	0.00	0.00000	-.00001	0.00001	35	-0.14	0.01	0.00	0.00000	0.00000	0.00001
20	35	0.00	-0.14	-0.01	-.00001	0.00000	0.00000	149	0.00	-0.13	-0.01	-.00001	-.00001	0.00000
	19	0.00	-0.14	0.00	-.00001	0.00000	0.00001	97	0.00	-0.13	0.00	0.00000	0.00000	0.00000
21	132	0.00	-0.16	0.01	0.00001	0.00000	0.00000	166	0.00	-0.17	0.01	0.00001	0.00001	0.00000
	5	0.00	-0.16	0.00	0.00003	0.00000	0.00000	58	0.00	-0.16	0.00	0.00003	0.00000	0.00000
22	151	0.00	-0.13	0.00	-.00001	0.00000	0.00000	178	0.00	-0.13	0.00	-.00001	0.00001	0.00000
	18	0.00	-0.13	0.00	0.00001	0.00000	0.00000	93	0.00	-0.13	0.00	0.00001	0.00000	0.00000
23	123	0.03	-0.15	0.00	0.00000	0.00000	-.00001	190	0.03	-0.16	0.00	0.00000	0.00000	-.00001
	2	0.02	-0.15	0.01	-.00001	0.00000	-.00001	73	0.02	-0.16	0.01	-.00001	0.00000	-.00002
24	53	-0.17	0.00	0.00	0.00000	-.00003	0.00000	118	-0.17	0.00	0.01	-.00001	-.00001	0.00001
	11	-0.17	0.00	0.00	0.00000	-.00004	0.00001	20	-0.18	0.00	0.01	0.00000	-.00001	0.00001
25	40	-0.14	0.00	0.00	0.00000	-.00002	-.00002	41	-0.14	-0.01	0.01	-.00001	0.00000	-.00001
	38	-0.16	0.00	0.00	0.00000	-.00003	-.00002	39	-0.16	-0.01	0.01	-.00001	-.00001	-.00001

Documento di proprietà **Snam Rete Gas**. La Società tutelerà i propri diritti in sede civile e penale a termini di legge.

SPOST. SOVRACCARICO PERMAN.: SHELL

Shell Nro	Nodo N.ro	S1 (mm)	S2 (mm)	S3 (mm)	R1 (rad)	R2 (rad)	R3 (rad)	Nodo N.ro	S1 (mm)	S2 (mm)	S3 (mm)	R1 (rad)	R2 (rad)	R3 (rad)
26	17	-0.14	0.00	0.00	0.00000	-.00001	-.00001	12	-0.14	-0.01	0.00	0.00000	0.00000	-.00001
	40	-0.14	0.00	0.00	0.00000	-.00002	-.00002	41	-0.14	-0.01	0.01	-.00001	0.00000	-.00001
27	44	-0.02	0.14	0.01	0.00000	0.00001	0.00000	45	-0.02	0.14	0.00	0.00000	0.00001	0.00000
	42	-0.02	0.15	0.01	0.00001	0.00000	0.00000	43	-0.02	0.14	0.00	0.00000	0.00001	0.00000
28	45	-0.02	0.14	0.00	0.00000	0.00001	0.00000	15	-0.02	0.14	0.00	0.00000	0.00000	-.00001
	43	-0.02	0.14	0.00	0.00000	0.00001	0.00000	9	-0.02	0.14	0.00	0.00000	0.00000	-.00001
29	41	-0.12	0.08	0.01	-.00001	0.00000	-.00001	45	-0.12	0.07	0.00	-.00001	0.00001	0.00000
	39	-0.13	0.08	0.01	-.00001	0.00000	-.00001	44	-0.13	0.07	0.01	-.00001	0.00001	0.00000
30	12	-0.13	0.04	0.00	0.00000	0.00000	-.00001	15	-0.13	0.03	0.00	0.00000	0.00000	-.00001
	41	-0.14	0.04	0.01	-.00001	0.00000	-.00001	45	-0.14	0.03	0.00	-.00001	0.00000	0.00000
31	48	-0.15	-0.06	0.01	0.00001	-.00001	-.00001	49	-0.15	-0.07	0.01	0.00001	0.00001	-.00002
	46	-0.15	-0.06	0.01	0.00001	0.00000	-.00001	47	-0.15	-0.07	0.00	0.00001	0.00000	-.00002
32	1	-0.14	-0.10	0.01	0.00001	-.00001	-.00001	8	-0.13	-0.10	0.01	0.00001	0.00001	-.00003
	48	-0.13	-0.10	0.01	0.00001	0.00000	-.00001	49	-0.13	-0.10	0.01	0.00001	0.00001	-.00002
33	51	-0.17	0.00	0.00	0.00000	-.00003	0.00000	48	-0.17	0.00	0.01	0.00001	-.00001	-.00001
	50	-0.17	0.00	0.00	0.00000	-.00002	0.00000	46	-0.17	0.00	0.01	0.00001	0.00000	-.00001
34	14	-0.17	0.00	0.00	0.00000	-.00004	-.00001	1	-0.17	0.00	0.01	0.00000	-.00001	-.00001
	51	-0.17	0.00	0.00	0.00000	-.00003	0.00000	48	-0.17	0.00	0.01	0.00001	-.00001	-.00001
35	55	0.00	0.00	-0.16	0.00002	-.00002	0.00000	56	0.00	0.00	-0.15	0.00003	-.00001	0.00000
	52	0.00	0.00	-0.17	0.00002	0.00000	0.00000	53	0.00	0.00	-0.17	0.00003	0.00000	0.00000
36	56	0.00	0.00	-0.15	0.00003	-.00001	0.00000	57	0.00	0.00	-0.14	0.00004	-.00001	0.00000
	53	0.00	0.00	-0.17	0.00003	0.00000	0.00000	11	0.00	0.00	-0.17	0.00004	-.00001	0.00000
37	58	0.00	0.00	-0.16	0.00000	-.00003	0.00000	59	0.00	0.00	-0.15	0.00001	-.00003	0.00000
	54	0.00	0.00	-0.17	0.00001	-.00002	0.00000	55	0.00	0.00	-0.16	0.00002	-.00002	0.00000
38	59	0.00	0.00	-0.15	0.00001	-.00003	0.00000	60	0.00	0.00	-0.13	0.00002	-.00002	0.00000
	55	0.00	0.00	-0.16	0.00002	-.00002	0.00000	56	0.00	0.00	-0.15	0.00003	-.00001	0.00000
39	60	0.00	0.00	-0.13	0.00002	-.00002	0.00000	61	0.00	0.00	-0.13	0.00002	-.00001	0.00000
	56	0.00	0.00	-0.15	0.00003	-.00001	0.00000	57	0.00	0.00	-0.14	0.00004	-.00001	0.00000
40	5	0.00	0.00	-0.16	0.00000	-.00003	0.00000	62	0.00	0.00	-0.14	0.00000	-.00003	0.00000
	58	0.00	0.00	-0.16	0.00000	-.00003	0.00000	59	0.00	0.00	-0.15	0.00001	-.00003	0.00000
41	62	0.00	0.00	-0.14	0.00000	-.00003	0.00000	63	0.00	0.00	-0.13	0.00000	-.00002	0.00000
	59	0.00	0.00	-0.15	0.00001	-.00003	0.00000	60	0.00	0.00	-0.13	0.00002	-.00002	0.00000
42	63	0.00	0.00	-0.13	0.00000	-.00002	0.00000	13	0.00	0.00	-0.12	0.00000	-.00001	0.00000
	60	0.00	0.00	-0.13	0.00002	-.00002	0.00000	61	0.00	0.00	-0.13	0.00002	-.00001	0.00000
43	65	0.00	0.00	-0.15	-.00001	-.00003	0.00000	66	0.00	0.00	-0.14	-.00002	-.00002	0.00000
	62	0.00	0.00	-0.14	0.00000	-.00003	0.00000	63	0.00	0.00	-0.13	0.00000	-.00002	0.00000
44	66	0.00	0.00	-0.14	-.00002	-.00002	0.00000	67	0.00	0.00	-0.13	-.00002	-.00001	0.00000
	63	0.00	0.00	-0.13	0.00000	-.00002	0.00000	13	0.00	0.00	-0.12	0.00000	-.00001	0.00000
45	68	0.00	0.00	-0.17	-.00001	-.00002	0.00000	69	0.00	0.00	-0.16	-.00002	-.00002	0.00000
	64	0.00	0.00	-0.16	0.00000	-.00003	0.00000	65	0.00	0.00	-0.15	-.00001	-.00003	0.00000
46	69	0.00	0.00	-0.16	-.00002	-.00002	0.00000	70	0.00	0.00	-0.15	-.00003	-.00001	0.00000
	65	0.00	0.00	-0.15	-.00001	-.00003	0.00000	66	0.00	0.00	-0.14	-.00002	-.00002	0.00000
47	70	0.00	0.00	-0.15	-.00003	-.00001	0.00000	71	0.00	0.00	-0.14	-.00004	-.00001	0.00000
	66	0.00	0.00	-0.14	-.00002	-.00002	0.00000	67	0.00	0.00	-0.13	-.00002	-.00001	0.00000
48	4	0.00	0.00	-0.17	-.00001	-.00001	0.00000	50	0.00	0.00	-0.17	-.00002	0.00000	0.00000
	68	0.00	0.00	-0.17	-.00001	-.00002	0.00000	69	0.00	0.00	-0.16	-.00002	-.00002	0.00000
49	50	0.00	0.00	-0.17	-.00002	0.00000	0.00000	51	0.00	0.00	-0.17	-.00003	0.00000	0.00000
	69	0.00	0.00	-0.16	-.00002	-.00002	0.00000	70	0.00	0.00	-0.15	-.00003	-.00001	0.00000
50	51	0.00	0.00	-0.17	-.00003	0.00000	0.00000	14	0.00	0.00	-0.17	-.00004	-.00001	0.00000
	70	0.00	0.00	-0.15	-.00003	-.00001	0.00000	71	0.00	0.00	-0.14	-.00004	-.00001	0.00000
51	49	-0.16	0.05	0.01	0.00001	0.00000	-.00002	73	-0.15	0.04	0.01	0.00001	0.00000	-.00002
	47	-0.16	0.05	0.00	0.00001	0.00000	-.00002	72	-0.16	0.04	0.00	0.00001	0.00000	-.00002
52	8	-0.14	0.09	0.01	0.00001	-.00001	-.00003	2	-0.14	0.07	0.01	0.00000	0.00001	-.00001
	49	-0.14	0.09	0.01	0.00001	-.00001	-.00002	73	-0.14	0.08	0.01	0.00001	0.00000	-.00002
53	77	-0.14	0.03	0.00	0.00000	0.00000	0.00001	78	-0.14	0.03	0.00	0.00000	0.00000	0.00001
	74	-0.14	0.03	0.00	0.00000	0.00000	0.00001	75	-0.14	0.03	0.00	0.00000	0.00000	0.00001
54	78	-0.14	0.03	0.00	0.00000	0.00000	0.00001	79	-0.14	0.04	0.00	0.00000	0.00000	0.00001
	75	-0.14	0.03	0.00	0.00000	0.00000	0.00001	32	-0.14	0.04	0.00	0.00000	0.00000	0.00001
55	80	-0.15	0.02	0.01	0.00000	0.00001	0.00000	81	-0.15	0.03	0.00	0.00000	0.00000	0.00001
	76	-0.14	0.02	0.00	0.00001	0.00000	0.00000	77	-0.14	0.03	0.00	0.00000	0.00000	0.00001
56	81	-0.15	0.03	0.00	0.00000	0.00000	0.00001	82	-0.15	0.03	0.00	0.00000	0.00000	0.00001
	77	-0.14	0.03	0.00	0.00000	0.00000	0.00001	78	-0.14	0.03	0.00	0.00000	0.00000	0.00001
57	82	-0.15	0.03	0.00	0.00000	0.00000	0.00001	83	-0.15	0.04	0.00	0.00000	0.00000	0.00001
	78	-0.14	0.03	0.00	0.00000	0.00000	0.00001	79	-0.14	0.04	0.00	0.00000	0.00000	0.00001
58	21	-0.15	0.02	0.01	0.00000	0.00001	0.00001	84	-0.15	0.03	0.00	0.00000	0.00000	0.00001
	80	-0.15	0.02	0.01	0.00000	0.00001	0.00000	81	-0.15	0.03	0.00	0.00000	0.00000	0.00001
59	84	-0.15	0.03	0.00	0.00000	0.00000	0.00001	85	-0.15	0.03	0.00	0.00000	0.00000	0.00001
	81	-0.15	0.03	0.00	0.00000	0.00000	0.00001	82	-0.15	0.03	0.00	0.00000	0.00000	0.00001
60	85	-0.15	0.03	0.00	0.00000	0.00000	0.00001	31	-0.15	0.04	0.00	0.00000	0.00000	0.00001
	82	-0.15	0.03	0.00	0.00000	0.00000	0.00001	83	-0.15	0.04	0.00	0.00000	0.00000	0.00001
61	86	0.00	0.00	-0.14	0.00001	-.00003	0.00000	87	0.00	0.00	-0.12	0.00000	-.00002	0.00000
	71	0.00	0.00	-0.14	0.00001	-.00004	0.00000	67	0.00	0.00	-0.13	0.00001	-.00002	0.00000
62	87	0.00	0.00	-0.12	0.00000	-.00002	0.00000	88	0.00	0.00	-0.12	0.00000	0.00000	0.00000
	67	0.00	0.00	-0.13	0.00001	-.00002	0.00000	13	0.00	0.00	-0.12	0.00001	0.00000	0.00000
63	40	0.00	0.00	-0.14	0.00002	-.00002	0.00000	89	0.00	0.00	-0.13	0.00000	-.00002	0.00000
	38	0.00	0.00	-0.16	0.00002	-.00003	0.00000	86	0.00	0.00	-0.14	0.00001	-.00003	0.00000
64	89	0.00	0.00	-0.13	0.00000	-.00002	0.00000	90	0.00	0.00	-0.13	-.00001	-.00001	0.00000
	86	0.00	0.00	-0.14	0.00001	-.00003	0.00000	87	0.00	0.00	-0.12	0.00000	-.00002	0.00000
65	90	0.00	0.00	-0.13	-.00001	-.00001	0.00000	91	0.00	0.00	-0.12	-.00001	0.00000	0.00000
	87	0.00	0.00	-0.12	0.00000	-.00002	0.00000	88	0.00	0.00	-0.12	0.00000	0.00000	0.00000

Documento di proprietà **Snam Rete Gas**. La Società tutelerà i propri diritti in sede civile e penale a termini di legge.

SPOST. SOVRACCARICO PERMAN.: SHELL

Shell Nro	Nodo N.ro	S1 (mm)	S2 (mm)	S3 (mm)	R1 (rad)	R2 (rad)	R3 (rad)	Nodo N.ro	S1 (mm)	S2 (mm)	S3 (mm)	R1 (rad)	R2 (rad)	R3 (rad)
66	17	0.00	0.00	-0.14	0.00001	-.00001	0.00000	92	0.00	0.00	-0.13	0.00000	0.00000	0.00000
	40	0.00	0.00	-0.14	0.00002	-.00002	0.00000	89	0.00	0.00	-0.13	0.00000	-.00002	0.00000
67	92	0.00	0.00	-0.13	0.00000	0.00000	0.00000	93	0.00	0.00	-0.13	-.00001	0.00000	0.00000
	89	0.00	0.00	-0.13	0.00000	-.00002	0.00000	90	0.00	0.00	-0.13	-.00001	-.00001	0.00000
68	93	0.00	0.00	-0.13	-.00001	0.00000	0.00000	18	0.00	0.00	-0.13	-.00001	0.00000	0.00000
	90	0.00	0.00	-0.13	-.00001	-.00001	0.00000	91	0.00	0.00	-0.12	-.00001	0.00000	0.00000
69	95	0.00	0.00	-0.13	-.00001	-.00001	0.00000	96	0.00	0.00	-0.12	-.00002	0.00000	0.00000
	91	0.00	0.00	-0.12	0.00000	-.00001	0.00000	88	0.00	0.00	-0.12	0.00000	0.00000	0.00000
70	96	0.00	0.00	-0.12	-.00002	0.00000	0.00000	61	0.00	0.00	-0.13	-.00002	0.00001	0.00000
	88	0.00	0.00	-0.12	0.00000	0.00000	0.00000	13	0.00	0.00	-0.12	0.00000	0.00001	0.00000
71	97	0.00	0.00	-0.13	0.00000	0.00000	0.00000	98	0.00	0.00	-0.13	-.00002	0.00000	0.00000
	94	0.00	0.00	-0.13	0.00000	-.00001	0.00000	95	0.00	0.00	-0.13	-.00001	-.00001	0.00000
72	98	0.00	0.00	-0.13	-.00002	0.00000	0.00000	99	0.00	0.00	-0.14	-.00003	0.00001	0.00000
	95	0.00	0.00	-0.13	-.00001	-.00001	0.00000	96	0.00	0.00	-0.12	-.00002	0.00000	0.00000
73	99	0.00	0.00	-0.14	-.00003	0.00001	0.00000	57	0.00	0.00	-0.14	-.00004	0.00001	0.00000
	96	0.00	0.00	-0.12	-.00002	0.00000	0.00000	61	0.00	0.00	-0.13	-.00002	0.00001	0.00000
74	19	0.00	0.00	-0.14	-.00001	0.00001	0.00000	100	0.00	0.00	-0.14	-.00002	0.00002	0.00000
	97	0.00	0.00	-0.13	0.00000	0.00000	0.00000	98	0.00	0.00	-0.13	-.00002	0.00000	0.00000
75	100	0.00	0.00	-0.14	-.00002	0.00002	0.00000	101	0.00	0.00	-0.16	-.00003	0.00002	0.00000
	98	0.00	0.00	-0.13	-.00002	0.00000	0.00000	99	0.00	0.00	-0.14	-.00003	0.00001	0.00000
76	101	0.00	0.00	-0.16	-.00003	0.00002	0.00000	11	0.00	0.00	-0.17	-.00004	0.00001	0.00000
	99	0.00	0.00	-0.14	-.00003	0.00001	0.00000	57	0.00	0.00	-0.14	-.00004	0.00001	0.00000
77	103	-0.16	0.03	0.00	0.00000	0.00000	0.00001	104	-0.16	0.03	0.00	0.00000	0.00000	0.00001
	84	-0.15	0.03	0.00	0.00000	0.00000	0.00001	85	-0.15	0.03	0.00	0.00000	0.00000	0.00001
78	104	-0.16	0.03	0.00	0.00000	0.00000	0.00001	105	-0.16	0.04	0.00	0.00000	0.00000	0.00001
	85	-0.15	0.03	0.00	0.00000	0.00000	0.00001	31	-0.15	0.04	0.00	0.00000	0.00000	0.00001
79	106	-0.16	0.02	0.00	-.00001	0.00000	0.00002	107	-0.16	0.03	0.00	0.00000	0.00000	0.00001
	102	-0.16	0.02	0.01	0.00000	0.00001	0.00002	103	-0.16	0.03	0.00	0.00000	0.00000	0.00001
80	107	-0.16	0.03	0.00	0.00000	0.00000	0.00001	108	-0.16	0.03	0.00	0.00000	0.00000	0.00001
	103	-0.16	0.03	0.00	0.00000	0.00000	0.00001	104	-0.16	0.03	0.00	0.00000	0.00000	0.00001
81	108	-0.16	0.03	0.00	0.00000	0.00000	0.00001	109	-0.16	0.04	0.00	0.00000	0.00000	0.00001
	104	-0.16	0.03	0.00	0.00000	0.00000	0.00001	105	-0.16	0.04	0.00	0.00000	0.00000	0.00001
82	22	-0.17	0.02	0.00	0.00000	0.00000	0.00001	110	-0.17	0.03	0.00	0.00000	0.00000	0.00001
	106	-0.16	0.02	0.00	-.00001	0.00000	0.00002	107	-0.16	0.03	0.00	0.00000	0.00000	0.00001
83	110	-0.17	0.03	0.00	0.00000	0.00000	0.00001	111	-0.17	0.03	0.00	0.00000	0.00000	0.00001
	107	-0.16	0.03	0.00	0.00000	0.00000	0.00001	108	-0.16	0.03	0.00	0.00000	0.00000	0.00001
84	111	-0.17	0.03	0.00	0.00000	0.00000	0.00001	30	-0.17	0.04	0.00	0.00000	0.00000	0.00001
	108	-0.16	0.03	0.00	0.00000	0.00000	0.00001	109	-0.16	0.04	0.00	0.00000	0.00000	0.00001
85	113	-0.13	0.07	0.01	0.00001	0.00000	0.00000	80	-0.13	0.07	0.01	0.00001	0.00000	0.00000
	112	-0.13	0.07	0.00	0.00001	0.00000	0.00000	76	-0.13	0.07	0.00	0.00001	0.00000	0.00000
86	23	-0.11	0.10	0.01	0.00001	0.00000	-.00001	21	-0.11	0.11	0.01	0.00000	0.00001	0.00001
	113	-0.11	0.10	0.01	0.00001	0.00000	0.00000	80	-0.11	0.10	0.01	0.00001	0.00000	0.00000
87	115	-0.15	-0.05	0.01	0.00001	-.00001	0.00001	113	-0.14	-0.03	0.01	0.00001	0.00001	0.00000
	114	-0.14	-0.04	0.01	0.00001	0.00000	0.00001	112	-0.14	-0.03	0.00	0.00001	0.00000	0.00000
88	20	-0.15	-0.10	0.01	0.00001	-.00001	0.00001	23	-0.13	-0.07	0.01	0.00001	0.00001	-.00001
	115	-0.13	-0.08	0.01	0.00001	0.00000	0.00001	113	-0.13	-0.07	0.01	0.00001	0.00001	0.00000
89	116	0.01	0.17	0.01	0.00000	0.00001	0.00002	117	0.01	0.17	0.00	0.00000	0.00001	0.00002
	102	0.02	0.16	0.01	0.00001	0.00000	0.00002	106	0.02	0.16	0.00	0.00000	0.00001	0.00002
90	117	0.01	0.17	0.00	0.00000	0.00001	0.00002	37	0.01	0.17	0.00	0.00000	0.00000	0.00001
	106	0.02	0.16	0.00	0.00000	0.00001	0.00002	22	0.02	0.17	0.00	0.00000	0.00000	0.00001
91	119	-0.13	0.10	0.01	-.00001	0.00000	0.00001	117	-0.13	0.10	0.00	-.00001	0.00001	0.00002
	118	-0.13	0.10	0.01	-.00001	0.00000	0.00001	116	-0.13	0.10	0.01	-.00001	0.00001	0.00002
92	34	-0.16	0.06	0.00	0.00000	0.00000	0.00001	37	-0.16	0.07	0.00	0.00000	0.00000	0.00001
	119	-0.16	0.06	0.01	-.00001	0.00000	0.00001	117	-0.15	0.07	0.00	-.00001	0.00000	0.00002
93	121	0.03	-0.14	0.00	0.00000	0.00000	-.00001	122	0.03	-0.15	0.00	0.00000	0.00000	-.00001
	43	0.02	-0.14	0.00	0.00000	-.00001	0.00000	42	0.02	-0.15	0.01	-.00001	0.00000	0.00000
94	122	0.03	-0.15	0.00	0.00000	0.00000	-.00001	123	0.03	-0.15	0.00	0.00000	0.00000	-.00001
	42	0.02	-0.15	0.01	-.00001	0.00000	0.00000	2	0.02	-0.15	0.01	-.00001	0.00000	-.00001
95	124	0.03	-0.14	0.00	0.00000	0.00000	-.00001	125	0.03	-0.14	0.00	0.00000	0.00000	-.00001
	120	0.03	-0.14	0.00	0.00000	0.00000	-.00001	121	0.03	-0.14	0.00	0.00000	0.00000	-.00001
96	125	0.03	-0.14	0.00	0.00000	0.00000	-.00001	126	0.03	-0.15	0.00	0.00000	0.00000	-.00001
	121	0.03	-0.14	0.00	0.00000	0.00000	-.00001	122	0.03	-0.15	0.00	0.00000	0.00000	-.00001
97	126	0.03	-0.15	0.00	0.00000	0.00000	-.00001	127	0.03	-0.15	0.00	0.00000	0.00000	-.00001
	122	0.03	-0.15	0.00	0.00000	0.00000	-.00001	123	0.03	-0.15	0.00	0.00000	0.00000	-.00001
98	26	0.04	-0.14	0.00	0.00000	0.00000	-.00001	128	0.04	-0.14	0.00	0.00000	0.00000	-.00001
	124	0.03	-0.14	0.00	0.00000	0.00000	-.00001	125	0.03	-0.14	0.00	0.00000	0.00000	-.00001
99	128	0.04	-0.14	0.00	0.00000	0.00000	-.00001	129	0.04	-0.15	0.00	0.00000	0.00000	-.00001
	125	0.03	-0.14	0.00	0.00000	0.00000	-.00001	126	0.03	-0.15	0.00	0.00000	0.00000	-.00001
100	129	0.04	-0.15	0.00	0.00000	0.00000	-.00001	27	0.04	-0.15	0.00	0.00000	0.00000	-.00001
	126	0.03	-0.15	0.00	0.00000	0.00000	-.00001	127	0.03	-0.15	0.00	0.00000	0.00000	-.00001
101	130	0.00	-0.17	0.01	0.00001	-.00001	0.00000	131	0.00	-0.17	0.01	0.00001	-.00001	0.00000
	68	0.00	-0.17	0.00	0.00002	0.00000	0.00001	64	0.00	-0.16	0.00	0.00003	0.00000	0.00000
102	131	0.00	-0.17	0.01	0.00001	-.00001	0.00000	132	0.00	-0.16	0.01	0.00001	0.00000	0.00000
	64	0.00	-0.16	0.00	0.00003	0.00000	0.00000	5	0.00	-0.16	0.00	0.00003	0.00000	0.00000
103	16	0.00	-0.17	0.01	0.00001	0.00000	0.00000	133	0.00	-0.17	0.01	0.00001	-.00001	0.00000
	10	0.00	-0.17	0.00	0.00001	0.00000	0.00000	130	0.00	-0.17	0.01	0.00001	-.00001	0.00000
104	133	0.00	-0.17	0.01	0.00001	-.00001	0.00000	134	0.00	-0.17	0.01	0.00001	-.00001	0.00000
	130	0.00	-0.17	0.01	0.00001	-.00001	0.00000	131	0.00	-0.17	0.01	0.00001	-.00001	0.00000
105	134	0.00	-0.17	0.01	0.00001	-.00001	0.00000	135	0.00	-0.17	0.02	0.00000	0.00000	0.00000
	131	0.00	-0.17	0.01	0.00001	-.00001	0.00000	132	0.00	-0.16	0.01	0.00001	0.00000	0.00000

Documento di proprietà **Snam Rete Gas**. La Società tutelerà i propri diritti in sede civile e penale a termini di legge.

SPOST. SOVRACCARICO PERMAN.: SHELL

Shell Nro	Nodo N.ro	S1 (mm)	S2 (mm)	S3 (mm)	R1 (rad)	R2 (rad)	R3 (rad)	Nodo N.ro	S1 (mm)	S2 (mm)	S3 (mm)	R1 (rad)	R2 (rad)	R3 (rad)
106	3	0.00	-0.17	0.02	0.00001	0.00000	0.00000	136	0.00	-0.17	0.02	0.00001	0.00000	0.00000
	16	0.00	-0.17	0.01	0.00001	0.00000	0.00000	133	0.00	-0.17	0.01	0.00001	-.00001	0.00000
107	136	0.00	-0.17	0.02	0.00001	0.00000	0.00000	137	0.00	-0.17	0.02	0.00001	0.00000	0.00000
	133	0.00	-0.17	0.01	0.00001	-.00001	0.00000	134	0.00	-0.17	0.01	0.00001	-.00001	0.00000
108	137	0.00	-0.17	0.02	0.00001	0.00000	0.00000	138	0.00	-0.17	0.02	0.00001	0.00000	0.00000
	134	0.00	-0.17	0.01	0.00001	-.00001	0.00000	135	0.00	-0.17	0.02	0.00000	0.00000	0.00000
109	139	0.00	-0.17	0.03	0.00001	0.00000	0.00000	140	0.00	-0.17	0.03	0.00001	0.00000	0.00000
	3	0.00	-0.17	0.02	0.00001	0.00000	0.00000	136	0.00	-0.17	0.02	0.00001	0.00000	0.00000
110	140	0.00	-0.17	0.03	0.00001	0.00000	0.00000	141	0.00	-0.17	0.03	0.00001	0.00000	0.00000
	136	0.00	-0.17	0.02	0.00001	0.00000	0.00000	137	0.00	-0.17	0.02	0.00001	0.00000	0.00000
111	141	0.00	-0.17	0.03	0.00001	0.00000	0.00000	142	0.00	-0.17	0.03	0.00001	0.00000	0.00000
	137	0.00	-0.17	0.02	0.00001	0.00000	0.00000	138	0.00	-0.17	0.02	0.00001	0.00000	0.00000
112	143	0.00	-0.17	0.03	0.00001	0.00000	0.00000	144	0.00	-0.17	0.03	0.00001	0.00000	0.00000
	139	0.00	-0.17	0.03	0.00001	0.00000	0.00000	140	0.00	-0.17	0.03	0.00001	0.00000	0.00000
113	144	0.00	-0.17	0.03	0.00001	0.00000	0.00000	145	0.00	-0.17	0.03	0.00001	0.00000	0.00000
	140	0.00	-0.17	0.03	0.00001	0.00000	0.00000	141	0.00	-0.17	0.03	0.00001	0.00000	0.00000
114	145	0.00	-0.17	0.03	0.00001	0.00000	0.00000	146	0.00	-0.17	0.03	0.00001	0.00000	0.00000
	141	0.00	-0.17	0.03	0.00001	0.00000	0.00000	142	0.00	-0.17	0.03	0.00001	0.00000	0.00000
115	28	0.00	-0.17	0.04	0.00001	0.00000	0.00000	147	0.00	-0.17	0.04	0.00001	0.00000	0.00000
	143	0.00	-0.17	0.03	0.00001	0.00000	0.00000	144	0.00	-0.17	0.03	0.00001	0.00000	0.00000
116	147	0.00	-0.17	0.04	0.00001	0.00000	0.00000	148	0.00	-0.17	0.04	0.00001	0.00000	0.00000
	144	0.00	-0.17	0.03	0.00001	0.00000	0.00000	145	0.00	-0.17	0.03	0.00001	0.00000	0.00000
117	148	0.00	-0.17	0.04	0.00001	0.00000	0.00000	29	0.00	-0.17	0.04	0.00001	0.00000	0.00000
	145	0.00	-0.17	0.03	0.00001	0.00000	0.00000	146	0.00	-0.17	0.03	0.00001	0.00000	0.00000
118	101	-0.16	0.00	0.00	0.00000	-.00003	0.00002	115	-0.16	0.01	0.01	0.00001	-.00001	0.00001
	100	-0.14	0.00	0.00	0.00000	-.00002	0.00002	114	-0.14	0.01	0.01	0.00001	0.00000	0.00001
119	11	-0.17	0.00	0.00	0.00000	-.00004	0.00001	20	-0.18	0.00	0.01	0.00000	-.00001	0.00001
	101	-0.16	0.00	0.00	0.00000	-.00003	0.00002	115	-0.16	0.01	0.01	0.00001	-.00001	0.00001
120	149	0.00	-0.13	-0.01	-.00001	-.00001	0.00000	150	0.00	-0.13	0.00	-.00001	-.00001	0.00000
	97	0.00	-0.13	0.00	0.00000	0.00000	0.00000	94	0.00	-0.13	0.00	0.00001	0.00000	0.00000
121	150	0.00	-0.13	0.00	-.00001	-.00001	0.00000	151	0.00	-0.13	0.00	-.00001	0.00000	0.00000
	94	0.00	-0.13	0.00	0.00001	0.00000	0.00000	18	0.00	-0.13	0.00	0.00001	0.00000	0.00000
122	36	0.00	-0.14	-0.02	-.00001	0.00000	0.00000	152	0.00	-0.14	-0.02	-.00001	-.00001	0.00000
	35	0.00	-0.14	-0.01	-.00001	0.00000	0.00000	149	0.00	-0.13	-0.01	-.00001	-.00001	0.00000
123	152	0.00	-0.14	-0.02	-.00001	-.00001	0.00000	153	0.00	-0.13	-0.01	-.00001	0.00000	0.00000
	149	0.00	-0.13	-0.01	-.00001	-.00001	0.00000	150	0.00	-0.13	0.00	-.00001	-.00001	0.00000
124	153	0.00	-0.13	-0.01	-.00001	0.00000	0.00000	154	0.00	-0.13	-0.01	-.00002	0.00000	0.00000
	150	0.00	-0.13	0.00	-.00001	-.00001	0.00000	151	0.00	-0.13	0.00	-.00001	0.00000	0.00000
125	25	0.00	-0.14	-0.02	-.00001	0.00000	0.00000	155	0.00	-0.14	-0.02	-.00001	0.00000	0.00000
	36	0.00	-0.14	-0.02	-.00001	0.00000	0.00000	152	0.00	-0.14	-0.02	-.00001	-.00001	0.00000
126	155	0.00	-0.14	-0.02	-.00001	0.00000	0.00000	156	0.00	-0.14	-0.02	-.00001	0.00000	0.00000
	152	0.00	-0.14	-0.02	-.00001	-.00001	0.00000	153	0.00	-0.13	-0.01	-.00001	0.00000	0.00000
127	156	0.00	-0.14	-0.02	-.00001	0.00000	0.00000	157	0.00	-0.13	-0.02	-.00001	0.00000	0.00000
	153	0.00	-0.13	-0.01	-.00001	0.00000	0.00000	154	0.00	-0.13	-0.01	-.00002	0.00000	0.00000
128	74	0.00	-0.14	-0.03	-.00001	0.00000	0.00000	158	0.00	-0.14	-0.03	-.00001	0.00000	0.00000
	25	0.00	-0.14	-0.02	-.00001	0.00000	0.00000	155	0.00	-0.14	-0.02	-.00001	0.00000	0.00000
129	158	0.00	-0.14	-0.03	-.00001	0.00000	0.00000	159	0.00	-0.14	-0.03	-.00001	0.00000	0.00000
	155	0.00	-0.14	-0.02	-.00001	0.00000	0.00000	156	0.00	-0.14	-0.02	-.00001	0.00000	0.00000
130	159	0.00	-0.14	-0.03	-.00001	0.00000	0.00000	160	0.00	-0.14	-0.03	-.00001	0.00000	0.00000
	156	0.00	-0.14	-0.02	-.00001	0.00000	0.00000	157	0.00	-0.13	-0.02	-.00001	0.00000	0.00000
131	75	0.00	-0.14	-0.03	-.00001	0.00000	0.00000	161	0.00	-0.14	-0.03	-.00001	0.00000	0.00000
	74	0.00	-0.14	-0.03	-.00001	0.00000	0.00000	158	0.00	-0.14	-0.03	-.00001	0.00000	0.00000
132	161	0.00	-0.14	-0.03	-.00001	0.00000	0.00000	162	0.00	-0.14	-0.03	-.00001	0.00000	0.00000
	158	0.00	-0.14	-0.03	-.00001	0.00000	0.00000	159	0.00	-0.14	-0.03	-.00001	0.00000	0.00000
133	162	0.00	-0.14	-0.03	-.00001	0.00000	0.00000	163	0.00	-0.14	-0.03	-.00001	0.00000	0.00000
	159	0.00	-0.14	-0.03	-.00001	0.00000	0.00000	160	0.00	-0.14	-0.03	-.00001	0.00000	0.00000
134	32	0.00	-0.14	-0.04	-.00001	0.00000	0.00000	164	0.00	-0.14	-0.04	-.00001	0.00000	0.00000
	75	0.00	-0.14	-0.03	-.00001	0.00000	0.00000	161	0.00	-0.14	-0.03	-.00001	0.00000	0.00000
135	164	0.00	-0.14	-0.04	-.00001	0.00000	0.00000	165	0.00	-0.14	-0.04	-.00001	0.00000	0.00000
	161	0.00	-0.14	-0.03	-.00001	0.00000	0.00000	162	0.00	-0.14	-0.03	-.00001	0.00000	0.00000
136	165	0.00	-0.14	-0.04	-.00001	0.00000	0.00000	33	0.00	-0.14	-0.04	-.00001	0.00000	0.00000
	162	0.00	-0.14	-0.03	-.00001	0.00000	0.00000	163	0.00	-0.14	-0.03	-.00001	0.00000	0.00000
137	166	0.00	-0.17	0.01	0.00001	0.00001	0.00000	167	0.00	-0.17	0.01	0.00001	0.00001	0.00000
	58	0.00	-0.16	0.00	0.00003	0.00000	0.00000	54	0.00	-0.17	0.00	0.00002	0.00000	-.00001
138	167	0.00	-0.17	0.01	0.00001	0.00001	0.00000	34	0.00	-0.17	0.00	0.00001	0.00000	0.00000
	54	0.00	-0.17	0.00	0.00002	0.00000	-.00001	7	0.00	-0.17	0.00	0.00001	0.00000	-.00001
139	135	0.00	-0.17	0.02	0.00000	0.00000	0.00000	168	0.00	-0.17	0.01	0.00001	0.00000	0.00000
	132	0.00	-0.16	0.01	0.00001	0.00000	0.00000	166	0.00	-0.17	0.01	0.00001	0.00001	0.00000
140	168	0.00	-0.17	0.01	0.00001	0.00000	0.00000	169	0.00	-0.17	0.01	0.00001	0.00001	0.00000
	166	0.00	-0.17	0.01	0.00001	0.00001	0.00000	167	0.00	-0.17	0.01	0.00001	0.00001	0.00000
141	169	0.00	-0.17	0.01	0.00001	0.00001	0.00000	37	0.00	-0.17	0.01	0.00001	0.00000	0.00000
	167	0.00	-0.17	0.01	0.00001	0.00001	0.00000	34	0.00	-0.17	0.00	0.00001	0.00000	0.00000
142	138	0.00	-0.17	0.02	0.00001	0.00000	0.00000	170	0.00	-0.17	0.02	0.00001	0.00000	0.00000
	135	0.00	-0.17	0.02	0.00000	0.00000	0.00000	168	0.00	-0.17	0.01	0.00001	0.00000	0.00000
143	170	0.00	-0.17	0.02	0.00001	0.00000	0.00000	171	0.00	-0.17	0.02	0.00001	0.00000	0.00000
	168	0.00	-0.17	0.01	0.00001	0.00000	0.00000	169	0.00	-0.17	0.01	0.00001	0.00001	0.00000
144	171	0.00	-0.17	0.02	0.00001	0.00000	0.00000	22	0.00	-0.17	0.02	0.00001	0.00000	0.00000
	169	0.00	-0.17	0.01	0.00001	0.00001	0.00000	37	0.00	-0.17	0.01	0.00001	0.00000	0.00000
145	142	0.00	-0.17	0.03	0.00001	0.00000	0.00000	172	0.00	-0.17	0.03	0.00001	0.00000	0.00000
	138	0.00	-0.17	0.02	0.00001	0.00000	0.00000	170	0.00	-0.17	0.02	0.00001	0.00000	0.00000

Documento di proprietà **Snam Rete Gas**. La Società tutelerà i propri diritti in sede civile e penale a termini di legge.

SPOST. SOVRACCARICO PERMAN.: SHELL

Shell Nro	Nodo N.ro	S1 (mm)	S2 (mm)	S3 (mm)	R1 (rad)	R2 (rad)	R3 (rad)	Nodo N.ro	S1 (mm)	S2 (mm)	S3 (mm)	R1 (rad)	R2 (rad)	R3 (rad)
146	172	0.00	-0.17	0.03	0.00001	0.00000	0.00000	173	0.00	-0.17	0.03	0.00001	0.00000	0.00000
	170	0.00	-0.17	0.02	0.00001	0.00000	0.00000	171	0.00	-0.17	0.02	0.00001	0.00000	0.00000
147	173	0.00	-0.17	0.03	0.00001	0.00000	0.00000	110	0.00	-0.17	0.03	0.00001	0.00000	0.00000
	171	0.00	-0.17	0.02	0.00001	0.00000	0.00000	22	0.00	-0.17	0.02	0.00001	0.00000	0.00000
148	146	0.00	-0.17	0.03	0.00001	0.00000	0.00000	174	0.00	-0.17	0.03	0.00001	0.00000	0.00000
	142	0.00	-0.17	0.03	0.00001	0.00000	0.00000	172	0.00	-0.17	0.03	0.00001	0.00000	0.00000
149	174	0.00	-0.17	0.03	0.00001	0.00000	0.00000	175	0.00	-0.17	0.03	0.00001	0.00000	0.00000
	172	0.00	-0.17	0.03	0.00001	0.00000	0.00000	173	0.00	-0.17	0.03	0.00001	0.00000	0.00000
150	175	0.00	-0.17	0.03	0.00001	0.00000	0.00000	111	0.00	-0.17	0.03	0.00001	0.00000	0.00000
	173	0.00	-0.17	0.03	0.00001	0.00000	0.00000	110	0.00	-0.17	0.03	0.00001	0.00000	0.00000
151	29	0.00	-0.17	0.04	0.00001	0.00000	0.00000	176	0.00	-0.17	0.04	0.00001	0.00000	0.00000
	146	0.00	-0.17	0.03	0.00001	0.00000	0.00000	174	0.00	-0.17	0.03	0.00001	0.00000	0.00000
152	176	0.00	-0.17	0.04	0.00001	0.00000	0.00000	177	0.00	-0.17	0.04	0.00001	0.00000	0.00000
	174	0.00	-0.17	0.03	0.00001	0.00000	0.00000	175	0.00	-0.17	0.03	0.00001	0.00000	0.00000
153	177	0.00	-0.17	0.04	0.00001	0.00000	0.00000	30	0.00	-0.17	0.04	0.00001	0.00000	0.00000
	175	0.00	-0.17	0.03	0.00001	0.00000	0.00000	111	0.00	-0.17	0.03	0.00001	0.00000	0.00000
154	178	0.00	-0.13	0.00	-.00001	0.00001	0.00000	179	0.00	-0.13	-0.01	-.00001	0.00001	0.00000
	93	0.00	-0.13	0.00	0.00001	0.00000	0.00000	92	0.00	-0.13	0.00	0.00000	0.00000	0.00000
155	179	0.00	-0.13	-0.01	-.00001	0.00001	0.00000	12	0.00	-0.14	-0.01	-.00001	0.00000	0.00000
	92	0.00	-0.13	0.00	0.00000	0.00000	0.00000	17	0.00	-0.14	0.00	-.00001	0.00000	-.00001
156	154	0.00	-0.13	-0.01	-.00002	0.00000	0.00000	180	0.00	-0.13	-0.01	-.00001	0.00000	0.00000
	151	0.00	-0.13	0.00	-.00001	0.00000	0.00000	178	0.00	-0.13	0.00	-.00001	0.00001	0.00000
157	180	0.00	-0.13	-0.01	-.00001	0.00000	0.00000	181	0.00	-0.14	-0.02	-.00001	0.00001	0.00000
	178	0.00	-0.13	0.00	-.00001	0.00001	0.00000	179	0.00	-0.13	-0.01	-.00001	0.00001	0.00000
158	181	0.00	-0.14	-0.02	-.00001	0.00001	0.00000	15	0.00	-0.14	-0.02	-.00001	0.00000	0.00000
	179	0.00	-0.13	-0.01	-.00001	0.00001	0.00000	12	0.00	-0.14	-0.01	-.00001	0.00000	0.00000
159	157	0.00	-0.13	-0.02	-.00001	0.00000	0.00000	182	0.00	-0.14	-0.02	-.00001	0.00000	0.00000
	154	0.00	-0.13	-0.01	-.00002	0.00000	0.00000	180	0.00	-0.13	-0.01	-.00001	0.00000	0.00000
160	182	0.00	-0.14	-0.02	-.00001	0.00000	0.00000	183	0.00	-0.14	-0.02	-.00001	0.00000	0.00000
	180	0.00	-0.13	-0.01	-.00001	0.00000	0.00000	181	0.00	-0.14	-0.02	-.00001	0.00001	0.00000
161	183	0.00	-0.14	-0.02	-.00001	0.00000	0.00000	9	0.00	-0.14	-0.02	-.00001	0.00000	0.00000
	181	0.00	-0.14	-0.02	-.00001	0.00001	0.00000	15	0.00	-0.14	-0.02	-.00001	0.00000	0.00000
162	160	0.00	-0.14	-0.03	-.00001	0.00000	0.00000	184	0.00	-0.14	-0.03	-.00001	0.00000	0.00000
	157	0.00	-0.13	-0.02	-.00001	0.00000	0.00000	182	0.00	-0.14	-0.02	-.00001	0.00000	0.00000
163	184	0.00	-0.14	-0.03	-.00001	0.00000	0.00000	185	0.00	-0.14	-0.03	-.00001	0.00000	0.00000
	182	0.00	-0.14	-0.02	-.00001	0.00000	0.00000	183	0.00	-0.14	-0.02	-.00001	0.00000	0.00000
164	185	0.00	-0.14	-0.03	-.00001	0.00000	0.00000	120	0.00	-0.14	-0.03	-.00001	0.00000	0.00000
	183	0.00	-0.14	-0.02	-.00001	0.00000	0.00000	9	0.00	-0.14	-0.02	-.00001	0.00000	0.00000
165	163	0.00	-0.14	-0.03	-.00001	0.00000	0.00000	186	0.00	-0.14	-0.03	-.00001	0.00000	0.00000
	160	0.00	-0.14	-0.03	-.00001	0.00000	0.00000	184	0.00	-0.14	-0.03	-.00001	0.00000	0.00000
166	186	0.00	-0.14	-0.03	-.00001	0.00000	0.00000	187	0.00	-0.14	-0.03	-.00001	0.00000	0.00000
	184	0.00	-0.14	-0.03	-.00001	0.00000	0.00000	185	0.00	-0.14	-0.03	-.00001	0.00000	0.00000
167	187	0.00	-0.14	-0.03	-.00001	0.00000	0.00000	124	0.00	-0.14	-0.03	-.00001	0.00000	0.00000
	185	0.00	-0.14	-0.03	-.00001	0.00000	0.00000	120	0.00	-0.14	-0.03	-.00001	0.00000	0.00000
168	33	0.00	-0.14	-0.04	-.00001	0.00000	0.00000	188	0.00	-0.14	-0.04	-.00001	0.00000	0.00000
	163	0.00	-0.14	-0.03	-.00001	0.00000	0.00000	186	0.00	-0.14	-0.03	-.00001	0.00000	0.00000
169	188	0.00	-0.14	-0.04	-.00001	0.00000	0.00000	189	0.00	-0.14	-0.04	-.00001	0.00000	0.00000
	186	0.00	-0.14	-0.03	-.00001	0.00000	0.00000	187	0.00	-0.14	-0.03	-.00001	0.00000	0.00000
170	189	0.00	-0.14	-0.04	-.00001	0.00000	0.00000	26	0.00	-0.14	-0.04	-.00001	0.00000	0.00000
	187	0.00	-0.14	-0.03	-.00001	0.00000	0.00000	124	0.00	-0.14	-0.03	-.00001	0.00000	0.00000
171	190	0.03	-0.16	0.00	0.00000	0.00000	-.00001	191	0.03	-0.16	0.00	0.00000	0.00000	-.00001
	73	0.02	-0.16	0.01	-.00001	0.00000	-.00002	72	0.02	-0.16	0.00	0.00000	0.00001	-.00002
172	191	0.03	-0.16	0.00	0.00000	0.00000	-.00001	139	0.03	-0.17	0.00	0.00000	0.00000	-.00001
	72	0.02	-0.16	0.00	0.00000	0.00001	-.00002	3	0.02	-0.17	0.00	0.00000	0.00000	-.00001
173	127	0.03	-0.15	0.00	0.00000	0.00000	-.00001	192	0.03	-0.16	0.00	0.00000	0.00000	-.00001
	123	0.03	-0.15	0.00	0.00000	0.00000	-.00001	190	0.03	-0.16	0.00	0.00000	0.00000	-.00001
174	192	0.03	-0.16	0.00	0.00000	0.00000	-.00001	193	0.03	-0.16	0.00	0.00000	0.00000	-.00001
	190	0.03	-0.16	0.00	0.00000	0.00000	-.00001	191	0.03	-0.16	0.00	0.00000	0.00000	-.00001
175	193	0.03	-0.16	0.00	0.00000	0.00000	-.00001	143	0.03	-0.17	0.00	0.00000	0.00000	-.00001
	191	0.03	-0.16	0.00	0.00000	0.00000	-.00001	139	0.03	-0.17	0.00	0.00000	0.00000	-.00001
176	27	0.04	-0.15	0.00	0.00000	0.00000	-.00001	194	0.04	-0.16	0.00	0.00000	0.00000	-.00001
	127	0.03	-0.15	0.00	0.00000	0.00000	-.00001	192	0.03	-0.16	0.00	0.00000	0.00000	-.00001
177	194	0.04	-0.16	0.00	0.00000	0.00000	-.00001	195	0.04	-0.16	0.00	0.00000	0.00000	-.00001
	192	0.03	-0.16	0.00	0.00000	0.00000	-.00001	193	0.03	-0.16	0.00	0.00000	0.00000	-.00001
178	195	0.04	-0.16	0.00	0.00000	0.00000	-.00001	28	0.04	-0.17	0.00	0.00000	0.00000	-.00001
	193	0.03	-0.16	0.00	0.00000	0.00000	-.00001	143	0.03	-0.17	0.00	0.00000	0.00000	-.00001
179	52	-0.17	0.00	0.00	0.00000	-.00002	0.00000	119	-0.17	0.00	0.01	-.00001	0.00000	0.00001
	53	-0.17	0.00	0.00	0.00000	-.00003	0.00000	118	-0.17	0.00	0.01	-.00001	-.00001	0.00001
180	7	-0.17	0.00	0.00	0.00000	-.00001	0.00001	34	-0.17	0.00	0.00	0.00000	0.00000	0.00001
	52	-0.17	0.00	0.00	0.00000	-.00002	0.00000	119	-0.17	0.00	0.01	-.00001	0.00000	0.00001

SPOST. SPINTA TERR STATICA: SHELL

Shell Nro	Nodo N.ro	S1 (mm)	S2 (mm)	S3 (mm)	R1 (rad)	R2 (rad)	R3 (rad)	Nodo N.ro	S1 (mm)	S2 (mm)	S3 (mm)	R1 (rad)	R2 (rad)	R3 (rad)
1	38	0.01	0.00	0.00	0.00000	0.00004	-.00001	39	0.01	0.00	-0.02	0.00002	0.00005	-.00001
	14	0.01	0.00	0.00	0.00000	0.00004	0.00000	1	0.01	0.00	-0.02	0.00000	0.00007	0.00000
2	6	-0.01	-0.02	-0.04	0.00002	-.00006	-.00001	44	-0.01	-0.02	-0.03	0.00001	-.00006	0.00000
	2	0.00	-0.02	-0.07	0.00001	0.00001	0.00000	42	0.00	-0.02	-0.06	0.00000	-.00005	0.00000
3	39	0.01	-0.01	-0.02	0.00005	0.00002	-.00001	44	0.00	-0.02	-0.03	0.00005	-.00004	0.00000
	1	0.01	-0.01	-0.02	0.00005	0.00005	0.00000	6	0.00	-0.02	-0.04	0.00005	-.00003	-.00001

Documento di proprietà **Snam Rete Gas**. La Società tutelerà i propri diritti in sede civile e penale a termini di legge.

SPOST. SPINTA TERR STATICA: SHELL

Shell Nro	Nodo N.ro	S1 (mm)	S2 (mm)	S3 (mm)	R1 (rad)	R2 (rad)	R3 (rad)	Nodo N.ro	S1 (mm)	S2 (mm)	S3 (mm)	R1 (rad)	R2 (rad)	R3 (rad)
4	46	0.02	0.01	-0.01	-.00003	0.00002	0.00001	47	0.02	0.01	-0.01	-.00004	0.00000	0.00000
	10	0.02	0.01	-0.01	0.00002	0.00000	0.00001	16	0.02	0.02	-0.01	0.00004	-.00001	0.00000
5	50	0.02	0.00	0.00	0.00000	0.00002	0.00001	46	0.02	0.01	-0.01	-.00003	0.00002	0.00001
	4	0.02	0.00	0.00	0.00000	0.00001	0.00001	10	0.02	0.01	-0.01	0.00002	0.00000	0.00001
6	54	0.00	0.00	0.02	0.00000	0.00004	0.00000	55	0.00	0.00	0.00	-.00002	0.00002	0.00000
	7	0.00	0.00	0.02	-.00001	0.00001	0.00000	52	0.00	0.00	0.02	-.00002	0.00001	0.00000
7	64	0.00	0.00	0.02	0.00000	0.00005	0.00000	65	0.00	0.00	0.00	0.00001	0.00003	0.00000
	5	0.00	0.00	0.02	0.00000	0.00006	0.00000	62	0.00	0.00	-0.01	0.00000	0.00003	0.00000
8	47	0.02	0.01	-0.01	-.00004	0.00000	0.00000	72	0.02	0.01	-0.02	-.00007	0.00000	0.00000
	16	0.02	0.02	-0.01	0.00004	-.00001	0.00000	3	0.02	0.01	-0.01	0.00005	-.00001	-.00001
9	76	0.02	0.01	-0.02	-.00007	0.00000	0.00000	77	0.02	0.01	-0.02	-.00006	-.00001	0.00000
	25	0.02	0.01	-0.01	0.00005	-.00001	-.00001	74	0.02	0.01	-0.01	0.00004	0.00000	0.00000
10	38	0.00	0.00	0.01	0.00001	0.00004	0.00000	86	0.00	0.00	0.00	0.00001	0.00002	0.00000
	14	0.00	0.00	0.01	0.00000	0.00004	0.00000	71	0.00	0.00	-0.01	0.00000	0.00002	0.00000
11	94	0.00	0.00	0.02	0.00000	0.00006	0.00000	95	0.00	0.00	0.00	0.00001	0.00003	0.00000
	18	0.00	0.00	0.02	0.00000	0.00006	0.00000	91	0.00	0.00	-0.01	0.00000	0.00003	0.00000
12	102	0.02	-0.01	-0.06	0.00006	0.00000	0.00000	103	0.02	0.00	-0.05	0.00006	-.00002	0.00000
	21	0.02	0.00	-0.07	0.00001	0.00001	0.00000	84	0.02	0.00	-0.07	0.00001	-.00002	0.00000
13	112	0.02	0.01	-0.01	-.00005	0.00000	0.00000	76	0.02	0.01	-0.02	-.00007	0.00000	0.00000
	36	0.02	0.01	-0.01	0.00003	-.00001	0.00000	25	0.02	0.01	-0.01	0.00005	-.00001	-.00001
14	114	0.02	0.01	-0.01	-.00003	0.00002	0.00001	112	0.02	0.01	-0.01	-.00005	0.00000	0.00000
	35	0.02	0.01	-0.01	0.00002	0.00000	0.00001	36	0.02	0.01	-0.01	0.00003	-.00001	0.00000
15	24	-0.01	-0.02	-0.03	0.00001	-.00006	-.00001	116	-0.01	-0.02	-0.02	0.00000	-.00006	0.00000
	21	0.00	-0.02	-0.07	0.00001	-.00001	0.00000	102	-0.01	-0.02	-0.06	0.00000	-.00006	0.00000
16	118	0.01	-0.01	-0.02	0.00005	0.00002	-.00001	116	0.00	-0.02	-0.02	0.00005	-.00004	0.00000
	20	0.01	-0.01	-0.02	0.00005	0.00005	0.00000	24	0.00	-0.02	-0.03	0.00005	-.00003	-.00001
17	120	0.01	0.02	-0.01	0.00000	-.00004	0.00000	121	0.01	0.02	-0.02	0.00001	0.00006	0.00000
	9	0.01	0.02	-0.01	0.00001	-.00005	0.00001	43	0.01	0.02	-0.02	0.00000	0.00007	0.00000
18	10	0.01	0.02	-0.01	-.00001	0.00002	0.00000	130	0.00	0.02	-0.04	-.00006	0.00007	0.00000
	4	0.00	0.02	0.00	-.00001	0.00000	-.00001	68	0.00	0.02	0.00	-.00003	0.00000	0.00000
19	100	0.02	0.00	0.00	0.00000	0.00002	0.00001	114	0.02	0.01	-0.01	-.00003	0.00002	0.00001
	19	0.02	0.00	0.00	0.00000	0.00001	0.00001	35	0.02	0.01	-0.01	0.00002	0.00000	0.00001
20	35	0.01	0.02	-0.01	-.00001	0.00002	0.00000	149	0.00	0.02	-0.04	-.00007	0.00007	0.00000
	19	0.00	0.02	0.00	-.00001	0.00000	-.00001	97	0.00	0.02	0.00	-.00004	0.00000	0.00000
21	132	0.00	0.02	-0.09	-.00015	0.00001	0.00000	166	0.00	0.02	-0.07	-.00013	-.00004	0.00000
	5	0.00	0.02	0.00	-.00006	0.00000	0.00000	58	0.00	0.02	0.00	-.00006	0.00000	0.00000
22	151	0.00	0.02	-0.09	-.00015	-.00001	0.00000	178	0.00	0.02	-0.07	-.00012	-.00005	0.00000
	18	0.00	0.02	0.00	-.00006	0.00000	0.00000	93	0.00	0.02	0.00	-.00005	0.00000	0.00000
23	123	0.00	0.02	-0.07	0.00002	-.00001	0.00000	190	0.00	0.02	-0.05	0.00002	-.00005	0.00000
	2	0.00	0.02	-0.07	-.00001	-.00001	0.00000	73	-0.01	0.02	-0.06	0.00000	-.00006	0.00000
24	53	0.01	0.00	0.00	0.00000	0.00003	-.00001	118	0.01	0.00	-0.02	0.00002	0.00005	-.00001
	11	0.01	0.00	0.00	0.00000	0.00004	0.00000	20	0.01	0.00	-0.02	0.00000	0.00007	0.00000
25	40	0.02	0.00	0.00	0.00000	0.00002	-.00001	41	0.02	-0.01	-0.01	0.00003	0.00002	-.00001
	38	0.01	0.00	0.00	0.00000	0.00004	-.00001	39	0.01	0.00	-0.02	0.00002	0.00005	-.00001
26	17	0.02	0.00	0.00	0.00000	0.00001	-.00001	12	0.02	-0.01	-0.01	-.00002	0.00000	-.00001
	40	0.02	0.00	0.00	0.00000	0.00002	-.00001	41	0.02	-0.01	-0.01	0.00003	0.00002	-.00001
27	44	-0.01	-0.02	-0.03	0.00001	-.00006	0.00000	45	-0.01	-0.02	-0.01	0.00000	-.00005	0.00000
	42	0.00	-0.02	-0.06	0.00000	-.00005	0.00000	43	-0.01	-0.02	-0.02	0.00000	-.00007	0.00000
28	45	-0.01	-0.02	-0.01	0.00000	-.00005	0.00000	15	-0.01	-0.02	-0.01	-.00001	0.00004	0.00000
	43	-0.01	-0.02	-0.02	0.00000	-.00007	0.00000	9	-0.01	-0.02	-0.01	-.00001	0.00005	0.00001
29	41	0.01	-0.02	-0.01	0.00004	0.00000	-.00001	45	0.01	-0.02	-0.01	0.00004	-.00003	0.00000
	39	0.01	-0.01	-0.02	0.00005	0.00003	-.00001	44	0.01	-0.02	-0.03	0.00006	-.00003	0.00000
30	12	0.02	-0.02	-0.01	-.00002	0.00001	-.00001	15	0.01	-0.02	-0.01	-.00003	0.00001	0.00000
	41	0.01	-0.01	-0.01	0.00004	0.00001	-.00001	45	0.01	-0.02	-0.01	0.00004	-.00002	0.00000
31	48	0.01	0.01	-0.02	-.00004	0.00004	0.00001	49	0.01	0.02	-0.02	-.00006	-.00002	0.00000
	46	0.01	0.01	-0.01	-.00004	0.00000	0.00001	47	0.01	0.02	-0.01	-.00003	-.00002	0.00000
32	1	0.01	0.01	-0.02	-.00004	0.00005	0.00000	8	0.01	0.02	-0.03	-.00005	-.00002	0.00001
	48	0.01	0.01	-0.02	-.00004	0.00003	0.00001	49	0.01	0.02	-0.02	-.00005	-.00003	0.00000
33	51	0.01	0.00	0.00	0.00000	0.00003	0.00001	48	0.01	0.00	-0.02	-.00002	0.00005	0.00001
	50	0.02	0.00	0.00	0.00000	0.00002	0.00001	46	0.02	0.01	-0.01	-.00003	0.00002	0.00001
34	14	0.01	0.00	0.00	0.00000	0.00004	0.00000	1	0.01	0.00	-0.02	0.00000	0.00007	0.00000
	51	0.01	0.00	0.00	0.00000	0.00003	0.00001	48	0.01	0.00	-0.02	-.00002	0.00005	0.00001
35	55	0.00	0.00	0.00	-.00002	0.00002	0.00000	56	0.00	0.00	0.00	-.00002	0.00001	0.00000
	52	0.00	0.00	0.02	-.00002	0.00001	0.00000	53	0.00	0.00	0.01	-.00003	0.00001	0.00000
36	56	0.00	0.00	0.00	-.00002	0.00001	0.00000	57	0.00	0.00	-0.01	-.00002	0.00000	0.00000
	53	0.00	0.00	0.01	-.00003	0.00001	0.00000	11	0.00	0.00	0.01	-.00004	0.00000	0.00000
37	58	0.00	0.00	0.02	0.00000	0.00006	0.00000	59	0.00	0.00	0.00	-.00001	0.00003	0.00000
	54	0.00	0.00	0.02	0.00000	0.00004	0.00000	55	0.00	0.00	0.00	-.00002	0.00002	0.00000
38	59	0.00	0.00	0.00	-.00001	0.00003	0.00000	60	0.00	0.00	-0.01	-.00001	0.00001	0.00000
	55	0.00	0.00	0.00	-.00002	0.00002	0.00000	56	0.00	0.00	0.00	-.00002	0.00001	0.00000
39	60	0.00	0.00	-0.01	-.00001	0.00001	0.00000	61	0.00	0.00	-0.02	-.00001	0.00000	0.00000
	56	0.00	0.00	0.00	-.00002	0.00001	0.00000	57	0.00	0.00	-0.01	-.00002	0.00000	0.00000
40	5	0.00	0.00	0.02	0.00000	0.00006	0.00000	62	0.00	0.00	-0.01	0.00000	0.00003	0.00000
	58	0.00	0.00	0.02	0.00000	0.00006	0.00000	59	0.00	0.00	0.00	-.00001	0.00003	0.00000
41	62	0.00	0.00	-0.01	0.00000	0.00003	0.00000	63	0.00	0.00	-0.02	0.00000	0.00001	0.00000
	59	0.00	0.00	0.00	-.00001	0.00003	0.00000	60	0.00	0.00	-0.01	-.00001	0.00001	0.00000
42	63	0.00	0.00	-0.02	0.00000	0.00001	0.00000	13	0.00	0.00	-0.02	0.00000	0.00000	0.00000
	60	0.00	0.00	-0.01	-.00001	0.00001	0.00000	61	0.00	0.00	-0.02	-.00001	0.00000	0.00000
43	65	0.00	0.00	0.00	0.00001	0.00003	0.00000	66	0.00	0.00	-0.01	0.00001	0.00001	0.00000
	62	0.00	0.00	-0.01	0.00000	0.00003	0.00000	63	0.00	0.00	-0.02	0.00000	0.00001	0.00000

Documento di proprietà **Snam Rete Gas**. La Società tutelerà i propri diritti in sede civile e penale a termini di legge.

SPOST. SPINTA TERR STATICA: SHELL

Shell Nro	Nodo N.ro	S1 (mm)	S2 (mm)	S3 (mm)	R1 (rad)	R2 (rad)	R3 (rad)	Nodo N.ro	S1 (mm)	S2 (mm)	S3 (mm)	R1 (rad)	R2 (rad)	R3 (rad)
44	66	0.00	0.00	-0.01	0.00001	0.00001	0.00000	67	0.00	0.00	-0.02	0.00001	0.00000	0.00000
	63	0.00	0.00	-0.02	0.00000	0.00001	0.00000	13	0.00	0.00	-0.02	0.00000	0.00000	0.00000
45	68	0.00	0.00	0.02	0.00000	0.00003	0.00000	69	0.00	0.00	0.01	0.00002	0.00002	0.00000
	64	0.00	0.00	0.02	0.00000	0.00005	0.00000	65	0.00	0.00	0.00	0.00001	0.00003	0.00000
46	69	0.00	0.00	0.01	0.00002	0.00002	0.00000	70	0.00	0.00	0.00	0.00002	0.00001	0.00000
	65	0.00	0.00	0.00	0.00001	0.00003	0.00000	66	0.00	0.00	-0.01	0.00001	0.00001	0.00000
47	70	0.00	0.00	0.00	0.00002	0.00001	0.00000	71	0.00	0.00	-0.01	0.00002	0.00000	0.00000
	66	0.00	0.00	-0.01	0.00001	0.00001	0.00000	67	0.00	0.00	-0.02	0.00001	0.00000	0.00000
48	4	0.00	0.00	0.02	0.00001	0.00001	0.00000	50	0.00	0.00	0.02	0.00002	0.00001	0.00000
	68	0.00	0.00	0.02	0.00000	0.00003	0.00000	69	0.00	0.00	0.01	0.00002	0.00002	0.00000
49	50	0.00	0.00	0.02	0.00002	0.00001	0.00000	51	0.00	0.00	0.01	0.00003	0.00001	0.00000
	69	0.00	0.00	0.01	0.00002	0.00002	0.00000	70	0.00	0.00	0.00	0.00002	0.00001	0.00000
50	51	0.00	0.00	0.01	0.00003	0.00001	0.00000	14	0.00	0.00	0.01	0.00004	0.00000	0.00000
	70	0.00	0.00	0.00	0.00002	0.00001	0.00000	71	0.00	0.00	-0.01	0.00002	0.00000	0.00000
51	49	0.02	0.01	-0.02	-.00005	0.00002	0.00000	73	0.02	0.00	-0.06	-.00006	0.00002	0.00000
	47	0.02	0.01	-0.01	-.00003	0.00001	0.00000	72	0.02	0.00	-0.02	-.00006	0.00002	0.00000
52	8	0.02	0.00	-0.03	-.00004	0.00004	0.00001	2	0.02	-0.01	-0.07	0.00000	0.00002	0.00000
	49	0.02	0.00	-0.02	-.00005	0.00004	0.00000	73	0.02	-0.01	-0.06	-.00005	0.00004	0.00000
53	77	0.02	0.01	-0.02	-.00006	-.00001	0.00000	78	0.02	0.00	-0.01	-.00004	-.00002	0.00000
	74	0.02	0.01	-0.01	0.00004	0.00000	0.00000	75	0.02	0.00	0.00	0.00002	0.00000	0.00000
54	78	0.02	0.00	-0.01	-.00004	-.00002	0.00000	79	0.02	0.00	0.00	0.00000	-.00002	0.00000
	75	0.02	0.00	0.00	0.00002	0.00000	0.00000	32	0.02	0.00	0.00	0.00000	0.00000	0.00000
55	80	0.02	0.00	-0.06	-.00006	0.00000	0.00000	81	0.02	0.00	-0.06	-.00005	-.00002	0.00000
	76	0.02	0.01	-0.02	-.00007	0.00000	0.00000	77	0.02	0.01	-0.02	-.00006	-.00001	0.00000
56	81	0.02	0.00	-0.06	-.00005	-.00002	0.00000	82	0.02	0.00	-0.03	-.00003	-.00004	0.00000
	77	0.02	0.01	-0.02	-.00006	-.00001	0.00000	78	0.02	0.00	-0.01	-.00004	-.00002	0.00000
57	82	0.02	0.00	-0.03	-.00003	-.00004	0.00000	83	0.02	0.00	0.00	0.00000	-.00006	0.00000
	78	0.02	0.00	-0.01	-.00004	-.00002	0.00000	79	0.02	0.00	0.00	0.00000	-.00002	0.00000
58	21	0.02	0.00	-0.07	0.00001	0.00001	0.00000	84	0.02	0.00	-0.07	0.00001	-.00002	0.00000
	80	0.02	0.00	-0.06	-.00006	0.00000	0.00000	81	0.02	0.00	-0.06	-.00005	-.00002	0.00000
59	84	0.02	0.00	-0.07	0.00001	-.00002	0.00000	85	0.02	0.00	-0.04	0.00000	-.00006	0.00000
	81	0.02	0.00	-0.06	-.00005	-.00002	0.00000	82	0.02	0.00	-0.03	-.00003	-.00004	0.00000
60	85	0.02	0.00	-0.04	0.00000	-.00006	0.00000	31	0.02	0.00	0.00	0.00000	-.00007	0.00000
	82	0.02	0.00	-0.03	-.00003	-.00004	0.00000	83	0.02	0.00	0.00	0.00000	-.00006	0.00000
61	86	0.00	0.00	0.00	0.00001	0.00002	0.00000	87	0.00	0.00	-0.01	0.00001	0.00001	0.00000
	71	0.00	0.00	-0.01	0.00000	0.00002	0.00000	67	0.00	0.00	-0.02	0.00000	0.00001	0.00000
62	87	0.00	0.00	-0.01	0.00001	0.00001	0.00000	88	0.00	0.00	-0.02	0.00001	0.00000	0.00000
	67	0.00	0.00	-0.02	0.00000	0.00001	0.00000	13	0.00	0.00	-0.02	0.00000	0.00000	0.00000
63	40	0.00	0.00	0.02	0.00001	0.00002	0.00000	89	0.00	0.00	0.00	0.00002	0.00002	0.00000
	38	0.00	0.00	0.01	0.00001	0.00004	0.00000	86	0.00	0.00	0.00	0.00001	0.00002	0.00000
64	89	0.00	0.00	0.00	0.00002	0.00002	0.00000	90	0.00	0.00	0.00	0.00003	0.00001	0.00000
	86	0.00	0.00	0.00	0.00001	0.00002	0.00000	87	0.00	0.00	-0.01	0.00001	0.00001	0.00000
65	90	0.00	0.00	0.00	0.00003	0.00001	0.00000	91	0.00	0.00	-0.01	0.00003	0.00000	0.00000
	87	0.00	0.00	-0.01	0.00001	0.00001	0.00000	88	0.00	0.00	-0.02	0.00001	0.00000	0.00000
66	17	0.00	0.00	0.02	0.00001	0.00001	0.00000	92	0.00	0.00	0.02	0.00003	0.00000	0.00000
	40	0.00	0.00	0.02	0.00001	0.00002	0.00000	89	0.00	0.00	0.00	0.00002	0.00002	0.00000
67	92	0.00	0.00	0.02	0.00003	0.00000	0.00000	93	0.00	0.00	0.02	0.00005	0.00000	0.00000
	89	0.00	0.00	0.00	0.00002	0.00002	0.00000	90	0.00	0.00	0.00	0.00003	0.00001	0.00000
68	93	0.00	0.00	0.02	0.00005	0.00000	0.00000	18	0.00	0.00	0.02	0.00006	0.00000	0.00000
	90	0.00	0.00	0.00	0.00003	0.00001	0.00000	91	0.00	0.00	-0.01	0.00003	0.00000	0.00000
69	95	0.00	0.00	0.00	0.00001	0.00003	0.00000	96	0.00	0.00	-0.01	0.00001	0.00001	0.00000
	91	0.00	0.00	-0.01	0.00000	0.00003	0.00000	88	0.00	0.00	-0.02	0.00000	0.00001	0.00000
70	96	0.00	0.00	-0.01	0.00001	0.00001	0.00000	61	0.00	0.00	-0.02	0.00001	0.00000	0.00000
	88	0.00	0.00	-0.02	0.00000	0.00001	0.00000	13	0.00	0.00	-0.02	0.00000	0.00000	0.00000
71	97	0.00	0.00	0.02	0.00000	0.00004	0.00000	98	0.00	0.00	0.00	0.00002	0.00002	0.00000
	94	0.00	0.00	0.02	0.00000	0.00006	0.00000	95	0.00	0.00	0.00	0.00001	0.00003	0.00000
72	98	0.00	0.00	0.00	0.00002	0.00002	0.00000	99	0.00	0.00	-0.01	0.00002	0.00001	0.00000
	95	0.00	0.00	0.00	0.00001	0.00003	0.00000	96	0.00	0.00	-0.01	0.00001	0.00001	0.00000
73	99	0.00	0.00	-0.01	0.00002	0.00001	0.00000	57	0.00	0.00	-0.01	0.00002	0.00000	0.00000
	96	0.00	0.00	-0.01	0.00001	0.00001	0.00000	61	0.00	0.00	-0.02	0.00001	0.00000	0.00000
74	19	0.00	0.00	0.02	0.00001	0.00001	0.00000	100	0.00	0.00	0.02	0.00002	0.00001	0.00000
	97	0.00	0.00	0.02	0.00000	0.00004	0.00000	98	0.00	0.00	0.00	0.00002	0.00002	0.00000
75	100	0.00	0.00	0.02	0.00002	0.00001	0.00000	101	0.00	0.00	0.01	0.00004	0.00001	0.00000
	98	0.00	0.00	0.00	0.00002	0.00002	0.00000	99	0.00	0.00	-0.01	0.00002	0.00001	0.00000
76	101	0.00	0.00	0.01	0.00004	0.00001	0.00000	11	0.00	0.00	0.01	0.00004	0.00000	0.00000
	99	0.00	0.00	-0.01	0.00002	0.00001	0.00000	57	0.00	0.00	-0.01	0.00002	0.00000	0.00000
77	103	0.02	0.00	-0.05	0.00006	-.00002	0.00000	104	0.02	0.00	-0.03	0.00003	-.00004	0.00000
	84	0.02	0.00	-0.07	0.00001	-.00002	0.00000	85	0.02	0.00	-0.04	0.00000	-.00006	0.00000
78	104	0.02	0.00	-0.03	0.00003	-.00004	0.00000	105	0.02	0.00	0.00	0.00000	-.00005	0.00000
	85	0.02	0.00	-0.04	0.00000	-.00006	0.00000	31	0.02	0.00	0.00	0.00000	-.00007	0.00000
79	106	0.02	-0.01	-0.02	0.00007	0.00000	0.00000	107	0.02	-0.01	-0.02	0.00006	-.00001	0.00000
	102	0.02	-0.01	-0.06	0.00006	0.00000	0.00000	103	0.02	0.00	-0.05	0.00006	-.00002	0.00000
80	107	0.02	-0.01	-0.02	0.00006	-.00001	0.00000	108	0.02	0.00	-0.01	0.00004	-.00001	0.00000
	103	0.02	0.00	-0.05	0.00006	-.00002	0.00000	104	0.02	0.00	-0.03	0.00003	-.00004	0.00000
81	108	0.02	0.00	-0.01	0.00004	-.00001	0.00000	109	0.02	0.00	0.00	0.00000	-.00002	0.00000
	104	0.02	0.00	-0.03	0.00003	-.00004	0.00000	105	0.02	0.00	0.00	0.00000	-.00005	0.00000
82	22	0.02	-0.01	-0.01	-.00005	-.00001	0.00001	110	0.02	-0.01	-0.01	-.00004	0.00000	0.00000
	106	0.02	-0.01	-0.02	0.00007	0.00000	0.00000	107	0.02	-0.01	-0.02	0.00006	-.00001	0.00000
83	110	0.02	-0.01	-0.01	-.00004	0.00000	0.00000	111	0.02	-0.01	0.00	-.00002	0.00000	0.00000
	107	0.02	-0.01	-0.02	0.00006	-.00001	0.00000	108	0.02	0.00	-0.01	0.00004	-.00001	0.00000

Documento di proprietà **Snam Rete Gas**. La Società tutelerà i propri diritti in sede civile e penale a termini di legge.

SPOST. SPINTA TERR STATICA: SHELL

Shell Nro	Nodo N.ro	S1 (mm)	S2 (mm)	S3 (mm)	R1 (rad)	R2 (rad)	R3 (rad)	Nodo N.ro	S1 (mm)	S2 (mm)	S3 (mm)	R1 (rad)	R2 (rad)	R3 (rad)
84	111	0.02	-0.01	0.00	-.00002	0.00000	0.00000	30	0.02	0.00	0.00	0.00000	0.00000	0.00000
	108	0.02	0.00	-0.01	0.00004	-.00001	0.00000	109	0.02	0.00	0.00	0.00000	-.00002	0.00000
85	113	0.02	0.01	-0.03	-.00006	0.00003	0.00000	80	0.02	0.00	-0.06	-.00005	0.00002	0.00000
	112	0.02	0.01	-0.01	-.00004	0.00001	0.00000	76	0.02	0.00	-0.02	-.00007	0.00002	0.00000
86	23	0.02	0.00	-0.04	-.00004	0.00005	0.00001	21	0.02	-0.01	-0.07	0.00002	0.00001	0.00000
	113	0.02	0.00	-0.03	-.00005	0.00004	0.00000	80	0.02	-0.01	-0.06	-.00004	0.00003	0.00000
87	115	0.01	0.01	-0.03	-.00004	0.00004	0.00001	113	0.01	0.02	-0.03	-.00006	-.00001	0.00000
	114	0.01	0.01	-0.01	-.00004	0.00001	0.00001	112	0.01	0.02	-0.01	-.00004	-.00002	0.00000
88	20	0.01	0.00	-0.02	-.00004	0.00006	0.00000	23	0.01	0.02	-0.04	-.00006	-.00002	0.00001
	115	0.01	0.01	-0.03	-.00005	0.00003	0.00001	113	0.01	0.02	-0.03	-.00006	-.00003	0.00000
89	116	-0.01	-0.02	-0.02	0.00000	-.00006	0.00000	117	-0.01	-0.02	-0.01	0.00000	-.00004	0.00000
	102	-0.01	-0.02	-0.06	0.00000	-.00006	0.00000	106	-0.01	-0.02	-0.02	0.00000	-.00007	0.00000
90	117	-0.01	-0.02	-0.01	0.00000	-.00004	0.00000	37	-0.02	-0.02	-0.01	-.00001	0.00004	0.00000
	106	-0.01	-0.02	-0.02	0.00000	-.00007	0.00000	22	-0.01	-0.02	-0.01	-.00001	0.00005	0.00001
91	119	0.01	-0.02	-0.01	0.00004	0.00000	-.00001	117	0.01	-0.02	-0.01	0.00003	-.00002	0.00000
	118	0.01	-0.01	-0.02	0.00004	0.00003	-.00001	116	0.01	-0.02	-0.02	0.00005	-.00003	0.00000
92	34	0.02	-0.02	-0.01	-.00002	0.00001	-.00001	37	0.01	-0.02	-0.01	-.00004	0.00001	0.00000
	119	0.01	-0.01	-0.01	0.00004	0.00000	-.00001	117	0.01	-0.02	-0.01	0.00003	-.00002	0.00000
93	121	0.01	0.02	-0.02	0.00001	0.00006	0.00000	122	0.00	0.02	-0.06	0.00002	0.00005	0.00000
	43	0.01	0.02	-0.02	0.00000	0.00007	0.00000	42	0.00	0.02	-0.06	0.00000	0.00005	0.00000
94	122	0.00	0.02	-0.06	0.00002	0.00005	0.00000	123	0.00	0.02	-0.07	0.00002	-.00001	0.00000
	42	0.00	0.02	-0.06	0.00000	0.00005	0.00000	2	0.00	0.02	-0.07	-.00001	-.00001	0.00000
95	124	0.00	0.02	0.00	0.00000	-.00002	0.00000	125	0.00	0.02	-0.01	0.00002	0.00004	0.00000
	120	0.01	0.02	-0.01	0.00000	-.00004	0.00000	121	0.01	0.02	-0.02	0.00001	0.00006	0.00000
96	125	0.00	0.02	-0.01	0.00002	0.00004	0.00000	126	0.00	0.02	-0.03	0.00004	0.00003	0.00000
	121	0.01	0.02	-0.02	0.00001	0.00006	0.00000	122	0.00	0.02	-0.06	0.00002	0.00005	0.00000
97	126	0.00	0.02	-0.03	0.00004	0.00003	0.00000	127	0.00	0.02	-0.04	0.00005	0.00000	0.00000
	122	0.00	0.02	-0.06	0.00002	0.00005	0.00000	123	0.00	0.02	-0.07	0.00002	-.00001	0.00000
98	26	0.00	0.02	0.00	0.00000	0.00000	0.00000	128	0.00	0.02	0.00	0.00002	0.00000	0.00000
	124	0.00	0.02	0.00	0.00000	-.00002	0.00000	125	0.00	0.02	-0.01	0.00002	0.00004	0.00000
99	128	0.00	0.02	0.00	0.00002	0.00000	0.00000	129	0.00	0.02	0.00	0.00006	0.00000	0.00000
	125	0.00	0.02	-0.01	0.00002	0.00004	0.00000	126	0.00	0.02	-0.03	0.00004	0.00003	0.00000
100	129	0.00	0.02	0.00	0.00006	0.00000	0.00000	27	0.00	0.02	0.00	0.00007	0.00000	0.00000
	126	0.00	0.02	-0.03	0.00004	0.00003	0.00000	127	0.00	0.02	-0.04	0.00005	0.00000	0.00000
101	130	0.00	0.02	-0.04	-.00006	0.00007	0.00000	131	0.00	0.02	-0.07	-.00012	0.00005	0.00000
	68	0.00	0.02	0.00	-.00003	0.00000	0.00000	64	0.00	0.02	0.00	-.00005	0.00000	0.00000
102	131	0.00	0.02	-0.07	-.00012	0.00005	0.00000	132	0.00	0.02	-0.09	-.00015	0.00001	0.00000
	64	0.00	0.02	0.00	-.00005	0.00000	0.00000	5	0.00	0.02	0.00	-.00006	0.00000	0.00000
103	16	0.01	0.02	-0.02	0.00000	0.00004	0.00001	133	0.01	0.02	-0.07	-.00003	0.00013	0.00000
	10	0.01	0.02	-0.01	-.00001	0.00002	0.00000	130	0.00	0.02	-0.04	-.00006	0.00007	0.00000
104	133	0.01	0.02	-0.07	-.00003	0.00013	0.00000	134	0.00	0.02	-0.13	-.00006	0.00010	0.00000
	130	0.00	0.02	-0.04	-.00006	0.00007	0.00000	131	0.00	0.02	-0.07	-.00012	0.00005	0.00000
105	134	0.00	0.02	-0.13	-.00006	0.00010	0.00000	135	0.00	0.02	-0.16	-.00007	0.00001	0.00000
	131	0.00	0.02	-0.07	-.00012	0.00005	0.00000	132	0.00	0.02	-0.09	-.00015	0.00001	0.00000
106	3	0.01	0.02	-0.01	0.00001	0.00005	0.00001	136	0.01	0.02	-0.07	0.00001	0.00015	0.00000
	16	0.01	0.02	-0.02	0.00000	0.00004	0.00001	133	0.01	0.02	-0.07	-.00003	0.00013	0.00000
107	136	0.01	0.02	-0.07	0.00001	0.00015	0.00000	137	0.00	0.02	-0.15	0.00001	0.00011	0.00000
	133	0.01	0.02	-0.07	-.00003	0.00013	0.00000	134	0.00	0.02	-0.13	-.00006	0.00010	0.00000
108	137	0.00	0.02	-0.15	0.00001	0.00011	0.00000	138	0.00	0.02	-0.18	0.00001	0.00001	0.00000
	134	0.00	0.02	-0.13	-.00006	0.00010	0.00000	135	0.00	0.02	-0.16	-.00007	0.00001	0.00000
109	139	0.01	0.02	-0.01	0.00000	0.00004	0.00000	140	0.00	0.02	-0.06	0.00003	0.00013	0.00000
	3	0.01	0.02	-0.01	0.00001	0.00005	0.00001	136	0.01	0.02	-0.07	0.00001	0.00015	0.00000
110	140	0.00	0.02	-0.06	0.00003	0.00013	0.00000	141	0.00	0.02	-0.12	0.00006	0.00010	0.00000
	136	0.01	0.02	-0.07	0.00001	0.00015	0.00000	137	0.00	0.02	-0.15	0.00001	0.00011	0.00000
111	141	0.00	0.02	-0.12	0.00006	0.00010	0.00000	142	0.00	0.02	-0.15	0.00007	0.00001	0.00000
	137	0.00	0.02	-0.15	0.00001	0.00011	0.00000	138	0.00	0.02	-0.18	0.00001	0.00001	0.00000
112	143	0.00	0.02	-0.01	0.00000	0.00002	0.00000	144	0.00	0.02	-0.03	0.00005	0.00007	0.00000
	139	0.01	0.02	-0.01	0.00000	0.00004	0.00000	140	0.00	0.02	-0.06	0.00003	0.00013	0.00000
113	144	0.00	0.02	-0.03	0.00005	0.00007	0.00000	145	0.00	0.02	-0.07	0.00009	0.00006	0.00000
	140	0.00	0.02	-0.06	0.00003	0.00013	0.00000	141	0.00	0.02	-0.12	0.00006	0.00010	0.00000
114	145	0.00	0.02	-0.07	0.00009	0.00006	0.00000	146	0.00	0.02	-0.09	0.00012	0.00001	0.00000
	141	0.00	0.02	-0.12	0.00006	0.00010	0.00000	142	0.00	0.02	-0.15	0.00007	0.00001	0.00000
115	28	0.00	0.02	0.00	0.00000	0.00000	0.00000	147	0.00	0.02	0.00	0.00005	0.00000	0.00000
	143	0.00	0.02	-0.01	0.00000	0.00002	0.00000	144	0.00	0.02	-0.03	0.00005	0.00007	0.00000
116	147	0.00	0.02	0.00	0.00005	0.00000	0.00000	148	0.00	0.02	0.00	0.00011	0.00000	0.00000
	144	0.00	0.02	-0.03	0.00005	0.00007	0.00000	145	0.00	0.02	-0.07	0.00009	0.00006	0.00000
117	148	0.00	0.02	0.00	0.00011	0.00000	0.00000	29	0.00	0.02	0.00	0.00013	0.00000	0.00000
	145	0.00	0.02	-0.07	0.00009	0.00006	0.00000	146	0.00	0.02	-0.09	0.00012	0.00001	0.00000
118	101	0.01	0.00	0.00	0.00000	0.00004	0.00001	115	0.01	0.00	-0.03	-.00002	0.00005	0.00001
	100	0.02	0.00	0.00	0.00000	0.00002	0.00001	114	0.02	0.01	-0.01	-.00003	0.00002	0.00001
119	11	0.01	0.00	0.00	0.00000	0.00004	0.00000	20	0.01	0.00	-0.02	0.00000	0.00007	0.00000
	101	0.01	0.00	0.00	0.00000	0.00004	0.00001	115	0.01	0.00	-0.03	-.00002	0.00005	0.00001
120	149	0.00	0.02	-0.04	-.00007	0.00007	0.00000	150	0.00	0.02	-0.07	-.00013	0.00004	0.00000
	97	0.00	0.02	0.00	-.00004	0.00000	0.00000	94	0.00	0.02	0.00	-.00006	0.00000	0.00000
121	150	0.00	0.02	-0.07	-.00013	0.00004	0.00000	151	0.00	0.02	-0.09	-.00015	-.00001	0.00000
	94	0.00	0.02	0.00	-.00006	0.00000	0.00000	18	0.00	0.02	0.00	-.00006	0.00000	0.00000
122	36	0.01	0.02	-0.01	0.00000	0.00003	0.00001	152	0.00	0.02	-0.07	-.00003	0.00013	0.00000
	35	0.01	0.02	-0.01	-.00001	0.00002	0.00000	149	0.00	0.02	-0.04	-.00007	0.00007	0.00000
123	152	0.00	0.02	-0.07	-.00003	0.00013	0.00000	153	0.00	0.02	-0.14	-.00006	0.00009	0.00000
	149	0.00	0.02	-0.04	-.00007	0.00007	0.00000	150	0.00	0.02	-0.07	-.00013	0.00004	0.00000

Documento di proprietà **Snam Rete Gas**. La Società tutelerà i propri diritti in sede civile e penale a termini di legge.

SPOST. SPINTA TERR STATICA: SHELL

Shell Nro	Nodo N.ro	S1 (mm)	S2 (mm)	S3 (mm)	R1 (rad)	R2 (rad)	R3 (rad)	Nodo N.ro	S1 (mm)	S2 (mm)	S3 (mm)	R1 (rad)	R2 (rad)	R3 (rad)
124	153	0.00	0.02	-0.14	-.00006	0.00009	0.00000	154	0.00	0.02	-0.16	-.00007	-.00001	0.00000
	150	0.00	0.02	-0.07	-.00013	0.00004	0.00000	151	0.00	0.02	-0.09	-.00015	-.00001	0.00000
125	25	0.01	0.02	-0.01	0.00001	0.00005	0.00001	155	0.00	0.02	-0.08	0.00001	0.00015	0.00000
	36	0.01	0.02	-0.01	0.00000	0.00003	0.00001	152	0.00	0.02	-0.07	-.00003	0.00013	0.00000
126	155	0.00	0.02	-0.08	0.00001	0.00015	0.00000	156	0.00	0.02	-0.15	0.00001	0.00010	0.00000
	152	0.00	0.02	-0.07	-.00003	0.00013	0.00000	153	0.00	0.02	-0.14	-.00006	0.00009	0.00000
127	156	0.00	0.02	-0.15	0.00001	0.00010	0.00000	157	0.00	0.02	-0.18	0.00001	-.00001	0.00000
	153	0.00	0.02	-0.14	-.00006	0.00009	0.00000	154	0.00	0.02	-0.16	-.00007	-.00001	0.00000
128	74	0.01	0.02	-0.01	0.00000	0.00004	0.00000	158	0.00	0.02	-0.06	0.00003	0.00013	0.00000
	25	0.01	0.02	-0.01	0.00001	0.00005	0.00001	155	0.00	0.02	-0.08	0.00001	0.00015	0.00000
129	158	0.00	0.02	-0.06	0.00003	0.00013	0.00000	159	0.00	0.02	-0.13	0.00006	0.00009	0.00000
	155	0.00	0.02	-0.08	0.00001	0.00015	0.00000	156	0.00	0.02	-0.15	0.00001	0.00010	0.00000
130	159	0.00	0.02	-0.13	0.00006	0.00009	0.00000	160	0.00	0.02	-0.15	0.00007	-.00001	0.00000
	156	0.00	0.02	-0.15	0.00001	0.00010	0.00000	157	0.00	0.02	-0.18	0.00001	-.00001	0.00000
131	75	0.00	0.02	0.00	0.00000	0.00002	0.00000	161	0.00	0.02	-0.04	0.00005	0.00007	0.00000
	74	0.01	0.02	-0.01	0.00000	0.00004	0.00000	158	0.00	0.02	-0.06	0.00003	0.00013	0.00000
132	161	0.00	0.02	-0.04	0.00005	0.00007	0.00000	162	0.00	0.02	-0.07	0.00010	0.00005	0.00000
	158	0.00	0.02	-0.06	0.00003	0.00013	0.00000	159	0.00	0.02	-0.13	0.00006	0.00009	0.00000
133	162	0.00	0.02	-0.07	0.00010	0.00005	0.00000	163	0.00	0.02	-0.09	0.00012	-.00001	0.00000
	159	0.00	0.02	-0.13	0.00006	0.00009	0.00000	160	0.00	0.02	-0.15	0.00007	-.00001	0.00000
134	32	0.00	0.02	0.00	0.00000	0.00000	0.00000	164	0.00	0.02	0.00	0.00006	0.00000	0.00000
	75	0.00	0.02	0.00	0.00000	0.00002	0.00000	161	0.00	0.02	-0.04	0.00005	0.00007	0.00000
135	164	0.00	0.02	0.00	0.00006	0.00000	0.00000	165	0.00	0.02	0.00	0.00011	0.00000	0.00000
	161	0.00	0.02	-0.04	0.00005	0.00007	0.00000	162	0.00	0.02	-0.07	0.00010	0.00005	0.00000
136	165	0.00	0.02	0.00	0.00011	0.00000	0.00000	33	0.00	0.02	0.00	0.00013	0.00000	0.00000
	162	0.00	0.02	-0.07	0.00010	0.00005	0.00000	163	0.00	0.02	-0.09	0.00012	-.00001	0.00000
137	166	0.00	0.02	-0.07	-.00013	-.00004	0.00000	167	0.00	0.02	-0.04	-.00007	-.00007	0.00000
	58	0.00	0.02	0.00	-.00006	0.00000	0.00000	54	0.00	0.02	0.00	-.00004	0.00000	0.00000
138	167	0.00	0.02	-0.04	-.00007	-.00007	0.00000	34	-0.01	0.02	-0.01	-.00001	-.00002	0.00000
	54	0.00	0.02	0.00	-.00004	0.00000	0.00000	7	0.00	0.02	0.00	-.00001	0.00000	0.00001
139	135	0.00	0.02	-0.16	-.00007	0.00001	0.00000	168	0.00	0.02	-0.14	-.00006	-.00009	0.00000
	132	0.00	0.02	-0.09	-.00015	0.00001	0.00000	166	0.00	0.02	-0.07	-.00013	-.00004	0.00000
140	168	0.00	0.02	-0.14	-.00006	-.00009	0.00000	169	0.00	0.02	-0.07	-.00003	-.00013	0.00000
	166	0.00	0.02	-0.07	-.00013	-.00004	0.00000	167	0.00	0.02	-0.04	-.00007	-.00007	0.00000
141	169	0.00	0.02	-0.07	-.00003	-.00013	0.00000	37	-0.01	0.02	-0.02	0.00000	-.00004	-.00001
	167	0.00	0.02	-0.04	-.00007	-.00007	0.00000	34	-0.01	0.02	-0.01	-.00001	-.00002	0.00000
142	138	0.00	0.02	-0.18	0.00001	0.00001	0.00000	170	0.00	0.02	-0.16	0.00001	-.00010	0.00000
	135	0.00	0.02	-0.16	-.00007	0.00001	0.00000	168	0.00	0.02	-0.14	-.00006	-.00009	0.00000
143	170	0.00	0.02	-0.16	0.00001	-.00010	0.00000	171	0.00	0.02	-0.08	0.00001	-.00015	0.00000
	168	0.00	0.02	-0.14	-.00006	-.00009	0.00000	169	0.00	0.02	-0.07	-.00003	-.00013	0.00000
144	171	0.00	0.02	-0.08	0.00001	-.00015	0.00000	22	-0.01	0.02	-0.01	0.00001	-.00005	-.00001
	169	0.00	0.02	-0.07	-.00003	-.00013	0.00000	37	-0.01	0.02	-0.02	0.00000	-.00004	-.00001
145	142	0.00	0.02	-0.15	0.00007	0.00001	0.00000	172	0.00	0.02	-0.13	0.00006	-.00009	0.00000
	138	0.00	0.02	-0.18	0.00001	0.00001	0.00000	170	0.00	0.02	-0.16	0.00001	-.00010	0.00000
146	172	0.00	0.02	-0.13	0.00006	-.00009	0.00000	173	0.00	0.02	-0.06	0.00003	-.00013	0.00000
	170	0.00	0.02	-0.16	0.00001	-.00010	0.00000	171	0.00	0.02	-0.08	0.00001	-.00015	0.00000
147	173	0.00	0.02	-0.06	0.00003	-.00013	0.00000	110	-0.01	0.02	-0.01	0.00000	-.00004	0.00000
	171	0.00	0.02	-0.08	0.00001	-.00015	0.00000	22	-0.01	0.02	-0.01	0.00001	-.00005	-.00001
148	146	0.00	0.02	-0.09	0.00012	0.00001	0.00000	174	0.00	0.02	-0.07	0.00010	-.00005	0.00000
	142	0.00	0.02	-0.15	0.00007	0.00001	0.00000	172	0.00	0.02	-0.13	0.00006	-.00009	0.00000
149	174	0.00	0.02	-0.07	0.00010	-.00005	0.00000	175	0.00	0.02	-0.04	0.00005	-.00007	0.00000
	172	0.00	0.02	-0.13	0.00006	-.00009	0.00000	173	0.00	0.02	-0.06	0.00003	-.00013	0.00000
150	175	0.00	0.02	-0.04	0.00005	-.00007	0.00000	111	0.00	0.02	-0.01	0.00000	-.00002	0.00000
	173	0.00	0.02	-0.06	0.00003	-.00013	0.00000	110	-0.01	0.02	-0.01	0.00000	-.00004	0.00000
151	29	0.00	0.02	0.00	0.00013	0.00000	0.00000	176	0.00	0.02	0.00	0.00011	0.00000	0.00000
	146	0.00	0.02	-0.09	0.00012	0.00001	0.00000	174	0.00	0.02	-0.07	0.00010	-.00005	0.00000
152	176	0.00	0.02	0.00	0.00011	0.00000	0.00000	177	0.00	0.02	0.00	0.00006	0.00000	0.00000
	174	0.00	0.02	-0.07	0.00010	-.00005	0.00000	175	0.00	0.02	-0.04	0.00005	-.00007	0.00000
153	177	0.00	0.02	0.00	0.00006	0.00000	0.00000	30	0.00	0.02	0.00	0.00000	0.00000	0.00000
	175	0.00	0.02	-0.04	0.00005	-.00007	0.00000	111	0.00	0.02	-0.01	0.00000	-.00002	0.00000
154	178	0.00	0.02	-0.07	-.00012	-.00005	0.00000	179	0.00	0.02	-0.04	-.00006	-.00007	0.00000
	93	0.00	0.02	0.00	-.00005	0.00000	0.00000	92	0.00	0.02	0.00	-.00003	0.00000	0.00000
155	179	0.00	0.02	-0.04	-.00006	-.00007	0.00000	12	-0.01	0.02	-0.01	-.00001	-.00002	0.00000
	92	0.00	0.02	0.00	-.00003	0.00000	0.00000	17	0.00	0.02	0.00	-.00001	0.00000	0.00001
156	154	0.00	0.02	-0.16	-.00007	-.00001	0.00000	180	0.00	0.02	-0.13	-.00006	-.00010	0.00000
	151	0.00	0.02	-0.09	-.00015	-.00001	0.00000	178	0.00	0.02	-0.07	-.00012	-.00005	0.00000
157	180	0.00	0.02	-0.13	-.00006	-.00010	0.00000	181	-0.01	0.02	-0.07	-.00003	-.00013	0.00000
	178	0.00	0.02	-0.07	-.00012	-.00005	0.00000	179	0.00	0.02	-0.04	-.00006	-.00007	0.00000
158	181	-0.01	0.02	-0.07	-.00003	-.00013	0.00000	15	-0.01	0.02	-0.01	0.00000	-.00004	-.00001
	179	0.00	0.02	-0.04	-.00006	-.00007	0.00000	12	-0.01	0.02	-0.01	-.00001	-.00002	0.00000
159	157	0.00	0.02	-0.18	0.00001	-.00001	0.00000	182	0.00	0.02	-0.15	0.00001	-.00011	0.00000
	154	0.00	0.02	-0.16	-.00007	-.00001	0.00000	180	0.00	0.02	-0.13	-.00006	-.00010	0.00000
160	182	0.00	0.02	-0.15	0.00001	-.00011	0.00000	183	-0.01	0.02	-0.07	0.00001	-.00015	0.00000
	180	0.00	0.02	-0.13	-.00006	-.00010	0.00000	181	-0.01	0.02	-0.07	-.00003	-.00013	0.00000
161	183	-0.01	0.02	-0.07	0.00001	-.00015	0.00000	9	-0.01	0.02	-0.01	0.00001	-.00005	-.00001
	181	-0.01	0.02	-0.07	-.00003	-.00013	0.00000	15	-0.01	0.02	-0.01	0.00000	-.00004	-.00001
162	160	0.00	0.02	-0.15	0.00007	-.00001	0.00000	184	0.00	0.02	-0.12	0.00006	-.00010	0.00000
	157	0.00	0.02	-0.18	0.00001	-.00001	0.00000	182	0.00	0.02	-0.15	0.00001	-.00011	0.00000
163	184	0.00	0.02	-0.12	0.00006	-.00010	0.00000	185	0.00	0.02	-0.06	0.00003	-.00013	0.00000
	182	0.00	0.02	-0.15	0.00001	-.00011	0.00000	183	-0.01	0.02	-0.07	0.00001	-.00015	0.00000

Documento di proprietà **Snam Rete Gas**. La Società tutelerà i propri diritti in sede civile e penale a termini di legge.

SPOST. SPINTA TERR STATICA: SHELL

Shell Nro	Nodo N.ro	S1 (mm)	S2 (mm)	S3 (mm)	R1 (rad)	R2 (rad)	R3 (rad)	Nodo N.ro	S1 (mm)	S2 (mm)	S3 (mm)	R1 (rad)	R2 (rad)	R3 (rad)
164	185	0.00	0.02	-0.06	0.00003	-.00013	0.00000	120	-0.01	0.02	-0.01	0.00000	-.00004	0.00000
	183	-0.01	0.02	-0.07	0.00001	-.00015	0.00000	9	-0.01	0.02	-0.01	0.00001	-.00005	-.00001
165	163	0.00	0.02	-0.09	0.00012	-.00001	0.00000	186	0.00	0.02	-0.07	0.00009	-.00006	0.00000
	160	0.00	0.02	-0.15	0.00007	-.00001	0.00000	184	0.00	0.02	-0.12	0.00006	-.00010	0.00000
166	186	0.00	0.02	-0.07	0.00009	-.00006	0.00000	187	0.00	0.02	-0.03	0.00005	-.00007	0.00000
	184	0.00	0.02	-0.12	0.00006	-.00010	0.00000	185	0.00	0.02	-0.06	0.00003	-.00013	0.00000
167	187	0.00	0.02	-0.03	0.00005	-.00007	0.00000	124	0.00	0.02	0.00	0.00000	-.00002	0.00000
	185	0.00	0.02	-0.06	0.00003	-.00013	0.00000	120	-0.01	0.02	-0.01	0.00000	-.00004	0.00000
168	33	0.00	0.02	0.00	0.00013	0.00000	0.00000	188	0.00	0.02	0.00	0.00011	0.00000	0.00000
	163	0.00	0.02	-0.09	0.00012	-.00001	0.00000	186	0.00	0.02	-0.07	0.00009	-.00006	0.00000
169	188	0.00	0.02	0.00	0.00011	0.00000	0.00000	189	0.00	0.02	0.00	0.00005	0.00000	0.00000
	186	0.00	0.02	-0.07	0.00009	-.00006	0.00000	187	0.00	0.02	-0.03	0.00005	-.00007	0.00000
170	189	0.00	0.02	0.00	0.00005	0.00000	0.00000	26	0.00	0.02	0.00	0.00000	0.00000	0.00000
	187	0.00	0.02	-0.03	0.00005	-.00007	0.00000	124	0.00	0.02	0.00	0.00000	-.00002	0.00000
171	190	0.00	0.02	-0.05	0.00002	-.00005	0.00000	191	-0.01	0.02	-0.02	0.00001	-.00006	0.00000
	73	-0.01	0.02	-0.06	0.00000	-.00006	0.00000	72	-0.01	0.02	-0.02	0.00000	-.00007	0.00000
172	191	-0.01	0.02	-0.02	0.00001	-.00006	0.00000	139	-0.01	0.02	-0.01	0.00000	0.00004	0.00000
	72	-0.01	0.02	-0.02	0.00000	-.00007	0.00000	3	-0.01	0.02	-0.01	0.00001	0.00005	-.00001
173	127	0.00	0.02	-0.04	0.00005	0.00000	0.00000	192	0.00	0.02	-0.03	0.00004	-.00003	0.00000
	123	0.00	0.02	-0.07	0.00002	-.00001	0.00000	190	0.00	0.02	-0.05	0.00002	-.00005	0.00000
174	192	0.00	0.02	-0.03	0.00004	-.00003	0.00000	193	0.00	0.02	-0.01	0.00001	-.00004	0.00000
	190	0.00	0.02	-0.05	0.00002	-.00005	0.00000	191	-0.01	0.02	-0.02	0.00001	-.00006	0.00000
175	193	0.00	0.02	-0.01	0.00001	-.00004	0.00000	143	-0.01	0.02	0.00	0.00000	0.00002	0.00000
	191	-0.01	0.02	-0.02	0.00001	-.00006	0.00000	139	-0.01	0.02	-0.01	0.00000	0.00004	0.00000
176	27	0.00	0.02	0.00	0.00007	0.00000	0.00000	194	0.00	0.02	0.00	0.00005	0.00000	0.00000
	127	0.00	0.02	-0.04	0.00005	0.00000	0.00000	192	0.00	0.02	-0.03	0.00004	-.00003	0.00000
177	194	0.00	0.02	0.00	0.00005	0.00000	0.00000	195	0.00	0.02	0.00	0.00002	0.00000	0.00000
	192	0.00	0.02	-0.03	0.00004	-.00003	0.00000	193	0.00	0.02	-0.01	0.00001	-.00004	0.00000
178	195	0.00	0.02	0.00	0.00002	0.00000	0.00000	28	0.00	0.02	0.00	0.00000	0.00000	0.00000
	193	0.00	0.02	-0.01	0.00001	-.00004	0.00000	143	-0.01	0.02	0.00	0.00000	0.00002	0.00000
179	52	0.02	0.00	0.00	0.00000	0.00002	-.00001	119	0.02	-0.01	-0.01	0.00003	0.00002	-.00001
	53	0.01	0.00	0.00	0.00000	0.00003	-.00001	118	0.01	0.00	-0.02	0.00002	0.00005	-.00001
180	7	0.02	0.00	0.00	0.00000	0.00001	-.00001	34	0.02	-0.01	-0.01	-.00002	0.00000	-.00001
	52	0.02	0.00	0.00	0.00000	0.00002	-.00001	119	0.02	-0.01	-0.01	0.00003	0.00002	-.00001

SPOST. SPINTA TERRENO SISMI: SHELL

Shell Nro	Nodo N.ro	S1 (mm)	S2 (mm)	S3 (mm)	R1 (rad)	R2 (rad)	R3 (rad)	Nodo N.ro	S1 (mm)	S2 (mm)	S3 (mm)	R1 (rad)	R2 (rad)	R3 (rad)
1	38	0.00	0.00	0.00	0.00000	0.00000	0.00000	39	0.00	0.00	0.00	0.00000	0.00000	0.00000
	14	0.00	0.00	0.00	0.00000	0.00000	0.00000	1	0.00	0.00	0.00	0.00000	0.00001	0.00000
2	6	0.00	0.00	0.00	0.00000	-.00001	0.00000	44	0.00	0.00	0.00	0.00000	-.00001	0.00000
	2	0.00	0.00	-0.01	0.00000	0.00000	0.00000	42	0.00	0.00	-0.01	0.00000	-.00001	0.00000
3	39	0.00	0.00	0.00	0.00000	0.00000	0.00000	44	0.00	0.00	0.00	0.00001	0.00000	0.00000
	1	0.00	0.00	0.00	0.00000	0.00000	0.00000	6	0.00	0.00	0.00	0.00001	0.00000	0.00000
4	46	0.00	0.00	0.00	0.00000	0.00000	0.00000	47	0.00	0.00	0.00	0.00000	0.00000	0.00000
	10	0.00	0.00	0.00	0.00000	0.00000	0.00000	16	0.00	0.00	0.00	0.00000	0.00000	0.00000
5	50	0.00	0.00	0.00	0.00000	0.00000	0.00000	46	0.00	0.00	0.00	0.00000	0.00000	0.00000
	4	0.00	0.00	0.00	0.00000	0.00000	0.00000	10	0.00	0.00	0.00	0.00000	0.00000	0.00000
6	54	0.00	0.00	0.00	0.00000	0.00000	0.00000	55	0.00	0.00	0.00	0.00000	0.00000	0.00000
	7	0.00	0.00	0.00	0.00000	0.00000	0.00000	52	0.00	0.00	0.00	0.00000	0.00000	0.00000
7	64	0.00	0.00	0.00	0.00000	0.00000	0.00000	65	0.00	0.00	0.00	0.00000	0.00000	0.00000
	5	0.00	0.00	0.00	0.00000	0.00000	0.00000	62	0.00	0.00	0.00	0.00000	0.00000	0.00000
8	47	0.00	0.00	0.00	0.00000	0.00000	0.00000	72	0.00	0.00	0.00	-.00001	0.00000	0.00000
	16	0.00	0.00	0.00	0.00000	0.00000	0.00000	3	0.00	0.00	0.00	0.00000	0.00000	0.00000
9	76	0.00	0.00	0.00	-.00001	0.00000	0.00000	77	0.00	0.00	0.00	-.00001	0.00000	0.00000
	25	0.00	0.00	0.00	0.00000	0.00000	0.00000	74	0.00	0.00	0.00	0.00000	0.00000	0.00000
10	38	0.00	0.00	0.00	0.00000	0.00000	0.00000	86	0.00	0.00	0.00	0.00000	0.00000	0.00000
	14	0.00	0.00	0.00	0.00000	0.00000	0.00000	71	0.00	0.00	0.00	0.00000	0.00000	0.00000
11	94	0.00	0.00	0.00	0.00000	0.00000	0.00000	95	0.00	0.00	0.00	0.00000	0.00000	0.00000
	18	0.00	0.00	0.00	0.00000	0.00000	0.00000	91	0.00	0.00	0.00	0.00000	0.00000	0.00000
12	102	0.00	0.00	-0.01	0.00001	0.00000	0.00000	103	0.00	0.00	-0.01	0.00001	0.00000	0.00000
	21	0.00	0.00	-0.01	0.00000	0.00000	0.00000	84	0.00	0.00	-0.01	0.00000	0.00000	0.00000
13	112	0.00	0.00	0.00	0.00000	0.00000	0.00000	76	0.00	0.00	0.00	-.00001	0.00000	0.00000
	36	0.00	0.00	0.00	0.00000	0.00000	0.00000	25	0.00	0.00	0.00	0.00000	0.00000	0.00000
14	114	0.00	0.00	0.00	0.00000	0.00000	0.00000	112	0.00	0.00	0.00	0.00000	0.00000	0.00000
	35	0.00	0.00	0.00	0.00000	0.00000	0.00000	36	0.00	0.00	0.00	0.00000	0.00000	0.00000
15	24	0.00	0.00	0.00	0.00000	-.00001	0.00000	116	0.00	0.00	0.00	0.00000	-.00001	0.00000
	21	0.00	0.00	-0.01	0.00000	0.00000	0.00000	102	0.00	0.00	-0.01	0.00000	-.00001	0.00000
16	118	0.00	0.00	0.00	0.00000	0.00000	0.00000	116	0.00	0.00	0.00	0.00001	0.00000	0.00000
	20	0.00	0.00	0.00	0.00000	0.00000	0.00000	24	0.00	0.00	0.00	0.00001	0.00000	0.00000
17	120	0.00	0.00	0.00	0.00000	0.00000	0.00000	121	0.00	0.00	0.00	0.00000	0.00001	0.00000
	9	0.00	0.00	0.00	0.00000	0.00000	0.00000	43	0.00	0.00	0.00	0.00000	0.00001	0.00000
18	10	0.00	0.00	0.00	0.00000	0.00000	0.00000	130	0.00	0.00	0.00	0.00000	0.00000	0.00000
	4	0.00	0.00	0.00	0.00000	0.00000	0.00000	68	0.00	0.00	0.00	0.00000	0.00000	0.00000
19	100	0.00	0.00	0.00	0.00000	0.00000	0.00000	114	0.00	0.00	0.00	0.00000	0.00000	0.00000
	19	0.00	0.00	0.00	0.00000	0.00000	0.00000	35	0.00	0.00	0.00	0.00000	0.00000	0.00000
20	35	0.00	0.00	0.00	0.00000	0.00000	0.00000	149	0.00	0.00	0.00	0.00000	0.00000	0.00000
	19	0.00	0.00	0.00	0.00000	0.00000	0.00000	97	0.00	0.00	0.00	0.00000	0.00000	0.00000
21	132	0.00	0.00	-0.01	-.00001	0.00000	0.00000	166	0.00	0.00	-0.01	-.00001	0.00000	0.00000
	5	0.00	0.00	0.00	0.00000	0.00000	0.00000	58	0.00	0.00	0.00	0.00000	0.00000	0.00000

Documento di proprietà **Snam Rete Gas**. La Società tutelerà i propri diritti in sede civile e penale a termini di legge.

SPOST. SPINTA TERRENO SISMI: SHELL

Shell Nro	Nodo N.ro	S1 (mm)	S2 (mm)	S3 (mm)	R1 (rad)	R2 (rad)	R3 (rad)	Nodo N.ro	S1 (mm)	S2 (mm)	S3 (mm)	R1 (rad)	R2 (rad)	R3 (rad)
22	151	0.00	0.00	-0.01	-.00001	0.00000	0.00000	178	0.00	0.00	0.00	-.00001	0.00000	0.00000
	18	0.00	0.00	0.00	0.00000	0.00000	0.00000	93	0.00	0.00	0.00	0.00000	0.00000	0.00000
23	123	0.00	0.00	-0.01	0.00000	0.00000	0.00000	190	0.00	0.00	-0.01	0.00000	-.00001	0.00000
	2	0.00	0.00	-0.01	0.00000	0.00000	0.00000	73	0.00	0.00	-0.01	0.00000	-.00001	0.00000
24	53	0.00	0.00	0.00	0.00000	0.00000	0.00000	118	0.00	0.00	0.00	0.00000	0.00000	0.00000
	11	0.00	0.00	0.00	0.00000	0.00000	0.00000	20	0.00	0.00	0.00	0.00000	0.00001	0.00000
25	40	0.00	0.00	0.00	0.00000	0.00000	0.00000	41	0.00	0.00	0.00	0.00000	0.00000	0.00000
	38	0.00	0.00	0.00	0.00000	0.00000	0.00000	39	0.00	0.00	0.00	0.00000	0.00000	0.00000
26	17	0.00	0.00	0.00	0.00000	0.00000	0.00000	12	0.00	0.00	0.00	0.00000	0.00000	0.00000
	40	0.00	0.00	0.00	0.00000	0.00000	0.00000	41	0.00	0.00	0.00	0.00000	0.00000	0.00000
27	44	0.00	0.00	0.00	0.00000	-.00001	0.00000	45	0.00	0.00	0.00	0.00000	0.00000	0.00000
	42	0.00	0.00	-0.01	0.00000	-.00001	0.00000	43	0.00	0.00	0.00	0.00000	-.00001	0.00000
28	45	0.00	0.00	0.00	0.00000	0.00000	0.00000	15	0.00	0.00	0.00	0.00000	0.00000	0.00000
	43	0.00	0.00	0.00	0.00000	-.00001	0.00000	9	0.00	0.00	0.00	0.00000	0.00000	0.00000
29	41	0.00	0.00	0.00	0.00000	0.00000	0.00000	45	0.00	0.00	0.00	0.00000	0.00000	0.00000
	39	0.00	0.00	0.00	0.00000	0.00000	0.00000	44	0.00	0.00	0.00	0.00001	0.00000	0.00000
30	12	0.00	0.00	0.00	0.00000	0.00000	0.00000	15	0.00	0.00	0.00	0.00000	0.00000	0.00000
	41	0.00	0.00	0.00	0.00000	0.00000	0.00000	45	0.00	0.00	0.00	0.00000	0.00000	0.00000
31	48	0.00	0.00	0.00	0.00000	0.00000	0.00000	49	0.00	0.00	0.00	-.00001	0.00000	0.00000
	46	0.00	0.00	0.00	0.00000	0.00000	0.00000	47	0.00	0.00	0.00	0.00000	0.00000	0.00000
32	1	0.00	0.00	0.00	0.00000	0.00001	0.00000	8	0.00	0.00	0.00	-.00001	0.00000	0.00000
	48	0.00	0.00	0.00	0.00000	0.00000	0.00000	49	0.00	0.00	0.00	-.00001	0.00000	0.00000
33	51	0.00	0.00	0.00	0.00000	0.00000	0.00000	48	0.00	0.00	0.00	0.00000	0.00000	0.00000
	50	0.00	0.00	0.00	0.00000	0.00000	0.00000	46	0.00	0.00	0.00	0.00000	0.00000	0.00000
34	14	0.00	0.00	0.00	0.00000	0.00000	0.00000	1	0.00	0.00	0.00	0.00000	0.00001	0.00000
	51	0.00	0.00	0.00	0.00000	0.00000	0.00000	48	0.00	0.00	0.00	0.00000	0.00000	0.00000
35	55	0.00	0.00	0.00	0.00000	0.00000	0.00000	56	0.00	0.00	0.00	0.00000	0.00000	0.00000
	52	0.00	0.00	0.00	0.00000	0.00000	0.00000	53	0.00	0.00	0.00	0.00000	0.00000	0.00000
36	56	0.00	0.00	0.00	0.00000	0.00000	0.00000	57	0.00	0.00	0.00	0.00000	0.00000	0.00000
	53	0.00	0.00	0.00	0.00000	0.00000	0.00000	11	0.00	0.00	0.00	0.00000	0.00000	0.00000
37	58	0.00	0.00	0.00	0.00000	0.00000	0.00000	59	0.00	0.00	0.00	0.00000	0.00000	0.00000
	54	0.00	0.00	0.00	0.00000	0.00000	0.00000	55	0.00	0.00	0.00	0.00000	0.00000	0.00000
38	59	0.00	0.00	0.00	0.00000	0.00000	0.00000	60	0.00	0.00	0.00	0.00000	0.00000	0.00000
	55	0.00	0.00	0.00	0.00000	0.00000	0.00000	56	0.00	0.00	0.00	0.00000	0.00000	0.00000
39	60	0.00	0.00	0.00	0.00000	0.00000	0.00000	61	0.00	0.00	0.00	0.00000	0.00000	0.00000
	56	0.00	0.00	0.00	0.00000	0.00000	0.00000	57	0.00	0.00	0.00	0.00000	0.00000	0.00000
40	5	0.00	0.00	0.00	0.00000	0.00000	0.00000	62	0.00	0.00	0.00	0.00000	0.00000	0.00000
	58	0.00	0.00	0.00	0.00000	0.00000	0.00000	59	0.00	0.00	0.00	0.00000	0.00000	0.00000
41	62	0.00	0.00	0.00	0.00000	0.00000	0.00000	63	0.00	0.00	0.00	0.00000	0.00000	0.00000
	59	0.00	0.00	0.00	0.00000	0.00000	0.00000	60	0.00	0.00	0.00	0.00000	0.00000	0.00000
42	63	0.00	0.00	0.00	0.00000	0.00000	0.00000	13	0.00	0.00	0.00	0.00000	0.00000	0.00000
	60	0.00	0.00	0.00	0.00000	0.00000	0.00000	61	0.00	0.00	0.00	0.00000	0.00000	0.00000
43	65	0.00	0.00	0.00	0.00000	0.00000	0.00000	66	0.00	0.00	0.00	0.00000	0.00000	0.00000
	62	0.00	0.00	0.00	0.00000	0.00000	0.00000	63	0.00	0.00	0.00	0.00000	0.00000	0.00000
44	66	0.00	0.00	0.00	0.00000	0.00000	0.00000	67	0.00	0.00	0.00	0.00000	0.00000	0.00000
	63	0.00	0.00	0.00	0.00000	0.00000	0.00000	13	0.00	0.00	0.00	0.00000	0.00000	0.00000
45	68	0.00	0.00	0.00	0.00000	0.00000	0.00000	69	0.00	0.00	0.00	0.00000	0.00000	0.00000
	64	0.00	0.00	0.00	0.00000	0.00000	0.00000	65	0.00	0.00	0.00	0.00000	0.00000	0.00000
46	69	0.00	0.00	0.00	0.00000	0.00000	0.00000	70	0.00	0.00	0.00	0.00000	0.00000	0.00000
	65	0.00	0.00	0.00	0.00000	0.00000	0.00000	66	0.00	0.00	0.00	0.00000	0.00000	0.00000
47	70	0.00	0.00	0.00	0.00000	0.00000	0.00000	71	0.00	0.00	0.00	0.00000	0.00000	0.00000
	66	0.00	0.00	0.00	0.00000	0.00000	0.00000	67	0.00	0.00	0.00	0.00000	0.00000	0.00000
48	4	0.00	0.00	0.00	0.00000	0.00000	0.00000	50	0.00	0.00	0.00	0.00000	0.00000	0.00000
	68	0.00	0.00	0.00	0.00000	0.00000	0.00000	69	0.00	0.00	0.00	0.00000	0.00000	0.00000
49	50	0.00	0.00	0.00	0.00000	0.00000	0.00000	51	0.00	0.00	0.00	0.00000	0.00000	0.00000
	69	0.00	0.00	0.00	0.00000	0.00000	0.00000	70	0.00	0.00	0.00	0.00000	0.00000	0.00000
50	51	0.00	0.00	0.00	0.00000	0.00000	0.00000	14	0.00	0.00	0.00	0.00000	0.00000	0.00000
	70	0.00	0.00	0.00	0.00000	0.00000	0.00000	71	0.00	0.00	0.00	0.00000	0.00000	0.00000
51	49	0.00	0.00	0.00	0.00000	0.00000	0.00000	73	0.00	0.00	-0.01	-.00001	0.00000	0.00000
	47	0.00	0.00	0.00	0.00000	0.00000	0.00000	72	0.00	0.00	0.00	-.00001	0.00000	0.00000
52	8	0.00	0.00	0.00	0.00000	0.00000	0.00000	2	0.00	0.00	-0.01	0.00000	0.00000	0.00000
	49	0.00	0.00	0.00	0.00000	0.00000	0.00000	73	0.00	0.00	-0.01	0.00000	0.00001	0.00000
53	77	0.00	0.00	0.00	-.00001	0.00000	0.00000	78	0.00	0.00	0.00	-.00001	0.00000	0.00000
	74	0.00	0.00	0.00	0.00000	0.00000	0.00000	75	0.00	0.00	0.00	0.00000	0.00000	0.00000
54	78	0.00	0.00	0.00	-.00001	0.00000	0.00000	79	0.00	0.00	0.00	0.00000	0.00000	0.00000
	75	0.00	0.00	0.00	0.00000	0.00000	0.00000	32	0.00	0.00	0.00	0.00000	0.00000	0.00000
55	80	0.00	0.00	-0.01	-.00001	0.00000	0.00000	81	0.00	0.00	-0.01	-.00001	0.00000	0.00000
	76	0.00	0.00	0.00	-.00001	0.00000	0.00000	77	0.00	0.00	0.00	-.00001	0.00000	0.00000
56	81	0.00	0.00	-0.01	-.00001	0.00000	0.00000	82	0.00	0.00	-0.01	0.00000	-.00001	0.00000
	77	0.00	0.00	0.00	-.00001	0.00000	0.00000	78	0.00	0.00	0.00	-.00001	0.00000	0.00000
57	82	0.00	0.00	-0.01	0.00000	-.00001	0.00000	83	0.00	0.00	0.00	0.00000	-.00001	0.00000
	78	0.00	0.00	0.00	-.00001	0.00000	0.00000	79	0.00	0.00	0.00	0.00000	0.00000	0.00000
58	21	0.00	0.00	-0.01	0.00000	0.00000	0.00000	84	0.00	0.00	-0.01	0.00000	0.00000	0.00000
	80	0.00	0.00	-0.01	-.00001	0.00000	0.00000	81	0.00	0.00	-0.01	-.00001	0.00000	0.00000
59	84	0.00	0.00	-0.01	0.00000	0.00000	0.00000	85	0.00	0.00	-0.01	0.00000	-.00001	0.00000
	81	0.00	0.00	-0.01	-.00001	0.00000	0.00000	82	0.00	0.00	-0.01	0.00000	-.00001	0.00000
60	85	0.00	0.00	-0.01	0.00000	-.00001	0.00000	31	0.00	0.00	0.00	0.00000	-.00001	0.00000
	82	0.00	0.00	-0.01	0.00000	-.00001	0.00000	83	0.00	0.00	0.00	0.00000	-.00001	0.00000
61	86	0.00	0.00	0.00	0.00000	0.00000	0.00000	87	0.00	0.00	0.00	0.00000	0.00000	0.00000
	71	0.00	0.00	0.00	0.00000	0.00000	0.00000	67	0.00	0.00	0.00	0.00000	0.00000	0.00000

Documento di proprietà **Snam Rete Gas**. La Società tutelerà i propri diritti in sede civile e penale a termini di legge.

SPOST. SPINTA TERRENO SISMI: SHELL

Shell Nro	Nodo N.ro	S1 (mm)	S2 (mm)	S3 (mm)	R1 (rad)	R2 (rad)	R3 (rad)	Nodo N.ro	S1 (mm)	S2 (mm)	S3 (mm)	R1 (rad)	R2 (rad)	R3 (rad)
62	87	0.00	0.00	0.00	0.00000	0.00000	0.00000	88	0.00	0.00	0.00	0.00000	0.00000	0.00000
	67	0.00	0.00	0.00	0.00000	0.00000	0.00000	13	0.00	0.00	0.00	0.00000	0.00000	0.00000
63	40	0.00	0.00	0.00	0.00000	0.00000	0.00000	89	0.00	0.00	0.00	0.00000	0.00000	0.00000
	38	0.00	0.00	0.00	0.00000	0.00000	0.00000	86	0.00	0.00	0.00	0.00000	0.00000	0.00000
64	89	0.00	0.00	0.00	0.00000	0.00000	0.00000	90	0.00	0.00	0.00	0.00000	0.00000	0.00000
	86	0.00	0.00	0.00	0.00000	0.00000	0.00000	87	0.00	0.00	0.00	0.00000	0.00000	0.00000
65	90	0.00	0.00	0.00	0.00000	0.00000	0.00000	91	0.00	0.00	0.00	0.00000	0.00000	0.00000
	87	0.00	0.00	0.00	0.00000	0.00000	0.00000	88	0.00	0.00	0.00	0.00000	0.00000	0.00000
66	17	0.00	0.00	0.00	0.00000	0.00000	0.00000	92	0.00	0.00	0.00	0.00000	0.00000	0.00000
	40	0.00	0.00	0.00	0.00000	0.00000	0.00000	89	0.00	0.00	0.00	0.00000	0.00000	0.00000
67	92	0.00	0.00	0.00	0.00000	0.00000	0.00000	93	0.00	0.00	0.00	0.00000	0.00000	0.00000
	89	0.00	0.00	0.00	0.00000	0.00000	0.00000	90	0.00	0.00	0.00	0.00000	0.00000	0.00000
68	93	0.00	0.00	0.00	0.00000	0.00000	0.00000	18	0.00	0.00	0.00	0.00000	0.00000	0.00000
	90	0.00	0.00	0.00	0.00000	0.00000	0.00000	91	0.00	0.00	0.00	0.00000	0.00000	0.00000
69	95	0.00	0.00	0.00	0.00000	0.00000	0.00000	96	0.00	0.00	0.00	0.00000	0.00000	0.00000
	91	0.00	0.00	0.00	0.00000	0.00000	0.00000	88	0.00	0.00	0.00	0.00000	0.00000	0.00000
70	96	0.00	0.00	0.00	0.00000	0.00000	0.00000	61	0.00	0.00	0.00	0.00000	0.00000	0.00000
	88	0.00	0.00	0.00	0.00000	0.00000	0.00000	13	0.00	0.00	0.00	0.00000	0.00000	0.00000
71	97	0.00	0.00	0.00	0.00000	0.00000	0.00000	98	0.00	0.00	0.00	0.00000	0.00000	0.00000
	94	0.00	0.00	0.00	0.00000	0.00000	0.00000	95	0.00	0.00	0.00	0.00000	0.00000	0.00000
72	98	0.00	0.00	0.00	0.00000	0.00000	0.00000	99	0.00	0.00	0.00	0.00000	0.00000	0.00000
	95	0.00	0.00	0.00	0.00000	0.00000	0.00000	96	0.00	0.00	0.00	0.00000	0.00000	0.00000
73	99	0.00	0.00	0.00	0.00000	0.00000	0.00000	57	0.00	0.00	0.00	0.00000	0.00000	0.00000
	96	0.00	0.00	0.00	0.00000	0.00000	0.00000	61	0.00	0.00	0.00	0.00000	0.00000	0.00000
74	19	0.00	0.00	0.00	0.00000	0.00000	0.00000	100	0.00	0.00	0.00	0.00000	0.00000	0.00000
	97	0.00	0.00	0.00	0.00000	0.00000	0.00000	98	0.00	0.00	0.00	0.00000	0.00000	0.00000
75	100	0.00	0.00	0.00	0.00000	0.00000	0.00000	101	0.00	0.00	0.00	0.00000	0.00000	0.00000
	98	0.00	0.00	0.00	0.00000	0.00000	0.00000	99	0.00	0.00	0.00	0.00000	0.00000	0.00000
76	101	0.00	0.00	0.00	0.00000	0.00000	0.00000	11	0.00	0.00	0.00	0.00000	0.00000	0.00000
	99	0.00	0.00	0.00	0.00000	0.00000	0.00000	57	0.00	0.00	0.00	0.00000	0.00000	0.00000
77	103	0.00	0.00	-0.01	0.00001	0.00000	0.00000	104	0.00	0.00	-0.01	0.00000	-.00001	0.00000
	84	0.00	0.00	-0.01	0.00000	0.00000	0.00000	85	0.00	0.00	-0.01	0.00000	-.00001	0.00000
78	104	0.00	0.00	-0.01	0.00000	-.00001	0.00000	105	0.00	0.00	0.00	0.00000	-.00001	0.00000
	85	0.00	0.00	-0.01	0.00000	-.00001	0.00000	31	0.00	0.00	0.00	0.00000	-.00001	0.00000
79	106	0.00	0.00	0.00	0.00001	0.00000	0.00000	107	0.00	0.00	0.00	0.00001	0.00000	0.00000
	102	0.00	0.00	-0.01	0.00001	0.00000	0.00000	103	0.00	0.00	-0.01	0.00001	0.00000	0.00000
80	107	0.00	0.00	0.00	0.00001	0.00000	0.00000	108	0.00	0.00	0.00	0.00001	0.00000	0.00000
	103	0.00	0.00	-0.01	0.00001	0.00000	0.00000	104	0.00	0.00	-0.01	0.00000	-.00001	0.00000
81	108	0.00	0.00	0.00	0.00001	0.00000	0.00000	109	0.00	0.00	0.00	0.00000	0.00000	0.00000
	104	0.00	0.00	-0.01	0.00000	-.00001	0.00000	105	0.00	0.00	0.00	0.00000	-.00001	0.00000
82	22	0.00	0.00	0.00	0.00000	0.00000	0.00000	110	0.00	0.00	0.00	0.00000	0.00000	0.00000
	106	0.00	0.00	0.00	0.00001	0.00000	0.00000	107	0.00	0.00	0.00	0.00001	0.00000	0.00000
83	110	0.00	0.00	0.00	0.00000	0.00000	0.00000	111	0.00	0.00	0.00	0.00000	0.00000	0.00000
	107	0.00	0.00	0.00	0.00001	0.00000	0.00000	108	0.00	0.00	0.00	0.00001	0.00000	0.00000
84	111	0.00	0.00	0.00	0.00000	0.00000	0.00000	30	0.00	0.00	0.00	0.00000	0.00000	0.00000
	108	0.00	0.00	0.00	0.00001	0.00000	0.00000	109	0.00	0.00	0.00	0.00000	0.00000	0.00000
85	113	0.00	0.00	0.00	-.00001	0.00000	0.00000	80	0.00	0.00	-0.01	-.00001	0.00000	0.00000
	112	0.00	0.00	0.00	0.00000	0.00000	0.00000	76	0.00	0.00	0.00	-.00001	0.00000	0.00000
86	23	0.00	0.00	0.00	0.00000	0.00001	0.00000	21	0.00	0.00	-0.01	0.00000	0.00000	0.00000
	113	0.00	0.00	0.00	0.00000	0.00001	0.00000	80	0.00	0.00	-0.01	0.00000	0.00001	0.00000
87	115	0.00	0.00	0.00	0.00000	0.00000	0.00000	113	0.00	0.00	0.00	-.00001	0.00000	0.00000
	114	0.00	0.00	0.00	0.00000	0.00000	0.00000	112	0.00	0.00	0.00	0.00000	0.00000	0.00000
88	20	0.00	0.00	0.00	0.00000	0.00001	0.00000	23	0.00	0.00	0.00	-.00001	0.00000	0.00000
	115	0.00	0.00	0.00	0.00000	0.00000	0.00000	113	0.00	0.00	0.00	-.00001	0.00000	0.00000
89	116	0.00	0.00	0.00	0.00000	-.00001	0.00000	117	0.00	0.00	0.00	0.00000	0.00000	0.00000
	102	0.00	0.00	-0.01	0.00000	-.00001	0.00000	106	0.00	0.00	0.00	0.00000	-.00001	0.00000
90	117	0.00	0.00	0.00	0.00000	0.00000	0.00000	37	0.00	0.00	0.00	0.00000	0.00000	0.00000
	106	0.00	0.00	0.00	0.00000	-.00001	0.00000	22	0.00	0.00	0.00	0.00000	0.00000	0.00000
91	119	0.00	0.00	0.00	0.00000	0.00000	0.00000	117	0.00	0.00	0.00	0.00000	0.00000	0.00000
	118	0.00	0.00	0.00	0.00000	0.00000	0.00000	116	0.00	0.00	0.00	0.00001	0.00000	0.00000
92	34	0.00	0.00	0.00	0.00000	0.00000	0.00000	37	0.00	0.00	0.00	0.00000	0.00000	0.00000
	119	0.00	0.00	0.00	0.00000	0.00000	0.00000	117	0.00	0.00	0.00	0.00000	0.00000	0.00000
93	121	0.00	0.00	0.00	0.00000	0.00001	0.00000	122	0.00	0.00	-0.01	0.00000	0.00001	0.00000
	43	0.00	0.00	0.00	0.00000	0.00001	0.00000	42	0.00	0.00	-0.01	0.00000	0.00001	0.00000
94	122	0.00	0.00	-0.01	0.00000	0.00001	0.00000	123	0.00	0.00	-0.01	0.00000	0.00000	0.00000
	42	0.00	0.00	-0.01	0.00000	0.00001	0.00000	2	0.00	0.00	-0.01	0.00000	0.00000	0.00000
95	124	0.00	0.00	0.00	0.00000	0.00000	0.00000	125	0.00	0.00	0.00	0.00000	0.00001	0.00000
	120	0.00	0.00	0.00	0.00000	0.00000	0.00000	121	0.00	0.00	0.00	0.00000	0.00001	0.00000
96	125	0.00	0.00	0.00	0.00000	0.00001	0.00000	126	0.00	0.00	-0.01	0.00001	0.00000	0.00000
	121	0.00	0.00	0.00	0.00000	0.00001	0.00000	122	0.00	0.00	-0.01	0.00000	0.00001	0.00000
97	126	0.00	0.00	-0.01	0.00001	0.00000	0.00000	127	0.00	0.00	-0.01	0.00001	0.00000	0.00000
	122	0.00	0.00	-0.01	0.00000	0.00001	0.00000	123	0.00	0.00	-0.01	0.00000	0.00000	0.00000
98	26	0.00	0.00	0.00	0.00000	0.00000	0.00000	128	0.00	0.00	0.00	0.00000	0.00000	0.00000
	124	0.00	0.00	0.00	0.00000	0.00000	0.00000	125	0.00	0.00	0.00	0.00000	0.00001	0.00000
99	128	0.00	0.00	0.00	0.00000	0.00000	0.00000	129	0.00	0.00	0.00	0.00001	0.00000	0.00000
	125	0.00	0.00	0.00	0.00000	0.00001	0.00000	126	0.00	0.00	-0.01	0.00001	0.00000	0.00000
100	129	0.00	0.00	0.00	0.00001	0.00000	0.00000	27	0.00	0.00	0.00	0.00001	0.00000	0.00000
	126	0.00	0.00	-0.01	0.00001	0.00000	0.00000	127	0.00	0.00	-0.01	0.00001	0.00000	0.00000
101	130	0.00	0.00	0.00	0.00000	0.00000	0.00000	131	0.00	0.00	0.00	-.00001	0.00000	0.00000
	68	0.00	0.00	0.00	0.00000	0.00000	0.00000	64	0.00	0.00	0.00	0.00000	0.00000	0.00000

Documento di proprietà **Snam Rete Gas**. La Società tutelerà i propri diritti in sede civile e penale a termini di legge.

SPOST. SPINTA TERRENO SISMI: SHELL

Shell Nro	Nodo N.ro	S1 (mm)	S2 (mm)	S3 (mm)	R1 (rad)	R2 (rad)	R3 (rad)	Nodo N.ro	S1 (mm)	S2 (mm)	S3 (mm)	R1 (rad)	R2 (rad)	R3 (rad)
102	131	0.00	0.00	0.00	-.00001	0.00000	0.00000	132	0.00	0.00	-0.01	-.00001	0.00000	0.00000
	64	0.00	0.00	0.00	0.00000	0.00000	0.00000	5	0.00	0.00	0.00	0.00000	0.00000	0.00000
103	16	0.00	0.00	0.00	0.00000	0.00000	0.00000	133	0.00	0.00	0.00	0.00000	0.00001	0.00000
	10	0.00	0.00	0.00	0.00000	0.00000	0.00000	130	0.00	0.00	0.00	0.00000	0.00000	0.00000
104	133	0.00	0.00	0.00	0.00000	0.00001	0.00000	134	0.00	0.00	-0.01	-.00001	0.00001	0.00000
	130	0.00	0.00	0.00	0.00000	0.00000	0.00000	131	0.00	0.00	0.00	-.00001	0.00000	0.00000
105	134	0.00	0.00	-0.01	-.00001	0.00001	0.00000	135	0.00	0.00	-0.01	-.00001	0.00000	0.00000
	131	0.00	0.00	0.00	-.00001	0.00000	0.00000	132	0.00	0.00	-0.01	-.00001	0.00000	0.00000
106	3	0.00	0.00	0.00	0.00000	0.00000	0.00000	136	0.00	0.00	-0.01	0.00000	0.00001	0.00000
	16	0.00	0.00	0.00	0.00000	0.00000	0.00000	133	0.00	0.00	0.00	0.00000	0.00001	0.00000
107	136	0.00	0.00	-0.01	0.00000	0.00001	0.00000	137	0.00	0.00	-0.01	0.00000	0.00001	0.00000
	133	0.00	0.00	0.00	0.00000	0.00001	0.00000	134	0.00	0.00	-0.01	-.00001	0.00001	0.00000
108	137	0.00	0.00	-0.01	0.00000	0.00001	0.00000	138	0.00	0.00	-0.01	0.00000	0.00000	0.00000
	134	0.00	0.00	-0.01	-.00001	0.00001	0.00000	135	0.00	0.00	-0.01	-.00001	0.00000	0.00000
109	139	0.00	0.00	0.00	0.00000	0.00000	0.00000	140	0.00	0.00	0.00	0.00000	0.00001	0.00000
	3	0.00	0.00	0.00	0.00000	0.00000	0.00000	136	0.00	0.00	-0.01	0.00000	0.00001	0.00000
110	140	0.00	0.00	0.00	0.00000	0.00001	0.00000	141	0.00	0.00	-0.01	0.00000	0.00001	0.00000
	136	0.00	0.00	-0.01	0.00000	0.00001	0.00000	137	0.00	0.00	-0.01	0.00000	0.00001	0.00000
111	141	0.00	0.00	-0.01	0.00000	0.00001	0.00000	142	0.00	0.00	-0.01	0.00000	0.00000	0.00000
	137	0.00	0.00	-0.01	0.00000	0.00001	0.00000	138	0.00	0.00	-0.01	0.00000	0.00000	0.00000
112	143	0.00	0.00	0.00	0.00000	0.00000	0.00000	144	0.00	0.00	0.00	0.00000	0.00001	0.00000
	139	0.00	0.00	0.00	0.00000	0.00000	0.00000	140	0.00	0.00	0.00	0.00000	0.00001	0.00000
113	144	0.00	0.00	0.00	0.00000	0.00001	0.00000	145	0.00	0.00	-0.01	0.00001	0.00001	0.00000
	140	0.00	0.00	0.00	0.00000	0.00001	0.00000	141	0.00	0.00	-0.01	0.00000	0.00001	0.00000
114	145	0.00	0.00	-0.01	0.00001	0.00001	0.00000	146	0.00	0.00	-0.01	0.00001	0.00000	0.00000
	141	0.00	0.00	-0.01	0.00000	0.00001	0.00000	142	0.00	0.00	-0.01	0.00000	0.00000	0.00000
115	28	0.00	0.00	0.00	0.00000	0.00000	0.00000	147	0.00	0.00	0.00	0.00001	0.00000	0.00000
	143	0.00	0.00	0.00	0.00000	0.00000	0.00000	144	0.00	0.00	0.00	0.00000	0.00001	0.00000
116	147	0.00	0.00	0.00	0.00001	0.00000	0.00000	148	0.00	0.00	0.00	0.00001	0.00000	0.00000
	144	0.00	0.00	0.00	0.00000	0.00001	0.00000	145	0.00	0.00	-0.01	0.00001	0.00001	0.00000
117	148	0.00	0.00	0.00	0.00001	0.00000	0.00000	29	0.00	0.00	0.00	0.00001	0.00000	0.00000
	145	0.00	0.00	-0.01	0.00001	0.00001	0.00000	146	0.00	0.00	-0.01	0.00001	0.00000	0.00000
118	101	0.00	0.00	0.00	0.00000	0.00000	0.00000	115	0.00	0.00	0.00	0.00000	0.00000	0.00000
	100	0.00	0.00	0.00	0.00000	0.00000	0.00000	114	0.00	0.00	0.00	0.00000	0.00000	0.00000
119	11	0.00	0.00	0.00	0.00000	0.00000	0.00000	20	0.00	0.00	0.00	0.00000	0.00001	0.00000
	101	0.00	0.00	0.00	0.00000	0.00000	0.00000	115	0.00	0.00	0.00	0.00000	0.00000	0.00000
120	149	0.00	0.00	0.00	0.00000	0.00000	0.00000	150	0.00	0.00	0.00	-.00001	0.00000	0.00000
	97	0.00	0.00	0.00	0.00000	0.00000	0.00000	94	0.00	0.00	0.00	0.00000	0.00000	0.00000
121	150	0.00	0.00	0.00	-.00001	0.00000	0.00000	151	0.00	0.00	-0.01	-.00001	0.00000	0.00000
	94	0.00	0.00	0.00	0.00000	0.00000	0.00000	18	0.00	0.00	0.00	0.00000	0.00000	0.00000
122	36	0.00	0.00	0.00	0.00000	0.00000	0.00000	152	0.00	0.00	0.00	0.00000	0.00001	0.00000
	35	0.00	0.00	0.00	0.00000	0.00000	0.00000	149	0.00	0.00	0.00	0.00000	0.00000	0.00000
123	152	0.00	0.00	0.00	0.00000	0.00001	0.00000	153	0.00	0.00	-0.01	-.00001	0.00001	0.00000
	149	0.00	0.00	0.00	0.00000	0.00000	0.00000	150	0.00	0.00	0.00	-.00001	0.00000	0.00000
124	153	0.00	0.00	-0.01	-.00001	0.00001	0.00000	154	0.00	0.00	-0.01	-.00001	0.00000	0.00000
	150	0.00	0.00	0.00	-.00001	0.00000	0.00000	151	0.00	0.00	-0.01	-.00001	0.00000	0.00000
125	25	0.00	0.00	0.00	0.00000	0.00000	0.00000	155	0.00	0.00	-0.01	0.00000	0.00001	0.00000
	36	0.00	0.00	0.00	0.00000	0.00000	0.00000	152	0.00	0.00	0.00	0.00000	0.00001	0.00000
126	155	0.00	0.00	-0.01	0.00000	0.00001	0.00000	156	0.00	0.00	-0.01	0.00000	0.00001	0.00000
	152	0.00	0.00	0.00	0.00000	0.00001	0.00000	153	0.00	0.00	-0.01	-.00001	0.00001	0.00000
127	156	0.00	0.00	-0.01	0.00000	0.00001	0.00000	157	0.00	0.00	-0.01	0.00000	0.00000	0.00000
	153	0.00	0.00	-0.01	-.00001	0.00001	0.00000	154	0.00	0.00	-0.01	-.00001	0.00000	0.00000
128	74	0.00	0.00	0.00	0.00000	0.00000	0.00000	158	0.00	0.00	-0.01	0.00000	0.00001	0.00000
	25	0.00	0.00	0.00	0.00000	0.00000	0.00000	155	0.00	0.00	-0.01	0.00000	0.00001	0.00000
129	158	0.00	0.00	-0.01	0.00000	0.00001	0.00000	159	0.00	0.00	-0.01	0.00000	0.00001	0.00000
	155	0.00	0.00	-0.01	0.00000	0.00001	0.00000	156	0.00	0.00	-0.01	0.00000	0.00001	0.00000
130	159	0.00	0.00	-0.01	0.00000	0.00001	0.00000	160	0.00	0.00	-0.01	0.00000	0.00000	0.00000
	156	0.00	0.00	-0.01	0.00000	0.00001	0.00000	157	0.00	0.00	-0.01	0.00000	0.00000	0.00000
131	75	0.00	0.00	0.00	0.00000	0.00000	0.00000	161	0.00	0.00	0.00	0.00000	0.00001	0.00000
	74	0.00	0.00	0.00	0.00000	0.00000	0.00000	158	0.00	0.00	-0.01	0.00000	0.00001	0.00000
132	161	0.00	0.00	0.00	0.00000	0.00001	0.00000	162	0.00	0.00	-0.01	0.00001	0.00000	0.00000
	158	0.00	0.00	-0.01	0.00000	0.00001	0.00000	159	0.00	0.00	-0.01	0.00000	0.00001	0.00000
133	162	0.00	0.00	-0.01	0.00001	0.00000	0.00000	163	0.00	0.00	-0.01	0.00001	0.00000	0.00000
	159	0.00	0.00	-0.01	0.00000	0.00001	0.00000	160	0.00	0.00	-0.01	0.00000	0.00000	0.00000
134	32	0.00	0.00	0.00	0.00000	0.00000	0.00000	164	0.00	0.00	0.00	0.00001	0.00000	0.00000
	75	0.00	0.00	0.00	0.00000	0.00000	0.00000	161	0.00	0.00	0.00	0.00000	0.00001	0.00000
135	164	0.00	0.00	0.00	0.00001	0.00000	0.00000	165	0.00	0.00	0.00	0.00001	0.00000	0.00000
	161	0.00	0.00	0.00	0.00000	0.00001	0.00000	162	0.00	0.00	-0.01	0.00001	0.00000	0.00000
136	165	0.00	0.00	0.00	0.00001	0.00000	0.00000	33	0.00	0.00	0.00	0.00001	0.00000	0.00000
	162	0.00	0.00	-0.01	0.00001	0.00000	0.00000	163	0.00	0.00	-0.01	0.00001	0.00000	0.00000
137	166	0.00	0.00	-0.01	-.00001	0.00000	0.00000	167	0.00	0.00	0.00	0.00000	0.00000	0.00000
	58	0.00	0.00	0.00	0.00000	0.00000	0.00000	54	0.00	0.00	0.00	0.00000	0.00000	0.00000
138	167	0.00	0.00	0.00	0.00000	0.00000	0.00000	34	0.00	0.00	0.00	0.00000	0.00000	0.00000
	54	0.00	0.00	0.00	0.00000	0.00000	0.00000	7	0.00	0.00	0.00	0.00000	0.00000	0.00000
139	135	0.00	0.00	-0.01	-.00001	0.00000	0.00000	168	0.00	0.00	-0.01	-.00001	-.00001	0.00000
	132	0.00	0.00	-0.01	-.00001	0.00000	0.00000	166	0.00	0.00	-0.01	-.00001	0.00000	0.00000
140	168	0.00	0.00	-0.01	-.00001	-.00001	0.00000	169	0.00	0.00	-0.01	0.00000	-.00001	0.00000
	166	0.00	0.00	-0.01	-.00001	0.00000	0.00000	167	0.00	0.00	0.00	0.00000	0.00000	0.00000
141	169	0.00	0.00	-0.01	0.00000	-.00001	0.00000	37	0.00	0.00	0.00	0.00000	0.00000	0.00000
	167	0.00	0.00	0.00	0.00000	0.00000	0.00000	34	0.00	0.00	0.00	0.00000	0.00000	0.00000

Documento di proprietà **Snam Rete Gas**. La Società tutelerà i propri diritti in sede civile e penale a termini di legge.

SPOST. SPINTA TERRENO SISMI: SHELL

Shell Nro	Nodo N.ro	S1 (mm)	S2 (mm)	S3 (mm)	R1 (rad)	R2 (rad)	R3 (rad)	Nodo N.ro	S1 (mm)	S2 (mm)	S3 (mm)	R1 (rad)	R2 (rad)	R3 (rad)
142	138	0.00	0.00	-0.01	0.00000	0.00000	0.00000	170	0.00	0.00	-0.01	0.00000	-.00001	0.00000
	135	0.00	0.00	-0.01	-.00001	0.00000	0.00000	168	0.00	0.00	-0.01	-.00001	-.00001	0.00000
143	170	0.00	0.00	-0.01	0.00000	-.00001	0.00000	171	0.00	0.00	-0.01	0.00000	-.00001	0.00000
	168	0.00	0.00	-0.01	-.00001	-.00001	0.00000	169	0.00	0.00	-0.01	0.00000	-.00001	0.00000
144	171	0.00	0.00	-0.01	0.00000	-.00001	0.00000	22	0.00	0.00	0.00	0.00000	0.00000	0.00000
	169	0.00	0.00	-0.01	0.00000	-.00001	0.00000	37	0.00	0.00	0.00	0.00000	0.00000	0.00000
145	142	0.00	0.00	-0.01	0.00000	0.00000	0.00000	172	0.00	0.00	-0.01	0.00000	-.00001	0.00000
	138	0.00	0.00	-0.01	0.00000	0.00000	0.00000	170	0.00	0.00	-0.01	0.00000	-.00001	0.00000
146	172	0.00	0.00	-0.01	0.00000	-.00001	0.00000	173	0.00	0.00	-0.01	0.00000	-.00001	0.00000
	170	0.00	0.00	-0.01	0.00000	-.00001	0.00000	171	0.00	0.00	-0.01	0.00000	-.00001	0.00000
147	173	0.00	0.00	-0.01	0.00000	-.00001	0.00000	110	0.00	0.00	0.00	0.00000	0.00000	0.00000
	171	0.00	0.00	-0.01	0.00000	-.00001	0.00000	22	0.00	0.00	0.00	0.00000	0.00000	0.00000
148	146	0.00	0.00	-0.01	0.00001	0.00000	0.00000	174	0.00	0.00	-0.01	0.00001	0.00000	0.00000
	142	0.00	0.00	-0.01	0.00000	0.00000	0.00000	172	0.00	0.00	-0.01	0.00000	-.00001	0.00000
149	174	0.00	0.00	-0.01	0.00001	0.00000	0.00000	175	0.00	0.00	0.00	0.00000	-.00001	0.00000
	172	0.00	0.00	-0.01	0.00000	-.00001	0.00000	173	0.00	0.00	-0.01	0.00000	-.00001	0.00000
150	175	0.00	0.00	0.00	0.00000	-.00001	0.00000	111	0.00	0.00	0.00	0.00000	0.00000	0.00000
	173	0.00	0.00	-0.01	0.00000	-.00001	0.00000	110	0.00	0.00	0.00	0.00000	0.00000	0.00000
151	29	0.00	0.00	0.00	0.00001	0.00000	0.00000	176	0.00	0.00	0.00	0.00001	0.00000	0.00000
	146	0.00	0.00	-0.01	0.00001	0.00000	0.00000	174	0.00	0.00	-0.01	0.00001	0.00000	0.00000
152	176	0.00	0.00	0.00	0.00001	0.00000	0.00000	177	0.00	0.00	0.00	0.00001	0.00000	0.00000
	174	0.00	0.00	-0.01	0.00001	0.00000	0.00000	175	0.00	0.00	0.00	0.00000	-.00001	0.00000
153	177	0.00	0.00	0.00	0.00001	0.00000	0.00000	30	0.00	0.00	0.00	0.00000	0.00000	0.00000
	175	0.00	0.00	0.00	0.00000	-.00001	0.00000	111	0.00	0.00	0.00	0.00000	0.00000	0.00000
154	178	0.00	0.00	0.00	-.00001	0.00000	0.00000	179	0.00	0.00	0.00	0.00000	0.00000	0.00000
	93	0.00	0.00	0.00	0.00000	0.00000	0.00000	92	0.00	0.00	0.00	0.00000	0.00000	0.00000
155	179	0.00	0.00	0.00	0.00000	0.00000	0.00000	12	0.00	0.00	0.00	0.00000	0.00000	0.00000
	92	0.00	0.00	0.00	0.00000	0.00000	0.00000	17	0.00	0.00	0.00	0.00000	0.00000	0.00000
156	154	0.00	0.00	-0.01	-.00001	0.00000	0.00000	180	0.00	0.00	-0.01	-.00001	-.00001	0.00000
	151	0.00	0.00	-0.01	-.00001	0.00000	0.00000	178	0.00	0.00	0.00	-.00001	0.00000	0.00000
157	180	0.00	0.00	-0.01	-.00001	-.00001	0.00000	181	0.00	0.00	0.00	0.00000	-.00001	0.00000
	178	0.00	0.00	0.00	-.00001	0.00000	0.00000	179	0.00	0.00	0.00	0.00000	0.00000	0.00000
158	181	0.00	0.00	0.00	0.00000	-.00001	0.00000	15	0.00	0.00	0.00	0.00000	0.00000	0.00000
	179	0.00	0.00	0.00	0.00000	0.00000	0.00000	12	0.00	0.00	0.00	0.00000	0.00000	0.00000
159	157	0.00	0.00	-0.01	0.00000	0.00000	0.00000	182	0.00	0.00	-0.01	0.00000	-.00001	0.00000
	154	0.00	0.00	-0.01	-.00001	0.00000	0.00000	180	0.00	0.00	-0.01	-.00001	-.00001	0.00000
160	182	0.00	0.00	-0.01	0.00000	-.00001	0.00000	183	0.00	0.00	-0.01	0.00000	-.00001	0.00000
	180	0.00	0.00	-0.01	-.00001	-.00001	0.00000	181	0.00	0.00	0.00	0.00000	-.00001	0.00000
161	183	0.00	0.00	-0.01	0.00000	-.00001	0.00000	9	0.00	0.00	0.00	0.00000	0.00000	0.00000
	181	0.00	0.00	0.00	0.00000	-.00001	0.00000	15	0.00	0.00	0.00	0.00000	0.00000	0.00000
162	160	0.00	0.00	-0.01	0.00000	0.00000	0.00000	184	0.00	0.00	-0.01	0.00000	-.00001	0.00000
	157	0.00	0.00	-0.01	0.00000	0.00000	0.00000	182	0.00	0.00	-0.01	0.00000	-.00001	0.00000
163	184	0.00	0.00	-0.01	0.00000	-.00001	0.00000	185	0.00	0.00	0.00	0.00000	-.00001	0.00000
	182	0.00	0.00	-0.01	0.00000	-.00001	0.00000	183	0.00	0.00	-0.01	0.00000	-.00001	0.00000
164	185	0.00	0.00	0.00	0.00000	-.00001	0.00000	120	0.00	0.00	0.00	0.00000	0.00000	0.00000
	183	0.00	0.00	-0.01	0.00000	-.00001	0.00000	9	0.00	0.00	0.00	0.00000	0.00000	0.00000
165	163	0.00	0.00	-0.01	0.00001	0.00000	0.00000	186	0.00	0.00	-0.01	0.00001	-.00001	0.00000
	160	0.00	0.00	-0.01	0.00000	0.00000	0.00000	184	0.00	0.00	-0.01	0.00000	-.00001	0.00000
166	186	0.00	0.00	-0.01	0.00001	-.00001	0.00000	187	0.00	0.00	0.00	0.00000	-.00001	0.00000
	184	0.00	0.00	-0.01	0.00000	-.00001	0.00000	185	0.00	0.00	0.00	0.00000	-.00001	0.00000
167	187	0.00	0.00	0.00	0.00000	-.00001	0.00000	124	0.00	0.00	0.00	0.00000	0.00000	0.00000
	185	0.00	0.00	0.00	0.00000	-.00001	0.00000	120	0.00	0.00	0.00	0.00000	0.00000	0.00000
168	33	0.00	0.00	0.00	0.00001	0.00000	0.00000	188	0.00	0.00	0.00	0.00001	0.00000	0.00000
	163	0.00	0.00	-0.01	0.00001	0.00000	0.00000	186	0.00	0.00	-0.01	0.00001	-.00001	0.00000
169	188	0.00	0.00	0.00	0.00001	0.00000	0.00000	189	0.00	0.00	0.00	0.00001	0.00000	0.00000
	186	0.00	0.00	-0.01	0.00001	-.00001	0.00000	187	0.00	0.00	0.00	0.00000	-.00001	0.00000
170	189	0.00	0.00	0.00	0.00001	0.00000	0.00000	26	0.00	0.00	0.00	0.00000	0.00000	0.00000
	187	0.00	0.00	0.00	0.00000	-.00001	0.00000	124	0.00	0.00	0.00	0.00000	0.00000	0.00000
171	190	0.00	0.00	-0.01	0.00000	-.00001	0.00000	191	0.00	0.00	0.00	0.00000	-.00001	0.00000
	73	0.00	0.00	-0.01	0.00000	-.00001	0.00000	72	0.00	0.00	0.00	0.00000	-.00001	0.00000
172	191	0.00	0.00	0.00	0.00000	-.00001	0.00000	139	0.00	0.00	0.00	0.00000	0.00000	0.00000
	72	0.00	0.00	0.00	0.00000	-.00001	0.00000	3	0.00	0.00	0.00	0.00000	0.00000	0.00000
173	127	0.00	0.00	-0.01	0.00001	0.00000	0.00000	192	0.00	0.00	0.00	0.00001	0.00000	0.00000
	123	0.00	0.00	-0.01	0.00000	0.00000	0.00000	190	0.00	0.00	-0.01	0.00000	-.00001	0.00000
174	192	0.00	0.00	0.00	0.00001	0.00000	0.00000	193	0.00	0.00	0.00	0.00000	-.00001	0.00000
	190	0.00	0.00	-0.01	0.00000	-.00001	0.00000	191	0.00	0.00	0.00	0.00000	-.00001	0.00000
175	193	0.00	0.00	0.00	0.00000	-.00001	0.00000	143	0.00	0.00	0.00	0.00000	0.00000	0.00000
	191	0.00	0.00	0.00	0.00000	-.00001	0.00000	139	0.00	0.00	0.00	0.00000	0.00000	0.00000
176	27	0.00	0.00	0.00	0.00001	0.00000	0.00000	194	0.00	0.00	0.00	0.00001	0.00000	0.00000
	127	0.00	0.00	-0.01	0.00001	0.00000	0.00000	192	0.00	0.00	0.00	0.00001	0.00000	0.00000
177	194	0.00	0.00	0.00	0.00001	0.00000	0.00000	195	0.00	0.00	0.00	0.00000	0.00000	0.00000
	192	0.00	0.00	0.00	0.00001	0.00000	0.00000	193	0.00	0.00	0.00	0.00000	-.00001	0.00000
178	195	0.00	0.00	0.00	0.00000	0.00000	0.00000	28	0.00	0.00	0.00	0.00000	0.00000	0.00000
	193	0.00	0.00	0.00	0.00000	-.00001	0.00000	143	0.00	0.00	0.00	0.00000	0.00000	0.00000
179	52	0.00	0.00	0.00	0.00000	0.00000	0.00000	119	0.00	0.00	0.00	0.00000	0.00000	0.00000
	53	0.00	0.00	0.00	0.00000	0.00000	0.00000	118	0.00	0.00	0.00	0.00000	0.00000	0.00000
180	7	0.00	0.00	0.00	0.00000	0.00000	0.00000	34	0.00	0.00	0.00	0.00000	0.00000	0.00000
	52	0.00	0.00	0.00	0.00000	0.00000	0.00000	119	0.00	0.00	0.00	0.00000	0.00000	0.00000

SPOST. NEVE: SHELL

Documento di proprietà **Snam Rete Gas**. La Società tutelerà i propri diritti in sede civile e penale a termini di legge.

Shell Nro	Nodo N.ro	S1 (mm)	S2 (mm)	S3 (mm)	R1 (rad)	R2 (rad)	R3 (rad)	Nodo N.ro	S1 (mm)	S2 (mm)	S3 (mm)	R1 (rad)	R2 (rad)	R3 (rad)
1	38	0.00	0.00	0.00	0.00000	0.00000	0.00000	39	0.00	0.00	0.00	0.00000	0.00000	0.00000
	14	0.00	0.00	0.00	0.00000	0.00000	0.00000	1	0.00	0.00	0.00	0.00000	0.00000	0.00000
2	6	0.00	0.00	0.00	0.00000	0.00000	0.00000	44	0.00	0.00	0.00	0.00000	0.00000	0.00000
	2	0.00	0.00	0.00	0.00000	0.00000	0.00000	42	0.00	0.00	0.00	0.00000	0.00000	0.00000
3	39	0.00	0.00	0.00	0.00000	0.00000	0.00000	44	0.00	0.00	0.00	0.00000	0.00000	0.00000
	1	0.00	0.00	0.00	0.00000	0.00000	0.00000	6	0.00	0.00	0.00	0.00000	0.00000	0.00000
4	46	0.00	0.00	0.00	0.00000	0.00000	0.00000	47	0.00	0.00	0.00	0.00000	0.00000	0.00000
	10	-0.01	0.00	0.00	0.00000	0.00000	0.00000	16	-0.01	0.00	0.00	0.00000	0.00000	0.00000
5	50	0.00	0.00	0.00	0.00000	0.00000	0.00000	46	0.00	0.00	0.00	0.00000	0.00000	0.00000
	4	-0.01	0.00	0.00	0.00000	0.00000	0.00000	10	-0.01	0.00	0.00	0.00000	0.00000	0.00000
6	54	0.00	0.00	-0.01	0.00000	0.00000	0.00000	55	0.00	0.00	-0.01	0.00000	0.00000	0.00000
	7	0.00	0.00	-0.01	0.00000	0.00000	0.00000	52	0.00	0.00	-0.01	0.00000	0.00000	0.00000
7	64	0.00	0.00	-0.01	0.00000	0.00000	0.00000	65	0.00	0.00	0.00	0.00000	0.00000	0.00000
	5	0.00	0.00	-0.01	0.00000	0.00000	0.00000	62	0.00	0.00	0.00	0.00000	0.00000	0.00000
8	47	0.00	0.00	0.00	0.00000	0.00000	0.00000	72	0.00	0.00	0.00	0.00000	0.00000	0.00000
	16	-0.01	0.00	0.00	0.00000	0.00000	0.00000	3	-0.01	0.00	0.00	0.00000	0.00000	0.00000
9	76	0.00	0.00	0.00	0.00000	0.00000	0.00000	77	0.00	0.00	0.00	0.00000	0.00000	0.00000
	25	0.00	0.00	0.00	0.00000	0.00000	0.00000	74	0.00	0.00	0.00	0.00000	0.00000	0.00000
10	38	0.00	0.00	0.00	0.00000	0.00000	0.00000	86	0.00	0.00	0.00	0.00000	0.00000	0.00000
	14	0.00	0.00	0.00	0.00000	0.00000	0.00000	71	0.00	0.00	0.00	0.00000	0.00000	0.00000
11	94	0.00	0.00	0.00	0.00000	0.00000	0.00000	95	0.00	0.00	0.00	0.00000	0.00000	0.00000
	18	0.00	0.00	0.00	0.00000	0.00000	0.00000	91	0.00	0.00	0.00	0.00000	0.00000	0.00000
12	102	-0.01	0.00	0.00	0.00000	0.00000	0.00000	103	-0.01	0.00	0.00	0.00000	0.00000	0.00000
	21	0.00	0.00	0.00	0.00000	0.00000	0.00000	84	0.00	0.00	0.00	0.00000	0.00000	0.00000
13	112	0.00	0.00	0.00	0.00000	0.00000	0.00000	76	0.00	0.00	0.00	0.00000	0.00000	0.00000
	36	0.00	0.00	0.00	0.00000	0.00000	0.00000	25	0.00	0.00	0.00	0.00000	0.00000	0.00000
14	114	0.00	0.00	0.00	0.00000	0.00000	0.00000	112	0.00	0.00	0.00	0.00000	0.00000	0.00000
	35	0.00	0.00	0.00	0.00000	0.00000	0.00000	36	0.00	0.00	0.00	0.00000	0.00000	0.00000
15	24	0.00	0.01	0.00	0.00000	0.00000	0.00000	116	0.00	0.01	0.00	0.00000	0.00000	0.00000
	21	0.00	0.00	0.00	0.00000	0.00000	0.00000	102	0.00	0.01	0.00	0.00000	0.00000	0.00000
16	118	0.00	0.00	0.00	0.00000	0.00000	0.00000	116	0.00	0.01	0.00	0.00000	0.00000	0.00000
	20	0.00	0.00	0.00	0.00000	0.00000	0.00000	24	0.00	0.00	0.00	0.00000	0.00000	0.00000
17	120	0.00	0.00	0.00	0.00000	0.00000	0.00000	121	0.00	0.00	0.00	0.00000	0.00000	0.00000
	9	0.00	0.00	0.00	0.00000	0.00000	0.00000	43	0.00	0.00	0.00	0.00000	0.00000	0.00000
18	10	0.00	-0.01	0.00	0.00000	0.00000	0.00000	130	0.00	-0.01	0.00	0.00000	0.00000	0.00000
	4	0.00	-0.01	0.00	0.00000	0.00000	0.00000	68	0.00	-0.01	0.00	0.00000	0.00000	0.00000
19	100	0.00	0.00	0.00	0.00000	0.00000	0.00000	114	0.00	0.00	0.00	0.00000	0.00000	0.00000
	19	0.00	0.00	0.00	0.00000	0.00000	0.00000	35	0.00	0.00	0.00	0.00000	0.00000	0.00000
20	35	0.00	0.00	0.00	0.00000	0.00000	0.00000	149	0.00	0.00	0.00	0.00000	0.00000	0.00000
	19	0.00	0.00	0.00	0.00000	0.00000	0.00000	97	0.00	0.00	0.00	0.00000	0.00000	0.00000
21	132	0.00	-0.01	0.00	0.00000	0.00000	0.00000	166	0.00	-0.01	0.00	0.00000	0.00000	0.00000
	5	0.00	-0.01	0.00	0.00000	0.00000	0.00000	58	0.00	-0.01	0.00	0.00000	0.00000	0.00000
22	151	0.00	0.00	0.00	0.00000	0.00000	0.00000	178	0.00	0.00	0.00	0.00000	0.00000	0.00000
	18	0.00	0.00	0.00	0.00000	0.00000	0.00000	93	0.00	0.00	0.00	0.00000	0.00000	0.00000
23	123	0.00	0.00	0.00	0.00000	0.00000	0.00000	190	0.00	0.00	0.00	0.00000	0.00000	0.00000
	2	0.00	0.00	0.00	0.00000	0.00000	0.00000	73	0.00	0.00	0.00	0.00000	0.00000	0.00000
24	53	-0.01	0.00	0.00	0.00000	0.00000	0.00000	118	-0.01	0.00	0.00	0.00000	0.00000	0.00000
	11	0.00	0.00	0.00	0.00000	0.00000	0.00000	20	0.00	0.00	0.00	0.00000	0.00000	0.00000
25	40	0.00	0.00	0.00	0.00000	0.00000	0.00000	41	0.00	0.00	0.00	0.00000	0.00000	0.00000
	38	0.00	0.00	0.00	0.00000	0.00000	0.00000	39	0.00	0.00	0.00	0.00000	0.00000	0.00000
26	17	0.00	0.00	0.00	0.00000	0.00000	0.00000	12	0.00	0.00	0.00	0.00000	0.00000	0.00000
	40	0.00	0.00	0.00	0.00000	0.00000	0.00000	41	0.00	0.00	0.00	0.00000	0.00000	0.00000
27	44	0.00	0.00	0.00	0.00000	0.00000	0.00000	45	0.00	0.00	0.00	0.00000	0.00000	0.00000
	42	0.00	0.00	0.00	0.00000	0.00000	0.00000	43	0.00	0.00	0.00	0.00000	0.00000	0.00000
28	45	0.00	0.00	0.00	0.00000	0.00000	0.00000	15	0.00	0.00	0.00	0.00000	0.00000	0.00000
	43	0.00	0.00	0.00	0.00000	0.00000	0.00000	9	0.00	0.00	0.00	0.00000	0.00000	0.00000
29	41	0.00	0.00	0.00	0.00000	0.00000	0.00000	45	0.00	0.00	0.00	0.00000	0.00000	0.00000
	39	0.00	0.00	0.00	0.00000	0.00000	0.00000	44	0.00	0.00	0.00	0.00000	0.00000	0.00000
30	12	0.00	0.00	0.00	0.00000	0.00000	0.00000	15	0.00	0.00	0.00	0.00000	0.00000	0.00000
	41	0.00	0.00	0.00	0.00000	0.00000	0.00000	45	0.00	0.00	0.00	0.00000	0.00000	0.00000
31	48	0.00	0.00	0.00	0.00000	0.00000	0.00000	49	0.00	0.00	0.00	0.00000	0.00000	0.00000
	46	0.00	0.00	0.00	0.00000	0.00000	0.00000	47	0.00	0.00	0.00	0.00000	0.00000	0.00000
32	1	0.00	0.00	0.00	0.00000	0.00000	0.00000	8	0.00	0.00	0.00	0.00000	0.00000	0.00000
	48	0.00	0.00	0.00	0.00000	0.00000	0.00000	49	0.00	0.00	0.00	0.00000	0.00000	0.00000
33	51	0.00	0.00	0.00	0.00000	0.00000	0.00000	48	0.00	0.00	0.00	0.00000	0.00000	0.00000
	50	0.00	0.00	0.00	0.00000	0.00000	0.00000	46	0.00	0.00	0.00	0.00000	0.00000	0.00000
34	14	0.00	0.00	0.00	0.00000	0.00000	0.00000	1	0.00	0.00	0.00	0.00000	0.00000	0.00000
	51	0.00	0.00	0.00	0.00000	0.00000	0.00000	48	0.00	0.00	0.00	0.00000	0.00000	0.00000
35	55	0.00	0.00	-0.01	0.00000	0.00000	0.00000	56	0.00	0.00	0.00	0.00000	0.00000	0.00000
	52	0.00	0.00	-0.01	0.00000	0.00000	0.00000	53	0.00	0.00	-0.01	0.00000	0.00000	0.00000
36	56	0.00	0.00	0.00	0.00000	0.00000	0.00000	57	0.00	0.00	0.00	0.00000	0.00000	0.00000
	53	0.00	0.00	-0.01	0.00000	0.00000	0.00000	11	0.00	0.00	0.00	0.00000	0.00000	0.00000
37	58	0.00	0.00	-0.01	0.00000	0.00000	0.00000	59	0.00	0.00	0.00	0.00000	0.00000	0.00000
	54	0.00	0.00	-0.01	0.00000	0.00000	0.00000	55	0.00	0.00	-0.01	0.00000	0.00000	0.00000
38	59	0.00	0.00	0.00	0.00000	0.00000	0.00000	60	0.00	0.00	0.00	0.00000	0.00000	0.00000
	55	0.00	0.00	-0.01	0.00000	0.00000	0.00000	56	0.00	0.00	0.00	0.00000	0.00000	0.00000
39	60	0.00	0.00	0.00	0.00000	0.00000	0.00000	61	0.00	0.00	0.00	0.00000	0.00000	0.00000
	56	0.00	0.00	0.00	0.00000	0.00000	0.00000	57	0.00	0.00	0.00	0.00000	0.00000	0.00000
40	5	0.00	0.00	-0.01	0.00000	0.00000	0.00000	62	0.00	0.00	0.00	0.00000	0.00000	0.00000
	58	0.00	0.00	-0.01	0.00000	0.00000	0.00000	59	0.00	0.00	0.00	0.00000	0.00000	0.00000
41	62	0.00	0.00	0.00	0.00000	0.00000	0.00000	63	0.00	0.00	0.00	0.00000	0.00000	0.00000
	59	0.00	0.00	0.00	0.00000	0.00000	0.00000	60	0.00	0.00	0.00	0.00000	0.00000	0.00000

Documento di proprietà **Snam Rete Gas**. La Società tutelerà i propri diritti in sede civile e penale a termini di legge.

SPOST. NEVE: SHELL

Shell Nro	Nodo N.ro	S1 (mm)	S2 (mm)	S3 (mm)	R1 (rad)	R2 (rad)	R3 (rad)	Nodo N.ro	S1 (mm)	S2 (mm)	S3 (mm)	R1 (rad)	R2 (rad)	R3 (rad)
42	63	0.00	0.00	0.00	0.00000	0.00000	0.00000	13	0.00	0.00	0.00	0.00000	0.00000	0.00000
	60	0.00	0.00	0.00	0.00000	0.00000	0.00000	61	0.00	0.00	0.00	0.00000	0.00000	0.00000
43	65	0.00	0.00	0.00	0.00000	0.00000	0.00000	66	0.00	0.00	0.00	0.00000	0.00000	0.00000
	62	0.00	0.00	0.00	0.00000	0.00000	0.00000	63	0.00	0.00	0.00	0.00000	0.00000	0.00000
44	66	0.00	0.00	0.00	0.00000	0.00000	0.00000	67	0.00	0.00	0.00	0.00000	0.00000	0.00000
	63	0.00	0.00	0.00	0.00000	0.00000	0.00000	13	0.00	0.00	0.00	0.00000	0.00000	0.00000
45	68	0.00	0.00	-0.01	0.00000	0.00000	0.00000	69	0.00	0.00	0.00	0.00000	0.00000	0.00000
	64	0.00	0.00	-0.01	0.00000	0.00000	0.00000	65	0.00	0.00	0.00	0.00000	0.00000	0.00000
46	69	0.00	0.00	0.00	0.00000	0.00000	0.00000	70	0.00	0.00	0.00	0.00000	0.00000	0.00000
	65	0.00	0.00	0.00	0.00000	0.00000	0.00000	66	0.00	0.00	0.00	0.00000	0.00000	0.00000
47	70	0.00	0.00	0.00	0.00000	0.00000	0.00000	71	0.00	0.00	0.00	0.00000	0.00000	0.00000
	66	0.00	0.00	0.00	0.00000	0.00000	0.00000	67	0.00	0.00	0.00	0.00000	0.00000	0.00000
48	4	0.00	0.00	-0.01	0.00000	0.00000	0.00000	50	0.00	0.00	0.00	0.00000	0.00000	0.00000
	68	0.00	0.00	-0.01	0.00000	0.00000	0.00000	69	0.00	0.00	0.00	0.00000	0.00000	0.00000
49	50	0.00	0.00	0.00	0.00000	0.00000	0.00000	51	0.00	0.00	0.00	0.00000	0.00000	0.00000
	69	0.00	0.00	0.00	0.00000	0.00000	0.00000	70	0.00	0.00	0.00	0.00000	0.00000	0.00000
50	51	0.00	0.00	0.00	0.00000	0.00000	0.00000	14	0.00	0.00	0.00	0.00000	0.00000	0.00000
	70	0.00	0.00	0.00	0.00000	0.00000	0.00000	71	0.00	0.00	0.00	0.00000	0.00000	0.00000
51	49	0.00	0.00	0.00	0.00000	0.00000	0.00000	73	0.00	0.00	0.00	0.00000	0.00000	0.00000
	47	-0.01	0.00	0.00	0.00000	0.00000	0.00000	72	-0.01	0.00	0.00	0.00000	0.00000	0.00000
52	8	0.00	0.00	0.00	0.00000	0.00000	0.00000	2	0.00	0.00	0.00	0.00000	0.00000	0.00000
	49	0.00	0.00	0.00	0.00000	0.00000	0.00000	73	0.00	0.00	0.00	0.00000	0.00000	0.00000
53	77	0.00	0.00	0.00	0.00000	0.00000	0.00000	78	0.00	0.00	0.00	0.00000	0.00000	0.00000
	74	0.00	0.00	0.00	0.00000	0.00000	0.00000	75	0.00	0.00	0.00	0.00000	0.00000	0.00000
54	78	0.00	0.00	0.00	0.00000	0.00000	0.00000	79	0.00	0.00	0.00	0.00000	0.00000	0.00000
	75	0.00	0.00	0.00	0.00000	0.00000	0.00000	32	0.00	0.00	0.00	0.00000	0.00000	0.00000
55	80	0.00	0.00	0.00	0.00000	0.00000	0.00000	81	0.00	0.00	0.00	0.00000	0.00000	0.00000
	76	0.00	0.00	0.00	0.00000	0.00000	0.00000	77	0.00	0.00	0.00	0.00000	0.00000	0.00000
56	81	0.00	0.00	0.00	0.00000	0.00000	0.00000	82	0.00	0.00	0.00	0.00000	0.00000	0.00000
	77	0.00	0.00	0.00	0.00000	0.00000	0.00000	78	0.00	0.00	0.00	0.00000	0.00000	0.00000
57	82	0.00	0.00	0.00	0.00000	0.00000	0.00000	83	0.00	0.00	0.00	0.00000	0.00000	0.00000
	78	0.00	0.00	0.00	0.00000	0.00000	0.00000	79	0.00	0.00	0.00	0.00000	0.00000	0.00000
58	21	0.00	0.00	0.00	0.00000	0.00000	0.00000	84	0.00	0.00	0.00	0.00000	0.00000	0.00000
	80	0.00	0.00	0.00	0.00000	0.00000	0.00000	81	0.00	0.00	0.00	0.00000	0.00000	0.00000
59	84	0.00	0.00	0.00	0.00000	0.00000	0.00000	85	0.00	0.00	0.00	0.00000	0.00000	0.00000
	81	0.00	0.00	0.00	0.00000	0.00000	0.00000	82	0.00	0.00	0.00	0.00000	0.00000	0.00000
60	85	0.00	0.00	0.00	0.00000	0.00000	0.00000	31	0.00	0.00	0.00	0.00000	0.00000	0.00000
	82	0.00	0.00	0.00	0.00000	0.00000	0.00000	83	0.00	0.00	0.00	0.00000	0.00000	0.00000
61	86	0.00	0.00	0.00	0.00000	0.00000	0.00000	87	0.00	0.00	0.00	0.00000	0.00000	0.00000
	71	0.00	0.00	0.00	0.00000	0.00000	0.00000	67	0.00	0.00	0.00	0.00000	0.00000	0.00000
62	87	0.00	0.00	0.00	0.00000	0.00000	0.00000	88	0.00	0.00	0.00	0.00000	0.00000	0.00000
	67	0.00	0.00	0.00	0.00000	0.00000	0.00000	13	0.00	0.00	0.00	0.00000	0.00000	0.00000
63	40	0.00	0.00	0.00	0.00000	0.00000	0.00000	89	0.00	0.00	0.00	0.00000	0.00000	0.00000
	38	0.00	0.00	0.00	0.00000	0.00000	0.00000	86	0.00	0.00	0.00	0.00000	0.00000	0.00000
64	89	0.00	0.00	0.00	0.00000	0.00000	0.00000	90	0.00	0.00	0.00	0.00000	0.00000	0.00000
	86	0.00	0.00	0.00	0.00000	0.00000	0.00000	87	0.00	0.00	0.00	0.00000	0.00000	0.00000
65	90	0.00	0.00	0.00	0.00000	0.00000	0.00000	91	0.00	0.00	0.00	0.00000	0.00000	0.00000
	87	0.00	0.00	0.00	0.00000	0.00000	0.00000	88	0.00	0.00	0.00	0.00000	0.00000	0.00000
66	17	0.00	0.00	0.00	0.00000	0.00000	0.00000	92	0.00	0.00	0.00	0.00000	0.00000	0.00000
	40	0.00	0.00	0.00	0.00000	0.00000	0.00000	89	0.00	0.00	0.00	0.00000	0.00000	0.00000
67	92	0.00	0.00	0.00	0.00000	0.00000	0.00000	93	0.00	0.00	0.00	0.00000	0.00000	0.00000
	89	0.00	0.00	0.00	0.00000	0.00000	0.00000	90	0.00	0.00	0.00	0.00000	0.00000	0.00000
68	93	0.00	0.00	0.00	0.00000	0.00000	0.00000	18	0.00	0.00	0.00	0.00000	0.00000	0.00000
	90	0.00	0.00	0.00	0.00000	0.00000	0.00000	91	0.00	0.00	0.00	0.00000	0.00000	0.00000
69	95	0.00	0.00	0.00	0.00000	0.00000	0.00000	96	0.00	0.00	0.00	0.00000	0.00000	0.00000
	91	0.00	0.00	0.00	0.00000	0.00000	0.00000	88	0.00	0.00	0.00	0.00000	0.00000	0.00000
70	96	0.00	0.00	0.00	0.00000	0.00000	0.00000	61	0.00	0.00	0.00	0.00000	0.00000	0.00000
	88	0.00	0.00	0.00	0.00000	0.00000	0.00000	13	0.00	0.00	0.00	0.00000	0.00000	0.00000
71	97	0.00	0.00	0.00	0.00000	0.00000	0.00000	98	0.00	0.00	0.00	0.00000	0.00000	0.00000
	94	0.00	0.00	0.00	0.00000	0.00000	0.00000	95	0.00	0.00	0.00	0.00000	0.00000	0.00000
72	98	0.00	0.00	0.00	0.00000	0.00000	0.00000	99	0.00	0.00	0.00	0.00000	0.00000	0.00000
	95	0.00	0.00	0.00	0.00000	0.00000	0.00000	96	0.00	0.00	0.00	0.00000	0.00000	0.00000
73	99	0.00	0.00	0.00	0.00000	0.00000	0.00000	57	0.00	0.00	0.00	0.00000	0.00000	0.00000
	96	0.00	0.00	0.00	0.00000	0.00000	0.00000	61	0.00	0.00	0.00	0.00000	0.00000	0.00000
74	19	0.00	0.00	0.00	0.00000	0.00000	0.00000	100	0.00	0.00	0.00	0.00000	0.00000	0.00000
	97	0.00	0.00	0.00	0.00000	0.00000	0.00000	98	0.00	0.00	0.00	0.00000	0.00000	0.00000
75	100	0.00	0.00	0.00	0.00000	0.00000	0.00000	101	0.00	0.00	0.00	0.00000	0.00000	0.00000
	98	0.00	0.00	0.00	0.00000	0.00000	0.00000	99	0.00	0.00	0.00	0.00000	0.00000	0.00000
76	101	0.00	0.00	0.00	0.00000	0.00000	0.00000	11	0.00	0.00	0.00	0.00000	0.00000	0.00000
	99	0.00	0.00	0.00	0.00000	0.00000	0.00000	57	0.00	0.00	0.00	0.00000	0.00000	0.00000
77	103	-0.01	0.00	0.00	0.00000	0.00000	0.00000	104	-0.01	0.00	0.00	0.00000	0.00000	0.00000
	84	0.00	0.00	0.00	0.00000	0.00000	0.00000	85	0.00	0.00	0.00	0.00000	0.00000	0.00000
78	104	-0.01	0.00	0.00	0.00000	0.00000	0.00000	105	-0.01	0.00	0.00	0.00000	0.00000	0.00000
	85	0.00	0.00	0.00	0.00000	0.00000	0.00000	31	0.00	0.00	0.00	0.00000	0.00000	0.00000
79	106	-0.01	0.00	0.00	0.00000	0.00000	0.00000	107	-0.01	0.00	0.00	0.00000	0.00000	0.00000
	102	-0.01	0.00	0.00	0.00000	0.00000	0.00000	103	-0.01	0.00	0.00	0.00000	0.00000	0.00000
80	107	-0.01	0.00	0.00	0.00000	0.00000	0.00000	108	-0.01	0.00	0.00	0.00000	0.00000	0.00000
	103	-0.01	0.00	0.00	0.00000	0.00000	0.00000	104	-0.01	0.00	0.00	0.00000	0.00000	0.00000
81	108	-0.01	0.00	0.00	0.00000	0.00000	0.00000	109	-0.01	0.00	0.00	0.00000	0.00000	0.00000
	104	-0.01	0.00	0.00	0.00000	0.00000	0.00000	105	-0.01	0.00	0.00	0.00000	0.00000	0.00000

Documento di proprietà **Snam Rete Gas**. La Società tutelerà i propri diritti in sede civile e penale a termini di legge.

SPOST. NEVE: SHELL

Shell Nro	Nodo N.ro	S1 (mm)	S2 (mm)	S3 (mm)	R1 (rad)	R2 (rad)	R3 (rad)	Nodo N.ro	S1 (mm)	S2 (mm)	S3 (mm)	R1 (rad)	R2 (rad)	R3 (rad)
82	22	-0.01	0.00	0.00	0.00000	0.00000	0.00000	110	-0.01	0.00	0.00	0.00000	0.00000	0.00000
	106	-0.01	0.00	0.00	0.00000	0.00000	0.00000	107	-0.01	0.00	0.00	0.00000	0.00000	0.00000
83	110	-0.01	0.00	0.00	0.00000	0.00000	0.00000	111	-0.01	0.00	0.00	0.00000	0.00000	0.00000
	107	-0.01	0.00	0.00	0.00000	0.00000	0.00000	108	-0.01	0.00	0.00	0.00000	0.00000	0.00000
84	111	-0.01	0.00	0.00	0.00000	0.00000	0.00000	30	-0.01	0.00	0.00	0.00000	0.00000	0.00000
	108	-0.01	0.00	0.00	0.00000	0.00000	0.00000	109	-0.01	0.00	0.00	0.00000	0.00000	0.00000
85	113	0.00	0.00	0.00	0.00000	0.00000	0.00000	80	0.00	0.00	0.00	0.00000	0.00000	0.00000
	112	0.00	0.00	0.00	0.00000	0.00000	0.00000	76	0.00	0.00	0.00	0.00000	0.00000	0.00000
86	23	0.00	0.00	0.00	0.00000	0.00000	0.00000	21	0.00	0.00	0.00	0.00000	0.00000	0.00000
	113	0.00	0.00	0.00	0.00000	0.00000	0.00000	80	0.00	0.00	0.00	0.00000	0.00000	0.00000
87	115	0.00	0.00	0.00	0.00000	0.00000	0.00000	113	0.00	0.00	0.00	0.00000	0.00000	0.00000
	114	0.00	0.00	0.00	0.00000	0.00000	0.00000	112	0.00	0.00	0.00	0.00000	0.00000	0.00000
88	20	0.00	0.00	0.00	0.00000	0.00000	0.00000	23	0.00	0.00	0.00	0.00000	0.00000	0.00000
	115	0.00	0.00	0.00	0.00000	0.00000	0.00000	113	0.00	0.00	0.00	0.00000	0.00000	0.00000
89	116	0.00	0.01	0.00	0.00000	0.00000	0.00000	117	0.00	0.01	0.00	0.00000	0.00000	0.00000
	102	0.00	0.01	0.00	0.00000	0.00000	0.00000	106	0.00	0.01	0.00	0.00000	0.00000	0.00000
90	117	0.00	0.01	0.00	0.00000	0.00000	0.00000	37	0.00	0.01	0.00	0.00000	0.00000	0.00000
	106	0.00	0.01	0.00	0.00000	0.00000	0.00000	22	0.00	0.01	0.00	0.00000	0.00000	0.00000
91	119	0.00	0.00	0.00	0.00000	0.00000	0.00000	117	0.00	0.00	0.00	0.00000	0.00000	0.00000
	118	0.00	0.00	0.00	0.00000	0.00000	0.00000	116	0.00	0.00	0.00	0.00000	0.00000	0.00000
92	34	-0.01	0.00	0.00	0.00000	0.00000	0.00000	37	-0.01	0.00	0.00	0.00000	0.00000	0.00000
	119	-0.01	0.00	0.00	0.00000	0.00000	0.00000	117	-0.01	0.00	0.00	0.00000	0.00000	0.00000
93	121	0.00	0.00	0.00	0.00000	0.00000	0.00000	122	0.00	0.00	0.00	0.00000	0.00000	0.00000
	43	0.00	0.00	0.00	0.00000	0.00000	0.00000	42	0.00	0.00	0.00	0.00000	0.00000	0.00000
94	122	0.00	0.00	0.00	0.00000	0.00000	0.00000	123	0.00	0.00	0.00	0.00000	0.00000	0.00000
	42	0.00	0.00	0.00	0.00000	0.00000	0.00000	2	0.00	0.00	0.00	0.00000	0.00000	0.00000
95	124	0.00	0.00	0.00	0.00000	0.00000	0.00000	125	0.00	0.00	0.00	0.00000	0.00000	0.00000
	120	0.00	0.00	0.00	0.00000	0.00000	0.00000	121	0.00	0.00	0.00	0.00000	0.00000	0.00000
96	125	0.00	0.00	0.00	0.00000	0.00000	0.00000	126	0.00	0.00	0.00	0.00000	0.00000	0.00000
	121	0.00	0.00	0.00	0.00000	0.00000	0.00000	122	0.00	0.00	0.00	0.00000	0.00000	0.00000
97	126	0.00	0.00	0.00	0.00000	0.00000	0.00000	127	0.00	0.00	0.00	0.00000	0.00000	0.00000
	122	0.00	0.00	0.00	0.00000	0.00000	0.00000	123	0.00	0.00	0.00	0.00000	0.00000	0.00000
98	26	0.00	0.00	0.00	0.00000	0.00000	0.00000	128	0.00	0.00	0.00	0.00000	0.00000	0.00000
	124	0.00	0.00	0.00	0.00000	0.00000	0.00000	125	0.00	0.00	0.00	0.00000	0.00000	0.00000
99	128	0.00	0.00	0.00	0.00000	0.00000	0.00000	129	0.00	0.00	0.00	0.00000	0.00000	0.00000
	125	0.00	0.00	0.00	0.00000	0.00000	0.00000	126	0.00	0.00	0.00	0.00000	0.00000	0.00000
100	129	0.00	0.00	0.00	0.00000	0.00000	0.00000	27	0.00	0.00	0.00	0.00000	0.00000	0.00000
	126	0.00	0.00	0.00	0.00000	0.00000	0.00000	127	0.00	0.00	0.00	0.00000	0.00000	0.00000
101	130	0.00	-0.01	0.00	0.00000	0.00000	0.00000	131	0.00	-0.01	0.00	0.00000	0.00000	0.00000
	68	0.00	-0.01	0.00	0.00000	0.00000	0.00000	64	0.00	-0.01	0.00	0.00000	0.00000	0.00000
102	131	0.00	-0.01	0.00	0.00000	0.00000	0.00000	132	0.00	-0.01	0.00	0.00000	0.00000	0.00000
	64	0.00	-0.01	0.00	0.00000	0.00000	0.00000	5	0.00	-0.01	0.00	0.00000	0.00000	0.00000
103	16	0.00	-0.01	0.00	0.00000	0.00000	0.00000	133	0.00	-0.01	0.00	0.00000	0.00000	0.00000
	10	0.00	-0.01	0.00	0.00000	0.00000	0.00000	130	0.00	-0.01	0.00	0.00000	0.00000	0.00000
104	133	0.00	-0.01	0.00	0.00000	0.00000	0.00000	134	0.00	-0.01	0.00	0.00000	0.00000	0.00000
	130	0.00	-0.01	0.00	0.00000	0.00000	0.00000	131	0.00	-0.01	0.00	0.00000	0.00000	0.00000
105	134	0.00	-0.01	0.00	0.00000	0.00000	0.00000	135	0.00	-0.01	0.00	0.00000	0.00000	0.00000
	131	0.00	-0.01	0.00	0.00000	0.00000	0.00000	132	0.00	-0.01	0.00	0.00000	0.00000	0.00000
106	3	0.00	-0.01	0.00	0.00000	0.00000	0.00000	136	0.00	-0.01	0.00	0.00000	0.00000	0.00000
	16	0.00	-0.01	0.00	0.00000	0.00000	0.00000	133	0.00	-0.01	0.00	0.00000	0.00000	0.00000
107	136	0.00	-0.01	0.00	0.00000	0.00000	0.00000	137	0.00	-0.01	0.00	0.00000	0.00000	0.00000
	133	0.00	-0.01	0.00	0.00000	0.00000	0.00000	134	0.00	-0.01	0.00	0.00000	0.00000	0.00000
108	137	0.00	-0.01	0.00	0.00000	0.00000	0.00000	138	0.00	-0.01	0.00	0.00000	0.00000	0.00000
	134	0.00	-0.01	0.00	0.00000	0.00000	0.00000	135	0.00	-0.01	0.00	0.00000	0.00000	0.00000
109	139	0.00	-0.01	0.00	0.00000	0.00000	0.00000	140	0.00	-0.01	0.00	0.00000	0.00000	0.00000
	3	0.00	-0.01	0.00	0.00000	0.00000	0.00000	136	0.00	-0.01	0.00	0.00000	0.00000	0.00000
110	140	0.00	-0.01	0.00	0.00000	0.00000	0.00000	141	0.00	-0.01	0.00	0.00000	0.00000	0.00000
	136	0.00	-0.01	0.00	0.00000	0.00000	0.00000	137	0.00	-0.01	0.00	0.00000	0.00000	0.00000
111	141	0.00	-0.01	0.00	0.00000	0.00000	0.00000	142	0.00	-0.01	0.00	0.00000	0.00000	0.00000
	137	0.00	-0.01	0.00	0.00000	0.00000	0.00000	138	0.00	-0.01	0.00	0.00000	0.00000	0.00000
112	143	0.00	-0.01	0.00	0.00000	0.00000	0.00000	144	0.00	-0.01	0.00	0.00000	0.00000	0.00000
	139	0.00	-0.01	0.00	0.00000	0.00000	0.00000	140	0.00	-0.01	0.00	0.00000	0.00000	0.00000
113	144	0.00	-0.01	0.00	0.00000	0.00000	0.00000	145	0.00	-0.01	0.00	0.00000	0.00000	0.00000
	140	0.00	-0.01	0.00	0.00000	0.00000	0.00000	141	0.00	-0.01	0.00	0.00000	0.00000	0.00000
114	145	0.00	-0.01	0.00	0.00000	0.00000	0.00000	146	0.00	-0.01	0.00	0.00000	0.00000	0.00000
	141	0.00	-0.01	0.00	0.00000	0.00000	0.00000	142	0.00	-0.01	0.00	0.00000	0.00000	0.00000
115	28	0.00	-0.01	0.00	0.00000	0.00000	0.00000	147	0.00	-0.01	0.00	0.00000	0.00000	0.00000
	143	0.00	-0.01	0.00	0.00000	0.00000	0.00000	144	0.00	-0.01	0.00	0.00000	0.00000	0.00000
116	147	0.00	-0.01	0.00	0.00000	0.00000	0.00000	148	0.00	-0.01	0.00	0.00000	0.00000	0.00000
	144	0.00	-0.01	0.00	0.00000	0.00000	0.00000	145	0.00	-0.01	0.00	0.00000	0.00000	0.00000
117	148	0.00	-0.01	0.00	0.00000	0.00000	0.00000	29	0.00	-0.01	0.00	0.00000	0.00000	0.00000
	145	0.00	-0.01	0.00	0.00000	0.00000	0.00000	146	0.00	-0.01	0.00	0.00000	0.00000	0.00000
118	101	0.00	0.00	0.00	0.00000	0.00000	0.00000	115	0.00	0.00	0.00	0.00000	0.00000	0.00000
	100	0.00	0.00	0.00	0.00000	0.00000	0.00000	114	0.00	0.00	0.00	0.00000	0.00000	0.00000
119	11	0.00	0.00	0.00	0.00000	0.00000	0.00000	20	0.00	0.00	0.00	0.00000	0.00000	0.00000
	101	0.00	0.00	0.00	0.00000	0.00000	0.00000	115	0.00	0.00	0.00	0.00000	0.00000	0.00000
120	149	0.00	0.00	0.00	0.00000	0.00000	0.00000	150	0.00	0.00	0.00	0.00000	0.00000	0.00000
	97	0.00	0.00	0.00	0.00000	0.00000	0.00000	94	0.00	0.00	0.00	0.00000	0.00000	0.00000
121	150	0.00	0.00	0.00	0.00000	0.00000	0.00000	151	0.00	0.00	0.00	0.00000	0.00000	0.00000
	94	0.00	0.00	0.00	0.00000	0.00000	0.00000	18	0.00	0.00	0.00	0.00000	0.00000	0.00000

Documento di proprietà **Snam Rete Gas**. La Società tutelerà i propri diritti in sede civile e penale a termini di legge.

SPOST. NEVE: SHELL

Shell Nro	Nodo N.ro	S1 (mm)	S2 (mm)	S3 (mm)	R1 (rad)	R2 (rad)	R3 (rad)	Nodo N.ro	S1 (mm)	S2 (mm)	S3 (mm)	R1 (rad)	R2 (rad)	R3 (rad)
122	36	0.00	0.00	0.00	0.00000	0.00000	0.00000	152	0.00	0.00	0.00	0.00000	0.00000	0.00000
	35	0.00	0.00	0.00	0.00000	0.00000	0.00000	149	0.00	0.00	0.00	0.00000	0.00000	0.00000
123	152	0.00	0.00	0.00	0.00000	0.00000	0.00000	153	0.00	0.00	0.00	0.00000	0.00000	0.00000
	149	0.00	0.00	0.00	0.00000	0.00000	0.00000	150	0.00	0.00	0.00	0.00000	0.00000	0.00000
124	153	0.00	0.00	0.00	0.00000	0.00000	0.00000	154	0.00	0.00	0.00	0.00000	0.00000	0.00000
	150	0.00	0.00	0.00	0.00000	0.00000	0.00000	151	0.00	0.00	0.00	0.00000	0.00000	0.00000
125	25	0.00	0.00	0.00	0.00000	0.00000	0.00000	155	0.00	0.00	0.00	0.00000	0.00000	0.00000
	36	0.00	0.00	0.00	0.00000	0.00000	0.00000	152	0.00	0.00	0.00	0.00000	0.00000	0.00000
126	155	0.00	0.00	0.00	0.00000	0.00000	0.00000	156	0.00	0.00	0.00	0.00000	0.00000	0.00000
	152	0.00	0.00	0.00	0.00000	0.00000	0.00000	153	0.00	0.00	0.00	0.00000	0.00000	0.00000
127	156	0.00	0.00	0.00	0.00000	0.00000	0.00000	157	0.00	0.00	0.00	0.00000	0.00000	0.00000
	153	0.00	0.00	0.00	0.00000	0.00000	0.00000	154	0.00	0.00	0.00	0.00000	0.00000	0.00000
128	74	0.00	0.00	0.00	0.00000	0.00000	0.00000	158	0.00	0.00	0.00	0.00000	0.00000	0.00000
	25	0.00	0.00	0.00	0.00000	0.00000	0.00000	155	0.00	0.00	0.00	0.00000	0.00000	0.00000
129	158	0.00	0.00	0.00	0.00000	0.00000	0.00000	159	0.00	0.00	0.00	0.00000	0.00000	0.00000
	155	0.00	0.00	0.00	0.00000	0.00000	0.00000	156	0.00	0.00	0.00	0.00000	0.00000	0.00000
130	159	0.00	0.00	0.00	0.00000	0.00000	0.00000	160	0.00	0.00	0.00	0.00000	0.00000	0.00000
	156	0.00	0.00	0.00	0.00000	0.00000	0.00000	157	0.00	0.00	0.00	0.00000	0.00000	0.00000
131	75	0.00	0.00	0.00	0.00000	0.00000	0.00000	161	0.00	0.00	0.00	0.00000	0.00000	0.00000
	74	0.00	0.00	0.00	0.00000	0.00000	0.00000	158	0.00	0.00	0.00	0.00000	0.00000	0.00000
132	161	0.00	0.00	0.00	0.00000	0.00000	0.00000	162	0.00	0.00	0.00	0.00000	0.00000	0.00000
	158	0.00	0.00	0.00	0.00000	0.00000	0.00000	159	0.00	0.00	0.00	0.00000	0.00000	0.00000
133	162	0.00	0.00	0.00	0.00000	0.00000	0.00000	163	0.00	0.00	0.00	0.00000	0.00000	0.00000
	159	0.00	0.00	0.00	0.00000	0.00000	0.00000	160	0.00	0.00	0.00	0.00000	0.00000	0.00000
134	32	0.00	0.00	0.00	0.00000	0.00000	0.00000	164	0.00	0.00	0.00	0.00000	0.00000	0.00000
	75	0.00	0.00	0.00	0.00000	0.00000	0.00000	161	0.00	0.00	0.00	0.00000	0.00000	0.00000
135	164	0.00	0.00	0.00	0.00000	0.00000	0.00000	165	0.00	0.00	0.00	0.00000	0.00000	0.00000
	161	0.00	0.00	0.00	0.00000	0.00000	0.00000	162	0.00	0.00	0.00	0.00000	0.00000	0.00000
136	165	0.00	0.00	0.00	0.00000	0.00000	0.00000	33	0.00	0.00	0.00	0.00000	0.00000	0.00000
	162	0.00	0.00	0.00	0.00000	0.00000	0.00000	163	0.00	0.00	0.00	0.00000	0.00000	0.00000
137	166	0.00	-0.01	0.00	0.00000	0.00000	0.00000	167	0.00	-0.01	0.00	0.00000	0.00000	0.00000
	58	0.00	-0.01	0.00	0.00000	0.00000	0.00000	54	0.00	-0.01	0.00	0.00000	0.00000	0.00000
138	167	0.00	-0.01	0.00	0.00000	0.00000	0.00000	34	0.00	-0.01	0.00	0.00000	0.00000	0.00000
	54	0.00	-0.01	0.00	0.00000	0.00000	0.00000	7	0.00	-0.01	0.00	0.00000	0.00000	0.00000
139	135	0.00	-0.01	0.00	0.00000	0.00000	0.00000	168	0.00	-0.01	0.00	0.00000	0.00000	0.00000
	132	0.00	-0.01	0.00	0.00000	0.00000	0.00000	166	0.00	-0.01	0.00	0.00000	0.00000	0.00000
140	168	0.00	-0.01	0.00	0.00000	0.00000	0.00000	169	0.00	-0.01	0.00	0.00000	0.00000	0.00000
	166	0.00	-0.01	0.00	0.00000	0.00000	0.00000	167	0.00	-0.01	0.00	0.00000	0.00000	0.00000
141	169	0.00	-0.01	0.00	0.00000	0.00000	0.00000	37	0.00	-0.01	0.00	0.00000	0.00000	0.00000
	167	0.00	-0.01	0.00	0.00000	0.00000	0.00000	34	0.00	-0.01	0.00	0.00000	0.00000	0.00000
142	138	0.00	-0.01	0.00	0.00000	0.00000	0.00000	170	0.00	-0.01	0.00	0.00000	0.00000	0.00000
	135	0.00	-0.01	0.00	0.00000	0.00000	0.00000	168	0.00	-0.01	0.00	0.00000	0.00000	0.00000
143	170	0.00	-0.01	0.00	0.00000	0.00000	0.00000	171	0.00	-0.01	0.00	0.00000	0.00000	0.00000
	168	0.00	-0.01	0.00	0.00000	0.00000	0.00000	169	0.00	-0.01	0.00	0.00000	0.00000	0.00000
144	171	0.00	-0.01	0.00	0.00000	0.00000	0.00000	22	0.00	-0.01	0.00	0.00000	0.00000	0.00000
	169	0.00	-0.01	0.00	0.00000	0.00000	0.00000	37	0.00	-0.01	0.00	0.00000	0.00000	0.00000
145	142	0.00	-0.01	0.00	0.00000	0.00000	0.00000	172	0.00	-0.01	0.00	0.00000	0.00000	0.00000
	138	0.00	-0.01	0.00	0.00000	0.00000	0.00000	170	0.00	-0.01	0.00	0.00000	0.00000	0.00000
146	172	0.00	-0.01	0.00	0.00000	0.00000	0.00000	173	0.00	-0.01	0.00	0.00000	0.00000	0.00000
	170	0.00	-0.01	0.00	0.00000	0.00000	0.00000	171	0.00	-0.01	0.00	0.00000	0.00000	0.00000
147	173	0.00	-0.01	0.00	0.00000	0.00000	0.00000	110	0.00	-0.01	0.00	0.00000	0.00000	0.00000
	171	0.00	-0.01	0.00	0.00000	0.00000	0.00000	22	0.00	-0.01	0.00	0.00000	0.00000	0.00000
148	146	0.00	-0.01	0.00	0.00000	0.00000	0.00000	174	0.00	-0.01	0.00	0.00000	0.00000	0.00000
	142	0.00	-0.01	0.00	0.00000	0.00000	0.00000	172	0.00	-0.01	0.00	0.00000	0.00000	0.00000
149	174	0.00	-0.01	0.00	0.00000	0.00000	0.00000	175	0.00	-0.01	0.00	0.00000	0.00000	0.00000
	172	0.00	-0.01	0.00	0.00000	0.00000	0.00000	173	0.00	-0.01	0.00	0.00000	0.00000	0.00000
150	175	0.00	-0.01	0.00	0.00000	0.00000	0.00000	111	0.00	-0.01	0.00	0.00000	0.00000	0.00000
	173	0.00	-0.01	0.00	0.00000	0.00000	0.00000	110	0.00	-0.01	0.00	0.00000	0.00000	0.00000
151	29	0.00	-0.01	0.00	0.00000	0.00000	0.00000	176	0.00	-0.01	0.00	0.00000	0.00000	0.00000
	146	0.00	-0.01	0.00	0.00000	0.00000	0.00000	174	0.00	-0.01	0.00	0.00000	0.00000	0.00000
152	176	0.00	-0.01	0.00	0.00000	0.00000	0.00000	177	0.00	-0.01	0.00	0.00000	0.00000	0.00000
	174	0.00	-0.01	0.00	0.00000	0.00000	0.00000	175	0.00	-0.01	0.00	0.00000	0.00000	0.00000
153	177	0.00	-0.01	0.00	0.00000	0.00000	0.00000	30	0.00	-0.01	0.00	0.00000	0.00000	0.00000
	175	0.00	-0.01	0.00	0.00000	0.00000	0.00000	111	0.00	-0.01	0.00	0.00000	0.00000	0.00000
154	178	0.00	0.00	0.00	0.00000	0.00000	0.00000	179	0.00	0.00	0.00	0.00000	0.00000	0.00000
	93	0.00	0.00	0.00	0.00000	0.00000	0.00000	92	0.00	0.00	0.00	0.00000	0.00000	0.00000
155	179	0.00	0.00	0.00	0.00000	0.00000	0.00000	12	0.00	0.00	0.00	0.00000	0.00000	0.00000
	92	0.00	0.00	0.00	0.00000	0.00000	0.00000	17	0.00	0.00	0.00	0.00000	0.00000	0.00000
156	154	0.00	0.00	0.00	0.00000	0.00000	0.00000	180	0.00	0.00	0.00	0.00000	0.00000	0.00000
	151	0.00	0.00	0.00	0.00000	0.00000	0.00000	178	0.00	0.00	0.00	0.00000	0.00000	0.00000
157	180	0.00	0.00	0.00	0.00000	0.00000	0.00000	181	0.00	0.00	0.00	0.00000	0.00000	0.00000
	178	0.00	0.00	0.00	0.00000	0.00000	0.00000	179	0.00	0.00	0.00	0.00000	0.00000	0.00000
158	181	0.00	0.00	0.00	0.00000	0.00000	0.00000	15	0.00	0.00	0.00	0.00000	0.00000	0.00000
	179	0.00	0.00	0.00	0.00000	0.00000	0.00000	12	0.00	0.00	0.00	0.00000	0.00000	0.00000
159	157	0.00	0.00	0.00	0.00000	0.00000	0.00000	182	0.00	0.00	0.00	0.00000	0.00000	0.00000
	154	0.00	0.00	0.00	0.00000	0.00000	0.00000	180	0.00	0.00	0.00	0.00000	0.00000	0.00000
160	182	0.00	0.00	0.00	0.00000	0.00000	0.00000	183	0.00	0.00	0.00	0.00000	0.00000	0.00000
	180	0.00	0.00	0.00	0.00000	0.00000	0.00000	181	0.00	0.00	0.00	0.00000	0.00000	0.00000
161	183	0.00	0.00	0.00	0.00000	0.00000	0.00000	9	0.00	0.00	0.00	0.00000	0.00000	0.00000
	181	0.00	0.00	0.00	0.00000	0.00000	0.00000	15	0.00	0.00	0.00	0.00000	0.00000	0.00000

Documento di proprietà **Snam Rete Gas**. La Società tutelerà i propri diritti in sede civile e penale a termini di legge.

SPOST. NEVE: SHELL

Shell Nro	Nodo N.ro	S1 (mm)	S2 (mm)	S3 (mm)	R1 (rad)	R2 (rad)	R3 (rad)	Nodo N.ro	S1 (mm)	S2 (mm)	S3 (mm)	R1 (rad)	R2 (rad)	R3 (rad)
162	160	0.00	0.00	0.00	0.00000	0.00000	0.00000	184	0.00	0.00	0.00	0.00000	0.00000	0.00000
	157	0.00	0.00	0.00	0.00000	0.00000	0.00000	182	0.00	0.00	0.00	0.00000	0.00000	0.00000
163	184	0.00	0.00	0.00	0.00000	0.00000	0.00000	185	0.00	0.00	0.00	0.00000	0.00000	0.00000
	182	0.00	0.00	0.00	0.00000	0.00000	0.00000	183	0.00	0.00	0.00	0.00000	0.00000	0.00000
164	185	0.00	0.00	0.00	0.00000	0.00000	0.00000	120	0.00	0.00	0.00	0.00000	0.00000	0.00000
	183	0.00	0.00	0.00	0.00000	0.00000	0.00000	9	0.00	0.00	0.00	0.00000	0.00000	0.00000
165	163	0.00	0.00	0.00	0.00000	0.00000	0.00000	186	0.00	0.00	0.00	0.00000	0.00000	0.00000
	160	0.00	0.00	0.00	0.00000	0.00000	0.00000	184	0.00	0.00	0.00	0.00000	0.00000	0.00000
166	186	0.00	0.00	0.00	0.00000	0.00000	0.00000	187	0.00	0.00	0.00	0.00000	0.00000	0.00000
	184	0.00	0.00	0.00	0.00000	0.00000	0.00000	185	0.00	0.00	0.00	0.00000	0.00000	0.00000
167	187	0.00	0.00	0.00	0.00000	0.00000	0.00000	124	0.00	0.00	0.00	0.00000	0.00000	0.00000
	185	0.00	0.00	0.00	0.00000	0.00000	0.00000	120	0.00	0.00	0.00	0.00000	0.00000	0.00000
168	33	0.00	0.00	0.00	0.00000	0.00000	0.00000	188	0.00	0.00	0.00	0.00000	0.00000	0.00000
	163	0.00	0.00	0.00	0.00000	0.00000	0.00000	186	0.00	0.00	0.00	0.00000	0.00000	0.00000
169	188	0.00	0.00	0.00	0.00000	0.00000	0.00000	189	0.00	0.00	0.00	0.00000	0.00000	0.00000
	186	0.00	0.00	0.00	0.00000	0.00000	0.00000	187	0.00	0.00	0.00	0.00000	0.00000	0.00000
170	189	0.00	0.00	0.00	0.00000	0.00000	0.00000	26	0.00	0.00	0.00	0.00000	0.00000	0.00000
	187	0.00	0.00	0.00	0.00000	0.00000	0.00000	124	0.00	0.00	0.00	0.00000	0.00000	0.00000
171	190	0.00	0.00	0.00	0.00000	0.00000	0.00000	191	0.00	0.00	0.00	0.00000	0.00000	0.00000
	73	0.00	0.00	0.00	0.00000	0.00000	0.00000	72	0.00	0.00	0.00	0.00000	0.00000	0.00000
172	191	0.00	0.00	0.00	0.00000	0.00000	0.00000	139	0.00	-0.01	0.00	0.00000	0.00000	0.00000
	72	0.00	0.00	0.00	0.00000	0.00000	0.00000	3	0.00	-0.01	0.00	0.00000	0.00000	0.00000
173	127	0.00	0.00	0.00	0.00000	0.00000	0.00000	192	0.00	0.00	0.00	0.00000	0.00000	0.00000
	123	0.00	0.00	0.00	0.00000	0.00000	0.00000	190	0.00	0.00	0.00	0.00000	0.00000	0.00000
174	192	0.00	0.00	0.00	0.00000	0.00000	0.00000	193	0.00	0.00	0.00	0.00000	0.00000	0.00000
	190	0.00	0.00	0.00	0.00000	0.00000	0.00000	191	0.00	0.00	0.00	0.00000	0.00000	0.00000
175	193	0.00	0.00	0.00	0.00000	0.00000	0.00000	143	0.00	-0.01	0.00	0.00000	0.00000	0.00000
	191	0.00	0.00	0.00	0.00000	0.00000	0.00000	139	0.00	-0.01	0.00	0.00000	0.00000	0.00000
176	27	0.00	0.00	0.00	0.00000	0.00000	0.00000	194	0.00	0.00	0.00	0.00000	0.00000	0.00000
	127	0.00	0.00	0.00	0.00000	0.00000	0.00000	192	0.00	0.00	0.00	0.00000	0.00000	0.00000
177	194	0.00	0.00	0.00	0.00000	0.00000	0.00000	195	0.00	0.00	0.00	0.00000	0.00000	0.00000
	192	0.00	0.00	0.00	0.00000	0.00000	0.00000	193	0.00	0.00	0.00	0.00000	0.00000	0.00000
178	195	0.00	0.00	0.00	0.00000	0.00000	0.00000	28	0.00	-0.01	0.00	0.00000	0.00000	0.00000
	193	0.00	0.00	0.00	0.00000	0.00000	0.00000	143	0.00	-0.01	0.00	0.00000	0.00000	0.00000
179	52	-0.01	0.00	0.00	0.00000	0.00000	0.00000	119	-0.01	0.00	0.00	0.00000	0.00000	0.00000
	53	-0.01	0.00	0.00	0.00000	0.00000	0.00000	118	-0.01	0.00	0.00	0.00000	0.00000	0.00000
180	7	-0.01	0.00	0.00	0.00000	0.00000	0.00000	34	-0.01	0.00	0.00	0.00000	0.00000	0.00000
	52	-0.01	0.00	0.00	0.00000	0.00000	0.00000	119	-0.01	0.00	0.00	0.00000	0.00000	0.00000

SPOST. Corr. Tors. dir. 0: SHELL

Shell Nro	Nodo N.ro	S1 (mm)	S2 (mm)	S3 (mm)	R1 (rad)	R2 (rad)	R3 (rad)	Nodo N.ro	S1 (mm)	S2 (mm)	S3 (mm)	R1 (rad)	R2 (rad)	R3 (rad)
1	38	0.00	0.00	0.00	0.00000	0.00000	0.00000	39	0.00	0.00	0.00	0.00000	0.00000	0.00000
	14	0.00	0.00	0.00	0.00000	0.00000	0.00000	1	0.00	0.00	0.00	0.00000	0.00000	0.00000
2	6	0.00	0.00	0.00	0.00000	0.00000	0.00000	44	0.00	0.00	0.00	0.00000	0.00000	0.00000
	2	0.00	0.00	0.00	0.00000	0.00000	0.00000	42	0.00	0.00	0.00	0.00000	0.00000	0.00000
3	39	0.00	0.00	0.00	0.00000	0.00000	0.00000	44	0.00	0.00	0.00	0.00000	0.00000	0.00000
	1	0.00	0.00	0.00	0.00000	0.00000	0.00000	6	0.00	0.00	0.00	0.00000	0.00000	0.00000
4	46	0.00	0.00	0.00	0.00000	0.00000	0.00000	47	0.00	0.00	0.00	0.00000	0.00000	0.00000
	10	0.00	0.00	0.00	0.00000	0.00000	0.00000	16	0.00	0.00	0.00	0.00000	0.00000	0.00000
5	50	0.00	0.00	0.00	0.00000	0.00000	0.00000	46	0.00	0.00	0.00	0.00000	0.00000	0.00000
	4	0.00	0.00	0.00	0.00000	0.00000	0.00000	10	0.00	0.00	0.00	0.00000	0.00000	0.00000
6	54	0.00	0.00	0.00	0.00000	0.00000	0.00000	55	0.00	0.00	0.00	0.00000	0.00000	0.00000
	7	0.00	0.00	0.00	0.00000	0.00000	0.00000	52	0.00	0.00	0.00	0.00000	0.00000	0.00000
7	64	0.00	0.00	0.00	0.00000	0.00000	0.00000	65	0.00	0.00	0.00	0.00000	0.00000	0.00000
	5	0.00	0.00	0.00	0.00000	0.00000	0.00000	62	0.00	0.00	0.00	0.00000	0.00000	0.00000
8	47	0.00	0.00	0.00	0.00000	0.00000	0.00000	72	0.00	0.00	0.00	0.00000	0.00000	0.00000
	16	0.00	0.00	0.00	0.00000	0.00000	0.00000	3	0.00	0.00	0.00	0.00000	0.00000	0.00000
9	76	0.00	0.00	0.00	0.00000	0.00000	0.00000	77	0.00	0.00	0.00	0.00000	0.00000	0.00000
	25	0.00	0.00	0.00	0.00000	0.00000	0.00000	74	0.00	0.00	0.00	0.00000	0.00000	0.00000
10	38	0.00	0.00	0.00	0.00000	0.00000	0.00000	86	0.00	0.00	0.00	0.00000	0.00000	0.00000
	14	0.00	0.00	0.00	0.00000	0.00000	0.00000	71	0.00	0.00	0.00	0.00000	0.00000	0.00000
11	94	0.00	0.00	0.00	0.00000	0.00000	0.00000	95	0.00	0.00	0.00	0.00000	0.00000	0.00000
	18	0.00	0.00	0.00	0.00000	0.00000	0.00000	91	0.00	0.00	0.00	0.00000	0.00000	0.00000
12	102	0.00	0.00	0.00	0.00000	0.00000	0.00000	103	0.00	0.00	0.00	0.00000	0.00000	0.00000
	21	0.00	0.00	0.00	0.00000	0.00000	0.00000	84	0.00	0.00	0.00	0.00000	0.00000	0.00000
13	112	0.00	0.00	0.00	0.00000	0.00000	0.00000	76	0.00	0.00	0.00	0.00000	0.00000	0.00000
	36	0.00	0.00	0.00	0.00000	0.00000	0.00000	25	0.00	0.00	0.00	0.00000	0.00000	0.00000
14	114	0.00	0.00	0.00	0.00000	0.00000	0.00000	112	0.00	0.00	0.00	0.00000	0.00000	0.00000
	35	0.00	0.00	0.00	0.00000	0.00000	0.00000	36	0.00	0.00	0.00	0.00000	0.00000	0.00000
15	24	0.00	0.00	0.00	0.00000	0.00000	0.00000	116	0.00	0.00	0.00	0.00000	0.00000	0.00000
	21	0.00	0.00	0.00	0.00000	0.00000	0.00000	102	0.00	0.00	0.00	0.00000	0.00000	0.00000
16	118	0.00	0.00	0.00	0.00000	0.00000	0.00000	116	0.00	0.00	0.00	0.00000	0.00000	0.00000
	20	0.00	0.00	0.00	0.00000	0.00000	0.00000	24	0.00	0.00	0.00	0.00000	0.00000	0.00000
17	120	0.00	0.00	0.00	0.00000	0.00000	0.00000	121	0.00	0.00	0.00	0.00000	0.00000	0.00000
	9	0.00	0.00	0.00	0.00000	0.00000	0.00000	43	0.00	0.00	0.00	0.00000	0.00000	0.00000
18	10	0.00	0.00	0.00	0.00000	0.00000	0.00000	130	0.00	0.00	0.00	0.00000	0.00000	0.00000
	4	0.00	0.00	0.00	0.00000	0.00000	0.00000	68	0.00	0.00	0.00	0.00000	0.00000	0.00000
19	100	0.00	0.00	0.00	0.00000	0.00000	0.00000	114	0.00	0.00	0.00	0.00000	0.00000	0.00000
	19	0.00	0.00	0.00	0.00000	0.00000	0.00000	35	0.00	0.00	0.00	0.00000	0.00000	0.00000

Documento di proprietà **Snam Rete Gas**. La Società tutelerà i propri diritti in sede civile e penale a termini di legge.

SPOST. Corr. Tors. dir. 0: SHELL

Shell Nro	Nodo N.ro	S1 (mm)	S2 (mm)	S3 (mm)	R1 (rad)	R2 (rad)	R3 (rad)	Nodo N.ro	S1 (mm)	S2 (mm)	S3 (mm)	R1 (rad)	R2 (rad)	R3 (rad)
20	35	0.00	0.00	0.00	0.00000	0.00000	0.00000	149	0.00	0.00	0.00	0.00000	0.00000	0.00000
	19	0.00	0.00	0.00	0.00000	0.00000	0.00000	97	0.00	0.00	0.00	0.00000	0.00000	0.00000
21	132	0.00	0.00	0.00	0.00000	0.00000	0.00000	166	0.00	0.00	0.00	0.00000	0.00000	0.00000
	5	0.00	0.00	0.00	0.00000	0.00000	0.00000	58	0.00	0.00	0.00	0.00000	0.00000	0.00000
22	151	0.00	0.00	0.00	0.00000	0.00000	0.00000	178	0.00	0.00	0.00	0.00000	0.00000	0.00000
	18	0.00	0.00	0.00	0.00000	0.00000	0.00000	93	0.00	0.00	0.00	0.00000	0.00000	0.00000
23	123	0.00	0.00	0.00	0.00000	0.00000	0.00000	190	0.00	0.00	0.00	0.00000	0.00000	0.00000
	2	0.00	0.00	0.00	0.00000	0.00000	0.00000	73	0.00	0.00	0.00	0.00000	0.00000	0.00000
24	53	0.00	0.00	0.00	0.00000	0.00000	0.00000	118	0.00	0.00	0.00	0.00000	0.00000	0.00000
	11	0.00	0.00	0.00	0.00000	0.00000	0.00000	20	0.00	0.00	0.00	0.00000	0.00000	0.00000
25	40	0.00	0.00	0.00	0.00000	0.00000	0.00000	41	0.00	0.00	0.00	0.00000	0.00000	0.00000
	38	0.00	0.00	0.00	0.00000	0.00000	0.00000	39	0.00	0.00	0.00	0.00000	0.00000	0.00000
26	17	0.00	0.00	0.00	0.00000	0.00000	0.00000	12	0.00	0.00	0.00	0.00000	0.00000	0.00000
	40	0.00	0.00	0.00	0.00000	0.00000	0.00000	41	0.00	0.00	0.00	0.00000	0.00000	0.00000
27	44	0.00	0.00	0.00	0.00000	0.00000	0.00000	45	0.00	0.00	0.00	0.00000	0.00000	0.00000
	42	0.00	0.00	0.00	0.00000	0.00000	0.00000	43	0.00	0.00	0.00	0.00000	0.00000	0.00000
28	45	0.00	0.00	0.00	0.00000	0.00000	0.00000	15	0.00	0.00	0.00	0.00000	0.00000	0.00000
	43	0.00	0.00	0.00	0.00000	0.00000	0.00000	9	0.00	0.00	0.00	0.00000	0.00000	0.00000
29	41	0.00	0.00	0.00	0.00000	0.00000	0.00000	45	0.00	0.00	0.00	0.00000	0.00000	0.00000
	39	0.00	0.00	0.00	0.00000	0.00000	0.00000	44	0.00	0.00	0.00	0.00000	0.00000	0.00000
30	12	0.00	0.00	0.00	0.00000	0.00000	0.00000	15	0.00	0.00	0.00	0.00000	0.00000	0.00000
	41	0.00	0.00	0.00	0.00000	0.00000	0.00000	45	0.00	0.00	0.00	0.00000	0.00000	0.00000
31	48	0.00	0.00	0.00	0.00000	0.00000	0.00000	49	0.00	0.00	0.00	0.00000	0.00000	0.00000
	46	0.00	0.00	0.00	0.00000	0.00000	0.00000	47	0.00	0.00	0.00	0.00000	0.00000	0.00000
32	1	0.00	0.00	0.00	0.00000	0.00000	0.00000	8	0.00	0.00	0.00	0.00000	0.00000	0.00000
	48	0.00	0.00	0.00	0.00000	0.00000	0.00000	49	0.00	0.00	0.00	0.00000	0.00000	0.00000
33	51	0.00	0.00	0.00	0.00000	0.00000	0.00000	48	0.00	0.00	0.00	0.00000	0.00000	0.00000
	50	0.00	0.00	0.00	0.00000	0.00000	0.00000	46	0.00	0.00	0.00	0.00000	0.00000	0.00000
34	14	0.00	0.00	0.00	0.00000	0.00000	0.00000	1	0.00	0.00	0.00	0.00000	0.00000	0.00000
	51	0.00	0.00	0.00	0.00000	0.00000	0.00000	48	0.00	0.00	0.00	0.00000	0.00000	0.00000
35	55	0.00	0.00	0.00	0.00000	0.00000	0.00000	56	0.00	0.00	0.00	0.00000	0.00000	0.00000
	52	0.00	0.00	0.00	0.00000	0.00000	0.00000	53	0.00	0.00	0.00	0.00000	0.00000	0.00000
36	56	0.00	0.00	0.00	0.00000	0.00000	0.00000	57	0.00	0.00	0.00	0.00000	0.00000	0.00000
	53	0.00	0.00	0.00	0.00000	0.00000	0.00000	11	0.00	0.00	0.00	0.00000	0.00000	0.00000
37	58	0.00	0.00	0.00	0.00000	0.00000	0.00000	59	0.00	0.00	0.00	0.00000	0.00000	0.00000
	54	0.00	0.00	0.00	0.00000	0.00000	0.00000	55	0.00	0.00	0.00	0.00000	0.00000	0.00000
38	59	0.00	0.00	0.00	0.00000	0.00000	0.00000	60	0.00	0.00	0.00	0.00000	0.00000	0.00000
	55	0.00	0.00	0.00	0.00000	0.00000	0.00000	56	0.00	0.00	0.00	0.00000	0.00000	0.00000
39	60	0.00	0.00	0.00	0.00000	0.00000	0.00000	61	0.00	0.00	0.00	0.00000	0.00000	0.00000
	56	0.00	0.00	0.00	0.00000	0.00000	0.00000	57	0.00	0.00	0.00	0.00000	0.00000	0.00000
40	5	0.00	0.00	0.00	0.00000	0.00000	0.00000	62	0.00	0.00	0.00	0.00000	0.00000	0.00000
	58	0.00	0.00	0.00	0.00000	0.00000	0.00000	59	0.00	0.00	0.00	0.00000	0.00000	0.00000
41	62	0.00	0.00	0.00	0.00000	0.00000	0.00000	63	0.00	0.00	0.00	0.00000	0.00000	0.00000
	59	0.00	0.00	0.00	0.00000	0.00000	0.00000	60	0.00	0.00	0.00	0.00000	0.00000	0.00000
42	63	0.00	0.00	0.00	0.00000	0.00000	0.00000	13	0.00	0.00	0.00	0.00000	0.00000	0.00000
	60	0.00	0.00	0.00	0.00000	0.00000	0.00000	61	0.00	0.00	0.00	0.00000	0.00000	0.00000
43	65	0.00	0.00	0.00	0.00000	0.00000	0.00000	66	0.00	0.00	0.00	0.00000	0.00000	0.00000
	62	0.00	0.00	0.00	0.00000	0.00000	0.00000	63	0.00	0.00	0.00	0.00000	0.00000	0.00000
44	66	0.00	0.00	0.00	0.00000	0.00000	0.00000	67	0.00	0.00	0.00	0.00000	0.00000	0.00000
	63	0.00	0.00	0.00	0.00000	0.00000	0.00000	13	0.00	0.00	0.00	0.00000	0.00000	0.00000
45	68	0.00	0.00	0.00	0.00000	0.00000	0.00000	69	0.00	0.00	0.00	0.00000	0.00000	0.00000
	64	0.00	0.00	0.00	0.00000	0.00000	0.00000	65	0.00	0.00	0.00	0.00000	0.00000	0.00000
46	69	0.00	0.00	0.00	0.00000	0.00000	0.00000	70	0.00	0.00	0.00	0.00000	0.00000	0.00000
	65	0.00	0.00	0.00	0.00000	0.00000	0.00000	66	0.00	0.00	0.00	0.00000	0.00000	0.00000
47	70	0.00	0.00	0.00	0.00000	0.00000	0.00000	71	0.00	0.00	0.00	0.00000	0.00000	0.00000
	66	0.00	0.00	0.00	0.00000	0.00000	0.00000	67	0.00	0.00	0.00	0.00000	0.00000	0.00000
48	4	0.00	0.00	0.00	0.00000	0.00000	0.00000	50	0.00	0.00	0.00	0.00000	0.00000	0.00000
	68	0.00	0.00	0.00	0.00000	0.00000	0.00000	69	0.00	0.00	0.00	0.00000	0.00000	0.00000
49	50	0.00	0.00	0.00	0.00000	0.00000	0.00000	51	0.00	0.00	0.00	0.00000	0.00000	0.00000
	69	0.00	0.00	0.00	0.00000	0.00000	0.00000	70	0.00	0.00	0.00	0.00000	0.00000	0.00000
50	51	0.00	0.00	0.00	0.00000	0.00000	0.00000	14	0.00	0.00	0.00	0.00000	0.00000	0.00000
	70	0.00	0.00	0.00	0.00000	0.00000	0.00000	71	0.00	0.00	0.00	0.00000	0.00000	0.00000
51	49	0.00	0.00	0.00	0.00000	0.00000	0.00000	73	0.00	0.00	0.00	0.00000	0.00000	0.00000
	47	0.00	0.00	0.00	0.00000	0.00000	0.00000	72	0.00	0.00	0.00	0.00000	0.00000	0.00000
52	8	0.00	0.00	0.00	0.00000	0.00000	0.00000	2	0.00	0.00	0.00	0.00000	0.00000	0.00000
	49	0.00	0.00	0.00	0.00000	0.00000	0.00000	73	0.00	0.00	0.00	0.00000	0.00000	0.00000
53	77	0.00	0.00	0.00	0.00000	0.00000	0.00000	78	0.00	0.00	0.00	0.00000	0.00000	0.00000
	74	0.00	0.00	0.00	0.00000	0.00000	0.00000	75	0.00	0.00	0.00	0.00000	0.00000	0.00000
54	78	0.00	0.00	0.00	0.00000	0.00000	0.00000	79	0.00	0.00	0.00	0.00000	0.00000	0.00000
	75	0.00	0.00	0.00	0.00000	0.00000	0.00000	32	0.00	0.00	0.00	0.00000	0.00000	0.00000
55	80	0.00	0.00	0.00	0.00000	0.00000	0.00000	81	0.00	0.00	0.00	0.00000	0.00000	0.00000
	76	0.00	0.00	0.00	0.00000	0.00000	0.00000	77	0.00	0.00	0.00	0.00000	0.00000	0.00000
56	81	0.00	0.00	0.00	0.00000	0.00000	0.00000	82	0.00	0.00	0.00	0.00000	0.00000	0.00000
	77	0.00	0.00	0.00	0.00000	0.00000	0.00000	78	0.00	0.00	0.00	0.00000	0.00000	0.00000
57	82	0.00	0.00	0.00	0.00000	0.00000	0.00000	83	0.00	0.00	0.00	0.00000	0.00000	0.00000
	78	0.00	0.00	0.00	0.00000	0.00000	0.00000	79	0.00	0.00	0.00	0.00000	0.00000	0.00000
58	21	0.00	0.00	0.00	0.00000	0.00000	0.00000	84	0.00	0.00	0.00	0.00000	0.00000	0.00000
	80	0.00	0.00	0.00	0.00000	0.00000	0.00000	81	0.00	0.00	0.00	0.00000	0.00000	0.00000
59	84	0.00	0.00	0.00	0.00000	0.00000	0.00000	85	0.00	0.00	0.00	0.00000	0.00000	0.00000
	81	0.00	0.00	0.00	0.00000	0.00000	0.00000	82	0.00	0.00	0.00	0.00000	0.00000	0.00000

Documento di proprietà **Snam Rete Gas**. La Società tutelerà i propri diritti in sede civile e penale a termini di legge.

SPOST. Corr. Tors. dir. 0: SHELL

Shell Nro	Nodo N.ro	S1 (mm)	S2 (mm)	S3 (mm)	R1 (rad)	R2 (rad)	R3 (rad)	Nodo N.ro	S1 (mm)	S2 (mm)	S3 (mm)	R1 (rad)	R2 (rad)	R3 (rad)
60	85	0.00	0.00	0.00	0.00000	0.00000	0.00000	31	0.00	0.00	0.00	0.00000	0.00000	0.00000
	82	0.00	0.00	0.00	0.00000	0.00000	0.00000	83	0.00	0.00	0.00	0.00000	0.00000	0.00000
61	86	0.00	0.00	0.00	0.00000	0.00000	0.00000	87	0.00	0.00	0.00	0.00000	0.00000	0.00000
	71	0.00	0.00	0.00	0.00000	0.00000	0.00000	67	0.00	0.00	0.00	0.00000	0.00000	0.00000
62	87	0.00	0.00	0.00	0.00000	0.00000	0.00000	88	0.00	0.00	0.00	0.00000	0.00000	0.00000
	67	0.00	0.00	0.00	0.00000	0.00000	0.00000	13	0.00	0.00	0.00	0.00000	0.00000	0.00000
63	40	0.00	0.00	0.00	0.00000	0.00000	0.00000	89	0.00	0.00	0.00	0.00000	0.00000	0.00000
	38	0.00	0.00	0.00	0.00000	0.00000	0.00000	86	0.00	0.00	0.00	0.00000	0.00000	0.00000
64	89	0.00	0.00	0.00	0.00000	0.00000	0.00000	90	0.00	0.00	0.00	0.00000	0.00000	0.00000
	86	0.00	0.00	0.00	0.00000	0.00000	0.00000	87	0.00	0.00	0.00	0.00000	0.00000	0.00000
65	90	0.00	0.00	0.00	0.00000	0.00000	0.00000	91	0.00	0.00	0.00	0.00000	0.00000	0.00000
	87	0.00	0.00	0.00	0.00000	0.00000	0.00000	88	0.00	0.00	0.00	0.00000	0.00000	0.00000
66	17	0.00	0.00	0.00	0.00000	0.00000	0.00000	92	0.00	0.00	0.00	0.00000	0.00000	0.00000
	40	0.00	0.00	0.00	0.00000	0.00000	0.00000	89	0.00	0.00	0.00	0.00000	0.00000	0.00000
67	92	0.00	0.00	0.00	0.00000	0.00000	0.00000	93	0.00	0.00	0.00	0.00000	0.00000	0.00000
	89	0.00	0.00	0.00	0.00000	0.00000	0.00000	90	0.00	0.00	0.00	0.00000	0.00000	0.00000
68	93	0.00	0.00	0.00	0.00000	0.00000	0.00000	18	0.00	0.00	0.00	0.00000	0.00000	0.00000
	90	0.00	0.00	0.00	0.00000	0.00000	0.00000	91	0.00	0.00	0.00	0.00000	0.00000	0.00000
69	95	0.00	0.00	0.00	0.00000	0.00000	0.00000	96	0.00	0.00	0.00	0.00000	0.00000	0.00000
	91	0.00	0.00	0.00	0.00000	0.00000	0.00000	88	0.00	0.00	0.00	0.00000	0.00000	0.00000
70	96	0.00	0.00	0.00	0.00000	0.00000	0.00000	61	0.00	0.00	0.00	0.00000	0.00000	0.00000
	88	0.00	0.00	0.00	0.00000	0.00000	0.00000	13	0.00	0.00	0.00	0.00000	0.00000	0.00000
71	97	0.00	0.00	0.00	0.00000	0.00000	0.00000	98	0.00	0.00	0.00	0.00000	0.00000	0.00000
	94	0.00	0.00	0.00	0.00000	0.00000	0.00000	95	0.00	0.00	0.00	0.00000	0.00000	0.00000
72	98	0.00	0.00	0.00	0.00000	0.00000	0.00000	99	0.00	0.00	0.00	0.00000	0.00000	0.00000
	95	0.00	0.00	0.00	0.00000	0.00000	0.00000	96	0.00	0.00	0.00	0.00000	0.00000	0.00000
73	99	0.00	0.00	0.00	0.00000	0.00000	0.00000	57	0.00	0.00	0.00	0.00000	0.00000	0.00000
	96	0.00	0.00	0.00	0.00000	0.00000	0.00000	61	0.00	0.00	0.00	0.00000	0.00000	0.00000
74	19	0.00	0.00	0.00	0.00000	0.00000	0.00000	100	0.00	0.00	0.00	0.00000	0.00000	0.00000
	97	0.00	0.00	0.00	0.00000	0.00000	0.00000	98	0.00	0.00	0.00	0.00000	0.00000	0.00000
75	100	0.00	0.00	0.00	0.00000	0.00000	0.00000	101	0.00	0.00	0.00	0.00000	0.00000	0.00000
	98	0.00	0.00	0.00	0.00000	0.00000	0.00000	99	0.00	0.00	0.00	0.00000	0.00000	0.00000
76	101	0.00	0.00	0.00	0.00000	0.00000	0.00000	11	0.00	0.00	0.00	0.00000	0.00000	0.00000
	99	0.00	0.00	0.00	0.00000	0.00000	0.00000	57	0.00	0.00	0.00	0.00000	0.00000	0.00000
77	103	0.00	0.00	0.00	0.00000	0.00000	0.00000	104	0.00	0.00	0.00	0.00000	0.00000	0.00000
	84	0.00	0.00	0.00	0.00000	0.00000	0.00000	85	0.00	0.00	0.00	0.00000	0.00000	0.00000
78	104	0.00	0.00	0.00	0.00000	0.00000	0.00000	105	0.00	0.00	0.00	0.00000	0.00000	0.00000
	85	0.00	0.00	0.00	0.00000	0.00000	0.00000	31	0.00	0.00	0.00	0.00000	0.00000	0.00000
79	106	0.00	0.00	0.00	0.00000	0.00000	0.00000	107	0.00	0.00	0.00	0.00000	0.00000	0.00000
	102	0.00	0.00	0.00	0.00000	0.00000	0.00000	103	0.00	0.00	0.00	0.00000	0.00000	0.00000
80	107	0.00	0.00	0.00	0.00000	0.00000	0.00000	108	0.00	0.00	0.00	0.00000	0.00000	0.00000
	103	0.00	0.00	0.00	0.00000	0.00000	0.00000	104	0.00	0.00	0.00	0.00000	0.00000	0.00000
81	108	0.00	0.00	0.00	0.00000	0.00000	0.00000	109	0.00	0.00	0.00	0.00000	0.00000	0.00000
	104	0.00	0.00	0.00	0.00000	0.00000	0.00000	105	0.00	0.00	0.00	0.00000	0.00000	0.00000
82	22	0.00	0.00	0.00	0.00000	0.00000	0.00000	110	0.00	0.00	0.00	0.00000	0.00000	0.00000
	106	0.00	0.00	0.00	0.00000	0.00000	0.00000	107	0.00	0.00	0.00	0.00000	0.00000	0.00000
83	110	0.00	0.00	0.00	0.00000	0.00000	0.00000	111	0.00	0.00	0.00	0.00000	0.00000	0.00000
	107	0.00	0.00	0.00	0.00000	0.00000	0.00000	108	0.00	0.00	0.00	0.00000	0.00000	0.00000
84	111	0.00	0.00	0.00	0.00000	0.00000	0.00000	30	0.00	0.00	0.00	0.00000	0.00000	0.00000
	108	0.00	0.00	0.00	0.00000	0.00000	0.00000	109	0.00	0.00	0.00	0.00000	0.00000	0.00000
85	113	0.00	0.00	0.00	0.00000	0.00000	0.00000	80	0.00	0.00	0.00	0.00000	0.00000	0.00000
	112	0.00	0.00	0.00	0.00000	0.00000	0.00000	76	0.00	0.00	0.00	0.00000	0.00000	0.00000
86	23	0.00	0.00	0.00	0.00000	0.00000	0.00000	21	0.00	0.00	0.00	0.00000	0.00000	0.00000
	113	0.00	0.00	0.00	0.00000	0.00000	0.00000	80	0.00	0.00	0.00	0.00000	0.00000	0.00000
87	115	0.00	0.00	0.00	0.00000	0.00000	0.00000	113	0.00	0.00	0.00	0.00000	0.00000	0.00000
	114	0.00	0.00	0.00	0.00000	0.00000	0.00000	112	0.00	0.00	0.00	0.00000	0.00000	0.00000
88	20	0.00	0.00	0.00	0.00000	0.00000	0.00000	23	0.00	0.00	0.00	0.00000	0.00000	0.00000
	115	0.00	0.00	0.00	0.00000	0.00000	0.00000	113	0.00	0.00	0.00	0.00000	0.00000	0.00000
89	116	0.00	0.00	0.00	0.00000	0.00000	0.00000	117	0.00	0.00	0.00	0.00000	0.00000	0.00000
	102	0.00	0.00	0.00	0.00000	0.00000	0.00000	106	0.00	0.00	0.00	0.00000	0.00000	0.00000
90	117	0.00	0.00	0.00	0.00000	0.00000	0.00000	37	0.00	0.00	0.00	0.00000	0.00000	0.00000
	106	0.00	0.00	0.00	0.00000	0.00000	0.00000	22	0.00	0.00	0.00	0.00000	0.00000	0.00000
91	119	0.00	0.00	0.00	0.00000	0.00000	0.00000	117	0.00	0.00	0.00	0.00000	0.00000	0.00000
	118	0.00	0.00	0.00	0.00000	0.00000	0.00000	116	0.00	0.00	0.00	0.00000	0.00000	0.00000
92	34	0.00	0.00	0.00	0.00000	0.00000	0.00000	37	0.00	0.00	0.00	0.00000	0.00000	0.00000
	119	0.00	0.00	0.00	0.00000	0.00000	0.00000	117	0.00	0.00	0.00	0.00000	0.00000	0.00000
93	121	0.00	0.00	0.00	0.00000	0.00000	0.00000	122	0.00	0.00	0.00	0.00000	0.00000	0.00000
	43	0.00	0.00	0.00	0.00000	0.00000	0.00000	42	0.00	0.00	0.00	0.00000	0.00000	0.00000
94	122	0.00	0.00	0.00	0.00000	0.00000	0.00000	123	0.00	0.00	0.00	0.00000	0.00000	0.00000
	42	0.00	0.00	0.00	0.00000	0.00000	0.00000	2	0.00	0.00	0.00	0.00000	0.00000	0.00000
95	124	0.00	0.00	0.00	0.00000	0.00000	0.00000	125	0.00	0.00	0.00	0.00000	0.00000	0.00000
	120	0.00	0.00	0.00	0.00000	0.00000	0.00000	121	0.00	0.00	0.00	0.00000	0.00000	0.00000
96	125	0.00	0.00	0.00	0.00000	0.00000	0.00000	126	0.00	0.00	0.00	0.00000	0.00000	0.00000
	121	0.00	0.00	0.00	0.00000	0.00000	0.00000	122	0.00	0.00	0.00	0.00000	0.00000	0.00000
97	126	0.00	0.00	0.00	0.00000	0.00000	0.00000	127	0.00	0.00	0.00	0.00000	0.00000	0.00000
	122	0.00	0.00	0.00	0.00000	0.00000	0.00000	123	0.00	0.00	0.00	0.00000	0.00000	0.00000
98	26	0.00	0.00	0.00	0.00000	0.00000	0.00000	128	0.00	0.00	0.00	0.00000	0.00000	0.00000
	124	0.00	0.00	0.00	0.00000	0.00000	0.00000	125	0.00	0.00	0.00	0.00000	0.00000	0.00000
99	128	0.00	0.00	0.00	0.00000	0.00000	0.00000	129	0.00	0.00	0.00	0.00000	0.00000	0.00000
	125	0.00	0.00	0.00	0.00000	0.00000	0.00000	126	0.00	0.00	0.00	0.00000	0.00000	0.00000

Documento di proprietà **Snam Rete Gas**. La Società tutelerà i propri diritti in sede civile e penale a termini di legge.

SPOST. Corr. Tors. dir. 0: SHELL

Shell Nro	Nodo N.ro	S1 (mm)	S2 (mm)	S3 (mm)	R1 (rad)	R2 (rad)	R3 (rad)	Nodo N.ro	S1 (mm)	S2 (mm)	S3 (mm)	R1 (rad)	R2 (rad)	R3 (rad)
100	129	0.00	0.00	0.00	0.00000	0.00000	0.00000	27	0.00	0.00	0.00	0.00000	0.00000	0.00000
	126	0.00	0.00	0.00	0.00000	0.00000	0.00000	127	0.00	0.00	0.00	0.00000	0.00000	0.00000
101	130	0.00	0.00	0.00	0.00000	0.00000	0.00000	131	0.00	0.00	0.00	0.00000	0.00000	0.00000
	68	0.00	0.00	0.00	0.00000	0.00000	0.00000	64	0.00	0.00	0.00	0.00000	0.00000	0.00000
102	131	0.00	0.00	0.00	0.00000	0.00000	0.00000	132	0.00	0.00	0.00	0.00000	0.00000	0.00000
	64	0.00	0.00	0.00	0.00000	0.00000	0.00000	5	0.00	0.00	0.00	0.00000	0.00000	0.00000
103	16	0.00	0.00	0.00	0.00000	0.00000	0.00000	133	0.00	0.00	0.00	0.00000	0.00000	0.00000
	10	0.00	0.00	0.00	0.00000	0.00000	0.00000	130	0.00	0.00	0.00	0.00000	0.00000	0.00000
104	133	0.00	0.00	0.00	0.00000	0.00000	0.00000	134	0.00	0.00	0.00	0.00000	0.00000	0.00000
	130	0.00	0.00	0.00	0.00000	0.00000	0.00000	131	0.00	0.00	0.00	0.00000	0.00000	0.00000
105	134	0.00	0.00	0.00	0.00000	0.00000	0.00000	135	0.00	0.00	0.00	0.00000	0.00000	0.00000
	131	0.00	0.00	0.00	0.00000	0.00000	0.00000	132	0.00	0.00	0.00	0.00000	0.00000	0.00000
106	3	0.00	0.00	0.00	0.00000	0.00000	0.00000	136	0.00	0.00	0.00	0.00000	0.00000	0.00000
	16	0.00	0.00	0.00	0.00000	0.00000	0.00000	133	0.00	0.00	0.00	0.00000	0.00000	0.00000
107	136	0.00	0.00	0.00	0.00000	0.00000	0.00000	137	0.00	0.00	0.00	0.00000	0.00000	0.00000
	133	0.00	0.00	0.00	0.00000	0.00000	0.00000	134	0.00	0.00	0.00	0.00000	0.00000	0.00000
108	137	0.00	0.00	0.00	0.00000	0.00000	0.00000	138	0.00	0.00	0.00	0.00000	0.00000	0.00000
	134	0.00	0.00	0.00	0.00000	0.00000	0.00000	135	0.00	0.00	0.00	0.00000	0.00000	0.00000
109	139	0.00	0.00	0.00	0.00000	0.00000	0.00000	140	0.00	0.00	0.00	0.00000	0.00000	0.00000
	3	0.00	0.00	0.00	0.00000	0.00000	0.00000	136	0.00	0.00	0.00	0.00000	0.00000	0.00000
110	140	0.00	0.00	0.00	0.00000	0.00000	0.00000	141	0.00	0.00	0.00	0.00000	0.00000	0.00000
	136	0.00	0.00	0.00	0.00000	0.00000	0.00000	137	0.00	0.00	0.00	0.00000	0.00000	0.00000
111	141	0.00	0.00	0.00	0.00000	0.00000	0.00000	142	0.00	0.00	0.00	0.00000	0.00000	0.00000
	137	0.00	0.00	0.00	0.00000	0.00000	0.00000	138	0.00	0.00	0.00	0.00000	0.00000	0.00000
112	143	0.00	0.00	0.00	0.00000	0.00000	0.00000	144	0.00	0.00	0.00	0.00000	0.00000	0.00000
	139	0.00	0.00	0.00	0.00000	0.00000	0.00000	140	0.00	0.00	0.00	0.00000	0.00000	0.00000
113	144	0.00	0.00	0.00	0.00000	0.00000	0.00000	145	0.00	0.00	0.00	0.00000	0.00000	0.00000
	140	0.00	0.00	0.00	0.00000	0.00000	0.00000	141	0.00	0.00	0.00	0.00000	0.00000	0.00000
114	145	0.00	0.00	0.00	0.00000	0.00000	0.00000	146	0.00	0.00	0.00	0.00000	0.00000	0.00000
	141	0.00	0.00	0.00	0.00000	0.00000	0.00000	142	0.00	0.00	0.00	0.00000	0.00000	0.00000
115	28	0.00	0.00	0.00	0.00000	0.00000	0.00000	147	0.00	0.00	0.00	0.00000	0.00000	0.00000
	143	0.00	0.00	0.00	0.00000	0.00000	0.00000	144	0.00	0.00	0.00	0.00000	0.00000	0.00000
116	147	0.00	0.00	0.00	0.00000	0.00000	0.00000	148	0.00	0.00	0.00	0.00000	0.00000	0.00000
	144	0.00	0.00	0.00	0.00000	0.00000	0.00000	145	0.00	0.00	0.00	0.00000	0.00000	0.00000
117	148	0.00	0.00	0.00	0.00000	0.00000	0.00000	29	0.00	0.00	0.00	0.00000	0.00000	0.00000
	145	0.00	0.00	0.00	0.00000	0.00000	0.00000	146	0.00	0.00	0.00	0.00000	0.00000	0.00000
118	101	0.00	0.00	0.00	0.00000	0.00000	0.00000	115	0.00	0.00	0.00	0.00000	0.00000	0.00000
	100	0.00	0.00	0.00	0.00000	0.00000	0.00000	114	0.00	0.00	0.00	0.00000	0.00000	0.00000
119	11	0.00	0.00	0.00	0.00000	0.00000	0.00000	20	0.00	0.00	0.00	0.00000	0.00000	0.00000
	101	0.00	0.00	0.00	0.00000	0.00000	0.00000	115	0.00	0.00	0.00	0.00000	0.00000	0.00000
120	149	0.00	0.00	0.00	0.00000	0.00000	0.00000	150	0.00	0.00	0.00	0.00000	0.00000	0.00000
	97	0.00	0.00	0.00	0.00000	0.00000	0.00000	94	0.00	0.00	0.00	0.00000	0.00000	0.00000
121	150	0.00	0.00	0.00	0.00000	0.00000	0.00000	151	0.00	0.00	0.00	0.00000	0.00000	0.00000
	94	0.00	0.00	0.00	0.00000	0.00000	0.00000	18	0.00	0.00	0.00	0.00000	0.00000	0.00000
122	36	0.00	0.00	0.00	0.00000	0.00000	0.00000	152	0.00	0.00	0.00	0.00000	0.00000	0.00000
	35	0.00	0.00	0.00	0.00000	0.00000	0.00000	149	0.00	0.00	0.00	0.00000	0.00000	0.00000
123	152	0.00	0.00	0.00	0.00000	0.00000	0.00000	153	0.00	0.00	0.00	0.00000	0.00000	0.00000
	149	0.00	0.00	0.00	0.00000	0.00000	0.00000	150	0.00	0.00	0.00	0.00000	0.00000	0.00000
124	153	0.00	0.00	0.00	0.00000	0.00000	0.00000	154	0.00	0.00	0.00	0.00000	0.00000	0.00000
	150	0.00	0.00	0.00	0.00000	0.00000	0.00000	151	0.00	0.00	0.00	0.00000	0.00000	0.00000
125	25	0.00	0.00	0.00	0.00000	0.00000	0.00000	155	0.00	0.00	0.00	0.00000	0.00000	0.00000
	36	0.00	0.00	0.00	0.00000	0.00000	0.00000	152	0.00	0.00	0.00	0.00000	0.00000	0.00000
126	155	0.00	0.00	0.00	0.00000	0.00000	0.00000	156	0.00	0.00	0.00	0.00000	0.00000	0.00000
	152	0.00	0.00	0.00	0.00000	0.00000	0.00000	153	0.00	0.00	0.00	0.00000	0.00000	0.00000
127	156	0.00	0.00	0.00	0.00000	0.00000	0.00000	157	0.00	0.00	0.00	0.00000	0.00000	0.00000
	153	0.00	0.00	0.00	0.00000	0.00000	0.00000	154	0.00	0.00	0.00	0.00000	0.00000	0.00000
128	74	0.00	0.00	0.00	0.00000	0.00000	0.00000	158	0.00	0.00	0.00	0.00000	0.00000	0.00000
	25	0.00	0.00	0.00	0.00000	0.00000	0.00000	155	0.00	0.00	0.00	0.00000	0.00000	0.00000
129	158	0.00	0.00	0.00	0.00000	0.00000	0.00000	159	0.00	0.00	0.00	0.00000	0.00000	0.00000
	155	0.00	0.00	0.00	0.00000	0.00000	0.00000	156	0.00	0.00	0.00	0.00000	0.00000	0.00000
130	159	0.00	0.00	0.00	0.00000	0.00000	0.00000	160	0.00	0.00	0.00	0.00000	0.00000	0.00000
	156	0.00	0.00	0.00	0.00000	0.00000	0.00000	157	0.00	0.00	0.00	0.00000	0.00000	0.00000
131	75	0.00	0.00	0.00	0.00000	0.00000	0.00000	161	0.00	0.00	0.00	0.00000	0.00000	0.00000
	74	0.00	0.00	0.00	0.00000	0.00000	0.00000	158	0.00	0.00	0.00	0.00000	0.00000	0.00000
132	161	0.00	0.00	0.00	0.00000	0.00000	0.00000	162	0.00	0.00	0.00	0.00000	0.00000	0.00000
	158	0.00	0.00	0.00	0.00000	0.00000	0.00000	159	0.00	0.00	0.00	0.00000	0.00000	0.00000
133	162	0.00	0.00	0.00	0.00000	0.00000	0.00000	163	0.00	0.00	0.00	0.00000	0.00000	0.00000
	159	0.00	0.00	0.00	0.00000	0.00000	0.00000	160	0.00	0.00	0.00	0.00000	0.00000	0.00000
134	32	0.00	0.00	0.00	0.00000	0.00000	0.00000	164	0.00	0.00	0.00	0.00000	0.00000	0.00000
	75	0.00	0.00	0.00	0.00000	0.00000	0.00000	161	0.00	0.00	0.00	0.00000	0.00000	0.00000
135	164	0.00	0.00	0.00	0.00000	0.00000	0.00000	165	0.00	0.00	0.00	0.00000	0.00000	0.00000
	161	0.00	0.00	0.00	0.00000	0.00000	0.00000	162	0.00	0.00	0.00	0.00000	0.00000	0.00000
136	165	0.00	0.00	0.00	0.00000	0.00000	0.00000	33	0.00	0.00	0.00	0.00000	0.00000	0.00000
	162	0.00	0.00	0.00	0.00000	0.00000	0.00000	163	0.00	0.00	0.00	0.00000	0.00000	0.00000
137	166	0.00	0.00	0.00	0.00000	0.00000	0.00000	167	0.00	0.00	0.00	0.00000	0.00000	0.00000
	58	0.00	0.00	0.00	0.00000	0.00000	0.00000	54	0.00	0.00	0.00	0.00000	0.00000	0.00000
138	167	0.00	0.00	0.00	0.00000	0.00000	0.00000	34	0.00	0.00	0.00	0.00000	0.00000	0.00000
	54	0.00	0.00	0.00	0.00000	0.00000	0.00000	7	0.00	0.00	0.00	0.00000	0.00000	0.00000
139	135	0.00	0.00	0.00	0.00000	0.00000	0.00000	168	0.00	0.00	0.00	0.00000	0.00000	0.00000
	132	0.00	0.00	0.00	0.00000	0.00000	0.00000	166	0.00	0.00	0.00	0.00000	0.00000	0.00000

Documento di proprietà **Snam Rete Gas**. La Società tutelerà i propri diritti in sede civile e penale a termini di legge.

SPOST. Corr. Tors. dir. 0: SHELL

Shell Nro	Nodo N.ro	S1 (mm)	S2 (mm)	S3 (mm)	R1 (rad)	R2 (rad)	R3 (rad)	Nodo N.ro	S1 (mm)	S2 (mm)	S3 (mm)	R1 (rad)	R2 (rad)	R3 (rad)
140	168	0.00	0.00	0.00	0.00000	0.00000	0.00000	169	0.00	0.00	0.00	0.00000	0.00000	0.00000
	166	0.00	0.00	0.00	0.00000	0.00000	0.00000	167	0.00	0.00	0.00	0.00000	0.00000	0.00000
141	169	0.00	0.00	0.00	0.00000	0.00000	0.00000	37	0.00	0.00	0.00	0.00000	0.00000	0.00000
	167	0.00	0.00	0.00	0.00000	0.00000	0.00000	34	0.00	0.00	0.00	0.00000	0.00000	0.00000
142	138	0.00	0.00	0.00	0.00000	0.00000	0.00000	170	0.00	0.00	0.00	0.00000	0.00000	0.00000
	135	0.00	0.00	0.00	0.00000	0.00000	0.00000	168	0.00	0.00	0.00	0.00000	0.00000	0.00000
143	170	0.00	0.00	0.00	0.00000	0.00000	0.00000	171	0.00	0.00	0.00	0.00000	0.00000	0.00000
	168	0.00	0.00	0.00	0.00000	0.00000	0.00000	169	0.00	0.00	0.00	0.00000	0.00000	0.00000
144	171	0.00	0.00	0.00	0.00000	0.00000	0.00000	22	0.00	0.00	0.00	0.00000	0.00000	0.00000
	169	0.00	0.00	0.00	0.00000	0.00000	0.00000	37	0.00	0.00	0.00	0.00000	0.00000	0.00000
145	142	0.00	0.00	0.00	0.00000	0.00000	0.00000	172	0.00	0.00	0.00	0.00000	0.00000	0.00000
	138	0.00	0.00	0.00	0.00000	0.00000	0.00000	170	0.00	0.00	0.00	0.00000	0.00000	0.00000
146	172	0.00	0.00	0.00	0.00000	0.00000	0.00000	173	0.00	0.00	0.00	0.00000	0.00000	0.00000
	170	0.00	0.00	0.00	0.00000	0.00000	0.00000	171	0.00	0.00	0.00	0.00000	0.00000	0.00000
147	173	0.00	0.00	0.00	0.00000	0.00000	0.00000	110	0.00	0.00	0.00	0.00000	0.00000	0.00000
	171	0.00	0.00	0.00	0.00000	0.00000	0.00000	22	0.00	0.00	0.00	0.00000	0.00000	0.00000
148	146	0.00	0.00	0.00	0.00000	0.00000	0.00000	174	0.00	0.00	0.00	0.00000	0.00000	0.00000
	142	0.00	0.00	0.00	0.00000	0.00000	0.00000	172	0.00	0.00	0.00	0.00000	0.00000	0.00000
149	174	0.00	0.00	0.00	0.00000	0.00000	0.00000	175	0.00	0.00	0.00	0.00000	0.00000	0.00000
	172	0.00	0.00	0.00	0.00000	0.00000	0.00000	173	0.00	0.00	0.00	0.00000	0.00000	0.00000
150	175	0.00	0.00	0.00	0.00000	0.00000	0.00000	111	0.00	0.00	0.00	0.00000	0.00000	0.00000
	173	0.00	0.00	0.00	0.00000	0.00000	0.00000	110	0.00	0.00	0.00	0.00000	0.00000	0.00000
151	29	0.00	0.00	0.00	0.00000	0.00000	0.00000	176	0.00	0.00	0.00	0.00000	0.00000	0.00000
	146	0.00	0.00	0.00	0.00000	0.00000	0.00000	174	0.00	0.00	0.00	0.00000	0.00000	0.00000
152	176	0.00	0.00	0.00	0.00000	0.00000	0.00000	177	0.00	0.00	0.00	0.00000	0.00000	0.00000
	174	0.00	0.00	0.00	0.00000	0.00000	0.00000	175	0.00	0.00	0.00	0.00000	0.00000	0.00000
153	177	0.00	0.00	0.00	0.00000	0.00000	0.00000	30	0.00	0.00	0.00	0.00000	0.00000	0.00000
	175	0.00	0.00	0.00	0.00000	0.00000	0.00000	111	0.00	0.00	0.00	0.00000	0.00000	0.00000
154	178	0.00	0.00	0.00	0.00000	0.00000	0.00000	179	0.00	0.00	0.00	0.00000	0.00000	0.00000
	93	0.00	0.00	0.00	0.00000	0.00000	0.00000	92	0.00	0.00	0.00	0.00000	0.00000	0.00000
155	179	0.00	0.00	0.00	0.00000	0.00000	0.00000	12	0.00	0.00	0.00	0.00000	0.00000	0.00000
	92	0.00	0.00	0.00	0.00000	0.00000	0.00000	17	0.00	0.00	0.00	0.00000	0.00000	0.00000
156	154	0.00	0.00	0.00	0.00000	0.00000	0.00000	180	0.00	0.00	0.00	0.00000	0.00000	0.00000
	151	0.00	0.00	0.00	0.00000	0.00000	0.00000	178	0.00	0.00	0.00	0.00000	0.00000	0.00000
157	180	0.00	0.00	0.00	0.00000	0.00000	0.00000	181	0.00	0.00	0.00	0.00000	0.00000	0.00000
	178	0.00	0.00	0.00	0.00000	0.00000	0.00000	179	0.00	0.00	0.00	0.00000	0.00000	0.00000
158	181	0.00	0.00	0.00	0.00000	0.00000	0.00000	15	0.00	0.00	0.00	0.00000	0.00000	0.00000
	179	0.00	0.00	0.00	0.00000	0.00000	0.00000	12	0.00	0.00	0.00	0.00000	0.00000	0.00000
159	157	0.00	0.00	0.00	0.00000	0.00000	0.00000	182	0.00	0.00	0.00	0.00000	0.00000	0.00000
	154	0.00	0.00	0.00	0.00000	0.00000	0.00000	180	0.00	0.00	0.00	0.00000	0.00000	0.00000
160	182	0.00	0.00	0.00	0.00000	0.00000	0.00000	183	0.00	0.00	0.00	0.00000	0.00000	0.00000
	180	0.00	0.00	0.00	0.00000	0.00000	0.00000	181	0.00	0.00	0.00	0.00000	0.00000	0.00000
161	183	0.00	0.00	0.00	0.00000	0.00000	0.00000	9	0.00	0.00	0.00	0.00000	0.00000	0.00000
	181	0.00	0.00	0.00	0.00000	0.00000	0.00000	15	0.00	0.00	0.00	0.00000	0.00000	0.00000
162	160	0.00	0.00	0.00	0.00000	0.00000	0.00000	184	0.00	0.00	0.00	0.00000	0.00000	0.00000
	157	0.00	0.00	0.00	0.00000	0.00000	0.00000	182	0.00	0.00	0.00	0.00000	0.00000	0.00000
163	184	0.00	0.00	0.00	0.00000	0.00000	0.00000	185	0.00	0.00	0.00	0.00000	0.00000	0.00000
	182	0.00	0.00	0.00	0.00000	0.00000	0.00000	183	0.00	0.00	0.00	0.00000	0.00000	0.00000
164	185	0.00	0.00	0.00	0.00000	0.00000	0.00000	120	0.00	0.00	0.00	0.00000	0.00000	0.00000
	183	0.00	0.00	0.00	0.00000	0.00000	0.00000	9	0.00	0.00	0.00	0.00000	0.00000	0.00000
165	163	0.00	0.00	0.00	0.00000	0.00000	0.00000	186	0.00	0.00	0.00	0.00000	0.00000	0.00000
	160	0.00	0.00	0.00	0.00000	0.00000	0.00000	184	0.00	0.00	0.00	0.00000	0.00000	0.00000
166	186	0.00	0.00	0.00	0.00000	0.00000	0.00000	187	0.00	0.00	0.00	0.00000	0.00000	0.00000
	184	0.00	0.00	0.00	0.00000	0.00000	0.00000	185	0.00	0.00	0.00	0.00000	0.00000	0.00000
167	187	0.00	0.00	0.00	0.00000	0.00000	0.00000	124	0.00	0.00	0.00	0.00000	0.00000	0.00000
	185	0.00	0.00	0.00	0.00000	0.00000	0.00000	120	0.00	0.00	0.00	0.00000	0.00000	0.00000
168	33	0.00	0.00	0.00	0.00000	0.00000	0.00000	188	0.00	0.00	0.00	0.00000	0.00000	0.00000
	163	0.00	0.00	0.00	0.00000	0.00000	0.00000	186	0.00	0.00	0.00	0.00000	0.00000	0.00000
169	188	0.00	0.00	0.00	0.00000	0.00000	0.00000	189	0.00	0.00	0.00	0.00000	0.00000	0.00000
	186	0.00	0.00	0.00	0.00000	0.00000	0.00000	187	0.00	0.00	0.00	0.00000	0.00000	0.00000
170	189	0.00	0.00	0.00	0.00000	0.00000	0.00000	26	0.00	0.00	0.00	0.00000	0.00000	0.00000
	187	0.00	0.00	0.00	0.00000	0.00000	0.00000	124	0.00	0.00	0.00	0.00000	0.00000	0.00000
171	190	0.00	0.00	0.00	0.00000	0.00000	0.00000	191	0.00	0.00	0.00	0.00000	0.00000	0.00000
	73	0.00	0.00	0.00	0.00000	0.00000	0.00000	72	0.00	0.00	0.00	0.00000	0.00000	0.00000
172	191	0.00	0.00	0.00	0.00000	0.00000	0.00000	139	0.00	0.00	0.00	0.00000	0.00000	0.00000
	72	0.00	0.00	0.00	0.00000	0.00000	0.00000	3	0.00	0.00	0.00	0.00000	0.00000	0.00000
173	127	0.00	0.00	0.00	0.00000	0.00000	0.00000	192	0.00	0.00	0.00	0.00000	0.00000	0.00000
	123	0.00	0.00	0.00	0.00000	0.00000	0.00000	190	0.00	0.00	0.00	0.00000	0.00000	0.00000
174	192	0.00	0.00	0.00	0.00000	0.00000	0.00000	193	0.00	0.00	0.00	0.00000	0.00000	0.00000
	190	0.00	0.00	0.00	0.00000	0.00000	0.00000	191	0.00	0.00	0.00	0.00000	0.00000	0.00000
175	193	0.00	0.00	0.00	0.00000	0.00000	0.00000	143	0.00	0.00	0.00	0.00000	0.00000	0.00000
	191	0.00	0.00	0.00	0.00000	0.00000	0.00000	139	0.00	0.00	0.00	0.00000	0.00000	0.00000
176	27	0.00	0.00	0.00	0.00000	0.00000	0.00000	194	0.00	0.00	0.00	0.00000	0.00000	0.00000
	127	0.00	0.00	0.00	0.00000	0.00000	0.00000	192	0.00	0.00	0.00	0.00000	0.00000	0.00000
177	194	0.00	0.00	0.00	0.00000	0.00000	0.00000	195	0.00	0.00	0.00	0.00000	0.00000	0.00000
	192	0.00	0.00	0.00	0.00000	0.00000	0.00000	193	0.00	0.00	0.00	0.00000	0.00000	0.00000
178	195	0.00	0.00	0.00	0.00000	0.00000	0.00000	28	0.00	0.00	0.00	0.00000	0.00000	0.00000
	193	0.00	0.00	0.00	0.00000	0.00000	0.00000	143	0.00	0.00	0.00	0.00000	0.00000	0.00000
179	52	0.00	0.00	0.00	0.00000	0.00000	0.00000	119	0.00	0.00	0.00	0.00000	0.00000	0.00000
	53	0.00	0.00	0.00	0.00000	0.00000	0.00000	118	0.00	0.00	0.00	0.00000	0.00000	0.00000

Documento di proprietà **Snam Rete Gas**. La Società tutelerà i propri diritti in sede civile e penale a termini di legge.

SPOST. Corr. Tors. dir. 0: SHELL

Shell Nro	Nodo N.ro	S1 (mm)	S2 (mm)	S3 (mm)	R1 (rad)	R2 (rad)	R3 (rad)	Nodo N.ro	S1 (mm)	S2 (mm)	S3 (mm)	R1 (rad)	R2 (rad)	R3 (rad)
180	7	0.00	0.00	0.00	0.00000	0.00000	0.00000	34	0.00	0.00	0.00	0.00000	0.00000	0.00000
	52	0.00	0.00	0.00	0.00000	0.00000	0.00000	119	0.00	0.00	0.00	0.00000	0.00000	0.00000

SPOST. Corr. Tors. dir. 90: SHELL

Shell Nro	Nodo N.ro	S1 (mm)	S2 (mm)	S3 (mm)	R1 (rad)	R2 (rad)	R3 (rad)	Nodo N.ro	S1 (mm)	S2 (mm)	S3 (mm)	R1 (rad)	R2 (rad)	R3 (rad)
1	38	0.00	0.00	0.00	0.00000	0.00000	0.00000	39	0.00	0.00	0.00	0.00000	0.00000	0.00000
	14	0.00	0.00	0.00	0.00000	0.00000	0.00000	1	0.00	0.00	0.00	0.00000	0.00000	0.00000
2	6	0.00	0.00	0.00	0.00000	0.00000	0.00000	44	0.00	0.00	0.00	0.00000	0.00000	0.00000
	2	0.00	0.00	0.00	0.00000	0.00000	0.00000	42	0.00	0.00	0.00	0.00000	0.00000	0.00000
3	39	0.00	0.00	0.00	0.00000	0.00000	0.00000	44	0.00	0.00	0.00	0.00000	0.00000	0.00000
	1	0.00	0.00	0.00	0.00000	0.00000	0.00000	6	0.00	0.00	0.00	0.00000	0.00000	0.00000
4	46	0.00	0.00	0.00	0.00000	0.00000	0.00000	47	0.00	0.00	0.00	0.00000	0.00000	0.00000
	10	0.00	0.00	0.00	0.00000	0.00000	0.00000	16	0.00	0.00	0.00	0.00000	0.00000	0.00000
5	50	0.00	0.00	0.00	0.00000	0.00000	0.00000	46	0.00	0.00	0.00	0.00000	0.00000	0.00000
	4	0.00	0.00	0.00	0.00000	0.00000	0.00000	10	0.00	0.00	0.00	0.00000	0.00000	0.00000
6	54	0.00	0.00	0.00	0.00000	0.00000	0.00000	55	0.00	0.00	0.00	0.00000	0.00000	0.00000
	7	0.00	0.00	0.00	0.00000	0.00000	0.00000	52	0.00	0.00	0.00	0.00000	0.00000	0.00000
7	64	0.00	0.00	0.00	0.00000	0.00000	0.00000	65	0.00	0.00	0.00	0.00000	0.00000	0.00000
	5	0.00	0.00	0.00	0.00000	0.00000	0.00000	62	0.00	0.00	0.00	0.00000	0.00000	0.00000
8	47	0.00	0.00	0.00	0.00000	0.00000	0.00000	72	0.00	0.00	0.00	0.00000	0.00000	0.00000
	16	0.00	0.00	0.00	0.00000	0.00000	0.00000	3	0.00	0.00	0.00	0.00000	0.00000	0.00000
9	76	0.00	0.00	0.00	0.00000	0.00000	0.00000	77	0.00	0.00	0.00	0.00000	0.00000	0.00000
	25	0.00	0.00	0.00	0.00000	0.00000	0.00000	74	0.00	0.00	0.00	0.00000	0.00000	0.00000
10	38	0.00	0.00	0.00	0.00000	0.00000	0.00000	86	0.00	0.00	0.00	0.00000	0.00000	0.00000
	14	0.00	0.00	0.00	0.00000	0.00000	0.00000	71	0.00	0.00	0.00	0.00000	0.00000	0.00000
11	94	0.00	0.00	0.00	0.00000	0.00000	0.00000	95	0.00	0.00	0.00	0.00000	0.00000	0.00000
	18	0.00	0.00	0.00	0.00000	0.00000	0.00000	91	0.00	0.00	0.00	0.00000	0.00000	0.00000
12	102	0.00	0.00	0.00	0.00000	0.00000	0.00000	103	0.00	0.00	0.00	0.00000	0.00000	0.00000
	21	0.00	0.00	0.00	0.00000	0.00000	0.00000	84	0.00	0.00	0.00	0.00000	0.00000	0.00000
13	112	0.00	0.00	0.00	0.00000	0.00000	0.00000	76	0.00	0.00	0.00	0.00000	0.00000	0.00000
	36	0.00	0.00	0.00	0.00000	0.00000	0.00000	25	0.00	0.00	0.00	0.00000	0.00000	0.00000
14	114	0.00	0.00	0.00	0.00000	0.00000	0.00000	112	0.00	0.00	0.00	0.00000	0.00000	0.00000
	35	0.00	0.00	0.00	0.00000	0.00000	0.00000	36	0.00	0.00	0.00	0.00000	0.00000	0.00000
15	24	0.00	0.00	0.00	0.00000	0.00000	0.00000	116	0.00	0.00	0.00	0.00000	0.00000	0.00000
	21	0.00	0.00	0.00	0.00000	0.00000	0.00000	102	0.00	0.00	0.00	0.00000	0.00000	0.00000
16	118	0.00	0.00	0.00	0.00000	0.00000	0.00000	116	0.00	0.00	0.00	0.00000	0.00000	0.00000
	20	0.00	0.00	0.00	0.00000	0.00000	0.00000	24	0.00	0.00	0.00	0.00000	0.00000	0.00000
17	120	0.00	0.00	0.00	0.00000	0.00000	0.00000	121	0.00	0.00	0.00	0.00000	0.00000	0.00000
	9	0.00	0.00	0.00	0.00000	0.00000	0.00000	43	0.00	0.00	0.00	0.00000	0.00000	0.00000
18	10	0.00	0.00	0.00	0.00000	0.00000	0.00000	130	0.00	0.00	0.00	0.00000	0.00000	0.00000
	4	0.00	0.00	0.00	0.00000	0.00000	0.00000	68	0.00	0.00	0.00	0.00000	0.00000	0.00000
19	100	0.00	0.00	0.00	0.00000	0.00000	0.00000	114	0.00	0.00	0.00	0.00000	0.00000	0.00000
	19	0.00	0.00	0.00	0.00000	0.00000	0.00000	35	0.00	0.00	0.00	0.00000	0.00000	0.00000
20	35	0.00	0.00	0.00	0.00000	0.00000	0.00000	149	0.00	0.00	0.00	0.00000	0.00000	0.00000
	19	0.00	0.00	0.00	0.00000	0.00000	0.00000	97	0.00	0.00	0.00	0.00000	0.00000	0.00000
21	132	0.00	0.00	0.00	0.00000	0.00000	0.00000	166	0.00	0.00	0.00	0.00000	0.00000	0.00000
	5	0.00	0.00	0.00	0.00000	0.00000	0.00000	58	0.00	0.00	0.00	0.00000	0.00000	0.00000
22	151	0.00	0.00	0.00	0.00000	0.00000	0.00000	178	0.00	0.00	0.00	0.00000	0.00000	0.00000
	18	0.00	0.00	0.00	0.00000	0.00000	0.00000	93	0.00	0.00	0.00	0.00000	0.00000	0.00000
23	123	0.00	0.00	0.00	0.00000	0.00000	0.00000	190	0.00	0.00	0.00	0.00000	0.00000	0.00000
	2	0.00	0.00	0.00	0.00000	0.00000	0.00000	73	0.00	0.00	0.00	0.00000	0.00000	0.00000
24	53	0.00	0.00	0.00	0.00000	0.00000	0.00000	118	0.00	0.00	0.00	0.00000	0.00000	0.00000
	11	0.00	0.00	0.00	0.00000	0.00000	0.00000	20	0.00	0.00	0.00	0.00000	0.00000	0.00000
25	40	0.00	0.00	0.00	0.00000	0.00000	0.00000	41	0.00	0.00	0.00	0.00000	0.00000	0.00000
	38	0.00	0.00	0.00	0.00000	0.00000	0.00000	39	0.00	0.00	0.00	0.00000	0.00000	0.00000
26	17	0.00	0.00	0.00	0.00000	0.00000	0.00000	12	0.00	0.00	0.00	0.00000	0.00000	0.00000
	40	0.00	0.00	0.00	0.00000	0.00000	0.00000	41	0.00	0.00	0.00	0.00000	0.00000	0.00000
27	44	0.00	0.00	0.00	0.00000	0.00000	0.00000	45	0.00	0.00	0.00	0.00000	0.00000	0.00000
	42	0.00	0.00	0.00	0.00000	0.00000	0.00000	43	0.00	0.00	0.00	0.00000	0.00000	0.00000
28	45	0.00	0.00	0.00	0.00000	0.00000	0.00000	15	0.00	0.00	0.00	0.00000	0.00000	0.00000
	43	0.00	0.00	0.00	0.00000	0.00000	0.00000	9	0.00	0.00	0.00	0.00000	0.00000	0.00000
29	41	0.00	0.00	0.00	0.00000	0.00000	0.00000	45	0.00	0.00	0.00	0.00000	0.00000	0.00000
	39	0.00	0.00	0.00	0.00000	0.00000	0.00000	44	0.00	0.00	0.00	0.00000	0.00000	0.00000
30	12	0.00	0.00	0.00	0.00000	0.00000	0.00000	15	0.00	0.00	0.00	0.00000	0.00000	0.00000
	41	0.00	0.00	0.00	0.00000	0.00000	0.00000	45	0.00	0.00	0.00	0.00000	0.00000	0.00000
31	48	0.00	0.00	0.00	0.00000	0.00000	0.00000	49	0.00	0.00	0.00	0.00000	0.00000	0.00000
	46	0.00	0.00	0.00	0.00000	0.00000	0.00000	47	0.00	0.00	0.00	0.00000	0.00000	0.00000
32	1	0.00	0.00	0.00	0.00000	0.00000	0.00000	8	0.00	0.00	0.00	0.00000	0.00000	0.00000
	48	0.00	0.00	0.00	0.00000	0.00000	0.00000	49	0.00	0.00	0.00	0.00000	0.00000	0.00000
33	51	0.00	0.00	0.00	0.00000	0.00000	0.00000	48	0.00	0.00	0.00	0.00000	0.00000	0.00000
	50	0.00	0.00	0.00	0.00000	0.00000	0.00000	46	0.00	0.00	0.00	0.00000	0.00000	0.00000
34	14	0.00	0.00	0.00	0.00000	0.00000	0.00000	1	0.00	0.00	0.00	0.00000	0.00000	0.00000
	51	0.00	0.00	0.00	0.00000	0.00000	0.00000	48	0.00	0.00	0.00	0.00000	0.00000	0.00000
35	55	0.00	0.00	0.00	0.00000	0.00000	0.00000	56	0.00	0.00	0.00	0.00000	0.00000	0.00000
	52	0.00	0.00	0.00	0.00000	0.00000	0.00000	53	0.00	0.00	0.00	0.00000	0.00000	0.00000
36	56	0.00	0.00	0.00	0.00000	0.00000	0.00000	57	0.00	0.00	0.00	0.00000	0.00000	0.00000
	53	0.00	0.00	0.00	0.00000	0.00000	0.00000	11	0.00	0.00	0.00	0.00000	0.00000	0.00000
37	58	0.00	0.00	0.00	0.00000	0.00000	0.00000	59	0.00	0.00	0.00	0.00000	0.00000	0.00000
	54	0.00	0.00	0.00	0.00000	0.00000	0.00000	55	0.00	0.00	0.00	0.00000	0.00000	0.00000

Documento di proprietà **Snam Rete Gas**. La Società tutelerà i propri diritti in sede civile e penale a termini di legge.

SPOST. Corr. Tors. dir. 90: SHELL

Shell Nro	Nodo N.ro	S1 (mm)	S2 (mm)	S3 (mm)	R1 (rad)	R2 (rad)	R3 (rad)	Nodo N.ro	S1 (mm)	S2 (mm)	S3 (mm)	R1 (rad)	R2 (rad)	R3 (rad)
38	59	0.00	0.00	0.00	0.00000	0.00000	0.00000	60	0.00	0.00	0.00	0.00000	0.00000	0.00000
	55	0.00	0.00	0.00	0.00000	0.00000	0.00000	56	0.00	0.00	0.00	0.00000	0.00000	0.00000
39	60	0.00	0.00	0.00	0.00000	0.00000	0.00000	61	0.00	0.00	0.00	0.00000	0.00000	0.00000
	56	0.00	0.00	0.00	0.00000	0.00000	0.00000	57	0.00	0.00	0.00	0.00000	0.00000	0.00000
40	5	0.00	0.00	0.00	0.00000	0.00000	0.00000	62	0.00	0.00	0.00	0.00000	0.00000	0.00000
	58	0.00	0.00	0.00	0.00000	0.00000	0.00000	59	0.00	0.00	0.00	0.00000	0.00000	0.00000
41	62	0.00	0.00	0.00	0.00000	0.00000	0.00000	63	0.00	0.00	0.00	0.00000	0.00000	0.00000
	59	0.00	0.00	0.00	0.00000	0.00000	0.00000	60	0.00	0.00	0.00	0.00000	0.00000	0.00000
42	63	0.00	0.00	0.00	0.00000	0.00000	0.00000	13	0.00	0.00	0.00	0.00000	0.00000	0.00000
	60	0.00	0.00	0.00	0.00000	0.00000	0.00000	61	0.00	0.00	0.00	0.00000	0.00000	0.00000
43	65	0.00	0.00	0.00	0.00000	0.00000	0.00000	66	0.00	0.00	0.00	0.00000	0.00000	0.00000
	62	0.00	0.00	0.00	0.00000	0.00000	0.00000	63	0.00	0.00	0.00	0.00000	0.00000	0.00000
44	66	0.00	0.00	0.00	0.00000	0.00000	0.00000	67	0.00	0.00	0.00	0.00000	0.00000	0.00000
	63	0.00	0.00	0.00	0.00000	0.00000	0.00000	13	0.00	0.00	0.00	0.00000	0.00000	0.00000
45	68	0.00	0.00	0.00	0.00000	0.00000	0.00000	69	0.00	0.00	0.00	0.00000	0.00000	0.00000
	64	0.00	0.00	0.00	0.00000	0.00000	0.00000	65	0.00	0.00	0.00	0.00000	0.00000	0.00000
46	69	0.00	0.00	0.00	0.00000	0.00000	0.00000	70	0.00	0.00	0.00	0.00000	0.00000	0.00000
	65	0.00	0.00	0.00	0.00000	0.00000	0.00000	66	0.00	0.00	0.00	0.00000	0.00000	0.00000
47	70	0.00	0.00	0.00	0.00000	0.00000	0.00000	71	0.00	0.00	0.00	0.00000	0.00000	0.00000
	66	0.00	0.00	0.00	0.00000	0.00000	0.00000	67	0.00	0.00	0.00	0.00000	0.00000	0.00000
48	4	0.00	0.00	0.00	0.00000	0.00000	0.00000	50	0.00	0.00	0.00	0.00000	0.00000	0.00000
	68	0.00	0.00	0.00	0.00000	0.00000	0.00000	69	0.00	0.00	0.00	0.00000	0.00000	0.00000
49	50	0.00	0.00	0.00	0.00000	0.00000	0.00000	51	0.00	0.00	0.00	0.00000	0.00000	0.00000
	69	0.00	0.00	0.00	0.00000	0.00000	0.00000	70	0.00	0.00	0.00	0.00000	0.00000	0.00000
50	51	0.00	0.00	0.00	0.00000	0.00000	0.00000	14	0.00	0.00	0.00	0.00000	0.00000	0.00000
	70	0.00	0.00	0.00	0.00000	0.00000	0.00000	71	0.00	0.00	0.00	0.00000	0.00000	0.00000
51	49	0.00	0.00	0.00	0.00000	0.00000	0.00000	73	0.00	0.00	0.00	0.00000	0.00000	0.00000
	47	0.00	0.00	0.00	0.00000	0.00000	0.00000	72	0.00	0.00	0.00	0.00000	0.00000	0.00000
52	8	0.00	0.00	0.00	0.00000	0.00000	0.00000	2	0.00	0.00	0.00	0.00000	0.00000	0.00000
	49	0.00	0.00	0.00	0.00000	0.00000	0.00000	73	0.00	0.00	0.00	0.00000	0.00000	0.00000
53	77	0.00	0.00	0.00	0.00000	0.00000	0.00000	78	0.00	0.00	0.00	0.00000	0.00000	0.00000
	74	0.00	0.00	0.00	0.00000	0.00000	0.00000	75	0.00	0.00	0.00	0.00000	0.00000	0.00000
54	78	0.00	0.00	0.00	0.00000	0.00000	0.00000	79	0.00	0.00	0.00	0.00000	0.00000	0.00000
	75	0.00	0.00	0.00	0.00000	0.00000	0.00000	32	0.00	0.00	0.00	0.00000	0.00000	0.00000
55	80	0.00	0.00	0.00	0.00000	0.00000	0.00000	81	0.00	0.00	0.00	0.00000	0.00000	0.00000
	76	0.00	0.00	0.00	0.00000	0.00000	0.00000	77	0.00	0.00	0.00	0.00000	0.00000	0.00000
56	81	0.00	0.00	0.00	0.00000	0.00000	0.00000	82	0.00	0.00	0.00	0.00000	0.00000	0.00000
	77	0.00	0.00	0.00	0.00000	0.00000	0.00000	78	0.00	0.00	0.00	0.00000	0.00000	0.00000
57	82	0.00	0.00	0.00	0.00000	0.00000	0.00000	83	0.00	0.00	0.00	0.00000	0.00000	0.00000
	78	0.00	0.00	0.00	0.00000	0.00000	0.00000	79	0.00	0.00	0.00	0.00000	0.00000	0.00000
58	21	0.00	0.00	0.00	0.00000	0.00000	0.00000	84	0.00	0.00	0.00	0.00000	0.00000	0.00000
	80	0.00	0.00	0.00	0.00000	0.00000	0.00000	81	0.00	0.00	0.00	0.00000	0.00000	0.00000
59	84	0.00	0.00	0.00	0.00000	0.00000	0.00000	85	0.00	0.00	0.00	0.00000	0.00000	0.00000
	81	0.00	0.00	0.00	0.00000	0.00000	0.00000	82	0.00	0.00	0.00	0.00000	0.00000	0.00000
60	85	0.00	0.00	0.00	0.00000	0.00000	0.00000	31	0.00	0.00	0.00	0.00000	0.00000	0.00000
	82	0.00	0.00	0.00	0.00000	0.00000	0.00000	83	0.00	0.00	0.00	0.00000	0.00000	0.00000
61	86	0.00	0.00	0.00	0.00000	0.00000	0.00000	87	0.00	0.00	0.00	0.00000	0.00000	0.00000
	71	0.00	0.00	0.00	0.00000	0.00000	0.00000	67	0.00	0.00	0.00	0.00000	0.00000	0.00000
62	87	0.00	0.00	0.00	0.00000	0.00000	0.00000	88	0.00	0.00	0.00	0.00000	0.00000	0.00000
	67	0.00	0.00	0.00	0.00000	0.00000	0.00000	13	0.00	0.00	0.00	0.00000	0.00000	0.00000
63	40	0.00	0.00	0.00	0.00000	0.00000	0.00000	89	0.00	0.00	0.00	0.00000	0.00000	0.00000
	38	0.00	0.00	0.00	0.00000	0.00000	0.00000	86	0.00	0.00	0.00	0.00000	0.00000	0.00000
64	89	0.00	0.00	0.00	0.00000	0.00000	0.00000	90	0.00	0.00	0.00	0.00000	0.00000	0.00000
	86	0.00	0.00	0.00	0.00000	0.00000	0.00000	87	0.00	0.00	0.00	0.00000	0.00000	0.00000
65	90	0.00	0.00	0.00	0.00000	0.00000	0.00000	91	0.00	0.00	0.00	0.00000	0.00000	0.00000
	87	0.00	0.00	0.00	0.00000	0.00000	0.00000	88	0.00	0.00	0.00	0.00000	0.00000	0.00000
66	17	0.00	0.00	0.00	0.00000	0.00000	0.00000	92	0.00	0.00	0.00	0.00000	0.00000	0.00000
	40	0.00	0.00	0.00	0.00000	0.00000	0.00000	89	0.00	0.00	0.00	0.00000	0.00000	0.00000
67	92	0.00	0.00	0.00	0.00000	0.00000	0.00000	93	0.00	0.00	0.00	0.00000	0.00000	0.00000
	89	0.00	0.00	0.00	0.00000	0.00000	0.00000	90	0.00	0.00	0.00	0.00000	0.00000	0.00000
68	93	0.00	0.00	0.00	0.00000	0.00000	0.00000	18	0.00	0.00	0.00	0.00000	0.00000	0.00000
	90	0.00	0.00	0.00	0.00000	0.00000	0.00000	91	0.00	0.00	0.00	0.00000	0.00000	0.00000
69	95	0.00	0.00	0.00	0.00000	0.00000	0.00000	96	0.00	0.00	0.00	0.00000	0.00000	0.00000
	91	0.00	0.00	0.00	0.00000	0.00000	0.00000	88	0.00	0.00	0.00	0.00000	0.00000	0.00000
70	96	0.00	0.00	0.00	0.00000	0.00000	0.00000	61	0.00	0.00	0.00	0.00000	0.00000	0.00000
	88	0.00	0.00	0.00	0.00000	0.00000	0.00000	13	0.00	0.00	0.00	0.00000	0.00000	0.00000
71	97	0.00	0.00	0.00	0.00000	0.00000	0.00000	98	0.00	0.00	0.00	0.00000	0.00000	0.00000
	94	0.00	0.00	0.00	0.00000	0.00000	0.00000	95	0.00	0.00	0.00	0.00000	0.00000	0.00000
72	98	0.00	0.00	0.00	0.00000	0.00000	0.00000	99	0.00	0.00	0.00	0.00000	0.00000	0.00000
	95	0.00	0.00	0.00	0.00000	0.00000	0.00000	96	0.00	0.00	0.00	0.00000	0.00000	0.00000
73	99	0.00	0.00	0.00	0.00000	0.00000	0.00000	57	0.00	0.00	0.00	0.00000	0.00000	0.00000
	96	0.00	0.00	0.00	0.00000	0.00000	0.00000	61	0.00	0.00	0.00	0.00000	0.00000	0.00000
74	19	0.00	0.00	0.00	0.00000	0.00000	0.00000	100	0.00	0.00	0.00	0.00000	0.00000	0.00000
	97	0.00	0.00	0.00	0.00000	0.00000	0.00000	98	0.00	0.00	0.00	0.00000	0.00000	0.00000
75	100	0.00	0.00	0.00	0.00000	0.00000	0.00000	101	0.00	0.00	0.00	0.00000	0.00000	0.00000
	98	0.00	0.00	0.00	0.00000	0.00000	0.00000	99	0.00	0.00	0.00	0.00000	0.00000	0.00000
76	101	0.00	0.00	0.00	0.00000	0.00000	0.00000	11	0.00	0.00	0.00	0.00000	0.00000	0.00000
	99	0.00	0.00	0.00	0.00000	0.00000	0.00000	57	0.00	0.00	0.00	0.00000	0.00000	0.00000
77	103	0.00	0.00	0.00	0.00000	0.00000	0.00000	104	0.00	0.00	0.00	0.00000	0.00000	0.00000
	84	0.00	0.00	0.00	0.00000	0.00000	0.00000	85	0.00	0.00	0.00	0.00000	0.00000	0.00000

Documento di proprietà **Snam Rete Gas**. La Società tutelerà i propri diritti in sede civile e penale a termini di legge.

SPOST. Corr. Tors. dir. 90: SHELL

Shell Nro	Nodo N.ro	S1 (mm)	S2 (mm)	S3 (mm)	R1 (rad)	R2 (rad)	R3 (rad)	Nodo N.ro	S1 (mm)	S2 (mm)	S3 (mm)	R1 (rad)	R2 (rad)	R3 (rad)
78	104	0.00	0.00	0.00	0.00000	0.00000	0.00000	105	0.00	0.00	0.00	0.00000	0.00000	0.00000
	85	0.00	0.00	0.00	0.00000	0.00000	0.00000	31	0.00	0.00	0.00	0.00000	0.00000	0.00000
79	106	0.00	0.00	0.00	0.00000	0.00000	0.00000	107	0.00	0.00	0.00	0.00000	0.00000	0.00000
	102	0.00	0.00	0.00	0.00000	0.00000	0.00000	103	0.00	0.00	0.00	0.00000	0.00000	0.00000
80	107	0.00	0.00	0.00	0.00000	0.00000	0.00000	108	0.00	0.00	0.00	0.00000	0.00000	0.00000
	103	0.00	0.00	0.00	0.00000	0.00000	0.00000	104	0.00	0.00	0.00	0.00000	0.00000	0.00000
81	108	0.00	0.00	0.00	0.00000	0.00000	0.00000	109	0.00	0.00	0.00	0.00000	0.00000	0.00000
	104	0.00	0.00	0.00	0.00000	0.00000	0.00000	105	0.00	0.00	0.00	0.00000	0.00000	0.00000
82	22	0.00	0.00	0.00	0.00000	0.00000	0.00000	110	0.00	0.00	0.00	0.00000	0.00000	0.00000
	106	0.00	0.00	0.00	0.00000	0.00000	0.00000	107	0.00	0.00	0.00	0.00000	0.00000	0.00000
83	110	0.00	0.00	0.00	0.00000	0.00000	0.00000	111	0.00	0.00	0.00	0.00000	0.00000	0.00000
	107	0.00	0.00	0.00	0.00000	0.00000	0.00000	108	0.00	0.00	0.00	0.00000	0.00000	0.00000
84	111	0.00	0.00	0.00	0.00000	0.00000	0.00000	30	0.00	0.00	0.00	0.00000	0.00000	0.00000
	108	0.00	0.00	0.00	0.00000	0.00000	0.00000	109	0.00	0.00	0.00	0.00000	0.00000	0.00000
85	113	0.00	0.00	0.00	0.00000	0.00000	0.00000	80	0.00	0.00	0.00	0.00000	0.00000	0.00000
	112	0.00	0.00	0.00	0.00000	0.00000	0.00000	76	0.00	0.00	0.00	0.00000	0.00000	0.00000
86	23	0.00	0.00	0.00	0.00000	0.00000	0.00000	21	0.00	0.00	0.00	0.00000	0.00000	0.00000
	113	0.00	0.00	0.00	0.00000	0.00000	0.00000	80	0.00	0.00	0.00	0.00000	0.00000	0.00000
87	115	0.00	0.00	0.00	0.00000	0.00000	0.00000	113	0.00	0.00	0.00	0.00000	0.00000	0.00000
	114	0.00	0.00	0.00	0.00000	0.00000	0.00000	112	0.00	0.00	0.00	0.00000	0.00000	0.00000
88	20	0.00	0.00	0.00	0.00000	0.00000	0.00000	23	0.00	0.00	0.00	0.00000	0.00000	0.00000
	115	0.00	0.00	0.00	0.00000	0.00000	0.00000	113	0.00	0.00	0.00	0.00000	0.00000	0.00000
89	116	0.00	0.00	0.00	0.00000	0.00000	0.00000	117	0.00	0.00	0.00	0.00000	0.00000	0.00000
	102	0.00	0.00	0.00	0.00000	0.00000	0.00000	106	0.00	0.00	0.00	0.00000	0.00000	0.00000
90	117	0.00	0.00	0.00	0.00000	0.00000	0.00000	37	0.00	0.00	0.00	0.00000	0.00000	0.00000
	106	0.00	0.00	0.00	0.00000	0.00000	0.00000	22	0.00	0.00	0.00	0.00000	0.00000	0.00000
91	119	0.00	0.00	0.00	0.00000	0.00000	0.00000	117	0.00	0.00	0.00	0.00000	0.00000	0.00000
	118	0.00	0.00	0.00	0.00000	0.00000	0.00000	116	0.00	0.00	0.00	0.00000	0.00000	0.00000
92	34	0.00	0.00	0.00	0.00000	0.00000	0.00000	37	0.00	0.00	0.00	0.00000	0.00000	0.00000
	119	0.00	0.00	0.00	0.00000	0.00000	0.00000	117	0.00	0.00	0.00	0.00000	0.00000	0.00000
93	121	0.00	0.00	0.00	0.00000	0.00000	0.00000	122	0.00	0.00	0.00	0.00000	0.00000	0.00000
	43	0.00	0.00	0.00	0.00000	0.00000	0.00000	42	0.00	0.00	0.00	0.00000	0.00000	0.00000
94	122	0.00	0.00	0.00	0.00000	0.00000	0.00000	123	0.00	0.00	0.00	0.00000	0.00000	0.00000
	42	0.00	0.00	0.00	0.00000	0.00000	0.00000	2	0.00	0.00	0.00	0.00000	0.00000	0.00000
95	124	0.00	0.00	0.00	0.00000	0.00000	0.00000	125	0.00	0.00	0.00	0.00000	0.00000	0.00000
	120	0.00	0.00	0.00	0.00000	0.00000	0.00000	121	0.00	0.00	0.00	0.00000	0.00000	0.00000
96	125	0.00	0.00	0.00	0.00000	0.00000	0.00000	126	0.00	0.00	0.00	0.00000	0.00000	0.00000
	121	0.00	0.00	0.00	0.00000	0.00000	0.00000	122	0.00	0.00	0.00	0.00000	0.00000	0.00000
97	126	0.00	0.00	0.00	0.00000	0.00000	0.00000	127	0.00	0.00	0.00	0.00000	0.00000	0.00000
	122	0.00	0.00	0.00	0.00000	0.00000	0.00000	123	0.00	0.00	0.00	0.00000	0.00000	0.00000
98	26	0.00	0.00	0.00	0.00000	0.00000	0.00000	128	0.00	0.00	0.00	0.00000	0.00000	0.00000
	124	0.00	0.00	0.00	0.00000	0.00000	0.00000	125	0.00	0.00	0.00	0.00000	0.00000	0.00000
99	128	0.00	0.00	0.00	0.00000	0.00000	0.00000	129	0.00	0.00	0.00	0.00000	0.00000	0.00000
	125	0.00	0.00	0.00	0.00000	0.00000	0.00000	126	0.00	0.00	0.00	0.00000	0.00000	0.00000
100	129	0.00	0.00	0.00	0.00000	0.00000	0.00000	27	0.00	0.00	0.00	0.00000	0.00000	0.00000
	126	0.00	0.00	0.00	0.00000	0.00000	0.00000	127	0.00	0.00	0.00	0.00000	0.00000	0.00000
101	130	0.00	0.00	0.00	0.00000	0.00000	0.00000	131	0.00	0.00	0.00	0.00000	0.00000	0.00000
	68	0.00	0.00	0.00	0.00000	0.00000	0.00000	64	0.00	0.00	0.00	0.00000	0.00000	0.00000
102	131	0.00	0.00	0.00	0.00000	0.00000	0.00000	132	0.00	0.00	0.00	0.00000	0.00000	0.00000
	64	0.00	0.00	0.00	0.00000	0.00000	0.00000	5	0.00	0.00	0.00	0.00000	0.00000	0.00000
103	16	0.00	0.00	0.00	0.00000	0.00000	0.00000	133	0.00	0.00	0.00	0.00000	0.00000	0.00000
	10	0.00	0.00	0.00	0.00000	0.00000	0.00000	130	0.00	0.00	0.00	0.00000	0.00000	0.00000
104	133	0.00	0.00	0.00	0.00000	0.00000	0.00000	134	0.00	0.00	0.00	0.00000	0.00000	0.00000
	130	0.00	0.00	0.00	0.00000	0.00000	0.00000	131	0.00	0.00	0.00	0.00000	0.00000	0.00000
105	134	0.00	0.00	0.00	0.00000	0.00000	0.00000	135	0.00	0.00	0.00	0.00000	0.00000	0.00000
	131	0.00	0.00	0.00	0.00000	0.00000	0.00000	132	0.00	0.00	0.00	0.00000	0.00000	0.00000
106	3	0.00	0.00	0.00	0.00000	0.00000	0.00000	136	0.00	0.00	0.00	0.00000	0.00000	0.00000
	16	0.00	0.00	0.00	0.00000	0.00000	0.00000	133	0.00	0.00	0.00	0.00000	0.00000	0.00000
107	136	0.00	0.00	0.00	0.00000	0.00000	0.00000	137	0.00	0.00	0.00	0.00000	0.00000	0.00000
	133	0.00	0.00	0.00	0.00000	0.00000	0.00000	134	0.00	0.00	0.00	0.00000	0.00000	0.00000
108	137	0.00	0.00	0.00	0.00000	0.00000	0.00000	138	0.00	0.00	0.00	0.00000	0.00000	0.00000
	134	0.00	0.00	0.00	0.00000	0.00000	0.00000	135	0.00	0.00	0.00	0.00000	0.00000	0.00000
109	139	0.00	0.00	0.00	0.00000	0.00000	0.00000	140	0.00	0.00	0.00	0.00000	0.00000	0.00000
	3	0.00	0.00	0.00	0.00000	0.00000	0.00000	136	0.00	0.00	0.00	0.00000	0.00000	0.00000
110	140	0.00	0.00	0.00	0.00000	0.00000	0.00000	141	0.00	0.00	0.00	0.00000	0.00000	0.00000
	136	0.00	0.00	0.00	0.00000	0.00000	0.00000	137	0.00	0.00	0.00	0.00000	0.00000	0.00000
111	141	0.00	0.00	0.00	0.00000	0.00000	0.00000	142	0.00	0.00	0.00	0.00000	0.00000	0.00000
	137	0.00	0.00	0.00	0.00000	0.00000	0.00000	138	0.00	0.00	0.00	0.00000	0.00000	0.00000
112	143	0.00	0.00	0.00	0.00000	0.00000	0.00000	144	0.00	0.00	0.00	0.00000	0.00000	0.00000
	139	0.00	0.00	0.00	0.00000	0.00000	0.00000	140	0.00	0.00	0.00	0.00000	0.00000	0.00000
113	144	0.00	0.00	0.00	0.00000	0.00000	0.00000	145	0.00	0.00	0.00	0.00000	0.00000	0.00000
	140	0.00	0.00	0.00	0.00000	0.00000	0.00000	141	0.00	0.00	0.00	0.00000	0.00000	0.00000
114	145	0.00	0.00	0.00	0.00000	0.00000	0.00000	146	0.00	0.00	0.00	0.00000	0.00000	0.00000
	141	0.00	0.00	0.00	0.00000	0.00000	0.00000	142	0.00	0.00	0.00	0.00000	0.00000	0.00000
115	28	0.00	0.00	0.00	0.00000	0.00000	0.00000	147	0.00	0.00	0.00	0.00000	0.00000	0.00000
	143	0.00	0.00	0.00	0.00000	0.00000	0.00000	144	0.00	0.00	0.00	0.00000	0.00000	0.00000
116	147	0.00	0.00	0.00	0.00000	0.00000	0.00000	148	0.00	0.00	0.00	0.00000	0.00000	0.00000
	144	0.00	0.00	0.00	0.00000	0.00000	0.00000	145	0.00	0.00	0.00	0.00000	0.00000	0.00000
117	148	0.00	0.00	0.00	0.00000	0.00000	0.00000	29	0.00	0.00	0.00	0.00000	0.00000	0.00000
	145	0.00	0.00	0.00	0.00000	0.00000	0.00000	146	0.00	0.00	0.00	0.00000	0.00000	0.00000

Documento di proprietà **Snam Rete Gas**. La Società tutelerà i propri diritti in sede civile e penale a termini di legge.

SPOST. Corr. Tors. dir. 90: SHELL

Shell Nro	Nodo N.ro	S1 (mm)	S2 (mm)	S3 (mm)	R1 (rad)	R2 (rad)	R3 (rad)	Nodo N.ro	S1 (mm)	S2 (mm)	S3 (mm)	R1 (rad)	R2 (rad)	R3 (rad)
118	101	0.00	0.00	0.00	0.00000	0.00000	0.00000	115	0.00	0.00	0.00	0.00000	0.00000	0.00000
	100	0.00	0.00	0.00	0.00000	0.00000	0.00000	114	0.00	0.00	0.00	0.00000	0.00000	0.00000
119	11	0.00	0.00	0.00	0.00000	0.00000	0.00000	20	0.00	0.00	0.00	0.00000	0.00000	0.00000
	101	0.00	0.00	0.00	0.00000	0.00000	0.00000	115	0.00	0.00	0.00	0.00000	0.00000	0.00000
120	149	0.00	0.00	0.00	0.00000	0.00000	0.00000	150	0.00	0.00	0.00	0.00000	0.00000	0.00000
	97	0.00	0.00	0.00	0.00000	0.00000	0.00000	94	0.00	0.00	0.00	0.00000	0.00000	0.00000
121	150	0.00	0.00	0.00	0.00000	0.00000	0.00000	151	0.00	0.00	0.00	0.00000	0.00000	0.00000
	94	0.00	0.00	0.00	0.00000	0.00000	0.00000	18	0.00	0.00	0.00	0.00000	0.00000	0.00000
122	36	0.00	0.00	0.00	0.00000	0.00000	0.00000	152	0.00	0.00	0.00	0.00000	0.00000	0.00000
	35	0.00	0.00	0.00	0.00000	0.00000	0.00000	149	0.00	0.00	0.00	0.00000	0.00000	0.00000
123	152	0.00	0.00	0.00	0.00000	0.00000	0.00000	153	0.00	0.00	0.00	0.00000	0.00000	0.00000
	149	0.00	0.00	0.00	0.00000	0.00000	0.00000	150	0.00	0.00	0.00	0.00000	0.00000	0.00000
124	153	0.00	0.00	0.00	0.00000	0.00000	0.00000	154	0.00	0.00	0.00	0.00000	0.00000	0.00000
	150	0.00	0.00	0.00	0.00000	0.00000	0.00000	151	0.00	0.00	0.00	0.00000	0.00000	0.00000
125	25	0.00	0.00	0.00	0.00000	0.00000	0.00000	155	0.00	0.00	0.00	0.00000	0.00000	0.00000
	36	0.00	0.00	0.00	0.00000	0.00000	0.00000	152	0.00	0.00	0.00	0.00000	0.00000	0.00000
126	155	0.00	0.00	0.00	0.00000	0.00000	0.00000	156	0.00	0.00	0.00	0.00000	0.00000	0.00000
	152	0.00	0.00	0.00	0.00000	0.00000	0.00000	153	0.00	0.00	0.00	0.00000	0.00000	0.00000
127	156	0.00	0.00	0.00	0.00000	0.00000	0.00000	157	0.00	0.00	0.00	0.00000	0.00000	0.00000
	153	0.00	0.00	0.00	0.00000	0.00000	0.00000	154	0.00	0.00	0.00	0.00000	0.00000	0.00000
128	74	0.00	0.00	0.00	0.00000	0.00000	0.00000	158	0.00	0.00	0.00	0.00000	0.00000	0.00000
	25	0.00	0.00	0.00	0.00000	0.00000	0.00000	155	0.00	0.00	0.00	0.00000	0.00000	0.00000
129	158	0.00	0.00	0.00	0.00000	0.00000	0.00000	159	0.00	0.00	0.00	0.00000	0.00000	0.00000
	155	0.00	0.00	0.00	0.00000	0.00000	0.00000	156	0.00	0.00	0.00	0.00000	0.00000	0.00000
130	159	0.00	0.00	0.00	0.00000	0.00000	0.00000	160	0.00	0.00	0.00	0.00000	0.00000	0.00000
	156	0.00	0.00	0.00	0.00000	0.00000	0.00000	157	0.00	0.00	0.00	0.00000	0.00000	0.00000
131	75	0.00	0.00	0.00	0.00000	0.00000	0.00000	161	0.00	0.00	0.00	0.00000	0.00000	0.00000
	74	0.00	0.00	0.00	0.00000	0.00000	0.00000	158	0.00	0.00	0.00	0.00000	0.00000	0.00000
132	161	0.00	0.00	0.00	0.00000	0.00000	0.00000	162	0.00	0.00	0.00	0.00000	0.00000	0.00000
	158	0.00	0.00	0.00	0.00000	0.00000	0.00000	159	0.00	0.00	0.00	0.00000	0.00000	0.00000
133	162	0.00	0.00	0.00	0.00000	0.00000	0.00000	163	0.00	0.00	0.00	0.00000	0.00000	0.00000
	159	0.00	0.00	0.00	0.00000	0.00000	0.00000	160	0.00	0.00	0.00	0.00000	0.00000	0.00000
134	32	0.00	0.00	0.00	0.00000	0.00000	0.00000	164	0.00	0.00	0.00	0.00000	0.00000	0.00000
	75	0.00	0.00	0.00	0.00000	0.00000	0.00000	161	0.00	0.00	0.00	0.00000	0.00000	0.00000
135	164	0.00	0.00	0.00	0.00000	0.00000	0.00000	165	0.00	0.00	0.00	0.00000	0.00000	0.00000
	161	0.00	0.00	0.00	0.00000	0.00000	0.00000	162	0.00	0.00	0.00	0.00000	0.00000	0.00000
136	165	0.00	0.00	0.00	0.00000	0.00000	0.00000	33	0.00	0.00	0.00	0.00000	0.00000	0.00000
	162	0.00	0.00	0.00	0.00000	0.00000	0.00000	163	0.00	0.00	0.00	0.00000	0.00000	0.00000
137	166	0.00	0.00	0.00	0.00000	0.00000	0.00000	167	0.00	0.00	0.00	0.00000	0.00000	0.00000
	58	0.00	0.00	0.00	0.00000	0.00000	0.00000	54	0.00	0.00	0.00	0.00000	0.00000	0.00000
138	167	0.00	0.00	0.00	0.00000	0.00000	0.00000	34	0.00	0.00	0.00	0.00000	0.00000	0.00000
	54	0.00	0.00	0.00	0.00000	0.00000	0.00000	7	0.00	0.00	0.00	0.00000	0.00000	0.00000
139	135	0.00	0.00	0.00	0.00000	0.00000	0.00000	168	0.00	0.00	0.00	0.00000	0.00000	0.00000
	132	0.00	0.00	0.00	0.00000	0.00000	0.00000	166	0.00	0.00	0.00	0.00000	0.00000	0.00000
140	168	0.00	0.00	0.00	0.00000	0.00000	0.00000	169	0.00	0.00	0.00	0.00000	0.00000	0.00000
	166	0.00	0.00	0.00	0.00000	0.00000	0.00000	167	0.00	0.00	0.00	0.00000	0.00000	0.00000
141	169	0.00	0.00	0.00	0.00000	0.00000	0.00000	37	0.00	0.00	0.00	0.00000	0.00000	0.00000
	167	0.00	0.00	0.00	0.00000	0.00000	0.00000	34	0.00	0.00	0.00	0.00000	0.00000	0.00000
142	138	0.00	0.00	0.00	0.00000	0.00000	0.00000	170	0.00	0.00	0.00	0.00000	0.00000	0.00000
	135	0.00	0.00	0.00	0.00000	0.00000	0.00000	168	0.00	0.00	0.00	0.00000	0.00000	0.00000
143	170	0.00	0.00	0.00	0.00000	0.00000	0.00000	171	0.00	0.00	0.00	0.00000	0.00000	0.00000
	168	0.00	0.00	0.00	0.00000	0.00000	0.00000	169	0.00	0.00	0.00	0.00000	0.00000	0.00000
144	171	0.00	0.00	0.00	0.00000	0.00000	0.00000	22	0.00	0.00	0.00	0.00000	0.00000	0.00000
	169	0.00	0.00	0.00	0.00000	0.00000	0.00000	37	0.00	0.00	0.00	0.00000	0.00000	0.00000
145	142	0.00	0.00	0.00	0.00000	0.00000	0.00000	172	0.00	0.00	0.00	0.00000	0.00000	0.00000
	138	0.00	0.00	0.00	0.00000	0.00000	0.00000	170	0.00	0.00	0.00	0.00000	0.00000	0.00000
146	172	0.00	0.00	0.00	0.00000	0.00000	0.00000	173	0.00	0.00	0.00	0.00000	0.00000	0.00000
	170	0.00	0.00	0.00	0.00000	0.00000	0.00000	171	0.00	0.00	0.00	0.00000	0.00000	0.00000
147	173	0.00	0.00	0.00	0.00000	0.00000	0.00000	110	0.00	0.00	0.00	0.00000	0.00000	0.00000
	171	0.00	0.00	0.00	0.00000	0.00000	0.00000	22	0.00	0.00	0.00	0.00000	0.00000	0.00000
148	146	0.00	0.00	0.00	0.00000	0.00000	0.00000	174	0.00	0.00	0.00	0.00000	0.00000	0.00000
	142	0.00	0.00	0.00	0.00000	0.00000	0.00000	172	0.00	0.00	0.00	0.00000	0.00000	0.00000
149	174	0.00	0.00	0.00	0.00000	0.00000	0.00000	175	0.00	0.00	0.00	0.00000	0.00000	0.00000
	172	0.00	0.00	0.00	0.00000	0.00000	0.00000	173	0.00	0.00	0.00	0.00000	0.00000	0.00000
150	175	0.00	0.00	0.00	0.00000	0.00000	0.00000	111	0.00	0.00	0.00	0.00000	0.00000	0.00000
	173	0.00	0.00	0.00	0.00000	0.00000	0.00000	110	0.00	0.00	0.00	0.00000	0.00000	0.00000
151	29	0.00	0.00	0.00	0.00000	0.00000	0.00000	176	0.00	0.00	0.00	0.00000	0.00000	0.00000
	146	0.00	0.00	0.00	0.00000	0.00000	0.00000	174	0.00	0.00	0.00	0.00000	0.00000	0.00000
152	176	0.00	0.00	0.00	0.00000	0.00000	0.00000	177	0.00	0.00	0.00	0.00000	0.00000	0.00000
	174	0.00	0.00	0.00	0.00000	0.00000	0.00000	175	0.00	0.00	0.00	0.00000	0.00000	0.00000
153	177	0.00	0.00	0.00	0.00000	0.00000	0.00000	30	0.00	0.00	0.00	0.00000	0.00000	0.00000
	175	0.00	0.00	0.00	0.00000	0.00000	0.00000	111	0.00	0.00	0.00	0.00000	0.00000	0.00000
154	178	0.00	0.00	0.00	0.00000	0.00000	0.00000	179	0.00	0.00	0.00	0.00000	0.00000	0.00000
	93	0.00	0.00	0.00	0.00000	0.00000	0.00000	92	0.00	0.00	0.00	0.00000	0.00000	0.00000
155	179	0.00	0.00	0.00	0.00000	0.00000	0.00000	12	0.00	0.00	0.00	0.00000	0.00000	0.00000
	92	0.00	0.00	0.00	0.00000	0.00000	0.00000	17	0.00	0.00	0.00	0.00000	0.00000	0.00000
156	154	0.00	0.00	0.00	0.00000	0.00000	0.00000	180	0.00	0.00	0.00	0.00000	0.00000	0.00000
	151	0.00	0.00	0.00	0.00000	0.00000	0.00000	178	0.00	0.00	0.00	0.00000	0.00000	0.00000
157	180	0.00	0.00	0.00	0.00000	0.00000	0.00000	181	0.00	0.00	0.00	0.00000	0.00000	0.00000
	178	0.00	0.00	0.00	0.00000	0.00000	0.00000	179	0.00	0.00	0.00	0.00000	0.00000	0.00000

Documento di proprietà **Snam Rete Gas**. La Società tutelerà i propri diritti in sede civile e penale a termini di legge.

SPOST. Corr. Tors. dir. 90: SHELL

Shell Nro	Nodo N.ro	S1 (mm)	S2 (mm)	S3 (mm)	R1 (rad)	R2 (rad)	R3 (rad)	Nodo N.ro	S1 (mm)	S2 (mm)	S3 (mm)	R1 (rad)	R2 (rad)	R3 (rad)
158	181	0.00	0.00	0.00	0.00000	0.00000	0.00000	15	0.00	0.00	0.00	0.00000	0.00000	0.00000
	179	0.00	0.00	0.00	0.00000	0.00000	0.00000	12	0.00	0.00	0.00	0.00000	0.00000	0.00000
159	157	0.00	0.00	0.00	0.00000	0.00000	0.00000	182	0.00	0.00	0.00	0.00000	0.00000	0.00000
	154	0.00	0.00	0.00	0.00000	0.00000	0.00000	180	0.00	0.00	0.00	0.00000	0.00000	0.00000
160	182	0.00	0.00	0.00	0.00000	0.00000	0.00000	183	0.00	0.00	0.00	0.00000	0.00000	0.00000
	180	0.00	0.00	0.00	0.00000	0.00000	0.00000	181	0.00	0.00	0.00	0.00000	0.00000	0.00000
161	183	0.00	0.00	0.00	0.00000	0.00000	0.00000	9	0.00	0.00	0.00	0.00000	0.00000	0.00000
	181	0.00	0.00	0.00	0.00000	0.00000	0.00000	15	0.00	0.00	0.00	0.00000	0.00000	0.00000
162	160	0.00	0.00	0.00	0.00000	0.00000	0.00000	184	0.00	0.00	0.00	0.00000	0.00000	0.00000
	157	0.00	0.00	0.00	0.00000	0.00000	0.00000	182	0.00	0.00	0.00	0.00000	0.00000	0.00000
163	184	0.00	0.00	0.00	0.00000	0.00000	0.00000	185	0.00	0.00	0.00	0.00000	0.00000	0.00000
	182	0.00	0.00	0.00	0.00000	0.00000	0.00000	183	0.00	0.00	0.00	0.00000	0.00000	0.00000
164	185	0.00	0.00	0.00	0.00000	0.00000	0.00000	120	0.00	0.00	0.00	0.00000	0.00000	0.00000
	183	0.00	0.00	0.00	0.00000	0.00000	0.00000	9	0.00	0.00	0.00	0.00000	0.00000	0.00000
165	163	0.00	0.00	0.00	0.00000	0.00000	0.00000	186	0.00	0.00	0.00	0.00000	0.00000	0.00000
	160	0.00	0.00	0.00	0.00000	0.00000	0.00000	184	0.00	0.00	0.00	0.00000	0.00000	0.00000
166	186	0.00	0.00	0.00	0.00000	0.00000	0.00000	187	0.00	0.00	0.00	0.00000	0.00000	0.00000
	184	0.00	0.00	0.00	0.00000	0.00000	0.00000	185	0.00	0.00	0.00	0.00000	0.00000	0.00000
167	187	0.00	0.00	0.00	0.00000	0.00000	0.00000	124	0.00	0.00	0.00	0.00000	0.00000	0.00000
	185	0.00	0.00	0.00	0.00000	0.00000	0.00000	120	0.00	0.00	0.00	0.00000	0.00000	0.00000
168	33	0.00	0.00	0.00	0.00000	0.00000	0.00000	188	0.00	0.00	0.00	0.00000	0.00000	0.00000
	163	0.00	0.00	0.00	0.00000	0.00000	0.00000	186	0.00	0.00	0.00	0.00000	0.00000	0.00000
169	188	0.00	0.00	0.00	0.00000	0.00000	0.00000	189	0.00	0.00	0.00	0.00000	0.00000	0.00000
	186	0.00	0.00	0.00	0.00000	0.00000	0.00000	187	0.00	0.00	0.00	0.00000	0.00000	0.00000
170	189	0.00	0.00	0.00	0.00000	0.00000	0.00000	26	0.00	0.00	0.00	0.00000	0.00000	0.00000
	187	0.00	0.00	0.00	0.00000	0.00000	0.00000	124	0.00	0.00	0.00	0.00000	0.00000	0.00000
171	190	0.00	0.00	0.00	0.00000	0.00000	0.00000	191	0.00	0.00	0.00	0.00000	0.00000	0.00000
	73	0.00	0.00	0.00	0.00000	0.00000	0.00000	72	0.00	0.00	0.00	0.00000	0.00000	0.00000
172	191	0.00	0.00	0.00	0.00000	0.00000	0.00000	139	0.00	0.00	0.00	0.00000	0.00000	0.00000
	72	0.00	0.00	0.00	0.00000	0.00000	0.00000	3	0.00	0.00	0.00	0.00000	0.00000	0.00000
173	127	0.00	0.00	0.00	0.00000	0.00000	0.00000	192	0.00	0.00	0.00	0.00000	0.00000	0.00000
	123	0.00	0.00	0.00	0.00000	0.00000	0.00000	190	0.00	0.00	0.00	0.00000	0.00000	0.00000
174	192	0.00	0.00	0.00	0.00000	0.00000	0.00000	193	0.00	0.00	0.00	0.00000	0.00000	0.00000
	190	0.00	0.00	0.00	0.00000	0.00000	0.00000	191	0.00	0.00	0.00	0.00000	0.00000	0.00000
175	193	0.00	0.00	0.00	0.00000	0.00000	0.00000	143	0.00	0.00	0.00	0.00000	0.00000	0.00000
	191	0.00	0.00	0.00	0.00000	0.00000	0.00000	139	0.00	0.00	0.00	0.00000	0.00000	0.00000
176	27	0.00	0.00	0.00	0.00000	0.00000	0.00000	194	0.00	0.00	0.00	0.00000	0.00000	0.00000
	127	0.00	0.00	0.00	0.00000	0.00000	0.00000	192	0.00	0.00	0.00	0.00000	0.00000	0.00000
177	194	0.00	0.00	0.00	0.00000	0.00000	0.00000	195	0.00	0.00	0.00	0.00000	0.00000	0.00000
	192	0.00	0.00	0.00	0.00000	0.00000	0.00000	193	0.00	0.00	0.00	0.00000	0.00000	0.00000
178	195	0.00	0.00	0.00	0.00000	0.00000	0.00000	28	0.00	0.00	0.00	0.00000	0.00000	0.00000
	193	0.00	0.00	0.00	0.00000	0.00000	0.00000	143	0.00	0.00	0.00	0.00000	0.00000	0.00000
179	52	0.00	0.00	0.00	0.00000	0.00000	0.00000	119	0.00	0.00	0.00	0.00000	0.00000	0.00000
	53	0.00	0.00	0.00	0.00000	0.00000	0.00000	118	0.00	0.00	0.00	0.00000	0.00000	0.00000
180	7	0.00	0.00	0.00	0.00000	0.00000	0.00000	34	0.00	0.00	0.00	0.00000	0.00000	0.00000
	52	0.00	0.00	0.00	0.00000	0.00000	0.00000	119	0.00	0.00	0.00	0.00000	0.00000	0.00000

S.L.U. - AZIONI S.L.V. -VERIFICA PIASTRE - QUOTA: 0 ELEMENTO: 1

Quo N.r	P. Nr	Nod3d N.ro	Nx N/m	Ny N/m	Txy N/m	Mx N*m /m	My N*m /m	Mxy N*m /m	Molt Direz. X	x/d	Molt Direz. Y	x/d	Ax s	Ay s	Ax i	Ay i	Atag	σt N/mmq	eta mm	Fpunz. N	FpnzLi N	Apunz cmq
													-------- cmq /m-------									
0	1	5	0	0	0	4744	34301	1456	21.8	0.1	3.0	0.10	7.7	7.7	7.7	7.7	0.0	0.08	-.06			
0	1	7	0	0	0	4882	-4948	-3118	21.2	0.1	20.9	0.10	7.7	7.7	7.7	7.7	0.0	0.09	-.06			
0	1	11	0	0	0	25195	19828	-216	4.1	0.1	5.2	0.10	7.7	7.7	7.7	7.7	0.0	0.09	-.06			
0	1	13	0	0	0	-19685	-17384	50	5.3	0.1	6.0	0.10	7.7	7.7	7.7	7.7	0.0	0.06	-.04			
0	1	14	0	0	0	25325	19911	204	4.1	0.1	5.2	0.10	7.7	7.7	7.7	7.7	0.0	0.09	-.06			
0	1	18	0	0	0	4811	33797	-357	21.5	0.1	3.1	0.10	7.7	7.7	7.7	7.7	0.0	0.08	-.05			
0	1	38	0	0	0	24424	9807	-7134	4.2	0.1	10.5	0.10	7.7	7.7	7.7	7.7	0.0	0.09	-.06			
0	1	58	0	0	0	6025	31695	-2110	17.2	0.1	3.3	0.10	7.7	7.7	7.7	7.7	0.0	0.09	-.06			
0	1	60	0	0	0	-19231	-16394	-4369	5.4	0.1	6.3	0.10	7.7	7.7	7.7	7.7	0.0	0.07	-.04			
0	1	64	0	0	0	6398	30508	2354	16.2	0.1	3.4	0.10	7.7	7.7	7.7	7.7	0.0	0.09	-.06			
0	1	87	0	0	0	-19354	-16567	-4721	5.3	0.1	6.2	0.10	7.7	7.7	7.7	7.7	0.0	0.07	-.04			
0	1	94	0	0	0	6009	31123	1942	17.2	0.1	3.3	0.10	7.7	7.7	7.7	7.7	0.0	0.08	-.05			
0	1	96	0	0	0	-19386	-16693	4084	5.3	0.1	6.2	0.10	7.7	7.7	7.7	7.7	0.0	0.06	-.04			

S.L.U. - AZIONI S.L.D. -VERIFICA PIASTRE - QUOTA: 0 ELEMENTO: 1

Quo N.r	P. Nr	Nod3d N.ro	Nx N/m	Ny N/m	Txy N/m	Mx N*m /m	My N*m /m	Mxy N*m /m	Molt Direz. X	x/d	Molt Direz. Y	x/d	Ax s	Ay s	Ax i	Ay i	Atag	σt N/mmq	eta mm	Fpunz. N	FpnzLi N	Apunz cmq
													-------- cmq /m-------									
0	1	5	0	0	0	4722	34301	386	25.6	0.1	3.5	0.09	7.7	7.7	7.7	7.7	0.0	0.07	-.05			
0	1	7	0	0	0	4144	-4948	-3166	29.2	0.1	24.4	0.09	7.7	7.7	7.7	7.7	0.0	0.07	-.05			
0	1	11	0	0	0	25195	19828	-216	4.8	0.1	6.1	0.09	7.7	7.7	7.7	7.7	0.0	0.07	-.05			
0	1	13	0	0	0	-19685	-17384	50	6.1	0.1	7.0	0.09	7.7	7.7	7.7	7.7	0.0	0.06	-.04			
0	1	14	0	0	0	25325	19911	204	4.8	0.1	6.1	0.09	7.7	7.7	7.7	7.7	0.0	0.07	-.05			
0	1	18	0	0	0	4811	33797	-357	25.1	0.1	3.6	0.09	7.7	7.7	7.7	7.7	0.0	0.07	-.04			
0	1	38	0	0	0	24424	9807	-7134	4.9	0.1	12.3	0.09	7.7	7.7	7.7	7.7	0.0	0.07	-.05			
0	1	58	0	0	0	6025	31695	-2110	20.1	0.1	3.8	0.09	7.7	7.7	7.7	7.7	0.0	0.07	-.05			
0	1	60	0	0	0	-19231	-16394	-4369	6.3	0.1	7.4	0.09	7.7	7.7	7.7	7.7	0.0	0.06	-.04			
0	1	64	0	0	0	6398	30508	2354	18.9	0.1	4.0	0.09	7.7	7.7	7.7	7.7	0.0	0.07	-.05			
0	1	87	0	0	0	-19354	-16567	-4721	6.2	0.1	7.3	0.09	7.7	7.7	7.7	7.7	0.0	0.06	-.04			
0	1	94	0	0	0	6009	31123	1942	20.1	0.1	3.9	0.09	7.7	7.7	7.7	7.7	0.0	0.07	-.04			
0	1	96	0	0	0	-19386	-16693	4084	6.2	0.1	7.2	0.09	7.7	7.7	7.7	7.7	0.0	0.06	-.04			

Documento di proprietà **Snam Rete Gas**. La Società tutelerà i propri diritti in sede civile e penale a termini di legge.

S.L.E. - VERIFICA PIASTRE - QUOTA: 0 ELEMENTO: 1

			FESSURAZIONI											TENSIONI		DIREZIONE X				DIREZIONE Y			
Quo N.r	Per N.r	Nodo N.ro	Comb. Cari	Fes lim	Fess mm	dis mm	Co mb	MfX kN*m)	NX (kN)	MfY kN*m)	NY (kN)	cos teta	sin teta	Combina Carico	σ lim. N/mmq	σ cal. N/mmq	Co mb	Mf kN*m)	N (kN)	σ cal. N/mmq	Co mb	Mf kN*m)	N (kN)
0	1	5	Rara											RaraCls	19.20	0.34	2	3.2	0.0	2.47	2	23.5	0.0
			Freq	0.3	0.00	0	2	3.2	0.0	23.4	0.0	0.000	0.000	RaraFer	360.0	12.4	2	3.2	0.0	90.8	2	23.5	0.0
			Perm	0.2	0.00	0	1	3.2	0.0	23.4	0.0	0.000	0.000	PermCls	14.40	0.34	1	3.2	0.0	2.46	1	23.4	0.0
0	1	7	Rara											RaraCls	19.20	0.38	2	3.6	0.0	0.39	2	-3.7	0.0
			Freq	0.3	0.00	0	2	-1.8	0.0	-3.6	0.0	0.000	0.000	RaraFer	360.0	13.8	2	3.6	0.0	14.2	2	-3.7	0.0
			Perm	0.2	0.00	0	1	-1.8	0.0	-3.6	0.0	0.000	0.000	PermCls	14.40	0.36	1	3.4	0.0	0.38	1	-3.6	0.0
0	1	11	Rara											RaraCls	19.20	1.82	2	17.3	0.0	1.35	1	12.8	0.0
			Freq	0.3	0.00	0	2	17.3	0.0	12.9	0.0	0.000	0.000	RaraFer	360.0	66.8	2	17.3	0.0	49.5	1	12.8	0.0
			Perm	0.2	0.00	0	1	17.3	0.0	12.9	0.0	0.000	0.000	PermCls	14.40	1.82	1	17.3	0.0	1.36	1	12.9	0.0
0	1	13	Rara											RaraCls	19.20	1.53	2	-14.5	0.0	1.38	2	-13.1	0.0
			Freq	0.3	0.00	0	2	-14.4	0.0	-12.9	0.0	0.000	0.000	RaraFer	360.0	56.0	2	-14.5	0.0	50.5	2	-13.1	0.0
			Perm	0.2	0.00	0	1	-14.3	0.0	-12.9	0.0	0.000	0.000	PermCls	14.40	1.51	1	-14.3	0.0	1.36	1	-12.9	0.0
0	1	14	Rara											RaraCls	19.20	1.83	2	17.4	0.0	1.36	1	12.9	0.0
			Freq	0.3	0.00	0	2	17.4	0.0	12.9	0.0	0.000	0.000	RaraFer	360.0	67.2	2	17.4	0.0	49.7	1	12.9	0.0
			Perm	0.2	0.00	0	1	17.3	0.0	12.9	0.0	0.000	0.000	PermCls	14.40	1.83	1	17.3	0.0	1.36	1	12.9	0.0
0	1	18	Rara											RaraCls	19.20	0.35	2	3.3	0.0	2.43	2	23.2	0.0
			Freq	0.3	0.00	0	2	3.3	0.0	23.1	0.0	0.000	0.000	RaraFer	360.0	12.6	2	3.3	0.0	89.5	2	23.2	0.0
			Perm	0.2	0.00	0	1	3.3	0.0	23.1	0.0	0.000	0.000	PermCls	14.40	0.35	1	3.3	0.0	2.42	1	23.1	0.0
0	1	38	Rara											RaraCls	19.20	1.80	2	17.1	0.0	0.72	2	6.8	0.0
			Freq	0.3	0.00	0	2	17.0	0.0	6.8	0.0	0.000	0.000	RaraFer	360.0	66.0	2	17.1	0.0	26.2	2	6.8	0.0
			Perm	0.2	0.00	0	1	17.0	0.0	6.8	0.0	0.000	0.000	PermCls	14.40	1.79	1	17.0	0.0	0.71	1	6.8	0.0
0	1	58	Rara											RaraCls	19.20	0.46	2	4.4	0.0	2.32	2	22.1	0.0
			Freq	0.3	0.00	0	2	4.3	0.0	22.0	0.0	0.000	0.000	RaraFer	360.0	16.9	2	4.4	0.0	85.2	2	22.1	0.0
			Perm	0.2	0.00	0	1	4.3	0.0	21.9	0.0	0.000	0.000	PermCls	14.40	0.46	1	4.3	0.0	2.31	1	21.9	0.0
0	1	60	Rara											RaraCls	19.20	1.49	2	-14.2	0.0	1.31	2	-12.4	0.0
			Freq	0.3	0.00	0	2	-14.0	0.0	-12.2	0.0	0.000	0.000	RaraFer	360.0	54.6	2	-14.2	0.0	47.7	2	-12.4	0.0
			Perm	0.2	0.00	0	1	-14.0	0.0	-12.1	0.0	0.000	0.000	PermCls	14.40	1.47	1	-14.0	0.0	1.28	1	-12.1	0.0
0	1	64	Rara											RaraCls	19.20	0.50	2	4.7	0.0	2.24	2	21.3	0.0
			Freq	0.3	0.00	0	2	4.6	0.0	21.2	0.0	0.000	0.000	RaraFer	360.0	18.1	2	4.7	0.0	82.3	2	21.3	0.0
			Perm	0.2	0.00	0	1	4.6	0.0	21.2	0.0	0.000	0.000	PermCls	14.40	0.49	1	4.6	0.0	2.23	1	21.2	0.0
0	1	87	Rara											RaraCls	19.20	1.50	2	-14.3	0.0	1.32	2	-12.5	0.0
			Freq	0.3	0.00	0	2	-14.1	0.0	-12.3	0.0	0.000	0.000	RaraFer	360.0	55.0	2	-14.3	0.0	48.1	2	-12.5	0.0
			Perm	0.2	0.00	0	1	-14.1	0.0	-12.3	0.0	0.000	0.000	PermCls	14.40	1.48	1	-14.1	0.0	1.30	1	-12.3	0.0
0	1	94	Rara											RaraCls	19.20	0.46	2	4.4	0.0	2.28	2	21.7	0.0
			Freq	0.3	0.00	0	2	4.3	0.0	21.6	0.0	0.000	0.000	RaraFer	360.0	16.9	2	4.4	0.0	83.7	2	21.7	0.0
			Perm	0.2	0.00	0	1	4.3	0.0	21.6	0.0	0.000	0.000	PermCls	14.40	0.46	1	4.3	0.0	2.27	1	21.6	0.0
0	1	96	Rara											RaraCls	19.20	1.51	2	-14.3	0.0	1.33	2	-12.6	0.0
			Freq	0.3	0.00	0	2	-14.1	0.0	-12.4	0.0	0.000	0.000	RaraFer	360.0	55.1	2	-14.3	0.0	48.5	2	-12.6	0.0
			Perm	0.2	0.00	0	1	-14.1	0.0	-12.4	0.0	0.000	0.000	PermCls	14.40	1.49	1	-14.1	0.0	1.31	1	-12.4	0.0

S.L.U. - AZIONI S.L.V. - VERIFICA SHELL C.A. - QUOTA: 1 ELEMENTO: 1

Gr.Q N.ro	Gen N.r	Nodo 3d N.ro	Nx N/m	Ny N/m	Txy N/m	Mx N*m /m	My N*m /m	Mxy N*m /m	Molt.Ult. Direz. X	Molt.Ult. Direz. Y	Ax s.	Ay s.	Ax i.	Ay i.	Atag.	σt N/mmq	eta mm
											----------	cmq	/m	---------			
1	1	4	8465	4796	14845	2151	2895	-738	20.60	18.30	7.7	7.7	7.7	7.7	0.2	0.092	-0.6
1	1	6	18696	167587	26954	-4196	-3295	-1885	10.17	3.04	7.7	7.7	7.7	7.7	0.3		-0.6
1	1	8	20256	178656	24847	-3692	-3209	2053	10.79	2.90	7.7	7.7	7.7	7.7	0.3		-0.6
1	1	16	-59180	-43575	40158	15733	1935	11	5.88	75.02	7.7	7.7	7.7	7.7	0.5		-0.6
1	1	38	3475	14758	12087	2286	11464	-236	23.45	4.77	7.7	7.7	7.7	7.7	0.2	0.086	-0.6
1	1	44	-12657	33470	19595	-2614	-3047	-1998	40.81	9.61	7.7	7.7	7.7	7.7	0.3		-0.6
1	1	49	-12828	36158	21555	2468	-2574	2009	45.46	9.91	7.7	7.7	7.7	7.7	0.3		-0.6
1	1	51	3473	8900	11742	2298	10979	334	23.34	5.20	7.7	7.7	7.7	7.7	0.2	0.088	-0.6
1	1	120	-63100	-20992	11325	22254	4144	-710	3.72	26.57	7.7	7.7	7.7	7.7	0.1		-0.6
1	1	139	-62425	-18979	10374	22368	4205	813	3.68	24.25	7.7	7.7	7.7	7.7	0.1		-0.6
1	1	193	-34954	-3715	3865	4498	-3518	-2799	34.82	19.46	7.7	7.7	7.7	7.7	0.0		-0.6
1	1	194	529	1827	3886	3069	3158	-3047	19.74	18.46	7.7	7.7	7.7	7.7	0.0		-0.6
1	1	195	125	1515	3770	-3670	-3885	-3616	16.73	15.28	7.7	7.7	7.7	7.7	0.0		-0.6

S.L.U. - AZIONI S.L.V. - VERIFICA SHELL C.A. - QUOTA: 1 ELEMENTO: 2

Gr.Q N.ro	Gen N.r	Nodo 3d N.ro	Nx N/m	Ny N/m	Txy N/m	Mx N*m /m	My N*m /m	Mxy N*m /m	Molt.Ult. Direz. X	Molt.Ult. Direz. Y	Ax s.	Ay s.	Ax i.	Ay i.	Atag.	σt N/mmq	eta mm
											----------	cmq	/m	---------			
1	2	7	8241	4200	14345	-2102	-2836	708	21.10	18.97	7.7	7.7	7.7	7.7	0.2	0.092	-0.6
1	2	23	18612	167034	27054	4248	3326	1904	10.10	3.05	7.7	7.7	7.7	7.7	0.3		-0.6
1	2	24	20183	178002	24748	3739	3239	-2073	10.71	2.90	7.7	7.7	7.7	7.7	0.3		-0.6
1	2	37	-59100	-43622	40209	-15664	-1944	-30	5.91	74.82	7.7	7.7	7.7	7.7	0.5		-0.6
1	2	74	-62942	-20747	11201	-22231	-4117	689	3.72	26.65	7.7	7.7	7.7	7.7	0.1		-0.6
1	2	101	3473	14876	12052	-2306	-11504	254	23.27	4.75	7.7	7.7	7.7	7.7	0.2	0.086	-0.6
1	2	110	-62261	-18895	10069	-22337	-4178	-796	3.69	24.44	7.7	7.7	7.7	7.7	0.1		-0.6
1	2	113	-12635	33191	19625	2667	3089	2022	39.43	9.59	7.7	7.7	7.7	7.7	0.3		-0.6
1	2	115	-62037	331	46184	499	-3595	1309	75.99	16.98	7.7	7.7	7.7	7.7	0.6		-0.6
1	2	116	-12786	35874	21439	-2468	2614	-2033	45.37	9.89	7.7	7.7	7.7	7.7	0.3		-0.6
1	2	117	-37767	-1399	29799	-8764	-1897	-1146	11.32	34.93	7.7	7.7	7.7	7.7	0.4		-0.6
1	2	118	-70001	-2098	50913	231	-3502	-1378	70.78	18.66	7.7	7.7	7.7	7.7	0.7		-0.6
1	2	119	-20937	-1485	11916	-2539	-2200	-1041	65.16	29.93	7.7	7.7	7.7	7.7	0.2		-0.6

S.L.U. - AZIONI S.L.V. - VERIFICA SHELL C.A. - QUOTA: 1 ELEMENTO: 3

Gr.Q N.ro	Gen N.r	Nodo 3d N.ro	Nx N/m	Ny N/m	Txy N/m	Mx N*m /m	My N*m /m	Mxy N*m /m	Molt.Ult. Direz. X	Molt.Ult. Direz. Y	Ax s.	Ay s.	Ax i.	Ay i.	Atag.	σt N/mmq	eta mm
											----------	cmq	/m	---------			
1	3	3	-52162	-34582	18851	-24825	-4906	194	3.08	29.51	7.7	7.7	7.7	7.7	0.2		-0.6
1	3	5	-14862	-85907	10431	-6799	-33636	-118	11.33	2.38	7.7	7.7	7.7	7.7	0.1	0.085	-0.6
1	3	7	7051	4786	27276	-1271	-3088	-817	31.20	17.32	7.7	7.7	7.7	7.7	0.3	0.092	-0.6
1	3	58	-14044	-77647	20735	-6610	-30118	733	11.58	2.67	7.7	7.7	7.7	7.7	0.3	0.087	-0.6
1	3	64	-13125	-76093	22432	-6396	-28741	-810	11.88	2.82	7.7	7.7	7.7	7.7	0.3	0.087	-0.6
1	3	110	-39971	-16703	12880	-23714	-5862	-1767	3.08	14.15	7.7	7.7	7.7	7.7	0.2		-0.6
1	3	131	-23288	-36912	22931	9459	6206	-3803	8.39	20.30	7.7	7.7	7.7	7.7	0.3		-0.6

Documento di proprietà **Snam Rete Gas**. La Società tutelerà i propri diritti in sede civile e penale a termini di legge.

S.L.U. - AZIONI S.L.V. - VERIFICA SHELL C.A. - QUOTA: 1 ELEMENTO: 3

Gr.Q N.ro	Gen N.r	Nodo 3d N.ro	Nx N/m	Ny N/m	Txy N/m	Mx N*m /m	My N*m /m	Mxy N*m /m	Molt.Ult. Direz. X	Molt.Ult. Direz. Y	Ax s.	Ay s.	Ax i.	Ay i.	Atag.	σt N/mmq	eta mm
											---------- cmq /m----------						
1	3	134	-43694	-42764	16521	13869	13368	-3371	6.19	6.46	7.7	7.7	7.7	7.7	0.2		-0.6
1	3	135	-39559	-45497	8576	13681	12487	-373	6.09	7.30	7.7	7.7	7.7	7.7	0.1		-0.6
1	3	139	-40361	-16641	12198	-23792	-5849	1748	3.08	14.17	7.7	7.7	7.7	7.7	0.2		-0.6
1	3	145	-22157	-6895	3963	10297	8397	4279	7.46	7.96	7.7	7.7	7.7	7.7	0.1		-0.6
1	3	168	-42972	-43349	15595	14348	13560	2995	5.88	6.37	7.7	7.7	7.7	7.7	0.2		-0.6
1	3	174	-21769	-6860	4001	10409	8212	-3797	7.33	8.15	7.7	7.7	7.7	7.7	0.1		-0.6

S.L.U. - AZIONI S.L.V. - VERIFICA SHELL C.A. - QUOTA: 1 ELEMENTO: 4

Gr.Q N.ro	Gen N.r	Nodo 3d N.ro	Nx N/m	Ny N/m	Txy N/m	Mx N*m /m	My N*m /m	Mxy N*m /m	Molt.Ult. Direz. X	Molt.Ult. Direz. Y	Ax s.	Ay s.	Ax i.	Ay i.	Atag.	σt N/mmq	eta mm
											---------- cmq /m----------						
1	4	9	-52570	-25320	16680	24775	3593	-137	3.09	40.30	7.7	7.7	7.7	7.7	0.2		-0.6
1	4	17	6273	4582	26937	1313	3237	-833	31.79	16.71	7.7	7.7	7.7	7.7	0.3	0.088	-0.6
1	4	18	-14393	-81705	10312	6759	33293	126	11.33	2.38	7.7	7.7	7.7	7.7	0.1	0.080	-0.5
1	4	74	-40922	-18572	12312	23642	5758	1695	3.11	15.05	7.7	7.7	7.7	7.7	0.2		-0.6
1	4	93	-12662	-73598	22015	6402	28578	858	11.77	2.81	7.7	7.7	7.7	7.7	0.3	0.082	-0.5
1	4	94	-13542	-74814	20331	6607	29949	-778	11.50	2.66	7.7	7.7	7.7	7.7	0.3	0.082	-0.5
1	4	120	-41205	-18672	12072	23707	5740	-1673	3.10	15.15	7.7	7.7	7.7	7.7	0.2		-0.6
1	4	153	-45191	-41504	15081	-14330	-13415	-2967	6.00	6.36	7.7	7.7	7.7	7.7	0.2		-0.6
1	4	154	-41756	-43368	8590	-13708	-12385	368	6.19	7.23	7.7	7.7	7.7	7.7	0.1		-0.5
1	4	157	-45312	-25750	6546	-15937	-10966	31	5.20	7.15	7.7	7.7	7.7	7.7	0.1		-0.5
1	4	159	-37070	-14718	6900	-13356	-8897	2149	6.16	8.19	7.7	7.7	7.7	7.7	0.1		-0.6
1	4	162	-22244	-6784	3792	-10372	-8209	3783	7.40	8.15	7.7	7.7	7.7	7.7	0.0		-0.6
1	4	180	-45963	-41111	16045	-13832	-13206	3334	6.34	6.48	7.7	7.7	7.7	7.7	0.2		-0.6
1	4	186	-22577	-6887	3884	-10257	-8393	-4261	7.52	7.96	7.7	7.7	7.7	7.7	0.0		-0.6

S.L.U. - AZIONI S.L.D. - VERIFICA SHELL C.A. - QUOTA: 1 ELEMENTO: 1

Gr.Q N.ro	Gen N.r	Nodo 3d N.ro	Nx N/m	Ny N/m	Txy N/m	Mx N*m /m	My N*m /m	Mxy N*m /m	Molt.Ult. Direz. X	Molt.Ult. Direz. Y	Ax s.	Ay s.	Ax i.	Ay i.	Atag.	σt N/mmq	eta mm
											---------- cmq /m----------						
1	1	4	8465	4796	14845	2151	2895	-738	24.03	21.51	7.7	7.7	7.7	7.7	0.2	0.073	-0.5
1	1	6	18696	167587	17343	-4196	-3295	-1885	11.86	3.48	7.7	7.7	7.7	7.7	0.3		-0.5
1	1	8	20256	178656	14424	-3692	-3209	2053	12.55	3.31	7.7	7.7	7.7	7.7	0.3		-0.5
1	1	16	-59180	-57409	40158	15733	2869	-115	7.46	90.16	7.7	7.7	7.7	7.7	0.5		-0.5
1	1	38	3475	14758	6117	2286	11464	-236	27.57	5.62	7.7	7.7	7.7	7.7	0.2	0.070	-0.5
1	1	44	-12657	33470	14193	-2614	-3047	-1998	52.29	11.10	7.7	7.7	7.7	7.7	0.3		-0.5
1	1	49	-12828	34884	17226	2468	1457	2013	58.45	14.22	7.7	7.7	7.7	7.7	0.3		-0.5
1	1	51	3473	8900	5402	2298	10979	334	27.44	6.13	7.7	7.7	7.7	7.7	0.2	0.072	-0.5
1	1	120	-63100	-20992	11325	22254	4144	-710	4.63	34.12	7.7	7.7	7.7	7.7	0.1		-0.5
1	1	139	-62425	-18979	10374	22368	4205	813	4.58	30.96	7.7	7.7	7.7	7.7	0.1		-0.5
1	1	193	-34954	-3715	2528	4498	-3518	-2799	49.26	23.33	7.7	7.7	7.7	7.7	0.0		-0.5
1	1	194	529	1827	2341	3069	3158	-3047	23.38	21.81	7.7	7.7	7.7	7.7	0.0		-0.5
1	1	195	125	1515	2901	-3670	-3885	-3616	19.84	18.07	7.7	7.7	7.7	7.7	0.0		-0.5

S.L.U. - AZIONI S.L.D. - VERIFICA SHELL C.A. - QUOTA: 1 ELEMENTO: 2

Gr.Q N.ro	Gen N.r	Nodo 3d N.ro	Nx N/m	Ny N/m	Txy N/m	Mx N*m /m	My N*m /m	Mxy N*m /m	Molt.Ult. Direz. X	Molt.Ult. Direz. Y	Ax s.	Ay s.	Ax i.	Ay i.	Atag.	σt N/mmq	eta mm
											---------- cmq /m----------						
1	2	7	8241	4200	14345	-2102	-2836	708	24.62	22.30	7.7	7.7	7.7	7.7	0.2	0.073	-0.5
1	2	23	18612	167034	17450	4248	3326	1904	11.77	3.48	7.7	7.7	7.7	7.7	0.3		-0.5
1	2	24	20183	178002	14249	3739	3239	-2073	12.46	3.31	7.7	7.7	7.7	7.7	0.3		-0.5
1	2	37	-59100	-57840	40209	-15664	-2826	89	7.51	90.61	7.7	7.7	7.7	7.7	0.5		-0.5
1	2	74	-62890	-20747	11201	-22226	-4117	690	4.63	34.21	7.7	7.7	7.7	7.7	0.1		-0.5
1	2	101	3473	14876	6069	-2306	-11504	254	27.36	5.59	7.7	7.7	7.7	7.7	0.2	0.070	-0.5
1	2	110	-62261	-18895	10069	-22337	-4178	-796	4.58	31.21	7.7	7.7	7.7	7.7	0.1		-0.5
1	2	113	-12635	33191	14236	2667	-956	2022	50.46	16.38	7.7	7.7	7.7	7.7	0.3		-0.5
1	2	115	-62037	-11871	46184	499	-4724	1465	99.90	20.86	7.7	7.7	7.7	7.7	0.6		-0.5
1	2	116	-12786	35874	17023	-2468	-1453	-2033	58.32	13.94	7.7	7.7	7.7	7.7	0.3		-0.5
1	2	117	-37767	-8830	29167	-8764	-2448	-1354	14.43	47.00	7.7	7.7	7.7	7.7	0.4		-0.5
1	2	118	-70001	-15823	50913	231	-4609	-1537	99.90	24.34	7.7	7.7	7.7	7.7	0.7		-0.5
1	2	119	-25669	-12076	7042	-2447	-2685	-968	99.90	48.38	7.7	7.7	7.7	7.7	0.2		-0.5

S.L.U. - AZIONI S.L.D. - VERIFICA SHELL C.A. - QUOTA: 1 ELEMENTO: 3

Gr.Q N.ro	Gen N.r	Nodo 3d N.ro	Nx N/m	Ny N/m	Txy N/m	Mx N*m /m	My N*m /m	Mxy N*m /m	Molt.Ult. Direz. X	Molt.Ult. Direz. Y	Ax s.	Ay s.	Ax i.	Ay i.	Atag.	σt N/mmq	eta mm
											---------- cmq /m----------						
1	3	3	-52162	-34582	18851	-24825	-4906	194	3.76	40.66	7.7	7.7	7.7	7.7	0.2		-0.5
1	3	5	-14862	-85907	3873	-6799	-33636	-118	13.88	2.95	7.7	7.7	7.7	7.7	0.1	0.070	-0.5
1	3	7	7051	4786	27276	-1271	-3088	-817	36.28	20.36	7.7	7.7	7.7	7.7	0.3	0.073	-0.5
1	3	58	-14044	-77647	17333	-6610	-30118	733	14.16	3.30	7.7	7.7	7.7	7.7	0.3	0.070	-0.5
1	3	64	-13125	-76093	20088	-6396	-28741	-810	14.50	3.49	7.7	7.7	7.7	7.7	0.3	0.070	-0.5
1	3	110	-39971	-16703	12880	-23714	-5862	-1767	3.73	17.61	7.7	7.7	7.7	7.7	0.2		-0.5
1	3	131	-23288	-63854	20304	9459	8773	-5148	10.35	23.84	7.7	7.7	7.7	7.7	0.3		-0.5
1	3	134	-43694	-42764	12890	13869	13368	-3371	7.77	8.11	7.7	7.7	7.7	7.7	0.2		-0.5
1	3	135	-39559	-45497	3268	13681	12487	-373	7.59	9.26	7.7	7.7	7.7	7.7	0.1		-0.5
1	3	139	-40361	-16641	12198	-23792	-5849	1748	3.73	17.64	7.7	7.7	7.7	7.7	0.2		-0.5
1	3	145	-22157	-6895	1895	10297	8397	4279	9.12	9.51	7.7	7.7	7.7	7.7	0.1		-0.5
1	3	168	-42972	-43349	11523	14348	13560	2995	7.34	8.00	7.7	7.7	7.7	7.7	0.2		-0.5
1	3	174	-21769	-6860	1921	10409	8212	-3797	8.95	9.74	7.7	7.7	7.7	7.7	0.1		-0.5

S.L.U. - AZIONI S.L.D. - VERIFICA SHELL C.A. - QUOTA: 1 ELEMENTO: 4

Gr.Q N.ro	Gen N.r	Nodo 3d N.ro	Nx N/m	Ny N/m	Txy N/m	Mx N*m /m	My N*m /m	Mxy N*m /m	Molt.Ult. Direz. X	Molt.Ult. Direz. Y	Ax s.	Ay s.	Ax i.	Ay i.	Atag.	σt N/mmq	eta mm
											---------- cmq /m----------						
1	4	9	-52570	-37113	16680	24775	4728	-131	3.78	47.27	7.7	7.7	7.7	7.7	0.2		-0.5
1	4	17	6273	4582	26937	1313	3237	-833	37.02	19.66	7.7	7.7	7.7	7.7	0.3	0.068	-0.5
1	4	18	-14393	-81705	3763	6759	33293	126	13.86	2.94	7.7	7.7	7.7	7.7	0.1	0.065	-0.4
1	4	74	-40922	-18572	12312	23642	5758	1695	3.77	18.91	7.7	7.7	7.7	7.7	0.2		-0.5

Documento di proprietà **Snam Rete Gas**. La Società tutelerà i propri diritti in sede civile e penale a termini di legge.

S.L.U. - AZIONI S.L.D. - VERIFICA SHELL C.A. - QUOTA: 1 ELEMENTO: 4

Gr.Q N.ro	Gen N.r	Nodo 3d N.ro	Nx N/m	Ny N/m	Txy N/m	Mx N*m /m	My N*m /m	Mxy N*m /m	Molt.Ult. Direz. X	Molt.Ult. Direz. Y	Ax s.	Ay s.	Ax i.	Ay i.	Atag.	σt N/mmq	eta mm
											---------- cmq /m----------						
1	4	93	-12662	-73598	19505	6402	28578	858	14.35	3.48	7.7	7.7	7.7	7.7	0.3	0.066	-0.4
1	4	94	-13542	-74814	16689	6607	29949	-778	14.03	3.28	7.7	7.7	7.7	7.7	0.3	0.066	-0.4
1	4	120	-41205	-18672	12023	23707	5740	-1673	3.76	19.04	7.7	7.7	7.7	7.7	0.2		-0.5
1	4	153	-45191	-41504	10546	-14330	-13415	-2967	7.52	7.96	7.7	7.7	7.7	7.7	0.2		-0.4
1	4	154	-41756	-43368	3254	-13708	-12385	368	7.74	9.15	7.7	7.7	7.7	7.7	0.1		-0.4
1	4	157	-45312	-25750	2324	-15937	-10966	31	6.47	8.79	7.7	7.7	7.7	7.7	0.1		-0.4
1	4	159	-37070	-14718	3670	-13356	-8897	2149	7.65	9.91	7.7	7.7	7.7	7.7	0.1		-0.4
1	4	162	-22244	-6784	1740	-10372	-8209	3783	9.05	9.74	7.7	7.7	7.7	7.7	0.0		-0.4
1	4	180	-45963	-41111	12161	-13832	-13206	3334	7.98	8.11	7.7	7.7	7.7	7.7	0.2		-0.4
1	4	186	-22577	-6887	1837	-10257	-8393	-4261	9.22	9.52	7.7	7.7	7.7	7.7	0.0		-0.4

S.L.E. - VERIFICA SHELL C.A. - QUOTA: 1 ELEMENTO: 1

			FESSURAZIONI											TENSIONI		DIREZIONE X				DIREZIONE Y			
GrQ N.r	Gen N.r	Nodo N.ro	Comb. Cari	Fes lim	Fess mm	dis mm	Co mb	MfX kN*m)	NX (kN)	MfY kN*m)	NY (kN)	cos teta	sin teta	Combina Carico	σ lim. N/mmq	σ cal. N/mmq	Co mb	Mf kN*m)	N (kN)	σ cal. N/mmq	Co mb	Mf kN*m)	N (kN)
1	1	4	Rara											RaraCls	19.20	0.37	2	1.5	6.3	0.56	2	2.1	5.3
			Freq	0.3	0.00	0	2	1.5	6.2	2.1	5.1	0.000	0.000	RaraFer	360.0	14.3	2	1.5	6.3	18.1	2	2.1	5.3
			Perm	0.2	0.00	0	1	1.5	6.2	2.1	5.1	0.000	0.000	PermCls	14.40	0.37	1	1.5	6.2	0.55	1	2.1	5.1
1	1	6	Rara											RaraCls	19.20	0.69	1	-2.7	11.0	0.00	0	0.0	0.0
			Freq	0.3	0.00	0	1	-2.7	11.1	-2.1	101.7	0.000	0.000	RaraFer	360.0	26.3	1	-2.7	11.0	82.9	1	-2.1	100.9
			Perm	0.2	0.00	0	1	-2.7	11.1	-2.1	101.7	0.000	0.000	PermCls	14.40	0.69	1	-2.7	11.1	0.00	0	0.0	0.0
1	1	8	Rara											RaraCls	19.20	0.60	1	-2.4	11.9	0.00	0	0.0	0.0
			Freq	0.3	0.00	0	1	-2.4	12.1	-2.1	109.0	0.000	0.000	RaraFer	360.0	24.8	1	-2.4	11.9	87.1	1	-2.1	108.1
			Perm	0.2	0.00	0	1	-2.4	12.1	-2.1	109.0	0.000	0.000	PermCls	14.40	0.60	1	-2.4	12.1	0.00	0	0.0	0.0
1	1	16	Rara											RaraCls	19.20	2.44	1	10.3	-39.5	0.32	1	1.9	-38.8
			Freq	0.3	0.00	0	1	10.3	-39.5	1.9	-38.6	0.000	0.000	RaraFer	360.0	43.4	1	10.3	-39.5	1.7	2	1.9	-38.9
			Perm	0.2	0.00	0	1	10.3	-39.5	1.9	-38.6	0.000	0.000	PermCls	14.40	2.44	1	10.3	-39.5	0.32	1	1.9	-38.6
1	1	38	Rara											RaraCls	19.20	0.42	1	1.6	1.0	2.10	2	8.0	2.3
			Freq	0.3	0.00	0	2	1.6	1.1	8.0	3.1	0.000	0.000	RaraFer	360.0	11.2	1	1.6	1.0	55.7	1	8.0	2.8
			Perm	0.2	0.00	0	1	1.6	1.1	8.0	3.2	0.000	0.000	PermCls	14.40	0.42	1	1.6	1.1	2.10	1	8.0	3.2
1	1	44	Rara											RaraCls	19.20	0.40	1	-1.7	-8.9	0.47	2	-2.0	16.8
			Freq	0.3	0.00	0	1	-1.7	-8.9	-2.0	17.6	0.000	0.000	RaraFer	360.0	5.8	1	-1.7	-8.9	25.9	1	-2.0	17.2
			Perm	0.2	0.00	0	1	-1.7	-8.9	-2.0	17.6	0.000	0.000	PermCls	14.40	0.40	1	-1.7	-8.9	0.46	1	-2.0	17.6
1	1	49	Rara											RaraCls	19.20	0.39	2	1.7	-9.1	0.37	2	-1.7	18.6
			Freq	0.3	0.00	0	1	-1.0	-9.1	-1.7	19.5	0.000	0.000	RaraFer	360.0	5.3	1	1.7	-9.1	25.1	1	-1.7	19.1
			Perm	0.2	0.00	0	1	-1.0	-9.1	-1.7	19.5	0.000	0.000	PermCls	14.40	0.38	1	1.7	-9.1	0.37	1	-1.7	19.5
1	1	51	Rara											RaraCls	19.20	0.42	1	1.6	1.1	1.99	2	7.7	-1.4
			Freq	0.3	0.00	0	2	1.5	1.1	7.6	-0.7	0.000	0.000	RaraFer	360.0	11.2	1	1.6	1.1	50.9	1	7.6	-1.0
			Perm	0.2	0.00	0	1	1.5	1.2	7.6	-0.5	0.000	0.000	PermCls	14.40	0.42	1	1.5	1.2	1.99	1	7.6	-0.5
1	1	120	Rara											RaraCls	19.20	3.58	1	14.8	-41.8	0.63	1	2.8	-15.7
			Freq	0.3	0.00	0	1	14.8	-41.8	2.8	-15.5	0.000	0.000	RaraFer	360.0	72.3	1	14.8	-41.8	8.2	1	2.8	-15.7
			Perm	0.2	0.00	0	1	14.8	-41.8	2.8	-15.5	0.000	0.000	PermCls	14.40	3.58	1	14.8	-41.8	0.63	1	2.8	-15.5
1	1	139	Rara											RaraCls	19.20	3.60	1	14.9	-41.4	0.64	1	2.8	-14.5
			Freq	0.3	0.00	0	1	14.9	-41.4	2.8	-14.3	0.000	0.000	RaraFer	360.0	73.1	1	14.9	-41.4	9.3	1	2.8	-14.5
			Perm	0.2	0.00	0	1	14.9	-41.4	2.8	-14.3	0.000	0.000	PermCls	14.40	3.60	1	14.9	-41.4	0.65	1	2.8	-14.3
1	1	193	Rara											RaraCls	19.20	0.61	1	3.0	-23.3	0.60	1	-2.3	-3.3
			Freq	0.3	0.00	0	1	3.0	-23.3	1.4	-3.1	0.000	0.000	RaraFer	360.0	5.7	1	3.0	-23.3	13.6	1	-2.3	-3.3
			Perm	0.2	0.00	0	1	3.0	-23.3	1.4	-3.1	0.000	0.000	PermCls	14.40	0.61	1	3.0	-23.3	0.60	1	-2.3	-3.1
1	1	194	Rara											RaraCls	19.20	0.54	1	2.0	0.3	0.56	1	2.1	0.9
			Freq	0.3	0.00	0	1	2.0	0.3	2.1	1.1	0.000	0.000	RaraFer	360.0	14.0	1	2.0	0.3	14.8	1	2.1	0.9
			Perm	0.2	0.00	0	1	2.0	0.3	2.1	1.1	0.000	0.000	PermCls	14.40	0.54	1	2.0	0.3	0.56	1	2.1	1.1
1	1	195	Rara											RaraCls	19.20	0.64	1	-2.4	0.0	0.68	1	-2.6	0.5
			Freq	0.3	0.00	0	1	-2.4	0.0	-2.6	0.7	0.000	0.000	RaraFer	360.0	16.4	1	-2.4	0.0	17.7	1	-2.6	0.5
			Perm	0.2	0.00	0	1	-2.4	0.0	-2.6	0.7	0.000	0.000	PermCls	14.40	0.64	1	-2.4	0.0	0.68	1	-2.6	0.7

S.L.E. - VERIFICA SHELL C.A. - QUOTA: 1 ELEMENTO: 2

			FESSURAZIONI											TENSIONI		DIREZIONE X				DIREZIONE Y			
GrQ N.r	Gen N.r	Nodo N.ro	Comb. Cari	Fes lim	Fess mm	dis mm	Co mb	MfX kN*m)	NX (kN)	MfY kN*m)	NY (kN)	cos teta	sin teta	Combina Carico	σ lim. N/mmq	σ cal. N/mmq	Co mb	Mf kN*m)	N (kN)	σ cal. N/mmq	Co mb	Mf kN*m)	N (kN)
1	2	7	Rara											RaraCls	19.20	0.36	2	-1.4	6.1	0.55	2	-2.1	4.9
			Freq	0.3	0.00	0	2	-1.4	6.0	-2.1	4.7	0.000	0.000	RaraFer	360.0	13.9	2	-1.4	6.1	17.5	2	-2.1	4.9
			Perm	0.2	0.00	0	1	-1.4	6.0	-2.1	4.7	0.000	0.000	PermCls	14.40	0.36	1	-1.4	6.0	0.54	1	-2.1	4.7
1	2	23	Rara											RaraCls	19.20	0.70	1	2.8	10.9	0.00	0	0.0	0.0
			Freq	0.3	0.00	0	1	2.8	11.0	2.2	101.3	0.000	0.000	RaraFer	360.0	26.5	1	2.8	10.9	82.7	1	2.2	100.4
			Perm	0.2	0.00	0	1	2.8	11.0	2.2	101.3	0.000	0.000	PermCls	14.40	0.70	1	2.8	11.0	0.00	0	0.0	0.0
1	2	24	Rara											RaraCls	19.20	0.61	1	2.4	11.9	0.00	0	0.0	0.0
			Freq	0.3	0.00	0	1	2.4	12.0	2.1	108.6	0.000	0.000	RaraFer	360.0	24.9	1	2.4	11.9	86.9	1	2.1	107.5
			Perm	0.2	0.00	0	1	2.4	12.0	2.1	108.6	0.000	0.000	PermCls	14.40	0.61	1	2.4	12.0	0.00	0	0.0	0.0
1	2	37	Rara											RaraCls	19.20	2.43	1	-10.3	-39.5	0.32	2	-1.8	-39.2
			Freq	0.3	0.00	0	1	-10.3	-39.5	-1.8	-38.7	0.000	0.000	RaraFer	360.0	43.1	1	-10.3	-39.5	1.7	2	-1.8	-39.2
			Perm	0.2	0.00	0	1	-10.3	-39.5	-1.8	-38.7	0.000	0.000	PermCls	14.40	2.43	1	-10.3	-39.5	0.32	1	-1.8	-38.7
1	2	74	Rara											RaraCls	19.20	3.57	1	-14.8	-41.7	0.62	1	-2.7	-15.5
			Freq	0.3	0.00	0	1	-14.8	-41.7	-2.7	-15.3	0.000	0.000	RaraFer	360.0	72.3	1	-14.8	-41.7	8.2	1	-2.7	-15.5
			Perm	0.2	0.00	0	1	-14.8	-41.7	-2.7	-15.3	0.000	0.000	PermCls	14.40	3.57	1	-14.8	-41.7	0.62	1	-2.7	-15.3
1	2	101	Rara											RaraCls	19.20	0.42	1	-1.6	1.0	2.11	2	-8.0	2.4
			Freq	0.3	0.00	0	2	-1.6	1.1	-8.0	3.1	0.000	0.000	RaraFer	360.0	11.2	1	-1.6	1.0	55.9	1	-8.0	2.8
			Perm	0.2	0.00	0	1	-1.6	1.1	-8.0	3.3	0.000	0.000	PermCls	14.40	0.42	1	-1.6	1.1	2.10	1	-8.0	3.3
1	2	110	Rara											RaraCls	19.20	3.59	1	-14.9	-41.3	0.64	1	-2.8	-14.6
			Freq	0.3	0.00	0	1	-14.9	-41.3	-2.8	-14.2	0.000	0.000	RaraFer	360.0	73.0	1	-14.9	-41.3	9.1	1	-2.8	-14.6
			Perm	0.2	0.00	0	1	-14.9	-41.3	-2.8	-14.2	0.000	0.000	PermCls	14.40	3.59	1	-14.9	-41.3	0.64	1	-2.8	-14.2
1	2	113	Rara											RaraCls	19.20	0.41	1	1.8	-8.9	0.47	2	2.0	16.6
			Freq	0.3	0.00	0	1	1.8	-8.9	2.0	17.4	0.000	0.000	RaraFer	360.0	6.1	1	1.8	-8.9	25.9	1	2.0	17.0
			Perm	0.2	0.00	0	1	1.8	-8.9	2.0	17.4	0.000	0.000	PermCls	14.40	0.41	1	1.8	-8.9	0.47	1	2.0	17.4
1	2	115	Rara											RaraCls	19.20	0.25	1	-1.1	-39.0	0.79	2	-3.3	-13.4
			Freq	0.3	0.00	0	2	-1.1	-39.1	-3.3	-12.8	0.000	0.000	RaraFer	360.0	1.4	1	-1.1	-39.0	13.8	1	-3.3	-13.1

Documento di proprietà **Snam Rete Gas**. La Società tutelerà i propri diritti in sede civile e penale a termini di legge.

S.L.E. - VERIFICA SHELL C.A. - QUOTA: 1 ELEMENTO: 2

			FESSURAZIONI											TENSIONI		DIREZIONE X				DIREZIONE Y			
GrQ N.r	Gen N.r	Nodo N.ro	Comb. Cari	Fes lim	Fess mm	dis mm	Co mb	MfX kN*m)	NX (kN)	MfY kN*m)	NY (kN)	cos teta	sin teta	Combina Carico	σ lim. N/mmq	σ cal. N/mmq	Co mb	Mf kN*m)	N (kN)	σ cal. N/mmq	Co mb	Mf kN*m)	N (kN)
			Perm	0.2	0.00	0	1	-1.1	-39.2	-3.3	-12.7	0.000	0.000	PermCls	14.40	0.25	1	-1.1	-39.2	0.79	1	-3.3	-12.7
1	2	116	Rara											RaraCls	19.20	0.39	2	-1.7	-9.2	0.38	2	1.7	18.2
			Freq	0.3	0.00	0	1	1.1	-9.0	1.7	19.3	0.000	0.000	RaraFer	360.0	5.3	1	-1.7	-9.1	25.1	1	1.7	18.8
			Perm	0.2	0.00	0	1	1.1	-9.0	1.7	19.3	0.000	0.000	PermCls	14.40	0.38	1	-1.7	-9.0	0.38	1	1.7	19.3
1	2	117	Rara											RaraCls	19.20	1.35	1	-5.8	-25.5	0.38	1	-1.7	-8.6
			Freq	0.3	0.00	0	1	-5.8	-25.4	-1.7	-8.2	0.000	0.000	RaraFer	360.0	22.2	1	-5.8	-25.5	5.5	1	-1.7	-8.6
			Perm	0.2	0.00	0	1	-5.8	-25.4	-1.7	-8.2	0.000	0.000	PermCls	14.40	1.36	1	-5.8	-25.4	0.38	1	-1.7	-8.2
1	2	118	Rara											RaraCls	19.20	0.30	1	-1.4	-44.6	0.75	2	-3.2	-16.1
			Freq	0.3	0.00	0	2	-1.4	-44.7	-3.2	-15.4	0.000	0.000	RaraFer	360.0	1.7	1	-1.4	-44.6	11.5	1	-3.2	-15.7
			Perm	0.2	0.00	0	1	-1.4	-44.8	-3.2	-15.2	0.000	0.000	PermCls	14.40	0.30	1	-1.4	-44.8	0.75	1	-3.2	-15.2
1	2	119	Rara											RaraCls	19.20	0.36	2	-2.1	-24.9	0.42	1	-1.9	-11.1
			Freq	0.3	0.00	0	2	-2.1	-25.1	-1.9	-10.9	0.000	0.000	RaraFer	360.0	1.6	1	-2.1	-25.1	5.2	1	-1.9	-11.1
			Perm	0.2	0.00	0	1	-2.1	-25.2	-1.9	-10.8	0.000	0.000	PermCls	14.40	0.36	1	-2.1	-25.2	0.42	1	-1.9	-10.8

S.L.E. - VERIFICA SHELL C.A. - QUOTA: 1 ELEMENTO: 3

			FESSURAZIONI											TENSIONI		DIREZIONE X				DIREZIONE Y			
GrQ N.r	Gen N.r	Nodo N.ro	Comb. Cari	Fes lim	Fess mm	dis mm	Co mb	MfX kN*m)	NX (kN)	MfY kN*m)	NY (kN)	cos teta	sin teta	Combina Carico	σ lim. N/mmq	σ cal. N/mmq	Co mb	Mf kN*m)	N (kN)	σ cal. N/mmq	Co mb	Mf kN*m)	N (kN)
1	3	3	Rara											RaraCls	19.20	4.04	1	-16.5	-34.7	0.67	1	-3.2	-24.9
			Freq	0.3	0.00	0	1	-16.5	-34.7	-3.2	-24.7	0.000	0.000	RaraFer	360.0	88.3	1	-16.5	-34.7	6.4	1	-3.2	-24.9
			Perm	0.2	0.00	0	1	-16.5	-34.7	-3.2	-24.7	0.000	0.000	PermCls	14.40	4.04	1	-16.5	-34.7	0.67	1	-3.2	-24.7
1	3	5	Rara											RaraCls	19.20	1.15	2	-4.7	-10.9	5.52	2	-23.0	-62.3
			Freq	0.3	0.00	0	2	-4.6	-10.8	-22.9	-61.6	0.000	0.000	RaraFer	360.0	24.2	2	-4.7	-10.9	114.4	2	-23.0	-62.3
			Perm	0.2	0.00	0	1	-4.6	-10.8	-22.9	-61.4	0.000	0.000	PermCls	14.40	1.15	1	-4.6	-10.8	5.50	1	-22.9	-61.4
1	3	7	Rara											RaraCls	19.20	0.23	2	-0.9	5.5	0.58	2	-2.2	5.1
			Freq	0.3	0.00	0	2	-0.9	5.4	-2.2	5.0	0.000	0.000	RaraFer	360.0	10.3	2	-0.9	5.5	18.5	2	-2.2	5.1
			Perm	0.2	0.00	0	1	-0.9	5.4	-2.2	4.9	0.000	0.000	PermCls	14.40	0.23	1	-0.9	5.4	0.57	1	-2.2	4.9
1	3	58	Rara											RaraCls	19.20	1.10	2	-4.4	-10.3	4.95	2	-20.6	-57.3
			Freq	0.3	0.00	0	2	-4.4	-10.2	-20.6	-56.6	0.000	0.000	RaraFer	360.0	23.2	1	-4.4	-10.2	101.5	1	-20.6	-56.9
			Perm	0.2	0.00	0	1	-4.4	-10.1	-20.5	-56.5	0.000	0.000	PermCls	14.40	1.10	1	-4.4	-10.1	4.94	1	-20.5	-56.5
1	3	64	Rara											RaraCls	19.20	1.06	1	-4.3	-9.5	4.72	2	-19.7	-56.1
			Freq	0.3	0.00	0	2	-4.3	-9.5	-19.6	-55.5	0.000	0.000	RaraFer	360.0	22.5	1	-4.3	-9.5	95.8	1	-19.6	-55.7
			Perm	0.2	0.00	0	1	-4.3	-9.4	-19.6	-55.3	0.000	0.000	PermCls	14.40	1.06	1	-4.3	-9.4	4.71	1	-19.6	-55.3
1	3	110	Rara											RaraCls	19.20	3.91	1	-15.8	-26.8	0.94	1	-3.9	-13.2
			Freq	0.3	0.00	0	1	-15.8	-26.8	-3.9	-12.8	0.000	0.000	RaraFer	360.0	88.8	1	-15.8	-26.8	17.5	1	-3.9	-13.2
			Perm	0.2	0.00	0	1	-15.8	-26.8	-3.9	-12.8	0.000	0.000	PermCls	14.40	3.91	1	-15.8	-26.8	0.94	1	-3.9	-12.8
1	3	131	Rara											RaraCls	19.20	1.53	1	6.2	-14.5	1.13	1	5.7	-46.7
			Freq	0.3	0.00	0	1	6.2	-14.6	5.7	-46.3	0.000	0.000	RaraFer	360.0	32.3	1	6.2	-14.5	9.6	1	5.7	-46.7
			Perm	0.2	0.00	0	1	6.2	-14.6	5.7	-46.3	0.000	0.000	PermCls	14.40	1.53	1	6.2	-14.6	1.13	1	5.7	-46.3
1	3	134	Rara											RaraCls	19.20	2.23	1	9.2	-28.3	2.13	1	8.9	-31.5
			Freq	0.3	0.00	0	1	9.2	-28.4	8.9	-31.2	0.000	0.000	RaraFer	360.0	43.5	2	9.2	-28.3	39.2	1	8.9	-31.5
			Perm	0.2	0.00	0	1	9.2	-28.4	8.9	-31.2	0.000	0.000	PermCls	14.40	2.23	1	9.2	-28.4	2.13	1	8.9	-31.2
1	3	135	Rara											RaraCls	19.20	2.20	1	9.0	-25.5	1.95	1	8.3	-33.7
			Freq	0.3	0.00	0	1	9.0	-25.5	8.3	-33.4	0.000	0.000	RaraFer	360.0	44.2	2	9.0	-25.4	33.6	1	8.3	-33.7
			Perm	0.2	0.00	0	1	9.0	-25.5	8.3	-33.4	0.000	0.000	PermCls	14.40	2.20	1	9.0	-25.5	1.96	1	8.3	-33.4
1	3	139	Rara											RaraCls	19.20	3.92	1	-15.8	-27.0	0.94	1	-3.9	-13.0
			Freq	0.3	0.00	0	1	-15.8	-27.0	-3.9	-12.8	0.000	0.000	RaraFer	360.0	89.0	1	-15.8	-27.0	17.5	1	-3.9	-13.0
			Perm	0.2	0.00	0	1	-15.8	-27.0	-3.9	-12.8	0.000	0.000	PermCls	14.40	3.92	1	-15.8	-27.0	0.94	1	-3.9	-12.8
1	3	145	Rara											RaraCls	19.20	1.70	1	6.9	-14.9	1.43	1	5.6	-5.4
			Freq	0.3	0.00	0	1	6.9	-14.8	5.6	-5.2	0.000	0.000	RaraFer	360.0	36.4	1	6.9	-14.9	34.3	1	5.6	-5.4
			Perm	0.2	0.00	0	1	6.9	-14.8	5.6	-5.2	0.000	0.000	PermCls	14.40	1.70	1	6.9	-14.8	1.44	1	5.6	-5.2
1	3	168	Rara											RaraCls	19.20	2.31	1	9.5	-27.8	2.15	1	9.0	-32.1
			Freq	0.3	0.00	0	1	9.5	-27.9	9.0	-31.7	0.000	0.000	RaraFer	360.0	45.9	2	9.5	-27.8	39.7	1	9.0	-32.1
			Perm	0.2	0.00	0	1	9.5	-27.9	9.0	-31.7	0.000	0.000	PermCls	14.40	2.31	1	9.5	-27.9	2.16	1	9.0	-31.7
1	3	174	Rara											RaraCls	19.20	1.72	1	6.9	-14.6	1.40	1	5.5	-5.4
			Freq	0.3	0.00	0	1	6.9	-14.6	5.5	-5.1	0.000	0.000	RaraFer	360.0	37.1	1	6.9	-14.6	33.4	1	5.5	-5.4
			Perm	0.2	0.00	0	1	6.9	-14.6	5.5	-5.1	0.000	0.000	PermCls	14.40	1.72	1	6.9	-14.6	1.40	1	5.5	-5.1

S.L.E. - VERIFICA SHELL C.A. - QUOTA: 1 ELEMENTO: 4

			FESSURAZIONI											TENSIONI		DIREZIONE X				DIREZIONE Y			
GrQ N.r	Gen N.r	Nodo N.ro	Comb. Cari	Fes lim	Fess mm	dis mm	Co mb	MfX kN*m)	NX (kN)	MfY kN*m)	NY (kN)	cos teta	sin teta	Combina Carico	σ lim. N/mmq	σ cal. N/mmq	Co mb	Mf kN*m)	N (kN)	σ cal. N/mmq	Co mb	Mf kN*m)	N (kN)
1	4	9	Rara											RaraCls	19.20	4.03	1	16.4	-35.0	0.62	1	3.1	-26.4
			Freq	0.3	0.00	0	1	16.4	-35.0	3.1	-26.2	0.000	0.000	RaraFer	360.0	87.9	1	16.4	-35.0	5.0	1	3.1	-26.4
			Perm	0.2	0.00	0	1	16.4	-35.0	3.1	-26.2	0.000	0.000	PermCls	14.40	4.03	1	16.4	-35.0	0.62	1	3.1	-26.2
1	4	17	Rara											RaraCls	19.20	0.24	2	1.0	5.0	0.60	2	2.3	5.0
			Freq	0.3	0.00	0	2	1.0	4.9	2.3	4.8	0.000	0.000	RaraFer	360.0	10.1	2	1.0	5.0	19.0	2	2.3	5.0
			Perm	0.2	0.00	0	1	1.0	4.9	2.3	4.7	0.000	0.000	PermCls	14.40	0.24	1	1.0	4.9	0.60	1	2.3	4.7
1	4	18	Rara											RaraCls	19.20	1.14	2	4.6	-10.5	5.47	2	22.8	-59.5
			Freq	0.3	0.00	0	2	4.6	-10.4	22.7	-59.0	0.000	0.000	RaraFer	360.0	24.2	2	4.6	-10.5	114.7	2	22.8	-59.5
			Perm	0.2	0.00	0	1	4.6	-10.3	22.7	-58.9	0.000	0.000	PermCls	14.40	1.14	1	4.6	-10.3	5.46	1	22.7	-58.9
1	4	74	Rara											RaraCls	19.20	3.90	1	15.7	-27.4	0.91	1	3.8	-14.1
			Freq	0.3	0.00	0	1	15.7	-27.4	3.8	-13.9	0.000	0.000	RaraFer	360.0	88.1	1	15.7	-27.4	16.5	1	3.8	-14.1
			Perm	0.2	0.00	0	1	15.7	-27.4	3.8	-13.9	0.000	0.000	PermCls	14.40	3.90	1	15.7	-27.4	0.92	1	3.8	-13.9
1	4	93	Rara											RaraCls	19.20	1.06	1	4.3	-9.2	4.69	2	19.5	-53.7
			Freq	0.3	0.00	0	2	4.3	-9.1	19.4	-53.3	0.000	0.000	RaraFer	360.0	22.8	1	4.3	-9.2	96.2	2	19.5	-53.7
			Perm	0.2	0.00	0	1	4.3	-9.1	19.4	-53.1	0.000	0.000	PermCls	14.40	1.06	1	4.3	-9.1	4.68	1	19.4	-53.1
1	4	94	Rara											RaraCls	19.20	1.10	2	4.4	-9.9	4.92	2	20.4	-54.6
			Freq	0.3	0.00	0	2	4.4	-9.8	20.4	-54.1	0.000	0.000	RaraFer	360.0	23.4	1	4.4	-9.8	102.0	2	20.4	-54.6
			Perm	0.2	0.00	0	1	4.4	-9.8	20.4	-54.0	0.000	0.000	PermCls	14.40	1.10	1	4.4	-9.8	4.91	1	20.4	-54.0
1	4	120	Rara											RaraCls	19.20	3.90	1	15.8	-27.6	0.91	1	3.8	-14.3
			Freq	0.3	0.00	0	1	15.8	-27.5	3.8	-14.0	0.000	0.000	RaraFer	360.0	88.3	1	15.8	-27.6	16.3	1	3.8	-14.3
			Perm	0.2	0.00	0	1	15.8	-27.5	3.8	-14.0	0.000	0.000	PermCls	14.40	3.91	1	15.8	-27.5	0.91	1	3.8	-14.0
1	4	153	Rara											RaraCls	19.20	2.30	1	-9.5	-29.3	2.14	1	-8.9	-30.7

Documento di proprietà **Snam Rete Gas**. La Società tutelerà i propri diritti in sede civile e penale a termini di legge.

S.L.E. - VERIFICA SHELL C.A. - QUOTA: 1 ELEMENTO: 4

			FESSURAZIONI											TENSIONI		DIREZIONE X				DIREZIONE Y			
GrQ N.r	Gen N.r	Nodo N.ro	Comb. Cari	Fes lim	Fess mm	dis mm	Co mb	MfX kN*m)	NX (kN)	MfY kN*m)	NY (kN)	cos teta	sin teta	Combina Carico	σ lim. N/mmq	σ cal. N/mmq	Co mb	Mf kN*m)	N (kN)	σ cal. N/mmq	Co mb	Mf kN*m)	N (kN)
			Freq	0.3	0.00	0	1	-9.5	-29.4	-8.9	-30.5	0.000	0.000	RaraFer	360.0	44.8	2	-9.5	-29.3	40.0	1	-8.9	-30.7
			Perm	0.2	0.00	0	1	-9.5	-29.4	-8.9	-30.5	0.000	0.000	PermCls	14.40	2.30	1	-9.5	-29.4	2.14	1	-8.9	-30.5
1	4	154	Rara											RaraCls	19.20	2.19	1	-9.1	-26.9	1.95	1	-8.2	-32.2
			Freq	0.3	0.00	0	1	-9.1	-27.0	-8.2	-32.0	0.000	0.000	RaraFer	360.0	43.3	2	-9.1	-26.9	34.2	1	-8.2	-32.2
			Perm	0.2	0.00	0	1	-9.1	-27.0	-8.2	-32.0	0.000	0.000	PermCls	14.40	2.20	1	-9.1	-27.0	1.95	1	-8.2	-32.0
1	4	157	Rara											RaraCls	19.20	2.57	1	-10.6	-29.8	1.79	1	-7.3	-19.4
			Freq	0.3	0.00	0	1	-10.6	-29.9	-7.3	-19.2	0.000	0.000	RaraFer	360.0	51.7	2	-10.6	-29.8	36.6	1	-7.3	-19.4
			Perm	0.2	0.00	0	1	-10.6	-29.9	-7.3	-19.2	0.000	0.000	PermCls	14.40	2.57	1	-10.6	-29.9	1.80	1	-7.3	-19.2
1	4	159	Rara											RaraCls	19.20	2.16	1	-8.9	-24.7	1.49	1	-5.9	-11.1
			Freq	0.3	0.00	0	1	-8.9	-24.7	-5.9	-11.0	0.000	0.000	RaraFer	360.0	43.6	1	-8.9	-24.7	32.7	1	-5.9	-11.1
			Perm	0.2	0.00	0	1	-8.9	-24.7	-5.9	-11.0	0.000	0.000	PermCls	14.40	2.16	1	-8.9	-24.7	1.49	1	-5.9	-11.0
1	4	162	Rara											RaraCls	19.20	1.71	1	-6.9	-14.9	1.40	1	-5.5	-5.3
			Freq	0.3	0.00	0	1	-6.9	-14.9	-5.5	-5.1	0.000	0.000	RaraFer	360.0	36.8	1	-6.9	-14.9	33.5	1	-5.5	-5.3
			Perm	0.2	0.00	0	1	-6.9	-14.9	-5.5	-5.1	0.000	0.000	PermCls	14.40	1.71	1	-6.9	-14.9	1.40	1	-5.5	-5.1
1	4	180	Rara											RaraCls	19.20	2.21	1	-9.2	-29.8	2.11	1	-8.8	-30.3
			Freq	0.3	0.00	0	1	-9.2	-29.9	-8.8	-30.1	0.000	0.000	RaraFer	360.0	42.3	2	-9.2	-29.8	39.3	1	-8.8	-30.3
			Perm	0.2	0.00	0	1	-9.2	-29.9	-8.8	-30.1	0.000	0.000	PermCls	14.40	2.21	1	-9.2	-29.9	2.11	1	-8.8	-30.1
1	4	186	Rara											RaraCls	19.20	1.69	1	-6.8	-15.1	1.43	1	-5.6	-5.4
			Freq	0.3	0.00	0	1	-6.8	-15.1	-5.6	-5.1	0.000	0.000	RaraFer	360.0	36.1	1	-6.8	-15.1	34.3	1	-5.6	-5.4
			Perm	0.2	0.00	0	1	-6.8	-15.1	-5.6	-5.1	0.000	0.000	PermCls	14.40	1.69	1	-6.8	-15.1	1.43	1	-5.6	-5.1

Documento di proprietà **Snam Rete Gas**. La Società tutelerà i propri diritti in sede civile e penale a termini di legge.