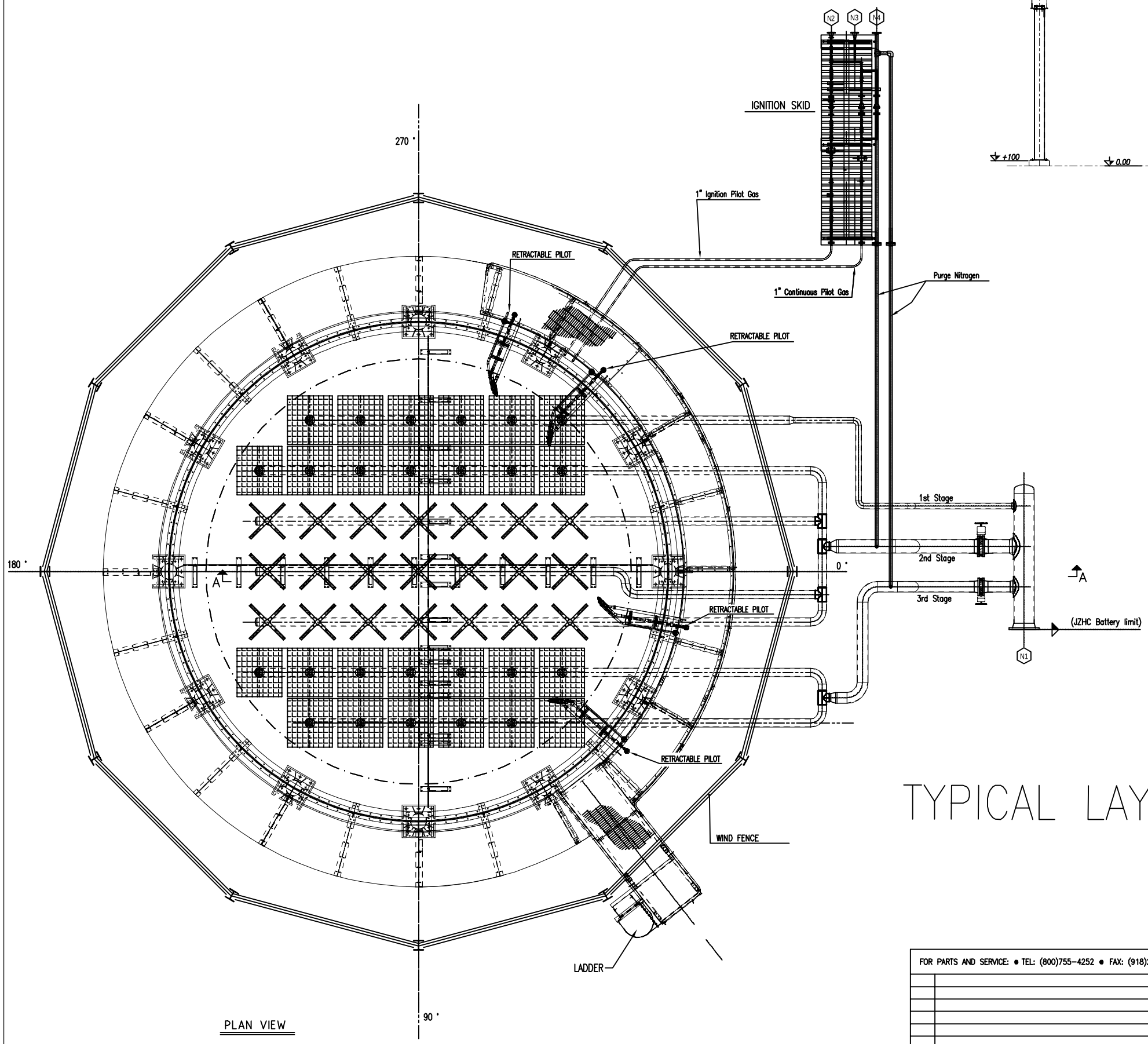

PLAN VIEW

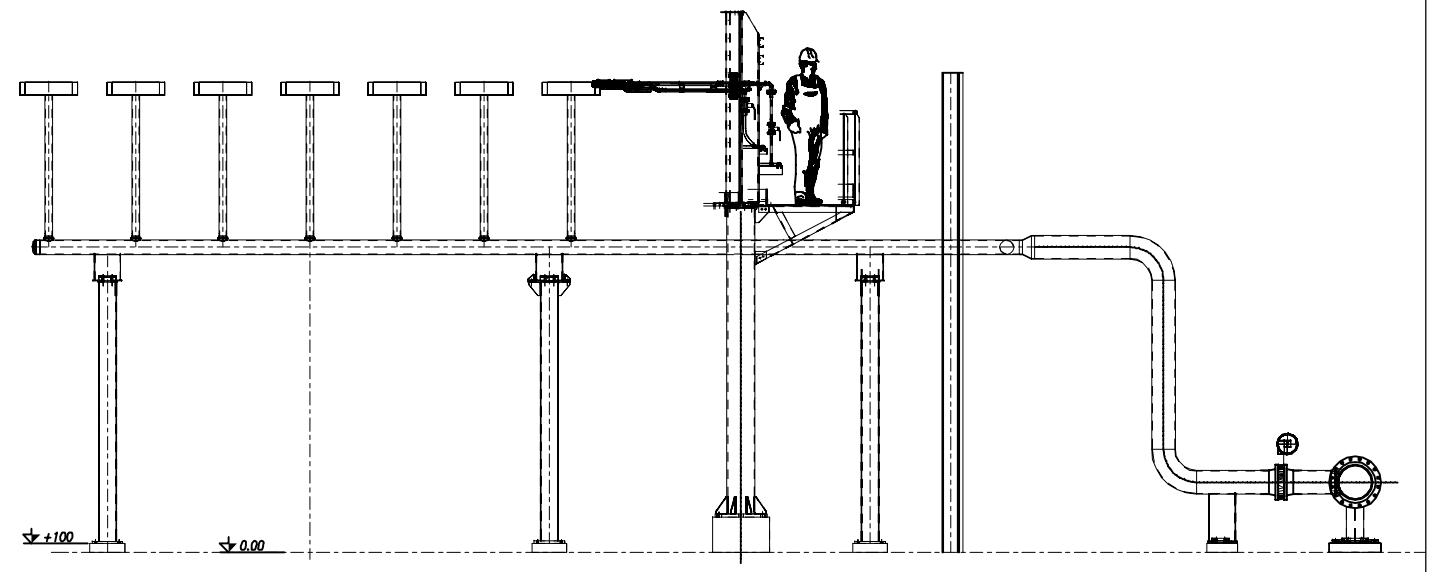

SECTION A-A

GENERAL NOTES :

Flanges <= 24" ANSI B16.5
All elevations are referred to level +0.00 mm.
All dimensions are in mm unless otherwise indicated
All dimensions on shop drawings are theoretical with zero air
Nozzle bolt holes shall straddle with stack centre line
Bolting and gaskets at battery limit to be supplied by others
All welds shall be continuous unless otherwise specified

TYPICAL LAYOUT – FOR REFERENCE ONLY

FOR PARTS AND SERVICE: • TEL: (800)755-4252 • FAX: (918)234-5705 • E-MAIL: FLAREPARTS@JOHNZINK.COM

NO.	REVISION DESCRIPTION	BY	CHK	APP	DATE
0	ISSUED FOR INFORMATION	CG	ES	MZ	29.06.2017

P/N XXXXXXX

This drawing and the information contained herein is of a confidential nature and the property of John Zink Company, LLC and shall not be copied, traced, photographed, or reproduced in any manner nor used for any purpose whatsoever, except by written permission of John Zink Company, LLC. This drawing shall be returned to John Zink Company, LLC upon request. © 2017 , John Zink Company, LLC. All rights reserved.

JOHN ZINK HAMWORTHY COMBUSTION
JOHN ZINK COMPANY, LLC

FOR: TECHNIP
USER: VERSALIS BRINDISI
–
JOBSITE: ITALY
–
S.O. NO: –
P.O. NO: –
SCALE: 1:1

ENCLOSED GROUND FLARE
PRELIMINARY GA
TOP VIEW

DRAWN: CG	CHK: ES	APP: MZ	SHEET:
DATE: 29.06.2017	DATE: 04.05.2017	DATE: 29.06.2017	1 OF 1

DRAWING NUMBER: JZ 55259 REV. 1