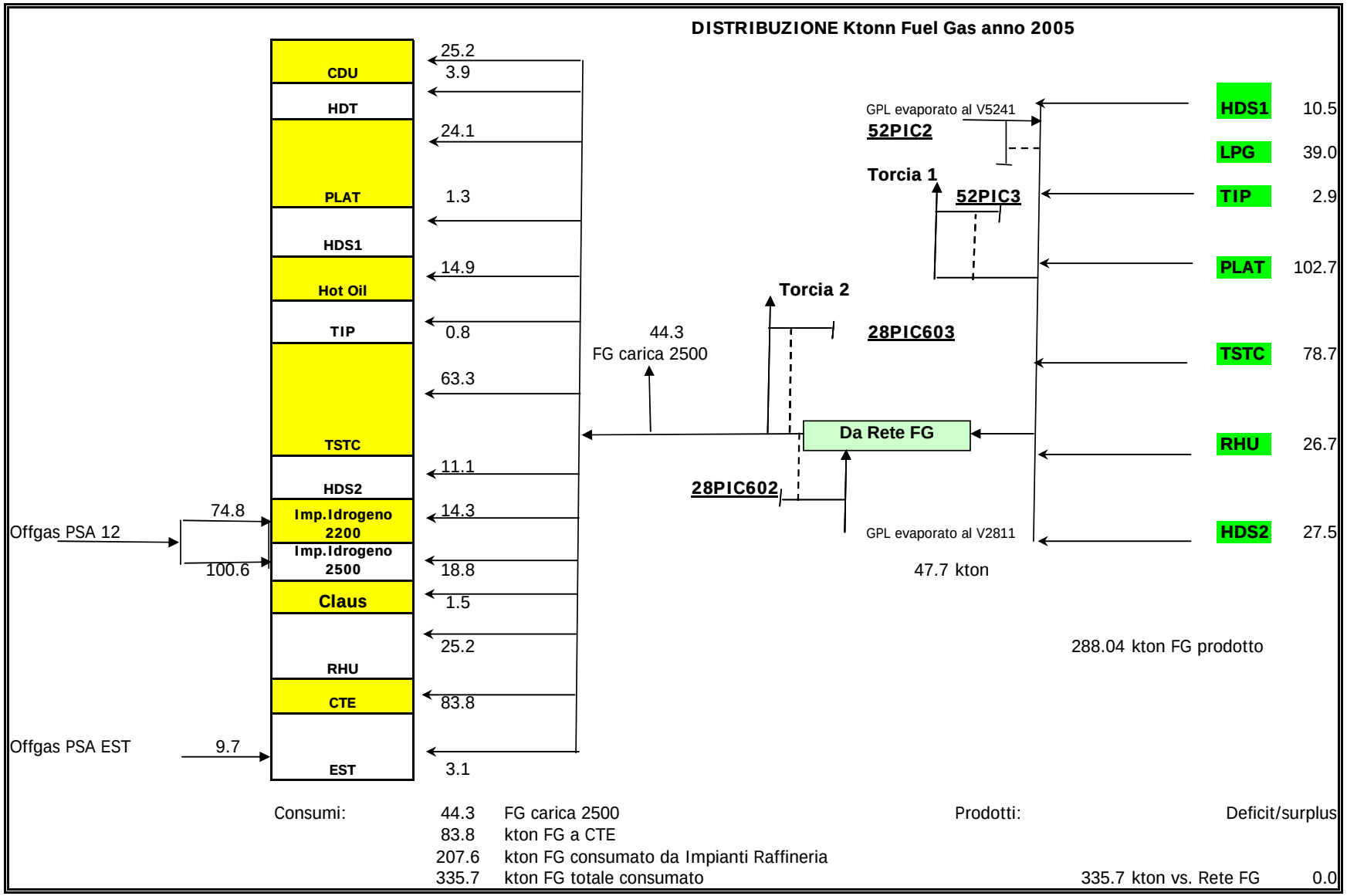
DISTRIBUZIONE Ktonn Fuel Gas anno 2005
CDU
HDT
PLAT
HDS1
Hot Oil
TIP
TSTC
HDS2
Imp.Idrogeno 2200
Imp.Idrogeno 2500
Claus
RHU
CTE
EST
25.2
3.9
24.1
1.3
14.9
0.8
63.3
11.1
14.3
18.8
1.5
25.2
83.8
3.1
Offgas PSA 12
74.8
100.6
Offgas PSA EST
9.7
44.3
FG carica 2500
Torcia 2
28PIC603
Da Rete FG
28PIC602
GPL evaporato al V5241
52PIC2
Torcia 1
52PIC3
GPL evaporato al V2811
47.7 kton
HDS1 10.5
LPG 39.0
TIP 2.9
PLAT 102.7
TSTC 78.7
RHU 26.7
HDS2 27.5
288.04 kton FG prodotto
Consumi:
44.3 FG carica 2500
83.8 kton FG a CTE
207.6 kton FG consumato da Impianti Raffineria
335.7 kton FG totale consumato
Prodotti:
Deficit/surplus
335.7 kton vs. Rete FG
0.0