COMMITTENTE:

RFI RETE FERROVIARIA ITALIANA
GRUPPO FERROVIE DELLO STATO ITALIANE

DIREZIONE LAVORI:

ITALFERR
GRUPPO FERROVIE DELLO STATO ITALIANE

APPALTATORE:

MANDATARIA: salini impregilo

MANDANTE: ASTALDI

PROGETTAZIONE:

MANDATARIA: SYSTRA

MANDANTI: SOTECNI SYSTRA GROUP; ROCKSOIL S.p.A. CONSULENZA E ASSISTENZA TECNICA nel campo della GEOINGEGNERIA

PROGETTO ESECUTIVO

LINEA FERROVIARIA NAPOLI - BARI, TRATTA NAPOLI-CANCELLO,

IN VARIANTE TRA LE PK 0+000 E PK 15+585, INCLUSE LE OPERE ACCESSORIE,

NELL'AMBITO DEGLI INTERVENTI DI CUI AL D.L. 133/2014, CONVERTITO IN LEGGE 164 / 2014

RILEVATI

RI05 - RILEVATO DAL KM 12+558.36 AL KM 13+202.33

Sezioni trasversali

APPALTATORE	PROGETTAZIONE	
DIRETTORE TECNICO Ing. M. PANISI	DIRETTORE DELLA PROGETTAZIONE Ing. A. CHECCHI	

COMMESSA	LOTTO	FASE	ENTE	TIPO DOC.	OPERA/DISCIPLINA	PROGR.	REV.	SCALA:
IF1M	00	E	ZZ	W9	RI0500	001	B	1:200

Rev.	Descrizione	Redatto	Data	Verificato	Data	Approvato	Data	Autorizzato Data
A	EMISSIONE	FRANCHINI	14/06/2018	CERAUDO	15/06/2018	PIAZZA	15/06/2018	LACOPO
B	EMISSIONE PER RDV	FRANCHINI	10/09/18	CERAUDO	11/09/18	PIAZZA	11/09/18	
								12/09/18

File:IF1M.0.0.E.ZZ.W9.RI.05.0.0.001.B.DWG

n. Elab.:

AREA
Scavo: 10.44
Rilevato: 124.65
SubBallast: 1.55
Ballast: 4.24
Inerbimento: 6.03
SuperCompattato:4.07
Stradello: 1.27
Anticapillare: 14.53
Scotico: 14.61
Bonifica: 14.61

PROG 12+566.00
SEZ. RI05_1

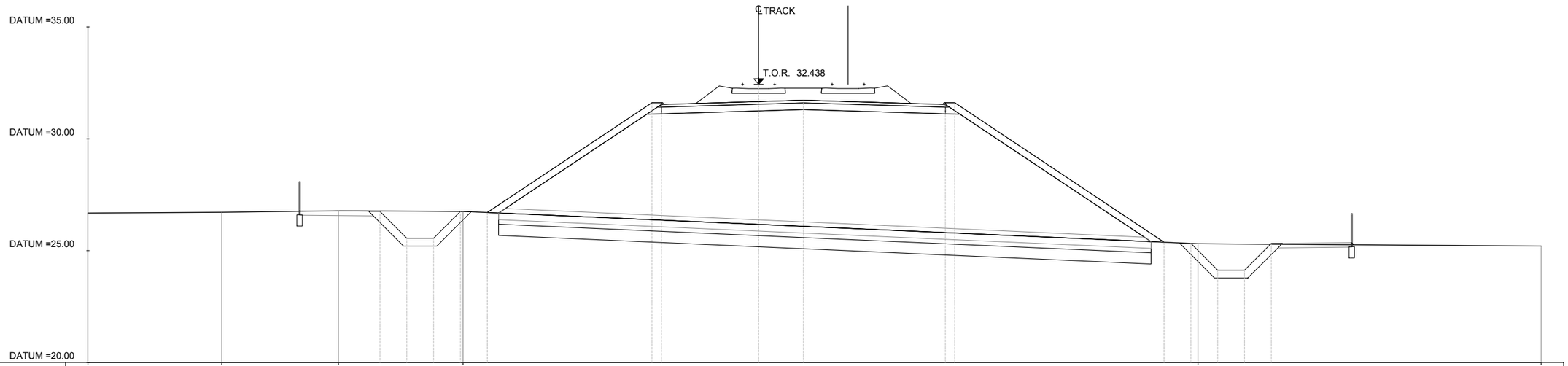

QUOTE TERRENO	26.68	26.72	26.78	26.75	25.31	25.20
DIST. PROGRESSIVE TERRENO	-30.00	-24.01	-18.79	-13.22	19.65	35.00
QUOTE PROGETTO	26.76	25.56	25.56	26.75	26.71	31.62 31.54	32.44	31.73	31.54 31.62	25.38	25.33	24.13	24.13	25.33
DIST.PROGRESSIVE PROGETTO	-16.94	-15.74	-14.54	-13.34	-12.14	-4.77 -4.35	0.00	2.00	8.35 8.77	18.13	19.33	20.53	21.73	22.93
DISTANZA BINARI	0.00	4.00

AREA
Scavo: 9.95
Rilevato: 116.24
SubBallast: 1.55
Ballast: 4.24
Inerbimento: 5.66
SuperCompattato:4.07
Stradello: 1.27
Anticapillare: 14.03
Scotico: 15.62
Bonifica: 15.62

PROG 12+580.00
SEZ. RI05_2

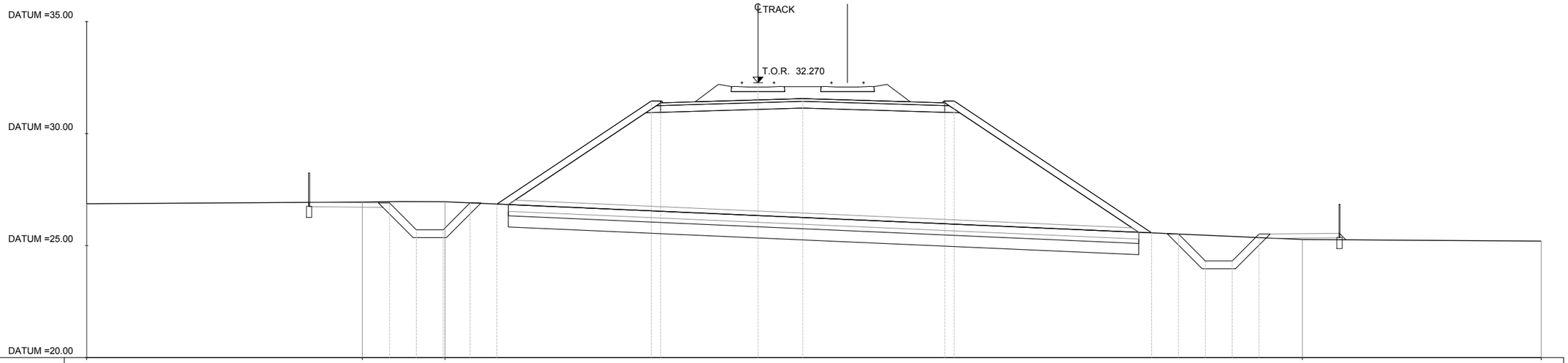

QUOTE TERRENO	26.87						26.94		26.96														25.27		25.20
DIST. PROGRESSIVE TERRENO	-30.00						-17.68		-13.99														24.33		35.00
QUOTE PROGETTO							26.91	25.71	25.71	26.91	26.85		31.45 31.37		32.27	31.56		31.37 31.45		25.57	25.52	24.32	24.32	25.52	
DIST.PROGRESSIVE PROGETTO							-16.47	-15.27	-14.07	-12.87	-11.67		-4.77 -4.35		0.00	2.00		8.35 8.77		17.59	18.79	19.99	21.19	22.39	
DISTANZA BINARI															0.00		4.00								

AREA
Scavo: 11.36
Rilevato: 124.51
SubBallast: 1.55
Ballast: 4.24
Inerbimento: 5.93
SuperCompattato:4.07
Stradello: 1.27
Anticapillare: 14.41
Scotico: 14.48
Bonifica: 14.48

PROG 12+600.00
SEZ. RI05_3

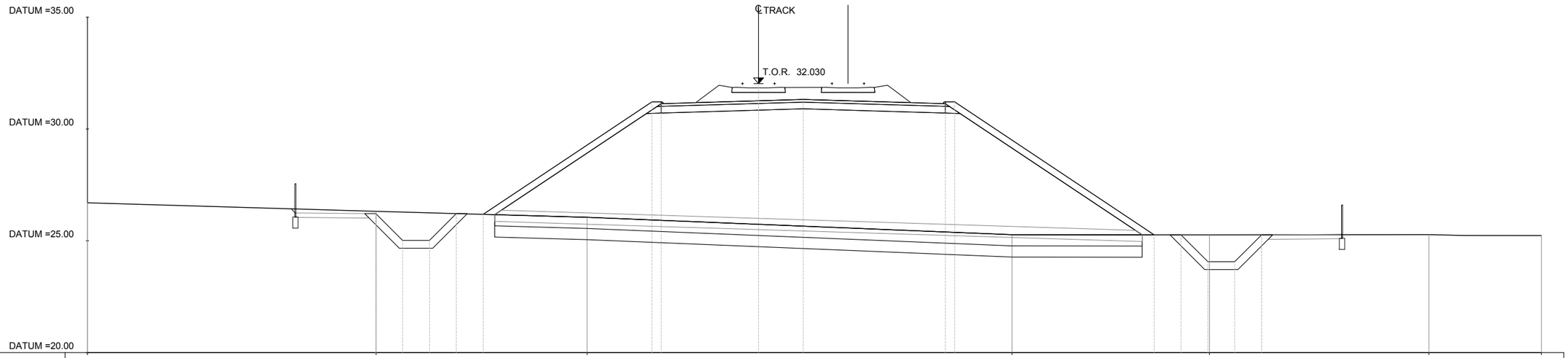

QUOTE TERRENO	26.70					26.32					26.05							25.27				25.26				25.27		25.24
DIST. PROGRESSIVE TERRENO	-30.00					-17.10					-7.66							11.33				20.16				29.97		35.00
QUOTE PROGETTO						26.22	25.02	25.02	26.22	26.18			31.21 31.13		32.03	31.32		31.13 31.21			25.27	25.26	24.06	24.06	25.26			
DIST.PROGRESSIVE PROGETTO						-17.11	-15.91	-14.71	-13.51	-12.31			-4.77 -4.35		-0.00	2.00		8.35 8.77			17.69	18.89	20.09	21.29	22.49			
DISTANZA BINARI															-0.00		4.00											

AREA
Scavo: 10.60
Rilevato: 126.91
SubBallast: 1.55
Ballast: 4.24
Inerbimento: 6.08
SuperCompattato:4.07
Stradello: 1.27
Anticapillare: 14.48
Scotico: 14.67
Bonifica: 14.67

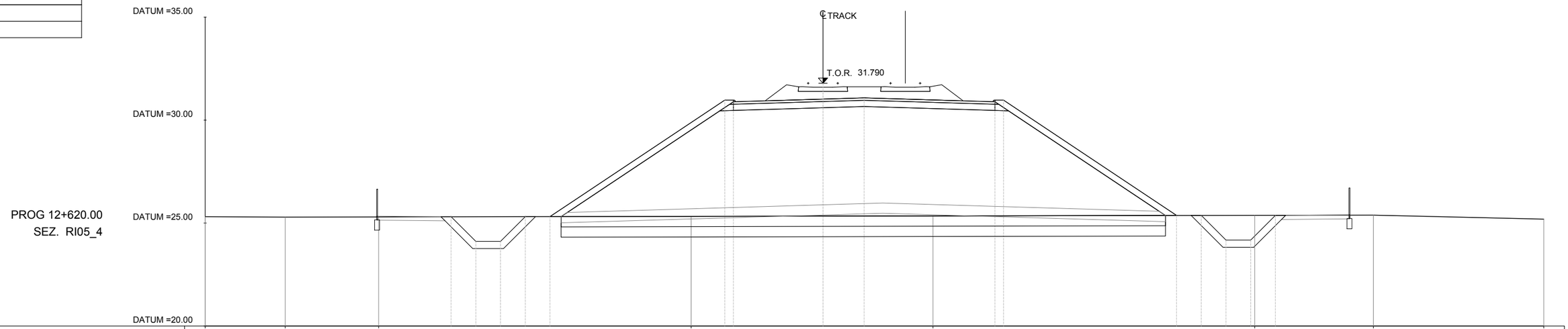

QUOTE TERRENO	25.31	25.29	25.30							25.33						25.35						25.38			25.39			25.19
DIST. PROGRESSIVE TERRENO	-30.00	-26.12	-21.58							-6.40						5.34						20.96			26.73			35.00
QUOTE PROGETTO				25.31	24.11	24.11	25.31	25.31			30.97 30.89		31.79	31.08			30.89 30.97			25.37	25.37	24.17	24.17	25.37				
DIST.PROGRESSIVE PROGETTO				-18.06	-16.86	-15.66	-14.46	-13.26			-4.77 -4.35		0.00	2.00			8.35 8.77			17.17	18.37	19.57	20.77	21.97				
DISTANZA BINARI													0.00		4.00													

AREA
Scavo: 10.61
Rilevato: 116.70
SubBallast: 1.55
Ballast: 4.24
Inerbimento: 5.75
SuperCompattato:4.07
Stradello: 1.27
Anticapillare: 14.03
Scotico: 14.21
Bonifica: 14.21

PROG 12+640.00
SEZ. RI05_5

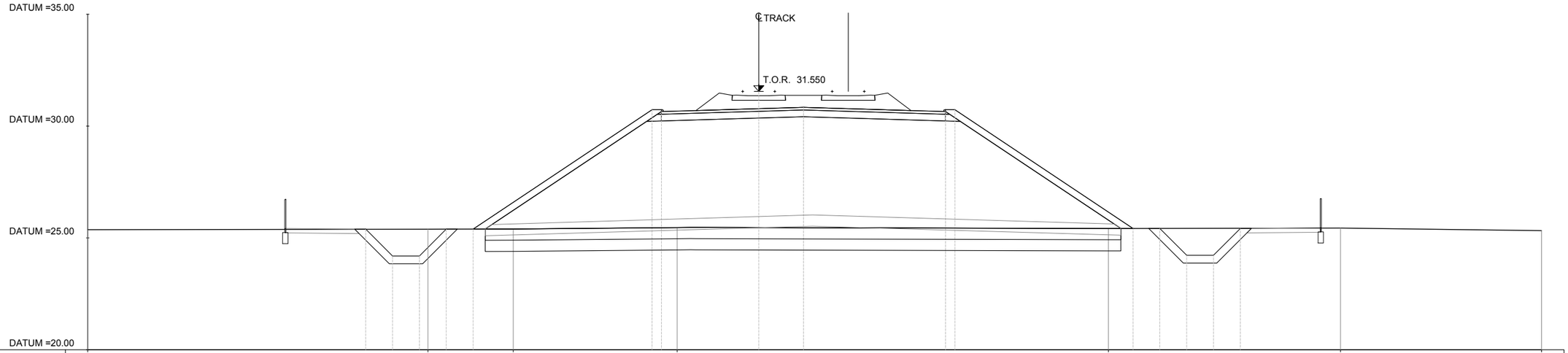

QUOTE TERRENO	25.37							25.39		25.40		25.46						25.42				25.44		25.33
DIST. PROGRESSIVE TERRENO	-30.00							-14.79		-10.98		-3.65						15.64				26.01		35.00
QUOTE PROGETTO			25.39	24.19	24.19	25.39	25.40				30.73 30.65		31.55	30.84		30.65 30.73			25.42	25.43	24.23	24.23	25.43	
DIST.PROGRESSIVE PROGETTO			-17.57	-16.37	-15.17	-13.97	-12.77				-4.77 -4.35		0.00	2.00		8.35 8.77			16.73	17.93	19.13	20.33	21.53	
DISTANZA BINARI													0.00		4.00									

AREA
Scavo: 10.97
Rilevato: 111.56
SubBallast: 1.55
Ballast: 4.23
Inerbimento: 5.50
SuperCompattato:4.07
Stradello: 1.27
Anticapillare: 13.69
Scotico: 13.87
Bonifica: 13.87

PROG 12+660.00
SEZ. RI05_6

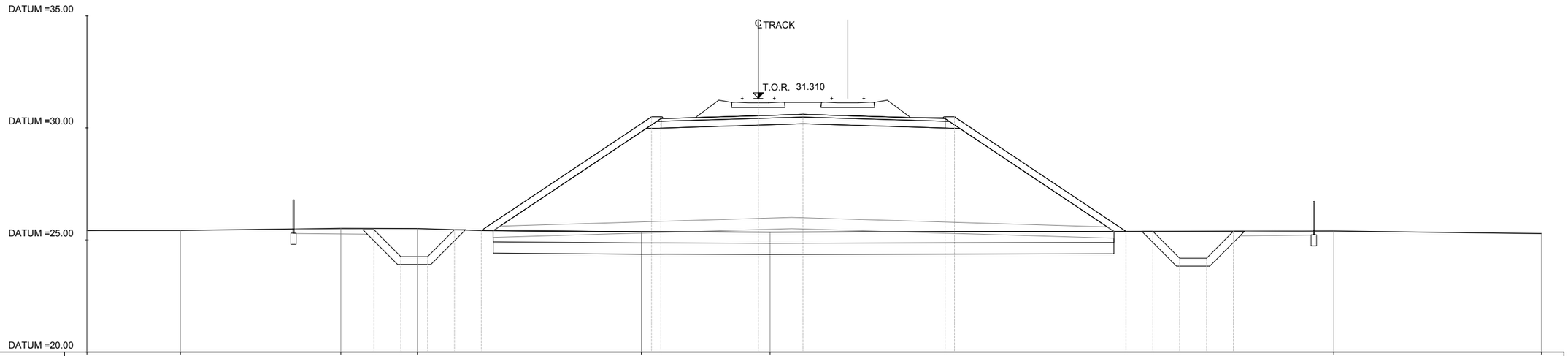

QUOTE TERRENO	25.42	25.42	25.52	25.51	25.36	25.35	25.40	25.28
DIST. PROGRESSIVE TERRENO	-30.00	-25.82	-18.66	-15.24	-5.23	0.53	25.72	35.00
QUOTE PROGETTO	25.46	24.26	24.26	25.46	25.42	30.49 30.41	31.31	30.60	30.41 30.49	25.38	25.38	24.18	24.18	25.38
DIST.PROGRESSIVE PROGETTO	-17.18	-15.97	-14.77	-13.57	-12.38	-4.77 -4.35	0.00	2.00	8.35 8.77	16.43	17.63	18.83	20.03	21.23
DISTANZA BINARI	0.00	4.00

AREA
Scavo: 10.54
Rilevato: 100.91
SubBallast: 1.55
Ballast: 4.24
Inerbimento: 5.21
SuperCompattato:4.07
Stradello: 1.27
Anticapillare: 13.28
Scotico: 13.46
Bonifica: 13.46

PROG 12+680.00
SEZ. RI05_7

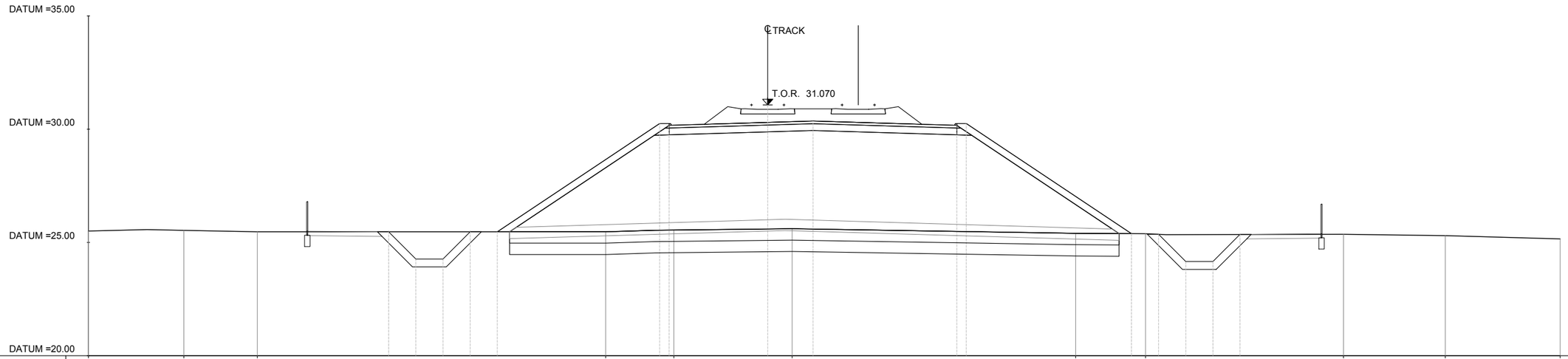

QUOTE TERRENO	25.50	25.54	25.47	25.47	25.55	25.60	25.40	25.39	25.36	25.30	25.16
DIST. PROGRESSIVE TERRENO	-30.00	-25.78	-22.54	-7.15	-4.14	1.08	13.60	16.69	25.43	29.92	35.00
QUOTE PROGETTO	25.47	24.27	24.27	25.47	25.47	30.25 30.17	31.07	30.36	30.17 30.25	25.39	25.36	24.16	24.16	25.36
DIST.PROGRESSIVE PROGETTO	-16.74	-15.54	-14.34	-13.14	-11.94	-4.77 -4.35	-0.00	2.00	8.35 8.77	16.06	17.26	18.46	19.66	20.86
DISTANZA BINARI	-0.00	4.00

AREA
Scavo: 10.67
Rilevato: 82.19
SubBallast: 1.55
Ballast: 4.23
Inerbimento: 4.52
SuperCompattato:4.07
Stradello: 1.27
Anticapillare: 12.33
Scotico: 12.50
Bonifica: 12.50

PROG 12+700.00
SEZ. RI05_8

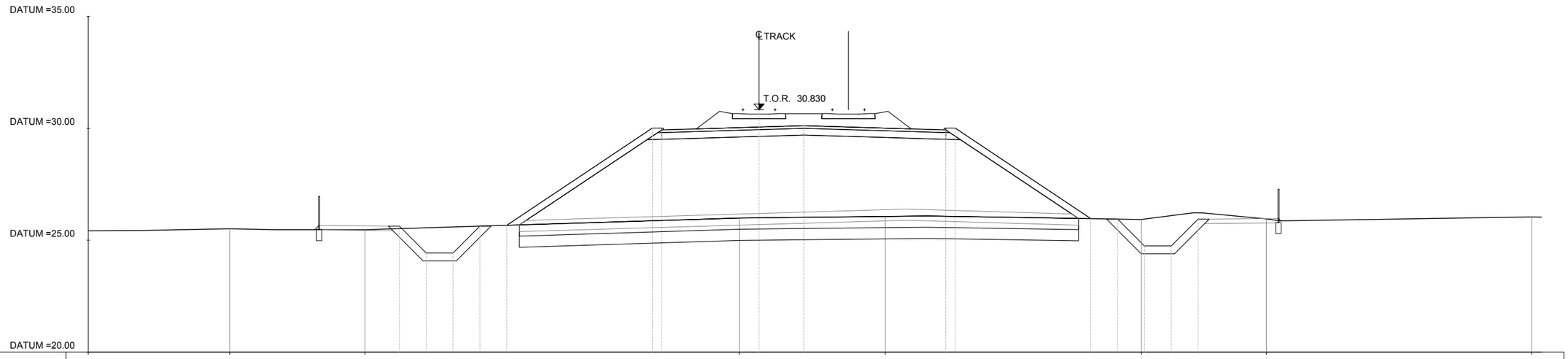

QUOTE TERRENO	25.42	25.51	25.47	25.99	26.06	25.93	25.95	26.04
DIST. PROGRESSIVE TERRENO	-30.00	-23.68	-17.63	-0.88	5.64	17.10	22.69	34.56
QUOTE PROGETTO	25.63	24.43	24.43	25.63	25.67	30.01 29.93	30.83	30.12	29.93 30.01	25.97	25.95	24.75	24.75	25.95
DIST.PROGRESSIVE PROGETTO	-16.09	-14.88	-13.68	-12.48	-11.28	-4.77 -4.35	-0.00	2.00	8.35 8.77	14.84	16.04	17.24	18.44	19.64
DISTANZA BINARI	-0.00	4.00

AREA
Scavo: 15.88
Rilevato: 76.86
SubBallast: 1.55
Ballast: 4.23
Inerbimento: 4.36
SuperCompattato:4.07
Stradello: 1.27
Anticapillare: 12.14
Scotico: 12.36
Bonifica: 12.36

PROG 12+720.00
SEZ. RI05_8

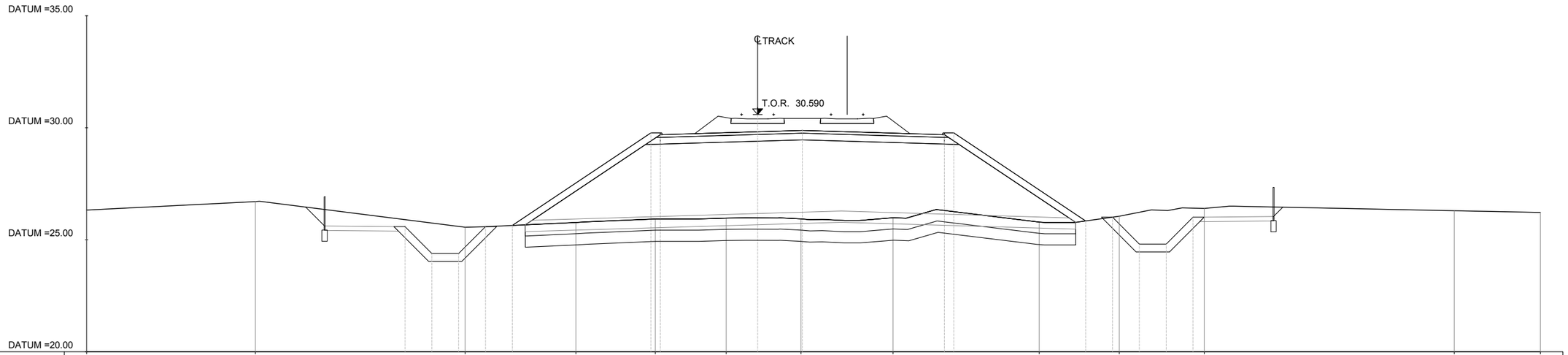

QUOTE TERRENO	26.33	26.71	25.56	25.77	25.93	25.97	25.93	25.98	25.79	26.05	26.40	26.30	26.22
DIST. PROGRESSIVE TERRENO	-30.00	-22.45	-13.08	-8.12	-4.57	-1.40	1.94	6.05	12.59	16.17	19.97	31.15	35.00
QUOTE PROGETTO	25.59	24.39	24.39	25.59	25.64	29.77 29.69	30.59	29.88	29.69 29.77	25.84	26.01	24.81	24.81	26.01
DIST.PROGRESSIVE PROGETTO	-15.77	-14.57	-13.37	-12.17	-10.97	-4.77 -4.35	0.00	2.00	8.35 8.77	14.67	15.87	17.07	18.27	19.47
DISTANZA BINARI	0.00	4.00

AREA
Scavo: 20.34
Rilevato: 102.58
SubBallast: 1.55
Ballast: 4.23
Inerbimento: 4.17
SuperCompattato:4.07
Stradello: 1.27
Anticapillare: 12.06
Scotico: 12.71
Bonifica: 12.71

PROG 12+740.00
SEZ. RI01_10

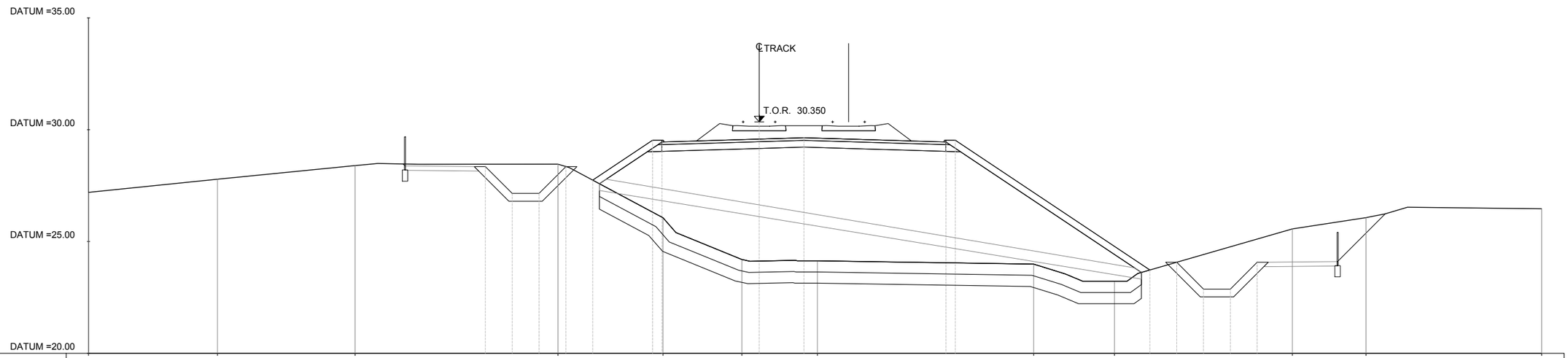

QUOTE TERRENO	27.20	27.79	28.40	28.46	26.06	24.20	24.14	23.99	23.22	25.57	26.07	26.47
DIST. PROGRESSIVE TERRENO	-30.00	-24.23	-18.07	-9.00	-4.30	-0.78	2.60	12.28	15.89	23.85	27.14	35.00
QUOTE PROGETTO	28.35	27.15	27.15	28.35	27.74	29.53 29.45	30.35	29.64	29.45 29.53	23.73	24.07	22.87	22.87	24.07
DIST.PROGRESSIVE PROGETTO	-12.25	-11.05	-9.85	-8.65	-7.45	-4.77 -4.35	-0.00	2.00	8.35 8.77	17.47	18.67	19.87	21.07	22.27
DISTANZA BINARI	-0.00	4.00

AREA
Scavo: 15.45
Rilevato: 96.39
SubBallast: 1.55
Ballast: 4.24
Inerbimento: 4.14
SuperCompattato:4.07
Stradello: 1.27
Anticapillare: 12.00
Scotico: 12.77
Bonifica: 12.77

PROG 12+760.00
SEZ. RI05_11

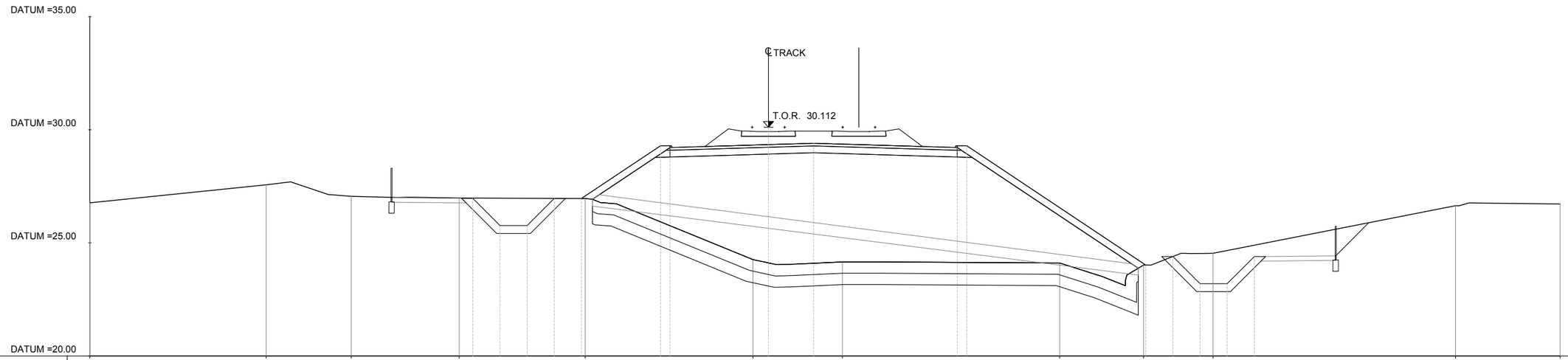

QUOTE TERRENO	26.77	27.57	27.06	26.98	26.96	24.26	24.16	24.11	24.02	24.54	26.64	26.72
DIST. PROGRESSIVE TERRENO	-30.00	-22.21	-18.45	-13.67	-8.10	-0.69	3.27	12.88	16.58	19.65	30.38	35.00
QUOTE PROGETTO	26.97	25.77	25.77	26.97	26.96	29.29 29.21	30.11	29.40	29.21 29.29	24.02	24.40	23.20	23.20	24.40
DIST.PROGRESSIVE PROGETTO	-13.07	-11.87	-10.67	-9.47	-8.27	-4.77 -4.35	0.00	2.00	8.35 8.77	16.68	17.88	19.08	20.28	21.48
DISTANZA BINARI	0.00	4.00

AREA
Scavo: 21.40
Rilevato: 100.26
SubBallast: 1.54
Ballast: 4.23
Inerbimento: 4.68
SuperCompattato:4.07
Stradello: 1.27
Anticapillare: 12.68
Scotico: 13.20
Bonifica: 13.20

PROG 12+780.00
SEZ. RI05_12

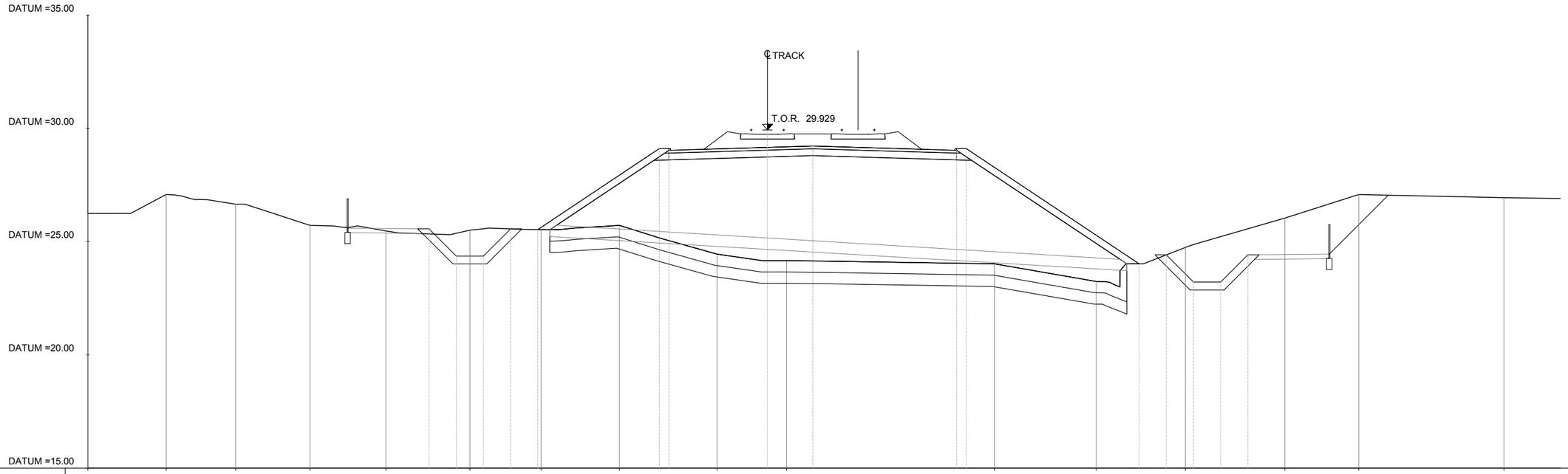

QUOTE TERRENO	26.24	27.08	26.65	25.72	25.47	25.51	25.53	25.72	24.45	24.16	24.02	23.24	24.74	26.04	27.08	26.94
DIST. PROGRESSIVE TERRENO	-30.00	-26.54	-23.48	-20.19	-16.84	-13.14	-9.99	-6.53	-2.22	0.84	10.02	14.51	18.45	22.84	26.10	32.52
QUOTE PROGETTO	25.56	24.36	24.36	25.56	25.53	29.11 29.03	29.93	29.22	29.03 29.11	24.02	24.41	23.21	23.21	24.41		
DIST.PROGRESSIVE PROGETTO	-14.94	-13.74	-12.54	-11.34	-10.14	-4.77 -4.35	-0.00	2.00	8.35 8.77	16.41	17.61	18.81	20.01	21.21		
DISTANZA BINARI	-0.00	4.00														

AREA
Scavo: 31.83
Rilevato: 108.04
SubBallast: 1.55
Ballast: 4.24
Inerbimento: 5.19
SuperCompattato:4.06
Stradello: 1.27
Anticapillare: 13.36
Scotico: 15.59
Bonifica: 15.59

PROG 12+800.00
SEZ. RI05_13

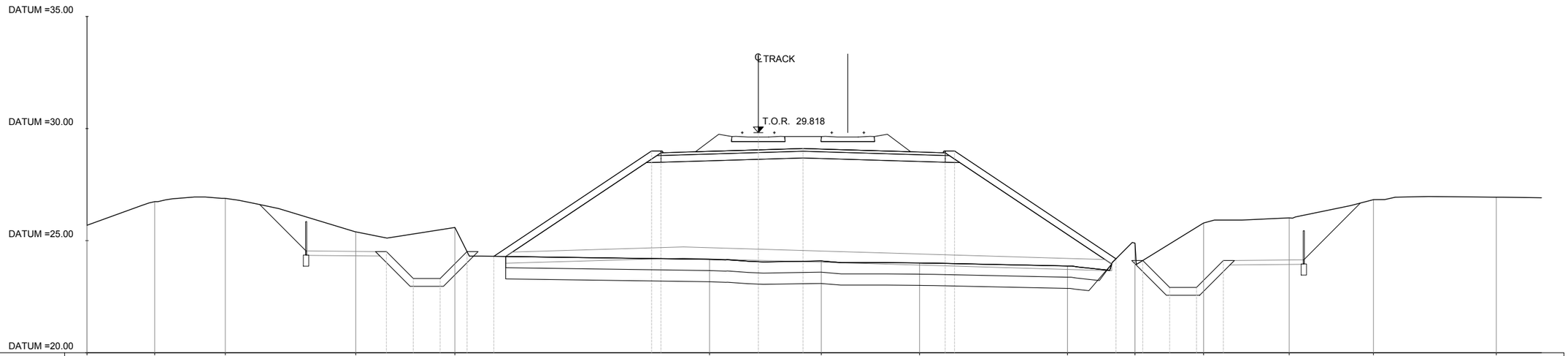

QUOTE TERRENO	25.69	26.74	26.89	25.39	25.59	24.17	24.09	24.01	23.87	24.89	25.79	26.02	26.83	26.94
DIST. PROGRESSIVE TERRENO	-30.00	-26.97	-23.82	-17.99	-13.56	-2.18	2.82	7.21	13.82	16.83	19.90	23.72	27.49	32.98
QUOTE PROGETTO	24.51	23.31	23.31	24.51	24.30	29.00 28.92	29.82	29.11	28.92 29.00	24.19	24.12	22.92	22.92	24.12
DIST.PROGRESSIVE PROGETTO	-16.62	-15.42	-14.22	-13.02	-11.82	-4.77 -4.35	0.00	2.00	8.35 8.77	15.98	17.18	18.38	19.58	20.78
DISTANZA BINARI							0.00	4.00						

AREA
Scavo: 21.76
Rilevato: 104.60
SubBallast: 1.55
Ballast: 4.24
Inerbimento: 5.10
SuperCompattato:4.07
Stradello: 1.27
Anticapillare: 13.30
Scotico: 16.54
Bonifica: 16.54

PROG 12+820.00
SEZ. RI05_14

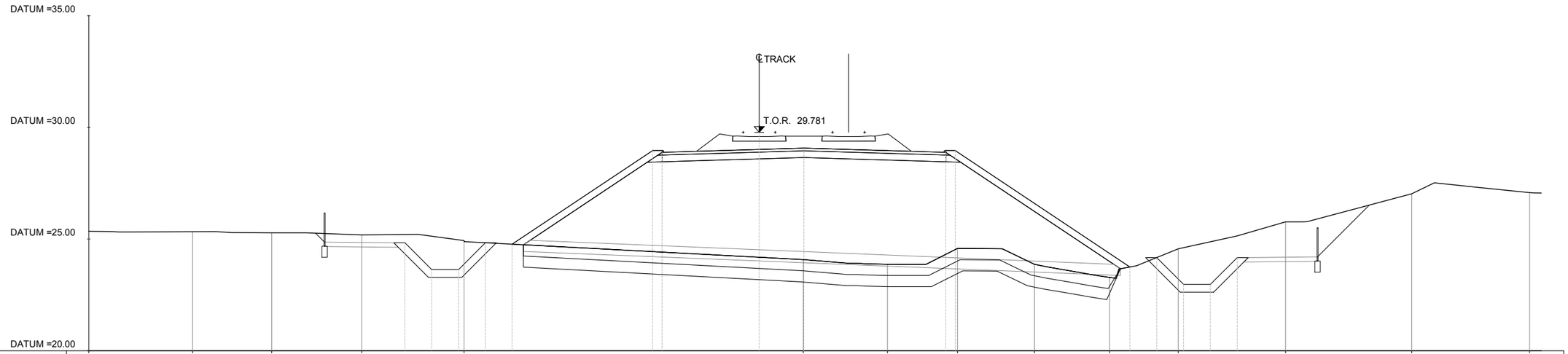

QUOTE TERRENO	25.35	25.33	25.28	25.19	24.93	24.08	23.87	24.58	23.87	23.28	24.57	25.77	27.03	27.08
DIST. PROGRESSIVE TERRENO	-30.00	-25.35	-21.81	-17.78	-13.21	1.97	5.74	8.87	12.32	15.68	18.75	23.55	29.20	34.47
QUOTE PROGETTO	24.84	23.63	23.63	24.83	24.77	28.96 28.88	29.78	29.07	28.88 28.96	23.75	24.17	22.97	22.97	24.17
DIST.PROGRESSIVE PROGETTO	-15.86	-14.66	-13.46	-12.26	-11.06	-4.77 -4.35	-0.00	2.00	8.35 8.77	16.59	17.79	18.99	20.19	21.39
DISTANZA BINARI							-0.00	4.00						

AREA
Scavo: 30.44
Rilevato: 126.57
SubBallast: 1.55
Ballast: 4.33
Inerbimento: 5.74
SuperCompattato:4.06
Stradello: 1.27
Anticapillare: 13.84
Scotico: 14.14
Bonifica: 14.14

PROG 12+840.00
SEZ. RI05_15

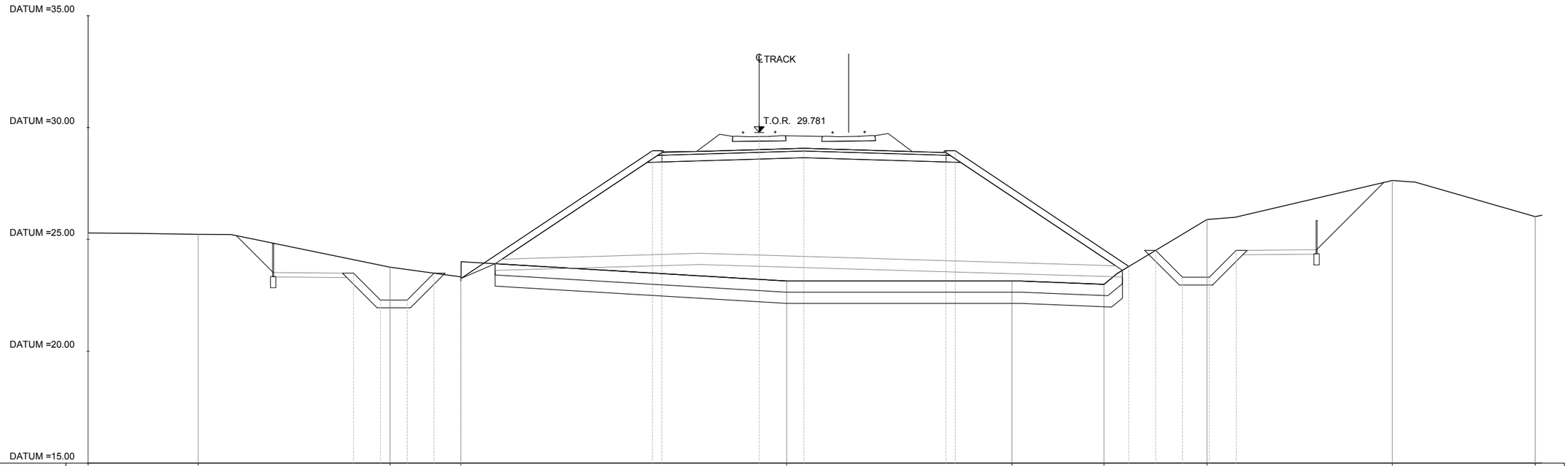

QUOTE TERRENO	25.29	25.23	23.76	23.33	23.14	23.14	22.99	25.89	27.64	26.02														
DIST. PROGRESSIVE TERRENO	-30.00	-25.08	-16.50	-13.34	1.23	11.30	15.42	20.02	28.31	34.70														
QUOTE PROGETTO				23.49	22.29	22.29	23.49	23.25	28.96 28.88	29.78	29.07	28.88 28.96	23.79	24.51	23.31	23.31	24.51							
DIST.PROGRESSIVE PROGETTO				-18.13	-16.93	-15.73	-14.53	-13.33	-4.77 -4.35	-0.00	2.00	8.35 8.77	16.53	17.73	18.93	20.13	21.33							
DISTANZA BINARI										-0.00	4.00													

AREA
Scavo: 14.87
Rilevato: 65.55
SubBallast: 1.55
Ballast: 4.43
Inerbimento: 3.30
SuperCompattato:4.06
Stradello: 1.27
Anticapillare: 10.70
Scotico: 10.95
Bonifica: 10.95

PROG 12+860.00
SEZ. RI05_16

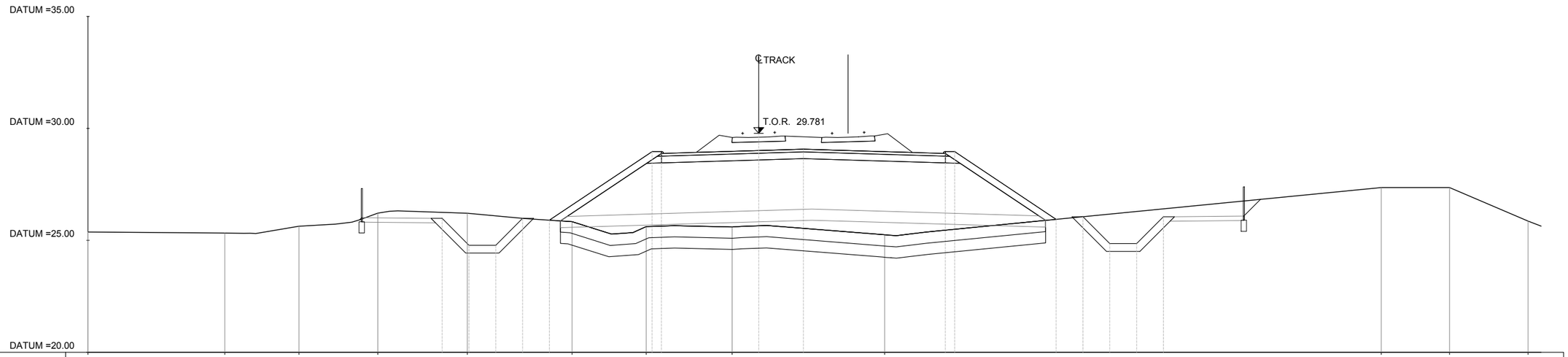

QUOTE TERRENO	25.37	25.33	25.63	26.22	26.21	25.83	25.61	25.60	25.25	27.36	27.36	25.86
DIST. PROGRESSIVE TERRENO	-30.00	-23.88	-20.57	-17.04	-13.03	-8.35	-5.03	-1.19	5.63	27.85	30.90	34.41
QUOTE PROGETTO	25.98	24.78	24.78	25.98	25.90	28.96 28.88	29.78	29.07	28.88 28.96	25.94	26.06	24.86	24.86	26.06
DIST.PROGRESSIVE PROGETTO	-14.16	-12.96	-11.76	-10.56	-9.36	-4.77 -4.35	-0.00	2.00	8.35 8.77	13.30	14.50	15.70	16.90	18.10
DISTANZA BINARI	-0.00	4.00

AREA
Scavo: 12.86
Rilevato: 40.36
SubBallast: 1.55
Ballast: 4.53
Inerbimento: 3.38
SuperCompattato:4.07
Stradello: 1.27
Anticapillare: 0.00
Scotico: 11.14
Bonifica: 11.14

PROG 12+880.00
SEZ. RI05_17

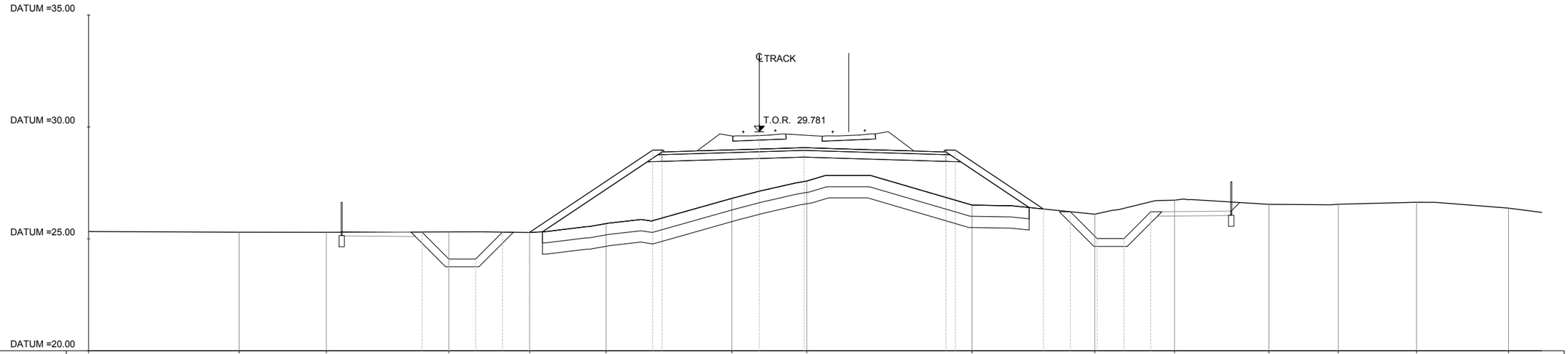

QUOTE TERRENO	25.33	25.30	25.29	25.31	25.28	25.68	26.81	27.58	26.51	26.10	26.73	26.54	26.55	26.64	26.37										
DIST. PROGRESSIVE TERRENO	-30.00	-23.27	-19.36	-13.89	-10.27	-6.85	-1.23	2.12	9.52	15.00	18.57	22.79	25.90	29.40	33.51										
QUOTE PROGETTO				25.30	24.10	24.10	25.30	25.28	28.96 28.88	29.78	29.07	28.88 28.96	26.33	26.21	25.01	25.01	26.21								
DIST.PROGRESSIVE PROGETTO				-15.09	-13.89	-12.69	-11.49	-10.29	-4.77 -4.35	-0.00	2.00	8.35 8.77	12.71	13.91	15.11	16.31	17.51								
DISTANZA BINARI										-0.00	4.00														

AREA
Scavo: 11.91
Rilevato: 73.63
SubBallast: 1.55
Ballast: 4.63
Inerbimento: 4.04
SuperCompattato:4.06
Stradello: 1.27
Anticapillare: 11.69
Scotico: 11.85
Bonifica: 11.85

PROG 12+900.00
SEZ. RI05_18

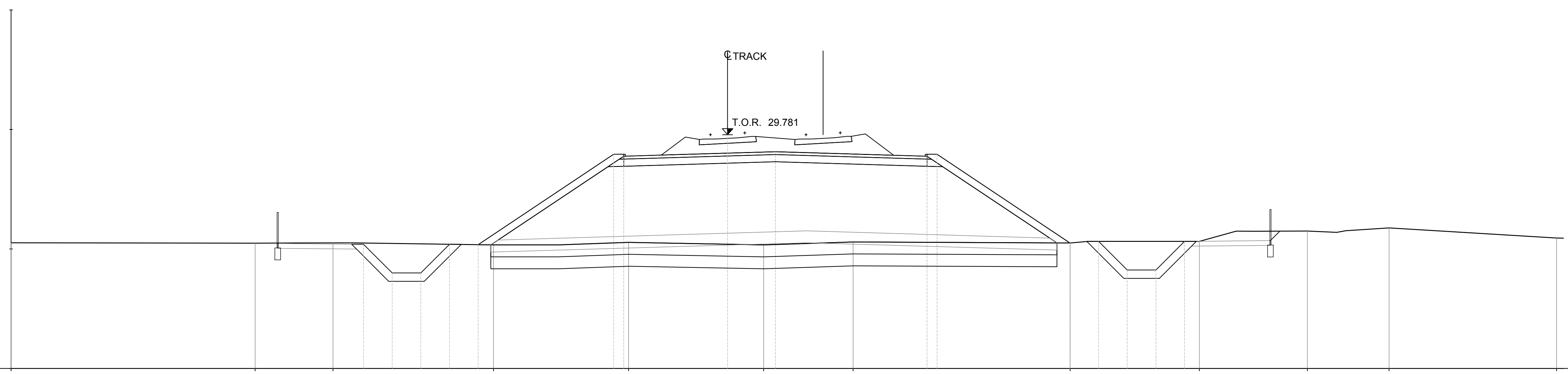

QUOTE TERRENO	DIST. PROGRESSIVE TERRENO	QUOTE PROGETTO	DIST.PROGRESSIVE PROGETTO	DISTANZA BINARI
25.26	-30.00			
25.24	-19.78			
25.25	-16.52			
		25.20	-15.24	
		24.00	-14.04	
		24.00	-12.84	
		25.20	-11.64	
		25.18	-10.44	
25.17	-9.80			
		28.96	-4.77	
		28.88	-4.35	
25.28	-4.14			
		29.78	0.00	0.00
25.17	1.51			
		29.07	2.00	
				4.00
25.30	5.26			
		28.88	8.35	
		28.96	8.77	
25.25	14.34	25.25	14.33	
		25.32	15.53	
		24.12	16.73	
		24.12	17.93	
		25.32	19.13	
25.32	19.75			
25.75	24.27			
25.88	27.70			
25.46	34.71			

AREA
Scavo: 10.51
Rilevato: 74.33
SubBallast: 1.55
Ballast: 4.73
Inerbimento: 4.03
SuperCompattato:4.07
Stradello: 1.27
Anticapillare: 11.68
Scotico: 11.84
Bonifica: 11.84

PROG 12+920.00
SEZ. RI05_19

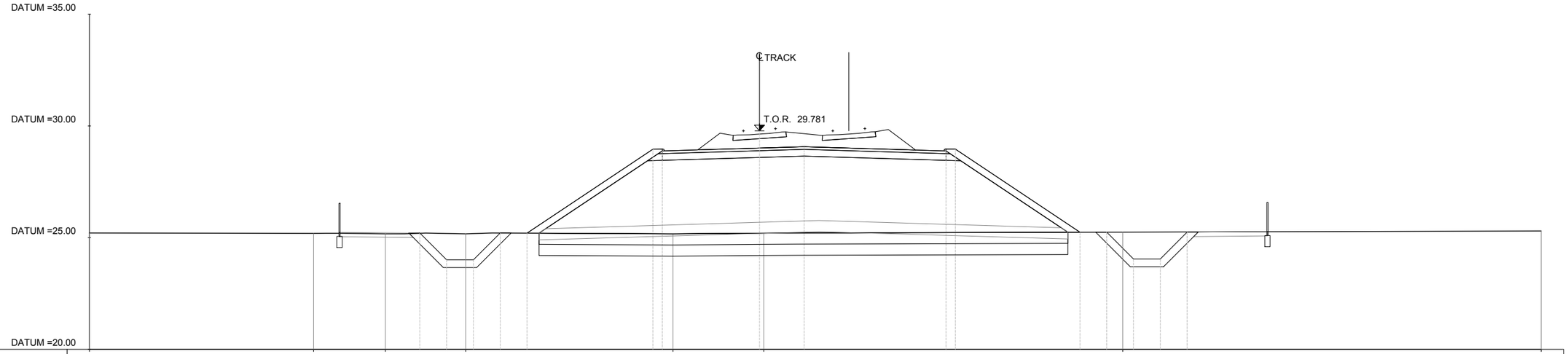

QUOTE TERRENO	25.21	25.19	25.17	25.17	25.17	25.20	25.25	25.30
DIST. PROGRESSIVE TERRENO	-30.00	-19.96	-16.75	-13.15	-3.87	0.19	16.26	35.00
QUOTE PROGETTO	25.21	24.01	24.01	25.21	25.20	28.96 28.88	29.78	29.07	28.88 28.96	25.24	25.25	24.05	24.05	25.25
DIST.PROGRESSIVE PROGETTO	-15.21	-14.01	-12.81	-11.61	-10.41	-4.77 -4.35	0.00	2.00	8.35 8.77	14.35	15.55	16.75	17.95	19.15
DISTANZA BINARI	0.00	4.00

AREA
Scavo: 10.59
Rilevato: 73.00
SubBallast: 1.55
Ballast: 4.83
Inerbimento: 3.99
SuperCompattato:4.07
Stradello: 1.27
Anticapillare: 11.62
Scotico: 11.78
Bonifica: 11.78

PROG 12+940.00
SEZ. RI05_19

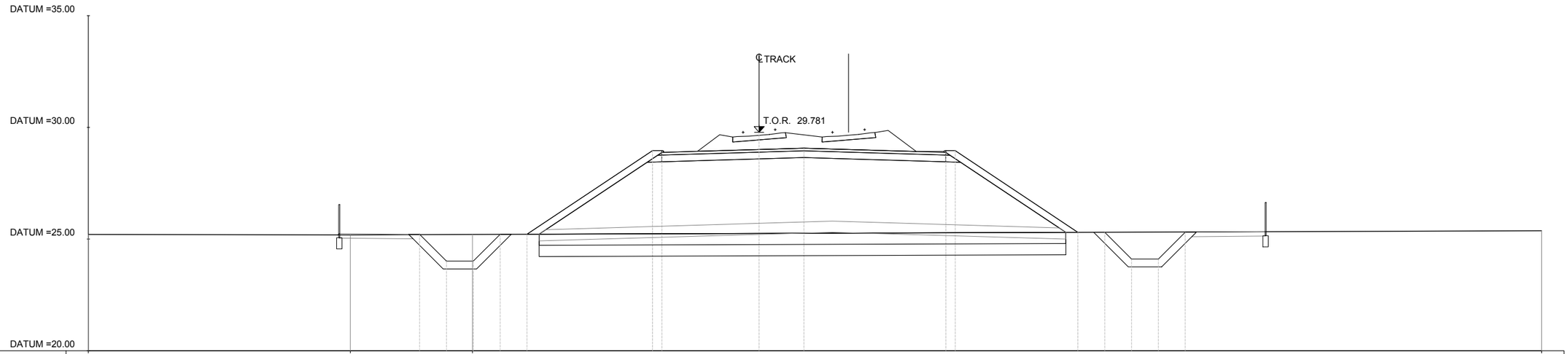

QUOTE TERRENO	25.21	25.19	25.21	25.37														
DIST. PROGRESSIVE TERRENO	-30.00	-18.28	-12.82	35.00														
QUOTE PROGETTO	25.21	24.01	24.01	25.21	25.22	28.96	28.88	29.78	29.07	28.88	28.96	25.30	25.31	24.11	24.11	25.31		
DIST.PROGRESSIVE PROGETTO	-15.18	-13.98	-12.78	-11.58	-10.38	-4.77	-4.35	-0.00	2.00	8.35	8.77	14.26	15.46	16.66	17.86	19.06		
DISTANZA BINARI	-0.00	4.00																

AREA
Scavo: 10.58
Rilevato: 74.13
SubBallast: 1.55
Ballast: 4.89
Inerbimento: 4.04
SuperCompattato:4.06
Stradello: 1.27
Anticapillare: 11.69
Scotico: 11.85
Bonifica: 11.85

PROG 12+960.00
SEZ. RI05_21

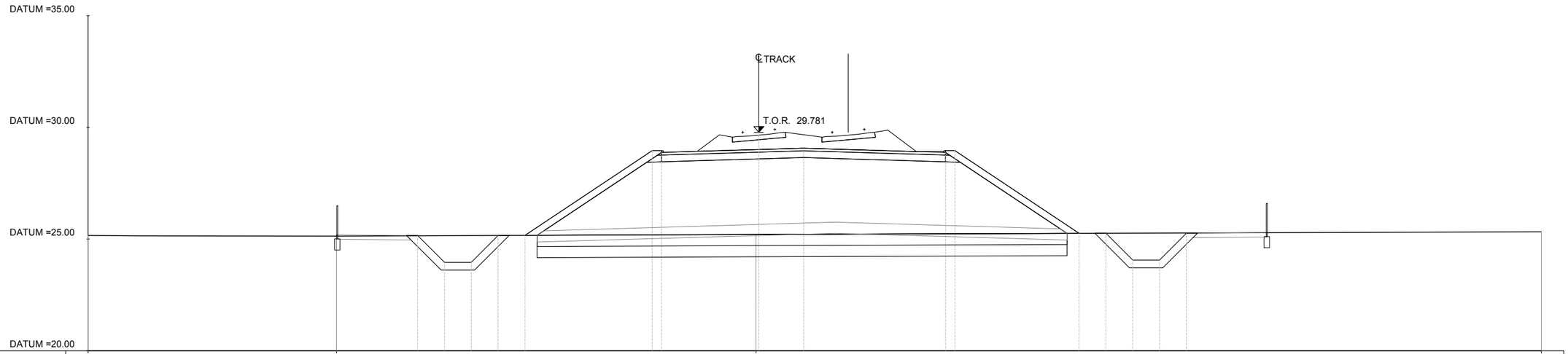

QUOTE TERRENO	25.16	25.13	25.21	25.33
DIST. PROGRESSIVE TERRENO	-30.00	-18.89	-0.13	35.00
QUOTE PROGETTO	25.16	23.96	23.96	25.16	25.17	28.96	28.88	29.78	29.07	28.88	28.96	25.26	25.26	24.06	24.06	25.26
DIST.PROGRESSIVE PROGETTO	-15.26	-14.06	-12.86	-11.66	-10.46	-4.77	-4.35	0.00	2.00	8.35	8.77	14.32	15.52	16.72	17.92	19.12
DISTANZA BINARI	0.00	4.00

AREA
Scavo: 10.57
Rilevato: 75.62
SubBallast: 1.55
Ballast: 4.89
Inerbimento: 4.11
SuperCompattato:4.07
Stradello: 1.27
Anticapillare: 11.77
Scotico: 11.94
Bonifica: 11.94

PROG 12+980.00
SEZ. RI05_22

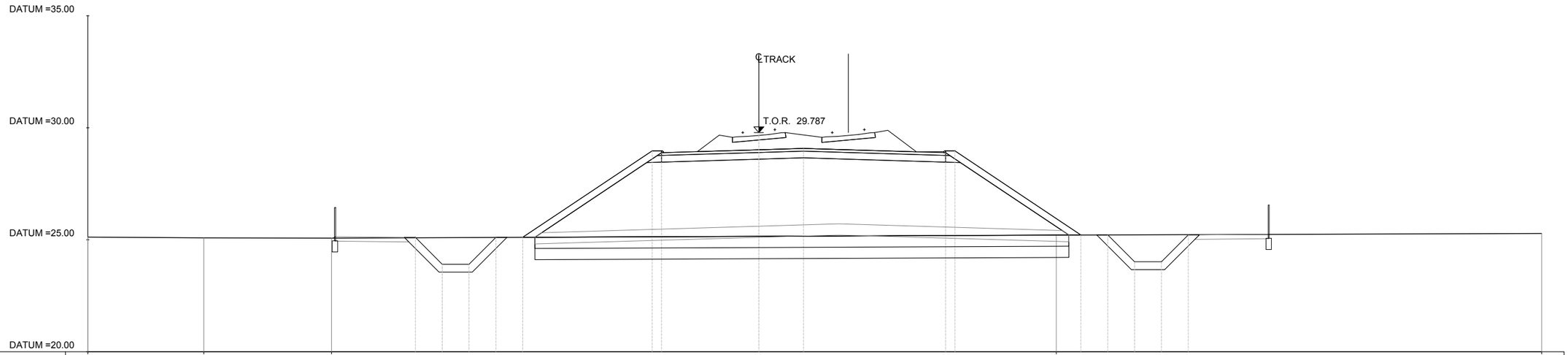

QUOTE TERRENO	25.12	25.09	25.07											25.21				25.28
DIST. PROGRESSIVE TERRENO	-30.00	-24.82	-19.11											13.30				35.00
QUOTE PROGETTO				25.11	23.91	23.91	25.11	25.11	28.97 28.89	29.79	29.08	28.89 28.97	25.21	25.22	24.02	24.02	25.22	
DIST.PROGRESSIVE PROGETTO				-15.35	-14.15	-12.95	-11.75	-10.55	-4.77 -4.35	-0.00	2.00	8.35 8.77	14.40	15.60	16.80	18.00	19.20	
DISTANZA BINARI										-0.00	4.00							

AREA
Scavo: 10.60
Rilevato: 78.38
SubBallast: 1.55
Ballast: 4.89
Inerbimento: 4.23
SuperCompattato:4.06
Stradello: 1.27
Anticapillare: 11.93
Scotico: 12.10
Bonifica: 12.10

PROG 13+000.00
SEZ. RI05_23

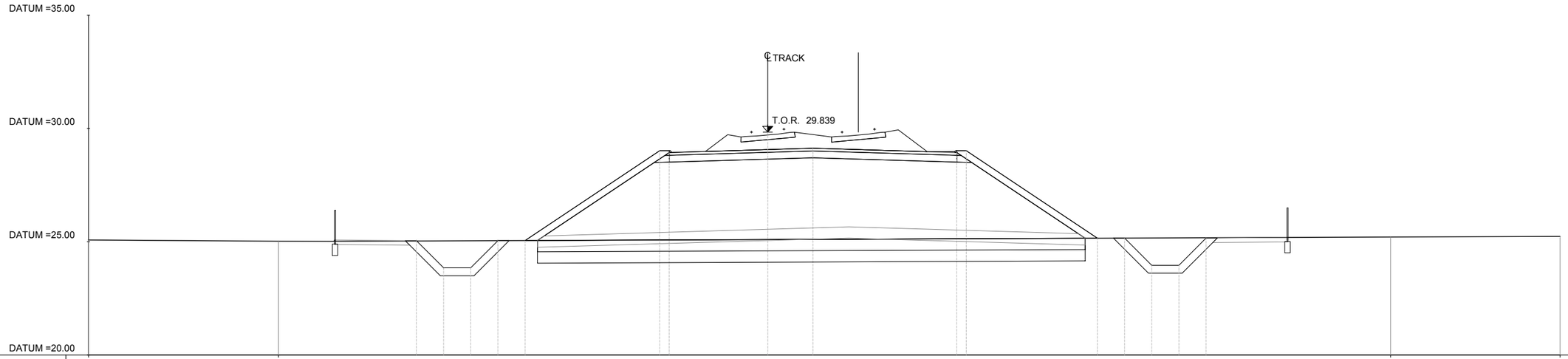

QUOTE TERRENO	25.08	25.02																				25.21	25.23
DIST. PROGRESSIVE TERRENO	-30.00	-21.61																				27.51	35.00
QUOTE PROGETTO			25.05	23.85	23.85	25.05	25.05	29.02 28.94	29.84	29.13	28.94 29.02	25.16	25.16	23.96	23.96	25.16						
DIST.PROGRESSIVE PROGETTO			-15.52	-14.32	-13.12	-11.92	-10.72	-4.77 -4.35	0.00	2.00	8.35 8.77	14.56	15.76	16.96	18.16	19.36						
DISTANZA BINARI									0.00	4.00												

AREA
Scavo: 10.64
Rilevato: 82.51
SubBallast: 1.55
Ballast: 4.89
Inerbimento: 4.39
SuperCompattato:4.07
Stradello: 1.27
Anticapillare: 12.16
Scotico: 12.33
Bonifica: 12.33

PROG 13+020.00
SEZ. RI05_24

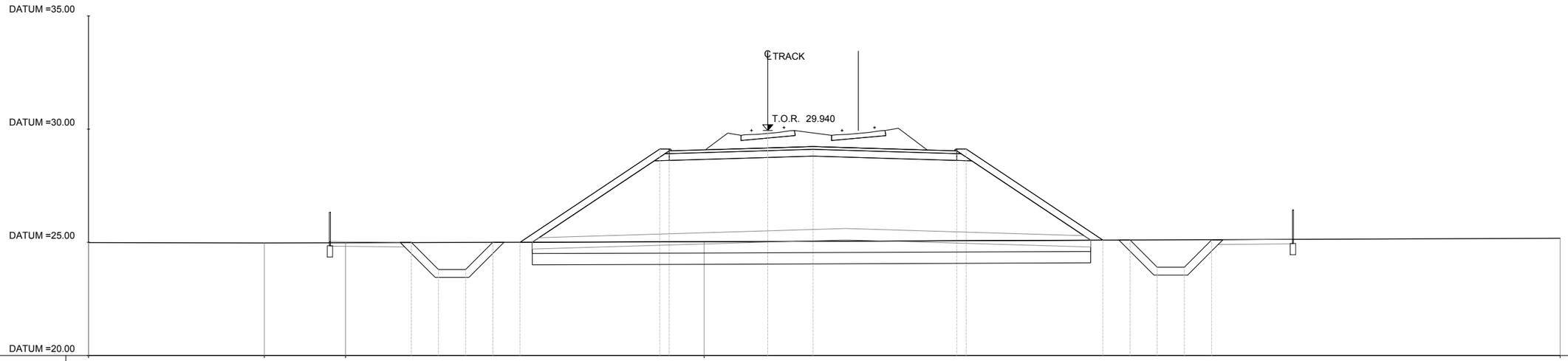

QUOTE TERRENO	24.99	24.97	24.98	25.03	25.18
DIST. PROGRESSIVE TERRENO	-30.00	-22.24	-18.64	-2.81	35.00
QUOTE PROGETTO	25.00	23.80	23.80	25.00	25.00	29.12	29.04	29.94	29.23	29.04	29.12	25.10	25.10	23.90	23.90	25.10
DIST.PROGRESSIVE PROGETTO	-15.74	-14.54	-13.34	-12.14	-10.94	-4.77	-4.35	0.00	2.00	8.35	8.77	14.80	16.00	17.20	18.40	19.60
DISTANZA BINARI	0.00	4.00

AREA
Scavo: 10.60
Rilevato: 83.98
SubBallast: 1.54
Ballast: 4.89
Inerbimento: 4.45
SuperCompattato:4.07
Stradello: 1.27
Anticapillare: 12.25
Scotico: 12.42
Bonifica: 12.42

PROG 13+040.00
SEZ. RI05_25

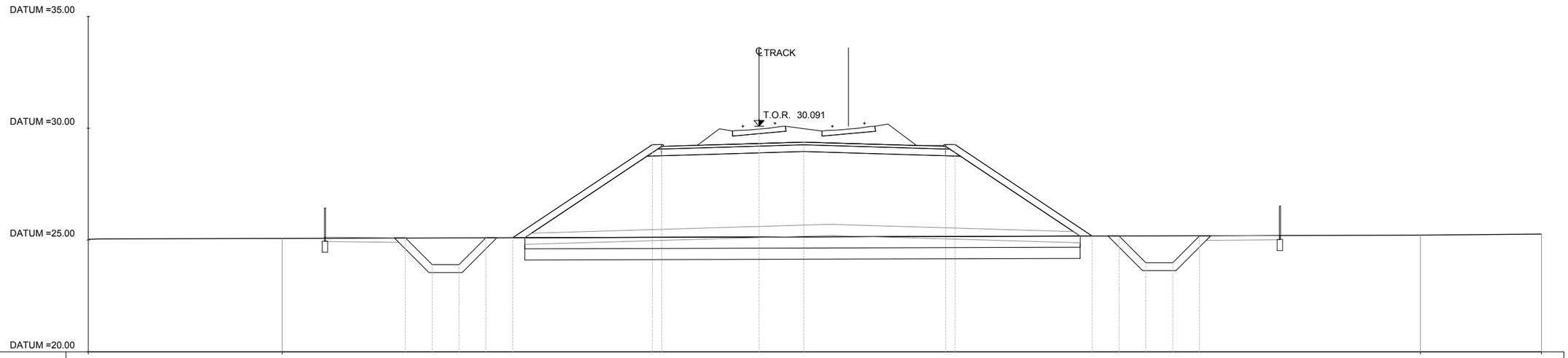

QUOTE TERRENO	25.04	25.07																				25.22	25.27
DIST. PROGRESSIVE TERRENO	-30.00	-21.32																				29.59	35.00
QUOTE PROGETTO			25.10	23.90	23.90	25.10	25.10	29.27	29.19	30.09	29.38	29.19	29.27	25.18	25.18	23.98	23.98	25.18					
DIST.PROGRESSIVE PROGETTO			-15.82	-14.62	-13.42	-12.22	-11.02	-4.77	-4.35	-0.00	2.00	8.35	8.77	14.90	16.10	17.30	18.50	19.70					
DISTANZA BINARI										-0.00	4.00												

AREA
Scavo: 10.50
Rilevato: 86.11
SubBallast: 1.55
Ballast: 4.89
Inerbimento: 4.53
SuperCompattato:4.06
Stradello: 1.27
Anticapillare: 12.35
Scotico: 12.52
Bonifica: 12.52

PROG 13+060.00
SEZ. RI05_26

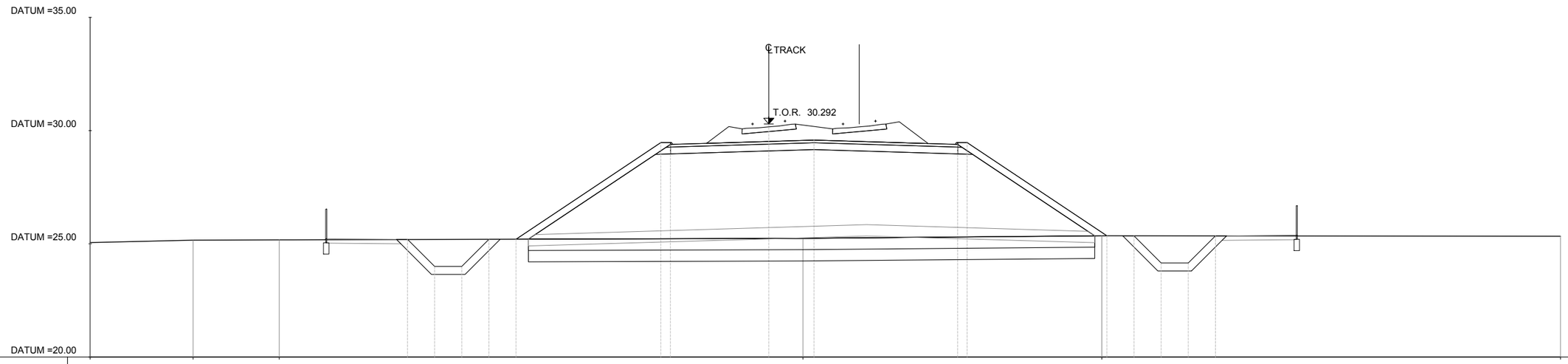

QUOTE TERRENO	25.05	25.16	25.17	25.24	25.36	25.34
DIST. PROGRESSIVE TERRENO	-30.00	-25.45	-21.64	1.51	14.72	35.00
QUOTE PROGETTO	25.20	24.00	24.00	25.20	25.21	29.47 29.39	30.29	29.58	29.39 29.47	25.35	25.35	24.15	24.15	25.35
DIST.PROGRESSIVE PROGETTO	-15.97	-14.77	-13.57	-12.37	-11.17	-4.77 -4.35	0.00	2.00	8.35 8.77	14.95	16.15	17.35	18.55	19.75
DISTANZA BINARI	0.00	4.00

AREA
Scavo: 10.61
Rilevato: 93.88
SubBallast: 1.55
Ballast: 4.88
Inerbimento: 4.85
SuperCompattato:4.06
Stradello: 1.27
Anticapillare: 12.80
Scotico: 12.97
Bonifica: 12.97

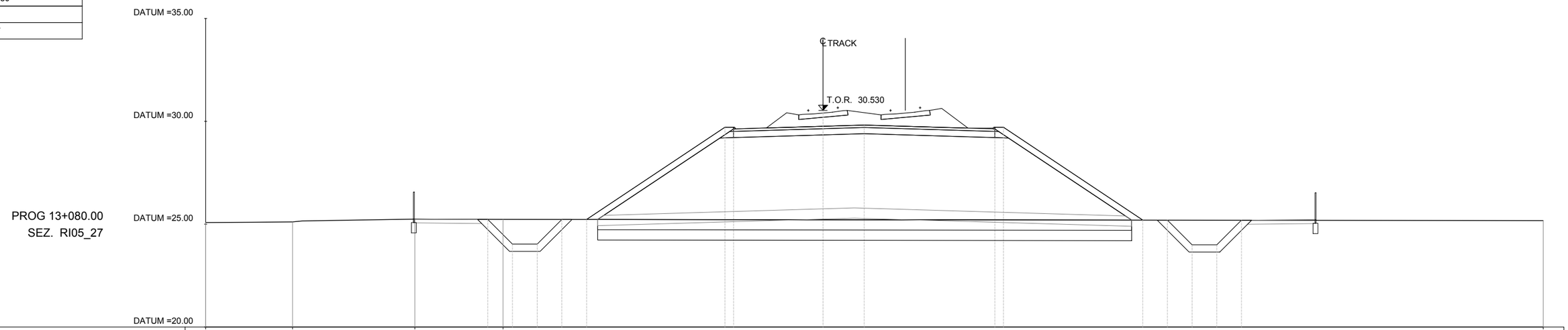

QUOTE TERRENO	25.08	25.11	25.25	25.23																				25.18
DIST. PROGRESSIVE TERRENO	-30.00	-25.78	-19.83	-15.55																				35.00
QUOTE PROGETTO				25.23	24.03	24.03	25.23	25.23		29.71 29.63		30.53	29.82		29.63 29.71			25.20	25.20	24.00	24.00	25.20		
DIST.PROGRESSIVE PROGETTO				-16.29	-15.09	-13.89	-12.69	-11.49		-4.77 -4.35		0.00	2.00		8.35 8.77			15.54	16.74	17.94	19.14	20.34		
DISTANZA BINARI												0.00		4.00										

AREA
Scavo: 10.82
Rilevato: 103.97
SubBallast: 1.55
Ballast: 4.88
Inerbimento: 5.26
SuperCompattato:4.06
Stradello: 1.27
Anticapillare: 13.36
Scotico: 13.54
Bonifica: 13.54

PROG 13+100.00
SEZ. RI05_28

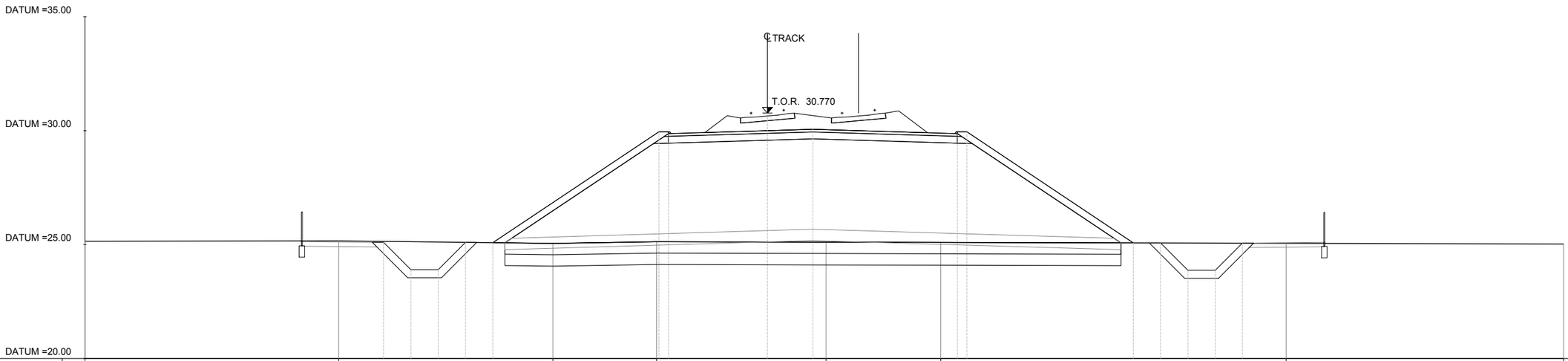

QUOTE TERRENO	25.15	25.16	25.05	25.12	25.11	25.10	25.06	25.02
DIST. PROGRESSIVE TERRENO	-30.00	-18.84	-9.43	-4.87	2.58	7.62	22.80	35.00
QUOTE PROGETTO	25.10	23.90	23.90	25.10	25.08	29.95	29.87	30.77	30.06	29.87	29.95	25.07	25.07	23.87	23.87	25.07
DIST.PROGRESSIVE PROGETTO	-16.87	-15.67	-14.47	-13.27	-12.07	-4.77	-4.35	0.00	2.00	8.35	8.77	16.08	17.29	18.48	19.68	20.88
DISTANZA BINARI	0.00	4.00

AREA	
Scavo:	10.58
Rilevato:	111.02
SubBallast:	1.55
Ballast:	4.88
Inerbimento:	5.50
SuperCompattato:	4.06
Stradello:	1.27
Anticapillare:	13.68
Scotico:	13.87
Bonifica:	13.87

PROG 13+120.00
SEZ. RI05_29

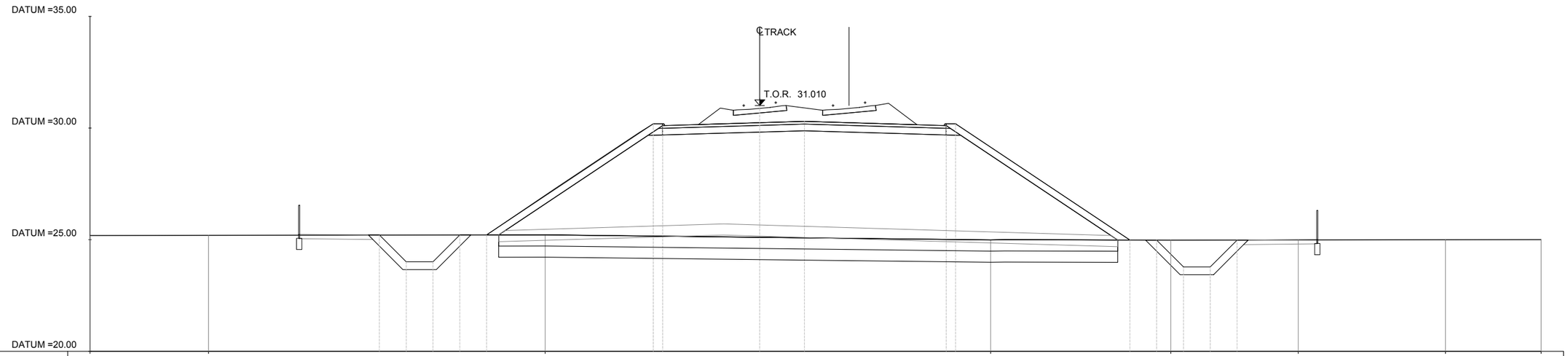

QUOTE TERRENO	25.19	25.20	25.22	24.99	24.98	24.99	25.00	25.00
DIST. PROGRESSIVE TERRENO	-30.00	-24.69	-9.61	10.34	18.41	24.12	30.71	35.00
QUOTE PROGETTO	25.21	24.01	24.01	25.21	25.21	30.19 30.11	31.01	30.30	30.11 30.19	24.98	24.98	23.78	23.78	24.98
DIST.PROGRESSIVE PROGETTO	-17.04	-15.84	-14.64	-13.44	-12.24	-4.77 -4.35	-0.00	2.00	8.35 8.77	16.58	17.78	18.98	20.18	21.38
DISTANZA BINARI	-0.00	4.00

AREA
Scavo: 10.31
Rilevato: 112.24
SubBallast: 1.46
Ballast: 4.88
Inerbimento: 5.71
SuperCompattato:3.76
Stradello: 1.23
Anticapillare: 13.87
Scotico: 14.06
Bonifica: 14.06

PROG 13+140.00
SEZ. RI05_29

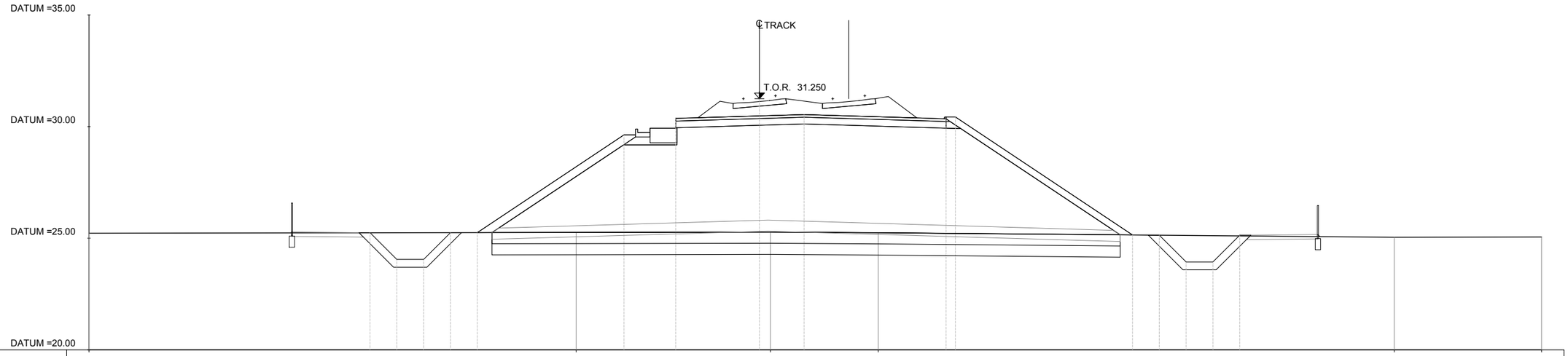

QUOTE TERRENO	25.23										25.26				25.28		25.25							25.04	25.06
DIST. PROGRESSIVE TERRENO	-30.00										-8.20				0.50		5.32							28.41	35.00
QUOTE PROGETTO				25.25	24.05	24.05	25.25	25.25				29.63	30.37		31.25	30.54			30.35 30.43			25.15	25.14	23.94	23.94	25.14
DIST.PROGRESSIVE PROGETTO				-17.42	-16.22	-15.02	-13.82	-12.62				-6.06	-3.74		0.00	2.00			8.35 8.77			16.69	17.89	19.09	20.29	21.49
DISTANZA BINARI															0.00		4.00									

AREA
Scavo: 11.55
Rilevato: 116.65
SubBallast: 1.46
Ballast: 4.88
Inerbimento: 5.82
SuperCompattato:3.76
Stradello: 1.23
Anticapillare: 14.02
Scotico: 14.20
Bonifica: 14.20

PROG 13+160.00
SEZ. RI05_30

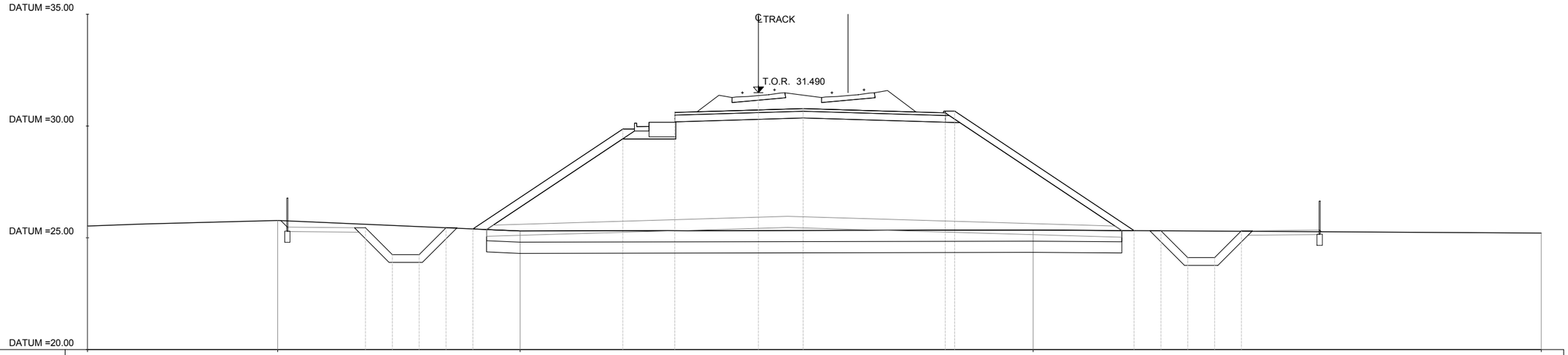

QUOTE TERRENO	25.53	25.78	25.30	25.35	25.21
DIST. PROGRESSIVE TERRENO	-30.00	-21.50	-10.66	12.28	35.00
QUOTE PROGETTO	25.45	24.25	24.25	25.45	25.40	29.87	30.61	31.49	30.78	30.59	30.67	25.32	25.31	24.11	24.11	25.32
DIST.PROGRESSIVE PROGETTO	-17.57	-16.37	-15.17	-13.97	-12.77	-6.06	-3.74	-0.00	2.00	8.35	8.77	16.79	17.99	19.19	20.39	21.59
DISTANZA BINARI	-0.00	4.00

AREA
Scavo: 11.60
Rilevato: 101.86
SubBallast: 1.46
Ballast: 4.88
Inerbimento: 5.20
SuperCompattato:3.76
Stradello: 1.23
Anticapillare: 13.43
Scotico: 13.51
Bonifica: 13.51

PROG 13+180.00
SEZ. RI05_31

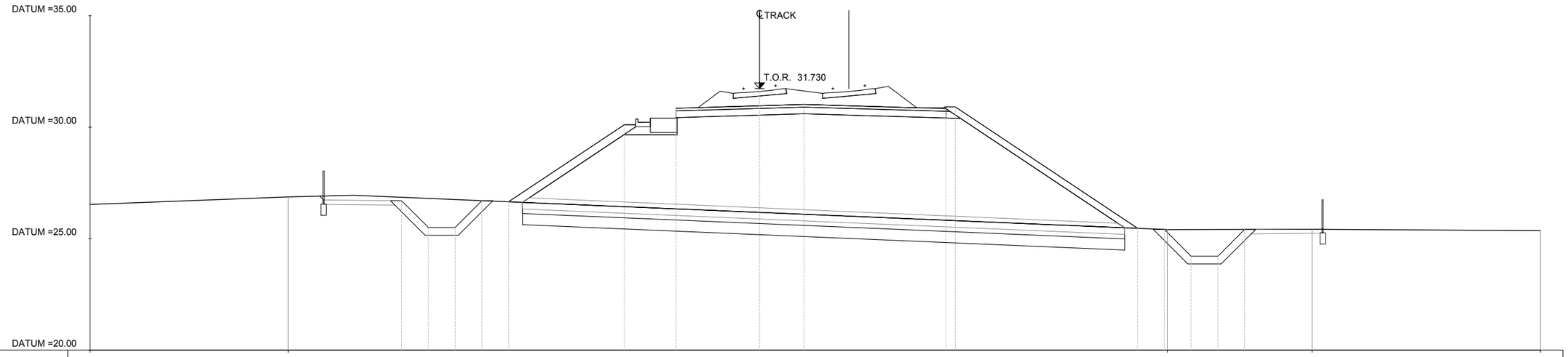

QUOTE TERRENO	26.54	26.87	25.41	25.42	25.36
DIST. PROGRESSIVE TERRENO	-30.00	-21.12	18.27	24.76	35.00
QUOTE PROGETTO	26.70	25.50	25.51	26.70	26.66	30.11	30.85	31.73	31.02	30.83 30.91	25.47	25.41	24.22	24.21	25.42
DIST.PROGRESSIVE PROGETTO	-16.04	-14.84	-13.64	-12.44	-11.24	-6.06	-3.74	0.00	2.00	8.35 8.77	16.94	18.14	19.34	20.54	21.74
DISTANZA BINARI	0.00	4.00

AREA
Scavo: 10.49
Rilevato: 86.58
SubBallast: 1.46
Ballast: 4.88
Inerbimento: 4.67
SuperCompattato:3.76
Stradello: 1.23
Anticapillare: 12.82
Scotico: 12.92
Bonifica: 12.92

PROG 13+195.00
SEZ. RI05_32

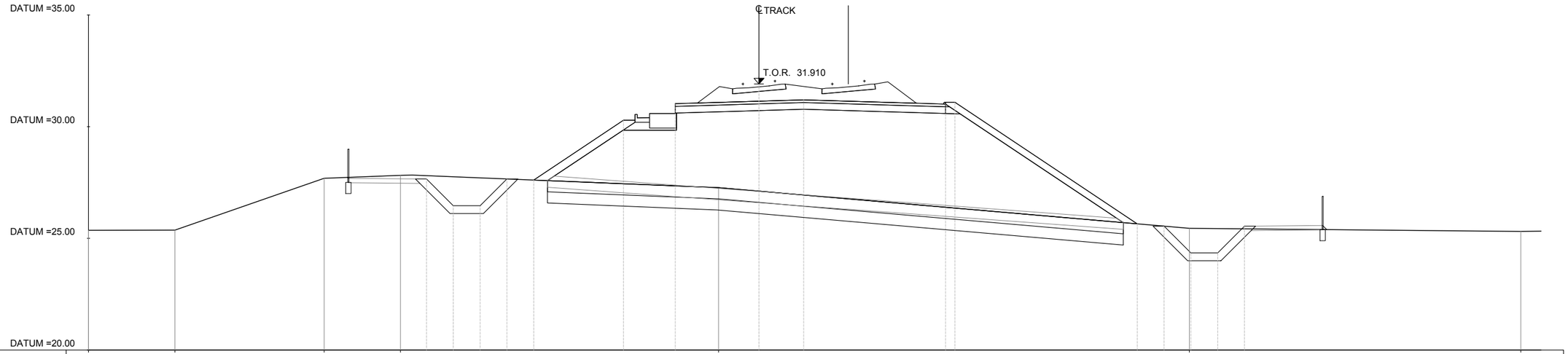

QUOTE TERRENO	25.36	25.37	27.69	27.82								27.27							25.45			25.31
DIST. PROGRESSIVE TERRENO	-30.00	-26.13	-19.46	-16.04								-1.81							19.26			34.09
QUOTE PROGETTO					27.66	26.46	26.46	27.66	27.61		30.29	31.03	31.91	31.20		31.01 31.09		25.65	25.55	24.35	24.35	25.55	
DIST.PROGRESSIVE PROGETTO					-14.88	-13.68	-12.48	-11.28	-10.08		-6.06	-3.74	0.00	2.00		8.35 8.77		16.93	18.13	19.33	20.53	21.73	
DISTANZA BINARI													0.00		4.00							