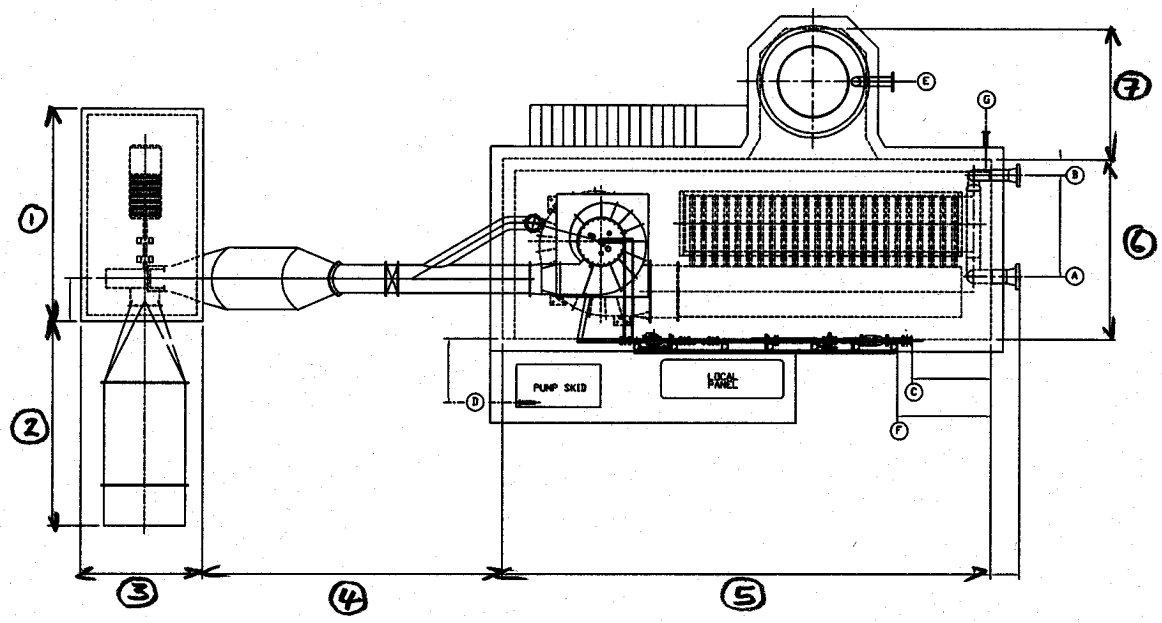

NOZZLE SCHEDULE			
ITEM No.	SIZE		TYPE OF CONNECTION
A		LNG BUNDLE OUTLET	ANSI RTJ FLANGE 900lb SERIES.
B		LNG BUNDLE INLET	ANSI RTJ FLANGE 900lb SERIES.
C		BURNER FUEL GAS	ANSI RF FLANGE 150lb SERIES
D		WATER FILL	ANSI RF FLANGE 150lb SERIES.
E		WATER OVERFLOW	ANSI RF FLANGE 150lb SERIES.
F		INSTRUMENT AIR	ANSI RF FLANGE 150lb SERIES
G		WATER DRAIN	ANSI RF FLANGE 150lb SERIES.

Dimension mm

optiin	200t/h	165t/h
1	4300	4100
2	5500	3600
3	3600	3600
4	8000	6500
5	14800	13000
6	4800	4300
7	3600	1900
8	10000	10000

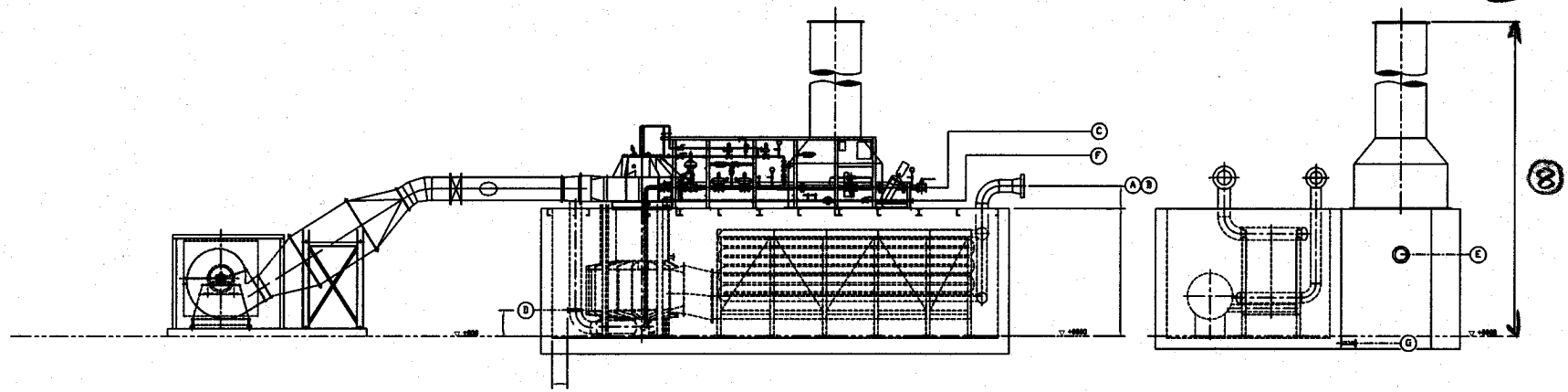

Typical for information only. 11/08/16

ISSUE/ÄNDG.	DESCRIPTION/BESCHREIBUNG	DAT.	NAME	CHECKED/GEPR.
DAT. NINDEF.				
DRAWN/GEZ.	SELAS-LINDE GMBH MÜNCHEN			
CHECKED/GEPRF.	NAME KENNWORT	COPYRIGHT BY SK ACC. TO DIN 34		
APPR. /GEN.	HEATERTYPE / DFENTYP; CODE / PLANZIFFER	SK-NO / SK-NR.		
TITLE/TITEL	SUB-X LNG VAPORISER	DWG. NO/ZEICHNUNGSNR.		
		SCALE/MASSSTAB	ISSUE/ÄNDG.	

THIS DRAWING IS CONFIDENTIAL AND THE PROPERTY OF SELAS-LINDE GMBH. IT IS SUPPLIED ON THE EXPRESS CONDITION THAT NONE OF THE INFORMATION CONTAINED THEREIN SHALL BE USED, OR DISCLOSED TO ANY THIRD PARTY, OR REPRODUCED IN WHOLE OR PART, WITHOUT THE PRIOR WRITTEN CONSENT OF SELAS-LINDE GMBH

TOLERANCES UNLESS OTHERWISE STATED ANGLAR / LINEAR

UNLESS OTHERWISE STATED FLANGE BOLT HOLES TO BE EQUI-SPACED ABOUT MAIN CENTRE LINES.

THIRD ANGLE PROJECTION

IF IN DOUBT ASK DO NOT SCALE

THIS DRAWING PRODUCED ON A CAD SYSTEM DO NOT ALTER MANUALLY