anas
GRUPPO FS ITALIANE

90

Direzione Progettazione e Realizzazione Lavori

S.S. 398 "Via Val di Cornia"

Bretella di collegamento tra l'Autostrada Tirrenica A12 e il Porto di Piombino

LOTTO 1 - Svincolo di Geodetica-Gagno

PROGETTO ESECUTIVO

COD. FI2

PROGETTAZIONE: ATI SINTAGMA - GDG - ICARIA

IL RESPONSABILE DELL'INTEGRAZIONE DELLE PRESTAZIONI SPECIALISTICHE:
Dott. Ing. Nando Granieri
Ordine degli Ingegneri della Prov. di Perugia n° A351

IL PROGETTISTA:
Dott. Ing. Luca Nani
Ordine degli Ingegneri della Prov. di Perugia n° A2445

IL GEOLOGO:
Dott. Geol. Giorgio Cerquiglini
Ordine dei Geologi della Regione Umbria n°108

Il R.U.P.
Dott. Ing.
Antonio Scalamandrè

IL COORDINATORE PER LA SICUREZZA IN FASE DI PROGETTAZIONE:
Dott. Ing. Filippo Pambianco
Ordine degli Ingegneri della Prov. di Perugia n° A1373

IL GRUPPO DI PROGETTAZIONE:

MANDATARIA: Sintagma

Dott.Ing. N.Granieri
Dott.Arch. N.Kamenicky
Dott.Ing. V.Truffini
Dott.Arch. A.Bracchini
Dott.Ing. F.Durastanti
Dott.Geol. G.Cerquiglini
Geom. S.Scopetta
Dott.Ing. L.Sbrenna
Dott.Ing. E.Sellari
Dott.Ing. E.Bartolocci
Dott.Ing. L.Dinelli
Dott.Ing. L.Nani
Dott.Ing. F.Pambianco
Dott. Agr. F.Berti Nulli

MANDANTI: GEOTECHNICAL DESIGN GROUP

Dott. Ing. D.Carlaccini
Dott. Ing. S.Sacconi
Dott. Ing. G.Cordua
Dott. Ing. V.De Gori
Dott. Ing. C.Consorti
Dott. Ing. F.Dominici

MANDANTI: ICARIA società di ingegneria

Dott. Ing. V.Rotisciani
Dott. Ing. F.Macchioni
Geom. C.Vischini
Dott. Ing. V.Piunno
Dott. Ing. G.Pulli
Geom. C.Sugaroni

ORDINE DEGLI INGEGNERI DELLA PROVINCIA DI PERUGIA
Sezione A
A351
DOTTORE INGEGNERE
NANDO GRANIERI
SETTORE CIVILE E AMBIENTALE
SETTORE INDUSTRIALE
SETTORE DELL'INFORMAZIONE

ORDINE DEGLI INGEGNERI DELLA PROVINCIA DI PERUGIA
Sezione A
N° A2445
DOTTORE INGEGNERE
LUCA NANI
SETTORE CIVILE E AMBIENTALE
SETTORE INDUSTRIALE
SETTORE DELL'INFORMAZIONE

PROTOCOLLO	DATA
	MARZO 2019

DOCUMENTI TECNICO-ECONOMICI

Tabulati movimenti terra

CODICE PROGETTO (PROGETTO / LIV. PROG. / N. PROG.)	NOME FILE	REVISIONE	SCALA:
DPFI12 E 1801	T00-EG00-CMS-ES01-A CODICE ELAB. T00EG00CMSES01	A	-

REV.	DESCRIZIONE	DATA	REDATTO	VERIFICATO	APPROVATO
A	Emissione	29/03/2019	M.De Tursi	E.Bartolocci	N.Granieri

ASSE PRINCIPALE

AP01

CALCOLO DELLE AREE	Foglio n. 1

RILEVATO

N. SEZIONE PROG.	FIG.	ELEMENTI DI CALCOLO	AREA ELEMENTARE mq	AREA FIGURA mq	NOTE
1	A1	(-10.95--11.34)x(3.57+3.31)/2	1.34		
0.00		(-10.76--10.95)x(3.56+3.57)/2	0.68		
		(-11.34--10.76)x(3.31+3.56)/2	-1.99		
				0.03	
2	A1	(-16.47--16.38)x(3.30+3.21)/2	-0.29		
15.00		(-11.20--16.47)x(3.30+3.30)/2	17.39		
		(-10.97--11.20)x(3.46+3.30)/2	0.78		
		(-10.78--10.97)x(3.46+3.46)/2	0.66		
		(-11.59--10.78)x(3.09+3.46)/2	-2.65		
		(-12.21--11.59)x(3.04+3.09)/2	-1.90		
		(-12.70--12.21)x(2.96+3.04)/2	-1.47		
		(-13.38--12.70)x(2.98+2.96)/2	-2.02		
		(-13.81--13.38)x(3.01+2.98)/2	-1.29		
		(-14.10--13.81)x(3.04+3.01)/2	-0.88		
		(-14.92--14.10)x(3.10+3.04)/2	-2.52		
		(-16.00--14.92)x(3.25+3.10)/2	-3.43		
		(-16.03--16.00)x(3.25+3.25)/2	-0.10		
		(-16.07--16.03)x(3.25+3.25)/2	-0.13		
		(-16.38--16.07)x(3.21+3.25)/2	-1.00		
				1.15	
3	A1	(-16.42--16.41)x(3.30+3.29)/2	-0.03		
30.00		(-11.40--16.42)x(3.30+3.30)/2	16.57		
		(-11.99--11.40)x(3.10+3.30)/2	-1.89		
		(-12.24--11.99)x(3.04+3.10)/2	-0.77		
		(-12.42--12.24)x(3.05+3.04)/2	-0.55		
		(-13.35--12.42)x(3.10+3.05)/2	-2.86		
		(-14.31--13.35)x(3.14+3.10)/2	-3.00		
		(-14.46--14.31)x(3.15+3.14)/2	-0.47		
		(-14.67--14.46)x(3.16+3.15)/2	-0.66		
		(-15.57--14.67)x(3.23+3.16)/2	-2.88		
		(-16.20--15.57)x(3.27+3.23)/2	-2.05		
		(-16.41--16.20)x(3.29+3.27)/2	-0.69		
				0.72	
3	A2	(-11.07--11.30)x(3.48+3.33)/2	0.78		
30.00		(-10.58--11.07)x(3.48+3.48)/2	1.71		
		(-11.13--10.58)x(3.39+3.48)/2	-1.89		
		(-11.30--11.13)x(3.33+3.39)/2	-0.57		
				0.03	
4	A1	(-16.36--16.26)x(3.29+3.19)/2	-0.32		
45.00		(-11.65--16.36)x(3.29+3.29)/2	15.50		
		(-11.79--11.65)x(3.25+3.29)/2	-0.46		
		(-12.63--11.79)x(3.13+3.25)/2	-2.68		
		(-12.90--12.63)x(3.08+3.13)/2	-0.84		
		(-13.27--12.90)x(3.08+3.08)/2	-1.14		
		(-14.01--13.27)x(3.10+3.08)/2	-2.29		
		(-14.52--14.01)x(3.12+3.10)/2	-1.59		
		(-15.12--14.52)x(3.15+3.12)/2	-1.88		
		(-15.96--15.12)x(3.18+3.15)/2	-2.66		
		(-16.22--15.96)x(3.19+3.18)/2	-0.83		
		(-16.26--16.22)x(3.19+3.19)/2	-0.13		
				0.68	
4	A2	(-11.27--11.63)x(3.54+3.30)/2	1.23		
45.00		(-10.96--11.27)x(3.54+3.54)/2	1.10		
		(-11.44--10.96)x(3.35+3.54)/2	-1.65		
		(-11.63--11.44)x(3.30+3.35)/2	-0.63		
				0.05	
5	A1	(-16.32--16.16)x(3.28+3.12)/2	-0.51		
60.00		(-12.18--16.32)x(3.28+3.28)/2	13.58		
		(-12.44--12.18)x(3.23+3.28)/2	-0.85		
		(-12.84--12.44)x(3.19+3.23)/2	-1.28		
		(-13.55--12.84)x(3.13+3.19)/2	-2.24		
		(-14.56--13.55)x(3.06+3.13)/2	-3.13		
		(-14.66--14.56)x(3.06+3.06)/2	-0.31		
		(-14.73--14.66)x(3.06+3.06)/2	-0.21		
		(-15.77--14.73)x(3.08+3.06)/2	-3.19		
		(-16.16--15.77)x(3.12+3.08)/2	-1.21		
				0.65	
6	A1	(-16.89--16.77)x(3.28+3.16)/2	-0.39		
75.00		(-12.80--16.89)x(3.28+3.28)/2	13.42		
		(-13.08--12.80)x(3.22+3.28)/2	-0.91		
		(-13.20--13.08)x(3.21+3.22)/2	-0.39		
		(-14.19--13.20)x(3.07+3.21)/2	-3.11		
		(-14.89--14.19)x(3.03+3.07)/2	-2.14		
		(-15.30--14.89)x(3.00+3.03)/2	-1.24		
		(-15.89--15.30)x(3.05+3.00)/2	-1.78		
		(-16.41--15.89)x(3.11+3.05)/2	-1.60		
		(-16.77--16.41)x(3.16+3.11)/2	-1.13		
				0.73	
6	A2	(-11.96--12.06)x(3.48+3.41)/2	0.34		
75.00		(-11.82--11.96)x(3.48+3.48)/2	0.49		
		(-11.89--11.82)x(3.45+3.48)/2	-0.24		
		(-11.95--11.89)x(3.40+3.45)/2	-0.21		
		(-11.96--11.95)x(3.31+3.40)/2	-0.03		
		(-12.06--11.96)x(3.41+3.38)/2	-0.34		
				0.01	
7	A1	(-17.45--17.20)x(3.27+3.03)/2	-0.79		
90.00		(-12.61--17.45)x(3.27+3.27)/2	15.83		
		(-12.31--12.61)x(3.47+3.27)/2	1.01		
		(-11.65--12.31)x(3.47+3.47)/2	2.29		
		(-11.86--11.65)x(3.31+3.47)/2	-0.71		
		(-11.98--11.86)x(3.24+3.31)/2	-0.39		
		(-12.01--11.98)x(3.25+3.24)/2	-0.10		
		(-12.03--12.01)x(3.23+3.25)/2	-0.06		
		(-12.04--12.03)x(3.22+3.23)/2	-0.03		
		(-12.05--12.04)x(3.25+3.23)/2	-0.03		
		(-12.25--12.05)x(3.24+3.25)/2	-0.65		
		(-12.29--12.25)x(3.24+3.24)/2	-0.13		
		(-12.58--12.29)x(3.25+3.24)/2	-0.94		
		(-13.11--12.58)x(3.04+3.25)/2	-1.67		
		(-13.69--13.11)x(2.84+3.04)/2	-1.71		
		(-14.53--13.69)x(2.60+2.84)/2	-2.28		
		(-14.80--14.53)x(2.55+2.60)/2	-0.70		
		(-14.99--14.80)x(2.58+2.55)/2	-0.49		
		(-15.91--14.99)x(2.73+2.58)/2	-2.44		
		(-16.86--15.91)x(2.95+2.73)/2	-2.70		
		(-17.02--16.86)x(2.99+2.95)/2	-0.48		
		A RIPORTARE mq	2.83		

	CALCOLO DELLE AREE		Foglio n. 2

RILEVATO

N. SEZIONE PROG.	FIG.	ELEMENTI DI CALCOLO	AREA ELEMENTARE mq	AREA FIGURA mq	NOTE
		RIPORTO mq	2.83		
		(-17.20--17.02)x(3.03+2.99)/2	-0.54		
				2.29	
8	A1	(-17.97--17.78)x(3.27+3.08)/2	-0.60		
105.00		(-12.95--17.97)x(3.27+3.27)/2	16.42		
		(-12.62--12.95)x(3.49+3.27)/2	1.12		
		(-11.92--12.62)x(3.49+3.49)/2	2.44		
		(-12.12--11.92)x(3.26+3.31)/2	-0.66		
		(-12.17--12.12)x(3.21+3.26)/2	-0.16		
		(-12.20--12.17)x(3.17+3.21)/2	-0.10		
		(-12.21--12.20)x(3.31+3.31)/2	-0.03		
		(-12.24--12.21)x(3.31+3.31)/2	-0.10		
		(-12.36--12.24)x(3.27+3.31)/2	-0.39		
		(-13.12--12.36)x(3.09+3.27)/2	-2.42		
		(-13.16--13.12)x(3.08+3.09)/2	-0.12		
		(-13.19--13.16)x(3.07+3.08)/2	-0.09		
		(-14.27--13.19)x(2.74+3.07)/2	-3.14		
		(-15.06--14.27)x(2.84+2.74)/2	-2.20		
		(-15.38--15.06)x(2.85+2.84)/2	-0.91		
		(-15.51--15.38)x(2.88+2.85)/2	-0.37		
		(-15.84--15.51)x(2.96+2.88)/2	-0.96		
		(-16.30--15.84)x(3.06+2.96)/2	-1.38		
		(-16.48--16.30)x(3.10+3.06)/2	-0.55		
		(-16.93--16.48)x(3.08+3.10)/2	-1.39		
		(-17.59--16.93)x(3.10+3.08)/2	-2.04		
		(-17.78--17.59)x(3.08+3.10)/2	-0.59		
				1.78	
8	A2	(12.30-11.60)x(3.49+3.49)/2	2.44		
105.00		(12.75-12.30)x(3.19+3.49)/2	1.50		
		(12.60-12.75)x(3.20+3.19)/2	-0.48		
		(12.54-12.60)x(3.13+3.20)/2	-0.19		
		(12.52-12.54)x(2.90+3.13)/2	-0.06		
		(12.42-12.52)x(3.06+2.90)/2	-0.30		
		(12.36-12.42)x(3.25+3.06)/2	-0.19		
		(12.18-12.36)x(3.26+3.25)/2	-0.59		
		(12.14-12.18)x(3.28+3.26)/2	-0.13		
		(12.02-12.14)x(3.30+3.28)/2	-0.39		
		(11.60-12.02)x(3.38+3.30)/2	-1.40		
				0.21	
9	A1	(-18.47--18.19)x(3.26+2.97)/2	-0.87		
120.00		(-11.97--18.47)x(3.26+3.26)/2	21.19		
		(-11.99--11.97)x(3.24+3.26)/2	-0.06		
		(-12.34--11.99)x(3.09+3.24)/2	-1.11		
		(-12.61--12.34)x(3.08+3.09)/2	-0.83		
		(-13.24--12.61)x(3.07+3.08)/2	-1.94		
		(-13.71--13.24)x(3.05+3.07)/2	-1.44		
		(-14.40--13.71)x(3.05+3.05)/2	-2.10		
		(-14.82--14.40)x(3.04+3.05)/2	-1.28		
		(-15.10--14.82)x(3.04+3.04)/2	-0.85		
		(-15.92--15.10)x(3.04+3.04)/2	-2.49		
		(-16.96--15.92)x(3.08+3.04)/2	-3.18		
		(-17.03--16.96)x(3.09+3.08)/2	-0.22		
		(-17.13--17.03)x(3.08+3.09)/2	-0.31		
		(-18.14--17.13)x(2.98+3.08)/2	-3.06		
		(-18.19--18.14)x(2.97+2.98)/2	-0.15		
				1.30	
10	A1	(-18.94--18.47)x(3.25+2.78)/2	-1.42		
135.00		(-12.67--18.94)x(3.25+3.25)/2	20.38		
		(-12.60--12.67)x(3.30+3.25)/2	0.23		
		(-11.33--12.60)x(3.29+3.30)/2	4.18		
		(-11.40--11.33)x(3.21+3.29)/2	-0.23		
		(-11.46--11.40)x(3.23+3.21)/2	-0.19		
		(-11.55--11.46)x(3.17+3.23)/2	-0.29		
		(-11.57--11.55)x(3.17+3.17)/2	-0.06		
		(-11.71--11.57)x(3.06+3.17)/2	-0.44		
		(-12.02--11.71)x(2.90+3.06)/2	-0.92		
		(-12.92--12.02)x(2.51+2.90)/2	-2.43		
		(-13.12--12.92)x(2.42+2.51)/2	-0.49		
		(-13.26--13.12)x(2.43+2.42)/2	-0.34		
		(-14.23--13.26)x(2.26+2.43)/2	-2.27		
		(-15.11--14.23)x(2.46+2.26)/2	-2.08		
		(-15.33--15.11)x(2.52+2.46)/2	-0.55		
		(-15.67--15.33)x(2.59+2.52)/2	-0.87		
		(-16.44--15.67)x(2.77+2.59)/2	-2.06		
		(-16.96--16.44)x(2.79+2.77)/2	-1.45		
		(-17.54--16.96)x(2.87+2.79)/2	-1.64		
		(-18.41--17.54)x(2.79+2.87)/2	-2.46		
		(-18.47--18.41)x(2.78+2.79)/2	-0.17		
				4.43	
10	A2	(12.55-12.10)x(3.30+3.30)/2	1.49		
135.00		(12.86-12.55)x(3.09+3.30)/2	0.99		
		(12.79-12.86)x(3.08+3.09)/2	-0.22		
		(12.75-12.79)x(3.08+3.08)/2	-0.12		
		(12.53-12.75)x(3.05+3.08)/2	-0.67		
		(12.47-12.53)x(3.02+3.05)/2	-0.18		
		(12.46-12.47)x(3.01+3.00)/2	-0.03		
		(12.45-12.46)x(3.04+3.01)/2	-0.03		
		(12.42-12.45)x(3.03+3.04)/2	-0.09		
		(12.30-12.42)x(3.23+3.03)/2	-0.38		
		(12.27-12.30)x(3.26+3.23)/2	-0.10		
		(12.10-12.27)x(3.30+3.26)/2	-0.56		
				0.10	
11	A1	(-19.38--18.75)x(3.25+2.62)/2	-1.85		
150.00		(-13.05--19.38)x(3.25+3.25)/2	20.57		
		(-12.91--13.05)x(3.34+3.25)/2	0.46		
		(-11.64--12.91)x(3.33+3.34)/2	4.24		
		(-11.75--11.64)x(3.20+3.33)/2	-0.36		
		(-11.86--11.75)x(3.22+3.20)/2	-0.35		
		(-12.19--11.86)x(3.22+3.22)/2	-1.06		
		(-12.51--12.19)x(3.18+3.22)/2	-1.02		
		(-13.25--12.51)x(3.10+3.18)/2	-2.32		
		(-13.61--13.25)x(3.06+3.10)/2	-1.11		
		(-14.15--13.61)x(3.00+3.06)/2	-1.64		
		(-14.72--14.15)x(2.94+3.00)/2	-1.69		
		(-15.34--14.72)x(2.88+2.94)/2	-1.80		
		A RIPORTARE mq	12.07		

		CALCOLO DELLE AREE		Foglio n. 3
RILEVATO				
N. SEZIONE PROG.	FIG.	ELEMENTI DI CALCOLO	AREA ELEMENTARE mq	AREA FIGURA mq	NOTE
		RIPORTO mq	12.07		
		(-15.82--15.34)x(2.84+2.88)/2	-1.37		
		(-16.91--15.82)x(2.73+2.84)/2	-3.04		
		(-16.92--16.91)x(2.73+2.73)/2	-0.03		
		(-16.93--16.92)x(2.73+2.73)/2	-0.03		
		(-18.03--16.93)x(2.71+2.73)/2	-2.99		
		(-18.75--18.03)x(2.62+2.71)/2	-1.92		
				2.69	
11	A2	(12.60-11.79)x(3.34+3.34)/2	2.71		
150.00		(12.94-12.60)x(3.12+3.34)/2	1.10		
		(12.92-12.94)x(2.96+3.12)/2	-0.06		
		(12.87-12.92)x(2.93+2.96)/2	-0.15		
		(12.83-12.87)x(2.92+2.93)/2	-0.12		
		(12.71-12.83)x(3.08+2.92)/2	-0.36		
		(12.17-12.71)x(3.11+3.08)/2	-1.67		
		(11.79-12.17)x(3.34+3.11)/2	-1.23		
				0.22	
12	A1	(-19.78--19.07)x(3.24+2.52)/2	-2.04		
165.00		(-14.03--19.78)x(3.24+3.24)/2	18.63		
		(-13.85--14.03)x(3.36+3.24)/2	0.59		
		(-12.59--13.85)x(3.35+3.36)/2	4.23		
		(-12.89--12.59)x(2.99+3.35)/2	-0.95		
		(-10.35--12.89)x(3.05+2.99)/2	7.67		
		(-10.49--10.35)x(2.99+3.05)/2	-0.42		
		(-10.76--10.49)x(2.89+2.99)/2	-0.79		
		(-11.06--10.76)x(2.78+2.89)/2	-0.85		
		(-11.20--11.06)x(2.78+2.78)/2	-0.39		
		(-11.31--11.20)x(2.75+2.78)/2	-0.30		
		(-11.34--11.31)x(2.72+2.75)/2	-0.08		
		(-11.35--11.34)x(2.79+2.72)/2	-0.03		
		(-11.39--11.35)x(2.64+2.79)/2	-0.11		
		(-11.52--11.39)x(2.60+2.64)/2	-0.34		
		(-11.86--11.52)x(2.44+2.60)/2	-0.86		
		(-12.60--11.86)x(2.20+2.44)/2	-1.72		
		(-12.96--12.60)x(2.11+2.20)/2	-0.78		
		(-13.21--12.96)x(2.20+2.11)/2	-0.54		
		(-14.07--13.21)x(2.43+2.20)/2	-1.99		
		(-15.04--14.07)x(2.68+2.43)/2	-2.48		
		(-15.17--15.04)x(2.73+2.68)/2	-0.35		
		(-15.37--15.17)x(2.74+2.73)/2	-0.55		
		(-16.27--15.37)x(2.76+2.74)/2	-2.48		
		(-16.87--16.27)x(2.71+2.76)/2	-1.64		
		(-17.38--16.87)x(2.65+2.71)/2	-1.37		
		(-18.14--17.38)x(2.64+2.65)/2	-2.01		
		(-18.48--18.14)x(2.63+2.64)/2	-0.90		
		(-18.71--18.48)x(2.58+2.63)/2	-0.60		
		(-19.07--18.71)x(2.52+2.58)/2	-0.92		
				5.63	
12	A2	(11.34-11.42)x(3.38+3.29)/2	-0.27		
165.00		(12.61-11.34)x(3.39+3.38)/2	4.30		
		(12.83-12.61)x(3.24+3.39)/2	0.73		
		(12.46-12.83)x(3.25+3.24)/2	-1.20		
		(12.42-12.46)x(3.25+3.25)/2	-0.13		
		(12.36-12.42)x(3.25+3.25)/2	-0.20		
		(11.42-12.36)x(3.29+3.25)/2	-3.07		
				0.16	
13	A1	(-20.16--19.44)x(3.23+2.51)/2	-2.07		
180.00		(-15.19--20.16)x(3.23+3.23)/2	16.05		
		(-14.98--15.19)x(3.38+3.23)/2	0.69		
		(-13.71--14.98)x(3.37+3.38)/2	4.29		
		(-14.02--13.71)x(3.01+3.37)/2	-0.99		
		(-11.79--14.02)x(3.06+3.01)/2	6.77		
		(-12.29--11.79)x(2.91+3.06)/2	-1.49		
		(-13.14--12.29)x(2.67+2.91)/2	-2.37		
		(-13.39--13.14)x(2.56+2.67)/2	-0.65		
		(-13.78--13.39)x(2.56+2.56)/2	-1.00		
		(-14.49--13.78)x(2.59+2.56)/2	-1.83		
		(-14.96--14.49)x(2.64+2.59)/2	-1.23		
		(-15.60--14.96)x(2.77+2.64)/2	-1.73		
		(-16.56--15.60)x(2.76+2.77)/2	-2.65		
		(-16.70--16.56)x(2.75+2.76)/2	-0.39		
		(-16.79--16.70)x(2.74+2.75)/2	-0.25		
		(-17.80--16.79)x(2.61+2.74)/2	-2.70		
		(-18.61--17.80)x(2.56+2.61)/2	-2.09		
		(-18.90--18.61)x(2.54+2.56)/2	-0.74		
		(-19.35--18.90)x(2.52+2.54)/2	-1.14		
		(-19.44--19.35)x(2.51+2.52)/2	-0.23		
				4.25	
13	A2	(-10.76--11.08)x(3.09+3.08)/2	0.99		
180.00		(-10.97--10.76)x(2.98+3.09)/2	-0.64		
		(-11.01--10.97)x(2.83+2.98)/2	-0.12		
		(-11.02--11.01)x(2.92+2.83)/2	-0.03		
		(-11.08--11.02)x(3.08+2.92)/2	-0.18		
				0.02	
13	A3	(12.61-11.34)x(3.43+3.43)/2	4.36		
180.00		(12.68-12.61)x(3.38+3.43)/2	0.24		
		(12.41-12.68)x(3.39+3.38)/2	-0.91		
		(11.97-12.41)x(3.37+3.39)/2	-1.49		
		(11.86-11.97)x(3.37+3.37)/2	-0.37		
		(11.57-11.86)x(3.38+3.37)/2	-0.98		
		(11.50-11.57)x(3.35+3.38)/2	-0.24		
		(11.45-11.50)x(3.35+3.35)/2	-0.17		
		(11.38-11.45)x(3.42+3.35)/2	-0.24		
		(11.34-11.38)x(3.42+3.42)/2	-0.14		
				0.06	
14	A1	(-20.51--19.80)x(3.23+2.52)/2	-2.04		
195.00		(-16.24--20.51)x(3.23+3.23)/2	13.79		
		(-15.98--16.24)x(3.40+3.23)/2	0.86		
		(-14.72--15.98)x(3.39+3.40)/2	4.28		
		(-15.02--14.72)x(3.03+3.39)/2	-0.96		
		(-10.49--15.02)x(3.14+3.03)/2	13.98		
		(-10.65--10.49)x(2.93+3.14)/2	-0.49		
		(-11.30--10.65)x(2.76+2.93)/2	-1.85		
		(-11.58--11.30)x(2.75+2.76)/2	-0.77		
		(-12.14--11.58)x(2.58+2.75)/2	-1.49		
		A RIPORTARE mq	25.31		

		CALCOLO DELLE AREE		Foglio n. 4
RILEVATO				
N. SEZIONE PROG.	FIG.	ELEMENTI DI CALCOLO	AREA ELEMENTARE mq	AREA FIGURA mq	NOTE
		RIPORTO mq	25.31		
		(-12.69--12.14)x(2.40+2.58)/2	-1.37		
		(-13.04--12.69)x(2.33+2.40)/2	-0.83		
		(-13.79--13.04)x(2.11+2.33)/2	-1.66		
		(-14.11--13.79)x(2.10+2.11)/2	-0.67		
		(-14.89--14.11)x(2.30+2.10)/2	-1.72		
		(-14.94--14.89)x(2.31+2.30)/2	-0.12		
		(-15.99--14.94)x(2.56+2.31)/2	-2.56		
		(-16.67--15.99)x(2.55+2.56)/2	-1.74		
		(-17.09--16.67)x(2.57+2.55)/2	-1.08		
		(-17.74--17.09)x(2.58+2.57)/2	-1.67		
		(-18.19--17.74)x(2.57+2.58)/2	-1.16		
		(-18.49--18.19)x(2.58+2.57)/2	-0.77		
		(-19.30--18.49)x(2.57+2.58)/2	-2.09		
		(-19.80--19.30)x(2.52+2.57)/2	-1.27		
				6.60	
14	A2	(-5.53--6.59)x(3.26+3.24)/2	3.44		
195.00		(-5.57--5.53)x(3.25+3.26)/2	-0.13		
		(-5.69--5.57)x(3.25+3.25)/2	-0.39		
		(-6.08--5.69)x(3.23+3.25)/2	-1.26		
		(-6.54--6.08)x(3.24+3.23)/2	-1.49		
		(-6.59--6.54)x(3.24+3.24)/2	-0.16		
				0.01	
14	A3	(11.34-11.47)x(3.47+3.32)/2	-0.44		
195.00		(11.87-11.34)x(3.48+3.47)/2	1.84		
		(11.78-11.87)x(3.36+3.48)/2	-0.31		
		(11.76-11.78)x(3.34+3.36)/2	-0.07		
		(11.73-11.76)x(3.30+3.34)/2	-0.10		
		(11.55-11.73)x(3.32+3.30)/2	-0.60		
		(11.47-11.55)x(3.32+3.32)/2	-0.27		
				0.05	
14	A4	(12.61-11.87)x(3.48+3.48)/2	2.58		
195.00		(12.89-12.61)x(3.29+3.48)/2	0.95		
		(12.77-12.89)x(3.30+3.29)/2	-0.40		
		(12.65-12.77)x(3.31+3.30)/2	-0.40		
		(12.26-12.65)x(3.24+3.31)/2	-1.28		
		(12.05-12.26)x(3.22+3.24)/2	-0.68		
		(11.95-12.05)x(3.13+3.22)/2	-0.32		
		(11.91-11.95)x(3.09+3.13)/2	-0.12		
		(11.90-11.91)x(3.11+3.09)/2	-0.03		
		(11.87-11.90)x(3.48+3.11)/2	-0.10		
				0.20	
15	A1	(-20.83--20.02)x(3.22+2.41)/2	-2.28		
210.00		(-16.68--20.83)x(3.22+3.22)/2	13.36		
		(-16.36--16.68)x(3.43+3.22)/2	1.06		
		(-15.10--16.36)x(3.43+3.43)/2	4.32		
		(-15.40--15.10)x(3.06+3.43)/2	-0.97		
		(-14.18--15.40)x(3.09+3.06)/2	3.75		
		(-14.72--14.18)x(3.03+3.09)/2	-1.65		
		(-15.25--14.72)x(2.97+3.03)/2	-1.59		
		(-16.09--15.25)x(2.85+2.97)/2	-2.44		
		(-16.36--16.09)x(2.82+2.85)/2	-0.77		
		(-16.53--16.36)x(2.81+2.82)/2	-0.48		
		(-17.46--16.53)x(2.76+2.81)/2	-2.59		
		(-18.33--17.46)x(2.69+2.76)/2	-2.37		
		(-18.56--18.33)x(2.68+2.69)/2	-0.62		
		(-18.90--18.56)x(2.65+2.68)/2	-0.91		
		(-19.66--18.90)x(2.53+2.65)/2	-1.97		
		(-20.02--19.66)x(2.41+2.53)/2	-0.89		
				2.96	
15	A2	(-5.13--6.95)x(3.32+3.27)/2	6.00		
210.00		(-5.15--5.13)x(3.30+3.31)/2	-0.07		
		(-5.27--5.15)x(3.27+3.30)/2	-0.39		
		(-5.35--5.27)x(3.26+3.27)/2	-0.26		
		(-5.68--5.35)x(3.26+3.26)/2	-1.08		
		(-6.45--5.68)x(3.24+3.26)/2	-2.50		
		(-6.64--6.45)x(3.25+3.24)/2	-0.62		
		(-6.81--6.64)x(3.26+3.25)/2	-0.55		
		(-6.84--6.81)x(3.26+3.26)/2	-0.10		
		(-6.90--6.84)x(3.27+3.26)/2	-0.20		
		(-6.95--6.90)x(3.27+3.27)/2	-0.16		
				0.07	
15	A3	(-1.75--5.13)x(3.40+3.32)/2	11.36		
210.00		(-0.68--1.75)x(3.43+3.40)/2	3.65		
		(-0.05--0.68)x(3.43+3.43)/2	2.16		
		(-0.25--0.05)x(3.42+3.43)/2	-0.69		
		(-0.94--0.25)x(3.39+3.42)/2	-2.35		
		(-2.01--0.94)x(3.37+3.39)/2	-3.62		
		(-2.04--2.01)x(3.37+3.37)/2	-0.10		
		(-2.06--2.04)x(3.37+3.37)/2	-0.07		
		(-3.14--2.06)x(3.33+3.37)/2	-3.62		
		(-3.87--3.14)x(3.31+3.33)/2	-2.42		
		(-4.25--3.87)x(3.30+3.31)/2	-1.26		
		(-4.41--4.25)x(3.29+3.30)/2	-0.53		
		(-4.80--4.41)x(3.28+3.29)/2	-1.28		
		(-4.96--4.80)x(3.28+3.28)/2	-0.52		
		(-5.09--4.96)x(3.27+3.28)/2	-0.43		
		(-5.12--5.09)x(3.27+3.27)/2	-0.10		
		(-5.13--5.12)x(3.32+3.27)/2	-0.03		
				0.15	
15	A4	(11.34-11.44)x(3.52+3.40)/2	-0.35		
210.00		(12.61-11.34)x(3.52+3.52)/2	4.47		
		(12.71-12.61)x(3.46+3.52)/2	0.35		
		(12.40-12.71)x(3.47+3.46)/2	-1.07		
		(12.27-12.40)x(3.49+3.47)/2	-0.45		
		(12.06-12.27)x(3.47+3.49)/2	-0.73		
		(11.44-12.06)x(3.40+3.47)/2	-2.13		
				0.09	
16	A1	(-21.11--19.93)x(3.21+2.03)/2	-3.09		
225.00		(-16.75--21.11)x(3.21+3.21)/2	14.00		
		(-16.36--16.75)x(3.48+3.21)/2	1.30		
		(-15.09--16.36)x(3.47+3.48)/2	4.41		
		(-15.40--15.09)x(3.11+3.47)/2	-1.02		
		(-8.52--15.40)x(3.28+3.11)/2	21.98		
		(-8.73--8.52)x(3.23+3.28)/2	-0.68		
		A RIPORTARE mq	36.90		

		CALCOLO DELLE AREE		Foglio n. 5
RILEVATO				
N. SEZIONE PROG.	FIG.	ELEMENTI DI CALCOLO	AREA ELEMENTARE mq	AREA FIGURA mq	NOTE
		RIPORTO mq	36.90		
		(-8.99--8.73)x(3.17+3.23)/2	-0.83		
		(-9.15--8.99)x(3.16+3.17)/2	-0.51		
		(-10.09--9.15)x(3.06+3.16)/2	-2.92		
		(-10.95--10.09)x(3.05+3.06)/2	-2.63		
		(-11.19--10.95)x(3.05+3.05)/2	-0.73		
		(-11.56--11.19)x(3.04+3.05)/2	-1.13		
		(-12.29--11.56)x(3.04+3.04)/2	-2.22		
		(-12.75--12.29)x(3.04+3.04)/2	-1.40		
		(-13.39--12.75)x(3.02+3.04)/2	-1.94		
		(-14.39--13.39)x(3.02+3.02)/2	-3.02		
		(-14.49--14.39)x(3.02+3.02)/2	-0.30		
		(-14.55--14.49)x(3.01+3.02)/2	-0.18		
		(-15.59--14.55)x(2.89+3.01)/2	-3.07		
		(-16.35--15.59)x(2.78+2.89)/2	-2.15		
		(-16.69--16.35)x(2.74+2.78)/2	-0.94		
		(-17.22--16.69)x(2.68+2.74)/2	-1.44		
		(-17.79--17.22)x(2.63+2.68)/2	-1.51		
		(-18.15--17.79)x(2.60+2.63)/2	-0.94		
		(-18.89--18.15)x(2.58+2.60)/2	-1.92		
		(-19.93--18.89)x(2.03+2.58)/2	-2.40		
				4.72	
16	A2	(-6.70--6.99)x(3.32+3.32)/2	0.96		
225.00		(-6.89--6.70)x(3.26+3.32)/2	-0.63		
		(-6.93--6.89)x(3.23+3.26)/2	-0.13		
		(-6.94--6.93)x(3.27+3.23)/2	-0.03		
		(-6.99--6.94)x(3.32+3.27)/2	-0.16		
				0.01	
16	A3	(-1.75--6.70)x(3.45+3.32)/2	16.76		
225.00		(-0.68--1.75)x(3.47+3.45)/2	3.70		
		(0.68--0.68)x(3.47+3.47)/2	4.72		
		(1.75-0.68)x(3.45+3.47)/2	3.70		
		(1.83-1.75)x(3.45+3.45)/2	0.28		
		(1.64-1.83)x(3.44+3.45)/2	-0.65		
		(0.91-1.64)x(3.41+3.44)/2	-2.50		
		(-0.16-0.91)x(3.37+3.41)/2	-3.63		
		(-0.19--0.16)x(3.37+3.37)/2	-0.10		
		(-0.24--0.19)x(3.37+3.37)/2	-0.17		
		(-1.29--0.24)x(3.33+3.37)/2	-3.52		
		(-1.96--1.29)x(3.31+3.33)/2	-2.22		
		(-2.39--1.96)x(3.30+3.31)/2	-1.42		
		(-3.07--2.39)x(3.28+3.30)/2	-2.24		
		(-3.49--3.07)x(3.27+3.28)/2	-1.38		
		(-4.16--3.49)x(3.24+3.27)/2	-2.18		
		(-4.50--4.16)x(3.25+3.24)/2	-1.10		
		(-4.70--4.50)x(3.27+3.25)/2	-0.65		
		(-4.75--4.70)x(3.28+3.27)/2	-0.16		
		(-4.76--4.75)x(3.29+3.28)/2	-0.03		
		(-4.77--4.76)x(3.22+3.29)/2	-0.03		
		(-4.78--4.77)x(3.21+3.22)/2	-0.03		
		(-4.80--4.78)x(3.21+3.21)/2	-0.06		
		(-4.96--4.80)x(3.20+3.21)/2	-0.51		
		(-5.69--4.96)x(3.19+3.20)/2	-2.33		
		(-5.75--5.69)x(3.20+3.19)/2	-0.19		
		(-6.18--5.75)x(3.22+3.20)/2	-1.38		
		(-6.25--6.18)x(3.22+3.22)/2	-0.23		
		(-6.27--6.25)x(3.22+3.22)/2	-0.06		
		(-6.30--6.27)x(3.23+3.22)/2	-0.10		
		(-6.31--6.30)x(3.23+3.23)/2	-0.03		
		(-6.59--6.31)x(3.32+3.23)/2	-0.92		
		(-6.61--6.59)x(3.32+3.32)/2	-0.07		
		(-6.70--6.61)x(3.32+3.32)/2	-0.30		
				0.97	
16	A4	(11.34-11.59)x(3.57+3.27)/2	-0.85		
225.00		(12.61-11.34)x(3.57+3.57)/2	4.53		
		(12.98-12.61)x(3.32+3.57)/2	1.27		
		(12.44-12.98)x(3.30+3.32)/2	-1.79		
		(11.91-12.44)x(3.29+3.30)/2	-1.75		
		(11.68-11.91)x(3.27+3.29)/2	-0.75		
		(11.59-11.68)x(3.27+3.27)/2	-0.29		
				0.37	
17	A1	(-21.18--19.79)x(3.21+1.82)/2	-3.50		
240.00		(-16.83--21.18)x(3.21+3.21)/2	13.96		
		(-16.36--16.83)x(3.52+3.21)/2	1.58		
		(-15.09--16.36)x(3.52+3.52)/2	4.47		
		(-15.40--15.09)x(3.15+3.52)/2	-1.03		
		(-7.18--15.40)x(3.36+3.15)/2	26.76		
		(-7.19--7.18)x(3.35+3.36)/2	-0.03		
		(-8.20--7.19)x(3.12+3.35)/2	-3.27		
		(-8.99--8.20)x(3.04+3.12)/2	-2.43		
		(-9.30--8.99)x(2.98+3.04)/2	-0.93		
		(-9.79--9.30)x(2.99+2.98)/2	-1.46		
		(-10.40--9.79)x(2.99+2.99)/2	-1.82		
		(-10.78--10.40)x(2.99+2.99)/2	-1.14		
		(-11.50--10.78)x(3.00+2.99)/2	-2.16		
		(-12.57--11.50)x(3.02+3.00)/2	-3.22		
		(-12.60--12.57)x(3.02+3.02)/2	-0.09		
		(-12.61--12.60)x(3.02+3.02)/2	-0.03		
		(-12.64--12.61)x(3.02+3.02)/2	-0.09		
		(-13.40--12.64)x(3.04+3.02)/2	-2.30		
		(-13.69--13.40)x(3.04+3.04)/2	-0.88		
		(-14.36--13.69)x(2.98+3.04)/2	-2.02		
		(-14.79--14.36)x(2.96+2.98)/2	-1.28		
		(-15.48--14.79)x(2.89+2.96)/2	-2.02		
		(-15.89--15.48)x(2.84+2.89)/2	-1.17		
		(-16.15--15.89)x(2.80+2.84)/2	-0.73		
		(-16.99--16.15)x(2.68+2.80)/2	-2.30		
		(-17.94--16.99)x(2.63+2.68)/2	-2.52		
		(-18.09--17.94)x(2.62+2.63)/2	-0.39		
		(-18.33--18.09)x(2.58+2.62)/2	-0.62		
		(-19.19--18.33)x(2.34+2.58)/2	-2.12		
		(-19.73--19.19)x(1.86+2.34)/2	-1.13		
		(-19.79--19.73)x(1.82+1.86)/2	-0.11		
				5.98	
17	A2	(-1.75--6.68)x(3.49+3.37)/2	16.91		
		A RIPORTARE mq	16.91		

		CALCOLO DELLE AREE		Foglio n. 6
RILEVATO				
N. SEZIONE PROG.	FIG.	ELEMENTI DI CALCOLO	AREA ELEMENTARE mq	AREA FIGURA mq	NOTE
		RIPORTO mq	16.91		
240.00		(-0.68--1.75)x(3.52+3.49)/2	3.75		
		(0.68--0.68)x(3.52+3.52)/2	4.79		
		(1.75-0.68)x(3.49+3.52)/2	3.75		
		(2.67-1.75)x(3.47+3.49)/2	3.20		
		(1.76-2.67)x(3.44+3.47)/2	-3.14		
		(1.69-1.76)x(3.44+3.44)/2	-0.24		
		(1.58-1.69)x(3.44+3.44)/2	-0.38		
		(0.60-1.58)x(3.40+3.44)/2	-3.35		
		(-0.03-0.60)x(3.38+3.40)/2	-2.14		
		(-0.50--0.03)x(3.37+3.38)/2	-1.59		
		(-1.26--0.50)x(3.34+3.37)/2	-2.55		
		(-1.60--1.26)x(3.32+3.34)/2	-1.13		
		(-1.82--1.60)x(3.31+3.32)/2	-0.73		
		(-2.70--1.82)x(3.27+3.31)/2	-2.90		
		(-3.61--2.70)x(3.23+3.27)/2	-2.96		
		(-3.80--3.61)x(3.22+3.23)/2	-0.61		
		(-4.11--3.80)x(3.20+3.22)/2	-1.00		
		(-4.90--4.11)x(3.19+3.20)/2	-2.52		
		(-5.40--4.90)x(3.26+3.19)/2	-1.61		
		(-6.00--5.40)x(3.34+3.26)/2	-1.98		
		(-6.68--6.00)x(3.37+3.34)/2	-2.28		
				1.29	
17	A3	(11.34-11.63)x(3.61+3.26)/2	-1.00		
240.00		(12.61-11.34)x(3.62+3.61)/2	4.59		
		(13.21-12.61)x(3.21+3.62)/2	2.05		
		(12.96-13.21)x(3.22+3.21)/2	-0.80		
		(12.69-12.96)x(3.23+3.22)/2	-0.87		
		(12.51-12.69)x(3.23+3.23)/2	-0.58		
		(11.63-12.51)x(3.26+3.23)/2	-2.86		
				0.53	
18	A1	(-21.21--19.58)x(3.20+1.56)/2	-3.88		
255.00		(-16.91--21.21)x(3.20+3.20)/2	13.76		
		(-16.36--16.91)x(3.57+3.20)/2	1.86		
		(-15.09--16.36)x(3.56+3.57)/2	4.53		
		(-15.40--15.09)x(3.20+3.56)/2	-1.05		
		(-1.75--15.40)x(3.54+3.20)/2	46.00		
		(-0.68--1.75)x(3.56+3.54)/2	3.80		
		(0.68--0.68)x(3.56+3.56)/2	4.84		
		(1.75-0.68)x(3.54+3.56)/2	3.80		
		(4.57-1.75)x(3.47+3.54)/2	9.88		
		(3.70-4.57)x(3.47+3.47)/2	-3.02		
		(3.60-3.70)x(3.48+3.47)/2	-0.35		
		(3.45-3.60)x(3.47+3.48)/2	-0.52		
		(2.51-3.45)x(3.44+3.47)/2	-3.25		
		(1.91-2.51)x(3.42+3.44)/2	-2.06		
		(1.41-1.91)x(3.40+3.42)/2	-1.71		
		(0.60-1.41)x(3.37+3.40)/2	-2.74		
		(0.31-0.60)x(3.36+3.37)/2	-0.98		
		(-0.41-0.31)x(3.33+3.36)/2	-2.41		
		(-0.79--0.41)x(3.31+3.33)/2	-1.26		
		(-1.65--0.79)x(3.27+3.31)/2	-2.83		
		(-1.89--1.65)x(3.27+3.27)/2	-0.78		
		(-2.26--1.89)x(3.25+3.27)/2	-1.21		
		(-2.99--2.26)x(3.23+3.25)/2	-2.37		
		(-3.44--2.99)x(3.21+3.23)/2	-1.45		
		(-4.08--3.44)x(3.18+3.21)/2	-2.04		
		(-5.12--4.08)x(3.39+3.18)/2	-3.42		
		(-5.18--5.12)x(3.40+3.39)/2	-0.20		
		(-5.22--5.18)x(3.40+3.40)/2	-0.14		
		(-6.28--5.22)x(3.38+3.40)/2	-3.59		
		(-7.00--6.28)x(3.20+3.38)/2	-2.37		
		(-7.38--7.00)x(3.12+3.20)/2	-1.20		
		(-7.98--7.38)x(3.09+3.12)/2	-1.86		
		(-8.48--7.98)x(3.07+3.09)/2	-1.54		
		(-8.79--8.48)x(3.11+3.07)/2	-0.96		
		(-9.58--8.79)x(3.14+3.11)/2	-2.47		
		(-10.57--9.58)x(3.13+3.14)/2	-3.10		
		(-10.67--10.57)x(3.13+3.13)/2	-0.31		
		(-10.84--10.67)x(3.13+3.13)/2	-0.53		
		(-11.77--10.84)x(3.18+3.13)/2	-2.93		
		(-12.35--11.77)x(3.18+3.18)/2	-1.84		
		(-12.87--12.35)x(3.20+3.18)/2	-1.66		
		(-13.70--12.87)x(3.13+3.20)/2	-2.63		
		(-13.97--13.70)x(3.10+3.13)/2	-0.84		
		(-14.14--13.97)x(3.08+3.10)/2	-0.53		
		(-15.07--14.14)x(2.95+3.08)/2	-2.80		
		(-15.92--15.07)x(2.87+2.95)/2	-2.47		
		(-16.17--15.92)x(2.84+2.87)/2	-0.71		
		(-16.56--16.17)x(2.82+2.84)/2	-1.10		
		(-17.26--16.56)x(2.78+2.82)/2	-1.96		
		(-17.71--17.26)x(2.63+2.78)/2	-1.22		
		(-18.36--17.71)x(2.50+2.63)/2	-1.67		
		(-18.66--18.36)x(2.30+2.50)/2	-0.72		
		(-19.42--18.66)x(1.70+2.30)/2	-1.52		
		(-19.45--19.42)x(1.67+1.70)/2	-0.05		
		(-19.46--19.45)x(1.66+1.67)/2	-0.02		
		(-19.49--19.46)x(1.64+1.66)/2	-0.05		
		(-19.58--19.49)x(1.56+1.64)/2	-0.14		
				8.01	
18	A2	(11.64-4.91)x(3.29+3.46)/2	22.71		
255.00		(11.33-11.64)x(3.66+3.29)/2	-1.08		
		(12.60-11.33)x(3.66+3.66)/2	4.65		
		(13.23-12.60)x(3.24+3.66)/2	2.17		
		(12.61-13.23)x(3.24+3.24)/2	-2.01		
		(12.39-12.61)x(3.24+3.24)/2	-0.71		
		(12.03-12.39)x(3.25+3.24)/2	-1.17		
		(11.29-12.03)x(3.27+3.25)/2	-2.41		
		(10.83-11.29)x(3.28+3.27)/2	-1.51		
		(10.19-10.83)x(3.30+3.28)/2	-2.11		
		(9.17-10.19)x(3.32+3.30)/2	-3.38		
		(9.10-9.17)x(3.33+3.32)/2	-0.23		
		(9.05-9.10)x(3.33+3.33)/2	-0.17		
		(8.00-9.05)x(3.36+3.33)/2	-3.51		
		(7.26-8.00)x(3.39+3.36)/2	-2.50		
		A RIPORTARE mq	8.74		

		CALCOLO DELLE AREE		Foglio n. 7
RILEVATO				
N. SEZIONE PROG.	FIG.	ELEMENTI DI CALCOLO	AREA ELEMENTARE mq	AREA FIGURA mq	NOTE
		RIPORTO mq	8.74		
		(6.90-7.26)x(3.40+3.39)/2	-1.22		
		(6.31-6.90)x(3.41+3.40)/2	-2.01		
		(5.80-6.31)x(3.43+3.41)/2	-1.74		
		(5.48-5.80)x(3.44+3.43)/2	-1.10		
		(4.91-5.48)x(3.46+3.44)/2	-1.97		
				0.70	
19	A1	(-21.21--19.08)x(3.20+1.06)/2	-4.54		
270.00		(-16.98--21.21)x(3.20+3.20)/2	13.54		
		(-16.36--16.98)x(3.61+3.20)/2	2.11		
		(-15.09--16.36)x(3.61+3.61)/2	4.58		
		(-15.40--15.09)x(3.24+3.61)/2	-1.06		
		(-1.75--15.40)x(3.58+3.24)/2	46.55		
		(-0.68--1.75)x(3.61+3.58)/2	3.85		
		(0.68--0.68)x(3.61+3.61)/2	4.91		
		(1.75-0.68)x(3.58+3.61)/2	3.85		
		(11.86-1.75)x(3.33+3.58)/2	34.93		
		(11.56-11.86)x(3.70+3.33)/2	-1.05		
		(12.82-11.56)x(3.70+3.70)/2	4.66		
		(13.51-12.82)x(3.24+3.70)/2	2.39		
		(13.22-13.51)x(3.24+3.24)/2	-0.94		
		(12.74-13.22)x(3.25+3.24)/2	-1.56		
		(12.13-12.74)x(3.25+3.25)/2	-1.98		
		(11.85-12.13)x(3.26+3.25)/2	-0.91		
		(11.12-11.85)x(3.28+3.26)/2	-2.39		
		(11.05-11.12)x(3.28+3.28)/2	-0.23		
		(11.03-11.05)x(3.28+3.28)/2	-0.07		
		(10.97-11.03)x(3.28+3.28)/2	-0.20		
		(9.93-10.97)x(3.31+3.28)/2	-3.43		
		(9.19-9.93)x(3.33+3.31)/2	-2.46		
		(8.83-9.19)x(3.34+3.33)/2	-1.20		
		(8.25-8.83)x(3.35+3.34)/2	-1.94		
		(7.74-8.25)x(3.35+3.35)/2	-1.71		
		(7.42-7.74)x(3.36+3.35)/2	-1.07		
		(6.64-7.42)x(3.38+3.36)/2	-2.63		
		(5.64-6.64)x(3.41+3.38)/2	-3.40		
		(5.54-5.64)x(3.41+3.41)/2	-0.34		
		(5.38-5.54)x(3.41+3.41)/2	-0.55		
		(4.44-5.38)x(3.42+3.41)/2	-3.21		
		(3.87-4.44)x(3.41+3.42)/2	-1.95		
		(3.35-3.87)x(3.40+3.41)/2	-1.77		
		(2.50-3.35)x(3.37+3.40)/2	-2.88		
		(2.25-2.50)x(3.36+3.37)/2	-0.84		
		(2.09-2.25)x(3.36+3.36)/2	-0.54		
		(1.15-2.09)x(3.32+3.36)/2	-3.14		
		(0.32-1.15)x(3.29+3.32)/2	-2.74		
		(0.05-0.32)x(3.28+3.29)/2	-0.89		
		(-0.37-0.05)x(3.27+3.28)/2	-1.38		
		(-1.04--0.37)x(3.26+3.27)/2	-2.19		
		(-1.46--1.04)x(3.25+3.26)/2	-1.37		
		(-2.14--1.46)x(3.24+3.25)/2	-2.21		
		(-3.24--2.14)x(3.20+3.24)/2	-3.54		
		(-3.25--3.24)x(3.20+3.20)/2	-0.03		
		(-4.34--3.25)x(3.23+3.20)/2	-3.50		
		(-5.01--4.34)x(3.21+3.23)/2	-2.16		
		(-5.43--5.01)x(3.21+3.21)/2	-1.35		
		(-5.62--5.43)x(3.21+3.21)/2	-0.61		
		(-6.12--5.62)x(3.17+3.21)/2	-1.59		
		(-6.42--6.12)x(3.15+3.17)/2	-0.95		
		(-6.53--6.42)x(3.15+3.15)/2	-0.35		
		(-6.79--6.53)x(3.13+3.15)/2	-0.82		
		(-7.63--6.79)x(3.01+3.13)/2	-2.58		
		(-8.56--7.63)x(2.99+3.01)/2	-2.79		
		(-8.73--8.56)x(2.97+2.99)/2	-0.51		
		(-8.99--8.73)x(2.97+2.97)/2	-0.77		
		(-9.82--8.99)x(2.95+2.97)/2	-2.46		
		(-10.34--9.82)x(2.95+2.95)/2	-1.53		
		(-10.92--10.34)x(2.93+2.95)/2	-1.71		
		(-11.87--10.92)x(2.78+2.93)/2	-2.71		
		(-12.02--11.87)x(2.75+2.78)/2	-0.41		
		(-12.11--12.02)x(2.74+2.75)/2	-0.25		
		(-13.12--12.11)x(2.68+2.74)/2	-2.74		
		(-13.89--13.12)x(2.90+2.68)/2	-2.15		
		(-14.21--13.89)x(2.97+2.90)/2	-0.94		
		(-14.74--14.21)x(2.98+2.97)/2	-1.58		
		(-15.31--14.74)x(2.96+2.98)/2	-1.69		
		(-15.66--15.31)x(2.82+2.96)/2	-1.01		
		(-16.41--15.66)x(2.59+2.82)/2	-2.03		
		(-17.44--16.41)x(2.07+2.59)/2	-2.40		
		(-17.51--17.44)x(2.04+2.07)/2	-0.14		
		(-17.62--17.51)x(1.96+2.04)/2	-0.22		
		(-18.60--17.62)x(1.28+1.96)/2	-1.59		
		(-19.08--18.60)x(1.06+1.28)/2	-0.56		
				14.93	
20	A1	(-15.10--20.73)x(3.64+3.64)/2	20.49		
285.00		(-15.40--15.10)x(3.29+3.64)/2	-1.04		
		(-1.75--15.40)x(3.63+3.29)/2	47.23		
		(-0.68--1.75)x(3.65+3.63)/2	3.89		
		(0.68--0.68)x(3.65+3.65)/2	4.96		
		(1.75-0.68)x(3.63+3.65)/2	3.89		
		(12.58-1.75)x(3.36+3.63)/2	37.85		
		(12.28-12.58)x(3.72+3.36)/2	-1.06		
		(13.54-12.28)x(3.73+3.72)/2	4.69		
		(14.32-13.54)x(3.21+3.73)/2	2.71		
		(14.08-14.32)x(3.20+3.21)/2	-0.77		
		(13.13-14.08)x(3.21+3.20)/2	-3.04		
		(12.99-13.13)x(3.22+3.21)/2	-0.45		
		(12.90-12.99)x(3.22+3.22)/2	-0.29		
		(11.89-12.90)x(3.25+3.22)/2	-3.27		
		(11.13-11.89)x(3.27+3.25)/2	-2.48		
		(10.79-11.13)x(3.28+3.27)/2	-1.11		
		(10.24-10.79)x(3.30+3.28)/2	-1.81		
		(9.70-10.24)x(3.31+3.30)/2	-1.78		
		(9.37-9.70)x(3.33+3.31)/2	-1.10		
		(8.60-9.37)x(3.35+3.33)/2	-2.57		
		A RIPORTARE mq	104.94		

		CALCOLO DELLE AREE		Foglio n. 8
RILEVATO				
N. SEZIONE PROG.	FIG.	ELEMENTI DI CALCOLO	AREA ELEMENTARE mq	AREA FIGURA mq	NOTE
		RIPORTO mq	104.94		
		(7.60-8.60)x(3.37+3.35)/2	-3.36		
		(7.50-7.60)x(3.37+3.37)/2	-0.34		
		(7.35-7.50)x(3.37+3.37)/2	-0.51		
		(6.41-7.35)x(3.38+3.37)/2	-3.17		
		(5.87-6.41)x(3.39+3.38)/2	-1.83		
		(5.31-5.87)x(3.40+3.39)/2	-1.90		
		(4.46-5.31)x(3.41+3.40)/2	-2.89		
		(4.21-4.46)x(3.41+3.41)/2	-0.85		
		(4.06-4.21)x(3.41+3.41)/2	-0.51		
		(3.12-4.06)x(3.38+3.41)/2	-3.19		
		(2.30-3.12)x(3.33+3.38)/2	-2.75		
		(2.02-2.30)x(3.32+3.33)/2	-0.93		
		(1.57-2.02)x(3.31+3.32)/2	-1.49		
		(0.92-1.57)x(3.31+3.31)/2	-2.15		
		(0.53-0.92)x(3.31+3.31)/2	-1.29		
		(-0.17-0.53)x(3.30+3.31)/2	-2.31		
		(-1.24--0.17)x(3.26+3.30)/2	-3.51		
		(-1.27--1.24)x(3.26+3.26)/2	-0.10		
		(-1.32--1.27)x(3.26+3.26)/2	-0.16		
		(-2.37--1.32)x(3.22+3.26)/2	-3.40		
		(-3.01--2.37)x(3.19+3.22)/2	-2.05		
		(-3.46--3.01)x(3.16+3.19)/2	-1.43		
		(-4.21--3.46)x(3.22+3.16)/2	-2.39		
		(-4.56--4.21)x(3.26+3.22)/2	-1.13		
		(-4.77--4.56)x(3.25+3.26)/2	-0.68		
		(-5.66--4.77)x(3.31+3.25)/2	-2.92		
		(-6.54--5.66)x(3.10+3.31)/2	-2.82		
		(-6.75--6.54)x(3.06+3.10)/2	-0.65		
		(-7.10--6.75)x(3.02+3.06)/2	-1.06		
		(-7.85--7.10)x(2.95+3.02)/2	-2.24		
		(-8.31--7.85)x(2.91+2.95)/2	-1.35		
		(-8.95--8.31)x(2.88+2.91)/2	-1.85		
		(-9.99--8.95)x(2.76+2.88)/2	-2.93		
		(-10.04--9.99)x(2.75+2.76)/2	-0.14		
		(-10.08--10.04)x(2.74+2.75)/2	-0.11		
		(-11.14--10.08)x(2.50+2.74)/2	-2.78		
		(-11.62--11.14)x(2.35+2.50)/2	-1.16		
		(-12.24--11.62)x(2.12+2.35)/2	-1.39		
		(-12.88--12.24)x(1.91+2.12)/2	-1.29		
		(-13.33--12.88)x(1.75+1.91)/2	-0.82		
		(-13.61--13.33)x(1.63+1.75)/2	-0.47		
		(-14.43--13.61)x(1.30+1.63)/2	-1.20		
		(-15.38--14.43)x(0.89+1.30)/2	-1.04		
		(-15.53--15.38)x(0.83+0.89)/2	-0.13		
		(-15.76--15.53)x(0.78+0.83)/2	-0.19		
		(-16.39--15.76)x(0.69+0.78)/2	-0.46		
		(-16.62--16.39)x(0.67+0.69)/2	-0.16		
		(-17.18--16.62)x(0.68+0.67)/2	-0.38		
		(-17.72--17.18)x(0.66+0.68)/2	-0.36		
		(-17.98--17.72)x(0.65+0.66)/2	-0.17		
		(-18.65--17.98)x(0.75+0.65)/2	-0.47		
		(-18.82--18.65)x(0.79+0.75)/2	-0.13		
		(-18.92--18.82)x(0.89+0.79)/2	-0.08		
		(-19.91--18.92)x(1.70+0.89)/2	-1.28		
		(-20.68--19.91)x(2.53+1.70)/2	-1.63		
		(-20.73--20.68)x(2.59+2.53)/2	-0.13		
				28.83	
21 300.00	A1	(-16.60--20.77)x(3.54+3.54)/2	14.76		
		(-16.36--16.60)x(3.70+3.54)/2	0.87		
		(-15.09--16.36)x(3.70+3.70)/2	4.70		
		(-15.40--15.09)x(3.33+3.70)/2	-1.09		
		(-1.75--15.40)x(3.67+3.33)/2	47.77		
		(-0.68--1.75)x(3.70+3.67)/2	3.94		
		(0.68--0.68)x(3.70+3.70)/2	5.03		
		(1.75-0.68)x(3.67+3.70)/2	3.94		
		(13.51-1.75)x(3.38+3.67)/2	41.45		
		(13.20-13.51)x(3.74+3.38)/2	-1.10		
		(14.47-13.20)x(3.75+3.74)/2	4.76		
		(15.27-14.47)x(3.22+3.75)/2	2.79		
		(15.18-15.27)x(3.21+3.22)/2	-0.29		
		(14.97-15.18)x(3.19+3.21)/2	-0.67		
		(14.85-14.97)x(3.19+3.19)/2	-0.38		
		(13.88-14.85)x(3.15+3.19)/2	-3.07		
		(13.09-13.88)x(3.18+3.15)/2	-2.50		
		(12.78-13.09)x(3.18+3.18)/2	-0.99		
		(12.27-12.78)x(3.20+3.18)/2	-1.63		
		(11.69-12.27)x(3.22+3.20)/2	-1.86		
		(11.33-11.69)x(3.22+3.22)/2	-1.16		
		(10.59-11.33)x(3.24+3.22)/2	-2.39		
		(9.57-10.59)x(3.25+3.24)/2	-3.31		
		(9.49-9.57)x(3.25+3.25)/2	-0.26		
		(9.37-9.49)x(3.25+3.25)/2	-0.39		
		(8.40-9.37)x(3.29+3.25)/2	-3.17		
		(7.81-8.40)x(3.31+3.29)/2	-1.95		
		(7.30-7.81)x(3.33+3.31)/2	-1.69		
		(6.47-7.30)x(3.35+3.33)/2	-2.77		
		(6.21-6.47)x(3.36+3.35)/2	-0.87		
		(6.05-6.21)x(3.36+3.36)/2	-0.54		
		(5.11-6.05)x(3.37+3.36)/2	-3.16		
		(4.29-5.11)x(3.35+3.37)/2	-2.76		
		(4.02-4.29)x(3.35+3.35)/2	-0.90		
		(3.56-4.02)x(3.35+3.35)/2	-1.54		
		(2.92-3.56)x(3.37+3.35)/2	-2.15		
		(2.53-2.92)x(3.35+3.37)/2	-1.31		
		(1.82-2.53)x(3.33+3.35)/2	-2.37		
		(0.77-1.82)x(3.30+3.33)/2	-3.48		
		(0.73-0.77)x(3.30+3.30)/2	-0.13		
		(0.71-0.73)x(3.30+3.30)/2	-0.07		
		(0.66-0.71)x(3.30+3.30)/2	-0.16		
		(-0.09-0.66)x(3.24+3.30)/2	-2.45		
		(-0.37--0.09)x(3.24+3.24)/2	-0.91		
		(-0.99--0.37)x(3.22+3.24)/2	-2.00		
		(-1.46--0.99)x(3.21+3.22)/2	-1.51		
		(-2.25--1.46)x(3.13+3.21)/2	-2.50		
		A RIPORTARE mq	70.53		

		CALCOLO DELLE AREE		Foglio n. 9
RILEVATO				
N. SEZIONE PROG.	FIG.	ELEMENTI DI CALCOLO	AREA ELEMENTARE mq	AREA FIGURA mq	NOTE
		RIPORTO mq	70.53		
		(-2.56--2.25)x(3.10+3.13)/2	-0.97		
		(-2.75--2.56)x(3.11+3.10)/2	-0.59		
		(-3.66--2.75)x(3.16+3.11)/2	-2.85		
		(-4.51--3.66)x(3.28+3.16)/2	-2.74		
		(-4.75--4.51)x(3.32+3.28)/2	-0.79		
		(-5.15--4.75)x(3.29+3.32)/2	-1.32		
		(-5.85--5.15)x(3.18+3.29)/2	-2.26		
		(-6.27--5.85)x(3.08+3.18)/2	-1.31		
		(-6.94--6.27)x(2.89+3.08)/2	-2.00		
		(-8.03--6.94)x(2.63+2.89)/2	-3.01		
		(-8.04--8.03)x(2.63+2.63)/2	-0.03		
		(-8.06--8.04)x(2.62+2.63)/2	-0.05		
		(-9.13--8.06)x(2.28+2.62)/2	-2.62		
		(-9.79--9.13)x(2.08+2.28)/2	-1.44		
		(-10.23--9.79)x(1.94+2.08)/2	-0.88		
		(-10.96--10.23)x(1.70+1.94)/2	-1.33		
		(-11.33--10.96)x(1.58+1.70)/2	-0.61		
		(-11.55--11.33)x(1.50+1.58)/2	-0.34		
		(-12.42--11.55)x(1.22+1.50)/2	-1.18		
		(-13.31--12.42)x(0.98+1.22)/2	-0.98		
		(-13.52--13.31)x(0.92+0.98)/2	-0.20		
		(-13.86--13.52)x(0.89+0.92)/2	-0.31		
		(-14.61--13.86)x(0.80+0.89)/2	-0.63		
		(-15.07--14.61)x(0.81+0.80)/2	-0.37		
		(-15.71--15.07)x(0.81+0.81)/2	-0.52		
		(-16.77--15.71)x(0.96+0.81)/2	-0.94		
		(-16.81--16.77)x(0.97+0.96)/2	-0.04		
		(-17.59--16.81)x(1.28+0.97)/2	-0.88		
		(-17.90--17.59)x(1.52+1.28)/2	-0.43		
		(-18.59--17.90)x(2.31+1.52)/2	-1.32		
		(-19.00--18.59)x(2.72+2.31)/2	-1.03		
		(-19.67--19.00)x(3.26+2.72)/2	-2.00		
		(-20.09--19.67)x(3.49+3.26)/2	-1.42		
		(-20.35--20.09)x(3.48+3.49)/2	-0.91		
		(-20.77--20.35)x(3.48+3.48)/2	-1.46		
				30.77	
22 315.00	A1	(-17.12--20.40)x(3.24+3.24)/2	10.63		
		(-16.36--17.12)x(3.75+3.24)/2	2.66		
		(-15.09--16.36)x(3.74+3.75)/2	4.76		
		(-15.40--15.09)x(3.38+3.74)/2	-1.10		
		(-1.75--15.40)x(3.72+3.38)/2	48.46		
		(-0.68--1.75)x(3.74+3.72)/2	3.99		
		(0.68--0.68)x(3.74+3.74)/2	5.09		
		(1.75-0.68)x(3.72+3.74)/2	3.99		
		(14.46-1.75)x(3.40+3.72)/2	45.25		
		(14.16-14.46)x(3.77+3.40)/2	-1.08		
		(15.42-14.16)x(3.77+3.77)/2	4.75		
		(16.43-15.42)x(3.10+3.77)/2	3.47		
		(15.89-16.43)x(3.12+3.10)/2	-1.68		
		(15.06-15.89)x(3.11+3.12)/2	-2.59		
		(14.80-15.06)x(3.11+3.11)/2	-0.81		
		(14.36-14.80)x(3.12+3.11)/2	-1.37		
		(13.70-14.36)x(3.16+3.12)/2	-2.07		
		(13.09-13.70)x(3.17+3.16)/2	-1.93		
		(12.61-13.09)x(3.17+3.17)/2	-1.52		
		(11.55-12.61)x(3.21+3.17)/2	-3.38		
		(11.51-11.55)x(3.21+3.21)/2	-0.13		
		(11.44-11.51)x(3.21+3.21)/2	-0.22		
		(10.42-11.44)x(3.25+3.21)/2	-3.29		
		(9.80-10.42)x(3.26+3.25)/2	-2.02		
		(9.32-9.80)x(3.27+3.26)/2	-1.57		
		(8.53-9.32)x(3.30+3.27)/2	-2.60		
		(8.23-8.53)x(3.32+3.30)/2	-0.99		
		(8.05-8.23)x(3.32+3.32)/2	-0.60		
		(7.13-8.05)x(3.33+3.32)/2	-3.06		
		(6.30-7.13)x(3.36+3.33)/2	-2.78		
		(6.04-6.30)x(3.36+3.36)/2	-0.87		
		(5.61-6.04)x(3.36+3.36)/2	-1.44		
		(4.94-5.61)x(3.35+3.36)/2	-2.25		
		(4.54-4.94)x(3.33+3.35)/2	-1.34		
		(3.85-4.54)x(3.30+3.33)/2	-2.29		
		(2.79-3.85)x(3.31+3.30)/2	-3.50		
		(2.75-2.79)x(3.31+3.31)/2	-0.13		
		(2.69-2.75)x(3.31+3.31)/2	-0.20		
		(1.66-2.69)x(3.30+3.31)/2	-3.40		
		(1.04-1.66)x(3.28+3.30)/2	-2.04		
		(0.56-1.04)x(3.26+3.28)/2	-1.57		
		(-0.23-0.56)x(3.25+3.26)/2	-2.57		
		(-0.53--0.23)x(3.24+3.25)/2	-0.97		
		(-0.71--0.53)x(3.23+3.24)/2	-0.58		
		(-1.63--0.71)x(3.19+3.23)/2	-2.95		
		(-2.46--1.63)x(3.19+3.19)/2	-2.65		
		(-2.72--2.46)x(3.19+3.19)/2	-0.83		
		(-3.15--2.72)x(3.23+3.19)/2	-1.38		
		(-3.82--3.15)x(3.30+3.23)/2	-2.19		
		(-4.22--3.82)x(3.29+3.30)/2	-1.32		
		(-4.91--4.22)x(3.31+3.29)/2	-2.28		
		(-5.23--4.91)x(3.21+3.31)/2	-1.04		
		(-6.01--5.23)x(3.06+3.21)/2	-2.45		
		(-6.07--6.01)x(3.05+3.06)/2	-0.18		
		(-7.10--6.07)x(2.77+3.05)/2	-3.00		
		(-7.72--7.10)x(2.50+2.77)/2	-1.63		
		(-8.20--7.72)x(2.33+2.50)/2	-1.16		
		(-8.99--8.20)x(1.99+2.33)/2	-1.71		
		(-9.29--8.99)x(1.87+1.99)/2	-0.58		
		(-9.47--9.29)x(1.79+1.87)/2	-0.33		
		(-10.39--9.47)x(1.44+1.79)/2	-1.49		
		(-11.22--10.39)x(0.99+1.44)/2	-1.01		
		(-11.48--11.22)x(0.86+0.99)/2	-0.24		
		(-11.91--11.48)x(0.70+0.86)/2	-0.34		
		(-12.58--11.91)x(0.53+0.70)/2	-0.41		
		(-12.98--12.58)x(0.58+0.53)/2	-0.22		
		(-13.67--12.98)x(0.64+0.58)/2	-0.42		
		(-14.73--13.67)x(0.75+0.64)/2	-0.74		
		A RIPORTARE mq	44.56		

		CALCOLO DELLE AREE		Foglio n. 10
RILEVATO				
N. SEZIONE PROG.	FIG.	ELEMENTI DI CALCOLO	AREA ELEMENTARE mq	AREA FIGURA mq	NOTE
		RIPORTO mq	44.56		
		(-14.77--14.73)x(0.75+0.75)/2	-0.03		
		(-14.83--14.77)x(0.76+0.75)/2	-0.05		
		(-15.86--14.83)x(0.98+0.76)/2	-0.90		
		(-16.48--15.86)x(1.15+0.98)/2	-0.66		
		(-16.96--16.48)x(1.27+1.15)/2	-0.58		
		(-17.75--16.96)x(1.76+1.27)/2	-1.20		
		(-18.05--17.75)x(1.96+1.76)/2	-0.56		
		(-18.23--18.05)x(2.09+1.96)/2	-0.36		
		(-19.15--18.23)x(2.87+2.09)/2	-2.28		
		(-19.99--19.15)x(3.15+2.87)/2	-2.53		
		(-20.24--19.99)x(3.23+3.15)/2	-0.80		
		(-20.40--20.24)x(3.24+3.23)/2	-0.52		
				34.09	
23 330.00	A1	(-16.92--20.77)x(3.42+3.42)/2	13.17		
		(-16.36--16.92)x(3.79+3.42)/2	2.02		
		(-15.09--16.36)x(3.79+3.79)/2	4.81		
		(-15.40--15.09)x(3.42+3.79)/2	-1.12		
		(-1.75--15.40)x(3.76+3.42)/2	49.00		
		(-0.68--1.75)x(3.79+3.76)/2	4.04		
		(0.68--0.68)x(3.79+3.79)/2	5.15		
		(1.75-0.68)x(3.76+3.79)/2	4.04		
		(15.16-1.75)x(3.43+3.76)/2	48.21		
		(14.86-15.16)x(3.79+3.43)/2	-1.08		
		(16.12-14.86)x(3.80+3.79)/2	4.78		
		(16.82-16.12)x(3.34+3.80)/2	2.50		
		(16.51-16.82)x(3.32+3.34)/2	-1.03		
		(15.74-16.51)x(3.26+3.32)/2	-2.53		
		(15.29-15.74)x(3.22+3.26)/2	-1.46		
		(14.65-15.29)x(3.17+3.22)/2	-2.04		
		(13.57-14.65)x(3.20+3.17)/2	-3.44		
		(13.56-13.57)x(3.20+3.20)/2	-0.03		
		(13.55-13.56)x(3.20+3.20)/2	-0.03		
		(12.46-13.55)x(3.21+3.20)/2	-3.49		
		(11.80-12.46)x(3.22+3.21)/2	-2.12		
		(11.37-11.80)x(3.23+3.22)/2	-1.39		
		(10.64-11.37)x(3.25+3.23)/2	-2.37		
		(10.27-10.64)x(3.26+3.25)/2	-1.20		
		(10.06-10.27)x(3.27+3.26)/2	-0.69		
		(9.18-10.06)x(3.29+3.27)/2	-2.89		
		(8.31-9.18)x(3.31+3.29)/2	-2.87		
		(8.09-8.31)x(3.31+3.31)/2	-0.73		
		(7.98-8.09)x(3.32+3.31)/2	-0.36		
		(7.70-7.98)x(3.31+3.32)/2	-0.93		
		(7.18-7.70)x(3.31+3.31)/2	-1.72		
		(6.99-7.18)x(3.32+3.31)/2	-0.63		
		(6.57-6.99)x(3.33+3.32)/2	-1.40		
		(5.90-6.57)x(3.37+3.33)/2	-2.24		
		(4.83-5.90)x(3.32+3.37)/2	-3.58		
		(4.80-4.83)x(3.32+3.32)/2	-0.10		
		(4.77-4.80)x(3.32+3.32)/2	-0.10		
		(3.71-4.77)x(3.29+3.32)/2	-3.50		
		(3.08-3.71)x(3.28+3.29)/2	-2.07		
		(2.61-3.08)x(3.27+3.28)/2	-1.54		
		(1.83-2.61)x(3.23+3.27)/2	-2.53		
		(1.52-1.83)x(3.22+3.23)/2	-1.00		
		(1.34-1.52)x(3.22+3.22)/2	-0.58		
		(0.43-1.34)x(3.23+3.22)/2	-2.93		
		(-0.41-0.43)x(3.20+3.23)/2	-2.70		
		(-0.67--0.41)x(3.19+3.20)/2	-0.83		
		(-1.11--0.67)x(3.17+3.19)/2	-1.40		
		(-1.76--1.11)x(3.16+3.17)/2	-2.06		
		(-2.15--1.76)x(3.19+3.16)/2	-1.24		
		(-2.86--2.15)x(3.23+3.19)/2	-2.28		
		(-3.90--2.86)x(3.20+3.23)/2	-3.34		
		(-3.95--3.90)x(3.20+3.20)/2	-0.16		
		(-4.04--3.95)x(3.17+3.20)/2	-0.29		
		(-5.04--4.04)x(2.91+3.17)/2	-3.04		
		(-5.64--5.04)x(2.74+2.91)/2	-1.69		
		(-6.14--5.64)x(2.63+2.74)/2	-1.34		
		(-6.98--6.14)x(2.34+2.63)/2	-2.09		
		(-7.23--6.98)x(2.24+2.34)/2	-0.57		
		(-7.39--7.23)x(2.17+2.24)/2	-0.35		
		(-8.33--7.39)x(1.79+2.17)/2	-1.86		
		(-9.13--8.33)x(1.45+1.79)/2	-1.30		
		(-9.42--9.13)x(1.33+1.45)/2	-0.40		
		(-9.91--9.42)x(1.13+1.33)/2	-0.60		
		(-10.52--9.91)x(0.88+1.13)/2	-0.61		
		(-11.15--10.52)x(0.59+0.88)/2	-0.46		
		(-11.61--11.15)x(0.51+0.59)/2	-0.25		
		(-12.62--11.61)x(0.63+0.51)/2	-0.58		
		(-12.70--12.62)x(0.63+0.63)/2	-0.05		
		(-12.85--12.70)x(0.65+0.63)/2	-0.10		
		(-13.80--12.85)x(0.74+0.65)/2	-0.66		
		(-14.36--13.80)x(0.77+0.74)/2	-0.42		
		(-14.89--14.36)x(0.82+0.77)/2	-0.42		
		(-15.78--14.89)x(1.12+0.82)/2	-0.86		
		(-15.99--15.78)x(1.19+1.12)/2	-0.24		
		(-16.11--15.99)x(1.30+1.19)/2	-0.15		
		(-17.08--16.11)x(1.89+1.30)/2	-1.55		
		(-17.85--17.08)x(2.45+1.89)/2	-1.67		
		(-18.17--17.85)x(2.71+2.45)/2	-0.83		
		(-18.72--18.17)x(2.99+2.71)/2	-1.57		
		(-19.27--18.72)x(3.18+2.99)/2	-1.70		
		(-19.60--19.27)x(3.22+3.18)/2	-1.06		
		(-20.36--19.60)x(3.33+3.22)/2	-2.49		
		(-20.77--20.36)x(3.35+3.33)/2	-1.37		
				37.42	
24 345.00	A1	(-16.36--17.43)x(3.84+3.12)/2	3.72		
		(-15.09--16.36)x(3.83+3.84)/2	4.87		
		(-15.40--15.09)x(3.47+3.83)/2	-1.13		
		(-1.75--15.40)x(3.81+3.47)/2	49.69		
		(-0.68--1.75)x(3.84+3.81)/2	4.09		
		(0.68--0.68)x(3.84+3.84)/2	5.22		
		(1.75-0.68)x(3.81+3.84)/2	4.09		
		A RIPORTARE mq	70.55		

		CALCOLO DELLE AREE		Foglio n. 11
RILEVATO				
N. SEZIONE PROG.	FIG.	ELEMENTI DI CALCOLO	AREA ELEMENTARE mq	AREA FIGURA mq	NOTE
		RIPORTO mq	70.55		
		(15.40-1.75)x(3.47+3.81)/2	49.69		
		(15.09-15.40)x(3.83+3.47)/2	-1.13		
		(16.36-15.09)x(3.84+3.83)/2	4.87		
		(17.40-16.36)x(3.14+3.84)/2	3.63		
		(17.29-17.40)x(3.14+3.14)/2	-0.35		
		(16.72-17.29)x(3.10+3.14)/2	-1.78		
		(15.75-16.72)x(3.14+3.10)/2	-3.03		
		(15.63-15.75)x(3.14+3.14)/2	-0.38		
		(15.56-15.63)x(3.14+3.14)/2	-0.22		
		(14.53-15.56)x(3.14+3.14)/2	-3.23		
		(13.82-14.53)x(3.16+3.14)/2	-2.24		
		(13.44-13.82)x(3.17+3.16)/2	-1.20		
		(12.80-13.44)x(3.19+3.17)/2	-2.04		
		(12.35-12.80)x(3.21+3.19)/2	-1.44		
		(12.08-12.35)x(3.22+3.21)/2	-0.87		
		(11.25-12.08)x(3.26+3.22)/2	-2.69		
		(10.34-11.25)x(3.27+3.26)/2	-2.97		
		(10.16-10.34)x(3.28+3.27)/2	-0.59		
		(9.85-10.16)x(3.28+3.28)/2	-1.02		
		(9.07-9.85)x(3.29+3.28)/2	-2.56		
		(8.61-9.07)x(3.30+3.29)/2	-1.52		
		(7.97-8.61)x(3.31+3.30)/2	-2.12		
		(6.90-7.97)x(3.33+3.31)/2	-3.55		
		(6.88-6.90)x(3.33+3.33)/2	-0.07		
		(6.87-6.88)x(3.33+3.33)/2	-0.03		
		(5.79-6.87)x(3.29+3.33)/2	-3.57		
		(5.13-5.79)x(3.27+3.29)/2	-2.16		
		(4.69-5.13)x(3.25+3.27)/2	-1.43		
		(3.95-4.69)x(3.23+3.25)/2	-2.40		
		(3.60-3.95)x(3.22+3.23)/2	-1.13		
		(3.40-3.60)x(3.22+3.22)/2	-0.64		
		(2.51-3.40)x(3.20+3.22)/2	-2.86		
		(2.10-2.51)x(3.19+3.20)/2	-1.31		
		(1.41-2.10)x(3.18+3.19)/2	-2.20		
		(1.00-1.41)x(3.18+3.18)/2	-1.30		
		(0.50-1.00)x(3.18+3.18)/2	-1.59		
		(0.32-0.50)x(3.18+3.18)/2	-0.57		
		(-0.29-0.32)x(3.17+3.18)/2	-1.94		
		(-0.77--0.29)x(3.17+3.17)/2	-1.52		
		(-1.09--0.77)x(3.18+3.17)/2	-1.02		
		(-1.87--1.09)x(3.27+3.18)/2	-2.52		
		(-1.89--1.87)x(3.27+3.27)/2	-0.07		
		(-1.96--1.89)x(3.28+3.27)/2	-0.23		
		(-2.96--1.96)x(3.32+3.28)/2	-3.30		
		(-3.55--2.96)x(3.17+3.32)/2	-1.91		
		(-4.05--3.55)x(3.08+3.17)/2	-1.56		
		(-4.91--4.05)x(2.83+3.08)/2	-2.54		
		(-5.15--4.91)x(2.76+2.83)/2	-0.67		
		(-5.29--5.15)x(2.71+2.76)/2	-0.38		
		(-6.24--5.29)x(2.34+2.71)/2	-2.40		
		(-7.02--6.24)x(2.02+2.34)/2	-1.70		
		(-7.33--7.02)x(1.89+2.02)/2	-0.61		
		(-7.86--7.33)x(1.67+1.89)/2	-0.94		
		(-8.43--7.86)x(1.43+1.67)/2	-0.88		
		(-8.76--8.43)x(1.28+1.43)/2	-0.45		
		(-9.52--8.76)x(0.97+1.28)/2	-0.85		
		(-10.50--9.52)x(0.54+0.97)/2	-0.74		
		(-10.61--10.50)x(0.49+0.54)/2	-0.06		
		(-10.81--10.61)x(0.47+0.49)/2	-0.10		
		(-11.71--10.81)x(0.44+0.47)/2	-0.41		
		(-12.23--11.71)x(0.50+0.44)/2	-0.24		
		(-12.80--12.23)x(0.56+0.50)/2	-0.30		
		(-13.76--12.80)x(0.69+0.56)/2	-0.60		
		(-13.89--13.76)x(0.71+0.69)/2	-0.09		
		(-13.97--13.89)x(0.72+0.71)/2	-0.06		
		(-14.99--13.97)x(0.87+0.72)/2	-0.81		
		(-15.71--14.99)x(1.31+0.87)/2	-0.78		
		(-16.08--15.71)x(1.50+1.31)/2	-0.52		
		(-16.25--16.08)x(1.71+1.50)/2	-0.27		
		(-16.71--16.25)x(2.43+1.71)/2	-0.95		
		(-17.05--16.71)x(2.96+2.43)/2	-0.92		
		(-17.17--17.05)x(3.02+2.96)/2	-0.36		
		(-17.44--17.17)x(3.12+3.02)/2	-0.83		
		(-17.43--17.44)x(3.12+3.12)/2	0.03		
				39.05	
25 360.00	A1	(-16.36--17.71)x(3.88+2.98)/2	4.63		
		(-15.09--16.36)x(3.88+3.88)/2	4.93		
		(-15.40--15.09)x(3.51+3.88)/2	-1.15		
		(-1.75--15.40)x(3.85+3.51)/2	50.23		
		(-0.68--1.75)x(3.88+3.85)/2	4.14		
		(0.68--0.68)x(3.88+3.88)/2	5.28		
		(1.75-0.68)x(3.85+3.88)/2	4.14		
		(15.40-1.75)x(3.51+3.85)/2	50.23		
		(15.09-15.40)x(3.88+3.51)/2	-1.15		
		(16.36-15.09)x(3.88+3.88)/2	4.93		
		(17.38-16.36)x(3.20+3.88)/2	3.61		
		(16.63-17.38)x(3.15+3.20)/2	-2.38		
		(15.85-16.63)x(3.12+3.15)/2	-2.45		
		(15.54-15.85)x(3.10+3.12)/2	-0.96		
		(15.40-15.54)x(3.11+3.10)/2	-0.43		
		(15.02-15.40)x(3.12+3.11)/2	-1.18		
		(14.60-15.02)x(3.13+3.12)/2	-1.31		
		(14.45-14.60)x(3.14+3.13)/2	-0.47		
		(14.12-14.45)x(3.15+3.14)/2	-1.04		
		(13.36-14.12)x(3.18+3.15)/2	-2.41		
		(12.39-13.36)x(3.21+3.18)/2	-3.10		
		(12.26-12.39)x(3.22+3.21)/2	-0.42		
		(12.05-12.26)x(3.22+3.22)/2	-0.68		
		(11.17-12.05)x(3.25+3.22)/2	-2.85		
		(10.66-11.17)x(3.26+3.25)/2	-1.66		
		(10.08-10.66)x(3.28+3.26)/2	-1.90		
		(9.08-10.08)x(3.29+3.28)/2	-3.29		
		(8.99-9.08)x(3.29+3.29)/2	-0.30		
		(8.93-8.99)x(3.29+3.29)/2	-0.20		
		A RIPORTARE mq	102.79		

		CALCOLO DELLE AREE		Foglio n. 12
RILEVATO				
N. SEZIONE PROG.	FIG.	ELEMENTI DI CALCOLO	AREA ELEMENTARE mq	AREA FIGURA mq	NOTE
		RIPORTO mq	102.79		
		(7.89-8.93)x(3.32+3.29)/2	-3.44		
		(7.20-7.89)x(3.31+3.32)/2	-2.29		
		(6.80-7.20)x(3.30+3.31)/2	-1.32		
		(6.12-6.80)x(3.27+3.30)/2	-2.23		
		(5.71-6.12)x(3.26+3.27)/2	-1.34		
		(5.47-5.71)x(3.24+3.26)/2	-0.78		
		(4.62-5.47)x(3.20+3.24)/2	-2.74		
		(3.74-4.62)x(3.16+3.20)/2	-2.80		
		(3.52-3.74)x(3.16+3.16)/2	-0.70		
		(3.15-3.52)x(3.15+3.16)/2	-1.17		
		(2.43-3.15)x(3.14+3.15)/2	-2.26		
		(2.01-2.43)x(3.12+3.14)/2	-1.31		
		(1.34-2.01)x(3.11+3.12)/2	-2.09		
		(0.28-1.34)x(3.09+3.11)/2	-3.29		
		(0.25-0.28)x(3.09+3.09)/2	-0.09		
		(0.18-0.25)x(3.09+3.09)/2	-0.22		
		(-0.85-0.18)x(3.11+3.09)/2	-3.19		
		(-1.45--0.85)x(3.07+3.11)/2	-1.85		
		(-1.94--1.45)x(3.04+3.07)/2	-1.50		
		(-2.79--1.94)x(3.00+3.04)/2	-2.57		
		(-3.03--2.79)x(2.98+3.00)/2	-0.72		
		(-3.76--3.03)x(2.82+2.98)/2	-2.12		
		(-4.12--3.76)x(2.79+2.82)/2	-1.01		
		(-4.91--4.12)x(2.56+2.79)/2	-2.11		
		(-5.22--4.91)x(2.48+2.56)/2	-0.78		
		(-5.75--5.22)x(2.28+2.48)/2	-1.26		
		(-6.31--5.75)x(2.07+2.28)/2	-1.22		
		(-6.63--6.31)x(1.96+2.07)/2	-0.64		
		(-7.40--6.63)x(1.68+1.96)/2	-1.40		
		(-8.36--7.40)x(1.32+1.68)/2	-1.44		
		(-8.49--8.36)x(1.27+1.32)/2	-0.17		
		(-8.72--8.49)x(1.19+1.27)/2	-0.28		
		(-9.59--8.72)x(0.87+1.19)/2	-0.90		
		(-10.09--9.59)x(0.70+0.87)/2	-0.39		
		(-10.68--10.09)x(0.48+0.70)/2	-0.35		
		(-11.69--10.68)x(0.62+0.48)/2	-0.56		
		(-11.77--11.69)x(0.64+0.62)/2	-0.05		
		(-11.82--11.77)x(0.64+0.64)/2	-0.03		
		(-12.87--11.82)x(0.76+0.64)/2	-0.73		
		(-13.55--12.87)x(0.75+0.76)/2	-0.51		
		(-13.96--13.55)x(0.75+0.75)/2	-0.31		
		(-14.66--13.96)x(0.93+0.75)/2	-0.59		
		(-15.05--14.66)x(1.14+0.93)/2	-0.40		
		(-15.28--15.05)x(1.29+1.14)/2	-0.28		
		(-16.14--15.28)x(2.10+1.29)/2	-1.46		
		(-17.01--16.14)x(2.56+2.10)/2	-2.03		
		(-17.24--17.01)x(2.73+2.56)/2	-0.61		
		(-17.62--17.24)x(2.93+2.73)/2	-1.08		
		(-17.71--17.62)x(2.98+2.93)/2	-0.27		
				41.91	
26 375.00	A1	(-16.36--17.41)x(3.93+3.22)/2	3.75		
		(-15.09--16.36)x(3.92+3.93)/2	4.98		
		(-15.40--15.09)x(3.56+3.92)/2	-1.16		
		(-1.75--15.40)x(3.90+3.56)/2	50.91		
		(-0.68--1.75)x(3.93+3.90)/2	4.19		
		(0.68--0.68)x(3.93+3.93)/2	5.34		
		(1.75-0.68)x(3.90+3.93)/2	4.19		
		(15.40-1.75)x(3.56+3.90)/2	50.91		
		(15.09-15.40)x(3.92+3.56)/2	-1.16		
		(16.36-15.09)x(3.93+3.92)/2	4.98		
		(17.64-16.36)x(3.07+3.93)/2	4.48		
		(17.29-17.64)x(3.08+3.07)/2	-1.08		
		(16.58-17.29)x(3.09+3.08)/2	-2.19		
		(16.16-16.58)x(3.10+3.09)/2	-1.30		
		(15.49-16.16)x(3.13+3.10)/2	-2.09		
		(14.44-15.49)x(3.15+3.13)/2	-3.30		
		(14.39-14.44)x(3.16+3.15)/2	-0.16		
		(14.31-14.39)x(3.16+3.16)/2	-0.25		
		(13.30-14.31)x(3.19+3.16)/2	-3.21		
		(12.72-13.30)x(3.20+3.19)/2	-1.85		
		(12.21-12.72)x(3.22+3.20)/2	-1.64		
		(11.32-12.21)x(3.23+3.22)/2	-2.87		
		(11.12-11.32)x(3.23+3.23)/2	-0.65		
		(11.00-11.12)x(3.24+3.23)/2	-0.39		
		(10.03-11.00)x(3.26+3.24)/2	-3.15		
		(9.57-10.03)x(3.27+3.26)/2	-1.50		
		(8.93-9.57)x(3.28+3.27)/2	-2.10		
		(8.34-8.93)x(3.28+3.28)/2	-1.94		
		(7.84-8.34)x(3.27+3.28)/2	-1.64		
		(7.56-7.84)x(3.26+3.27)/2	-0.91		
		(6.75-7.56)x(3.23+3.26)/2	-2.63		
		(5.83-6.75)x(3.20+3.23)/2	-2.96		
		(5.66-5.83)x(3.19+3.20)/2	-0.54		
		(5.36-5.66)x(3.19+3.19)/2	-0.96		
		(4.57-5.36)x(3.17+3.19)/2	-2.51		
		(4.11-4.57)x(3.15+3.17)/2	-1.45		
		(3.48-4.11)x(3.13+3.15)/2	-1.98		
		(2.39-3.48)x(3.11+3.13)/2	-3.40		
		(2.38-2.39)x(3.11+3.11)/2	-0.03		
		(2.37-2.38)x(3.11+3.11)/2	-0.03		
		(1.29-2.37)x(3.09+3.11)/2	-3.35		
		(0.67-1.29)x(3.07+3.09)/2	-1.91		
		(0.20-0.67)x(3.06+3.07)/2	-1.44		
		(-0.61-0.20)x(3.13+3.06)/2	-2.51		
		(-0.89--0.61)x(3.16+3.13)/2	-0.88		
		(-1.05--0.89)x(3.14+3.16)/2	-0.50		
		(-1.98--1.05)x(3.17+3.14)/2	-2.93		
		(-2.78--1.98)x(2.96+3.17)/2	-2.45		
		(-3.07--2.78)x(2.88+2.96)/2	-0.85		
		(-3.59--3.07)x(2.70+2.88)/2	-1.45		
		(-4.17--3.59)x(2.52+2.70)/2	-1.51		
		(-4.50--4.17)x(2.40+2.52)/2	-0.81		
		(-5.26--4.50)x(2.15+2.40)/2	-1.73		
		(-6.22--5.26)x(1.83+2.15)/2	-1.91		
		A RIPORTARE mq	58.47		

		CALCOLO DELLE AREE		Foglio n. 13
RILEVATO				
N. SEZIONE PROG.	FIG.	ELEMENTI DI CALCOLO	AREA ELEMENTARE mq	AREA FIGURA mq	NOTE
		RIPORTO mq	58.47		
		(-6.35--6.22)x(1.78+1.83)/2	-0.23		
		(-6.58--6.35)x(1.71+1.78)/2	-0.40		
		(-7.44--6.58)x(1.41+1.71)/2	-1.34		
		(-7.94--7.44)x(1.24+1.41)/2	-0.66		
		(-8.53--7.94)x(1.03+1.24)/2	-0.67		
		(-8.81--8.53)x(0.93+1.03)/2	-0.27		
		(-9.56--8.81)x(0.67+0.93)/2	-0.60		
		(-9.61--9.56)x(0.65+0.67)/2	-0.03		
		(-9.63--9.61)x(0.64+0.65)/2	-0.01		
		(-9.66--9.63)x(0.64+0.64)/2	-0.02		
		(-10.72--9.66)x(0.51+0.64)/2	-0.61		
		(-11.38--10.72)x(0.56+0.51)/2	-0.35		
		(-11.81--11.38)x(0.59+0.56)/2	-0.25		
		(-12.54--11.81)x(0.66+0.59)/2	-0.46		
		(-12.90--12.54)x(0.68+0.66)/2	-0.24		
		(-13.11--12.90)x(0.75+0.68)/2	-0.15		
		(-13.99--13.11)x(0.96+0.75)/2	-0.75		
		(-14.83--13.99)x(1.56+0.96)/2	-1.06		
		(-15.08--14.83)x(1.72+1.56)/2	-0.41		
		(-15.53--15.08)x(2.15+1.72)/2	-0.87		
		(-16.18--15.53)x(2.76+2.15)/2	-1.60		
		(-16.55--16.18)x(2.89+2.76)/2	-1.05		
		(-17.27--16.55)x(3.22+2.89)/2	-2.20		
		(-17.41--17.27)x(3.22+3.22)/2	-0.45		
				43.79	
27 390.00	A1	(-16.36--17.64)x(3.97+3.12)/2	4.54		
		(-15.09--16.36)x(3.97+3.97)/2	5.04		
		(-15.40--15.09)x(3.60+3.97)/2	-1.17		
		(-1.75--15.40)x(3.94+3.60)/2	51.46		
		(-0.68--1.75)x(3.97+3.94)/2	4.23		
		(0.68--0.68)x(3.97+3.97)/2	5.40		
		(1.75-0.68)x(3.94+3.97)/2	4.23		
		(15.40-1.75)x(3.60+3.94)/2	51.46		
		(15.09-15.40)x(3.97+3.60)/2	-1.17		
		(16.36-15.09)x(3.97+3.97)/2	5.04		
		(17.78-16.36)x(3.02+3.97)/2	4.96		
		(17.64-17.78)x(3.02+3.02)/2	-0.42		
		(16.62-17.64)x(3.07+3.02)/2	-3.11		
		(16.55-16.62)x(3.08+3.07)/2	-0.22		
		(16.51-16.55)x(3.08+3.08)/2	-0.12		
		(15.46-16.51)x(3.09+3.08)/2	-3.24		
		(14.80-15.46)x(3.12+3.09)/2	-2.05		
		(14.37-14.80)x(3.13+3.12)/2	-1.34		
		(13.62-14.37)x(3.15+3.13)/2	-2.35		
		(13.28-13.62)x(3.16+3.15)/2	-1.07		
		(13.08-13.28)x(3.17+3.16)/2	-0.63		
		(12.19-13.08)x(3.20+3.17)/2	-2.83		
		(11.37-12.19)x(3.22+3.20)/2	-2.63		
		(11.09-11.37)x(3.23+3.22)/2	-0.90		
		(10.62-11.09)x(3.24+3.23)/2	-1.52		
		(10.00-10.62)x(3.25+3.24)/2	-2.01		
		(9.65-10.00)x(3.25+3.25)/2	-1.14		
		(8.91-9.65)x(3.26+3.25)/2	-2.41		
		(7.94-8.91)x(3.24+3.26)/2	-3.15		
		(7.82-7.94)x(3.24+3.24)/2	-0.39		
		(7.62-7.82)x(3.24+3.24)/2	-0.65		
		(6.73-7.62)x(3.20+3.24)/2	-2.87		
		(6.22-6.73)x(3.20+3.20)/2	-1.63		
		(5.64-6.22)x(3.18+3.20)/2	-1.85		
		(4.62-5.64)x(3.13+3.18)/2	-3.22		
		(4.55-4.62)x(3.13+3.13)/2	-0.22		
		(3.77-4.55)x(3.12+3.13)/2	-2.44		
		(3.46-3.77)x(3.11+3.12)/2	-0.97		
		(2.79-3.46)x(3.09+3.11)/2	-2.08		
		(2.37-2.79)x(3.07+3.09)/2	-1.29		
		(1.62-2.37)x(3.05+3.07)/2	-2.29		
		(1.28-1.62)x(3.05+3.05)/2	-1.04		
		(1.08-1.28)x(3.07+3.05)/2	-0.61		
		(0.19-1.08)x(3.12+3.07)/2	-2.75		
		(-0.63-0.19)x(3.21+3.12)/2	-2.60		
		(-0.91--0.63)x(3.24+3.21)/2	-0.90		
		(-1.38--0.91)x(3.14+3.24)/2	-1.50		
		(-2.00--1.38)x(2.97+3.14)/2	-1.89		
		(-2.35--2.00)x(2.88+2.97)/2	-1.02		
		(-3.09--2.35)x(2.68+2.88)/2	-2.06		
		(-4.06--3.09)x(2.34+2.68)/2	-2.43		
		(-4.18--4.06)x(2.30+2.34)/2	-0.28		
		(-4.38--4.18)x(2.23+2.30)/2	-0.45		
		(-5.27--4.38)x(1.93+2.23)/2	-1.85		
		(-5.78--5.27)x(1.74+1.93)/2	-0.94		
		(-6.36--5.78)x(1.53+1.74)/2	-0.95		
		(-7.38--6.36)x(1.18+1.53)/2	-1.38		
		(-7.45--7.38)x(1.16+1.18)/2	-0.08		
		(-7.49--7.45)x(1.15+1.16)/2	-0.05		
		(-8.54--7.49)x(0.77+1.15)/2	-1.01		
		(-9.21--8.54)x(0.58+0.77)/2	-0.45		
		(-9.63--9.21)x(0.46+0.58)/2	-0.22		
		(-10.38--9.63)x(0.53+0.46)/2	-0.37		
		(-10.72--10.38)x(0.57+0.53)/2	-0.19		
		(-10.92--10.72)x(0.58+0.57)/2	-0.11		
		(-11.82--10.92)x(0.67+0.58)/2	-0.56		
		(-12.64--11.82)x(0.75+0.67)/2	-0.58		
		(-12.91--12.64)x(0.77+0.75)/2	-0.21		
		(-13.38--12.91)x(1.04+0.77)/2	-0.43		
		(-14.00--13.38)x(1.45+1.04)/2	-0.77		
		(-14.63--14.00)x(2.14+1.45)/2	-1.13		
		(-15.09--14.63)x(2.56+2.14)/2	-1.08		
		(-16.06--15.09)x(2.89+2.56)/2	-2.64		
		(-16.18--16.06)x(2.93+2.89)/2	-0.35		
		(-16.38--16.18)x(2.96+2.93)/2	-0.59		
		(-17.27--16.38)x(3.09+2.96)/2	-2.69		
		(-17.64--17.27)x(3.12+3.09)/2	-1.15		
				45.67	
28	A1	(-16.36--17.65)x(4.02+3.16)/2	4.63		
		A RIPORTARE mq	4.63		

		CALCOLO DELLE AREE		Foglio n. 14
RILEVATO				
N. SEZIONE PROG.	FIG.	ELEMENTI DI CALCOLO	AREA ELEMENTARE mq	AREA FIGURA mq	NOTE
		RIPORTO mq	4.63		
405.00		(-15.09--16.36)x(4.01+4.02)/2	5.10		
		(-15.40--15.09)x(3.65+4.01)/2	-1.19		
		(-1.75--15.40)x(3.99+3.65)/2	52.14		
		(-0.68--1.75)x(4.02+3.99)/2	4.29		
		(0.68--0.68)x(4.02+4.02)/2	5.47		
		(1.75-0.68)x(3.99+4.02)/2	4.29		
		(15.40-1.75)x(3.65+3.99)/2	52.14		
		(15.09-15.40)x(4.01+3.65)/2	-1.19		
		(16.36-15.09)x(4.02+4.01)/2	5.10		
		(17.90-16.36)x(2.99+4.02)/2	5.40		
		(17.64-17.90)x(3.00+2.99)/2	-0.78		
		(16.88-17.64)x(3.04+3.00)/2	-2.30		
		(16.55-16.88)x(3.06+3.04)/2	-1.01		
		(15.97-16.55)x(3.09+3.06)/2	-1.78		
		(15.60-15.97)x(3.11+3.09)/2	-1.15		
		(15.46-15.60)x(3.11+3.11)/2	-0.44		
		(14.80-15.46)x(3.13+3.11)/2	-2.06		
		(14.37-14.80)x(3.14+3.13)/2	-1.35		
		(14.00-14.37)x(3.16+3.14)/2	-1.17		
		(13.28-14.00)x(3.17+3.16)/2	-2.28		
		(13.19-13.28)x(3.17+3.17)/2	-0.29		
		(12.95-13.19)x(3.18+3.17)/2	-0.76		
		(12.19-12.95)x(3.19+3.18)/2	-2.42		
		(11.76-12.19)x(3.21+3.19)/2	-1.38		
		(11.10-11.76)x(3.23+3.21)/2	-2.13		
		(10.05-11.10)x(3.24+3.23)/2	-3.40		
		(10.01-10.05)x(3.24+3.24)/2	-0.13		
		(9.94-10.01)x(3.24+3.24)/2	-0.23		
		(8.92-9.94)x(3.21+3.24)/2	-3.29		
		(8.35-8.92)x(3.19+3.21)/2	-1.82		
		(7.83-8.35)x(3.16+3.19)/2	-1.65		
		(6.92-7.83)x(3.14+3.16)/2	-2.87		
		(6.74-6.92)x(3.14+3.14)/2	-0.57		
		(6.64-6.74)x(3.14+3.14)/2	-0.31		
		(5.65-6.64)x(3.10+3.14)/2	-3.09		
		(4.93-5.65)x(3.09+3.10)/2	-2.23		
		(4.56-4.93)x(3.08+3.09)/2	-1.14		
		(3.90-4.56)x(3.07+3.08)/2	-2.03		
		(3.47-3.90)x(3.05+3.07)/2	-1.32		
		(3.23-3.47)x(3.05+3.05)/2	-0.73		
		(2.38-3.23)x(3.04+3.05)/2	-2.59		
		(1.52-2.38)x(3.03+3.04)/2	-2.61		
		(1.29-1.52)x(3.03+3.03)/2	-0.70		
		(0.89-1.29)x(3.09+3.03)/2	-1.22		
		(0.20-0.89)x(3.18+3.09)/2	-2.16		
		(-0.19-0.20)x(3.12+3.18)/2	-1.23		
		(-0.89--0.19)x(3.04+3.12)/2	-2.16		
		(-1.22--0.89)x(2.94+3.04)/2	-0.99		
		(-1.98--1.22)x(2.70+2.94)/2	-2.14		
		(-2.13--1.98)x(2.66+2.70)/2	-0.40		
		(-3.07--2.13)x(2.46+2.66)/2	-2.41		
		(-3.60--3.07)x(2.31+2.46)/2	-1.26		
		(-4.16--3.60)x(2.15+2.31)/2	-1.25		
		(-5.15--4.16)x(1.83+2.15)/2	-1.97		
		(-5.25--5.15)x(1.80+1.83)/2	-0.18		
		(-5.31--5.25)x(1.78+1.80)/2	-0.11		
		(-6.34--5.31)x(1.43+1.78)/2	-1.65		
		(-7.02--6.34)x(1.20+1.43)/2	-0.89		
		(-7.43--7.02)x(1.05+1.20)/2	-0.46		
		(-8.16--7.43)x(0.80+1.05)/2	-0.68		
		(-8.52--8.16)x(0.69+0.80)/2	-0.27		
		(-8.72--8.52)x(0.67+0.69)/2	-0.14		
		(-9.61--8.72)x(0.59+0.67)/2	-0.56		
		(-10.43--9.61)x(0.67+0.59)/2	-0.52		
		(-10.70--10.43)x(0.71+0.67)/2	-0.19		
		(-11.18--10.70)x(0.71+0.71)/2	-0.34		
		(-11.79--11.18)x(0.72+0.71)/2	-0.44		
		(-12.14--11.79)x(0.83+0.72)/2	-0.27		
		(-12.88--12.14)x(0.97+0.83)/2	-0.67		
		(-13.85--12.88)x(1.88+0.97)/2	-1.38		
		(-13.97--13.85)x(1.97+1.88)/2	-0.23		
		(-14.20--13.97)x(2.16+1.97)/2	-0.47		
		(-15.06--14.20)x(2.72+2.16)/2	-2.10		
		(-15.55--15.06)x(2.86+2.72)/2	-1.37		
		(-16.15--15.55)x(3.03+2.86)/2	-1.77		
		(-17.21--16.15)x(3.15+3.03)/2	-3.28		
		(-17.24--17.21)x(3.15+3.15)/2	-0.09		
		(-17.26--17.24)x(3.15+3.15)/2	-0.06		
		(-17.65--17.26)x(3.16+3.15)/2	-1.23		
				47.63	
29 420.00	A1	(-16.47--17.94)x(4.06+3.09)/2	5.26		
		(-15.21--16.47)x(4.06+4.06)/2	5.12		
		(-15.51--15.21)x(3.69+4.06)/2	-1.16		
		(-1.75--15.51)x(4.03+3.69)/2	53.11		
		(-0.68--1.75)x(4.06+4.03)/2	4.33		
		(0.68--0.68)x(4.06+4.06)/2	5.52		
		(1.75-0.68)x(4.03+4.06)/2	4.33		
		(15.40-1.75)x(3.69+4.03)/2	52.69		
		(15.09-15.40)x(4.06+3.69)/2	-1.20		
		(16.36-15.09)x(4.06+4.06)/2	5.16		
		(17.95-16.36)x(3.00+4.06)/2	5.61		
		(17.68-17.95)x(3.02+3.00)/2	-0.81		
		(17.28-17.68)x(3.04+3.02)/2	-1.21		
		(16.59-17.28)x(3.08+3.04)/2	-2.11		
		(15.58-16.59)x(3.13+3.08)/2	-3.14		
		(15.50-15.58)x(3.13+3.13)/2	-0.25		
		(15.34-15.50)x(3.14+3.13)/2	-0.50		
		(14.41-15.34)x(3.15+3.14)/2	-2.92		
		(13.88-14.41)x(3.16+3.15)/2	-1.67		
		(13.32-13.88)x(3.18+3.16)/2	-1.78		
		(13.05-13.32)x(3.19+3.18)/2	-0.86		
		(12.31-13.05)x(3.18+3.19)/2	-2.36		
		(12.25-12.31)x(3.18+3.18)/2	-0.19		
		(12.23-12.25)x(3.18+3.18)/2	-0.06		
		A RIPORTARE mq	120.91		

		CALCOLO DELLE AREE		Foglio n. 15
RILEVATO				
N. SEZIONE PROG.	FIG.	ELEMENTI DI CALCOLO	AREA ELEMENTARE mq	AREA FIGURA mq	NOTE
		RIPORTO mq	120.91		
		(12.18-12.23)x(3.18+3.18)/2	-0.16		
		(11.14-12.18)x(3.22+3.18)/2	-3.33		
		(10.48-11.14)x(3.21+3.22)/2	-2.12		
		(10.05-10.48)x(3.21+3.21)/2	-1.38		
		(9.28-10.05)x(3.16+3.21)/2	-2.45		
		(8.96-9.28)x(3.15+3.16)/2	-1.01		
		(8.78-8.96)x(3.15+3.15)/2	-0.57		
		(7.87-8.78)x(3.13+3.15)/2	-2.86		
		(7.08-7.87)x(3.11+3.13)/2	-2.46		
		(6.78-7.08)x(3.10+3.11)/2	-0.93		
		(6.24-6.78)x(3.09+3.10)/2	-1.67		
		(5.69-6.24)x(3.07+3.09)/2	-1.69		
		(5.38-5.69)x(3.06+3.07)/2	-0.95		
		(4.60-5.38)x(3.03+3.06)/2	-2.38		
		(3.68-4.60)x(2.99+3.03)/2	-2.77		
		(3.51-3.68)x(2.99+2.99)/2	-0.51		
		(3.21-3.51)x(2.97+2.99)/2	-0.89		
		(2.42-3.21)x(2.94+2.97)/2	-2.33		
		(1.98-2.42)x(2.95+2.94)/2	-1.30		
		(1.33-1.98)x(2.97+2.95)/2	-1.92		
		(0.28-1.33)x(2.84+2.97)/2	-3.05		
		(0.24-0.28)x(2.83+2.84)/2	-0.11		
		(0.18-0.24)x(2.82+2.83)/2	-0.17		
		(-0.84-0.18)x(2.56+2.82)/2	-2.74		
		(-1.42--0.84)x(2.45+2.56)/2	-1.45		
		(-1.93--1.42)x(2.33+2.45)/2	-1.22		
		(-2.86--1.93)x(2.03+2.33)/2	-2.03		
		(-3.02--2.86)x(1.98+2.03)/2	-0.32		
		(-3.12--3.02)x(1.95+1.98)/2	-0.20		
		(-4.11--3.12)x(1.65+1.95)/2	-1.78		
		(-4.82--4.11)x(1.41+1.65)/2	-1.09		
		(-5.20--4.82)x(1.30+1.41)/2	-0.51		
		(-5.89--5.20)x(1.08+1.30)/2	-0.82		
		(-6.29--5.89)x(0.96+1.08)/2	-0.41		
		(-6.99--6.29)x(0.75+0.96)/2	-0.60		
		(-7.38--6.99)x(0.63+0.75)/2	-0.27		
		(-8.22--7.38)x(0.52+0.63)/2	-0.48		
		(-8.47--8.22)x(0.47+0.52)/2	-0.12		
		(-8.92--8.47)x(0.52+0.47)/2	-0.22		
		(-9.56--8.92)x(0.59+0.52)/2	-0.36		
		(-9.92--9.56)x(0.62+0.59)/2	-0.22		
		(-10.65--9.92)x(0.67+0.62)/2	-0.47		
		(-11.62--10.65)x(0.92+0.67)/2	-0.77		
		(-11.74--11.62)x(0.94+0.92)/2	-0.11		
		(-11.96--11.74)x(1.11+0.94)/2	-0.23		
		(-12.83--11.96)x(1.82+1.11)/2	-1.27		
		(-13.32--12.83)x(2.18+1.82)/2	-0.98		
		(-13.92--13.32)x(2.63+2.18)/2	-1.44		
		(-14.99--13.92)x(3.07+2.63)/2	-3.05		
		(-15.01--14.99)x(3.08+3.07)/2	-0.06		
		(-15.02--15.01)x(3.08+3.08)/2	-0.03		
		(-16.10--15.02)x(3.11+3.08)/2	-3.34		
		(-16.72--16.10)x(3.09+3.11)/2	-1.92		
		(-17.19--16.72)x(3.06+3.09)/2	-1.45		
		(-17.94--17.19)x(3.09+3.06)/2	-2.31		
				51.63	
30 435.00	A1	(-17.90--19.50)x(4.07+3.00)/2	5.66		
		(-16.63--17.90)x(4.07+4.07)/2	5.17		
		(-16.93--16.63)x(3.70+4.07)/2	-1.17		
		(-1.75--16.93)x(4.08+3.70)/2	59.05		
		(-0.68--1.75)x(4.11+4.08)/2	4.38		
		(0.68--0.68)x(4.11+4.11)/2	5.59		
		(1.75-0.68)x(4.08+4.11)/2	4.38		
		(15.39-1.75)x(3.74+4.08)/2	53.33		
		(15.08-15.39)x(4.10+3.74)/2	-1.22		
		(16.35-15.08)x(4.11+4.10)/2	5.21		
		(17.94-16.35)x(3.05+4.11)/2	5.69		
		(17.79-17.94)x(3.06+3.05)/2	-0.46		
		(17.74-17.79)x(3.06+3.06)/2	-0.15		
		(17.71-17.74)x(3.06+3.06)/2	-0.09		
		(16.65-17.71)x(3.08+3.06)/2	-3.25		
		(16.02-16.65)x(3.11+3.08)/2	-1.95		
		(15.56-16.02)x(3.12+3.11)/2	-1.43		
		(14.74-15.56)x(3.12+3.12)/2	-2.56		
		(14.47-14.74)x(3.12+3.12)/2	-0.84		
		(14.32-14.47)x(3.13+3.12)/2	-0.47		
		(13.38-14.32)x(3.16+3.13)/2	-2.96		
		(12.63-13.38)x(3.17+3.16)/2	-2.37		
		(12.29-12.63)x(3.17+3.17)/2	-1.08		
		(11.69-12.29)x(3.19+3.17)/2	-1.91		
		(11.21-11.69)x(3.20+3.19)/2	-1.53		
		(10.94-11.21)x(3.18+3.20)/2	-0.86		
		(10.12-10.94)x(3.14+3.18)/2	-2.59		
		(9.24-10.12)x(3.13+3.14)/2	-2.76		
		(9.03-9.24)x(3.13+3.13)/2	-0.66		
		(8.64-9.03)x(3.11+3.13)/2	-1.22		
		(7.94-8.64)x(3.08+3.11)/2	-2.17		
		(7.32-7.94)x(3.07+3.08)/2	-1.91		
		(6.85-7.32)x(3.05+3.07)/2	-1.44		
		(5.86-6.85)x(3.03+3.05)/2	-3.01		
		(5.76-5.86)x(3.03+3.03)/2	-0.30		
		(5.59-5.76)x(3.02+3.03)/2	-0.51		
		(4.67-5.59)x(2.99+3.02)/2	-2.76		
		(4.17-4.67)x(2.97+2.99)/2	-1.49		
		(3.59-4.17)x(2.94+2.97)/2	-1.71		
		(2.54-3.59)x(3.00+2.94)/2	-3.12		
		(2.50-2.54)x(3.01+3.00)/2	-0.12		
		(2.47-2.50)x(3.01+3.01)/2	-0.09		
		(1.41-2.47)x(3.09+3.01)/2	-3.23		
		(0.78-1.41)x(2.92+3.09)/2	-1.89		
		(0.32-0.78)x(2.84+2.92)/2	-1.32		
		(-0.51-0.32)x(2.51+2.84)/2	-2.22		
		(-0.77--0.51)x(2.42+2.51)/2	-0.64		
		(-0.91--0.77)x(2.40+2.42)/2	-0.34		
		A RIPORTARE mq	88.66		

		CALCOLO DELLE AREE		Foglio n. 16
RILEVATO				
N. SEZIONE PROG.	FIG.	ELEMENTI DI CALCOLO	AREA ELEMENTARE mq	AREA FIGURA mq	NOTE
		RIPORTO mq	88.66		
		(-1.86--0.91)x(2.24+2.40)/2	-2.20		
		(-2.60--1.86)x(2.08+2.24)/2	-1.60		
		(-2.95--2.60)x(2.00+2.08)/2	-0.71		
		(-3.56--2.95)x(1.90+2.00)/2	-1.19		
		(-4.03--3.56)x(1.81+1.90)/2	-0.87		
		(-4.30--4.03)x(1.73+1.81)/2	-0.48		
		(-5.12--4.30)x(1.54+1.73)/2	-1.34		
		(-5.99--5.12)x(1.06+1.54)/2	-1.13		
		(-6.21--5.99)x(0.95+1.06)/2	-0.22		
		(-6.61--6.21)x(0.78+0.95)/2	-0.35		
		(-7.30--6.61)x(0.53+0.78)/2	-0.45		
		(-7.68--7.30)x(0.54+0.53)/2	-0.20		
		(-8.39--7.68)x(0.50+0.54)/2	-0.37		
		(-9.38--8.39)x(0.65+0.50)/2	-0.57		
		(-9.48--9.38)x(0.66+0.65)/2	-0.07		
		(-9.66--9.48)x(0.68+0.66)/2	-0.12		
		(-10.57--9.66)x(0.80+0.68)/2	-0.67		
		(-11.07--10.57)x(1.12+0.80)/2	-0.48		
		(-11.66--11.07)x(1.46+1.12)/2	-0.76		
		(-11.93--11.66)x(1.73+1.46)/2	-0.43		
		(-12.71--11.93)x(2.33+1.73)/2	-1.58		
		(-12.74--12.71)x(2.35+2.33)/2	-0.07		
		(-12.76--12.74)x(2.36+2.36)/2	-0.05		
		(-13.83--12.76)x(3.08+2.36)/2	-2.91		
		(-14.45--13.83)x(3.09+3.08)/2	-1.91		
		(-14.92--14.45)x(3.14+3.09)/2	-1.46		
		(-15.76--14.92)x(3.02+3.14)/2	-2.59		
		(-16.01--15.76)x(2.98+3.02)/2	-0.75		
		(-16.15--16.01)x(2.98+2.98)/2	-0.42		
		(-17.10--16.15)x(2.96+2.98)/2	-2.82		
		(-17.84--17.10)x(2.99+2.96)/2	-2.20		
		(-18.19--17.84)x(2.99+2.99)/2	-1.05		
		(-18.81--18.19)x(2.99+2.99)/2	-1.85		
		(-19.28--18.81)x(3.00+2.99)/2	-1.41		
		(-19.50--19.28)x(3.00+3.00)/2	-0.66		
				52.72	
31 450.00	A1	(-12.61--14.70)x(4.25+2.85)/2	7.42		
		(-11.34--12.61)x(4.24+4.25)/2	5.39		
		(-11.65--11.34)x(3.88+4.24)/2	-1.26		
		(-1.75--11.65)x(4.12+3.88)/2	39.60		
		(-0.68--1.75)x(4.15+4.12)/2	4.42		
		(0.68--0.68)x(4.15+4.15)/2	5.64		
		(1.75-0.68)x(4.12+4.15)/2	4.42		
		(15.38-1.75)x(3.78+4.12)/2	53.84		
		(15.07-15.38)x(4.15+3.78)/2	-1.23		
		(16.34-15.07)x(4.15+4.15)/2	5.27		
		(17.98-16.34)x(3.06+4.15)/2	5.91		
		(17.83-17.98)x(3.06+3.06)/2	-0.46		
		(17.23-17.83)x(3.07+3.06)/2	-1.84		
		(16.74-17.23)x(3.08+3.07)/2	-1.51		
		(16.47-16.74)x(3.09+3.08)/2	-0.83		
		(15.65-16.47)x(3.11+3.09)/2	-2.54		
		(14.79-15.65)x(3.13+3.11)/2	-2.68		
		(14.57-14.79)x(3.13+3.13)/2	-0.69		
		(14.16-14.57)x(3.13+3.13)/2	-1.28		
		(13.48-14.16)x(3.14+3.13)/2	-2.13		
		(13.10-13.48)x(3.14+3.14)/2	-1.19		
		(12.39-13.10)x(3.16+3.14)/2	-2.24		
		(11.42-12.39)x(3.13+3.16)/2	-3.05		
		(11.30-11.42)x(3.12+3.13)/2	-0.37		
		(11.09-11.30)x(3.12+3.12)/2	-0.66		
		(10.21-11.09)x(3.10+3.12)/2	-2.74		
		(9.73-10.21)x(3.08+3.10)/2	-1.48		
		(9.13-9.73)x(3.06+3.08)/2	-1.84		
		(8.05-9.13)x(3.02+3.06)/2	-3.28		
		(8.04-8.05)x(3.02+3.02)/2	-0.03		
		(8.02-8.04)x(3.02+3.02)/2	-0.06		
		(6.95-8.02)x(2.99+3.02)/2	-3.22		
		(6.36-6.95)x(2.98+2.99)/2	-1.76		
		(5.86-6.36)x(2.96+2.98)/2	-1.48		
		(4.96-5.86)x(2.93+2.96)/2	-2.65		
		(4.78-4.96)x(2.92+2.93)/2	-0.53		
		(4.68-4.78)x(2.92+2.92)/2	-0.29		
		(3.69-4.68)x(2.93+2.92)/2	-2.90		
		(2.99-3.69)x(2.93+2.93)/2	-2.05		
		(2.60-2.99)x(2.93+2.93)/2	-1.14		
		(2.41-2.60)x(2.91+2.93)/2	-0.55		
		(1.89-2.41)x(2.87+2.91)/2	-1.50		
		(1.61-1.89)x(2.85+2.87)/2	-0.80		
		(1.51-1.61)x(2.84+2.85)/2	-0.28		
		(1.30-1.51)x(2.80+2.84)/2	-0.59		
		(0.42-1.30)x(2.66+2.80)/2	-2.40		
		(-0.38-0.42)x(2.70+2.66)/2	-2.14		
		(-0.66--0.38)x(2.70+2.70)/2	-0.76		
		(-1.18--0.66)x(2.76+2.70)/2	-1.42		
		(-1.75--1.18)x(2.81+2.76)/2	-1.59		
		(-2.07--1.75)x(2.76+2.81)/2	-0.89		
		(-2.84--2.07)x(2.68+2.76)/2	-2.09		
		(-3.75--2.84)x(2.11+2.68)/2	-2.18		
		(-3.93--3.75)x(2.03+2.11)/2	-0.37		
		(-4.25--3.93)x(1.85+2.03)/2	-0.62		
		(-5.01--4.25)x(1.42+1.85)/2	-1.24		
		(-5.44--5.01)x(1.17+1.42)/2	-0.56		
		(-6.10--5.44)x(0.73+1.17)/2	-0.63		
		(-7.12--6.10)x(0.44+0.73)/2	-0.60		
		(-7.19--7.12)x(0.42+0.44)/2	-0.03		
		(-7.31--7.19)x(0.42+0.42)/2	-0.05		
		(-8.03--7.31)x(0.44+0.42)/2	-0.31		
		(-8.28--8.03)x(0.46+0.44)/2	-0.11		
		(-8.81--8.28)x(0.54+0.46)/2	-0.27		
		(-9.37--8.81)x(0.61+0.54)/2	-0.32		
		(-10.38--9.37)x(0.81+0.61)/2	-0.72		
		(-10.45--10.38)x(0.82+0.81)/2	-0.06		
		(-10.49--10.45)x(0.85+0.82)/2	-0.03		
		A RIPORTARE mq	59.39		

		CALCOLO DELLE AREE		Foglio n. 17
RILEVATO				
N. SEZIONE PROG.	FIG.	ELEMENTI DI CALCOLO	AREA ELEMENTARE mq	AREA FIGURA mq	NOTE
		RIPORTO mq	59.39		
		(-11.54--10.49)x(1.37+0.85)/2	-1.17		
		(-12.18--11.54)x(1.75+1.37)/2	-1.00		
		(-12.63--12.18)x(2.04+1.75)/2	-0.85		
		(-13.45--12.63)x(2.52+2.04)/2	-1.87		
		(-13.72--13.45)x(2.67+2.52)/2	-0.70		
		(-13.87--13.72)x(2.68+2.67)/2	-0.40		
		(-14.70--13.87)x(2.85+2.68)/2	-2.29		
				51.11	
32 465.00	A1	(-12.61--14.78)x(4.29+2.84)/2	7.74		
		(-11.34--12.61)x(4.29+4.29)/2	5.45		
		(-11.65--11.34)x(3.92+4.29)/2	-1.27		
		(-1.75--11.65)x(4.17+3.92)/2	40.05		
		(-0.68--1.75)x(4.20+4.17)/2	4.48		
		(0.68--0.68)x(4.20+4.20)/2	5.71		
		(1.75-0.68)x(4.17+4.20)/2	4.48		
		(15.40-1.75)x(3.83+4.17)/2	54.60		
		(15.09-15.40)x(4.19+3.83)/2	-1.24		
		(16.36-15.09)x(4.20+4.19)/2	5.33		
		(18.13-16.36)x(3.02+4.20)/2	6.39		
		(17.95-18.13)x(3.02+3.02)/2	-0.54		
		(16.96-17.95)x(3.05+3.02)/2	-3.00		
		(16.86-16.96)x(3.05+3.05)/2	-0.31		
		(16.69-16.86)x(3.06+3.05)/2	-0.52		
		(15.78-16.69)x(3.08+3.06)/2	-2.79		
		(15.21-15.78)x(3.08+3.08)/2	-1.76		
		(14.69-15.21)x(3.07+3.08)/2	-1.60		
		(13.60-14.69)x(3.13+3.07)/2	-3.38		
		(12.52-13.60)x(3.12+3.13)/2	-3.38		
		(11.92-12.52)x(3.11+3.12)/2	-1.87		
		(11.43-11.92)x(3.09+3.11)/2	-1.52		
		(10.52-11.43)x(3.09+3.09)/2	-2.81		
		(10.34-10.52)x(3.09+3.09)/2	-0.56		
		(10.25-10.34)x(3.08+3.09)/2	-0.28		
		(9.26-10.25)x(3.05+3.08)/2	-3.03		
		(8.57-9.26)x(3.03+3.05)/2	-2.10		
		(8.17-8.57)x(3.02+3.03)/2	-1.21		
		(7.43-8.17)x(3.00+3.02)/2	-2.23		
		(7.08-7.43)x(2.99+3.00)/2	-1.05		
		(6.89-7.08)x(2.98+2.99)/2	-0.57		
		(5.99-6.89)x(2.94+2.98)/2	-2.66		
		(5.21-5.99)x(2.96+2.94)/2	-2.30		
		(4.91-5.21)x(2.95+2.96)/2	-0.89		
		(4.35-4.91)x(3.04+2.95)/2	-1.68		
		(3.82-4.35)x(3.13+3.04)/2	-1.64		
		(3.53-3.82)x(3.08+3.13)/2	-0.90		
		(2.73-3.53)x(3.05+3.08)/2	-2.45		
		(1.85-2.73)x(2.74+3.05)/2	-2.55		
		(1.65-1.85)x(2.67+2.74)/2	-0.54		
		(1.26-1.65)x(2.58+2.67)/2	-1.02		
		(0.56-1.26)x(2.45+2.58)/2	-1.76		
		(0.17-0.56)x(2.38+2.45)/2	-0.94		
		(-0.53-0.17)x(2.25+2.38)/2	-1.62		
		(-1.50--0.53)x(2.04+2.25)/2	-2.08		
		(-1.62--1.50)x(2.02+2.04)/2	-0.24		
		(-1.82--1.62)x(1.98+2.02)/2	-0.40		
		(-2.70--1.82)x(1.84+1.98)/2	-1.68		
		(-3.28--2.70)x(1.74+1.84)/2	-1.04		
		(-3.79--3.28)x(1.60+1.74)/2	-0.85		
		(-4.86--3.79)x(1.25+1.60)/2	-1.52		
		(-4.88--4.86)x(1.25+1.25)/2	-0.02		
		(-4.91--4.88)x(1.24+1.25)/2	-0.04		
		(-5.96--4.91)x(0.84+1.24)/2	-1.09		
		(-6.54--5.96)x(0.84+0.84)/2	-0.49		
		(-7.05--6.54)x(0.73+0.84)/2	-0.40		
		(-7.99--7.05)x(0.92+0.73)/2	-0.78		
		(-8.14--7.99)x(0.93+0.92)/2	-0.14		
		(-8.22--8.14)x(0.92+0.93)/2	-0.07		
		(-9.23--8.22)x(0.84+0.92)/2	-0.89		
		(-9.90--9.23)x(0.78+0.84)/2	-0.54		
		(-10.31--9.90)x(0.71+0.78)/2	-0.31		
		(-11.08--10.31)x(1.07+0.71)/2	-0.69		
		(-11.40--11.08)x(1.28+1.07)/2	-0.38		
		(-11.57--11.40)x(1.44+1.28)/2	-0.23		
		(-12.49--11.57)x(2.38+1.44)/2	-1.76		
		(-13.25--12.49)x(2.70+2.38)/2	-1.93		
		(-13.57--13.25)x(2.90+2.70)/2	-0.90		
		(-14.16--13.57)x(2.87+2.90)/2	-1.70		
		(-14.66--14.16)x(2.85+2.87)/2	-1.43		
		(-14.78--14.66)x(2.84+2.85)/2	-0.34		
				54.32	
33 480.00	A1	(-12.61--14.97)x(4.34+2.76)/2	8.38		
		(-11.34--12.61)x(4.33+4.34)/2	5.51		
		(-11.65--11.34)x(3.97+4.33)/2	-1.29		
		(-1.75--11.65)x(4.22+3.97)/2	40.54		
		(-0.68--1.75)x(4.24+4.22)/2	4.53		
		(0.68--0.68)x(4.24+4.24)/2	5.77		
		(1.75-0.68)x(4.22+4.24)/2	4.53		
		(15.45-1.75)x(3.87+4.22)/2	55.42		
		(15.15-15.45)x(4.24+3.87)/2	-1.22		
		(16.41-15.15)x(4.24+4.24)/2	5.34		
		(18.27-16.41)x(3.00+4.24)/2	6.73		
		(18.10-18.27)x(3.00+3.00)/2	-0.51		
		(17.47-18.10)x(3.02+3.00)/2	-1.90		
		(17.02-17.47)x(3.03+3.02)/2	-1.36		
		(16.17-17.02)x(3.05+3.03)/2	-2.58		
		(15.93-16.17)x(3.06+3.05)/2	-0.73		
		(15.80-15.93)x(3.06+3.06)/2	-0.40		
		(14.84-15.80)x(3.08+3.06)/2	-2.95		
		(14.13-14.84)x(3.09+3.08)/2	-2.19		
		(13.76-14.13)x(3.09+3.09)/2	-1.14		
		(13.07-13.76)x(3.07+3.09)/2	-2.13		
		(12.67-13.07)x(3.06+3.07)/2	-1.23		
		(12.46-12.67)x(3.06+3.06)/2	-0.64		
		(11.59-12.46)x(3.06+3.06)/2	-2.66		
		A RIPORTARE mq	113.82		

		CALCOLO DELLE AREE		Foglio n. 18
RILEVATO				
N. SEZIONE PROG.	FIG.	ELEMENTI DI CALCOLO	AREA ELEMENTARE mq	AREA FIGURA mq	NOTE
		RIPORTO mq	113.82		
		(10.79-11.59)x(3.04+3.06)/2	-2.44		
		(10.50-10.79)x(3.04+3.04)/2	-0.88		
		(10.36-10.50)x(3.04+3.04)/2	-0.43		
		(9.97-10.36)x(3.03+3.04)/2	-1.18		
		(9.56-9.97)x(3.02+3.03)/2	-1.24		
		(9.41-9.56)x(3.02+3.02)/2	-0.45		
		(9.11-9.41)x(3.01+3.02)/2	-0.90		
		(8.33-9.11)x(3.00+3.01)/2	-2.34		
		(7.44-8.33)x(2.97+3.00)/2	-2.66		
		(7.24-7.44)x(2.96+2.97)/2	-0.59		
		(6.87-7.24)x(2.95+2.96)/2	-1.09		
		(6.15-6.87)x(2.92+2.95)/2	-2.11		
		(5.77-6.15)x(2.95+2.92)/2	-1.12		
		(5.07-5.77)x(2.97+2.95)/2	-2.07		
		(4.10-5.07)x(2.98+2.97)/2	-2.89		
		(3.98-4.10)x(2.99+2.98)/2	-0.36		
		(3.76-3.98)x(2.93+2.99)/2	-0.65		
		(2.90-3.76)x(2.66+2.93)/2	-2.40		
		(2.43-2.90)x(2.57+2.66)/2	-1.23		
		(1.81-2.43)x(2.44+2.57)/2	-1.55		
		(0.76-1.81)x(2.44+2.44)/2	-2.56		
		(0.72-0.76)x(2.44+2.44)/2	-0.10		
		(0.66-0.72)x(2.44+2.44)/2	-0.15		
		(-0.36-0.66)x(2.42+2.44)/2	-2.48		
		(-0.92--0.36)x(2.33+2.42)/2	-1.33		
		(-1.45--0.92)x(2.28+2.33)/2	-1.22		
		(-2.44--1.45)x(2.23+2.28)/2	-2.23		
		(-2.54--2.44)x(2.22+2.23)/2	-0.22		
		(-2.59--2.54)x(2.21+2.22)/2	-0.11		
		(-3.62--2.59)x(2.00+2.21)/2	-2.17		
		(-4.26--3.62)x(1.86+2.00)/2	-1.24		
		(-4.71--4.26)x(1.77+1.86)/2	-0.82		
		(-5.54--4.71)x(1.14+1.77)/2	-1.21		
		(-5.79--5.54)x(0.97+1.14)/2	-0.26		
		(-5.93--5.79)x(0.95+0.97)/2	-0.13		
		(-6.88--5.93)x(0.73+0.95)/2	-0.80		
		(-7.60--6.88)x(0.73+0.73)/2	-0.53		
		(-7.97--7.60)x(0.71+0.73)/2	-0.27		
		(-8.14--7.97)x(0.70+0.71)/2	-0.12		
		(-8.65--8.14)x(0.66+0.70)/2	-0.35		
		(-8.95--8.65)x(0.63+0.66)/2	-0.19		
		(-9.05--8.95)x(0.62+0.63)/2	-0.06		
		(-9.27--9.05)x(0.69+0.62)/2	-0.14		
		(-10.14--9.27)x(0.85+0.69)/2	-0.67		
		(-10.94--10.14)x(1.53+0.85)/2	-0.95		
		(-11.23--10.94)x(1.73+1.53)/2	-0.47		
		(-11.75--11.23)x(2.12+1.73)/2	-1.00		
		(-12.31--11.75)x(2.47+2.12)/2	-1.29		
		(-12.62--12.31)x(2.56+2.47)/2	-0.78		
		(-13.40--12.62)x(2.75+2.56)/2	-2.07		
		(-14.29--13.40)x(2.76+2.75)/2	-2.45		
		(-14.49--14.29)x(2.77+2.76)/2	-0.55		
		(-14.85--14.49)x(2.76+2.77)/2	-1.00		
		(-14.97--14.85)x(2.76+2.76)/2	-0.33		
				54.99	
34 495.00	A1	(-12.61--14.97)x(4.38+2.81)/2	8.48		
		(-11.34--12.61)x(4.38+4.38)/2	5.56		
		(-11.65--11.34)x(4.01+4.38)/2	-1.30		
		(-1.75--11.65)x(4.26+4.01)/2	40.94		
		(-0.68--1.75)x(4.29+4.26)/2	4.57		
		(0.68--0.68)x(4.29+4.29)/2	5.83		
		(1.75-0.68)x(4.26+4.29)/2	4.57		
		(15.55-1.75)x(3.92+4.26)/2	56.44		
		(15.25-15.55)x(4.28+3.92)/2	-1.23		
		(16.52-15.25)x(4.29+4.28)/2	5.44		
		(18.46-16.52)x(2.99+4.29)/2	7.06		
		(18.29-18.46)x(3.00+2.99)/2	-0.51		
		(18.01-18.29)x(3.01+3.00)/2	-0.84		
		(17.20-18.01)x(3.04+3.01)/2	-2.45		
		(16.34-17.20)x(3.06+3.04)/2	-2.62		
		(16.11-16.34)x(3.07+3.06)/2	-0.70		
		(15.68-16.11)x(3.08+3.07)/2	-1.32		
		(15.03-15.68)x(3.09+3.08)/2	-2.01		
		(14.68-15.03)x(3.08+3.09)/2	-1.08		
		(13.94-14.68)x(3.06+3.08)/2	-2.27		
		(13.02-13.94)x(3.03+3.06)/2	-2.80		
		(12.86-13.02)x(3.03+3.03)/2	-0.48		
		(12.56-12.86)x(3.02+3.03)/2	-0.91		
		(11.77-12.56)x(3.01+3.02)/2	-2.38		
		(11.35-11.77)x(3.01+3.01)/2	-1.26		
		(10.69-11.35)x(3.01+3.01)/2	-1.99		
		(9.69-10.69)x(2.99+3.01)/2	-3.00		
		(9.60-9.69)x(2.99+2.99)/2	-0.27		
		(9.44-9.60)x(2.98+2.99)/2	-0.48		
		(8.52-9.44)x(2.94+2.98)/2	-2.72		
		(8.02-8.52)x(2.92+2.94)/2	-1.46		
		(7.43-8.02)x(2.90+2.92)/2	-1.72		
		(6.36-7.43)x(2.94+2.90)/2	-3.12		
		(6.34-6.36)x(2.95+2.94)/2	-0.06		
		(6.32-6.34)x(2.95+2.95)/2	-0.06		
		(5.26-6.32)x(3.06+2.95)/2	-3.19		
		(4.73-5.26)x(3.00+3.06)/2	-1.61		
		(4.17-4.73)x(2.86+3.00)/2	-1.64		
		(3.20-4.17)x(2.61+2.86)/2	-2.65		
		(3.09-3.20)x(2.58+2.61)/2	-0.29		
		(3.03-3.09)x(2.58+2.58)/2	-0.15		
		(2.00-3.03)x(2.44+2.58)/2	-2.59		
		(1.36-2.00)x(2.40+2.44)/2	-1.55		
		(0.92-1.36)x(2.36+2.40)/2	-1.05		
		(0.08-0.92)x(2.26+2.36)/2	-1.94		
		(-0.17-0.08)x(2.24+2.26)/2	-0.56		
		(-0.30--0.17)x(2.19+2.24)/2	-0.29		
		(-1.25--0.30)x(1.98+2.19)/2	-1.98		
		(-1.97--1.25)x(1.62+1.98)/2	-1.30		
		A RIPORTARE mq	79.06		

		CALCOLO DELLE AREE		Foglio n. 19
RILEVATO				
N. SEZIONE PROG.	FIG.	ELEMENTI DI CALCOLO	AREA ELEMENTARE mq	AREA FIGURA mq	NOTE
		RIPORTO mq	79.06		
		(-2.34--1.97)x(1.46+1.62)/2	-0.57		
		(-3.04--2.34)x(1.06+1.46)/2	-0.88		
		(-3.43--3.04)x(0.83+1.06)/2	-0.37		
		(-3.63--3.43)x(0.78+0.83)/2	-0.16		
		(-4.51--3.63)x(0.51+0.78)/2	-0.57		
		(-5.30--4.51)x(0.54+0.51)/2	-0.41		
		(-5.60--5.30)x(0.55+0.54)/2	-0.16		
		(-6.16--5.60)x(0.58+0.55)/2	-0.32		
		(-6.68--6.16)x(0.61+0.58)/2	-0.31		
		(-6.96--6.68)x(0.62+0.61)/2	-0.17		
		(-7.77--6.96)x(0.63+0.62)/2	-0.51		
		(-8.63--7.77)x(0.65+0.63)/2	-0.55		
		(-8.85--8.63)x(0.65+0.65)/2	-0.14		
		(-9.28--8.85)x(0.77+0.65)/2	-0.31		
		(-9.94--9.28)x(1.01+0.77)/2	-0.59		
		(-10.29--9.94)x(1.31+1.01)/2	-0.41		
		(-11.02--10.29)x(1.89+1.31)/2	-1.17		
		(-11.95--11.02)x(2.58+1.89)/2	-2.08		
		(-12.11--11.95)x(2.71+2.58)/2	-0.42		
		(-12.40--12.11)x(2.75+2.71)/2	-0.79		
		(-13.20--12.40)x(2.82+2.75)/2	-2.23		
		(-13.80--13.20)x(2.81+2.82)/2	-1.69		
		(-14.28--13.80)x(2.79+2.81)/2	-1.34		
		(-14.97--14.28)x(2.81+2.79)/2	-1.93		
				60.98	
35 510.00	A1	(-12.61--14.85)x(4.43+2.93)/2	8.24		
		(-11.34--12.61)x(4.42+4.43)/2	5.62		
		(-11.65--11.34)x(4.06+4.42)/2	-1.31		
		(-1.75--11.65)x(4.31+4.06)/2	41.43		
		(-0.68--1.75)x(4.33+4.31)/2	4.62		
		(0.68--0.68)x(4.33+4.33)/2	5.89		
		(1.75-0.68)x(4.31+4.33)/2	4.62		
		(16.93-1.75)x(3.93+4.31)/2	62.54		
		(16.62-16.93)x(4.29+3.93)/2	-1.27		
		(17.89-16.62)x(4.30+4.29)/2	5.45		
		(19.90-17.89)x(2.95+4.30)/2	7.29		
		(19.58-19.90)x(2.97+2.95)/2	-0.95		
		(18.57-19.58)x(2.98+2.97)/2	-3.00		
		(18.50-18.57)x(2.98+2.98)/2	-0.21		
		(18.46-18.50)x(2.98+2.98)/2	-0.12		
		(18.36-18.46)x(2.98+2.98)/2	-0.30		
		(17.65-18.36)x(3.00+2.98)/2	-2.12		
		(17.41-17.65)x(3.01+3.00)/2	-0.72		
		(16.91-17.41)x(3.03+3.01)/2	-1.51		
		(16.33-16.91)x(3.05+3.03)/2	-1.76		
		(15.26-16.33)x(3.06+3.05)/2	-3.27		
		(15.24-15.26)x(3.06+3.06)/2	-0.06		
		(15.22-15.24)x(3.06+3.06)/2	-0.06		
		(14.16-15.22)x(3.03+3.06)/2	-3.23		
		(13.60-14.16)x(3.02+3.03)/2	-1.69		
		(13.07-13.60)x(3.01+3.02)/2	-1.60		
		(12.08-13.07)x(2.99+3.01)/2	-2.97		
		(12.01-12.08)x(2.99+2.99)/2	-0.21		
		(11.99-12.01)x(2.99+2.99)/2	-0.06		
		(11.21-11.99)x(2.97+2.99)/2	-2.32		
		(10.90-11.21)x(2.96+2.97)/2	-0.92		
		(10.40-10.90)x(2.94+2.96)/2	-1.48		
		(9.82-10.40)x(2.92+2.94)/2	-1.70		
		(9.59-9.82)x(2.92+2.92)/2	-0.67		
		(8.94-9.59)x(2.89+2.92)/2	-1.89		
		(8.73-8.94)x(2.89+2.89)/2	-0.61		
		(8.62-8.73)x(2.89+2.89)/2	-0.32		
		(7.65-8.62)x(2.91+2.89)/2	-2.81		
		(6.97-7.65)x(3.02+2.91)/2	-2.02		
		(6.56-6.97)x(3.08+3.02)/2	-1.25		
		(5.80-6.56)x(3.09+3.08)/2	-2.34		
		(5.48-5.80)x(3.07+3.09)/2	-0.99		
		(5.31-5.48)x(3.02+3.07)/2	-0.52		
		(4.39-5.31)x(2.75+3.02)/2	-2.65		
		(3.65-4.39)x(2.68+2.75)/2	-2.01		
		(3.31-3.65)x(2.61+2.68)/2	-0.90		
		(2.66-3.31)x(2.61+2.61)/2	-1.70		
		(2.23-2.66)x(2.66+2.61)/2	-1.13		
		(1.99-2.23)x(2.66+2.66)/2	-0.64		
		(1.14-1.99)x(2.74+2.66)/2	-2.30		
		(0.34-1.14)x(2.71+2.74)/2	-2.18		
		(0.06-0.34)x(2.73+2.71)/2	-0.76		
		(-0.08-0.06)x(2.70+2.73)/2	-0.38		
		(-0.47--0.08)x(2.63+2.70)/2	-1.04		
		(-0.89--0.47)x(2.57+2.63)/2	-1.09		
		(-1.03--0.89)x(2.54+2.57)/2	-0.36		
		(-1.32--1.03)x(2.45+2.54)/2	-0.72		
		(-2.11--1.32)x(2.23+2.45)/2	-1.85		
		(-2.98--2.11)x(1.71+2.23)/2	-1.71		
		(-3.20--2.98)x(1.63+1.71)/2	-0.37		
		(-3.61--3.20)x(1.18+1.63)/2	-0.58		
		(-4.28--3.61)x(0.47+1.18)/2	-0.55		
		(-4.64--4.28)x(0.51+0.47)/2	-0.18		
		(-5.37--4.64)x(0.48+0.51)/2	-0.36		
		(-6.30--5.37)x(0.51+0.48)/2	-0.46		
		(-6.45--6.30)x(0.52+0.51)/2	-0.08		
		(-6.75--6.45)x(0.54+0.52)/2	-0.16		
		(-7.54--6.75)x(0.61+0.54)/2	-0.45		
		(-7.95--7.54)x(0.68+0.61)/2	-0.26		
		(-8.62--7.95)x(0.78+0.68)/2	-0.49		
		(-9.61--8.62)x(1.86+0.78)/2	-1.31		
		(-9.71--9.61)x(1.95+1.86)/2	-0.19		
		(-9.89--9.71)x(2.13+1.95)/2	-0.37		
		(-10.79--9.89)x(3.03+2.13)/2	-2.32		
		(-11.27--10.79)x(3.02+3.03)/2	-1.45		
		(-11.88--11.27)x(3.13+3.02)/2	-1.88		
		(-12.93--11.88)x(2.93+3.13)/2	-3.18		
		(-12.96--12.93)x(2.93+2.93)/2	-0.09		
		(-13.03--12.96)x(2.92+2.93)/2	-0.20		
		A RIPORTARE mq	63.09		

AP01

		CALCOLO DELLE AREE		Foglio n. 20
RILEVATO				
N. SEZIONE PROG.	FIG.	ELEMENTI DI CALCOLO	AREA ELEMENTARE mq	AREA FIGURA mq	NOTE
		RIPORTO mq	63.09		
		(-14.05--13.03)x(2.91+2.92)/2	-2.97		
		(-14.58--14.05)x(2.92+2.91)/2	-1.54		
		(-14.85--14.58)x(2.93+2.92)/2	-0.79		
				57.79	
36	A1	(-12.61--14.86)x(4.47+2.97)/2	8.37		
525.00		(-11.34--12.61)x(4.47+4.47)/2	5.68		
		(-11.65--11.34)x(4.10+4.47)/2	-1.33		
		(-1.75--11.65)x(4.35+4.10)/2	41.83		
		(-0.68--1.75)x(4.38+4.35)/2	4.67		
		(0.68--0.68)x(4.38+4.38)/2	5.96		
		(1.75-0.68)x(4.35+4.38)/2	4.67		
		(20.09-1.75)x(3.89+4.35)/2	75.56		
		(19.78-20.09)x(4.26+3.89)/2	-1.26		
		(21.05-19.78)x(4.26+4.26)/2	5.41		
		(23.14-21.05)x(2.87+4.26)/2	7.45		
		(23.07-23.14)x(2.87+2.87)/2	-0.20		
		(22.46-23.07)x(2.89+2.87)/2	-1.76		
		(21.99-22.46)x(2.91+2.89)/2	-1.36		
		(21.09-21.99)x(2.93+2.91)/2	-2.63		
		(20.91-21.09)x(2.93+2.93)/2	-0.53		
		(20.81-20.91)x(2.93+2.93)/2	-0.29		
		(19.82-20.81)x(2.95+2.93)/2	-2.91		
		(19.16-19.82)x(2.97+2.95)/2	-1.95		
		(18.74-19.16)x(2.98+2.97)/2	-1.25		
		(17.93-18.74)x(3.01+2.98)/2	-2.43		
		(17.65-17.93)x(3.01+3.01)/2	-0.84		
		(17.51-17.65)x(3.01+3.01)/2	-0.42		
		(16.57-17.51)x(3.01+3.01)/2	-2.83		
		(15.86-16.57)x(2.99+3.01)/2	-2.13		
		(15.49-15.86)x(2.99+2.99)/2	-1.11		
		(14.78-15.49)x(2.99+2.99)/2	-2.12		
		(14.40-14.78)x(2.99+2.99)/2	-1.14		
		(14.21-14.40)x(2.99+2.99)/2	-0.57		
		(13.32-14.21)x(2.97+2.99)/2	-2.65		
		(12.88-13.32)x(2.96+2.97)/2	-1.30		
		(12.23-12.88)x(2.95+2.96)/2	-1.92		
		(11.62-12.23)x(2.93+2.95)/2	-1.79		
		(11.15-11.62)x(2.91+2.93)/2	-1.37		
		(10.90-11.15)x(2.90+2.91)/2	-0.73		
		(10.07-10.90)x(2.87+2.90)/2	-2.39		
		(9.25-10.07)x(2.86+2.87)/2	-2.35		
		(8.98-9.25)x(2.85+2.86)/2	-0.77		
		(8.46-8.98)x(2.89+2.85)/2	-1.49		
		(7.90-8.46)x(2.91+2.89)/2	-1.62		
		(7.60-7.90)x(2.88+2.91)/2	-0.87		
		(6.81-7.60)x(2.78+2.88)/2	-2.24		
		(5.95-6.81)x(2.52+2.78)/2	-2.28		
		(5.73-5.95)x(2.46+2.52)/2	-0.55		
		(5.31-5.73)x(2.47+2.46)/2	-1.04		
		(4.65-5.31)x(2.50+2.47)/2	-1.64		
		(4.30-4.65)x(2.49+2.50)/2	-0.87		
		(3.56-4.30)x(2.53+2.49)/2	-1.86		
		(2.65-3.56)x(2.56+2.53)/2	-2.32		
		(2.48-2.65)x(2.57+2.56)/2	-0.44		
		(2.15-2.48)x(2.58+2.57)/2	-0.85		
		(1.39-2.15)x(2.60+2.58)/2	-1.97		
		(1.00-1.39)x(2.63+2.60)/2	-1.02		
		(0.31-1.00)x(2.72+2.63)/2	-1.85		
		(-0.65-0.31)x(2.54+2.72)/2	-2.52		
		(-0.77--0.65)x(2.51+2.54)/2	-0.30		
		(-1.01--0.77)x(2.37+2.51)/2	-0.59		
		(-1.86--1.01)x(1.82+2.37)/2	-1.78		
		(-2.30--1.86)x(1.57+1.82)/2	-0.75		
		(-2.94--2.30)x(1.16+1.57)/2	-0.87		
		(-3.95--2.94)x(0.73+1.16)/2	-0.95		
		(-4.03--3.95)x(0.69+0.73)/2	-0.06		
		(-4.16--4.03)x(0.67+0.69)/2	-0.09		
		(-5.11--4.16)x(0.52+0.67)/2	-0.57		
		(-5.68--5.11)x(0.54+0.52)/2	-0.30		
		(-6.19--5.68)x(0.55+0.54)/2	-0.28		
		(-7.26--6.19)x(0.55+0.55)/2	-0.59		
		(-7.28--7.26)x(0.55+0.55)/2	-0.01		
		(-7.32--7.28)x(0.57+0.55)/2	-0.02		
		(-8.36--7.32)x(0.94+0.57)/2	-0.79		
		(-8.91--8.36)x(1.56+0.94)/2	-0.69		
		(-9.45--8.91)x(2.10+1.56)/2	-0.99		
		(-10.48--9.45)x(2.78+2.10)/2	-2.51		
		(-10.53--10.48)x(2.81+2.78)/2	-0.14		
		(-10.56--10.53)x(2.81+2.81)/2	-0.08		
		(-11.61--10.56)x(2.95+2.81)/2	-3.02		
		(-12.21--11.61)x(2.93+2.95)/2	-1.76		
		(-12.70--12.21)x(2.88+2.93)/2	-1.42		
		(-13.63--12.70)x(2.87+2.88)/2	-2.67		
		(-13.78--13.63)x(2.87+2.87)/2	-0.43		
		(-13.86--13.78)x(2.87+2.87)/2	-0.23		
		(-14.86--13.86)x(2.97+2.87)/2	-2.92		
				65.03	
37	A1	(-12.75--15.06)x(4.52+2.98)/2	8.66		
540.00		(-11.49--12.75)x(4.51+4.52)/2	5.69		
		(-11.79--11.49)x(4.14+4.51)/2	-1.30		
		(-1.75--11.79)x(4.40+4.14)/2	42.87		
		(-0.68--1.75)x(4.42+4.40)/2	4.72		
		(0.68--0.68)x(4.42+4.42)/2	6.01		
		(1.75-0.68)x(4.40+4.42)/2	4.72		
		(11.65-1.75)x(4.15+4.40)/2	42.32		
		(11.34-11.65)x(4.51+4.15)/2	-1.34		
		(12.61-11.34)x(4.52+4.51)/2	5.73		
		(14.95-12.61)x(2.96+4.52)/2	8.75		
		(14.84-14.95)x(2.95+2.96)/2	-0.33		
		(14.68-14.84)x(2.95+2.95)/2	-0.47		
		(14.36-14.68)x(2.95+2.95)/2	-0.94		
		(13.59-14.36)x(2.95+2.95)/2	-2.27		
		(13.20-13.59)x(2.94+2.95)/2	-1.15		
		(12.51-13.20)x(2.91+2.94)/2	-2.02		
		A RIPORTARE mq	119.65		

		CALCOLO DELLE AREE		Foglio n. 21
RILEVATO				
N. SEZIONE PROG.	FIG.	ELEMENTI DI CALCOLO	AREA ELEMENTARE mq	AREA FIGURA mq	NOTE
		RIPORTO mq	119.65		
		(11.55-12.51)x(2.87+2.91)/2	-2.77		
		(11.43-11.55)x(2.87+2.87)/2	-0.34		
		(11.19-11.43)x(2.86+2.87)/2	-0.69		
		(10.34-11.19)x(2.84+2.86)/2	-2.42		
		(9.91-10.34)x(2.85+2.84)/2	-1.22		
		(9.26-9.91)x(2.85+2.85)/2	-1.85		
		(8.26-9.26)x(2.72+2.85)/2	-2.79		
		(8.18-8.26)x(2.71+2.72)/2	-0.22		
		(8.13-8.18)x(2.71+2.71)/2	-0.14		
		(8.01-8.13)x(2.68+2.71)/2	-0.32		
		(7.33-8.01)x(2.57+2.68)/2	-1.78		
		(7.09-7.33)x(2.53+2.57)/2	-0.61		
		(6.62-7.09)x(2.47+2.53)/2	-1.17		
		(6.01-6.62)x(2.37+2.47)/2	-1.48		
		(4.97-6.01)x(2.63+2.37)/2	-2.60		
		(4.93-4.97)x(2.64+2.63)/2	-0.11		
		(4.84-4.93)x(2.68+2.64)/2	-0.24		
		(3.84-4.84)x(3.24+2.68)/2	-2.96		
		(3.33-3.84)x(3.28+3.24)/2	-1.66		
		(2.76-3.33)x(3.31+3.28)/2	-1.88		
		(1.69-2.76)x(3.33+3.31)/2	-3.55		
		(1.68-1.69)x(3.34+3.33)/2	-0.03		
		(1.66-1.68)x(3.33+3.34)/2	-0.07		
		(0.59-1.66)x(2.97+3.33)/2	-3.37		
		(0.04-0.59)x(2.91+2.97)/2	-1.62		
		(-0.49-0.04)x(2.89+2.91)/2	-1.54		
		(-1.52--0.49)x(2.56+2.89)/2	-2.81		
		(-1.57--1.52)x(2.54+2.56)/2	-0.13		
		(-1.60--1.57)x(2.51+2.54)/2	-0.08		
		(-2.66--1.60)x(1.59+2.51)/2	-2.17		
		(-3.25--2.66)x(1.08+1.59)/2	-0.79		
		(-3.74--3.25)x(0.59+1.08)/2	-0.41		
		(-4.69--3.74)x(0.46+0.59)/2	-0.50		
		(-4.82--4.69)x(0.46+0.46)/2	-0.06		
		(-4.89--4.82)x(0.46+0.46)/2	-0.03		
		(-5.91--4.89)x(0.52+0.46)/2	-0.50		
		(-6.54--5.91)x(0.60+0.52)/2	-0.35		
		(-6.99--6.54)x(0.65+0.60)/2	-0.28		
		(-7.87--6.99)x(0.94+0.65)/2	-0.70		
		(-8.07--7.87)x(1.01+0.94)/2	-0.20		
		(-8.18--8.07)x(1.07+1.01)/2	-0.11		
		(-9.16--8.18)x(1.48+1.07)/2	-1.25		
		(-9.82--9.16)x(2.02+1.48)/2	-1.16		
		(-10.24--9.82)x(2.31+2.02)/2	-0.91		
		(-10.44--10.24)x(2.42+2.31)/2	-0.47		
		(-11.04--10.44)x(2.69+2.42)/2	-1.53		
		(-11.25--11.04)x(2.78+2.69)/2	-0.57		
		(-11.32--11.25)x(2.79+2.78)/2	-0.19		
		(-11.47--11.32)x(2.79+2.79)/2	-0.42		
		(-12.41--11.47)x(2.81+2.79)/2	-2.63		
		(-13.11--12.41)x(2.86+2.81)/2	-1.98		
		(-13.49--13.11)x(2.87+2.86)/2	-1.09		
		(-14.22--13.49)x(2.92+2.87)/2	-2.11		
		(-14.57--14.22)x(2.95+2.92)/2	-1.03		
		(-14.76--14.57)x(2.96+2.95)/2	-0.56		
		(-15.06--14.76)x(2.98+2.96)/2	-0.89		
				56.31	
38 555.00	A1	(-26.34--27.53)x(4.11+3.32)/2	4.42		
		(-14.11--26.34)x(4.48+4.11)/2	52.53		
		(-14.41--14.11)x(4.12+4.48)/2	-1.29		
		(-1.75--14.41)x(4.44+4.12)/2	54.18		
		(-0.68--1.75)x(4.47+4.44)/2	4.77		
		(0.68--0.68)x(4.47+4.47)/2	6.08		
		(1.75-0.68)x(4.44+4.47)/2	4.77		
		(11.65-1.75)x(4.19+4.44)/2	42.72		
		(11.34-11.65)x(4.56+4.19)/2	-1.36		
		(12.61-11.34)x(4.56+4.56)/2	5.79		
		(15.11-12.61)x(2.89+4.56)/2	9.31		
		(14.98-15.11)x(2.89+2.89)/2	-0.38		
		(13.97-14.98)x(2.88+2.89)/2	-2.91		
		(13.90-13.97)x(2.88+2.88)/2	-0.20		
		(13.86-13.90)x(2.88+2.88)/2	-0.12		
		(12.82-13.86)x(2.84+2.88)/2	-2.97		
		(12.22-12.82)x(2.85+2.84)/2	-1.71		
		(11.73-12.22)x(2.84+2.85)/2	-1.39		
		(10.78-11.73)x(2.84+2.84)/2	-2.70		
		(10.65-10.78)x(2.84+2.84)/2	-0.37		
		(10.59-10.65)x(2.83+2.84)/2	-0.17		
		(9.57-10.59)x(2.81+2.83)/2	-2.88		
		(8.95-9.57)x(2.73+2.81)/2	-1.72		
		(8.48-8.95)x(2.67+2.73)/2	-1.27		
		(7.58-8.48)x(2.49+2.67)/2	-2.32		
		(7.40-7.58)x(2.46+2.49)/2	-0.45		
		(7.31-7.40)x(2.45+2.46)/2	-0.22		
		(6.32-7.31)x(2.40+2.45)/2	-2.40		
		(5.67-6.32)x(2.38+2.40)/2	-1.55		
		(5.24-5.67)x(2.37+2.38)/2	-1.02		
		(4.39-5.24)x(2.32+2.37)/2	-1.99		
		(4.15-4.39)x(2.30+2.32)/2	-0.55		
		(4.03-4.15)x(2.28+2.30)/2	-0.27		
		(3.07-4.03)x(2.10+2.28)/2	-2.10		
		(2.60-3.07)x(1.96+2.10)/2	-0.95		
		(1.99-2.60)x(1.69+1.96)/2	-1.11		
		(1.19-1.99)x(1.31+1.69)/2	-1.20		
		(0.91-1.19)x(1.17+1.31)/2	-0.35		
		(0.76-0.91)x(1.13+1.17)/2	-0.17		
		(-0.18-0.76)x(0.79+1.13)/2	-0.90		
		(-0.88--0.18)x(0.59+0.79)/2	-0.48		
		(-1.26--0.88)x(0.48+0.59)/2	-0.20		
		(-2.00--1.26)x(0.37+0.48)/2	-0.31		
		(-2.34--2.00)x(0.33+0.37)/2	-0.12		
		(-2.52--2.34)x(0.34+0.33)/2	-0.06		
		(-3.42--2.52)x(0.36+0.34)/2	-0.31		
		(-4.15--3.42)x(0.45+0.36)/2	-0.30		
		A RIPORTARE mq	143.80		

		CALCOLO DELLE AREE		Foglio n. 22
RILEVATO				
N. SEZIONE PROG.	FIG.	ELEMENTI DI CALCOLO	AREA ELEMENTARE mq	AREA FIGURA mq	NOTE
		RIPORTO mq	143.80		
		(-4.51--4.15)x(0.50+0.45)/2	-0.17		
		(-5.19--4.51)x(0.54+0.50)/2	-0.35		
		(-5.59--5.19)x(0.57+0.54)/2	-0.22		
		(-5.79--5.59)x(0.59+0.57)/2	-0.12		
		(-6.67--5.79)x(0.63+0.59)/2	-0.54		
		(-7.43--6.67)x(1.08+0.63)/2	-0.65		
		(-7.75--7.43)x(1.25+1.08)/2	-0.37		
		(-8.39--7.75)x(1.71+1.25)/2	-0.95		
		(-8.84--8.39)x(2.03+1.71)/2	-0.84		
		(-9.07--8.84)x(2.13+2.03)/2	-0.48		
		(-9.92--9.07)x(2.55+2.13)/2	-1.99		
		(-10.70--9.92)x(2.74+2.55)/2	-2.06		
		(-11.00--10.70)x(2.82+2.74)/2	-0.83		
		(-11.58--11.00)x(2.88+2.82)/2	-1.65		
		(-12.08--11.58)x(2.93+2.88)/2	-1.45		
		(-12.34--12.08)x(2.95+2.93)/2	-0.76		
		(-13.17--12.34)x(3.02+2.95)/2	-2.48		
		(-13.98--13.17)x(3.06+3.02)/2	-2.46		
		(-14.25--13.98)x(3.08+3.06)/2	-0.83		
		(-14.78--14.25)x(3.10+3.08)/2	-1.64		
		(-15.33--14.78)x(3.12+3.10)/2	-1.71		
		(-15.62--15.33)x(3.13+3.12)/2	-0.91		
		(-16.41--15.62)x(3.16+3.13)/2	-2.48		
		(-16.81--16.41)x(3.16+3.16)/2	-1.26		
		(-17.50--16.81)x(3.15+3.16)/2	-2.18		
		(-17.62--17.50)x(3.16+3.15)/2	-0.38		
		(-17.97--17.62)x(3.17+3.16)/2	-1.11		
		(-18.58--17.97)x(3.20+3.17)/2	-1.94		
		(-18.89--18.58)x(3.22+3.20)/2	-1.00		
		(-19.66--18.89)x(3.26+3.22)/2	-2.49		
		(-20.53--19.66)x(3.29+3.26)/2	-2.85		
		(-20.74--20.53)x(3.30+3.29)/2	-0.69		
		(-21.16--20.74)x(3.32+3.30)/2	-1.39		
		(-21.83--21.16)x(3.34+3.32)/2	-2.23		
		(-22.17--21.83)x(3.32+3.34)/2	-1.13		
		(-22.91--22.17)x(3.28+3.32)/2	-2.44		
		(-23.80--22.91)x(3.27+3.28)/2	-2.91		
		(-23.99--23.80)x(3.27+3.27)/2	-0.62		
		(-24.36--23.99)x(3.27+3.27)/2	-1.21		
		(-25.07--24.36)x(3.26+3.27)/2	-2.32		
		(-25.44--25.07)x(3.28+3.26)/2	-1.21		
		(-26.16--25.44)x(3.31+3.28)/2	-2.37		
		(-27.08--26.16)x(3.32+3.31)/2	-3.05		
		(-27.24--27.08)x(3.33+3.32)/2	-0.53		
		(-27.53--27.24)x(3.32+3.33)/2	-0.96		
				81.59	
39 570.00	A1	(-24.95--26.20)x(4.19+3.36)/2	4.72		
		(-14.85--24.95)x(4.51+4.19)/2	43.93		
		(-15.15--14.85)x(4.15+4.51)/2	-1.30		
		(-1.75--15.15)x(4.49+4.15)/2	57.89		
		(-0.68--1.75)x(4.51+4.49)/2	4.81		
		(0.68--0.68)x(4.51+4.51)/2	6.13		
		(1.75-0.68)x(4.49+4.51)/2	4.81		
		(11.65-1.75)x(4.24+4.49)/2	43.21		
		(11.34-11.65)x(4.60+4.24)/2	-1.37		
		(12.61-11.34)x(4.61+4.60)/2	5.85		
		(15.17-12.61)x(2.90+4.61)/2	9.61		
		(14.55-15.17)x(2.90+2.90)/2	-1.80		
		(14.23-14.55)x(2.91+2.90)/2	-0.93		
		(13.61-14.23)x(2.90+2.91)/2	-1.80		
		(13.15-13.61)x(2.90+2.90)/2	-1.33		
		(12.92-13.15)x(2.90+2.90)/2	-0.67		
		(12.07-12.92)x(2.90+2.90)/2	-2.46		
		(11.29-12.07)x(2.89+2.90)/2	-2.26		
		(10.99-11.29)x(2.88+2.89)/2	-0.87		
		(10.39-10.99)x(2.89+2.88)/2	-1.73		
		(9.90-10.39)x(2.89+2.89)/2	-1.42		
		(9.66-9.90)x(2.89+2.89)/2	-0.69		
		(8.82-9.66)x(2.85+2.89)/2	-2.41		
		(8.03-8.82)x(2.87+2.85)/2	-2.26		
		(7.74-8.03)x(2.87+2.87)/2	-0.83		
		(7.18-7.74)x(2.85+2.87)/2	-1.60		
		(6.66-7.18)x(2.80+2.85)/2	-1.47		
		(6.39-6.66)x(2.75+2.80)/2	-0.75		
		(5.58-6.39)x(2.61+2.75)/2	-2.17		
		(4.76-5.58)x(2.47+2.61)/2	-2.08		
		(4.50-4.76)x(2.43+2.47)/2	-0.64		
		(3.97-4.50)x(2.34+2.43)/2	-1.26		
		(3.41-3.97)x(2.25+2.34)/2	-1.29		
		(3.13-3.41)x(2.18+2.25)/2	-0.62		
		(2.33-3.13)x(2.02+2.18)/2	-1.68		
		(1.50-2.33)x(1.72+2.02)/2	-1.55		
		(1.25-1.50)x(1.62+1.72)/2	-0.42		
		(0.75-1.25)x(1.44+1.62)/2	-0.77		
		(0.17-0.75)x(1.22+1.44)/2	-0.77		
		(-0.13-0.17)x(1.08+1.22)/2	-0.35		
		(-0.91--0.13)x(0.74+1.08)/2	-0.71		
		(-1.76--0.91)x(0.51+0.74)/2	-0.53		
		(-2.00--1.76)x(0.42+0.51)/2	-0.11		
		(-2.11--2.00)x(0.41+0.42)/2	-0.05		
		(-2.46--2.11)x(0.38+0.41)/2	-0.14		
		(-2.92--2.46)x(0.34+0.38)/2	-0.17		
		(-3.08--2.92)x(0.33+0.34)/2	-0.05		
		(-3.39--3.08)x(0.36+0.33)/2	-0.11		
		(-4.16--3.39)x(0.43+0.36)/2	-0.30		
		(-5.02--4.16)x(0.75+0.43)/2	-0.51		
		(-5.24--5.02)x(0.83+0.75)/2	-0.17		
		(-5.67--5.24)x(1.02+0.83)/2	-0.40		
		(-6.32--5.67)x(1.37+1.02)/2	-0.78		
		(-6.65--6.32)x(1.57+1.37)/2	-0.49		
		(-7.40--6.65)x(2.06+1.57)/2	-1.36		
		(-8.28--7.40)x(2.45+2.06)/2	-1.98		
		(-8.49--8.28)x(2.53+2.45)/2	-0.52		
		(-8.89--8.49)x(2.68+2.53)/2	-1.04		
		A RIPORTARE mq	129.99		

		CALCOLO DELLE AREE		Foglio n. 23
RILEVATO				
N. SEZIONE PROG.	FIG.	ELEMENTI DI CALCOLO	AREA ELEMENTARE mq	AREA FIGURA mq	NOTE
		RIPORTO mq	129.99		
		(-9.57--8.89)x(2.89+2.68)/2	-1.89		
		(-9.92--9.57)x(2.91+2.89)/2	-1.01		
		(-10.65--9.92)x(3.00+2.91)/2	-2.16		
		(-11.55--10.65)x(3.05+3.00)/2	-2.72		
		(-11.73--11.55)x(3.06+3.05)/2	-0.55		
		(-12.10--11.73)x(3.09+3.06)/2	-1.14		
		(-12.81--12.10)x(3.15+3.09)/2	-2.22		
		(-13.18--12.81)x(3.15+3.15)/2	-1.17		
		(-13.90--13.18)x(3.16+3.15)/2	-2.27		
		(-14.81--13.90)x(3.21+3.16)/2	-2.90		
		(-14.98--14.81)x(3.21+3.21)/2	-0.55		
		(-15.31--14.98)x(3.22+3.21)/2	-1.06		
		(-16.06--15.31)x(3.23+3.22)/2	-2.42		
		(-16.44--16.06)x(3.24+3.23)/2	-1.23		
		(-17.14--16.44)x(3.23+3.24)/2	-2.26		
		(-18.07--17.14)x(3.26+3.23)/2	-3.02		
		(-18.22--18.07)x(3.26+3.26)/2	-0.49		
		(-18.52--18.22)x(3.27+3.26)/2	-0.98		
		(-19.31--18.52)x(3.29+3.27)/2	-2.59		
		(-19.70--19.31)x(3.31+3.29)/2	-1.29		
		(-20.39--19.70)x(3.36+3.31)/2	-2.30		
		(-20.73--20.39)x(3.37+3.36)/2	-1.14		
		(-21.47--20.73)x(3.36+3.37)/2	-2.49		
		(-21.74--21.47)x(3.35+3.36)/2	-0.91		
		(-22.55--21.74)x(3.33+3.35)/2	-2.71		
		(-22.96--22.55)x(3.32+3.33)/2	-1.36		
		(-23.63--22.96)x(3.30+3.32)/2	-2.22		
		(-24.59--23.63)x(3.31+3.30)/2	-3.17		
		(-24.71--24.59)x(3.31+3.31)/2	-0.40		
		(-24.95--24.71)x(3.32+3.31)/2	-0.80		
		(-25.80--24.95)x(3.36+3.32)/2	-2.84		
		(-26.20--25.80)x(3.36+3.36)/2	-1.34		
				74.39	
40 585.00	A1	(-26.45--28.23)x(4.33+3.14)/2	6.65		
		(-14.72--26.45)x(4.56+4.33)/2	52.14		
		(-15.02--14.72)x(4.20+4.56)/2	-1.31		
		(-1.75--15.02)x(4.53+4.20)/2	57.92		
		(-0.68--1.75)x(4.56+4.53)/2	4.86		
		(0.68--0.68)x(4.56+4.56)/2	6.20		
		(1.75-0.68)x(4.53+4.56)/2	4.86		
		(11.65-1.75)x(4.28+4.53)/2	43.61		
		(11.34-11.65)x(4.65+4.28)/2	-1.38		
		(12.61-11.34)x(4.65+4.65)/2	5.91		
		(15.17-12.61)x(2.95+4.65)/2	9.73		
		(14.60-15.17)x(2.96+2.95)/2	-1.68		
		(13.64-14.60)x(2.98+2.96)/2	-2.85		
		(13.51-13.64)x(2.98+2.98)/2	-0.39		
		(13.27-13.51)x(2.98+2.98)/2	-0.72		
		(12.43-13.27)x(2.98+2.98)/2	-2.50		
		(12.01-12.43)x(2.98+2.98)/2	-1.25		
		(11.35-12.01)x(2.99+2.98)/2	-1.97		
		(11.02-11.35)x(2.98+2.99)/2	-0.99		
		(10.27-11.02)x(2.96+2.98)/2	-2.23		
		(10.03-10.27)x(2.96+2.96)/2	-0.71		
		(9.19-10.03)x(2.95+2.96)/2	-2.48		
		(8.77-9.19)x(2.94+2.95)/2	-1.24		
		(8.11-8.77)x(2.94+2.94)/2	-1.94		
		(7.14-8.11)x(2.93+2.94)/2	-2.85		
		(7.03-7.14)x(2.93+2.93)/2	-0.32		
		(6.80-7.03)x(2.93+2.93)/2	-0.67		
		(5.95-6.80)x(2.92+2.93)/2	-2.49		
		(5.52-5.95)x(2.91+2.92)/2	-1.25		
		(4.87-5.52)x(2.88+2.91)/2	-1.88		
		(3.89-4.87)x(2.74+2.88)/2	-2.75		
		(3.78-3.89)x(2.73+2.74)/2	-0.30		
		(3.57-3.78)x(2.68+2.73)/2	-0.57		
		(2.70-3.57)x(2.48+2.68)/2	-2.24		
		(2.39-2.70)x(2.50+2.48)/2	-0.77		
		(2.25-2.39)x(2.51+2.50)/2	-0.35		
		(1.83-2.25)x(2.43+2.51)/2	-1.04		
		(1.81-1.83)x(2.40+2.43)/2	-0.05		
		(1.80-1.81)x(2.55+2.40)/2	-0.02		
		(1.78-1.80)x(2.47+2.50)/2	-0.05		
		(1.73-1.78)x(2.44+2.47)/2	-0.12		
		(1.65-1.73)x(2.45+2.44)/2	-0.20		
		(1.53-1.65)x(2.37+2.45)/2	-0.29		
		(1.30-1.53)x(1.94+2.37)/2	-0.50		
		(0.54-1.30)x(1.63+1.94)/2	-1.36		
		(0.34-0.54)x(1.55+1.63)/2	-0.32		
		(-0.54-0.34)x(1.22+1.55)/2	-1.22		
		(-0.98--0.54)x(1.03+1.22)/2	-0.49		
		(-1.62--0.98)x(0.78+1.03)/2	-0.58		
		(-2.61--1.62)x(0.41+0.78)/2	-0.59		
		(-2.70--2.61)x(0.36+0.41)/2	-0.03		
		(-2.89--2.70)x(0.38+0.36)/2	-0.07		
		(-3.78--2.89)x(0.51+0.38)/2	-0.40		
		(-4.23--3.78)x(0.60+0.51)/2	-0.25		
		(-4.86--4.23)x(0.71+0.60)/2	-0.41		
		(-5.85--4.86)x(1.18+0.71)/2	-0.94		
		(-5.95--5.85)x(1.23+1.18)/2	-0.12		
		(-6.13--5.95)x(1.32+1.23)/2	-0.23		
		(-7.03--6.13)x(1.76+1.32)/2	-1.39		
		(-7.61--7.03)x(2.03+1.76)/2	-1.10		
		(-8.11--7.61)x(2.24+2.03)/2	-1.07		
		(-8.20--8.11)x(2.35+2.24)/2	-0.21		
		(-8.23--8.20)x(2.35+2.35)/2	-0.07		
		(-8.26--8.23)x(3.07+2.35)/2	-0.08		
		(-8.27--8.26)x(2.79+3.07)/2	-0.03		
		(-8.45--8.27)x(2.58+2.79)/2	-0.48		
		(-8.56--8.45)x(2.59+2.58)/2	-0.28		
		(-8.75--8.56)x(2.60+2.59)/2	-0.49		
		(-9.19--8.75)x(2.72+2.60)/2	-1.17		
		(-9.36--9.19)x(2.76+2.72)/2	-0.47		
		(-10.27--9.36)x(2.98+2.76)/2	-2.61		
		A RIPORTARE mq	133.07		

		CALCOLO DELLE AREE		Foglio n. 24
RILEVATO				
N. SEZIONE PROG.	FIG.	ELEMENTI DI CALCOLO	AREA ELEMENTARE mq	AREA FIGURA mq	NOTE
		RIPORTO mq	133.07		
		(-10.73--10.27)x(3.01+2.98)/2	-1.38		
		(-11.35--10.73)x(3.06+3.01)/2	-1.88		
		(-12.35--11.35)x(3.10+3.06)/2	-3.08		
		(-12.43--12.35)x(3.10+3.10)/2	-0.25		
		(-12.59--12.43)x(3.11+3.10)/2	-0.50		
		(-13.51--12.59)x(3.13+3.11)/2	-2.87		
		(-13.98--13.51)x(3.14+3.13)/2	-1.47		
		(-14.59--13.98)x(3.16+3.14)/2	-1.92		
		(-15.60--14.59)x(3.16+3.16)/2	-3.19		
		(-15.68--15.60)x(3.16+3.16)/2	-0.25		
		(-15.82--15.68)x(3.16+3.16)/2	-0.44		
		(-16.76--15.82)x(3.16+3.16)/2	-2.97		
		(-17.23--16.76)x(3.16+3.16)/2	-1.49		
		(-17.84--17.23)x(3.17+3.16)/2	-1.93		
		(-18.85--17.84)x(3.20+3.17)/2	-3.22		
		(-18.92--18.85)x(3.20+3.20)/2	-0.22		
		(-19.06--18.92)x(3.21+3.20)/2	-0.45		
		(-20.00--19.06)x(3.26+3.21)/2	-3.04		
		(-20.47--20.00)x(3.23+3.26)/2	-1.53		
		(-21.08--20.47)x(3.21+3.23)/2	-1.96		
		(-22.10--21.08)x(3.17+3.21)/2	-3.25		
		(-22.16--22.10)x(3.16+3.17)/2	-0.19		
		(-22.29--22.16)x(3.16+3.16)/2	-0.41		
		(-23.24--22.29)x(3.15+3.16)/2	-3.00		
		(-23.72--23.24)x(3.14+3.15)/2	-1.51		
		(-24.32--23.72)x(3.14+3.14)/2	-1.88		
		(-25.35--24.32)x(3.16+3.14)/2	-3.24		
		(-25.41--25.35)x(3.16+3.16)/2	-0.19		
		(-25.43--25.41)x(3.16+3.16)/2	-0.06		
		(-25.52--25.43)x(3.16+3.16)/2	-0.28		
		(-26.24--25.52)x(3.17+3.16)/2	-2.28		
		(-26.49--26.24)x(3.16+3.17)/2	-0.79		
		(-26.97--26.49)x(3.15+3.16)/2	-1.51		
		(-27.57--26.97)x(3.13+3.15)/2	-1.88		
		(-28.23--27.57)x(3.14+3.13)/2	-2.07		
				76.49	
41 600.00	A1	(-34.95--36.23)x(3.05+1.77)/2	3.08		
		(-29.69--34.95)x(3.05+3.05)/2	16.04		
		(-27.82--29.69)x(4.30+3.05)/2	6.87		
		(-12.10--27.82)x(4.67+4.30)/2	70.50		
		(-12.40--12.10)x(4.31+4.67)/2	-1.35		
		(-1.75--12.40)x(4.58+4.31)/2	47.34		
		(-0.68--1.75)x(4.60+4.58)/2	4.91		
		(0.68--0.68)x(4.60+4.60)/2	6.26		
		(1.75-0.68)x(4.58+4.60)/2	4.91		
		(11.65-1.75)x(4.33+4.58)/2	44.10		
		(11.34-11.65)x(4.69+4.33)/2	-1.40		
		(12.61-11.34)x(4.70+4.69)/2	5.96		
		(15.25-12.61)x(2.94+4.70)/2	10.08		
		(14.99-15.25)x(2.93+2.94)/2	-0.76		
		(14.38-14.99)x(2.96+2.93)/2	-1.80		
		(13.91-14.38)x(2.97+2.96)/2	-1.39		
		(12.95-13.91)x(3.00+2.97)/2	-2.87		
		(12.83-12.95)x(3.00+3.00)/2	-0.36		
		(12.77-12.83)x(3.00+3.00)/2	-0.18		
		(11.75-12.77)x(3.02+3.00)/2	-3.07		
		(11.15-11.75)x(3.03+3.02)/2	-1.81		
		(10.67-11.15)x(3.04+3.03)/2	-1.46		
		(9.70-10.67)x(3.07+3.04)/2	-2.96		
		(9.59-9.70)x(3.07+3.07)/2	-0.34		
		(9.53-9.59)x(3.07+3.07)/2	-0.18		
		(8.51-9.53)x(3.14+3.07)/2	-3.17		
		(7.91-8.51)x(3.13+3.14)/2	-1.88		
		(7.43-7.91)x(3.14+3.13)/2	-1.50		
		(6.45-7.43)x(3.14+3.14)/2	-3.08		
		(6.35-6.45)x(3.14+3.14)/2	-0.31		
		(5.56-6.35)x(3.17+3.14)/2	-2.49		
		(5.27-5.56)x(3.16+3.17)/2	-0.92		
		(4.68-5.27)x(3.15+3.16)/2	-1.86		
		(4.18-4.68)x(3.14+3.15)/2	-1.57		
		(3.20-4.18)x(3.11+3.14)/2	-3.06		
		(3.10-3.20)x(3.11+3.11)/2	-0.31		
		(3.06-3.10)x(3.11+3.11)/2	-0.12		
		(2.02-3.06)x(3.07+3.11)/2	-3.21		
		(1.44-2.02)x(3.07+3.07)/2	-1.78		
		(0.94-1.44)x(3.06+3.07)/2	-1.53		
		(-0.05-0.94)x(3.03+3.06)/2	-3.01		
		(-0.14--0.05)x(3.03+3.03)/2	-0.27		
		(-0.18--0.14)x(3.03+3.03)/2	-0.12		
		(-1.22--0.18)x(3.02+3.03)/2	-3.15		
		(-1.80--1.22)x(3.01+3.02)/2	-1.75		
		(-2.30--1.80)x(3.02+3.01)/2	-1.51		
		(-3.30--2.30)x(3.10+3.02)/2	-3.06		
		(-3.38--3.30)x(3.11+3.10)/2	-0.25		
		(-3.41--3.38)x(3.11+3.11)/2	-0.09		
		(-4.46--3.41)x(3.12+3.11)/2	-3.27		
		(-5.03--4.46)x(3.00+3.12)/2	-1.74		
		(-5.54--5.03)x(2.87+3.00)/2	-1.50		
		(-6.56--5.54)x(2.72+2.87)/2	-2.85		
		(-6.62--6.56)x(2.71+2.72)/2	-0.16		
		(-6.65--6.62)x(2.71+2.71)/2	-0.08		
		(-7.70--6.65)x(2.72+2.71)/2	-2.85		
		(-8.27--7.70)x(2.72+2.72)/2	-1.55		
		(-8.78--8.27)x(2.72+2.72)/2	-1.39		
		(-9.81--8.78)x(2.75+2.72)/2	-2.82		
		(-9.86--9.81)x(2.76+2.75)/2	-0.14		
		(-9.89--9.86)x(2.76+2.76)/2	-0.08		
		(-10.94--9.89)x(2.79+2.76)/2	-2.91		
		(-11.50--10.94)x(2.79+2.79)/2	-1.56		
		(-12.02--11.50)x(2.80+2.79)/2	-1.45		
		(-12.28--12.02)x(2.78+2.80)/2	-0.73		
		(-13.06--12.28)x(2.75+2.78)/2	-2.16		
		(-13.09--13.06)x(2.75+2.75)/2	-0.08		
		(-13.10--13.09)x(2.75+2.75)/2	-0.03		
		A RIPORTARE mq	132.77		

		CALCOLO DELLE AREE		Foglio n. 25
RILEVATO				
N. SEZIONE PROG.	FIG.	ELEMENTI DI CALCOLO	AREA ELEMENTARE mq	AREA FIGURA mq	NOTE
		RIPORTO mq	132.77		
		(-13.12--13.10)x(2.75+2.75)/2	-0.05		
		(-14.18--13.12)x(2.74+2.75)/2	-2.91		
		(-14.74--14.18)x(2.74+2.74)/2	-1.53		
		(-15.26--14.74)x(2.75+2.74)/2	-1.43		
		(-16.31--15.26)x(2.78+2.75)/2	-2.90		
		(-16.34--16.31)x(2.78+2.78)/2	-0.08		
		(-16.36--16.34)x(2.78+2.78)/2	-0.06		
		(-17.42--16.36)x(2.79+2.78)/2	-2.95		
		(-17.98--17.42)x(2.79+2.79)/2	-1.56		
		(-18.50--17.98)x(2.79+2.79)/2	-1.45		
		(-19.56--18.50)x(2.84+2.79)/2	-2.98		
		(-19.58--19.56)x(2.84+2.84)/2	-0.06		
		(-19.59--19.58)x(2.85+2.84)/2	-0.03		
		(-20.66--19.59)x(2.89+2.85)/2	-3.07		
		(-21.21--20.66)x(2.89+2.89)/2	-1.59		
		(-21.74--21.21)x(2.90+2.89)/2	-1.53		
		(-22.81--21.74)x(2.89+2.90)/2	-3.10		
		(-22.82--22.81)x(2.89+2.89)/2	-0.03		
		(-22.83--22.82)x(2.89+2.89)/2	-0.03		
		(-23.91--22.83)x(2.97+2.89)/2	-3.16		
		(-24.45--23.91)x(2.98+2.97)/2	-1.61		
		(-24.99--24.45)x(2.99+2.98)/2	-1.61		
		(-26.07--24.99)x(2.97+2.99)/2	-3.22		
		(-27.15--26.07)x(2.97+2.97)/2	-3.21		
		(-27.68--27.15)x(2.96+2.97)/2	-1.57		
		(-28.23--27.68)x(2.95+2.96)/2	-1.63		
		(-29.30--28.23)x(2.96+2.95)/2	-3.16		
		(-29.31--29.30)x(2.96+2.96)/2	-0.03		
		(-29.32--29.31)x(2.96+2.96)/2	-0.03		
		(-30.39--29.32)x(2.72+2.96)/2	-3.04		
		(-30.93--30.39)x(2.41+2.72)/2	-1.39		
		(-31.47--30.93)x(2.06+2.41)/2	-1.21		
		(-32.54--31.47)x(1.38+2.06)/2	-1.84		
		(-32.55--32.54)x(1.37+1.38)/2	-0.01		
		(-32.57--32.55)x(1.35+1.37)/2	-0.03		
		(-33.63--32.57)x(0.65+1.35)/2	-1.06		
		(-34.16--33.63)x(0.67+0.65)/2	-0.35		
		(-34.71--34.16)x(0.61+0.67)/2	-0.35		
		(-36.23--34.71)x(1.77+0.61)/2	-1.81		
				75.11	
42 615.00	A1	(-29.73--31.43)x(4.20+3.07)/2	6.18		
		(-11.35--29.73)x(4.73+4.20)/2	82.07		
		(-11.65--11.35)x(4.37+4.73)/2	-1.37		
		(-1.75--11.65)x(4.62+4.37)/2	44.50		
		(-0.68--1.75)x(4.65+4.62)/2	4.96		
		(0.68--0.68)x(4.65+4.65)/2	6.32		
		(1.75-0.68)x(4.62+4.65)/2	4.96		
		(11.65-1.75)x(4.37+4.62)/2	44.50		
		(11.35-11.65)x(4.73+4.37)/2	-1.37		
		(32.41-11.35)x(4.14+4.73)/2	93.40		
		(33.91-32.41)x(3.13+4.14)/2	5.45		
		(33.77-33.91)x(3.13+3.13)/2	-0.44		
		(32.88-33.77)x(3.12+3.13)/2	-2.78		
		(32.69-32.88)x(3.12+3.12)/2	-0.59		
		(32.29-32.69)x(3.11+3.12)/2	-1.25		
		(31.61-32.29)x(3.09+3.11)/2	-2.11		
		(31.27-31.61)x(3.08+3.09)/2	-1.05		
		(30.53-31.27)x(3.07+3.08)/2	-2.28		
		(29.66-30.53)x(3.04+3.07)/2	-2.66		
		(29.45-29.66)x(3.03+3.04)/2	-0.64		
		(29.02-29.45)x(3.01+3.03)/2	-1.30		
		(28.37-29.02)x(2.98+3.01)/2	-1.95		
		(28.04-28.37)x(3.00+2.98)/2	-0.99		
		(27.29-28.04)x(3.00+3.00)/2	-2.25		
		(26.43-27.29)x(3.08+3.00)/2	-2.61		
		(26.21-26.43)x(3.10+3.08)/2	-0.68		
		(25.75-26.21)x(3.10+3.10)/2	-1.43		
		(25.13-25.75)x(3.08+3.10)/2	-1.92		
		(24.82-25.13)x(3.08+3.08)/2	-0.95		
		(24.05-24.82)x(3.08+3.08)/2	-2.37		
		(23.21-24.05)x(3.00+3.08)/2	-2.55		
		(22.97-23.21)x(2.97+3.00)/2	-0.72		
		(22.48-22.97)x(2.92+2.97)/2	-1.44		
		(21.89-22.48)x(2.85+2.92)/2	-1.70		
		(21.60-21.89)x(2.85+2.85)/2	-0.83		
		(20.81-21.60)x(2.86+2.85)/2	-2.26		
		(19.99-20.81)x(2.93+2.86)/2	-2.37		
		(19.73-19.99)x(2.94+2.93)/2	-0.76		
		(19.60-19.73)x(2.94+2.94)/2	-0.38		
		(19.21-19.60)x(2.94+2.94)/2	-1.15		
		(18.79-19.21)x(2.94+2.94)/2	-1.23		
		(18.65-18.79)x(2.94+2.94)/2	-0.41		
		(18.38-18.65)x(2.95+2.94)/2	-0.80		
		(17.57-18.38)x(2.94+2.95)/2	-2.39		
		(16.76-17.57)x(2.96+2.94)/2	-2.39		
		(16.49-16.76)x(2.96+2.96)/2	-0.80		
		(15.94-16.49)x(2.96+2.96)/2	-1.63		
		(15.41-15.94)x(2.96+2.96)/2	-1.57		
		(15.15-15.41)x(2.96+2.96)/2	-0.77		
		(14.33-15.15)x(2.95+2.96)/2	-2.42		
		(13.54-14.33)x(2.96+2.95)/2	-2.33		
		(13.25-13.54)x(2.96+2.96)/2	-0.86		
		(12.67-13.25)x(2.98+2.96)/2	-1.72		
		(12.17-12.67)x(2.98+2.98)/2	-1.49		
		(11.93-12.17)x(2.99+2.98)/2	-0.72		
		(11.09-11.93)x(2.99+2.99)/2	-2.51		
		(10.32-11.09)x(3.00+2.99)/2	-2.31		
		(10.01-10.32)x(3.00+3.00)/2	-0.93		
		(9.40-10.01)x(3.03+3.00)/2	-1.84		
		(8.93-9.40)x(3.06+3.03)/2	-1.43		
		(8.71-8.93)x(3.06+3.06)/2	-0.67		
		(7.85-8.71)x(3.07+3.06)/2	-2.64		
		(7.09-7.85)x(3.06+3.07)/2	-2.33		
		(6.77-7.09)x(3.06+3.06)/2	-0.98		
		A RIPORTARE mq	208.02		

		CALCOLO DELLE AREE		Foglio n. 26
RILEVATO				
N. SEZIONE PROG.	FIG.	ELEMENTI DI CALCOLO	AREA ELEMENTARE mq	AREA FIGURA mq	NOTE
		RIPORTO mq	208.02		
		(6.12-6.77)x(3.08+3.06)/2	-2.00		
		(5.69-6.12)x(3.09+3.08)/2	-1.33		
		(5.48-5.69)x(3.09+3.09)/2	-0.65		
		(4.61-5.48)x(3.11+3.09)/2	-2.70		
		(3.87-4.61)x(3.14+3.11)/2	-2.31		
		(3.54-3.87)x(3.16+3.14)/2	-1.04		
		(2.85-3.54)x(3.18+3.16)/2	-2.19		
		(2.46-2.85)x(3.19+3.18)/2	-1.24		
		(2.26-2.46)x(3.20+3.19)/2	-0.64		
		(1.38-2.26)x(3.26+3.20)/2	-2.84		
		(0.93-1.38)x(3.26+3.26)/2	-1.47		
		(0.30-0.93)x(3.27+3.26)/2	-2.06		
		(-0.42-0.30)x(3.29+3.27)/2	-2.36		
		(-0.78--0.42)x(3.30+3.29)/2	-1.19		
		(-0.96--0.78)x(3.31+3.30)/2	-0.59		
		(-1.86--0.96)x(3.32+3.31)/2	-2.98		
		(-2.57--1.86)x(3.32+3.32)/2	-2.36		
		(-2.94--2.57)x(3.32+3.32)/2	-1.23		
		(-3.69--2.94)x(3.30+3.32)/2	-2.48		
		(-4.02--3.69)x(3.30+3.30)/2	-1.09		
		(-4.19--4.02)x(3.29+3.30)/2	-0.56		
		(-5.10--4.19)x(3.29+3.29)/2	-2.99		
		(-5.80--5.10)x(3.30+3.29)/2	-2.31		
		(-6.18--5.80)x(3.29+3.30)/2	-1.25		
		(-6.96--6.18)x(3.26+3.29)/2	-2.55		
		(-7.26--6.96)x(3.24+3.26)/2	-0.97		
		(-7.41--7.26)x(3.24+3.24)/2	-0.49		
		(-8.34--7.41)x(3.21+3.24)/2	-3.00		
		(-9.02--8.34)x(3.19+3.21)/2	-2.18		
		(-9.42--9.02)x(3.17+3.19)/2	-1.27		
		(-10.23--9.42)x(3.14+3.17)/2	-2.56		
		(-10.50--10.23)x(3.13+3.14)/2	-0.85		
		(-10.63--10.50)x(3.13+3.13)/2	-0.41		
		(-11.58--10.63)x(3.10+3.13)/2	-2.96		
		(-12.24--11.58)x(3.08+3.10)/2	-2.04		
		(-12.66--12.24)x(3.07+3.08)/2	-1.29		
		(-13.50--12.66)x(3.06+3.07)/2	-2.57		
		(-13.74--13.50)x(3.05+3.06)/2	-0.73		
		(-13.86--13.74)x(3.05+3.05)/2	-0.37		
		(-14.82--13.86)x(3.03+3.05)/2	-2.92		
		(-15.47--14.82)x(3.02+3.03)/2	-1.97		
		(-15.90--15.47)x(3.01+3.02)/2	-1.30		
		(-16.77--15.90)x(3.01+3.01)/2	-2.62		
		(-16.98--16.77)x(3.00+3.01)/2	-0.63		
		(-17.74--16.98)x(3.00+3.00)/2	-2.28		
		(-18.06--17.74)x(3.00+3.00)/2	-0.96		
		(-18.69--18.06)x(2.99+3.00)/2	-1.89		
		(-19.14--18.69)x(2.99+2.99)/2	-1.35		
		(-20.05--19.14)x(2.98+2.99)/2	-2.72		
		(-20.22--20.05)x(2.98+2.98)/2	-0.51		
		(-20.30--20.22)x(2.98+2.98)/2	-0.24		
		(-21.30--20.30)x(2.97+2.98)/2	-2.98		
		(-21.91--21.30)x(2.97+2.97)/2	-1.81		
		(-22.38--21.91)x(2.97+2.97)/2	-1.40		
		(-23.32--22.38)x(2.98+2.97)/2	-2.80		
		(-23.46--23.32)x(2.98+2.98)/2	-0.42		
		(-23.53--23.46)x(2.98+2.98)/2	-0.21		
		(-24.54--23.53)x(2.96+2.98)/2	-3.00		
		(-25.14--24.54)x(2.97+2.96)/2	-1.78		
		(-25.62--25.14)x(2.96+2.97)/2	-1.42		
		(-26.59--25.62)x(2.97+2.96)/2	-2.88		
		(-26.70--26.59)x(2.97+2.97)/2	-0.33		
		(-26.75--26.70)x(2.97+2.97)/2	-0.15		
		(-27.78--26.75)x(2.96+2.97)/2	-3.05		
		(-28.36--27.78)x(3.01+2.96)/2	-1.73		
		(-28.86--28.36)x(3.04+3.01)/2	-1.51		
		(-29.86--28.86)x(3.08+3.04)/2	-3.06		
		(-29.93--29.86)x(3.08+3.08)/2	-0.22		
		(-29.97--29.93)x(3.08+3.08)/2	-0.12		
		(-31.01--29.97)x(3.05+3.08)/2	-3.19		
		(-31.43--31.01)x(3.07+3.05)/2	-1.29		
				89.18	
43 630.00	A1	(-31.62--33.10)x(4.20+3.21)/2	5.48		
		(-11.35--31.62)x(4.78+4.20)/2	91.01		
		(-11.65--11.35)x(4.42+4.78)/2	-1.38		
		(-1.75--11.65)x(4.67+4.42)/2	45.00		
		(-0.68--1.75)x(4.69+4.67)/2	5.01		
		(0.68--0.68)x(4.69+4.69)/2	6.38		
		(1.75-0.68)x(4.67+4.69)/2	5.01		
		(11.65-1.75)x(4.42+4.67)/2	45.00		
		(11.35-11.65)x(4.78+4.42)/2	-1.38		
		(32.61-11.35)x(4.18+4.78)/2	95.24		
		(34.12-32.61)x(3.16+4.18)/2	5.54		
		(33.60-34.12)x(3.17+3.16)/2	-1.65		
		(33.13-33.60)x(3.18+3.17)/2	-1.49		
		(32.15-33.13)x(3.17+3.18)/2	-3.11		
		(32.05-32.15)x(3.17+3.17)/2	-0.32		
		(31.26-32.05)x(3.15+3.17)/2	-2.50		
		(30.97-31.26)x(3.16+3.15)/2	-0.91		
		(30.39-30.97)x(3.14+3.16)/2	-1.83		
		(29.89-30.39)x(3.14+3.14)/2	-1.57		
		(28.86-29.89)x(3.14+3.14)/2	-3.23		
		(28.81-28.86)x(3.14+3.14)/2	-0.16		
		(28.79-28.81)x(3.14+3.14)/2	-0.06		
		(27.73-28.79)x(3.17+3.14)/2	-3.34		
		(27.18-27.73)x(3.18+3.17)/2	-1.75		
		(26.65-27.18)x(3.18+3.18)/2	-1.69		
		(25.58-26.65)x(3.20+3.18)/2	-3.41		
		(25.57-25.58)x(3.20+3.20)/2	-0.03		
		(24.50-25.57)x(3.17+3.20)/2	-3.41		
		(23.97-24.50)x(3.17+3.17)/2	-1.68		
		(23.42-23.97)x(3.16+3.17)/2	-1.74		
		(22.37-23.42)x(3.14+3.16)/2	-3.31		
		(22.34-22.37)x(3.14+3.14)/2	-0.09		
		A RIPORTARE mq	263.63		

		CALCOLO DELLE AREE		Foglio n. 27
RILEVATO				
N. SEZIONE PROG.	FIG.	ELEMENTI DI CALCOLO	AREA ELEMENTARE mq	AREA FIGURA mq	NOTE
		RIPORTO mq	263.63		
		(22.28-22.34)x(3.13+3.14)/2	-0.19		
		(21.26-22.28)x(3.12+3.13)/2	-3.19		
		(20.76-21.26)x(3.11+3.12)/2	-1.56		
		(20.18-20.76)x(3.11+3.11)/2	-1.80		
		(19.16-20.18)x(3.09+3.11)/2	-3.16		
		(19.10-19.16)x(3.09+3.09)/2	-0.19		
		(18.99-19.10)x(3.09+3.09)/2	-0.34		
		(18.02-18.99)x(3.11+3.09)/2	-3.01		
		(17.55-18.02)x(3.09+3.11)/2	-1.46		
		(16.94-17.55)x(3.08+3.09)/2	-1.88		
		(15.94-16.94)x(3.03+3.08)/2	-3.06		
		(15.86-15.94)x(3.03+3.03)/2	-0.24		
		(15.70-15.86)x(3.03+3.03)/2	-0.48		
		(14.78-15.70)x(3.01+3.03)/2	-2.78		
		(14.20-14.78)x(3.02+3.01)/2	-1.75		
		(13.71-14.20)x(3.02+3.02)/2	-1.48		
		(12.73-13.71)x(3.02+3.02)/2	-2.96		
		(12.63-12.73)x(3.02+3.02)/2	-0.30		
		(12.41-12.63)x(3.02+3.02)/2	-0.66		
		(11.55-12.41)x(3.03+3.02)/2	-2.60		
		(11.13-11.55)x(3.04+3.03)/2	-1.27		
		(10.47-11.13)x(3.05+3.04)/2	-2.01		
		(9.52-10.47)x(3.09+3.05)/2	-2.92		
		(9.39-9.52)x(3.09+3.09)/2	-0.40		
		(9.12-9.39)x(3.11+3.09)/2	-0.84		
		(8.31-9.12)x(3.17+3.11)/2	-2.54		
		(7.92-8.31)x(3.18+3.17)/2	-1.24		
		(7.23-7.92)x(3.21+3.18)/2	-2.20		
		(6.31-7.23)x(3.22+3.21)/2	-2.96		
		(6.15-6.31)x(3.22+3.22)/2	-0.52		
		(5.82-6.15)x(3.21+3.22)/2	-1.06		
		(5.07-5.82)x(3.19+3.21)/2	-2.40		
		(4.71-5.07)x(3.18+3.19)/2	-1.15		
		(4.00-4.71)x(3.14+3.18)/2	-2.24		
		(3.10-4.00)x(3.13+3.14)/2	-2.82		
		(2.92-3.10)x(3.13+3.13)/2	-0.56		
		(2.53-2.92)x(3.11+3.13)/2	-1.22		
		(1.84-2.53)x(3.07+3.11)/2	-2.13		
		(1.50-1.84)x(3.09+3.07)/2	-1.05		
		(0.76-1.50)x(3.11+3.09)/2	-2.29		
		(-0.11-0.76)x(3.14+3.11)/2	-2.72		
		(-0.32--0.11)x(3.16+3.14)/2	-0.66		
		(-0.76--0.32)x(3.17+3.16)/2	-1.39		
		(-1.40--0.76)x(3.18+3.17)/2	-2.03		
		(-1.71--1.40)x(3.18+3.18)/2	-0.99		
		(-2.48--1.71)x(3.19+3.18)/2	-2.45		
		(-3.32--2.48)x(3.19+3.19)/2	-2.68		
		(-3.56--3.32)x(3.18+3.19)/2	-0.76		
		(-3.68--3.56)x(3.19+3.18)/2	-0.38		
		(-4.05--3.68)x(3.19+3.19)/2	-1.18		
		(-4.49--4.05)x(3.19+3.19)/2	-1.40		
		(-4.64--4.49)x(3.19+3.19)/2	-0.48		
		(-4.92--4.64)x(3.20+3.19)/2	-0.89		
		(-5.72--4.92)x(3.20+3.20)/2	-2.56		
		(-6.53--5.72)x(3.19+3.20)/2	-2.59		
		(-6.79--6.53)x(3.19+3.19)/2	-0.83		
		(-7.34--6.79)x(3.20+3.19)/2	-1.76		
		(-7.87--7.34)x(3.20+3.20)/2	-1.70		
		(-8.13--7.87)x(3.20+3.20)/2	-0.83		
		(-8.95--8.13)x(3.19+3.20)/2	-2.62		
		(-9.74--8.95)x(3.20+3.19)/2	-2.52		
		(-10.03--9.74)x(3.20+3.20)/2	-0.93		
		(-10.63--10.03)x(3.21+3.20)/2	-1.92		
		(-11.11--10.63)x(3.21+3.21)/2	-1.54		
		(-11.34--11.11)x(3.20+3.21)/2	-0.74		
		(-12.19--11.34)x(3.19+3.20)/2	-2.72		
		(-12.95--12.19)x(3.19+3.19)/2	-2.42		
		(-13.27--12.95)x(3.19+3.19)/2	-1.02		
		(-13.92--13.27)x(3.18+3.19)/2	-2.07		
		(-14.35--13.92)x(3.18+3.18)/2	-1.37		
		(-14.55--14.35)x(3.18+3.18)/2	-0.64		
		(-15.43--14.55)x(3.17+3.18)/2	-2.79		
		(-16.16--15.43)x(3.17+3.17)/2	-2.31		
		(-16.51--16.16)x(3.16+3.17)/2	-1.11		
		(-17.21--16.51)x(3.16+3.16)/2	-2.21		
		(-17.58--17.21)x(3.17+3.16)/2	-1.17		
		(-17.76--17.58)x(3.17+3.17)/2	-0.57		
		(-18.66--17.76)x(3.17+3.17)/2	-2.85		
		(-19.37--18.66)x(3.18+3.17)/2	-2.25		
		(-19.74--19.37)x(3.18+3.18)/2	-1.18		
		(-20.51--19.74)x(3.19+3.18)/2	-2.45		
		(-20.82--20.51)x(3.19+3.19)/2	-0.99		
		(-20.97--20.82)x(3.19+3.19)/2	-0.48		
		(-21.90--20.97)x(3.20+3.19)/2	-2.97		
		(-22.37--21.90)x(3.20+3.20)/2	-1.50		
		(-22.98--22.37)x(3.20+3.20)/2	-1.95		
		(-23.80--22.98)x(3.20+3.20)/2	-2.62		
		(-24.06--23.80)x(3.20+3.20)/2	-0.83		
		(-24.19--24.06)x(3.20+3.20)/2	-0.42		
		(-25.14--24.19)x(3.20+3.20)/2	-3.04		
		(-25.79--25.14)x(3.21+3.20)/2	-2.08		
		(-26.22--25.79)x(3.21+3.21)/2	-1.38		
		(-27.09--26.22)x(3.21+3.21)/2	-2.79		
		(-27.29--27.09)x(3.21+3.21)/2	-0.64		
		(-27.40--27.29)x(3.21+3.21)/2	-0.35		
		(-28.37--27.40)x(3.21+3.21)/2	-3.11		
		(-29.00--28.37)x(3.21+3.21)/2	-2.02		
		(-29.45--29.00)x(3.21+3.21)/2	-1.44		
		(-30.38--29.45)x(3.21+3.21)/2	-2.99		
		(-30.53--30.38)x(3.21+3.21)/2	-0.48		
		(-30.61--30.53)x(3.21+3.21)/2	-0.26		
		(-31.61--30.61)x(3.21+3.21)/2	-3.21		
		(-32.21--31.61)x(3.21+3.21)/2	-1.93		
		(-32.69--32.21)x(3.21+3.21)/2	-1.54		
		A RIPORTARE mq	90.02		

AP01

		CALCOLO DELLE AREE		Foglio n. 28
RILEVATO				
N. SEZIONE PROG.	FIG.	ELEMENTI DI CALCOLO	AREA ELEMENTARE mq	AREA FIGURA mq	NOTE
		RIPORTO mq	90.02		
		(-33.10--32.69)x(3.21+3.21)/2	-1.32		
				88.70	
SP40	A1	(-31.13--32.71)x(4.25+3.19)/2	5.88		
641.94		(-11.35--31.13)x(4.82+4.25)/2	89.70		
		(-11.65--11.35)x(4.46+4.82)/2	-1.39		
		(-1.75--11.65)x(4.70+4.46)/2	45.34		
		(-0.68--1.75)x(4.73+4.70)/2	5.05		
		(0.68--0.68)x(4.73+4.73)/2	6.43		
		(1.75-0.68)x(4.70+4.73)/2	5.05		
		(11.65-1.75)x(4.46+4.70)/2	45.34		
		(11.35-11.65)x(4.82+4.46)/2	-1.39		
		(32.61-11.35)x(4.21+4.82)/2	95.99		
		(34.53-32.61)x(2.93+4.21)/2	6.85		
		(34.00-34.53)x(2.92+2.93)/2	-1.55		
		(33.52-34.00)x(2.92+2.92)/2	-1.40		
		(32.54-33.52)x(2.91+2.92)/2	-2.86		
		(32.44-32.54)x(2.91+2.91)/2	-0.29		
		(32.40-32.44)x(2.91+2.91)/2	-0.12		
		(31.36-32.40)x(2.90+2.91)/2	-3.02		
		(30.80-31.36)x(2.90+2.90)/2	-1.62		
		(30.29-30.80)x(2.90+2.90)/2	-1.48		
		(29.23-30.29)x(2.92+2.90)/2	-3.08		
		(29.21-29.23)x(2.92+2.92)/2	-0.06		
		(29.20-29.21)x(2.92+2.92)/2	-0.03		
		(28.13-29.20)x(2.93+2.92)/2	-3.13		
		(27.59-28.13)x(2.93+2.93)/2	-1.58		
		(27.05-27.59)x(2.94+2.93)/2	-1.58		
		(26.00-27.05)x(2.96+2.94)/2	-3.10		
		(25.97-26.00)x(2.96+2.96)/2	-0.09		
		(25.92-25.97)x(2.96+2.96)/2	-0.15		
		(24.89-25.92)x(2.97+2.96)/2	-3.05		
		(24.40-24.89)x(2.98+2.97)/2	-1.46		
		(23.82-24.40)x(2.98+2.98)/2	-1.73		
		(22.80-23.82)x(2.98+2.98)/2	-3.04		
		(22.74-22.80)x(2.99+2.98)/2	-0.18		
		(22.62-22.74)x(2.98+2.99)/2	-0.36		
		(22.59-22.62)x(2.99+2.98)/2	-0.09		
		(22.35-22.59)x(3.00+2.99)/2	-0.72		
		(22.15-22.35)x(3.01+3.00)/2	-0.60		
		(21.97-22.15)x(3.03+3.01)/2	-0.54		
		(21.82-21.97)x(3.01+3.03)/2	-0.45		
		(21.69-21.82)x(3.01+3.01)/2	-0.39		
		(21.57-21.69)x(3.02+3.01)/2	-0.36		
		(21.51-21.57)x(3.15+3.02)/2	-0.19		
		(21.47-21.51)x(3.03+3.15)/2	-0.12		
		(21.46-21.47)x(3.03+3.03)/2	-0.03		
		(20.93-21.46)x(2.97+3.03)/2	-1.59		
		(20.80-20.93)x(2.97+2.97)/2	-0.39		
		(20.64-20.80)x(2.96+2.97)/2	-0.47		
		(20.46-20.64)x(2.96+2.96)/2	-0.53		
		(20.25-20.46)x(2.97+2.96)/2	-0.62		
		(19.98-20.25)x(2.98+2.97)/2	-0.80		
		(19.65-19.98)x(2.99+2.98)/2	-0.99		
		(19.31-19.65)x(3.00+2.99)/2	-1.02		
		(18.42-19.31)x(3.01+3.00)/2	-2.67		
		(18.00-18.42)x(3.02+3.01)/2	-1.27		
		(17.35-18.00)x(3.03+3.02)/2	-1.97		
		(16.40-17.35)x(3.04+3.03)/2	-2.88		
		(16.27-16.40)x(3.04+3.04)/2	-0.40		
		(16.00-16.27)x(3.04+3.04)/2	-0.82		
		(15.19-16.00)x(3.05+3.04)/2	-2.47		
		(14.80-15.19)x(3.06+3.05)/2	-1.19		
		(14.11-14.80)x(3.07+3.06)/2	-2.11		
		(13.19-14.11)x(3.08+3.07)/2	-2.83		
		(13.03-13.19)x(3.08+3.08)/2	-0.49		
		(12.69-13.03)x(3.10+3.08)/2	-1.05		
		(11.95-12.69)x(3.12+3.10)/2	-2.30		
		(11.59-11.95)x(3.12+3.12)/2	-1.12		
		(10.87-11.59)x(3.13+3.12)/2	-2.25		
		(10.51-10.87)x(3.13+3.13)/2	-1.13		
		(9.80-10.51)x(3.14+3.13)/2	-2.23		
		(9.39-9.80)x(3.15+3.14)/2	-1.29		
		(8.72-9.39)x(3.16+3.15)/2	-2.11		
		(8.39-8.72)x(3.17+3.16)/2	-1.04		
		(7.64-8.39)x(3.18+3.17)/2	-2.38		
		(6.79-7.64)x(3.19+3.18)/2	-2.71		
		(6.56-6.79)x(3.20+3.19)/2	-0.73		
		(6.08-6.56)x(3.20+3.20)/2	-1.54		
		(5.48-6.08)x(3.19+3.20)/2	-1.92		
		(5.19-5.48)x(3.19+3.19)/2	-0.93		
		(4.40-5.19)x(3.19+3.19)/2	-2.52		
		(3.59-4.40)x(3.20+3.19)/2	-2.59		
		(3.33-3.59)x(3.20+3.20)/2	-0.83		
		(2.77-3.33)x(3.20+3.20)/2	-1.79		
		(2.25-2.77)x(3.20+3.20)/2	-1.66		
		(1.99-2.25)x(3.20+3.20)/2	-0.83		
		(1.17-1.99)x(3.19+3.20)/2	-2.62		
		(0.39-1.17)x(3.19+3.19)/2	-2.49		
		(0.09-0.39)x(3.19+3.19)/2	-0.96		
		(-0.54-0.09)x(3.20+3.19)/2	-2.01		
		(-0.99--0.54)x(3.20+3.20)/2	-1.44		
		(-1.21--0.99)x(3.20+3.20)/2	-0.70		
		(-2.07--1.21)x(3.19+3.20)/2	-2.75		
		(-2.81--2.07)x(3.19+3.19)/2	-2.36		
		(-3.14--2.81)x(3.18+3.19)/2	-1.05		
		(-3.84--3.14)x(3.18+3.18)/2	-2.23		
		(-4.22--3.84)x(3.18+3.18)/2	-1.21		
		(-4.41--4.22)x(3.18+3.18)/2	-0.60		
		(-5.30--4.41)x(3.18+3.18)/2	-2.83		
		(-6.01--5.30)x(3.18+3.18)/2	-2.26		
		(-6.38--6.01)x(3.19+3.18)/2	-1.18		
		(-7.15--6.38)x(3.19+3.19)/2	-2.46		
		(-7.46--7.15)x(3.19+3.19)/2	-0.99		
		(-8.20--7.46)x(3.19+3.19)/2	-2.36		
		A RIPORTARE mq	171.44		

		CALCOLO DELLE AREE		Foglio n. 29
RILEVATO				
N. SEZIONE PROG.	FIG.	ELEMENTI DI CALCOLO	AREA ELEMENTARE mq	AREA FIGURA mq	NOTE
		RIPORTO mq	171.44		
		(-8.54--8.20)x(3.19+3.19)/2	-1.08		
		(-9.21--8.54)x(3.19+3.19)/2	-2.14		
		(-9.62--9.21)x(3.19+3.19)/2	-1.31		
		(-10.46--9.62)x(3.19+3.19)/2	-2.68		
		(-10.69--10.46)x(3.19+3.19)/2	-0.73		
		(-10.81--10.69)x(3.19+3.19)/2	-0.38		
		(-11.77--10.81)x(3.19+3.19)/2	-3.06		
		(-12.41--11.77)x(3.19+3.19)/2	-2.04		
		(-12.85--12.41)x(3.19+3.19)/2	-1.40		
		(-13.76--12.85)x(3.18+3.19)/2	-2.90		
		(-13.93--13.76)x(3.18+3.18)/2	-0.54		
		(-14.01--13.93)x(3.18+3.18)/2	-0.25		
		(-15.01--14.01)x(3.18+3.18)/2	-3.18		
		(-15.61--15.01)x(3.18+3.18)/2	-1.91		
		(-16.09--15.61)x(3.18+3.18)/2	-1.53		
		(-17.07--16.09)x(3.17+3.18)/2	-3.11		
		(-17.16--17.07)x(3.17+3.17)/2	-0.29		
		(-17.21--17.16)x(3.17+3.17)/2	-0.16		
		(-18.24--17.21)x(3.16+3.17)/2	-3.26		
		(-18.81--18.24)x(3.17+3.16)/2	-1.80		
		(-19.32--18.81)x(3.16+3.17)/2	-1.61		
		(-20.38--19.32)x(3.17+3.16)/2	-3.35		
		(-20.40--20.38)x(3.17+3.17)/2	-0.06		
		(-20.41--20.40)x(3.17+3.17)/2	-0.03		
		(-21.48--20.41)x(3.16+3.17)/2	-3.39		
		(-22.01--21.48)x(3.15+3.16)/2	-1.67		
		(-22.56--22.01)x(3.14+3.15)/2	-1.73		
		(-23.61--22.56)x(3.16+3.14)/2	-3.31		
		(-23.63--23.61)x(3.16+3.16)/2	-0.06		
		(-23.69--23.63)x(3.16+3.16)/2	-0.19		
		(-24.71--23.69)x(3.13+3.16)/2	-3.21		
		(-25.21--24.71)x(3.13+3.13)/2	-1.56		
		(-25.79--25.21)x(3.16+3.13)/2	-1.82		
		(-26.09--25.79)x(3.15+3.16)/2	-0.95		
		(-26.87--26.09)x(3.17+3.15)/2	-2.46		
		(-26.99--26.87)x(3.17+3.17)/2	-0.38		
		(-27.95--26.99)x(3.14+3.17)/2	-3.03		
		(-28.41--27.95)x(3.13+3.14)/2	-1.44		
		(-29.03--28.41)x(3.13+3.13)/2	-1.94		
		(-30.01--29.03)x(3.08+3.13)/2	-3.04		
		(-30.10--30.01)x(3.08+3.08)/2	-0.28		
		(-30.30--30.10)x(3.08+3.08)/2	-0.62		
		(-31.18--30.30)x(3.10+3.08)/2	-2.72		
		(-31.61--31.18)x(3.14+3.10)/2	-1.34		
		(-32.26--31.61)x(3.19+3.14)/2	-2.06		
		(-32.71--32.26)x(3.19+3.19)/2	-1.44		
				94.00	
44 645.00	A1	(-29.85--31.61)x(4.29+3.11)/2	6.51		
		(-11.35--29.85)x(4.82+4.29)/2	84.27		
		(-11.65--11.35)x(4.46+4.82)/2	-1.39		
		(-1.75--11.65)x(4.71+4.46)/2	45.39		
		(-0.68--1.75)x(4.74+4.71)/2	5.06		
		(0.68--0.68)x(4.74+4.74)/2	6.45		
		(1.75-0.68)x(4.71+4.74)/2	5.06		
		(11.65-1.75)x(4.46+4.71)/2	45.39		
		(11.35-11.65)x(4.83+4.46)/2	-1.39		
		(32.61-11.35)x(4.22+4.83)/2	96.20		
		(34.43-32.61)x(3.00+4.22)/2	6.57		
		(34.35-34.43)x(3.00+3.00)/2	-0.24		
		(33.60-34.35)x(2.95+3.00)/2	-2.23		
		(32.75-33.60)x(2.95+2.95)/2	-2.51		
		(32.52-32.75)x(2.94+2.95)/2	-0.68		
		(32.04-32.52)x(2.94+2.94)/2	-1.41		
		(31.44-32.04)x(2.94+2.94)/2	-1.76		
		(30.85-31.44)x(3.04+2.94)/2	-1.76		
		(30.46-30.85)x(3.03+3.04)/2	-1.18		
		(30.36-30.46)x(2.94+3.03)/2	-0.30		
		(29.55-30.36)x(2.95+2.94)/2	-2.39		
		(29.28-29.55)x(2.95+2.95)/2	-0.80		
		(28.73-29.28)x(2.95+2.95)/2	-1.62		
		(28.21-28.73)x(2.95+2.95)/2	-1.53		
		(27.95-28.21)x(2.95+2.95)/2	-0.77		
		(27.13-27.95)x(2.97+2.95)/2	-2.43		
		(26.71-27.13)x(2.98+2.97)/2	-1.25		
		(26.05-26.71)x(3.00+2.98)/2	-1.97		
		(25.42-26.05)x(3.01+3.00)/2	-1.89		
		(24.97-25.42)x(3.01+3.01)/2	-1.35		
		(24.76-24.97)x(3.01+3.01)/2	-0.63		
		(23.89-24.76)x(3.01+3.01)/2	-2.62		
		(23.16-23.89)x(3.02+3.01)/2	-2.20		
		(22.82-23.16)x(3.02+3.02)/2	-1.03		
		(22.11-22.82)x(3.03+3.02)/2	-2.15		
		(21.74-22.11)x(3.04+3.03)/2	-1.12		
		(21.56-21.74)x(3.04+3.04)/2	-0.55		
		(20.66-21.56)x(3.04+3.04)/2	-2.74		
		(19.96-20.66)x(3.05+3.04)/2	-2.13		
		(19.58-19.96)x(3.06+3.05)/2	-1.16		
		(18.80-19.58)x(3.07+3.06)/2	-2.39		
		(18.50-18.80)x(3.08+3.07)/2	-0.92		
		(18.36-18.50)x(3.08+3.08)/2	-0.43		
		(17.42-18.36)x(3.09+3.08)/2	-2.90		
		(16.76-17.42)x(3.09+3.09)/2	-2.04		
		(16.35-16.76)x(3.08+3.09)/2	-1.26		
		(15.49-16.35)x(3.10+3.08)/2	-2.66		
		(15.27-15.49)x(3.10+3.10)/2	-0.68		
		(15.16-15.27)x(3.10+3.10)/2	-0.34		
		(14.19-15.16)x(3.12+3.10)/2	-3.02		
		(13.56-14.19)x(3.12+3.12)/2	-1.97		
		(13.11-13.56)x(3.13+3.12)/2	-1.41		
		(12.17-13.11)x(3.14+3.13)/2	-2.95		
		(12.03-12.17)x(3.14+3.14)/2	-0.44		
		(11.96-12.03)x(3.14+3.14)/2	-0.22		
		(10.95-11.96)x(3.15+3.14)/2	-3.18		
		(10.37-10.95)x(3.15+3.15)/2	-1.83		
		A RIPORTARE mq	225.08		

		CALCOLO DELLE AREE		Foglio n. 30
RILEVATO				
N. SEZIONE PROG.	FIG.	ELEMENTI DI CALCOLO	AREA ELEMENTARE mq	AREA FIGURA mq	NOTE
		RIPORTO mq	225.08		
		(9.88-10.37)x(3.15+3.15)/2	-1.54		
		(9.63-9.88)x(3.15+3.15)/2	-0.79		
		(8.86-9.63)x(3.16+3.15)/2	-2.43		
		(8.81-8.86)x(3.16+3.16)/2	-0.16		
		(8.80-8.81)x(3.16+3.16)/2	-0.03		
		(8.77-8.80)x(3.16+3.16)/2	-0.09		
		(7.72-8.77)x(3.17+3.16)/2	-3.32		
		(7.17-7.72)x(3.18+3.17)/2	-1.75		
		(6.64-7.17)x(3.19+3.18)/2	-1.69		
		(5.57-6.64)x(3.19+3.19)/2	-3.41		
		(5.56-5.57)x(3.19+3.19)/2	-0.03		
		(5.55-5.56)x(3.19+3.19)/2	-0.03		
		(4.48-5.55)x(3.19+3.19)/2	-3.41		
		(3.97-4.48)x(3.19+3.19)/2	-1.63		
		(3.41-3.97)x(3.19+3.19)/2	-1.79		
		(2.37-3.41)x(3.19+3.19)/2	-3.32		
		(2.33-2.37)x(3.19+3.19)/2	-0.13		
		(2.24-2.33)x(3.19+3.19)/2	-0.29		
		(1.25-2.24)x(3.19+3.19)/2	-3.16		
		(0.77-1.25)x(3.19+3.19)/2	-1.53		
		(0.17-0.77)x(3.18+3.19)/2	-1.91		
		(-0.83-0.17)x(3.18+3.18)/2	-3.18		
		(-0.91--0.83)x(3.18+3.18)/2	-0.25		
		(-1.07--0.91)x(3.18+3.18)/2	-0.51		
		(-1.98--1.07)x(3.18+3.18)/2	-2.89		
		(-2.43--1.98)x(3.18+3.18)/2	-1.43		
		(-3.06--2.43)x(3.18+3.18)/2	-2.00		
		(-4.02--3.06)x(3.18+3.18)/2	-3.05		
		(-4.14--4.02)x(3.18+3.18)/2	-0.38		
		(-4.38--4.14)x(3.17+3.18)/2	-0.76		
		(-5.22--4.38)x(3.16+3.17)/2	-2.66		
		(-5.62--5.22)x(3.17+3.16)/2	-1.27		
		(-6.30--5.62)x(3.17+3.17)/2	-2.16		
		(-7.22--6.30)x(3.17+3.17)/2	-2.92		
		(-7.38--7.22)x(3.17+3.17)/2	-0.51		
		(-7.98--7.38)x(3.30+3.17)/2	-1.94		
		(-8.01--7.98)x(3.30+3.30)/2	-0.10		
		(-8.06--8.01)x(3.29+3.30)/2	-0.16		
		(-8.21--8.06)x(3.27+3.29)/2	-0.49		
		(-8.31--8.21)x(3.29+3.27)/2	-0.33		
		(-8.34--8.31)x(3.29+3.29)/2	-0.10		
		(-8.46--8.34)x(3.31+3.29)/2	-0.40		
		(-8.47--8.46)x(3.31+3.31)/2	-0.03		
		(-8.90--8.47)x(3.28+3.31)/2	-1.42		
		(-9.38--8.90)x(3.27+3.28)/2	-1.57		
		(-10.59--9.38)x(3.23+3.27)/2	-3.93		
		(-10.60--10.59)x(3.23+3.23)/2	-0.03		
		(-10.61--10.60)x(3.30+3.23)/2	-0.03		
		(-10.79--10.61)x(3.20+3.30)/2	-0.58		
		(-11.01--10.79)x(3.18+3.20)/2	-0.70		
		(-11.69--11.01)x(3.16+3.18)/2	-2.16		
		(-12.02--11.69)x(3.17+3.16)/2	-1.04		
		(-12.96--12.02)x(3.15+3.17)/2	-2.97		
		(-14.09--12.96)x(3.15+3.15)/2	-3.56		
		(-14.32--14.09)x(3.12+3.15)/2	-0.72		
		(-14.92--14.32)x(3.08+3.12)/2	-1.86		
		(-15.22--14.92)x(3.08+3.08)/2	-0.92		
		(-16.00--15.22)x(3.06+3.08)/2	-2.39		
		(-16.82--16.00)x(3.06+3.06)/2	-2.51		
		(-17.08--16.82)x(3.06+3.06)/2	-0.80		
		(-17.63--17.08)x(3.07+3.06)/2	-1.69		
		(-18.16--17.63)x(3.09+3.07)/2	-1.63		
		(-18.41--18.16)x(3.09+3.09)/2	-0.77		
		(-19.24--18.41)x(3.11+3.09)/2	-2.57		
		(-20.01--19.24)x(3.13+3.11)/2	-2.40		
		(-20.32--20.01)x(3.14+3.13)/2	-0.97		
		(-20.94--20.32)x(3.13+3.14)/2	-1.94		
		(-21.39--20.94)x(3.14+3.13)/2	-1.41		
		(-21.61--21.39)x(3.14+3.14)/2	-0.69		
		(-22.47--21.61)x(3.14+3.14)/2	-2.70		
		(-23.21--22.47)x(3.15+3.14)/2	-2.33		
		(-23.55--23.21)x(3.17+3.15)/2	-1.07		
		(-24.25--23.55)x(3.14+3.17)/2	-2.21		
		(-24.63--24.25)x(3.12+3.14)/2	-1.19		
		(-24.81--24.63)x(3.13+3.12)/2	-0.56		
		(-25.71--24.81)x(3.19+3.13)/2	-2.84		
		(-26.41--25.71)x(3.19+3.19)/2	-2.23		
		(-26.78--26.41)x(3.19+3.19)/2	-1.18		
		(-26.98--26.78)x(3.19+3.19)/2	-0.64		
		(-27.56--26.98)x(3.19+3.19)/2	-1.85		
		(-27.79--27.56)x(3.19+3.19)/2	-0.73		
		(-27.86--27.79)x(3.18+3.19)/2	-0.22		
		(-28.01--27.86)x(3.19+3.18)/2	-0.48		
		(-28.94--28.01)x(3.16+3.19)/2	-2.95		
		(-29.61--28.94)x(3.15+3.16)/2	-2.11		
		(-30.02--29.61)x(3.15+3.15)/2	-1.29		
		(-30.87--30.02)x(3.14+3.15)/2	-2.67		
		(-31.10--30.87)x(3.14+3.14)/2	-0.72		
		(-31.21--31.10)x(3.13+3.14)/2	-0.34		
		(-31.61--31.21)x(3.11+3.13)/2	-1.25		
				92.30	
45 660.00	A1	(-26.38--26.57)x(3.01+2.84)/2	0.56		
		(-25.29--26.38)x(3.01+3.01)/2	3.28		
		(-23.05--25.29)x(4.51+3.01)/2	8.42		
		(-11.35--23.05)x(4.87+4.51)/2	54.87		
		(-11.65--11.35)x(4.51+4.87)/2	-1.41		
		(-1.75--11.65)x(4.76+4.51)/2	45.89		
		(-0.68--1.75)x(4.78+4.76)/2	5.10		
		(0.68--0.68)x(4.78+4.78)/2	6.50		
		(1.75-0.68)x(4.76+4.78)/2	5.10		
		(12.65-1.75)x(4.48+4.76)/2	50.36		
		(12.35-12.65)x(4.85+4.48)/2	-1.40		
		(33.61-12.35)x(4.24+4.85)/2	96.63		
		(35.48-33.61)x(2.99+4.24)/2	6.76		
		A RIPORTARE mq	280.66		

	CALCOLO DELLE AREE		Foglio n. 31

RILEVATO

N. SEZIONE PROG.	FIG.	ELEMENTI DI CALCOLO	AREA ELEMENTARE mq	AREA FIGURA mq	NOTE
		RIPORTO mq	280.66		
		(34.10-35.48)x(2.99+2.99)/2	-4.13		
		(33.53-34.10)x(2.98+2.99)/2	-1.70		
		(33.02-33.53)x(2.97+2.98)/2	-1.52		
		(31.96-33.02)x(2.92+2.97)/2	-3.12		
		(31.94-31.96)x(2.92+2.92)/2	-0.06		
		(31.93-31.94)x(2.92+2.92)/2	-0.03		
		(30.87-31.93)x(2.83+2.92)/2	-3.05		
		(30.34-30.87)x(2.82+2.83)/2	-1.50		
		(29.79-30.34)x(2.81+2.82)/2	-1.55		
		(28.75-29.79)x(2.83+2.81)/2	-2.93		
		(28.71-28.75)x(2.83+2.83)/2	-0.11		
		(28.63-28.71)x(2.83+2.83)/2	-0.23		
		(27.63-28.63)x(2.90+2.83)/2	-2.87		
		(27.16-27.63)x(2.90+2.90)/2	-1.36		
		(26.55-27.16)x(2.91+2.90)/2	-1.77		
		(25.56-26.55)x(2.91+2.91)/2	-2.88		
		(25.48-25.56)x(2.91+2.91)/2	-0.23		
		(25.30-25.48)x(2.91+2.91)/2	-0.52		
		(24.40-25.30)x(2.95+2.91)/2	-2.64		
		(23.97-24.40)x(2.96+2.95)/2	-1.27		
		(23.32-23.97)x(2.96+2.96)/2	-1.92		
		(22.38-23.32)x(2.98+2.96)/2	-2.79		
		(22.24-22.38)x(2.98+2.98)/2	-0.42		
		(22.18-22.24)x(2.98+2.98)/2	-0.18		
		(21.96-22.18)x(2.99+2.98)/2	-0.66		
		(21.36-21.96)x(2.99+2.99)/2	-1.79		
		(21.17-21.36)x(3.00+2.99)/2	-0.57		
		(20.79-21.17)x(3.00+3.00)/2	-1.14		
		(20.09-20.79)x(3.01+3.00)/2	-2.10		
		(19.19-20.09)x(3.06+3.01)/2	-2.73		
		(19.01-19.19)x(3.07+3.06)/2	-0.55		
		(18.63-19.01)x(3.08+3.07)/2	-1.17		
		(17.93-18.63)x(3.09+3.08)/2	-2.16		
		(17.60-17.93)x(3.09+3.09)/2	-1.02		
		(16.86-17.60)x(3.10+3.09)/2	-2.29		
		(16.01-16.86)x(3.11+3.10)/2	-2.64		
		(15.78-16.01)x(3.11+3.11)/2	-0.72		
		(15.30-15.78)x(3.12+3.11)/2	-1.50		
		(14.70-15.30)x(3.14+3.12)/2	-1.88		
		(14.42-14.70)x(3.15+3.14)/2	-0.88		
		(13.62-14.42)x(3.17+3.15)/2	-2.53		
		(12.82-13.62)x(3.11+3.17)/2	-2.51		
		(12.55-12.82)x(3.10+3.11)/2	-0.84		
		(11.97-12.55)x(3.06+3.10)/2	-1.79		
		(11.47-11.97)x(3.03+3.06)/2	-1.52		
		(11.23-11.47)x(2.99+3.03)/2	-0.72		
		(10.39-11.23)x(2.90+2.99)/2	-2.47		
		(10.22-10.39)x(2.82+2.90)/2	-0.49		
		(10.17-10.22)x(2.72+2.83)/2	-0.14		
		(9.98-10.17)x(2.67+2.72)/2	-0.51		
		(9.90-9.98)x(2.64+2.67)/2	-0.21		
		(9.68-9.90)x(2.63+2.64)/2	-0.58		
		(9.31-9.68)x(2.42+2.63)/2	-0.93		
		(8.64-9.31)x(1.88+2.42)/2	-1.44		
		(8.24-8.64)x(1.54+1.88)/2	-0.68		
		(8.04-8.24)x(1.37+1.54)/2	-0.29		
		(7.16-8.04)x(0.49+1.37)/2	-0.82		
		(6.90-7.16)x(0.30+0.49)/2	-0.10		
		(6.76-6.90)x(0.26+0.30)/2	-0.04		
		(6.65-6.76)x(0.22+0.26)/2	-0.03		
		(6.61-6.65)x(0.21+0.22)/2	-0.01		
		(6.58-6.61)x(0.22+0.21)/2	-0.01		
		(6.56-6.58)x(0.18+0.22)/2	-0.00		
		(6.44-6.56)x(0.20+0.18)/2	-0.02		
		(6.08-6.44)x(0.16+0.20)/2	-0.06		
		(5.30-6.08)x(0.13+0.16)/2	-0.11		
		(5.00-5.30)x(0.13+0.13)/2	-0.04		
		(4.26-5.00)x(0.15+0.13)/2	-0.10		
		(3.93-4.26)x(0.15+0.15)/2	-0.05		
		(3.27-3.93)x(0.19+0.15)/2	-0.11		
		(2.85-3.27)x(0.19+0.19)/2	-0.08		
		(2.63-2.85)x(0.23+0.19)/2	-0.05		
		(2.26-2.63)x(0.30+0.23)/2	-0.10		
		(2.11-2.26)x(0.35+0.30)/2	-0.05		
		(2.06-2.11)x(0.40+0.35)/2	-0.02		
		(1.95-2.06)x(0.27+0.40)/2	-0.04		
		(1.79-1.95)x(0.62+0.27)/2	-0.07		
		(1.77-1.79)x(0.64+0.63)/2	-0.01		
		(1.67-1.77)x(0.71+0.64)/2	-0.07		
		(0.69-1.67)x(1.47+0.71)/2	-1.07		
		(0.08-0.69)x(1.84+1.47)/2	-1.01		
		(-0.38-0.08)x(2.15+1.84)/2	-0.92		
		(-0.62--0.38)x(2.24+2.15)/2	-0.53		
		(-0.98--0.62)x(2.41+2.24)/2	-0.84		
		(-1.13--0.98)x(2.46+2.41)/2	-0.37		
		(-1.16--1.13)x(2.40+2.46)/2	-0.07		
		(-1.37--1.16)x(2.41+2.40)/2	-0.51		
		(-1.45--1.37)x(2.49+2.46)/2	-0.20		
		(-1.46--1.45)x(2.49+2.49)/2	-0.02		
		(-1.51--1.46)x(2.50+2.49)/2	-0.12		
		(-2.54--1.51)x(2.67+2.50)/2	-2.66		
		(-3.10--2.54)x(2.73+2.67)/2	-1.51		
		(-3.62--3.10)x(2.80+2.73)/2	-1.44		
		(-4.69--3.62)x(2.89+2.80)/2	-3.04		
		(-4.70--4.69)x(2.89+2.89)/2	-0.03		
		(-5.77--4.70)x(2.97+2.89)/2	-3.14		
		(-6.29--5.77)x(2.99+2.97)/2	-1.55		
		(-6.85--6.29)x(3.03+2.99)/2	-1.69		
		(-7.88--6.85)x(3.03+3.03)/2	-3.12		
		(-7.93--7.88)x(3.03+3.03)/2	-0.15		
		(-8.02--7.93)x(3.02+3.03)/2	-0.27		
		(-9.00--8.02)x(3.02+3.02)/2	-2.96		
		(-9.47--9.00)x(3.05+3.02)/2	-1.43		
		(-10.08--9.47)x(3.06+3.05)/2	-1.86		
		A RIPORTARE mq	167.93		

		CALCOLO DELLE AREE		Foglio n. 32
RILEVATO				
N. SEZIONE PROG.	FIG.	ELEMENTI DI CALCOLO	AREA ELEMENTARE mq	AREA FIGURA mq	NOTE
		RIPORTO mq	167.93		
		(-11.07--10.08)x(3.08+3.06)/2	-3.04		
		(-11.16--11.07)x(3.08+3.08)/2	-0.28		
		(-11.35--11.16)x(3.08+3.08)/2	-0.59		
		(-12.24--11.35)x(3.06+3.08)/2	-2.73		
		(-12.66--12.24)x(3.06+3.06)/2	-1.29		
		(-13.32--12.66)x(3.04+3.06)/2	-2.01		
		(-13.65--13.32)x(3.04+3.04)/2	-1.00		
		(-14.39--13.65)x(2.99+3.04)/2	-2.23		
		(-14.69--14.39)x(2.99+2.99)/2	-0.90		
		(-15.47--14.69)x(3.06+2.99)/2	-2.36		
		(-15.84--15.47)x(3.08+3.06)/2	-1.14		
		(-16.55--15.84)x(3.13+3.08)/2	-2.20		
		(-17.44--16.55)x(3.14+3.13)/2	-2.79		
		(-17.63--17.44)x(3.14+3.14)/2	-0.60		
		(-18.02--17.63)x(3.14+3.14)/2	-1.22		
		(-18.70--18.02)x(3.13+3.14)/2	-2.13		
		(-19.03--18.70)x(3.14+3.13)/2	-1.03		
		(-19.78--19.03)x(3.15+3.14)/2	-2.36		
		(-20.62--19.78)x(3.15+3.15)/2	-2.65		
		(-20.86--20.62)x(3.15+3.15)/2	-0.76		
		(-21.35--20.86)x(3.13+3.15)/2	-1.54		
		(-21.79--21.35)x(3.10+3.13)/2	-1.37		
		(-21.94--21.79)x(3.09+3.10)/2	-0.46		
		(-22.61--21.94)x(3.04+3.09)/2	-2.05		
		(-23.01--22.61)x(3.02+3.04)/2	-1.21		
		(-23.42--23.01)x(3.01+3.02)/2	-1.24		
		(-24.09--23.42)x(2.97+3.01)/2	-2.00		
		(-24.68--24.09)x(2.93+2.97)/2	-1.74		
		(-25.17--24.68)x(2.92+2.93)/2	-1.43		
		(-25.40--25.17)x(2.90+2.92)/2	-0.67		
		(-26.25--25.40)x(2.85+2.90)/2	-2.44		
		(-26.57--26.25)x(2.84+2.85)/2	-0.91		
				117.56	
46 675.00	A1	(-12.95--14.85)x(4.70+4.70)/2	8.93		
		(-12.61--12.95)x(4.93+4.70)/2	1.64		
		(-11.34--12.61)x(4.92+4.93)/2	6.25		
		(-11.65--11.34)x(4.55+4.92)/2	-1.47		
		(-1.75--11.65)x(4.80+4.55)/2	46.28		
		(-0.68--1.75)x(4.83+4.80)/2	5.15		
		(0.68--0.68)x(4.83+4.83)/2	6.57		
		(1.75-0.68)x(4.80+4.83)/2	5.15		
		(15.15-1.75)x(4.47+4.80)/2	62.11		
		(14.85-15.15)x(4.83+4.47)/2	-1.40		
		(36.11-14.85)x(4.22+4.83)/2	96.20		
		(37.75-36.11)x(3.13+4.22)/2	6.03		
		(34.78-37.75)x(3.40+3.13)/2	-9.70		
		(34.63-34.78)x(3.42+3.40)/2	-0.51		
		(34.33-34.63)x(3.39+3.42)/2	-1.02		
		(33.55-34.33)x(3.34+3.39)/2	-2.62		
		(32.74-33.55)x(3.26+3.34)/2	-2.67		
		(32.47-32.74)x(3.23+3.26)/2	-0.88		
		(31.91-32.47)x(3.23+3.23)/2	-1.81		
		(31.40-31.91)x(3.22+3.23)/2	-1.64		
		(31.16-31.40)x(3.24+3.22)/2	-0.78		
		(30.32-31.16)x(3.25+3.24)/2	-2.73		
		(29.57-30.32)x(3.39+3.25)/2	-2.49		
		(29.24-29.57)x(3.43+3.39)/2	-1.13		
		(28.55-29.24)x(3.53+3.43)/2	-2.40		
		(28.17-28.55)x(3.59+3.53)/2	-1.35		
		(27.98-28.17)x(3.60+3.59)/2	-0.68		
		(27.09-27.98)x(3.68+3.60)/2	-3.24		
		(26.40-27.09)x(3.72+3.68)/2	-2.55		
		(26.01-26.40)x(3.75+3.72)/2	-1.46		
		(25.20-26.01)x(3.78+3.75)/2	-3.05		
		(24.94-25.20)x(3.79+3.78)/2	-0.98		
		(24.81-24.94)x(3.79+3.79)/2	-0.49		
		(23.86-24.81)x(3.77+3.79)/2	-3.59		
		(23.22-23.86)x(3.76+3.77)/2	-2.41		
		(22.78-23.22)x(3.75+3.76)/2	-1.65		
		(21.85-22.78)x(3.75+3.75)/2	-3.49		
		(21.70-21.85)x(3.75+3.75)/2	-0.56		
		(21.64-21.70)x(3.75+3.75)/2	-0.22		
		(20.63-21.64)x(3.78+3.75)/2	-3.80		
		(20.05-20.63)x(3.75+3.78)/2	-2.18		
		(19.55-20.05)x(3.72+3.75)/2	-1.87		
		(18.50-19.55)x(3.66+3.72)/2	-3.87		
		(18.47-18.50)x(3.66+3.66)/2	-0.11		
		(18.46-18.47)x(3.66+3.66)/2	-0.04		
		(17.40-18.46)x(3.76+3.66)/2	-3.93		
		(16.85-17.40)x(3.72+3.76)/2	-2.06		
		(16.32-16.85)x(3.72+3.72)/2	-1.97		
		(15.29-16.32)x(3.26+3.72)/2	-3.59		
		(15.24-15.29)x(3.25+3.26)/2	-0.16		
		(15.14-15.24)x(3.19+3.25)/2	-0.32		
		(14.17-15.14)x(2.57+3.19)/2	-2.79		
		(13.70-14.17)x(2.52+2.57)/2	-1.20		
		(13.09-13.70)x(2.41+2.52)/2	-1.50		
		(12.12-13.09)x(2.24+2.41)/2	-2.26		
		(12.01-12.12)x(2.23+2.24)/2	-0.25		
		(11.79-12.01)x(2.15+2.23)/2	-0.48		
		(10.94-11.79)x(1.87+2.15)/2	-1.71		
		(10.79-10.94)x(1.99+1.87)/2	-0.29		
		(10.33-10.79)x(2.05+1.99)/2	-0.93		
		(10.31-10.33)x(2.04+2.05)/2	-0.04		
		(10.30-10.31)x(2.14+2.04)/2	-0.02		
		(10.29-10.30)x(2.13+2.14)/2	-0.02		
		(10.26-10.29)x(2.12+2.13)/2	-0.06		
		(10.17-10.26)x(1.78+2.12)/2	-0.18		
		(10.12-10.17)x(1.79+1.78)/2	-0.09		
		(9.86-10.12)x(1.32+1.79)/2	-0.40		
		(8.95-9.86)x(0.82+1.32)/2	-0.97		
		(8.78-8.95)x(0.73+0.82)/2	-0.13		
		(8.44-8.78)x(0.59+0.73)/2	-0.22		
		(7.71-8.44)x(0.31+0.59)/2	-0.33		
		A RIPORTARE mq	147.57		

		CALCOLO DELLE AREE		Foglio n. 33
RILEVATO				
N. SEZIONE PROG.	FIG.	ELEMENTI DI CALCOLO	AREA ELEMENTARE mq	AREA FIGURA mq	NOTE
		RIPORTO mq	147.57		
		(7.64-7.71)x(0.29+0.31)/2	-0.02		
		(7.28-7.64)x(0.26+0.29)/2	-0.10		
		(6.63-7.28)x(0.16+0.26)/2	-0.14		
		(5.77-6.63)x(0.15+0.16)/2	-0.13		
		(5.55-5.77)x(0.15+0.15)/2	-0.03		
		(5.09-5.55)x(0.15+0.15)/2	-0.07		
		(4.47-5.09)x(0.13+0.15)/2	-0.09		
		(4.19-4.47)x(0.14+0.13)/2	-0.04		
		(3.40-4.19)x(0.12+0.14)/2	-0.10		
		(2.60-3.40)x(0.43+0.12)/2	-0.22		
		(2.32-2.60)x(0.51+0.43)/2	-0.13		
		(1.73-2.32)x(1.06+0.51)/2	-0.46		
		(1.24-1.73)x(1.53+1.06)/2	-0.63		
		(1.01-1.24)x(1.66+1.53)/2	-0.37		
		(0.17-1.01)x(2.16+1.66)/2	-1.60		
		(-0.27-0.17)x(2.30+2.16)/2	-0.98		
		(-0.91--0.27)x(2.41+2.30)/2	-1.51		
		(-1.62--0.91)x(2.52+2.41)/2	-1.75		
		(-1.99--1.62)x(2.56+2.52)/2	-0.94		
		(-2.16--1.99)x(2.57+2.56)/2	-0.44		
		(-3.06--2.16)x(2.57+2.57)/2	-2.31		
		(-3.75--3.06)x(2.66+2.57)/2	-1.80		
		(-4.14--3.75)x(2.71+2.66)/2	-1.05		
		(-4.97--4.14)x(3.11+2.71)/2	-2.42		
		(-5.22--4.97)x(3.24+3.11)/2	-0.79		
		(-5.33--5.22)x(3.26+3.24)/2	-0.36		
		(-6.29--5.33)x(3.57+3.26)/2	-3.28		
		(-6.92--6.29)x(3.57+3.57)/2	-2.25		
		(-7.37--6.92)x(3.57+3.57)/2	-1.61		
		(-8.32--7.37)x(3.60+3.57)/2	-3.41		
		(-8.45--8.32)x(3.60+3.60)/2	-0.47		
		(-8.51--8.45)x(3.61+3.60)/2	-0.22		
		(-9.52--8.51)x(3.62+3.61)/2	-3.65		
		(-10.09--9.52)x(3.62+3.62)/2	-2.06		
		(-10.60--10.09)x(3.61+3.62)/2	-1.84		
		(-11.68--10.60)x(3.41+3.61)/2	-3.79		
		(-12.76--11.68)x(3.14+3.41)/2	-3.54		
		(-13.26--12.76)x(3.12+3.14)/2	-1.56		
		(-13.83--13.26)x(3.12+3.12)/2	-1.78		
		(-14.85--13.83)x(3.09+3.12)/2	-3.17		
				96.46	
47 690.00	A1	(-6.65--5.87)x(4.72+3.94)/2	-3.38		
		(-1.75--6.65)x(4.85+4.72)/2	23.45		
		(-0.68--1.75)x(4.87+4.85)/2	5.20		
		(0.68--0.68)x(4.87+4.87)/2	6.62		
		(1.75-0.68)x(4.85+4.87)/2	5.20		
		(15.15-1.75)x(4.51+4.85)/2	62.71		
		(14.85-15.15)x(4.87+4.51)/2	-1.41		
		(35.98-14.85)x(4.27+4.87)/2	96.56		
		(38.16-35.98)x(2.82+4.27)/2	7.73		
		(34.11-38.16)x(2.76+2.82)/2	-11.30		
		(33.57-34.11)x(2.85+2.76)/2	-1.51		
		(33.03-33.57)x(2.91+2.85)/2	-1.56		
		(31.99-33.03)x(3.10+2.91)/2	-3.13		
		(31.96-31.99)x(3.11+3.10)/2	-0.09		
		(31.88-31.96)x(3.12+3.11)/2	-0.25		
		(30.88-31.88)x(3.18+3.12)/2	-3.15		
		(30.31-30.88)x(3.20+3.18)/2	-1.82		
		(29.81-30.31)x(3.22+3.20)/2	-1.60		
		(28.83-29.81)x(3.24+3.22)/2	-3.17		
		(28.73-28.83)x(3.24+3.24)/2	-0.32		
		(28.51-28.73)x(3.23+3.24)/2	-0.71		
		(27.65-28.51)x(3.20+3.23)/2	-2.76		
		(27.25-27.65)x(3.18+3.20)/2	-1.28		
		(26.58-27.25)x(3.15+3.18)/2	-2.12		
		(25.67-26.58)x(3.23+3.15)/2	-2.90		
		(25.50-25.67)x(3.23+3.23)/2	-0.55		
		(25.14-25.50)x(3.33+3.23)/2	-1.18		
		(24.42-25.14)x(3.52+3.33)/2	-2.47		
		(24.09-24.42)x(3.53+3.52)/2	-1.16		
		(23.35-24.09)x(3.64+3.53)/2	-2.65		
		(22.51-23.35)x(3.53+3.64)/2	-3.01		
		(22.27-22.51)x(3.51+3.53)/2	-0.84		
		(21.76-22.27)x(3.53+3.51)/2	-1.80		
		(21.20-21.76)x(3.57+3.53)/2	-1.99		
		(20.93-21.20)x(3.54+3.57)/2	-0.96		
		(20.12-20.93)x(3.46+3.54)/2	-2.83		
		(19.35-20.12)x(3.46+3.46)/2	-2.66		
		(19.04-19.35)x(3.45+3.46)/2	-1.07		
		(18.39-19.04)x(3.43+3.45)/2	-2.24		
		(17.97-18.39)x(3.41+3.43)/2	-1.44		
		(17.77-17.97)x(3.36+3.41)/2	-0.68		
		(16.89-17.77)x(3.28+3.36)/2	-2.92		
		(16.19-16.89)x(2.95+3.28)/2	-2.18		
		(15.81-16.19)x(2.83+2.95)/2	-1.10		
		(15.02-15.81)x(2.41+2.83)/2	-2.07		
		(14.74-15.02)x(2.29+2.41)/2	-0.66		
		(14.61-14.74)x(2.28+2.29)/2	-0.30		
		(13.66-14.61)x(2.14+2.28)/2	-2.10		
		(13.03-13.66)x(2.09+2.14)/2	-1.33		
		(12.59-13.03)x(2.05+2.09)/2	-0.91		
		(12.36-12.59)x(2.01+2.05)/2	-0.47		
		(11.64-12.36)x(1.79+2.01)/2	-1.37		
		(11.54-11.64)x(1.75+1.79)/2	-0.18		
		(11.51-11.54)x(1.74+1.75)/2	-0.05		
		(11.45-11.51)x(1.70+1.74)/2	-0.10		
		(10.43-11.45)x(1.03+1.70)/2	-1.39		
		(9.87-10.43)x(0.69+1.03)/2	-0.48		
		(9.36-9.87)x(0.33+0.69)/2	-0.26		
		(8.29-9.36)x(0.14+0.33)/2	-0.25		
		(8.28-8.29)x(0.14+0.14)/2	-0.00		
		(8.27-8.28)x(0.14+0.14)/2	-0.00		
		(7.21-8.27)x(0.13+0.14)/2	-0.14		
		(6.71-7.21)x(0.13+0.13)/2	-0.07		
		A RIPORTARE mq	119.15		

		CALCOLO DELLE AREE		Foglio n. 34
RILEVATO				
N. SEZIONE PROG.	FIG.	ELEMENTI DI CALCOLO	AREA ELEMENTARE mq	AREA FIGURA mq	NOTE
		RIPORTO mq	119.15		
		(6.13-6.71)x(0.13+0.13)/2	-0.08		
		(5.13-6.13)x(0.11+0.13)/2	-0.12		
		(5.05-5.13)x(0.11+0.11)/2	-0.01		
		(4.89-5.05)x(0.13+0.11)/2	-0.02		
		(3.98-4.89)x(0.27+0.13)/2	-0.18		
		(3.55-3.98)x(0.53+0.27)/2	-0.17		
		(2.90-3.55)x(0.86+0.53)/2	-0.45		
		(1.97-2.90)x(1.67+0.86)/2	-1.18		
		(1.82-1.97)x(1.78+1.67)/2	-0.26		
		(1.52-1.82)x(1.98+1.78)/2	-0.56		
		(0.75-1.52)x(2.43+1.98)/2	-1.70		
		(0.39-0.75)x(2.45+2.43)/2	-0.88		
		(-0.33-0.39)x(2.53+2.45)/2	-1.79		
		(-1.19--0.33)x(2.47+2.53)/2	-2.15		
		(-1.40--1.19)x(2.47+2.47)/2	-0.52		
		(-1.85--1.40)x(2.56+2.47)/2	-1.13		
		(-2.48--1.85)x(2.72+2.56)/2	-1.66		
		(-2.77--2.48)x(2.86+2.72)/2	-0.81		
		(-3.56--2.77)x(3.27+2.86)/2	-2.42		
		(-4.35--3.56)x(3.65+3.27)/2	-2.73		
		(-4.63--4.35)x(3.82+3.65)/2	-1.05		
		(-4.78--4.63)x(3.83+3.82)/2	-0.57		
		(-5.23--4.78)x(3.89+3.83)/2	-1.74		
		(-5.59--5.23)x(3.94+3.89)/2	-1.41		
		(-5.71--5.59)x(3.96+3.94)/2	-0.47		
		(-5.87--5.71)x(3.94+3.96)/2	-0.63		
				94.46	
48 705.00	A1	(-12.61--15.69)x(5.02+2.96)/2	12.29		
		(-11.34--12.61)x(5.01+5.02)/2	6.37		
		(-11.65--11.34)x(4.65+5.01)/2	-1.50		
		(-9.33--11.65)x(4.70+4.65)/2	10.85		
		(-11.10--9.33)x(2.93+4.70)/2	-6.75		
		(-11.22--11.10)x(2.94+2.93)/2	-0.35		
		(-11.55--11.22)x(2.96+2.94)/2	-0.97		
		(-12.24--11.55)x(3.03+2.96)/2	-2.07		
		(-12.62--12.24)x(3.06+3.03)/2	-1.16		
		(-12.80--12.62)x(3.06+3.06)/2	-0.55		
		(-13.70--12.80)x(3.08+3.06)/2	-2.76		
		(-14.37--13.70)x(3.04+3.08)/2	-2.05		
		(-14.77--14.37)x(3.03+3.04)/2	-1.21		
		(-15.64--14.77)x(2.96+3.03)/2	-2.61		
		(-15.69--15.64)x(2.96+2.96)/2	-0.15		
				7.38	
48 705.00	A2	(5.40-9.99)x(4.80+0.21)/2	-11.50		
		(14.12-5.40)x(4.58+4.80)/2	40.90		
		(13.81-14.12)x(4.95+4.58)/2	-1.48		
		(15.08-13.81)x(4.95+4.95)/2	6.29		
		(25.96-15.08)x(3.48+4.95)/2	45.86		
		(29.89-25.96)x(3.48+3.48)/2	13.68		
		(30.96-29.89)x(2.77+3.48)/2	3.34		
		(30.40-30.96)x(2.83+2.77)/2	-1.57		
		(29.70-30.40)x(2.91+2.83)/2	-2.01		
		(29.32-29.70)x(2.94+2.91)/2	-1.11		
		(28.49-29.32)x(3.06+2.94)/2	-2.49		
		(28.25-28.49)x(3.10+3.06)/2	-0.74		
		(28.13-28.25)x(3.12+3.10)/2	-0.37		
		(27.17-28.13)x(3.26+3.12)/2	-3.06		
		(26.56-27.17)x(3.35+3.26)/2	-2.02		
		(26.09-26.56)x(3.41+3.35)/2	-1.59		
		(25.86-26.09)x(3.41+3.41)/2	-0.78		
		(25.10-25.86)x(3.40+3.41)/2	-2.59		
		(25.04-25.10)x(3.39+3.40)/2	-0.20		
		(25.02-25.04)x(3.39+3.39)/2	-0.07		
		(24.98-25.02)x(3.39+3.39)/2	-0.14		
		(23.94-24.98)x(3.35+3.39)/2	-3.50		
		(23.41-23.94)x(3.36+3.35)/2	-1.78		
		(22.87-23.41)x(3.34+3.36)/2	-1.81		
		(21.83-22.87)x(3.35+3.34)/2	-3.48		
		(21.79-21.83)x(3.35+3.35)/2	-0.13		
		(21.70-21.79)x(3.35+3.35)/2	-0.30		
		(20.72-21.70)x(3.31+3.35)/2	-3.26		
		(20.26-20.72)x(3.30+3.31)/2	-1.52		
		(19.64-20.26)x(3.26+3.30)/2	-2.03		
		(18.69-19.64)x(3.07+3.26)/2	-3.01		
		(18.57-18.69)x(3.05+3.07)/2	-0.37		
		(18.31-18.57)x(2.97+3.05)/2	-0.78		
		(17.49-18.31)x(2.73+2.97)/2	-2.34		
		(17.11-17.49)x(2.62+2.73)/2	-1.02		
		(16.42-17.11)x(2.43+2.62)/2	-1.74		
		(15.54-16.42)x(2.19+2.43)/2	-2.03		
		(15.34-15.54)x(2.13+2.19)/2	-0.43		
		(14.91-15.34)x(2.04+2.13)/2	-0.90		
		(14.26-14.91)x(1.93+2.04)/2	-1.29		
		(13.96-14.26)x(1.92+1.93)/2	-0.58		
		(13.19-13.96)x(1.88+1.92)/2	-1.46		
		(12.39-13.19)x(1.62+1.88)/2	-1.40		
		(12.11-12.39)x(1.55+1.62)/2	-0.44		
		(11.52-12.11)x(1.13+1.55)/2	-0.79		
		(11.04-11.52)x(0.76+1.13)/2	-0.45		
		(10.81-11.04)x(0.66+0.76)/2	-0.16		
		(9.99-10.81)x(0.21+0.66)/2	-0.36		
				40.99	
49 720.00	A1	(-12.61--15.86)x(5.06+2.89)/2	12.92		
		(-11.34--12.61)x(5.06+5.06)/2	6.43		
		(-11.65--11.34)x(4.69+5.06)/2	-1.51		
		(-1.75--11.65)x(4.94+4.69)/2	47.67		
		(-0.68--1.75)x(4.96+4.94)/2	5.30		
		(0.68--0.68)x(4.96+4.96)/2	6.75		
		(1.75-0.68)x(4.94+4.96)/2	5.30		
		(3.04-1.75)x(4.91+4.94)/2	6.35		
		(0.47-3.04)x(2.34+4.91)/2	-9.32		
		(0.16-0.47)x(2.37+2.34)/2	-0.73		
		(-0.16-0.16)x(2.40+2.37)/2	-0.76		
		(-0.66--0.16)x(2.46+2.40)/2	-1.21		
		A RIPORTARE mq	77.19		

		CALCOLO DELLE AREE		Foglio n. 35
RILEVATO				
N. SEZIONE PROG.	FIG.	ELEMENTI DI CALCOLO	AREA ELEMENTARE mq	AREA FIGURA mq	NOTE
		RIPORTO mq	77.19		
		(-1.24--0.66)x(2.57+2.46)/2	-1.46		
		(-1.48--1.24)x(2.62+2.57)/2	-0.62		
		(-2.23--1.48)x(2.86+2.62)/2	-2.06		
		(-2.31--2.23)x(2.88+2.86)/2	-0.23		
		(-2.35--2.31)x(2.90+2.88)/2	-0.12		
		(-3.39--2.35)x(3.23+2.90)/2	-3.19		
		(-3.92--3.39)x(3.40+3.23)/2	-1.76		
		(-4.46--3.92)x(3.55+3.40)/2	-1.88		
		(-5.50--4.46)x(3.71+3.55)/2	-3.78		
		(-5.54--5.50)x(3.72+3.71)/2	-0.15		
		(-5.63--5.54)x(3.70+3.72)/2	-0.33		
		(-6.61--5.63)x(3.50+3.70)/2	-3.53		
		(-7.07--6.61)x(3.47+3.50)/2	-1.60		
		(-7.69--7.07)x(3.43+3.47)/2	-2.14		
		(-8.65--7.69)x(3.41+3.43)/2	-3.28		
		(-8.76--8.65)x(3.40+3.41)/2	-0.37		
		(-9.02--8.76)x(3.43+3.40)/2	-0.89		
		(-9.84--9.02)x(3.50+3.43)/2	-2.84		
		(-10.22--9.84)x(3.46+3.50)/2	-1.32		
		(-10.92--10.22)x(3.46+3.46)/2	-2.42		
		(-11.79--10.92)x(3.26+3.46)/2	-2.92		
		(-11.99--11.79)x(3.24+3.26)/2	-0.65		
		(-12.41--11.99)x(3.18+3.24)/2	-1.35		
		(-13.07--12.41)x(3.13+3.18)/2	-2.08		
		(-13.37--13.07)x(3.12+3.13)/2	-0.94		
		(-14.14--13.37)x(3.10+3.12)/2	-2.39		
		(-14.54--14.14)x(3.05+3.10)/2	-1.23		
		(-15.22--14.54)x(2.97+3.05)/2	-2.05		
		(-15.81--15.22)x(2.90+2.97)/2	-1.73		
		(-15.86--15.81)x(2.89+2.90)/2	-0.14		
				27.74	
49 720.00	A2	(19.32-16.36)x(4.80+4.92)/2	14.39		
		(19.33-19.32)x(2.59+4.80)/2	0.04		
		(19.20-19.33)x(2.58+2.59)/2	-0.34		
		(18.13-19.20)x(2.53+2.58)/2	-2.73		
		(18.12-18.13)x(2.53+2.53)/2	-0.03		
		(17.05-18.12)x(2.46+2.53)/2	-2.67		
		(16.55-17.05)x(2.41+2.46)/2	-1.22		
		(16.36-16.55)x(2.39+2.41)/2	-0.46		
				6.98	
50 735.00	A1	(-12.61--16.51)x(5.11+2.50)/2	14.84		
		(-11.34--12.61)x(5.10+5.11)/2	6.48		
		(-11.65--11.34)x(4.74+5.10)/2	-1.53		
		(-1.75--11.65)x(4.98+4.74)/2	48.11		
		(-0.68--1.75)x(5.01+4.98)/2	5.34		
		(0.68--0.68)x(5.01+5.01)/2	6.81		
		(1.75-0.68)x(4.98+5.01)/2	5.34		
		(11.65-1.75)x(4.74+4.98)/2	48.11		
		(11.34-11.65)x(5.10+4.74)/2	-1.53		
		(12.61-11.34)x(5.11+5.10)/2	6.48		
		(13.22-12.61)x(4.70+5.11)/2	2.99		
		(13.90-13.22)x(4.70+4.70)/2	3.20		
		(14.42-13.90)x(4.17+4.70)/2	2.31		
		(15.05-14.42)x(4.17+4.17)/2	2.63		
		(15.87-15.05)x(5.00+4.17)/2	3.76		
		(16.25-15.87)x(5.00+5.00)/2	1.90		
		(16.07-16.25)x(2.35+2.37)/2	-0.42		
		(15.52-16.07)x(2.24+2.35)/2	-1.26		
		(14.45-15.52)x(1.82+2.24)/2	-2.17		
		(14.44-14.45)x(1.81+1.82)/2	-0.02		
		(13.36-14.44)x(1.10+1.81)/2	-1.57		
		(12.85-13.36)x(0.77+1.10)/2	-0.48		
		(12.29-12.85)x(0.35+0.77)/2	-0.31		
		(11.27-12.29)x(0.26+0.35)/2	-0.31		
		(11.21-11.27)x(0.25+0.26)/2	-0.02		
		(11.08-11.21)x(0.24+0.25)/2	-0.03		
		(10.14-11.08)x(0.24+0.24)/2	-0.23		
		(9.69-10.14)x(0.26+0.24)/2	-0.11		
		(9.06-9.69)x(0.33+0.26)/2	-0.19		
		(8.11-9.06)x(0.25+0.33)/2	-0.28		
		(7.98-8.11)x(0.24+0.25)/2	-0.03		
		(7.71-7.98)x(0.31+0.24)/2	-0.07		
		(7.10-7.71)x(0.49+0.31)/2	-0.24		
		(7.00-7.10)x(0.50+0.49)/2	-0.05		
		(6.77-7.00)x(0.23+0.50)/2	-0.08		
		(6.60-6.77)x(0.55+0.23)/2	-0.07		
		(6.55-6.60)x(0.64+0.55)/2	-0.03		
		(6.46-6.55)x(0.62+0.64)/2	-0.06		
		(6.15-6.46)x(0.64+0.62)/2	-0.20		
		(6.14-6.15)x(0.43+0.64)/2	-0.01		
		(6.08-6.14)x(0.75+0.43)/2	-0.04		
		(6.03-6.08)x(0.82+0.75)/2	-0.04		
		(6.00-6.03)x(0.75+0.82)/2	-0.02		
		(5.91-6.00)x(0.75+0.75)/2	-0.07		
		(5.89-5.91)x(0.75+0.75)/2	-0.02		
		(5.87-5.89)x(0.76+0.75)/2	-0.02		
		(5.83-5.87)x(0.75+0.76)/2	-0.03		
		(5.82-5.83)x(0.77+0.75)/2	-0.01		
		(5.81-5.82)x(0.77+0.77)/2	-0.01		
		(5.63-5.81)x(0.93+0.77)/2	-0.15		
		(5.25-5.63)x(1.31+0.93)/2	-0.43		
		(4.99-5.25)x(1.59+1.31)/2	-0.38		
		(4.75-4.99)x(1.81+1.59)/2	-0.41		
		(4.33-4.75)x(2.14+1.81)/2	-0.83		
		(3.68-4.33)x(2.68+2.14)/2	-1.57		
		(3.37-3.68)x(2.85+2.68)/2	-0.86		
		(2.60-3.37)x(3.39+2.85)/2	-2.40		
		(2.40-2.60)x(3.48+3.39)/2	-0.69		
		(2.39-2.40)x(3.60+3.48)/2	-0.04		
		(2.35-2.39)x(3.60+3.60)/2	-0.14		
		(2.31-2.35)x(3.60+3.60)/2	-0.14		
		(1.99-2.31)x(3.55+3.60)/2	-1.14		
		(1.53-1.99)x(3.51+3.55)/2	-1.62		
		(0.96-1.53)x(3.49+3.51)/2	-2.00		
		A RIPORTARE mq	133.94		

		CALCOLO DELLE AREE		Foglio n. 36
RILEVATO				
N. SEZIONE PROG.	FIG.	ELEMENTI DI CALCOLO	AREA ELEMENTARE mq	AREA FIGURA mq	NOTE
		RIPORTO mq	133.94		
		(0.57-0.96)x(3.48+3.49)/2	-1.36		
		(0.50-0.57)x(3.49+3.48)/2	-0.24		
		(0.40-0.50)x(3.62+3.49)/2	-0.36		
		(0.21-0.40)x(3.51+3.62)/2	-0.68		
		(-0.24-0.21)x(3.39+3.51)/2	-1.55		
		(-0.63--0.24)x(3.34+3.39)/2	-1.31		
		(-1.37--0.63)x(3.26+3.34)/2	-2.44		
		(-1.70--1.37)x(3.23+3.26)/2	-1.07		
		(-1.87--1.70)x(3.20+3.23)/2	-0.55		
		(-2.41--1.87)x(3.20+3.20)/2	-1.73		
		(-2.69--2.41)x(3.19+3.20)/2	-0.89		
		(-2.78--2.69)x(3.19+3.19)/2	-0.29		
		(-2.95--2.78)x(3.19+3.19)/2	-0.54		
		(-3.86--2.95)x(3.12+3.19)/2	-2.87		
		(-4.53--3.86)x(3.03+3.12)/2	-2.06		
		(-4.93--4.53)x(3.00+3.03)/2	-1.21		
		(-5.79--4.93)x(2.91+3.00)/2	-2.54		
		(-6.01--5.79)x(2.89+2.91)/2	-0.64		
		(-6.11--6.01)x(2.89+2.89)/2	-0.29		
		(-7.08--6.11)x(2.85+2.89)/2	-2.78		
		(-7.69--7.08)x(2.82+2.85)/2	-1.73		
		(-8.16--7.69)x(2.81+2.82)/2	-1.32		
		(-9.16--8.16)x(2.78+2.81)/2	-2.79		
		(-9.24--9.16)x(2.78+2.78)/2	-0.22		
		(-9.27--9.24)x(2.78+2.78)/2	-0.08		
		(-10.31--9.27)x(2.80+2.78)/2	-2.90		
		(-10.85--10.31)x(2.81+2.80)/2	-1.51		
		(-11.39--10.85)x(2.83+2.81)/2	-1.52		
		(-12.43--11.39)x(2.85+2.83)/2	-2.95		
		(-12.46--12.43)x(2.85+2.85)/2	-0.09		
		(-12.53--12.46)x(2.84+2.85)/2	-0.20		
		(-13.54--12.53)x(2.75+2.84)/2	-2.82		
		(-14.01--13.54)x(2.70+2.75)/2	-1.28		
		(-14.62--14.01)x(2.64+2.70)/2	-1.63		
		(-15.59--14.62)x(2.58+2.64)/2	-2.53		
		(-15.69--15.59)x(2.57+2.58)/2	-0.26		
		(-15.90--15.69)x(2.55+2.57)/2	-0.54		
		(-16.51--15.90)x(2.50+2.55)/2	-1.54		
				82.63	
51 750.00	A1	(-12.61--16.95)x(5.15+2.26)/2	16.08		
		(-11.34--12.61)x(5.15+5.15)/2	6.54		
		(-11.65--11.34)x(4.78+5.15)/2	-1.54		
		(-1.75--11.65)x(5.03+4.78)/2	48.56		
		(-0.68--1.75)x(5.05+5.03)/2	5.39		
		(0.68--0.68)x(5.05+5.05)/2	6.87		
		(1.75-0.68)x(5.03+5.05)/2	5.39		
		(11.65-1.75)x(4.78+5.03)/2	48.56		
		(11.34-11.65)x(5.15+4.78)/2	-1.54		
		(12.61-11.34)x(5.15+5.15)/2	6.54		
		(14.33-12.61)x(4.01+5.15)/2	7.88		
		(15.75-14.33)x(4.01+4.01)/2	5.69		
		(16.57-15.75)x(3.18+4.01)/2	2.95		
		(17.20-16.57)x(3.18+3.18)/2	2.00		
		(17.85-17.20)x(3.83+3.18)/2	2.28		
		(17.49-17.85)x(2.38+2.40)/2	-0.86		
		(17.18-17.49)x(2.36+2.38)/2	-0.73		
		(17.04-17.18)x(2.32+2.36)/2	-0.33		
		(16.11-17.04)x(2.12+2.32)/2	-2.06		
		(15.45-16.11)x(1.78+2.12)/2	-1.29		
		(15.03-15.45)x(1.59+1.78)/2	-0.71		
		(14.14-15.03)x(0.83+1.59)/2	-1.08		
		(13.95-14.14)x(0.67+0.83)/2	-0.14		
		(13.87-13.95)x(0.64+0.67)/2	-0.05		
		(12.88-13.87)x(0.23+0.64)/2	-0.43		
		(12.28-12.88)x(0.20+0.23)/2	-0.13		
		(11.80-12.28)x(0.17+0.20)/2	-0.09		
		(11.55-11.80)x(0.18+0.17)/2	-0.04		
		(10.79-11.55)x(0.15+0.18)/2	-0.13		
		(10.74-10.79)x(0.15+0.15)/2	-0.01		
		(10.72-10.74)x(0.15+0.15)/2	-0.00		
		(10.69-10.72)x(0.15+0.15)/2	-0.00		
		(9.65-10.69)x(0.17+0.15)/2	-0.17		
		(9.11-9.65)x(0.19+0.17)/2	-0.10		
		(8.57-9.11)x(0.22+0.19)/2	-0.11		
		(7.52-8.57)x(0.46+0.22)/2	-0.36		
		(7.49-7.52)x(0.47+0.46)/2	-0.01		
		(7.43-7.49)x(0.51+0.47)/2	-0.03		
		(6.41-7.43)x(1.27+0.51)/2	-0.91		
		(5.93-6.41)x(1.46+1.27)/2	-0.66		
		(5.34-5.93)x(1.78+1.46)/2	-0.96		
		(4.35-5.34)x(1.99+1.78)/2	-1.87		
		(4.26-4.35)x(2.01+1.99)/2	-0.18		
		(4.08-4.26)x(2.02+2.01)/2	-0.36		
		(3.18-4.08)x(2.07+2.02)/2	-1.84		
		(2.76-3.18)x(2.10+2.07)/2	-0.88		
		(2.11-2.76)x(2.15+2.10)/2	-1.38		
		(1.17-2.11)x(2.40+2.15)/2	-2.14		
		(1.03-1.17)x(2.43+2.40)/2	-0.34		
		(0.73-1.03)x(2.56+2.43)/2	-0.75		
		(-0.05-0.73)x(2.88+2.56)/2	-2.12		
		(-0.41--0.05)x(2.94+2.88)/2	-1.05		
		(-1.12--0.41)x(3.09+2.94)/2	-2.14		
		(-2.00--1.12)x(3.14+3.09)/2	-2.74		
		(-2.20--2.00)x(3.17+3.14)/2	-0.63		
		(-2.62--2.20)x(3.18+3.17)/2	-1.33		
		(-3.28--2.62)x(3.23+3.18)/2	-2.12		
		(-3.59--3.28)x(3.24+3.23)/2	-1.00		
		(-4.35--3.59)x(3.29+3.24)/2	-2.48		
		(-5.17--4.35)x(3.22+3.29)/2	-2.67		
		(-5.43--5.17)x(3.20+3.22)/2	-0.83		
		(-5.97--5.43)x(3.11+3.20)/2	-1.70		
		(-6.51--5.97)x(3.00+3.11)/2	-1.65		
		(-7.19--6.51)x(2.87+3.00)/2	-2.00		
		(-7.58--7.19)x(2.80+2.87)/2	-1.11		
		A RIPORTARE mq	114.95		

		CALCOLO DELLE AREE		Foglio n. 37
RILEVATO				
N. SEZIONE PROG.	FIG.	ELEMENTI DI CALCOLO	AREA ELEMENTARE mq	AREA FIGURA mq	NOTE
		RIPORTO mq	114.95		
		(-8.35--7.58)x(2.68+2.80)/2	-2.11		
		(-8.66--8.35)x(2.62+2.68)/2	-0.82		
		(-9.33--8.66)x(2.55+2.62)/2	-1.73		
		(-9.74--9.33)x(2.51+2.55)/2	-1.04		
		(-9.93--9.74)x(2.50+2.51)/2	-0.48		
		(-10.82--9.93)x(2.43+2.50)/2	-2.19		
		(-11.52--10.82)x(2.45+2.43)/2	-1.71		
		(-11.89--11.52)x(2.46+2.45)/2	-0.91		
		(-12.68--11.89)x(2.54+2.46)/2	-1.97		
		(-12.97--12.68)x(2.57+2.54)/2	-0.74		
		(-13.11--12.97)x(2.56+2.57)/2	-0.36		
		(-14.05--13.11)x(2.54+2.56)/2	-2.40		
		(-14.69--14.05)x(2.44+2.54)/2	-1.59		
		(-15.12--14.69)x(2.37+2.44)/2	-1.03		
		(-16.03--15.12)x(2.29+2.37)/2	-2.12		
		(-16.20--16.03)x(2.28+2.29)/2	-0.39		
		(-16.28--16.20)x(2.28+2.28)/2	-0.18		
		(-16.95--16.28)x(2.26+2.28)/2	-1.52		
				91.66	
52 765.00	A1	(-17.87--22.63)x(5.06+1.89)/2	16.54		
		(-16.60--17.87)x(5.06+5.06)/2	6.43		
		(-16.91--16.60)x(4.69+5.06)/2	-1.51		
		(-1.75--16.91)x(5.07+4.69)/2	73.98		
		(-0.68--1.75)x(5.10+5.07)/2	5.44		
		(0.68--0.68)x(5.10+5.10)/2	6.94		
		(1.75-0.68)x(5.07+5.10)/2	5.44		
		(11.65-1.75)x(4.83+5.07)/2	49.01		
		(11.34-11.65)x(5.19+4.83)/2	-1.55		
		(12.61-11.34)x(5.20+5.19)/2	6.60		
		(17.24-12.61)x(2.11+5.20)/2	16.92		
		(17.13-17.24)x(2.08+2.11)/2	-0.23		
		(16.67-17.13)x(1.96+2.08)/2	-0.93		
		(16.45-16.67)x(1.82+1.96)/2	-0.42		
		(15.59-16.45)x(1.38+1.82)/2	-1.38		
		(14.85-15.59)x(0.81+1.38)/2	-0.81		
		(14.51-14.85)x(0.49+0.81)/2	-0.22		
		(13.80-14.51)x(0.28+0.49)/2	-0.27		
		(13.43-13.80)x(0.17+0.28)/2	-0.08		
		(13.26-13.43)x(0.16+0.17)/2	-0.03		
		(12.36-13.26)x(0.06+0.16)/2	-0.10		
		(11.67-12.36)x(0.06+0.06)/2	-0.04		
		(11.28-11.67)x(0.07+0.06)/2	-0.03		
		(10.47-11.28)x(0.10+0.07)/2	-0.07		
		(10.20-10.47)x(0.11+0.10)/2	-0.03		
		(10.08-10.20)x(0.12+0.11)/2	-0.01		
		(9.12-10.08)x(0.22+0.12)/2	-0.16		
		(8.48-9.12)x(0.43+0.22)/2	-0.21		
		(8.05-8.48)x(0.55+0.43)/2	-0.21		
		(7.14-8.05)x(1.31+0.55)/2	-0.85		
		(6.97-7.14)x(1.44+1.31)/2	-0.23		
		(6.20-6.97)x(1.79+1.44)/2	-1.24		
		(5.89-6.20)x(1.87+1.79)/2	-0.57		
		(5.30-5.89)x(1.88+1.87)/2	-1.11		
		(4.81-5.30)x(1.87+1.88)/2	-0.92		
		(3.81-4.81)x(1.90+1.87)/2	-1.88		
		(3.74-3.81)x(1.90+1.90)/2	-0.13		
		(3.70-3.74)x(1.91+1.90)/2	-0.08		
		(2.66-3.70)x(2.10+1.91)/2	-2.09		
		(2.11-2.66)x(2.43+2.10)/2	-1.25		
		(1.58-2.11)x(2.75+2.43)/2	-1.37		
		(0.52-1.58)x(3.22+2.75)/2	-3.16		
		(0.50-0.52)x(3.23+3.22)/2	-0.06		
		(0.47-0.50)x(3.23+3.23)/2	-0.10		
		(-0.57-0.47)x(3.36+3.23)/2	-3.43		
		(-1.07--0.57)x(3.42+3.36)/2	-1.70		
		(-1.65--1.07)x(3.52+3.42)/2	-2.01		
		(-2.67--1.65)x(3.49+3.52)/2	-3.58		
		(-2.73--2.67)x(3.49+3.49)/2	-0.21		
		(-2.86--2.73)x(3.46+3.49)/2	-0.45		
		(-3.81--2.86)x(3.24+3.46)/2	-3.18		
		(-4.26--3.81)x(3.15+3.24)/2	-1.44		
		(-4.88--4.26)x(3.06+3.15)/2	-1.93		
		(-5.85--4.88)x(2.84+3.06)/2	-2.86		
		(-5.96--5.85)x(2.81+2.84)/2	-0.31		
		(-6.19--5.96)x(2.75+2.81)/2	-0.64		
		(-7.04--6.19)x(2.49+2.75)/2	-2.23		
		(-7.45--7.04)x(2.39+2.49)/2	-1.00		
		(-8.12--7.45)x(2.23+2.39)/2	-1.55		
		(-9.04--8.12)x(2.24+2.23)/2	-2.06		
		(-9.19--9.04)x(2.23+2.24)/2	-0.34		
		(-9.52--9.19)x(2.26+2.23)/2	-0.74		
		(-10.27--9.52)x(2.35+2.26)/2	-1.73		
		(-10.63--10.27)x(2.33+2.35)/2	-0.84		
		(-11.35--10.63)x(2.33+2.33)/2	-1.68		
		(-11.72--11.35)x(2.34+2.33)/2	-0.86		
		(-12.43--11.72)x(2.35+2.34)/2	-1.66		
		(-12.85--12.43)x(2.33+2.35)/2	-0.98		
		(-13.50--12.85)x(2.30+2.33)/2	-1.50		
		(-13.82--13.50)x(2.25+2.30)/2	-0.73		
		(-14.58--13.82)x(2.15+2.25)/2	-1.67		
		(-15.41--14.58)x(2.06+2.15)/2	-1.75		
		(-15.66--15.41)x(2.03+2.06)/2	-0.51		
		(-16.18--15.66)x(1.99+2.03)/2	-1.05		
		(-16.74--16.18)x(1.99+1.99)/2	-1.11		
		(-17.00--16.74)x(1.95+1.99)/2	-0.51		
		(-17.82--17.00)x(1.93+1.95)/2	-1.59		
		(-18.60--17.82)x(1.90+1.93)/2	-1.49		
		(-18.89--18.60)x(1.89+1.90)/2	-0.55		
		(-19.51--18.89)x(1.90+1.89)/2	-1.17		
		(-19.97--19.51)x(1.91+1.90)/2	-0.88		
		(-20.19--19.97)x(1.91+1.91)/2	-0.42		
		(-21.05--20.19)x(1.92+1.91)/2	-1.65		
		(-21.78--21.05)x(1.91+1.92)/2	-1.40		
		(-22.13--21.78)x(1.91+1.91)/2	-0.67		
		A RIPORTARE mq	107.91		

		CALCOLO DELLE AREE		Foglio n. 38
RILEVATO				
N. SEZIONE PROG.	FIG.	ELEMENTI DI CALCOLO	AREA ELEMENTARE mq	AREA FIGURA mq	NOTE
		RIPORTO mq	107.91		
		(-22.63--22.13)x(1.89+1.91)/2	-0.95		
				106.96	
53	A1	(-16.49--21.83)x(5.14+1.58)/2	17.94		
780.00		(-15.22--16.49)x(5.14+5.14)/2	6.53		
		(-15.53--15.22)x(4.77+5.14)/2	-1.54		
		(-1.75--15.53)x(5.12+4.77)/2	68.14		
		(-0.68--1.75)x(5.15+5.12)/2	5.49		
		(0.68--0.68)x(5.15+5.15)/2	7.00		
		(1.75-0.68)x(5.12+5.15)/2	5.49		
		(11.65-1.75)x(4.87+5.12)/2	49.45		
		(11.34-11.65)x(5.24+4.87)/2	-1.57		
		(12.61-11.34)x(5.24+5.24)/2	6.65		
		(17.67-12.61)x(1.87+5.24)/2	17.99		
		(17.42-17.67)x(1.77+1.87)/2	-0.46		
		(17.20-17.42)x(1.70+1.77)/2	-0.38		
		(16.74-17.20)x(1.40+1.70)/2	-0.71		
		(16.12-16.74)x(0.97+1.40)/2	-0.73		
		(15.82-16.12)x(0.79+0.97)/2	-0.26		
		(15.04-15.82)x(0.26+0.79)/2	-0.41		
		(14.22-15.04)x(0.08+0.26)/2	-0.14		
		(13.96-14.22)x(0.02+0.08)/2	-0.01		
		(13.43-13.96)x(-0.01+0.02)/2	-0.00		
		(12.89-13.43)x(-0.02+-0.01)/2	0.01		
		(12.62-12.89)x(-0.01+-0.02)/2	0.00		
		(11.81-12.62)x(0.02+-0.01)/2	-0.00		
		(11.02-11.81)x(0.04+0.02)/2	-0.02		
		(10.73-11.02)x(0.06+0.04)/2	-0.01		
		(10.12-10.73)x(0.15+0.06)/2	-0.06		
		(9.65-10.12)x(0.27+0.15)/2	-0.10		
		(9.42-9.65)x(0.44+0.27)/2	-0.08		
		(8.57-9.42)x(0.98+0.44)/2	-0.60		
		(7.82-8.57)x(1.34+0.98)/2	-0.87		
		(7.49-7.82)x(1.56+1.34)/2	-0.48		
		(6.81-7.49)x(1.67+1.56)/2	-1.10		
		(6.42-6.81)x(1.72+1.67)/2	-0.66		
		(6.23-6.42)x(1.72+1.72)/2	-0.33		
		(5.34-6.23)x(1.74+1.72)/2	-1.54		
		(4.63-5.34)x(1.85+1.74)/2	-1.27		
		(4.26-4.63)x(1.88+1.85)/2	-0.69		
		(3.50-4.26)x(2.19+1.88)/2	-1.55		
		(3.18-3.50)x(2.33+2.19)/2	-0.72		
		(3.03-3.18)x(2.40+2.33)/2	-0.35		
		(2.10-3.03)x(2.89+2.40)/2	-2.46		
		(1.63-2.10)x(3.12+2.89)/2	-1.41		
		(1.03-1.63)x(3.42+3.12)/2	-1.96		
		(0.19-1.03)x(3.64+3.42)/2	-2.97		
		(-0.05-0.19)x(3.66+3.64)/2	-0.88		
		(-0.17--0.05)x(3.65+3.66)/2	-0.44		
		(-1.13--0.17)x(3.56+3.65)/2	-3.46		
		(-1.77--1.13)x(3.50+3.56)/2	-2.26		
		(-2.21--1.77)x(3.45+3.50)/2	-1.53		
		(-3.12--2.21)x(3.25+3.45)/2	-3.05		
		(-3.29--3.12)x(3.21+3.25)/2	-0.55		
		(-3.37--3.29)x(3.19+3.21)/2	-0.26		
		(-4.37--3.37)x(2.93+3.19)/2	-3.06		
		(-4.97--4.37)x(2.77+2.93)/2	-1.71		
		(-5.44--4.97)x(2.60+2.77)/2	-1.26		
		(-6.43--5.44)x(2.44+2.60)/2	-2.49		
		(-6.52--6.43)x(2.42+2.44)/2	-0.22		
		(-6.57--6.52)x(2.42+2.42)/2	-0.12		
		(-7.60--6.57)x(2.32+2.42)/2	-2.44		
		(-8.17--7.60)x(2.26+2.32)/2	-1.31		
		(-8.68--8.17)x(2.19+2.26)/2	-1.13		
		(-9.74--8.68)x(2.10+2.19)/2	-2.27		
		(-9.76--9.74)x(2.10+2.10)/2	-0.04		
		(-9.77--9.76)x(2.10+2.10)/2	-0.02		
		(-10.84--9.77)x(2.15+2.10)/2	-2.27		
		(-11.37--10.84)x(2.20+2.15)/2	-1.15		
		(-11.91--11.37)x(2.26+2.20)/2	-1.20		
		(-12.96--11.91)x(2.44+2.26)/2	-2.47		
		(-12.99--12.96)x(2.44+2.44)/2	-0.07		
		(-13.05--12.99)x(2.44+2.44)/2	-0.15		
		(-14.07--13.05)x(2.38+2.44)/2	-2.46		
		(-14.56--14.07)x(2.36+2.38)/2	-1.16		
		(-15.15--14.56)x(2.32+2.36)/2	-1.38		
		(-16.16--15.15)x(2.27+2.32)/2	-2.32		
		(-16.23--16.16)x(2.27+2.27)/2	-0.16		
		(-16.26--16.23)x(2.27+2.27)/2	-0.07		
		(-16.36--16.26)x(2.27+2.27)/2	-0.23		
		(-17.07--16.36)x(2.27+2.27)/2	-1.61		
		(-17.31--17.07)x(2.28+2.27)/2	-0.55		
		(-17.76--17.31)x(2.24+2.28)/2	-1.02		
		(-18.38--17.76)x(2.18+2.24)/2	-1.37		
		(-19.36--18.38)x(2.06+2.18)/2	-2.08		
		(-19.46--19.36)x(2.04+2.06)/2	-0.21		
		(-19.67--19.46)x(2.01+2.04)/2	-0.43		
		(-20.54--19.67)x(1.87+2.01)/2	-1.69		
		(-20.96--20.54)x(1.77+1.87)/2	-0.76		
		(-21.62--20.96)x(1.60+1.77)/2	-1.11		
		(-21.83--21.62)x(1.58+1.60)/2	-0.33		
				104.50	
54	A1	(-16.36--18.74)x(5.19+3.60)/2	10.46		
795.00		(-15.09--16.36)x(5.19+5.19)/2	6.59		
		(-15.40--15.09)x(4.82+5.19)/2	-1.55		
		(-1.75--15.40)x(5.16+4.82)/2	68.11		
		(-0.68--1.75)x(5.19+5.16)/2	5.54		
		(0.68--0.68)x(5.19+5.19)/2	7.06		
		(1.75-0.68)x(5.16+5.19)/2	5.54		
		(11.65-1.75)x(4.92+5.16)/2	49.90		
		(11.34-11.65)x(5.28+4.92)/2	-1.58		
		(12.61-11.34)x(5.29+5.28)/2	6.71		
		(18.14-12.61)x(1.60+5.29)/2	19.05		
		(17.70-18.14)x(1.37+1.60)/2	-0.65		
		(16.76-17.70)x(0.66+1.37)/2	-0.95		
		A RIPORTARE mq	174.23		

		CALCOLO DELLE AREE		Foglio n. 39
RILEVATO				
N. SEZIONE PROG.	FIG.	ELEMENTI DI CALCOLO	AREA ELEMENTARE mq	AREA FIGURA mq	NOTE
		RIPORTO mq	174.23		
		(16.62-16.76)x(0.57+0.66)/2	-0.09		
		(16.33-16.62)x(0.42+0.57)/2	-0.14		
		(15.54-16.33)x(0.11+0.42)/2	-0.21		
		(14.93-15.54)x(0.02+0.11)/2	-0.04		
		(14.46-14.93)x(0.01+0.02)/2	-0.01		
		(13.55-14.46)x(0.03+0.01)/2	-0.02		
		(13.39-13.55)x(0.03+0.03)/2	-0.00		
		(13.04-13.39)x(0.03+0.03)/2	-0.01		
		(12.31-13.04)x(0.03+0.03)/2	-0.02		
		(11.95-12.31)x(0.06+0.03)/2	-0.02		
		(11.23-11.95)x(0.09+0.06)/2	-0.05		
		(10.34-11.23)x(0.46+0.09)/2	-0.24		
		(10.15-10.34)x(0.53+0.46)/2	-0.09		
		(9.75-10.15)x(0.80+0.53)/2	-0.27		
		(9.07-9.75)x(1.27+0.80)/2	-0.70		
		(8.74-9.07)x(1.39+1.27)/2	-0.44		
		(7.99-8.74)x(1.73+1.39)/2	-1.17		
		(7.13-7.99)x(1.89+1.73)/2	-1.56		
		(6.91-7.13)x(1.93+1.89)/2	-0.42		
		(6.46-6.91)x(1.98+1.93)/2	-0.88		
		(5.83-6.46)x(2.04+1.98)/2	-1.27		
		(5.53-5.83)x(2.06+2.04)/2	-0.61		
		(4.75-5.53)x(2.11+2.06)/2	-1.63		
		(3.92-4.75)x(2.17+2.11)/2	-1.78		
		(3.68-3.92)x(2.18+2.17)/2	-0.52		
		(3.17-3.68)x(2.22+2.18)/2	-1.12		
		(2.60-3.17)x(2.26+2.22)/2	-1.28		
		(2.31-2.60)x(2.27+2.26)/2	-0.66		
		(1.52-2.31)x(2.33+2.27)/2	-1.82		
		(0.71-1.52)x(2.39+2.33)/2	-1.91		
		(0.44-0.71)x(2.42+2.39)/2	-0.65		
		(-0.12-0.44)x(2.46+2.42)/2	-1.37		
		(-0.64--0.12)x(2.50+2.46)/2	-1.29		
		(-0.90--0.64)x(2.51+2.50)/2	-0.65		
		(-1.72--0.90)x(2.62+2.51)/2	-2.10		
		(-2.50--1.72)x(2.46+2.62)/2	-1.98		
		(-2.80--2.50)x(2.41+2.46)/2	-0.73		
		(-2.95--2.80)x(2.37+2.41)/2	-0.36		
		(-3.41--2.95)x(2.28+2.37)/2	-1.07		
		(-3.76--3.41)x(2.22+2.28)/2	-0.79		
		(-3.88--3.76)x(2.18+2.22)/2	-0.26		
		(-4.11--3.88)x(2.14+2.18)/2	-0.50		
		(-4.96--4.11)x(1.96+2.14)/2	-1.74		
		(-5.71--4.96)x(1.97+1.96)/2	-1.47		
		(-6.04--5.71)x(1.96+1.97)/2	-0.65		
		(-6.70--6.04)x(1.95+1.96)/2	-1.29		
		(-7.11--6.70)x(1.95+1.95)/2	-0.80		
		(-7.32--7.11)x(1.94+1.95)/2	-0.41		
		(-8.19--7.32)x(1.90+1.94)/2	-1.67		
		(-8.92--8.19)x(1.92+1.90)/2	-1.39		
		(-9.27--8.92)x(1.95+1.92)/2	-0.68		
		(-9.99--9.27)x(1.97+1.95)/2	-1.41		
		(-10.35--9.99)x(1.97+1.97)/2	-0.71		
		(-10.53--10.35)x(1.96+1.97)/2	-0.35		
		(-11.43--10.53)x(1.84+1.96)/2	-1.71		
		(-12.13--11.43)x(1.85+1.84)/2	-1.29		
		(-12.51--12.13)x(1.87+1.85)/2	-0.71		
		(-13.28--12.51)x(1.91+1.87)/2	-1.46		
		(-13.51--13.28)x(1.92+1.91)/2	-0.44		
		(-13.59--13.51)x(1.92+1.92)/2	-0.15		
		(-14.33--13.59)x(1.93+1.92)/2	-1.42		
		(-14.67--14.33)x(1.99+1.93)/2	-0.67		
		(-15.14--14.67)x(2.10+1.99)/2	-0.96		
		(-15.75--15.14)x(2.30+2.10)/2	-1.34		
		(-15.95--15.75)x(2.37+2.30)/2	-0.47		
		(-16.57--15.95)x(2.59+2.37)/2	-1.54		
		(-16.83--16.57)x(2.69+2.59)/2	-0.69		
		(-16.95--16.83)x(2.75+2.69)/2	-0.33		
		(-17.90--16.95)x(3.20+2.75)/2	-2.83		
		(-18.56--17.90)x(3.52+3.20)/2	-2.22		
		(-18.74--18.56)x(3.60+3.52)/2	-0.64		
				112.06	
55 810.00	A1	(-16.36--18.36)x(5.24+3.90)/2	9.14		
		(-15.09--16.36)x(5.23+5.24)/2	6.65		
		(-15.40--15.09)x(4.87+5.23)/2	-1.57		
		(-1.75--15.40)x(5.21+4.87)/2	68.80		
		(-0.68--1.75)x(5.24+5.21)/2	5.59		
		(0.68--0.68)x(5.24+5.24)/2	7.13		
		(1.75-0.68)x(5.21+5.24)/2	5.59		
		(11.65-1.75)x(4.96+5.21)/2	50.34		
		(11.34-11.65)x(5.33+4.96)/2	-1.59		
		(12.61-11.34)x(5.33+5.33)/2	6.77		
		(18.51-12.61)x(1.40+5.33)/2	19.85		
		(18.18-18.51)x(1.20+1.40)/2	-0.43		
		(17.69-18.18)x(0.77+1.20)/2	-0.48		
		(17.10-17.69)x(0.22+0.77)/2	-0.29		
		(16.07-17.10)x(-0.04+0.22)/2	-0.09		
		(16.02-16.07)x(-0.07+-0.04)/2	0.00		
		(15.90-16.02)x(-0.07+-0.07)/2	0.01		
		(14.94-15.90)x(-0.06+-0.07)/2	0.06		
		(14.46-14.94)x(-0.05+-0.06)/2	0.03		
		(13.86-14.46)x(-0.04+-0.05)/2	0.03		
		(12.85-13.86)x(-0.04+-0.04)/2	0.04		
		(12.78-12.85)x(-0.04+-0.04)/2	0.00		
		(12.63-12.78)x(-0.02+-0.04)/2	0.00		
		(11.70-12.63)x(0.10+-0.02)/2	-0.04		
		(11.24-11.70)x(0.29+0.10)/2	-0.09		
		(10.62-11.24)x(0.55+0.29)/2	-0.26		
		(10.30-10.62)x(0.76+0.55)/2	-0.21		
		(9.54-10.30)x(1.39+0.76)/2	-0.82		
		(9.36-9.54)x(1.47+1.39)/2	-0.26		
		(8.46-9.36)x(1.83+1.47)/2	-1.48		
		(8.01-8.46)x(1.87+1.83)/2	-0.83		
		(7.38-8.01)x(1.92+1.87)/2	-1.19		
		A RIPORTARE mq	170.40		

		CALCOLO DELLE AREE		Foglio n. 40
RILEVATO				
N. SEZIONE PROG.	FIG.	ELEMENTI DI CALCOLO	AREA ELEMENTARE mq	AREA FIGURA mq	NOTE
		RIPORTO mq	170.40		
		(6.40-7.38)x(2.03+1.92)/2	-1.94		
		(6.30-6.40)x(2.04+2.03)/2	-0.20		
		(6.09-6.30)x(2.07+2.04)/2	-0.43		
		(5.22-6.09)x(2.15+2.07)/2	-1.84		
		(4.79-5.22)x(2.18+2.15)/2	-0.93		
		(4.14-4.79)x(2.21+2.18)/2	-1.43		
		(3.18-4.14)x(2.29+2.21)/2	-2.16		
		(3.06-3.18)x(2.30+2.29)/2	-0.28		
		(2.82-3.06)x(2.32+2.30)/2	-0.55		
		(1.98-2.82)x(2.37+2.32)/2	-1.97		
		(1.57-1.98)x(2.38+2.37)/2	-0.97		
		(0.90-1.57)x(2.44+2.38)/2	-1.61		
		(-0.05-0.90)x(2.35+2.44)/2	-2.28		
		(-0.18--0.05)x(2.34+2.35)/2	-0.30		
		(-0.45--0.18)x(2.33+2.34)/2	-0.63		
		(-1.26--0.45)x(2.33+2.33)/2	-1.89		
		(-1.66--1.26)x(2.36+2.33)/2	-0.94		
		(-2.34--1.66)x(2.39+2.36)/2	-1.61		
		(-3.27--2.34)x(2.44+2.39)/2	-2.25		
		(-3.42--3.27)x(2.44+2.44)/2	-0.37		
		(-3.72--3.42)x(2.41+2.44)/2	-0.73		
		(-4.50--3.72)x(2.37+2.41)/2	-1.86		
		(-4.88--4.50)x(2.40+2.37)/2	-0.91		
		(-5.58--4.88)x(2.51+2.40)/2	-1.72		
		(-6.49--5.58)x(2.63+2.51)/2	-2.34		
		(-6.66--6.49)x(2.66+2.63)/2	-0.45		
		(-6.99--6.66)x(2.73+2.66)/2	-0.89		
		(-7.74--6.99)x(2.94+2.73)/2	-2.13		
		(-8.37--7.74)x(3.06+2.94)/2	-1.89		
		(-8.82--8.37)x(3.10+3.06)/2	-1.39		
		(-9.72--8.82)x(3.17+3.10)/2	-2.82		
		(-9.90--9.72)x(3.19+3.17)/2	-0.57		
		(-10.26--9.90)x(3.18+3.19)/2	-1.15		
		(-10.98--10.26)x(3.13+3.18)/2	-2.27		
		(-11.33--10.98)x(3.12+3.13)/2	-1.09		
		(-12.06--11.33)x(3.06+3.12)/2	-2.26		
		(-12.94--12.06)x(3.04+3.06)/2	-2.68		
		(-13.14--12.94)x(3.03+3.04)/2	-0.61		
		(-13.54--13.14)x(3.03+3.03)/2	-1.21		
		(-14.22--13.54)x(2.98+3.03)/2	-2.04		
		(-14.55--14.22)x(3.08+2.98)/2	-1.00		
		(-15.30--14.55)x(3.17+3.08)/2	-2.34		
		(-16.16--15.30)x(3.56+3.17)/2	-2.89		
		(-16.38--16.16)x(3.63+3.56)/2	-0.79		
		(-16.81--16.38)x(3.77+3.63)/2	-1.59		
		(-17.46--16.81)x(3.91+3.77)/2	-2.50		
		(-17.78--17.46)x(3.90+3.91)/2	-1.25		
		(-18.36--17.78)x(3.90+3.90)/2	-2.26		
				100.19	
56 825.00	A1	(-16.36--18.42)x(5.28+3.91)/2	9.47		
		(-15.09--16.36)x(5.28+5.28)/2	6.71		
		(-15.40--15.09)x(4.91+5.28)/2	-1.58		
		(-1.75--15.40)x(5.25+4.91)/2	69.34		
		(-0.68--1.75)x(5.28+5.25)/2	5.63		
		(0.68--0.68)x(5.28+5.28)/2	7.18		
		(1.75-0.68)x(5.25+5.28)/2	5.63		
		(11.65-1.75)x(5.01+5.25)/2	50.79		
		(11.34-11.65)x(5.37+5.01)/2	-1.61		
		(12.61-11.34)x(5.38+5.37)/2	6.83		
		(19.13-12.61)x(1.03+5.38)/2	20.90		
		(18.69-19.13)x(0.79+1.03)/2	-0.40		
		(18.62-18.69)x(0.75+0.79)/2	-0.05		
		(18.58-18.62)x(0.73+0.75)/2	-0.03		
		(17.54-18.58)x(0.10+0.73)/2	-0.43		
		(16.97-17.54)x(0.01+0.10)/2	-0.03		
		(16.46-16.97)x(-0.10+0.01)/2	0.02		
		(15.44-16.46)x(-0.08+-0.10)/2	0.09		
		(15.38-15.44)x(-0.08+-0.08)/2	0.00		
		(15.35-15.38)x(-0.08+-0.08)/2	0.00		
		(14.30-15.35)x(-0.08+-0.08)/2	0.08		
		(13.73-14.30)x(-0.07+-0.08)/2	0.04		
		(13.22-13.73)x(-0.07+-0.07)/2	0.04		
		(12.19-13.22)x(0.18+-0.07)/2	-0.06		
		(12.14-12.19)x(0.19+0.18)/2	-0.01		
		(12.11-12.14)x(0.21+0.19)/2	-0.01		
		(11.06-12.11)x(0.91+0.21)/2	-0.59		
		(10.49-11.06)x(1.25+0.91)/2	-0.62		
		(9.98-10.49)x(1.62+1.25)/2	-0.73		
		(8.94-9.98)x(1.85+1.62)/2	-1.80		
		(8.90-8.94)x(1.86+1.85)/2	-0.07		
		(8.87-8.90)x(1.86+1.86)/2	-0.06		
		(7.81-8.87)x(1.97+1.86)/2	-2.03		
		(7.26-7.81)x(2.02+1.97)/2	-1.10		
		(6.73-7.26)x(2.08+2.02)/2	-1.09		
		(5.69-6.73)x(2.13+2.08)/2	-2.19		
		(5.65-5.69)x(2.13+2.13)/2	-0.09		
		(4.85-5.65)x(2.12+2.13)/2	-1.70		
		(4.57-4.85)x(2.12+2.12)/2	-0.59		
		(4.02-4.57)x(2.12+2.12)/2	-1.17		
		(3.49-4.02)x(2.12+2.12)/2	-1.12		
		(2.44-3.49)x(2.11+2.12)/2	-2.22		
		(2.41-2.44)x(2.11+2.11)/2	-0.06		
		(2.40-2.41)x(2.11+2.11)/2	-0.02		
		(1.33-2.40)x(2.12+2.11)/2	-2.26		
		(0.78-1.33)x(2.13+2.12)/2	-1.17		
		(0.25-0.78)x(2.13+2.13)/2	-1.13		
		(-0.81-0.25)x(2.10+2.13)/2	-2.24		
		(-0.83--0.81)x(2.10+2.10)/2	-0.04		
		(-0.84--0.83)x(2.10+2.10)/2	-0.02		
		(-1.91--0.84)x(2.02+2.10)/2	-2.20		
		(-2.45--1.91)x(1.99+2.02)/2	-1.08		
		(-2.99--2.45)x(1.97+1.99)/2	-1.07		
		(-4.07--2.99)x(2.01+1.97)/2	-2.15		
		(-5.15--4.07)x(2.09+2.01)/2	-2.21		
		A RIPORTARE mq	145.72		

		CALCOLO DELLE AREE		Foglio n. 41
RILEVATO				
N. SEZIONE PROG.	FIG.	ELEMENTI DI CALCOLO	AREA ELEMENTARE mq	AREA FIGURA mq	NOTE
		RIPORTO mq	145.72		
		(-5.69--5.15)x(2.15+2.09)/2	-1.14		
		(-6.23--5.69)x(2.17+2.15)/2	-1.17		
		(-7.31--6.23)x(2.17+2.17)/2	-2.34		
		(-7.32--7.31)x(2.17+2.17)/2	-0.02		
		(-8.39--7.32)x(1.97+2.17)/2	-2.21		
		(-8.93--8.39)x(1.90+1.97)/2	-1.04		
		(-9.47--8.93)x(1.90+1.90)/2	-1.03		
		(-10.55--9.47)x(1.74+1.90)/2	-1.97		
		(-10.57--10.55)x(1.74+1.74)/2	-0.03		
		(-11.63--10.57)x(1.80+1.74)/2	-1.88		
		(-12.16--11.63)x(1.96+1.80)/2	-1.00		
		(-12.71--12.16)x(2.13+1.96)/2	-1.12		
		(-12.99--12.71)x(2.21+2.13)/2	-0.61		
		(-13.79--12.99)x(2.59+2.21)/2	-1.92		
		(-13.82--13.79)x(2.61+2.59)/2	-0.08		
		(-14.87--13.82)x(3.31+2.61)/2	-3.11		
		(-15.40--14.87)x(3.57+3.31)/2	-1.82		
		(-15.95--15.40)x(3.92+3.57)/2	-2.06		
		(-17.02--15.95)x(3.93+3.92)/2	-4.20		
		(-17.03--17.02)x(3.94+3.93)/2	-0.04		
		(-17.07--17.03)x(3.93+3.94)/2	-0.16		
		(-18.12--17.07)x(3.89+3.93)/2	-4.11		
		(-18.42--18.12)x(3.91+3.89)/2	-1.17		
				111.49	
57 840.00	A1	(-16.36--18.36)x(5.33+3.99)/2	9.32		
		(-15.09--16.36)x(5.32+5.33)/2	6.76		
		(-15.40--15.09)x(4.96+5.32)/2	-1.59		
		(-1.75--15.40)x(5.30+4.96)/2	70.02		
		(-0.68--1.75)x(5.33+5.30)/2	5.69		
		(0.68--0.68)x(5.33+5.33)/2	7.25		
		(1.75-0.68)x(5.30+5.33)/2	5.69		
		(11.65-1.75)x(5.05+5.30)/2	51.23		
		(11.34-11.65)x(5.42+5.05)/2	-1.62		
		(12.61-11.34)x(5.42+5.42)/2	6.88		
		(19.71-12.61)x(0.69+5.42)/2	21.69		
		(19.63-19.71)x(0.64+0.69)/2	-0.05		
		(19.03-19.63)x(0.33+0.64)/2	-0.29		
		(18.19-19.03)x(0.06+0.33)/2	-0.16		
		(17.95-18.19)x(0.00+0.06)/2	-0.01		
		(16.87-17.83)x(-0.08+-0.00)/2	0.04		
		(16.21-16.87)x(-0.07+-0.08)/2	0.05		
		(15.79-16.21)x(-0.06+-0.07)/2	0.03		
		(14.96-15.79)x(-0.05+-0.06)/2	0.05		
		(14.71-14.96)x(-0.04+-0.05)/2	0.01		
		(14.58-14.71)x(-0.02+-0.04)/2	0.00		
		(13.63-14.58)x(0.11+-0.02)/2	-0.04		
		(12.96-13.63)x(0.52+0.11)/2	-0.21		
		(12.55-12.96)x(0.66+0.52)/2	-0.24		
		(11.72-12.55)x(1.14+0.66)/2	-0.75		
		(11.47-11.72)x(1.27+1.14)/2	-0.30		
		(11.34-11.47)x(1.31+1.27)/2	-0.17		
		(10.38-11.34)x(1.74+1.31)/2	-1.46		
		(9.71-10.38)x(1.83+1.74)/2	-1.20		
		(9.30-9.71)x(1.88+1.83)/2	-0.76		
		(8.49-9.30)x(2.00+1.88)/2	-1.57		
		(8.22-8.49)x(2.04+2.00)/2	-0.55		
		(8.09-8.22)x(2.05+2.04)/2	-0.27		
		(7.14-8.09)x(2.15+2.05)/2	-2.00		
		(6.46-7.14)x(2.29+2.15)/2	-1.51		
		(6.06-6.46)x(2.36+2.29)/2	-0.93		
		(5.26-6.06)x(2.37+2.36)/2	-1.89		
		(4.98-5.26)x(2.37+2.37)/2	-0.66		
		(4.84-4.98)x(2.37+2.37)/2	-0.33		
		(3.90-4.84)x(2.36+2.37)/2	-2.22		
		(3.21-3.90)x(2.35+2.36)/2	-1.62		
		(2.82-3.21)x(2.37+2.35)/2	-0.92		
		(2.03-2.82)x(2.39+2.37)/2	-1.88		
		(1.74-2.03)x(2.40+2.39)/2	-0.69		
		(1.59-1.74)x(2.39+2.40)/2	-0.36		
		(0.65-1.59)x(2.38+2.39)/2	-2.24		
		(0.19-0.65)x(2.32+2.38)/2	-1.08		
		(-0.43-0.19)x(2.33+2.32)/2	-1.44		
		(-1.20--0.43)x(2.33+2.33)/2	-1.79		
		(-1.51--1.20)x(2.33+2.33)/2	-0.72		
		(-1.66--1.51)x(2.33+2.33)/2	-0.35		
		(-2.59--1.66)x(2.27+2.33)/2	-2.14		
		(-3.29--2.59)x(2.19+2.27)/2	-1.56		
		(-3.67--3.29)x(2.13+2.19)/2	-0.82		
		(-4.43--3.67)x(2.03+2.13)/2	-1.58		
		(-4.75--4.43)x(1.99+2.03)/2	-0.64		
		(-4.91--4.75)x(1.97+1.99)/2	-0.32		
		(-5.83--4.91)x(1.86+1.97)/2	-1.76		
		(-6.54--5.83)x(1.79+1.86)/2	-1.30		
		(-6.91--6.54)x(1.74+1.79)/2	-0.65		
		(-7.66--6.91)x(1.70+1.74)/2	-1.29		
		(-8.00--7.66)x(1.68+1.70)/2	-0.57		
		(-8.16--8.00)x(1.67+1.68)/2	-0.27		
		(-9.08--8.16)x(1.63+1.67)/2	-1.52		
		(-9.79--9.08)x(1.60+1.63)/2	-1.15		
		(-10.16--9.79)x(1.58+1.60)/2	-0.59		
		(-10.90--10.16)x(1.74+1.58)/2	-1.23		
		(-11.24--10.90)x(1.84+1.74)/2	-0.61		
		(-11.41--11.24)x(1.92+1.84)/2	-0.32		
		(-12.32--11.41)x(2.36+1.92)/2	-1.95		
		(-13.04--12.32)x(2.74+2.36)/2	-1.84		
		(-13.40--13.04)x(2.91+2.74)/2	-1.02		
		(-14.13--13.40)x(3.47+2.91)/2	-2.33		
		(-14.48--14.13)x(3.72+3.47)/2	-1.26		
		(-14.66--14.48)x(3.77+3.72)/2	-0.67		
		(-15.56--14.66)x(4.01+3.77)/2	-3.50		
		(-16.29--15.56)x(4.01+4.01)/2	-2.93		
		(-16.64--16.29)x(4.01+4.01)/2	-1.40		
		(-17.36--16.64)x(4.01+4.01)/2	-2.89		
		(-17.73--17.36)x(4.00+4.01)/2	-1.48		
		A RIPORTARE mq	111.25		

	CALCOLO DELLE AREE		Foglio n. 42

RILEVATO

N. SEZIONE PROG.	FIG.	ELEMENTI DI CALCOLO	AREA ELEMENTARE mq	AREA FIGURA mq	NOTE
		RIPORTO mq	111.25		
		(-18.36--17.73)x(3.99+4.00)/2	-2.52		
				108.73	
58	A1	(-16.36--18.44)x(5.37+3.98)/2	9.72		
855.00		(-15.09--16.36)x(5.37+5.37)/2	6.82		
		(-15.40--15.09)x(5.00+5.37)/2	-1.61		
		(-1.75--15.40)x(5.34+5.00)/2	70.57		
		(-0.68--1.75)x(5.37+5.34)/2	5.73		
		(0.68--0.68)x(5.37+5.37)/2	7.30		
		(1.75-0.68)x(5.34+5.37)/2	5.73		
		(11.65-1.75)x(5.10+5.34)/2	51.68		
		(11.34-11.65)x(5.46+5.10)/2	-1.64		
		(12.61-11.34)x(5.47+5.46)/2	6.94		
		(18.60-12.61)x(1.47+5.47)/2	20.79		
		(18.34-18.60)x(-0.04+0.03)/2	0.00		
		(17.66-18.34)x(-0.06+-0.04)/2	0.03		
		(17.25-17.66)x(-0.07+-0.06)/2	0.03		
		(17.05-17.25)x(-0.07+-0.07)/2	0.01		
		(16.17-17.05)x(-0.07+-0.07)/2	0.06		
		(15.42-16.17)x(-0.07+-0.07)/2	0.05		
		(15.09-15.42)x(-0.06+-0.07)/2	0.02		
		(14.93-15.09)x(-0.05+-0.06)/2	0.01		
		(14.45-14.93)x(0.13+-0.05)/2	-0.02		
		(14.12-14.45)x(0.22+0.13)/2	-0.06		
		(14.01-14.12)x(0.26+0.22)/2	-0.03		
		(13.79-14.01)x(0.42+0.26)/2	-0.07		
		(12.93-13.79)x(0.86+0.42)/2	-0.55		
		(12.16-12.93)x(1.36+0.86)/2	-0.85		
		(11.85-12.16)x(1.59+1.36)/2	-0.46		
		(11.24-11.85)x(1.75+1.59)/2	-1.02		
		(10.76-11.24)x(1.86+1.75)/2	-0.87		
		(10.52-10.76)x(1.87+1.86)/2	-0.45		
		(9.68-10.52)x(1.93+1.87)/2	-1.60		
		(8.89-9.68)x(2.07+1.93)/2	-1.58		
		(8.60-8.89)x(2.11+2.07)/2	-0.61		
		(8.02-8.60)x(2.21+2.11)/2	-1.25		
		(7.65-8.02)x(2.28+2.21)/2	-0.83		
		(7.52-7.65)x(2.28+2.28)/2	-0.30		
		(6.84-7.52)x(2.24+2.28)/2	-1.54		
		(6.44-6.84)x(2.24+2.24)/2	-0.90		
		(6.03-6.44)x(2.23+2.24)/2	-0.92		
		(5.35-6.03)x(2.21+2.23)/2	-1.51		
		(5.22-5.35)x(2.21+2.21)/2	-0.29		
		(4.81-5.22)x(2.20+2.21)/2	-0.90		
		(4.27-4.81)x(2.20+2.20)/2	-1.19		
		(4.00-4.27)x(2.19+2.20)/2	-0.59		
		(3.19-4.00)x(2.18+2.19)/2	-1.77		
		(2.37-3.19)x(2.17+2.18)/2	-1.78		
		(2.11-2.37)x(2.17+2.17)/2	-0.56		
		(1.60-2.11)x(2.13+2.17)/2	-1.10		
		(1.03-1.60)x(2.07+2.13)/2	-1.20		
		(0.74-1.03)x(2.01+2.07)/2	-0.59		
		(-0.05-0.74)x(1.85+2.01)/2	-1.52		
		(-0.89--0.05)x(1.82+1.85)/2	-1.54		
		(-1.14--0.89)x(1.81+1.82)/2	-0.45		
		(-1.61--1.14)x(1.79+1.81)/2	-0.85		
		(-2.22--1.61)x(1.76+1.79)/2	-1.08		
		(-2.53--2.22)x(1.76+1.76)/2	-0.55		
		(-3.30--2.53)x(1.75+1.76)/2	-1.35		
		(-4.16--3.30)x(1.75+1.75)/2	-1.51		
		(-4.38--4.16)x(1.75+1.75)/2	-0.38		
		(-4.49--4.38)x(1.75+1.75)/2	-0.19		
		(-4.83--4.49)x(1.74+1.75)/2	-0.59		
		(-5.30--4.83)x(1.74+1.74)/2	-0.82		
		(-5.46--5.30)x(1.74+1.74)/2	-0.28		
		(-5.79--5.46)x(1.74+1.74)/2	-0.57		
		(-6.55--5.79)x(1.71+1.74)/2	-1.31		
		(-7.42--6.55)x(1.67+1.71)/2	-1.47		
		(-7.63--7.42)x(1.66+1.67)/2	-0.35		
		(-8.04--7.63)x(1.71+1.66)/2	-0.69		
		(-8.71--8.04)x(1.80+1.71)/2	-1.18		
		(-9.05--8.71)x(1.90+1.80)/2	-0.63		
		(-9.79--9.05)x(2.09+1.90)/2	-1.48		
		(-10.68--9.79)x(2.26+2.09)/2	-1.94		
		(-10.87--10.68)x(2.30+2.26)/2	-0.43		
		(-11.25--10.87)x(2.47+2.30)/2	-0.91		
		(-11.96--11.25)x(2.82+2.47)/2	-1.88		
		(-12.31--11.96)x(2.98+2.82)/2	-1.01		
		(-13.04--12.31)x(3.23+2.98)/2	-2.27		
		(-13.95--13.04)x(3.71+3.23)/2	-3.16		
		(-14.12--13.95)x(3.82+3.71)/2	-0.64		
		(-14.46--14.12)x(3.87+3.82)/2	-1.31		
		(-15.20--14.46)x(3.93+3.87)/2	-2.89		
		(-15.58--15.20)x(3.93+3.93)/2	-1.49		
		(-16.28--15.58)x(3.92+3.93)/2	-2.75		
		(-17.21--16.28)x(3.93+3.92)/2	-3.65		
		(-17.36--17.21)x(3.92+3.93)/2	-0.59		
		(-17.67--17.36)x(3.94+3.92)/2	-1.22		
		(-18.44--17.67)x(3.98+3.94)/2	-3.05		
				108.87	
59	A1	(-16.36--18.72)x(5.42+3.84)/2	10.93		
870.00		(-15.09--16.36)x(5.41+5.42)/2	6.88		
		(-15.40--15.09)x(5.05+5.41)/2	-1.62		
		(-1.75--15.40)x(5.39+5.05)/2	71.25		
		(-0.68--1.75)x(5.42+5.39)/2	5.78		
		(0.68--0.68)x(5.42+5.42)/2	7.37		
		(1.75-0.68)x(5.39+5.42)/2	5.78		
		(11.65-1.75)x(5.14+5.39)/2	52.12		
		(11.34-11.65)x(5.51+5.14)/2	-1.65		
		(12.61-11.34)x(5.51+5.51)/2	7.00		
		(17.08-12.61)x(2.53+5.51)/2	17.97		
		(16.53-17.08)x(-0.10+-0.09)/2	0.05		
		(16.23-16.53)x(-0.06+-0.10)/2	0.02		
		(15.44-16.23)x(-0.00+-0.06)/2	0.02		
		(14.59-15.44)x(0.21+-0.00)/2	-0.09		
		A RIPORTARE mq	181.81		

		CALCOLO DELLE AREE		Foglio n. 43
RILEVATO				
N. SEZIONE PROG.	FIG.	ELEMENTI DI CALCOLO	AREA ELEMENTARE mq	AREA FIGURA mq	NOTE
		RIPORTO mq	181.81		
		(14.36-14.59)x(0.28+0.21)/2	-0.06		
		(13.92-14.36)x(0.61+0.28)/2	-0.20		
		(13.28-13.92)x(1.13+0.61)/2	-0.56		
		(12.95-13.28)x(1.28+1.13)/2	-0.40		
		(12.20-12.95)x(1.68+1.28)/2	-1.11		
		(11.31-12.20)x(1.82+1.68)/2	-1.56		
		(11.11-11.31)x(1.86+1.82)/2	-0.37		
		(10.72-11.11)x(1.91+1.86)/2	-0.74		
		(10.03-10.72)x(1.98+1.91)/2	-1.34		
		(9.40-10.03)x(2.06+1.98)/2	-1.27		
		(8.95-9.40)x(2.07+2.06)/2	-0.93		
		(8.04-8.95)x(2.00+2.07)/2	-1.85		
		(7.87-8.04)x(1.99+2.00)/2	-0.34		
		(7.53-7.87)x(1.97+1.99)/2	-0.67		
		(6.78-7.53)x(1.94+1.97)/2	-1.47		
		(6.40-6.78)x(1.91+1.94)/2	-0.73		
		(5.70-6.40)x(1.88+1.91)/2	-1.33		
		(4.76-5.70)x(1.83+1.88)/2	-1.74		
		(4.62-4.76)x(1.82+1.83)/2	-0.26		
		(4.34-4.62)x(1.80+1.82)/2	-0.51		
		(3.54-4.34)x(1.74+1.80)/2	-1.42		
		(3.12-3.54)x(1.73+1.74)/2	-0.73		
		(2.45-3.12)x(1.68+1.73)/2	-1.14		
		(1.49-2.45)x(1.68+1.68)/2	-1.61		
		(1.37-1.49)x(1.68+1.68)/2	-0.20		
		(1.14-1.37)x(1.69+1.68)/2	-0.39		
		(0.29-1.14)x(1.70+1.69)/2	-1.44		
		(-0.15-0.29)x(1.72+1.70)/2	-0.75		
		(-0.80--0.15)x(1.73+1.72)/2	-1.12		
		(-1.79--0.80)x(1.71+1.73)/2	-1.70		
		(-1.88--1.79)x(1.70+1.71)/2	-0.15		
		(-2.05--1.88)x(1.69+1.70)/2	-0.29		
		(-2.96--2.05)x(1.63+1.69)/2	-1.51		
		(-3.43--2.96)x(1.64+1.63)/2	-0.77		
		(-4.04--3.43)x(1.67+1.64)/2	-1.01		
		(-5.07--4.04)x(1.69+1.67)/2	-1.73		
		(-5.13--5.07)x(1.70+1.69)/2	-0.10		
		(-5.24--5.13)x(1.70+1.70)/2	-0.19		
		(-6.21--5.24)x(1.70+1.70)/2	-1.65		
		(-6.70--6.21)x(1.69+1.70)/2	-0.83		
		(-7.29--6.70)x(1.68+1.69)/2	-0.99		
		(-8.34--7.29)x(1.71+1.68)/2	-1.78		
		(-8.37--8.34)x(1.71+1.71)/2	-0.05		
		(-8.44--8.37)x(1.71+1.71)/2	-0.12		
		(-9.46--8.44)x(1.71+1.71)/2	-1.74		
		(-10.01--9.46)x(1.85+1.71)/2	-0.98		
		(-10.54--10.01)x(2.03+1.85)/2	-1.03		
		(-11.62--10.54)x(2.67+2.03)/2	-2.54		
		(-11.63--11.62)x(2.68+2.67)/2	-0.03		
		(-12.70--11.63)x(3.24+2.68)/2	-3.17		
		(-13.25--12.70)x(3.53+3.24)/2	-1.86		
		(-13.79--13.25)x(3.89+3.53)/2	-2.00		
		(-14.82--13.79)x(3.90+3.89)/2	-4.01		
		(-14.87--14.82)x(3.90+3.90)/2	-0.19		
		(-14.89--14.87)x(3.89+3.90)/2	-0.08		
		(-15.95--14.89)x(3.87+3.89)/2	-4.11		
		(-16.53--15.95)x(3.87+3.87)/2	-2.24		
		(-17.03--16.53)x(3.88+3.87)/2	-1.94		
		(-18.02--17.03)x(3.83+3.88)/2	-3.82		
		(-18.12--18.02)x(3.82+3.83)/2	-0.38		
		(-18.17--18.12)x(3.82+3.82)/2	-0.19		
		(-18.72--18.17)x(3.84+3.82)/2	-2.11		
				110.28	
60 885.00	A1	(-16.36--18.90)x(5.46+3.77)/2	11.72		
		(-15.09--16.36)x(5.46+5.46)/2	6.93		
		(-15.40--15.09)x(5.09+5.46)/2	-1.64		
		(-1.75--15.40)x(5.43+5.09)/2	71.80		
		(-0.68--1.75)x(5.46+5.43)/2	5.83		
		(0.68--0.68)x(5.46+5.46)/2	7.43		
		(1.75-0.68)x(5.43+5.46)/2	5.83		
		(11.65-1.75)x(5.19+5.43)/2	52.57		
		(11.34-11.65)x(5.55+5.19)/2	-1.66		
		(12.61-11.34)x(5.56+5.55)/2	7.05		
		(15.71-12.61)x(3.49+5.56)/2	14.03		
		(15.16-15.71)x(0.44+0.09)/2	-0.15		
		(14.68-15.16)x(0.64+0.44)/2	-0.26		
		(14.35-14.68)x(0.82+0.64)/2	-0.24		
		(13.60-14.35)x(1.37+0.82)/2	-0.82		
		(13.54-13.60)x(1.39+1.37)/2	-0.08		
		(13.36-13.54)x(1.46+1.39)/2	-0.26		
		(12.52-13.36)x(1.77+1.46)/2	-1.36		
		(12.08-12.52)x(1.79+1.77)/2	-0.78		
		(11.43-12.08)x(1.84+1.79)/2	-1.18		
		(10.44-11.43)x(1.86+1.84)/2	-1.83		
		(10.35-10.44)x(1.86+1.86)/2	-0.17		
		(10.19-10.35)x(1.88+1.86)/2	-0.30		
		(9.27-10.19)x(2.02+1.88)/2	-1.79		
		(8.79-9.27)x(2.03+2.02)/2	-0.97		
		(8.18-8.79)x(2.05+2.03)/2	-1.24		
		(7.15-8.18)x(2.08+2.05)/2	-2.13		
		(7.10-7.15)x(2.08+2.08)/2	-0.10		
		(7.01-7.10)x(2.08+2.08)/2	-0.19		
		(6.02-7.01)x(2.09+2.08)/2	-2.06		
		(5.50-6.02)x(2.10+2.09)/2	-1.09		
		(4.93-5.50)x(2.10+2.10)/2	-1.20		
		(4.65-4.93)x(2.12+2.10)/2	-0.59		
		(3.85-4.65)x(2.12+2.12)/2	-1.70		
		(3.84-3.85)x(2.12+2.12)/2	-0.02		
		(2.77-3.84)x(2.20+2.12)/2	-2.31		
		(2.21-2.77)x(2.17+2.20)/2	-1.22		
		(1.68-2.21)x(2.16+2.17)/2	-1.15		
		(0.66-1.68)x(1.90+2.16)/2	-2.07		
		(0.60-0.66)x(1.89+1.90)/2	-0.11		
		(0.57-0.60)x(1.89+1.89)/2	-0.06		
		A RIPORTARE mq	152.46		

	CALCOLO DELLE AREE		Foglio n. 44

RILEVATO

N. SEZIONE PROG.	FIG.	ELEMENTI DI CALCOLO	AREA ELEMENTARE mq	AREA FIGURA mq	NOTE
		RIPORTO mq	152.46		
		(-0.48-0.57)x(1.82+1.89)/2	-1.95		
		(-1.08--0.48)x(1.82+1.82)/2	-1.09		
		(-1.57--1.08)x(1.82+1.82)/2	-0.89		
		(-2.51--1.57)x(1.81+1.82)/2	-1.71		
		(-2.65--2.51)x(1.80+1.81)/2	-0.25		
		(-2.72--2.65)x(1.80+1.80)/2	-0.13		
		(-3.73--2.72)x(1.75+1.80)/2	-1.79		
		(-4.37--3.73)x(1.77+1.75)/2	-1.13		
		(-4.82--4.37)x(1.78+1.77)/2	-0.80		
		(-5.69--4.82)x(1.74+1.78)/2	-1.53		
		(-5.90--5.69)x(1.74+1.74)/2	-0.37		
		(-6.01--5.90)x(1.73+1.74)/2	-0.19		
		(-6.98--6.01)x(1.69+1.73)/2	-1.66		
		(-7.65--6.98)x(1.71+1.69)/2	-1.14		
		(-8.07--7.65)x(1.70+1.71)/2	-0.72		
		(-8.86--8.07)x(1.74+1.70)/2	-1.36		
		(-9.15--8.86)x(1.75+1.74)/2	-0.51		
		(-9.30--9.15)x(1.76+1.75)/2	-0.26		
		(-10.23--9.30)x(1.84+1.76)/2	-1.67		
		(-10.94--10.23)x(1.97+1.84)/2	-1.35		
		(-11.32--10.94)x(2.05+1.97)/2	-0.76		
		(-12.04--11.32)x(2.58+2.05)/2	-1.67		
		(-12.40--12.04)x(2.88+2.58)/2	-0.98		
		(-12.59--12.40)x(2.97+2.88)/2	-0.56		
		(-13.48--12.59)x(3.41+2.97)/2	-2.84		
		(-14.23--13.48)x(3.57+3.41)/2	-2.62		
		(-14.57--14.23)x(3.70+3.57)/2	-1.24		
		(-14.73--14.57)x(3.69+3.70)/2	-0.59		
		(-15.21--14.73)x(3.67+3.69)/2	-1.77		
		(-15.54--15.21)x(3.65+3.67)/2	-1.21		
		(-15.65--15.54)x(3.65+3.65)/2	-0.40		
		(-15.88--15.65)x(3.66+3.65)/2	-0.84		
		(-16.73--15.88)x(3.69+3.66)/2	-3.12		
		(-17.52--16.73)x(3.76+3.69)/2	-2.94		
		(-17.82--17.52)x(3.77+3.76)/2	-1.13		
		(-18.38--17.82)x(3.77+3.77)/2	-2.11		
		(-18.90--18.38)x(3.77+3.77)/2	-1.96		
				105.22	
61	A1	(-16.18--18.30)x(5.51+4.11)/2	10.20		
900.00		(-14.92--16.18)x(5.51+5.51)/2	6.94		
		(-15.22--14.92)x(5.14+5.51)/2	-1.60		
		(-1.75--15.22)x(5.48+5.14)/2	71.53		
		(-0.68--1.75)x(5.51+5.48)/2	5.88		
		(0.68--0.68)x(5.51+5.51)/2	7.49		
		(1.75-0.68)x(5.48+5.51)/2	5.88		
		(11.65-1.75)x(5.23+5.48)/2	53.01		
		(11.34-11.65)x(5.60+5.23)/2	-1.68		
		(12.61-11.34)x(5.60+5.60)/2	7.11		
		(13.79-12.61)x(4.82+5.60)/2	6.15		
		(12.82-13.79)x(1.61+1.44)/2	-1.48		
		(12.81-12.82)x(1.61+1.61)/2	-0.02		
		(12.78-12.81)x(1.62+1.61)/2	-0.05		
		(11.72-12.78)x(1.66+1.62)/2	-1.74		
		(11.17-11.72)x(1.76+1.66)/2	-0.94		
		(10.64-11.17)x(1.83+1.76)/2	-0.95		
		(9.63-10.64)x(1.88+1.83)/2	-1.87		
		(9.56-9.63)x(1.88+1.88)/2	-0.13		
		(9.52-9.56)x(1.89+1.88)/2	-0.08		
		(8.47-9.52)x(1.93+1.89)/2	-2.01		
		(7.87-8.47)x(1.96+1.93)/2	-1.17		
		(7.39-7.87)x(1.98+1.96)/2	-0.95		
		(6.47-7.39)x(2.01+1.98)/2	-1.84		
		(6.30-6.47)x(2.02+2.01)/2	-0.34		
		(6.22-6.30)x(2.02+2.02)/2	-0.16		
		(5.22-6.22)x(2.04+2.02)/2	-2.03		
		(4.57-5.22)x(2.04+2.04)/2	-1.33		
		(4.14-4.57)x(2.05+2.04)/2	-0.88		
		(3.31-4.14)x(2.06+2.05)/2	-1.71		
		(3.05-3.31)x(2.06+2.06)/2	-0.54		
		(2.91-3.05)x(2.05+2.06)/2	-0.29		
		(1.97-2.91)x(2.01+2.05)/2	-1.91		
		(1.26-1.97)x(1.97+2.01)/2	-1.41		
		(0.88-1.26)x(1.95+1.97)/2	-0.74		
		(0.16-0.88)x(1.91+1.95)/2	-1.39		
		(-0.20-0.16)x(1.89+1.91)/2	-0.68		
		(-0.92--0.20)x(1.85+1.89)/2	-1.35		
		(-1.28--0.92)x(1.83+1.85)/2	-0.66		
		(-2.04--1.28)x(1.80+1.83)/2	-1.38		
		(-2.37--2.04)x(1.78+1.80)/2	-0.59		
		(-3.00--2.37)x(1.75+1.78)/2	-1.11		
		(-3.45--3.00)x(1.72+1.75)/2	-0.78		
		(-3.69--3.45)x(1.69+1.72)/2	-0.41		
		(-4.54--3.69)x(1.60+1.69)/2	-1.40		
		(-5.34--4.54)x(1.59+1.60)/2	-1.28		
		(-5.62--5.34)x(1.57+1.59)/2	-0.44		
		(-6.15--5.62)x(1.58+1.57)/2	-0.83		
		(-6.70--6.15)x(1.59+1.58)/2	-0.87		
		(-6.99--6.70)x(1.60+1.59)/2	-0.46		
		(-7.79--6.99)x(1.64+1.60)/2	-1.30		
		(-8.64--7.79)x(1.69+1.64)/2	-1.42		
		(-8.87--8.64)x(1.70+1.69)/2	-0.39		
		(-9.31--8.87)x(1.73+1.70)/2	-0.75		
		(-9.96--9.31)x(1.78+1.73)/2	-1.14		
		(-10.30--9.96)x(1.80+1.78)/2	-0.61		
		(-11.04--10.30)x(1.84+1.80)/2	-1.35		
		(-11.95--11.04)x(1.96+1.84)/2	-1.73		
		(-12.12--11.95)x(2.00+1.96)/2	-0.34		
		(-12.47--12.12)x(2.15+2.00)/2	-0.73		
		(-13.21--12.47)x(2.42+2.15)/2	-1.69		
		(-13.60--13.21)x(2.61+2.42)/2	-0.98		
		(-14.29--13.60)x(3.05+2.61)/2	-1.95		
		(-15.25--14.29)x(3.30+3.05)/2	-3.05		
		(-15.38--15.25)x(3.35+3.30)/2	-0.43		
		(-15.62--15.38)x(3.42+3.35)/2	-0.81		
		A RIPORTARE mq	114.04		

		CALCOLO DELLE AREE		Foglio n. 45
RILEVATO				
N. SEZIONE PROG.	FIG.	ELEMENTI DI CALCOLO	AREA ELEMENTARE mq	AREA FIGURA mq	NOTE
		RIPORTO mq	114.04		
		(-16.46--15.62)x(3.75+3.42)/2	-3.01		
		(-16.90--16.46)x(3.87+3.75)/2	-1.68		
		(-17.55--16.90)x(4.01+3.87)/2	-2.56		
		(-18.30--17.55)x(4.11+4.01)/2	-3.05		
				103.74	
62	A1	(-15.56--18.34)x(5.57+3.72)/2	12.91		
915.00		(-14.30--15.56)x(5.57+5.57)/2	7.02		
		(-14.60--14.30)x(5.20+5.57)/2	-1.62		
		(-1.75--14.60)x(5.52+5.20)/2	68.88		
		(-0.68--1.75)x(5.55+5.52)/2	5.92		
		(0.68--0.68)x(5.55+5.55)/2	7.55		
		(1.75-0.68)x(5.52+5.55)/2	5.92		
		(11.01-1.75)x(5.29+5.52)/2	50.05		
		(13.12-11.01)x(5.40+5.29)/2	11.28		
		(13.07-13.12)x(1.88+1.87)/2	-0.09		
		(12.84-13.07)x(1.88+1.88)/2	-0.43		
		(12.18-12.84)x(1.90+1.88)/2	-1.25		
		(12.04-12.18)x(1.90+1.90)/2	-0.27		
		(11.99-12.04)x(1.91+1.90)/2	-0.10		
		(11.88-11.99)x(1.91+1.91)/2	-0.21		
		(10.90-11.88)x(1.94+1.91)/2	-1.89		
		(10.22-10.90)x(1.93+1.94)/2	-1.32		
		(9.82-10.22)x(1.94+1.93)/2	-0.77		
		(9.04-9.82)x(1.92+1.94)/2	-1.51		
		(8.73-9.04)x(1.91+1.92)/2	-0.59		
		(8.57-8.73)x(1.90+1.91)/2	-0.30		
		(7.65-8.57)x(1.87+1.90)/2	-1.73		
		(6.91-7.65)x(1.83+1.87)/2	-1.37		
		(6.56-6.91)x(1.82+1.83)/2	-0.64		
		(5.91-6.56)x(1.79+1.82)/2	-1.17		
		(5.48-5.91)x(1.77+1.79)/2	-0.77		
		(5.25-5.48)x(1.76+1.77)/2	-0.41		
		(4.39-5.25)x(1.73+1.76)/2	-1.50		
		(3.59-4.39)x(1.69+1.73)/2	-1.37		
		(3.31-3.59)x(1.68+1.69)/2	-0.47		
		(2.77-3.31)x(1.65+1.68)/2	-0.90		
		(2.22-2.77)x(1.62+1.65)/2	-0.90		
		(1.93-2.22)x(1.61+1.62)/2	-0.47		
		(1.14-1.93)x(1.57+1.61)/2	-1.26		
		(0.28-1.14)x(1.57+1.57)/2	-1.35		
		(0.05-0.28)x(1.57+1.57)/2	-0.36		
		(-0.37-0.05)x(1.58+1.57)/2	-0.66		
		(-1.03--0.37)x(1.59+1.58)/2	-1.05		
		(-1.38--1.03)x(1.59+1.59)/2	-0.56		
		(-2.12--1.38)x(1.59+1.59)/2	-1.18		
		(-3.04--2.12)x(1.59+1.59)/2	-1.46		
		(-3.20--3.04)x(1.59+1.59)/2	-0.25		
		(-3.51--3.20)x(1.58+1.59)/2	-0.49		
		(-4.29--3.51)x(1.58+1.58)/2	-1.23		
		(-4.70--4.29)x(1.59+1.58)/2	-0.65		
		(-5.37--4.70)x(1.61+1.59)/2	-1.07		
		(-5.70--5.37)x(1.63+1.61)/2	-0.53		
		(-6.46--5.70)x(1.63+1.63)/2	-1.24		
		(-6.65--6.46)x(1.65+1.63)/2	-0.31		
		(-7.54--6.65)x(1.74+1.65)/2	-1.51		
		(-8.01--7.54)x(1.78+1.74)/2	-0.83		
		(-8.63--8.01)x(1.81+1.78)/2	-1.11		
		(-9.67--8.63)x(1.84+1.81)/2	-1.90		
		(-9.71--9.67)x(1.84+1.84)/2	-0.07		
		(-9.78--9.71)x(1.84+1.84)/2	-0.13		
		(-10.80--9.78)x(1.82+1.84)/2	-1.87		
		(-11.33--10.80)x(1.81+1.82)/2	-0.96		
		(-11.88--11.33)x(1.80+1.81)/2	-0.99		
		(-12.92--11.88)x(1.79+1.80)/2	-1.87		
		(-12.97--12.92)x(1.79+1.79)/2	-0.09		
		(-12.99--12.97)x(1.79+1.79)/2	-0.04		
		(-14.05--12.99)x(1.77+1.79)/2	-1.89		
		(-14.65--14.05)x(1.84+1.77)/2	-1.08		
		(-15.13--14.65)x(1.86+1.84)/2	-0.89		
		(-16.06--15.13)x(2.30+1.86)/2	-1.93		
		(-16.22--16.06)x(2.39+2.30)/2	-0.38		
		(-16.30--16.22)x(2.45+2.39)/2	-0.19		
		(-17.30--16.30)x(3.10+2.45)/2	-2.78		
		(-17.96--17.30)x(3.50+3.10)/2	-2.18		
		(-18.34--17.96)x(3.72+3.50)/2	-1.37		
				109.77	
63	A1	(-14.62--19.64)x(5.64+2.30)/2	19.93		
930.00		(-13.36--14.62)x(5.64+5.64)/2	7.11		
		(-13.66--13.36)x(5.27+5.64)/2	-1.64		
		(-1.75--13.66)x(5.57+5.27)/2	64.55		
		(-0.68--1.75)x(5.60+5.57)/2	5.98		
		(0.68--0.68)x(5.60+5.60)/2	7.62		
		(1.75-0.68)x(5.57+5.60)/2	5.98		
		(17.71-1.75)x(5.17+5.57)/2	85.71		
		(17.40-17.71)x(5.54+5.17)/2	-1.66		
		(18.67-17.40)x(5.54+5.54)/2	7.04		
		(23.11-18.67)x(2.58+5.54)/2	18.03		
		(27.82-23.11)x(2.58+2.58)/2	12.15		
		(27.55-27.82)x(1.83+1.89)/2	-0.50		
		(27.42-27.55)x(1.80+1.83)/2	-0.24		
		(27.16-27.42)x(1.77+1.80)/2	-0.46		
		(26.33-27.16)x(1.68+1.77)/2	-1.43		
		(25.74-26.33)x(1.46+1.68)/2	-0.93		
		(25.24-25.74)x(1.24+1.46)/2	-0.68		
		(24.22-25.24)x(0.89+1.24)/2	-1.09		
		(24.16-24.22)x(0.85+0.89)/2	-0.05		
		(24.04-24.16)x(0.80+0.85)/2	-0.10		
		(23.07-24.04)x(0.36+0.80)/2	-0.56		
		(22.56-23.07)x(0.20+0.36)/2	-0.14		
		(21.99-22.56)x(0.03+0.20)/2	-0.07		
		(20.92-21.99)x(-0.07+0.03)/2	0.02		
		(20.90-20.92)x(-0.07+-0.07)/2	0.00		
		(19.82-20.90)x(-0.05+-0.07)/2	0.06		
		(19.23-19.82)x(-0.06+-0.05)/2	0.03		
		A RIPORTARE mq	224.66		

		CALCOLO DELLE AREE		Foglio n. 46
RILEVATO				
N. SEZIONE PROG.	FIG.	ELEMENTI DI CALCOLO	AREA ELEMENTARE mq	AREA FIGURA mq	NOTE
		RIPORTO mq	224.66		
		(18.73-19.23)x(-0.06+-0.06)/2	0.03		
		(17.80-18.73)x(0.03+-0.06)/2	0.01		
		(17.65-17.80)x(0.05+0.03)/2	-0.01		
		(17.57-17.65)x(0.10+0.05)/2	-0.01		
		(16.56-17.57)x(0.64+0.10)/2	-0.37		
		(15.90-16.56)x(1.05+0.64)/2	-0.56		
		(15.47-15.90)x(1.35+1.05)/2	-0.52		
		(14.68-15.47)x(1.62+1.35)/2	-1.17		
		(14.39-14.68)x(1.71+1.62)/2	-0.48		
		(14.24-14.39)x(1.71+1.71)/2	-0.26		
		(13.30-14.24)x(1.80+1.71)/2	-1.65		
		(12.57-13.30)x(1.85+1.80)/2	-1.33		
		(12.22-12.57)x(1.86+1.85)/2	-0.65		
		(11.56-12.22)x(1.95+1.86)/2	-1.26		
		(11.13-11.56)x(2.00+1.95)/2	-0.85		
		(10.91-11.13)x(2.00+2.00)/2	-0.44		
		(10.05-10.91)x(2.00+2.00)/2	-1.72		
		(9.24-10.05)x(1.99+2.00)/2	-1.62		
		(8.96-9.24)x(1.98+1.99)/2	-0.56		
		(8.44-8.96)x(1.96+1.98)/2	-1.02		
		(7.88-8.44)x(1.94+1.96)/2	-1.09		
		(7.21-7.88)x(1.94+1.94)/2	-1.30		
		(6.79-7.21)x(1.92+1.94)/2	-0.81		
		(5.91-6.79)x(1.89+1.92)/2	-1.68		
		(5.70-5.91)x(1.88+1.89)/2	-0.40		
		(5.32-5.70)x(1.87+1.88)/2	-0.71		
		(4.62-5.32)x(1.86+1.87)/2	-1.31		
		(4.25-4.62)x(1.86+1.86)/2	-0.69		
		(3.53-4.25)x(1.85+1.86)/2	-1.34		
		(2.58-3.53)x(1.85+1.85)/2	-1.76		
		(2.45-2.58)x(1.85+1.85)/2	-0.24		
		(2.20-2.45)x(1.84+1.85)/2	-0.46		
		(1.36-2.20)x(1.84+1.84)/2	-1.55		
		(0.92-1.36)x(1.82+1.84)/2	-0.81		
		(0.28-0.92)x(1.81+1.82)/2	-1.16		
		(-0.75-0.28)x(1.73+1.81)/2	-1.82		
		(-0.81--0.75)x(1.73+1.73)/2	-0.10		
		(-0.92--0.81)x(1.72+1.73)/2	-0.19		
		(-1.89--0.92)x(1.60+1.72)/2	-1.61		
		(-2.41--1.89)x(1.60+1.60)/2	-0.83		
		(-2.98--2.41)x(1.58+1.60)/2	-0.91		
		(-4.04--2.98)x(1.60+1.58)/2	-1.69		
		(-4.07--4.04)x(1.60+1.60)/2	-0.05		
		(-4.08--4.07)x(1.60+1.60)/2	-0.02		
		(-5.15--4.08)x(1.66+1.60)/2	-1.74		
		(-5.74--5.15)x(1.71+1.66)/2	-0.99		
		(-6.24--5.74)x(1.74+1.71)/2	-0.86		
		(-7.16--6.24)x(1.80+1.74)/2	-1.63		
		(-7.32--7.16)x(1.81+1.80)/2	-0.29		
		(-7.41--7.32)x(1.81+1.81)/2	-0.16		
		(-8.41--7.41)x(1.82+1.81)/2	-1.81		
		(-9.07--8.41)x(1.80+1.82)/2	-1.19		
		(-9.49--9.07)x(1.80+1.80)/2	-0.76		
		(-10.28--9.49)x(1.77+1.80)/2	-1.41		
		(-10.58--10.28)x(1.76+1.77)/2	-0.53		
		(-11.31--10.58)x(1.75+1.76)/2	-1.28		
		(-11.67--11.31)x(1.75+1.75)/2	-0.63		
		(-12.40--11.67)x(1.80+1.75)/2	-1.30		
		(-12.75--12.40)x(1.82+1.80)/2	-0.63		
		(-13.40--12.75)x(1.85+1.82)/2	-1.19		
		(-13.84--13.40)x(1.86+1.85)/2	-0.82		
		(-14.07--13.84)x(1.86+1.86)/2	-0.43		
		(-14.92--14.07)x(1.83+1.86)/2	-1.57		
		(-15.73--14.92)x(1.81+1.83)/2	-1.47		
		(-16.01--15.73)x(1.80+1.81)/2	-0.51		
		(-16.52--16.01)x(1.83+1.80)/2	-0.93		
		(-17.09--16.52)x(1.87+1.83)/2	-1.05		
		(-17.40--17.09)x(1.90+1.87)/2	-0.58		
		(-18.18--17.40)x(1.99+1.90)/2	-1.52		
		(-19.06--18.18)x(2.17+1.99)/2	-1.83		
		(-19.26--19.06)x(2.21+2.17)/2	-0.44		
		(-19.64--19.26)x(2.30+2.21)/2	-0.86		
				159.28	
64 945.00	A1	(-13.69--18.68)x(5.71+2.38)/2	20.18		
		(-12.42--13.69)x(5.71+5.71)/2	7.25		
		(-12.73--12.42)x(5.34+5.71)/2	-1.71		
		(-1.75--12.73)x(5.62+5.34)/2	60.17		
		(-0.68--1.75)x(5.64+5.62)/2	6.02		
		(0.68--0.68)x(5.64+5.64)/2	7.67		
		(1.75-0.68)x(5.62+5.64)/2	6.02		
		(16.05-1.75)x(5.26+5.62)/2	77.79		
		(15.75-16.05)x(5.62+5.26)/2	-1.63		
		(17.01-15.75)x(5.63+5.62)/2	7.09		
		(21.60-17.01)x(2.57+5.63)/2	18.82		
		(29.07-21.60)x(2.57+2.57)/2	19.20		
		(28.71-29.07)x(2.00+2.03)/2	-0.73		
		(28.28-28.71)x(1.92+2.00)/2	-0.84		
		(27.63-28.28)x(1.79+1.92)/2	-1.21		
		(26.61-27.63)x(1.60+1.79)/2	-1.73		
		(26.54-26.61)x(1.60+1.60)/2	-0.11		
		(26.42-26.54)x(1.52+1.60)/2	-0.19		
		(25.46-26.42)x(0.86+1.52)/2	-1.14		
		(24.94-25.46)x(0.68+0.86)/2	-0.40		
		(24.37-24.94)x(0.41+0.68)/2	-0.31		
		(23.32-24.37)x(0.34+0.41)/2	-0.39		
		(23.28-23.32)x(0.34+0.34)/2	-0.01		
		(23.26-23.28)x(0.33+0.34)/2	-0.01		
		(22.20-23.26)x(0.05+0.33)/2	-0.20		
		(21.59-22.20)x(0.00+0.05)/2	-0.02		
		(21.11-21.59)x(-0.06+0.00)/2	0.01		
		(20.88-21.11)x(-0.06+-0.06)/2	0.01		
		(20.22-20.88)x(-0.08+-0.06)/2	0.05		
		(20.07-20.22)x(-0.08+-0.08)/2	0.01		
		(20.02-20.07)x(-0.08+-0.08)/2	0.00		
		A RIPORTARE mq	219.66		

		CALCOLO DELLE AREE		Foglio n. 47
RILEVATO				
N. SEZIONE PROG.	FIG.	ELEMENTI DI CALCOLO	AREA ELEMENTARE mq	AREA FIGURA mq	NOTE
		RIPORTO mq	219.66		
		(19.92-20.02)x(-0.08+-0.08)/2	0.01		
		(18.94-19.92)x(-0.08+-0.08)/2	0.08		
		(18.25-18.94)x(0.18+-0.08)/2	-0.03		
		(17.85-18.25)x(0.29+0.18)/2	-0.09		
		(17.11-17.85)x(0.84+0.29)/2	-0.42		
		(16.76-17.11)x(1.10+0.84)/2	-0.34		
		(16.58-16.76)x(1.16+1.10)/2	-0.20		
		(15.68-16.58)x(1.53+1.16)/2	-1.21		
		(14.91-15.68)x(1.66+1.53)/2	-1.23		
		(14.59-14.91)x(1.74+1.66)/2	-0.54		
		(14.01-14.59)x(1.75+1.74)/2	-1.01		
		(13.51-14.01)x(1.76+1.75)/2	-0.88		
		(13.23-13.51)x(1.90+1.76)/2	-0.51		
		(12.42-13.23)x(2.22+1.90)/2	-1.67		
		(11.56-12.42)x(3.05+2.22)/2	-2.27		
		(11.33-11.56)x(3.23+3.05)/2	-0.72		
		(10.91-11.33)x(3.58+3.23)/2	-1.43		
		(10.25-10.91)x(4.10+3.58)/2	-2.53		
		(9.89-10.25)x(4.15+4.10)/2	-1.48		
		(9.16-9.89)x(4.28+4.15)/2	-3.08		
		(8.22-9.16)x(4.34+4.28)/2	-4.05		
		(8.07-8.22)x(4.35+4.34)/2	-0.65		
		(7.81-8.07)x(4.34+4.35)/2	-1.13		
		(6.99-7.81)x(4.20+4.34)/2	-3.50		
		(6.55-6.99)x(3.65+4.20)/2	-1.73		
		(5.90-6.55)x(2.96+3.65)/2	-2.15		
		(4.87-5.90)x(2.11+2.96)/2	-2.61		
		(4.82-4.87)x(2.07+2.11)/2	-0.10		
		(4.71-4.82)x(2.03+2.07)/2	-0.23		
		(3.73-4.71)x(1.90+2.03)/2	-1.93		
		(3.20-3.73)x(1.85+1.90)/2	-0.99		
		(2.64-3.20)x(1.82+1.85)/2	-1.03		
		(2.37-2.64)x(1.81+1.82)/2	-0.49		
		(1.60-2.37)x(1.79+1.81)/2	-1.39		
		(1.57-1.60)x(1.79+1.79)/2	-0.05		
		(1.56-1.57)x(1.79+1.79)/2	-0.02		
		(1.53-1.56)x(1.79+1.79)/2	-0.05		
		(0.47-1.53)x(1.76+1.79)/2	-1.88		
		(-0.14-0.47)x(1.73+1.76)/2	-1.06		
		(-0.62--0.14)x(1.71+1.73)/2	-0.83		
		(-1.50--0.62)x(1.67+1.71)/2	-1.49		
		(-1.70--1.50)x(1.66+1.67)/2	-0.33		
		(-1.81--1.70)x(1.66+1.66)/2	-0.18		
		(-2.79--1.81)x(1.62+1.66)/2	-1.61		
		(-3.48--2.79)x(1.63+1.62)/2	-1.12		
		(-3.88--3.48)x(1.63+1.63)/2	-0.65		
		(-4.60--3.88)x(1.64+1.63)/2	-1.18		
		(-4.96--4.60)x(1.64+1.64)/2	-0.59		
		(-5.16--4.96)x(1.64+1.64)/2	-0.33		
		(-6.05--5.16)x(1.68+1.64)/2	-1.48		
		(-6.83--6.05)x(1.71+1.68)/2	-1.32		
		(-7.13--6.83)x(1.72+1.71)/2	-0.51		
		(-7.70--7.13)x(1.75+1.72)/2	-0.99		
		(-8.22--7.70)x(1.79+1.75)/2	-0.92		
		(-8.50--8.22)x(1.80+1.79)/2	-0.50		
		(-9.31--8.50)x(1.86+1.80)/2	-1.48		
		(-10.17--9.31)x(1.88+1.86)/2	-1.61		
		(-10.39--10.17)x(1.90+1.88)/2	-0.42		
		(-10.80--10.39)x(1.90+1.90)/2	-0.78		
		(-11.48--10.80)x(1.92+1.90)/2	-1.30		
		(-11.84--11.48)x(1.92+1.92)/2	-0.69		
		(-12.57--11.84)x(1.94+1.92)/2	-1.41		
		(-13.52--12.57)x(1.94+1.94)/2	-1.84		
		(-13.65--13.52)x(1.94+1.94)/2	-0.25		
		(-13.91--13.65)x(1.94+1.94)/2	-0.50		
		(-14.74--13.91)x(1.95+1.94)/2	-1.61		
		(-15.19--14.74)x(1.95+1.95)/2	-0.88		
		(-15.83--15.19)x(1.96+1.95)/2	-1.25		
		(-16.13--15.83)x(1.97+1.96)/2	-0.59		
		(-16.91--16.13)x(2.02+1.97)/2	-1.56		
		(-17.01--16.91)x(2.03+2.02)/2	-0.20		
		(-18.00--17.01)x(2.16+2.03)/2	-2.07		
		(-18.53--18.00)x(2.32+2.16)/2	-1.19		
		(-18.68--18.53)x(2.38+2.32)/2	-0.35		
				141.06	
65 960.00	A1	(-12.91--15.82)x(5.78+3.83)/2	13.98		
		(-11.64--12.91)x(5.77+5.78)/2	7.33		
		(-11.94--11.64)x(5.41+5.77)/2	-1.68		
		(-1.75--11.94)x(5.66+5.41)/2	56.40		
		(-0.68--1.75)x(5.69+5.66)/2	6.07		
		(0.68--0.68)x(5.69+5.69)/2	7.74		
		(1.75-0.68)x(5.66+5.69)/2	6.07		
		(15.40-1.75)x(5.32+5.66)/2	74.94		
		(15.10-15.40)x(5.68+5.32)/2	-1.65		
		(16.37-15.10)x(5.69+5.68)/2	7.22		
		(21.06-16.37)x(2.56+5.69)/2	19.35		
		(29.34-21.06)x(2.56+2.56)/2	21.20		
		(28.98-29.34)x(2.04+2.06)/2	-0.74		
		(28.90-28.98)x(2.04+2.04)/2	-0.16		
		(28.75-28.90)x(2.01+2.04)/2	-0.30		
		(27.81-28.75)x(1.78+2.01)/2	-1.78		
		(27.30-27.81)x(1.62+1.78)/2	-0.87		
		(26.72-27.30)x(1.39+1.62)/2	-0.87		
		(25.66-26.72)x(0.73+1.39)/2	-1.12		
		(25.64-25.66)x(0.72+0.73)/2	-0.01		
		(25.62-25.64)x(0.71+0.72)/2	-0.01		
		(24.55-25.62)x(0.31+0.71)/2	-0.55		
		(23.94-24.55)x(0.15+0.31)/2	-0.14		
		(23.46-23.94)x(-0.00+0.15)/2	-0.04		
		(22.58-23.46)x(-0.07+-0.00)/2	0.03		
		(22.38-22.58)x(-0.08+-0.07)/2	0.01		
		(22.27-22.38)x(-0.08+-0.08)/2	0.01		
		(21.29-22.27)x(-0.07+-0.08)/2	0.07		
		(20.59-21.29)x(-0.08+-0.07)/2	0.05		
		A RIPORTARE mq	210.55		

		CALCOLO DELLE AREE		Foglio n. 48
RILEVATO				
N. SEZIONE PROG.	FIG.	ELEMENTI DI CALCOLO	AREA ELEMENTARE mq	AREA FIGURA mq	NOTE
		RIPORTO mq	210.55		
		(20.20-20.59)x(-0.08+-0.08)/2	0.03		
		(19.49-20.20)x(-0.09+-0.08)/2	0.06		
		(19.11-19.49)x(-0.08+-0.09)/2	0.03		
		(18.91-19.11)x(0.00+-0.08)/2	0.01		
		(18.03-18.91)x(0.32+0.00)/2	-0.14		
		(17.23-18.03)x(0.88+0.32)/2	-0.48		
		(16.94-17.23)x(1.07+0.88)/2	-0.28		
		(16.41-16.94)x(1.27+1.07)/2	-0.62		
		(15.85-16.41)x(1.45+1.27)/2	-0.76		
		(15.19-15.85)x(1.57+1.45)/2	-1.00		
		(14.77-15.19)x(1.60+1.57)/2	-0.67		
		(13.87-14.77)x(1.67+1.60)/2	-1.47		
		(13.68-13.87)x(1.67+1.67)/2	-0.32		
		(13.32-13.68)x(1.88+1.67)/2	-0.64		
		(12.59-13.32)x(2.32+1.88)/2	-1.53		
		(12.19-12.59)x(2.52+2.32)/2	-0.97		
		(11.50-12.19)x(2.95+2.52)/2	-1.89		
		(10.51-11.50)x(3.38+2.95)/2	-3.13		
		(10.42-10.51)x(3.43+3.38)/2	-0.31		
		(10.24-10.42)x(3.48+3.43)/2	-0.62		
		(9.33-10.24)x(3.64+3.48)/2	-3.24		
		(8.84-9.33)x(3.72+3.64)/2	-1.80		
		(8.24-8.84)x(3.76+3.72)/2	-2.24		
		(7.16-8.24)x(3.81+3.76)/2	-4.09		
		(6.07-7.16)x(3.64+3.81)/2	-4.06		
		(5.48-6.07)x(3.47+3.64)/2	-2.10		
		(4.98-5.48)x(3.32+3.47)/2	-1.70		
		(4.07-4.98)x(3.17+3.32)/2	-2.95		
		(3.90-4.07)x(3.15+3.17)/2	-0.54		
		(3.80-3.90)x(3.14+3.15)/2	-0.31		
		(2.81-3.80)x(3.12+3.14)/2	-3.10		
		(2.12-2.81)x(3.03+3.12)/2	-2.12		
		(1.72-2.12)x(2.98+3.03)/2	-1.20		
		(0.99-1.72)x(2.82+2.98)/2	-2.12		
		(0.73-0.99)x(2.76+2.82)/2	-0.73		
		(0.63-0.73)x(2.74+2.76)/2	-0.27		
		(-0.08-0.63)x(2.58+2.74)/2	-1.89		
		(-0.45--0.08)x(2.51+2.58)/2	-0.94		
		(-0.88--0.45)x(2.42+2.51)/2	-1.06		
		(-1.54--0.88)x(2.34+2.42)/2	-1.57		
		(-1.69--1.54)x(2.30+2.34)/2	-0.35		
		(-2.10--1.69)x(2.26+2.30)/2	-0.93		
		(-2.63--2.10)x(2.19+2.26)/2	-1.18		
		(-3.29--2.63)x(2.03+2.19)/2	-1.39		
		(-3.71--3.29)x(2.00+2.03)/2	-0.85		
		(-4.60--3.71)x(1.87+2.00)/2	-1.72		
		(-4.80--4.60)x(1.83+1.87)/2	-0.37		
		(-5.18--4.80)x(1.82+1.83)/2	-0.69		
		(-5.89--5.18)x(1.78+1.82)/2	-1.28		
		(-6.27--5.89)x(1.77+1.78)/2	-0.67		
		(-6.98--6.27)x(1.77+1.77)/2	-1.26		
		(-7.95--6.98)x(1.86+1.77)/2	-1.76		
		(-8.06--7.95)x(1.87+1.86)/2	-0.21		
		(-8.27--8.06)x(1.90+1.87)/2	-0.40		
		(-9.15--8.27)x(2.05+1.90)/2	-1.74		
		(-9.63--9.15)x(2.12+2.05)/2	-1.00		
		(-10.24--9.63)x(2.21+2.12)/2	-1.32		
		(-11.31--10.24)x(2.36+2.21)/2	-2.44		
		(-11.32--11.31)x(2.37+2.36)/2	-0.02		
		(-11.35--11.32)x(2.37+2.37)/2	-0.07		
		(-12.41--11.35)x(2.69+2.37)/2	-2.68		
		(-12.99--12.41)x(2.94+2.69)/2	-1.63		
		(-13.50--12.99)x(3.17+2.94)/2	-1.56		
		(-14.43--13.50)x(3.54+3.17)/2	-3.12		
		(-14.59--14.43)x(3.57+3.54)/2	-0.57		
		(-14.67--14.59)x(3.59+3.57)/2	-0.29		
		(-15.67--14.67)x(3.82+3.59)/2	-3.71		
		(-15.82--15.67)x(3.83+3.82)/2	-0.57		
				124.04	
66 975.00	A1	(-12.60--15.63)x(5.83+3.81)/2	14.60		
		(-11.34--12.60)x(5.82+5.83)/2	7.34		
		(-11.64--11.34)x(5.46+5.82)/2	-1.69		
		(-1.75--11.64)x(5.71+5.46)/2	55.24		
		(-0.68--1.75)x(5.73+5.71)/2	6.12		
		(0.68--0.68)x(5.73+5.73)/2	7.79		
		(1.75-0.68)x(5.71+5.73)/2	6.12		
		(15.39-1.75)x(5.36+5.71)/2	75.50		
		(15.09-15.39)x(5.73+5.36)/2	-1.66		
		(16.36-15.09)x(5.73+5.73)/2	7.28		
		(21.14-16.36)x(2.55+5.73)/2	19.79		
		(29.64-21.14)x(2.55+2.55)/2	21.67		
		(29.05-29.64)x(1.97+2.04)/2	-1.18		
		(28.76-29.05)x(1.94+1.97)/2	-0.57		
		(27.96-28.76)x(1.89+1.94)/2	-1.53		
		(27.95-27.96)x(1.88+1.89)/2	-0.02		
		(26.88-27.95)x(1.30+1.88)/2	-1.70		
		(26.29-26.88)x(1.00+1.30)/2	-0.68		
		(25.79-26.29)x(0.64+1.00)/2	-0.41		
		(24.88-25.79)x(0.35+0.64)/2	-0.45		
		(24.70-24.88)x(0.29+0.35)/2	-0.06		
		(24.60-24.70)x(0.27+0.29)/2	-0.03		
		(23.61-24.60)x(0.03+0.27)/2	-0.15		
		(22.53-22.92)x(-0.08+-0.03)/2	0.02		
		(21.82-22.53)x(-0.09+-0.08)/2	0.06		
		(21.44-21.82)x(-0.09+-0.09)/2	0.03		
		(21.23-21.44)x(-0.06+-0.09)/2	0.02		
		(20.35-21.23)x(0.02+-0.06)/2	0.02		
		(19.54-20.35)x(0.17+0.02)/2	-0.08		
		(19.26-19.54)x(0.22+0.17)/2	-0.05		
		(18.75-19.26)x(0.39+0.22)/2	-0.16		
		(18.17-18.75)x(0.62+0.39)/2	-0.29		
		(17.86-18.17)x(0.86+0.62)/2	-0.23		
		(17.09-17.86)x(1.45+0.86)/2	-0.89		
		(16.17-17.09)x(1.64+1.45)/2	-1.42		
		A RIPORTARE mq	208.35		

		CALCOLO DELLE AREE		Foglio n. 49
RILEVATO				
N. SEZIONE PROG.	FIG.	ELEMENTI DI CALCOLO	AREA ELEMENTARE mq	AREA FIGURA mq	NOTE
		RIPORTO mq	208.35		
		(16.00-16.17)x(1.69+1.64)/2	-0.28		
		(15.68-16.00)x(1.73+1.69)/2	-0.55		
		(14.91-15.68)x(1.79+1.73)/2	-1.36		
		(14.49-14.91)x(1.80+1.79)/2	-0.75		
		(13.82-14.49)x(1.80+1.80)/2	-1.21		
		(12.80-13.82)x(1.99+1.80)/2	-1.93		
		(12.73-12.80)x(2.00+1.99)/2	-0.14		
		(12.62-12.73)x(2.05+2.00)/2	-0.22		
		(11.65-12.62)x(2.48+2.05)/2	-2.20		
		(11.11-11.65)x(2.71+2.48)/2	-1.40		
		(10.56-11.11)x(2.95+2.71)/2	-1.56		
		(10.29-10.56)x(3.08+2.95)/2	-0.81		
		(9.55-10.29)x(3.35+3.08)/2	-2.38		
		(9.49-9.55)x(3.38+3.35)/2	-0.20		
		(9.47-9.49)x(3.38+3.38)/2	-0.07		
		(9.43-9.47)x(3.38+3.38)/2	-0.14		
		(8.38-9.43)x(3.54+3.38)/2	-3.63		
		(7.74-8.38)x(3.47+3.54)/2	-2.24		
		(7.30-7.74)x(3.41+3.47)/2	-1.51		
		(6.48-7.30)x(3.22+3.41)/2	-2.72		
		(6.21-6.48)x(3.14+3.22)/2	-0.86		
		(6.06-6.21)x(3.11+3.14)/2	-0.47		
		(5.12-6.06)x(2.91+3.11)/2	-2.83		
		(4.37-5.12)x(2.59+2.91)/2	-2.06		
		(4.03-4.37)x(2.45+2.59)/2	-0.86		
		(3.41-4.03)x(2.23+2.45)/2	-1.45		
		(2.94-3.41)x(2.06+2.23)/2	-1.01		
		(2.68-2.94)x(2.05+2.06)/2	-0.53		
		(1.86-2.68)x(1.95+2.05)/2	-1.64		
		(1.00-1.86)x(1.94+1.95)/2	-1.67		
		(0.77-1.00)x(1.92+1.94)/2	-0.44		
		(0.35-0.77)x(1.94+1.92)/2	-0.81		
		(-0.32-0.35)x(2.00+1.94)/2	-1.32		
		(-0.69--0.32)x(2.03+2.00)/2	-0.75		
		(-1.41--0.69)x(2.10+2.03)/2	-1.49		
		(-2.37--1.41)x(2.20+2.10)/2	-2.06		
		(-2.50--2.37)x(2.21+2.20)/2	-0.29		
		(-2.72--2.50)x(2.23+2.21)/2	-0.49		
		(-3.58--2.72)x(2.32+2.23)/2	-1.96		
		(-4.06--3.58)x(2.37+2.32)/2	-1.13		
		(-4.67--4.06)x(2.44+2.37)/2	-1.47		
		(-5.74--4.67)x(2.53+2.44)/2	-2.66		
		(-5.76--5.74)x(2.53+2.53)/2	-0.05		
		(-5.79--5.76)x(2.54+2.53)/2	-0.08		
		(-6.85--5.79)x(2.83+2.54)/2	-2.85		
		(-7.43--6.85)x(2.89+2.83)/2	-1.66		
		(-7.94--7.43)x(2.97+2.89)/2	-1.49		
		(-8.18--7.94)x(2.99+2.97)/2	-0.72		
		(-8.85--8.18)x(3.02+2.99)/2	-2.01		
		(-8.98--8.85)x(3.02+3.02)/2	-0.39		
		(-9.02--8.98)x(3.03+3.02)/2	-0.12		
		(-9.12--9.02)x(3.03+3.03)/2	-0.30		
		(-10.11--9.12)x(3.13+3.03)/2	-3.05		
		(-10.80--10.11)x(3.21+3.13)/2	-2.19		
		(-11.20--10.80)x(3.26+3.21)/2	-1.29		
		(-11.92--11.20)x(3.36+3.26)/2	-2.38		
		(-12.29--11.92)x(3.40+3.36)/2	-1.25		
		(-12.49--12.29)x(3.42+3.40)/2	-0.68		
		(-13.37--12.49)x(3.43+3.42)/2	-3.01		
		(-14.17--13.37)x(3.56+3.43)/2	-2.80		
		(-14.46--14.17)x(3.61+3.56)/2	-1.04		
		(-14.99--14.46)x(3.70+3.61)/2	-1.94		
		(-15.55--14.99)x(3.80+3.70)/2	-2.10		
		(-15.63--15.55)x(3.81+3.80)/2	-0.30		
				123.10	
67 990.00	A1	(-12.61--15.90)x(5.87+3.68)/2	15.71		
		(-11.34--12.61)x(5.87+5.87)/2	7.45		
		(-11.65--11.34)x(5.50+5.87)/2	-1.76		
		(-1.75--11.65)x(5.75+5.50)/2	55.69		
		(-0.68--1.75)x(5.78+5.75)/2	6.17		
		(0.68--0.68)x(5.78+5.78)/2	7.86		
		(1.75-0.68)x(5.75+5.78)/2	6.17		
		(15.40-1.75)x(5.41+5.75)/2	76.17		
		(15.09-15.40)x(5.78+5.41)/2	-1.73		
		(16.36-15.09)x(5.78+5.78)/2	7.34		
		(21.22-16.36)x(2.54+5.78)/2	20.22		
		(29.92-21.22)x(2.54+2.54)/2	22.10		
		(29.18-29.92)x(1.76+1.91)/2	-1.36		
		(28.62-29.18)x(1.47+1.76)/2	-0.90		
		(28.09-28.62)x(1.33+1.47)/2	-0.74		
		(27.13-28.09)x(1.16+1.33)/2	-1.20		
		(27.00-27.13)x(1.13+1.16)/2	-0.15		
		(26.93-27.00)x(1.09+1.13)/2	-0.08		
		(25.91-26.93)x(0.39+1.09)/2	-0.75		
		(25.23-25.91)x(0.30+0.39)/2	-0.23		
		(24.82-25.23)x(0.22+0.30)/2	-0.11		
		(24.08-24.82)x(0.10+0.22)/2	-0.12		
		(23.73-24.08)x(0.05+0.10)/2	-0.03		
		(23.02-23.73)x(-0.02+0.05)/2	-0.01		
		(22.65-23.02)x(-0.05+-0.02)/2	0.01		
		(21.85-22.65)x(0.00+-0.05)/2	0.02		
		(21.42-21.56)x(0.03+0.00)/2	-0.00		
		(21.02-21.42)x(0.07+0.03)/2	-0.02		
		(20.83-21.02)x(0.11+0.07)/2	-0.02		
		(20.82-20.83)x(0.11+0.11)/2	-0.00		
		(20.81-20.82)x(0.04+0.11)/2	-0.00		
		(20.55-20.81)x(0.09+0.04)/2	-0.02		
		(20.47-20.55)x(0.10+0.09)/2	-0.01		
		(20.15-20.47)x(0.17+0.10)/2	-0.04		
		(19.38-20.15)x(0.29+0.17)/2	-0.18		
		(19.18-19.38)x(0.34+0.29)/2	-0.06		
		(19.13-19.18)x(0.29+0.34)/2	-0.02		
		(19.12-19.13)x(0.33+0.29)/2	-0.00		
		(18.85-19.12)x(0.54+0.33)/2	-0.12		
		A RIPORTARE mq	215.25		

		CALCOLO DELLE AREE		Foglio n. 50
RILEVATO				
N. SEZIONE PROG.	FIG.	ELEMENTI DI CALCOLO	AREA ELEMENTARE mq	AREA FIGURA mq	NOTE
		RIPORTO mq	215.25		
		(18.29-18.85)x(1.01+0.54)/2	-0.43		
		(17.98-18.29)x(1.23+1.01)/2	-0.35		
		(17.20-17.98)x(1.74+1.23)/2	-1.16		
		(16.96-17.20)x(1.81+1.74)/2	-0.43		
		(16.88-16.96)x(1.83+1.81)/2	-0.15		
		(16.83-16.88)x(1.86+1.83)/2	-0.09		
		(16.73-16.83)x(1.82+1.86)/2	-0.18		
		(16.44-16.73)x(1.91+1.82)/2	-0.54		
		(16.11-16.44)x(1.97+1.91)/2	-0.64		
		(15.07-16.11)x(2.04+1.97)/2	-2.09		
		(15.02-15.07)x(2.04+2.04)/2	-0.10		
		(14.93-15.02)x(2.05+2.04)/2	-0.18		
		(13.94-14.93)x(2.13+2.05)/2	-2.07		
		(13.38-13.94)x(2.29+2.13)/2	-1.24		
		(12.85-13.38)x(2.42+2.29)/2	-1.25		
		(11.88-12.85)x(2.69+2.42)/2	-2.48		
		(11.76-11.88)x(2.73+2.69)/2	-0.33		
		(11.69-11.76)x(2.75+2.73)/2	-0.19		
		(10.67-11.69)x(3.02+2.75)/2	-2.94		
		(10.00-10.67)x(3.17+3.02)/2	-2.07		
		(9.58-10.00)x(3.28+3.17)/2	-1.35		
		(8.83-9.58)x(3.47+3.28)/2	-2.53		
		(8.49-8.83)x(3.57+3.47)/2	-1.20		
		(8.30-8.49)x(3.61+3.57)/2	-0.68		
		(7.40-8.30)x(3.87+3.61)/2	-3.37		
		(6.61-7.40)x(4.03+3.87)/2	-3.12		
		(6.32-6.61)x(4.08+4.03)/2	-1.18		
		(5.78-6.32)x(4.09+4.08)/2	-2.21		
		(5.23-5.78)x(4.10+4.09)/2	-2.25		
		(4.57-5.23)x(4.08+4.10)/2	-2.70		
		(4.14-4.57)x(4.06+4.08)/2	-1.75		
		(3.22-4.14)x(4.02+4.06)/2	-3.72		
		(3.05-3.22)x(4.02+4.02)/2	-0.68		
		(2.74-3.05)x(4.00+4.02)/2	-1.24		
		(1.96-2.74)x(3.99+4.00)/2	-3.12		
		(1.53-1.96)x(3.96+3.99)/2	-1.71		
		(0.87-1.53)x(3.93+3.96)/2	-2.60		
		(-0.16-0.87)x(3.95+3.93)/2	-4.06		
		(-0.22--0.16)x(3.95+3.95)/2	-0.24		
		(-0.31--0.22)x(3.97+3.95)/2	-0.36		
		(-1.31--0.31)x(4.09+3.97)/2	-4.03		
		(-1.86--1.31)x(4.14+4.09)/2	-2.26		
		(-2.39--1.86)x(4.20+4.14)/2	-2.21		
		(-3.36--2.39)x(4.10+4.20)/2	-4.03		
		(-3.48--3.36)x(4.09+4.10)/2	-0.49		
		(-3.55--3.48)x(4.08+4.09)/2	-0.29		
		(-4.57--3.55)x(4.04+4.08)/2	-4.14		
		(-5.24--4.57)x(4.02+4.04)/2	-2.70		
		(-5.66--5.24)x(4.00+4.02)/2	-1.68		
		(-6.41--5.66)x(3.97+4.00)/2	-2.99		
		(-6.75--6.41)x(3.96+3.97)/2	-1.35		
		(-6.93--6.75)x(3.95+3.96)/2	-0.71		
		(-7.84--6.93)x(3.92+3.95)/2	-3.58		
		(-8.63--7.84)x(3.87+3.92)/2	-3.08		
		(-8.93--8.63)x(3.85+3.87)/2	-1.16		
		(-9.46--8.93)x(3.79+3.85)/2	-2.02		
		(-10.01--9.46)x(3.74+3.79)/2	-2.07		
		(-10.32--10.01)x(3.72+3.74)/2	-1.16		
		(-11.10--10.32)x(3.69+3.72)/2	-2.89		
		(-12.01--11.10)x(3.71+3.69)/2	-3.37		
		(-12.19--12.01)x(3.71+3.71)/2	-0.67		
		(-12.51--12.19)x(3.70+3.71)/2	-1.19		
		(-13.28--12.51)x(3.68+3.70)/2	-2.84		
		(-13.88--13.28)x(3.68+3.68)/2	-2.21		
		(-14.37--13.88)x(3.69+3.68)/2	-1.81		
		(-15.40--14.37)x(3.68+3.69)/2	-3.80		
		(-15.46--15.40)x(3.68+3.68)/2	-0.22		
		(-15.56--15.46)x(3.68+3.68)/2	-0.37		
		(-15.90--15.56)x(3.68+3.68)/2	-1.25		
				95.70	
68 1005.00	A1	(-12.61--15.73)x(5.92+3.84)/2	15.23		
		(-11.34--12.61)x(5.91+5.92)/2	7.51		
		(-11.65--11.34)x(5.55+5.91)/2	-1.78		
		(-1.75--11.65)x(5.80+5.55)/2	56.18		
		(-0.68--1.75)x(5.82+5.80)/2	6.22		
		(0.68--0.68)x(5.82+5.82)/2	7.92		
		(1.75-0.68)x(5.80+5.82)/2	6.22		
		(15.40-1.75)x(5.45+5.80)/2	76.78		
		(15.09-15.40)x(5.82+5.45)/2	-1.75		
		(16.36-15.09)x(5.83+5.82)/2	7.40		
		(21.31-16.36)x(2.53+5.83)/2	20.69		
		(30.17-21.31)x(2.53+2.53)/2	22.42		
		(29.33-30.17)x(1.90+1.99)/2	-1.63		
		(29.27-29.33)x(1.89+1.90)/2	-0.11		
		(29.24-29.27)x(1.88+1.89)/2	-0.06		
		(28.18-29.24)x(1.43+1.88)/2	-1.75		
		(27.54-28.18)x(1.26+1.43)/2	-0.86		
		(27.09-27.54)x(1.11+1.26)/2	-0.53		
		(26.30-27.09)x(0.60+1.11)/2	-0.68		
		(26.00-26.30)x(0.39+0.60)/2	-0.15		
		(25.84-26.00)x(0.38+0.39)/2	-0.06		
		(24.91-25.84)x(0.16+0.38)/2	-0.25		
		(24.14-24.91)x(0.12+0.16)/2	-0.11		
		(23.82-24.14)x(0.11+0.12)/2	-0.04		
		(23.26-23.82)x(0.08+0.11)/2	-0.05		
		(22.74-23.26)x(0.06+0.08)/2	-0.04		
		(22.44-22.74)x(0.05+0.06)/2	-0.02		
		(21.65-22.44)x(0.03+0.05)/2	-0.03		
		(20.74-21.65)x(0.11+0.03)/2	-0.06		
		(20.56-20.74)x(0.13+0.11)/2	-0.02		
		(20.23-20.56)x(0.22+0.13)/2	-0.06		
		(19.77-20.23)x(0.20+0.22)/2	-0.10		
		(19.46-19.77)x(0.21+0.20)/2	-0.06		
		(19.39-19.46)x(0.21+0.21)/2	-0.01		
		A RIPORTARE mq	216.36		

		CALCOLO DELLE AREE		Foglio n. 51
RILEVATO				
N. SEZIONE PROG.	FIG.	ELEMENTI DI CALCOLO	AREA ELEMENTARE mq	AREA FIGURA mq	NOTE
		RIPORTO mq	216.36		
		(19.38-19.39)x(0.21+0.21)/2	-0.00		
		(19.35-19.38)x(0.23+0.21)/2	-0.01		
		(19.34-19.35)x(0.25+0.22)/2	-0.00		
		(19.32-19.34)x(0.22+0.25)/2	-0.00		
		(19.31-19.32)x(0.22+0.22)/2	-0.00		
		(19.03-19.31)x(0.46+0.22)/2	-0.10		
		(18.38-19.03)x(1.17+0.46)/2	-0.53		
		(18.07-18.38)x(1.39+1.17)/2	-0.40		
		(17.29-18.07)x(1.73+1.39)/2	-1.22		
		(17.15-17.29)x(1.77+1.73)/2	-0.25		
		(17.00-17.15)x(1.80+1.77)/2	-0.27		
		(16.97-17.00)x(1.80+1.80)/2	-0.05		
		(16.91-16.97)x(1.80+1.80)/2	-0.11		
		(16.83-16.91)x(1.81+1.80)/2	-0.14		
		(16.20-16.83)x(1.87+1.81)/2	-1.16		
		(15.64-16.20)x(1.94+1.87)/2	-1.07		
		(15.11-15.64)x(1.99+1.94)/2	-1.04		
		(14.16-15.11)x(2.16+1.99)/2	-1.97		
		(14.02-14.16)x(2.19+2.16)/2	-0.30		
		(13.94-14.02)x(2.25+2.19)/2	-0.18		
		(12.93-13.94)x(2.78+2.25)/2	-2.54		
		(12.24-12.93)x(3.31+2.78)/2	-2.10		
		(11.84-12.24)x(3.64+3.31)/2	-1.39		
		(11.13-11.84)x(4.05+3.64)/2	-2.73		
		(10.75-11.13)x(4.23+4.05)/2	-1.57		
		(10.54-10.75)x(4.30+4.23)/2	-0.90		
		(9.66-10.54)x(4.59+4.30)/2	-3.91		
		(8.84-9.66)x(4.69+4.59)/2	-3.80		
		(8.57-8.84)x(4.71+4.69)/2	-1.27		
		(8.10-8.57)x(4.69+4.71)/2	-2.21		
		(7.48-8.10)x(4.62+4.69)/2	-2.89		
		(7.14-7.48)x(4.62+4.62)/2	-1.57		
		(6.39-7.14)x(4.62+4.62)/2	-3.46		
		(5.44-6.39)x(4.75+4.62)/2	-4.45		
		(5.30-5.44)x(4.75+4.75)/2	-0.67		
		(5.07-5.30)x(4.72+4.75)/2	-1.09		
		(4.21-5.07)x(4.63+4.72)/2	-4.02		
		(3.74-4.21)x(4.63+4.63)/2	-2.18		
		(3.13-3.74)x(4.63+4.63)/2	-2.82		
		(2.04-3.13)x(4.79+4.63)/2	-5.13		
		(2.03-2.04)x(4.79+4.79)/2	-0.05		
		(0.95-2.03)x(4.90+4.79)/2	-5.23		
		(0.34-0.95)x(4.88+4.90)/2	-2.98		
		(-0.14-0.34)x(4.88+4.88)/2	-2.34		
		(-0.37--0.14)x(4.89+4.88)/2	-1.12		
		(-1.00--0.37)x(4.85+4.89)/2	-3.07		
		(-1.17--1.00)x(4.84+4.85)/2	-0.82		
		(-1.23--1.17)x(4.84+4.84)/2	-0.29		
		(-1.36--1.23)x(4.83+4.84)/2	-0.63		
		(-2.32--1.36)x(4.86+4.83)/2	-4.65		
		(-3.06--2.32)x(4.73+4.86)/2	-3.55		
		(-3.41--3.06)x(4.67+4.73)/2	-1.65		
		(-4.03--3.41)x(4.53+4.67)/2	-2.85		
		(-4.50--4.03)x(4.41+4.53)/2	-2.10		
		(-4.76--4.50)x(4.35+4.41)/2	-1.14		
		(-5.59--4.76)x(4.15+4.35)/2	-3.53		
		(-6.46--5.59)x(3.93+4.15)/2	-3.51		
		(-6.68--6.46)x(3.88+3.93)/2	-0.86		
		(-7.06--6.68)x(3.80+3.88)/2	-1.46		
		(-7.77--7.06)x(3.67+3.80)/2	-2.65		
		(-8.16--7.77)x(3.67+3.67)/2	-1.43		
		(-8.86--8.16)x(3.66+3.67)/2	-2.57		
		(-9.86--8.86)x(3.68+3.66)/2	-3.67		
		(-9.95--9.86)x(3.68+3.68)/2	-0.33		
		(-10.10--9.95)x(3.69+3.68)/2	-0.55		
		(-11.04--10.10)x(3.73+3.69)/2	-3.49		
		(-11.56--11.04)x(3.74+3.73)/2	-1.94		
		(-12.13--11.56)x(3.75+3.74)/2	-2.13		
		(-13.13--12.13)x(3.74+3.75)/2	-3.75		
		(-13.22--13.13)x(3.74+3.74)/2	-0.34		
		(-13.26--13.22)x(3.74+3.74)/2	-0.15		
		(-14.31--13.26)x(3.79+3.74)/2	-3.95		
		(-14.96--14.31)x(3.81+3.79)/2	-2.47		
		(-15.39--14.96)x(3.82+3.81)/2	-1.64		
		(-15.73--15.39)x(3.84+3.82)/2	-1.30		
				82.67	
69 1020.00	A1	(-12.61--15.62)x(5.96+3.96)/2	14.93		
		(-11.34--12.61)x(5.96+5.96)/2	7.57		
		(-11.65--11.34)x(5.59+5.96)/2	-1.79		
		(-1.75--11.65)x(5.84+5.59)/2	56.58		
		(-0.68--1.75)x(5.87+5.84)/2	6.26		
		(0.68--0.68)x(5.87+5.87)/2	7.98		
		(1.75-0.68)x(5.84+5.87)/2	6.26		
		(15.40-1.75)x(5.50+5.84)/2	77.40		
		(15.09-15.40)x(5.87+5.50)/2	-1.76		
		(16.36-15.09)x(5.87+5.87)/2	7.45		
		(21.39-16.36)x(2.51+5.87)/2	21.08		
		(30.38-21.39)x(2.51+2.51)/2	22.56		
		(29.84-30.38)x(1.89+1.94)/2	-1.03		
		(29.34-29.84)x(1.88+1.89)/2	-0.94		
		(28.45-29.34)x(1.48+1.88)/2	-1.50		
		(28.25-28.45)x(1.38+1.48)/2	-0.29		
		(28.13-28.25)x(1.28+1.38)/2	-0.16		
		(27.16-28.13)x(0.64+1.28)/2	-0.93		
		(26.42-27.16)x(0.41+0.64)/2	-0.39		
		(26.07-26.42)x(0.22+0.41)/2	-0.11		
		(25.44-26.07)x(0.15+0.22)/2	-0.12		
		(24.98-25.44)x(0.12+0.15)/2	-0.06		
		(24.71-24.98)x(0.11+0.12)/2	-0.03		
		(23.89-24.71)x(0.06+0.11)/2	-0.07		
		(23.01-23.89)x(0.03+0.06)/2	-0.04		
		(22.80-23.01)x(0.03+0.03)/2	-0.01		
		(22.42-22.80)x(0.03+0.03)/2	-0.01		
		(21.71-22.42)x(0.08+0.03)/2	-0.04		
		A RIPORTARE mq	218.79		

		CALCOLO DELLE AREE		Foglio n. 52
RILEVATO				
N. SEZIONE PROG.	FIG.	ELEMENTI DI CALCOLO	AREA ELEMENTARE mq	AREA FIGURA mq	NOTE
		RIPORTO mq	218.79		
		(21.30-21.71)x(0.15+0.08)/2	-0.05		
		(20.61-21.30)x(0.26+0.15)/2	-0.14		
		(19.59-20.61)x(0.60+0.26)/2	-0.44		
		(19.52-19.59)x(0.62+0.60)/2	-0.04		
		(19.41-19.52)x(0.71+0.62)/2	-0.07		
		(18.43-19.41)x(1.40+0.71)/2	-1.03		
		(17.88-18.43)x(1.54+1.40)/2	-0.81		
		(17.34-17.88)x(1.75+1.54)/2	-0.89		
		(16.39-17.34)x(1.76+1.75)/2	-1.67		
		(16.25-16.39)x(1.76+1.76)/2	-0.25		
		(16.18-16.25)x(1.76+1.76)/2	-0.12		
		(15.16-16.18)x(1.82+1.76)/2	-1.83		
		(14.47-15.16)x(1.97+1.82)/2	-1.31		
		(14.07-14.47)x(2.03+1.97)/2	-0.80		
		(13.37-14.07)x(2.47+2.03)/2	-1.58		
		(12.98-13.37)x(2.73+2.47)/2	-1.01		
		(12.29-12.98)x(3.32+2.73)/2	-2.09		
		(11.89-12.29)x(3.58+3.32)/2	-1.38		
		(11.06-11.89)x(3.96+3.58)/2	-3.13		
		(10.80-11.06)x(4.08+3.96)/2	-1.05		
		(10.36-10.80)x(4.11+4.08)/2	-1.80		
		(9.71-10.36)x(4.14+4.11)/2	-2.68		
		(9.35-9.71)x(4.13+4.14)/2	-1.49		
		(8.62-9.35)x(4.09+4.13)/2	-3.00		
		(7.64-8.62)x(4.09+4.09)/2	-4.01		
		(7.53-7.64)x(4.09+4.09)/2	-0.45		
		(7.34-7.53)x(4.13+4.09)/2	-0.78		
		(6.44-7.34)x(4.31+4.13)/2	-3.80		
		(5.93-6.44)x(4.34+4.31)/2	-2.21		
		(5.35-5.93)x(4.39+4.34)/2	-2.53		
		(4.33-5.35)x(4.36+4.39)/2	-4.46		
		(4.26-4.33)x(4.36+4.36)/2	-0.31		
		(4.23-4.26)x(4.36+4.36)/2	-0.13		
		(3.17-4.23)x(4.50+4.36)/2	-4.70		
		(2.52-3.17)x(4.60+4.50)/2	-2.96		
		(2.08-2.52)x(4.66+4.60)/2	-2.04		
		(1.31-2.08)x(4.78+4.66)/2	-3.63		
		(0.99-1.31)x(4.82+4.78)/2	-1.54		
		(0.81-0.99)x(4.82+4.82)/2	-0.87		
		(-0.10-0.81)x(4.95+4.82)/2	-4.45		
		(-0.90--0.10)x(4.97+4.95)/2	-3.97		
		(-1.19--0.90)x(4.97+4.97)/2	-1.44		
		(-1.71--1.19)x(4.90+4.97)/2	-2.57		
		(-2.28--1.71)x(4.83+4.90)/2	-2.77		
		(-2.60--2.28)x(4.77+4.83)/2	-1.54		
		(-3.37--2.60)x(4.63+4.77)/2	-3.62		
		(-4.31--3.37)x(4.42+4.63)/2	-4.25		
		(-4.46--4.31)x(4.38+4.42)/2	-0.66		
		(-4.72--4.46)x(4.33+4.38)/2	-1.13		
		(-5.55--4.72)x(4.14+4.33)/2	-3.52		
		(-6.13--5.55)x(4.01+4.14)/2	-2.36		
		(-6.64--6.13)x(3.88+4.01)/2	-2.01		
		(-7.73--6.64)x(3.66+3.88)/2	-4.11		
		(-7.74--7.73)x(3.66+3.66)/2	-0.04		
		(-8.82--7.74)x(3.67+3.66)/2	-3.96		
		(-9.43--8.82)x(3.67+3.67)/2	-2.24		
		(-9.91--9.43)x(3.67+3.67)/2	-1.76		
		(-10.75--9.91)x(3.70+3.67)/2	-3.10		
		(-11.00--10.75)x(3.71+3.70)/2	-0.93		
		(-11.14--11.00)x(3.71+3.71)/2	-0.52		
		(-12.09--11.14)x(3.76+3.71)/2	-3.55		
		(-12.85--12.09)x(3.81+3.76)/2	-2.88		
		(-13.18--12.85)x(3.83+3.81)/2	-1.26		
		(-13.77--13.18)x(3.87+3.83)/2	-2.27		
		(-14.27--13.77)x(3.90+3.87)/2	-1.94		
		(-14.56--14.27)x(3.91+3.90)/2	-1.13		
		(-15.36--14.56)x(3.95+3.91)/2	-3.14		
		(-15.62--15.36)x(3.96+3.95)/2	-1.03		
				87.56	
70 1035.00	A1	(-12.61--15.76)x(6.01+3.91)/2	15.62		
		(-11.34--12.61)x(6.00+6.01)/2	7.63		
		(-11.65--11.34)x(5.64+6.00)/2	-1.80		
		(-1.75--11.65)x(5.89+5.64)/2	57.07		
		(-0.68--1.75)x(5.91+5.89)/2	6.31		
		(0.68--0.68)x(5.91+5.91)/2	8.04		
		(1.75-0.68)x(5.89+5.91)/2	6.31		
		(15.40-1.75)x(5.55+5.89)/2	78.08		
		(15.09-15.40)x(5.91+5.55)/2	-1.78		
		(16.36-15.09)x(5.92+5.91)/2	7.51		
		(21.48-16.36)x(2.50+5.92)/2	21.56		
		(30.57-21.48)x(2.50+2.50)/2	22.73		
		(30.46-30.57)x(1.96+1.98)/2	-0.22		
		(30.41-30.46)x(1.94+1.96)/2	-0.10		
		(29.37-30.41)x(1.79+1.94)/2	-1.94		
		(28.69-29.37)x(1.37+1.79)/2	-1.07		
		(28.28-28.69)x(1.09+1.37)/2	-0.50		
		(27.56-28.28)x(0.68+1.09)/2	-0.64		
		(27.19-27.56)x(0.49+0.68)/2	-0.22		
		(26.98-27.19)x(0.40+0.49)/2	-0.09		
		(26.10-26.98)x(0.01+0.40)/2	-0.18		
		(25.69-26.10)x(-0.06+0.01)/2	0.01		
		(25.01-25.69)x(-0.10+-0.06)/2	0.05		
		(24.56-25.01)x(-0.09+-0.10)/2	0.04		
		(23.92-24.56)x(-0.06+-0.09)/2	0.05		
		(23.55-23.92)x(-0.06+-0.06)/2	0.02		
		(22.83-23.55)x(-0.04+-0.06)/2	0.04		
		(21.83-22.83)x(0.03+-0.04)/2	0.01		
		(21.73-21.83)x(0.04+0.03)/2	-0.00		
		(21.56-21.73)x(0.07+0.04)/2	-0.01		
		(20.64-21.56)x(0.28+0.07)/2	-0.16		
		(20.12-20.64)x(0.59+0.28)/2	-0.23		
		(19.55-20.12)x(0.89+0.59)/2	-0.42		
		(18.56-19.55)x(1.48+0.89)/2	-1.17		
		(18.46-18.56)x(1.53+1.48)/2	-0.15		
		A RIPORTARE mq	220.40		

		CALCOLO DELLE AREE		Foglio n. 53
RILEVATO				
N. SEZIONE PROG.	FIG.	ELEMENTI DI CALCOLO	AREA ELEMENTARE mq	AREA FIGURA mq	NOTE
		RIPORTO mq	220.40		
		(18.41-18.46)x(1.54+1.53)/2	-0.08		
		(17.37-18.41)x(1.65+1.54)/2	-1.66		
		(16.69-17.37)x(1.65+1.65)/2	-1.12		
		(16.28-16.69)x(1.66+1.65)/2	-0.68		
		(15.56-16.28)x(1.70+1.66)/2	-1.21		
		(15.19-15.56)x(1.73+1.70)/2	-0.63		
		(14.98-15.19)x(1.82+1.73)/2	-0.37		
		(14.10-14.98)x(2.12+1.82)/2	-1.73		
		(13.26-14.10)x(2.58+2.12)/2	-1.97		
		(13.01-13.26)x(2.69+2.58)/2	-0.66		
		(12.56-13.01)x(2.86+2.69)/2	-1.25		
		(11.92-12.56)x(3.12+2.86)/2	-1.91		
		(11.55-11.92)x(3.26+3.12)/2	-1.18		
		(10.82-11.55)x(3.52+3.26)/2	-2.47		
		(9.83-10.82)x(3.90+3.52)/2	-3.67		
		(9.73-9.83)x(3.93+3.90)/2	-0.39		
		(9.56-9.73)x(3.98+3.93)/2	-0.67		
		(8.64-9.56)x(4.17+3.98)/2	-3.75		
		(8.12-8.64)x(4.14+4.17)/2	-2.16		
		(7.55-8.12)x(4.13+4.14)/2	-2.36		
		(7.29-7.55)x(4.09+4.13)/2	-1.07		
		(6.56-7.29)x(3.90+4.09)/2	-2.92		
		(6.49-6.56)x(3.88+3.90)/2	-0.27		
		(6.46-6.49)x(3.87+3.88)/2	-0.12		
		(6.40-6.46)x(3.86+3.87)/2	-0.23		
		(5.37-6.40)x(3.65+3.86)/2	-3.87		
		(4.69-5.37)x(3.60+3.65)/2	-2.46		
		(4.28-4.69)x(3.62+3.60)/2	-1.48		
		(3.56-4.28)x(3.58+3.62)/2	-2.59		
		(3.19-3.56)x(3.57+3.58)/2	-1.32		
		(2.97-3.19)x(3.56+3.57)/2	-0.78		
		(2.10-2.97)x(3.51+3.56)/2	-3.08		
		(1.26-2.10)x(3.50+3.51)/2	-2.94		
		(1.01-1.26)x(3.49+3.50)/2	-0.87		
		(0.56-1.01)x(3.49+3.49)/2	-1.57		
		(-0.09-0.56)x(3.49+3.49)/2	-2.27		
		(-0.46--0.09)x(3.49+3.49)/2	-1.29		
		(-1.18--0.46)x(3.46+3.49)/2	-2.50		
		(-2.17--1.18)x(3.40+3.46)/2	-3.40		
		(-2.27--2.17)x(3.40+3.40)/2	-0.34		
		(-2.44--2.27)x(3.41+3.40)/2	-0.58		
		(-3.36--2.44)x(3.51+3.41)/2	-3.18		
		(-3.89--3.36)x(3.56+3.51)/2	-1.87		
		(-4.45--3.89)x(3.62+3.56)/2	-2.01		
		(-5.43--4.45)x(3.71+3.62)/2	-3.59		
		(-5.54--5.43)x(3.72+3.71)/2	-0.41		
		(-5.60--5.54)x(3.72+3.72)/2	-0.22		
		(-6.63--5.60)x(3.79+3.72)/2	-3.87		
		(-7.32--6.63)x(3.78+3.79)/2	-2.61		
		(-7.72--7.32)x(3.77+3.78)/2	-1.51		
		(-8.43--7.72)x(3.74+3.77)/2	-2.67		
		(-8.81--8.43)x(3.72+3.74)/2	-1.42		
		(-9.03--8.81)x(3.73+3.72)/2	-0.82		
		(-9.90--9.03)x(3.74+3.73)/2	-3.25		
		(-10.75--9.90)x(3.77+3.74)/2	-3.19		
		(-11.00--10.75)x(3.78+3.77)/2	-0.94		
		(-11.11--11.00)x(3.78+3.78)/2	-0.42		
		(-11.43--11.11)x(3.79+3.78)/2	-1.21		
		(-11.91--11.43)x(3.81+3.79)/2	-1.82		
		(-12.09--11.91)x(3.81+3.81)/2	-0.69		
		(-12.46--12.09)x(3.82+3.81)/2	-1.41		
		(-13.18--12.46)x(3.83+3.82)/2	-2.75		
		(-14.17--13.18)x(3.86+3.83)/2	-3.81		
		(-14.27--14.17)x(3.86+3.86)/2	-0.39		
		(-14.43--14.27)x(3.86+3.86)/2	-0.62		
		(-15.11--14.43)x(3.88+3.86)/2	-2.63		
		(-15.36--15.11)x(3.89+3.88)/2	-0.97		
		(-15.76--15.36)x(3.91+3.89)/2	-1.56		
				104.69	
71 1050.00	A1	(-12.61--16.09)x(6.05+3.73)/2	17.02		
		(-11.34--12.61)x(6.05+6.05)/2	7.68		
		(-11.65--11.34)x(5.68+6.05)/2	-1.82		
		(-1.75--11.65)x(5.93+5.68)/2	57.47		
		(-0.68--1.75)x(5.96+5.93)/2	6.36		
		(0.68--0.68)x(5.96+5.96)/2	8.11		
		(1.75-0.68)x(5.93+5.96)/2	6.36		
		(15.40-1.75)x(5.59+5.93)/2	78.62		
		(15.09-15.40)x(5.96+5.59)/2	-1.79		
		(16.36-15.09)x(5.96+5.96)/2	7.57		
		(21.56-16.36)x(2.49+5.96)/2	21.97		
		(30.71-21.56)x(2.49+2.49)/2	22.78		
		(30.47-30.71)x(1.92+1.96)/2	-0.47		
		(30.24-30.47)x(1.86+1.92)/2	-0.43		
		(29.63-30.24)x(1.68+1.86)/2	-1.08		
		(29.44-29.63)x(1.63+1.68)/2	-0.31		
		(29.38-29.44)x(1.61+1.63)/2	-0.10		
		(29.23-29.38)x(1.53+1.61)/2	-0.24		
		(28.29-29.23)x(1.08+1.53)/2	-1.23		
		(27.51-28.29)x(0.68+1.08)/2	-0.69		
		(27.19-27.51)x(0.51+0.68)/2	-0.19		
		(26.64-27.19)x(0.32+0.51)/2	-0.23		
		(26.10-26.64)x(0.16+0.32)/2	-0.13		
		(25.79-26.10)x(0.10+0.16)/2	-0.04		
		(25.01-25.79)x(-0.03+0.10)/2	-0.03		
		(24.07-25.01)x(-0.11+-0.03)/2	0.07		
		(23.92-24.07)x(-0.12+-0.11)/2	0.02		
		(23.66-23.92)x(-0.09+-0.12)/2	0.03		
		(22.83-23.66)x(0.01+-0.09)/2	0.03		
		(22.34-22.83)x(0.06+0.01)/2	-0.02		
		(21.73-22.34)x(0.15+0.06)/2	-0.06		
		(20.68-21.73)x(0.46+0.15)/2	-0.32		
		(20.64-20.68)x(0.47+0.46)/2	-0.02		
		(19.85-20.64)x(0.93+0.47)/2	-0.55		
		(19.55-19.85)x(1.13+0.93)/2	-0.31		
		A RIPORTARE mq	224.03		

		CALCOLO DELLE AREE		Foglio n. 54
RILEVATO				
N. SEZIONE PROG.	FIG.	ELEMENTI DI CALCOLO	AREA ELEMENTARE mq	AREA FIGURA mq	NOTE
		RIPORTO mq	224.03		
		(18.90-19.55)x(1.37+1.13)/2	-0.81		
		(18.46-18.90)x(1.59+1.37)/2	-0.65		
		(17.69-18.46)x(1.65+1.59)/2	-1.25		
		(17.37-17.69)x(1.66+1.65)/2	-0.53		
		(17.18-17.37)x(1.66+1.66)/2	-0.32		
		(16.28-17.18)x(1.67+1.66)/2	-1.50		
		(15.46-16.28)x(1.85+1.67)/2	-1.44		
		(15.18-15.46)x(1.89+1.85)/2	-0.52		
		(14.71-15.18)x(2.27+1.89)/2	-0.98		
		(14.09-14.71)x(2.79+2.27)/2	-1.57		
		(13.73-14.09)x(2.97+2.79)/2	-1.04		
		(13.00-13.73)x(3.36+2.97)/2	-2.31		
		(12.01-13.00)x(3.55+3.36)/2	-3.42		
		(11.91-12.01)x(3.57+3.55)/2	-0.36		
		(11.73-11.91)x(3.61+3.57)/2	-0.65		
		(10.82-11.73)x(3.82+3.61)/2	-3.38		
		(10.29-10.82)x(3.82+3.82)/2	-2.02		
		(9.72-10.29)x(3.85+3.82)/2	-2.19		
		(8.75-9.72)x(3.82+3.85)/2	-3.72		
		(8.63-8.75)x(3.82+3.82)/2	-0.46		
		(8.57-8.63)x(3.82+3.82)/2	-0.23		
		(7.54-8.57)x(3.72+3.82)/2	-3.88		
		(6.85-7.54)x(3.51+3.72)/2	-2.49		
		(6.45-6.85)x(3.41+3.51)/2	-1.38		
		(5.76-6.45)x(3.48+3.41)/2	-2.38		
		(5.36-5.76)x(3.52+3.48)/2	-1.40		
		(5.12-5.36)x(3.55+3.52)/2	-0.85		
		(4.27-5.12)x(3.65+3.55)/2	-3.06		
		(3.40-4.27)x(3.73+3.65)/2	-3.21		
		(3.17-3.40)x(3.75+3.73)/2	-0.86		
		(2.78-3.17)x(3.77+3.75)/2	-1.47		
		(2.08-2.78)x(3.80+3.77)/2	-2.65		
		(1.47-2.08)x(3.82+3.80)/2	-2.32		
		(0.99-1.47)x(3.85+3.82)/2	-1.84		
		(-0.04-0.99)x(3.91+3.85)/2	-4.00		
		(-0.10--0.04)x(3.91+3.91)/2	-0.23		
		(-0.20--0.10)x(3.92+3.91)/2	-0.39		
		(-1.19--0.20)x(3.99+3.92)/2	-3.92		
		(-1.77--1.19)x(3.98+3.99)/2	-2.31		
		(-2.29--1.77)x(3.97+3.98)/2	-2.07		
		(-3.19--2.29)x(3.94+3.97)/2	-3.56		
		(-3.38--3.19)x(3.93+3.94)/2	-0.75		
		(-3.49--3.38)x(3.93+3.93)/2	-0.43		
		(-4.47--3.49)x(3.90+3.93)/2	-3.84		
		(-5.21--4.47)x(3.87+3.90)/2	-2.87		
		(-5.56--5.21)x(3.87+3.87)/2	-1.35		
		(-6.17--5.56)x(3.82+3.87)/2	-2.35		
		(-6.65--6.17)x(3.78+3.82)/2	-1.82		
		(-6.93--6.65)x(3.78+3.78)/2	-1.06		
		(-7.74--6.93)x(3.76+3.78)/2	-3.05		
		(-8.65--7.74)x(3.77+3.76)/2	-3.43		
		(-8.84--8.65)x(3.77+3.77)/2	-0.72		
		(-9.15--8.84)x(3.78+3.77)/2	-1.17		
		(-9.93--9.15)x(3.77+3.78)/2	-2.94		
		(-10.38--9.93)x(3.77+3.77)/2	-1.70		
		(-11.02--10.38)x(3.77+3.77)/2	-2.41		
		(-12.10--11.02)x(3.75+3.77)/2	-4.06		
		(-12.11--12.10)x(3.75+3.75)/2	-0.04		
		(-12.13--12.11)x(3.75+3.75)/2	-0.08		
		(-13.20--12.13)x(3.70+3.75)/2	-3.99		
		(-13.82--13.20)x(3.69+3.70)/2	-2.29		
		(-14.29--13.82)x(3.69+3.69)/2	-1.73		
		(-15.12--14.29)x(3.70+3.69)/2	-3.07		
		(-15.39--15.12)x(3.71+3.70)/2	-1.00		
		(-15.54--15.39)x(3.71+3.71)/2	-0.56		
		(-16.09--15.54)x(3.73+3.71)/2	-2.05		
				101.65	
72 1065.00	A1	(-12.61--16.00)x(6.10+3.84)/2	16.85		
		(-11.34--12.61)x(6.09+6.10)/2	7.74		
		(-11.65--11.34)x(5.73+6.09)/2	-1.83		
		(-1.75--11.65)x(5.98+5.73)/2	57.96		
		(-0.68--1.75)x(6.00+5.98)/2	6.41		
		(0.68--0.68)x(6.00+6.00)/2	8.16		
		(1.75-0.68)x(5.98+6.00)/2	6.41		
		(15.40-1.75)x(5.64+5.98)/2	79.31		
		(15.09-15.40)x(6.00+5.64)/2	-1.80		
		(16.36-15.09)x(6.01+6.00)/2	7.63		
		(21.64-16.36)x(2.48+6.01)/2	22.41		
		(30.79-21.64)x(2.48+2.48)/2	22.69		
		(30.44-30.79)x(1.73+1.79)/2	-0.62		
		(29.75-30.44)x(1.52+1.73)/2	-1.12		
		(29.35-29.75)x(1.42+1.52)/2	-0.59		
		(28.68-29.35)x(1.04+1.42)/2	-0.82		
		(28.26-28.68)x(0.79+1.04)/2	-0.38		
		(28.02-28.26)x(0.65+0.79)/2	-0.17		
		(27.17-28.02)x(0.12+0.65)/2	-0.33		
		(26.29-27.17)x(-0.08+0.12)/2	-0.02		
		(26.07-26.29)x(-0.14+-0.08)/2	0.02		
		(25.71-26.07)x(-0.16+-0.14)/2	0.05		
		(24.98-25.71)x(-0.16+-0.16)/2	0.12		
		(24.38-24.98)x(-0.15+-0.16)/2	0.09		
		(23.89-24.38)x(-0.16+-0.15)/2	0.08		
		(22.83-23.89)x(-0.10+-0.16)/2	0.14		
		(22.80-22.83)x(-0.10+-0.10)/2	0.00		
		(22.74-22.80)x(-0.09+-0.10)/2	0.01		
		(21.70-22.74)x(0.18+-0.09)/2	-0.05		
		(21.10-21.70)x(0.59+0.18)/2	-0.23		
		(20.61-21.10)x(0.88+0.59)/2	-0.36		
		(19.78-20.61)x(1.32+0.88)/2	-0.91		
		(19.52-19.78)x(1.43+1.32)/2	-0.36		
		(19.37-19.52)x(1.45+1.43)/2	-0.22		
		(18.43-19.37)x(1.60+1.45)/2	-1.43		
		(17.64-18.43)x(1.66+1.60)/2	-1.29		
		(17.33-17.64)x(1.70+1.66)/2	-0.52		
		A RIPORTARE mq	223.03		

		CALCOLO DELLE AREE		Foglio n. 55
RILEVATO				
N. SEZIONE PROG.	FIG.	ELEMENTI DI CALCOLO	AREA ELEMENTARE mq	AREA FIGURA mq	NOTE
		RIPORTO mq	223.03		
		(16.81-17.33)x(1.70+1.70)/2	-0.88		
		(16.24-16.81)x(1.70+1.70)/2	-0.97		
		(15.91-16.24)x(1.87+1.70)/2	-0.59		
		(15.15-15.91)x(2.12+1.87)/2	-1.52		
		(14.80-15.15)x(2.36+2.12)/2	-0.78		
		(14.06-14.80)x(3.03+2.36)/2	-1.99		
		(13.84-14.06)x(3.15+3.03)/2	-0.68		
		(12.96-13.84)x(3.55+3.15)/2	-2.95		
		(12.45-12.96)x(3.61+3.55)/2	-1.83		
		(11.87-12.45)x(3.73+3.61)/2	-2.13		
		(10.88-11.87)x(3.81+3.73)/2	-3.73		
		(10.78-10.88)x(3.81+3.81)/2	-0.38		
		(10.72-10.78)x(3.80+3.81)/2	-0.23		
		(9.69-10.72)x(3.59+3.80)/2	-3.81		
		(8.99-9.69)x(3.45+3.59)/2	-2.46		
		(8.59-8.99)x(3.36+3.45)/2	-1.36		
		(7.91-8.59)x(3.25+3.36)/2	-2.25		
		(7.50-7.91)x(3.20+3.25)/2	-1.32		
		(7.26-7.50)x(3.28+3.20)/2	-0.78		
		(6.41-7.26)x(3.55+3.28)/2	-2.90		
		(5.53-6.41)x(3.84+3.55)/2	-3.25		
		(5.32-5.53)x(3.90+3.84)/2	-0.81		
		(4.94-5.32)x(3.95+3.90)/2	-1.49		
		(4.22-4.94)x(4.04+3.95)/2	-2.88		
		(3.80-4.22)x(4.11+4.04)/2	-1.71		
		(3.13-3.80)x(4.20+4.11)/2	-2.78		
		(2.07-3.13)x(4.36+4.20)/2	-4.54		
		(2.04-2.07)x(4.37+4.36)/2	-0.13		
		(1.98-2.04)x(4.38+4.37)/2	-0.26		
		(0.94-1.98)x(4.68+4.38)/2	-4.71		
		(0.34-0.94)x(4.77+4.68)/2	-2.83		
		(-0.15-0.34)x(4.90+4.77)/2	-2.37		
		(-0.99--0.15)x(5.04+4.90)/2	-4.17		
		(-1.24--0.99)x(5.07+5.04)/2	-1.26		
		(-1.39--1.24)x(5.06+5.07)/2	-0.76		
		(-2.33--1.39)x(5.02+5.06)/2	-4.74		
		(-3.12--2.33)x(4.70+5.02)/2	-3.84		
		(-3.43--3.12)x(4.57+4.70)/2	-1.44		
		(-3.57--3.43)x(4.51+4.57)/2	-0.64		
		(-3.96--3.57)x(4.33+4.51)/2	-1.72		
		(-4.37--3.96)x(4.12+4.33)/2	-1.73		
		(-4.52--4.37)x(4.05+4.12)/2	-0.61		
		(-4.84--4.52)x(3.96+4.05)/2	-1.28		
		(-5.61--4.84)x(3.70+3.96)/2	-2.95		
		(-6.57--5.61)x(3.65+3.70)/2	-3.53		
		(-6.70--6.57)x(3.64+3.65)/2	-0.47		
		(-6.93--6.70)x(3.64+3.64)/2	-0.84		
		(-7.80--6.93)x(3.64+3.64)/2	-3.17		
		(-8.30--7.80)x(3.64+3.64)/2	-1.82		
		(-8.89--8.30)x(3.65+3.64)/2	-2.15		
		(-9.89--8.89)x(3.62+3.65)/2	-3.63		
		(-9.98--9.89)x(3.62+3.62)/2	-0.33		
		(-10.03--9.98)x(3.62+3.62)/2	-0.18		
		(-11.07--10.03)x(3.63+3.62)/2	-3.77		
		(-11.76--11.07)x(3.67+3.63)/2	-2.52		
		(-12.17--11.76)x(3.70+3.67)/2	-1.51		
		(-12.86--12.17)x(3.74+3.70)/2	-2.57		
		(-13.26--12.86)x(3.77+3.74)/2	-1.50		
		(-13.49--13.26)x(3.77+3.77)/2	-0.87		
		(-14.35--13.49)x(3.81+3.77)/2	-3.26		
		(-15.22--14.35)x(3.82+3.81)/2	-3.32		
		(-15.44--15.22)x(3.82+3.82)/2	-0.84		
		(-15.83--15.44)x(3.83+3.82)/2	-1.49		
		(-16.00--15.83)x(3.84+3.83)/2	-0.65		
				98.17	
73 1080.00	A1	(-12.61--16.20)x(6.14+3.75)/2	17.75		
		(-11.34--12.61)x(6.14+6.14)/2	7.80		
		(-11.65--11.34)x(5.77+6.14)/2	-1.85		
		(-1.75--11.65)x(6.02+5.77)/2	58.36		
		(-0.68--1.75)x(6.05+6.02)/2	6.46		
		(0.68--0.68)x(6.05+6.05)/2	8.23		
		(1.75-0.68)x(6.02+6.05)/2	6.46		
		(15.40-1.75)x(5.68+6.02)/2	79.85		
		(15.09-15.40)x(6.05+5.68)/2	-1.82		
		(16.36-15.09)x(6.05+6.05)/2	7.68		
		(21.73-16.36)x(2.47+6.05)/2	22.88		
		(30.83-21.73)x(2.47+2.47)/2	22.48		
		(30.66-30.83)x(1.55+1.60)/2	-0.27		
		(30.39-30.66)x(1.46+1.55)/2	-0.41		
		(29.67-30.39)x(1.19+1.46)/2	-0.95		
		(29.30-29.67)x(1.02+1.19)/2	-0.41		
		(28.50-29.30)x(0.65+1.02)/2	-0.67		
		(28.20-28.50)x(0.52+0.65)/2	-0.18		
		(27.71-28.20)x(0.26+0.52)/2	-0.19		
		(27.11-27.71)x(0.01+0.26)/2	-0.08		
		(26.76-27.11)x(-0.00+0.01)/2	-0.00		
		(26.02-26.76)x(-0.06+-0.00)/2	0.02		
		(25.02-26.02)x(-0.08+-0.06)/2	0.07		
		(24.92-25.02)x(-0.08+-0.08)/2	0.01		
		(24.75-24.92)x(-0.07+-0.08)/2	0.01		
		(23.83-24.75)x(-0.02+-0.07)/2	0.04		
		(23.29-23.83)x(0.08+-0.02)/2	-0.02		
		(22.74-23.29)x(0.17+0.08)/2	-0.07		
		(21.80-22.74)x(0.40+0.17)/2	-0.27		
		(21.64-21.80)x(0.44+0.40)/2	-0.07		
		(21.55-21.64)x(0.48+0.44)/2	-0.04		
		(20.55-21.55)x(0.88+0.48)/2	-0.68		
		(19.81-20.55)x(1.19+0.88)/2	-0.77		
		(19.46-19.81)x(1.34+1.19)/2	-0.44		
		(19.29-19.46)x(1.40+1.34)/2	-0.23		
		(18.85-19.29)x(1.51+1.40)/2	-0.64		
		(18.50-18.85)x(1.61+1.51)/2	-0.55		
		(18.36-18.50)x(1.62+1.61)/2	-0.23		
		(18.08-18.36)x(1.65+1.62)/2	-0.46		
		A RIPORTARE mq	226.80		

		CALCOLO DELLE AREE		Foglio n. 56
RILEVATO				
N. SEZIONE PROG.	FIG.	ELEMENTI DI CALCOLO	AREA ELEMENTARE mq	AREA FIGURA mq	NOTE
		RIPORTO mq	226.80		
		(17.27-18.08)x(1.71+1.65)/2	-1.36		
		(16.34-17.27)x(1.95+1.71)/2	-1.70		
		(16.18-16.34)x(1.98+1.95)/2	-0.31		
		(15.90-16.18)x(2.16+1.98)/2	-0.58		
		(15.08-15.90)x(2.62+2.16)/2	-1.96		
		(14.60-15.08)x(2.77+2.62)/2	-1.29		
		(13.99-14.60)x(3.06+2.77)/2	-1.78		
		(12.95-13.99)x(3.29+3.06)/2	-3.30		
		(12.90-12.95)x(3.31+3.29)/2	-0.16		
		(12.86-12.90)x(3.31+3.31)/2	-0.13		
		(11.80-12.86)x(3.45+3.31)/2	-3.58		
		(11.13-11.80)x(3.39+3.45)/2	-2.29		
		(10.71-11.13)x(3.29+3.39)/2	-1.40		
		(10.00-10.71)x(3.34+3.29)/2	-2.35		
		(9.62-10.00)x(3.37+3.34)/2	-1.27		
		(8.92-9.62)x(3.41+3.37)/2	-2.37		
		(8.52-8.92)x(3.45+3.41)/2	-1.37		
		(7.65-8.52)x(3.54+3.45)/2	-3.04		
		(7.43-7.65)x(3.56+3.54)/2	-0.78		
		(7.05-7.43)x(3.61+3.56)/2	-1.36		
		(6.34-7.05)x(3.70+3.61)/2	-2.60		
		(5.92-6.34)x(3.78+3.70)/2	-1.57		
		(5.24-5.92)x(3.92+3.78)/2	-2.62		
		(4.18-5.24)x(4.16+3.92)/2	-4.28		
		(4.15-4.18)x(4.17+4.16)/2	-0.12		
		(4.10-4.15)x(4.18+4.17)/2	-0.21		
		(3.06-4.10)x(4.36+4.18)/2	-4.44		
		(2.44-3.06)x(4.44+4.36)/2	-2.73		
		(1.96-2.44)x(4.49+4.44)/2	-2.14		
		(1.15-1.96)x(4.65+4.49)/2	-3.70		
		(0.87-1.15)x(4.70+4.65)/2	-1.31		
		(0.70-0.87)x(4.70+4.70)/2	-0.80		
		(-0.22-0.70)x(4.74+4.70)/2	-4.34		
		(-1.03--0.22)x(4.70+4.74)/2	-3.82		
		(-1.32--1.03)x(4.69+4.70)/2	-1.36		
		(-1.80--1.32)x(4.60+4.69)/2	-2.23		
		(-2.41--1.80)x(4.48+4.60)/2	-2.77		
		(-2.77--2.41)x(4.36+4.48)/2	-1.59		
		(-3.50--2.77)x(4.16+4.36)/2	-3.11		
		(-4.51--3.50)x(3.88+4.16)/2	-4.06		
		(-4.60--4.51)x(3.85+3.88)/2	-0.35		
		(-4.75--4.60)x(3.83+3.85)/2	-0.58		
		(-5.69--4.75)x(3.71+3.83)/2	-3.54		
		(-6.24--5.69)x(3.70+3.71)/2	-2.04		
		(-6.78--6.24)x(3.68+3.70)/2	-1.99		
		(-7.70--6.78)x(3.67+3.68)/2	-3.38		
		(-7.88--7.70)x(3.67+3.67)/2	-0.66		
		(-7.98--7.88)x(3.67+3.67)/2	-0.37		
		(-8.97--7.98)x(3.64+3.67)/2	-3.62		
		(-9.43--8.97)x(3.62+3.64)/2	-1.67		
		(-10.06--9.43)x(3.59+3.62)/2	-2.27		
		(-10.65--10.06)x(3.61+3.59)/2	-2.12		
		(-11.16--10.65)x(3.63+3.61)/2	-1.85		
		(-11.46--11.16)x(3.65+3.63)/2	-1.09		
		(-12.25--11.46)x(3.69+3.65)/2	-2.90		
		(-13.19--12.25)x(3.79+3.69)/2	-3.52		
		(-13.35--13.19)x(3.80+3.79)/2	-0.61		
		(-13.60--13.35)x(3.81+3.80)/2	-0.95		
		(-14.44--13.60)x(3.84+3.81)/2	-3.21		
		(-14.93--14.44)x(3.81+3.84)/2	-1.87		
		(-15.53--14.93)x(3.78+3.81)/2	-2.28		
		(-16.20--15.53)x(3.75+3.78)/2	-2.52		
				101.23	
74 1095.00	A1	(-12.61--16.15)x(6.19+3.83)/2	17.74		
		(-11.34--12.61)x(6.19+6.19)/2	7.86		
		(-11.65--11.34)x(5.82+6.19)/2	-1.86		
		(-1.75--11.65)x(6.07+5.82)/2	58.86		
		(-0.68--1.75)x(6.09+6.07)/2	6.51		
		(0.68--0.68)x(6.09+6.09)/2	8.28		
		(1.75-0.68)x(6.07+6.09)/2	6.51		
		(15.39-1.75)x(5.73+6.07)/2	80.48		
		(15.09-15.39)x(6.09+5.73)/2	-1.77		
		(16.36-15.09)x(6.10+6.09)/2	7.74		
		(21.81-16.36)x(2.46+6.10)/2	23.33		
		(30.91-21.81)x(2.46+2.46)/2	22.39		
		(30.70-30.91)x(1.57+1.60)/2	-0.33		
		(30.31-30.70)x(1.50+1.57)/2	-0.60		
		(29.65-30.31)x(1.18+1.50)/2	-0.88		
		(29.21-29.65)x(0.93+1.18)/2	-0.46		
		(28.95-29.21)x(0.75+0.93)/2	-0.22		
		(28.12-28.95)x(0.16+0.75)/2	-0.38		
		(27.21-28.12)x(-0.07+0.16)/2	-0.04		
		(27.02-27.21)x(-0.14+-0.07)/2	0.02		
		(26.72-27.02)x(-0.14+-0.14)/2	0.04		
		(25.93-26.72)x(-0.15+-0.14)/2	0.11		
		(25.46-25.93)x(-0.15+-0.15)/2	0.07		
		(24.84-25.46)x(-0.15+-0.15)/2	0.09		
		(24.55-24.84)x(-0.14+-0.15)/2	0.04		
		(23.78-24.55)x(-0.13+-0.14)/2	0.10		
		(23.75-23.78)x(-0.13+-0.13)/2	0.00		
		(23.74-23.75)x(-0.13+-0.13)/2	0.00		
		(23.72-23.74)x(-0.13+-0.13)/2	0.00		
		(22.65-23.72)x(-0.08+-0.13)/2	0.11		
		(21.97-22.65)x(0.36+-0.08)/2	-0.10		
		(21.55-21.97)x(0.57+0.36)/2	-0.20		
		(20.85-21.55)x(1.13+0.57)/2	-0.59		
		(20.46-20.85)x(1.41+1.13)/2	-0.50		
		(20.23-20.46)x(1.44+1.41)/2	-0.33		
		(19.37-20.23)x(1.61+1.44)/2	-1.31		
		(18.48-19.37)x(1.68+1.61)/2	-1.46		
		(18.27-18.48)x(1.69+1.68)/2	-0.35		
		(17.91-18.27)x(1.72+1.69)/2	-0.61		
		(17.18-17.91)x(1.79+1.72)/2	-1.28		
		(16.74-17.18)x(2.01+1.79)/2	-0.84		
		A RIPORTARE mq	226.17		

		CALCOLO DELLE AREE		Foglio n. 57
RILEVATO				
N. SEZIONE PROG.	FIG.	ELEMENTI DI CALCOLO	AREA ELEMENTARE mq	AREA FIGURA mq	NOTE
		RIPORTO mq	226.17		
		(16.08-16.74)x(2.31+2.01)/2	-1.43		
		(15.00-16.08)x(3.09+2.31)/2	-2.92		
		(14.99-15.00)x(3.10+3.09)/2	-0.03		
		(14.98-14.99)x(3.10+3.10)/2	-0.03		
		(13.89-14.98)x(3.76+3.10)/2	-3.74		
		(13.25-13.89)x(3.96+3.76)/2	-2.47		
		(12.80-13.25)x(4.13+3.96)/2	-1.82		
		(12.59-12.80)x(4.17+4.13)/2	-0.87		
		(12.04-12.59)x(4.30+4.17)/2	-2.33		
		(11.71-12.04)x(4.37+4.30)/2	-1.43		
		(11.51-11.71)x(4.36+4.37)/2	-0.87		
		(10.61-11.51)x(4.34+4.36)/2	-3.92		
		(9.76-10.61)x(4.23+4.34)/2	-3.64		
		(9.52-9.76)x(4.21+4.23)/2	-1.01		
		(9.11-9.52)x(4.20+4.21)/2	-1.72		
		(8.42-9.11)x(4.20+4.20)/2	-2.90		
		(8.02-8.42)x(4.22+4.20)/2	-1.68		
		(7.33-8.02)x(4.27+4.22)/2	-2.93		
		(6.27-7.33)x(4.32+4.27)/2	-4.55		
		(6.23-6.27)x(4.33+4.32)/2	-0.17		
		(6.17-6.23)x(4.34+4.33)/2	-0.26		
		(5.14-6.17)x(4.47+4.34)/2	-4.54		
		(4.53-5.14)x(4.45+4.47)/2	-2.72		
		(4.05-4.53)x(4.47+4.45)/2	-2.14		
		(3.83-4.05)x(4.45+4.47)/2	-0.98		
		(3.24-3.83)x(4.39+4.45)/2	-2.61		
		(3.03-3.24)x(4.37+4.39)/2	-0.92		
		(2.95-3.03)x(4.36+4.37)/2	-0.35		
		(2.78-2.95)x(4.35+4.36)/2	-0.74		
		(1.86-2.78)x(4.26+4.35)/2	-3.96		
		(1.04-1.86)x(4.18+4.26)/2	-3.46		
		(0.76-1.04)x(4.16+4.18)/2	-1.17		
		(0.30-0.76)x(4.15+4.16)/2	-1.91		
		(-0.16-0.30)x(4.14+4.15)/2	-1.91		
		(-0.33--0.16)x(4.13+4.14)/2	-0.70		
		(-0.96--0.33)x(4.23+4.13)/2	-2.63		
		(-1.43--0.96)x(4.27+4.23)/2	-2.00		
		(-1.75--1.43)x(4.25+4.27)/2	-1.36		
		(-2.52--1.75)x(4.13+4.25)/2	-3.23		
		(-2.53--2.52)x(4.13+4.13)/2	-0.04		
		(-2.57--2.53)x(3.71+4.12)/2	-0.16		
		(-2.59--2.57)x(3.91+3.71)/2	-0.08		
		(-2.60--2.59)x(3.83+3.91)/2	-0.04		
		(-2.64--2.60)x(3.77+3.79)/2	-0.15		
		(-2.65--2.64)x(4.30+3.78)/2	-0.04		
		(-2.66--2.65)x(4.33+4.34)/2	-0.04		
		(-2.67--2.66)x(4.17+4.21)/2	-0.04		
		(-2.68--2.67)x(4.21+4.28)/2	-0.04		
		(-2.70--2.68)x(3.98+4.21)/2	-0.08		
		(-2.72--2.70)x(4.26+3.98)/2	-0.08		
		(-2.86--2.72)x(4.22+4.26)/2	-0.59		
		(-2.91--2.86)x(4.15+4.22)/2	-0.21		
		(-2.92--2.91)x(4.10+4.15)/2	-0.04		
		(-2.93--2.92)x(4.11+4.10)/2	-0.04		
		(-2.94--2.93)x(4.21+4.22)/2	-0.04		
		(-2.95--2.94)x(4.35+4.21)/2	-0.04		
		(-2.96--2.95)x(3.85+4.31)/2	-0.04		
		(-2.97--2.96)x(3.85+3.85)/2	-0.04		
		(-3.00--2.97)x(3.85+3.85)/2	-0.12		
		(-3.01--3.00)x(3.91+3.88)/2	-0.04		
		(-3.02--3.01)x(3.85+3.87)/2	-0.04		
		(-3.03--3.02)x(3.92+3.82)/2	-0.04		
		(-3.04--3.03)x(3.95+3.92)/2	-0.04		
		(-3.07--3.04)x(3.77+3.95)/2	-0.12		
		(-3.11--3.07)x(4.17+3.77)/2	-0.16		
		(-3.18--3.11)x(4.18+4.17)/2	-0.29		
		(-3.46--3.18)x(4.04+4.18)/2	-1.15		
		(-3.61--3.46)x(4.04+4.04)/2	-0.61		
		(-4.20--3.61)x(4.02+4.04)/2	-2.38		
		(-4.71--4.20)x(4.01+4.02)/2	-2.05		
		(-5.57--4.71)x(3.93+4.01)/2	-3.41		
		(-5.74--5.57)x(3.91+3.93)/2	-0.67		
		(-5.77--5.74)x(3.91+3.91)/2	-0.12		
		(-5.83--5.77)x(3.83+3.91)/2	-0.23		
		(-5.84--5.83)x(3.85+3.83)/2	-0.04		
		(-5.85--5.84)x(3.80+3.85)/2	-0.04		
		(-5.87--5.85)x(3.85+3.80)/2	-0.08		
		(-5.89--5.87)x(3.82+3.85)/2	-0.08		
		(-5.96--5.89)x(3.84+3.82)/2	-0.27		
		(-6.10--5.96)x(3.85+3.84)/2	-0.54		
		(-6.23--6.10)x(3.85+3.85)/2	-0.50		
		(-6.54--6.23)x(3.84+3.85)/2	-1.19		
		(-6.90--6.54)x(3.83+3.84)/2	-1.38		
		(-7.69--6.90)x(3.81+3.83)/2	-3.02		
		(-7.99--7.69)x(3.80+3.81)/2	-1.14		
		(-8.50--7.99)x(3.80+3.80)/2	-1.94		
		(-9.08--8.50)x(3.80+3.80)/2	-2.20		
		(-9.43--9.08)x(3.80+3.80)/2	-1.33		
		(-10.18--9.43)x(3.80+3.80)/2	-2.85		
		(-10.38--10.18)x(3.80+3.80)/2	-0.76		
		(-10.64--10.38)x(3.80+3.80)/2	-0.99		
		(-10.69--10.64)x(3.82+3.80)/2	-0.19		
		(-10.73--10.69)x(3.77+3.82)/2	-0.15		
		(-10.74--10.73)x(3.76+3.81)/2	-0.04		
		(-10.75--10.74)x(3.68+3.76)/2	-0.04		
		(-10.77--10.75)x(3.75+3.68)/2	-0.07		
		(-10.81--10.77)x(3.76+3.75)/2	-0.15		
		(-10.91--10.81)x(3.79+3.76)/2	-0.38		
		(-10.97--10.91)x(3.80+3.79)/2	-0.23		
		(-11.27--10.97)x(3.81+3.80)/2	-1.14		
		(-11.44--11.27)x(3.81+3.81)/2	-0.65		
		(-12.37--11.44)x(3.82+3.81)/2	-3.55		
		(-12.92--12.37)x(3.84+3.82)/2	-2.11		
		(-13.46--12.92)x(3.87+3.84)/2	-2.08		
		A RIPORTARE mq	105.69		

		CALCOLO DELLE AREE		Foglio n. 58
RILEVATO				
N. SEZIONE PROG.	FIG.	ELEMENTI DI CALCOLO	AREA ELEMENTARE mq	AREA FIGURA mq	NOTE
		RIPORTO mq	105.69		
		(-14.37--13.46)x(3.85+3.87)/2	-3.51		
		(-14.56--14.37)x(3.85+3.85)/2	-0.73		
		(-15.30--14.56)x(3.83+3.85)/2	-2.84		
		(-15.65--15.30)x(3.82+3.83)/2	-1.34		
		(-16.15--15.65)x(3.83+3.82)/2	-1.91		
				95.36	
75	A1	(-12.61--16.45)x(6.24+3.68)/2	19.05		
1110.00		(-11.34--12.61)x(6.23+6.24)/2	7.92		
		(-11.65--11.34)x(5.86+6.23)/2	-1.87		
		(-1.75--11.65)x(6.11+5.86)/2	59.25		
		(-0.68--1.75)x(6.14+6.11)/2	6.55		
		(0.68--0.68)x(6.14+6.14)/2	8.35		
		(1.75-0.68)x(6.11+6.14)/2	6.55		
		(15.39-1.75)x(5.77+6.11)/2	81.02		
		(15.09-15.39)x(6.14+5.77)/2	-1.79		
		(16.35-15.09)x(6.14+6.14)/2	7.74		
		(21.89-16.35)x(2.45+6.14)/2	23.79		
		(31.00-21.89)x(2.45+2.45)/2	22.32		
		(30.19-31.00)x(1.39+1.62)/2	-1.22		
		(29.77-30.19)x(1.14+1.39)/2	-0.53		
		(29.10-29.77)x(0.72+1.14)/2	-0.62		
		(28.63-29.10)x(0.45+0.72)/2	-0.27		
		(28.00-28.63)x(0.11+0.45)/2	-0.18		
		(27.63-28.00)x(0.08+0.11)/2	-0.04		
		(26.91-27.63)x(-0.04+0.08)/2	-0.01		
		(25.88-26.91)x(-0.09+-0.04)/2	0.07		
		(25.81-25.88)x(-0.09+-0.09)/2	0.01		
		(25.71-25.81)x(-0.09+-0.09)/2	0.01		
		(24.72-25.71)x(-0.13+-0.09)/2	0.11		
		(24.12-24.72)x(-0.14+-0.13)/2	0.08		
		(23.62-24.12)x(-0.15+-0.14)/2	0.07		
		(22.79-23.62)x(-0.04+-0.15)/2	0.08		
		(22.53-22.79)x(0.02+-0.04)/2	0.00		
		(22.37-22.53)x(0.13+0.02)/2	-0.01		
		(21.43-22.37)x(0.76+0.13)/2	-0.42		
		(20.62-21.43)x(1.19+0.76)/2	-0.79		
		(20.34-20.62)x(1.38+1.19)/2	-0.36		
		(19.87-20.34)x(1.43+1.38)/2	-0.66		
		(19.24-19.87)x(1.48+1.43)/2	-0.92		
		(18.62-19.24)x(1.53+1.48)/2	-0.93		
		(18.15-18.62)x(1.56+1.53)/2	-0.73		
		(17.12-18.15)x(1.71+1.56)/2	-1.68		
		(17.05-17.12)x(1.72+1.71)/2	-0.12		
		(16.95-17.05)x(1.77+1.72)/2	-0.17		
		(15.96-16.95)x(2.34+1.77)/2	-2.03		
		(15.36-15.96)x(2.87+2.34)/2	-1.56		
		(14.86-15.36)x(3.32+2.87)/2	-1.55		
		(14.03-14.86)x(3.89+3.32)/2	-2.99		
		(13.77-14.03)x(4.05+3.89)/2	-1.03		
		(13.61-13.77)x(4.07+4.05)/2	-0.65		
		(12.67-13.61)x(4.23+4.07)/2	-3.90		
		(11.86-12.67)x(4.28+4.23)/2	-3.45		
		(11.58-11.86)x(4.29+4.28)/2	-1.20		
		(11.11-11.58)x(4.28+4.29)/2	-2.01		
		(10.48-11.11)x(4.25+4.28)/2	-2.69		
		(10.11-10.48)x(4.10+4.25)/2	-1.54		
		(9.39-10.11)x(3.86+4.10)/2	-2.87		
		(8.35-9.39)x(3.51+3.86)/2	-3.83		
		(8.29-8.35)x(3.48+3.51)/2	-0.21		
		(8.27-8.29)x(3.48+3.48)/2	-0.07		
		(8.19-8.27)x(3.49+3.48)/2	-0.28		
		(7.47-8.19)x(3.60+3.49)/2	-2.55		
		(7.20-7.47)x(3.68+3.60)/2	-0.98		
		(6.60-7.20)x(3.84+3.68)/2	-2.26		
		(6.10-6.60)x(4.01+3.84)/2	-1.96		
		(5.27-6.10)x(4.25+4.01)/2	-3.43		
		(5.01-5.27)x(4.31+4.25)/2	-1.11		
		(4.85-5.01)x(4.32+4.31)/2	-0.69		
		(3.91-4.85)x(4.42+4.32)/2	-4.11		
		(3.10-3.91)x(4.42+4.42)/2	-3.58		
		(2.82-3.10)x(4.42+4.42)/2	-1.24		
		(2.35-2.82)x(4.41+4.42)/2	-2.08		
		(1.72-2.35)x(4.40+4.41)/2	-2.78		
		(1.34-1.72)x(4.39+4.40)/2	-1.67		
		(0.63-1.34)x(4.35+4.39)/2	-3.10		
		(-0.41-0.63)x(4.29+4.35)/2	-4.49		
		(-0.47--0.41)x(4.28+4.29)/2	-0.26		
		(-0.57--0.47)x(4.28+4.28)/2	-0.43		
		(-1.56--0.57)x(4.18+4.28)/2	-4.19		
		(-1.87--1.56)x(4.11+4.18)/2	-1.28		
		(-2.10--1.87)x(4.09+4.11)/2	-0.94		
		(-2.19--2.10)x(4.02+4.09)/2	-0.36		
		(-2.20--2.19)x(3.97+4.02)/2	-0.04		
		(-2.22--2.20)x(3.85+3.97)/2	-0.08		
		(-2.32--2.22)x(3.80+3.85)/2	-0.38		
		(-2.33--2.32)x(3.85+3.90)/2	-0.04		
		(-2.34--2.33)x(4.31+4.32)/2	-0.04		
		(-2.35--2.34)x(4.20+4.13)/2	-0.04		
		(-2.36--2.35)x(3.98+4.09)/2	-0.04		
		(-2.37--2.36)x(3.87+3.98)/2	-0.04		
		(-2.38--2.37)x(4.12+3.87)/2	-0.04		
		(-2.43--2.38)x(4.13+4.12)/2	-0.21		
		(-2.58--2.43)x(4.02+4.13)/2	-0.61		
		(-2.63--2.58)x(4.35+3.99)/2	-0.21		
		(-2.64--2.63)x(3.85+4.24)/2	-0.04		
		(-2.65--2.64)x(3.86+3.85)/2	-0.04		
		(-2.68--2.65)x(3.85+3.86)/2	-0.12		
		(-2.69--2.68)x(3.95+3.86)/2	-0.04		
		(-2.70--2.69)x(4.00+4.01)/2	-0.04		
		(-2.71--2.70)x(3.92+3.88)/2	-0.04		
		(-2.72--2.71)x(3.93+3.92)/2	-0.04		
		(-2.73--2.72)x(3.86+3.93)/2	-0.04		
		(-2.74--2.73)x(3.78+3.86)/2	-0.04		
		(-2.76--2.74)x(4.05+3.78)/2	-0.08		
		A RIPORTARE mq	152.01		

		CALCOLO DELLE AREE		Foglio n. 59
RILEVATO				
N. SEZIONE PROG.	FIG.	ELEMENTI DI CALCOLO	AREA ELEMENTARE mq	AREA FIGURA mq	NOTE
		RIPORTO mq	152.01		
		(-2.77--2.76)x(4.05+4.05)/2	-0.04		
		(-2.79--2.77)x(4.05+4.05)/2	-0.08		
		(-2.88--2.79)x(4.05+4.05)/2	-0.36		
		(-3.49--2.88)x(4.01+4.05)/2	-2.46		
		(-3.75--3.49)x(3.99+4.01)/2	-1.04		
		(-3.91--3.75)x(3.98+3.99)/2	-0.64		
		(-4.85--3.91)x(3.87+3.98)/2	-3.69		
		(-5.27--4.85)x(3.80+3.87)/2	-1.61		
		(-5.55--5.27)x(3.75+3.80)/2	-1.06		
		(-5.67--5.55)x(3.75+3.75)/2	-0.45		
		(-5.81--5.67)x(3.75+3.75)/2	-0.52		
		(-5.88--5.81)x(3.77+3.75)/2	-0.26		
		(-5.90--5.88)x(3.80+3.77)/2	-0.08		
		(-5.92--5.90)x(3.85+3.82)/2	-0.08		
		(-5.94--5.92)x(3.75+3.85)/2	-0.08		
		(-5.95--5.94)x(3.78+3.75)/2	-0.04		
		(-6.00--5.95)x(3.72+3.78)/2	-0.19		
		(-6.02--6.00)x(3.72+3.72)/2	-0.07		
		(-6.07--6.02)x(3.72+3.72)/2	-0.19		
		(-6.40--6.07)x(3.72+3.72)/2	-1.23		
		(-7.04--6.40)x(3.72+3.72)/2	-2.38		
		(-7.42--7.04)x(3.72+3.72)/2	-1.41		
		(-8.13--7.42)x(3.71+3.72)/2	-2.64		
		(-9.17--8.13)x(3.74+3.71)/2	-3.87		
		(-9.23--9.17)x(3.74+3.74)/2	-0.22		
		(-9.32--9.23)x(3.74+3.74)/2	-0.34		
		(-10.32--9.32)x(3.73+3.74)/2	-3.74		
		(-10.63--10.32)x(3.73+3.73)/2	-1.16		
		(-10.76--10.63)x(3.71+3.73)/2	-0.48		
		(-10.80--10.76)x(3.71+3.71)/2	-0.15		
		(-10.81--10.80)x(3.72+3.71)/2	-0.04		
		(-10.84--10.81)x(3.68+3.82)/2	-0.11		
		(-10.86--10.84)x(3.71+3.65)/2	-0.07		
		(-10.90--10.86)x(3.73+3.71)/2	-0.15		
		(-10.92--10.90)x(3.73+3.73)/2	-0.07		
		(-10.95--10.92)x(3.73+3.73)/2	-0.11		
		(-11.09--10.95)x(3.73+3.73)/2	-0.52		
		(-11.42--11.09)x(3.73+3.73)/2	-1.23		
		(-12.24--11.42)x(3.73+3.73)/2	-3.06		
		(-12.51--12.24)x(3.73+3.73)/2	-1.01		
		(-12.68--12.51)x(3.73+3.73)/2	-0.63		
		(-13.61--12.68)x(3.73+3.73)/2	-3.47		
		(-14.43--13.61)x(3.70+3.73)/2	-3.05		
		(-14.70--14.43)x(3.69+3.70)/2	-1.00		
		(-15.16--14.70)x(3.68+3.69)/2	-1.70		
		(-15.80--15.16)x(3.68+3.68)/2	-2.36		
		(-16.18--15.80)x(3.68+3.68)/2	-1.40		
		(-16.45--16.18)x(3.68+3.68)/2	-0.99		
				100.48	
76 1125.00	A1	(-12.61--16.55)x(6.28+3.66)/2	19.58		
		(-11.34--12.61)x(6.28+6.28)/2	7.98		
		(-11.65--11.34)x(5.91+6.28)/2	-1.89		
		(-1.75--11.65)x(6.16+5.91)/2	59.75		
		(-0.68--1.75)x(6.18+6.16)/2	6.60		
		(0.68--0.68)x(6.18+6.18)/2	8.40		
		(1.75-0.68)x(6.16+6.18)/2	6.60		
		(15.39-1.75)x(5.82+6.16)/2	81.70		
		(15.09-15.39)x(6.18+5.82)/2	-1.80		
		(16.35-15.09)x(6.19+6.18)/2	7.79		
		(21.98-16.35)x(2.44+6.19)/2	24.29		
		(31.05-21.98)x(2.44+2.44)/2	22.13		
		(30.49-31.05)x(1.24+1.48)/2	-0.76		
		(30.05-30.49)x(1.03+1.24)/2	-0.50		
		(29.78-30.05)x(0.90+1.03)/2	-0.26		
		(28.95-29.78)x(0.43+0.90)/2	-0.55		
		(28.02-28.95)x(0.21+0.43)/2	-0.30		
		(27.86-28.02)x(0.14+0.21)/2	-0.03		
		(27.58-27.86)x(0.08+0.14)/2	-0.03		
		(26.76-27.58)x(-0.11+0.08)/2	0.01		
		(26.26-26.76)x(-0.10+-0.11)/2	0.05		
		(25.67-26.26)x(-0.07+-0.10)/2	0.05		
		(24.68-25.67)x(-0.07+-0.07)/2	0.07		
		(24.57-24.68)x(-0.07+-0.07)/2	0.01		
		(23.80-24.57)x(-0.07+-0.07)/2	0.05		
		(23.47-23.80)x(-0.03+-0.07)/2	0.02		
		(22.74-23.47)x(0.30+-0.03)/2	-0.10		
		(22.38-22.74)x(0.43+0.30)/2	-0.13		
		(21.78-22.38)x(0.90+0.43)/2	-0.40		
		(21.28-21.78)x(1.28+0.90)/2	-0.55		
		(20.98-21.28)x(1.33+1.28)/2	-0.39		
		(20.19-20.98)x(1.56+1.33)/2	-1.14		
		(19.22-20.19)x(1.61+1.56)/2	-1.54		
		(19.09-19.22)x(1.62+1.61)/2	-0.21		
		(18.87-19.09)x(1.63+1.62)/2	-0.36		
		(18.00-18.87)x(1.68+1.63)/2	-1.44		
		(17.46-18.00)x(1.76+1.68)/2	-0.93		
		(16.90-17.46)x(1.83+1.76)/2	-1.01		
		(15.97-16.90)x(2.02+1.83)/2	-1.79		
		(15.80-15.97)x(2.05+2.02)/2	-0.35		
		(15.70-15.80)x(2.07+2.05)/2	-0.21		
		(14.71-15.70)x(2.28+2.07)/2	-2.15		
		(13.94-14.71)x(2.42+2.28)/2	-1.81		
		(13.61-13.94)x(2.49+2.42)/2	-0.81		
		(13.46-13.61)x(2.52+2.49)/2	-0.38		
		(13.06-13.46)x(2.59+2.52)/2	-1.02		
		(12.67-13.06)x(2.67+2.59)/2	-1.03		
		(12.52-12.67)x(2.69+2.67)/2	-0.40		
		(12.18-12.52)x(2.72+2.69)/2	-0.92		
		(11.42-12.18)x(2.83+2.72)/2	-2.11		
		(10.42-11.42)x(2.88+2.83)/2	-2.85		
		(10.32-10.42)x(2.90+2.88)/2	-0.29		
		(10.16-10.32)x(2.90+2.90)/2	-0.46		
		(9.23-10.16)x(2.89+2.90)/2	-2.69		
		(8.66-9.23)x(2.88+2.89)/2	-1.64		
		A RIPORTARE mq	209.85		

	CALCOLO DELLE AREE		Foglio n. 60

RILEVATO

N. SEZIONE PROG.	FIG.	ELEMENTI DI CALCOLO	AREA ELEMENTARE mq	AREA FIGURA mq	NOTE
		RIPORTO mq	209.85		
		(8.13-8.66)x(2.85+2.88)/2	-1.52		
		(7.26-8.13)x(2.85+2.85)/2	-2.48		
		(7.04-7.26)x(2.86+2.85)/2	-0.63		
		(6.90-7.04)x(2.89+2.86)/2	-0.40		
		(5.94-6.90)x(3.08+2.89)/2	-2.87		
		(5.14-5.94)x(3.22+3.08)/2	-2.52		
		(4.84-5.14)x(3.28+3.22)/2	-0.97		
		(4.35-4.84)x(3.34+3.28)/2	-1.62		
		(3.75-4.35)x(3.42+3.34)/2	-2.03		
		(3.38-3.75)x(3.48+3.42)/2	-1.28		
		(2.65-3.38)x(3.58+3.48)/2	-2.58		
		(2.32-2.65)x(3.63+3.58)/2	-1.19		
		(1.56-2.32)x(3.74+3.63)/2	-2.80		
		(1.45-1.56)x(3.76+3.74)/2	-0.41		
		(0.46-1.45)x(3.92+3.76)/2	-3.80		
		(-0.14-0.46)x(3.91+3.92)/2	-2.35		
		(-0.63--0.14)x(3.91+3.91)/2	-1.92		
		(-1.45--0.63)x(3.86+3.91)/2	-3.19		
		(-1.65--1.45)x(3.85+3.86)/2	-0.77		
		(-1.69--1.65)x(3.85+3.85)/2	-0.15		
		(-1.70--1.69)x(3.84+3.85)/2	-0.04		
		(-1.88--1.70)x(3.93+3.84)/2	-0.70		
		(-1.90--1.88)x(3.83+3.93)/2	-0.08		
		(-1.92--1.90)x(3.89+3.83)/2	-0.08		
		(-2.03--1.92)x(3.83+3.89)/2	-0.42		
		(-2.04--2.03)x(3.91+4.00)/2	-0.04		
		(-2.05--2.04)x(4.29+4.31)/2	-0.04		
		(-2.06--2.05)x(3.99+4.29)/2	-0.04		
		(-2.07--2.06)x(3.93+4.10)/2	-0.04		
		(-2.15--2.07)x(3.86+3.90)/2	-0.31		
		(-2.27--2.15)x(3.85+3.86)/2	-0.46		
		(-2.28--2.27)x(3.91+3.78)/2	-0.04		
		(-2.34--2.28)x(4.35+3.91)/2	-0.25		
		(-2.35--2.34)x(3.85+4.17)/2	-0.04		
		(-2.36--2.35)x(3.86+3.85)/2	-0.04		
		(-2.38--2.36)x(3.86+3.86)/2	-0.08		
		(-2.39--2.38)x(3.81+3.86)/2	-0.04		
		(-2.40--2.39)x(3.87+3.97)/2	-0.04		
		(-2.41--2.40)x(3.98+4.01)/2	-0.04		
		(-2.42--2.41)x(4.10+4.12)/2	-0.04		
		(-2.43--2.42)x(3.90+4.10)/2	-0.04		
		(-2.44--2.43)x(3.96+3.90)/2	-0.04		
		(-2.45--2.44)x(3.98+3.96)/2	-0.04		
		(-2.46--2.45)x(3.94+3.98)/2	-0.04		
		(-2.61--2.46)x(3.84+3.94)/2	-0.58		
		(-2.83--2.61)x(3.81+3.84)/2	-0.84		
		(-3.66--2.83)x(3.79+3.81)/2	-3.15		
		(-3.92--3.66)x(3.79+3.79)/2	-0.99		
		(-4.36--3.92)x(3.78+3.79)/2	-1.67		
		(-5.02--4.36)x(3.77+3.78)/2	-2.49		
		(-5.63--5.02)x(3.74+3.77)/2	-2.29		
		(-5.84--5.63)x(3.72+3.74)/2	-0.78		
		(-5.92--5.84)x(3.71+3.72)/2	-0.30		
		(-5.99--5.92)x(3.71+3.71)/2	-0.26		
		(-6.00--5.99)x(3.73+3.71)/2	-0.04		
		(-6.02--6.00)x(3.84+3.73)/2	-0.08		
		(-6.04--6.02)x(3.86+3.84)/2	-0.08		
		(-6.05--6.04)x(3.75+3.86)/2	-0.04		
		(-6.08--6.05)x(3.71+3.71)/2	-0.11		
		(-6.14--6.08)x(3.68+3.71)/2	-0.22		
		(-6.24--6.14)x(3.68+3.68)/2	-0.37		
		(-6.30--6.24)x(3.68+3.68)/2	-0.22		
		(-6.43--6.30)x(3.67+3.68)/2	-0.48		
		(-7.21--6.43)x(3.65+3.67)/2	-2.85		
		(-7.22--7.21)x(3.65+3.65)/2	-0.04		
		(-7.26--7.22)x(3.65+3.65)/2	-0.15		
		(-8.02--7.26)x(3.64+3.65)/2	-2.77		
		(-8.31--8.02)x(3.65+3.64)/2	-1.06		
		(-8.94--8.31)x(3.65+3.65)/2	-2.30		
		(-9.40--8.94)x(3.66+3.65)/2	-1.68		
		(-10.17--9.40)x(3.63+3.66)/2	-2.81		
		(-10.50--10.17)x(3.62+3.63)/2	-1.20		
		(-10.78--10.50)x(3.62+3.62)/2	-1.01		
		(-10.82--10.78)x(3.62+3.62)/2	-0.14		
		(-10.90--10.82)x(3.61+3.62)/2	-0.29		
		(-10.91--10.90)x(3.62+3.61)/2	-0.04		
		(-10.92--10.91)x(3.77+3.62)/2	-0.04		
		(-10.96--10.92)x(3.67+3.82)/2	-0.15		
		(-10.98--10.96)x(3.63+3.64)/2	-0.07		
		(-11.06--10.98)x(3.61+3.63)/2	-0.29		
		(-11.11--11.06)x(3.61+3.61)/2	-0.18		
		(-11.37--11.11)x(3.60+3.61)/2	-0.94		
		(-11.59--11.37)x(3.60+3.60)/2	-0.79		
		(-12.46--11.59)x(3.59+3.60)/2	-3.13		
		(-12.69--12.46)x(3.59+3.59)/2	-0.83		
		(-13.07--12.69)x(3.57+3.59)/2	-1.36		
		(-13.78--13.07)x(3.56+3.57)/2	-2.53		
		(-14.22--13.78)x(3.57+3.56)/2	-1.57		
		(-14.88--14.22)x(3.59+3.57)/2	-2.36		
		(-15.97--14.88)x(3.63+3.59)/2	-3.93		
		(-15.98--15.97)x(3.63+3.63)/2	-0.04		
		(-16.55--15.98)x(3.66+3.63)/2	-2.08		
				119.73	

Il Direttore dei Lavori	L'Impresa	

	CALCOLO DELLE AREE		Foglio n. 61

STERRO

N. SEZIONE PROG.	FIG.	ELEMENTI DI CALCOLO	AREA ELEMENTARE mq	AREA FIGURA mq	NOTE
1	B1	(-10.70--10.76)x(3.59+3.56)/2	0.21		
0.00		(-10.48--10.70)x(3.69+3.59)/2	0.80		
		(-10.32--10.48)x(3.71+3.69)/2	0.59		
		(-9.34--10.32)x(3.79+3.71)/2	3.68		
		(-8.43--9.34)x(3.77+3.79)/2	3.44		
		(-8.26--8.43)x(3.76+3.77)/2	0.64		
		(-8.02--8.26)x(3.75+3.76)/2	0.90		
		(-7.15--8.02)x(3.73+3.75)/2	3.25		
		(-6.54--7.15)x(3.72+3.73)/2	2.27		
		(-6.04--6.54)x(3.70+3.72)/2	1.85		
		(-5.33--6.04)x(3.68+3.70)/2	2.62		
		(-4.93--5.33)x(3.67+3.68)/2	1.47		
		(-4.65--4.93)x(3.67+3.67)/2	1.03		
		(-3.82--4.65)x(3.64+3.67)/2	3.03		
		(-2.76--3.82)x(3.63+3.64)/2	3.85		
		(-2.71--2.76)x(3.63+3.63)/2	0.18		
		(-2.65--2.71)x(3.63+3.63)/2	0.22		
		(-1.60--2.65)x(3.62+3.63)/2	3.81		
		(-0.86--1.60)x(3.61+3.62)/2	2.68		
		(-0.49--0.86)x(3.61+3.61)/2	1.34		
		(0.03--0.49)x(3.61+3.61)/2	1.88		
		(0.62-0.03)x(3.61+3.61)/2	2.13		
		(1.03-0.62)x(3.60+3.61)/2	1.48		
		(1.73-1.03)x(3.59+3.60)/2	2.52		
		(2.72-1.73)x(3.58+3.59)/2	3.55		
		(2.84-2.72)x(3.58+3.58)/2	0.43		
		(2.92-2.84)x(3.58+3.58)/2	0.29		
		(3.95-2.92)x(3.58+3.58)/2	3.69		
		(4.81-3.95)x(3.57+3.58)/2	3.07		
		(5.05-4.81)x(3.57+3.57)/2	0.86		
		(5.40-5.05)x(3.57+3.57)/2	1.25		
		(6.16-5.40)x(3.56+3.57)/2	2.71		
		(6.70-6.16)x(3.56+3.56)/2	1.92		
		(7.27-6.70)x(3.56+3.56)/2	2.03		
		(8.08-7.27)x(3.55+3.56)/2	2.88		
		(8.38-8.08)x(3.55+3.55)/2	1.07		
		(8.59-8.38)x(3.55+3.55)/2	0.75		
		(9.49-8.59)x(3.56+3.55)/2	3.20		
		(10.49-9.49)x(3.55+3.56)/2	3.55		
		(10.60-10.49)x(3.55+3.55)/2	0.39		
		(10.77-10.60)x(3.53+3.55)/2	0.60		
		(11.54-10.77)x(3.49+3.53)/2	2.70		
		(11.25-11.54)x(3.33+3.49)/2	-0.99		
		(9.98-11.25)x(3.32+3.33)/2	-4.22		
		(10.29-9.98)x(2.96+3.32)/2	0.97		
		(0.91-10.29)x(3.04+2.96)/2	-28.14		
		(0.05-0.91)x(3.04+3.04)/2	-2.61		
		(-0.81-0.05)x(3.04+3.04)/2	-2.61		
		(-2.21--0.81)x(3.00+3.04)/2	-4.23		
		(-9.99--2.21)x(3.19+3.00)/2	-24.08		
		(-9.68--9.99)x(3.56+3.19)/2	1.05		
		(-10.76--9.68)x(3.56+3.56)/2	-3.84		
				12.11	
2	B1	(-10.70--10.78)x(3.49+3.46)/2	0.28		
15.00		(-10.48--10.70)x(3.60+3.49)/2	0.78		
		(-10.32--10.48)x(3.61+3.60)/2	0.58		
		(-9.37--10.32)x(3.79+3.61)/2	3.52		
		(-8.43--9.37)x(3.68+3.79)/2	3.51		
		(-8.26--8.43)x(3.66+3.68)/2	0.62		
		(-8.02--8.26)x(3.66+3.66)/2	0.88		
		(-7.15--8.02)x(3.64+3.66)/2	3.18		
		(-6.54--7.15)x(3.62+3.64)/2	2.21		
		(-6.04--6.54)x(3.60+3.62)/2	1.81		
		(-5.33--6.04)x(3.59+3.60)/2	2.55		
		(-4.93--5.33)x(3.58+3.59)/2	1.43		
		(-4.65--4.93)x(3.57+3.58)/2	1.00		
		(-3.82--4.65)x(3.54+3.57)/2	2.95		
		(-2.76--3.82)x(3.53+3.54)/2	3.75		
		(-2.71--2.76)x(3.53+3.53)/2	0.18		
		(-2.65--2.71)x(3.53+3.53)/2	0.21		
		(-1.60--2.65)x(3.52+3.53)/2	3.70		
		(-0.86--1.60)x(3.51+3.52)/2	2.60		
		(-0.49--0.86)x(3.51+3.51)/2	1.30		
		(0.03--0.49)x(3.51+3.51)/2	1.83		
		(0.62-0.03)x(3.51+3.51)/2	2.07		
		(1.03-0.62)x(3.50+3.51)/2	1.44		
		(1.73-1.03)x(3.49+3.50)/2	2.45		
		(2.72-1.73)x(3.48+3.49)/2	3.45		
		(2.84-2.72)x(3.48+3.48)/2	0.42		
		(2.92-2.84)x(3.48+3.48)/2	0.28		
		(3.95-2.92)x(3.48+3.48)/2	3.58		
		(4.81-3.95)x(3.47+3.48)/2	2.99		
		(5.05-4.81)x(3.47+3.47)/2	0.83		
		(5.40-5.05)x(3.47+3.47)/2	1.21		
		(6.16-5.40)x(3.46+3.47)/2	2.63		
		(6.70-6.16)x(3.46+3.46)/2	1.87		
		(7.27-6.70)x(3.46+3.46)/2	1.97		
		(8.08-7.27)x(3.45+3.46)/2	2.80		
		(8.38-8.08)x(3.45+3.45)/2	1.04		
		(8.59-8.38)x(3.45+3.45)/2	0.72		
		(9.49-8.59)x(3.46+3.45)/2	3.11		
		(10.49-9.49)x(3.45+3.46)/2	3.46		
		(10.60-10.49)x(3.45+3.45)/2	0.38		
		(10.77-10.60)x(3.43+3.45)/2	0.58		
		(11.36-10.77)x(3.40+3.43)/2	2.01		
		(11.17-11.36)x(3.17+3.40)/2	-0.62		
		(9.90-11.17)x(3.17+3.17)/2	-4.03		
		(10.21-9.90)x(2.80+3.17)/2	0.93		
		(0.86-10.21)x(3.03+2.80)/2	-27.26		
		(0.00-0.86)x(3.03+3.03)/2	-2.61		
		(-0.86-0.00)x(3.03+3.03)/2	-2.61		
		(-2.26--0.86)x(3.00+3.03)/2	-4.22		
		(-10.01--2.26)x(3.09+3.00)/2	-23.60		
		(-9.70--10.01)x(3.45+3.09)/2	1.01		
		(-10.78--9.70)x(3.46+3.45)/2	-3.73		
				11.42	
		A RIPORTARE mq			

	CALCOLO DELLE AREE		Foglio n. 62

STERRO

N. SEZIONE PROG.	FIG.	ELEMENTI DI CALCOLO	AREA ELEMENTARE mq	AREA FIGURA mq	NOTE
		RIPORTO mq			
3	B1	(-10.53--10.58)x(3.49+3.48)/2	0.17		
30.00		(-10.02--10.53)x(3.59+3.49)/2	1.81		
		(-9.30--10.02)x(3.69+3.59)/2	2.62		
		(-8.91--9.30)x(3.73+3.69)/2	1.45		
		(-8.64--8.91)x(3.72+3.73)/2	1.01		
		(-7.80--8.64)x(3.68+3.72)/2	3.11		
		(-6.75--7.80)x(3.65+3.68)/2	3.85		
		(-6.69--6.75)x(3.64+3.65)/2	0.22		
		(-6.62--6.69)x(3.64+3.64)/2	0.25		
		(-5.58--6.62)x(3.63+3.64)/2	3.78		
		(-4.86--5.58)x(3.61+3.63)/2	2.61		
		(-4.48--4.86)x(3.60+3.61)/2	1.37		
		(-3.94--4.48)x(3.59+3.60)/2	1.94		
		(-3.37--3.94)x(3.58+3.59)/2	2.04		
		(-2.96--3.37)x(3.58+3.58)/2	1.47		
		(-2.26--2.96)x(3.57+3.58)/2	2.50		
		(-1.25--2.26)x(3.56+3.57)/2	3.60		
		(-1.15--1.25)x(3.55+3.56)/2	0.36		
		(-1.07--1.15)x(3.56+3.55)/2	0.28		
		(-0.04--1.07)x(3.56+3.56)/2	3.67		
		(0.82--0.04)x(3.55+3.56)/2	3.06		
		(1.07-0.82)x(3.54+3.55)/2	0.89		
		(1.43-1.07)x(3.54+3.54)/2	1.27		
		(2.18-1.43)x(3.53+3.54)/2	2.65		
		(2.71-2.18)x(3.52+3.53)/2	1.87		
		(3.29-2.71)x(3.52+3.52)/2	2.04		
		(4.11-3.29)x(3.51+3.52)/2	2.88		
		(4.40-4.11)x(3.51+3.51)/2	1.02		
		(4.60-4.40)x(3.51+3.51)/2	0.70		
		(5.51-4.60)x(3.50+3.51)/2	3.19		
		(6.49-5.51)x(3.50+3.50)/2	3.43		
		(6.62-6.49)x(3.50+3.50)/2	0.45		
		(6.80-6.62)x(3.50+3.50)/2	0.63		
		(7.73-6.80)x(3.49+3.50)/2	3.25		
		(8.39-7.73)x(3.49+3.49)/2	2.30		
		(8.84-8.39)x(3.49+3.49)/2	1.57		
		(9.48-8.84)x(3.46+3.49)/2	2.22		
		(9.95-9.48)x(3.43+3.46)/2	1.62		
		(10.28-9.95)x(3.40+3.43)/2	1.13		
		(11.06-10.28)x(3.33+3.40)/2	2.62		
		(11.63-11.06)x(3.27+3.33)/2	1.88		
		(11.12-11.63)x(3.25+3.27)/2	-1.66		
		(9.85-11.12)x(3.25+3.25)/2	-4.13		
		(10.16-9.85)x(2.88+3.25)/2	0.95		
		(0.86-10.16)x(3.03+2.88)/2	-27.48		
		(0.00-0.86)x(3.03+3.03)/2	-2.61		
		(-0.86-0.00)x(3.03+3.03)/2	-2.61		
		(-2.26--0.86)x(3.00+3.03)/2	-4.22		
		(-10.11--2.26)x(3.11+3.00)/2	-23.98		
		(-9.80--10.11)x(3.48+3.11)/2	1.02		
		(-10.58--9.80)x(3.48+3.48)/2	-2.71		
				11.35	
4	B1	(-10.68--10.96)x(3.65+3.54)/2	1.01		
45.00		(-10.59--10.68)x(3.66+3.65)/2	0.33		
		(-9.57--10.59)x(3.78+3.66)/2	3.79		
		(-8.85--9.57)x(3.73+3.78)/2	2.70		
		(-8.46--8.85)x(3.71+3.73)/2	1.45		
		(-7.91--8.46)x(3.68+3.71)/2	2.03		
		(-7.35--7.91)x(3.67+3.68)/2	2.06		
		(-6.96--7.35)x(3.66+3.67)/2	1.43		
		(-6.24--6.96)x(3.64+3.66)/2	2.63		
		(-5.22--6.24)x(3.63+3.64)/2	3.71		
		(-5.13--5.22)x(3.63+3.63)/2	0.33		
		(-5.06--5.13)x(3.63+3.63)/2	0.25		
		(-4.02--5.06)x(3.60+3.63)/2	3.76		
		(-3.17--4.02)x(3.59+3.60)/2	3.06		
		(-2.91--3.17)x(3.59+3.59)/2	0.93		
		(-2.54--2.91)x(3.59+3.59)/2	1.33		
		(-1.80--2.54)x(3.58+3.59)/2	2.65		
		(-1.28--1.80)x(3.58+3.58)/2	1.86		
		(-0.69--1.28)x(3.57+3.58)/2	2.11		
		(0.14--0.69)x(3.57+3.57)/2	2.96		
		(0.42-0.14)x(3.57+3.57)/2	1.00		
		(0.61-0.42)x(3.57+3.57)/2	0.68		
		(1.53-0.61)x(3.56+3.57)/2	3.28		
		(2.50-1.53)x(3.55+3.56)/2	3.45		
		(2.64-2.50)x(3.55+3.55)/2	0.50		
		(2.83-2.64)x(3.55+3.55)/2	0.67		
		(3.75-2.83)x(3.55+3.55)/2	3.27		
		(4.39-3.75)x(3.55+3.55)/2	2.27		
		(4.86-4.39)x(3.55+3.55)/2	1.67		
		(5.51-4.86)x(3.55+3.55)/2	2.31		
		(5.96-5.51)x(3.55+3.55)/2	1.60		
		(6.29-5.96)x(3.54+3.55)/2	1.17		
		(7.07-6.29)x(3.52+3.54)/2	2.75		
		(7.31-7.07)x(3.54+3.52)/2	0.85		
		(8.18-7.31)x(3.52+3.54)/2	3.07		
		(8.19-8.18)x(3.52+3.52)/2	0.04		
		(8.97-8.19)x(3.52+3.52)/2	2.75		
		(9.29-8.97)x(3.53+3.52)/2	1.13		
		(9.51-9.29)x(3.58+3.53)/2	0.78		
		(9.74-9.51)x(3.62+3.58)/2	0.83		
		(9.75-9.74)x(3.62+3.62)/2	0.04		
		(9.76-9.75)x(3.61+3.62)/2	0.04		
		(9.77-9.76)x(3.61+3.61)/2	0.04		
		(9.94-9.77)x(3.62+3.61)/2	0.61		
		(10.00-9.94)x(3.62+3.62)/2	0.22		
		(10.40-10.00)x(3.63+3.62)/2	1.45		
		(10.45-10.40)x(3.64+3.63)/2	0.18		
		(10.88-10.45)x(3.56+3.64)/2	1.55		
		(11.51-10.88)x(3.44+3.56)/2	2.20		
		(12.16-11.51)x(3.18+3.44)/2	2.15		
		(12.31-12.16)x(3.17+3.18)/2	0.48		
		(9.90-12.31)x(3.16+3.17)/2	-7.63		
		A RIPORTARE mq	75.78		

		CALCOLO DELLE AREE		Foglio n. 63
STERRO				
N. SEZIONE PROG.	FIG.	ELEMENTI DI CALCOLO	AREA ELEMENTARE mq	AREA FIGURA mq	NOTE
		RIPORTO mq	75.78		
		(10.21-9.90)x(2.79+3.16)/2	0.92		
		(0.86-10.21)x(3.03+2.79)/2	-27.21		
		(0.00-0.86)x(3.03+3.03)/2	-2.61		
		(-0.86-0.00)x(3.03+3.03)/2	-2.61		
		(-2.26--0.86)x(2.99+3.03)/2	-4.21		
		(-10.31--2.26)x(3.17+2.99)/2	-24.79		
		(-10.00--10.31)x(3.53+3.17)/2	1.04		
		(-10.96--10.00)x(3.54+3.53)/2	-3.39		
				12.92	
5	B1	(-11.88--12.18)x(3.35+3.28)/2	0.99		
60.00		(-11.67--11.88)x(3.41+3.35)/2	0.71		
		(-11.86--11.67)x(3.28+3.41)/2	-0.64		
		(-12.18--11.86)x(3.28+3.28)/2	-1.05		
				0.01	
5	B2	(-11.33--11.44)x(3.51+3.48)/2	0.38		
60.00		(-10.95--11.33)x(3.62+3.51)/2	1.35		
		(-10.22--10.95)x(3.86+3.62)/2	2.73		
		(-9.20--10.22)x(3.79+3.86)/2	3.90		
		(-9.11--9.20)x(3.78+3.79)/2	0.34		
		(-9.05--9.11)x(3.77+3.78)/2	0.23		
		(-8.00--9.05)x(3.68+3.77)/2	3.91		
		(-7.16--8.00)x(3.67+3.68)/2	3.09		
		(-6.89--7.16)x(3.67+3.67)/2	0.99		
		(-6.51--6.89)x(3.66+3.67)/2	1.39		
		(-5.78--6.51)x(3.65+3.66)/2	2.67		
		(-5.27--5.78)x(3.64+3.65)/2	1.86		
		(-4.68--5.27)x(3.63+3.64)/2	2.14		
		(-3.83--4.68)x(3.62+3.63)/2	3.08		
		(-3.57--3.83)x(3.62+3.62)/2	0.94		
		(-3.38--3.57)x(3.62+3.62)/2	0.69		
		(-2.46--3.38)x(3.61+3.62)/2	3.33		
		(-1.49--2.46)x(3.61+3.61)/2	3.50		
		(-1.35--1.49)x(3.61+3.61)/2	0.51		
		(-1.15--1.35)x(3.61+3.61)/2	0.72		
		(-0.24--1.15)x(3.61+3.61)/2	3.29		
		(0.40--0.24)x(3.60+3.61)/2	2.31		
		(0.87-0.40)x(3.60+3.60)/2	1.69		
		(1.54-0.87)x(3.59+3.60)/2	2.41		
		(1.98-1.54)x(3.58+3.59)/2	1.58		
		(2.64-1.98)x(3.57+3.58)/2	2.36		
		(3.09-2.64)x(3.57+3.57)/2	1.61		
		(4.19-3.09)x(3.56+3.57)/2	3.92		
		(4.20-4.19)x(3.56+3.56)/2	0.04		
		(4.22-4.20)x(3.56+3.56)/2	0.07		
		(5.31-4.22)x(3.55+3.56)/2	3.87		
		(6.08-5.31)x(3.54+3.55)/2	2.73		
		(6.42-6.08)x(3.53+3.54)/2	1.20		
		(6.90-6.42)x(3.52+3.53)/2	1.69		
		(7.35-6.90)x(3.51+3.52)/2	1.58		
		(7.42-7.35)x(3.51+3.51)/2	0.25		
		(7.43-7.42)x(3.51+3.51)/2	0.04		
		(7.44-7.43)x(3.51+3.51)/2	0.04		
		(7.46-7.44)x(3.56+3.51)/2	0.07		
		(7.48-7.46)x(3.54+3.56)/2	0.07		
		(7.58-7.48)x(3.54+3.54)/2	0.35		
		(7.63-7.58)x(3.51+3.54)/2	0.18		
		(7.78-7.63)x(3.50+3.51)/2	0.53		
		(7.88-7.78)x(3.50+3.50)/2	0.35		
		(8.13-7.88)x(3.50+3.50)/2	0.88		
		(8.64-8.13)x(3.49+3.50)/2	1.78		
		(8.80-8.64)x(3.49+3.49)/2	0.56		
		(9.08-8.80)x(3.50+3.49)/2	0.98		
		(9.20-9.08)x(3.51+3.50)/2	0.42		
		(9.27-9.20)x(3.53+3.51)/2	0.25		
		(9.30-9.27)x(3.55+3.53)/2	0.11		
		(9.33-9.30)x(3.53+3.55)/2	0.11		
		(9.34-9.33)x(3.49+3.53)/2	0.04		
		(9.47-9.34)x(3.52+3.49)/2	0.46		
		(9.51-9.47)x(3.51+3.52)/2	0.14		
		(9.55-9.51)x(3.52+3.53)/2	0.14		
		(9.72-9.55)x(3.53+3.52)/2	0.60		
		(9.75-9.72)x(3.54+3.53)/2	0.11		
		(9.86-9.75)x(3.54+3.54)/2	0.39		
		(10.86-9.86)x(3.59+3.54)/2	3.56		
		(11.75-10.86)x(3.37+3.59)/2	3.10		
		(11.97-11.75)x(3.32+3.37)/2	0.74		
		(12.27-11.97)x(3.24+3.32)/2	0.98		
		(12.62-12.27)x(3.16+3.24)/2	1.12		
		(10.06-12.62)x(3.15+3.16)/2	-8.08		
		(10.37-10.06)x(2.78+3.15)/2	0.92		
		(0.86-10.37)x(3.02+2.78)/2	-27.58		
		(0.00-0.86)x(3.02+3.02)/2	-2.60		
		(-0.86-0.00)x(3.02+3.02)/2	-2.60		
		(-2.26--0.86)x(2.99+3.02)/2	-4.21		
		(-10.61--2.26)x(3.11+2.99)/2	-25.47		
		(-10.30--10.61)x(3.47+3.11)/2	1.02		
		(-11.44--10.30)x(3.48+3.47)/2	-3.96		
				13.89	
6	B1	(-12.33--12.80)x(3.37+3.28)/2	1.56		
75.00		(-12.18--12.33)x(3.42+3.37)/2	0.51		
		(-12.13--12.18)x(3.44+3.42)/2	0.17		
		(-12.06--12.13)x(3.41+3.44)/2	0.24		
		(-12.27--12.06)x(3.28+3.41)/2	-0.70		
		(-12.80--12.27)x(3.28+3.28)/2	-1.74		
				0.04	
6	B2	(-11.77--11.82)x(3.51+3.48)/2	0.17		
75.00		(-11.72--11.77)x(3.52+3.51)/2	0.18		
		(-11.55--11.72)x(3.56+3.52)/2	0.60		
		(-10.87--11.55)x(3.79+3.56)/2	2.50		
		(-10.82--10.87)x(3.81+3.79)/2	0.19		
		(-10.73--10.82)x(3.78+3.81)/2	0.34		
		(-10.69--10.73)x(3.83+3.78)/2	0.15		
		(-10.67--10.69)x(3.82+3.83)/2	0.08		
		(-10.65--10.67)x(3.71+3.82)/2	0.08		
		A RIPORTARE mq	4.29		

	CALCOLO DELLE AREE		Foglio n. 64

STERRO

N. SEZIONE PROG.	FIG.	ELEMENTI DI CALCOLO	AREA ELEMENTARE mq	AREA FIGURA mq	NOTE
		RIPORTO mq	4.29		
		(-10.50--10.65)x(3.80+3.71)/2	0.56		
		(-10.34--10.50)x(3.80+3.80)/2	0.61		
		(-10.17--10.34)x(3.75+3.80)/2	0.64		
		(-10.05--10.17)x(3.77+3.75)/2	0.45		
		(-10.00--10.05)x(3.76+3.77)/2	0.19		
		(-9.96--10.00)x(3.85+3.76)/2	0.15		
		(-9.87--9.96)x(3.80+3.85)/2	0.34		
		(-9.76--9.87)x(3.80+3.80)/2	0.42		
		(-9.52--9.76)x(3.78+3.80)/2	0.91		
		(-9.48--9.52)x(3.79+3.78)/2	0.15		
		(-9.47--9.48)x(3.80+3.79)/2	0.04		
		(-9.34--9.47)x(3.72+3.80)/2	0.49		
		(-9.32--9.34)x(3.71+3.72)/2	0.07		
		(-9.28--9.32)x(3.71+3.71)/2	0.15		
		(-9.20--9.28)x(3.75+3.73)/2	0.30		
		(-9.18--9.20)x(3.73+3.75)/2	0.07		
		(-9.10--9.18)x(3.72+3.73)/2	0.30		
		(-8.97--9.10)x(3.71+3.72)/2	0.48		
		(-8.65--8.97)x(3.69+3.71)/2	1.18		
		(-7.82--8.65)x(3.68+3.69)/2	3.06		
		(-7.62--7.82)x(3.67+3.68)/2	0.74		
		(-7.59--7.62)x(3.67+3.67)/2	0.11		
		(-7.57--7.59)x(3.67+3.67)/2	0.07		
		(-7.34--7.57)x(3.72+3.68)/2	0.85		
		(-7.24--7.34)x(3.74+3.72)/2	0.37		
		(-7.22--7.24)x(3.77+3.74)/2	0.08		
		(-7.19--7.22)x(3.68+3.77)/2	0.11		
		(-7.13--7.19)x(3.67+3.68)/2	0.22		
		(-6.83--7.13)x(3.67+3.67)/2	1.10		
		(-6.43--6.83)x(3.66+3.67)/2	1.47		
		(-5.46--6.43)x(3.65+3.66)/2	3.55		
		(-5.32--5.46)x(3.65+3.65)/2	0.51		
		(-5.13--5.32)x(3.65+3.65)/2	0.69		
		(-4.21--5.13)x(3.63+3.65)/2	3.35		
		(-3.69--4.21)x(3.63+3.63)/2	1.89		
		(-3.10--3.69)x(3.62+3.63)/2	2.14		
		(-2.43--3.10)x(3.61+3.62)/2	2.42		
		(-1.99--2.43)x(3.61+3.61)/2	1.59		
		(-1.69--1.99)x(3.60+3.61)/2	1.08		
		(-0.89--1.69)x(3.60+3.60)/2	2.88		
		(0.20--0.89)x(3.59+3.60)/2	3.92		
		(0.22-0.20)x(3.59+3.59)/2	0.07		
		(0.26-0.22)x(3.59+3.59)/2	0.14		
		(1.33-0.26)x(3.57+3.59)/2	3.83		
		(2.09-1.33)x(3.56+3.57)/2	2.71		
		(2.44-2.09)x(3.56+3.56)/2	1.25		
		(2.95-2.44)x(3.55+3.56)/2	1.81		
		(3.55-2.95)x(3.54+3.55)/2	2.13		
		(3.97-3.55)x(3.53+3.54)/2	1.48		
		(4.66-3.97)x(3.52+3.53)/2	2.43		
		(4.95-4.66)x(3.52+3.52)/2	1.02		
		(5.64-4.95)x(3.51+3.52)/2	2.43		
		(5.77-5.64)x(3.51+3.51)/2	0.46		
		(5.86-5.77)x(3.51+3.51)/2	0.32		
		(6.88-5.86)x(3.50+3.51)/2	3.58		
		(7.13-6.88)x(3.49+3.50)/2	0.87		
		(7.38-7.13)x(3.50+3.49)/2	0.87		
		(7.46-7.38)x(3.50+3.50)/2	0.28		
		(7.49-7.46)x(3.50+3.50)/2	0.11		
		(7.51-7.49)x(3.54+3.50)/2	0.07		
		(7.53-7.51)x(3.51+3.54)/2	0.07		
		(7.63-7.53)x(3.50+3.51)/2	0.35		
		(7.65-7.63)x(3.50+3.50)/2	0.07		
		(7.70-7.65)x(3.50+3.50)/2	0.17		
		(7.99-7.70)x(3.49+3.50)/2	1.01		
		(8.33-7.99)x(3.49+3.49)/2	1.19		
		(9.09-8.33)x(3.51+3.49)/2	2.66		
		(9.33-9.09)x(3.54+3.51)/2	0.85		
		(9.39-9.33)x(3.55+3.54)/2	0.21		
		(9.41-9.39)x(3.51+3.55)/2	0.07		
		(9.45-9.41)x(3.48+3.51)/2	0.14		
		(9.52-9.45)x(3.48+3.48)/2	0.24		
		(9.54-9.52)x(3.49+3.48)/2	0.07		
		(9.55-9.54)x(3.47+3.49)/2	0.03		
		(9.58-9.55)x(3.51+3.47)/2	0.10		
		(9.72-9.58)x(3.57+3.51)/2	0.50		
		(9.75-9.72)x(3.57+3.57)/2	0.11		
		(9.88-9.75)x(3.53+3.57)/2	0.46		
		(10.02-9.88)x(3.53+3.53)/2	0.49		
		(10.03-10.02)x(3.53+3.53)/2	0.04		
		(10.22-10.03)x(3.57+3.53)/2	0.67		
		(10.29-10.22)x(3.60+3.57)/2	0.25		
		(10.32-10.29)x(3.64+3.60)/2	0.11		
		(10.33-10.32)x(3.53+3.64)/2	0.04		
		(10.34-10.33)x(3.51+3.53)/2	0.04		
		(10.44-10.34)x(3.49+3.51)/2	0.35		
		(11.02-10.44)x(3.50+3.49)/2	2.03		
		(11.31-11.02)x(3.50+3.50)/2	1.02		
		(11.60-11.31)x(3.50+3.50)/2	1.01		
		(11.75-11.60)x(3.49+3.50)/2	0.52		
		(11.79-11.75)x(3.65+3.49)/2	0.14		
		(11.81-11.79)x(3.57+3.65)/2	0.07		
		(11.91-11.81)x(3.44+3.57)/2	0.35		
		(11.93-11.91)x(3.40+3.44)/2	0.07		
		(12.18-11.93)x(3.37+3.40)/2	0.85		
		(12.42-12.18)x(3.31+3.37)/2	0.80		
		(12.80-12.42)x(3.19+3.31)/2	1.24		
		(12.89-12.80)x(3.16+3.19)/2	0.29		
		(10.33-12.89)x(3.15+3.16)/2	-8.08		
		(10.63-10.33)x(2.79+3.15)/2	0.89		
		(0.86-10.63)x(3.03+2.79)/2	-28.43		
		(-0.00-0.86)x(3.03+3.03)/2	-2.61		
		(-0.86--0.00)x(3.03+3.03)/2	-2.61		
		(-2.26--0.86)x(3.00+3.03)/2	-4.22		
		A RIPORTARE mq	43.47		

		CALCOLO DELLE AREE		Foglio n. 65
STERRO				
N. SEZIONE PROG.	FIG.	ELEMENTI DI CALCOLO	AREA ELEMENTARE mq	AREA FIGURA mq	NOTE
		RIPORTO mq	43.47		
		(-11.00--2.26)x(3.11+3.00)/2	-26.70		
		(-10.69--11.00)x(3.48+3.11)/2	1.02		
		(-11.82--10.69)x(3.48+3.48)/2	-3.93		
				13.86	
7	B1	(-11.48--11.65)x(3.60+3.47)/2	0.60		
90.00		(-10.97--11.48)x(3.79+3.60)/2	1.88		
		(-10.90--10.97)x(3.78+3.79)/2	0.26		
		(-10.84--10.90)x(3.80+3.78)/2	0.23		
		(-10.83--10.84)x(3.80+3.79)/2	0.04		
		(-10.82--10.83)x(3.80+3.79)/2	0.04		
		(-10.79--10.82)x(3.80+3.80)/2	0.11		
		(-10.64--10.79)x(3.82+3.80)/2	0.57		
		(-10.53--10.64)x(3.83+3.82)/2	0.42		
		(-10.37--10.53)x(3.82+3.83)/2	0.61		
		(-10.22--10.37)x(3.84+3.82)/2	0.57		
		(-10.18--10.22)x(3.87+3.84)/2	0.15		
		(-10.11--10.18)x(3.78+3.87)/2	0.27		
		(-10.07--10.11)x(3.84+3.78)/2	0.15		
		(-10.02--10.07)x(3.69+3.84)/2	0.19		
		(-10.00--10.02)x(3.72+3.69)/2	0.07		
		(-9.89--10.00)x(3.75+3.72)/2	0.41		
		(-9.70--9.89)x(3.73+3.75)/2	0.71		
		(-9.26--9.70)x(3.72+3.73)/2	1.64		
		(-9.24--9.26)x(3.72+3.72)/2	0.07		
		(-9.22--9.24)x(3.70+3.70)/2	0.07		
		(-9.17--9.22)x(3.72+3.71)/2	0.19		
		(-9.15--9.17)x(3.73+3.72)/2	0.07		
		(-9.14--9.15)x(3.71+3.73)/2	0.04		
		(-9.09--9.14)x(3.72+3.71)/2	0.19		
		(-9.05--9.09)x(3.72+3.72)/2	0.15		
		(-8.92--9.05)x(3.70+3.72)/2	0.48		
		(-8.78--8.92)x(3.68+3.70)/2	0.52		
		(-8.43--8.78)x(3.68+3.68)/2	1.29		
		(-8.15--8.43)x(3.67+3.68)/2	1.03		
		(-7.65--8.15)x(3.67+3.67)/2	1.83		
		(-7.40--7.65)x(3.67+3.67)/2	0.92		
		(-7.34--7.40)x(3.67+3.67)/2	0.22		
		(-7.22--7.34)x(3.66+3.67)/2	0.44		
		(-7.18--7.22)x(3.68+3.66)/2	0.15		
		(-7.15--7.18)x(3.72+3.68)/2	0.11		
		(-7.12--7.15)x(3.68+3.72)/2	0.11		
		(-7.09--7.12)x(3.66+3.68)/2	0.11		
		(-6.96--7.09)x(3.67+3.66)/2	0.48		
		(-6.94--6.96)x(3.67+3.67)/2	0.07		
		(-6.86--6.94)x(3.67+3.67)/2	0.29		
		(-6.42--6.86)x(3.66+3.67)/2	1.61		
		(-5.94--6.42)x(3.66+3.66)/2	1.76		
		(-5.60--5.94)x(3.66+3.66)/2	1.24		
		(-4.83--5.60)x(3.65+3.66)/2	2.81		
		(-3.73--4.83)x(3.64+3.65)/2	4.01		
		(-3.72--3.73)x(3.64+3.64)/2	0.04		
		(-3.71--3.72)x(3.64+3.64)/2	0.04		
		(-2.61--3.71)x(3.62+3.64)/2	3.99		
		(-1.85--2.61)x(3.61+3.62)/2	2.75		
		(-1.50--1.85)x(3.61+3.61)/2	1.26		
		(-1.01--1.50)x(3.60+3.61)/2	1.77		
		(-0.40--1.01)x(3.60+3.60)/2	2.20		
		(0.03--0.40)x(3.59+3.60)/2	1.55		
		(0.71-0.03)x(3.58+3.59)/2	2.44		
		(1.70-0.71)x(3.56+3.58)/2	3.53		
		(1.82-1.70)x(3.56+3.56)/2	0.43		
		(1.90-1.82)x(3.56+3.56)/2	0.28		
		(2.93-1.90)x(3.55+3.56)/2	3.66		
		(3.78-2.93)x(3.53+3.55)/2	3.01		
		(4.04-3.78)x(3.53+3.53)/2	0.92		
		(4.40-4.04)x(3.52+3.53)/2	1.27		
		(5.14-4.40)x(3.53+3.52)/2	2.61		
		(5.66-5.14)x(3.52+3.53)/2	1.83		
		(6.25-5.66)x(3.52+3.52)/2	2.08		
		(7.11-6.25)x(3.51+3.52)/2	3.02		
		(7.29-7.11)x(3.50+3.51)/2	0.63		
		(7.32-7.29)x(3.50+3.50)/2	0.11		
		(7.33-7.32)x(3.50+3.50)/2	0.03		
		(7.51-7.33)x(3.51+3.50)/2	0.63		
		(7.58-7.51)x(3.51+3.51)/2	0.25		
		(7.61-7.58)x(3.54+3.51)/2	0.11		
		(7.62-7.61)x(3.52+3.54)/2	0.04		
		(7.70-7.62)x(3.50+3.52)/2	0.28		
		(7.78-7.70)x(3.50+3.50)/2	0.28		
		(8.07-7.78)x(3.50+3.50)/2	1.02		
		(8.47-8.07)x(3.49+3.50)/2	1.40		
		(8.86-8.47)x(3.49+3.49)/2	1.36		
		(9.16-8.86)x(3.50+3.49)/2	1.05		
		(9.28-9.16)x(3.49+3.50)/2	0.42		
		(9.42-9.28)x(3.51+3.49)/2	0.49		
		(9.45-9.42)x(3.50+3.51)/2	0.11		
		(9.49-9.45)x(3.51+3.50)/2	0.14		
		(9.50-9.49)x(3.56+3.51)/2	0.04		
		(9.53-9.50)x(3.57+3.56)/2	0.11		
		(9.58-9.53)x(3.54+3.57)/2	0.18		
		(9.61-9.58)x(3.51+3.54)/2	0.11		
		(9.62-9.61)x(3.51+3.51)/2	0.04		
		(9.66-9.62)x(3.54+3.51)/2	0.14		
		(9.67-9.66)x(3.53+3.54)/2	0.04		
		(9.68-9.67)x(3.54+3.53)/2	0.04		
		(9.71-9.68)x(3.53+3.54)/2	0.11		
		(9.83-9.71)x(3.52+3.53)/2	0.42		
		(9.84-9.83)x(3.52+3.52)/2	0.04		
		(10.08-9.84)x(3.47+3.52)/2	0.84		
		(10.25-10.08)x(3.44+3.47)/2	0.59		
		(10.37-10.25)x(3.50+3.44)/2	0.42		
		(10.41-10.37)x(3.63+3.50)/2	0.14		
		(10.42-10.41)x(3.61+3.63)/2	0.04		
		(10.55-10.42)x(3.44+3.61)/2	0.46		
		A RIPORTARE mq	79.97		

		CALCOLO DELLE AREE		Foglio n. 66
STERRO				
N. SEZIONE PROG.	FIG.	ELEMENTI DI CALCOLO	AREA ELEMENTARE mq	AREA FIGURA mq	NOTE
		RIPORTO mq	79.97		
		(10.58-10.55)x(3.42+3.44)/2	0.10		
		(10.68-10.58)x(3.42+3.42)/2	0.34		
		(11.29-10.68)x(3.32+3.42)/2	2.06		
		(11.79-11.29)x(3.27+3.32)/2	1.65		
		(12.00-11.79)x(3.22+3.27)/2	0.68		
		(12.37-12.00)x(3.15+3.22)/2	1.18		
		(12.53-12.37)x(3.11+3.15)/2	0.50		
		(12.58-12.53)x(3.10+3.11)/2	0.16		
		(11.93-12.58)x(3.18+3.10)/2	-2.04		
		(10.66-11.93)x(3.18+3.18)/2	-4.04		
		(10.97-10.66)x(2.81+3.18)/2	0.93		
		(0.86-10.97)x(3.06+2.81)/2	-29.67		
		(-0.00-0.86)x(3.06+3.06)/2	-2.63		
		(-0.86--0.00)x(3.06+3.06)/2	-2.63		
		(-2.26--0.86)x(3.03+3.06)/2	-4.26		
		(-11.35--2.26)x(3.10+3.03)/2	-27.86		
		(-11.04--11.35)x(3.47+3.10)/2	1.02		
		(-11.65--11.04)x(3.47+3.47)/2	-2.12		
				13.34	
8 105.00	B1	(-11.91--11.92)x(3.31+3.31)/2	0.03		
		(-11.90--11.91)x(3.31+3.31)/2	0.03		
		(-11.58--11.90)x(3.41+3.31)/2	1.08		
		(-11.32--11.58)x(3.47+3.41)/2	0.89		
		(-11.21--11.32)x(3.50+3.47)/2	0.38		
		(-10.97--11.21)x(3.65+3.50)/2	0.86		
		(-10.92--10.97)x(3.72+3.65)/2	0.18		
		(-10.89--10.92)x(3.78+3.72)/2	0.11		
		(-10.87--10.89)x(3.57+3.78)/2	0.07		
		(-10.79--10.87)x(3.55+3.57)/2	0.28		
		(-10.40--10.79)x(3.56+3.55)/2	1.39		
		(-10.23--10.40)x(3.58+3.56)/2	0.61		
		(-10.11--10.23)x(3.60+3.58)/2	0.43		
		(-10.04--10.11)x(3.67+3.60)/2	0.25		
		(-9.95--10.04)x(3.83+3.67)/2	0.34		
		(-9.93--9.95)x(3.63+3.74)/2	0.07		
		(-9.92--9.93)x(3.62+3.63)/2	0.04		
		(-9.91--9.92)x(3.63+3.62)/2	0.04		
		(-9.84--9.91)x(3.63+3.63)/2	0.25		
		(-9.48--9.84)x(3.64+3.63)/2	1.31		
		(-9.26--9.48)x(3.65+3.64)/2	0.80		
		(-9.16--9.26)x(3.66+3.65)/2	0.37		
		(-9.13--9.16)x(3.68+3.66)/2	0.11		
		(-9.11--9.13)x(3.69+3.68)/2	0.07		
		(-9.09--9.11)x(3.67+3.69)/2	0.07		
		(-9.07--9.09)x(3.68+3.68)/2	0.07		
		(-8.99--9.07)x(3.68+3.70)/2	0.30		
		(-8.93--8.99)x(3.68+3.68)/2	0.22		
		(-8.73--8.93)x(3.67+3.68)/2	0.73		
		(-7.69--8.73)x(3.63+3.67)/2	3.80		
		(-7.63--7.69)x(3.63+3.63)/2	0.22		
		(-7.18--7.63)x(3.62+3.63)/2	1.63		
		(-7.08--7.18)x(3.64+3.62)/2	0.36		
		(-7.03--7.08)x(3.66+3.64)/2	0.18		
		(-7.02--7.03)x(3.68+3.66)/2	0.04		
		(-6.98--7.02)x(3.65+3.68)/2	0.15		
		(-6.87--6.98)x(3.62+3.65)/2	0.40		
		(-6.72--6.87)x(3.62+3.62)/2	0.54		
		(-6.52--6.72)x(3.61+3.62)/2	0.72		
		(-5.72--6.52)x(3.60+3.61)/2	2.88		
		(-5.41--5.72)x(3.60+3.60)/2	1.12		
		(-4.97--5.41)x(3.59+3.60)/2	1.58		
		(-4.31--4.97)x(3.58+3.59)/2	2.37		
		(-3.85--4.31)x(3.58+3.58)/2	1.65		
		(-3.20--3.85)x(3.58+3.58)/2	2.33		
		(-2.25--3.20)x(3.58+3.58)/2	3.40		
		(-2.09--2.25)x(3.58+3.58)/2	0.57		
		(-1.98--2.09)x(3.58+3.58)/2	0.39		
		(-0.99--1.98)x(3.58+3.58)/2	3.54		
		(-0.12--0.99)x(3.59+3.58)/2	3.12		
		(0.12--0.12)x(3.59+3.59)/2	0.86		
		(0.47-0.12)x(3.58+3.59)/2	1.25		
		(1.23-0.47)x(3.57+3.58)/2	2.72		
		(1.75-1.23)x(3.56+3.57)/2	1.85		
		(2.34-1.75)x(3.54+3.56)/2	2.09		
		(2.58-2.34)x(3.53+3.54)/2	0.85		
		(3.19-2.58)x(3.52+3.53)/2	2.15		
		(3.37-3.19)x(3.52+3.52)/2	0.63		
		(3.44-3.37)x(3.52+3.52)/2	0.25		
		(3.62-3.44)x(3.51+3.52)/2	0.63		
		(4.55-3.62)x(3.50+3.51)/2	3.26		
		(5.49-4.55)x(3.48+3.50)/2	3.28		
		(5.66-5.49)x(3.48+3.48)/2	0.59		
		(5.90-5.66)x(3.48+3.48)/2	0.84		
		(6.76-5.90)x(3.48+3.48)/2	2.99		
		(7.30-6.76)x(3.48+3.48)/2	1.88		
		(7.54-7.30)x(3.48+3.48)/2	0.84		
		(7.61-7.54)x(3.49+3.48)/2	0.24		
		(7.75-7.61)x(3.50+3.49)/2	0.49		
		(7.76-7.75)x(3.54+3.50)/2	0.04		
		(7.77-7.76)x(3.52+3.54)/2	0.04		
		(7.82-7.77)x(3.51+3.52)/2	0.18		
		(7.85-7.82)x(3.49+3.51)/2	0.10		
		(7.98-7.85)x(3.48+3.49)/2	0.45		
		(8.00-7.98)x(3.48+3.48)/2	0.07		
		(8.09-8.00)x(3.48+3.48)/2	0.31		
		(8.62-8.09)x(3.48+3.48)/2	1.84		
		(8.87-8.62)x(3.48+3.48)/2	0.87		
		(8.98-8.87)x(3.48+3.48)/2	0.38		
		(9.38-8.98)x(3.48+3.48)/2	1.39		
		(9.50-9.38)x(3.49+3.48)/2	0.42		
		(9.55-9.50)x(3.51+3.49)/2	0.18		
		(9.56-9.55)x(3.51+3.51)/2	0.04		
		(9.61-9.56)x(3.50+3.50)/2	0.17		
		(9.69-9.61)x(3.51+3.50)/2	0.28		
		A RIPORTARE mq	76.82		

		CALCOLO DELLE AREE		Foglio n. 67
STERRO				
N. SEZIONE PROG.	FIG.	ELEMENTI DI CALCOLO	AREA ELEMENTARE mq	AREA FIGURA mq	NOTE
		RIPORTO mq	76.82		
		(9.84-9.69)x(3.50+3.51)/2	0.53		
		(10.09-9.84)x(3.52+3.50)/2	0.88		
		(10.24-10.09)x(3.54+3.52)/2	0.53		
		(10.27-10.24)x(3.54+3.54)/2	0.11		
		(10.37-10.27)x(3.48+3.54)/2	0.35		
		(10.43-10.37)x(3.43+3.48)/2	0.21		
		(10.45-10.43)x(3.46+3.43)/2	0.07		
		(10.56-10.45)x(3.50+3.46)/2	0.38		
		(10.76-10.56)x(3.49+3.50)/2	0.70		
		(11.19-10.76)x(3.45+3.49)/2	1.49		
		(11.23-11.19)x(3.45+3.45)/2	0.14		
		(11.34-11.23)x(3.43+3.45)/2	0.38		
		(11.60-11.34)x(3.38+3.43)/2	0.89		
		(10.60-11.60)x(3.07+3.07)/2	-3.07		
		(1.75-10.60)x(3.09+2.86)/2	-26.33		
		(0.68-1.75)x(3.11+3.09)/2	-3.32		
		(-0.68-0.68)x(3.11+3.11)/2	-4.23		
		(-1.75--0.68)x(3.09+3.11)/2	-3.32		
		(-10.92--1.75)x(2.86+3.09)/2	-27.28		
		(-11.92--10.92)x(3.07+3.07)/2	-3.07		
				12.86	
9 120.00	B1	(-11.53--11.60)x(3.36+3.26)/2	0.23		
		(-11.50--11.53)x(3.37+3.36)/2	0.10		
		(-11.07--11.50)x(3.46+3.37)/2	1.47		
		(-10.87--11.07)x(3.48+3.46)/2	0.69		
		(-10.76--10.87)x(3.47+3.48)/2	0.38		
		(-10.69--10.76)x(3.55+3.47)/2	0.25		
		(-10.62--10.69)x(3.79+3.55)/2	0.26		
		(-10.58--10.62)x(3.52+3.79)/2	0.15		
		(-10.57--10.58)x(3.51+3.50)/2	0.04		
		(-10.54--10.57)x(3.50+3.51)/2	0.11		
		(-10.39--10.54)x(3.54+3.50)/2	0.53		
		(-10.15--10.39)x(3.57+3.54)/2	0.85		
		(-9.90--10.15)x(3.60+3.57)/2	0.90		
		(-9.81--9.90)x(3.60+3.60)/2	0.32		
		(-9.77--9.81)x(3.59+3.60)/2	0.14		
		(-9.72--9.77)x(3.84+3.64)/2	0.19		
		(-9.64--9.72)x(3.59+3.84)/2	0.30		
		(-9.62--9.64)x(3.56+3.56)/2	0.07		
		(-9.57--9.62)x(3.57+3.56)/2	0.18		
		(-9.29--9.57)x(3.58+3.57)/2	1.00		
		(-9.23--9.29)x(3.59+3.58)/2	0.22		
		(-8.99--9.23)x(3.67+3.59)/2	0.87		
		(-8.93--8.99)x(3.65+3.67)/2	0.22		
		(-8.92--8.93)x(3.63+3.62)/2	0.04		
		(-8.90--8.92)x(3.62+3.63)/2	0.07		
		(-8.87--8.90)x(3.65+3.62)/2	0.11		
		(-8.85--8.87)x(3.66+3.66)/2	0.07		
		(-8.78--8.85)x(3.66+3.66)/2	0.26		
		(-8.77--8.78)x(3.64+3.66)/2	0.04		
		(-8.40--8.77)x(3.60+3.64)/2	1.34		
		(-8.18--8.40)x(3.59+3.60)/2	0.79		
		(-7.66--8.18)x(3.58+3.59)/2	1.86		
		(-7.07--7.66)x(3.56+3.58)/2	2.11		
		(-6.97--7.07)x(3.57+3.56)/2	0.36		
		(-6.95--6.97)x(3.57+3.57)/2	0.07		
		(-6.86--6.95)x(3.62+3.57)/2	0.32		
		(-6.82--6.86)x(3.63+3.62)/2	0.15		
		(-6.80--6.82)x(3.65+3.63)/2	0.07		
		(-6.65--6.80)x(3.56+3.61)/2	0.54		
		(-6.47--6.65)x(3.55+3.56)/2	0.64		
		(-6.04--6.47)x(3.55+3.55)/2	1.53		
		(-5.97--6.04)x(3.55+3.55)/2	0.25		
		(-5.80--5.97)x(3.55+3.55)/2	0.60		
		(-4.86--5.80)x(3.53+3.55)/2	3.33		
		(-3.95--4.86)x(3.52+3.53)/2	3.21		
		(-3.76--3.95)x(3.51+3.52)/2	0.67		
		(-3.68--3.76)x(3.51+3.51)/2	0.28		
		(-3.48--3.68)x(3.51+3.51)/2	0.70		
		(-2.89--3.48)x(3.51+3.51)/2	2.07		
		(-2.65--2.89)x(3.52+3.51)/2	0.84		
		(-2.09--2.65)x(3.52+3.52)/2	1.97		
		(-1.54--2.09)x(3.53+3.52)/2	1.94		
		(-0.75--1.54)x(3.54+3.53)/2	2.79		
		(-0.44--0.75)x(3.54+3.54)/2	1.10		
		(-0.23--0.44)x(3.54+3.54)/2	0.74		
		(0.67--0.23)x(3.56+3.54)/2	3.19		
		(1.63-0.67)x(3.55+3.56)/2	3.41		
		(1.78-1.63)x(3.54+3.55)/2	0.53		
		(1.99-1.78)x(3.54+3.54)/2	0.74		
		(2.88-1.99)x(3.52+3.54)/2	3.14		
		(3.49-2.88)x(3.51+3.52)/2	2.14		
		(3.99-3.49)x(3.50+3.51)/2	1.75		
		(4.72-3.99)x(3.48+3.50)/2	2.55		
		(5.09-4.72)x(3.47+3.48)/2	1.29		
		(5.35-5.09)x(3.46+3.47)/2	0.90		
		(6.20-5.35)x(3.45+3.46)/2	2.94		
		(7.21-6.20)x(3.45+3.45)/2	3.48		
		(7.31-7.21)x(3.45+3.45)/2	0.34		
		(7.35-7.31)x(3.45+3.45)/2	0.14		
		(7.79-7.35)x(3.43+3.45)/2	1.51		
		(7.90-7.79)x(3.45+3.43)/2	0.38		
		(7.94-7.90)x(3.49+3.45)/2	0.14		
		(7.95-7.94)x(3.51+3.49)/2	0.03		
		(7.99-7.95)x(3.47+3.51)/2	0.14		
		(8.09-7.99)x(3.43+3.47)/2	0.34		
		(8.25-8.09)x(3.44+3.43)/2	0.55		
		(8.41-8.25)x(3.44+3.44)/2	0.55		
		(9.07-8.41)x(3.43+3.44)/2	2.27		
		(9.52-9.07)x(3.43+3.43)/2	1.54		
		(9.60-9.52)x(3.43+3.43)/2	0.27		
		(9.61-9.60)x(3.43+3.43)/2	0.03		
		(9.66-9.61)x(3.48+3.43)/2	0.17		
		(9.68-9.66)x(3.47+3.48)/2	0.07		
		A RIPORTARE mq	74.86		

		CALCOLO DELLE AREE		Foglio n. 68
STERRO				
N. SEZIONE PROG.	FIG.	ELEMENTI DI CALCOLO	AREA ELEMENTARE mq	AREA FIGURA mq	NOTE
		RIPORTO mq	74.86		
		(9.74-9.68)x(3.44+3.47)/2	0.21		
		(9.92-9.74)x(3.41+3.44)/2	0.62		
		(10.09-9.92)x(3.40+3.41)/2	0.58		
		(10.18-10.09)x(3.49+3.40)/2	0.31		
		(10.40-10.18)x(3.51+3.49)/2	0.77		
		(10.42-10.40)x(3.38+3.51)/2	0.07		
		(10.43-10.42)x(3.42+3.38)/2	0.03		
		(10.50-10.43)x(3.54+3.42)/2	0.24		
		(10.51-10.50)x(3.53+3.54)/2	0.04		
		(10.56-10.51)x(3.41+3.53)/2	0.17		
		(10.57-10.56)x(3.40+3.41)/2	0.03		
		(10.62-10.57)x(3.40+3.40)/2	0.17		
		(10.93-10.62)x(3.37+3.40)/2	1.05		
		(11.73-10.93)x(3.30+3.37)/2	2.67		
		(12.07-11.73)x(3.27+3.30)/2	1.12		
		(12.39-12.07)x(3.26+3.27)/2	1.04		
		(11.15-12.39)x(3.25+3.26)/2	-4.04		
		(11.45-11.15)x(2.89+3.25)/2	0.92		
		(1.75-11.45)x(3.13+2.89)/2	-29.20		
		(0.68-1.75)x(3.16+3.13)/2	-3.37		
		(-0.68-0.68)x(3.16+3.16)/2	-4.30		
		(-1.75--0.68)x(3.13+3.16)/2	-3.37		
		(-11.65--1.75)x(2.88+3.13)/2	-29.75		
		(-11.33--11.65)x(3.26+2.88)/2	0.98		
		(-11.60--11.33)x(3.26+3.26)/2	-0.88		
				10.97	
10 135.00	B1	(-11.25--11.35)x(3.24+3.27)/2	0.33		
		(-10.91--11.25)x(3.41+3.24)/2	1.13		
		(-10.79--10.91)x(3.47+3.41)/2	0.41		
		(-10.50--10.79)x(3.57+3.47)/2	1.02		
		(-10.43--10.50)x(3.57+3.57)/2	0.25		
		(-10.40--10.43)x(3.58+3.57)/2	0.11		
		(-10.33--10.40)x(3.74+3.61)/2	0.26		
		(-10.27--10.33)x(3.59+3.74)/2	0.22		
		(-10.24--10.27)x(3.57+3.55)/2	0.11		
		(-10.18--10.24)x(3.58+3.57)/2	0.21		
		(-9.87--10.18)x(3.56+3.58)/2	1.11		
		(-9.85--9.87)x(3.56+3.56)/2	0.07		
		(-9.67--9.85)x(3.56+3.56)/2	0.64		
		(-9.59--9.67)x(3.55+3.56)/2	0.28		
		(-9.53--9.59)x(3.62+3.55)/2	0.22		
		(-9.50--9.53)x(3.83+3.62)/2	0.11		
		(-9.47--9.50)x(3.61+3.83)/2	0.11		
		(-9.46--9.47)x(3.58+3.61)/2	0.04		
		(-9.41--9.46)x(3.59+3.58)/2	0.18		
		(-9.13--9.41)x(3.59+3.59)/2	1.01		
		(-8.95--9.13)x(3.59+3.59)/2	0.65		
		(-8.83--8.95)x(3.55+3.59)/2	0.43		
		(-8.72--8.83)x(3.53+3.55)/2	0.39		
		(-8.71--8.72)x(3.52+3.53)/2	0.04		
		(-8.70--8.71)x(3.53+3.52)/2	0.04		
		(-8.58--8.70)x(3.56+3.54)/2	0.43		
		(-8.57--8.58)x(3.56+3.56)/2	0.04		
		(-8.52--8.57)x(3.56+3.56)/2	0.18		
		(-8.49--8.52)x(3.56+3.56)/2	0.11		
		(-8.46--8.49)x(3.52+3.56)/2	0.11		
		(-8.45--8.46)x(3.53+3.52)/2	0.04		
		(-8.44--8.45)x(3.52+3.53)/2	0.04		
		(-8.41--8.44)x(3.52+3.52)/2	0.11		
		(-8.38--8.41)x(3.54+3.52)/2	0.11		
		(-8.30--8.38)x(3.53+3.54)/2	0.28		
		(-7.63--8.30)x(3.49+3.53)/2	2.35		
		(-7.60--7.63)x(3.49+3.49)/2	0.10		
		(-7.51--7.60)x(3.49+3.49)/2	0.31		
		(-7.43--7.51)x(3.48+3.49)/2	0.28		
		(-6.76--7.43)x(3.47+3.48)/2	2.33		
		(-6.65--6.76)x(3.47+3.47)/2	0.38		
		(-6.63--6.65)x(3.47+3.47)/2	0.07		
		(-6.62--6.63)x(3.53+3.47)/2	0.03		
		(-6.61--6.62)x(3.54+3.53)/2	0.04		
		(-6.60--6.61)x(3.53+3.54)/2	0.04		
		(-6.56--6.60)x(3.53+3.53)/2	0.14		
		(-6.39--6.56)x(3.50+3.53)/2	0.60		
		(-5.97--6.39)x(3.48+3.50)/2	1.47		
		(-5.39--5.97)x(3.48+3.48)/2	2.02		
		(-4.69--5.39)x(3.49+3.48)/2	2.44		
		(-4.28--4.69)x(3.50+3.49)/2	1.43		
		(-4.01--4.28)x(3.50+3.50)/2	0.95		
		(-3.18--4.01)x(3.50+3.50)/2	2.90		
		(-2.16--3.18)x(3.52+3.50)/2	3.58		
		(-2.07--2.16)x(3.52+3.52)/2	0.32		
		(-1.94--2.07)x(3.52+3.52)/2	0.46		
		(-0.97--1.94)x(3.53+3.52)/2	3.42		
		(-0.31--0.97)x(3.54+3.53)/2	2.33		
		(0.14--0.31)x(3.54+3.54)/2	1.59		
		(0.80-0.14)x(3.55+3.54)/2	2.34		
		(1.25-0.80)x(3.55+3.55)/2	1.60		
		(1.54-1.25)x(3.54+3.55)/2	1.03		
		(2.35-1.54)x(3.52+3.54)/2	2.86		
		(3.39-2.35)x(3.49+3.52)/2	3.65		
		(3.46-3.39)x(3.49+3.49)/2	0.24		
		(3.55-3.46)x(3.49+3.49)/2	0.31		
		(4.56-3.55)x(3.47+3.49)/2	3.51		
		(5.24-4.56)x(3.45+3.47)/2	2.35		
		(5.67-5.24)x(3.45+3.45)/2	1.48		
		(6.29-5.67)x(3.44+3.45)/2	2.14		
		(6.77-6.29)x(3.43+3.44)/2	1.65		
		(7.09-6.77)x(3.43+3.43)/2	1.10		
		(7.88-7.09)x(3.42+3.43)/2	2.71		
		(8.01-7.88)x(3.41+3.42)/2	0.44		
		(8.04-8.01)x(3.41+3.41)/2	0.10		
		(8.13-8.04)x(3.47+3.41)/2	0.31		
		(8.16-8.13)x(3.47+3.47)/2	0.10		
		(8.17-8.16)x(3.47+3.47)/2	0.03		
		A RIPORTARE mq	68.35		

	CALCOLO DELLE AREE		Foglio n. 69

STERRO

N. SEZIONE PROG.	FIG.	ELEMENTI DI CALCOLO	AREA ELEMENTARE mq	AREA FIGURA mq	NOTE
		RIPORTO mq	68.35		
		(8.18-8.17)x(3.45+3.48)/2	0.03		
		(8.40-8.18)x(3.44+3.45)/2	0.76		
		(8.44-8.40)x(3.44+3.44)/2	0.14		
		(8.98-8.44)x(3.41+3.44)/2	1.85		
		(9.00-8.98)x(3.41+3.41)/2	0.07		
		(9.63-9.00)x(3.42+3.41)/2	2.15		
		(9.65-9.63)x(3.42+3.42)/2	0.07		
		(9.74-9.65)x(3.43+3.42)/2	0.31		
		(9.76-9.74)x(3.43+3.43)/2	0.07		
		(9.78-9.76)x(3.43+3.43)/2	0.07		
		(9.90-9.78)x(3.41+3.43)/2	0.41		
		(10.09-9.90)x(3.40+3.41)/2	0.65		
		(10.22-10.09)x(3.49+3.40)/2	0.45		
		(10.56-10.22)x(3.55+3.49)/2	1.20		
		(10.58-10.56)x(3.55+3.55)/2	0.07		
		(10.61-10.58)x(3.59+3.55)/2	0.11		
		(10.62-10.61)x(3.58+3.60)/2	0.04		
		(10.73-10.62)x(3.51+3.58)/2	0.39		
		(10.77-10.73)x(3.51+3.51)/2	0.14		
		(11.19-10.77)x(3.39+3.51)/2	1.45		
		(11.78-11.19)x(3.38+3.39)/2	2.00		
		(12.10-11.78)x(3.30+3.38)/2	1.07		
		(11.28-12.10)x(3.30+3.30)/2	-2.71		
		(11.58-11.28)x(2.93+3.30)/2	0.93		
		(1.75-11.58)x(3.18+2.93)/2	-30.03		
		(0.68-1.75)x(3.20+3.18)/2	-3.41		
		(-0.68-0.68)x(3.20+3.20)/2	-4.35		
		(-1.75--0.68)x(3.18+3.20)/2	-3.41		
		(-11.63--1.75)x(2.93+3.18)/2	-30.18		
		(-11.35--11.63)x(3.27+2.93)/2	0.87		
				9.56	
11	B1	(-11.73--11.75)x(3.20+3.20)/2	0.06		
150.00		(-11.59--11.73)x(3.12+3.20)/2	0.44		
		(-11.55--11.59)x(3.06+3.12)/2	0.12		
		(-11.48--11.55)x(2.98+3.06)/2	0.21		
		(-11.95--11.48)x(2.97+2.98)/2	-1.40		
		(-11.75--11.95)x(3.20+2.97)/2	0.62		
				0.05	
11	B2	(-11.40--11.44)x(3.31+2.98)/2	0.13		
150.00		(-11.39--11.40)x(3.31+3.31)/2	0.03		
		(-10.61--11.39)x(3.32+3.31)/2	2.59		
		(-10.48--10.61)x(3.31+3.32)/2	0.43		
		(-10.43--10.48)x(3.32+3.31)/2	0.17		
		(-10.26--10.43)x(3.31+3.32)/2	0.56		
		(-10.19--10.26)x(3.29+3.31)/2	0.23		
		(-10.12--10.19)x(3.45+3.29)/2	0.24		
		(-10.09--10.12)x(3.60+3.45)/2	0.11		
		(-10.06--10.09)x(3.44+3.60)/2	0.11		
		(-10.05--10.06)x(3.42+3.44)/2	0.03		
		(-10.02--10.05)x(3.41+3.42)/2	0.10		
		(-9.82--10.02)x(3.42+3.41)/2	0.68		
		(-9.56--9.82)x(3.41+3.42)/2	0.89		
		(-9.50--9.56)x(3.42+3.41)/2	0.20		
		(-9.38--9.50)x(3.44+3.42)/2	0.41		
		(-9.33--9.38)x(3.55+3.44)/2	0.17		
		(-9.31--9.33)x(3.78+3.55)/2	0.07		
		(-9.28--9.31)x(3.46+3.78)/2	0.11		
		(-9.25--9.28)x(3.39+3.46)/2	0.10		
		(-9.12--9.25)x(3.44+3.39)/2	0.44		
		(-9.10--9.12)x(3.44+3.44)/2	0.07		
		(-9.03--9.10)x(3.44+3.44)/2	0.24		
		(-8.64--9.03)x(3.45+3.44)/2	1.34		
		(-8.57--8.64)x(3.46+3.45)/2	0.24		
		(-8.53--8.57)x(3.46+3.46)/2	0.14		
		(-8.48--8.53)x(3.47+3.46)/2	0.17		
		(-8.39--8.48)x(3.47+3.48)/2	0.31		
		(-8.18--8.39)x(3.44+3.47)/2	0.73		
		(-8.17--8.18)x(3.44+3.44)/2	0.03		
		(-8.13--8.17)x(3.47+3.44)/2	0.14		
		(-8.11--8.13)x(3.48+3.47)/2	0.07		
		(-8.09--8.11)x(3.47+3.48)/2	0.07		
		(-8.01--8.09)x(3.49+3.47)/2	0.28		
		(-7.84--8.01)x(3.46+3.49)/2	0.59		
		(-7.72--7.84)x(3.47+3.46)/2	0.42		
		(-7.46--7.72)x(3.44+3.47)/2	0.90		
		(-6.98--7.46)x(3.41+3.44)/2	1.64		
		(-6.80--6.98)x(3.40+3.41)/2	0.61		
		(-6.53--6.80)x(3.41+3.40)/2	0.92		
		(-6.40--6.53)x(3.44+3.41)/2	0.45		
		(-6.33--6.40)x(3.49+3.44)/2	0.24		
		(-6.28--6.33)x(3.41+3.47)/2	0.17		
		(-6.26--6.28)x(3.41+3.41)/2	0.07		
		(-6.20--6.26)x(3.41+3.41)/2	0.20		
		(-5.88--6.20)x(3.41+3.41)/2	1.09		
		(-4.78--5.88)x(3.42+3.41)/2	3.76		
		(-4.04--4.78)x(3.43+3.42)/2	2.53		
		(-3.67--4.04)x(3.44+3.43)/2	1.27		
		(-3.12--3.67)x(3.44+3.44)/2	1.89		
		(-2.57--3.12)x(3.45+3.44)/2	1.89		
		(-2.20--2.57)x(3.46+3.45)/2	1.28		
		(-1.46--2.20)x(3.48+3.46)/2	2.57		
		(-0.36--1.46)x(3.49+3.48)/2	3.83		
		(0.75--0.36)x(3.52+3.49)/2	3.89		
		(1.48-0.75)x(3.52+3.52)/2	2.57		
		(1.85-1.48)x(3.53+3.52)/2	1.30		
		(2.40-1.85)x(3.51+3.53)/2	1.94		
		(2.95-2.40)x(3.50+3.51)/2	1.93		
		(3.58-2.95)x(3.49+3.50)/2	2.20		
		(4.06-3.58)x(3.48+3.49)/2	1.67		
		(5.16-4.06)x(3.47+3.48)/2	3.82		
		(5.17-5.16)x(3.47+3.47)/2	0.03		
		(6.27-5.17)x(3.44+3.47)/2	3.80		
		(7.01-6.27)x(3.42+3.44)/2	2.54		
		(7.37-7.01)x(3.41+3.42)/2	1.23		
		A RIPORTARE mq	64.87		

		CALCOLO DELLE AREE		Foglio n. 70
STERRO				
N. SEZIONE PROG.	FIG.	ELEMENTI DI CALCOLO	AREA ELEMENTARE mq	AREA FIGURA mq	NOTE
		RIPORTO mq	64.87		
		(7.92-7.37)x(3.40+3.41)/2	1.87		
		(8.32-7.92)x(3.40+3.40)/2	1.36		
		(8.38-8.32)x(3.40+3.40)/2	0.20		
		(8.39-8.38)x(3.40+3.40)/2	0.03		
		(8.40-8.39)x(3.40+3.40)/2	0.03		
		(8.41-8.40)x(3.42+3.40)/2	0.03		
		(8.42-8.41)x(3.41+3.42)/2	0.03		
		(8.43-8.42)x(3.41+3.41)/2	0.03		
		(8.50-8.43)x(3.41+3.41)/2	0.24		
		(8.68-8.50)x(3.40+3.41)/2	0.61		
		(8.69-8.68)x(3.40+3.40)/2	0.03		
		(9.11-8.69)x(3.39+3.40)/2	1.43		
		(9.58-9.11)x(3.38+3.39)/2	1.59		
		(9.77-9.58)x(3.39+3.38)/2	0.64		
		(9.89-9.77)x(3.39+3.39)/2	0.41		
		(9.91-9.89)x(3.39+3.39)/2	0.07		
		(9.92-9.91)x(3.39+3.39)/2	0.03		
		(9.93-9.92)x(3.38+3.39)/2	0.03		
		(10.03-9.93)x(3.38+3.38)/2	0.34		
		(10.04-10.03)x(3.38+3.38)/2	0.03		
		(10.27-10.04)x(3.31+3.38)/2	0.77		
		(10.54-10.27)x(3.41+3.31)/2	0.91		
		(10.68-10.54)x(3.35+3.41)/2	0.47		
		(10.75-10.68)x(3.50+3.35)/2	0.24		
		(10.76-10.75)x(3.50+3.50)/2	0.03		
		(10.89-10.76)x(3.46+3.50)/2	0.45		
		(10.95-10.89)x(3.46+3.46)/2	0.21		
		(11.25-10.95)x(3.40+3.46)/2	1.03		
		(11.77-11.25)x(3.34+3.40)/2	1.75		
		(11.34-11.77)x(3.34+3.34)/2	-1.44		
		(11.64-11.34)x(2.97+3.34)/2	0.95		
		(1.75-11.64)x(3.22+2.97)/2	-30.61		
		(0.68-1.75)x(3.25+3.22)/2	-3.46		
		(-0.68-0.68)x(3.25+3.25)/2	-4.42		
		(-1.75--0.68)x(3.22+3.25)/2	-3.46		
		(-11.44--1.75)x(2.98+3.22)/2	-30.04		
				7.28	
12 165.00	B1	(-10.14--10.35)x(3.14+3.05)/2	0.65		
		(-10.04--10.14)x(3.19+3.14)/2	0.32		
		(-9.90--10.04)x(3.32+3.19)/2	0.46		
		(-9.83--9.90)x(3.35+3.32)/2	0.23		
		(-9.79--9.83)x(3.48+3.35)/2	0.14		
		(-9.78--9.79)x(3.31+3.34)/2	0.03		
		(-9.68--9.78)x(3.23+3.31)/2	0.33		
		(-9.65--9.68)x(3.24+3.23)/2	0.10		
		(-9.22--9.65)x(3.28+3.24)/2	1.40		
		(-9.12--9.22)x(3.36+3.28)/2	0.33		
		(-9.08--9.12)x(3.60+3.36)/2	0.14		
		(-9.07--9.08)x(3.67+3.60)/2	0.04		
		(-9.02--9.07)x(3.51+3.67)/2	0.18		
		(-9.00--9.02)x(3.36+3.51)/2	0.07		
		(-8.92--9.00)x(3.37+3.36)/2	0.27		
		(-8.76--8.92)x(3.33+3.37)/2	0.54		
		(-8.55--8.76)x(3.35+3.33)/2	0.70		
		(-8.37--8.55)x(3.38+3.35)/2	0.61		
		(-8.33--8.37)x(3.39+3.38)/2	0.14		
		(-8.26--8.33)x(3.36+3.39)/2	0.24		
		(-8.25--8.26)x(3.39+3.36)/2	0.03		
		(-8.19--8.25)x(3.32+3.39)/2	0.20		
		(-8.15--8.19)x(3.33+3.32)/2	0.13		
		(-8.05--8.15)x(3.37+3.33)/2	0.33		
		(-7.92--8.05)x(3.41+3.37)/2	0.44		
		(-7.85--7.92)x(3.38+3.41)/2	0.24		
		(-7.84--7.85)x(3.40+3.38)/2	0.03		
		(-7.79--7.84)x(3.40+3.40)/2	0.17		
		(-7.77--7.79)x(3.39+3.40)/2	0.07		
		(-7.72--7.77)x(3.39+3.39)/2	0.17		
		(-7.45--7.72)x(3.37+3.39)/2	0.91		
		(-7.05--7.45)x(3.35+3.37)/2	1.34		
		(-6.54--7.05)x(3.33+3.35)/2	1.70		
		(-6.46--6.54)x(3.32+3.33)/2	0.27		
		(-6.43--6.46)x(3.32+3.32)/2	0.10		
		(-6.25--6.43)x(3.32+3.32)/2	0.60		
		(-6.15--6.25)x(3.36+3.32)/2	0.33		
		(-6.08--6.15)x(3.38+3.36)/2	0.24		
		(-6.06--6.08)x(3.42+3.38)/2	0.07		
		(-6.05--6.06)x(3.34+3.42)/2	0.03		
		(-6.00--6.05)x(3.33+3.34)/2	0.17		
		(-5.76--6.00)x(3.34+3.33)/2	0.80		
		(-5.24--5.76)x(3.34+3.34)/2	1.74		
		(-4.28--5.24)x(3.35+3.34)/2	3.21		
		(-4.14--4.28)x(3.35+3.35)/2	0.47		
		(-4.04--4.14)x(3.35+3.35)/2	0.33		
		(-3.03--4.04)x(3.36+3.35)/2	3.39		
		(-2.60--3.03)x(3.37+3.36)/2	1.45		
		(-1.93--2.60)x(3.40+3.37)/2	2.27		
		(-1.51--1.93)x(3.41+3.40)/2	1.43		
		(-0.83--1.51)x(3.43+3.41)/2	2.33		
		(-0.38--0.83)x(3.44+3.43)/2	1.55		
		(0.28--0.38)x(3.46+3.44)/2	2.28		
		(1.27-0.28)x(3.50+3.46)/2	3.45		
		(1.38-1.27)x(3.50+3.50)/2	0.38		
		(1.46-1.38)x(3.50+3.50)/2	0.28		
		(2.48-1.46)x(3.49+3.50)/2	3.56		
		(3.29-2.48)x(3.48+3.49)/2	2.82		
		(3.59-3.29)x(3.47+3.48)/2	1.04		
		(4.04-3.59)x(3.46+3.47)/2	1.56		
		(4.69-4.04)x(3.44+3.46)/2	2.24		
		(5.12-4.69)x(3.43+3.44)/2	1.48		
		(5.80-5.12)x(3.41+3.43)/2	2.33		
		(6.81-5.80)x(3.39+3.41)/2	3.43		
		(6.90-6.81)x(3.39+3.39)/2	0.31		
		(6.96-6.90)x(3.39+3.39)/2	0.20		
		(8.00-6.96)x(3.38+3.39)/2	3.52		
		A RIPORTARE mq	62.34		

		CALCOLO DELLE AREE		Foglio n. 71
STERRO				
N. SEZIONE PROG.	FIG.	ELEMENTI DI CALCOLO	AREA ELEMENTARE mq	AREA FIGURA mq	NOTE
		RIPORTO mq	62.34		
		(8.27-8.00)x(3.37+3.38)/2	0.91		
		(8.51-8.27)x(3.37+3.37)/2	0.81		
		(8.60-8.51)x(3.37+3.37)/2	0.30		
		(8.63-8.60)x(3.38+3.37)/2	0.10		
		(8.67-8.63)x(3.41+3.38)/2	0.14		
		(8.69-8.67)x(3.40+3.41)/2	0.07		
		(8.77-8.69)x(3.37+3.40)/2	0.27		
		(8.79-8.77)x(3.36+3.37)/2	0.07		
		(8.84-8.79)x(3.36+3.36)/2	0.17		
		(9.11-8.84)x(3.35+3.36)/2	0.91		
		(9.59-9.11)x(3.34+3.35)/2	1.61		
		(10.03-9.59)x(3.34+3.34)/2	1.47		
		(10.11-10.03)x(3.34+3.34)/2	0.27		
		(10.12-10.11)x(3.34+3.34)/2	0.03		
		(10.14-10.12)x(3.40+3.34)/2	0.07		
		(10.17-10.14)x(3.38+3.40)/2	0.10		
		(10.25-10.17)x(3.35+3.38)/2	0.27		
		(10.31-10.25)x(3.34+3.35)/2	0.20		
		(10.46-10.31)x(3.34+3.34)/2	0.50		
		(10.57-10.46)x(3.33+3.34)/2	0.37		
		(10.71-10.57)x(3.37+3.33)/2	0.47		
		(10.82-10.71)x(3.39+3.37)/2	0.37		
		(10.87-10.82)x(3.41+3.39)/2	0.17		
		(10.88-10.87)x(3.41+3.41)/2	0.03		
		(10.93-10.88)x(3.34+3.41)/2	0.17		
		(11.03-10.93)x(3.31+3.34)/2	0.33		
		(11.31-11.03)x(3.29+3.31)/2	0.92		
		(11.42-11.31)x(3.29+3.29)/2	0.36		
		(11.65-11.42)x(3.02+3.29)/2	0.73		
		(1.75-11.65)x(3.27+3.02)/2	-31.14		
		(0.68-1.75)x(3.29+3.27)/2	-3.51		
		(-0.68-0.68)x(3.29+3.29)/2	-4.47		
		(-1.75--0.68)x(3.27+3.29)/2	-3.51		
		(-10.35--1.75)x(3.05+3.27)/2	-27.18		
				4.72	
13 180.00	B1	(-11.31--11.79)x(3.21+3.06)/2	1.50		
		(-11.19--11.31)x(3.24+3.21)/2	0.39		
		(-11.15--11.19)x(3.25+3.24)/2	0.13		
		(-11.08--11.15)x(3.08+3.25)/2	0.22		
		(-11.79--11.08)x(3.06+3.08)/2	-2.18		
				0.06	
13 180.00	B2	(-10.69--10.75)x(3.24+3.09)/2	0.19		
		(-10.34--10.69)x(3.39+3.24)/2	1.16		
		(-10.08--10.34)x(3.44+3.39)/2	0.89		
		(-9.77--10.08)x(3.49+3.44)/2	1.07		
		(-9.54--9.77)x(3.44+3.49)/2	0.80		
		(-9.45--9.54)x(3.38+3.44)/2	0.31		
		(-9.39--9.45)x(3.52+3.38)/2	0.21		
		(-9.32--9.39)x(3.51+3.52)/2	0.25		
		(-9.31--9.32)x(3.49+3.51)/2	0.03		
		(-9.27--9.31)x(3.64+3.49)/2	0.14		
		(-9.14--9.27)x(3.63+3.64)/2	0.47		
		(-8.98--9.14)x(3.70+3.63)/2	0.59		
		(-8.89--8.98)x(3.70+3.70)/2	0.33		
		(-8.87--8.89)x(3.70+3.70)/2	0.07		
		(-8.78--8.87)x(3.53+3.70)/2	0.33		
		(-8.75--8.78)x(3.62+3.55)/2	0.11		
		(-8.51--8.75)x(3.60+3.62)/2	0.87		
		(-8.39--8.51)x(3.59+3.60)/2	0.43		
		(-8.24--8.39)x(3.53+3.59)/2	0.53		
		(-8.11--8.24)x(3.41+3.53)/2	0.45		
		(-8.04--8.11)x(3.32+3.41)/2	0.24		
		(-7.97--8.04)x(3.34+3.32)/2	0.23		
		(-7.96--7.97)x(3.32+3.34)/2	0.03		
		(-7.92--7.96)x(3.49+3.32)/2	0.14		
		(-7.73--7.92)x(3.36+3.49)/2	0.65		
		(-7.64--7.73)x(3.29+3.36)/2	0.30		
		(-7.59--7.64)x(3.30+3.29)/2	0.16		
		(-7.58--7.59)x(3.30+3.30)/2	0.03		
		(-7.54--7.58)x(3.34+3.30)/2	0.13		
		(-7.47--7.54)x(3.35+3.34)/2	0.23		
		(-7.18--7.47)x(3.30+3.35)/2	0.96		
		(-6.78--7.18)x(3.26+3.30)/2	1.31		
		(-6.39--6.78)x(3.26+3.26)/2	1.27		
		(-6.09--6.39)x(3.27+3.26)/2	0.98		
		(-6.02--6.09)x(3.27+3.27)/2	0.23		
		(-5.91--6.02)x(3.28+3.27)/2	0.36		
		(-5.86--5.91)x(3.29+3.28)/2	0.16		
		(-5.80--5.86)x(3.34+3.29)/2	0.20		
		(-5.64--5.80)x(3.28+3.29)/2	0.53		
		(-5.63--5.64)x(3.28+3.28)/2	0.03		
		(-5.60--5.63)x(3.28+3.28)/2	0.10		
		(-5.42--5.60)x(3.29+3.28)/2	0.59		
		(-4.57--5.42)x(3.32+3.29)/2	2.81		
		(-4.01--4.57)x(3.33+3.32)/2	1.86		
		(-3.47--4.01)x(3.34+3.33)/2	1.80		
		(-2.63--3.47)x(3.37+3.34)/2	2.82		
		(-2.36--2.63)x(3.37+3.37)/2	0.91		
		(-2.19--2.36)x(3.38+3.37)/2	0.57		
		(-1.26--2.19)x(3.40+3.38)/2	3.15		
		(-0.37--1.26)x(3.43+3.40)/2	3.04		
		(-0.16--0.37)x(3.44+3.43)/2	0.72		
		(0.15--0.16)x(3.45+3.44)/2	1.07		
		(0.94-0.15)x(3.48+3.45)/2	2.74		
		(1.46-0.94)x(3.47+3.48)/2	1.81		
		(2.05-1.46)x(3.48+3.47)/2	2.05		
		(2.94-2.05)x(3.45+3.48)/2	3.08		
		(3.15-2.94)x(3.45+3.45)/2	0.72		
		(3.28-3.15)x(3.44+3.45)/2	0.45		
		(4.25-3.28)x(3.42+3.44)/2	3.33		
		(5.11-4.25)x(3.40+3.42)/2	2.93		
		(5.35-5.11)x(3.40+3.40)/2	0.82		
		(5.73-5.35)x(3.39+3.40)/2	1.29		
		(6.46-5.73)x(3.37+3.39)/2	2.47		
		A RIPORTARE mq	58.53		

		CALCOLO DELLE AREE		Foglio n. 72
STERRO				
N. SEZIONE PROG.	FIG.	ELEMENTI DI CALCOLO	AREA ELEMENTARE mq	AREA FIGURA mq	NOTE
		RIPORTO mq	58.53		
		(6.93-6.46)x(3.36+3.37)/2	1.58		
		(7.56-6.93)x(3.36+3.36)/2	2.12		
		(8.51-7.56)x(3.35+3.36)/2	3.19		
		(8.62-8.51)x(3.35+3.35)/2	0.37		
		(8.64-8.62)x(3.35+3.35)/2	0.07		
		(8.83-8.64)x(3.34+3.35)/2	0.64		
		(8.91-8.83)x(3.35+3.34)/2	0.27		
		(8.95-8.91)x(3.37+3.35)/2	0.13		
		(8.97-8.95)x(3.40+3.37)/2	0.07		
		(9.03-8.97)x(3.35+3.40)/2	0.20		
		(9.04-9.03)x(3.34+3.35)/2	0.03		
		(9.10-9.04)x(3.35+3.34)/2	0.20		
		(9.41-9.10)x(3.34+3.35)/2	1.04		
		(9.76-9.41)x(3.34+3.34)/2	1.17		
		(10.02-9.76)x(3.34+3.34)/2	0.87		
		(10.27-10.02)x(3.35+3.34)/2	0.84		
		(10.35-10.27)x(3.35+3.35)/2	0.27		
		(10.39-10.35)x(3.35+3.35)/2	0.13		
		(10.41-10.39)x(3.36+3.35)/2	0.07		
		(10.51-10.41)x(3.39+3.36)/2	0.34		
		(10.52-10.51)x(3.35+3.39)/2	0.03		
		(10.53-10.52)x(3.34+3.35)/2	0.03		
		(10.55-10.53)x(3.34+3.34)/2	0.07		
		(10.59-10.55)x(3.35+3.34)/2	0.13		
		(10.87-10.59)x(3.37+3.35)/2	0.94		
		(10.94-10.87)x(3.37+3.37)/2	0.24		
		(11.24-10.94)x(3.39+3.37)/2	1.01		
		(11.31-11.24)x(3.40+3.39)/2	0.24		
		(11.33-11.31)x(3.40+3.40)/2	0.07		
		(11.35-11.33)x(3.43+3.40)/2	0.07		
		(11.65-11.35)x(3.06+3.43)/2	0.97		
		(1.75-11.65)x(3.31+3.06)/2	-31.53		
		(0.68-1.75)x(3.34+3.31)/2	-3.56		
		(-0.68-0.68)x(3.34+3.34)/2	-4.54		
		(-1.75--0.68)x(3.31+3.34)/2	-3.56		
		(-10.75--1.75)x(3.09+3.31)/2	-28.80		
				3.94	
14 195.00	B1	(-10.48--10.49)x(3.15+3.14)/2	0.03		
		(-9.41--10.48)x(3.33+3.15)/2	3.47		
		(-9.38--9.41)x(3.33+3.33)/2	0.10		
		(-9.34--9.38)x(3.33+3.33)/2	0.13		
		(-8.50--9.34)x(3.45+3.33)/2	2.85		
		(-8.42--8.50)x(3.44+3.45)/2	0.28		
		(-8.28--8.42)x(3.33+3.44)/2	0.47		
		(-7.99--8.28)x(3.32+3.33)/2	0.96		
		(-7.75--7.99)x(3.29+3.32)/2	0.79		
		(-7.66--7.75)x(3.31+3.29)/2	0.30		
		(-7.63--7.66)x(3.27+3.31)/2	0.10		
		(-7.62--7.63)x(3.28+3.27)/2	0.03		
		(-7.59--7.62)x(3.28+3.28)/2	0.10		
		(-7.49--7.59)x(3.28+3.28)/2	0.33		
		(-7.47--7.49)x(3.28+3.28)/2	0.07		
		(-7.43--7.47)x(3.27+3.28)/2	0.13		
		(-7.28--7.43)x(3.26+3.27)/2	0.49		
		(-7.18--7.28)x(3.26+3.26)/2	0.33		
		(-7.13--7.18)x(3.27+3.26)/2	0.16		
		(-7.09--7.13)x(3.25+3.27)/2	0.13		
		(-7.07--7.09)x(3.25+3.25)/2	0.06		
		(-7.00--7.07)x(3.24+3.25)/2	0.23		
		(-6.59--7.00)x(3.24+3.24)/2	1.33		
		(-10.49--6.59)x(3.14+3.24)/2	-12.44		
				0.43	
14 195.00	B2	(-3.96--4.91)x(3.32+3.28)/2	3.14		
		(-3.87--3.96)x(3.32+3.32)/2	0.30		
		(-3.74--3.87)x(3.33+3.32)/2	0.43		
		(-2.77--3.74)x(3.35+3.33)/2	3.24		
		(-2.14--2.77)x(3.37+3.35)/2	2.12		
		(-1.67--2.14)x(3.39+3.37)/2	1.59		
		(-0.94--1.67)x(3.41+3.39)/2	2.48		
		(-0.57--0.94)x(3.42+3.41)/2	1.26		
		(-0.32--0.57)x(3.43+3.42)/2	0.86		
		(0.54--0.32)x(3.47+3.43)/2	2.97		
		(1.49-0.54)x(3.50+3.47)/2	3.31		
		(1.64-1.49)x(3.50+3.50)/2	0.52		
		(1.86-1.64)x(3.50+3.50)/2	0.77		
		(2.74-1.86)x(3.47+3.50)/2	3.07		
		(3.31-2.74)x(3.45+3.47)/2	1.97		
		(3.84-3.31)x(3.44+3.45)/2	1.83		
		(4.07-3.84)x(3.43+3.44)/2	0.79		
		(4.66-4.07)x(3.43+3.43)/2	2.02		
		(4.86-4.66)x(3.42+3.43)/2	0.69		
		(4.94-4.86)x(3.42+3.42)/2	0.27		
		(5.12-4.94)x(3.42+3.42)/2	0.62		
		(6.04-5.12)x(3.40+3.42)/2	3.14		
		(6.94-6.04)x(3.38+3.40)/2	3.05		
		(7.15-6.94)x(3.37+3.38)/2	0.71		
		(7.46-7.15)x(3.36+3.37)/2	1.04		
		(8.25-7.46)x(3.34+3.36)/2	2.65		
		(8.82-8.25)x(3.33+3.34)/2	1.90		
		(9.04-8.82)x(3.33+3.33)/2	0.73		
		(9.13-9.04)x(3.33+3.33)/2	0.30		
		(9.28-9.13)x(3.32+3.33)/2	0.50		
		(9.35-9.28)x(3.32+3.32)/2	0.23		
		(9.36-9.35)x(3.34+3.32)/2	0.03		
		(9.37-9.36)x(3.39+3.34)/2	0.03		
		(9.48-9.37)x(3.33+3.39)/2	0.37		
		(9.50-9.48)x(3.33+3.33)/2	0.07		
		(9.61-9.50)x(3.33+3.33)/2	0.37		
		(10.26-9.61)x(3.31+3.33)/2	2.16		
		(10.45-10.26)x(3.30+3.31)/2	0.63		
		(10.88-10.45)x(3.28+3.30)/2	1.41		
		(10.96-10.88)x(3.24+3.28)/2	0.26		
		(10.98-10.96)x(3.34+3.24)/2	0.07		
		(11.05-10.98)x(3.28+3.37)/2	0.23		
		A RIPORTARE mq	54.13		

		CALCOLO DELLE AREE		Foglio n. 73
STERRO				
N. SEZIONE PROG.	FIG.	ELEMENTI DI CALCOLO	AREA ELEMENTARE mq	AREA FIGURA mq	NOTE
		RIPORTO mq	54.13		
		(11.10-11.05)x(3.29+3.28)/2	0.16		
		(11.19-11.10)x(3.33+3.29)/2	0.30		
		(11.34-11.19)x(3.31+3.33)/2	0.50		
		(11.47-11.34)x(3.32+3.31)/2	0.43		
		(11.65-11.47)x(3.11+3.32)/2	0.58		
		(1.75-11.65)x(3.36+3.11)/2	-32.03		
		(0.68-1.75)x(3.38+3.36)/2	-3.61		
		(-0.68-0.68)x(3.38+3.38)/2	-4.60		
		(-1.75--0.68)x(3.36+3.38)/2	-3.61		
		(-4.91--1.75)x(3.28+3.36)/2	-10.49		
				1.76	
15	B1	(-14.15--14.18)x(3.09+3.09)/2	0.09		
210.00		(-13.27--14.15)x(3.20+3.09)/2	2.77		
		(-13.05--13.27)x(3.22+3.20)/2	0.71		
		(-12.91--13.05)x(3.24+3.22)/2	0.45		
		(-11.95--12.91)x(3.33+3.24)/2	3.15		
		(-11.10--11.95)x(3.40+3.33)/2	2.86		
		(-10.85--11.10)x(3.42+3.40)/2	0.85		
		(-10.46--10.85)x(3.44+3.42)/2	1.34		
		(-9.75--10.46)x(3.46+3.44)/2	2.45		
		(-9.29--9.75)x(3.48+3.46)/2	1.60		
		(-8.65--9.29)x(3.52+3.48)/2	2.24		
		(-7.64--8.65)x(3.39+3.52)/2	3.49		
		(-7.57--7.64)x(3.38+3.39)/2	0.24		
		(-7.56--7.57)x(3.38+3.38)/2	0.03		
		(-7.37--7.56)x(3.32+3.38)/2	0.64		
		(-7.32--7.37)x(3.30+3.32)/2	0.17		
		(-7.30--7.32)x(3.28+3.30)/2	0.07		
		(-7.29--7.30)x(3.28+3.28)/2	0.03		
		(-7.20--7.29)x(3.30+3.28)/2	0.30		
		(-7.10--7.20)x(3.29+3.30)/2	0.33		
		(-6.99--7.10)x(3.27+3.29)/2	0.36		
		(-6.95--6.99)x(3.27+3.27)/2	0.13		
		(-14.18--6.95)x(3.09+3.27)/2	-22.99		
				1.31	
15	B2	(0.16--0.05)x(3.44+3.43)/2	0.72		
210.00		(0.80-0.16)x(3.46+3.44)/2	2.21		
		(1.26-0.80)x(3.47+3.46)/2	1.59		
		(1.55-1.26)x(3.47+3.47)/2	1.01		
		(2.36-1.55)x(3.48+3.47)/2	2.81		
		(3.36-2.36)x(3.45+3.48)/2	3.46		
		(3.46-3.36)x(3.45+3.45)/2	0.35		
		(3.62-3.46)x(3.45+3.45)/2	0.55		
		(4.56-3.62)x(3.43+3.45)/2	3.23		
		(5.17-4.56)x(3.42+3.43)/2	2.09		
		(5.66-5.17)x(3.41+3.42)/2	1.67		
		(6.43-5.66)x(3.40+3.41)/2	2.62		
		(6.76-6.43)x(3.39+3.40)/2	1.12		
		(6.98-6.76)x(3.38+3.39)/2	0.74		
		(7.86-6.98)x(3.37+3.38)/2	2.97		
		(8.78-7.86)x(3.35+3.37)/2	3.09		
		(8.97-8.78)x(3.34+3.35)/2	0.64		
		(9.25-8.97)x(3.33+3.34)/2	0.93		
		(10.07-9.25)x(3.32+3.33)/2	2.73		
		(10.59-10.07)x(3.35+3.32)/2	1.73		
		(11.17-10.59)x(3.37+3.35)/2	1.95		
		(11.44-11.17)x(3.40+3.37)/2	0.91		
		(11.65-11.44)x(3.15+3.40)/2	0.69		
		(1.75-11.65)x(3.40+3.15)/2	-32.42		
		(0.68-1.75)x(3.43+3.40)/2	-3.65		
		(-0.05-0.68)x(3.43+3.43)/2	-2.50		
				1.24	
16	B1	(-7.89--8.52)x(3.41+3.28)/2	2.11		
225.00		(-7.33--7.89)x(3.42+3.41)/2	1.91		
		(-7.10--7.33)x(3.39+3.42)/2	0.78		
		(-7.05--7.10)x(3.39+3.39)/2	0.17		
		(-6.99--7.05)x(3.32+3.39)/2	0.20		
		(-8.52--6.99)x(3.28+3.32)/2	-5.05		
				0.12	
16	B2	(2.01-1.83)x(3.45+3.45)/2	0.62		
225.00		(2.59-2.01)x(3.46+3.45)/2	2.00		
		(3.11-2.59)x(3.46+3.46)/2	1.80		
		(3.44-3.11)x(3.45+3.46)/2	1.14		
		(4.21-3.44)x(3.43+3.45)/2	2.65		
		(5.24-4.21)x(3.40+3.43)/2	3.52		
		(5.31-5.24)x(3.40+3.40)/2	0.24		
		(5.42-5.31)x(3.39+3.40)/2	0.37		
		(6.41-5.42)x(3.39+3.39)/2	3.36		
		(7.04-6.41)x(3.37+3.39)/2	2.13		
		(7.51-7.04)x(3.36+3.37)/2	1.58		
		(8.25-7.51)x(3.34+3.36)/2	2.48		
		(8.61-8.25)x(3.33+3.34)/2	1.20		
		(8.84-8.61)x(3.32+3.33)/2	0.76		
		(9.71-8.84)x(3.29+3.32)/2	2.88		
		(10.64-9.71)x(3.27+3.29)/2	3.05		
		(10.81-10.64)x(3.26+3.27)/2	0.56		
		(10.89-10.81)x(3.26+3.26)/2	0.26		
		(11.08-10.89)x(3.27+3.26)/2	0.62		
		(11.59-11.08)x(3.27+3.27)/2	1.67		
		(11.65-11.59)x(3.20+3.27)/2	0.19		
		(1.83-11.65)x(3.45+3.20)/2	-32.65		
				0.43	
17	B1	(2.79-2.67)x(3.47+3.47)/2	0.42		
240.00		(3.56-2.79)x(3.47+3.47)/2	2.67		
		(3.89-3.56)x(3.47+3.47)/2	1.15		
		(4.43-3.89)x(3.46+3.47)/2	1.87		
		(4.83-4.43)x(3.44+3.46)/2	1.38		
		(4.99-4.83)x(3.44+3.44)/2	0.55		
		(5.35-4.99)x(3.43+3.44)/2	1.24		
		(6.09-5.35)x(3.40+3.43)/2	2.53		
		(7.14-6.09)x(3.37+3.40)/2	3.55		
		(7.19-7.14)x(3.37+3.37)/2	0.17		
		(7.27-7.19)x(3.36+3.37)/2	0.27		
		(8.29-7.27)x(3.34+3.36)/2	3.42		
		A RIPORTARE mq	19.22		

		CALCOLO DELLE AREE		Foglio n. 74
STERRO				
N. SEZIONE PROG.	FIG.	ELEMENTI DI CALCOLO	AREA ELEMENTARE mq	AREA FIGURA mq	NOTE
		RIPORTO mq	19.22		
		(8.93-8.29)x(3.33+3.34)/2	2.13		
		(9.39-8.93)x(3.32+3.33)/2	1.53		
		(10.12-9.39)x(3.30+3.32)/2	2.42		
		(10.49-10.12)x(3.29+3.30)/2	1.22		
		(10.72-10.49)x(3.28+3.29)/2	0.76		
		(11.59-10.72)x(3.26+3.28)/2	2.84		
		(11.63-11.59)x(3.26+3.26)/2	0.13		
		(11.65-11.63)x(3.25+3.26)/2	0.07		
		(2.67-11.65)x(3.47+3.25)/2	-30.17		
				0.15	
40	B1	(-29.73--30.22)x(3.15+3.05)/2	1.52		
585.00		(-28.75--29.73)x(3.15+3.15)/2	3.09		
		(-28.65--28.75)x(3.15+3.15)/2	0.32		
		(-28.60--28.65)x(3.15+3.15)/2	0.16		
		(-28.23--28.60)x(3.14+3.15)/2	1.16		
		(-28.36--28.23)x(3.05+3.14)/2	-0.40		
		(-30.22--28.36)x(3.05+3.05)/2	-5.67		
				0.18	
76bis	B1	(-14.17--14.47)x(3.82+3.81)/2	1.14		
1131.80		(-13.45--14.17)x(3.73+3.82)/2	2.72		
		(-13.07--13.45)x(3.71+3.73)/2	1.41		
		(-12.45--13.07)x(3.67+3.71)/2	2.29		
		(-11.97--12.45)x(3.64+3.67)/2	1.75		
		(-11.31--11.97)x(3.63+3.64)/2	2.40		
		(-11.13--11.31)x(3.63+3.63)/2	0.65		
		(-11.08--11.13)x(3.63+3.63)/2	0.18		
		(-11.07--11.08)x(3.63+3.63)/2	0.04		
		(-11.02--11.07)x(3.64+3.63)/2	0.18		
		(-11.01--11.02)x(3.72+3.64)/2	0.04		
		(-10.98--11.01)x(3.83+3.72)/2	0.11		
		(-10.97--10.98)x(3.63+3.79)/2	0.04		
		(-10.95--10.97)x(3.62+3.63)/2	0.07		
		(-10.89--10.95)x(3.63+3.62)/2	0.22		
		(-10.73--10.89)x(3.63+3.63)/2	0.58		
		(-10.67--10.73)x(3.63+3.63)/2	0.22		
		(-10.51--10.67)x(3.63+3.63)/2	0.58		
		(-9.78--10.51)x(3.64+3.63)/2	2.65		
		(-9.55--9.78)x(3.64+3.64)/2	0.84		
		(-8.69--9.55)x(3.66+3.64)/2	3.14		
		(-8.16--8.69)x(3.66+3.66)/2	1.94		
		(-7.59--8.16)x(3.66+3.66)/2	2.09		
		(-6.65--7.59)x(3.70+3.66)/2	3.46		
		(-6.49--6.65)x(3.70+3.70)/2	0.59		
		(-6.19--6.49)x(3.71+3.70)/2	1.11		
		(-6.15--6.19)x(3.71+3.71)/2	0.15		
		(-6.11--6.15)x(3.71+3.71)/2	0.15		
		(-6.10--6.11)x(3.86+3.79)/2	0.04		
		(-6.09--6.10)x(3.85+3.86)/2	0.04		
		(-6.07--6.09)x(3.75+3.85)/2	0.08		
		(-6.03--6.07)x(3.72+3.75)/2	0.15		
		(-5.94--6.03)x(3.73+3.72)/2	0.34		
		(-5.86--5.94)x(3.73+3.73)/2	0.30		
		(-5.60--5.86)x(3.77+3.73)/2	0.98		
		(-5.40--5.60)x(3.79+3.77)/2	0.76		
		(-4.63--5.40)x(3.86+3.79)/2	2.95		
		(-4.30--4.63)x(3.89+3.86)/2	1.28		
		(-3.76--4.30)x(3.92+3.89)/2	2.11		
		(-3.20--3.76)x(3.95+3.92)/2	2.20		
		(-2.56--3.20)x(3.98+3.95)/2	2.54		
		(-2.37--2.56)x(3.99+3.98)/2	0.76		
		(-2.33--2.37)x(3.98+3.99)/2	0.16		
		(-2.32--2.33)x(3.98+3.98)/2	0.04		
		(-2.31--2.32)x(3.91+3.98)/2	0.04		
		(-2.30--2.31)x(4.15+3.91)/2	0.04		
		(-2.29--2.30)x(4.17+4.15)/2	0.04		
		(-2.28--2.29)x(4.04+4.01)/2	0.04		
		(-2.27--2.28)x(4.00+3.87)/2	0.04		
		(-2.26--2.27)x(3.80+3.98)/2	0.04		
		(-2.24--2.26)x(3.87+3.87)/2	0.08		
		(-2.23--2.24)x(3.85+3.87)/2	0.04		
		(-2.22--2.23)x(4.14+3.85)/2	0.04		
		(-2.16--2.22)x(3.96+4.35)/2	0.25		
		(-2.15--2.16)x(3.84+3.96)/2	0.04		
		(-2.14--2.15)x(4.08+3.84)/2	0.04		
		(-2.13--2.14)x(4.03+4.08)/2	0.04		
		(-1.97--2.13)x(4.05+4.03)/2	0.65		
		(-1.94--1.97)x(4.05+4.05)/2	0.12		
		(-1.93--1.94)x(4.28+3.92)/2	0.04		
		(-1.92--1.93)x(4.30+4.28)/2	0.04		
		(-1.91--1.92)x(3.94+4.13)/2	0.04		
		(-1.81--1.91)x(3.89+3.84)/2	0.39		
		(-1.80--1.81)x(3.84+3.89)/2	0.04		
		(-1.77--1.80)x(4.06+3.84)/2	0.12		
		(-1.75--1.77)x(4.05+4.06)/2	0.08		
		(-1.64--1.75)x(4.07+4.05)/2	0.45		
		(-1.45--1.64)x(4.06+4.07)/2	0.77		
		(-1.01--1.45)x(4.09+4.06)/2	1.79		
		(-0.97--1.01)x(4.09+4.09)/2	0.16		
		(-0.86--0.97)x(4.10+4.09)/2	0.45		
		(-0.18--0.86)x(4.14+4.10)/2	2.80		
		(0.08--0.18)x(4.16+4.14)/2	1.08		
		(0.66-0.08)x(4.14+4.16)/2	2.41		
		(1.18-0.66)x(4.15+4.14)/2	2.16		
		(2.04-1.18)x(3.95+4.15)/2	3.48		
		(2.28-2.04)x(3.89+3.95)/2	0.94		
		(2.42-2.28)x(3.86+3.89)/2	0.54		
		(3.37-2.42)x(3.66+3.86)/2	3.57		
		(4.19-3.37)x(3.49+3.66)/2	2.93		
		(4.47-4.19)x(3.43+3.49)/2	0.97		
		(4.93-4.47)x(3.33+3.43)/2	1.55		
		(5.57-4.93)x(3.20+3.33)/2	2.09		
		(5.95-5.57)x(3.12+3.20)/2	1.20		
		(6.66-5.95)x(2.98+3.12)/2	2.17		
		(7.71-6.66)x(2.74+2.98)/2	3.00		
		A RIPORTARE mq	82.27		

	CALCOLO DELLE AREE		Foglio n. 75

STERRO

N. SEZIONE PROG.	FIG.	ELEMENTI DI CALCOLO	AREA ELEMENTARE mq	AREA FIGURA mq	NOTE
		RIPORTO mq	82.27		
		(7.76-7.71)x(2.73+2.74)/2	0.14		
		(7.83-7.76)x(2.73+2.73)/2	0.19		
		(8.85-7.83)x(2.61+2.73)/2	2.72		
		(9.48-8.85)x(2.70+2.61)/2	1.67		
		(9.95-9.48)x(2.78+2.70)/2	1.29		
		(10.16-9.95)x(2.80+2.78)/2	0.59		
		(10.73-10.16)x(2.83+2.80)/2	1.60		
		(10.96-10.73)x(2.84+2.83)/2	0.65		
		(11.05-10.96)x(2.84+2.84)/2	0.26		
		(11.24-11.05)x(2.83+2.84)/2	0.54		
		(12.14-11.24)x(2.72+2.83)/2	2.50		
		(13.01-12.14)x(2.57+2.72)/2	2.30		
		(13.24-13.01)x(2.54+2.57)/2	0.59		
		(13.62-13.24)x(2.46+2.54)/2	0.95		
		(14.34-13.62)x(2.35+2.46)/2	1.73		
		(14.77-14.34)x(2.26+2.35)/2	0.99		
		(15.43-14.77)x(2.18+2.26)/2	1.47		
		(16.52-15.43)x(1.98+2.18)/2	2.27		
		(16.53-16.52)x(1.98+1.98)/2	0.02		
		(17.46-16.53)x(1.80+1.97)/2	1.75		
		(15.19-17.46)x(1.80+1.80)/2	-4.09		
		(-11.45-15.19)x(1.80+1.80)/2	-47.95		
		(-14.47--11.45)x(3.81+1.80)/2	-8.47		
				45.98	

Il Direttore dei Lavori	L'Impresa	

	CALCOLO DELLE AREE		Foglio n. 76

BONIFICA

N. SEZIONE PROG.	FIG.	ELEMENTI DI CALCOLO	AREA ELEMENTARE mq	AREA FIGURA mq	NOTE
1	BO1	(-10.76--11.34)x(3.56+3.31)/2	1.99		
0.00		(-11.34--10.76)x(2.81+3.06)/2	-1.70		
				0.29	
2	BO1	(-16.07--16.38)x(3.25+3.21)/2	1.00		
15.00		(-16.03--16.07)x(3.25+3.25)/2	0.13		
		(-16.00--16.03)x(3.25+3.25)/2	0.10		
		(-14.92--16.00)x(3.10+3.25)/2	3.43		
		(-14.10--14.92)x(3.04+3.10)/2	2.52		
		(-13.81--14.10)x(3.01+3.04)/2	0.88		
		(-13.38--13.81)x(2.98+3.01)/2	1.29		
		(-12.70--13.38)x(2.96+2.98)/2	2.02		
		(-12.21--12.70)x(3.04+2.96)/2	1.47		
		(-11.59--12.21)x(3.09+3.04)/2	1.90		
		(-10.78--11.59)x(3.46+3.09)/2	2.65		
		(-11.59--10.78)x(2.59+2.96)/2	-2.25		
		(-12.21--11.59)x(2.54+2.59)/2	-1.59		
		(-12.70--12.21)x(2.46+2.54)/2	-1.22		
		(-13.38--12.70)x(2.48+2.46)/2	-1.68		
		(-13.81--13.38)x(2.51+2.48)/2	-1.07		
		(-14.10--13.81)x(2.54+2.51)/2	-0.73		
		(-14.92--14.10)x(2.60+2.54)/2	-2.11		
		(-16.00--14.92)x(2.75+2.60)/2	-2.89		
		(-16.03--16.00)x(2.75+2.75)/2	-0.08		
		(-16.07--16.03)x(2.75+2.75)/2	-0.11		
		(-16.38--16.07)x(2.71+2.75)/2	-0.85		
				2.81	
3	BO2	(-16.20--16.41)x(3.27+3.29)/2	0.69		
30.00		(-15.57--16.20)x(3.23+3.27)/2	2.05		
		(-14.67--15.57)x(3.16+3.23)/2	2.88		
		(-14.46--14.67)x(3.15+3.16)/2	0.66		
		(-14.31--14.46)x(3.14+3.15)/2	0.47		
		(-13.35--14.31)x(3.10+3.14)/2	3.00		
		(-12.42--13.35)x(3.05+3.10)/2	2.86		
		(-12.24--12.42)x(3.04+3.05)/2	0.55		
		(-11.99--12.24)x(3.10+3.04)/2	0.77		
		(-11.40--11.99)x(3.30+3.10)/2	1.89		
		(-11.99--11.40)x(2.60+2.80)/2	-1.59		
		(-12.24--11.99)x(2.54+2.60)/2	-0.64		
		(-12.42--12.24)x(2.55+2.54)/2	-0.46		
		(-13.35--12.42)x(2.60+2.55)/2	-2.39		
		(-14.31--13.35)x(2.64+2.60)/2	-2.52		
		(-14.46--14.31)x(2.65+2.64)/2	-0.40		
		(-14.67--14.46)x(2.66+2.65)/2	-0.56		
		(-15.57--14.67)x(2.73+2.66)/2	-2.43		
		(-16.20--15.57)x(2.77+2.73)/2	-1.73		
		(-16.41--16.20)x(2.79+2.77)/2	-0.58		
				2.52	
3	BO1	(-11.13--11.30)x(3.39+3.33)/2	0.57		
30.00		(-10.58--11.13)x(3.48+3.39)/2	1.89		
		(-11.13--10.58)x(2.89+2.98)/2	-1.61		
		(-11.30--11.13)x(2.83+2.89)/2	-0.49		
				0.36	
4	BO1	(-11.44--11.63)x(3.35+3.30)/2	0.63		
45.00		(-10.96--11.44)x(3.54+3.35)/2	1.65		
		(-11.44--10.96)x(2.85+3.04)/2	-1.41		
		(-11.63--11.44)x(2.80+2.85)/2	-0.54		
				0.33	
4	BO2	(-16.22--16.26)x(3.19+3.19)/2	0.13		
45.00		(-15.96--16.22)x(3.18+3.19)/2	0.83		
		(-15.12--15.96)x(3.15+3.18)/2	2.66		
		(-14.52--15.12)x(3.12+3.15)/2	1.88		
		(-14.01--14.52)x(3.10+3.12)/2	1.59		
		(-13.27--14.01)x(3.08+3.10)/2	2.29		
		(-12.90--13.27)x(3.08+3.08)/2	1.14		
		(-12.63--12.90)x(3.13+3.08)/2	0.84		
		(-11.79--12.63)x(3.25+3.13)/2	2.68		
		(-11.65--11.79)x(3.29+3.25)/2	0.46		
		(-11.79--11.65)x(2.75+2.79)/2	-0.39		
		(-12.63--11.79)x(2.63+2.75)/2	-2.26		
		(-12.90--12.63)x(2.58+2.63)/2	-0.70		
		(-13.27--12.90)x(2.58+2.58)/2	-0.95		
		(-14.01--13.27)x(2.60+2.58)/2	-1.92		
		(-14.52--14.01)x(2.62+2.60)/2	-1.33		
		(-15.12--14.52)x(2.65+2.62)/2	-1.58		
		(-15.96--15.12)x(2.68+2.65)/2	-2.24		
		(-16.22--15.96)x(2.69+2.68)/2	-0.70		
		(-16.26--16.22)x(2.69+2.69)/2	-0.11		
				2.32	
5	BO1	(-11.44--11.67)x(3.48+3.41)/2	0.79		
60.00		(-11.67--11.44)x(2.91+2.98)/2	-0.68		
				0.11	
5	BO2	(-15.77--16.16)x(3.08+3.12)/2	1.21		
60.00		(-14.73--15.77)x(3.06+3.08)/2	3.19		
		(-14.66--14.73)x(3.06+3.06)/2	0.21		
		(-14.56--14.66)x(3.06+3.06)/2	0.31		
		(-13.55--14.56)x(3.13+3.06)/2	3.13		
		(-12.84--13.55)x(3.19+3.13)/2	2.24		
		(-12.44--12.84)x(3.23+3.19)/2	1.28		
		(-12.18--12.44)x(3.28+3.23)/2	0.85		
		(-12.44--12.18)x(2.73+2.78)/2	-0.72		
		(-12.84--12.44)x(2.69+2.73)/2	-1.08		
		(-13.55--12.84)x(2.63+2.69)/2	-1.89		
		(-14.56--13.55)x(2.56+2.63)/2	-2.62		
		(-14.66--14.56)x(2.56+2.56)/2	-0.26		
		(-14.73--14.66)x(2.56+2.56)/2	-0.18		
		(-15.77--14.73)x(2.58+2.56)/2	-2.67		
		(-16.16--15.77)x(2.62+2.58)/2	-1.01		
				1.99	
6	BO1	(-11.96--12.06)x(3.38+3.41)/2	0.34		
75.00		(-11.95--11.96)x(3.40+3.31)/2	0.03		
		(-11.89--11.95)x(3.45+3.40)/2	0.21		
		(-11.82--11.89)x(3.48+3.45)/2	0.24		
		(-11.89--11.82)x(2.95+2.98)/2	-0.21		
		(-11.95--11.89)x(2.90+2.95)/2	-0.18		
		(-11.96--11.95)x(2.81+2.90)/2	-0.03		
		(-12.06--11.96)x(2.91+2.88)/2	-0.29		
		A RIPORTARE mq	0.11		

	CALCOLO DELLE AREE		Foglio n. 77

BONIFICA

N. SEZIONE PROG.	FIG.	ELEMENTI DI CALCOLO	AREA ELEMENTARE mq	AREA FIGURA mq	NOTE
		RIPORTO mq	0.11		
				0.11	
6	BO2	(-16.41--16.77)x(3.11+3.16)/2	1.13		
75.00		(-15.89--16.41)x(3.05+3.11)/2	1.60		
		(-15.30--15.89)x(3.00+3.05)/2	1.78		
		(-14.89--15.30)x(3.03+3.00)/2	1.24		
		(-14.19--14.89)x(3.07+3.03)/2	2.14		
		(-13.20--14.19)x(3.21+3.07)/2	3.11		
		(-13.08--13.20)x(3.22+3.21)/2	0.39		
		(-12.80--13.08)x(3.28+3.22)/2	0.91		
		(-13.08--12.80)x(2.72+2.78)/2	-0.77		
		(-13.20--13.08)x(2.71+2.72)/2	-0.33		
		(-14.19--13.20)x(2.57+2.71)/2	-2.61		
		(-14.89--14.19)x(2.53+2.57)/2	-1.79		
		(-15.30--14.89)x(2.50+2.53)/2	-1.03		
		(-15.89--15.30)x(2.55+2.50)/2	-1.49		
		(-16.41--15.89)x(2.61+2.55)/2	-1.34		
		(-16.77--16.41)x(2.66+2.61)/2	-0.95		
				1.99	
7	BO1	(-17.02--17.20)x(2.99+3.03)/2	0.54		
90.00		(-16.86--17.02)x(2.95+2.99)/2	0.48		
		(-15.91--16.86)x(2.73+2.95)/2	2.70		
		(-14.99--15.91)x(2.58+2.73)/2	2.44		
		(-14.80--14.99)x(2.55+2.58)/2	0.49		
		(-14.53--14.80)x(2.60+2.55)/2	0.70		
		(-13.69--14.53)x(2.84+2.60)/2	2.28		
		(-13.11--13.69)x(3.04+2.84)/2	1.71		
		(-12.58--13.11)x(3.25+3.04)/2	1.67		
		(-12.29--12.58)x(3.24+3.25)/2	0.94		
		(-12.25--12.29)x(3.24+3.24)/2	0.13		
		(-12.05--12.25)x(3.25+3.24)/2	0.65		
		(-12.04--12.05)x(3.23+3.25)/2	0.03		
		(-12.03--12.04)x(3.23+3.22)/2	0.03		
		(-12.01--12.03)x(3.25+3.23)/2	0.06		
		(-11.98--12.01)x(3.24+3.25)/2	0.10		
		(-11.86--11.98)x(3.31+3.24)/2	0.39		
		(-11.65--11.86)x(3.47+3.31)/2	0.71		
		(-11.86--11.65)x(2.81+2.97)/2	-0.61		
		(-11.98--11.86)x(2.74+2.81)/2	-0.33		
		(-12.01--11.98)x(2.75+2.74)/2	-0.08		
		(-12.03--12.01)x(2.73+2.75)/2	-0.05		
		(-12.04--12.03)x(2.72+2.73)/2	-0.03		
		(-12.05--12.04)x(2.75+2.73)/2	-0.03		
		(-12.25--12.05)x(2.74+2.75)/2	-0.55		
		(-12.29--12.25)x(2.74+2.74)/2	-0.11		
		(-12.58--12.29)x(2.75+2.74)/2	-0.80		
		(-13.11--12.58)x(2.54+2.75)/2	-1.40		
		(-13.69--13.11)x(2.34+2.54)/2	-1.42		
		(-14.53--13.69)x(2.10+2.34)/2	-1.86		
		(-14.80--14.53)x(2.05+2.10)/2	-0.56		
		(-14.99--14.80)x(2.08+2.05)/2	-0.39		
		(-15.91--14.99)x(2.23+2.08)/2	-1.98		
		(-16.86--15.91)x(2.45+2.23)/2	-2.22		
		(-17.02--16.86)x(2.49+2.45)/2	-0.40		
		(-17.20--17.02)x(2.53+2.49)/2	-0.45		
				2.78	
8	BO2	(-17.59--17.78)x(3.10+3.08)/2	0.59		
105.00		(-16.93--17.59)x(3.08+3.10)/2	2.04		
		(-16.48--16.93)x(3.10+3.08)/2	1.39		
		(-16.30--16.48)x(3.06+3.10)/2	0.55		
		(-15.84--16.30)x(2.96+3.06)/2	1.38		
		(-15.51--15.84)x(2.88+2.96)/2	0.96		
		(-15.38--15.51)x(2.85+2.88)/2	0.37		
		(-15.06--15.38)x(2.84+2.85)/2	0.91		
		(-14.27--15.06)x(2.74+2.84)/2	2.20		
		(-13.19--14.27)x(3.07+2.74)/2	3.14		
		(-13.16--13.19)x(3.08+3.07)/2	0.09		
		(-13.12--13.16)x(3.09+3.08)/2	0.12		
		(-12.36--13.12)x(3.27+3.09)/2	2.42		
		(-12.24--12.36)x(3.31+3.27)/2	0.39		
		(-12.21--12.24)x(3.31+3.31)/2	0.10		
		(-12.20--12.21)x(3.31+3.31)/2	0.03		
		(-12.17--12.20)x(3.21+3.17)/2	0.10		
		(-12.12--12.17)x(3.26+3.21)/2	0.16		
		(-11.92--12.12)x(3.31+3.26)/2	0.66		
		(-12.12--11.92)x(2.76+2.81)/2	-0.56		
		(-12.17--12.12)x(2.71+2.76)/2	-0.14		
		(-12.20--12.17)x(2.67+2.71)/2	-0.08		
		(-12.21--12.20)x(2.81+2.81)/2	-0.03		
		(-12.24--12.21)x(2.81+2.81)/2	-0.08		
		(-12.36--12.24)x(2.77+2.81)/2	-0.33		
		(-13.12--12.36)x(2.59+2.77)/2	-2.04		
		(-13.16--13.12)x(2.58+2.59)/2	-0.10		
		(-13.19--13.16)x(2.57+2.58)/2	-0.08		
		(-14.27--13.19)x(2.24+2.57)/2	-2.60		
		(-15.06--14.27)x(2.34+2.24)/2	-1.81		
		(-15.38--15.06)x(2.35+2.34)/2	-0.75		
		(-15.51--15.38)x(2.38+2.35)/2	-0.31		
		(-15.84--15.51)x(2.46+2.38)/2	-0.80		
		(-16.30--15.84)x(2.56+2.46)/2	-1.15		
		(-16.48--16.30)x(2.60+2.56)/2	-0.46		
		(-16.93--16.48)x(2.58+2.60)/2	-1.17		
		(-17.59--16.93)x(2.60+2.58)/2	-1.71		
		(-17.78--17.59)x(2.58+2.60)/2	-0.49		
				2.91	
8	BO1	(12.02-11.60)x(3.30+3.38)/2	1.40		
105.00		(12.14-12.02)x(3.28+3.30)/2	0.39		
		(12.18-12.14)x(3.26+3.28)/2	0.13		
		(12.36-12.18)x(3.25+3.26)/2	0.59		
		(12.42-12.36)x(3.06+3.25)/2	0.19		
		(12.52-12.42)x(2.90+3.06)/2	0.30		
		(12.54-12.52)x(3.13+2.90)/2	0.06		
		(12.60-12.54)x(3.20+3.13)/2	0.19		
		(12.75-12.60)x(3.19+3.20)/2	0.48		
		(12.60-12.75)x(2.70+2.69)/2	-0.40		
		A RIPORTARE mq	3.33		

		CALCOLO DELLE AREE		Foglio n. 78	
BONIFICA					
N. SEZIONE PROG.	FIG.	ELEMENTI DI CALCOLO	AREA ELEMENTARE mq	AREA FIGURA mq	NOTE
		RIPORTO mq	3.33		
		(12.54-12.60)x(2.63+2.70)/2	-0.16		
		(12.52-12.54)x(2.40+2.63)/2	-0.05		
		(12.42-12.52)x(2.56+2.40)/2	-0.25		
		(12.36-12.42)x(2.75+2.56)/2	-0.16		
		(12.18-12.36)x(2.76+2.75)/2	-0.50		
		(12.14-12.18)x(2.78+2.76)/2	-0.11		
		(12.02-12.14)x(2.80+2.78)/2	-0.33		
		(11.60-12.02)x(2.88+2.80)/2	-1.19		
				0.58	
9	BO1	(12.43-12.39)x(3.25+3.26)/2	0.13		
120.00		(12.39-12.43)x(2.76+2.75)/2	-0.11		
				0.02	
9	BO2	(-18.14--18.19)x(2.98+2.97)/2	0.15		
120.00		(-17.13--18.14)x(3.08+2.98)/2	3.06		
		(-17.03--17.13)x(3.09+3.08)/2	0.31		
		(-16.96--17.03)x(3.08+3.09)/2	0.22		
		(-15.92--16.96)x(3.04+3.08)/2	3.18		
		(-15.10--15.92)x(3.04+3.04)/2	2.49		
		(-14.82--15.10)x(3.04+3.04)/2	0.85		
		(-14.40--14.82)x(3.05+3.04)/2	1.28		
		(-13.71--14.40)x(3.05+3.05)/2	2.10		
		(-13.24--13.71)x(3.07+3.05)/2	1.44		
		(-12.61--13.24)x(3.08+3.07)/2	1.94		
		(-12.34--12.61)x(3.09+3.08)/2	0.83		
		(-11.99--12.34)x(3.24+3.09)/2	1.11		
		(-11.97--11.99)x(3.26+3.24)/2	0.06		
		(-11.99--11.97)x(2.74+2.76)/2	-0.05		
		(-12.34--11.99)x(2.59+2.74)/2	-0.93		
		(-12.61--12.34)x(2.58+2.59)/2	-0.70		
		(-13.24--12.61)x(2.57+2.58)/2	-1.62		
		(-13.71--13.24)x(2.55+2.57)/2	-1.20		
		(-14.40--13.71)x(2.55+2.55)/2	-1.76		
		(-14.82--14.40)x(2.54+2.55)/2	-1.07		
		(-15.10--14.82)x(2.54+2.54)/2	-0.71		
		(-15.92--15.10)x(2.54+2.54)/2	-2.08		
		(-16.96--15.92)x(2.58+2.54)/2	-2.66		
		(-17.03--16.96)x(2.59+2.58)/2	-0.18		
		(-17.13--17.03)x(2.58+2.59)/2	-0.26		
		(-18.14--17.13)x(2.48+2.58)/2	-2.56		
		(-18.19--18.14)x(2.47+2.48)/2	-0.12		
				3.12	
10	BO2	(-18.41--18.47)x(2.79+2.78)/2	0.17		
135.00		(-17.54--18.41)x(2.87+2.79)/2	2.46		
		(-16.96--17.54)x(2.79+2.87)/2	1.64		
		(-16.44--16.96)x(2.77+2.79)/2	1.45		
		(-15.67--16.44)x(2.59+2.77)/2	2.06		
		(-15.33--15.67)x(2.52+2.59)/2	0.87		
		(-15.11--15.33)x(2.46+2.52)/2	0.55		
		(-14.23--15.11)x(2.26+2.46)/2	2.08		
		(-13.26--14.23)x(2.43+2.26)/2	2.27		
		(-13.12--13.26)x(2.42+2.43)/2	0.34		
		(-12.92--13.12)x(2.51+2.42)/2	0.49		
		(-12.02--12.92)x(2.90+2.51)/2	2.43		
		(-11.71--12.02)x(3.06+2.90)/2	0.92		
		(-11.57--11.71)x(3.17+3.06)/2	0.44		
		(-11.55--11.57)x(3.17+3.17)/2	0.06		
		(-11.46--11.55)x(3.23+3.17)/2	0.29		
		(-11.40--11.46)x(3.21+3.23)/2	0.19		
		(-11.46--11.40)x(2.73+2.71)/2	-0.16		
		(-11.55--11.46)x(2.67+2.73)/2	-0.24		
		(-11.57--11.55)x(2.67+2.67)/2	-0.05		
		(-11.71--11.57)x(2.56+2.67)/2	-0.37		
		(-12.02--11.71)x(2.40+2.56)/2	-0.77		
		(-12.92--12.02)x(2.01+2.40)/2	-1.98		
		(-13.12--12.92)x(1.92+2.01)/2	-0.39		
		(-13.26--13.12)x(1.93+1.92)/2	-0.27		
		(-14.23--13.26)x(1.76+1.93)/2	-1.79		
		(-15.11--14.23)x(1.96+1.76)/2	-1.64		
		(-15.33--15.11)x(2.02+1.96)/2	-0.44		
		(-15.67--15.33)x(2.09+2.02)/2	-0.70		
		(-16.44--15.67)x(2.27+2.09)/2	-1.68		
		(-16.96--16.44)x(2.29+2.27)/2	-1.19		
		(-17.54--16.96)x(2.37+2.29)/2	-1.35		
		(-18.41--17.54)x(2.29+2.37)/2	-2.03		
		(-18.47--18.41)x(2.28+2.29)/2	-0.14		
				3.52	
10	BO1	(12.27-12.10)x(3.26+3.30)/2	0.56		
135.00		(12.30-12.27)x(3.23+3.26)/2	0.10		
		(12.42-12.30)x(3.03+3.23)/2	0.38		
		(12.45-12.42)x(3.04+3.03)/2	0.09		
		(12.46-12.45)x(3.01+3.04)/2	0.03		
		(12.47-12.46)x(3.00+3.01)/2	0.03		
		(12.53-12.47)x(3.05+3.02)/2	0.18		
		(12.75-12.53)x(3.08+3.05)/2	0.67		
		(12.79-12.75)x(3.08+3.08)/2	0.12		
		(12.86-12.79)x(3.09+3.08)/2	0.22		
		(12.79-12.86)x(2.58+2.59)/2	-0.18		
		(12.75-12.79)x(2.58+2.58)/2	-0.10		
		(12.53-12.75)x(2.55+2.58)/2	-0.56		
		(12.47-12.53)x(2.52+2.55)/2	-0.15		
		(12.46-12.47)x(2.51+2.50)/2	-0.03		
		(12.45-12.46)x(2.54+2.51)/2	-0.03		
		(12.42-12.45)x(2.53+2.54)/2	-0.08		
		(12.30-12.42)x(2.73+2.53)/2	-0.32		
		(12.27-12.30)x(2.76+2.73)/2	-0.08		
		(12.10-12.27)x(2.80+2.76)/2	-0.47		
				0.38	
11	BO1	(12.17-11.79)x(3.11+3.34)/2	1.23		
150.00		(12.71-12.17)x(3.08+3.11)/2	1.67		
		(12.83-12.71)x(2.92+3.08)/2	0.36		
		(12.87-12.83)x(2.93+2.92)/2	0.12		
		(12.92-12.87)x(2.96+2.93)/2	0.15		
		(12.94-12.92)x(3.12+2.96)/2	0.06		
		(12.92-12.94)x(2.46+2.62)/2	-0.05		
		A RIPORTARE mq	3.54		

		CALCOLO DELLE AREE		Foglio n. 79
BONIFICA				
N. SEZIONE PROG.	FIG.	ELEMENTI DI CALCOLO	AREA ELEMENTARE mq	AREA FIGURA mq	NOTE
		RIPORTO mq	3.54		
		(12.87-12.92)x(2.43+2.46)/2	-0.12		
		(12.83-12.87)x(2.42+2.43)/2	-0.10		
		(12.71-12.83)x(2.58+2.42)/2	-0.30		
		(12.17-12.71)x(2.61+2.58)/2	-1.40		
		(11.79-12.17)x(2.84+2.61)/2	-1.04		
				0.58	
11	BO2	(-11.46--11.48)x(2.95+2.98)/2	0.06		
150.00		(-11.44--11.46)x(2.95+2.95)/2	0.06		
		(-11.46--11.44)x(2.45+2.45)/2	-0.05		
		(-11.48--11.46)x(2.48+2.45)/2	-0.05		
				0.02	
11	BO3	(-18.03--18.75)x(2.71+2.62)/2	1.92		
150.00		(-16.93--18.03)x(2.73+2.71)/2	2.99		
		(-16.92--16.93)x(2.73+2.73)/2	0.03		
		(-16.91--16.92)x(2.73+2.73)/2	0.03		
		(-15.82--16.91)x(2.84+2.73)/2	3.04		
		(-15.34--15.82)x(2.88+2.84)/2	1.37		
		(-14.72--15.34)x(2.94+2.88)/2	1.80		
		(-14.15--14.72)x(3.00+2.94)/2	1.69		
		(-13.61--14.15)x(3.06+3.00)/2	1.64		
		(-13.25--13.61)x(3.10+3.06)/2	1.11		
		(-12.51--13.25)x(3.18+3.10)/2	2.32		
		(-12.19--12.51)x(3.22+3.18)/2	1.02		
		(-11.86--12.19)x(3.22+3.22)/2	1.06		
		(-11.75--11.86)x(3.20+3.22)/2	0.35		
		(-11.86--11.75)x(2.72+2.70)/2	-0.30		
		(-12.19--11.86)x(2.72+2.72)/2	-0.90		
		(-12.51--12.19)x(2.68+2.72)/2	-0.86		
		(-13.25--12.51)x(2.60+2.68)/2	-1.95		
		(-13.61--13.25)x(2.56+2.60)/2	-0.93		
		(-14.15--13.61)x(2.50+2.56)/2	-1.37		
		(-14.72--14.15)x(2.44+2.50)/2	-1.41		
		(-15.34--14.72)x(2.38+2.44)/2	-1.49		
		(-15.82--15.34)x(2.34+2.38)/2	-1.13		
		(-16.91--15.82)x(2.23+2.34)/2	-2.49		
		(-16.92--16.91)x(2.23+2.23)/2	-0.02		
		(-16.93--16.92)x(2.23+2.23)/2	-0.02		
		(-18.03--16.93)x(2.21+2.23)/2	-2.44		
		(-18.75--18.03)x(2.12+2.21)/2	-1.56		
				3.50	
12	BO1	(12.36-11.42)x(3.25+3.29)/2	3.07		
165.00		(12.42-12.36)x(3.25+3.25)/2	0.20		
		(12.46-12.42)x(3.25+3.25)/2	0.13		
		(12.83-12.46)x(3.24+3.25)/2	1.20		
		(12.46-12.83)x(2.75+2.74)/2	-1.02		
		(12.42-12.46)x(2.75+2.75)/2	-0.11		
		(12.36-12.42)x(2.75+2.75)/2	-0.17		
		(11.42-12.36)x(2.79+2.75)/2	-2.60		
				0.70	
12	BO2	(-18.71--19.07)x(2.58+2.52)/2	0.92		
165.00		(-18.48--18.71)x(2.63+2.58)/2	0.60		
		(-18.14--18.48)x(2.64+2.63)/2	0.90		
		(-17.38--18.14)x(2.65+2.64)/2	2.01		
		(-16.87--17.38)x(2.71+2.65)/2	1.37		
		(-16.27--16.87)x(2.76+2.71)/2	1.64		
		(-15.37--16.27)x(2.74+2.76)/2	2.48		
		(-15.17--15.37)x(2.73+2.74)/2	0.55		
		(-15.04--15.17)x(2.68+2.73)/2	0.35		
		(-14.07--15.04)x(2.43+2.68)/2	2.48		
		(-13.21--14.07)x(2.20+2.43)/2	1.99		
		(-12.96--13.21)x(2.11+2.20)/2	0.54		
		(-12.60--12.96)x(2.20+2.11)/2	0.78		
		(-11.86--12.60)x(2.44+2.20)/2	1.72		
		(-11.52--11.86)x(2.60+2.44)/2	0.86		
		(-11.39--11.52)x(2.64+2.60)/2	0.34		
		(-11.35--11.39)x(2.79+2.64)/2	0.11		
		(-11.34--11.35)x(2.72+2.79)/2	0.03		
		(-11.31--11.34)x(2.75+2.72)/2	0.08		
		(-11.20--11.31)x(2.78+2.75)/2	0.30		
		(-11.06--11.20)x(2.78+2.78)/2	0.39		
		(-10.76--11.06)x(2.89+2.78)/2	0.85		
		(-10.49--10.76)x(2.99+2.89)/2	0.79		
		(-10.35--10.49)x(3.05+2.99)/2	0.42		
		(-10.49--10.35)x(2.49+2.55)/2	-0.35		
		(-10.76--10.49)x(2.39+2.49)/2	-0.66		
		(-11.06--10.76)x(2.28+2.39)/2	-0.70		
		(-11.20--11.06)x(2.28+2.28)/2	-0.32		
		(-11.31--11.20)x(2.25+2.28)/2	-0.25		
		(-11.34--11.31)x(2.22+2.25)/2	-0.07		
		(-11.35--11.34)x(2.29+2.22)/2	-0.02		
		(-11.39--11.35)x(2.14+2.29)/2	-0.09		
		(-11.52--11.39)x(2.10+2.14)/2	-0.28		
		(-11.86--11.52)x(1.94+2.10)/2	-0.69		
		(-12.60--11.86)x(1.70+1.94)/2	-1.35		
		(-12.96--12.60)x(1.61+1.70)/2	-0.60		
		(-13.21--12.96)x(1.70+1.61)/2	-0.41		
		(-14.07--13.21)x(1.93+1.70)/2	-1.56		
		(-15.04--14.07)x(2.18+1.93)/2	-1.99		
		(-15.17--15.04)x(2.23+2.18)/2	-0.29		
		(-15.37--15.17)x(2.24+2.23)/2	-0.45		
		(-16.27--15.37)x(2.26+2.24)/2	-2.03		
		(-16.87--16.27)x(2.21+2.26)/2	-1.34		
		(-17.38--16.87)x(2.15+2.21)/2	-1.11		
		(-18.14--17.38)x(2.14+2.15)/2	-1.63		
		(-18.48--18.14)x(2.13+2.14)/2	-0.73		
		(-18.71--18.48)x(2.08+2.13)/2	-0.48		
		(-19.07--18.71)x(2.02+2.08)/2	-0.74		
				4.36	
13	BO1	(11.38-11.34)x(3.42+3.42)/2	0.14		
180.00		(11.45-11.38)x(3.35+3.42)/2	0.24		
		(11.50-11.45)x(3.35+3.35)/2	0.17		
		(11.57-11.50)x(3.38+3.35)/2	0.24		
		(11.86-11.57)x(3.37+3.38)/2	0.98		
		(11.97-11.86)x(3.37+3.37)/2	0.37		
		A RIPORTARE mq	2.14		

		CALCOLO DELLE AREE		Foglio n. 80	
BONIFICA					
N. SEZIONE PROG.	FIG.	ELEMENTI DI CALCOLO	AREA ELEMENTARE mq	AREA FIGURA mq	NOTE
		RIPORTO mq	2.14		
		(12.41-11.97)x(3.39+3.37)/2	1.49		
		(12.68-12.41)x(3.38+3.39)/2	0.91		
		(12.41-12.68)x(2.89+2.88)/2	-0.78		
		(11.97-12.41)x(2.87+2.89)/2	-1.27		
		(11.86-11.97)x(2.87+2.87)/2	-0.32		
		(11.57-11.86)x(2.88+2.87)/2	-0.83		
		(11.50-11.57)x(2.85+2.88)/2	-0.20		
		(11.45-11.50)x(2.85+2.85)/2	-0.14		
		(11.38-11.45)x(2.92+2.85)/2	-0.20		
		(11.34-11.38)x(2.92+2.92)/2	-0.12		
				0.68	
13	BO2	(-11.02--11.08)x(2.92+3.08)/2	0.18		
180.00		(-11.01--11.02)x(2.83+2.92)/2	0.03		
		(-10.97--11.01)x(2.98+2.83)/2	0.12		
		(-10.76--10.97)x(3.09+2.98)/2	0.64		
		(-10.97--10.76)x(2.48+2.59)/2	-0.53		
		(-11.01--10.97)x(2.33+2.48)/2	-0.10		
		(-11.02--11.01)x(2.42+2.33)/2	-0.02		
		(-11.08--11.02)x(2.58+2.42)/2	-0.15		
				0.17	
13	BO3	(-19.35--19.44)x(2.52+2.51)/2	0.23		
180.00		(-18.90--19.35)x(2.54+2.52)/2	1.14		
		(-18.61--18.90)x(2.56+2.54)/2	0.74		
		(-17.80--18.61)x(2.61+2.56)/2	2.09		
		(-16.79--17.80)x(2.74+2.61)/2	2.70		
		(-16.70--16.79)x(2.75+2.74)/2	0.25		
		(-16.56--16.70)x(2.76+2.75)/2	0.39		
		(-15.60--16.56)x(2.77+2.76)/2	2.65		
		(-14.96--15.60)x(2.64+2.77)/2	1.73		
		(-14.49--14.96)x(2.59+2.64)/2	1.23		
		(-13.78--14.49)x(2.56+2.59)/2	1.83		
		(-13.39--13.78)x(2.56+2.56)/2	1.00		
		(-13.14--13.39)x(2.67+2.56)/2	0.65		
		(-12.29--13.14)x(2.91+2.67)/2	2.37		
		(-11.79--12.29)x(3.06+2.91)/2	1.49		
		(-12.29--11.79)x(2.41+2.56)/2	-1.24		
		(-13.14--12.29)x(2.17+2.41)/2	-1.95		
		(-13.39--13.14)x(2.06+2.17)/2	-0.53		
		(-13.78--13.39)x(2.06+2.06)/2	-0.80		
		(-14.49--13.78)x(2.09+2.06)/2	-1.47		
		(-14.96--14.49)x(2.14+2.09)/2	-0.99		
		(-15.60--14.96)x(2.27+2.14)/2	-1.41		
		(-16.56--15.60)x(2.26+2.27)/2	-2.17		
		(-16.70--16.56)x(2.25+2.26)/2	-0.32		
		(-16.79--16.70)x(2.24+2.25)/2	-0.20		
		(-17.80--16.79)x(2.11+2.24)/2	-2.20		
		(-18.61--17.80)x(2.06+2.11)/2	-1.69		
		(-18.90--18.61)x(2.04+2.06)/2	-0.59		
		(-19.35--18.90)x(2.02+2.04)/2	-0.91		
		(-19.44--19.35)x(2.01+2.02)/2	-0.18		
				3.84	
14	BO1	(11.55-11.47)x(3.32+3.32)/2	0.27		
195.00		(11.73-11.55)x(3.30+3.32)/2	0.60		
		(11.76-11.73)x(3.34+3.30)/2	0.10		
		(11.78-11.76)x(3.36+3.34)/2	0.07		
		(11.87-11.78)x(3.48+3.36)/2	0.31		
		(11.78-11.87)x(2.86+2.97)/2	-0.26		
		(11.76-11.78)x(2.84+2.86)/2	-0.06		
		(11.73-11.76)x(2.80+2.84)/2	-0.08		
		(11.55-11.73)x(2.82+2.80)/2	-0.51		
		(11.47-11.55)x(2.82+2.82)/2	-0.23		
				0.21	
14	BO2	(11.90-11.87)x(3.11+3.48)/2	0.10		
195.00		(11.91-11.90)x(3.09+3.11)/2	0.03		
		(11.95-11.91)x(3.13+3.09)/2	0.12		
		(12.05-11.95)x(3.22+3.13)/2	0.32		
		(12.26-12.05)x(3.24+3.22)/2	0.68		
		(12.65-12.26)x(3.31+3.24)/2	1.28		
		(12.77-12.65)x(3.30+3.31)/2	0.40		
		(12.89-12.77)x(3.29+3.30)/2	0.40		
		(12.77-12.89)x(2.80+2.79)/2	-0.34		
		(12.65-12.77)x(2.81+2.80)/2	-0.34		
		(12.26-12.65)x(2.74+2.81)/2	-1.08		
		(12.05-12.26)x(2.72+2.74)/2	-0.57		
		(11.95-12.05)x(2.63+2.72)/2	-0.27		
		(11.91-11.95)x(2.59+2.63)/2	-0.10		
		(11.90-11.91)x(2.61+2.59)/2	-0.03		
		(11.87-11.90)x(2.97+2.61)/2	-0.08		
				0.52	
14	BO3	(-5.23--5.38)x(3.26+3.26)/2	0.49		
195.00		(-4.97--5.23)x(3.28+3.26)/2	0.85		
		(-4.91--4.97)x(3.28+3.28)/2	0.20		
		(-4.97--4.91)x(2.78+2.78)/2	-0.17		
		(-5.23--4.97)x(2.76+2.78)/2	-0.72		
		(-5.38--5.23)x(2.76+2.76)/2	-0.41		
				0.24	
14	BO4	(-6.54--6.59)x(3.24+3.24)/2	0.16		
195.00		(-6.08--6.54)x(3.23+3.24)/2	1.49		
		(-5.69--6.08)x(3.25+3.23)/2	1.26		
		(-5.57--5.69)x(3.25+3.25)/2	0.39		
		(-5.53--5.57)x(3.26+3.25)/2	0.13		
		(-5.57--5.53)x(2.75+2.76)/2	-0.11		
		(-5.69--5.57)x(2.75+2.75)/2	-0.33		
		(-6.08--5.69)x(2.73+2.75)/2	-1.07		
		(-6.54--6.08)x(2.74+2.73)/2	-1.26		
		(-6.59--6.54)x(2.74+2.74)/2	-0.14		
				0.52	
14	BO5	(-19.30--19.80)x(2.57+2.52)/2	1.27		
195.00		(-18.49--19.30)x(2.58+2.57)/2	2.09		
		(-18.19--18.49)x(2.57+2.58)/2	0.77		
		(-17.74--18.19)x(2.58+2.57)/2	1.16		
		(-17.09--17.74)x(2.57+2.58)/2	1.67		
		(-16.67--17.09)x(2.55+2.57)/2	1.08		
		(-15.99--16.67)x(2.56+2.55)/2	1.74		
		A RIPORTARE mq	9.78		

	CALCOLO DELLE AREE		Foglio n. 81

BONIFICA

N. SEZIONE PROG.	FIG.	ELEMENTI DI CALCOLO	AREA ELEMENTARE mq	AREA FIGURA mq	NOTE
		RIPORTO mq	9.78		
		(-14.94--15.99)x(2.31+2.56)/2	2.56		
		(-14.89--14.94)x(2.30+2.31)/2	0.12		
		(-14.11--14.89)x(2.10+2.30)/2	1.72		
		(-13.79--14.11)x(2.11+2.10)/2	0.67		
		(-13.04--13.79)x(2.33+2.11)/2	1.66		
		(-12.69--13.04)x(2.40+2.33)/2	0.83		
		(-12.14--12.69)x(2.58+2.40)/2	1.37		
		(-11.58--12.14)x(2.75+2.58)/2	1.49		
		(-11.30--11.58)x(2.76+2.75)/2	0.77		
		(-10.65--11.30)x(2.93+2.76)/2	1.85		
		(-10.49--10.65)x(3.14+2.93)/2	0.49		
		(-10.65--10.49)x(2.43+2.64)/2	-0.41		
		(-11.30--10.65)x(2.26+2.43)/2	-1.52		
		(-11.58--11.30)x(2.25+2.26)/2	-0.63		
		(-12.14--11.58)x(2.08+2.25)/2	-1.21		
		(-12.69--12.14)x(1.90+2.08)/2	-1.09		
		(-13.04--12.69)x(1.83+1.90)/2	-0.65		
		(-13.79--13.04)x(1.61+1.83)/2	-1.29		
		(-14.11--13.79)x(1.60+1.61)/2	-0.51		
		(-14.89--14.11)x(1.80+1.60)/2	-1.33		
		(-14.94--14.89)x(1.81+1.80)/2	-0.09		
		(-15.99--14.94)x(2.06+1.81)/2	-2.03		
		(-16.67--15.99)x(2.05+2.06)/2	-1.40		
		(-17.09--16.67)x(2.07+2.05)/2	-0.87		
		(-17.74--17.09)x(2.08+2.07)/2	-1.35		
		(-18.19--17.74)x(2.07+2.08)/2	-0.93		
		(-18.49--18.19)x(2.08+2.07)/2	-0.62		
		(-19.30--18.49)x(2.07+2.08)/2	-1.68		
		(-19.80--19.30)x(2.02+2.07)/2	-1.02		
				4.68	
15 210.00	BO1	(12.06-11.44)x(3.47+3.40)/2	2.13		
		(12.27-12.06)x(3.49+3.47)/2	0.73		
		(12.40-12.27)x(3.47+3.49)/2	0.45		
		(12.71-12.40)x(3.46+3.47)/2	1.07		
		(12.40-12.71)x(2.97+2.96)/2	-0.92		
		(12.27-12.40)x(2.99+2.97)/2	-0.39		
		(12.06-12.27)x(2.97+2.99)/2	-0.63		
		(11.44-12.06)x(2.90+2.97)/2	-1.82		
				0.62	
15 210.00	BO2	(-6.90--6.95)x(3.27+3.27)/2	0.16		
		(-6.84--6.90)x(3.26+3.27)/2	0.20		
		(-6.81--6.84)x(3.26+3.26)/2	0.10		
		(-6.64--6.81)x(3.25+3.26)/2	0.55		
		(-6.45--6.64)x(3.24+3.25)/2	0.62		
		(-5.68--6.45)x(3.26+3.24)/2	2.50		
		(-5.35--5.68)x(3.26+3.26)/2	1.08		
		(-5.27--5.35)x(3.27+3.26)/2	0.26		
		(-5.15--5.27)x(3.30+3.27)/2	0.39		
		(-5.13--5.15)x(3.31+3.30)/2	0.07		
		(-5.15--5.13)x(2.80+2.82)/2	-0.06		
		(-5.27--5.15)x(2.77+2.80)/2	-0.33		
		(-5.35--5.27)x(2.76+2.77)/2	-0.22		
		(-5.68--5.35)x(2.76+2.76)/2	-0.91		
		(-6.45--5.68)x(2.74+2.76)/2	-2.12		
		(-6.64--6.45)x(2.75+2.74)/2	-0.52		
		(-6.81--6.64)x(2.76+2.75)/2	-0.47		
		(-6.84--6.81)x(2.76+2.76)/2	-0.08		
		(-6.90--6.84)x(2.77+2.76)/2	-0.17		
		(-6.95--6.90)x(2.77+2.77)/2	-0.14		
				0.91	
15 210.00	BO3	(-5.12--5.13)x(3.27+3.32)/2	0.03		
		(-5.09--5.12)x(3.27+3.27)/2	0.10		
		(-4.96--5.09)x(3.28+3.27)/2	0.43		
		(-4.80--4.96)x(3.28+3.28)/2	0.52		
		(-4.41--4.80)x(3.29+3.28)/2	1.28		
		(-4.25--4.41)x(3.30+3.29)/2	0.53		
		(-3.87--4.25)x(3.31+3.30)/2	1.26		
		(-3.14--3.87)x(3.33+3.31)/2	2.42		
		(-2.06--3.14)x(3.37+3.33)/2	3.62		
		(-2.04--2.06)x(3.37+3.37)/2	0.07		
		(-2.01--2.04)x(3.37+3.37)/2	0.10		
		(-0.94--2.01)x(3.39+3.37)/2	3.62		
		(-0.25--0.94)x(3.42+3.39)/2	2.35		
		(-0.05--0.25)x(3.43+3.42)/2	0.69		
		(-0.25--0.05)x(2.92+2.93)/2	-0.58		
		(-0.94--0.25)x(2.89+2.92)/2	-2.00		
		(-2.01--0.94)x(2.87+2.89)/2	-3.08		
		(-2.04--2.01)x(2.87+2.87)/2	-0.09		
		(-2.06--2.04)x(2.87+2.87)/2	-0.06		
		(-3.14--2.06)x(2.83+2.87)/2	-3.08		
		(-3.87--3.14)x(2.81+2.83)/2	-2.06		
		(-4.25--3.87)x(2.80+2.81)/2	-1.07		
		(-4.41--4.25)x(2.79+2.80)/2	-0.45		
		(-4.80--4.41)x(2.78+2.79)/2	-1.09		
		(-4.96--4.80)x(2.78+2.78)/2	-0.44		
		(-5.09--4.96)x(2.77+2.78)/2	-0.36		
		(-5.12--5.09)x(2.77+2.77)/2	-0.08		
		(-5.13--5.12)x(2.81+2.77)/2	-0.03		
				2.55	
15 210.00	BO4	(-19.66--20.02)x(2.53+2.41)/2	0.89		
		(-18.90--19.66)x(2.65+2.53)/2	1.97		
		(-18.56--18.90)x(2.68+2.65)/2	0.91		
		(-18.33--18.56)x(2.69+2.68)/2	0.62		
		(-17.46--18.33)x(2.76+2.69)/2	2.37		
		(-16.53--17.46)x(2.81+2.76)/2	2.59		
		(-16.36--16.53)x(2.82+2.81)/2	0.48		
		(-16.09--16.36)x(2.85+2.82)/2	0.77		
		(-15.25--16.09)x(2.97+2.85)/2	2.44		
		(-14.72--15.25)x(3.03+2.97)/2	1.59		
		(-14.18--14.72)x(3.09+3.03)/2	1.65		
		(-14.72--14.18)x(2.53+2.59)/2	-1.38		
		(-15.25--14.72)x(2.47+2.53)/2	-1.32		
		(-16.09--15.25)x(2.35+2.47)/2	-2.02		
		(-16.36--16.09)x(2.32+2.35)/2	-0.63		
		A RIPORTARE mq	10.93		

		CALCOLO DELLE AREE		Foglio n. 82	
BONIFICA					
N. SEZIONE PROG.	FIG.	ELEMENTI DI CALCOLO	AREA ELEMENTARE mq	AREA FIGURA mq	NOTE
		RIPORTO mq	10.93		
		(-16.53--16.36)x(2.31+2.32)/2	-0.39		
		(-17.46--16.53)x(2.26+2.31)/2	-2.13		
		(-18.33--17.46)x(2.19+2.26)/2	-1.94		
		(-18.56--18.33)x(2.18+2.19)/2	-0.50		
		(-18.90--18.56)x(2.15+2.18)/2	-0.74		
		(-19.66--18.90)x(2.03+2.15)/2	-1.59		
		(-20.02--19.66)x(1.91+2.03)/2	-0.71		
				2.93	
16	BO1	(11.68-11.59)x(3.27+3.27)/2	0.29		
225.00		(11.91-11.68)x(3.29+3.27)/2	0.75		
		(12.44-11.91)x(3.30+3.29)/2	1.75		
		(12.98-12.44)x(3.32+3.30)/2	1.79		
		(12.44-12.98)x(2.80+2.82)/2	-1.52		
		(11.91-12.44)x(2.79+2.80)/2	-1.48		
		(11.68-11.91)x(2.77+2.79)/2	-0.64		
		(11.59-11.68)x(2.77+2.77)/2	-0.25		
				0.69	
16	BO2	(-6.94--6.99)x(3.27+3.32)/2	0.16		
225.00		(-6.93--6.94)x(3.23+3.27)/2	0.03		
		(-6.89--6.93)x(3.26+3.23)/2	0.13		
		(-6.70--6.89)x(3.32+3.26)/2	0.63		
		(-6.89--6.70)x(2.76+2.82)/2	-0.53		
		(-6.93--6.89)x(2.73+2.76)/2	-0.11		
		(-6.94--6.93)x(2.77+2.73)/2	-0.03		
		(-6.99--6.94)x(2.82+2.77)/2	-0.14		
				0.14	
16	BO3	(-6.61--6.70)x(3.32+3.32)/2	0.30		
225.00		(-6.59--6.61)x(3.32+3.32)/2	0.07		
		(-6.31--6.59)x(3.23+3.32)/2	0.92		
		(-6.30--6.31)x(3.23+3.23)/2	0.03		
		(-6.27--6.30)x(3.22+3.23)/2	0.10		
		(-6.25--6.27)x(3.22+3.22)/2	0.06		
		(-6.18--6.25)x(3.22+3.22)/2	0.23		
		(-5.75--6.18)x(3.20+3.22)/2	1.38		
		(-5.69--5.75)x(3.19+3.20)/2	0.19		
		(-4.96--5.69)x(3.20+3.19)/2	2.33		
		(-4.80--4.96)x(3.21+3.20)/2	0.51		
		(-4.78--4.80)x(3.21+3.21)/2	0.06		
		(-4.77--4.78)x(3.22+3.21)/2	0.03		
		(-4.76--4.77)x(3.29+3.22)/2	0.03		
		(-4.75--4.76)x(3.28+3.29)/2	0.03		
		(-4.70--4.75)x(3.27+3.28)/2	0.16		
		(-4.50--4.70)x(3.25+3.27)/2	0.65		
		(-4.16--4.50)x(3.24+3.25)/2	1.10		
		(-3.49--4.16)x(3.27+3.24)/2	2.18		
		(-3.07--3.49)x(3.28+3.27)/2	1.38		
		(-2.39--3.07)x(3.30+3.28)/2	2.24		
		(-1.96--2.39)x(3.31+3.30)/2	1.42		
		(-1.29--1.96)x(3.33+3.31)/2	2.22		
		(-0.24--1.29)x(3.37+3.33)/2	3.52		
		(-0.19--0.24)x(3.37+3.37)/2	0.17		
		(-0.16--0.19)x(3.37+3.37)/2	0.10		
		(0.91--0.16)x(3.41+3.37)/2	3.63		
		(1.64-0.91)x(3.44+3.41)/2	2.50		
		(1.83-1.64)x(3.45+3.44)/2	0.65		
		(1.64-1.83)x(2.94+2.95)/2	-0.56		
		(0.91-1.64)x(2.91+2.94)/2	-2.14		
		(-0.16-0.91)x(2.87+2.91)/2	-3.09		
		(-0.19--0.16)x(2.87+2.87)/2	-0.09		
		(-0.24--0.19)x(2.87+2.87)/2	-0.14		
		(-1.29--0.24)x(2.83+2.87)/2	-2.99		
		(-1.96--1.29)x(2.81+2.83)/2	-1.89		
		(-2.39--1.96)x(2.80+2.81)/2	-1.21		
		(-3.07--2.39)x(2.78+2.80)/2	-1.90		
		(-3.49--3.07)x(2.77+2.78)/2	-1.17		
		(-4.16--3.49)x(2.74+2.77)/2	-1.85		
		(-4.50--4.16)x(2.75+2.74)/2	-0.93		
		(-4.70--4.50)x(2.77+2.75)/2	-0.55		
		(-4.75--4.70)x(2.78+2.77)/2	-0.14		
		(-4.76--4.75)x(2.79+2.78)/2	-0.03		
		(-4.77--4.76)x(2.72+2.79)/2	-0.03		
		(-4.78--4.77)x(2.71+2.72)/2	-0.03		
		(-4.80--4.78)x(2.71+2.71)/2	-0.05		
		(-4.96--4.80)x(2.70+2.71)/2	-0.43		
		(-5.69--4.96)x(2.69+2.70)/2	-1.97		
		(-5.75--5.69)x(2.70+2.69)/2	-0.16		
		(-6.18--5.75)x(2.72+2.70)/2	-1.17		
		(-6.25--6.18)x(2.72+2.72)/2	-0.19		
		(-6.27--6.25)x(2.72+2.72)/2	-0.05		
		(-6.30--6.27)x(2.73+2.72)/2	-0.08		
		(-6.31--6.30)x(2.73+2.73)/2	-0.03		
		(-6.59--6.31)x(2.82+2.73)/2	-0.78		
		(-6.61--6.59)x(2.82+2.82)/2	-0.06		
		(-6.70--6.61)x(2.82+2.82)/2	-0.25		
				4.23	
16	BO4	(-18.89--19.93)x(2.58+2.03)/2	2.40		
225.00		(-18.15--18.89)x(2.60+2.58)/2	1.92		
		(-17.79--18.15)x(2.63+2.60)/2	0.94		
		(-17.22--17.79)x(2.68+2.63)/2	1.51		
		(-16.69--17.22)x(2.74+2.68)/2	1.44		
		(-16.35--16.69)x(2.78+2.74)/2	0.94		
		(-15.59--16.35)x(2.89+2.78)/2	2.15		
		(-14.55--15.59)x(3.01+2.89)/2	3.07		
		(-14.49--14.55)x(3.02+3.01)/2	0.18		
		(-14.39--14.49)x(3.02+3.02)/2	0.30		
		(-13.39--14.39)x(3.02+3.02)/2	3.02		
		(-12.75--13.39)x(3.04+3.02)/2	1.94		
		(-12.29--12.75)x(3.04+3.04)/2	1.40		
		(-11.56--12.29)x(3.04+3.04)/2	2.22		
		(-11.19--11.56)x(3.05+3.04)/2	1.13		
		(-10.95--11.19)x(3.05+3.05)/2	0.73		
		(-10.09--10.95)x(3.06+3.05)/2	2.63		
		(-9.15--10.09)x(3.16+3.06)/2	2.92		
		(-8.99--9.15)x(3.17+3.16)/2	0.51		
		A RIPORTARE mq	31.35		

		CALCOLO DELLE AREE		Foglio n. 83
BONIFICA				
N. SEZIONE PROG.	FIG.	ELEMENTI DI CALCOLO	AREA ELEMENTARE mq	AREA FIGURA mq	NOTE
		RIPORTO mq	31.35		
		(-8.73--8.99)x(3.23+3.17)/2	0.83		
		(-8.52--8.73)x(3.28+3.23)/2	0.68		
		(-8.73--8.52)x(2.73+2.78)/2	-0.58		
		(-8.99--8.73)x(2.67+2.73)/2	-0.70		
		(-9.15--8.99)x(2.66+2.67)/2	-0.43		
		(-10.09--9.15)x(2.56+2.66)/2	-2.45		
		(-10.95--10.09)x(2.55+2.56)/2	-2.20		
		(-11.19--10.95)x(2.55+2.55)/2	-0.61		
		(-11.56--11.19)x(2.54+2.55)/2	-0.94		
		(-12.29--11.56)x(2.54+2.54)/2	-1.85		
		(-12.75--12.29)x(2.54+2.54)/2	-1.17		
		(-13.39--12.75)x(2.52+2.54)/2	-1.62		
		(-14.39--13.39)x(2.52+2.52)/2	-2.52		
		(-14.49--14.39)x(2.52+2.52)/2	-0.25		
		(-14.55--14.49)x(2.51+2.52)/2	-0.15		
		(-15.59--14.55)x(2.39+2.51)/2	-2.55		
		(-16.35--15.59)x(2.28+2.39)/2	-1.77		
		(-16.69--16.35)x(2.24+2.28)/2	-0.77		
		(-17.22--16.69)x(2.18+2.24)/2	-1.17		
		(-17.79--17.22)x(2.13+2.18)/2	-1.23		
		(-18.15--17.79)x(2.10+2.13)/2	-0.76		
		(-18.89--18.15)x(2.08+2.10)/2	-1.55		
		(-19.93--18.89)x(1.53+2.08)/2	-1.88		
				5.71	
17	BO1	(12.51-11.63)x(3.23+3.26)/2	2.86		
240.00		(12.69-12.51)x(3.23+3.23)/2	0.58		
		(12.96-12.69)x(3.22+3.23)/2	0.87		
		(13.21-12.96)x(3.21+3.22)/2	0.80		
		(12.96-13.21)x(2.72+2.71)/2	-0.68		
		(12.69-12.96)x(2.73+2.72)/2	-0.74		
		(12.51-12.69)x(2.73+2.73)/2	-0.49		
		(11.63-12.51)x(2.76+2.73)/2	-2.42		
				0.78	
17	BO2	(-6.00--6.68)x(3.34+3.37)/2	2.28		
240.00		(-5.40--6.00)x(3.26+3.34)/2	1.98		
		(-4.90--5.40)x(3.19+3.26)/2	1.61		
		(-4.11--4.90)x(3.20+3.19)/2	2.52		
		(-3.80--4.11)x(3.22+3.20)/2	1.00		
		(-3.61--3.80)x(3.23+3.22)/2	0.61		
		(-2.70--3.61)x(3.27+3.23)/2	2.96		
		(-1.82--2.70)x(3.31+3.27)/2	2.90		
		(-1.60--1.82)x(3.32+3.31)/2	0.73		
		(-1.26--1.60)x(3.34+3.32)/2	1.13		
		(-0.50--1.26)x(3.37+3.34)/2	2.55		
		(-0.03--0.50)x(3.38+3.37)/2	1.59		
		(0.60--0.03)x(3.40+3.38)/2	2.14		
		(1.58-0.60)x(3.44+3.40)/2	3.35		
		(1.69-1.58)x(3.44+3.44)/2	0.38		
		(1.76-1.69)x(3.44+3.44)/2	0.24		
		(2.67-1.76)x(3.47+3.44)/2	3.14		
		(1.76-2.67)x(2.94+2.97)/2	-2.69		
		(1.69-1.76)x(2.94+2.94)/2	-0.21		
		(1.58-1.69)x(2.94+2.94)/2	-0.32		
		(0.60-1.58)x(2.90+2.94)/2	-2.86		
		(-0.03-0.60)x(2.88+2.90)/2	-1.82		
		(-0.50--0.03)x(2.87+2.88)/2	-1.35		
		(-1.26--0.50)x(2.84+2.87)/2	-2.17		
		(-1.60--1.26)x(2.82+2.84)/2	-0.96		
		(-1.82--1.60)x(2.81+2.82)/2	-0.62		
		(-2.70--1.82)x(2.77+2.81)/2	-2.46		
		(-3.61--2.70)x(2.73+2.77)/2	-2.50		
		(-3.80--3.61)x(2.72+2.73)/2	-0.52		
		(-4.11--3.80)x(2.70+2.72)/2	-0.84		
		(-4.90--4.11)x(2.69+2.70)/2	-2.13		
		(-5.40--4.90)x(2.76+2.69)/2	-1.36		
		(-6.00--5.40)x(2.84+2.76)/2	-1.68		
		(-6.68--6.00)x(2.87+2.84)/2	-1.94		
				4.68	
17	BO3	(-19.73--19.79)x(1.86+1.82)/2	0.11		
240.00		(-19.19--19.73)x(2.34+1.86)/2	1.13		
		(-18.33--19.19)x(2.58+2.34)/2	2.12		
		(-18.09--18.33)x(2.62+2.58)/2	0.62		
		(-17.94--18.09)x(2.63+2.62)/2	0.39		
		(-16.99--17.94)x(2.68+2.63)/2	2.52		
		(-16.15--16.99)x(2.80+2.68)/2	2.30		
		(-15.89--16.15)x(2.84+2.80)/2	0.73		
		(-15.48--15.89)x(2.89+2.84)/2	1.17		
		(-14.79--15.48)x(2.96+2.89)/2	2.02		
		(-14.36--14.79)x(2.98+2.96)/2	1.28		
		(-13.69--14.36)x(3.04+2.98)/2	2.02		
		(-13.40--13.69)x(3.04+3.04)/2	0.88		
		(-12.64--13.40)x(3.02+3.04)/2	2.30		
		(-12.61--12.64)x(3.02+3.02)/2	0.09		
		(-12.60--12.61)x(3.02+3.02)/2	0.03		
		(-12.57--12.60)x(3.02+3.02)/2	0.09		
		(-11.50--12.57)x(3.00+3.02)/2	3.22		
		(-10.78--11.50)x(2.99+3.00)/2	2.16		
		(-10.40--10.78)x(2.99+2.99)/2	1.14		
		(-9.79--10.40)x(2.99+2.99)/2	1.82		
		(-9.30--9.79)x(2.98+2.99)/2	1.46		
		(-8.99--9.30)x(3.04+2.98)/2	0.93		
		(-8.20--8.99)x(3.12+3.04)/2	2.43		
		(-7.19--8.20)x(3.35+3.12)/2	3.27		
		(-7.18--7.19)x(3.36+3.35)/2	0.03		
		(-7.19--7.18)x(2.85+2.86)/2	-0.03		
		(-8.20--7.19)x(2.62+2.85)/2	-2.76		
		(-8.99--8.20)x(2.54+2.62)/2	-2.04		
		(-9.30--8.99)x(2.48+2.54)/2	-0.78		
		(-9.79--9.30)x(2.49+2.48)/2	-1.22		
		(-10.40--9.79)x(2.49+2.49)/2	-1.52		
		(-10.78--10.40)x(2.49+2.49)/2	-0.95		
		(-11.50--10.78)x(2.50+2.49)/2	-1.80		
		(-12.57--11.50)x(2.52+2.50)/2	-2.69		
		(-12.60--12.57)x(2.52+2.52)/2	-0.08		
		A RIPORTARE mq	22.39		

		CALCOLO DELLE AREE		Foglio n. 84
BONIFICA				
N. SEZIONE PROG.	FIG.	ELEMENTI DI CALCOLO	AREA ELEMENTARE mq	AREA FIGURA mq	NOTE
		RIPORTO mq	22.39		
		(-12.61--12.60)x(2.52+2.52)/2	-0.03		
		(-12.64--12.61)x(2.52+2.52)/2	-0.08		
		(-13.40--12.64)x(2.54+2.52)/2	-1.92		
		(-13.69--13.40)x(2.54+2.54)/2	-0.74		
		(-14.36--13.69)x(2.48+2.54)/2	-1.68		
		(-14.79--14.36)x(2.46+2.48)/2	-1.06		
		(-15.48--14.79)x(2.39+2.46)/2	-1.67		
		(-15.89--15.48)x(2.34+2.39)/2	-0.97		
		(-16.15--15.89)x(2.30+2.34)/2	-0.60		
		(-16.99--16.15)x(2.18+2.30)/2	-1.88		
		(-17.94--16.99)x(2.13+2.18)/2	-2.05		
		(-18.09--17.94)x(2.12+2.13)/2	-0.32		
		(-18.33--18.09)x(2.08+2.12)/2	-0.50		
		(-19.19--18.33)x(1.84+2.08)/2	-1.69		
		(-19.73--19.19)x(1.36+1.84)/2	-0.86		
		(-19.79--19.73)x(1.32+1.36)/2	-0.08		
				6.26	
18	BO1	(5.48-4.91)x(3.44+3.46)/2	1.97		
255.00		(5.80-5.48)x(3.43+3.44)/2	1.10		
		(6.31-5.80)x(3.41+3.43)/2	1.74		
		(6.90-6.31)x(3.40+3.41)/2	2.01		
		(7.26-6.90)x(3.39+3.40)/2	1.22		
		(8.00-7.26)x(3.36+3.39)/2	2.50		
		(9.05-8.00)x(3.33+3.36)/2	3.51		
		(9.10-9.05)x(3.33+3.33)/2	0.17		
		(9.17-9.10)x(3.32+3.33)/2	0.23		
		(10.19-9.17)x(3.30+3.32)/2	3.38		
		(10.83-10.19)x(3.28+3.30)/2	2.11		
		(11.29-10.83)x(3.27+3.28)/2	1.51		
		(12.03-11.29)x(3.25+3.27)/2	2.41		
		(12.39-12.03)x(3.24+3.25)/2	1.17		
		(12.61-12.39)x(3.24+3.24)/2	0.71		
		(13.23-12.61)x(3.24+3.24)/2	2.01		
		(12.61-13.23)x(2.74+2.74)/2	-1.70		
		(12.39-12.61)x(2.74+2.74)/2	-0.60		
		(12.03-12.39)x(2.75+2.74)/2	-0.99		
		(11.29-12.03)x(2.77+2.75)/2	-2.04		
		(10.83-11.29)x(2.78+2.77)/2	-1.28		
		(10.19-10.83)x(2.80+2.78)/2	-1.79		
		(9.17-10.19)x(2.82+2.80)/2	-2.87		
		(9.10-9.17)x(2.83+2.82)/2	-0.20		
		(9.05-9.10)x(2.83+2.83)/2	-0.14		
		(8.00-9.05)x(2.86+2.83)/2	-2.99		
		(7.26-8.00)x(2.89+2.86)/2	-2.13		
		(6.90-7.26)x(2.90+2.89)/2	-1.04		
		(6.31-6.90)x(2.91+2.90)/2	-1.71		
		(5.80-6.31)x(2.93+2.91)/2	-1.49		
		(5.48-5.80)x(2.94+2.93)/2	-0.94		
		(4.91-5.48)x(2.96+2.94)/2	-1.68		
				4.16	
18	BO2	(-19.49--19.58)x(1.64+1.56)/2	0.14		
255.00		(-19.46--19.49)x(1.66+1.64)/2	0.05		
		(-19.45--19.46)x(1.67+1.66)/2	0.02		
		(-19.42--19.45)x(1.70+1.67)/2	0.05		
		(-18.66--19.42)x(2.30+1.70)/2	1.52		
		(-18.36--18.66)x(2.50+2.30)/2	0.72		
		(-17.71--18.36)x(2.63+2.50)/2	1.67		
		(-17.26--17.71)x(2.78+2.63)/2	1.22		
		(-16.56--17.26)x(2.82+2.78)/2	1.96		
		(-16.17--16.56)x(2.84+2.82)/2	1.10		
		(-15.92--16.17)x(2.87+2.84)/2	0.71		
		(-15.07--15.92)x(2.95+2.87)/2	2.47		
		(-14.14--15.07)x(3.08+2.95)/2	2.80		
		(-13.97--14.14)x(3.10+3.08)/2	0.53		
		(-13.70--13.97)x(3.13+3.10)/2	0.84		
		(-12.87--13.70)x(3.20+3.13)/2	2.63		
		(-12.35--12.87)x(3.18+3.20)/2	1.66		
		(-11.77--12.35)x(3.18+3.18)/2	1.84		
		(-10.84--11.77)x(3.13+3.18)/2	2.93		
		(-10.67--10.84)x(3.13+3.13)/2	0.53		
		(-10.57--10.67)x(3.13+3.13)/2	0.31		
		(-9.58--10.57)x(3.14+3.13)/2	3.10		
		(-8.79--9.58)x(3.11+3.14)/2	2.47		
		(-8.48--8.79)x(3.07+3.11)/2	0.96		
		(-7.98--8.48)x(3.09+3.07)/2	1.54		
		(-7.38--7.98)x(3.12+3.09)/2	1.86		
		(-7.00--7.38)x(3.20+3.12)/2	1.20		
		(-6.28--7.00)x(3.38+3.20)/2	2.37		
		(-5.22--6.28)x(3.40+3.38)/2	3.59		
		(-5.18--5.22)x(3.40+3.40)/2	0.14		
		(-5.12--5.18)x(3.39+3.40)/2	0.20		
		(-4.08--5.12)x(3.18+3.39)/2	3.42		
		(-3.44--4.08)x(3.21+3.18)/2	2.04		
		(-2.99--3.44)x(3.23+3.21)/2	1.45		
		(-2.26--2.99)x(3.25+3.23)/2	2.37		
		(-1.89--2.26)x(3.27+3.25)/2	1.21		
		(-1.65--1.89)x(3.27+3.27)/2	0.78		
		(-0.79--1.65)x(3.31+3.27)/2	2.83		
		(-0.41--0.79)x(3.33+3.31)/2	1.26		
		(0.31--0.41)x(3.36+3.33)/2	2.41		
		(0.60-0.31)x(3.37+3.36)/2	0.98		
		(1.41-0.60)x(3.40+3.37)/2	2.74		
		(1.91-1.41)x(3.42+3.40)/2	1.71		
		(2.51-1.91)x(3.44+3.42)/2	2.06		
		(3.45-2.51)x(3.47+3.44)/2	3.25		
		(3.60-3.45)x(3.48+3.47)/2	0.52		
		(3.70-3.60)x(3.47+3.48)/2	0.35		
		(4.57-3.70)x(3.47+3.47)/2	3.02		
		(3.70-4.57)x(2.97+2.97)/2	-2.58		
		(3.60-3.70)x(2.98+2.97)/2	-0.30		
		(3.45-3.60)x(2.97+2.98)/2	-0.45		
		(2.51-3.45)x(2.94+2.97)/2	-2.78		
		(1.91-2.51)x(2.92+2.94)/2	-1.76		
		(1.41-1.91)x(2.90+2.92)/2	-1.46		
		A RIPORTARE mq	66.20		

		CALCOLO DELLE AREE		Foglio n. 85
BONIFICA				
N. SEZIONE PROG.	FIG.	ELEMENTI DI CALCOLO	AREA ELEMENTARE mq	AREA FIGURA mq	NOTE
		RIPORTO mq	66.20		
		(0.60-1.41)x(2.87+2.90)/2	-2.34		
		(0.31-0.60)x(2.86+2.87)/2	-0.83		
		(-0.41-0.31)x(2.83+2.86)/2	-2.05		
		(-0.79--0.41)x(2.81+2.83)/2	-1.07		
		(-1.65--0.79)x(2.77+2.81)/2	-2.40		
		(-1.89--1.65)x(2.77+2.77)/2	-0.66		
		(-2.26--1.89)x(2.75+2.77)/2	-1.02		
		(-2.99--2.26)x(2.73+2.75)/2	-2.00		
		(-3.44--2.99)x(2.71+2.73)/2	-1.22		
		(-4.08--3.44)x(2.68+2.71)/2	-1.72		
		(-5.12--4.08)x(2.89+2.68)/2	-2.90		
		(-5.18--5.12)x(2.90+2.89)/2	-0.17		
		(-5.22--5.18)x(2.90+2.90)/2	-0.12		
		(-6.28--5.22)x(2.88+2.90)/2	-3.06		
		(-7.00--6.28)x(2.70+2.88)/2	-2.01		
		(-7.38--7.00)x(2.62+2.70)/2	-1.01		
		(-7.98--7.38)x(2.59+2.62)/2	-1.56		
		(-8.48--7.98)x(2.57+2.59)/2	-1.29		
		(-8.79--8.48)x(2.61+2.57)/2	-0.80		
		(-9.58--8.79)x(2.64+2.61)/2	-2.07		
		(-10.57--9.58)x(2.63+2.64)/2	-2.61		
		(-10.67--10.57)x(2.63+2.63)/2	-0.26		
		(-10.84--10.67)x(2.63+2.63)/2	-0.45		
		(-11.77--10.84)x(2.68+2.63)/2	-2.47		
		(-12.35--11.77)x(2.68+2.68)/2	-1.55		
		(-12.87--12.35)x(2.70+2.68)/2	-1.40		
		(-13.70--12.87)x(2.63+2.70)/2	-2.21		
		(-13.97--13.70)x(2.60+2.63)/2	-0.71		
		(-14.14--13.97)x(2.58+2.60)/2	-0.44		
		(-15.07--14.14)x(2.45+2.58)/2	-2.34		
		(-15.92--15.07)x(2.37+2.45)/2	-2.05		
		(-16.17--15.92)x(2.34+2.37)/2	-0.59		
		(-16.56--16.17)x(2.32+2.34)/2	-0.91		
		(-17.26--16.56)x(2.28+2.32)/2	-1.61		
		(-17.71--17.26)x(2.13+2.28)/2	-0.99		
		(-18.36--17.71)x(2.00+2.13)/2	-1.34		
		(-18.66--18.36)x(1.80+2.00)/2	-0.57		
		(-19.42--18.66)x(1.20+1.80)/2	-1.14		
		(-19.45--19.42)x(1.17+1.20)/2	-0.04		
		(-19.46--19.45)x(1.16+1.17)/2	-0.01		
		(-19.49--19.46)x(1.14+1.16)/2	-0.03		
		(-19.58--19.49)x(1.06+1.14)/2	-0.10		
				12.08	
19 270.00	B01	(-18.60--19.08)x(1.28+1.06)/2	0.56		
		(-17.62--18.60)x(1.96+1.28)/2	1.59		
		(-17.51--17.62)x(2.04+1.96)/2	0.22		
		(-17.44--17.51)x(2.07+2.04)/2	0.14		
		(-16.41--17.44)x(2.59+2.07)/2	2.40		
		(-15.66--16.41)x(2.82+2.59)/2	2.03		
		(-15.31--15.66)x(2.96+2.82)/2	1.01		
		(-14.74--15.31)x(2.98+2.96)/2	1.69		
		(-14.21--14.74)x(2.97+2.98)/2	1.58		
		(-13.89--14.21)x(2.90+2.97)/2	0.94		
		(-13.12--13.89)x(2.68+2.90)/2	2.15		
		(-12.11--13.12)x(2.74+2.68)/2	2.74		
		(-12.02--12.11)x(2.75+2.74)/2	0.25		
		(-11.87--12.02)x(2.78+2.75)/2	0.41		
		(-10.92--11.87)x(2.93+2.78)/2	2.71		
		(-10.34--10.92)x(2.95+2.93)/2	1.71		
		(-9.82--10.34)x(2.95+2.95)/2	1.53		
		(-8.99--9.82)x(2.97+2.95)/2	2.46		
		(-8.73--8.99)x(2.97+2.97)/2	0.77		
		(-8.56--8.73)x(2.99+2.97)/2	0.51		
		(-7.63--8.56)x(3.01+2.99)/2	2.79		
		(-6.79--7.63)x(3.13+3.01)/2	2.58		
		(-6.53--6.79)x(3.15+3.13)/2	0.82		
		(-6.42--6.53)x(3.15+3.15)/2	0.35		
		(-6.12--6.42)x(3.17+3.15)/2	0.95		
		(-5.62--6.12)x(3.21+3.17)/2	1.59		
		(-5.43--5.62)x(3.21+3.21)/2	0.61		
		(-5.01--5.43)x(3.21+3.21)/2	1.35		
		(-4.34--5.01)x(3.23+3.21)/2	2.16		
		(-3.25--4.34)x(3.20+3.23)/2	3.50		
		(-3.24--3.25)x(3.20+3.20)/2	0.03		
		(-2.14--3.24)x(3.24+3.20)/2	3.54		
		(-1.46--2.14)x(3.25+3.24)/2	2.21		
		(-1.04--1.46)x(3.26+3.25)/2	1.37		
		(-0.37--1.04)x(3.27+3.26)/2	2.19		
		(0.05--0.37)x(3.28+3.27)/2	1.38		
		(0.32-0.05)x(3.29+3.28)/2	0.89		
		(1.15-0.32)x(3.32+3.29)/2	2.74		
		(2.09-1.15)x(3.36+3.32)/2	3.14		
		(2.25-2.09)x(3.36+3.36)/2	0.54		
		(2.50-2.25)x(3.37+3.36)/2	0.84		
		(3.35-2.50)x(3.40+3.37)/2	2.88		
		(3.87-3.35)x(3.41+3.40)/2	1.77		
		(4.44-3.87)x(3.42+3.41)/2	1.95		
		(5.38-4.44)x(3.41+3.42)/2	3.21		
		(5.54-5.38)x(3.41+3.41)/2	0.55		
		(5.64-5.54)x(3.41+3.41)/2	0.34		
		(6.64-5.64)x(3.38+3.41)/2	3.40		
		(7.42-6.64)x(3.36+3.38)/2	2.63		
		(7.74-7.42)x(3.35+3.36)/2	1.07		
		(8.25-7.74)x(3.35+3.35)/2	1.71		
		(8.83-8.25)x(3.34+3.35)/2	1.94		
		(9.19-8.83)x(3.33+3.34)/2	1.20		
		(9.93-9.19)x(3.31+3.33)/2	2.46		
		(10.97-9.93)x(3.28+3.31)/2	3.43		
		(11.03-10.97)x(3.28+3.28)/2	0.20		
		(11.05-11.03)x(3.28+3.28)/2	0.07		
		(11.12-11.05)x(3.28+3.28)/2	0.23		
		(11.85-11.12)x(3.26+3.28)/2	2.39		
		(12.13-11.85)x(3.25+3.26)/2	0.91		
		(12.74-12.13)x(3.25+3.25)/2	1.98		
		A RIPORTARE mq	97.29		

		CALCOLO DELLE AREE		Foglio n. 86
BONIFICA				

N. SEZIONE PROG.	FIG.	ELEMENTI DI CALCOLO	AREA ELEMENTARE mq	AREA FIGURA mq	NOTE
		RIPORTO mq	97.29		
		(13.22-12.74)x(3.24+3.25)/2	1.56		
		(13.51-13.22)x(3.24+3.24)/2	0.94		
		(13.22-13.51)x(2.74+2.74)/2	-0.79		
		(12.74-13.22)x(2.75+2.74)/2	-1.32		
		(12.13-12.74)x(2.75+2.75)/2	-1.68		
		(11.85-12.13)x(2.76+2.75)/2	-0.77		
		(11.12-11.85)x(2.78+2.76)/2	-2.02		
		(11.05-11.12)x(2.78+2.78)/2	-0.19		
		(11.03-11.05)x(2.78+2.78)/2	-0.06		
		(10.97-11.03)x(2.78+2.78)/2	-0.17		
		(9.93-10.97)x(2.81+2.78)/2	-2.91		
		(9.19-9.93)x(2.83+2.81)/2	-2.09		
		(8.83-9.19)x(2.84+2.83)/2	-1.02		
		(8.25-8.83)x(2.85+2.84)/2	-1.65		
		(7.74-8.25)x(2.85+2.85)/2	-1.45		
		(7.42-7.74)x(2.86+2.85)/2	-0.91		
		(6.64-7.42)x(2.88+2.86)/2	-2.24		
		(5.64-6.64)x(2.91+2.88)/2	-2.90		
		(5.54-5.64)x(2.91+2.91)/2	-0.29		
		(5.38-5.54)x(2.91+2.91)/2	-0.47		
		(4.44-5.38)x(2.92+2.91)/2	-2.74		
		(3.87-4.44)x(2.91+2.92)/2	-1.66		
		(3.35-3.87)x(2.90+2.91)/2	-1.51		
		(2.50-3.35)x(2.87+2.90)/2	-2.45		
		(2.25-2.50)x(2.86+2.87)/2	-0.72		
		(2.09-2.25)x(2.86+2.86)/2	-0.46		
		(1.15-2.09)x(2.82+2.86)/2	-2.67		
		(0.32-1.15)x(2.79+2.82)/2	-2.33		
		(0.05-0.32)x(2.78+2.79)/2	-0.75		
		(-0.37-0.05)x(2.77+2.78)/2	-1.17		
		(-1.04--0.37)x(2.76+2.77)/2	-1.85		
		(-1.46--1.04)x(2.75+2.76)/2	-1.16		
		(-2.14--1.46)x(2.74+2.75)/2	-1.87		
		(-3.24--2.14)x(2.70+2.74)/2	-2.99		
		(-3.25--3.24)x(2.70+2.70)/2	-0.03		
		(-4.34--3.25)x(2.73+2.70)/2	-2.96		
		(-5.01--4.34)x(2.71+2.73)/2	-1.82		
		(-5.43--5.01)x(2.71+2.71)/2	-1.14		
		(-5.62--5.43)x(2.71+2.71)/2	-0.51		
		(-6.12--5.62)x(2.67+2.71)/2	-1.34		
		(-6.42--6.12)x(2.65+2.67)/2	-0.80		
		(-6.53--6.42)x(2.65+2.65)/2	-0.29		
		(-6.79--6.53)x(2.63+2.65)/2	-0.69		
		(-7.63--6.79)x(2.51+2.63)/2	-2.16		
		(-8.56--7.63)x(2.49+2.51)/2	-2.33		
		(-8.73--8.56)x(2.47+2.49)/2	-0.42		
		(-8.99--8.73)x(2.47+2.47)/2	-0.64		
		(-9.82--8.99)x(2.45+2.47)/2	-2.04		
		(-10.34--9.82)x(2.45+2.45)/2	-1.27		
		(-10.92--10.34)x(2.43+2.45)/2	-1.42		
		(-11.87--10.92)x(2.28+2.43)/2	-2.24		
		(-12.02--11.87)x(2.25+2.28)/2	-0.34		
		(-12.11--12.02)x(2.24+2.25)/2	-0.20		
		(-13.12--12.11)x(2.18+2.24)/2	-2.23		
		(-13.89--13.12)x(2.40+2.18)/2	-1.76		
		(-14.21--13.89)x(2.47+2.40)/2	-0.78		
		(-14.74--14.21)x(2.48+2.47)/2	-1.31		
		(-15.31--14.74)x(2.46+2.48)/2	-1.41		
		(-15.66--15.31)x(2.32+2.46)/2	-0.84		
		(-16.41--15.66)x(2.09+2.32)/2	-1.65		
		(-17.44--16.41)x(1.57+2.09)/2	-1.88		
		(-17.51--17.44)x(1.54+1.57)/2	-0.11		
		(-17.62--17.51)x(1.46+1.54)/2	-0.16		
		(-18.60--17.62)x(0.78+1.46)/2	-1.10		
		(-19.08--18.60)x(0.56+0.78)/2	-0.32		
				16.34	
20 285.00	BO1	(-20.68--20.73)x(2.53+2.59)/2	0.13		
		(-19.91--20.68)x(1.70+2.53)/2	1.63		
		(-18.92--19.91)x(0.89+1.70)/2	1.28		
		(-18.82--18.92)x(0.79+0.89)/2	0.08		
		(-18.65--18.82)x(0.75+0.79)/2	0.13		
		(-17.98--18.65)x(0.65+0.75)/2	0.47		
		(-17.72--17.98)x(0.66+0.65)/2	0.17		
		(-17.18--17.72)x(0.68+0.66)/2	0.36		
		(-16.62--17.18)x(0.67+0.68)/2	0.38		
		(-16.39--16.62)x(0.69+0.67)/2	0.16		
		(-15.76--16.39)x(0.78+0.69)/2	0.46		
		(-15.53--15.76)x(0.83+0.78)/2	0.19		
		(-15.38--15.53)x(0.89+0.83)/2	0.13		
		(-14.43--15.38)x(1.30+0.89)/2	1.04		
		(-13.61--14.43)x(1.63+1.30)/2	1.20		
		(-13.33--13.61)x(1.75+1.63)/2	0.47		
		(-12.88--13.33)x(1.91+1.75)/2	0.82		
		(-12.24--12.88)x(2.12+1.91)/2	1.29		
		(-11.62--12.24)x(2.35+2.12)/2	1.39		
		(-11.14--11.62)x(2.50+2.35)/2	1.16		
		(-10.08--11.14)x(2.74+2.50)/2	2.78		
		(-10.04--10.08)x(2.75+2.74)/2	0.11		
		(-9.99--10.04)x(2.76+2.75)/2	0.14		
		(-8.95--9.99)x(2.88+2.76)/2	2.93		
		(-8.31--8.95)x(2.91+2.88)/2	1.85		
		(-7.85--8.31)x(2.95+2.91)/2	1.35		
		(-7.10--7.85)x(3.02+2.95)/2	2.24		
		(-6.75--7.10)x(3.06+3.02)/2	1.06		
		(-6.54--6.75)x(3.10+3.06)/2	0.65		
		(-5.66--6.54)x(3.31+3.10)/2	2.82		
		(-4.77--5.66)x(3.25+3.31)/2	2.92		
		(-4.56--4.77)x(3.26+3.25)/2	0.68		
		(-4.21--4.56)x(3.22+3.26)/2	1.13		
		(-3.46--4.21)x(3.16+3.22)/2	2.39		
		(-3.01--3.46)x(3.19+3.16)/2	1.43		
		(-2.37--3.01)x(3.22+3.19)/2	2.05		
		(-1.32--2.37)x(3.26+3.22)/2	3.40		
		(-1.27--1.32)x(3.26+3.26)/2	0.16		
		A RIPORTARE mq	43.03		

		CALCOLO DELLE AREE		Foglio n. 87
BONIFICA				
N. SEZIONE PROG.	FIG.	ELEMENTI DI CALCOLO	AREA ELEMENTARE mq	AREA FIGURA mq	NOTE
		RIPORTO mq	43.03		
		(-1.24--1.27)x(3.26+3.26)/2	0.10		
		(-0.17--1.24)x(3.30+3.26)/2	3.51		
		(0.53--0.17)x(3.31+3.30)/2	2.31		
		(0.92-0.53)x(3.31+3.31)/2	1.29		
		(1.57-0.92)x(3.31+3.31)/2	2.15		
		(2.02-1.57)x(3.32+3.31)/2	1.49		
		(2.30-2.02)x(3.33+3.32)/2	0.93		
		(3.12-2.30)x(3.38+3.33)/2	2.75		
		(4.06-3.12)x(3.41+3.38)/2	3.19		
		(4.21-4.06)x(3.41+3.41)/2	0.51		
		(4.46-4.21)x(3.41+3.41)/2	0.85		
		(5.31-4.46)x(3.40+3.41)/2	2.89		
		(5.87-5.31)x(3.39+3.40)/2	1.90		
		(6.41-5.87)x(3.38+3.39)/2	1.83		
		(7.35-6.41)x(3.37+3.38)/2	3.17		
		(7.50-7.35)x(3.37+3.37)/2	0.51		
		(7.60-7.50)x(3.37+3.37)/2	0.34		
		(8.60-7.60)x(3.35+3.37)/2	3.36		
		(9.37-8.60)x(3.33+3.35)/2	2.57		
		(9.70-9.37)x(3.31+3.33)/2	1.10		
		(10.24-9.70)x(3.30+3.31)/2	1.78		
		(10.79-10.24)x(3.28+3.30)/2	1.81		
		(11.13-10.79)x(3.27+3.28)/2	1.11		
		(11.89-11.13)x(3.25+3.27)/2	2.48		
		(12.90-11.89)x(3.22+3.25)/2	3.27		
		(12.99-12.90)x(3.22+3.22)/2	0.29		
		(13.13-12.99)x(3.21+3.22)/2	0.45		
		(14.08-13.13)x(3.20+3.21)/2	3.04		
		(14.32-14.08)x(3.21+3.20)/2	0.77		
		(14.08-14.32)x(2.70+2.71)/2	-0.65		
		(13.13-14.08)x(2.71+2.70)/2	-2.57		
		(12.99-13.13)x(2.72+2.71)/2	-0.38		
		(12.90-12.99)x(2.72+2.72)/2	-0.24		
		(11.89-12.90)x(2.75+2.72)/2	-2.76		
		(11.13-11.89)x(2.77+2.75)/2	-2.10		
		(10.79-11.13)x(2.78+2.77)/2	-0.94		
		(10.24-10.79)x(2.80+2.78)/2	-1.53		
		(9.70-10.24)x(2.81+2.80)/2	-1.51		
		(9.37-9.70)x(2.83+2.81)/2	-0.93		
		(8.60-9.37)x(2.85+2.83)/2	-2.19		
		(7.60-8.60)x(2.87+2.85)/2	-2.86		
		(7.50-7.60)x(2.87+2.87)/2	-0.29		
		(7.35-7.50)x(2.87+2.87)/2	-0.43		
		(6.41-7.35)x(2.88+2.87)/2	-2.70		
		(5.87-6.41)x(2.89+2.88)/2	-1.56		
		(5.31-5.87)x(2.90+2.89)/2	-1.62		
		(4.46-5.31)x(2.91+2.90)/2	-2.47		
		(4.21-4.46)x(2.91+2.91)/2	-0.73		
		(4.06-4.21)x(2.91+2.91)/2	-0.44		
		(3.12-4.06)x(2.88+2.91)/2	-2.72		
		(2.30-3.12)x(2.83+2.88)/2	-2.34		
		(2.02-2.30)x(2.82+2.83)/2	-0.79		
		(1.57-2.02)x(2.81+2.82)/2	-1.27		
		(0.92-1.57)x(2.81+2.81)/2	-1.83		
		(0.53-0.92)x(2.81+2.81)/2	-1.10		
		(-0.17-0.53)x(2.80+2.81)/2	-1.96		
		(-1.24--0.17)x(2.76+2.80)/2	-2.97		
		(-1.27--1.24)x(2.76+2.76)/2	-0.08		
		(-1.32--1.27)x(2.76+2.76)/2	-0.14		
		(-2.37--1.32)x(2.72+2.76)/2	-2.88		
		(-3.01--2.37)x(2.69+2.72)/2	-1.73		
		(-3.46--3.01)x(2.66+2.69)/2	-1.20		
		(-4.21--3.46)x(2.72+2.66)/2	-2.02		
		(-4.56--4.21)x(2.76+2.72)/2	-0.96		
		(-4.77--4.56)x(2.75+2.76)/2	-0.58		
		(-5.66--4.77)x(2.81+2.75)/2	-2.47		
		(-6.54--5.66)x(2.60+2.81)/2	-2.38		
		(-6.75--6.54)x(2.56+2.60)/2	-0.54		
		(-7.10--6.75)x(2.52+2.56)/2	-0.89		
		(-7.85--7.10)x(2.45+2.52)/2	-1.86		
		(-8.31--7.85)x(2.41+2.45)/2	-1.12		
		(-8.95--8.31)x(2.38+2.41)/2	-1.53		
		(-9.99--8.95)x(2.26+2.38)/2	-2.41		
		(-10.04--9.99)x(2.25+2.26)/2	-0.11		
		(-10.08--10.04)x(2.24+2.25)/2	-0.09		
		(-11.14--10.08)x(2.00+2.24)/2	-2.25		
		(-11.62--11.14)x(1.85+2.00)/2	-0.92		
		(-12.24--11.62)x(1.62+1.85)/2	-1.08		
		(-12.88--12.24)x(1.41+1.62)/2	-0.97		
		(-13.33--12.88)x(1.25+1.41)/2	-0.60		
		(-13.61--13.33)x(1.13+1.25)/2	-0.33		
		(-14.43--13.61)x(0.80+1.13)/2	-0.79		
		(-15.38--14.43)x(0.39+0.80)/2	-0.57		
		(-15.53--15.38)x(0.33+0.39)/2	-0.05		
		(-15.76--15.53)x(0.28+0.33)/2	-0.07		
		(-16.39--15.76)x(0.19+0.28)/2	-0.15		
		(-16.62--16.39)x(0.17+0.19)/2	-0.04		
		(-17.18--16.62)x(0.18+0.17)/2	-0.10		
		(-17.72--17.18)x(0.16+0.18)/2	-0.09		
		(-17.98--17.72)x(0.15+0.16)/2	-0.04		
		(-18.65--17.98)x(0.25+0.15)/2	-0.13		
		(-18.82--18.65)x(0.29+0.25)/2	-0.05		
		(-18.92--18.82)x(0.39+0.29)/2	-0.03		
		(-19.91--18.92)x(1.20+0.39)/2	-0.79		
		(-20.68--19.91)x(2.03+1.20)/2	-1.24		
		(-20.73--20.68)x(2.09+2.03)/2	-0.10		
				17.52	
21 300.00	B01	(-20.35--20.77)x(3.48+3.48)/2	1.46		
		(-20.09--20.35)x(3.49+3.48)/2	0.91		
		(-19.67--20.09)x(3.26+3.49)/2	1.42		
		(-19.00--19.67)x(2.72+3.26)/2	2.00		
		(-18.59--19.00)x(2.31+2.72)/2	1.03		
		(-17.90--18.59)x(1.52+2.31)/2	1.32		
		(-17.59--17.90)x(1.28+1.52)/2	0.43		
		A RIPORTARE mq	8.57		

	CALCOLO DELLE AREE		Foglio n. 88

BONIFICA

N. SEZIONE PROG.	FIG.	ELEMENTI DI CALCOLO	AREA ELEMENTARE mq	AREA FIGURA mq	NOTE
		RIPORTO mq	8.57		
		(-16.81--17.59)x(0.97+1.28)/2	0.88		
		(-16.77--16.81)x(0.96+0.97)/2	0.04		
		(-15.71--16.77)x(0.81+0.96)/2	0.94		
		(-15.07--15.71)x(0.81+0.81)/2	0.52		
		(-14.61--15.07)x(0.80+0.81)/2	0.37		
		(-13.86--14.61)x(0.89+0.80)/2	0.63		
		(-13.52--13.86)x(0.92+0.89)/2	0.31		
		(-13.31--13.52)x(0.98+0.92)/2	0.20		
		(-12.42--13.31)x(1.22+0.98)/2	0.98		
		(-11.55--12.42)x(1.50+1.22)/2	1.18		
		(-11.33--11.55)x(1.58+1.50)/2	0.34		
		(-10.96--11.33)x(1.70+1.58)/2	0.61		
		(-10.23--10.96)x(1.94+1.70)/2	1.33		
		(-9.79--10.23)x(2.08+1.94)/2	0.88		
		(-9.13--9.79)x(2.28+2.08)/2	1.44		
		(-8.06--9.13)x(2.62+2.28)/2	2.62		
		(-8.04--8.06)x(2.63+2.62)/2	0.05		
		(-8.03--8.04)x(2.63+2.63)/2	0.03		
		(-6.94--8.03)x(2.89+2.63)/2	3.01		
		(-6.27--6.94)x(3.08+2.89)/2	2.00		
		(-5.85--6.27)x(3.18+3.08)/2	1.31		
		(-5.15--5.85)x(3.29+3.18)/2	2.26		
		(-4.75--5.15)x(3.32+3.29)/2	1.32		
		(-4.51--4.75)x(3.28+3.32)/2	0.79		
		(-3.66--4.51)x(3.16+3.28)/2	2.74		
		(-2.75--3.66)x(3.11+3.16)/2	2.85		
		(-2.56--2.75)x(3.10+3.11)/2	0.59		
		(-2.25--2.56)x(3.13+3.10)/2	0.97		
		(-1.46--2.25)x(3.21+3.13)/2	2.50		
		(-0.99--1.46)x(3.22+3.21)/2	1.51		
		(-0.37--0.99)x(3.24+3.22)/2	2.00		
		(-0.09--0.37)x(3.24+3.24)/2	0.91		
		(0.66--0.09)x(3.30+3.24)/2	2.45		
		(0.71-0.66)x(3.30+3.30)/2	0.16		
		(0.73-0.71)x(3.30+3.30)/2	0.07		
		(0.77-0.73)x(3.30+3.30)/2	0.13		
		(1.82-0.77)x(3.33+3.30)/2	3.48		
		(2.53-1.82)x(3.35+3.33)/2	2.37		
		(2.92-2.53)x(3.37+3.35)/2	1.31		
		(3.56-2.92)x(3.35+3.37)/2	2.15		
		(4.02-3.56)x(3.35+3.35)/2	1.54		
		(4.29-4.02)x(3.35+3.35)/2	0.90		
		(5.11-4.29)x(3.37+3.35)/2	2.76		
		(6.05-5.11)x(3.36+3.37)/2	3.16		
		(6.21-6.05)x(3.36+3.36)/2	0.54		
		(6.47-6.21)x(3.35+3.36)/2	0.87		
		(7.30-6.47)x(3.33+3.35)/2	2.77		
		(7.81-7.30)x(3.31+3.33)/2	1.69		
		(8.40-7.81)x(3.29+3.31)/2	1.95		
		(9.37-8.40)x(3.25+3.29)/2	3.17		
		(9.49-9.37)x(3.25+3.25)/2	0.39		
		(9.57-9.49)x(3.25+3.25)/2	0.26		
		(10.59-9.57)x(3.24+3.25)/2	3.31		
		(11.33-10.59)x(3.22+3.24)/2	2.39		
		(11.69-11.33)x(3.22+3.22)/2	1.16		
		(12.27-11.69)x(3.20+3.22)/2	1.86		
		(12.78-12.27)x(3.18+3.20)/2	1.63		
		(13.09-12.78)x(3.18+3.18)/2	0.99		
		(13.88-13.09)x(3.15+3.18)/2	2.50		
		(14.85-13.88)x(3.19+3.15)/2	3.07		
		(14.97-14.85)x(3.19+3.19)/2	0.38		
		(15.18-14.97)x(3.21+3.19)/2	0.67		
		(15.27-15.18)x(3.22+3.21)/2	0.29		
		(15.18-15.27)x(2.71+2.72)/2	-0.24		
		(14.97-15.18)x(2.69+2.71)/2	-0.57		
		(14.85-14.97)x(2.69+2.69)/2	-0.32		
		(13.88-14.85)x(2.65+2.69)/2	-2.59		
		(13.09-13.88)x(2.68+2.65)/2	-2.11		
		(12.78-13.09)x(2.68+2.68)/2	-0.83		
		(12.27-12.78)x(2.70+2.68)/2	-1.37		
		(11.69-12.27)x(2.72+2.70)/2	-1.57		
		(11.33-11.69)x(2.72+2.72)/2	-0.98		
		(10.59-11.33)x(2.74+2.72)/2	-2.02		
		(9.57-10.59)x(2.75+2.74)/2	-2.80		
		(9.49-9.57)x(2.75+2.75)/2	-0.22		
		(9.37-9.49)x(2.75+2.75)/2	-0.33		
		(8.40-9.37)x(2.79+2.75)/2	-2.69		
		(7.81-8.40)x(2.81+2.79)/2	-1.65		
		(7.30-7.81)x(2.83+2.81)/2	-1.44		
		(6.47-7.30)x(2.85+2.83)/2	-2.36		
		(6.21-6.47)x(2.86+2.85)/2	-0.74		
		(6.05-6.21)x(2.86+2.86)/2	-0.46		
		(5.11-6.05)x(2.87+2.86)/2	-2.69		
		(4.29-5.11)x(2.85+2.87)/2	-2.35		
		(4.02-4.29)x(2.85+2.85)/2	-0.77		
		(3.56-4.02)x(2.85+2.85)/2	-1.31		
		(2.92-3.56)x(2.87+2.85)/2	-1.83		
		(2.53-2.92)x(2.85+2.87)/2	-1.12		
		(1.82-2.53)x(2.83+2.85)/2	-2.02		
		(0.77-1.82)x(2.80+2.83)/2	-2.96		
		(0.73-0.77)x(2.80+2.80)/2	-0.11		
		(0.71-0.73)x(2.80+2.80)/2	-0.06		
		(0.66-0.71)x(2.80+2.80)/2	-0.14		
		(-0.09-0.66)x(2.74+2.80)/2	-2.08		
		(-0.37--0.09)x(2.74+2.74)/2	-0.77		
		(-0.99--0.37)x(2.72+2.74)/2	-1.69		
		(-1.46--0.99)x(2.71+2.72)/2	-1.28		
		(-2.25--1.46)x(2.63+2.71)/2	-2.11		
		(-2.56--2.25)x(2.60+2.63)/2	-0.81		
		(-2.75--2.56)x(2.61+2.60)/2	-0.49		
		(-3.66--2.75)x(2.66+2.61)/2	-2.40		
		(-4.51--3.66)x(2.78+2.66)/2	-2.31		
		(-4.75--4.51)x(2.82+2.78)/2	-0.67		
		(-5.15--4.75)x(2.79+2.82)/2	-1.12		
		A RIPORTARE mq	40.67		

		CALCOLO DELLE AREE		Foglio n. 89
BONIFICA				
N. SEZIONE PROG.	FIG.	ELEMENTI DI CALCOLO	AREA ELEMENTARE mq	AREA FIGURA mq	NOTE
		RIPORTO mq	40.67		
		(-5.85--5.15)x(2.68+2.79)/2	-1.91		
		(-6.27--5.85)x(2.58+2.68)/2	-1.10		
		(-6.94--6.27)x(2.39+2.58)/2	-1.66		
		(-8.03--6.94)x(2.13+2.39)/2	-2.46		
		(-8.04--8.03)x(2.13+2.13)/2	-0.02		
		(-8.06--8.04)x(2.12+2.13)/2	-0.04		
		(-9.13--8.06)x(1.78+2.12)/2	-2.09		
		(-9.79--9.13)x(1.58+1.78)/2	-1.11		
		(-10.23--9.79)x(1.44+1.58)/2	-0.66		
		(-10.96--10.23)x(1.20+1.44)/2	-0.96		
		(-11.33--10.96)x(1.08+1.20)/2	-0.42		
		(-11.55--11.33)x(1.00+1.08)/2	-0.23		
		(-12.42--11.55)x(0.72+1.00)/2	-0.75		
		(-13.31--12.42)x(0.48+0.72)/2	-0.53		
		(-13.52--13.31)x(0.42+0.48)/2	-0.09		
		(-13.86--13.52)x(0.39+0.42)/2	-0.14		
		(-14.61--13.86)x(0.30+0.39)/2	-0.26		
		(-15.07--14.61)x(0.31+0.30)/2	-0.14		
		(-15.71--15.07)x(0.31+0.31)/2	-0.20		
		(-16.77--15.71)x(0.46+0.31)/2	-0.41		
		(-16.81--16.77)x(0.47+0.46)/2	-0.02		
		(-17.59--16.81)x(0.78+0.47)/2	-0.49		
		(-17.90--17.59)x(1.02+0.78)/2	-0.28		
		(-18.59--17.90)x(1.81+1.02)/2	-0.98		
		(-19.00--18.59)x(2.22+1.81)/2	-0.83		
		(-19.67--19.00)x(2.76+2.22)/2	-1.67		
		(-20.09--19.67)x(2.99+2.76)/2	-1.21		
		(-20.35--20.09)x(2.98+2.99)/2	-0.78		
		(-20.77--20.35)x(2.98+2.98)/2	-1.25		
				17.98	
22 315.00	B01	(-20.24--20.40)x(3.23+3.24)/2	0.52		
		(-19.99--20.24)x(3.15+3.23)/2	0.80		
		(-19.15--19.99)x(2.87+3.15)/2	2.53		
		(-18.23--19.15)x(2.09+2.87)/2	2.28		
		(-18.05--18.23)x(1.96+2.09)/2	0.36		
		(-17.75--18.05)x(1.76+1.96)/2	0.56		
		(-16.96--17.75)x(1.27+1.76)/2	1.20		
		(-16.48--16.96)x(1.15+1.27)/2	0.58		
		(-15.86--16.48)x(0.98+1.15)/2	0.66		
		(-14.83--15.86)x(0.76+0.98)/2	0.90		
		(-14.77--14.83)x(0.75+0.76)/2	0.05		
		(-14.73--14.77)x(0.75+0.75)/2	0.03		
		(-13.67--14.73)x(0.64+0.75)/2	0.74		
		(-12.98--13.67)x(0.58+0.64)/2	0.42		
		(-12.58--12.98)x(0.53+0.58)/2	0.22		
		(-11.91--12.58)x(0.70+0.53)/2	0.41		
		(-11.48--11.91)x(0.86+0.70)/2	0.34		
		(-11.22--11.48)x(0.99+0.86)/2	0.24		
		(-10.39--11.22)x(1.44+0.99)/2	1.01		
		(-9.47--10.39)x(1.79+1.44)/2	1.49		
		(-9.29--9.47)x(1.87+1.79)/2	0.33		
		(-8.99--9.29)x(1.99+1.87)/2	0.58		
		(-8.20--8.99)x(2.33+1.99)/2	1.71		
		(-7.72--8.20)x(2.50+2.33)/2	1.16		
		(-7.10--7.72)x(2.77+2.50)/2	1.63		
		(-6.07--7.10)x(3.05+2.77)/2	3.00		
		(-6.01--6.07)x(3.06+3.05)/2	0.18		
		(-5.23--6.01)x(3.21+3.06)/2	2.45		
		(-4.91--5.23)x(3.31+3.21)/2	1.04		
		(-4.22--4.91)x(3.29+3.31)/2	2.28		
		(-3.82--4.22)x(3.30+3.29)/2	1.32		
		(-3.15--3.82)x(3.23+3.30)/2	2.19		
		(-2.72--3.15)x(3.19+3.23)/2	1.38		
		(-2.46--2.72)x(3.19+3.19)/2	0.83		
		(-1.63--2.46)x(3.19+3.19)/2	2.65		
		(-0.71--1.63)x(3.23+3.19)/2	2.95		
		(-0.53--0.71)x(3.24+3.23)/2	0.58		
		(-0.23--0.53)x(3.25+3.24)/2	0.97		
		(0.56--0.23)x(3.26+3.25)/2	2.57		
		(1.04-0.56)x(3.28+3.26)/2	1.57		
		(1.66-1.04)x(3.30+3.28)/2	2.04		
		(2.69-1.66)x(3.31+3.30)/2	3.40		
		(2.75-2.69)x(3.31+3.31)/2	0.20		
		(2.79-2.75)x(3.31+3.31)/2	0.13		
		(3.85-2.79)x(3.30+3.31)/2	3.50		
		(4.54-3.85)x(3.33+3.30)/2	2.29		
		(4.94-4.54)x(3.35+3.33)/2	1.34		
		(5.61-4.94)x(3.36+3.35)/2	2.25		
		(6.04-5.61)x(3.36+3.36)/2	1.44		
		(6.30-6.04)x(3.36+3.36)/2	0.87		
		(7.13-6.30)x(3.33+3.36)/2	2.78		
		(8.05-7.13)x(3.32+3.33)/2	3.06		
		(8.23-8.05)x(3.32+3.32)/2	0.60		
		(8.53-8.23)x(3.30+3.32)/2	0.99		
		(9.32-8.53)x(3.27+3.30)/2	2.60		
		(9.80-9.32)x(3.26+3.27)/2	1.57		
		(10.42-9.80)x(3.25+3.26)/2	2.02		
		(11.44-10.42)x(3.21+3.25)/2	3.29		
		(11.51-11.44)x(3.21+3.21)/2	0.22		
		(11.55-11.51)x(3.21+3.21)/2	0.13		
		(12.61-11.55)x(3.17+3.21)/2	3.38		
		(13.09-12.61)x(3.17+3.17)/2	1.52		
		(13.70-13.09)x(3.16+3.17)/2	1.93		
		(14.36-13.70)x(3.12+3.16)/2	2.07		
		(14.80-14.36)x(3.11+3.12)/2	1.37		
		(15.06-14.80)x(3.11+3.11)/2	0.81		
		(15.89-15.06)x(3.12+3.11)/2	2.59		
		(16.43-15.89)x(3.10+3.12)/2	1.68		
		(15.89-16.43)x(2.62+2.60)/2	-1.41		
		(15.06-15.89)x(2.61+2.62)/2	-2.17		
		(14.80-15.06)x(2.61+2.61)/2	-0.68		
		(14.36-14.80)x(2.62+2.61)/2	-1.15		
		(13.70-14.36)x(2.66+2.62)/2	-1.74		
		(13.09-13.70)x(2.67+2.66)/2	-1.63		
		A RIPORTARE mq	88.00		

		CALCOLO DELLE AREE		Foglio n. 90
BONIFICA				

N. SEZIONE PROG.	FIG.	ELEMENTI DI CALCOLO	AREA ELEMENTARE mq	AREA FIGURA mq	NOTE
		RIPORTO mq	88.00		
		(12.61-13.09)x(2.67+2.67)/2	-1.28		
		(11.55-12.61)x(2.71+2.67)/2	-2.85		
		(11.51-11.55)x(2.71+2.71)/2	-0.11		
		(11.44-11.51)x(2.71+2.71)/2	-0.19		
		(10.42-11.44)x(2.75+2.71)/2	-2.78		
		(9.80-10.42)x(2.76+2.75)/2	-1.71		
		(9.32-9.80)x(2.77+2.76)/2	-1.33		
		(8.53-9.32)x(2.80+2.77)/2	-2.20		
		(8.23-8.53)x(2.82+2.80)/2	-0.84		
		(8.05-8.23)x(2.82+2.82)/2	-0.51		
		(7.13-8.05)x(2.83+2.82)/2	-2.60		
		(6.30-7.13)x(2.86+2.83)/2	-2.36		
		(6.04-6.30)x(2.86+2.86)/2	-0.74		
		(5.61-6.04)x(2.86+2.86)/2	-1.23		
		(4.94-5.61)x(2.85+2.86)/2	-1.91		
		(4.54-4.94)x(2.83+2.85)/2	-1.14		
		(3.85-4.54)x(2.80+2.83)/2	-1.94		
		(2.79-3.85)x(2.81+2.80)/2	-2.97		
		(2.75-2.79)x(2.81+2.81)/2	-0.11		
		(2.69-2.75)x(2.81+2.81)/2	-0.17		
		(1.66-2.69)x(2.80+2.81)/2	-2.89		
		(1.04-1.66)x(2.78+2.80)/2	-1.73		
		(0.56-1.04)x(2.76+2.78)/2	-1.33		
		(-0.23-0.56)x(2.75+2.76)/2	-2.18		
		(-0.53--0.23)x(2.74+2.75)/2	-0.82		
		(-0.71--0.53)x(2.73+2.74)/2	-0.49		
		(-1.63--0.71)x(2.69+2.73)/2	-2.49		
		(-2.46--1.63)x(2.69+2.69)/2	-2.23		
		(-2.72--2.46)x(2.69+2.69)/2	-0.70		
		(-3.15--2.72)x(2.73+2.69)/2	-1.17		
		(-3.82--3.15)x(2.80+2.73)/2	-1.85		
		(-4.22--3.82)x(2.79+2.80)/2	-1.12		
		(-4.91--4.22)x(2.81+2.79)/2	-1.93		
		(-5.23--4.91)x(2.71+2.81)/2	-0.88		
		(-6.01--5.23)x(2.56+2.71)/2	-2.06		
		(-6.07--6.01)x(2.55+2.56)/2	-0.15		
		(-7.10--6.07)x(2.27+2.55)/2	-2.48		
		(-7.72--7.10)x(2.00+2.27)/2	-1.32		
		(-8.20--7.72)x(1.83+2.00)/2	-0.92		
		(-8.99--8.20)x(1.49+1.83)/2	-1.31		
		(-9.29--8.99)x(1.37+1.49)/2	-0.43		
		(-9.47--9.29)x(1.29+1.37)/2	-0.24		
		(-10.39--9.47)x(0.94+1.29)/2	-1.03		
		(-11.22--10.39)x(0.49+0.94)/2	-0.59		
		(-11.48--11.22)x(0.36+0.49)/2	-0.11		
		(-11.91--11.48)x(0.20+0.36)/2	-0.12		
		(-12.58--11.91)x(0.03+0.20)/2	-0.08		
		(-12.98--12.58)x(0.08+0.03)/2	-0.02		
		(-13.67--12.98)x(0.14+0.08)/2	-0.08		
		(-14.73--13.67)x(0.25+0.14)/2	-0.21		
		(-14.77--14.73)x(0.25+0.25)/2	-0.01		
		(-14.83--14.77)x(0.26+0.25)/2	-0.02		
		(-15.86--14.83)x(0.48+0.26)/2	-0.38		
		(-16.48--15.86)x(0.65+0.48)/2	-0.35		
		(-16.96--16.48)x(0.77+0.65)/2	-0.34		
		(-17.75--16.96)x(1.26+0.77)/2	-0.80		
		(-18.05--17.75)x(1.46+1.26)/2	-0.41		
		(-18.23--18.05)x(1.59+1.46)/2	-0.27		
		(-19.15--18.23)x(2.37+1.59)/2	-1.82		
		(-19.99--19.15)x(2.65+2.37)/2	-2.11		
		(-20.24--19.99)x(2.73+2.65)/2	-0.67		
		(-20.40--20.24)x(2.74+2.73)/2	-0.44		
				18.45	
23 330.00	B01	(-20.36--20.77)x(3.33+3.35)/2	1.37		
		(-19.60--20.36)x(3.22+3.33)/2	2.49		
		(-19.27--19.60)x(3.18+3.22)/2	1.06		
		(-18.72--19.27)x(2.99+3.18)/2	1.70		
		(-18.17--18.72)x(2.71+2.99)/2	1.57		
		(-17.85--18.17)x(2.45+2.71)/2	0.83		
		(-17.08--17.85)x(1.89+2.45)/2	1.67		
		(-16.11--17.08)x(1.30+1.89)/2	1.55		
		(-15.99--16.11)x(1.19+1.30)/2	0.15		
		(-15.78--15.99)x(1.12+1.19)/2	0.24		
		(-14.89--15.78)x(0.82+1.12)/2	0.86		
		(-14.36--14.89)x(0.77+0.82)/2	0.42		
		(-13.80--14.36)x(0.74+0.77)/2	0.42		
		(-12.85--13.80)x(0.65+0.74)/2	0.66		
		(-12.70--12.85)x(0.63+0.65)/2	0.10		
		(-12.62--12.70)x(0.63+0.63)/2	0.05		
		(-11.61--12.62)x(0.51+0.63)/2	0.58		
		(-11.15--11.61)x(0.59+0.51)/2	0.25		
		(-10.52--11.15)x(0.88+0.59)/2	0.46		
		(-9.91--10.52)x(1.13+0.88)/2	0.61		
		(-9.42--9.91)x(1.33+1.13)/2	0.60		
		(-9.13--9.42)x(1.45+1.33)/2	0.40		
		(-8.33--9.13)x(1.79+1.45)/2	1.30		
		(-7.39--8.33)x(2.17+1.79)/2	1.86		
		(-7.23--7.39)x(2.24+2.17)/2	0.35		
		(-6.98--7.23)x(2.34+2.24)/2	0.57		
		(-6.14--6.98)x(2.63+2.34)/2	2.09		
		(-5.64--6.14)x(2.74+2.63)/2	1.34		
		(-5.04--5.64)x(2.91+2.74)/2	1.69		
		(-4.04--5.04)x(3.17+2.91)/2	3.04		
		(-3.95--4.04)x(3.20+3.17)/2	0.29		
		(-3.90--3.95)x(3.20+3.20)/2	0.16		
		(-2.86--3.90)x(3.23+3.20)/2	3.34		
		(-2.15--2.86)x(3.19+3.23)/2	2.28		
		(-1.76--2.15)x(3.16+3.19)/2	1.24		
		(-1.11--1.76)x(3.17+3.16)/2	2.06		
		(-0.67--1.11)x(3.19+3.17)/2	1.40		
		(-0.41--0.67)x(3.20+3.19)/2	0.83		
		(0.43--0.41)x(3.23+3.20)/2	2.70		
		(1.34-0.43)x(3.22+3.23)/2	2.93		
		(1.52-1.34)x(3.22+3.22)/2	0.58		
		A RIPORTARE mq	48.09		

		CALCOLO DELLE AREE		Foglio n. 91
BONIFICA				
N. SEZIONE PROG.	FIG.	ELEMENTI DI CALCOLO	AREA ELEMENTARE mq	AREA FIGURA mq	NOTE
		RIPORTO mq	48.09		
		(1.83-1.52)x(3.23+3.22)/2	1.00		
		(2.61-1.83)x(3.27+3.23)/2	2.53		
		(3.08-2.61)x(3.28+3.27)/2	1.54		
		(3.71-3.08)x(3.29+3.28)/2	2.07		
		(4.77-3.71)x(3.32+3.29)/2	3.50		
		(4.80-4.77)x(3.32+3.32)/2	0.10		
		(4.83-4.80)x(3.32+3.32)/2	0.10		
		(5.90-4.83)x(3.37+3.32)/2	3.58		
		(6.57-5.90)x(3.33+3.37)/2	2.24		
		(6.99-6.57)x(3.32+3.33)/2	1.40		
		(7.18-6.99)x(3.31+3.32)/2	0.63		
		(7.70-7.18)x(3.31+3.31)/2	1.72		
		(7.98-7.70)x(3.32+3.31)/2	0.93		
		(8.09-7.98)x(3.31+3.32)/2	0.36		
		(8.31-8.09)x(3.31+3.31)/2	0.73		
		(9.18-8.31)x(3.29+3.31)/2	2.87		
		(10.06-9.18)x(3.27+3.29)/2	2.89		
		(10.27-10.06)x(3.26+3.27)/2	0.69		
		(10.64-10.27)x(3.25+3.26)/2	1.20		
		(11.37-10.64)x(3.23+3.25)/2	2.37		
		(11.80-11.37)x(3.22+3.23)/2	1.39		
		(12.46-11.80)x(3.21+3.22)/2	2.12		
		(13.55-12.46)x(3.20+3.21)/2	3.49		
		(13.56-13.55)x(3.20+3.20)/2	0.03		
		(13.57-13.56)x(3.20+3.20)/2	0.03		
		(14.65-13.57)x(3.17+3.20)/2	3.44		
		(15.29-14.65)x(3.22+3.17)/2	2.04		
		(15.74-15.29)x(3.26+3.22)/2	1.46		
		(16.51-15.74)x(3.32+3.26)/2	2.53		
		(16.82-16.51)x(3.34+3.32)/2	1.03		
		(16.51-16.82)x(2.82+2.84)/2	-0.88		
		(15.74-16.51)x(2.76+2.82)/2	-2.15		
		(15.29-15.74)x(2.72+2.76)/2	-1.23		
		(14.65-15.29)x(2.67+2.72)/2	-1.72		
		(13.57-14.65)x(2.70+2.67)/2	-2.90		
		(13.56-13.57)x(2.70+2.70)/2	-0.03		
		(13.55-13.56)x(2.70+2.70)/2	-0.03		
		(12.46-13.55)x(2.71+2.70)/2	-2.95		
		(11.80-12.46)x(2.72+2.71)/2	-1.79		
		(11.37-11.80)x(2.73+2.72)/2	-1.17		
		(10.64-11.37)x(2.75+2.73)/2	-2.00		
		(10.27-10.64)x(2.76+2.75)/2	-1.02		
		(10.06-10.27)x(2.77+2.76)/2	-0.58		
		(9.18-10.06)x(2.79+2.77)/2	-2.45		
		(8.31-9.18)x(2.81+2.79)/2	-2.44		
		(8.09-8.31)x(2.81+2.81)/2	-0.62		
		(7.98-8.09)x(2.82+2.81)/2	-0.31		
		(7.70-7.98)x(2.81+2.82)/2	-0.79		
		(7.18-7.70)x(2.81+2.81)/2	-1.46		
		(6.99-7.18)x(2.82+2.81)/2	-0.53		
		(6.57-6.99)x(2.83+2.82)/2	-1.19		
		(5.90-6.57)x(2.87+2.83)/2	-1.91		
		(4.83-5.90)x(2.82+2.87)/2	-3.04		
		(4.80-4.83)x(2.82+2.82)/2	-0.08		
		(4.77-4.80)x(2.82+2.82)/2	-0.08		
		(3.71-4.77)x(2.79+2.82)/2	-2.97		
		(3.08-3.71)x(2.78+2.79)/2	-1.75		
		(2.61-3.08)x(2.77+2.78)/2	-1.30		
		(1.83-2.61)x(2.73+2.77)/2	-2.14		
		(1.52-1.83)x(2.72+2.73)/2	-0.84		
		(1.34-1.52)x(2.72+2.72)/2	-0.49		
		(0.43-1.34)x(2.73+2.72)/2	-2.48		
		(-0.41-0.43)x(2.70+2.73)/2	-2.28		
		(-0.67--0.41)x(2.69+2.70)/2	-0.70		
		(-1.11--0.67)x(2.67+2.69)/2	-1.18		
		(-1.76--1.11)x(2.66+2.67)/2	-1.73		
		(-2.15--1.76)x(2.69+2.66)/2	-1.04		
		(-2.86--2.15)x(2.73+2.69)/2	-1.92		
		(-3.90--2.86)x(2.70+2.73)/2	-2.82		
		(-3.95--3.90)x(2.70+2.70)/2	-0.14		
		(-4.04--3.95)x(2.67+2.70)/2	-0.24		
		(-5.04--4.04)x(2.41+2.67)/2	-2.54		
		(-5.64--5.04)x(2.24+2.41)/2	-1.39		
		(-6.14--5.64)x(2.13+2.24)/2	-1.09		
		(-6.98--6.14)x(1.84+2.13)/2	-1.67		
		(-7.23--6.98)x(1.74+1.84)/2	-0.45		
		(-7.39--7.23)x(1.67+1.74)/2	-0.27		
		(-8.33--7.39)x(1.29+1.67)/2	-1.39		
		(-9.13--8.33)x(0.95+1.29)/2	-0.90		
		(-9.42--9.13)x(0.83+0.95)/2	-0.26		
		(-9.91--9.42)x(0.63+0.83)/2	-0.36		
		(-10.52--9.91)x(0.38+0.63)/2	-0.31		
		(-11.15--10.52)x(0.09+0.38)/2	-0.15		
		(-11.61--11.15)x(0.01+0.09)/2	-0.02		
		(-12.62--11.61)x(0.13+0.01)/2	-0.07		
		(-12.70--12.62)x(0.13+0.13)/2	-0.01		
		(-12.85--12.70)x(0.15+0.13)/2	-0.02		
		(-13.80--12.85)x(0.24+0.15)/2	-0.19		
		(-14.36--13.80)x(0.27+0.24)/2	-0.14		
		(-14.89--14.36)x(0.32+0.27)/2	-0.16		
		(-15.78--14.89)x(0.62+0.32)/2	-0.42		
		(-15.99--15.78)x(0.69+0.62)/2	-0.14		
		(-16.11--15.99)x(0.80+0.69)/2	-0.09		
		(-17.08--16.11)x(1.39+0.80)/2	-1.06		
		(-17.85--17.08)x(1.95+1.39)/2	-1.29		
		(-18.17--17.85)x(2.21+1.95)/2	-0.67		
		(-18.72--18.17)x(2.49+2.21)/2	-1.29		
		(-19.27--18.72)x(2.68+2.49)/2	-1.42		
		(-19.60--19.27)x(2.72+2.68)/2	-0.89		
		(-20.36--19.60)x(2.83+2.72)/2	-2.11		
		(-20.77--20.36)x(2.85+2.83)/2	-1.16		
				18.80	
24 345.00	BO1	(-17.17--17.43)x(3.02+3.12)/2 (-17.05--17.17)x(2.96+3.02)/2	0.80 0.36		
		A RIPORTARE mq	1.16		

	CALCOLO DELLE AREE		Foglio n. 92

BONIFICA

N. SEZIONE PROG.	FIG.	ELEMENTI DI CALCOLO	AREA ELEMENTARE mq	AREA FIGURA mq	NOTE
		RIPORTO mq	1.16		
		(-16.71--17.05)x(2.43+2.96)/2	0.92		
		(-16.25--16.71)x(1.71+2.43)/2	0.95		
		(-16.08--16.25)x(1.50+1.71)/2	0.27		
		(-15.71--16.08)x(1.31+1.50)/2	0.52		
		(-14.99--15.71)x(0.87+1.31)/2	0.78		
		(-13.97--14.99)x(0.72+0.87)/2	0.81		
		(-13.89--13.97)x(0.71+0.72)/2	0.06		
		(-13.76--13.89)x(0.69+0.71)/2	0.09		
		(-12.80--13.76)x(0.56+0.69)/2	0.60		
		(-12.23--12.80)x(0.50+0.56)/2	0.30		
		(-11.71--12.23)x(0.44+0.50)/2	0.24		
		(-10.81--11.71)x(0.47+0.44)/2	0.41		
		(-10.61--10.81)x(0.49+0.47)/2	0.10		
		(-10.50--10.61)x(0.54+0.49)/2	0.06		
		(-9.52--10.50)x(0.97+0.54)/2	0.74		
		(-8.76--9.52)x(1.28+0.97)/2	0.85		
		(-8.43--8.76)x(1.43+1.28)/2	0.45		
		(-7.86--8.43)x(1.67+1.43)/2	0.88		
		(-7.33--7.86)x(1.89+1.67)/2	0.94		
		(-7.02--7.33)x(2.02+1.89)/2	0.61		
		(-6.24--7.02)x(2.34+2.02)/2	1.70		
		(-5.29--6.24)x(2.71+2.34)/2	2.40		
		(-5.15--5.29)x(2.76+2.71)/2	0.38		
		(-4.91--5.15)x(2.83+2.76)/2	0.67		
		(-4.05--4.91)x(3.08+2.83)/2	2.54		
		(-3.55--4.05)x(3.17+3.08)/2	1.56		
		(-2.96--3.55)x(3.32+3.17)/2	1.91		
		(-1.96--2.96)x(3.28+3.32)/2	3.30		
		(-1.89--1.96)x(3.27+3.28)/2	0.23		
		(-1.87--1.89)x(3.27+3.27)/2	0.07		
		(-1.09--1.87)x(3.18+3.27)/2	2.52		
		(-0.77--1.09)x(3.17+3.18)/2	1.02		
		(-0.29--0.77)x(3.17+3.17)/2	1.52		
		(0.32--0.29)x(3.18+3.17)/2	1.94		
		(0.50-0.32)x(3.18+3.18)/2	0.57		
		(1.00-0.50)x(3.18+3.18)/2	1.59		
		(1.41-1.00)x(3.18+3.18)/2	1.30		
		(2.10-1.41)x(3.19+3.18)/2	2.20		
		(2.51-2.10)x(3.20+3.19)/2	1.31		
		(3.40-2.51)x(3.22+3.20)/2	2.86		
		(3.60-3.40)x(3.22+3.22)/2	0.64		
		(3.95-3.60)x(3.23+3.22)/2	1.13		
		(4.69-3.95)x(3.25+3.23)/2	2.40		
		(5.13-4.69)x(3.27+3.25)/2	1.43		
		(5.79-5.13)x(3.29+3.27)/2	2.16		
		(6.87-5.79)x(3.33+3.29)/2	3.57		
		(6.88-6.87)x(3.33+3.33)/2	0.03		
		(6.90-6.88)x(3.33+3.33)/2	0.07		
		(7.97-6.90)x(3.31+3.33)/2	3.55		
		(8.61-7.97)x(3.30+3.31)/2	2.12		
		(9.07-8.61)x(3.29+3.30)/2	1.52		
		(9.85-9.07)x(3.28+3.29)/2	2.56		
		(10.16-9.85)x(3.28+3.28)/2	1.02		
		(10.34-10.16)x(3.27+3.28)/2	0.59		
		(11.25-10.34)x(3.26+3.27)/2	2.97		
		(12.08-11.25)x(3.22+3.26)/2	2.69		
		(12.35-12.08)x(3.21+3.22)/2	0.87		
		(12.80-12.35)x(3.19+3.21)/2	1.44		
		(13.44-12.80)x(3.17+3.19)/2	2.04		
		(13.82-13.44)x(3.16+3.17)/2	1.20		
		(14.53-13.82)x(3.14+3.16)/2	2.24		
		(15.56-14.53)x(3.14+3.14)/2	3.23		
		(15.63-15.56)x(3.14+3.14)/2	0.22		
		(15.75-15.63)x(3.14+3.14)/2	0.38		
		(16.72-15.75)x(3.10+3.14)/2	3.03		
		(17.29-16.72)x(3.14+3.10)/2	1.78		
		(17.40-17.29)x(3.14+3.14)/2	0.35		
		(17.29-17.40)x(2.64+2.64)/2	-0.29		
		(16.72-17.29)x(2.60+2.64)/2	-1.49		
		(15.75-16.72)x(2.64+2.60)/2	-2.54		
		(15.63-15.75)x(2.64+2.64)/2	-0.32		
		(15.56-15.63)x(2.64+2.64)/2	-0.18		
		(14.53-15.56)x(2.64+2.64)/2	-2.72		
		(13.82-14.53)x(2.66+2.64)/2	-1.88		
		(13.44-13.82)x(2.67+2.66)/2	-1.01		
		(12.80-13.44)x(2.69+2.67)/2	-1.72		
		(12.35-12.80)x(2.71+2.69)/2	-1.22		
		(12.08-12.35)x(2.72+2.71)/2	-0.73		
		(11.25-12.08)x(2.76+2.72)/2	-2.27		
		(10.34-11.25)x(2.77+2.76)/2	-2.52		
		(10.16-10.34)x(2.78+2.77)/2	-0.50		
		(9.85-10.16)x(2.78+2.78)/2	-0.86		
		(9.07-9.85)x(2.79+2.78)/2	-2.17		
		(8.61-9.07)x(2.80+2.79)/2	-1.29		
		(7.97-8.61)x(2.81+2.80)/2	-1.80		
		(6.90-7.97)x(2.83+2.81)/2	-3.02		
		(6.88-6.90)x(2.83+2.83)/2	-0.06		
		(6.87-6.88)x(2.83+2.83)/2	-0.03		
		(5.79-6.87)x(2.79+2.83)/2	-3.03		
		(5.13-5.79)x(2.77+2.79)/2	-1.83		
		(4.69-5.13)x(2.75+2.77)/2	-1.21		
		(3.95-4.69)x(2.73+2.75)/2	-2.03		
		(3.60-3.95)x(2.72+2.73)/2	-0.95		
		(3.40-3.60)x(2.72+2.72)/2	-0.54		
		(2.51-3.40)x(2.70+2.72)/2	-2.41		
		(2.10-2.51)x(2.69+2.70)/2	-1.10		
		(1.41-2.10)x(2.68+2.69)/2	-1.85		
		(1.00-1.41)x(2.68+2.68)/2	-1.10		
		(0.50-1.00)x(2.68+2.68)/2	-1.34		
		(0.32-0.50)x(2.68+2.68)/2	-0.48		
		(-0.29-0.32)x(2.67+2.68)/2	-1.63		
		(-0.77--0.29)x(2.67+2.67)/2	-1.28		
		(-1.09--0.77)x(2.68+2.67)/2	-0.86		
		(-1.87--1.09)x(2.77+2.68)/2	-2.13		
		A RIPORTARE mq	36.17		

		CALCOLO DELLE AREE		Foglio n. 93
BONIFICA				
N. SEZIONE PROG.	FIG.	ELEMENTI DI CALCOLO	AREA ELEMENTARE mq	AREA FIGURA mq	NOTE
		RIPORTO mq	36.17		
		(-1.89--1.87)x(2.77+2.77)/2	-0.06		
		(-1.96--1.89)x(2.78+2.77)/2	-0.19		
		(-2.96--1.96)x(2.82+2.78)/2	-2.80		
		(-3.55--2.96)x(2.67+2.82)/2	-1.62		
		(-4.05--3.55)x(2.58+2.67)/2	-1.31		
		(-4.91--4.05)x(2.33+2.58)/2	-2.11		
		(-5.15--4.91)x(2.26+2.33)/2	-0.55		
		(-5.29--5.15)x(2.21+2.26)/2	-0.31		
		(-6.24--5.29)x(1.84+2.21)/2	-1.92		
		(-7.02--6.24)x(1.52+1.84)/2	-1.31		
		(-7.33--7.02)x(1.39+1.52)/2	-0.45		
		(-7.86--7.33)x(1.17+1.39)/2	-0.68		
		(-8.43--7.86)x(0.93+1.17)/2	-0.60		
		(-8.76--8.43)x(0.78+0.93)/2	-0.28		
		(-9.52--8.76)x(0.47+0.78)/2	-0.47		
		(-10.50--9.52)x(0.04+0.47)/2	-0.25		
		(-10.61--10.50)x(-0.01+0.04)/2	-0.00		
		(-10.81--10.61)x(-0.03+-0.01)/2	0.00		
		(-11.71--10.81)x(-0.06+-0.03)/2	0.04		
		(-12.23--11.71)x(0.00+-0.06)/2	0.02		
		(-12.80--12.23)x(0.06+0.00)/2	-0.02		
		(-13.76--12.80)x(0.19+0.06)/2	-0.12		
		(-13.89--13.76)x(0.21+0.19)/2	-0.03		
		(-13.97--13.89)x(0.22+0.21)/2	-0.02		
		(-14.99--13.97)x(0.37+0.22)/2	-0.30		
		(-15.71--14.99)x(0.81+0.37)/2	-0.42		
		(-16.08--15.71)x(1.00+0.81)/2	-0.33		
		(-16.25--16.08)x(1.21+1.00)/2	-0.19		
		(-16.71--16.25)x(1.93+1.21)/2	-0.72		
		(-17.05--16.71)x(2.46+1.93)/2	-0.75		
		(-17.17--17.05)x(2.52+2.46)/2	-0.30		
		(-17.43--17.17)x(2.62+2.52)/2	-0.67		
				17.45	
25 360.00	BO1	(-17.62--17.71)x(2.93+2.98)/2	0.27		
		(-17.24--17.62)x(2.73+2.93)/2	1.08		
		(-17.01--17.24)x(2.56+2.73)/2	0.61		
		(-16.14--17.01)x(2.10+2.56)/2	2.03		
		(-15.28--16.14)x(1.29+2.10)/2	1.46		
		(-15.05--15.28)x(1.14+1.29)/2	0.28		
		(-14.66--15.05)x(0.93+1.14)/2	0.40		
		(-13.96--14.66)x(0.75+0.93)/2	0.59		
		(-13.55--13.96)x(0.75+0.75)/2	0.31		
		(-12.87--13.55)x(0.76+0.75)/2	0.51		
		(-11.82--12.87)x(0.64+0.76)/2	0.73		
		(-11.77--11.82)x(0.64+0.64)/2	0.03		
		(-11.69--11.77)x(0.62+0.64)/2	0.05		
		(-10.68--11.69)x(0.48+0.62)/2	0.56		
		(-10.09--10.68)x(0.70+0.48)/2	0.35		
		(-9.59--10.09)x(0.87+0.70)/2	0.39		
		(-8.72--9.59)x(1.19+0.87)/2	0.90		
		(-8.49--8.72)x(1.27+1.19)/2	0.28		
		(-8.36--8.49)x(1.32+1.27)/2	0.17		
		(-7.40--8.36)x(1.68+1.32)/2	1.44		
		(-6.63--7.40)x(1.96+1.68)/2	1.40		
		(-6.31--6.63)x(2.07+1.96)/2	0.64		
		(-5.75--6.31)x(2.28+2.07)/2	1.22		
		(-5.22--5.75)x(2.48+2.28)/2	1.26		
		(-4.91--5.22)x(2.56+2.48)/2	0.78		
		(-4.12--4.91)x(2.79+2.56)/2	2.11		
		(-3.76--4.12)x(2.82+2.79)/2	1.01		
		(-3.03--3.76)x(2.98+2.82)/2	2.12		
		(-2.79--3.03)x(3.00+2.98)/2	0.72		
		(-1.94--2.79)x(3.04+3.00)/2	2.57		
		(-1.45--1.94)x(3.07+3.04)/2	1.50		
		(-0.85--1.45)x(3.11+3.07)/2	1.85		
		(0.18--0.85)x(3.09+3.11)/2	3.19		
		(0.25-0.18)x(3.09+3.09)/2	0.22		
		(0.28-0.25)x(3.09+3.09)/2	0.09		
		(1.34-0.28)x(3.11+3.09)/2	3.29		
		(2.01-1.34)x(3.12+3.11)/2	2.09		
		(2.43-2.01)x(3.14+3.12)/2	1.31		
		(3.15-2.43)x(3.15+3.14)/2	2.26		
		(3.52-3.15)x(3.16+3.15)/2	1.17		
		(3.74-3.52)x(3.16+3.16)/2	0.70		
		(4.62-3.74)x(3.20+3.16)/2	2.80		
		(5.47-4.62)x(3.24+3.20)/2	2.74		
		(5.71-5.47)x(3.26+3.24)/2	0.78		
		(6.12-5.71)x(3.27+3.26)/2	1.34		
		(6.80-6.12)x(3.30+3.27)/2	2.23		
		(7.20-6.80)x(3.31+3.30)/2	1.32		
		(7.89-7.20)x(3.32+3.31)/2	2.29		
		(8.93-7.89)x(3.29+3.32)/2	3.44		
		(8.99-8.93)x(3.29+3.29)/2	0.20		
		(9.08-8.99)x(3.29+3.29)/2	0.30		
		(10.08-9.08)x(3.28+3.29)/2	3.29		
		(10.66-10.08)x(3.26+3.28)/2	1.90		
		(11.17-10.66)x(3.25+3.26)/2	1.66		
		(12.05-11.17)x(3.22+3.25)/2	2.85		
		(12.26-12.05)x(3.22+3.22)/2	0.68		
		(12.39-12.26)x(3.21+3.22)/2	0.42		
		(13.36-12.39)x(3.18+3.21)/2	3.10		
		(14.12-13.36)x(3.15+3.18)/2	2.41		
		(14.45-14.12)x(3.14+3.15)/2	1.04		
		(14.60-14.45)x(3.13+3.14)/2	0.47		
		(15.02-14.60)x(3.12+3.13)/2	1.31		
		(15.40-15.02)x(3.11+3.12)/2	1.18		
		(15.54-15.40)x(3.10+3.11)/2	0.43		
		(15.85-15.54)x(3.12+3.10)/2	0.96		
		(16.63-15.85)x(3.15+3.12)/2	2.45		
		(17.38-16.63)x(3.20+3.15)/2	2.38		
		(16.63-17.38)x(2.65+2.70)/2	-2.01		
		(15.85-16.63)x(2.62+2.65)/2	-2.06		
		(15.54-15.85)x(2.60+2.62)/2	-0.81		
		(15.40-15.54)x(2.61+2.60)/2	-0.36		
		A RIPORTARE mq	82.67		

		CALCOLO DELLE AREE		Foglio n. 94
BONIFICA				

N. SEZIONE PROG.	FIG.	ELEMENTI DI CALCOLO	AREA ELEMENTARE mq	AREA FIGURA mq	NOTE
		RIPORTO mq	82.67		
		(15.02-15.40)x(2.62+2.61)/2	-0.99		
		(14.60-15.02)x(2.63+2.62)/2	-1.10		
		(14.45-14.60)x(2.64+2.63)/2	-0.40		
		(14.12-14.45)x(2.65+2.64)/2	-0.87		
		(13.36-14.12)x(2.68+2.65)/2	-2.03		
		(12.39-13.36)x(2.71+2.68)/2	-2.61		
		(12.26-12.39)x(2.72+2.71)/2	-0.35		
		(12.05-12.26)x(2.72+2.72)/2	-0.57		
		(11.17-12.05)x(2.75+2.72)/2	-2.41		
		(10.66-11.17)x(2.76+2.75)/2	-1.41		
		(10.08-10.66)x(2.78+2.76)/2	-1.61		
		(9.08-10.08)x(2.79+2.78)/2	-2.79		
		(8.99-9.08)x(2.79+2.79)/2	-0.25		
		(8.93-8.99)x(2.79+2.79)/2	-0.17		
		(7.89-8.93)x(2.82+2.79)/2	-2.92		
		(7.20-7.89)x(2.81+2.82)/2	-1.94		
		(6.80-7.20)x(2.80+2.81)/2	-1.12		
		(6.12-6.80)x(2.77+2.80)/2	-1.89		
		(5.71-6.12)x(2.76+2.77)/2	-1.13		
		(5.47-5.71)x(2.74+2.76)/2	-0.66		
		(4.62-5.47)x(2.70+2.74)/2	-2.31		
		(3.74-4.62)x(2.66+2.70)/2	-2.36		
		(3.52-3.74)x(2.66+2.66)/2	-0.59		
		(3.15-3.52)x(2.65+2.66)/2	-0.98		
		(2.43-3.15)x(2.64+2.65)/2	-1.90		
		(2.01-2.43)x(2.62+2.64)/2	-1.10		
		(1.34-2.01)x(2.61+2.62)/2	-1.75		
		(0.28-1.34)x(2.59+2.61)/2	-2.76		
		(0.25-0.28)x(2.59+2.59)/2	-0.08		
		(0.18-0.25)x(2.59+2.59)/2	-0.18		
		(-0.85-0.18)x(2.61+2.59)/2	-2.68		
		(-1.45--0.85)x(2.57+2.61)/2	-1.55		
		(-1.94--1.45)x(2.54+2.57)/2	-1.25		
		(-2.79--1.94)x(2.50+2.54)/2	-2.14		
		(-3.03--2.79)x(2.48+2.50)/2	-0.60		
		(-3.76--3.03)x(2.32+2.48)/2	-1.75		
		(-4.12--3.76)x(2.29+2.32)/2	-0.83		
		(-4.91--4.12)x(2.06+2.29)/2	-1.72		
		(-5.22--4.91)x(1.98+2.06)/2	-0.63		
		(-5.75--5.22)x(1.78+1.98)/2	-1.00		
		(-6.31--5.75)x(1.57+1.78)/2	-0.94		
		(-6.63--6.31)x(1.46+1.57)/2	-0.48		
		(-7.40--6.63)x(1.18+1.46)/2	-1.02		
		(-8.36--7.40)x(0.82+1.18)/2	-0.96		
		(-8.49--8.36)x(0.77+0.82)/2	-0.10		
		(-8.72--8.49)x(0.69+0.77)/2	-0.17		
		(-9.59--8.72)x(0.37+0.69)/2	-0.46		
		(-10.09--9.59)x(0.20+0.37)/2	-0.14		
		(-10.68--10.09)x(-0.02+0.20)/2	-0.05		
		(-11.69--10.68)x(0.12+-0.02)/2	-0.05		
		(-11.77--11.69)x(0.14+0.12)/2	-0.01		
		(-11.82--11.77)x(0.14+0.14)/2	-0.01		
		(-12.87--11.82)x(0.26+0.14)/2	-0.21		
		(-13.55--12.87)x(0.25+0.26)/2	-0.17		
		(-13.96--13.55)x(0.25+0.25)/2	-0.10		
		(-14.66--13.96)x(0.43+0.25)/2	-0.24		
		(-15.05--14.66)x(0.64+0.43)/2	-0.21		
		(-15.28--15.05)x(0.79+0.64)/2	-0.16		
		(-16.14--15.28)x(1.60+0.79)/2	-1.03		
		(-17.01--16.14)x(2.06+1.60)/2	-1.59		
		(-17.24--17.01)x(2.23+2.06)/2	-0.49		
		(-17.62--17.24)x(2.43+2.23)/2	-0.89		
		(-17.71--17.62)x(2.48+2.43)/2	-0.22		
				17.59	
26 375.00	BO1	(-17.27--17.41)x(3.22+3.22)/2	0.45		
		(-16.55--17.27)x(2.89+3.22)/2	2.20		
		(-16.18--16.55)x(2.76+2.89)/2	1.05		
		(-15.53--16.18)x(2.15+2.76)/2	1.60		
		(-15.08--15.53)x(1.72+2.15)/2	0.87		
		(-14.83--15.08)x(1.56+1.72)/2	0.41		
		(-13.99--14.83)x(0.96+1.56)/2	1.06		
		(-13.11--13.99)x(0.75+0.96)/2	0.75		
		(-12.90--13.11)x(0.68+0.75)/2	0.15		
		(-12.54--12.90)x(0.66+0.68)/2	0.24		
		(-11.81--12.54)x(0.59+0.66)/2	0.46		
		(-11.38--11.81)x(0.56+0.59)/2	0.25		
		(-10.72--11.38)x(0.51+0.56)/2	0.35		
		(-9.66--10.72)x(0.64+0.51)/2	0.61		
		(-9.63--9.66)x(0.64+0.64)/2	0.02		
		(-9.61--9.63)x(0.65+0.64)/2	0.01		
		(-9.56--9.61)x(0.67+0.65)/2	0.03		
		(-8.81--9.56)x(0.93+0.67)/2	0.60		
		(-8.53--8.81)x(1.03+0.93)/2	0.27		
		(-7.94--8.53)x(1.24+1.03)/2	0.67		
		(-7.44--7.94)x(1.41+1.24)/2	0.66		
		(-6.58--7.44)x(1.71+1.41)/2	1.34		
		(-6.35--6.58)x(1.78+1.71)/2	0.40		
		(-6.22--6.35)x(1.83+1.78)/2	0.23		
		(-5.26--6.22)x(2.15+1.83)/2	1.91		
		(-4.50--5.26)x(2.40+2.15)/2	1.73		
		(-4.17--4.50)x(2.52+2.40)/2	0.81		
		(-3.59--4.17)x(2.70+2.52)/2	1.51		
		(-3.07--3.59)x(2.88+2.70)/2	1.45		
		(-2.78--3.07)x(2.96+2.88)/2	0.85		
		(-1.98--2.78)x(3.17+2.96)/2	2.45		
		(-1.05--1.98)x(3.14+3.17)/2	2.93		
		(-0.89--1.05)x(3.16+3.14)/2	0.50		
		(-0.61--0.89)x(3.13+3.16)/2	0.88		
		(0.20--0.61)x(3.06+3.13)/2	2.51		
		(0.67-0.20)x(3.07+3.06)/2	1.44		
		(1.29-0.67)x(3.09+3.07)/2	1.91		
		(2.37-1.29)x(3.11+3.09)/2	3.35		
		(2.38-2.37)x(3.11+3.11)/2	0.03		
		(2.39-2.38)x(3.11+3.11)/2	0.03		
		A RIPORTARE mq	38.97		

		CALCOLO DELLE AREE		Foglio n. 95
BONIFICA				
N. SEZIONE PROG.	FIG.	ELEMENTI DI CALCOLO	AREA ELEMENTARE mq	AREA FIGURA mq	NOTE
		RIPORTO mq	38.97		
		(3.48-2.39)x(3.13+3.11)/2	3.40		
		(4.11-3.48)x(3.15+3.13)/2	1.98		
		(4.57-4.11)x(3.17+3.15)/2	1.45		
		(5.36-4.57)x(3.19+3.17)/2	2.51		
		(5.66-5.36)x(3.19+3.19)/2	0.96		
		(5.83-5.66)x(3.20+3.19)/2	0.54		
		(6.75-5.83)x(3.23+3.20)/2	2.96		
		(7.56-6.75)x(3.26+3.23)/2	2.63		
		(7.84-7.56)x(3.27+3.26)/2	0.91		
		(8.34-7.84)x(3.28+3.27)/2	1.64		
		(8.93-8.34)x(3.28+3.28)/2	1.94		
		(9.57-8.93)x(3.27+3.28)/2	2.10		
		(10.03-9.57)x(3.26+3.27)/2	1.50		
		(11.00-10.03)x(3.24+3.26)/2	3.15		
		(11.12-11.00)x(3.23+3.24)/2	0.39		
		(11.32-11.12)x(3.23+3.23)/2	0.65		
		(12.21-11.32)x(3.22+3.23)/2	2.87		
		(12.72-12.21)x(3.20+3.22)/2	1.64		
		(13.30-12.72)x(3.19+3.20)/2	1.85		
		(14.31-13.30)x(3.16+3.19)/2	3.21		
		(14.39-14.31)x(3.16+3.16)/2	0.25		
		(14.44-14.39)x(3.15+3.16)/2	0.16		
		(15.49-14.44)x(3.13+3.15)/2	3.30		
		(16.16-15.49)x(3.10+3.13)/2	2.09		
		(16.58-16.16)x(3.09+3.10)/2	1.30		
		(17.29-16.58)x(3.08+3.09)/2	2.19		
		(17.64-17.29)x(3.07+3.08)/2	1.08		
		(17.29-17.64)x(2.58+2.57)/2	-0.90		
		(16.58-17.29)x(2.59+2.58)/2	-1.84		
		(16.16-16.58)x(2.60+2.59)/2	-1.09		
		(15.49-16.16)x(2.63+2.60)/2	-1.75		
		(14.44-15.49)x(2.65+2.63)/2	-2.77		
		(14.39-14.44)x(2.66+2.65)/2	-0.13		
		(14.31-14.39)x(2.66+2.66)/2	-0.21		
		(13.30-14.31)x(2.69+2.66)/2	-2.70		
		(12.72-13.30)x(2.70+2.69)/2	-1.56		
		(12.21-12.72)x(2.72+2.70)/2	-1.38		
		(11.32-12.21)x(2.73+2.72)/2	-2.43		
		(11.12-11.32)x(2.73+2.73)/2	-0.55		
		(11.00-11.12)x(2.74+2.73)/2	-0.33		
		(10.03-11.00)x(2.76+2.74)/2	-2.67		
		(9.57-10.03)x(2.77+2.76)/2	-1.27		
		(8.93-9.57)x(2.78+2.77)/2	-1.78		
		(8.34-8.93)x(2.78+2.78)/2	-1.64		
		(7.84-8.34)x(2.77+2.78)/2	-1.39		
		(7.56-7.84)x(2.76+2.77)/2	-0.77		
		(6.75-7.56)x(2.73+2.76)/2	-2.22		
		(5.83-6.75)x(2.70+2.73)/2	-2.50		
		(5.66-5.83)x(2.69+2.70)/2	-0.46		
		(5.36-5.66)x(2.69+2.69)/2	-0.81		
		(4.57-5.36)x(2.67+2.69)/2	-2.12		
		(4.11-4.57)x(2.65+2.67)/2	-1.22		
		(3.48-4.11)x(2.63+2.65)/2	-1.66		
		(2.39-3.48)x(2.61+2.63)/2	-2.86		
		(2.38-2.39)x(2.61+2.61)/2	-0.03		
		(2.37-2.38)x(2.61+2.61)/2	-0.03		
		(1.29-2.37)x(2.59+2.61)/2	-2.81		
		(0.67-1.29)x(2.57+2.59)/2	-1.60		
		(0.20-0.67)x(2.56+2.57)/2	-1.21		
		(-0.61-0.20)x(2.63+2.56)/2	-2.10		
		(-0.89--0.61)x(2.66+2.63)/2	-0.74		
		(-1.05--0.89)x(2.64+2.66)/2	-0.42		
		(-1.98--1.05)x(2.67+2.64)/2	-2.47		
		(-2.78--1.98)x(2.46+2.67)/2	-2.05		
		(-3.07--2.78)x(2.38+2.46)/2	-0.70		
		(-3.59--3.07)x(2.20+2.38)/2	-1.19		
		(-4.17--3.59)x(2.02+2.20)/2	-1.22		
		(-4.50--4.17)x(1.90+2.02)/2	-0.65		
		(-5.26--4.50)x(1.65+1.90)/2	-1.35		
		(-6.22--5.26)x(1.33+1.65)/2	-1.43		
		(-6.35--6.22)x(1.28+1.33)/2	-0.17		
		(-6.58--6.35)x(1.21+1.28)/2	-0.29		
		(-7.44--6.58)x(0.91+1.21)/2	-0.91		
		(-7.94--7.44)x(0.74+0.91)/2	-0.41		
		(-8.53--7.94)x(0.53+0.74)/2	-0.37		
		(-8.81--8.53)x(0.43+0.53)/2	-0.13		
		(-9.56--8.81)x(0.17+0.43)/2	-0.22		
		(-9.61--9.56)x(0.15+0.17)/2	-0.01		
		(-9.63--9.61)x(0.14+0.15)/2	-0.00		
		(-9.66--9.63)x(0.14+0.14)/2	-0.00		
		(-10.72--9.66)x(0.01+0.14)/2	-0.08		
		(-11.38--10.72)x(0.06+0.01)/2	-0.02		
		(-11.81--11.38)x(0.09+0.06)/2	-0.03		
		(-12.54--11.81)x(0.16+0.09)/2	-0.09		
		(-12.90--12.54)x(0.18+0.16)/2	-0.06		
		(-13.11--12.90)x(0.25+0.18)/2	-0.05		
		(-13.99--13.11)x(0.46+0.25)/2	-0.31		
		(-14.83--13.99)x(1.06+0.46)/2	-0.64		
		(-15.08--14.83)x(1.22+1.06)/2	-0.29		
		(-15.53--15.08)x(1.65+1.22)/2	-0.65		
		(-16.18--15.53)x(2.26+1.65)/2	-1.27		
		(-16.55--16.18)x(2.39+2.26)/2	-0.86		
		(-17.27--16.55)x(2.72+2.39)/2	-1.84		
		(-17.41--17.27)x(2.72+2.72)/2	-0.38		
				17.53	
27 390.00	B01	(-17.27--17.64)x(3.09+3.12)/2	1.15		
		(-16.38--17.27)x(2.96+3.09)/2	2.69		
		(-16.18--16.38)x(2.93+2.96)/2	0.59		
		(-16.06--16.18)x(2.89+2.93)/2	0.35		
		(-15.09--16.06)x(2.56+2.89)/2	2.64		
		(-14.63--15.09)x(2.14+2.56)/2	1.08		
		(-14.00--14.63)x(1.45+2.14)/2	1.13		
		(-13.38--14.00)x(1.04+1.45)/2	0.77		
		(-12.91--13.38)x(0.77+1.04)/2	0.43		
		A RIPORTARE mq	10.83		

	CALCOLO DELLE AREE		Foglio n. 96

BONIFICA

N. SEZIONE PROG.	FIG.	ELEMENTI DI CALCOLO	AREA ELEMENTARE mq	AREA FIGURA mq	NOTE
		RIPORTO mq	10.83		
		(-12.64--12.91)x(0.75+0.77)/2	0.21		
		(-11.82--12.64)x(0.67+0.75)/2	0.58		
		(-10.92--11.82)x(0.58+0.67)/2	0.56		
		(-10.72--10.92)x(0.57+0.58)/2	0.11		
		(-10.38--10.72)x(0.53+0.57)/2	0.19		
		(-9.63--10.38)x(0.46+0.53)/2	0.37		
		(-9.21--9.63)x(0.58+0.46)/2	0.22		
		(-8.54--9.21)x(0.77+0.58)/2	0.45		
		(-7.49--8.54)x(1.15+0.77)/2	1.01		
		(-7.45--7.49)x(1.16+1.15)/2	0.05		
		(-7.38--7.45)x(1.18+1.16)/2	0.08		
		(-6.36--7.38)x(1.53+1.18)/2	1.38		
		(-5.78--6.36)x(1.74+1.53)/2	0.95		
		(-5.27--5.78)x(1.93+1.74)/2	0.94		
		(-4.38--5.27)x(2.23+1.93)/2	1.85		
		(-4.18--4.38)x(2.30+2.23)/2	0.45		
		(-4.06--4.18)x(2.34+2.30)/2	0.28		
		(-3.09--4.06)x(2.68+2.34)/2	2.43		
		(-2.35--3.09)x(2.88+2.68)/2	2.06		
		(-2.00--2.35)x(2.97+2.88)/2	1.02		
		(-1.38--2.00)x(3.14+2.97)/2	1.89		
		(-0.91--1.38)x(3.24+3.14)/2	1.50		
		(-0.63--0.91)x(3.21+3.24)/2	0.90		
		(0.19--0.63)x(3.12+3.21)/2	2.60		
		(1.08-0.19)x(3.07+3.12)/2	2.75		
		(1.28-1.08)x(3.05+3.07)/2	0.61		
		(1.62-1.28)x(3.05+3.05)/2	1.04		
		(2.37-1.62)x(3.07+3.05)/2	2.29		
		(2.79-2.37)x(3.09+3.07)/2	1.29		
		(3.46-2.79)x(3.11+3.09)/2	2.08		
		(3.77-3.46)x(3.12+3.11)/2	0.97		
		(4.55-3.77)x(3.13+3.12)/2	2.44		
		(4.62-4.55)x(3.13+3.13)/2	0.22		
		(5.64-4.62)x(3.18+3.13)/2	3.22		
		(6.22-5.64)x(3.20+3.18)/2	1.85		
		(6.73-6.22)x(3.20+3.20)/2	1.63		
		(7.62-6.73)x(3.24+3.20)/2	2.87		
		(7.82-7.62)x(3.24+3.24)/2	0.65		
		(7.94-7.82)x(3.24+3.24)/2	0.39		
		(8.91-7.94)x(3.26+3.24)/2	3.15		
		(9.65-8.91)x(3.25+3.26)/2	2.41		
		(10.00-9.65)x(3.25+3.25)/2	1.14		
		(10.62-10.00)x(3.24+3.25)/2	2.01		
		(11.09-10.62)x(3.23+3.24)/2	1.52		
		(11.37-11.09)x(3.22+3.23)/2	0.90		
		(12.19-11.37)x(3.20+3.22)/2	2.63		
		(13.08-12.19)x(3.17+3.20)/2	2.83		
		(13.28-13.08)x(3.16+3.17)/2	0.63		
		(13.62-13.28)x(3.15+3.16)/2	1.07		
		(14.37-13.62)x(3.13+3.15)/2	2.35		
		(14.80-14.37)x(3.12+3.13)/2	1.34		
		(15.46-14.80)x(3.09+3.12)/2	2.05		
		(16.51-15.46)x(3.08+3.09)/2	3.24		
		(16.55-16.51)x(3.08+3.08)/2	0.12		
		(16.62-16.55)x(3.07+3.08)/2	0.22		
		(17.64-16.62)x(3.02+3.07)/2	3.11		
		(17.78-17.64)x(3.02+3.02)/2	0.42		
		(17.64-17.78)x(2.52+2.52)/2	-0.35		
		(16.62-17.64)x(2.57+2.52)/2	-2.60		
		(16.55-16.62)x(2.58+2.57)/2	-0.18		
		(16.51-16.55)x(2.58+2.58)/2	-0.10		
		(15.46-16.51)x(2.59+2.58)/2	-2.71		
		(14.80-15.46)x(2.62+2.59)/2	-1.72		
		(14.37-14.80)x(2.63+2.62)/2	-1.13		
		(13.62-14.37)x(2.65+2.63)/2	-1.98		
		(13.28-13.62)x(2.66+2.65)/2	-0.90		
		(13.08-13.28)x(2.67+2.66)/2	-0.53		
		(12.19-13.08)x(2.70+2.67)/2	-2.39		
		(11.37-12.19)x(2.72+2.70)/2	-2.22		
		(11.09-11.37)x(2.73+2.72)/2	-0.76		
		(10.62-11.09)x(2.74+2.73)/2	-1.29		
		(10.00-10.62)x(2.75+2.74)/2	-1.70		
		(9.65-10.00)x(2.75+2.75)/2	-0.96		
		(8.91-9.65)x(2.76+2.75)/2	-2.04		
		(7.94-8.91)x(2.74+2.76)/2	-2.67		
		(7.82-7.94)x(2.74+2.74)/2	-0.33		
		(7.62-7.82)x(2.74+2.74)/2	-0.55		
		(6.73-7.62)x(2.70+2.74)/2	-2.42		
		(6.22-6.73)x(2.70+2.70)/2	-1.38		
		(5.64-6.22)x(2.68+2.70)/2	-1.56		
		(4.62-5.64)x(2.63+2.68)/2	-2.71		
		(4.55-4.62)x(2.63+2.63)/2	-0.18		
		(3.77-4.55)x(2.62+2.63)/2	-2.05		
		(3.46-3.77)x(2.61+2.62)/2	-0.81		
		(2.79-3.46)x(2.59+2.61)/2	-1.74		
		(2.37-2.79)x(2.57+2.59)/2	-1.08		
		(1.62-2.37)x(2.55+2.57)/2	-1.92		
		(1.28-1.62)x(2.55+2.55)/2	-0.87		
		(1.08-1.28)x(2.57+2.55)/2	-0.51		
		(0.19-1.08)x(2.62+2.57)/2	-2.31		
		(-0.63-0.19)x(2.71+2.62)/2	-2.19		
		(-0.91--0.63)x(2.74+2.71)/2	-0.76		
		(-1.38--0.91)x(2.64+2.74)/2	-1.26		
		(-2.00--1.38)x(2.47+2.64)/2	-1.58		
		(-2.35--2.00)x(2.38+2.47)/2	-0.85		
		(-3.09--2.35)x(2.18+2.38)/2	-1.69		
		(-4.06--3.09)x(1.84+2.18)/2	-1.95		
		(-4.18--4.06)x(1.80+1.84)/2	-0.22		
		(-4.38--4.18)x(1.73+1.80)/2	-0.35		
		(-5.27--4.38)x(1.43+1.73)/2	-1.41		
		(-5.78--5.27)x(1.24+1.43)/2	-0.68		
		(-6.36--5.78)x(1.03+1.24)/2	-0.66		
		(-7.38--6.36)x(0.68+1.03)/2	-0.87		
		(-7.45--7.38)x(0.66+0.68)/2	-0.05		
		A RIPORTARE mq	27.18		

		CALCOLO DELLE AREE		Foglio n. 97
BONIFICA				
N. SEZIONE PROG.	FIG.	ELEMENTI DI CALCOLO	AREA ELEMENTARE mq	AREA FIGURA mq	NOTE
		RIPORTO mq	27.18		
		(-7.49--7.45)x(0.65+0.66)/2	-0.03		
		(-8.54--7.49)x(0.27+0.65)/2	-0.48		
		(-9.21--8.54)x(0.08+0.27)/2	-0.12		
		(-9.63--9.21)x(-0.04+0.08)/2	-0.01		
		(-10.38--9.63)x(0.03+-0.04)/2	0.00		
		(-10.72--10.38)x(0.07+0.03)/2	-0.02		
		(-10.92--10.72)x(0.08+0.07)/2	-0.01		
		(-11.82--10.92)x(0.17+0.08)/2	-0.11		
		(-12.64--11.82)x(0.25+0.17)/2	-0.17		
		(-12.91--12.64)x(0.27+0.25)/2	-0.07		
		(-13.38--12.91)x(0.54+0.27)/2	-0.19		
		(-14.00--13.38)x(0.95+0.54)/2	-0.46		
		(-14.63--14.00)x(1.64+0.95)/2	-0.82		
		(-15.09--14.63)x(2.06+1.64)/2	-0.85		
		(-16.06--15.09)x(2.39+2.06)/2	-2.16		
		(-16.18--16.06)x(2.43+2.39)/2	-0.29		
		(-16.38--16.18)x(2.46+2.43)/2	-0.49		
		(-17.27--16.38)x(2.59+2.46)/2	-2.25		
		(-17.64--17.27)x(2.62+2.59)/2	-0.96		
				17.69	
28 405.00	B01	(-17.26--17.65)x(3.15+3.16)/2	1.23		
		(-17.24--17.26)x(3.15+3.15)/2	0.06		
		(-17.21--17.24)x(3.15+3.15)/2	0.09		
		(-16.15--17.21)x(3.03+3.15)/2	3.28		
		(-15.55--16.15)x(2.86+3.03)/2	1.77		
		(-15.06--15.55)x(2.72+2.86)/2	1.37		
		(-14.20--15.06)x(2.16+2.72)/2	2.10		
		(-13.97--14.20)x(1.97+2.16)/2	0.47		
		(-13.85--13.97)x(1.88+1.97)/2	0.23		
		(-12.88--13.85)x(0.97+1.88)/2	1.38		
		(-12.14--12.88)x(0.83+0.97)/2	0.67		
		(-11.79--12.14)x(0.72+0.83)/2	0.27		
		(-11.18--11.79)x(0.71+0.72)/2	0.44		
		(-10.70--11.18)x(0.71+0.71)/2	0.34		
		(-10.43--10.70)x(0.67+0.71)/2	0.19		
		(-9.61--10.43)x(0.59+0.67)/2	0.52		
		(-8.72--9.61)x(0.67+0.59)/2	0.56		
		(-8.52--8.72)x(0.69+0.67)/2	0.14		
		(-8.16--8.52)x(0.80+0.69)/2	0.27		
		(-7.43--8.16)x(1.05+0.80)/2	0.68		
		(-7.02--7.43)x(1.20+1.05)/2	0.46		
		(-6.34--7.02)x(1.43+1.20)/2	0.89		
		(-5.31--6.34)x(1.78+1.43)/2	1.65		
		(-5.25--5.31)x(1.80+1.78)/2	0.11		
		(-5.15--5.25)x(1.83+1.80)/2	0.18		
		(-4.16--5.15)x(2.15+1.83)/2	1.97		
		(-3.60--4.16)x(2.31+2.15)/2	1.25		
		(-3.07--3.60)x(2.46+2.31)/2	1.26		
		(-2.13--3.07)x(2.66+2.46)/2	2.41		
		(-1.98--2.13)x(2.70+2.66)/2	0.40		
		(-1.22--1.98)x(2.94+2.70)/2	2.14		
		(-0.89--1.22)x(3.04+2.94)/2	0.99		
		(-0.19--0.89)x(3.12+3.04)/2	2.16		
		(0.20--0.19)x(3.18+3.12)/2	1.23		
		(0.89-0.20)x(3.09+3.18)/2	2.16		
		(1.29-0.89)x(3.03+3.09)/2	1.22		
		(1.52-1.29)x(3.03+3.03)/2	0.70		
		(2.38-1.52)x(3.04+3.03)/2	2.61		
		(3.23-2.38)x(3.05+3.04)/2	2.59		
		(3.47-3.23)x(3.05+3.05)/2	0.73		
		(3.90-3.47)x(3.07+3.05)/2	1.32		
		(4.56-3.90)x(3.08+3.07)/2	2.03		
		(4.93-4.56)x(3.09+3.08)/2	1.14		
		(5.65-4.93)x(3.10+3.09)/2	2.23		
		(6.64-5.65)x(3.14+3.10)/2	3.09		
		(6.74-6.64)x(3.14+3.14)/2	0.31		
		(6.92-6.74)x(3.14+3.14)/2	0.57		
		(7.83-6.92)x(3.16+3.14)/2	2.87		
		(8.35-7.83)x(3.19+3.16)/2	1.65		
		(8.92-8.35)x(3.21+3.19)/2	1.82		
		(9.94-8.92)x(3.24+3.21)/2	3.29		
		(10.01-9.94)x(3.24+3.24)/2	0.23		
		(10.05-10.01)x(3.24+3.24)/2	0.13		
		(11.10-10.05)x(3.23+3.24)/2	3.40		
		(11.76-11.10)x(3.21+3.23)/2	2.13		
		(12.19-11.76)x(3.19+3.21)/2	1.38		
		(12.95-12.19)x(3.18+3.19)/2	2.42		
		(13.19-12.95)x(3.17+3.18)/2	0.76		
		(13.28-13.19)x(3.17+3.17)/2	0.29		
		(14.00-13.28)x(3.16+3.17)/2	2.28		
		(14.37-14.00)x(3.14+3.16)/2	1.17		
		(14.80-14.37)x(3.13+3.14)/2	1.35		
		(15.46-14.80)x(3.11+3.13)/2	2.06		
		(15.60-15.46)x(3.11+3.11)/2	0.44		
		(15.97-15.60)x(3.09+3.11)/2	1.15		
		(16.55-15.97)x(3.06+3.09)/2	1.78		
		(16.88-16.55)x(3.04+3.06)/2	1.01		
		(17.64-16.88)x(3.00+3.04)/2	2.30		
		(17.90-17.64)x(2.99+3.00)/2	0.78		
		(17.64-17.90)x(2.50+2.49)/2	-0.65		
		(16.88-17.64)x(2.54+2.50)/2	-1.92		
		(16.55-16.88)x(2.56+2.54)/2	-0.84		
		(15.97-16.55)x(2.59+2.56)/2	-1.49		
		(15.60-15.97)x(2.61+2.59)/2	-0.96		
		(15.46-15.60)x(2.61+2.61)/2	-0.37		
		(14.80-15.46)x(2.63+2.61)/2	-1.73		
		(14.37-14.80)x(2.64+2.63)/2	-1.13		
		(14.00-14.37)x(2.66+2.64)/2	-0.98		
		(13.28-14.00)x(2.67+2.66)/2	-1.92		
		(13.19-13.28)x(2.67+2.67)/2	-0.24		
		(12.95-13.19)x(2.68+2.67)/2	-0.64		
		(12.19-12.95)x(2.69+2.68)/2	-2.04		
		(11.76-12.19)x(2.71+2.69)/2	-1.16		
		(11.10-11.76)x(2.73+2.71)/2	-1.80		
		A RIPORTARE mq	70.68		

		CALCOLO DELLE AREE		Foglio n. 98
BONIFICA				
N. SEZIONE PROG.	FIG.	ELEMENTI DI CALCOLO	AREA ELEMENTARE mq	AREA FIGURA mq	NOTE
		RIPORTO mq	70.68		
		(10.05-11.10)x(2.74+2.73)/2	-2.87		
		(10.01-10.05)x(2.74+2.74)/2	-0.11		
		(9.94-10.01)x(2.74+2.74)/2	-0.19		
		(8.92-9.94)x(2.71+2.74)/2	-2.78		
		(8.35-8.92)x(2.69+2.71)/2	-1.54		
		(7.83-8.35)x(2.66+2.69)/2	-1.39		
		(6.92-7.83)x(2.64+2.66)/2	-2.41		
		(6.74-6.92)x(2.64+2.64)/2	-0.48		
		(6.64-6.74)x(2.64+2.64)/2	-0.26		
		(5.65-6.64)x(2.60+2.64)/2	-2.59		
		(4.93-5.65)x(2.59+2.60)/2	-1.87		
		(4.56-4.93)x(2.58+2.59)/2	-0.96		
		(3.90-4.56)x(2.57+2.58)/2	-1.70		
		(3.47-3.90)x(2.55+2.57)/2	-1.10		
		(3.23-3.47)x(2.55+2.55)/2	-0.61		
		(2.38-3.23)x(2.54+2.55)/2	-2.16		
		(1.52-2.38)x(2.53+2.54)/2	-2.18		
		(1.29-1.52)x(2.53+2.53)/2	-0.58		
		(0.89-1.29)x(2.59+2.53)/2	-1.02		
		(0.20-0.89)x(2.68+2.59)/2	-1.82		
		(-0.19-0.20)x(2.62+2.68)/2	-1.03		
		(-0.89--0.19)x(2.54+2.62)/2	-1.81		
		(-1.22--0.89)x(2.44+2.54)/2	-0.82		
		(-1.98--1.22)x(2.20+2.44)/2	-1.76		
		(-2.13--1.98)x(2.16+2.20)/2	-0.33		
		(-3.07--2.13)x(1.96+2.16)/2	-1.94		
		(-3.60--3.07)x(1.81+1.96)/2	-1.00		
		(-4.16--3.60)x(1.65+1.81)/2	-0.97		
		(-5.15--4.16)x(1.33+1.65)/2	-1.48		
		(-5.25--5.15)x(1.30+1.33)/2	-0.13		
		(-5.31--5.25)x(1.28+1.30)/2	-0.08		
		(-6.34--5.31)x(0.93+1.28)/2	-1.14		
		(-7.02--6.34)x(0.70+0.93)/2	-0.55		
		(-7.43--7.02)x(0.55+0.70)/2	-0.26		
		(-8.16--7.43)x(0.30+0.55)/2	-0.31		
		(-8.52--8.16)x(0.19+0.30)/2	-0.09		
		(-8.72--8.52)x(0.17+0.19)/2	-0.04		
		(-9.61--8.72)x(0.09+0.17)/2	-0.12		
		(-10.43--9.61)x(0.17+0.09)/2	-0.11		
		(-10.70--10.43)x(0.21+0.17)/2	-0.05		
		(-11.18--10.70)x(0.21+0.21)/2	-0.10		
		(-11.79--11.18)x(0.22+0.21)/2	-0.13		
		(-12.14--11.79)x(0.33+0.22)/2	-0.10		
		(-12.88--12.14)x(0.47+0.33)/2	-0.30		
		(-13.85--12.88)x(1.38+0.47)/2	-0.90		
		(-13.97--13.85)x(1.47+1.38)/2	-0.17		
		(-14.20--13.97)x(1.66+1.47)/2	-0.36		
		(-15.06--14.20)x(2.22+1.66)/2	-1.67		
		(-15.55--15.06)x(2.36+2.22)/2	-1.12		
		(-16.15--15.55)x(2.53+2.36)/2	-1.47		
		(-17.21--16.15)x(2.65+2.53)/2	-2.75		
		(-17.24--17.21)x(2.65+2.65)/2	-0.08		
		(-17.26--17.24)x(2.65+2.65)/2	-0.05		
		(-17.65--17.26)x(2.66+2.65)/2	-1.04		
				17.80	
29 420.00	BO1	(-17.19--17.94)x(3.06+3.09)/2	2.31		
		(-16.72--17.19)x(3.09+3.06)/2	1.45		
		(-16.10--16.72)x(3.11+3.09)/2	1.92		
		(-15.02--16.10)x(3.08+3.11)/2	3.34		
		(-15.01--15.02)x(3.08+3.08)/2	0.03		
		(-14.99--15.01)x(3.07+3.08)/2	0.06		
		(-13.92--14.99)x(2.63+3.07)/2	3.05		
		(-13.32--13.92)x(2.18+2.63)/2	1.44		
		(-12.83--13.32)x(1.82+2.18)/2	0.98		
		(-11.96--12.83)x(1.11+1.82)/2	1.27		
		(-11.74--11.96)x(0.94+1.11)/2	0.23		
		(-11.62--11.74)x(0.92+0.94)/2	0.11		
		(-10.65--11.62)x(0.67+0.92)/2	0.77		
		(-9.92--10.65)x(0.62+0.67)/2	0.47		
		(-9.56--9.92)x(0.59+0.62)/2	0.22		
		(-8.92--9.56)x(0.52+0.59)/2	0.36		
		(-8.47--8.92)x(0.47+0.52)/2	0.22		
		(-8.22--8.47)x(0.52+0.47)/2	0.12		
		(-7.38--8.22)x(0.63+0.52)/2	0.48		
		(-6.99--7.38)x(0.75+0.63)/2	0.27		
		(-6.29--6.99)x(0.96+0.75)/2	0.60		
		(-5.89--6.29)x(1.08+0.96)/2	0.41		
		(-5.20--5.89)x(1.30+1.08)/2	0.82		
		(-4.82--5.20)x(1.41+1.30)/2	0.51		
		(-4.11--4.82)x(1.65+1.41)/2	1.09		
		(-3.12--4.11)x(1.95+1.65)/2	1.78		
		(-3.02--3.12)x(1.98+1.95)/2	0.20		
		(-2.86--3.02)x(2.03+1.98)/2	0.32		
		(-1.93--2.86)x(2.33+2.03)/2	2.03		
		(-1.42--1.93)x(2.45+2.33)/2	1.22		
		(-0.84--1.42)x(2.56+2.45)/2	1.45		
		(0.18--0.84)x(2.82+2.56)/2	2.74		
		(0.24-0.18)x(2.83+2.82)/2	0.17		
		(0.28-0.24)x(2.84+2.83)/2	0.11		
		(1.33-0.28)x(2.97+2.84)/2	3.05		
		(1.98-1.33)x(2.95+2.97)/2	1.92		
		(2.42-1.98)x(2.94+2.95)/2	1.30		
		(3.21-2.42)x(2.97+2.94)/2	2.33		
		(3.51-3.21)x(2.99+2.97)/2	0.89		
		(3.68-3.51)x(2.99+2.99)/2	0.51		
		(4.60-3.68)x(3.03+2.99)/2	2.77		
		(5.38-4.60)x(3.06+3.03)/2	2.38		
		(5.69-5.38)x(3.07+3.06)/2	0.95		
		(6.24-5.69)x(3.09+3.07)/2	1.69		
		(6.78-6.24)x(3.10+3.09)/2	1.67		
		(7.08-6.78)x(3.11+3.10)/2	0.93		
		(7.87-7.08)x(3.13+3.11)/2	2.46		
		(8.78-7.87)x(3.15+3.13)/2	2.86		
		(8.96-8.78)x(3.15+3.15)/2	0.57		
		A RIPORTARE mq	58.83		

		CALCOLO DELLE AREE		Foglio n. 99
BONIFICA				
N. SEZIONE PROG.	FIG.	ELEMENTI DI CALCOLO	AREA ELEMENTARE mq	AREA FIGURA mq	NOTE
		RIPORTO mq	58.83		
		(9.28-8.96)x(3.16+3.15)/2	1.01		
		(10.05-9.28)x(3.21+3.16)/2	2.45		
		(10.48-10.05)x(3.21+3.21)/2	1.38		
		(11.14-10.48)x(3.22+3.21)/2	2.12		
		(12.18-11.14)x(3.18+3.22)/2	3.33		
		(12.23-12.18)x(3.18+3.18)/2	0.16		
		(12.25-12.23)x(3.18+3.18)/2	0.06		
		(12.31-12.25)x(3.18+3.18)/2	0.19		
		(13.05-12.31)x(3.19+3.18)/2	2.36		
		(13.32-13.05)x(3.18+3.19)/2	0.86		
		(13.88-13.32)x(3.16+3.18)/2	1.78		
		(14.41-13.88)x(3.15+3.16)/2	1.67		
		(15.34-14.41)x(3.14+3.15)/2	2.92		
		(15.50-15.34)x(3.13+3.14)/2	0.50		
		(15.58-15.50)x(3.13+3.13)/2	0.25		
		(16.59-15.58)x(3.08+3.13)/2	3.14		
		(17.28-16.59)x(3.04+3.08)/2	2.11		
		(17.68-17.28)x(3.02+3.04)/2	1.21		
		(17.95-17.68)x(3.00+3.02)/2	0.81		
		(17.68-17.95)x(2.52+2.50)/2	-0.68		
		(17.28-17.68)x(2.54+2.52)/2	-1.01		
		(16.59-17.28)x(2.58+2.54)/2	-1.77		
		(15.58-16.59)x(2.63+2.58)/2	-2.63		
		(15.50-15.58)x(2.63+2.63)/2	-0.21		
		(15.34-15.50)x(2.64+2.63)/2	-0.42		
		(14.41-15.34)x(2.65+2.64)/2	-2.46		
		(13.88-14.41)x(2.66+2.65)/2	-1.41		
		(13.32-13.88)x(2.68+2.66)/2	-1.50		
		(13.05-13.32)x(2.69+2.68)/2	-0.72		
		(12.31-13.05)x(2.68+2.69)/2	-1.99		
		(12.25-12.31)x(2.68+2.68)/2	-0.16		
		(12.23-12.25)x(2.68+2.68)/2	-0.05		
		(12.18-12.23)x(2.68+2.68)/2	-0.13		
		(11.14-12.18)x(2.72+2.68)/2	-2.81		
		(10.48-11.14)x(2.71+2.72)/2	-1.79		
		(10.05-10.48)x(2.71+2.71)/2	-1.17		
		(9.28-10.05)x(2.66+2.71)/2	-2.07		
		(8.96-9.28)x(2.65+2.66)/2	-0.85		
		(8.78-8.96)x(2.65+2.65)/2	-0.48		
		(7.87-8.78)x(2.63+2.65)/2	-2.40		
		(7.08-7.87)x(2.61+2.63)/2	-2.07		
		(6.78-7.08)x(2.60+2.61)/2	-0.78		
		(6.24-6.78)x(2.59+2.60)/2	-1.40		
		(5.69-6.24)x(2.57+2.59)/2	-1.42		
		(5.38-5.69)x(2.56+2.57)/2	-0.80		
		(4.60-5.38)x(2.53+2.56)/2	-1.99		
		(3.68-4.60)x(2.49+2.53)/2	-2.31		
		(3.51-3.68)x(2.49+2.49)/2	-0.42		
		(3.21-3.51)x(2.47+2.49)/2	-0.74		
		(2.42-3.21)x(2.44+2.47)/2	-1.94		
		(1.98-2.42)x(2.45+2.44)/2	-1.08		
		(1.33-1.98)x(2.47+2.45)/2	-1.60		
		(0.28-1.33)x(2.34+2.47)/2	-2.53		
		(0.24-0.28)x(2.33+2.34)/2	-0.09		
		(0.18-0.24)x(2.32+2.33)/2	-0.14		
		(-0.84-0.18)x(2.06+2.32)/2	-2.23		
		(-1.42--0.84)x(1.95+2.06)/2	-1.16		
		(-1.93--1.42)x(1.83+1.95)/2	-0.96		
		(-2.86--1.93)x(1.53+1.83)/2	-1.56		
		(-3.02--2.86)x(1.48+1.53)/2	-0.24		
		(-3.12--3.02)x(1.45+1.48)/2	-0.15		
		(-4.11--3.12)x(1.15+1.45)/2	-1.29		
		(-4.82--4.11)x(0.91+1.15)/2	-0.73		
		(-5.20--4.82)x(0.80+0.91)/2	-0.32		
		(-5.89--5.20)x(0.58+0.80)/2	-0.48		
		(-6.29--5.89)x(0.46+0.58)/2	-0.21		
		(-6.99--6.29)x(0.25+0.46)/2	-0.25		
		(-7.38--6.99)x(0.13+0.25)/2	-0.07		
		(-8.22--7.38)x(0.02+0.13)/2	-0.06		
		(-8.47--8.22)x(-0.03+0.02)/2	0.00		
		(-8.92--8.47)x(0.02+-0.03)/2	0.00		
		(-9.56--8.92)x(0.09+0.02)/2	-0.04		
		(-9.92--9.56)x(0.12+0.09)/2	-0.04		
		(-10.65--9.92)x(0.17+0.12)/2	-0.11		
		(-11.62--10.65)x(0.42+0.17)/2	-0.29		
		(-11.74--11.62)x(0.44+0.42)/2	-0.05		
		(-11.96--11.74)x(0.61+0.44)/2	-0.12		
		(-12.83--11.96)x(1.32+0.61)/2	-0.84		
		(-13.32--12.83)x(1.68+1.32)/2	-0.74		
		(-13.92--13.32)x(2.13+1.68)/2	-1.14		
		(-14.99--13.92)x(2.57+2.13)/2	-2.51		
		(-15.01--14.99)x(2.58+2.57)/2	-0.05		
		(-15.02--15.01)x(2.58+2.58)/2	-0.03		
		(-16.10--15.02)x(2.61+2.58)/2	-2.80		
		(-16.72--16.10)x(2.59+2.61)/2	-1.61		
		(-17.19--16.72)x(2.56+2.59)/2	-1.21		
		(-17.94--17.19)x(2.59+2.56)/2	-1.93		
				17.90	
30 435.00	BO1	(-19.28--19.50)x(3.00+3.00)/2	0.66		
		(-18.81--19.28)x(2.99+3.00)/2	1.41		
		(-18.19--18.81)x(2.99+2.99)/2	1.85		
		(-17.84--18.19)x(2.99+2.99)/2	1.05		
		(-17.10--17.84)x(2.96+2.99)/2	2.20		
		(-16.15--17.10)x(2.98+2.96)/2	2.82		
		(-16.01--16.15)x(2.98+2.98)/2	0.42		
		(-15.76--16.01)x(3.02+2.98)/2	0.75		
		(-14.92--15.76)x(3.14+3.02)/2	2.59		
		(-14.45--14.92)x(3.09+3.14)/2	1.46		
		(-13.83--14.45)x(3.08+3.09)/2	1.91		
		(-12.76--13.83)x(2.36+3.08)/2	2.91		
		(-12.74--12.76)x(2.36+2.36)/2	0.05		
		(-12.71--12.74)x(2.33+2.35)/2	0.07		
		(-11.93--12.71)x(1.73+2.33)/2	1.58		
		(-11.66--11.93)x(1.46+1.73)/2	0.43		
		A RIPORTARE mq	22.16		

	CALCOLO DELLE AREE		Foglio n. 100

BONIFICA

N. SEZIONE PROG.	FIG.	ELEMENTI DI CALCOLO	AREA ELEMENTARE mq	AREA FIGURA mq	NOTE
		RIPORTO mq	22.16		
		(-11.07--11.66)x(1.12+1.46)/2	0.76		
		(-10.57--11.07)x(0.80+1.12)/2	0.48		
		(-9.66--10.57)x(0.68+0.80)/2	0.67		
		(-9.48--9.66)x(0.66+0.68)/2	0.12		
		(-9.38--9.48)x(0.65+0.66)/2	0.07		
		(-8.39--9.38)x(0.50+0.65)/2	0.57		
		(-7.68--8.39)x(0.54+0.50)/2	0.37		
		(-7.30--7.68)x(0.53+0.54)/2	0.20		
		(-6.61--7.30)x(0.78+0.53)/2	0.45		
		(-6.21--6.61)x(0.95+0.78)/2	0.35		
		(-5.99--6.21)x(1.06+0.95)/2	0.22		
		(-5.12--5.99)x(1.54+1.06)/2	1.13		
		(-4.30--5.12)x(1.73+1.54)/2	1.34		
		(-4.03--4.30)x(1.81+1.73)/2	0.48		
		(-3.56--4.03)x(1.90+1.81)/2	0.87		
		(-2.95--3.56)x(2.00+1.90)/2	1.19		
		(-2.60--2.95)x(2.08+2.00)/2	0.71		
		(-1.86--2.60)x(2.24+2.08)/2	1.60		
		(-0.91--1.86)x(2.40+2.24)/2	2.20		
		(-0.77--0.91)x(2.42+2.40)/2	0.34		
		(-0.51--0.77)x(2.51+2.42)/2	0.64		
		(0.32--0.51)x(2.84+2.51)/2	2.22		
		(0.78-0.32)x(2.92+2.84)/2	1.32		
		(1.41-0.78)x(3.09+2.92)/2	1.89		
		(2.47-1.41)x(3.01+3.09)/2	3.23		
		(2.50-2.47)x(3.01+3.01)/2	0.09		
		(2.54-2.50)x(3.00+3.01)/2	0.12		
		(3.59-2.54)x(2.94+3.00)/2	3.12		
		(4.17-3.59)x(2.97+2.94)/2	1.71		
		(4.67-4.17)x(2.99+2.97)/2	1.49		
		(5.59-4.67)x(3.02+2.99)/2	2.76		
		(5.76-5.59)x(3.03+3.02)/2	0.51		
		(5.86-5.76)x(3.03+3.03)/2	0.30		
		(6.85-5.86)x(3.05+3.03)/2	3.01		
		(7.32-6.85)x(3.07+3.05)/2	1.44		
		(7.94-7.32)x(3.08+3.07)/2	1.91		
		(8.64-7.94)x(3.11+3.08)/2	2.17		
		(9.03-8.64)x(3.13+3.11)/2	1.22		
		(9.24-9.03)x(3.13+3.13)/2	0.66		
		(10.12-9.24)x(3.14+3.13)/2	2.76		
		(10.94-10.12)x(3.18+3.14)/2	2.59		
		(11.21-10.94)x(3.20+3.18)/2	0.86		
		(11.69-11.21)x(3.19+3.20)/2	1.53		
		(12.29-11.69)x(3.17+3.19)/2	1.91		
		(12.63-12.29)x(3.17+3.17)/2	1.08		
		(13.38-12.63)x(3.16+3.17)/2	2.37		
		(14.32-13.38)x(3.13+3.16)/2	2.96		
		(14.47-14.32)x(3.12+3.13)/2	0.47		
		(14.74-14.47)x(3.12+3.12)/2	0.84		
		(15.56-14.74)x(3.12+3.12)/2	2.56		
		(16.02-15.56)x(3.11+3.12)/2	1.43		
		(16.65-16.02)x(3.08+3.11)/2	1.95		
		(17.71-16.65)x(3.06+3.08)/2	3.25		
		(17.74-17.71)x(3.06+3.06)/2	0.09		
		(17.79-17.74)x(3.06+3.06)/2	0.15		
		(17.94-17.79)x(3.05+3.06)/2	0.46		
		(17.79-17.94)x(2.56+2.55)/2	-0.38		
		(17.74-17.79)x(2.56+2.56)/2	-0.13		
		(17.71-17.74)x(2.56+2.56)/2	-0.08		
		(16.65-17.71)x(2.58+2.56)/2	-2.72		
		(16.02-16.65)x(2.61+2.58)/2	-1.63		
		(15.56-16.02)x(2.62+2.61)/2	-1.20		
		(14.74-15.56)x(2.62+2.62)/2	-2.15		
		(14.47-14.74)x(2.62+2.62)/2	-0.71		
		(14.32-14.47)x(2.63+2.62)/2	-0.39		
		(13.38-14.32)x(2.66+2.63)/2	-2.49		
		(12.63-13.38)x(2.67+2.66)/2	-2.00		
		(12.29-12.63)x(2.67+2.67)/2	-0.91		
		(11.69-12.29)x(2.69+2.67)/2	-1.61		
		(11.21-11.69)x(2.70+2.69)/2	-1.29		
		(10.94-11.21)x(2.68+2.70)/2	-0.73		
		(10.12-10.94)x(2.64+2.68)/2	-2.18		
		(9.24-10.12)x(2.63+2.64)/2	-2.32		
		(9.03-9.24)x(2.63+2.63)/2	-0.55		
		(8.64-9.03)x(2.61+2.63)/2	-1.02		
		(7.94-8.64)x(2.58+2.61)/2	-1.82		
		(7.32-7.94)x(2.57+2.58)/2	-1.60		
		(6.85-7.32)x(2.55+2.57)/2	-1.20		
		(5.86-6.85)x(2.53+2.55)/2	-2.51		
		(5.76-5.86)x(2.53+2.53)/2	-0.25		
		(5.59-5.76)x(2.52+2.53)/2	-0.43		
		(4.67-5.59)x(2.49+2.52)/2	-2.30		
		(4.17-4.67)x(2.47+2.49)/2	-1.24		
		(3.59-4.17)x(2.44+2.47)/2	-1.42		
		(2.54-3.59)x(2.50+2.44)/2	-2.59		
		(2.50-2.54)x(2.51+2.50)/2	-0.10		
		(2.47-2.50)x(2.51+2.51)/2	-0.08		
		(1.41-2.47)x(2.59+2.51)/2	-2.70		
		(0.78-1.41)x(2.42+2.59)/2	-1.58		
		(0.32-0.78)x(2.34+2.42)/2	-1.09		
		(-0.51-0.32)x(2.01+2.34)/2	-1.81		
		(-0.77--0.51)x(1.92+2.01)/2	-0.51		
		(-0.91--0.77)x(1.90+1.92)/2	-0.27		
		(-1.86--0.91)x(1.74+1.90)/2	-1.73		
		(-2.60--1.86)x(1.58+1.74)/2	-1.23		
		(-2.95--2.60)x(1.50+1.58)/2	-0.54		
		(-3.56--2.95)x(1.40+1.50)/2	-0.88		
		(-4.03--3.56)x(1.31+1.40)/2	-0.64		
		(-4.30--4.03)x(1.23+1.31)/2	-0.34		
		(-5.12--4.30)x(1.04+1.23)/2	-0.93		
		(-5.99--5.12)x(0.56+1.04)/2	-0.70		
		(-6.21--5.99)x(0.45+0.56)/2	-0.11		
		(-6.61--6.21)x(0.28+0.45)/2	-0.15		
		(-7.30--6.61)x(0.03+0.28)/2	-0.11		
		A RIPORTARE mq	38.00		

		CALCOLO DELLE AREE		Foglio n. 101
BONIFICA				
N. SEZIONE PROG.	FIG.	ELEMENTI DI CALCOLO	AREA ELEMENTARE mq	AREA FIGURA mq	NOTE
		RIPORTO mq	38.00		
		(-7.68--7.30)x(0.04+0.03)/2	-0.01		
		(-8.39--7.68)x(0.00+0.04)/2	-0.01		
		(-9.38--8.39)x(0.15+0.00)/2	-0.07		
		(-9.48--9.38)x(0.16+0.15)/2	-0.02		
		(-9.66--9.48)x(0.18+0.16)/2	-0.03		
		(-10.57--9.66)x(0.30+0.18)/2	-0.22		
		(-11.07--10.57)x(0.62+0.30)/2	-0.23		
		(-11.66--11.07)x(0.96+0.62)/2	-0.47		
		(-11.93--11.66)x(1.23+0.96)/2	-0.30		
		(-12.71--11.93)x(1.83+1.23)/2	-1.19		
		(-12.74--12.71)x(1.85+1.83)/2	-0.06		
		(-12.76--12.74)x(1.86+1.86)/2	-0.04		
		(-13.83--12.76)x(2.58+1.86)/2	-2.38		
		(-14.45--13.83)x(2.59+2.58)/2	-1.60		
		(-14.92--14.45)x(2.64+2.59)/2	-1.23		
		(-15.76--14.92)x(2.52+2.64)/2	-2.17		
		(-16.01--15.76)x(2.48+2.52)/2	-0.63		
		(-16.15--16.01)x(2.48+2.48)/2	-0.35		
		(-17.10--16.15)x(2.46+2.48)/2	-2.35		
		(-17.84--17.10)x(2.49+2.46)/2	-1.83		
		(-18.19--17.84)x(2.49+2.49)/2	-0.87		
		(-18.81--18.19)x(2.49+2.49)/2	-1.54		
		(-19.28--18.81)x(2.50+2.49)/2	-1.17		
		(-19.50--19.28)x(2.50+2.50)/2	-0.55		
				18.68	
31 450.00	B01	(-13.87--14.70)x(2.68+2.85)/2	2.29		
		(-13.72--13.87)x(2.67+2.68)/2	0.40		
		(-13.45--13.72)x(2.52+2.67)/2	0.70		
		(-12.63--13.45)x(2.04+2.52)/2	1.87		
		(-12.18--12.63)x(1.75+2.04)/2	0.85		
		(-11.54--12.18)x(1.37+1.75)/2	1.00		
		(-10.49--11.54)x(0.85+1.37)/2	1.17		
		(-10.45--10.49)x(0.82+0.85)/2	0.03		
		(-10.38--10.45)x(0.81+0.82)/2	0.06		
		(-9.37--10.38)x(0.61+0.81)/2	0.72		
		(-8.81--9.37)x(0.54+0.61)/2	0.32		
		(-8.28--8.81)x(0.46+0.54)/2	0.27		
		(-8.03--8.28)x(0.44+0.46)/2	0.11		
		(-7.31--8.03)x(0.42+0.44)/2	0.31		
		(-7.19--7.31)x(0.42+0.42)/2	0.05		
		(-7.12--7.19)x(0.44+0.42)/2	0.03		
		(-6.10--7.12)x(0.73+0.44)/2	0.60		
		(-5.44--6.10)x(1.17+0.73)/2	0.63		
		(-5.01--5.44)x(1.42+1.17)/2	0.56		
		(-4.25--5.01)x(1.85+1.42)/2	1.24		
		(-3.93--4.25)x(2.03+1.85)/2	0.62		
		(-3.75--3.93)x(2.11+2.03)/2	0.37		
		(-2.84--3.75)x(2.68+2.11)/2	2.18		
		(-2.07--2.84)x(2.76+2.68)/2	2.09		
		(-1.75--2.07)x(2.81+2.76)/2	0.89		
		(-1.18--1.75)x(2.76+2.81)/2	1.59		
		(-0.66--1.18)x(2.70+2.76)/2	1.42		
		(-0.38--0.66)x(2.70+2.70)/2	0.76		
		(0.42--0.38)x(2.66+2.70)/2	2.14		
		(1.30-0.42)x(2.80+2.66)/2	2.40		
		(1.51-1.30)x(2.84+2.80)/2	0.59		
		(1.61-1.51)x(2.85+2.84)/2	0.28		
		(1.89-1.61)x(2.87+2.85)/2	0.80		
		(2.41-1.89)x(2.91+2.87)/2	1.50		
		(2.60-2.41)x(2.93+2.91)/2	0.55		
		(2.99-2.60)x(2.93+2.93)/2	1.14		
		(3.69-2.99)x(2.93+2.93)/2	2.05		
		(4.68-3.69)x(2.92+2.93)/2	2.90		
		(4.78-4.68)x(2.92+2.92)/2	0.29		
		(4.96-4.78)x(2.93+2.92)/2	0.53		
		(5.86-4.96)x(2.96+2.93)/2	2.65		
		(6.36-5.86)x(2.98+2.96)/2	1.48		
		(6.95-6.36)x(2.99+2.98)/2	1.76		
		(8.02-6.95)x(3.02+2.99)/2	3.22		
		(8.04-8.02)x(3.02+3.02)/2	0.06		
		(8.05-8.04)x(3.02+3.02)/2	0.03		
		(9.13-8.05)x(3.06+3.02)/2	3.28		
		(9.73-9.13)x(3.08+3.06)/2	1.84		
		(10.21-9.73)x(3.10+3.08)/2	1.48		
		(11.09-10.21)x(3.12+3.10)/2	2.74		
		(11.30-11.09)x(3.12+3.12)/2	0.66		
		(11.42-11.30)x(3.13+3.12)/2	0.37		
		(12.39-11.42)x(3.16+3.13)/2	3.05		
		(13.10-12.39)x(3.14+3.16)/2	2.24		
		(13.48-13.10)x(3.14+3.14)/2	1.19		
		(14.16-13.48)x(3.13+3.14)/2	2.13		
		(14.57-14.16)x(3.13+3.13)/2	1.28		
		(14.79-14.57)x(3.13+3.13)/2	0.69		
		(15.65-14.79)x(3.11+3.13)/2	2.68		
		(16.47-15.65)x(3.09+3.11)/2	2.54		
		(16.74-16.47)x(3.08+3.09)/2	0.83		
		(17.23-16.74)x(3.07+3.08)/2	1.51		
		(17.83-17.23)x(3.06+3.07)/2	1.84		
		(17.98-17.83)x(3.06+3.06)/2	0.46		
		(17.83-17.98)x(2.56+2.56)/2	-0.38		
		(17.23-17.83)x(2.57+2.56)/2	-1.54		
		(16.74-17.23)x(2.58+2.57)/2	-1.26		
		(16.47-16.74)x(2.59+2.58)/2	-0.70		
		(15.65-16.47)x(2.61+2.59)/2	-2.13		
		(14.79-15.65)x(2.63+2.61)/2	-2.25		
		(14.57-14.79)x(2.63+2.63)/2	-0.58		
		(14.16-14.57)x(2.63+2.63)/2	-1.08		
		(13.48-14.16)x(2.64+2.63)/2	-1.79		
		(13.10-13.48)x(2.64+2.64)/2	-1.00		
		(12.39-13.10)x(2.66+2.64)/2	-1.88		
		(11.42-12.39)x(2.63+2.66)/2	-2.57		
		(11.30-11.42)x(2.62+2.63)/2	-0.31		
		(11.09-11.30)x(2.62+2.62)/2	-0.55		
		(10.21-11.09)x(2.60+2.62)/2	-2.30		
		A RIPORTARE mq	57.99		

		CALCOLO DELLE AREE		Foglio n. 102
BONIFICA				
N. SEZIONE PROG.	FIG.	ELEMENTI DI CALCOLO	AREA ELEMENTARE mq	AREA FIGURA mq	NOTE
		RIPORTO mq	57.99		
		(9.73-10.21)x(2.58+2.60)/2	-1.24		
		(9.13-9.73)x(2.56+2.58)/2	-1.54		
		(8.05-9.13)x(2.52+2.56)/2	-2.74		
		(8.04-8.05)x(2.52+2.52)/2	-0.03		
		(8.02-8.04)x(2.52+2.52)/2	-0.05		
		(6.95-8.02)x(2.49+2.52)/2	-2.68		
		(6.36-6.95)x(2.48+2.49)/2	-1.47		
		(5.86-6.36)x(2.46+2.48)/2	-1.23		
		(4.96-5.86)x(2.43+2.46)/2	-2.20		
		(4.78-4.96)x(2.42+2.43)/2	-0.44		
		(4.68-4.78)x(2.42+2.42)/2	-0.24		
		(3.69-4.68)x(2.43+2.42)/2	-2.40		
		(2.99-3.69)x(2.43+2.43)/2	-1.70		
		(2.60-2.99)x(2.43+2.43)/2	-0.95		
		(2.41-2.60)x(2.41+2.43)/2	-0.46		
		(1.89-2.41)x(2.37+2.41)/2	-1.24		
		(1.61-1.89)x(2.35+2.37)/2	-0.66		
		(1.51-1.61)x(2.34+2.35)/2	-0.23		
		(1.30-1.51)x(2.30+2.34)/2	-0.49		
		(0.42-1.30)x(2.16+2.30)/2	-1.96		
		(-0.38-0.42)x(2.20+2.16)/2	-1.74		
		(-0.66--0.38)x(2.20+2.20)/2	-0.62		
		(-1.18--0.66)x(2.26+2.20)/2	-1.16		
		(-1.75--1.18)x(2.31+2.26)/2	-1.30		
		(-2.07--1.75)x(2.26+2.31)/2	-0.73		
		(-2.84--2.07)x(2.18+2.26)/2	-1.71		
		(-3.75--2.84)x(1.61+2.18)/2	-1.72		
		(-3.93--3.75)x(1.53+1.61)/2	-0.28		
		(-4.25--3.93)x(1.35+1.53)/2	-0.46		
		(-5.01--4.25)x(0.92+1.35)/2	-0.86		
		(-5.44--5.01)x(0.67+0.92)/2	-0.34		
		(-6.10--5.44)x(0.23+0.67)/2	-0.30		
		(-7.12--6.10)x(-0.06+0.23)/2	-0.09		
		(-7.19--7.12)x(-0.08+-0.06)/2	0.00		
		(-7.31--7.19)x(-0.08+-0.08)/2	0.01		
		(-8.03--7.31)x(-0.06+-0.08)/2	0.05		
		(-8.28--8.03)x(-0.04+-0.06)/2	0.01		
		(-9.37--8.81)x(0.11+0.04)/2	-0.04		
		(-10.38--9.37)x(0.31+0.11)/2	-0.21		
		(-10.45--10.38)x(0.32+0.31)/2	-0.02		
		(-10.49--10.45)x(0.35+0.32)/2	-0.01		
		(-11.54--10.49)x(0.87+0.35)/2	-0.64		
		(-12.18--11.54)x(1.25+0.87)/2	-0.68		
		(-12.63--12.18)x(1.54+1.25)/2	-0.63		
		(-13.45--12.63)x(2.02+1.54)/2	-1.46		
		(-13.72--13.45)x(2.17+2.02)/2	-0.57		
		(-13.87--13.72)x(2.18+2.17)/2	-0.33		
		(-14.70--13.87)x(2.35+2.18)/2	-1.88		
				16.33	
32 465.00	BO1	(-14.66--14.78)x(2.85+2.84)/2	0.34		
		(-14.16--14.66)x(2.87+2.85)/2	1.43		
		(-13.57--14.16)x(2.90+2.87)/2	1.70		
		(-13.25--13.57)x(2.70+2.90)/2	0.90		
		(-12.49--13.25)x(2.38+2.70)/2	1.93		
		(-11.57--12.49)x(1.44+2.38)/2	1.76		
		(-11.40--11.57)x(1.28+1.44)/2	0.23		
		(-11.08--11.40)x(1.07+1.28)/2	0.38		
		(-10.31--11.08)x(0.71+1.07)/2	0.69		
		(-9.90--10.31)x(0.78+0.71)/2	0.31		
		(-9.23--9.90)x(0.84+0.78)/2	0.54		
		(-8.22--9.23)x(0.92+0.84)/2	0.89		
		(-8.14--8.22)x(0.93+0.92)/2	0.07		
		(-7.99--8.14)x(0.92+0.93)/2	0.14		
		(-7.05--7.99)x(0.73+0.92)/2	0.78		
		(-6.54--7.05)x(0.84+0.73)/2	0.40		
		(-5.96--6.54)x(0.84+0.84)/2	0.49		
		(-4.91--5.96)x(1.24+0.84)/2	1.09		
		(-4.88--4.91)x(1.25+1.24)/2	0.04		
		(-4.86--4.88)x(1.25+1.25)/2	0.02		
		(-3.79--4.86)x(1.60+1.25)/2	1.52		
		(-3.28--3.79)x(1.74+1.60)/2	0.85		
		(-2.70--3.28)x(1.84+1.74)/2	1.04		
		(-1.82--2.70)x(1.98+1.84)/2	1.68		
		(-1.62--1.82)x(2.02+1.98)/2	0.40		
		(-1.50--1.62)x(2.04+2.02)/2	0.24		
		(-0.53--1.50)x(2.25+2.04)/2	2.08		
		(0.17--0.53)x(2.38+2.25)/2	1.62		
		(0.56-0.17)x(2.45+2.38)/2	0.94		
		(1.26-0.56)x(2.58+2.45)/2	1.76		
		(1.65-1.26)x(2.67+2.58)/2	1.02		
		(1.85-1.65)x(2.74+2.67)/2	0.54		
		(2.73-1.85)x(3.05+2.74)/2	2.55		
		(3.53-2.73)x(3.08+3.05)/2	2.45		
		(3.82-3.53)x(3.13+3.08)/2	0.90		
		(4.35-3.82)x(3.04+3.13)/2	1.64		
		(4.91-4.35)x(2.95+3.04)/2	1.68		
		(5.21-4.91)x(2.96+2.95)/2	0.89		
		(5.99-5.21)x(2.94+2.96)/2	2.30		
		(6.89-5.99)x(2.98+2.94)/2	2.66		
		(7.08-6.89)x(2.99+2.98)/2	0.57		
		(7.43-7.08)x(3.00+2.99)/2	1.05		
		(8.17-7.43)x(3.02+3.00)/2	2.23		
		(8.57-8.17)x(3.03+3.02)/2	1.21		
		(9.26-8.57)x(3.05+3.03)/2	2.10		
		(10.25-9.26)x(3.08+3.05)/2	3.03		
		(10.34-10.25)x(3.09+3.08)/2	0.28		
		(10.52-10.34)x(3.09+3.09)/2	0.56		
		(11.43-10.52)x(3.09+3.09)/2	2.81		
		(11.92-11.43)x(3.11+3.09)/2	1.52		
		(12.52-11.92)x(3.12+3.11)/2	1.87		
		(13.60-12.52)x(3.13+3.12)/2	3.38		
		(14.69-13.60)x(3.07+3.13)/2	3.38		
		(15.21-14.69)x(3.08+3.07)/2	1.60		
		(15.78-15.21)x(3.08+3.08)/2	1.76		
		A RIPORTARE mq	70.24		

		CALCOLO DELLE AREE		Foglio n. 103
BONIFICA				
N. SEZIONE PROG.	FIG.	ELEMENTI DI CALCOLO	AREA ELEMENTARE mq	AREA FIGURA mq	NOTE
		RIPORTO mq	70.24		
		(16.69-15.78)x(3.06+3.08)/2	2.79		
		(16.86-16.69)x(3.05+3.06)/2	0.52		
		(16.96-16.86)x(3.05+3.05)/2	0.31		
		(17.95-16.96)x(3.02+3.05)/2	3.00		
		(18.13-17.95)x(3.02+3.02)/2	0.54		
		(17.95-18.13)x(2.52+2.52)/2	-0.45		
		(16.96-17.95)x(2.55+2.52)/2	-2.51		
		(16.86-16.96)x(2.55+2.55)/2	-0.26		
		(16.69-16.86)x(2.56+2.55)/2	-0.43		
		(15.78-16.69)x(2.58+2.56)/2	-2.34		
		(15.21-15.78)x(2.58+2.58)/2	-1.47		
		(14.69-15.21)x(2.57+2.58)/2	-1.34		
		(13.60-14.69)x(2.63+2.57)/2	-2.83		
		(12.52-13.60)x(2.62+2.63)/2	-2.83		
		(11.92-12.52)x(2.61+2.62)/2	-1.57		
		(11.43-11.92)x(2.59+2.61)/2	-1.27		
		(10.52-11.43)x(2.59+2.59)/2	-2.36		
		(10.34-10.52)x(2.59+2.59)/2	-0.47		
		(10.25-10.34)x(2.58+2.59)/2	-0.23		
		(9.26-10.25)x(2.55+2.58)/2	-2.54		
		(8.57-9.26)x(2.53+2.55)/2	-1.75		
		(8.17-8.57)x(2.52+2.53)/2	-1.01		
		(7.43-8.17)x(2.50+2.52)/2	-1.86		
		(7.08-7.43)x(2.49+2.50)/2	-0.87		
		(6.89-7.08)x(2.48+2.49)/2	-0.47		
		(5.99-6.89)x(2.44+2.48)/2	-2.21		
		(5.21-5.99)x(2.46+2.44)/2	-1.91		
		(4.91-5.21)x(2.45+2.46)/2	-0.74		
		(4.35-4.91)x(2.54+2.45)/2	-1.40		
		(3.82-4.35)x(2.63+2.54)/2	-1.37		
		(3.53-3.82)x(2.58+2.63)/2	-0.76		
		(2.73-3.53)x(2.55+2.58)/2	-2.05		
		(1.85-2.73)x(2.24+2.55)/2	-2.11		
		(1.65-1.85)x(2.17+2.24)/2	-0.44		
		(1.26-1.65)x(2.08+2.17)/2	-0.83		
		(0.56-1.26)x(1.95+2.08)/2	-1.41		
		(0.17-0.56)x(1.88+1.95)/2	-0.75		
		(-0.53-0.17)x(1.75+1.88)/2	-1.27		
		(-1.50--0.53)x(1.54+1.75)/2	-1.60		
		(-1.62--1.50)x(1.52+1.54)/2	-0.18		
		(-1.82--1.62)x(1.48+1.52)/2	-0.30		
		(-2.70--1.82)x(1.34+1.48)/2	-1.24		
		(-3.28--2.70)x(1.24+1.34)/2	-0.75		
		(-3.79--3.28)x(1.10+1.24)/2	-0.60		
		(-4.86--3.79)x(0.75+1.10)/2	-0.99		
		(-4.88--4.86)x(0.75+0.75)/2	-0.01		
		(-4.91--4.88)x(0.74+0.75)/2	-0.02		
		(-5.96--4.91)x(0.34+0.74)/2	-0.57		
		(-6.54--5.96)x(0.34+0.34)/2	-0.20		
		(-7.05--6.54)x(0.23+0.34)/2	-0.15		
		(-7.99--7.05)x(0.42+0.23)/2	-0.31		
		(-8.14--7.99)x(0.43+0.42)/2	-0.06		
		(-8.22--8.14)x(0.42+0.43)/2	-0.03		
		(-9.23--8.22)x(0.34+0.42)/2	-0.38		
		(-9.90--9.23)x(0.28+0.34)/2	-0.21		
		(-10.31--9.90)x(0.21+0.28)/2	-0.10		
		(-11.08--10.31)x(0.57+0.21)/2	-0.30		
		(-11.40--11.08)x(0.78+0.57)/2	-0.22		
		(-11.57--11.40)x(0.94+0.78)/2	-0.15		
		(-12.49--11.57)x(1.88+0.94)/2	-1.30		
		(-13.25--12.49)x(2.20+1.88)/2	-1.55		
		(-13.57--13.25)x(2.40+2.20)/2	-0.74		
		(-14.16--13.57)x(2.37+2.40)/2	-1.41		
		(-14.66--14.16)x(2.35+2.37)/2	-1.18		
		(-14.78--14.66)x(2.34+2.35)/2	-0.28		
				16.46	
33 480.00	BO1	(-14.85--14.97)x(2.76+2.76)/2	0.33		
		(-14.49--14.85)x(2.77+2.76)/2	1.00		
		(-14.29--14.49)x(2.76+2.77)/2	0.55		
		(-13.40--14.29)x(2.75+2.76)/2	2.45		
		(-12.62--13.40)x(2.56+2.75)/2	2.07		
		(-12.31--12.62)x(2.47+2.56)/2	0.78		
		(-11.75--12.31)x(2.12+2.47)/2	1.29		
		(-11.23--11.75)x(1.73+2.12)/2	1.00		
		(-10.94--11.23)x(1.53+1.73)/2	0.47		
		(-10.14--10.94)x(0.85+1.53)/2	0.95		
		(-9.27--10.14)x(0.69+0.85)/2	0.67		
		(-9.05--9.27)x(0.62+0.69)/2	0.14		
		(-8.95--9.05)x(0.63+0.62)/2	0.06		
		(-8.65--8.95)x(0.66+0.63)/2	0.19		
		(-8.14--8.65)x(0.70+0.66)/2	0.35		
		(-7.97--8.14)x(0.71+0.70)/2	0.12		
		(-7.60--7.97)x(0.73+0.71)/2	0.27		
		(-6.88--7.60)x(0.73+0.73)/2	0.53		
		(-5.93--6.88)x(0.95+0.73)/2	0.80		
		(-5.79--5.93)x(0.97+0.95)/2	0.13		
		(-5.54--5.79)x(1.14+0.97)/2	0.26		
		(-4.71--5.54)x(1.77+1.14)/2	1.21		
		(-4.26--4.71)x(1.86+1.77)/2	0.82		
		(-3.62--4.26)x(2.00+1.86)/2	1.24		
		(-2.59--3.62)x(2.21+2.00)/2	2.17		
		(-2.54--2.59)x(2.22+2.21)/2	0.11		
		(-2.44--2.54)x(2.23+2.22)/2	0.22		
		(-1.45--2.44)x(2.28+2.23)/2	2.23		
		(-0.92--1.45)x(2.33+2.28)/2	1.22		
		(-0.36--0.92)x(2.42+2.33)/2	1.33		
		(0.66--0.36)x(2.44+2.42)/2	2.48		
		(0.72-0.66)x(2.44+2.44)/2	0.15		
		(0.76-0.72)x(2.44+2.44)/2	0.10		
		(1.81-0.76)x(2.44+2.44)/2	2.56		
		(2.43-1.81)x(2.57+2.44)/2	1.55		
		(2.90-2.43)x(2.66+2.57)/2	1.23		
		(3.76-2.90)x(2.93+2.66)/2	2.40		
		(3.98-3.76)x(2.99+2.93)/2	0.65		
		A RIPORTARE mq	36.08		

		CALCOLO DELLE AREE		Foglio n. 104
BONIFICA				
N. SEZIONE PROG.	FIG.	ELEMENTI DI CALCOLO	AREA ELEMENTARE mq	AREA FIGURA mq	NOTE
		RIPORTO mq	36.08		
		(4.10-3.98)x(2.98+2.99)/2	0.36		
		(5.07-4.10)x(2.97+2.98)/2	2.89		
		(5.77-5.07)x(2.95+2.97)/2	2.07		
		(6.15-5.77)x(2.92+2.95)/2	1.12		
		(6.87-6.15)x(2.95+2.92)/2	2.11		
		(7.24-6.87)x(2.96+2.95)/2	1.09		
		(7.44-7.24)x(2.97+2.96)/2	0.59		
		(8.33-7.44)x(3.00+2.97)/2	2.66		
		(9.11-8.33)x(3.01+3.00)/2	2.34		
		(9.41-9.11)x(3.02+3.01)/2	0.90		
		(9.56-9.41)x(3.02+3.02)/2	0.45		
		(9.97-9.56)x(3.03+3.02)/2	1.24		
		(10.36-9.97)x(3.04+3.03)/2	1.18		
		(10.50-10.36)x(3.04+3.04)/2	0.43		
		(10.79-10.50)x(3.04+3.04)/2	0.88		
		(11.59-10.79)x(3.06+3.04)/2	2.44		
		(12.46-11.59)x(3.06+3.06)/2	2.66		
		(12.67-12.46)x(3.06+3.06)/2	0.64		
		(13.07-12.67)x(3.07+3.06)/2	1.23		
		(13.76-13.07)x(3.09+3.07)/2	2.13		
		(14.13-13.76)x(3.09+3.09)/2	1.14		
		(14.84-14.13)x(3.08+3.09)/2	2.19		
		(15.80-14.84)x(3.06+3.08)/2	2.95		
		(15.93-15.80)x(3.06+3.06)/2	0.40		
		(16.17-15.93)x(3.05+3.06)/2	0.73		
		(17.02-16.17)x(3.03+3.05)/2	2.58		
		(17.47-17.02)x(3.02+3.03)/2	1.36		
		(18.10-17.47)x(3.00+3.02)/2	1.90		
		(18.27-18.10)x(3.00+3.00)/2	0.51		
		(18.10-18.27)x(2.50+2.50)/2	-0.42		
		(17.47-18.10)x(2.52+2.50)/2	-1.58		
		(17.02-17.47)x(2.53+2.52)/2	-1.14		
		(16.17-17.02)x(2.55+2.53)/2	-2.16		
		(15.93-16.17)x(2.56+2.55)/2	-0.61		
		(15.80-15.93)x(2.56+2.56)/2	-0.33		
		(14.84-15.80)x(2.58+2.56)/2	-2.47		
		(14.13-14.84)x(2.59+2.58)/2	-1.84		
		(13.76-14.13)x(2.59+2.59)/2	-0.96		
		(13.07-13.76)x(2.57+2.59)/2	-1.78		
		(12.67-13.07)x(2.56+2.57)/2	-1.03		
		(12.46-12.67)x(2.56+2.56)/2	-0.54		
		(11.59-12.46)x(2.56+2.56)/2	-2.23		
		(10.79-11.59)x(2.54+2.56)/2	-2.04		
		(10.50-10.79)x(2.54+2.54)/2	-0.74		
		(10.36-10.50)x(2.54+2.54)/2	-0.36		
		(9.97-10.36)x(2.53+2.54)/2	-0.99		
		(9.56-9.97)x(2.52+2.53)/2	-1.04		
		(9.41-9.56)x(2.52+2.52)/2	-0.38		
		(9.11-9.41)x(2.51+2.52)/2	-0.75		
		(8.33-9.11)x(2.50+2.51)/2	-1.95		
		(7.44-8.33)x(2.47+2.50)/2	-2.21		
		(7.24-7.44)x(2.46+2.47)/2	-0.49		
		(6.87-7.24)x(2.45+2.46)/2	-0.91		
		(6.15-6.87)x(2.42+2.45)/2	-1.75		
		(5.77-6.15)x(2.45+2.42)/2	-0.93		
		(5.07-5.77)x(2.47+2.45)/2	-1.72		
		(4.10-5.07)x(2.48+2.47)/2	-2.40		
		(3.98-4.10)x(2.49+2.48)/2	-0.30		
		(3.76-3.98)x(2.43+2.49)/2	-0.54		
		(2.90-3.76)x(2.16+2.43)/2	-1.97		
		(2.43-2.90)x(2.07+2.16)/2	-0.99		
		(1.81-2.43)x(1.94+2.07)/2	-1.24		
		(0.76-1.81)x(1.94+1.94)/2	-2.04		
		(0.72-0.76)x(1.94+1.94)/2	-0.08		
		(0.66-0.72)x(1.94+1.94)/2	-0.12		
		(-0.36-0.66)x(1.92+1.94)/2	-1.97		
		(-0.92--0.36)x(1.83+1.92)/2	-1.05		
		(-1.45--0.92)x(1.78+1.83)/2	-0.96		
		(-2.44--1.45)x(1.73+1.78)/2	-1.74		
		(-2.54--2.44)x(1.72+1.73)/2	-0.17		
		(-2.59--2.54)x(1.71+1.72)/2	-0.09		
		(-3.62--2.59)x(1.50+1.71)/2	-1.65		
		(-4.26--3.62)x(1.36+1.50)/2	-0.92		
		(-4.71--4.26)x(1.27+1.36)/2	-0.59		
		(-5.54--4.71)x(0.64+1.27)/2	-0.79		
		(-5.79--5.54)x(0.47+0.64)/2	-0.14		
		(-5.93--5.79)x(0.45+0.47)/2	-0.06		
		(-6.88--5.93)x(0.23+0.45)/2	-0.32		
		(-7.60--6.88)x(0.23+0.23)/2	-0.17		
		(-7.97--7.60)x(0.21+0.23)/2	-0.08		
		(-8.14--7.97)x(0.20+0.21)/2	-0.03		
		(-8.65--8.14)x(0.16+0.20)/2	-0.09		
		(-8.95--8.65)x(0.13+0.16)/2	-0.04		
		(-9.05--8.95)x(0.12+0.13)/2	-0.01		
		(-9.27--9.05)x(0.19+0.12)/2	-0.03		
		(-10.14--9.27)x(0.35+0.19)/2	-0.23		
		(-10.94--10.14)x(1.03+0.35)/2	-0.55		
		(-11.23--10.94)x(1.23+1.03)/2	-0.33		
		(-11.75--11.23)x(1.62+1.23)/2	-0.74		
		(-12.31--11.75)x(1.97+1.62)/2	-1.01		
		(-12.62--12.31)x(2.06+1.97)/2	-0.62		
		(-13.40--12.62)x(2.25+2.06)/2	-1.68		
		(-14.29--13.40)x(2.26+2.25)/2	-2.01		
		(-14.49--14.29)x(2.27+2.26)/2	-0.45		
		(-14.85--14.49)x(2.26+2.27)/2	-0.82		
		(-14.97--14.85)x(2.26+2.26)/2	-0.27		
				16.61	
34 495.00	B01	(-14.28--14.97)x(2.79+2.81)/2	1.93		
		(-13.80--14.28)x(2.81+2.79)/2	1.34		
		(-13.20--13.80)x(2.82+2.81)/2	1.69		
		(-12.40--13.20)x(2.75+2.82)/2	2.23		
		(-12.11--12.40)x(2.71+2.75)/2	0.79		
		(-11.95--12.11)x(2.58+2.71)/2	0.42		
		(-11.02--11.95)x(1.89+2.58)/2	2.08		
		A RIPORTARE mq	10.48		

	CALCOLO DELLE AREE		Foglio n. 105

BONIFICA

N. SEZIONE PROG.	FIG.	ELEMENTI DI CALCOLO	AREA ELEMENTARE mq	AREA FIGURA mq	NOTE
		RIPORTO mq	10.48		
		(-10.29--11.02)x(1.31+1.89)/2	1.17		
		(-9.94--10.29)x(1.01+1.31)/2	0.41		
		(-9.28--9.94)x(0.77+1.01)/2	0.59		
		(-8.85--9.28)x(0.65+0.77)/2	0.31		
		(-8.63--8.85)x(0.65+0.65)/2	0.14		
		(-7.77--8.63)x(0.63+0.65)/2	0.55		
		(-6.96--7.77)x(0.62+0.63)/2	0.51		
		(-6.68--6.96)x(0.61+0.62)/2	0.17		
		(-6.16--6.68)x(0.58+0.61)/2	0.31		
		(-5.60--6.16)x(0.55+0.58)/2	0.32		
		(-5.30--5.60)x(0.54+0.55)/2	0.16		
		(-4.51--5.30)x(0.51+0.54)/2	0.41		
		(-3.63--4.51)x(0.78+0.51)/2	0.57		
		(-3.43--3.63)x(0.83+0.78)/2	0.16		
		(-3.04--3.43)x(1.06+0.83)/2	0.37		
		(-2.34--3.04)x(1.46+1.06)/2	0.88		
		(-1.97--2.34)x(1.62+1.46)/2	0.57		
		(-1.25--1.97)x(1.98+1.62)/2	1.30		
		(-0.30--1.25)x(2.19+1.98)/2	1.98		
		(-0.17--0.30)x(2.24+2.19)/2	0.29		
		(0.08--0.17)x(2.26+2.24)/2	0.56		
		(0.92-0.08)x(2.36+2.26)/2	1.94		
		(1.36-0.92)x(2.40+2.36)/2	1.05		
		(2.00-1.36)x(2.44+2.40)/2	1.55		
		(3.03-2.00)x(2.58+2.44)/2	2.59		
		(3.09-3.03)x(2.58+2.58)/2	0.15		
		(3.20-3.09)x(2.61+2.58)/2	0.29		
		(4.17-3.20)x(2.86+2.61)/2	2.65		
		(4.73-4.17)x(3.00+2.86)/2	1.64		
		(5.26-4.73)x(3.06+3.00)/2	1.61		
		(6.32-5.26)x(2.95+3.06)/2	3.19		
		(6.34-6.32)x(2.95+2.95)/2	0.06		
		(6.36-6.34)x(2.94+2.95)/2	0.06		
		(7.43-6.36)x(2.90+2.94)/2	3.12		
		(8.02-7.43)x(2.92+2.90)/2	1.72		
		(8.52-8.02)x(2.94+2.92)/2	1.46		
		(9.44-8.52)x(2.98+2.94)/2	2.72		
		(9.60-9.44)x(2.99+2.98)/2	0.48		
		(9.69-9.60)x(2.99+2.99)/2	0.27		
		(10.69-9.69)x(3.01+2.99)/2	3.00		
		(11.35-10.69)x(3.01+3.01)/2	1.99		
		(11.77-11.35)x(3.01+3.01)/2	1.26		
		(12.56-11.77)x(3.02+3.01)/2	2.38		
		(12.86-12.56)x(3.03+3.02)/2	0.91		
		(13.02-12.86)x(3.03+3.03)/2	0.48		
		(13.94-13.02)x(3.06+3.03)/2	2.80		
		(14.68-13.94)x(3.08+3.06)/2	2.27		
		(15.03-14.68)x(3.09+3.08)/2	1.08		
		(15.68-15.03)x(3.08+3.09)/2	2.01		
		(16.11-15.68)x(3.07+3.08)/2	1.32		
		(16.34-16.11)x(3.06+3.07)/2	0.70		
		(17.20-16.34)x(3.04+3.06)/2	2.62		
		(18.01-17.20)x(3.01+3.04)/2	2.45		
		(18.29-18.01)x(3.00+3.01)/2	0.84		
		(18.46-18.29)x(2.99+3.00)/2	0.51		
		(18.29-18.46)x(2.50+2.49)/2	-0.42		
		(18.01-18.29)x(2.51+2.50)/2	-0.70		
		(17.20-18.01)x(2.54+2.51)/2	-2.05		
		(16.34-17.20)x(2.56+2.54)/2	-2.19		
		(16.11-16.34)x(2.57+2.56)/2	-0.59		
		(15.68-16.11)x(2.58+2.57)/2	-1.11		
		(15.03-15.68)x(2.59+2.58)/2	-1.68		
		(14.68-15.03)x(2.58+2.59)/2	-0.90		
		(13.94-14.68)x(2.56+2.58)/2	-1.90		
		(13.02-13.94)x(2.53+2.56)/2	-2.34		
		(12.86-13.02)x(2.53+2.53)/2	-0.40		
		(12.56-12.86)x(2.52+2.53)/2	-0.76		
		(11.77-12.56)x(2.51+2.52)/2	-1.99		
		(11.35-11.77)x(2.51+2.51)/2	-1.05		
		(10.69-11.35)x(2.51+2.51)/2	-1.66		
		(9.69-10.69)x(2.49+2.51)/2	-2.50		
		(9.60-9.69)x(2.49+2.49)/2	-0.22		
		(9.44-9.60)x(2.48+2.49)/2	-0.40		
		(8.52-9.44)x(2.44+2.48)/2	-2.26		
		(8.02-8.52)x(2.42+2.44)/2	-1.21		
		(7.43-8.02)x(2.40+2.42)/2	-1.42		
		(6.36-7.43)x(2.44+2.40)/2	-2.59		
		(6.34-6.36)x(2.45+2.44)/2	-0.05		
		(6.32-6.34)x(2.45+2.45)/2	-0.05		
		(5.26-6.32)x(2.56+2.45)/2	-2.66		
		(4.73-5.26)x(2.50+2.56)/2	-1.34		
		(4.17-4.73)x(2.36+2.50)/2	-1.36		
		(3.20-4.17)x(2.11+2.36)/2	-2.17		
		(3.09-3.20)x(2.08+2.11)/2	-0.23		
		(3.03-3.09)x(2.08+2.08)/2	-0.12		
		(2.00-3.03)x(1.94+2.08)/2	-2.07		
		(1.36-2.00)x(1.90+1.94)/2	-1.23		
		(0.92-1.36)x(1.86+1.90)/2	-0.83		
		(0.08-0.92)x(1.76+1.86)/2	-1.52		
		(-0.17-0.08)x(1.74+1.76)/2	-0.44		
		(-0.30--0.17)x(1.69+1.74)/2	-0.22		
		(-1.25--0.30)x(1.48+1.69)/2	-1.51		
		(-1.97--1.25)x(1.12+1.48)/2	-0.94		
		(-2.34--1.97)x(0.96+1.12)/2	-0.38		
		(-3.04--2.34)x(0.56+0.96)/2	-0.53		
		(-3.43--3.04)x(0.33+0.56)/2	-0.17		
		(-3.63--3.43)x(0.28+0.33)/2	-0.06		
		(-4.51--3.63)x(0.01+0.28)/2	-0.13		
		(-5.30--4.51)x(0.04+0.01)/2	-0.02		
		(-5.60--5.30)x(0.05+0.04)/2	-0.01		
		(-6.16--5.60)x(0.08+0.05)/2	-0.04		
		(-6.68--6.16)x(0.11+0.08)/2	-0.05		
		(-6.96--6.68)x(0.12+0.11)/2	-0.03		
		(-7.77--6.96)x(0.13+0.12)/2	-0.10		
		A RIPORTARE mq	26.78		

		CALCOLO DELLE AREE		Foglio n. 106
BONIFICA				
N. SEZIONE PROG.	FIG.	ELEMENTI DI CALCOLO	AREA ELEMENTARE mq	AREA FIGURA mq	NOTE
		RIPORTO mq	26.78		
		(-8.63--7.77)x(0.15+0.13)/2	-0.12		
		(-8.85--8.63)x(0.15+0.15)/2	-0.03		
		(-9.28--8.85)x(0.27+0.15)/2	-0.09		
		(-9.94--9.28)x(0.51+0.27)/2	-0.26		
		(-10.29--9.94)x(0.81+0.51)/2	-0.23		
		(-11.02--10.29)x(1.39+0.81)/2	-0.80		
		(-11.95--11.02)x(2.08+1.39)/2	-1.61		
		(-12.11--11.95)x(2.21+2.08)/2	-0.34		
		(-12.40--12.11)x(2.25+2.21)/2	-0.65		
		(-13.20--12.40)x(2.32+2.25)/2	-1.83		
		(-13.80--13.20)x(2.31+2.32)/2	-1.39		
		(-14.28--13.80)x(2.29+2.31)/2	-1.10		
		(-14.97--14.28)x(2.31+2.29)/2	-1.59		
				16.74	
35 510.00	B01	(-14.58--14.85)x(2.92+2.93)/2	0.79		
		(-14.05--14.58)x(2.91+2.92)/2	1.54		
		(-13.03--14.05)x(2.92+2.91)/2	2.97		
		(-12.96--13.03)x(2.93+2.92)/2	0.20		
		(-12.93--12.96)x(2.93+2.93)/2	0.09		
		(-11.88--12.93)x(3.13+2.93)/2	3.18		
		(-11.27--11.88)x(3.02+3.13)/2	1.88		
		(-10.79--11.27)x(3.03+3.02)/2	1.45		
		(-9.89--10.79)x(2.13+3.03)/2	2.32		
		(-9.71--9.89)x(1.95+2.13)/2	0.37		
		(-9.61--9.71)x(1.86+1.95)/2	0.19		
		(-8.62--9.61)x(0.78+1.86)/2	1.31		
		(-7.95--8.62)x(0.68+0.78)/2	0.49		
		(-7.54--7.95)x(0.61+0.68)/2	0.26		
		(-6.75--7.54)x(0.54+0.61)/2	0.45		
		(-6.45--6.75)x(0.52+0.54)/2	0.16		
		(-6.30--6.45)x(0.51+0.52)/2	0.08		
		(-5.37--6.30)x(0.48+0.51)/2	0.46		
		(-4.64--5.37)x(0.51+0.48)/2	0.36		
		(-4.28--4.64)x(0.47+0.51)/2	0.18		
		(-3.61--4.28)x(1.18+0.47)/2	0.55		
		(-3.20--3.61)x(1.63+1.18)/2	0.58		
		(-2.98--3.20)x(1.71+1.63)/2	0.37		
		(-2.11--2.98)x(2.23+1.71)/2	1.71		
		(-1.32--2.11)x(2.45+2.23)/2	1.85		
		(-1.03--1.32)x(2.54+2.45)/2	0.72		
		(-0.89--1.03)x(2.57+2.54)/2	0.36		
		(-0.47--0.89)x(2.63+2.57)/2	1.09		
		(-0.08--0.47)x(2.70+2.63)/2	1.04		
		(0.06--0.08)x(2.73+2.70)/2	0.38		
		(0.34-0.06)x(2.71+2.73)/2	0.76		
		(1.14-0.34)x(2.74+2.71)/2	2.18		
		(1.99-1.14)x(2.66+2.74)/2	2.30		
		(2.23-1.99)x(2.66+2.66)/2	0.64		
		(2.66-2.23)x(2.61+2.66)/2	1.13		
		(3.31-2.66)x(2.61+2.61)/2	1.70		
		(3.65-3.31)x(2.68+2.61)/2	0.90		
		(4.39-3.65)x(2.75+2.68)/2	2.01		
		(5.31-4.39)x(3.02+2.75)/2	2.65		
		(5.48-5.31)x(3.07+3.02)/2	0.52		
		(5.80-5.48)x(3.09+3.07)/2	0.99		
		(6.56-5.80)x(3.08+3.09)/2	2.34		
		(6.97-6.56)x(3.02+3.08)/2	1.25		
		(7.65-6.97)x(2.91+3.02)/2	2.02		
		(8.62-7.65)x(2.89+2.91)/2	2.81		
		(8.73-8.62)x(2.89+2.89)/2	0.32		
		(8.94-8.73)x(2.89+2.89)/2	0.61		
		(9.59-8.94)x(2.92+2.89)/2	1.89		
		(9.82-9.59)x(2.92+2.92)/2	0.67		
		(10.40-9.82)x(2.94+2.92)/2	1.70		
		(10.90-10.40)x(2.96+2.94)/2	1.48		
		(11.21-10.90)x(2.97+2.96)/2	0.92		
		(11.99-11.21)x(2.99+2.97)/2	2.32		
		(12.01-11.99)x(2.99+2.99)/2	0.06		
		(12.08-12.01)x(2.99+2.99)/2	0.21		
		(13.07-12.08)x(3.01+2.99)/2	2.97		
		(13.60-13.07)x(3.02+3.01)/2	1.60		
		(14.16-13.60)x(3.03+3.02)/2	1.69		
		(15.22-14.16)x(3.06+3.03)/2	3.23		
		(15.24-15.22)x(3.06+3.06)/2	0.06		
		(15.26-15.24)x(3.06+3.06)/2	0.06		
		(16.33-15.26)x(3.05+3.06)/2	3.27		
		(16.91-16.33)x(3.03+3.05)/2	1.76		
		(17.41-16.91)x(3.01+3.03)/2	1.51		
		(17.65-17.41)x(3.00+3.01)/2	0.72		
		(18.36-17.65)x(2.98+3.00)/2	2.12		
		(18.46-18.36)x(2.98+2.98)/2	0.30		
		(18.50-18.46)x(2.98+2.98)/2	0.12		
		(18.57-18.50)x(2.98+2.98)/2	0.21		
		(19.58-18.57)x(2.97+2.98)/2	3.00		
		(19.90-19.58)x(2.95+2.97)/2	0.95		
		(19.58-19.90)x(2.47+2.45)/2	-0.79		
		(18.57-19.58)x(2.48+2.47)/2	-2.50		
		(18.50-18.57)x(2.48+2.48)/2	-0.17		
		(18.46-18.50)x(2.48+2.48)/2	-0.10		
		(18.36-18.46)x(2.48+2.48)/2	-0.25		
		(17.65-18.36)x(2.50+2.48)/2	-1.77		
		(17.41-17.65)x(2.51+2.50)/2	-0.60		
		(16.91-17.41)x(2.53+2.51)/2	-1.26		
		(16.33-16.91)x(2.55+2.53)/2	-1.47		
		(15.26-16.33)x(2.56+2.55)/2	-2.73		
		(15.24-15.26)x(2.56+2.56)/2	-0.05		
		(15.22-15.24)x(2.56+2.56)/2	-0.05		
		(14.16-15.22)x(2.53+2.56)/2	-2.70		
		(13.60-14.16)x(2.52+2.53)/2	-1.41		
		(13.07-13.60)x(2.51+2.52)/2	-1.33		
		(12.08-13.07)x(2.49+2.51)/2	-2.48		
		(12.01-12.08)x(2.49+2.49)/2	-0.17		
		(11.99-12.01)x(2.49+2.49)/2	-0.05		
		(11.21-11.99)x(2.47+2.49)/2	-1.93		
		A RIPORTARE mq	63.52		

		CALCOLO DELLE AREE		Foglio n. 107
BONIFICA				
N. SEZIONE PROG.	FIG.	ELEMENTI DI CALCOLO	AREA ELEMENTARE mq	AREA FIGURA mq	NOTE
		RIPORTO mq	63.52		
		(10.90-11.21)x(2.46+2.47)/2	-0.76		
		(10.40-10.90)x(2.44+2.46)/2	-1.23		
		(9.82-10.40)x(2.42+2.44)/2	-1.41		
		(9.59-9.82)x(2.42+2.42)/2	-0.56		
		(8.94-9.59)x(2.39+2.42)/2	-1.56		
		(8.73-8.94)x(2.39+2.39)/2	-0.50		
		(8.62-8.73)x(2.39+2.39)/2	-0.26		
		(7.65-8.62)x(2.41+2.39)/2	-2.33		
		(6.97-7.65)x(2.52+2.41)/2	-1.68		
		(6.56-6.97)x(2.58+2.52)/2	-1.05		
		(5.80-6.56)x(2.59+2.58)/2	-1.96		
		(5.48-5.80)x(2.57+2.59)/2	-0.83		
		(5.31-5.48)x(2.52+2.57)/2	-0.43		
		(4.39-5.31)x(2.25+2.52)/2	-2.19		
		(3.65-4.39)x(2.18+2.25)/2	-1.64		
		(3.31-3.65)x(2.11+2.18)/2	-0.73		
		(2.66-3.31)x(2.11+2.11)/2	-1.37		
		(2.23-2.66)x(2.16+2.11)/2	-0.92		
		(1.99-2.23)x(2.16+2.16)/2	-0.52		
		(1.14-1.99)x(2.24+2.16)/2	-1.87		
		(0.34-1.14)x(2.21+2.24)/2	-1.78		
		(0.06-0.34)x(2.23+2.21)/2	-0.62		
		(-0.08-0.06)x(2.20+2.23)/2	-0.31		
		(-0.47--0.08)x(2.13+2.20)/2	-0.84		
		(-0.89--0.47)x(2.07+2.13)/2	-0.88		
		(-1.03--0.89)x(2.04+2.07)/2	-0.29		
		(-1.32--1.03)x(1.95+2.04)/2	-0.58		
		(-2.11--1.32)x(1.73+1.95)/2	-1.45		
		(-2.98--2.11)x(1.21+1.73)/2	-1.28		
		(-3.20--2.98)x(1.13+1.21)/2	-0.26		
		(-3.61--3.20)x(0.68+1.13)/2	-0.37		
		(-4.28--3.61)x(-0.03+0.68)/2	-0.22		
		(-4.64--4.28)x(0.01+-0.03)/2	0.00		
		(-5.37--4.64)x(-0.02+0.01)/2	0.00		
		(-6.30--5.37)x(0.01+-0.02)/2	0.00		
		(-6.45--6.30)x(0.02+0.01)/2	-0.00		
		(-6.75--6.45)x(0.04+0.02)/2	-0.01		
		(-7.54--6.75)x(0.11+0.04)/2	-0.06		
		(-7.95--7.54)x(0.18+0.11)/2	-0.06		
		(-8.62--7.95)x(0.28+0.18)/2	-0.15		
		(-9.61--8.62)x(1.36+0.28)/2	-0.81		
		(-9.71--9.61)x(1.45+1.36)/2	-0.14		
		(-9.89--9.71)x(1.63+1.45)/2	-0.28		
		(-10.79--9.89)x(2.53+1.63)/2	-1.87		
		(-11.27--10.79)x(2.52+2.53)/2	-1.21		
		(-11.88--11.27)x(2.63+2.52)/2	-1.57		
		(-12.93--11.88)x(2.43+2.63)/2	-2.66		
		(-12.96--12.93)x(2.43+2.43)/2	-0.07		
		(-13.03--12.96)x(2.42+2.43)/2	-0.17		
		(-14.05--13.03)x(2.41+2.42)/2	-2.46		
		(-14.58--14.05)x(2.42+2.41)/2	-1.28		
		(-14.85--14.58)x(2.43+2.42)/2	-0.65		
				17.39	
36 525.00	BO1	(-13.86--14.86)x(2.87+2.97)/2	2.92		
		(-13.78--13.86)x(2.87+2.87)/2	0.23		
		(-13.63--13.78)x(2.87+2.87)/2	0.43		
		(-12.70--13.63)x(2.88+2.87)/2	2.67		
		(-12.21--12.70)x(2.93+2.88)/2	1.42		
		(-11.61--12.21)x(2.95+2.93)/2	1.76		
		(-10.56--11.61)x(2.81+2.95)/2	3.02		
		(-10.53--10.56)x(2.81+2.81)/2	0.08		
		(-10.48--10.53)x(2.78+2.81)/2	0.14		
		(-9.45--10.48)x(2.10+2.78)/2	2.51		
		(-8.91--9.45)x(1.56+2.10)/2	0.99		
		(-8.36--8.91)x(0.94+1.56)/2	0.69		
		(-7.32--8.36)x(0.57+0.94)/2	0.79		
		(-7.28--7.32)x(0.55+0.57)/2	0.02		
		(-7.26--7.28)x(0.55+0.55)/2	0.01		
		(-6.19--7.26)x(0.55+0.55)/2	0.59		
		(-5.68--6.19)x(0.54+0.55)/2	0.28		
		(-5.11--5.68)x(0.52+0.54)/2	0.30		
		(-4.16--5.11)x(0.67+0.52)/2	0.57		
		(-4.03--4.16)x(0.69+0.67)/2	0.09		
		(-3.95--4.03)x(0.73+0.69)/2	0.06		
		(-2.94--3.95)x(1.16+0.73)/2	0.95		
		(-2.30--2.94)x(1.57+1.16)/2	0.87		
		(-1.86--2.30)x(1.82+1.57)/2	0.75		
		(-1.01--1.86)x(2.37+1.82)/2	1.78		
		(-0.77--1.01)x(2.51+2.37)/2	0.59		
		(-0.65--0.77)x(2.54+2.51)/2	0.30		
		(0.31--0.65)x(2.72+2.54)/2	2.52		
		(1.00-0.31)x(2.63+2.72)/2	1.85		
		(1.39-1.00)x(2.60+2.63)/2	1.02		
		(2.15-1.39)x(2.58+2.60)/2	1.97		
		(2.48-2.15)x(2.57+2.58)/2	0.85		
		(2.65-2.48)x(2.56+2.57)/2	0.44		
		(3.56-2.65)x(2.53+2.56)/2	2.32		
		(4.30-3.56)x(2.49+2.53)/2	1.86		
		(4.65-4.30)x(2.50+2.49)/2	0.87		
		(5.31-4.65)x(2.47+2.50)/2	1.64		
		(5.73-5.31)x(2.46+2.47)/2	1.04		
		(5.95-5.73)x(2.52+2.46)/2	0.55		
		(6.81-5.95)x(2.78+2.52)/2	2.28		
		(7.60-6.81)x(2.88+2.78)/2	2.24		
		(7.90-7.60)x(2.91+2.88)/2	0.87		
		(8.46-7.90)x(2.89+2.91)/2	1.62		
		(8.98-8.46)x(2.85+2.89)/2	1.49		
		(9.25-8.98)x(2.86+2.85)/2	0.77		
		(10.07-9.25)x(2.87+2.86)/2	2.35		
		(10.90-10.07)x(2.90+2.87)/2	2.39		
		(11.15-10.90)x(2.91+2.90)/2	0.73		
		(11.62-11.15)x(2.93+2.91)/2	1.37		
		(12.23-11.62)x(2.95+2.93)/2	1.79		
		(12.88-12.23)x(2.96+2.95)/2	1.92		
		A RIPORTARE mq	61.56		

		CALCOLO DELLE AREE		Foglio n. 108
BONIFICA				
N. SEZIONE PROG.	FIG.	ELEMENTI DI CALCOLO	AREA ELEMENTARE mq	AREA FIGURA mq	NOTE
		RIPORTO mq	61.56		
		(13.32-12.88)x(2.97+2.96)/2	1.30		
		(14.21-13.32)x(2.99+2.97)/2	2.65		
		(14.40-14.21)x(2.99+2.99)/2	0.57		
		(14.78-14.40)x(2.99+2.99)/2	1.14		
		(15.49-14.78)x(2.99+2.99)/2	2.12		
		(15.86-15.49)x(2.99+2.99)/2	1.11		
		(16.57-15.86)x(3.01+2.99)/2	2.13		
		(17.51-16.57)x(3.01+3.01)/2	2.83		
		(17.65-17.51)x(3.01+3.01)/2	0.42		
		(17.93-17.65)x(3.01+3.01)/2	0.84		
		(18.74-17.93)x(2.98+3.01)/2	2.43		
		(19.16-18.74)x(2.97+2.98)/2	1.25		
		(19.82-19.16)x(2.95+2.97)/2	1.95		
		(20.81-19.82)x(2.93+2.95)/2	2.91		
		(20.91-20.81)x(2.93+2.93)/2	0.29		
		(21.09-20.91)x(2.93+2.93)/2	0.53		
		(21.99-21.09)x(2.91+2.93)/2	2.63		
		(22.46-21.99)x(2.89+2.91)/2	1.36		
		(23.07-22.46)x(2.87+2.89)/2	1.76		
		(23.14-23.07)x(2.87+2.87)/2	0.20		
		(23.09-23.14)x(2.37+2.37)/2	-0.12		
		(22.76-23.09)x(2.33+2.37)/2	-0.78		
		(14.21-22.76)x(2.49+2.33)/2	-20.61		
		(13.32-14.21)x(2.47+2.49)/2	-2.21		
		(12.88-13.32)x(2.46+2.47)/2	-1.08		
		(12.23-12.88)x(2.45+2.46)/2	-1.60		
		(11.62-12.23)x(2.43+2.45)/2	-1.49		
		(11.15-11.62)x(2.41+2.43)/2	-1.14		
		(10.90-11.15)x(2.40+2.41)/2	-0.60		
		(10.07-10.90)x(2.37+2.40)/2	-1.98		
		(9.25-10.07)x(2.36+2.37)/2	-1.94		
		(8.98-9.25)x(2.35+2.36)/2	-0.64		
		(8.46-8.98)x(2.39+2.35)/2	-1.23		
		(7.90-8.46)x(2.41+2.39)/2	-1.34		
		(7.60-7.90)x(2.38+2.41)/2	-0.72		
		(6.81-7.60)x(2.28+2.38)/2	-1.84		
		(5.95-6.81)x(2.02+2.28)/2	-1.85		
		(5.73-5.95)x(1.96+2.02)/2	-0.44		
		(5.31-5.73)x(1.97+1.96)/2	-0.83		
		(4.65-5.31)x(2.00+1.97)/2	-1.31		
		(4.30-4.65)x(1.99+2.00)/2	-0.70		
		(3.56-4.30)x(2.03+1.99)/2	-1.49		
		(2.65-3.56)x(2.06+2.03)/2	-1.86		
		(2.48-2.65)x(2.07+2.06)/2	-0.35		
		(2.15-2.48)x(2.08+2.07)/2	-0.68		
		(1.39-2.15)x(2.10+2.08)/2	-1.59		
		(1.00-1.39)x(2.13+2.10)/2	-0.82		
		(0.31-1.00)x(2.22+2.13)/2	-1.50		
		(-0.65-0.31)x(2.04+2.22)/2	-2.04		
		(-0.77--0.65)x(2.01+2.04)/2	-0.24		
		(-1.01--0.77)x(1.87+2.01)/2	-0.47		
		(-1.86--1.01)x(1.32+1.87)/2	-1.36		
		(-2.30--1.86)x(1.07+1.32)/2	-0.53		
		(-2.94--2.30)x(0.66+1.07)/2	-0.55		
		(-3.95--2.94)x(0.23+0.66)/2	-0.45		
		(-4.03--3.95)x(0.19+0.23)/2	-0.02		
		(-4.16--4.03)x(0.17+0.19)/2	-0.02		
		(-5.11--4.16)x(0.02+0.17)/2	-0.09		
		(-5.68--5.11)x(0.04+0.02)/2	-0.02		
		(-6.19--5.68)x(0.05+0.04)/2	-0.02		
		(-7.26--6.19)x(0.05+0.05)/2	-0.05		
		(-7.28--7.26)x(0.05+0.05)/2	-0.00		
		(-7.32--7.28)x(0.07+0.05)/2	-0.00		
		(-8.36--7.32)x(0.44+0.07)/2	-0.27		
		(-8.91--8.36)x(1.06+0.44)/2	-0.41		
		(-9.45--8.91)x(1.60+1.06)/2	-0.72		
		(-10.48--9.45)x(2.28+1.60)/2	-2.00		
		(-10.53--10.48)x(2.31+2.28)/2	-0.11		
		(-10.56--10.53)x(2.31+2.31)/2	-0.07		
		(-11.61--10.56)x(2.45+2.31)/2	-2.50		
		(-12.21--11.61)x(2.43+2.45)/2	-1.46		
		(-12.70--12.21)x(2.38+2.43)/2	-1.18		
		(-13.63--12.70)x(2.37+2.38)/2	-2.21		
		(-13.78--13.63)x(2.37+2.37)/2	-0.36		
		(-13.86--13.78)x(2.37+2.37)/2	-0.19		
		(-14.86--13.86)x(2.47+2.37)/2	-2.42		
				19.48	
37 540.00	B01	(-14.76--15.06)x(2.96+2.98)/2	0.89		
		(-14.57--14.76)x(2.95+2.96)/2	0.56		
		(-14.22--14.57)x(2.92+2.95)/2	1.03		
		(-13.49--14.22)x(2.87+2.92)/2	2.11		
		(-13.11--13.49)x(2.86+2.87)/2	1.09		
		(-12.41--13.11)x(2.81+2.86)/2	1.98		
		(-11.47--12.41)x(2.79+2.81)/2	2.63		
		(-11.32--11.47)x(2.79+2.79)/2	0.42		
		(-11.25--11.32)x(2.78+2.79)/2	0.19		
		(-11.04--11.25)x(2.69+2.78)/2	0.57		
		(-10.44--11.04)x(2.42+2.69)/2	1.53		
		(-10.24--10.44)x(2.31+2.42)/2	0.47		
		(-9.82--10.24)x(2.02+2.31)/2	0.91		
		(-9.16--9.82)x(1.48+2.02)/2	1.16		
		(-8.18--9.16)x(1.07+1.48)/2	1.25		
		(-8.07--8.18)x(1.01+1.07)/2	0.11		
		(-7.87--8.07)x(0.94+1.01)/2	0.20		
		(-6.99--7.87)x(0.65+0.94)/2	0.70		
		(-6.54--6.99)x(0.60+0.65)/2	0.28		
		(-5.91--6.54)x(0.52+0.60)/2	0.35		
		(-4.89--5.91)x(0.46+0.52)/2	0.50		
		(-4.82--4.89)x(0.46+0.46)/2	0.03		
		(-4.69--4.82)x(0.46+0.46)/2	0.06		
		(-3.74--4.69)x(0.59+0.46)/2	0.50		
		(-3.25--3.74)x(1.08+0.59)/2	0.41		
		(-2.66--3.25)x(1.59+1.08)/2	0.79		
		(-1.60--2.66)x(2.51+1.59)/2	2.17		
		A RIPORTARE mq	22.89		

		CALCOLO DELLE AREE		Foglio n. 109
BONIFICA				
N. SEZIONE PROG.	FIG.	ELEMENTI DI CALCOLO	AREA ELEMENTARE mq	AREA FIGURA mq	NOTE
		RIPORTO mq	22.89		
		(-1.57--1.60)x(2.54+2.51)/2	0.08		
		(-1.52--1.57)x(2.56+2.54)/2	0.13		
		(-0.49--1.52)x(2.89+2.56)/2	2.81		
		(0.04--0.49)x(2.91+2.89)/2	1.54		
		(0.59-0.04)x(2.97+2.91)/2	1.62		
		(1.66-0.59)x(3.33+2.97)/2	3.37		
		(1.68-1.66)x(3.34+3.33)/2	0.07		
		(1.69-1.68)x(3.33+3.34)/2	0.03		
		(2.76-1.69)x(3.31+3.33)/2	3.55		
		(3.33-2.76)x(3.28+3.31)/2	1.88		
		(3.84-3.33)x(3.24+3.28)/2	1.66		
		(4.84-3.84)x(2.68+3.24)/2	2.96		
		(4.93-4.84)x(2.64+2.68)/2	0.24		
		(4.97-4.93)x(2.63+2.64)/2	0.11		
		(6.01-4.97)x(2.37+2.63)/2	2.60		
		(6.62-6.01)x(2.47+2.37)/2	1.48		
		(7.09-6.62)x(2.53+2.47)/2	1.17		
		(7.33-7.09)x(2.57+2.53)/2	0.61		
		(8.01-7.33)x(2.68+2.57)/2	1.78		
		(8.13-8.01)x(2.71+2.68)/2	0.32		
		(8.18-8.13)x(2.71+2.71)/2	0.14		
		(8.26-8.18)x(2.72+2.71)/2	0.22		
		(9.26-8.26)x(2.85+2.72)/2	2.79		
		(9.91-9.26)x(2.85+2.85)/2	1.85		
		(10.34-9.91)x(2.84+2.85)/2	1.22		
		(11.19-10.34)x(2.86+2.84)/2	2.42		
		(11.43-11.19)x(2.87+2.86)/2	0.69		
		(11.55-11.43)x(2.87+2.87)/2	0.34		
		(12.51-11.55)x(2.91+2.87)/2	2.77		
		(13.20-12.51)x(2.94+2.91)/2	2.02		
		(13.59-13.20)x(2.95+2.94)/2	1.15		
		(14.36-13.59)x(2.95+2.95)/2	2.27		
		(14.68-14.36)x(2.95+2.95)/2	0.94		
		(14.84-14.68)x(2.95+2.95)/2	0.47		
		(14.95-14.84)x(2.96+2.95)/2	0.33		
		(14.84-14.95)x(2.45+2.46)/2	-0.27		
		(14.68-14.84)x(2.45+2.45)/2	-0.39		
		(14.36-14.68)x(2.45+2.45)/2	-0.78		
		(13.59-14.36)x(2.45+2.45)/2	-1.89		
		(13.20-13.59)x(2.44+2.45)/2	-0.95		
		(12.51-13.20)x(2.41+2.44)/2	-1.67		
		(11.55-12.51)x(2.37+2.41)/2	-2.29		
		(11.43-11.55)x(2.37+2.37)/2	-0.28		
		(11.19-11.43)x(2.36+2.37)/2	-0.57		
		(10.34-11.19)x(2.34+2.36)/2	-2.00		
		(9.91-10.34)x(2.35+2.34)/2	-1.01		
		(9.26-9.91)x(2.35+2.35)/2	-1.53		
		(8.26-9.26)x(2.22+2.35)/2	-2.29		
		(8.18-8.26)x(2.21+2.22)/2	-0.18		
		(8.13-8.18)x(2.21+2.21)/2	-0.11		
		(8.01-8.13)x(2.18+2.21)/2	-0.26		
		(7.33-8.01)x(2.07+2.18)/2	-1.44		
		(7.09-7.33)x(2.03+2.07)/2	-0.49		
		(6.62-7.09)x(1.97+2.03)/2	-0.94		
		(6.01-6.62)x(1.87+1.97)/2	-1.17		
		(4.97-6.01)x(2.13+1.87)/2	-2.08		
		(4.93-4.97)x(2.14+2.13)/2	-0.09		
		(4.84-4.93)x(2.18+2.14)/2	-0.19		
		(3.84-4.84)x(2.74+2.18)/2	-2.46		
		(3.33-3.84)x(2.78+2.74)/2	-1.41		
		(2.76-3.33)x(2.81+2.78)/2	-1.59		
		(1.69-2.76)x(2.83+2.81)/2	-3.02		
		(1.68-1.69)x(2.84+2.83)/2	-0.03		
		(1.66-1.68)x(2.83+2.84)/2	-0.06		
		(0.59-1.66)x(2.47+2.83)/2	-2.84		
		(0.04-0.59)x(2.41+2.47)/2	-1.34		
		(-0.49-0.04)x(2.39+2.41)/2	-1.27		
		(-1.52--0.49)x(2.06+2.39)/2	-2.29		
		(-1.57--1.52)x(2.04+2.06)/2	-0.10		
		(-1.60--1.57)x(2.01+2.04)/2	-0.06		
		(-2.66--1.60)x(1.09+2.01)/2	-1.64		
		(-3.25--2.66)x(0.58+1.09)/2	-0.49		
		(-3.74--3.25)x(0.09+0.58)/2	-0.16		
		(-4.69--3.74)x(-0.04+0.09)/2	-0.02		
		(-4.82--4.69)x(-0.04+-0.04)/2	0.01		
		(-4.89--4.82)x(-0.04+-0.04)/2	0.00		
		(-5.91--4.89)x(0.02+-0.04)/2	0.01		
		(-6.54--5.91)x(0.10+0.02)/2	-0.04		
		(-6.99--6.54)x(0.15+0.10)/2	-0.06		
		(-7.87--6.99)x(0.44+0.15)/2	-0.26		
		(-8.07--7.87)x(0.51+0.44)/2	-0.10		
		(-8.18--8.07)x(0.57+0.51)/2	-0.06		
		(-9.16--8.18)x(0.98+0.57)/2	-0.76		
		(-9.82--9.16)x(1.52+0.98)/2	-0.83		
		(-10.24--9.82)x(1.81+1.52)/2	-0.70		
		(-10.44--10.24)x(1.92+1.81)/2	-0.37		
		(-11.04--10.44)x(2.19+1.92)/2	-1.23		
		(-11.25--11.04)x(2.28+2.19)/2	-0.47		
		(-11.32--11.25)x(2.29+2.28)/2	-0.16		
		(-11.47--11.32)x(2.29+2.29)/2	-0.34		
		(-12.41--11.47)x(2.31+2.29)/2	-2.16		
		(-13.11--12.41)x(2.36+2.31)/2	-1.63		
		(-13.49--13.11)x(2.37+2.36)/2	-0.90		
		(-14.22--13.49)x(2.42+2.37)/2	-1.75		
		(-14.57--14.22)x(2.45+2.42)/2	-0.85		
		(-14.76--14.57)x(2.46+2.45)/2	-0.47		
		(-15.06--14.76)x(2.48+2.46)/2	-0.74		
				15.01	
38 555.00	BO1	(-27.24--27.53)x(3.33+3.32)/2	0.96		
		(-27.08--27.24)x(3.32+3.33)/2	0.53		
		(-26.16--27.08)x(3.31+3.32)/2	3.05		
		(-25.44--26.16)x(3.28+3.31)/2	2.37		
		(-25.07--25.44)x(3.26+3.28)/2	1.21		
		(-24.36--25.07)x(3.27+3.26)/2	2.32		
		A RIPORTARE mq	10.44		

	CALCOLO DELLE AREE		Foglio n. 110

BONIFICA

N. SEZIONE PROG.	FIG.	ELEMENTI DI CALCOLO	AREA ELEMENTARE mq	AREA FIGURA mq	NOTE
		RIPORTO mq	10.44		
		(-23.99--24.36)x(3.27+3.27)/2	1.21		
		(-23.80--23.99)x(3.27+3.27)/2	0.62		
		(-22.91--23.80)x(3.28+3.27)/2	2.91		
		(-22.17--22.91)x(3.32+3.28)/2	2.44		
		(-21.83--22.17)x(3.34+3.32)/2	1.13		
		(-21.16--21.83)x(3.32+3.34)/2	2.23		
		(-20.74--21.16)x(3.30+3.32)/2	1.39		
		(-20.53--20.74)x(3.29+3.30)/2	0.69		
		(-19.66--20.53)x(3.26+3.29)/2	2.85		
		(-18.89--19.66)x(3.22+3.26)/2	2.49		
		(-18.58--18.89)x(3.20+3.22)/2	1.00		
		(-17.97--18.58)x(3.17+3.20)/2	1.94		
		(-17.62--17.97)x(3.16+3.17)/2	1.11		
		(-17.50--17.62)x(3.15+3.16)/2	0.38		
		(-16.81--17.50)x(3.16+3.15)/2	2.18		
		(-16.41--16.81)x(3.16+3.16)/2	1.26		
		(-15.62--16.41)x(3.13+3.16)/2	2.48		
		(-15.33--15.62)x(3.12+3.13)/2	0.91		
		(-14.78--15.33)x(3.10+3.12)/2	1.71		
		(-14.25--14.78)x(3.08+3.10)/2	1.64		
		(-13.98--14.25)x(3.06+3.08)/2	0.83		
		(-13.17--13.98)x(3.02+3.06)/2	2.46		
		(-12.34--13.17)x(2.95+3.02)/2	2.48		
		(-12.08--12.34)x(2.93+2.95)/2	0.76		
		(-11.58--12.08)x(2.88+2.93)/2	1.45		
		(-11.00--11.58)x(2.82+2.88)/2	1.65		
		(-10.70--11.00)x(2.74+2.82)/2	0.83		
		(-9.92--10.70)x(2.55+2.74)/2	2.06		
		(-9.07--9.92)x(2.13+2.55)/2	1.99		
		(-8.84--9.07)x(2.03+2.13)/2	0.48		
		(-8.39--8.84)x(1.71+2.03)/2	0.84		
		(-7.75--8.39)x(1.25+1.71)/2	0.95		
		(-7.43--7.75)x(1.08+1.25)/2	0.37		
		(-6.67--7.43)x(0.63+1.08)/2	0.65		
		(-5.79--6.67)x(0.59+0.63)/2	0.54		
		(-5.59--5.79)x(0.57+0.59)/2	0.12		
		(-5.19--5.59)x(0.54+0.57)/2	0.22		
		(-4.51--5.19)x(0.50+0.54)/2	0.35		
		(-4.15--4.51)x(0.45+0.50)/2	0.17		
		(-3.42--4.15)x(0.36+0.45)/2	0.30		
		(-2.52--3.42)x(0.34+0.36)/2	0.31		
		(-2.34--2.52)x(0.33+0.34)/2	0.06		
		(-2.00--2.34)x(0.37+0.33)/2	0.12		
		(-1.26--2.00)x(0.48+0.37)/2	0.31		
		(-0.88--1.26)x(0.59+0.48)/2	0.20		
		(-0.18--0.88)x(0.79+0.59)/2	0.48		
		(0.76--0.18)x(1.13+0.79)/2	0.90		
		(0.91-0.76)x(1.17+1.13)/2	0.17		
		(1.19-0.91)x(1.31+1.17)/2	0.35		
		(1.99-1.19)x(1.69+1.31)/2	1.20		
		(2.60-1.99)x(1.96+1.69)/2	1.11		
		(3.07-2.60)x(2.10+1.96)/2	0.95		
		(4.03-3.07)x(2.28+2.10)/2	2.10		
		(4.15-4.03)x(2.30+2.28)/2	0.27		
		(4.39-4.15)x(2.32+2.30)/2	0.55		
		(5.24-4.39)x(2.37+2.32)/2	1.99		
		(5.67-5.24)x(2.38+2.37)/2	1.02		
		(6.32-5.67)x(2.40+2.38)/2	1.55		
		(7.31-6.32)x(2.45+2.40)/2	2.40		
		(7.40-7.31)x(2.46+2.45)/2	0.22		
		(7.58-7.40)x(2.49+2.46)/2	0.45		
		(8.48-7.58)x(2.67+2.49)/2	2.32		
		(8.95-8.48)x(2.73+2.67)/2	1.27		
		(9.57-8.95)x(2.81+2.73)/2	1.72		
		(10.59-9.57)x(2.83+2.81)/2	2.88		
		(10.65-10.59)x(2.84+2.83)/2	0.17		
		(10.78-10.65)x(2.84+2.84)/2	0.37		
		(11.73-10.78)x(2.84+2.84)/2	2.70		
		(12.22-11.73)x(2.85+2.84)/2	1.39		
		(12.82-12.22)x(2.84+2.85)/2	1.71		
		(13.86-12.82)x(2.88+2.84)/2	2.97		
		(13.90-13.86)x(2.88+2.88)/2	0.12		
		(13.97-13.90)x(2.88+2.88)/2	0.20		
		(14.98-13.97)x(2.89+2.88)/2	2.91		
		(15.11-14.98)x(2.89+2.89)/2	0.38		
		(14.98-15.11)x(2.39+2.39)/2	-0.31		
		(13.97-14.98)x(2.38+2.39)/2	-2.41		
		(13.90-13.97)x(2.38+2.38)/2	-0.17		
		(13.86-13.90)x(2.38+2.38)/2	-0.10		
		(12.82-13.86)x(2.34+2.38)/2	-2.45		
		(12.22-12.82)x(2.35+2.34)/2	-1.41		
		(11.73-12.22)x(2.34+2.35)/2	-1.15		
		(10.78-11.73)x(2.34+2.34)/2	-2.22		
		(10.65-10.78)x(2.34+2.34)/2	-0.30		
		(10.59-10.65)x(2.33+2.34)/2	-0.14		
		(9.57-10.59)x(2.31+2.33)/2	-2.37		
		(8.95-9.57)x(2.23+2.31)/2	-1.41		
		(8.48-8.95)x(2.17+2.23)/2	-1.03		
		(7.58-8.48)x(1.99+2.17)/2	-1.87		
		(7.40-7.58)x(1.96+1.99)/2	-0.36		
		(7.31-7.40)x(1.95+1.96)/2	-0.18		
		(6.32-7.31)x(1.90+1.95)/2	-1.91		
		(5.67-6.32)x(1.88+1.90)/2	-1.23		
		(5.24-5.67)x(1.87+1.88)/2	-0.81		
		(4.39-5.24)x(1.82+1.87)/2	-1.57		
		(4.15-4.39)x(1.80+1.82)/2	-0.43		
		(4.03-4.15)x(1.78+1.80)/2	-0.21		
		(3.07-4.03)x(1.60+1.78)/2	-1.62		
		(2.60-3.07)x(1.46+1.60)/2	-0.72		
		(1.99-2.60)x(1.19+1.46)/2	-0.81		
		(1.19-1.99)x(0.81+1.19)/2	-0.80		
		(0.91-1.19)x(0.67+0.81)/2	-0.21		
		(0.76-0.91)x(0.63+0.67)/2	-0.10		
		(-0.18-0.76)x(0.29+0.63)/2	-0.43		
		A RIPORTARE mq	71.60		

		CALCOLO DELLE AREE		Foglio n. 111
BONIFICA				

N. SEZIONE PROG.	FIG.	ELEMENTI DI CALCOLO	AREA ELEMENTARE mq	AREA FIGURA mq	NOTE
		RIPORTO mq	71.60		
		(-0.88--0.18)x(0.09+0.29)/2	-0.13		
		(-1.26--0.88)x(-0.02+0.09)/2	-0.01		
		(-2.00--1.26)x(-0.13+-0.02)/2	0.06		
		(-2.34--2.00)x(-0.17+-0.13)/2	0.05		
		(-2.52--2.34)x(-0.16+-0.17)/2	0.03		
		(-3.42--2.52)x(-0.14+-0.16)/2	0.14		
		(-4.15--3.42)x(-0.05+-0.14)/2	0.07		
		(-4.51--4.15)x(-0.00+-0.05)/2	0.01		
		(-5.19--4.51)x(0.04+-0.00)/2	-0.01		
		(-5.59--5.19)x(0.07+0.04)/2	-0.02		
		(-5.79--5.59)x(0.09+0.07)/2	-0.02		
		(-6.67--5.79)x(0.13+0.09)/2	-0.10		
		(-7.43--6.67)x(0.58+0.13)/2	-0.27		
		(-7.75--7.43)x(0.75+0.58)/2	-0.21		
		(-8.39--7.75)x(1.21+0.75)/2	-0.63		
		(-8.84--8.39)x(1.53+1.21)/2	-0.62		
		(-9.07--8.84)x(1.63+1.53)/2	-0.36		
		(-9.92--9.07)x(2.05+1.63)/2	-1.56		
		(-10.70--9.92)x(2.24+2.05)/2	-1.67		
		(-11.00--10.70)x(2.32+2.24)/2	-0.68		
		(-11.58--11.00)x(2.38+2.32)/2	-1.36		
		(-12.08--11.58)x(2.43+2.38)/2	-1.20		
		(-12.34--12.08)x(2.45+2.43)/2	-0.63		
		(-13.17--12.34)x(2.52+2.45)/2	-2.06		
		(-13.98--13.17)x(2.56+2.52)/2	-2.06		
		(-14.25--13.98)x(2.58+2.56)/2	-0.69		
		(-14.78--14.25)x(2.60+2.58)/2	-1.37		
		(-15.33--14.78)x(2.62+2.60)/2	-1.44		
		(-15.62--15.33)x(2.63+2.62)/2	-0.76		
		(-16.41--15.62)x(2.66+2.63)/2	-2.09		
		(-16.81--16.41)x(2.66+2.66)/2	-1.06		
		(-17.50--16.81)x(2.65+2.66)/2	-1.83		
		(-17.62--17.50)x(2.66+2.65)/2	-0.32		
		(-17.97--17.62)x(2.67+2.66)/2	-0.93		
		(-18.58--17.97)x(2.70+2.67)/2	-1.64		
		(-18.89--18.58)x(2.72+2.70)/2	-0.84		
		(-19.66--18.89)x(2.76+2.72)/2	-2.11		
		(-20.53--19.66)x(2.79+2.76)/2	-2.41		
		(-20.74--20.53)x(2.80+2.79)/2	-0.59		
		(-21.16--20.74)x(2.82+2.80)/2	-1.18		
		(-21.83--21.16)x(2.84+2.82)/2	-1.90		
		(-22.17--21.83)x(2.82+2.84)/2	-0.96		
		(-22.91--22.17)x(2.78+2.82)/2	-2.07		
		(-23.80--22.91)x(2.77+2.78)/2	-2.47		
		(-23.99--23.80)x(2.77+2.77)/2	-0.53		
		(-24.36--23.99)x(2.77+2.77)/2	-1.02		
		(-25.07--24.36)x(2.76+2.77)/2	-1.96		
		(-25.44--25.07)x(2.78+2.76)/2	-1.02		
		(-26.16--25.44)x(2.81+2.78)/2	-2.01		
		(-27.08--26.16)x(2.82+2.81)/2	-2.59		
		(-27.24--27.08)x(2.83+2.82)/2	-0.45		
		(-27.53--27.24)x(2.82+2.83)/2	-0.82		
				21.30	
39 570.00	BO1	(-25.80--26.20)x(3.36+3.36)/2	1.34		
		(-24.95--25.80)x(3.32+3.36)/2	2.84		
		(-24.71--24.95)x(3.31+3.32)/2	0.80		
		(-24.59--24.71)x(3.31+3.31)/2	0.40		
		(-23.63--24.59)x(3.30+3.31)/2	3.17		
		(-22.96--23.63)x(3.32+3.30)/2	2.22		
		(-22.55--22.96)x(3.33+3.32)/2	1.36		
		(-21.74--22.55)x(3.35+3.33)/2	2.71		
		(-21.47--21.74)x(3.36+3.35)/2	0.91		
		(-20.73--21.47)x(3.37+3.36)/2	2.49		
		(-20.39--20.73)x(3.36+3.37)/2	1.14		
		(-19.70--20.39)x(3.31+3.36)/2	2.30		
		(-19.31--19.70)x(3.29+3.31)/2	1.29		
		(-18.52--19.31)x(3.27+3.29)/2	2.59		
		(-18.22--18.52)x(3.26+3.27)/2	0.98		
		(-18.07--18.22)x(3.26+3.26)/2	0.49		
		(-17.14--18.07)x(3.23+3.26)/2	3.02		
		(-16.44--17.14)x(3.24+3.23)/2	2.26		
		(-16.06--16.44)x(3.23+3.24)/2	1.23		
		(-15.31--16.06)x(3.22+3.23)/2	2.42		
		(-14.98--15.31)x(3.21+3.22)/2	1.06		
		(-14.81--14.98)x(3.21+3.21)/2	0.55		
		(-13.90--14.81)x(3.16+3.21)/2	2.90		
		(-13.18--13.90)x(3.15+3.16)/2	2.27		
		(-12.81--13.18)x(3.15+3.15)/2	1.17		
		(-12.10--12.81)x(3.09+3.15)/2	2.22		
		(-11.73--12.10)x(3.06+3.09)/2	1.14		
		(-11.55--11.73)x(3.05+3.06)/2	0.55		
		(-10.65--11.55)x(3.00+3.05)/2	2.72		
		(-9.92--10.65)x(2.91+3.00)/2	2.16		
		(-9.57--9.92)x(2.89+2.91)/2	1.01		
		(-8.89--9.57)x(2.68+2.89)/2	1.89		
		(-8.49--8.89)x(2.53+2.68)/2	1.04		
		(-8.28--8.49)x(2.45+2.53)/2	0.52		
		(-7.40--8.28)x(2.06+2.45)/2	1.98		
		(-6.65--7.40)x(1.57+2.06)/2	1.36		
		(-6.32--6.65)x(1.37+1.57)/2	0.49		
		(-5.67--6.32)x(1.02+1.37)/2	0.78		
		(-5.24--5.67)x(0.83+1.02)/2	0.40		
		(-5.02--5.24)x(0.75+0.83)/2	0.17		
		(-4.16--5.02)x(0.43+0.75)/2	0.51		
		(-3.39--4.16)x(0.36+0.43)/2	0.30		
		(-3.08--3.39)x(0.33+0.36)/2	0.11		
		(-2.92--3.08)x(0.34+0.33)/2	0.05		
		(-2.46--2.92)x(0.38+0.34)/2	0.17		
		(-2.11--2.46)x(0.41+0.38)/2	0.14		
		(-2.00--2.11)x(0.42+0.41)/2	0.05		
		(-1.76--2.00)x(0.51+0.42)/2	0.11		
		(-0.91--1.76)x(0.74+0.51)/2	0.53		
		(-0.13--0.91)x(1.08+0.74)/2	0.71		
		(0.17--0.13)x(1.22+1.08)/2	0.35		
		A RIPORTARE mq	65.37		

		CALCOLO DELLE AREE		Foglio n. 112
BONIFICA				
N. SEZIONE PROG.	FIG.	ELEMENTI DI CALCOLO	AREA ELEMENTARE mq	AREA FIGURA mq	NOTE
		RIPORTO mq	65.37		
		(0.75-0.17)x(1.44+1.22)/2	0.77		
		(1.25-0.75)x(1.62+1.44)/2	0.77		
		(1.50-1.25)x(1.72+1.62)/2	0.42		
		(2.33-1.50)x(2.02+1.72)/2	1.55		
		(3.13-2.33)x(2.18+2.02)/2	1.68		
		(3.41-3.13)x(2.25+2.18)/2	0.62		
		(3.97-3.41)x(2.34+2.25)/2	1.29		
		(4.50-3.97)x(2.43+2.34)/2	1.26		
		(4.76-4.50)x(2.47+2.43)/2	0.64		
		(5.58-4.76)x(2.61+2.47)/2	2.08		
		(6.39-5.58)x(2.75+2.61)/2	2.17		
		(6.66-6.39)x(2.80+2.75)/2	0.75		
		(7.18-6.66)x(2.85+2.80)/2	1.47		
		(7.74-7.18)x(2.87+2.85)/2	1.60		
		(8.03-7.74)x(2.87+2.87)/2	0.83		
		(8.82-8.03)x(2.85+2.87)/2	2.26		
		(9.66-8.82)x(2.89+2.85)/2	2.41		
		(9.90-9.66)x(2.89+2.89)/2	0.69		
		(10.39-9.90)x(2.89+2.89)/2	1.42		
		(10.99-10.39)x(2.88+2.89)/2	1.73		
		(11.29-10.99)x(2.89+2.88)/2	0.87		
		(12.07-11.29)x(2.90+2.89)/2	2.26		
		(12.92-12.07)x(2.90+2.90)/2	2.46		
		(13.15-12.92)x(2.90+2.90)/2	0.67		
		(13.61-13.15)x(2.90+2.90)/2	1.33		
		(14.23-13.61)x(2.91+2.90)/2	1.80		
		(14.55-14.23)x(2.90+2.91)/2	0.93		
		(15.17-14.55)x(2.90+2.90)/2	1.80		
		(14.55-15.17)x(2.40+2.40)/2	-1.49		
		(14.23-14.55)x(2.41+2.40)/2	-0.77		
		(13.61-14.23)x(2.40+2.41)/2	-1.49		
		(13.15-13.61)x(2.40+2.40)/2	-1.10		
		(12.92-13.15)x(2.40+2.40)/2	-0.55		
		(12.07-12.92)x(2.40+2.40)/2	-2.04		
		(11.29-12.07)x(2.39+2.40)/2	-1.87		
		(10.99-11.29)x(2.38+2.39)/2	-0.72		
		(10.39-10.99)x(2.39+2.38)/2	-1.43		
		(9.90-10.39)x(2.39+2.39)/2	-1.17		
		(9.66-9.90)x(2.39+2.39)/2	-0.57		
		(8.82-9.66)x(2.35+2.39)/2	-1.99		
		(8.03-8.82)x(2.37+2.35)/2	-1.86		
		(7.74-8.03)x(2.37+2.37)/2	-0.69		
		(7.18-7.74)x(2.35+2.37)/2	-1.32		
		(6.66-7.18)x(2.30+2.35)/2	-1.21		
		(6.39-6.66)x(2.25+2.30)/2	-0.61		
		(5.58-6.39)x(2.11+2.25)/2	-1.77		
		(4.76-5.58)x(1.97+2.11)/2	-1.67		
		(4.50-4.76)x(1.93+1.97)/2	-0.51		
		(3.97-4.50)x(1.84+1.93)/2	-1.00		
		(3.41-3.97)x(1.75+1.84)/2	-1.01		
		(3.13-3.41)x(1.68+1.75)/2	-0.48		
		(2.33-3.13)x(1.52+1.68)/2	-1.28		
		(1.50-2.33)x(1.22+1.52)/2	-1.14		
		(1.25-1.50)x(1.12+1.22)/2	-0.29		
		(0.75-1.25)x(0.94+1.12)/2	-0.52		
		(0.17-0.75)x(0.72+0.94)/2	-0.48		
		(-0.13-0.17)x(0.58+0.72)/2	-0.20		
		(-0.91--0.13)x(0.24+0.58)/2	-0.32		
		(-1.76--0.91)x(0.01+0.24)/2	-0.11		
		(-2.00--1.76)x(-0.08+0.01)/2	0.01		
		(-2.11--2.00)x(-0.09+-0.08)/2	0.01		
		(-2.46--2.11)x(-0.12+-0.09)/2	0.04		
		(-2.92--2.46)x(-0.16+-0.12)/2	0.06		
		(-3.08--2.92)x(-0.17+-0.16)/2	0.03		
		(-3.39--3.08)x(-0.14+-0.17)/2	0.05		
		(-4.16--3.39)x(-0.07+-0.14)/2	0.08		
		(-5.02--4.16)x(0.25+-0.07)/2	-0.08		
		(-5.24--5.02)x(0.33+0.25)/2	-0.06		
		(-5.67--5.24)x(0.52+0.33)/2	-0.18		
		(-6.32--5.67)x(0.87+0.52)/2	-0.45		
		(-6.65--6.32)x(1.07+0.87)/2	-0.32		
		(-7.40--6.65)x(1.56+1.07)/2	-0.99		
		(-8.28--7.40)x(1.95+1.56)/2	-1.54		
		(-8.49--8.28)x(2.03+1.95)/2	-0.42		
		(-8.89--8.49)x(2.18+2.03)/2	-0.84		
		(-9.57--8.89)x(2.39+2.18)/2	-1.55		
		(-9.92--9.57)x(2.41+2.39)/2	-0.84		
		(-10.65--9.92)x(2.50+2.41)/2	-1.79		
		(-11.55--10.65)x(2.55+2.50)/2	-2.27		
		(-11.73--11.55)x(2.56+2.55)/2	-0.46		
		(-12.10--11.73)x(2.59+2.56)/2	-0.95		
		(-12.81--12.10)x(2.65+2.59)/2	-1.86		
		(-13.18--12.81)x(2.65+2.65)/2	-0.98		
		(-13.90--13.18)x(2.66+2.65)/2	-1.91		
		(-14.81--13.90)x(2.71+2.66)/2	-2.44		
		(-14.98--14.81)x(2.71+2.71)/2	-0.46		
		(-15.31--14.98)x(2.72+2.71)/2	-0.90		
		(-16.06--15.31)x(2.73+2.72)/2	-2.04		
		(-16.44--16.06)x(2.74+2.73)/2	-1.04		
		(-17.14--16.44)x(2.73+2.74)/2	-1.91		
		(-18.07--17.14)x(2.76+2.73)/2	-2.55		
		(-18.22--18.07)x(2.76+2.76)/2	-0.41		
		(-18.52--18.22)x(2.77+2.76)/2	-0.83		
		(-19.31--18.52)x(2.79+2.77)/2	-2.20		
		(-19.70--19.31)x(2.81+2.79)/2	-1.09		
		(-20.39--19.70)x(2.86+2.81)/2	-1.96		
		(-20.73--20.39)x(2.87+2.86)/2	-0.97		
		(-21.47--20.73)x(2.86+2.87)/2	-2.12		
		(-21.74--21.47)x(2.85+2.86)/2	-0.77		
		(-22.55--21.74)x(2.83+2.85)/2	-2.30		
		(-22.96--22.55)x(2.82+2.83)/2	-1.16		
		(-23.63--22.96)x(2.80+2.82)/2	-1.88		
		(-24.59--23.63)x(2.81+2.80)/2	-2.69		
		(-24.71--24.59)x(2.81+2.81)/2	-0.34		
		A RIPORTARE mq	24.97		

		CALCOLO DELLE AREE		Foglio n. 113
BONIFICA				
N. SEZIONE PROG.	FIG.	ELEMENTI DI CALCOLO	AREA ELEMENTARE mq	AREA FIGURA mq	NOTE
		RIPORTO mq	24.97		
		(-24.95--24.71)x(2.82+2.81)/2	-0.68		
		(-25.80--24.95)x(2.86+2.82)/2	-2.41		
		(-26.20--25.80)x(2.86+2.86)/2	-1.14		
				20.74	
40 585.00	BO1	(-27.57--28.23)x(3.13+3.14)/2	2.07		
		(-26.97--27.57)x(3.15+3.13)/2	1.88		
		(-26.49--26.97)x(3.16+3.15)/2	1.51		
		(-26.24--26.49)x(3.17+3.16)/2	0.79		
		(-25.52--26.24)x(3.16+3.17)/2	2.28		
		(-25.43--25.52)x(3.16+3.16)/2	0.28		
		(-25.41--25.43)x(3.16+3.16)/2	0.06		
		(-25.35--25.41)x(3.16+3.16)/2	0.19		
		(-24.32--25.35)x(3.14+3.16)/2	3.24		
		(-23.72--24.32)x(3.14+3.14)/2	1.88		
		(-23.24--23.72)x(3.15+3.14)/2	1.51		
		(-22.29--23.24)x(3.16+3.15)/2	3.00		
		(-22.16--22.29)x(3.16+3.16)/2	0.41		
		(-22.10--22.16)x(3.17+3.16)/2	0.19		
		(-21.08--22.10)x(3.21+3.17)/2	3.25		
		(-20.47--21.08)x(3.23+3.21)/2	1.96		
		(-20.00--20.47)x(3.26+3.23)/2	1.53		
		(-19.06--20.00)x(3.21+3.26)/2	3.04		
		(-18.92--19.06)x(3.20+3.21)/2	0.45		
		(-18.85--18.92)x(3.20+3.20)/2	0.22		
		(-17.84--18.85)x(3.17+3.20)/2	3.22		
		(-17.23--17.84)x(3.16+3.17)/2	1.93		
		(-16.76--17.23)x(3.16+3.16)/2	1.49		
		(-15.82--16.76)x(3.16+3.16)/2	2.97		
		(-15.68--15.82)x(3.16+3.16)/2	0.44		
		(-15.60--15.68)x(3.16+3.16)/2	0.25		
		(-14.59--15.60)x(3.16+3.16)/2	3.19		
		(-13.98--14.59)x(3.14+3.16)/2	1.92		
		(-13.51--13.98)x(3.13+3.14)/2	1.47		
		(-12.59--13.51)x(3.11+3.13)/2	2.87		
		(-12.43--12.59)x(3.10+3.11)/2	0.50		
		(-12.35--12.43)x(3.10+3.10)/2	0.25		
		(-11.35--12.35)x(3.06+3.10)/2	3.08		
		(-10.73--11.35)x(3.01+3.06)/2	1.88		
		(-10.27--10.73)x(2.98+3.01)/2	1.38		
		(-9.36--10.27)x(2.76+2.98)/2	2.61		
		(-9.19--9.36)x(2.72+2.76)/2	0.47		
		(-8.75--9.19)x(2.60+2.72)/2	1.17		
		(-8.56--8.75)x(2.59+2.60)/2	0.49		
		(-8.45--8.56)x(2.58+2.59)/2	0.28		
		(-8.27--8.45)x(2.79+2.58)/2	0.48		
		(-8.26--8.27)x(3.07+2.79)/2	0.03		
		(-8.23--8.26)x(2.35+3.07)/2	0.08		
		(-8.20--8.23)x(2.35+2.35)/2	0.07		
		(-8.11--8.20)x(2.24+2.35)/2	0.21		
		(-7.61--8.11)x(2.03+2.24)/2	1.07		
		(-7.03--7.61)x(1.76+2.03)/2	1.10		
		(-6.13--7.03)x(1.32+1.76)/2	1.39		
		(-5.95--6.13)x(1.23+1.32)/2	0.23		
		(-5.85--5.95)x(1.18+1.23)/2	0.12		
		(-4.86--5.85)x(0.71+1.18)/2	0.94		
		(-4.23--4.86)x(0.60+0.71)/2	0.41		
		(-3.78--4.23)x(0.51+0.60)/2	0.25		
		(-2.89--3.78)x(0.38+0.51)/2	0.40		
		(-2.70--2.89)x(0.36+0.38)/2	0.07		
		(-2.61--2.70)x(0.41+0.36)/2	0.03		
		(-1.62--2.61)x(0.78+0.41)/2	0.59		
		(-0.98--1.62)x(1.03+0.78)/2	0.58		
		(-0.54--0.98)x(1.22+1.03)/2	0.49		
		(0.34--0.54)x(1.55+1.22)/2	1.22		
		(0.54-0.34)x(1.63+1.55)/2	0.32		
		(1.30-0.54)x(1.94+1.63)/2	1.36		
		(1.53-1.30)x(2.37+1.94)/2	0.50		
		(1.65-1.53)x(2.45+2.37)/2	0.29		
		(1.73-1.65)x(2.44+2.45)/2	0.20		
		(1.78-1.73)x(2.47+2.44)/2	0.12		
		(1.80-1.78)x(2.50+2.47)/2	0.05		
		(1.81-1.80)x(2.40+2.55)/2	0.02		
		(1.83-1.81)x(2.43+2.40)/2	0.05		
		(2.25-1.83)x(2.51+2.43)/2	1.04		
		(2.39-2.25)x(2.50+2.51)/2	0.35		
		(2.70-2.39)x(2.48+2.50)/2	0.77		
		(3.57-2.70)x(2.68+2.48)/2	2.24		
		(3.78-3.57)x(2.73+2.68)/2	0.57		
		(3.89-3.78)x(2.74+2.73)/2	0.30		
		(4.87-3.89)x(2.88+2.74)/2	2.75		
		(5.52-4.87)x(2.91+2.88)/2	1.88		
		(5.95-5.52)x(2.92+2.91)/2	1.25		
		(6.80-5.95)x(2.93+2.92)/2	2.49		
		(7.03-6.80)x(2.93+2.93)/2	0.67		
		(7.14-7.03)x(2.93+2.93)/2	0.32		
		(8.11-7.14)x(2.94+2.93)/2	2.85		
		(8.77-8.11)x(2.94+2.94)/2	1.94		
		(9.19-8.77)x(2.95+2.94)/2	1.24		
		(10.03-9.19)x(2.96+2.95)/2	2.48		
		(10.27-10.03)x(2.96+2.96)/2	0.71		
		(11.02-10.27)x(2.98+2.96)/2	2.23		
		(11.35-11.02)x(2.99+2.98)/2	0.99		
		(12.01-11.35)x(2.98+2.99)/2	1.97		
		(12.43-12.01)x(2.98+2.98)/2	1.25		
		(13.27-12.43)x(2.98+2.98)/2	2.50		
		(13.51-13.27)x(2.98+2.98)/2	0.72		
		(13.64-13.51)x(2.98+2.98)/2	0.39		
		(14.60-13.64)x(2.96+2.98)/2	2.85		
		(15.17-14.60)x(2.95+2.96)/2	1.68		
		(14.60-15.17)x(2.46+2.45)/2	-1.40		
		(13.64-14.60)x(2.48+2.46)/2	-2.37		
		(13.51-13.64)x(2.48+2.48)/2	-0.32		
		(13.27-13.51)x(2.48+2.48)/2	-0.60		
		(12.43-13.27)x(2.48+2.48)/2	-2.08		
		A RIPORTARE mq	105.93		

		CALCOLO DELLE AREE		Foglio n. 114
BONIFICA				
N. SEZIONE PROG.	FIG.	ELEMENTI DI CALCOLO	AREA ELEMENTARE mq	AREA FIGURA mq	NOTE
		RIPORTO mq	105.93		
		(12.01-12.43)x(2.48+2.48)/2	-1.04		
		(11.35-12.01)x(2.49+2.48)/2	-1.64		
		(11.02-11.35)x(2.48+2.49)/2	-0.82		
		(10.27-11.02)x(2.46+2.48)/2	-1.85		
		(10.03-10.27)x(2.46+2.46)/2	-0.59		
		(9.19-10.03)x(2.45+2.46)/2	-2.06		
		(8.77-9.19)x(2.44+2.45)/2	-1.03		
		(8.11-8.77)x(2.44+2.44)/2	-1.61		
		(7.14-8.11)x(2.43+2.44)/2	-2.36		
		(7.03-7.14)x(2.43+2.43)/2	-0.27		
		(6.80-7.03)x(2.43+2.43)/2	-0.56		
		(5.95-6.80)x(2.42+2.43)/2	-2.06		
		(5.52-5.95)x(2.41+2.42)/2	-1.04		
		(4.87-5.52)x(2.38+2.41)/2	-1.56		
		(3.89-4.87)x(2.24+2.38)/2	-2.26		
		(3.78-3.89)x(2.23+2.24)/2	-0.25		
		(3.57-3.78)x(2.18+2.23)/2	-0.46		
		(2.70-3.57)x(1.98+2.18)/2	-1.81		
		(2.39-2.70)x(2.00+1.98)/2	-0.62		
		(2.25-2.39)x(2.01+2.00)/2	-0.28		
		(1.83-2.25)x(1.93+2.01)/2	-0.83		
		(1.81-1.83)x(1.90+1.93)/2	-0.04		
		(1.80-1.81)x(2.05+1.90)/2	-0.02		
		(1.78-1.80)x(1.97+2.00)/2	-0.04		
		(1.73-1.78)x(1.94+1.97)/2	-0.10		
		(1.65-1.73)x(1.95+1.94)/2	-0.16		
		(1.53-1.65)x(1.87+1.95)/2	-0.23		
		(1.30-1.53)x(1.44+1.87)/2	-0.38		
		(0.54-1.30)x(1.13+1.44)/2	-0.98		
		(0.34-0.54)x(1.05+1.13)/2	-0.22		
		(-0.54-0.34)x(0.72+1.05)/2	-0.78		
		(-0.98--0.54)x(0.53+0.72)/2	-0.27		
		(-1.62--0.98)x(0.28+0.53)/2	-0.26		
		(-2.61--1.62)x(-0.09+0.28)/2	-0.09		
		(-2.70--2.61)x(-0.14+-0.09)/2	0.01		
		(-2.89--2.70)x(-0.12+-0.14)/2	0.02		
		(-3.78--2.89)x(0.01+-0.12)/2	0.05		
		(-4.23--3.78)x(0.10+0.01)/2	-0.02		
		(-4.86--4.23)x(0.21+0.10)/2	-0.10		
		(-5.85--4.86)x(0.68+0.21)/2	-0.44		
		(-5.95--5.85)x(0.73+0.68)/2	-0.07		
		(-6.13--5.95)x(0.82+0.73)/2	-0.14		
		(-7.03--6.13)x(1.26+0.82)/2	-0.94		
		(-7.61--7.03)x(1.53+1.26)/2	-0.81		
		(-8.11--7.61)x(1.74+1.53)/2	-0.82		
		(-8.20--8.11)x(1.85+1.74)/2	-0.16		
		(-8.23--8.20)x(1.85+1.85)/2	-0.06		
		(-8.26--8.23)x(2.57+1.85)/2	-0.07		
		(-8.27--8.26)x(2.29+2.57)/2	-0.02		
		(-8.45--8.27)x(2.08+2.29)/2	-0.39		
		(-8.56--8.45)x(2.09+2.08)/2	-0.23		
		(-8.75--8.56)x(2.10+2.09)/2	-0.40		
		(-9.19--8.75)x(2.22+2.10)/2	-0.95		
		(-9.36--9.19)x(2.26+2.22)/2	-0.38		
		(-10.27--9.36)x(2.48+2.26)/2	-2.16		
		(-10.73--10.27)x(2.51+2.48)/2	-1.15		
		(-11.35--10.73)x(2.56+2.51)/2	-1.57		
		(-12.35--11.35)x(2.60+2.56)/2	-2.58		
		(-12.43--12.35)x(2.60+2.60)/2	-0.21		
		(-12.59--12.43)x(2.61+2.60)/2	-0.42		
		(-13.51--12.59)x(2.63+2.61)/2	-2.41		
		(-13.98--13.51)x(2.64+2.63)/2	-1.24		
		(-14.59--13.98)x(2.66+2.64)/2	-1.62		
		(-15.60--14.59)x(2.66+2.66)/2	-2.69		
		(-15.68--15.60)x(2.66+2.66)/2	-0.21		
		(-15.82--15.68)x(2.66+2.66)/2	-0.37		
		(-16.76--15.82)x(2.66+2.66)/2	-2.50		
		(-17.23--16.76)x(2.66+2.66)/2	-1.25		
		(-17.84--17.23)x(2.67+2.66)/2	-1.63		
		(-18.85--17.84)x(2.70+2.67)/2	-2.71		
		(-18.92--18.85)x(2.70+2.70)/2	-0.19		
		(-19.06--18.92)x(2.71+2.70)/2	-0.38		
		(-20.00--19.06)x(2.76+2.71)/2	-2.57		
		(-20.47--20.00)x(2.73+2.76)/2	-1.29		
		(-21.08--20.47)x(2.71+2.73)/2	-1.66		
		(-22.10--21.08)x(2.67+2.71)/2	-2.74		
		(-22.16--22.10)x(2.66+2.67)/2	-0.16		
		(-22.29--22.16)x(2.66+2.66)/2	-0.35		
		(-23.24--22.29)x(2.65+2.66)/2	-2.52		
		(-23.72--23.24)x(2.64+2.65)/2	-1.27		
		(-24.32--23.72)x(2.64+2.64)/2	-1.58		
		(-25.35--24.32)x(2.66+2.64)/2	-2.73		
		(-25.41--25.35)x(2.66+2.66)/2	-0.16		
		(-25.43--25.41)x(2.66+2.66)/2	-0.05		
		(-25.52--25.43)x(2.66+2.66)/2	-0.24		
		(-26.24--25.52)x(2.67+2.66)/2	-1.92		
		(-26.49--26.24)x(2.66+2.67)/2	-0.67		
		(-26.97--26.49)x(2.65+2.66)/2	-1.27		
		(-27.57--26.97)x(2.63+2.65)/2	-1.58		
		(-28.23--27.57)x(2.64+2.63)/2	-1.74		
				21.65	
41 600.00	BO1	(-34.71--36.23)x(0.61+1.77)/2	1.81		
		(-34.16--34.71)x(0.67+0.61)/2	0.35		
		(-33.63--34.16)x(0.65+0.67)/2	0.35		
		(-32.57--33.63)x(1.35+0.65)/2	1.06		
		(-32.55--32.57)x(1.37+1.35)/2	0.03		
		(-32.54--32.55)x(1.38+1.37)/2	0.01		
		(-31.47--32.54)x(2.06+1.38)/2	1.84		
		(-30.93--31.47)x(2.41+2.06)/2	1.21		
		(-30.39--30.93)x(2.72+2.41)/2	1.39		
		(-29.32--30.39)x(2.96+2.72)/2	3.04		
		(-29.31--29.32)x(2.96+2.96)/2	0.03		
		(-29.30--29.31)x(2.96+2.96)/2	0.03		
		(-28.23--29.30)x(2.95+2.96)/2	3.16		
		A RIPORTARE mq	14.31		

		CALCOLO DELLE AREE		Foglio n. 115
BONIFICA				
N. SEZIONE PROG.	FIG.	ELEMENTI DI CALCOLO	AREA ELEMENTARE mq	AREA FIGURA mq	NOTE
		RIPORTO mq	14.31		
		(-27.68--28.23)x(2.96+2.95)/2	1.63		
		(-27.15--27.68)x(2.97+2.96)/2	1.57		
		(-26.07--27.15)x(2.97+2.97)/2	3.21		
		(-24.99--26.07)x(2.99+2.97)/2	3.22		
		(-24.45--24.99)x(2.98+2.99)/2	1.61		
		(-23.91--24.45)x(2.97+2.98)/2	1.61		
		(-22.83--23.91)x(2.89+2.97)/2	3.16		
		(-22.82--22.83)x(2.89+2.89)/2	0.03		
		(-22.81--22.82)x(2.89+2.89)/2	0.03		
		(-21.74--22.81)x(2.90+2.89)/2	3.10		
		(-21.21--21.74)x(2.89+2.90)/2	1.53		
		(-20.66--21.21)x(2.89+2.89)/2	1.59		
		(-19.59--20.66)x(2.85+2.89)/2	3.07		
		(-19.58--19.59)x(2.84+2.85)/2	0.03		
		(-19.56--19.58)x(2.84+2.84)/2	0.06		
		(-18.50--19.56)x(2.79+2.84)/2	2.98		
		(-17.98--18.50)x(2.79+2.79)/2	1.45		
		(-17.42--17.98)x(2.79+2.79)/2	1.56		
		(-16.36--17.42)x(2.78+2.79)/2	2.95		
		(-16.34--16.36)x(2.78+2.78)/2	0.06		
		(-16.31--16.34)x(2.78+2.78)/2	0.08		
		(-15.26--16.31)x(2.75+2.78)/2	2.90		
		(-14.74--15.26)x(2.74+2.75)/2	1.43		
		(-14.18--14.74)x(2.74+2.74)/2	1.53		
		(-13.12--14.18)x(2.75+2.74)/2	2.91		
		(-13.10--13.12)x(2.75+2.75)/2	0.05		
		(-13.09--13.10)x(2.75+2.75)/2	0.03		
		(-13.06--13.09)x(2.75+2.75)/2	0.08		
		(-12.28--13.06)x(2.78+2.75)/2	2.16		
		(-12.02--12.28)x(2.80+2.78)/2	0.73		
		(-11.50--12.02)x(2.79+2.80)/2	1.45		
		(-10.94--11.50)x(2.79+2.79)/2	1.56		
		(-9.89--10.94)x(2.76+2.79)/2	2.91		
		(-9.86--9.89)x(2.76+2.76)/2	0.08		
		(-9.81--9.86)x(2.75+2.76)/2	0.14		
		(-8.78--9.81)x(2.72+2.75)/2	2.82		
		(-8.27--8.78)x(2.72+2.72)/2	1.39		
		(-7.70--8.27)x(2.72+2.72)/2	1.55		
		(-6.65--7.70)x(2.71+2.72)/2	2.85		
		(-6.62--6.65)x(2.71+2.71)/2	0.08		
		(-6.56--6.62)x(2.72+2.71)/2	0.16		
		(-5.54--6.56)x(2.87+2.72)/2	2.85		
		(-5.03--5.54)x(3.00+2.87)/2	1.50		
		(-4.46--5.03)x(3.12+3.00)/2	1.74		
		(-3.41--4.46)x(3.11+3.12)/2	3.27		
		(-3.38--3.41)x(3.11+3.11)/2	0.09		
		(-3.30--3.38)x(3.10+3.11)/2	0.25		
		(-2.30--3.30)x(3.02+3.10)/2	3.06		
		(-1.80--2.30)x(3.01+3.02)/2	1.51		
		(-1.22--1.80)x(3.02+3.01)/2	1.75		
		(-0.18--1.22)x(3.03+3.02)/2	3.15		
		(-0.14--0.18)x(3.03+3.03)/2	0.12		
		(-0.05--0.14)x(3.03+3.03)/2	0.27		
		(0.94--0.05)x(3.06+3.03)/2	3.01		
		(1.44-0.94)x(3.07+3.06)/2	1.53		
		(2.02-1.44)x(3.07+3.07)/2	1.78		
		(3.06-2.02)x(3.11+3.07)/2	3.21		
		(3.10-3.06)x(3.11+3.11)/2	0.12		
		(3.20-3.10)x(3.11+3.11)/2	0.31		
		(4.18-3.20)x(3.14+3.11)/2	3.06		
		(4.68-4.18)x(3.15+3.14)/2	1.57		
		(5.27-4.68)x(3.16+3.15)/2	1.86		
		(5.56-5.27)x(3.17+3.16)/2	0.92		
		(6.35-5.56)x(3.14+3.17)/2	2.49		
		(6.45-6.35)x(3.14+3.14)/2	0.31		
		(7.43-6.45)x(3.14+3.14)/2	3.08		
		(7.91-7.43)x(3.13+3.14)/2	1.50		
		(8.51-7.91)x(3.14+3.13)/2	1.88		
		(9.53-8.51)x(3.07+3.14)/2	3.17		
		(9.59-9.53)x(3.07+3.07)/2	0.18		
		(9.70-9.59)x(3.07+3.07)/2	0.34		
		(10.67-9.70)x(3.04+3.07)/2	2.96		
		(11.15-10.67)x(3.03+3.04)/2	1.46		
		(11.75-11.15)x(3.02+3.03)/2	1.81		
		(12.77-11.75)x(3.00+3.02)/2	3.07		
		(12.83-12.77)x(3.00+3.00)/2	0.18		
		(12.95-12.83)x(3.00+3.00)/2	0.36		
		(13.91-12.95)x(2.97+3.00)/2	2.87		
		(14.38-13.91)x(2.96+2.97)/2	1.39		
		(14.99-14.38)x(2.93+2.96)/2	1.80		
		(15.25-14.99)x(2.94+2.93)/2	0.76		
		(14.99-15.25)x(2.43+2.44)/2	-0.63		
		(14.38-14.99)x(2.46+2.43)/2	-1.49		
		(13.91-14.38)x(2.47+2.46)/2	-1.16		
		(12.95-13.91)x(2.50+2.47)/2	-2.39		
		(12.83-12.95)x(2.50+2.50)/2	-0.30		
		(12.77-12.83)x(2.50+2.50)/2	-0.15		
		(11.75-12.77)x(2.52+2.50)/2	-2.56		
		(11.15-11.75)x(2.53+2.52)/2	-1.51		
		(10.67-11.15)x(2.54+2.53)/2	-1.22		
		(9.70-10.67)x(2.57+2.54)/2	-2.48		
		(9.59-9.70)x(2.57+2.57)/2	-0.28		
		(9.53-9.59)x(2.57+2.57)/2	-0.15		
		(8.51-9.53)x(2.64+2.57)/2	-2.66		
		(7.91-8.51)x(2.63+2.64)/2	-1.58		
		(7.43-7.91)x(2.64+2.63)/2	-1.26		
		(6.45-7.43)x(2.64+2.64)/2	-2.59		
		(6.35-6.45)x(2.64+2.64)/2	-0.26		
		(5.56-6.35)x(2.67+2.64)/2	-2.10		
		(5.27-5.56)x(2.66+2.67)/2	-0.77		
		(4.68-5.27)x(2.65+2.66)/2	-1.57		
		(4.18-4.68)x(2.64+2.65)/2	-1.32		
		(3.20-4.18)x(2.61+2.64)/2	-2.57		
		(3.10-3.20)x(2.61+2.61)/2	-0.26		
		A RIPORTARE mq	110.93		

		CALCOLO DELLE AREE		Foglio n. 116
BONIFICA				
N. SEZIONE PROG.	FIG.	ELEMENTI DI CALCOLO	AREA ELEMENTARE mq	AREA FIGURA mq	NOTE
		RIPORTO mq	110.93		
		(3.06-3.10)x(2.61+2.61)/2	-0.10		
		(2.02-3.06)x(2.57+2.61)/2	-2.69		
		(1.44-2.02)x(2.57+2.57)/2	-1.49		
		(0.94-1.44)x(2.56+2.57)/2	-1.28		
		(-0.05-0.94)x(2.53+2.56)/2	-2.52		
		(-0.14--0.05)x(2.53+2.53)/2	-0.23		
		(-0.18--0.14)x(2.53+2.53)/2	-0.10		
		(-1.22--0.18)x(2.52+2.53)/2	-2.63		
		(-1.80--1.22)x(2.51+2.52)/2	-1.46		
		(-2.30--1.80)x(2.52+2.51)/2	-1.26		
		(-3.30--2.30)x(2.60+2.52)/2	-2.56		
		(-3.38--3.30)x(2.61+2.60)/2	-0.21		
		(-3.41--3.38)x(2.61+2.61)/2	-0.08		
		(-4.46--3.41)x(2.62+2.61)/2	-2.75		
		(-5.03--4.46)x(2.50+2.62)/2	-1.46		
		(-5.54--5.03)x(2.37+2.50)/2	-1.24		
		(-6.56--5.54)x(2.22+2.37)/2	-2.34		
		(-6.62--6.56)x(2.21+2.22)/2	-0.13		
		(-6.65--6.62)x(2.21+2.21)/2	-0.07		
		(-7.70--6.65)x(2.22+2.21)/2	-2.33		
		(-8.27--7.70)x(2.22+2.22)/2	-1.27		
		(-8.78--8.27)x(2.22+2.22)/2	-1.13		
		(-9.81--8.78)x(2.25+2.22)/2	-2.30		
		(-9.86--9.81)x(2.26+2.25)/2	-0.11		
		(-9.89--9.86)x(2.26+2.26)/2	-0.07		
		(-10.94--9.89)x(2.29+2.26)/2	-2.39		
		(-11.50--10.94)x(2.29+2.29)/2	-1.28		
		(-12.02--11.50)x(2.30+2.29)/2	-1.19		
		(-12.28--12.02)x(2.28+2.30)/2	-0.60		
		(-13.06--12.28)x(2.25+2.28)/2	-1.77		
		(-13.09--13.06)x(2.25+2.25)/2	-0.07		
		(-13.10--13.09)x(2.25+2.25)/2	-0.02		
		(-13.12--13.10)x(2.25+2.25)/2	-0.04		
		(-14.18--13.12)x(2.24+2.25)/2	-2.38		
		(-14.74--14.18)x(2.24+2.24)/2	-1.25		
		(-15.26--14.74)x(2.25+2.24)/2	-1.17		
		(-16.31--15.26)x(2.28+2.25)/2	-2.38		
		(-16.34--16.31)x(2.28+2.28)/2	-0.07		
		(-16.36--16.34)x(2.28+2.28)/2	-0.05		
		(-17.42--16.36)x(2.29+2.28)/2	-2.42		
		(-17.98--17.42)x(2.29+2.29)/2	-1.28		
		(-18.50--17.98)x(2.29+2.29)/2	-1.19		
		(-19.56--18.50)x(2.34+2.29)/2	-2.45		
		(-19.58--19.56)x(2.34+2.34)/2	-0.05		
		(-19.59--19.58)x(2.35+2.34)/2	-0.02		
		(-20.66--19.59)x(2.39+2.35)/2	-2.54		
		(-21.21--20.66)x(2.39+2.39)/2	-1.31		
		(-21.74--21.21)x(2.40+2.39)/2	-1.27		
		(-22.81--21.74)x(2.39+2.40)/2	-2.56		
		(-22.82--22.81)x(2.39+2.39)/2	-0.02		
		(-22.83--22.82)x(2.39+2.39)/2	-0.02		
		(-23.91--22.83)x(2.47+2.39)/2	-2.62		
		(-24.45--23.91)x(2.48+2.47)/2	-1.34		
		(-24.99--24.45)x(2.49+2.48)/2	-1.34		
		(-26.07--24.99)x(2.47+2.49)/2	-2.68		
		(-27.15--26.07)x(2.47+2.47)/2	-2.67		
		(-27.68--27.15)x(2.46+2.47)/2	-1.31		
		(-28.23--27.68)x(2.45+2.46)/2	-1.35		
		(-29.30--28.23)x(2.46+2.45)/2	-2.63		
		(-29.31--29.30)x(2.46+2.46)/2	-0.02		
		(-29.32--29.31)x(2.46+2.46)/2	-0.02		
		(-30.39--29.32)x(2.22+2.46)/2	-2.50		
		(-30.93--30.39)x(1.91+2.22)/2	-1.12		
		(-31.47--30.93)x(1.56+1.91)/2	-0.94		
		(-32.54--31.47)x(0.88+1.56)/2	-1.31		
		(-32.55--32.54)x(0.87+0.88)/2	-0.01		
		(-32.57--32.55)x(0.85+0.87)/2	-0.02		
		(-33.63--32.57)x(0.15+0.85)/2	-0.53		
		(-34.16--33.63)x(0.17+0.15)/2	-0.08		
		(-34.71--34.16)x(0.11+0.17)/2	-0.08		
		(-36.23--34.71)x(1.27+0.11)/2	-1.05		
				25.71	
42 615.00	B01	(-31.01--31.43)x(3.05+3.07)/2	1.29		
		(-29.97--31.01)x(3.08+3.05)/2	3.19		
		(-29.93--29.97)x(3.08+3.08)/2	0.12		
		(-29.86--29.93)x(3.08+3.08)/2	0.22		
		(-28.86--29.86)x(3.04+3.08)/2	3.06		
		(-28.36--28.86)x(3.01+3.04)/2	1.51		
		(-27.78--28.36)x(2.96+3.01)/2	1.73		
		(-26.75--27.78)x(2.97+2.96)/2	3.05		
		(-26.70--26.75)x(2.97+2.97)/2	0.15		
		(-26.59--26.70)x(2.97+2.97)/2	0.33		
		(-25.62--26.59)x(2.96+2.97)/2	2.88		
		(-25.14--25.62)x(2.97+2.96)/2	1.42		
		(-24.54--25.14)x(2.96+2.97)/2	1.78		
		(-23.53--24.54)x(2.98+2.96)/2	3.00		
		(-23.46--23.53)x(2.98+2.98)/2	0.21		
		(-23.32--23.46)x(2.98+2.98)/2	0.42		
		(-22.38--23.32)x(2.97+2.98)/2	2.80		
		(-21.91--22.38)x(2.97+2.97)/2	1.40		
		(-21.30--21.91)x(2.97+2.97)/2	1.81		
		(-20.30--21.30)x(2.98+2.97)/2	2.98		
		(-20.22--20.30)x(2.98+2.98)/2	0.24		
		(-20.05--20.22)x(2.98+2.98)/2	0.51		
		(-19.14--20.05)x(2.99+2.98)/2	2.72		
		(-18.69--19.14)x(2.99+2.99)/2	1.35		
		(-18.06--18.69)x(3.00+2.99)/2	1.89		
		(-17.74--18.06)x(3.00+3.00)/2	0.96		
		(-16.98--17.74)x(3.00+3.00)/2	2.28		
		(-16.77--16.98)x(3.01+3.00)/2	0.63		
		(-15.90--16.77)x(3.01+3.01)/2	2.62		
		(-15.47--15.90)x(3.02+3.01)/2	1.30		
		(-14.82--15.47)x(3.03+3.02)/2	1.97		
		(-13.86--14.82)x(3.05+3.03)/2	2.92		
		A RIPORTARE mq	52.74		

		CALCOLO DELLE AREE		Foglio n. 117
BONIFICA				
N. SEZIONE PROG.	FIG.	ELEMENTI DI CALCOLO	AREA ELEMENTARE mq	AREA FIGURA mq	NOTE
		RIPORTO mq	52.74		
		(-13.74--13.86)x(3.05+3.05)/2	0.37		
		(-13.50--13.74)x(3.06+3.05)/2	0.73		
		(-12.66--13.50)x(3.07+3.06)/2	2.57		
		(-12.24--12.66)x(3.08+3.07)/2	1.29		
		(-11.58--12.24)x(3.10+3.08)/2	2.04		
		(-10.63--11.58)x(3.13+3.10)/2	2.96		
		(-10.50--10.63)x(3.13+3.13)/2	0.41		
		(-10.23--10.50)x(3.14+3.13)/2	0.85		
		(-9.42--10.23)x(3.17+3.14)/2	2.56		
		(-9.02--9.42)x(3.19+3.17)/2	1.27		
		(-8.34--9.02)x(3.21+3.19)/2	2.18		
		(-7.41--8.34)x(3.24+3.21)/2	3.00		
		(-7.26--7.41)x(3.24+3.24)/2	0.49		
		(-6.96--7.26)x(3.26+3.24)/2	0.97		
		(-6.18--6.96)x(3.29+3.26)/2	2.55		
		(-5.80--6.18)x(3.30+3.29)/2	1.25		
		(-5.10--5.80)x(3.29+3.30)/2	2.31		
		(-4.19--5.10)x(3.29+3.29)/2	2.99		
		(-4.02--4.19)x(3.30+3.29)/2	0.56		
		(-3.69--4.02)x(3.30+3.30)/2	1.09		
		(-2.94--3.69)x(3.32+3.30)/2	2.48		
		(-2.57--2.94)x(3.32+3.32)/2	1.23		
		(-1.86--2.57)x(3.32+3.32)/2	2.36		
		(-0.96--1.86)x(3.31+3.32)/2	2.98		
		(-0.78--0.96)x(3.30+3.31)/2	0.59		
		(-0.42--0.78)x(3.29+3.30)/2	1.19		
		(0.30--0.42)x(3.27+3.29)/2	2.36		
		(0.93-0.30)x(3.26+3.27)/2	2.06		
		(1.38-0.93)x(3.26+3.26)/2	1.47		
		(2.26-1.38)x(3.20+3.26)/2	2.84		
		(2.46-2.26)x(3.19+3.20)/2	0.64		
		(2.85-2.46)x(3.18+3.19)/2	1.24		
		(3.54-2.85)x(3.16+3.18)/2	2.19		
		(3.87-3.54)x(3.14+3.16)/2	1.04		
		(4.61-3.87)x(3.11+3.14)/2	2.31		
		(5.48-4.61)x(3.09+3.11)/2	2.70		
		(5.69-5.48)x(3.09+3.09)/2	0.65		
		(6.12-5.69)x(3.08+3.09)/2	1.33		
		(6.77-6.12)x(3.06+3.08)/2	2.00		
		(7.09-6.77)x(3.06+3.06)/2	0.98		
		(7.85-7.09)x(3.07+3.06)/2	2.33		
		(8.71-7.85)x(3.06+3.07)/2	2.64		
		(8.93-8.71)x(3.06+3.06)/2	0.67		
		(9.40-8.93)x(3.03+3.06)/2	1.43		
		(10.01-9.40)x(3.00+3.03)/2	1.84		
		(10.32-10.01)x(3.00+3.00)/2	0.93		
		(11.09-10.32)x(2.99+3.00)/2	2.31		
		(11.93-11.09)x(2.99+2.99)/2	2.51		
		(12.17-11.93)x(2.98+2.99)/2	0.72		
		(12.67-12.17)x(2.98+2.98)/2	1.49		
		(13.25-12.67)x(2.96+2.98)/2	1.72		
		(13.54-13.25)x(2.96+2.96)/2	0.86		
		(14.33-13.54)x(2.95+2.96)/2	2.33		
		(15.15-14.33)x(2.96+2.95)/2	2.42		
		(15.41-15.15)x(2.96+2.96)/2	0.77		
		(15.94-15.41)x(2.96+2.96)/2	1.57		
		(16.49-15.94)x(2.96+2.96)/2	1.63		
		(16.76-16.49)x(2.96+2.96)/2	0.80		
		(17.57-16.76)x(2.94+2.96)/2	2.39		
		(18.38-17.57)x(2.95+2.94)/2	2.39		
		(18.65-18.38)x(2.94+2.95)/2	0.80		
		(18.79-18.65)x(2.94+2.94)/2	0.41		
		(19.21-18.79)x(2.94+2.94)/2	1.23		
		(19.60-19.21)x(2.94+2.94)/2	1.15		
		(19.73-19.60)x(2.94+2.94)/2	0.38		
		(19.99-19.73)x(2.93+2.94)/2	0.76		
		(20.81-19.99)x(2.86+2.93)/2	2.37		
		(21.60-20.81)x(2.85+2.86)/2	2.26		
		(21.89-21.60)x(2.85+2.85)/2	0.83		
		(22.48-21.89)x(2.92+2.85)/2	1.70		
		(22.97-22.48)x(2.97+2.92)/2	1.44		
		(23.21-22.97)x(3.00+2.97)/2	0.72		
		(24.05-23.21)x(3.08+3.00)/2	2.55		
		(24.82-24.05)x(3.08+3.08)/2	2.37		
		(25.13-24.82)x(3.08+3.08)/2	0.95		
		(25.75-25.13)x(3.10+3.08)/2	1.92		
		(26.21-25.75)x(3.10+3.10)/2	1.43		
		(26.43-26.21)x(3.08+3.10)/2	0.68		
		(27.29-26.43)x(3.00+3.08)/2	2.61		
		(28.04-27.29)x(3.00+3.00)/2	2.25		
		(28.37-28.04)x(2.98+3.00)/2	0.99		
		(29.02-28.37)x(3.01+2.98)/2	1.95		
		(29.45-29.02)x(3.03+3.01)/2	1.30		
		(29.66-29.45)x(3.04+3.03)/2	0.64		
		(30.53-29.66)x(3.07+3.04)/2	2.66		
		(31.27-30.53)x(3.08+3.07)/2	2.28		
		(31.61-31.27)x(3.09+3.08)/2	1.05		
		(32.29-31.61)x(3.11+3.09)/2	2.11		
		(32.69-32.29)x(3.12+3.11)/2	1.25		
		(32.88-32.69)x(3.12+3.12)/2	0.59		
		(33.77-32.88)x(3.13+3.12)/2	2.78		
		(33.91-33.77)x(3.13+3.13)/2	0.44		
		(33.77-33.91)x(2.63+2.63)/2	-0.37		
		(32.88-33.77)x(2.62+2.63)/2	-2.34		
		(32.69-32.88)x(2.62+2.62)/2	-0.50		
		(32.29-32.69)x(2.61+2.62)/2	-1.05		
		(31.61-32.29)x(2.59+2.61)/2	-1.77		
		(31.27-31.61)x(2.58+2.59)/2	-0.88		
		(30.53-31.27)x(2.57+2.58)/2	-1.91		
		(29.66-30.53)x(2.54+2.57)/2	-2.22		
		(29.45-29.66)x(2.53+2.54)/2	-0.53		
		(29.02-29.45)x(2.51+2.53)/2	-1.08		
		(28.37-29.02)x(2.48+2.51)/2	-1.62		
		(28.04-28.37)x(2.50+2.48)/2	-0.82		
		A RIPORTARE mq	185.33		

	CALCOLO DELLE AREE		Foglio n. 118

BONIFICA

N. SEZIONE PROG.	FIG.	ELEMENTI DI CALCOLO	AREA ELEMENTARE mq	AREA FIGURA mq	NOTE
		RIPORTO mq	185.33		
		(27.29-28.04)x(2.50+2.50)/2	-1.88		
		(26.43-27.29)x(2.58+2.50)/2	-2.18		
		(26.21-26.43)x(2.60+2.58)/2	-0.57		
		(25.75-26.21)x(2.60+2.60)/2	-1.20		
		(25.13-25.75)x(2.58+2.60)/2	-1.61		
		(24.82-25.13)x(2.58+2.58)/2	-0.80		
		(24.05-24.82)x(2.58+2.58)/2	-1.99		
		(23.21-24.05)x(2.50+2.58)/2	-2.13		
		(22.97-23.21)x(2.47+2.50)/2	-0.60		
		(22.48-22.97)x(2.42+2.47)/2	-1.20		
		(21.89-22.48)x(2.35+2.42)/2	-1.41		
		(21.60-21.89)x(2.35+2.35)/2	-0.68		
		(20.81-21.60)x(2.36+2.35)/2	-1.86		
		(19.99-20.81)x(2.43+2.36)/2	-1.96		
		(19.73-19.99)x(2.44+2.43)/2	-0.63		
		(19.60-19.73)x(2.44+2.44)/2	-0.32		
		(19.21-19.60)x(2.44+2.44)/2	-0.95		
		(18.79-19.21)x(2.44+2.44)/2	-1.02		
		(18.65-18.79)x(2.44+2.44)/2	-0.34		
		(18.38-18.65)x(2.45+2.44)/2	-0.66		
		(17.57-18.38)x(2.44+2.45)/2	-1.98		
		(16.76-17.57)x(2.46+2.44)/2	-1.98		
		(16.49-16.76)x(2.46+2.46)/2	-0.66		
		(15.94-16.49)x(2.46+2.46)/2	-1.35		
		(15.41-15.94)x(2.46+2.46)/2	-1.30		
		(15.15-15.41)x(2.46+2.46)/2	-0.64		
		(14.33-15.15)x(2.45+2.46)/2	-2.01		
		(13.54-14.33)x(2.46+2.45)/2	-1.94		
		(13.25-13.54)x(2.46+2.46)/2	-0.71		
		(12.67-13.25)x(2.48+2.46)/2	-1.43		
		(12.17-12.67)x(2.48+2.48)/2	-1.24		
		(11.93-12.17)x(2.49+2.48)/2	-0.60		
		(11.09-11.93)x(2.49+2.49)/2	-2.09		
		(10.32-11.09)x(2.50+2.49)/2	-1.92		
		(10.01-10.32)x(2.50+2.50)/2	-0.78		
		(9.40-10.01)x(2.53+2.50)/2	-1.53		
		(8.93-9.40)x(2.56+2.53)/2	-1.20		
		(8.71-8.93)x(2.56+2.56)/2	-0.56		
		(7.85-8.71)x(2.57+2.56)/2	-2.21		
		(7.09-7.85)x(2.56+2.57)/2	-1.95		
		(6.77-7.09)x(2.56+2.56)/2	-0.82		
		(6.12-6.77)x(2.58+2.56)/2	-1.67		
		(5.69-6.12)x(2.59+2.58)/2	-1.11		
		(5.48-5.69)x(2.59+2.59)/2	-0.54		
		(4.61-5.48)x(2.61+2.59)/2	-2.26		
		(3.87-4.61)x(2.64+2.61)/2	-1.94		
		(3.54-3.87)x(2.66+2.64)/2	-0.87		
		(2.85-3.54)x(2.68+2.66)/2	-1.84		
		(2.46-2.85)x(2.69+2.68)/2	-1.05		
		(2.26-2.46)x(2.70+2.69)/2	-0.54		
		(1.38-2.26)x(2.76+2.70)/2	-2.40		
		(0.93-1.38)x(2.76+2.76)/2	-1.24		
		(0.30-0.93)x(2.77+2.76)/2	-1.74		
		(-0.42-0.30)x(2.79+2.77)/2	-2.00		
		(-0.78--0.42)x(2.80+2.79)/2	-1.01		
		(-0.96--0.78)x(2.81+2.80)/2	-0.50		
		(-1.86--0.96)x(2.82+2.81)/2	-2.53		
		(-2.57--1.86)x(2.82+2.82)/2	-2.00		
		(-2.94--2.57)x(2.82+2.82)/2	-1.04		
		(-3.69--2.94)x(2.80+2.82)/2	-2.11		
		(-4.02--3.69)x(2.80+2.80)/2	-0.92		
		(-4.19--4.02)x(2.79+2.80)/2	-0.48		
		(-5.10--4.19)x(2.79+2.79)/2	-2.54		
		(-5.80--5.10)x(2.80+2.79)/2	-1.96		
		(-6.18--5.80)x(2.79+2.80)/2	-1.06		
		(-6.96--6.18)x(2.76+2.79)/2	-2.16		
		(-7.26--6.96)x(2.74+2.76)/2	-0.82		
		(-7.41--7.26)x(2.74+2.74)/2	-0.41		
		(-8.34--7.41)x(2.71+2.74)/2	-2.53		
		(-9.02--8.34)x(2.69+2.71)/2	-1.84		
		(-9.42--9.02)x(2.67+2.69)/2	-1.07		
		(-10.23--9.42)x(2.64+2.67)/2	-2.15		
		(-10.50--10.23)x(2.63+2.64)/2	-0.71		
		(-10.63--10.50)x(2.63+2.63)/2	-0.34		
		(-11.58--10.63)x(2.60+2.63)/2	-2.48		
		(-12.24--11.58)x(2.58+2.60)/2	-1.71		
		(-12.66--12.24)x(2.57+2.58)/2	-1.08		
		(-13.50--12.66)x(2.56+2.57)/2	-2.15		
		(-13.74--13.50)x(2.55+2.56)/2	-0.61		
		(-13.86--13.74)x(2.55+2.55)/2	-0.31		
		(-14.82--13.86)x(2.53+2.55)/2	-2.44		
		(-15.47--14.82)x(2.52+2.53)/2	-1.64		
		(-15.90--15.47)x(2.51+2.52)/2	-1.08		
		(-16.77--15.90)x(2.51+2.51)/2	-2.18		
		(-16.98--16.77)x(2.50+2.51)/2	-0.53		
		(-17.74--16.98)x(2.50+2.50)/2	-1.90		
		(-18.06--17.74)x(2.50+2.50)/2	-0.80		
		(-18.69--18.06)x(2.49+2.50)/2	-1.57		
		(-19.14--18.69)x(2.49+2.49)/2	-1.12		
		(-20.05--19.14)x(2.48+2.49)/2	-2.26		
		(-20.22--20.05)x(2.48+2.48)/2	-0.42		
		(-20.30--20.22)x(2.48+2.48)/2	-0.20		
		(-21.30--20.30)x(2.47+2.48)/2	-2.48		
		(-21.91--21.30)x(2.47+2.47)/2	-1.51		
		(-22.38--21.91)x(2.47+2.47)/2	-1.16		
		(-23.32--22.38)x(2.48+2.47)/2	-2.33		
		(-23.46--23.32)x(2.48+2.48)/2	-0.35		
		(-23.53--23.46)x(2.48+2.48)/2	-0.17		
		(-24.54--23.53)x(2.46+2.48)/2	-2.49		
		(-25.14--24.54)x(2.47+2.46)/2	-1.48		
		(-25.62--25.14)x(2.46+2.47)/2	-1.18		
		(-26.59--25.62)x(2.47+2.46)/2	-2.39		
		(-26.70--26.59)x(2.47+2.47)/2	-0.27		
		(-26.75--26.70)x(2.47+2.47)/2	-0.12		
		A RIPORTARE mq	44.65		

		CALCOLO DELLE AREE		Foglio n. 119
BONIFICA				
N. SEZIONE PROG.	FIG.	ELEMENTI DI CALCOLO	AREA ELEMENTARE mq	AREA FIGURA mq	NOTE
		RIPORTO mq	44.65		
		(-27.78--26.75)x(2.46+2.47)/2	-2.54		
		(-28.36--27.78)x(2.51+2.46)/2	-1.44		
		(-28.86--28.36)x(2.54+2.51)/2	-1.26		
		(-29.86--28.86)x(2.58+2.54)/2	-2.56		
		(-29.93--29.86)x(2.58+2.58)/2	-0.18		
		(-29.97--29.93)x(2.58+2.58)/2	-0.10		
		(-31.01--29.97)x(2.55+2.58)/2	-2.67		
		(-31.43--31.01)x(2.57+2.55)/2	-1.08		
				32.82	
43	B01	(-32.69--33.10)x(3.21+3.21)/2	1.32		
630.00		(-32.21--32.69)x(3.21+3.21)/2	1.54		
		(-31.61--32.21)x(3.21+3.21)/2	1.93		
		(-30.61--31.61)x(3.21+3.21)/2	3.21		
		(-30.53--30.61)x(3.21+3.21)/2	0.26		
		(-30.38--30.53)x(3.21+3.21)/2	0.48		
		(-29.45--30.38)x(3.21+3.21)/2	2.99		
		(-29.00--29.45)x(3.21+3.21)/2	1.44		
		(-28.37--29.00)x(3.21+3.21)/2	2.02		
		(-27.40--28.37)x(3.21+3.21)/2	3.11		
		(-27.29--27.40)x(3.21+3.21)/2	0.35		
		(-27.09--27.29)x(3.21+3.21)/2	0.64		
		(-26.22--27.09)x(3.21+3.21)/2	2.79		
		(-25.79--26.22)x(3.21+3.21)/2	1.38		
		(-25.14--25.79)x(3.20+3.21)/2	2.08		
		(-24.19--25.14)x(3.20+3.20)/2	3.04		
		(-24.06--24.19)x(3.20+3.20)/2	0.42		
		(-23.80--24.06)x(3.20+3.20)/2	0.83		
		(-22.98--23.80)x(3.20+3.20)/2	2.62		
		(-22.37--22.98)x(3.20+3.20)/2	1.95		
		(-21.90--22.37)x(3.20+3.20)/2	1.50		
		(-20.97--21.90)x(3.19+3.20)/2	2.97		
		(-20.82--20.97)x(3.19+3.19)/2	0.48		
		(-20.51--20.82)x(3.19+3.19)/2	0.99		
		(-19.74--20.51)x(3.18+3.19)/2	2.45		
		(-19.37--19.74)x(3.18+3.18)/2	1.18		
		(-18.66--19.37)x(3.17+3.18)/2	2.25		
		(-17.76--18.66)x(3.17+3.17)/2	2.85		
		(-17.58--17.76)x(3.17+3.17)/2	0.57		
		(-17.21--17.58)x(3.16+3.17)/2	1.17		
		(-16.51--17.21)x(3.16+3.16)/2	2.21		
		(-16.16--16.51)x(3.17+3.16)/2	1.11		
		(-15.43--16.16)x(3.17+3.17)/2	2.31		
		(-14.55--15.43)x(3.18+3.17)/2	2.79		
		(-14.35--14.55)x(3.18+3.18)/2	0.64		
		(-13.92--14.35)x(3.18+3.18)/2	1.37		
		(-13.27--13.92)x(3.19+3.18)/2	2.07		
		(-12.95--13.27)x(3.19+3.19)/2	1.02		
		(-12.19--12.95)x(3.19+3.19)/2	2.42		
		(-11.34--12.19)x(3.20+3.19)/2	2.72		
		(-11.11--11.34)x(3.21+3.20)/2	0.74		
		(-10.63--11.11)x(3.21+3.21)/2	1.54		
		(-10.03--10.63)x(3.20+3.21)/2	1.92		
		(-9.74--10.03)x(3.20+3.20)/2	0.93		
		(-8.95--9.74)x(3.19+3.20)/2	2.52		
		(-8.13--8.95)x(3.20+3.19)/2	2.62		
		(-7.87--8.13)x(3.20+3.20)/2	0.83		
		(-7.34--7.87)x(3.20+3.20)/2	1.70		
		(-6.79--7.34)x(3.19+3.20)/2	1.76		
		(-6.53--6.79)x(3.19+3.19)/2	0.83		
		(-5.72--6.53)x(3.20+3.19)/2	2.59		
		(-4.92--5.72)x(3.20+3.20)/2	2.56		
		(-4.64--4.92)x(3.19+3.20)/2	0.89		
		(-4.49--4.64)x(3.19+3.19)/2	0.48		
		(-4.05--4.49)x(3.19+3.19)/2	1.40		
		(-3.68--4.05)x(3.19+3.19)/2	1.18		
		(-3.56--3.68)x(3.18+3.19)/2	0.38		
		(-3.32--3.56)x(3.19+3.18)/2	0.76		
		(-2.48--3.32)x(3.19+3.19)/2	2.68		
		(-1.71--2.48)x(3.18+3.19)/2	2.45		
		(-1.40--1.71)x(3.18+3.18)/2	0.99		
		(-0.76--1.40)x(3.17+3.18)/2	2.03		
		(-0.32--0.76)x(3.16+3.17)/2	1.39		
		(-0.11--0.32)x(3.14+3.16)/2	0.66		
		(0.76--0.11)x(3.11+3.14)/2	2.72		
		(1.50-0.76)x(3.09+3.11)/2	2.29		
		(1.84-1.50)x(3.07+3.09)/2	1.05		
		(2.53-1.84)x(3.11+3.07)/2	2.13		
		(2.92-2.53)x(3.13+3.11)/2	1.22		
		(3.10-2.92)x(3.13+3.13)/2	0.56		
		(4.00-3.10)x(3.14+3.13)/2	2.82		
		(4.71-4.00)x(3.18+3.14)/2	2.24		
		(5.07-4.71)x(3.19+3.18)/2	1.15		
		(5.82-5.07)x(3.21+3.19)/2	2.40		
		(6.15-5.82)x(3.22+3.21)/2	1.06		
		(6.31-6.15)x(3.22+3.22)/2	0.52		
		(7.23-6.31)x(3.21+3.22)/2	2.96		
		(7.92-7.23)x(3.18+3.21)/2	2.20		
		(8.31-7.92)x(3.17+3.18)/2	1.24		
		(9.12-8.31)x(3.11+3.17)/2	2.54		
		(9.39-9.12)x(3.09+3.11)/2	0.84		
		(9.52-9.39)x(3.09+3.09)/2	0.40		
		(10.47-9.52)x(3.05+3.09)/2	2.92		
		(11.13-10.47)x(3.04+3.05)/2	2.01		
		(11.55-11.13)x(3.03+3.04)/2	1.27		
		(12.41-11.55)x(3.02+3.03)/2	2.60		
		(12.63-12.41)x(3.02+3.02)/2	0.66		
		(12.73-12.63)x(3.02+3.02)/2	0.30		
		(13.71-12.73)x(3.02+3.02)/2	2.96		
		(14.20-13.71)x(3.02+3.02)/2	1.48		
		(14.78-14.20)x(3.01+3.02)/2	1.75		
		(15.70-14.78)x(3.03+3.01)/2	2.78		
		(15.86-15.70)x(3.03+3.03)/2	0.48		
		(15.94-15.86)x(3.03+3.03)/2	0.24		
		(16.94-15.94)x(3.08+3.03)/2	3.06		
		A RIPORTARE mq	158.15		

	CALCOLO DELLE AREE		Foglio n. 120

BONIFICA

N. SEZIONE PROG.	FIG.	ELEMENTI DI CALCOLO	AREA ELEMENTARE mq	AREA FIGURA mq	NOTE
		RIPORTO mq	158.15		
		(17.55-16.94)x(3.09+3.08)/2	1.88		
		(18.02-17.55)x(3.11+3.09)/2	1.46		
		(18.99-18.02)x(3.09+3.11)/2	3.01		
		(19.10-18.99)x(3.09+3.09)/2	0.34		
		(19.16-19.10)x(3.09+3.09)/2	0.19		
		(20.18-19.16)x(3.11+3.09)/2	3.16		
		(20.76-20.18)x(3.11+3.11)/2	1.80		
		(21.26-20.76)x(3.12+3.11)/2	1.56		
		(22.28-21.26)x(3.13+3.12)/2	3.19		
		(22.34-22.28)x(3.14+3.13)/2	0.19		
		(22.37-22.34)x(3.14+3.14)/2	0.09		
		(23.42-22.37)x(3.16+3.14)/2	3.31		
		(23.97-23.42)x(3.17+3.16)/2	1.74		
		(24.50-23.97)x(3.17+3.17)/2	1.68		
		(25.57-24.50)x(3.20+3.17)/2	3.41		
		(25.58-25.57)x(3.20+3.20)/2	0.03		
		(26.65-25.58)x(3.18+3.20)/2	3.41		
		(27.18-26.65)x(3.18+3.18)/2	1.69		
		(27.73-27.18)x(3.17+3.18)/2	1.75		
		(28.79-27.73)x(3.14+3.17)/2	3.34		
		(28.81-28.79)x(3.14+3.14)/2	0.06		
		(28.86-28.81)x(3.14+3.14)/2	0.16		
		(29.89-28.86)x(3.14+3.14)/2	3.23		
		(30.39-29.89)x(3.14+3.14)/2	1.57		
		(30.97-30.39)x(3.16+3.14)/2	1.83		
		(31.26-30.97)x(3.15+3.16)/2	0.91		
		(32.05-31.26)x(3.17+3.15)/2	2.50		
		(32.15-32.05)x(3.17+3.17)/2	0.32		
		(33.13-32.15)x(3.18+3.17)/2	3.11		
		(33.60-33.13)x(3.17+3.18)/2	1.49		
		(34.12-33.60)x(3.16+3.17)/2	1.65		
		(33.60-34.12)x(2.67+2.66)/2	-1.39		
		(33.13-33.60)x(2.68+2.67)/2	-1.26		
		(32.15-33.13)x(2.67+2.68)/2	-2.62		
		(32.05-32.15)x(2.67+2.67)/2	-0.27		
		(31.26-32.05)x(2.65+2.67)/2	-2.10		
		(30.97-31.26)x(2.66+2.65)/2	-0.77		
		(30.39-30.97)x(2.64+2.66)/2	-1.54		
		(29.89-30.39)x(2.64+2.64)/2	-1.32		
		(28.86-29.89)x(2.64+2.64)/2	-2.72		
		(28.81-28.86)x(2.64+2.64)/2	-0.13		
		(28.79-28.81)x(2.64+2.64)/2	-0.05		
		(27.73-28.79)x(2.67+2.64)/2	-2.81		
		(27.18-27.73)x(2.68+2.67)/2	-1.47		
		(26.65-27.18)x(2.68+2.68)/2	-1.42		
		(25.58-26.65)x(2.70+2.68)/2	-2.88		
		(25.57-25.58)x(2.70+2.70)/2	-0.03		
		(24.50-25.57)x(2.67+2.70)/2	-2.87		
		(23.97-24.50)x(2.67+2.67)/2	-1.42		
		(23.42-23.97)x(2.66+2.67)/2	-1.47		
		(22.37-23.42)x(2.64+2.66)/2	-2.78		
		(22.34-22.37)x(2.64+2.64)/2	-0.08		
		(22.28-22.34)x(2.63+2.64)/2	-0.16		
		(21.26-22.28)x(2.62+2.63)/2	-2.68		
		(20.76-21.26)x(2.61+2.62)/2	-1.31		
		(20.18-20.76)x(2.61+2.61)/2	-1.51		
		(19.16-20.18)x(2.59+2.61)/2	-2.65		
		(19.10-19.16)x(2.59+2.59)/2	-0.16		
		(18.99-19.10)x(2.59+2.59)/2	-0.28		
		(18.02-18.99)x(2.61+2.59)/2	-2.52		
		(17.55-18.02)x(2.59+2.61)/2	-1.22		
		(16.94-17.55)x(2.58+2.59)/2	-1.58		
		(15.94-16.94)x(2.53+2.58)/2	-2.56		
		(15.86-15.94)x(2.53+2.53)/2	-0.20		
		(15.70-15.86)x(2.53+2.53)/2	-0.40		
		(14.78-15.70)x(2.51+2.53)/2	-2.32		
		(14.20-14.78)x(2.52+2.51)/2	-1.46		
		(13.71-14.20)x(2.52+2.52)/2	-1.23		
		(12.73-13.71)x(2.52+2.52)/2	-2.47		
		(12.63-12.73)x(2.52+2.52)/2	-0.25		
		(12.41-12.63)x(2.52+2.52)/2	-0.55		
		(11.55-12.41)x(2.53+2.52)/2	-2.17		
		(11.13-11.55)x(2.54+2.53)/2	-1.06		
		(10.47-11.13)x(2.55+2.54)/2	-1.68		
		(9.52-10.47)x(2.59+2.55)/2	-2.44		
		(9.39-9.52)x(2.59+2.59)/2	-0.34		
		(9.12-9.39)x(2.61+2.59)/2	-0.70		
		(8.31-9.12)x(2.67+2.61)/2	-2.14		
		(7.92-8.31)x(2.68+2.67)/2	-1.04		
		(7.23-7.92)x(2.71+2.68)/2	-1.86		
		(6.31-7.23)x(2.72+2.71)/2	-2.50		
		(6.15-6.31)x(2.72+2.72)/2	-0.44		
		(5.82-6.15)x(2.71+2.72)/2	-0.90		
		(5.07-5.82)x(2.69+2.71)/2	-2.03		
		(4.71-5.07)x(2.68+2.69)/2	-0.97		
		(4.00-4.71)x(2.64+2.68)/2	-1.89		
		(3.10-4.00)x(2.63+2.64)/2	-2.37		
		(2.92-3.10)x(2.63+2.63)/2	-0.47		
		(2.53-2.92)x(2.61+2.63)/2	-1.02		
		(1.84-2.53)x(2.57+2.61)/2	-1.79		
		(1.50-1.84)x(2.59+2.57)/2	-0.88		
		(0.76-1.50)x(2.61+2.59)/2	-1.92		
		(-0.11-0.76)x(2.64+2.61)/2	-2.28		
		(-0.32--0.11)x(2.66+2.64)/2	-0.56		
		(-0.76--0.32)x(2.67+2.66)/2	-1.17		
		(-1.40--0.76)x(2.68+2.67)/2	-1.71		
		(-1.71--1.40)x(2.68+2.68)/2	-0.83		
		(-2.48--1.71)x(2.69+2.68)/2	-2.07		
		(-3.32--2.48)x(2.69+2.69)/2	-2.26		
		(-3.56--3.32)x(2.68+2.69)/2	-0.64		
		(-3.68--3.56)x(2.69+2.68)/2	-0.32		
		(-4.05--3.68)x(2.69+2.69)/2	-1.00		
		(-4.49--4.05)x(2.69+2.69)/2	-1.18		
		(-4.64--4.49)x(2.69+2.69)/2	-0.40		
		A RIPORTARE mq	110.27		

		CALCOLO DELLE AREE		Foglio n. 121
BONIFICA				
N. SEZIONE PROG.	FIG.	ELEMENTI DI CALCOLO	AREA ELEMENTARE mq	AREA FIGURA mq	NOTE
		RIPORTO mq	110.27		
		(-4.92--4.64)x(2.70+2.69)/2	-0.75		
		(-5.72--4.92)x(2.70+2.70)/2	-2.16		
		(-6.53--5.72)x(2.69+2.70)/2	-2.18		
		(-6.79--6.53)x(2.69+2.69)/2	-0.70		
		(-7.34--6.79)x(2.70+2.69)/2	-1.48		
		(-7.87--7.34)x(2.70+2.70)/2	-1.43		
		(-8.13--7.87)x(2.70+2.70)/2	-0.70		
		(-8.95--8.13)x(2.69+2.70)/2	-2.21		
		(-9.74--8.95)x(2.70+2.69)/2	-2.13		
		(-10.03--9.74)x(2.70+2.70)/2	-0.78		
		(-10.63--10.03)x(2.71+2.70)/2	-1.62		
		(-11.11--10.63)x(2.71+2.71)/2	-1.30		
		(-11.34--11.11)x(2.70+2.71)/2	-0.62		
		(-12.19--11.34)x(2.69+2.70)/2	-2.29		
		(-12.95--12.19)x(2.69+2.69)/2	-2.04		
		(-13.27--12.95)x(2.69+2.69)/2	-0.86		
		(-13.92--13.27)x(2.68+2.69)/2	-1.75		
		(-14.35--13.92)x(2.68+2.68)/2	-1.15		
		(-14.55--14.35)x(2.68+2.68)/2	-0.54		
		(-15.43--14.55)x(2.67+2.68)/2	-2.35		
		(-16.16--15.43)x(2.67+2.67)/2	-1.95		
		(-16.51--16.16)x(2.66+2.67)/2	-0.93		
		(-17.21--16.51)x(2.66+2.66)/2	-1.86		
		(-17.58--17.21)x(2.67+2.66)/2	-0.99		
		(-17.76--17.58)x(2.67+2.67)/2	-0.48		
		(-18.66--17.76)x(2.67+2.67)/2	-2.40		
		(-19.37--18.66)x(2.68+2.67)/2	-1.90		
		(-19.74--19.37)x(2.68+2.68)/2	-0.99		
		(-20.51--19.74)x(2.69+2.68)/2	-2.07		
		(-20.82--20.51)x(2.69+2.69)/2	-0.83		
		(-20.97--20.82)x(2.69+2.69)/2	-0.40		
		(-21.90--20.97)x(2.70+2.69)/2	-2.51		
		(-22.37--21.90)x(2.70+2.70)/2	-1.27		
		(-22.98--22.37)x(2.70+2.70)/2	-1.65		
		(-23.80--22.98)x(2.70+2.70)/2	-2.21		
		(-24.06--23.80)x(2.70+2.70)/2	-0.70		
		(-24.19--24.06)x(2.70+2.70)/2	-0.35		
		(-25.14--24.19)x(2.70+2.70)/2	-2.56		
		(-25.79--25.14)x(2.71+2.70)/2	-1.76		
		(-26.22--25.79)x(2.71+2.71)/2	-1.17		
		(-27.09--26.22)x(2.71+2.71)/2	-2.36		
		(-27.29--27.09)x(2.71+2.71)/2	-0.54		
		(-27.40--27.29)x(2.71+2.71)/2	-0.30		
		(-28.37--27.40)x(2.71+2.71)/2	-2.63		
		(-29.00--28.37)x(2.71+2.71)/2	-1.71		
		(-29.45--29.00)x(2.71+2.71)/2	-1.22		
		(-30.38--29.45)x(2.71+2.71)/2	-2.52		
		(-30.53--30.38)x(2.71+2.71)/2	-0.41		
		(-30.61--30.53)x(2.71+2.71)/2	-0.22		
		(-31.61--30.61)x(2.71+2.71)/2	-2.71		
		(-32.21--31.61)x(2.71+2.71)/2	-1.63		
		(-32.69--32.21)x(2.71+2.71)/2	-1.30		
		(-33.10--32.69)x(2.71+2.71)/2	-1.11		
				33.59	
SP40 641.94	BO1	(-32.26--32.71)x(3.19+3.19)/2	1.44		
		(-31.61--32.26)x(3.14+3.19)/2	2.06		
		(-31.18--31.61)x(3.10+3.14)/2	1.34		
		(-30.30--31.18)x(3.08+3.10)/2	2.72		
		(-30.10--30.30)x(3.08+3.08)/2	0.62		
		(-30.01--30.10)x(3.08+3.08)/2	0.28		
		(-29.03--30.01)x(3.13+3.08)/2	3.04		
		(-28.41--29.03)x(3.13+3.13)/2	1.94		
		(-27.95--28.41)x(3.14+3.13)/2	1.44		
		(-26.99--27.95)x(3.17+3.14)/2	3.03		
		(-26.87--26.99)x(3.17+3.17)/2	0.38		
		(-26.09--26.87)x(3.15+3.17)/2	2.46		
		(-25.79--26.09)x(3.16+3.15)/2	0.95		
		(-25.21--25.79)x(3.13+3.16)/2	1.82		
		(-24.71--25.21)x(3.13+3.13)/2	1.56		
		(-23.69--24.71)x(3.16+3.13)/2	3.21		
		(-23.63--23.69)x(3.16+3.16)/2	0.19		
		(-23.61--23.63)x(3.16+3.16)/2	0.06		
		(-22.56--23.61)x(3.14+3.16)/2	3.31		
		(-22.01--22.56)x(3.15+3.14)/2	1.73		
		(-21.48--22.01)x(3.16+3.15)/2	1.67		
		(-20.41--21.48)x(3.17+3.16)/2	3.39		
		(-20.40--20.41)x(3.17+3.17)/2	0.03		
		(-20.38--20.40)x(3.17+3.17)/2	0.06		
		(-19.32--20.38)x(3.16+3.17)/2	3.35		
		(-18.81--19.32)x(3.17+3.16)/2	1.61		
		(-18.24--18.81)x(3.16+3.17)/2	1.80		
		(-17.21--18.24)x(3.17+3.16)/2	3.26		
		(-17.16--17.21)x(3.17+3.17)/2	0.16		
		(-17.07--17.16)x(3.17+3.17)/2	0.29		
		(-16.09--17.07)x(3.18+3.17)/2	3.11		
		(-15.61--16.09)x(3.18+3.18)/2	1.53		
		(-15.01--15.61)x(3.18+3.18)/2	1.91		
		(-14.01--15.01)x(3.18+3.18)/2	3.18		
		(-13.93--14.01)x(3.18+3.18)/2	0.25		
		(-13.76--13.93)x(3.18+3.18)/2	0.54		
		(-12.85--13.76)x(3.19+3.18)/2	2.90		
		(-12.41--12.85)x(3.19+3.19)/2	1.40		
		(-11.77--12.41)x(3.19+3.19)/2	2.04		
		(-10.81--11.77)x(3.19+3.19)/2	3.06		
		(-10.69--10.81)x(3.19+3.19)/2	0.38		
		(-10.46--10.69)x(3.19+3.19)/2	0.73		
		(-9.62--10.46)x(3.19+3.19)/2	2.68		
		(-9.21--9.62)x(3.19+3.19)/2	1.31		
		(-8.54--9.21)x(3.19+3.19)/2	2.14		
		(-8.20--8.54)x(3.19+3.19)/2	1.08		
		(-7.46--8.20)x(3.19+3.19)/2	2.36		
		(-7.15--7.46)x(3.19+3.19)/2	0.99		
		(-6.38--7.15)x(3.19+3.19)/2	2.46		
		(-6.01--6.38)x(3.18+3.19)/2	1.18		
		A RIPORTARE mq	84.43		

		CALCOLO DELLE AREE		Foglio n. 122
BONIFICA				
N. SEZIONE PROG.	FIG.	ELEMENTI DI CALCOLO	AREA ELEMENTARE mq	AREA FIGURA mq	NOTE
		RIPORTO mq	84.43		
		(-5.30--6.01)x(3.18+3.18)/2	2.26		
		(-4.41--5.30)x(3.18+3.18)/2	2.83		
		(-4.22--4.41)x(3.18+3.18)/2	0.60		
		(-3.84--4.22)x(3.18+3.18)/2	1.21		
		(-3.14--3.84)x(3.18+3.18)/2	2.23		
		(-2.81--3.14)x(3.19+3.18)/2	1.05		
		(-2.07--2.81)x(3.19+3.19)/2	2.36		
		(-1.21--2.07)x(3.20+3.19)/2	2.75		
		(-0.99--1.21)x(3.20+3.20)/2	0.70		
		(-0.54--0.99)x(3.20+3.20)/2	1.44		
		(0.09--0.54)x(3.19+3.20)/2	2.01		
		(0.39-0.09)x(3.19+3.19)/2	0.96		
		(1.17-0.39)x(3.19+3.19)/2	2.49		
		(1.99-1.17)x(3.20+3.19)/2	2.62		
		(2.25-1.99)x(3.20+3.20)/2	0.83		
		(2.77-2.25)x(3.20+3.20)/2	1.66		
		(3.33-2.77)x(3.20+3.20)/2	1.79		
		(3.59-3.33)x(3.20+3.20)/2	0.83		
		(4.40-3.59)x(3.19+3.20)/2	2.59		
		(5.19-4.40)x(3.19+3.19)/2	2.52		
		(5.48-5.19)x(3.19+3.19)/2	0.93		
		(6.08-5.48)x(3.20+3.19)/2	1.92		
		(6.56-6.08)x(3.20+3.20)/2	1.54		
		(6.79-6.56)x(3.19+3.20)/2	0.73		
		(7.64-6.79)x(3.18+3.19)/2	2.71		
		(8.39-7.64)x(3.17+3.18)/2	2.38		
		(8.72-8.39)x(3.16+3.17)/2	1.04		
		(9.39-8.72)x(3.15+3.16)/2	2.11		
		(9.80-9.39)x(3.14+3.15)/2	1.29		
		(10.51-9.80)x(3.13+3.14)/2	2.23		
		(10.87-10.51)x(3.13+3.13)/2	1.13		
		(11.59-10.87)x(3.12+3.13)/2	2.25		
		(11.95-11.59)x(3.12+3.12)/2	1.12		
		(12.69-11.95)x(3.10+3.12)/2	2.30		
		(13.03-12.69)x(3.08+3.10)/2	1.05		
		(13.19-13.03)x(3.08+3.08)/2	0.49		
		(14.11-13.19)x(3.07+3.08)/2	2.83		
		(14.80-14.11)x(3.06+3.07)/2	2.11		
		(15.19-14.80)x(3.05+3.06)/2	1.19		
		(16.00-15.19)x(3.04+3.05)/2	2.47		
		(16.27-16.00)x(3.04+3.04)/2	0.82		
		(16.40-16.27)x(3.04+3.04)/2	0.40		
		(17.35-16.40)x(3.03+3.04)/2	2.88		
		(18.00-17.35)x(3.02+3.03)/2	1.97		
		(18.42-18.00)x(3.01+3.02)/2	1.27		
		(19.31-18.42)x(3.00+3.01)/2	2.67		
		(19.65-19.31)x(2.99+3.00)/2	1.02		
		(19.98-19.65)x(2.98+2.99)/2	0.99		
		(20.25-19.98)x(2.97+2.98)/2	0.80		
		(20.46-20.25)x(2.96+2.97)/2	0.62		
		(20.64-20.46)x(2.96+2.96)/2	0.53		
		(20.80-20.64)x(2.97+2.96)/2	0.47		
		(20.93-20.80)x(2.97+2.97)/2	0.39		
		(21.46-20.93)x(3.03+2.97)/2	1.59		
		(21.47-21.46)x(3.03+3.03)/2	0.03		
		(21.51-21.47)x(3.15+3.03)/2	0.12		
		(21.57-21.51)x(3.02+3.15)/2	0.19		
		(21.69-21.57)x(3.01+3.02)/2	0.36		
		(21.82-21.69)x(3.01+3.01)/2	0.39		
		(21.97-21.82)x(3.03+3.01)/2	0.45		
		(22.15-21.97)x(3.01+3.03)/2	0.54		
		(22.35-22.15)x(3.00+3.01)/2	0.60		
		(22.59-22.35)x(2.99+3.00)/2	0.72		
		(22.62-22.59)x(2.98+2.99)/2	0.09		
		(22.74-22.62)x(2.99+2.98)/2	0.36		
		(22.80-22.74)x(2.98+2.99)/2	0.18		
		(23.82-22.80)x(2.98+2.98)/2	3.04		
		(24.40-23.82)x(2.98+2.98)/2	1.73		
		(24.89-24.40)x(2.97+2.98)/2	1.46		
		(25.92-24.89)x(2.96+2.97)/2	3.05		
		(25.97-25.92)x(2.96+2.96)/2	0.15		
		(26.00-25.97)x(2.96+2.96)/2	0.09		
		(27.05-26.00)x(2.94+2.96)/2	3.10		
		(27.59-27.05)x(2.93+2.94)/2	1.58		
		(28.13-27.59)x(2.93+2.93)/2	1.58		
		(29.20-28.13)x(2.92+2.93)/2	3.13		
		(29.21-29.20)x(2.92+2.92)/2	0.03		
		(29.23-29.21)x(2.92+2.92)/2	0.06		
		(30.29-29.23)x(2.90+2.92)/2	3.08		
		(30.80-30.29)x(2.90+2.90)/2	1.48		
		(31.36-30.80)x(2.90+2.90)/2	1.62		
		(32.40-31.36)x(2.91+2.90)/2	3.02		
		(32.44-32.40)x(2.91+2.91)/2	0.12		
		(32.54-32.44)x(2.91+2.91)/2	0.29		
		(33.52-32.54)x(2.92+2.91)/2	2.86		
		(34.00-33.52)x(2.92+2.92)/2	1.40		
		(34.53-34.00)x(2.93+2.92)/2	1.55		
		(34.00-34.53)x(2.42+2.43)/2	-1.29		
		(33.52-34.00)x(2.42+2.42)/2	-1.16		
		(32.54-33.52)x(2.41+2.42)/2	-2.37		
		(32.44-32.54)x(2.41+2.41)/2	-0.24		
		(32.40-32.44)x(2.41+2.41)/2	-0.10		
		(31.36-32.40)x(2.40+2.41)/2	-2.50		
		(30.80-31.36)x(2.40+2.40)/2	-1.34		
		(30.29-30.80)x(2.40+2.40)/2	-1.22		
		(29.23-30.29)x(2.42+2.40)/2	-2.55		
		(29.21-29.23)x(2.42+2.42)/2	-0.05		
		(29.20-29.21)x(2.42+2.42)/2	-0.02		
		(28.13-29.20)x(2.43+2.42)/2	-2.59		
		(27.59-28.13)x(2.43+2.43)/2	-1.31		
		(27.05-27.59)x(2.44+2.43)/2	-1.31		
		(26.00-27.05)x(2.46+2.44)/2	-2.57		
		(25.97-26.00)x(2.46+2.46)/2	-0.07		
		(25.92-25.97)x(2.46+2.46)/2	-0.12		
		A RIPORTARE mq	188.04		

		CALCOLO DELLE AREE		Foglio n. 123
BONIFICA				
N. SEZIONE PROG.	FIG.	ELEMENTI DI CALCOLO	AREA ELEMENTARE mq	AREA FIGURA mq	NOTE
		RIPORTO mq	188.04		
		(24.89-25.92)x(2.47+2.46)/2	-2.54		
		(24.40-24.89)x(2.48+2.47)/2	-1.21		
		(23.82-24.40)x(2.48+2.48)/2	-1.44		
		(22.80-23.82)x(2.48+2.48)/2	-2.53		
		(22.74-22.80)x(2.49+2.48)/2	-0.15		
		(22.62-22.74)x(2.48+2.49)/2	-0.30		
		(22.59-22.62)x(2.49+2.48)/2	-0.07		
		(22.35-22.59)x(2.50+2.49)/2	-0.60		
		(22.15-22.35)x(2.51+2.50)/2	-0.50		
		(21.97-22.15)x(2.53+2.51)/2	-0.45		
		(21.82-21.97)x(2.51+2.53)/2	-0.38		
		(21.69-21.82)x(2.51+2.51)/2	-0.33		
		(21.57-21.69)x(2.52+2.51)/2	-0.30		
		(21.51-21.57)x(2.65+2.52)/2	-0.16		
		(21.47-21.51)x(2.53+2.65)/2	-0.10		
		(21.46-21.47)x(2.53+2.53)/2	-0.03		
		(20.93-21.46)x(2.47+2.53)/2	-1.33		
		(20.80-20.93)x(2.47+2.47)/2	-0.32		
		(20.64-20.80)x(2.46+2.47)/2	-0.39		
		(20.46-20.64)x(2.46+2.46)/2	-0.44		
		(20.25-20.46)x(2.47+2.46)/2	-0.52		
		(19.98-20.25)x(2.48+2.47)/2	-0.67		
		(19.65-19.98)x(2.49+2.48)/2	-0.82		
		(19.31-19.65)x(2.50+2.49)/2	-0.85		
		(18.42-19.31)x(2.51+2.50)/2	-2.23		
		(18.00-18.42)x(2.52+2.51)/2	-1.06		
		(17.35-18.00)x(2.53+2.52)/2	-1.64		
		(16.40-17.35)x(2.54+2.53)/2	-2.41		
		(16.27-16.40)x(2.54+2.54)/2	-0.33		
		(16.00-16.27)x(2.54+2.54)/2	-0.69		
		(15.19-16.00)x(2.55+2.54)/2	-2.06		
		(14.80-15.19)x(2.56+2.55)/2	-1.00		
		(14.11-14.80)x(2.57+2.56)/2	-1.77		
		(13.19-14.11)x(2.58+2.57)/2	-2.37		
		(13.03-13.19)x(2.58+2.58)/2	-0.41		
		(12.69-13.03)x(2.60+2.58)/2	-0.88		
		(11.95-12.69)x(2.62+2.60)/2	-1.93		
		(11.59-11.95)x(2.62+2.62)/2	-0.94		
		(10.87-11.59)x(2.63+2.62)/2	-1.89		
		(10.51-10.87)x(2.63+2.63)/2	-0.95		
		(9.80-10.51)x(2.64+2.63)/2	-1.87		
		(9.39-9.80)x(2.65+2.64)/2	-1.08		
		(8.72-9.39)x(2.66+2.65)/2	-1.78		
		(8.39-8.72)x(2.67+2.66)/2	-0.88		
		(7.64-8.39)x(2.68+2.67)/2	-2.01		
		(6.79-7.64)x(2.69+2.68)/2	-2.28		
		(6.56-6.79)x(2.70+2.69)/2	-0.62		
		(6.08-6.56)x(2.70+2.70)/2	-1.30		
		(5.48-6.08)x(2.69+2.70)/2	-1.62		
		(5.19-5.48)x(2.69+2.69)/2	-0.78		
		(4.40-5.19)x(2.69+2.69)/2	-2.13		
		(3.59-4.40)x(2.70+2.69)/2	-2.18		
		(3.33-3.59)x(2.70+2.70)/2	-0.70		
		(2.77-3.33)x(2.70+2.70)/2	-1.51		
		(2.25-2.77)x(2.70+2.70)/2	-1.40		
		(1.99-2.25)x(2.70+2.70)/2	-0.70		
		(1.17-1.99)x(2.69+2.70)/2	-2.21		
		(0.39-1.17)x(2.69+2.69)/2	-2.10		
		(0.09-0.39)x(2.69+2.69)/2	-0.81		
		(-0.54-0.09)x(2.70+2.69)/2	-1.70		
		(-0.99--0.54)x(2.70+2.70)/2	-1.21		
		(-1.21--0.99)x(2.70+2.70)/2	-0.59		
		(-2.07--1.21)x(2.69+2.70)/2	-2.32		
		(-2.81--2.07)x(2.69+2.69)/2	-1.99		
		(-3.14--2.81)x(2.68+2.69)/2	-0.89		
		(-3.84--3.14)x(2.68+2.68)/2	-1.88		
		(-4.22--3.84)x(2.68+2.68)/2	-1.02		
		(-4.41--4.22)x(2.68+2.68)/2	-0.51		
		(-5.30--4.41)x(2.68+2.68)/2	-2.39		
		(-6.01--5.30)x(2.68+2.68)/2	-1.90		
		(-6.38--6.01)x(2.69+2.68)/2	-0.99		
		(-7.15--6.38)x(2.69+2.69)/2	-2.07		
		(-7.46--7.15)x(2.69+2.69)/2	-0.83		
		(-8.20--7.46)x(2.69+2.69)/2	-1.99		
		(-8.54--8.20)x(2.69+2.69)/2	-0.91		
		(-9.21--8.54)x(2.69+2.69)/2	-1.80		
		(-9.62--9.21)x(2.69+2.69)/2	-1.10		
		(-10.46--9.62)x(2.69+2.69)/2	-2.26		
		(-10.69--10.46)x(2.69+2.69)/2	-0.62		
		(-10.81--10.69)x(2.69+2.69)/2	-0.32		
		(-11.77--10.81)x(2.69+2.69)/2	-2.58		
		(-12.41--11.77)x(2.69+2.69)/2	-1.72		
		(-12.85--12.41)x(2.69+2.69)/2	-1.18		
		(-13.76--12.85)x(2.68+2.69)/2	-2.44		
		(-13.93--13.76)x(2.68+2.68)/2	-0.46		
		(-14.01--13.93)x(2.68+2.68)/2	-0.21		
		(-15.01--14.01)x(2.68+2.68)/2	-2.68		
		(-15.61--15.01)x(2.68+2.68)/2	-1.61		
		(-16.09--15.61)x(2.68+2.68)/2	-1.29		
		(-17.07--16.09)x(2.67+2.68)/2	-2.62		
		(-17.16--17.07)x(2.67+2.67)/2	-0.24		
		(-17.21--17.16)x(2.67+2.67)/2	-0.13		
		(-18.24--17.21)x(2.66+2.67)/2	-2.74		
		(-18.81--18.24)x(2.67+2.66)/2	-1.52		
		(-19.32--18.81)x(2.66+2.67)/2	-1.36		
		(-20.38--19.32)x(2.67+2.66)/2	-2.82		
		(-20.40--20.38)x(2.67+2.67)/2	-0.05		
		(-20.41--20.40)x(2.67+2.67)/2	-0.03		
		(-21.48--20.41)x(2.66+2.67)/2	-2.85		
		(-22.01--21.48)x(2.65+2.66)/2	-1.41		
		(-22.56--22.01)x(2.64+2.65)/2	-1.45		
		(-23.61--22.56)x(2.66+2.64)/2	-2.78		
		(-23.63--23.61)x(2.66+2.66)/2	-0.05		
		(-23.69--23.63)x(2.66+2.66)/2	-0.16		
		A RIPORTARE mq	57.42		

		CALCOLO DELLE AREE		Foglio n. 124
BONIFICA				
N. SEZIONE PROG.	FIG.	ELEMENTI DI CALCOLO	AREA ELEMENTARE mq	AREA FIGURA mq	NOTE
		RIPORTO mq	57.42		
		(-24.71--23.69)x(2.63+2.66)/2	-2.70		
		(-25.21--24.71)x(2.63+2.63)/2	-1.31		
		(-25.79--25.21)x(2.66+2.63)/2	-1.53		
		(-26.09--25.79)x(2.65+2.66)/2	-0.80		
		(-26.87--26.09)x(2.67+2.65)/2	-2.07		
		(-26.99--26.87)x(2.67+2.67)/2	-0.32		
		(-27.95--26.99)x(2.64+2.67)/2	-2.55		
		(-28.41--27.95)x(2.63+2.64)/2	-1.21		
		(-29.03--28.41)x(2.63+2.63)/2	-1.63		
		(-30.01--29.03)x(2.58+2.63)/2	-2.55		
		(-30.10--30.01)x(2.58+2.58)/2	-0.23		
		(-30.30--30.10)x(2.58+2.58)/2	-0.52		
		(-31.18--30.30)x(2.60+2.58)/2	-2.28		
		(-31.61--31.18)x(2.64+2.60)/2	-1.13		
		(-32.26--31.61)x(2.69+2.64)/2	-1.73		
		(-32.71--32.26)x(2.69+2.69)/2	-1.21		
				33.65	
44	B01	(-31.21--31.61)x(3.13+3.11)/2	1.25		
645.00		(-31.10--31.21)x(3.14+3.13)/2	0.34		
		(-30.87--31.10)x(3.14+3.14)/2	0.72		
		(-30.02--30.87)x(3.15+3.14)/2	2.67		
		(-29.61--30.02)x(3.15+3.15)/2	1.29		
		(-28.94--29.61)x(3.16+3.15)/2	2.11		
		(-28.01--28.94)x(3.19+3.16)/2	2.95		
		(-27.86--28.01)x(3.18+3.19)/2	0.48		
		(-27.79--27.86)x(3.19+3.18)/2	0.22		
		(-27.56--27.79)x(3.19+3.19)/2	0.73		
		(-26.98--27.56)x(3.19+3.19)/2	1.85		
		(-26.78--26.98)x(3.19+3.19)/2	0.64		
		(-26.41--26.78)x(3.19+3.19)/2	1.18		
		(-25.71--26.41)x(3.19+3.19)/2	2.23		
		(-24.81--25.71)x(3.13+3.19)/2	2.84		
		(-24.63--24.81)x(3.12+3.13)/2	0.56		
		(-24.25--24.63)x(3.14+3.12)/2	1.19		
		(-23.55--24.25)x(3.17+3.14)/2	2.21		
		(-23.21--23.55)x(3.15+3.17)/2	1.07		
		(-22.47--23.21)x(3.14+3.15)/2	2.33		
		(-21.61--22.47)x(3.14+3.14)/2	2.70		
		(-21.39--21.61)x(3.14+3.14)/2	0.69		
		(-20.94--21.39)x(3.13+3.14)/2	1.41		
		(-20.32--20.94)x(3.14+3.13)/2	1.94		
		(-20.01--20.32)x(3.13+3.14)/2	0.97		
		(-19.24--20.01)x(3.11+3.13)/2	2.40		
		(-18.41--19.24)x(3.09+3.11)/2	2.57		
		(-18.16--18.41)x(3.09+3.09)/2	0.77		
		(-17.63--18.16)x(3.07+3.09)/2	1.63		
		(-17.08--17.63)x(3.06+3.07)/2	1.69		
		(-16.82--17.08)x(3.06+3.06)/2	0.80		
		(-16.00--16.82)x(3.06+3.06)/2	2.51		
		(-15.22--16.00)x(3.08+3.06)/2	2.39		
		(-14.92--15.22)x(3.08+3.08)/2	0.92		
		(-14.32--14.92)x(3.12+3.08)/2	1.86		
		(-14.09--14.32)x(3.15+3.12)/2	0.72		
		(-12.96--14.09)x(3.15+3.15)/2	3.56		
		(-12.02--12.96)x(3.17+3.15)/2	2.97		
		(-11.69--12.02)x(3.16+3.17)/2	1.04		
		(-11.01--11.69)x(3.18+3.16)/2	2.16		
		(-10.79--11.01)x(3.20+3.18)/2	0.70		
		(-10.61--10.79)x(3.30+3.20)/2	0.58		
		(-10.60--10.61)x(3.23+3.30)/2	0.03		
		(-10.59--10.60)x(3.23+3.23)/2	0.03		
		(-9.38--10.59)x(3.27+3.23)/2	3.93		
		(-8.90--9.38)x(3.28+3.27)/2	1.57		
		(-8.47--8.90)x(3.31+3.28)/2	1.42		
		(-8.46--8.47)x(3.31+3.31)/2	0.03		
		(-8.34--8.46)x(3.29+3.31)/2	0.40		
		(-8.31--8.34)x(3.29+3.29)/2	0.10		
		(-8.21--8.31)x(3.27+3.29)/2	0.33		
		(-8.06--8.21)x(3.29+3.27)/2	0.49		
		(-8.01--8.06)x(3.30+3.29)/2	0.16		
		(-7.98--8.01)x(3.30+3.30)/2	0.10		
		(-7.38--7.98)x(3.17+3.30)/2	1.94		
		(-7.22--7.38)x(3.17+3.17)/2	0.51		
		(-6.30--7.22)x(3.17+3.17)/2	2.92		
		(-5.62--6.30)x(3.17+3.17)/2	2.16		
		(-5.22--5.62)x(3.16+3.17)/2	1.27		
		(-4.38--5.22)x(3.17+3.16)/2	2.66		
		(-4.14--4.38)x(3.18+3.17)/2	0.76		
		(-4.02--4.14)x(3.18+3.18)/2	0.38		
		(-3.06--4.02)x(3.18+3.18)/2	3.05		
		(-2.43--3.06)x(3.18+3.18)/2	2.00		
		(-1.98--2.43)x(3.18+3.18)/2	1.43		
		(-1.07--1.98)x(3.18+3.18)/2	2.89		
		(-0.91--1.07)x(3.18+3.18)/2	0.51		
		(-0.83--0.91)x(3.18+3.18)/2	0.25		
		(0.17--0.83)x(3.18+3.18)/2	3.18		
		(0.77-0.17)x(3.19+3.18)/2	1.91		
		(1.25-0.77)x(3.19+3.19)/2	1.53		
		(2.24-1.25)x(3.19+3.19)/2	3.16		
		(2.33-2.24)x(3.19+3.19)/2	0.29		
		(2.37-2.33)x(3.19+3.19)/2	0.13		
		(3.41-2.37)x(3.19+3.19)/2	3.32		
		(3.97-3.41)x(3.19+3.19)/2	1.79		
		(4.48-3.97)x(3.19+3.19)/2	1.63		
		(5.55-4.48)x(3.19+3.19)/2	3.41		
		(5.56-5.55)x(3.19+3.19)/2	0.03		
		(5.57-5.56)x(3.19+3.19)/2	0.03		
		(6.64-5.57)x(3.19+3.19)/2	3.41		
		(7.17-6.64)x(3.18+3.19)/2	1.69		
		(7.72-7.17)x(3.17+3.18)/2	1.75		
		(8.77-7.72)x(3.16+3.17)/2	3.32		
		(8.80-8.77)x(3.16+3.16)/2	0.09		
		(8.81-8.80)x(3.16+3.16)/2	0.03		
		(8.86-8.81)x(3.16+3.16)/2	0.16		
		A RIPORTARE mq	128.02		

	CALCOLO DELLE AREE		Foglio n. 125

BONIFICA

N. SEZIONE PROG.	FIG.	ELEMENTI DI CALCOLO	AREA ELEMENTARE mq	AREA FIGURA mq	NOTE
		RIPORTO mq	128.02		
		(9.63-8.86)x(3.15+3.16)/2	2.43		
		(9.88-9.63)x(3.15+3.15)/2	0.79		
		(10.37-9.88)x(3.15+3.15)/2	1.54		
		(10.95-10.37)x(3.15+3.15)/2	1.83		
		(11.96-10.95)x(3.14+3.15)/2	3.18		
		(12.03-11.96)x(3.14+3.14)/2	0.22		
		(12.17-12.03)x(3.14+3.14)/2	0.44		
		(13.11-12.17)x(3.13+3.14)/2	2.95		
		(13.56-13.11)x(3.12+3.13)/2	1.41		
		(14.19-13.56)x(3.12+3.12)/2	1.97		
		(15.16-14.19)x(3.10+3.12)/2	3.02		
		(15.27-15.16)x(3.10+3.10)/2	0.34		
		(15.49-15.27)x(3.10+3.10)/2	0.68		
		(16.35-15.49)x(3.08+3.10)/2	2.66		
		(16.76-16.35)x(3.09+3.08)/2	1.26		
		(17.42-16.76)x(3.09+3.09)/2	2.04		
		(18.36-17.42)x(3.08+3.09)/2	2.90		
		(18.50-18.36)x(3.08+3.08)/2	0.43		
		(18.80-18.50)x(3.07+3.08)/2	0.92		
		(19.58-18.80)x(3.06+3.07)/2	2.39		
		(19.96-19.58)x(3.05+3.06)/2	1.16		
		(20.66-19.96)x(3.04+3.05)/2	2.13		
		(21.56-20.66)x(3.04+3.04)/2	2.74		
		(21.74-21.56)x(3.04+3.04)/2	0.55		
		(22.11-21.74)x(3.03+3.04)/2	1.12		
		(22.82-22.11)x(3.02+3.03)/2	2.15		
		(23.16-22.82)x(3.02+3.02)/2	1.03		
		(23.89-23.16)x(3.01+3.02)/2	2.20		
		(24.76-23.89)x(3.01+3.01)/2	2.62		
		(24.97-24.76)x(3.01+3.01)/2	0.63		
		(25.42-24.97)x(3.01+3.01)/2	1.35		
		(26.05-25.42)x(3.00+3.01)/2	1.89		
		(26.71-26.05)x(2.98+3.00)/2	1.97		
		(27.13-26.71)x(2.97+2.98)/2	1.25		
		(27.95-27.13)x(2.95+2.97)/2	2.43		
		(28.21-27.95)x(2.95+2.95)/2	0.77		
		(28.73-28.21)x(2.95+2.95)/2	1.53		
		(29.28-28.73)x(2.95+2.95)/2	1.62		
		(29.55-29.28)x(2.95+2.95)/2	0.80		
		(30.36-29.55)x(2.94+2.95)/2	2.39		
		(30.46-30.36)x(3.03+2.94)/2	0.30		
		(30.85-30.46)x(3.04+3.03)/2	1.18		
		(31.44-30.85)x(2.94+3.04)/2	1.76		
		(32.04-31.44)x(2.94+2.94)/2	1.76		
		(32.52-32.04)x(2.94+2.94)/2	1.41		
		(32.75-32.52)x(2.95+2.94)/2	0.68		
		(33.60-32.75)x(2.95+2.95)/2	2.51		
		(34.35-33.60)x(3.00+2.95)/2	2.23		
		(34.43-34.35)x(3.00+3.00)/2	0.24		
		(34.35-34.43)x(2.50+2.50)/2	-0.20		
		(33.60-34.35)x(2.45+2.50)/2	-1.86		
		(32.75-33.60)x(2.45+2.45)/2	-2.08		
		(32.52-32.75)x(2.44+2.45)/2	-0.56		
		(32.04-32.52)x(2.44+2.44)/2	-1.17		
		(31.44-32.04)x(2.44+2.44)/2	-1.46		
		(30.85-31.44)x(2.54+2.44)/2	-1.47		
		(30.46-30.85)x(2.53+2.54)/2	-0.99		
		(30.36-30.46)x(2.44+2.53)/2	-0.25		
		(29.55-30.36)x(2.45+2.44)/2	-1.98		
		(29.28-29.55)x(2.45+2.45)/2	-0.66		
		(28.73-29.28)x(2.45+2.45)/2	-1.35		
		(28.21-28.73)x(2.45+2.45)/2	-1.27		
		(27.95-28.21)x(2.45+2.45)/2	-0.64		
		(27.13-27.95)x(2.47+2.45)/2	-2.02		
		(26.71-27.13)x(2.48+2.47)/2	-1.04		
		(26.05-26.71)x(2.50+2.48)/2	-1.64		
		(25.42-26.05)x(2.51+2.50)/2	-1.58		
		(24.97-25.42)x(2.51+2.51)/2	-1.13		
		(24.76-24.97)x(2.51+2.51)/2	-0.53		
		(23.89-24.76)x(2.51+2.51)/2	-2.18		
		(23.16-23.89)x(2.52+2.51)/2	-1.84		
		(22.82-23.16)x(2.52+2.52)/2	-0.86		
		(22.11-22.82)x(2.53+2.52)/2	-1.79		
		(21.74-22.11)x(2.54+2.53)/2	-0.94		
		(21.56-21.74)x(2.54+2.54)/2	-0.46		
		(20.66-21.56)x(2.54+2.54)/2	-2.29		
		(19.96-20.66)x(2.55+2.54)/2	-1.78		
		(19.58-19.96)x(2.56+2.55)/2	-0.97		
		(18.80-19.58)x(2.57+2.56)/2	-2.00		
		(18.50-18.80)x(2.58+2.57)/2	-0.77		
		(18.36-18.50)x(2.58+2.58)/2	-0.36		
		(17.42-18.36)x(2.59+2.58)/2	-2.43		
		(16.76-17.42)x(2.59+2.59)/2	-1.71		
		(16.35-16.76)x(2.58+2.59)/2	-1.06		
		(15.49-16.35)x(2.60+2.58)/2	-2.23		
		(15.27-15.49)x(2.60+2.60)/2	-0.57		
		(15.16-15.27)x(2.60+2.60)/2	-0.29		
		(14.19-15.16)x(2.62+2.60)/2	-2.53		
		(13.56-14.19)x(2.62+2.62)/2	-1.65		
		(13.11-13.56)x(2.63+2.62)/2	-1.18		
		(12.17-13.11)x(2.64+2.63)/2	-2.48		
		(12.03-12.17)x(2.64+2.64)/2	-0.37		
		(11.96-12.03)x(2.64+2.64)/2	-0.18		
		(10.95-11.96)x(2.65+2.64)/2	-2.67		
		(10.37-10.95)x(2.65+2.65)/2	-1.54		
		(9.88-10.37)x(2.65+2.65)/2	-1.30		
		(9.63-9.88)x(2.65+2.65)/2	-0.66		
		(8.86-9.63)x(2.66+2.65)/2	-2.04		
		(8.81-8.86)x(2.66+2.66)/2	-0.13		
		(8.80-8.81)x(2.66+2.66)/2	-0.03		
		(8.77-8.80)x(2.66+2.66)/2	-0.08		
		(7.72-8.77)x(2.67+2.66)/2	-2.80		
		(7.17-7.72)x(2.68+2.67)/2	-1.47		
		(6.64-7.17)x(2.69+2.68)/2	-1.42		
		A RIPORTARE mq	134.88		

		CALCOLO DELLE AREE		Foglio n. 126
BONIFICA				
N. SEZIONE PROG.	FIG.	ELEMENTI DI CALCOLO	AREA ELEMENTARE mq	AREA FIGURA mq	NOTE
		RIPORTO mq	134.88		
		(5.57-6.64)x(2.69+2.69)/2	-2.88		
		(5.56-5.57)x(2.69+2.69)/2	-0.03		
		(5.55-5.56)x(2.69+2.69)/2	-0.03		
		(4.48-5.55)x(2.69+2.69)/2	-2.88		
		(3.97-4.48)x(2.69+2.69)/2	-1.37		
		(3.41-3.97)x(2.69+2.69)/2	-1.51		
		(2.37-3.41)x(2.69+2.69)/2	-2.80		
		(2.33-2.37)x(2.69+2.69)/2	-0.11		
		(2.24-2.33)x(2.69+2.69)/2	-0.24		
		(1.25-2.24)x(2.69+2.69)/2	-2.66		
		(0.77-1.25)x(2.69+2.69)/2	-1.29		
		(0.17-0.77)x(2.68+2.69)/2	-1.61		
		(-0.83-0.17)x(2.68+2.68)/2	-2.68		
		(-0.91--0.83)x(2.68+2.68)/2	-0.21		
		(-1.07--0.91)x(2.68+2.68)/2	-0.43		
		(-1.98--1.07)x(2.68+2.68)/2	-2.44		
		(-2.43--1.98)x(2.68+2.68)/2	-1.21		
		(-3.06--2.43)x(2.68+2.68)/2	-1.69		
		(-4.02--3.06)x(2.68+2.68)/2	-2.57		
		(-4.14--4.02)x(2.68+2.68)/2	-0.32		
		(-4.38--4.14)x(2.67+2.68)/2	-0.64		
		(-5.22--4.38)x(2.66+2.67)/2	-2.24		
		(-5.62--5.22)x(2.67+2.66)/2	-1.07		
		(-6.30--5.62)x(2.67+2.67)/2	-1.82		
		(-7.22--6.30)x(2.67+2.67)/2	-2.46		
		(-7.38--7.22)x(2.67+2.67)/2	-0.43		
		(-7.98--7.38)x(2.80+2.67)/2	-1.64		
		(-8.01--7.98)x(2.80+2.80)/2	-0.08		
		(-8.06--8.01)x(2.79+2.80)/2	-0.14		
		(-8.21--8.06)x(2.77+2.79)/2	-0.42		
		(-8.31--8.21)x(2.79+2.77)/2	-0.28		
		(-8.34--8.31)x(2.79+2.79)/2	-0.08		
		(-8.46--8.34)x(2.81+2.79)/2	-0.34		
		(-8.47--8.46)x(2.81+2.81)/2	-0.03		
		(-8.90--8.47)x(2.78+2.81)/2	-1.20		
		(-9.38--8.90)x(2.77+2.78)/2	-1.33		
		(-10.59--9.38)x(2.73+2.77)/2	-3.33		
		(-10.60--10.59)x(2.73+2.73)/2	-0.03		
		(-10.61--10.60)x(2.80+2.73)/2	-0.03		
		(-10.79--10.61)x(2.70+2.80)/2	-0.49		
		(-11.01--10.79)x(2.68+2.70)/2	-0.59		
		(-11.69--11.01)x(2.66+2.68)/2	-1.82		
		(-12.02--11.69)x(2.67+2.66)/2	-0.88		
		(-12.96--12.02)x(2.65+2.67)/2	-2.50		
		(-14.09--12.96)x(2.65+2.65)/2	-2.99		
		(-14.32--14.09)x(2.62+2.65)/2	-0.61		
		(-14.92--14.32)x(2.58+2.62)/2	-1.56		
		(-15.22--14.92)x(2.58+2.58)/2	-0.77		
		(-16.00--15.22)x(2.56+2.58)/2	-2.00		
		(-16.82--16.00)x(2.56+2.56)/2	-2.10		
		(-17.08--16.82)x(2.56+2.56)/2	-0.67		
		(-17.63--17.08)x(2.57+2.56)/2	-1.41		
		(-18.16--17.63)x(2.59+2.57)/2	-1.37		
		(-18.41--18.16)x(2.59+2.59)/2	-0.65		
		(-19.24--18.41)x(2.61+2.59)/2	-2.16		
		(-20.01--19.24)x(2.63+2.61)/2	-2.02		
		(-20.32--20.01)x(2.64+2.63)/2	-0.82		
		(-20.94--20.32)x(2.63+2.64)/2	-1.63		
		(-21.39--20.94)x(2.64+2.63)/2	-1.19		
		(-21.61--21.39)x(2.64+2.64)/2	-0.58		
		(-22.47--21.61)x(2.64+2.64)/2	-2.27		
		(-23.21--22.47)x(2.65+2.64)/2	-1.96		
		(-23.55--23.21)x(2.67+2.65)/2	-0.90		
		(-24.25--23.55)x(2.64+2.67)/2	-1.86		
		(-24.63--24.25)x(2.62+2.64)/2	-1.00		
		(-24.81--24.63)x(2.63+2.62)/2	-0.47		
		(-25.71--24.81)x(2.69+2.63)/2	-2.39		
		(-26.41--25.71)x(2.69+2.69)/2	-1.88		
		(-26.78--26.41)x(2.69+2.69)/2	-1.00		
		(-26.98--26.78)x(2.69+2.69)/2	-0.54		
		(-27.56--26.98)x(2.69+2.69)/2	-1.56		
		(-27.79--27.56)x(2.69+2.69)/2	-0.62		
		(-27.86--27.79)x(2.68+2.69)/2	-0.19		
		(-28.01--27.86)x(2.69+2.68)/2	-0.40		
		(-28.94--28.01)x(2.66+2.69)/2	-2.49		
		(-29.61--28.94)x(2.65+2.66)/2	-1.78		
		(-30.02--29.61)x(2.65+2.65)/2	-1.09		
		(-30.87--30.02)x(2.64+2.65)/2	-2.25		
		(-31.10--30.87)x(2.64+2.64)/2	-0.61		
		(-31.21--31.10)x(2.63+2.64)/2	-0.29		
		(-31.61--31.21)x(2.61+2.63)/2	-1.05		
				32.92	
45 660.00	BO1	(-26.25--26.57)x(2.85+2.84)/2	0.91		
		(-25.40--26.25)x(2.90+2.85)/2	2.44		
		(-25.17--25.40)x(2.92+2.90)/2	0.67		
		(-24.68--25.17)x(2.93+2.92)/2	1.43		
		(-24.09--24.68)x(2.97+2.93)/2	1.74		
		(-23.42--24.09)x(3.01+2.97)/2	2.00		
		(-23.01--23.42)x(3.02+3.01)/2	1.24		
		(-22.61--23.01)x(3.04+3.02)/2	1.21		
		(-21.94--22.61)x(3.09+3.04)/2	2.05		
		(-21.79--21.94)x(3.10+3.09)/2	0.46		
		(-21.35--21.79)x(3.13+3.10)/2	1.37		
		(-20.86--21.35)x(3.15+3.13)/2	1.54		
		(-20.62--20.86)x(3.15+3.15)/2	0.76		
		(-19.78--20.62)x(3.15+3.15)/2	2.65		
		(-19.03--19.78)x(3.14+3.15)/2	2.36		
		(-18.70--19.03)x(3.13+3.14)/2	1.03		
		(-18.02--18.70)x(3.14+3.13)/2	2.13		
		(-17.63--18.02)x(3.14+3.14)/2	1.22		
		(-17.44--17.63)x(3.14+3.14)/2	0.60		
		(-16.55--17.44)x(3.13+3.14)/2	2.79		
		(-15.84--16.55)x(3.08+3.13)/2	2.20		
		(-15.47--15.84)x(3.06+3.08)/2	1.14		
		A RIPORTARE mq	33.94		

	CALCOLO DELLE AREE		Foglio n. 127

BONIFICA

N. SEZIONE PROG.	FIG.	ELEMENTI DI CALCOLO	AREA ELEMENTARE mq	AREA FIGURA mq	NOTE
		RIPORTO mq	33.94		
		(-14.69--15.47)x(2.99+3.06)/2	2.36		
		(-14.39--14.69)x(2.99+2.99)/2	0.90		
		(-13.65--14.39)x(3.04+2.99)/2	2.23		
		(-13.32--13.65)x(3.04+3.04)/2	1.00		
		(-12.66--13.32)x(3.06+3.04)/2	2.01		
		(-12.24--12.66)x(3.06+3.06)/2	1.29		
		(-11.35--12.24)x(3.08+3.06)/2	2.73		
		(-11.16--11.35)x(3.08+3.08)/2	0.59		
		(-11.07--11.16)x(3.08+3.08)/2	0.28		
		(-10.08--11.07)x(3.06+3.08)/2	3.04		
		(-9.47--10.08)x(3.05+3.06)/2	1.86		
		(-9.00--9.47)x(3.02+3.05)/2	1.43		
		(-8.02--9.00)x(3.02+3.02)/2	2.96		
		(-7.93--8.02)x(3.03+3.02)/2	0.27		
		(-7.88--7.93)x(3.03+3.03)/2	0.15		
		(-6.85--7.88)x(3.03+3.03)/2	3.12		
		(-6.29--6.85)x(2.99+3.03)/2	1.69		
		(-5.77--6.29)x(2.97+2.99)/2	1.55		
		(-4.70--5.77)x(2.89+2.97)/2	3.14		
		(-4.69--4.70)x(2.89+2.89)/2	0.03		
		(-3.62--4.69)x(2.80+2.89)/2	3.04		
		(-3.10--3.62)x(2.73+2.80)/2	1.44		
		(-2.54--3.10)x(2.67+2.73)/2	1.51		
		(-1.51--2.54)x(2.50+2.67)/2	2.66		
		(-1.46--1.51)x(2.49+2.50)/2	0.12		
		(-1.45--1.46)x(2.49+2.49)/2	0.02		
		(-1.37--1.45)x(2.46+2.49)/2	0.20		
		(-1.16--1.37)x(2.40+2.41)/2	0.51		
		(-1.13--1.16)x(2.46+2.40)/2	0.07		
		(-0.98--1.13)x(2.41+2.46)/2	0.37		
		(-0.62--0.98)x(2.24+2.41)/2	0.84		
		(-0.38--0.62)x(2.15+2.24)/2	0.53		
		(0.08--0.38)x(1.84+2.15)/2	0.92		
		(0.69-0.08)x(1.47+1.84)/2	1.01		
		(1.67-0.69)x(0.71+1.47)/2	1.07		
		(1.77-1.67)x(0.64+0.71)/2	0.07		
		(1.79-1.77)x(0.63+0.64)/2	0.01		
		(1.95-1.79)x(0.27+0.62)/2	0.07		
		(2.06-1.95)x(0.40+0.27)/2	0.04		
		(2.11-2.06)x(0.35+0.40)/2	0.02		
		(2.26-2.11)x(0.30+0.35)/2	0.05		
		(2.63-2.26)x(0.23+0.30)/2	0.10		
		(2.85-2.63)x(0.19+0.23)/2	0.05		
		(3.27-2.85)x(0.19+0.19)/2	0.08		
		(3.93-3.27)x(0.15+0.19)/2	0.11		
		(4.26-3.93)x(0.15+0.15)/2	0.05		
		(5.00-4.26)x(0.13+0.15)/2	0.10		
		(5.30-5.00)x(0.13+0.13)/2	0.04		
		(6.08-5.30)x(0.16+0.13)/2	0.11		
		(6.44-6.08)x(0.20+0.16)/2	0.06		
		(6.56-6.44)x(0.18+0.20)/2	0.02		
		(6.58-6.56)x(0.22+0.18)/2	0.00		
		(6.61-6.58)x(0.21+0.22)/2	0.01		
		(6.65-6.61)x(0.22+0.21)/2	0.01		
		(6.76-6.65)x(0.26+0.22)/2	0.03		
		(6.90-6.76)x(0.30+0.26)/2	0.04		
		(7.16-6.90)x(0.49+0.30)/2	0.10		
		(8.04-7.16)x(1.37+0.49)/2	0.82		
		(8.24-8.04)x(1.54+1.37)/2	0.29		
		(8.64-8.24)x(1.88+1.54)/2	0.68		
		(9.31-8.64)x(2.42+1.88)/2	1.44		
		(9.68-9.31)x(2.63+2.42)/2	0.93		
		(9.90-9.68)x(2.64+2.63)/2	0.58		
		(9.98-9.90)x(2.67+2.64)/2	0.21		
		(10.17-9.98)x(2.72+2.67)/2	0.51		
		(10.22-10.17)x(2.83+2.72)/2	0.14		
		(10.39-10.22)x(2.90+2.82)/2	0.49		
		(11.23-10.39)x(2.99+2.90)/2	2.47		
		(11.47-11.23)x(3.03+2.99)/2	0.72		
		(11.97-11.47)x(3.06+3.03)/2	1.52		
		(12.55-11.97)x(3.10+3.06)/2	1.79		
		(12.82-12.55)x(3.11+3.10)/2	0.84		
		(13.62-12.82)x(3.17+3.11)/2	2.51		
		(14.42-13.62)x(3.15+3.17)/2	2.53		
		(14.70-14.42)x(3.14+3.15)/2	0.88		
		(15.30-14.70)x(3.12+3.14)/2	1.88		
		(15.78-15.30)x(3.11+3.12)/2	1.50		
		(16.01-15.78)x(3.11+3.11)/2	0.72		
		(16.86-16.01)x(3.10+3.11)/2	2.64		
		(17.60-16.86)x(3.09+3.10)/2	2.29		
		(17.93-17.60)x(3.09+3.09)/2	1.02		
		(18.63-17.93)x(3.08+3.09)/2	2.16		
		(19.01-18.63)x(3.07+3.08)/2	1.17		
		(19.19-19.01)x(3.06+3.07)/2	0.55		
		(20.09-19.19)x(3.01+3.06)/2	2.73		
		(20.79-20.09)x(3.00+3.01)/2	2.10		
		(21.17-20.79)x(3.00+3.00)/2	1.14		
		(21.36-21.17)x(2.99+3.00)/2	0.57		
		(21.96-21.36)x(2.99+2.99)/2	1.79		
		(22.18-21.96)x(2.98+2.99)/2	0.66		
		(22.24-22.18)x(2.98+2.98)/2	0.18		
		(22.38-22.24)x(2.98+2.98)/2	0.42		
		(23.32-22.38)x(2.96+2.98)/2	2.79		
		(23.97-23.32)x(2.96+2.96)/2	1.92		
		(24.40-23.97)x(2.95+2.96)/2	1.27		
		(25.30-24.40)x(2.91+2.95)/2	2.64		
		(25.48-25.30)x(2.91+2.91)/2	0.52		
		(25.56-25.48)x(2.91+2.91)/2	0.23		
		(26.55-25.56)x(2.91+2.91)/2	2.88		
		(27.16-26.55)x(2.90+2.91)/2	1.77		
		(27.63-27.16)x(2.90+2.90)/2	1.36		
		(28.63-27.63)x(2.83+2.90)/2	2.87		
		(28.71-28.63)x(2.83+2.83)/2	0.23		
		(28.75-28.71)x(2.83+2.83)/2	0.11		
		A RIPORTARE mq	143.51		

	CALCOLO DELLE AREE		Foglio n. 128

BONIFICA

N. SEZIONE PROG.	FIG.	ELEMENTI DI CALCOLO	AREA ELEMENTARE mq	AREA FIGURA mq	NOTE
		RIPORTO mq	143.51		
		(29.79-28.75)x(2.81+2.83)/2	2.93		
		(30.34-29.79)x(2.82+2.81)/2	1.55		
		(30.87-30.34)x(2.83+2.82)/2	1.50		
		(31.93-30.87)x(2.92+2.83)/2	3.05		
		(31.94-31.93)x(2.92+2.92)/2	0.03		
		(31.96-31.94)x(2.92+2.92)/2	0.06		
		(33.02-31.96)x(2.97+2.92)/2	3.12		
		(33.53-33.02)x(2.98+2.97)/2	1.52		
		(34.10-33.53)x(2.99+2.98)/2	1.70		
		(35.48-34.10)x(2.99+2.99)/2	4.13		
		(34.10-35.48)x(2.49+2.49)/2	-3.44		
		(33.53-34.10)x(2.48+2.49)/2	-1.42		
		(33.02-33.53)x(2.47+2.48)/2	-1.26		
		(31.96-33.02)x(2.42+2.47)/2	-2.59		
		(31.94-31.96)x(2.42+2.42)/2	-0.05		
		(31.93-31.94)x(2.42+2.42)/2	-0.02		
		(30.87-31.93)x(2.33+2.42)/2	-2.52		
		(30.34-30.87)x(2.32+2.33)/2	-1.23		
		(29.79-30.34)x(2.31+2.32)/2	-1.27		
		(28.75-29.79)x(2.33+2.31)/2	-2.41		
		(28.71-28.75)x(2.33+2.33)/2	-0.09		
		(28.63-28.71)x(2.33+2.33)/2	-0.19		
		(27.63-28.63)x(2.40+2.33)/2	-2.37		
		(27.16-27.63)x(2.40+2.40)/2	-1.13		
		(26.55-27.16)x(2.41+2.40)/2	-1.47		
		(25.56-26.55)x(2.41+2.41)/2	-2.39		
		(25.48-25.56)x(2.41+2.41)/2	-0.19		
		(25.30-25.48)x(2.41+2.41)/2	-0.43		
		(24.40-25.30)x(2.45+2.41)/2	-2.19		
		(23.97-24.40)x(2.46+2.45)/2	-1.06		
		(23.32-23.97)x(2.46+2.46)/2	-1.60		
		(22.38-23.32)x(2.48+2.46)/2	-2.32		
		(22.24-22.38)x(2.48+2.48)/2	-0.35		
		(22.18-22.24)x(2.48+2.48)/2	-0.15		
		(21.96-22.18)x(2.49+2.48)/2	-0.55		
		(21.36-21.96)x(2.49+2.49)/2	-1.49		
		(21.17-21.36)x(2.50+2.49)/2	-0.47		
		(20.79-21.17)x(2.50+2.50)/2	-0.95		
		(20.09-20.79)x(2.51+2.50)/2	-1.75		
		(19.19-20.09)x(2.56+2.51)/2	-2.28		
		(19.01-19.19)x(2.57+2.56)/2	-0.46		
		(18.63-19.01)x(2.58+2.57)/2	-0.98		
		(17.93-18.63)x(2.59+2.58)/2	-1.81		
		(17.60-17.93)x(2.59+2.59)/2	-0.85		
		(16.86-17.60)x(2.60+2.59)/2	-1.92		
		(16.01-16.86)x(2.61+2.60)/2	-2.21		
		(15.78-16.01)x(2.61+2.61)/2	-0.60		
		(15.30-15.78)x(2.62+2.61)/2	-1.26		
		(14.70-15.30)x(2.64+2.62)/2	-1.58		
		(14.42-14.70)x(2.65+2.64)/2	-0.74		
		(13.62-14.42)x(2.67+2.65)/2	-2.13		
		(12.82-13.62)x(2.61+2.67)/2	-2.11		
		(12.55-12.82)x(2.60+2.61)/2	-0.70		
		(11.97-12.55)x(2.56+2.60)/2	-1.50		
		(11.47-11.97)x(2.53+2.56)/2	-1.27		
		(11.23-11.47)x(2.49+2.53)/2	-0.60		
		(10.39-11.23)x(2.40+2.49)/2	-2.05		
		(10.22-10.39)x(2.32+2.40)/2	-0.40		
		(10.17-10.22)x(2.22+2.33)/2	-0.11		
		(9.98-10.17)x(2.17+2.22)/2	-0.42		
		(9.90-9.98)x(2.14+2.17)/2	-0.17		
		(9.68-9.90)x(2.13+2.14)/2	-0.47		
		(9.31-9.68)x(1.92+2.13)/2	-0.75		
		(8.64-9.31)x(1.38+1.92)/2	-1.11		
		(8.24-8.64)x(1.04+1.38)/2	-0.48		
		(8.04-8.24)x(0.87+1.04)/2	-0.19		
		(7.16-8.04)x(-0.01+0.87)/2	-0.38		
		(6.90-7.16)x(-0.20+-0.01)/2	0.03		
		(6.76-6.90)x(-0.24+-0.20)/2	0.03		
		(6.65-6.76)x(-0.28+-0.24)/2	0.03		
		(6.61-6.65)x(-0.29+-0.28)/2	0.01		
		(6.58-6.61)x(-0.28+-0.29)/2	0.01		
		(6.56-6.58)x(-0.32+-0.28)/2	0.01		
		(6.44-6.56)x(-0.30+-0.32)/2	0.04		
		(6.08-6.44)x(-0.34+-0.30)/2	0.12		
		(5.30-6.08)x(-0.37+-0.34)/2	0.28		
		(5.00-5.30)x(-0.37+-0.37)/2	0.11		
		(4.26-5.00)x(-0.35+-0.37)/2	0.27		
		(3.93-4.26)x(-0.35+-0.35)/2	0.12		
		(3.27-3.93)x(-0.31+-0.35)/2	0.22		
		(2.85-3.27)x(-0.31+-0.31)/2	0.13		
		(2.63-2.85)x(-0.27+-0.31)/2	0.06		
		(2.26-2.63)x(-0.20+-0.27)/2	0.09		
		(2.11-2.26)x(-0.15+-0.20)/2	0.03		
		(2.06-2.11)x(-0.10+-0.15)/2	0.01		
		(1.95-2.06)x(-0.23+-0.10)/2	0.02		
		(1.79-1.95)x(0.12+-0.23)/2	0.01		
		(1.77-1.79)x(0.14+0.13)/2	-0.00		
		(1.67-1.77)x(0.21+0.14)/2	-0.02		
		(0.69-1.67)x(0.97+0.21)/2	-0.58		
		(0.08-0.69)x(1.34+0.97)/2	-0.70		
		(-0.38-0.08)x(1.65+1.34)/2	-0.69		
		(-0.62--0.38)x(1.74+1.65)/2	-0.41		
		(-0.98--0.62)x(1.91+1.74)/2	-0.66		
		(-1.13--0.98)x(1.96+1.91)/2	-0.29		
		(-1.16--1.13)x(1.90+1.96)/2	-0.06		
		(-1.37--1.16)x(1.91+1.90)/2	-0.40		
		(-1.45--1.37)x(1.99+1.96)/2	-0.16		
		(-1.46--1.45)x(1.99+1.99)/2	-0.02		
		(-1.51--1.46)x(2.00+1.99)/2	-0.10		
		(-2.54--1.51)x(2.17+2.00)/2	-2.15		
		(-3.10--2.54)x(2.23+2.17)/2	-1.23		
		(-3.62--3.10)x(2.30+2.23)/2	-1.18		
		(-4.69--3.62)x(2.39+2.30)/2	-2.51		
		A RIPORTARE mq	86.69		

		CALCOLO DELLE AREE		Foglio n. 129
BONIFICA				
N. SEZIONE PROG.	FIG.	ELEMENTI DI CALCOLO	AREA ELEMENTARE mq	AREA FIGURA mq	NOTE
		RIPORTO mq	86.69		
		(-4.70--4.69)x(2.39+2.39)/2	-0.02		
		(-5.77--4.70)x(2.47+2.39)/2	-2.60		
		(-6.29--5.77)x(2.49+2.47)/2	-1.29		
		(-6.85--6.29)x(2.53+2.49)/2	-1.41		
		(-7.88--6.85)x(2.53+2.53)/2	-2.61		
		(-7.93--7.88)x(2.53+2.53)/2	-0.13		
		(-8.02--7.93)x(2.52+2.53)/2	-0.23		
		(-9.00--8.02)x(2.52+2.52)/2	-2.47		
		(-9.47--9.00)x(2.55+2.52)/2	-1.19		
		(-10.08--9.47)x(2.56+2.55)/2	-1.56		
		(-11.07--10.08)x(2.58+2.56)/2	-2.54		
		(-11.16--11.07)x(2.58+2.58)/2	-0.23		
		(-11.35--11.16)x(2.58+2.58)/2	-0.49		
		(-12.24--11.35)x(2.56+2.58)/2	-2.29		
		(-12.66--12.24)x(2.56+2.56)/2	-1.08		
		(-13.32--12.66)x(2.54+2.56)/2	-1.68		
		(-13.65--13.32)x(2.54+2.54)/2	-0.84		
		(-14.39--13.65)x(2.49+2.54)/2	-1.86		
		(-14.69--14.39)x(2.49+2.49)/2	-0.75		
		(-15.47--14.69)x(2.56+2.49)/2	-1.97		
		(-15.84--15.47)x(2.58+2.56)/2	-0.95		
		(-16.55--15.84)x(2.63+2.58)/2	-1.85		
		(-17.44--16.55)x(2.64+2.63)/2	-2.35		
		(-17.63--17.44)x(2.64+2.64)/2	-0.50		
		(-18.02--17.63)x(2.64+2.64)/2	-1.03		
		(-18.70--18.02)x(2.63+2.64)/2	-1.79		
		(-19.03--18.70)x(2.64+2.63)/2	-0.87		
		(-19.78--19.03)x(2.65+2.64)/2	-1.98		
		(-20.62--19.78)x(2.65+2.65)/2	-2.23		
		(-20.86--20.62)x(2.65+2.65)/2	-0.64		
		(-21.35--20.86)x(2.63+2.65)/2	-1.29		
		(-21.79--21.35)x(2.60+2.63)/2	-1.15		
		(-21.94--21.79)x(2.59+2.60)/2	-0.39		
		(-22.61--21.94)x(2.54+2.59)/2	-1.72		
		(-23.01--22.61)x(2.52+2.54)/2	-1.01		
		(-23.42--23.01)x(2.51+2.52)/2	-1.03		
		(-24.09--23.42)x(2.47+2.51)/2	-1.67		
		(-24.68--24.09)x(2.43+2.47)/2	-1.45		
		(-25.17--24.68)x(2.42+2.43)/2	-1.19		
		(-25.40--25.17)x(2.40+2.42)/2	-0.55		
		(-26.25--25.40)x(2.35+2.40)/2	-2.02		
		(-26.57--26.25)x(2.34+2.35)/2	-0.75		
				31.04	
46 675.00	B01	(-13.83--14.85)x(3.12+3.09)/2	3.17		
		(-13.26--13.83)x(3.12+3.12)/2	1.78		
		(-12.76--13.26)x(3.14+3.12)/2	1.56		
		(-11.68--12.76)x(3.41+3.14)/2	3.54		
		(-10.60--11.68)x(3.61+3.41)/2	3.79		
		(-10.09--10.60)x(3.62+3.61)/2	1.84		
		(-9.52--10.09)x(3.62+3.62)/2	2.06		
		(-8.51--9.52)x(3.61+3.62)/2	3.65		
		(-8.45--8.51)x(3.60+3.61)/2	0.22		
		(-8.32--8.45)x(3.60+3.60)/2	0.47		
		(-7.37--8.32)x(3.57+3.60)/2	3.41		
		(-6.92--7.37)x(3.57+3.57)/2	1.61		
		(-6.29--6.92)x(3.57+3.57)/2	2.25		
		(-5.33--6.29)x(3.26+3.57)/2	3.28		
		(-5.22--5.33)x(3.24+3.26)/2	0.36		
		(-4.97--5.22)x(3.11+3.24)/2	0.79		
		(-4.14--4.97)x(2.71+3.11)/2	2.42		
		(-3.75--4.14)x(2.66+2.71)/2	1.05		
		(-3.06--3.75)x(2.57+2.66)/2	1.80		
		(-2.16--3.06)x(2.57+2.57)/2	2.31		
		(-1.99--2.16)x(2.56+2.57)/2	0.44		
		(-1.62--1.99)x(2.52+2.56)/2	0.94		
		(-0.91--1.62)x(2.41+2.52)/2	1.75		
		(-0.27--0.91)x(2.30+2.41)/2	1.51		
		(0.17--0.27)x(2.16+2.30)/2	0.98		
		(1.01-0.17)x(1.66+2.16)/2	1.60		
		(1.24-1.01)x(1.53+1.66)/2	0.37		
		(1.73-1.24)x(1.06+1.53)/2	0.63		
		(2.32-1.73)x(0.51+1.06)/2	0.46		
		(2.60-2.32)x(0.43+0.51)/2	0.13		
		(3.40-2.60)x(0.12+0.43)/2	0.22		
		(4.19-3.40)x(0.14+0.12)/2	0.10		
		(4.47-4.19)x(0.13+0.14)/2	0.04		
		(5.09-4.47)x(0.15+0.13)/2	0.09		
		(5.55-5.09)x(0.15+0.15)/2	0.07		
		(5.77-5.55)x(0.15+0.15)/2	0.03		
		(6.63-5.77)x(0.16+0.15)/2	0.13		
		(7.28-6.63)x(0.26+0.16)/2	0.14		
		(7.64-7.28)x(0.29+0.26)/2	0.10		
		(7.71-7.64)x(0.31+0.29)/2	0.02		
		(8.44-7.71)x(0.59+0.31)/2	0.33		
		(8.78-8.44)x(0.73+0.59)/2	0.22		
		(8.95-8.78)x(0.82+0.73)/2	0.13		
		(9.86-8.95)x(1.32+0.82)/2	0.97		
		(10.12-9.86)x(1.79+1.32)/2	0.40		
		(10.17-10.12)x(1.78+1.79)/2	0.09		
		(10.26-10.17)x(2.12+1.78)/2	0.18		
		(10.29-10.26)x(2.13+2.12)/2	0.06		
		(10.30-10.29)x(2.14+2.13)/2	0.02		
		(10.31-10.30)x(2.04+2.14)/2	0.02		
		(10.33-10.31)x(2.05+2.04)/2	0.04		
		(10.79-10.33)x(1.99+2.05)/2	0.93		
		(10.94-10.79)x(1.87+1.99)/2	0.29		
		(11.79-10.94)x(2.15+1.87)/2	1.71		
		(12.01-11.79)x(2.23+2.15)/2	0.48		
		(12.12-12.01)x(2.24+2.23)/2	0.25		
		(13.09-12.12)x(2.41+2.24)/2	2.26		
		(13.70-13.09)x(2.52+2.41)/2	1.50		
		(14.17-13.70)x(2.57+2.52)/2	1.20		
		(15.14-14.17)x(3.19+2.57)/2	2.79		
		(15.24-15.14)x(3.25+3.19)/2	0.32		
		A RIPORTARE mq	65.30		

		CALCOLO DELLE AREE		Foglio n. 130
BONIFICA				
N. SEZIONE PROG.	FIG.	ELEMENTI DI CALCOLO	AREA ELEMENTARE mq	AREA FIGURA mq	NOTE
		RIPORTO mq	65.30		
		(15.29-15.24)x(3.26+3.25)/2	0.16		
		(16.32-15.29)x(3.72+3.26)/2	3.59		
		(16.85-16.32)x(3.72+3.72)/2	1.97		
		(17.40-16.85)x(3.76+3.72)/2	2.06		
		(18.46-17.40)x(3.66+3.76)/2	3.93		
		(18.47-18.46)x(3.66+3.66)/2	0.04		
		(18.50-18.47)x(3.66+3.66)/2	0.11		
		(19.55-18.50)x(3.72+3.66)/2	3.87		
		(20.05-19.55)x(3.75+3.72)/2	1.87		
		(20.63-20.05)x(3.78+3.75)/2	2.18		
		(21.64-20.63)x(3.75+3.78)/2	3.80		
		(21.70-21.64)x(3.75+3.75)/2	0.22		
		(21.85-21.70)x(3.75+3.75)/2	0.56		
		(22.78-21.85)x(3.75+3.75)/2	3.49		
		(23.22-22.78)x(3.76+3.75)/2	1.65		
		(23.86-23.22)x(3.77+3.76)/2	2.41		
		(24.81-23.86)x(3.79+3.77)/2	3.59		
		(24.94-24.81)x(3.79+3.79)/2	0.49		
		(25.20-24.94)x(3.78+3.79)/2	0.98		
		(26.01-25.20)x(3.75+3.78)/2	3.05		
		(26.40-26.01)x(3.72+3.75)/2	1.46		
		(27.09-26.40)x(3.68+3.72)/2	2.55		
		(27.98-27.09)x(3.60+3.68)/2	3.24		
		(28.17-27.98)x(3.59+3.60)/2	0.68		
		(28.55-28.17)x(3.53+3.59)/2	1.35		
		(29.24-28.55)x(3.43+3.53)/2	2.40		
		(29.57-29.24)x(3.39+3.43)/2	1.13		
		(30.32-29.57)x(3.25+3.39)/2	2.49		
		(31.16-30.32)x(3.24+3.25)/2	2.73		
		(31.40-31.16)x(3.22+3.24)/2	0.78		
		(31.91-31.40)x(3.23+3.22)/2	1.64		
		(32.47-31.91)x(3.23+3.23)/2	1.81		
		(32.74-32.47)x(3.26+3.23)/2	0.88		
		(33.55-32.74)x(3.34+3.26)/2	2.67		
		(34.33-33.55)x(3.39+3.34)/2	2.62		
		(34.63-34.33)x(3.42+3.39)/2	1.02		
		(34.78-34.63)x(3.40+3.42)/2	0.51		
		(37.75-34.78)x(3.13+3.40)/2	9.70		
		(34.78-37.75)x(2.90+2.63)/2	-8.21		
		(34.63-34.78)x(2.92+2.90)/2	-0.44		
		(34.33-34.63)x(2.89+2.92)/2	-0.87		
		(33.55-34.33)x(2.84+2.89)/2	-2.23		
		(32.74-33.55)x(2.76+2.84)/2	-2.27		
		(32.47-32.74)x(2.73+2.76)/2	-0.74		
		(31.91-32.47)x(2.73+2.73)/2	-1.53		
		(31.40-31.91)x(2.72+2.73)/2	-1.39		
		(31.16-31.40)x(2.74+2.72)/2	-0.66		
		(30.32-31.16)x(2.75+2.74)/2	-2.31		
		(29.57-30.32)x(2.89+2.75)/2	-2.12		
		(29.24-29.57)x(2.93+2.89)/2	-0.96		
		(28.55-29.24)x(3.03+2.93)/2	-2.06		
		(28.17-28.55)x(3.09+3.03)/2	-1.16		
		(27.98-28.17)x(3.10+3.09)/2	-0.59		
		(27.09-27.98)x(3.18+3.10)/2	-2.79		
		(26.40-27.09)x(3.22+3.18)/2	-2.21		
		(26.01-26.40)x(3.25+3.22)/2	-1.26		
		(25.20-26.01)x(3.28+3.25)/2	-2.64		
		(24.94-25.20)x(3.29+3.28)/2	-0.85		
		(24.81-24.94)x(3.29+3.29)/2	-0.43		
		(23.86-24.81)x(3.27+3.29)/2	-3.12		
		(23.22-23.86)x(3.26+3.27)/2	-2.09		
		(22.78-23.22)x(3.25+3.26)/2	-1.43		
		(21.85-22.78)x(3.25+3.25)/2	-3.02		
		(21.70-21.85)x(3.25+3.25)/2	-0.49		
		(21.64-21.70)x(3.25+3.25)/2	-0.19		
		(20.63-21.64)x(3.28+3.25)/2	-3.30		
		(20.05-20.63)x(3.25+3.28)/2	-1.89		
		(19.55-20.05)x(3.22+3.25)/2	-1.62		
		(18.50-19.55)x(3.16+3.22)/2	-3.35		
		(18.47-18.50)x(3.16+3.16)/2	-0.09		
		(18.46-18.47)x(3.16+3.16)/2	-0.03		
		(17.40-18.46)x(3.26+3.16)/2	-3.40		
		(16.85-17.40)x(3.22+3.26)/2	-1.78		
		(16.32-16.85)x(3.22+3.22)/2	-1.71		
		(15.29-16.32)x(2.76+3.22)/2	-3.08		
		(15.24-15.29)x(2.75+2.76)/2	-0.14		
		(15.14-15.24)x(2.69+2.75)/2	-0.27		
		(14.17-15.14)x(2.07+2.69)/2	-2.31		
		(13.70-14.17)x(2.02+2.07)/2	-0.96		
		(13.09-13.70)x(1.91+2.02)/2	-1.20		
		(12.12-13.09)x(1.74+1.91)/2	-1.77		
		(12.01-12.12)x(1.73+1.74)/2	-0.19		
		(11.79-12.01)x(1.65+1.73)/2	-0.37		
		(10.94-11.79)x(1.37+1.65)/2	-1.28		
		(10.79-10.94)x(1.49+1.37)/2	-0.21		
		(10.33-10.79)x(1.55+1.49)/2	-0.70		
		(10.31-10.33)x(1.54+1.55)/2	-0.03		
		(10.30-10.31)x(1.64+1.54)/2	-0.02		
		(10.29-10.30)x(1.63+1.64)/2	-0.02		
		(10.26-10.29)x(1.62+1.63)/2	-0.05		
		(10.17-10.26)x(1.28+1.62)/2	-0.13		
		(10.12-10.17)x(1.29+1.28)/2	-0.06		
		(9.86-10.12)x(0.82+1.29)/2	-0.27		
		(8.95-9.86)x(0.32+0.82)/2	-0.52		
		(8.78-8.95)x(0.23+0.32)/2	-0.05		
		(8.44-8.78)x(0.09+0.23)/2	-0.05		
		(7.71-8.44)x(-0.19+0.09)/2	0.04		
		(7.64-7.71)x(-0.21+-0.19)/2	0.01		
		(7.28-7.64)x(-0.24+-0.21)/2	0.08		
		(6.63-7.28)x(-0.34+-0.24)/2	0.19		
		(5.77-6.63)x(-0.35+-0.34)/2	0.30		
		(5.55-5.77)x(-0.35+-0.35)/2	0.08		
		(5.09-5.55)x(-0.35+-0.35)/2	0.16		
		(4.47-5.09)x(-0.37+-0.35)/2	0.22		
		A RIPORTARE mq	67.15		

		CALCOLO DELLE AREE		Foglio n. 131
BONIFICA				
N. SEZIONE PROG.	FIG.	ELEMENTI DI CALCOLO	AREA ELEMENTARE mq	AREA FIGURA mq	NOTE
		RIPORTO mq	67.15		
		(4.19-4.47)x(-0.36+-0.37)/2	0.10		
		(3.40-4.19)x(-0.38+-0.36)/2	0.29		
		(2.60-3.40)x(-0.07+-0.38)/2	0.18		
		(2.32-2.60)x(0.01+-0.07)/2	0.01		
		(1.73-2.32)x(0.56+0.01)/2	-0.17		
		(1.24-1.73)x(1.03+0.56)/2	-0.39		
		(1.01-1.24)x(1.16+1.03)/2	-0.25		
		(0.17-1.01)x(1.66+1.16)/2	-1.18		
		(-0.27-0.17)x(1.80+1.66)/2	-0.76		
		(-0.91--0.27)x(1.91+1.80)/2	-1.19		
		(-1.62--0.91)x(2.02+1.91)/2	-1.40		
		(-1.99--1.62)x(2.06+2.02)/2	-0.75		
		(-2.16--1.99)x(2.07+2.06)/2	-0.35		
		(-3.06--2.16)x(2.07+2.07)/2	-1.86		
		(-3.75--3.06)x(2.16+2.07)/2	-1.46		
		(-4.14--3.75)x(2.21+2.16)/2	-0.85		
		(-4.97--4.14)x(2.61+2.21)/2	-2.00		
		(-5.22--4.97)x(2.74+2.61)/2	-0.67		
		(-5.33--5.22)x(2.76+2.74)/2	-0.30		
		(-6.29--5.33)x(3.07+2.76)/2	-2.80		
		(-6.92--6.29)x(3.07+3.07)/2	-1.93		
		(-7.37--6.92)x(3.07+3.07)/2	-1.38		
		(-8.32--7.37)x(3.10+3.07)/2	-2.93		
		(-8.45--8.32)x(3.10+3.10)/2	-0.40		
		(-8.51--8.45)x(3.11+3.10)/2	-0.19		
		(-9.52--8.51)x(3.12+3.11)/2	-3.15		
		(-10.09--9.52)x(3.12+3.12)/2	-1.78		
		(-10.60--10.09)x(3.11+3.12)/2	-1.59		
		(-11.68--10.60)x(2.91+3.11)/2	-3.25		
		(-12.76--11.68)x(2.64+2.91)/2	-3.00		
		(-13.26--12.76)x(2.62+2.64)/2	-1.31		
		(-13.83--13.26)x(2.62+2.62)/2	-1.49		
		(-14.85--13.83)x(2.59+2.62)/2	-2.66		
				26.29	
47 690.00	B01	(-5.71--5.87)x(3.96+3.94)/2	0.63		
		(-5.59--5.71)x(3.94+3.96)/2	0.47		
		(-5.23--5.59)x(3.89+3.94)/2	1.41		
		(-4.78--5.23)x(3.83+3.89)/2	1.74		
		(-4.63--4.78)x(3.82+3.83)/2	0.57		
		(-4.35--4.63)x(3.65+3.82)/2	1.05		
		(-3.56--4.35)x(3.27+3.65)/2	2.73		
		(-2.77--3.56)x(2.86+3.27)/2	2.42		
		(-2.48--2.77)x(2.72+2.86)/2	0.81		
		(-1.85--2.48)x(2.56+2.72)/2	1.66		
		(-1.40--1.85)x(2.47+2.56)/2	1.13		
		(-1.19--1.40)x(2.47+2.47)/2	0.52		
		(-0.33--1.19)x(2.53+2.47)/2	2.15		
		(0.39--0.33)x(2.45+2.53)/2	1.79		
		(0.75-0.39)x(2.43+2.45)/2	0.88		
		(1.52-0.75)x(1.98+2.43)/2	1.70		
		(1.82-1.52)x(1.78+1.98)/2	0.56		
		(1.97-1.82)x(1.67+1.78)/2	0.26		
		(2.90-1.97)x(0.86+1.67)/2	1.18		
		(3.55-2.90)x(0.53+0.86)/2	0.45		
		(3.98-3.55)x(0.27+0.53)/2	0.17		
		(4.89-3.98)x(0.13+0.27)/2	0.18		
		(5.05-4.89)x(0.11+0.13)/2	0.02		
		(5.13-5.05)x(0.11+0.11)/2	0.01		
		(6.13-5.13)x(0.13+0.11)/2	0.12		
		(6.71-6.13)x(0.13+0.13)/2	0.08		
		(7.21-6.71)x(0.13+0.13)/2	0.07		
		(8.27-7.21)x(0.14+0.13)/2	0.14		
		(8.28-8.27)x(0.14+0.14)/2	0.00		
		(8.29-8.28)x(0.14+0.14)/2	0.00		
		(9.36-8.29)x(0.33+0.14)/2	0.25		
		(9.87-9.36)x(0.69+0.33)/2	0.26		
		(10.43-9.87)x(1.03+0.69)/2	0.48		
		(11.45-10.43)x(1.70+1.03)/2	1.39		
		(11.51-11.45)x(1.74+1.70)/2	0.10		
		(11.54-11.51)x(1.75+1.74)/2	0.05		
		(11.64-11.54)x(1.79+1.75)/2	0.18		
		(12.36-11.64)x(2.01+1.79)/2	1.37		
		(12.59-12.36)x(2.05+2.01)/2	0.47		
		(13.03-12.59)x(2.09+2.05)/2	0.91		
		(13.66-13.03)x(2.14+2.09)/2	1.33		
		(14.61-13.66)x(2.28+2.14)/2	2.10		
		(14.74-14.61)x(2.29+2.28)/2	0.30		
		(15.02-14.74)x(2.41+2.29)/2	0.66		
		(15.81-15.02)x(2.83+2.41)/2	2.07		
		(16.19-15.81)x(2.95+2.83)/2	1.10		
		(16.89-16.19)x(3.28+2.95)/2	2.18		
		(17.77-16.89)x(3.36+3.28)/2	2.92		
		(17.97-17.77)x(3.41+3.36)/2	0.68		
		(18.39-17.97)x(3.43+3.41)/2	1.44		
		(19.04-18.39)x(3.45+3.43)/2	2.24		
		(19.35-19.04)x(3.46+3.45)/2	1.07		
		(20.12-19.35)x(3.46+3.46)/2	2.66		
		(20.93-20.12)x(3.54+3.46)/2	2.83		
		(21.20-20.93)x(3.57+3.54)/2	0.96		
		(21.76-21.20)x(3.53+3.57)/2	1.99		
		(22.27-21.76)x(3.51+3.53)/2	1.80		
		(22.51-22.27)x(3.53+3.51)/2	0.84		
		(23.35-22.51)x(3.64+3.53)/2	3.01		
		(24.09-23.35)x(3.53+3.64)/2	2.65		
		(24.42-24.09)x(3.52+3.53)/2	1.16		
		(25.14-24.42)x(3.33+3.52)/2	2.47		
		(25.50-25.14)x(3.23+3.33)/2	1.18		
		(25.67-25.50)x(3.23+3.23)/2	0.55		
		(26.58-25.67)x(3.15+3.23)/2	2.90		
		(27.25-26.58)x(3.18+3.15)/2	2.12		
		(27.65-27.25)x(3.20+3.18)/2	1.28		
		(28.51-27.65)x(3.23+3.20)/2	2.76		
		(28.73-28.51)x(3.24+3.23)/2	0.71		
		(28.83-28.73)x(3.24+3.24)/2	0.32		
		A RIPORTARE mq	80.64		

		CALCOLO DELLE AREE		Foglio n. 132
BONIFICA				
N. SEZIONE PROG.	FIG.	ELEMENTI DI CALCOLO	AREA ELEMENTARE mq	AREA FIGURA mq	NOTE
		RIPORTO mq	80.64		
		(29.81-28.83)x(3.22+3.24)/2	3.17		
		(30.31-29.81)x(3.20+3.22)/2	1.60		
		(30.88-30.31)x(3.18+3.20)/2	1.82		
		(31.88-30.88)x(3.12+3.18)/2	3.15		
		(31.96-31.88)x(3.11+3.12)/2	0.25		
		(31.99-31.96)x(3.10+3.11)/2	0.09		
		(33.03-31.99)x(2.91+3.10)/2	3.13		
		(33.57-33.03)x(2.85+2.91)/2	1.56		
		(34.11-33.57)x(2.76+2.85)/2	1.51		
		(38.16-34.11)x(2.82+2.76)/2	11.30		
		(34.11-38.16)x(2.26+2.32)/2	-9.27		
		(33.57-34.11)x(2.35+2.26)/2	-1.24		
		(33.03-33.57)x(2.41+2.35)/2	-1.29		
		(31.99-33.03)x(2.60+2.41)/2	-2.61		
		(31.96-31.99)x(2.61+2.60)/2	-0.08		
		(31.88-31.96)x(2.62+2.61)/2	-0.21		
		(30.88-31.88)x(2.68+2.62)/2	-2.65		
		(30.31-30.88)x(2.70+2.68)/2	-1.53		
		(29.81-30.31)x(2.72+2.70)/2	-1.35		
		(28.83-29.81)x(2.74+2.72)/2	-2.68		
		(28.73-28.83)x(2.74+2.74)/2	-0.27		
		(28.51-28.73)x(2.73+2.74)/2	-0.60		
		(27.65-28.51)x(2.70+2.73)/2	-2.33		
		(27.25-27.65)x(2.68+2.70)/2	-1.08		
		(26.58-27.25)x(2.65+2.68)/2	-1.79		
		(25.67-26.58)x(2.73+2.65)/2	-2.45		
		(25.50-25.67)x(2.73+2.73)/2	-0.46		
		(25.14-25.50)x(2.83+2.73)/2	-1.00		
		(24.42-25.14)x(3.02+2.83)/2	-2.11		
		(24.09-24.42)x(3.03+3.02)/2	-1.00		
		(23.35-24.09)x(3.14+3.03)/2	-2.28		
		(22.51-23.35)x(3.03+3.14)/2	-2.59		
		(22.27-22.51)x(3.01+3.03)/2	-0.72		
		(21.76-22.27)x(3.03+3.01)/2	-1.54		
		(21.20-21.76)x(3.07+3.03)/2	-1.71		
		(20.93-21.20)x(3.04+3.07)/2	-0.82		
		(20.12-20.93)x(2.96+3.04)/2	-2.43		
		(19.35-20.12)x(2.96+2.96)/2	-2.28		
		(19.04-19.35)x(2.95+2.96)/2	-0.92		
		(18.39-19.04)x(2.93+2.95)/2	-1.91		
		(17.97-18.39)x(2.91+2.93)/2	-1.23		
		(17.77-17.97)x(2.86+2.91)/2	-0.58		
		(16.89-17.77)x(2.78+2.86)/2	-2.48		
		(16.19-16.89)x(2.45+2.78)/2	-1.83		
		(15.81-16.19)x(2.33+2.45)/2	-0.91		
		(15.02-15.81)x(1.91+2.33)/2	-1.67		
		(14.74-15.02)x(1.79+1.91)/2	-0.52		
		(14.61-14.74)x(1.78+1.79)/2	-0.23		
		(13.66-14.61)x(1.64+1.78)/2	-1.62		
		(13.03-13.66)x(1.59+1.64)/2	-1.02		
		(12.59-13.03)x(1.55+1.59)/2	-0.69		
		(12.36-12.59)x(1.51+1.55)/2	-0.35		
		(11.64-12.36)x(1.29+1.51)/2	-1.01		
		(11.54-11.64)x(1.25+1.29)/2	-0.13		
		(11.51-11.54)x(1.24+1.25)/2	-0.04		
		(11.45-11.51)x(1.20+1.24)/2	-0.07		
		(10.43-11.45)x(0.53+1.20)/2	-0.88		
		(9.87-10.43)x(0.19+0.53)/2	-0.20		
		(9.36-9.87)x(-0.17+0.19)/2	-0.01		
		(8.29-9.36)x(-0.36+-0.17)/2	0.28		
		(8.28-8.29)x(-0.36+-0.36)/2	0.00		
		(8.27-8.28)x(-0.36+-0.36)/2	0.00		
		(7.21-8.27)x(-0.37+-0.36)/2	0.39		
		(6.71-7.21)x(-0.37+-0.37)/2	0.18		
		(6.13-6.71)x(-0.37+-0.37)/2	0.21		
		(5.13-6.13)x(-0.39+-0.37)/2	0.38		
		(5.05-5.13)x(-0.39+-0.39)/2	0.03		
		(4.89-5.05)x(-0.37+-0.39)/2	0.06		
		(3.98-4.89)x(-0.23+-0.37)/2	0.27		
		(3.55-3.98)x(0.03+-0.23)/2	0.04		
		(2.90-3.55)x(0.36+0.03)/2	-0.13		
		(1.97-2.90)x(1.17+0.36)/2	-0.71		
		(1.82-1.97)x(1.28+1.17)/2	-0.18		
		(1.52-1.82)x(1.48+1.28)/2	-0.41		
		(0.75-1.52)x(1.93+1.48)/2	-1.31		
		(0.39-0.75)x(1.95+1.93)/2	-0.70		
		(-0.33-0.39)x(2.03+1.95)/2	-1.43		
		(-1.19--0.33)x(1.97+2.03)/2	-1.72		
		(-1.40--1.19)x(1.97+1.97)/2	-0.41		
		(-1.85--1.40)x(2.06+1.97)/2	-0.91		
		(-2.48--1.85)x(2.22+2.06)/2	-1.35		
		(-2.77--2.48)x(2.36+2.22)/2	-0.66		
		(-3.56--2.77)x(2.77+2.36)/2	-2.03		
		(-4.35--3.56)x(3.15+2.77)/2	-2.34		
		(-4.63--4.35)x(3.32+3.15)/2	-0.91		
		(-4.78--4.63)x(3.33+3.32)/2	-0.50		
		(-5.23--4.78)x(3.39+3.33)/2	-1.51		
		(-5.59--5.23)x(3.44+3.39)/2	-1.23		
		(-5.71--5.59)x(3.46+3.44)/2	-0.41		
		(-5.87--5.71)x(3.44+3.46)/2	-0.55		
				21.99	
48 705.00	BO1	(10.81-9.99)x(0.66+0.21)/2	0.36		
		(11.04-10.81)x(0.76+0.66)/2	0.16		
		(11.52-11.04)x(1.13+0.76)/2	0.45		
		(12.11-11.52)x(1.55+1.13)/2	0.79		
		(12.39-12.11)x(1.62+1.55)/2	0.44		
		(13.19-12.39)x(1.88+1.62)/2	1.40		
		(13.96-13.19)x(1.92+1.88)/2	1.46		
		(14.26-13.96)x(1.93+1.92)/2	0.58		
		(14.91-14.26)x(2.04+1.93)/2	1.29		
		(15.34-14.91)x(2.13+2.04)/2	0.90		
		(15.54-15.34)x(2.19+2.13)/2	0.43		
		(16.42-15.54)x(2.43+2.19)/2	2.03		
		(17.11-16.42)x(2.62+2.43)/2	1.74		
		A RIPORTARE mq	12.03		

		CALCOLO DELLE AREE		Foglio n. 133
BONIFICA				
N. SEZIONE PROG.	FIG.	ELEMENTI DI CALCOLO	AREA ELEMENTARE mq	AREA FIGURA mq	NOTE
		RIPORTO mq	12.03		
		(17.49-17.11)x(2.73+2.62)/2	1.02		
		(18.31-17.49)x(2.97+2.73)/2	2.34		
		(18.57-18.31)x(3.05+2.97)/2	0.78		
		(18.69-18.57)x(3.07+3.05)/2	0.37		
		(19.64-18.69)x(3.26+3.07)/2	3.01		
		(20.26-19.64)x(3.30+3.26)/2	2.03		
		(20.72-20.26)x(3.31+3.30)/2	1.52		
		(21.70-20.72)x(3.35+3.31)/2	3.26		
		(21.79-21.70)x(3.35+3.35)/2	0.30		
		(21.83-21.79)x(3.35+3.35)/2	0.13		
		(22.87-21.83)x(3.34+3.35)/2	3.48		
		(23.41-22.87)x(3.36+3.34)/2	1.81		
		(23.94-23.41)x(3.35+3.36)/2	1.78		
		(24.98-23.94)x(3.39+3.35)/2	3.50		
		(25.02-24.98)x(3.39+3.39)/2	0.14		
		(25.04-25.02)x(3.39+3.39)/2	0.07		
		(25.10-25.04)x(3.40+3.39)/2	0.20		
		(25.86-25.10)x(3.41+3.40)/2	2.59		
		(26.09-25.86)x(3.41+3.41)/2	0.78		
		(26.56-26.09)x(3.35+3.41)/2	1.59		
		(27.17-26.56)x(3.26+3.35)/2	2.02		
		(28.13-27.17)x(3.12+3.26)/2	3.06		
		(28.25-28.13)x(3.10+3.12)/2	0.37		
		(28.49-28.25)x(3.06+3.10)/2	0.74		
		(29.32-28.49)x(2.94+3.06)/2	2.49		
		(29.70-29.32)x(2.91+2.94)/2	1.11		
		(30.40-29.70)x(2.83+2.91)/2	2.01		
		(30.96-30.40)x(2.77+2.83)/2	1.57		
		(30.40-30.96)x(2.33+2.27)/2	-1.29		
		(29.70-30.40)x(2.41+2.33)/2	-1.66		
		(29.32-29.70)x(2.44+2.41)/2	-0.92		
		(28.49-29.32)x(2.56+2.44)/2	-2.08		
		(28.25-28.49)x(2.60+2.56)/2	-0.62		
		(28.13-28.25)x(2.62+2.60)/2	-0.31		
		(27.17-28.13)x(2.76+2.62)/2	-2.58		
		(26.56-27.17)x(2.85+2.76)/2	-1.71		
		(26.09-26.56)x(2.91+2.85)/2	-1.35		
		(25.86-26.09)x(2.91+2.91)/2	-0.67		
		(25.10-25.86)x(2.90+2.91)/2	-2.21		
		(25.04-25.10)x(2.89+2.90)/2	-0.17		
		(25.02-25.04)x(2.89+2.89)/2	-0.06		
		(24.98-25.02)x(2.89+2.89)/2	-0.12		
		(23.94-24.98)x(2.85+2.89)/2	-2.98		
		(23.41-23.94)x(2.86+2.85)/2	-1.51		
		(22.87-23.41)x(2.84+2.86)/2	-1.54		
		(21.83-22.87)x(2.85+2.84)/2	-2.96		
		(21.79-21.83)x(2.85+2.85)/2	-0.11		
		(21.70-21.79)x(2.85+2.85)/2	-0.26		
		(20.72-21.70)x(2.81+2.85)/2	-2.77		
		(20.26-20.72)x(2.80+2.81)/2	-1.29		
		(19.64-20.26)x(2.76+2.80)/2	-1.72		
		(18.69-19.64)x(2.57+2.76)/2	-2.53		
		(18.57-18.69)x(2.55+2.57)/2	-0.31		
		(18.31-18.57)x(2.47+2.55)/2	-0.65		
		(17.49-18.31)x(2.23+2.47)/2	-1.93		
		(17.11-17.49)x(2.12+2.23)/2	-0.83		
		(16.42-17.11)x(1.93+2.12)/2	-1.40		
		(15.54-16.42)x(1.69+1.93)/2	-1.59		
		(15.34-15.54)x(1.63+1.69)/2	-0.33		
		(14.91-15.34)x(1.54+1.63)/2	-0.68		
		(14.26-14.91)x(1.43+1.54)/2	-0.97		
		(13.96-14.26)x(1.42+1.43)/2	-0.43		
		(13.19-13.96)x(1.38+1.42)/2	-1.08		
		(12.39-13.19)x(1.12+1.38)/2	-1.00		
		(12.11-12.39)x(1.05+1.12)/2	-0.30		
		(11.52-12.11)x(0.63+1.05)/2	-0.50		
		(11.04-11.52)x(0.26+0.63)/2	-0.21		
		(10.81-11.04)x(0.16+0.26)/2	-0.05		
		(9.99-10.81)x(-0.29+0.16)/2	0.05		
				10.47	
48 705.00	BO2	(-15.64--15.69)x(2.96+2.96)/2	0.15		
		(-14.77--15.64)x(3.03+2.96)/2	2.61		
		(-14.37--14.77)x(3.04+3.03)/2	1.21		
		(-13.70--14.37)x(3.08+3.04)/2	2.05		
		(-12.80--13.70)x(3.06+3.08)/2	2.76		
		(-12.62--12.80)x(3.06+3.06)/2	0.55		
		(-12.24--12.62)x(3.03+3.06)/2	1.16		
		(-11.55--12.24)x(2.96+3.03)/2	2.07		
		(-11.22--11.55)x(2.94+2.96)/2	0.97		
		(-11.10--11.22)x(2.93+2.94)/2	0.35		
		(-11.22--11.10)x(2.44+2.43)/2	-0.29		
		(-11.55--11.22)x(2.46+2.44)/2	-0.81		
		(-12.24--11.55)x(2.53+2.46)/2	-1.72		
		(-12.62--12.24)x(2.56+2.53)/2	-0.97		
		(-12.80--12.62)x(2.56+2.56)/2	-0.46		
		(-13.70--12.80)x(2.58+2.56)/2	-2.31		
		(-14.37--13.70)x(2.54+2.58)/2	-1.72		
		(-14.77--14.37)x(2.53+2.54)/2	-1.01		
		(-15.64--14.77)x(2.46+2.53)/2	-2.17		
		(-15.69--15.64)x(2.46+2.46)/2	-0.12		
				2.30	
49 720.00	BO1	(-15.81--15.86)x(2.90+2.89)/2	0.14		
		(-15.22--15.81)x(2.97+2.90)/2	1.73		
		(-14.54--15.22)x(3.05+2.97)/2	2.05		
		(-14.14--14.54)x(3.10+3.05)/2	1.23		
		(-13.37--14.14)x(3.12+3.10)/2	2.39		
		(-13.07--13.37)x(3.13+3.12)/2	0.94		
		(-12.41--13.07)x(3.18+3.13)/2	2.08		
		(-11.99--12.41)x(3.24+3.18)/2	1.35		
		(-11.79--11.99)x(3.26+3.24)/2	0.65		
		(-10.92--11.79)x(3.46+3.26)/2	2.92		
		(-10.22--10.92)x(3.46+3.46)/2	2.42		
		(-9.84--10.22)x(3.50+3.46)/2	1.32		
		(-9.02--9.84)x(3.43+3.50)/2	2.84		
		A RIPORTARE mq	22.06		

		CALCOLO DELLE AREE		Foglio n. 134
BONIFICA				
N. SEZIONE PROG.	FIG.	ELEMENTI DI CALCOLO	AREA ELEMENTARE mq	AREA FIGURA mq	NOTE
		RIPORTO mq	22.06		
		(-8.76--9.02)x(3.40+3.43)/2	0.89		
		(-8.65--8.76)x(3.41+3.40)/2	0.37		
		(-7.69--8.65)x(3.43+3.41)/2	3.28		
		(-7.07--7.69)x(3.47+3.43)/2	2.14		
		(-6.61--7.07)x(3.50+3.47)/2	1.60		
		(-5.63--6.61)x(3.70+3.50)/2	3.53		
		(-5.54--5.63)x(3.72+3.70)/2	0.33		
		(-5.50--5.54)x(3.71+3.72)/2	0.15		
		(-4.46--5.50)x(3.55+3.71)/2	3.78		
		(-3.92--4.46)x(3.40+3.55)/2	1.88		
		(-3.39--3.92)x(3.23+3.40)/2	1.76		
		(-2.35--3.39)x(2.90+3.23)/2	3.19		
		(-2.31--2.35)x(2.88+2.90)/2	0.12		
		(-2.23--2.31)x(2.86+2.88)/2	0.23		
		(-1.48--2.23)x(2.62+2.86)/2	2.06		
		(-1.24--1.48)x(2.57+2.62)/2	0.62		
		(-0.66--1.24)x(2.46+2.57)/2	1.46		
		(-0.16--0.66)x(2.40+2.46)/2	1.21		
		(0.16--0.16)x(2.37+2.40)/2	0.76		
		(0.47-0.16)x(2.34+2.37)/2	0.73		
		(0.16-0.47)x(1.87+1.84)/2	-0.58		
		(-0.16-0.16)x(1.90+1.87)/2	-0.60		
		(-0.66--0.16)x(1.96+1.90)/2	-0.96		
		(-1.24--0.66)x(2.07+1.96)/2	-1.17		
		(-1.48--1.24)x(2.12+2.07)/2	-0.50		
		(-2.23--1.48)x(2.36+2.12)/2	-1.68		
		(-2.31--2.23)x(2.38+2.36)/2	-0.19		
		(-2.35--2.31)x(2.40+2.38)/2	-0.10		
		(-3.39--2.35)x(2.73+2.40)/2	-2.67		
		(-3.92--3.39)x(2.90+2.73)/2	-1.49		
		(-4.46--3.92)x(3.05+2.90)/2	-1.61		
		(-5.50--4.46)x(3.21+3.05)/2	-3.26		
		(-5.54--5.50)x(3.22+3.21)/2	-0.13		
		(-5.63--5.54)x(3.20+3.22)/2	-0.29		
		(-6.61--5.63)x(3.00+3.20)/2	-3.04		
		(-7.07--6.61)x(2.97+3.00)/2	-1.37		
		(-7.69--7.07)x(2.93+2.97)/2	-1.83		
		(-8.65--7.69)x(2.91+2.93)/2	-2.80		
		(-8.76--8.65)x(2.90+2.91)/2	-0.32		
		(-9.02--8.76)x(2.93+2.90)/2	-0.76		
		(-9.84--9.02)x(3.00+2.93)/2	-2.43		
		(-10.22--9.84)x(2.96+3.00)/2	-1.13		
		(-10.92--10.22)x(2.96+2.96)/2	-2.07		
		(-11.79--10.92)x(2.76+2.96)/2	-2.49		
		(-11.99--11.79)x(2.74+2.76)/2	-0.55		
		(-12.41--11.99)x(2.68+2.74)/2	-1.14		
		(-13.07--12.41)x(2.63+2.68)/2	-1.75		
		(-13.37--13.07)x(2.62+2.63)/2	-0.79		
		(-14.14--13.37)x(2.60+2.62)/2	-2.01		
		(-14.54--14.14)x(2.55+2.60)/2	-1.03		
		(-15.22--14.54)x(2.47+2.55)/2	-1.71		
		(-15.81--15.22)x(2.40+2.47)/2	-1.44		
		(-15.86--15.81)x(2.39+2.40)/2	-0.12		
				8.14	
49 720.00	BO2	(16.55-16.36)x(2.41+2.39)/2	0.46		
		(17.05-16.55)x(2.46+2.41)/2	1.22		
		(18.12-17.05)x(2.53+2.46)/2	2.67		
		(18.13-18.12)x(2.53+2.53)/2	0.03		
		(19.20-18.13)x(2.58+2.53)/2	2.73		
		(19.33-19.20)x(2.59+2.58)/2	0.34		
		(19.20-19.33)x(2.08+2.09)/2	-0.27		
		(18.13-19.20)x(2.03+2.08)/2	-2.20		
		(18.12-18.13)x(2.03+2.03)/2	-0.02		
		(17.05-18.12)x(1.96+2.03)/2	-2.13		
		(16.55-17.05)x(1.91+1.96)/2	-0.97		
		(16.36-16.55)x(1.89+1.91)/2	-0.36		
				1.50	
50 735.00	BO1	(-15.90--16.51)x(2.55+2.50)/2	1.54		
		(-15.69--15.90)x(2.57+2.55)/2	0.54		
		(-15.59--15.69)x(2.58+2.57)/2	0.26		
		(-14.62--15.59)x(2.64+2.58)/2	2.53		
		(-14.01--14.62)x(2.70+2.64)/2	1.63		
		(-13.54--14.01)x(2.75+2.70)/2	1.28		
		(-12.53--13.54)x(2.84+2.75)/2	2.82		
		(-12.46--12.53)x(2.85+2.84)/2	0.20		
		(-12.43--12.46)x(2.85+2.85)/2	0.09		
		(-11.39--12.43)x(2.83+2.85)/2	2.95		
		(-10.85--11.39)x(2.81+2.83)/2	1.52		
		(-10.31--10.85)x(2.80+2.81)/2	1.51		
		(-9.27--10.31)x(2.78+2.80)/2	2.90		
		(-9.24--9.27)x(2.78+2.78)/2	0.08		
		(-9.16--9.24)x(2.78+2.78)/2	0.22		
		(-8.16--9.16)x(2.81+2.78)/2	2.79		
		(-7.69--8.16)x(2.82+2.81)/2	1.32		
		(-7.08--7.69)x(2.85+2.82)/2	1.73		
		(-6.11--7.08)x(2.89+2.85)/2	2.78		
		(-6.01--6.11)x(2.89+2.89)/2	0.29		
		(-5.79--6.01)x(2.91+2.89)/2	0.64		
		(-4.93--5.79)x(3.00+2.91)/2	2.54		
		(-4.53--4.93)x(3.03+3.00)/2	1.21		
		(-3.86--4.53)x(3.12+3.03)/2	2.06		
		(-2.95--3.86)x(3.19+3.12)/2	2.87		
		(-2.78--2.95)x(3.19+3.19)/2	0.54		
		(-2.69--2.78)x(3.19+3.19)/2	0.29		
		(-2.41--2.69)x(3.20+3.19)/2	0.89		
		(-1.87--2.41)x(3.20+3.20)/2	1.73		
		(-1.70--1.87)x(3.23+3.20)/2	0.55		
		(-1.37--1.70)x(3.26+3.23)/2	1.07		
		(-0.63--1.37)x(3.34+3.26)/2	2.44		
		(-0.24--0.63)x(3.39+3.34)/2	1.31		
		(0.21--0.24)x(3.51+3.39)/2	1.55		
		(0.40-0.21)x(3.62+3.51)/2	0.68		
		(0.50-0.40)x(3.49+3.62)/2	0.36		
		(0.57-0.50)x(3.48+3.49)/2	0.24		
		A RIPORTARE mq	49.95		

		CALCOLO DELLE AREE		Foglio n. 135
BONIFICA				
N. SEZIONE PROG.	FIG.	ELEMENTI DI CALCOLO	AREA ELEMENTARE mq	AREA FIGURA mq	NOTE
		RIPORTO mq	49.95		
		(0.96-0.57)x(3.49+3.48)/2	1.36		
		(1.53-0.96)x(3.51+3.49)/2	2.00		
		(1.99-1.53)x(3.55+3.51)/2	1.62		
		(2.31-1.99)x(3.60+3.55)/2	1.14		
		(2.35-2.31)x(3.60+3.60)/2	0.14		
		(2.39-2.35)x(3.60+3.60)/2	0.14		
		(2.40-2.39)x(3.48+3.60)/2	0.04		
		(2.60-2.40)x(3.39+3.48)/2	0.69		
		(3.37-2.60)x(2.85+3.39)/2	2.40		
		(3.68-3.37)x(2.68+2.85)/2	0.86		
		(4.33-3.68)x(2.14+2.68)/2	1.57		
		(4.75-4.33)x(1.81+2.14)/2	0.83		
		(4.99-4.75)x(1.59+1.81)/2	0.41		
		(5.25-4.99)x(1.31+1.59)/2	0.38		
		(5.63-5.25)x(0.93+1.31)/2	0.43		
		(5.81-5.63)x(0.77+0.93)/2	0.15		
		(5.82-5.81)x(0.77+0.77)/2	0.01		
		(5.83-5.82)x(0.75+0.77)/2	0.01		
		(5.87-5.83)x(0.76+0.75)/2	0.03		
		(5.89-5.87)x(0.75+0.76)/2	0.02		
		(5.91-5.89)x(0.75+0.75)/2	0.02		
		(6.00-5.91)x(0.75+0.75)/2	0.07		
		(6.03-6.00)x(0.82+0.75)/2	0.02		
		(6.08-6.03)x(0.75+0.82)/2	0.04		
		(6.14-6.08)x(0.43+0.75)/2	0.04		
		(6.15-6.14)x(0.64+0.43)/2	0.01		
		(6.46-6.15)x(0.62+0.64)/2	0.20		
		(6.55-6.46)x(0.64+0.62)/2	0.06		
		(6.60-6.55)x(0.55+0.64)/2	0.03		
		(6.77-6.60)x(0.23+0.55)/2	0.07		
		(7.00-6.77)x(0.50+0.23)/2	0.08		
		(7.10-7.00)x(0.49+0.50)/2	0.05		
		(7.71-7.10)x(0.31+0.49)/2	0.24		
		(7.98-7.71)x(0.24+0.31)/2	0.07		
		(8.11-7.98)x(0.25+0.24)/2	0.03		
		(9.06-8.11)x(0.33+0.25)/2	0.28		
		(9.69-9.06)x(0.26+0.33)/2	0.19		
		(10.14-9.69)x(0.24+0.26)/2	0.11		
		(11.08-10.14)x(0.24+0.24)/2	0.23		
		(11.21-11.08)x(0.25+0.24)/2	0.03		
		(11.27-11.21)x(0.26+0.25)/2	0.02		
		(12.29-11.27)x(0.35+0.26)/2	0.31		
		(12.85-12.29)x(0.77+0.35)/2	0.31		
		(13.36-12.85)x(1.10+0.77)/2	0.48		
		(14.44-13.36)x(1.81+1.10)/2	1.57		
		(14.45-14.44)x(1.82+1.81)/2	0.02		
		(15.52-14.45)x(2.24+1.82)/2	2.17		
		(16.07-15.52)x(2.35+2.24)/2	1.26		
		(16.25-16.07)x(2.37+2.35)/2	0.42		
		(16.07-16.25)x(1.85+1.87)/2	-0.33		
		(15.52-16.07)x(1.74+1.85)/2	-0.99		
		(14.45-15.52)x(1.32+1.74)/2	-1.64		
		(14.44-14.45)x(1.31+1.32)/2	-0.01		
		(13.36-14.44)x(0.60+1.31)/2	-1.03		
		(12.85-13.36)x(0.27+0.60)/2	-0.22		
		(12.29-12.85)x(-0.15+0.27)/2	-0.03		
		(11.27-12.29)x(-0.24+-0.15)/2	0.20		
		(11.21-11.27)x(-0.25+-0.24)/2	0.01		
		(11.08-11.21)x(-0.26+-0.25)/2	0.03		
		(10.14-11.08)x(-0.26+-0.26)/2	0.24		
		(9.69-10.14)x(-0.24+-0.26)/2	0.11		
		(9.06-9.69)x(-0.17+-0.24)/2	0.13		
		(8.11-9.06)x(-0.25+-0.17)/2	0.20		
		(7.98-8.11)x(-0.26+-0.25)/2	0.03		
		(7.71-7.98)x(-0.19+-0.26)/2	0.06		
		(7.10-7.71)x(-0.01+-0.19)/2	0.06		
		(7.00-7.10)x(0.00+-0.01)/2	0.00		
		(6.77-7.00)x(-0.27+0.00)/2	0.03		
		(6.60-6.77)x(0.05+-0.27)/2	0.02		
		(6.55-6.60)x(0.14+0.05)/2	-0.00		
		(6.46-6.55)x(0.12+0.14)/2	-0.01		
		(6.15-6.46)x(0.14+0.12)/2	-0.04		
		(6.14-6.15)x(-0.07+0.14)/2	-0.00		
		(6.08-6.14)x(0.25+-0.07)/2	-0.01		
		(6.03-6.08)x(0.32+0.25)/2	-0.01		
		(6.00-6.03)x(0.25+0.32)/2	-0.01		
		(5.91-6.00)x(0.25+0.25)/2	-0.02		
		(5.89-5.91)x(0.25+0.25)/2	-0.01		
		(5.87-5.89)x(0.26+0.25)/2	-0.01		
		(5.83-5.87)x(0.25+0.26)/2	-0.01		
		(5.82-5.83)x(0.27+0.25)/2	-0.00		
		(5.81-5.82)x(0.27+0.27)/2	-0.00		
		(5.63-5.81)x(0.43+0.27)/2	-0.06		
		(5.25-5.63)x(0.81+0.43)/2	-0.24		
		(4.99-5.25)x(1.09+0.81)/2	-0.25		
		(4.75-4.99)x(1.31+1.09)/2	-0.29		
		(4.33-4.75)x(1.64+1.31)/2	-0.62		
		(3.68-4.33)x(2.18+1.64)/2	-1.24		
		(3.37-3.68)x(2.35+2.18)/2	-0.70		
		(2.60-3.37)x(2.89+2.35)/2	-2.02		
		(2.40-2.60)x(2.98+2.89)/2	-0.59		
		(2.39-2.40)x(3.10+2.98)/2	-0.03		
		(2.35-2.39)x(3.10+3.10)/2	-0.12		
		(2.31-2.35)x(3.10+3.10)/2	-0.12		
		(1.99-2.31)x(3.05+3.10)/2	-0.98		
		(1.53-1.99)x(3.01+3.05)/2	-1.39		
		(0.96-1.53)x(2.99+3.01)/2	-1.71		
		(0.57-0.96)x(2.98+2.99)/2	-1.16		
		(0.50-0.57)x(2.99+2.98)/2	-0.21		
		(0.40-0.50)x(3.12+2.99)/2	-0.31		
		(0.21-0.40)x(3.01+3.12)/2	-0.58		
		(-0.24-0.21)x(2.89+3.01)/2	-1.33		
		(-0.63--0.24)x(2.84+2.89)/2	-1.12		
		(-1.37--0.63)x(2.76+2.84)/2	-2.07		
		A RIPORTARE mq	52.21		

		CALCOLO DELLE AREE		Foglio n. 136
BONIFICA				
N. SEZIONE PROG.	FIG.	ELEMENTI DI CALCOLO	AREA ELEMENTARE mq	AREA FIGURA mq	NOTE
		RIPORTO mq	52.21		
		(-1.70--1.37)x(2.73+2.76)/2	-0.91		
		(-1.87--1.70)x(2.70+2.73)/2	-0.46		
		(-2.41--1.87)x(2.70+2.70)/2	-1.46		
		(-2.69--2.41)x(2.69+2.70)/2	-0.75		
		(-2.78--2.69)x(2.69+2.69)/2	-0.24		
		(-2.95--2.78)x(2.69+2.69)/2	-0.46		
		(-3.86--2.95)x(2.62+2.69)/2	-2.42		
		(-4.53--3.86)x(2.53+2.62)/2	-1.73		
		(-4.93--4.53)x(2.50+2.53)/2	-1.01		
		(-5.79--4.93)x(2.41+2.50)/2	-2.11		
		(-6.01--5.79)x(2.39+2.41)/2	-0.53		
		(-6.11--6.01)x(2.39+2.39)/2	-0.24		
		(-7.08--6.11)x(2.35+2.39)/2	-2.30		
		(-7.69--7.08)x(2.32+2.35)/2	-1.42		
		(-8.16--7.69)x(2.31+2.32)/2	-1.09		
		(-9.16--8.16)x(2.28+2.31)/2	-2.29		
		(-9.24--9.16)x(2.28+2.28)/2	-0.18		
		(-9.27--9.24)x(2.28+2.28)/2	-0.07		
		(-10.31--9.27)x(2.30+2.28)/2	-2.38		
		(-10.85--10.31)x(2.31+2.30)/2	-1.24		
		(-11.39--10.85)x(2.33+2.31)/2	-1.25		
		(-12.43--11.39)x(2.35+2.33)/2	-2.43		
		(-12.46--12.43)x(2.35+2.35)/2	-0.07		
		(-12.53--12.46)x(2.34+2.35)/2	-0.16		
		(-13.54--12.53)x(2.25+2.34)/2	-2.32		
		(-14.01--13.54)x(2.20+2.25)/2	-1.05		
		(-14.62--14.01)x(2.14+2.20)/2	-1.32		
		(-15.59--14.62)x(2.08+2.14)/2	-2.05		
		(-15.69--15.59)x(2.07+2.08)/2	-0.21		
		(-15.90--15.69)x(2.05+2.07)/2	-0.43		
		(-16.51--15.90)x(2.00+2.05)/2	-1.24		
				16.39	
51 750.00	BO1	(-16.28--16.95)x(2.28+2.26)/2	1.52		
		(-16.20--16.28)x(2.28+2.28)/2	0.18		
		(-16.03--16.20)x(2.29+2.28)/2	0.39		
		(-15.12--16.03)x(2.37+2.29)/2	2.12		
		(-14.69--15.12)x(2.44+2.37)/2	1.03		
		(-14.05--14.69)x(2.54+2.44)/2	1.59		
		(-13.11--14.05)x(2.56+2.54)/2	2.40		
		(-12.97--13.11)x(2.57+2.56)/2	0.36		
		(-12.68--12.97)x(2.54+2.57)/2	0.74		
		(-11.89--12.68)x(2.46+2.54)/2	1.97		
		(-11.52--11.89)x(2.45+2.46)/2	0.91		
		(-10.82--11.52)x(2.43+2.45)/2	1.71		
		(-9.93--10.82)x(2.50+2.43)/2	2.19		
		(-9.74--9.93)x(2.51+2.50)/2	0.48		
		(-9.33--9.74)x(2.55+2.51)/2	1.04		
		(-8.66--9.33)x(2.62+2.55)/2	1.73		
		(-8.35--8.66)x(2.68+2.62)/2	0.82		
		(-7.58--8.35)x(2.80+2.68)/2	2.11		
		(-7.19--7.58)x(2.87+2.80)/2	1.11		
		(-6.51--7.19)x(3.00+2.87)/2	2.00		
		(-5.97--6.51)x(3.11+3.00)/2	1.65		
		(-5.43--5.97)x(3.20+3.11)/2	1.70		
		(-5.17--5.43)x(3.22+3.20)/2	0.83		
		(-4.35--5.17)x(3.29+3.22)/2	2.67		
		(-3.59--4.35)x(3.24+3.29)/2	2.48		
		(-3.28--3.59)x(3.23+3.24)/2	1.00		
		(-2.62--3.28)x(3.18+3.23)/2	2.12		
		(-2.20--2.62)x(3.17+3.18)/2	1.33		
		(-2.00--2.20)x(3.14+3.17)/2	0.63		
		(-1.12--2.00)x(3.09+3.14)/2	2.74		
		(-0.41--1.12)x(2.94+3.09)/2	2.14		
		(-0.05--0.41)x(2.88+2.94)/2	1.05		
		(0.73--0.05)x(2.56+2.88)/2	2.12		
		(1.03-0.73)x(2.43+2.56)/2	0.75		
		(1.17-1.03)x(2.40+2.43)/2	0.34		
		(2.11-1.17)x(2.15+2.40)/2	2.14		
		(2.76-2.11)x(2.10+2.15)/2	1.38		
		(3.18-2.76)x(2.07+2.10)/2	0.88		
		(4.08-3.18)x(2.02+2.07)/2	1.84		
		(4.26-4.08)x(2.01+2.02)/2	0.36		
		(4.35-4.26)x(1.99+2.01)/2	0.18		
		(5.34-4.35)x(1.78+1.99)/2	1.87		
		(5.93-5.34)x(1.46+1.78)/2	0.96		
		(6.41-5.93)x(1.27+1.46)/2	0.66		
		(7.43-6.41)x(0.51+1.27)/2	0.91		
		(7.49-7.43)x(0.47+0.51)/2	0.03		
		(7.52-7.49)x(0.46+0.47)/2	0.01		
		(8.57-7.52)x(0.22+0.46)/2	0.36		
		(9.11-8.57)x(0.19+0.22)/2	0.11		
		(9.65-9.11)x(0.17+0.19)/2	0.10		
		(10.69-9.65)x(0.15+0.17)/2	0.17		
		(10.72-10.69)x(0.15+0.15)/2	0.00		
		(10.74-10.72)x(0.15+0.15)/2	0.00		
		(10.79-10.74)x(0.15+0.15)/2	0.01		
		(11.55-10.79)x(0.18+0.15)/2	0.13		
		(11.80-11.55)x(0.17+0.18)/2	0.04		
		(12.28-11.80)x(0.20+0.17)/2	0.09		
		(12.88-12.28)x(0.23+0.20)/2	0.13		
		(13.87-12.88)x(0.64+0.23)/2	0.43		
		(13.95-13.87)x(0.67+0.64)/2	0.05		
		(14.14-13.95)x(0.83+0.67)/2	0.14		
		(15.03-14.14)x(1.59+0.83)/2	1.08		
		(15.45-15.03)x(1.78+1.59)/2	0.71		
		(16.11-15.45)x(2.12+1.78)/2	1.29		
		(16.90-16.11)x(2.29+2.12)/2	1.74		
		(16.11-16.90)x(1.62+1.79)/2	-1.35		
		(15.45-16.11)x(1.28+1.62)/2	-0.96		
		(15.03-15.45)x(1.09+1.28)/2	-0.50		
		(14.14-15.03)x(0.33+1.09)/2	-0.63		
		(13.95-14.14)x(0.17+0.33)/2	-0.05		
		(13.87-13.95)x(0.14+0.17)/2	-0.01		
		(12.88-13.87)x(-0.27+0.14)/2	0.06		
		A RIPORTARE mq	64.31		

	CALCOLO DELLE AREE		Foglio n. 137

BONIFICA

N. SEZIONE PROG.	FIG.	ELEMENTI DI CALCOLO	AREA ELEMENTARE mq	AREA FIGURA mq	NOTE
		RIPORTO mq	64.31		
		(12.28-12.88)x(-0.30+-0.27)/2	0.17		
		(11.80-12.28)x(-0.33+-0.30)/2	0.15		
		(11.55-11.80)x(-0.32+-0.33)/2	0.08		
		(10.79-11.55)x(-0.35+-0.32)/2	0.25		
		(10.74-10.79)x(-0.35+-0.35)/2	0.02		
		(10.72-10.74)x(-0.35+-0.35)/2	0.01		
		(10.69-10.72)x(-0.35+-0.35)/2	0.01		
		(9.65-10.69)x(-0.33+-0.35)/2	0.35		
		(9.11-9.65)x(-0.31+-0.33)/2	0.17		
		(8.57-9.11)x(-0.28+-0.31)/2	0.16		
		(7.52-8.57)x(-0.04+-0.28)/2	0.17		
		(7.49-7.52)x(-0.03+-0.04)/2	0.00		
		(7.43-7.49)x(0.01+-0.03)/2	0.00		
		(6.41-7.43)x(0.77+0.01)/2	-0.40		
		(5.93-6.41)x(0.96+0.77)/2	-0.42		
		(5.34-5.93)x(1.28+0.96)/2	-0.66		
		(4.35-5.34)x(1.49+1.28)/2	-1.37		
		(4.26-4.35)x(1.51+1.49)/2	-0.13		
		(4.08-4.26)x(1.52+1.51)/2	-0.27		
		(3.18-4.08)x(1.57+1.52)/2	-1.39		
		(2.76-3.18)x(1.60+1.57)/2	-0.67		
		(2.11-2.76)x(1.65+1.60)/2	-1.06		
		(1.17-2.11)x(1.90+1.65)/2	-1.67		
		(1.03-1.17)x(1.93+1.90)/2	-0.27		
		(0.73-1.03)x(2.06+1.93)/2	-0.60		
		(-0.05-0.73)x(2.38+2.06)/2	-1.73		
		(-0.41--0.05)x(2.44+2.38)/2	-0.87		
		(-1.12--0.41)x(2.59+2.44)/2	-1.79		
		(-2.00--1.12)x(2.64+2.59)/2	-2.30		
		(-2.20--2.00)x(2.67+2.64)/2	-0.53		
		(-2.62--2.20)x(2.68+2.67)/2	-1.12		
		(-3.28--2.62)x(2.73+2.68)/2	-1.79		
		(-3.59--3.28)x(2.74+2.73)/2	-0.85		
		(-4.35--3.59)x(2.79+2.74)/2	-2.10		
		(-5.17--4.35)x(2.72+2.79)/2	-2.26		
		(-5.43--5.17)x(2.70+2.72)/2	-0.70		
		(-5.97--5.43)x(2.61+2.70)/2	-1.43		
		(-6.51--5.97)x(2.50+2.61)/2	-1.38		
		(-7.19--6.51)x(2.37+2.50)/2	-1.66		
		(-7.58--7.19)x(2.30+2.37)/2	-0.91		
		(-8.35--7.58)x(2.18+2.30)/2	-1.72		
		(-8.66--8.35)x(2.12+2.18)/2	-0.67		
		(-9.33--8.66)x(2.05+2.12)/2	-1.40		
		(-9.74--9.33)x(2.01+2.05)/2	-0.83		
		(-9.93--9.74)x(2.00+2.01)/2	-0.38		
		(-10.82--9.93)x(1.93+2.00)/2	-1.75		
		(-11.52--10.82)x(1.95+1.93)/2	-1.36		
		(-11.89--11.52)x(1.96+1.95)/2	-0.72		
		(-12.68--11.89)x(2.04+1.96)/2	-1.58		
		(-12.97--12.68)x(2.07+2.04)/2	-0.60		
		(-13.11--12.97)x(2.06+2.07)/2	-0.29		
		(-14.05--13.11)x(2.04+2.06)/2	-1.93		
		(-14.69--14.05)x(1.94+2.04)/2	-1.27		
		(-15.12--14.69)x(1.87+1.94)/2	-0.82		
		(-16.03--15.12)x(1.79+1.87)/2	-1.67		
		(-16.20--16.03)x(1.78+1.79)/2	-0.30		
		(-16.28--16.20)x(1.78+1.78)/2	-0.14		
		(-16.95--16.28)x(1.76+1.78)/2	-1.19		
				16.90	
52 765.00	BO1	(-22.13--22.63)x(1.91+1.89)/2	0.95		
		(-21.78--22.13)x(1.91+1.91)/2	0.67		
		(-21.05--21.78)x(1.92+1.91)/2	1.40		
		(-20.19--21.05)x(1.91+1.92)/2	1.65		
		(-19.97--20.19)x(1.91+1.91)/2	0.42		
		(-19.51--19.97)x(1.90+1.91)/2	0.88		
		(-18.89--19.51)x(1.89+1.90)/2	1.17		
		(-18.60--18.89)x(1.90+1.89)/2	0.55		
		(-17.82--18.60)x(1.93+1.90)/2	1.49		
		(-17.00--17.82)x(1.95+1.93)/2	1.59		
		(-16.74--17.00)x(1.99+1.95)/2	0.51		
		(-16.18--16.74)x(1.99+1.99)/2	1.11		
		(-15.66--16.18)x(2.03+1.99)/2	1.05		
		(-15.41--15.66)x(2.06+2.03)/2	0.51		
		(-14.58--15.41)x(2.15+2.06)/2	1.75		
		(-13.82--14.58)x(2.25+2.15)/2	1.67		
		(-13.50--13.82)x(2.30+2.25)/2	0.73		
		(-12.85--13.50)x(2.33+2.30)/2	1.50		
		(-12.43--12.85)x(2.35+2.33)/2	0.98		
		(-11.72--12.43)x(2.34+2.35)/2	1.66		
		(-11.35--11.72)x(2.33+2.34)/2	0.86		
		(-10.63--11.35)x(2.33+2.33)/2	1.68		
		(-10.27--10.63)x(2.35+2.33)/2	0.84		
		(-9.52--10.27)x(2.26+2.35)/2	1.73		
		(-9.19--9.52)x(2.23+2.26)/2	0.74		
		(-9.04--9.19)x(2.24+2.23)/2	0.34		
		(-8.12--9.04)x(2.23+2.24)/2	2.06		
		(-7.45--8.12)x(2.39+2.23)/2	1.55		
		(-7.04--7.45)x(2.49+2.39)/2	1.00		
		(-6.19--7.04)x(2.75+2.49)/2	2.23		
		(-5.96--6.19)x(2.81+2.75)/2	0.64		
		(-5.85--5.96)x(2.84+2.81)/2	0.31		
		(-4.88--5.85)x(3.06+2.84)/2	2.86		
		(-4.26--4.88)x(3.15+3.06)/2	1.93		
		(-3.81--4.26)x(3.24+3.15)/2	1.44		
		(-2.86--3.81)x(3.46+3.24)/2	3.18		
		(-2.73--2.86)x(3.49+3.46)/2	0.45		
		(-2.67--2.73)x(3.49+3.49)/2	0.21		
		(-1.65--2.67)x(3.52+3.49)/2	3.58		
		(-1.07--1.65)x(3.42+3.52)/2	2.01		
		(-0.57--1.07)x(3.36+3.42)/2	1.70		
		(0.47--0.57)x(3.23+3.36)/2	3.43		
		(0.50-0.47)x(3.23+3.23)/2	0.10		
		(0.52-0.50)x(3.22+3.23)/2	0.06		
		(1.58-0.52)x(2.75+3.22)/2	3.16		
		A RIPORTARE mq	60.33		

	CALCOLO DELLE AREE		Foglio n. 138

BONIFICA

N. SEZIONE PROG.	FIG.	ELEMENTI DI CALCOLO	AREA ELEMENTARE mq	AREA FIGURA mq	NOTE
		RIPORTO mq	60.33		
		(2.11-1.58)x(2.43+2.75)/2	1.37		
		(2.66-2.11)x(2.10+2.43)/2	1.25		
		(3.70-2.66)x(1.91+2.10)/2	2.09		
		(3.74-3.70)x(1.90+1.91)/2	0.08		
		(3.81-3.74)x(1.90+1.90)/2	0.13		
		(4.81-3.81)x(1.87+1.90)/2	1.88		
		(5.30-4.81)x(1.88+1.87)/2	0.92		
		(5.89-5.30)x(1.87+1.88)/2	1.11		
		(6.20-5.89)x(1.79+1.87)/2	0.57		
		(6.97-6.20)x(1.44+1.79)/2	1.24		
		(7.14-6.97)x(1.31+1.44)/2	0.23		
		(8.05-7.14)x(0.55+1.31)/2	0.85		
		(8.48-8.05)x(0.43+0.55)/2	0.21		
		(9.12-8.48)x(0.22+0.43)/2	0.21		
		(10.08-9.12)x(0.12+0.22)/2	0.16		
		(10.20-10.08)x(0.11+0.12)/2	0.01		
		(10.47-10.20)x(0.10+0.11)/2	0.03		
		(11.28-10.47)x(0.07+0.10)/2	0.07		
		(11.67-11.28)x(0.06+0.07)/2	0.03		
		(12.36-11.67)x(0.06+0.06)/2	0.04		
		(13.26-12.36)x(0.16+0.06)/2	0.10		
		(13.43-13.26)x(0.17+0.16)/2	0.03		
		(13.80-13.43)x(0.28+0.17)/2	0.08		
		(14.51-13.80)x(0.49+0.28)/2	0.27		
		(14.85-14.51)x(0.81+0.49)/2	0.22		
		(15.59-14.85)x(1.38+0.81)/2	0.81		
		(16.45-15.59)x(1.82+1.38)/2	1.38		
		(16.67-16.45)x(1.96+1.82)/2	0.42		
		(17.13-16.67)x(2.08+1.96)/2	0.93		
		(17.24-17.13)x(2.11+2.08)/2	0.23		
		(17.13-17.24)x(1.58+1.61)/2	-0.18		
		(16.67-17.13)x(1.46+1.58)/2	-0.70		
		(16.45-16.67)x(1.32+1.46)/2	-0.31		
		(15.59-16.45)x(0.88+1.32)/2	-0.95		
		(14.85-15.59)x(0.31+0.88)/2	-0.44		
		(14.51-14.85)x(-0.01+0.31)/2	-0.05		
		(13.80-14.51)x(-0.22+-0.01)/2	0.08		
		(13.43-13.80)x(-0.33+-0.22)/2	0.10		
		(13.26-13.43)x(-0.34+-0.33)/2	0.06		
		(12.36-13.26)x(-0.44+-0.34)/2	0.35		
		(11.67-12.36)x(-0.44+-0.44)/2	0.30		
		(11.28-11.67)x(-0.43+-0.44)/2	0.17		
		(10.47-11.28)x(-0.40+-0.43)/2	0.34		
		(10.20-10.47)x(-0.39+-0.40)/2	0.11		
		(10.08-10.20)x(-0.38+-0.39)/2	0.05		
		(9.12-10.08)x(-0.28+-0.38)/2	0.32		
		(8.48-9.12)x(-0.07+-0.28)/2	0.11		
		(8.05-8.48)x(0.05+-0.07)/2	0.00		
		(7.14-8.05)x(0.81+0.05)/2	-0.39		
		(6.97-7.14)x(0.94+0.81)/2	-0.15		
		(6.20-6.97)x(1.29+0.94)/2	-0.86		
		(5.89-6.20)x(1.37+1.29)/2	-0.41		
		(5.30-5.89)x(1.38+1.37)/2	-0.81		
		(4.81-5.30)x(1.37+1.38)/2	-0.67		
		(3.81-4.81)x(1.40+1.37)/2	-1.38		
		(3.74-3.81)x(1.40+1.40)/2	-0.10		
		(3.70-3.74)x(1.41+1.40)/2	-0.06		
		(2.66-3.70)x(1.60+1.41)/2	-1.57		
		(2.11-2.66)x(1.93+1.60)/2	-0.97		
		(1.58-2.11)x(2.25+1.93)/2	-1.11		
		(0.52-1.58)x(2.72+2.25)/2	-2.63		
		(0.50-0.52)x(2.73+2.72)/2	-0.05		
		(0.47-0.50)x(2.73+2.73)/2	-0.08		
		(-0.57-0.47)x(2.86+2.73)/2	-2.91		
		(-1.07--0.57)x(2.92+2.86)/2	-1.45		
		(-1.65--1.07)x(3.02+2.92)/2	-1.72		
		(-2.67--1.65)x(2.99+3.02)/2	-3.07		
		(-2.73--2.67)x(2.99+2.99)/2	-0.18		
		(-2.86--2.73)x(2.96+2.99)/2	-0.39		
		(-3.81--2.86)x(2.74+2.96)/2	-2.71		
		(-4.26--3.81)x(2.65+2.74)/2	-1.21		
		(-4.88--4.26)x(2.56+2.65)/2	-1.62		
		(-5.85--4.88)x(2.34+2.56)/2	-2.38		
		(-5.96--5.85)x(2.31+2.34)/2	-0.26		
		(-6.19--5.96)x(2.25+2.31)/2	-0.52		
		(-7.04--6.19)x(1.99+2.25)/2	-1.80		
		(-7.45--7.04)x(1.89+1.99)/2	-0.80		
		(-8.12--7.45)x(1.73+1.89)/2	-1.21		
		(-9.04--8.12)x(1.74+1.73)/2	-1.60		
		(-9.19--9.04)x(1.73+1.74)/2	-0.26		
		(-9.52--9.19)x(1.76+1.73)/2	-0.58		
		(-10.27--9.52)x(1.85+1.76)/2	-1.35		
		(-10.63--10.27)x(1.83+1.85)/2	-0.66		
		(-11.35--10.63)x(1.83+1.83)/2	-1.32		
		(-11.72--11.35)x(1.84+1.83)/2	-0.68		
		(-12.43--11.72)x(1.85+1.84)/2	-1.31		
		(-12.85--12.43)x(1.83+1.85)/2	-0.77		
		(-13.50--12.85)x(1.80+1.83)/2	-1.18		
		(-13.82--13.50)x(1.75+1.80)/2	-0.57		
		(-14.58--13.82)x(1.65+1.75)/2	-1.29		
		(-15.41--14.58)x(1.56+1.65)/2	-1.33		
		(-15.66--15.41)x(1.53+1.56)/2	-0.39		
		(-16.18--15.66)x(1.49+1.53)/2	-0.79		
		(-16.74--16.18)x(1.49+1.49)/2	-0.83		
		(-17.00--16.74)x(1.45+1.49)/2	-0.38		
		(-17.82--17.00)x(1.43+1.45)/2	-1.18		
		(-18.60--17.82)x(1.40+1.43)/2	-1.10		
		(-18.89--18.60)x(1.39+1.40)/2	-0.40		
		(-19.51--18.89)x(1.40+1.39)/2	-0.86		
		(-19.97--19.51)x(1.41+1.40)/2	-0.65		
		(-20.19--19.97)x(1.41+1.41)/2	-0.31		
		(-21.05--20.19)x(1.42+1.41)/2	-1.22		
		(-21.78--21.05)x(1.41+1.42)/2	-1.03		
		(-22.13--21.78)x(1.41+1.41)/2	-0.49		
		A RIPORTARE mq	20.64		

		CALCOLO DELLE AREE		Foglio n. 139
BONIFICA				
N. SEZIONE PROG.	FIG.	ELEMENTI DI CALCOLO	AREA ELEMENTARE mq	AREA FIGURA mq	NOTE
		RIPORTO mq	20.64		
		(-22.63--22.13)x(1.39+1.41)/2	-0.70		
53 780.00	B01	(-21.62--21.83)x(1.60+1.58)/2	0.33	19.94	
		(-20.96--21.62)x(1.77+1.60)/2	1.11		
		(-20.54--20.96)x(1.87+1.77)/2	0.76		
		(-19.67--20.54)x(2.01+1.87)/2	1.69		
		(-19.46--19.67)x(2.04+2.01)/2	0.43		
		(-19.36--19.46)x(2.06+2.04)/2	0.21		
		(-18.38--19.36)x(2.18+2.06)/2	2.08		
		(-17.76--18.38)x(2.24+2.18)/2	1.37		
		(-17.31--17.76)x(2.28+2.24)/2	1.02		
		(-17.07--17.31)x(2.27+2.28)/2	0.55		
		(-16.36--17.07)x(2.27+2.27)/2	1.61		
		(-16.26--16.36)x(2.27+2.27)/2	0.23		
		(-16.23--16.26)x(2.27+2.27)/2	0.07		
		(-16.16--16.23)x(2.27+2.27)/2	0.16		
		(-15.15--16.16)x(2.32+2.27)/2	2.32		
		(-14.56--15.15)x(2.36+2.32)/2	1.38		
		(-14.07--14.56)x(2.38+2.36)/2	1.16		
		(-13.05--14.07)x(2.44+2.38)/2	2.46		
		(-12.99--13.05)x(2.44+2.44)/2	0.15		
		(-12.96--12.99)x(2.44+2.44)/2	0.07		
		(-11.91--12.96)x(2.26+2.44)/2	2.47		
		(-11.37--11.91)x(2.20+2.26)/2	1.20		
		(-10.84--11.37)x(2.15+2.20)/2	1.15		
		(-9.77--10.84)x(2.10+2.15)/2	2.27		
		(-9.76--9.77)x(2.10+2.10)/2	0.02		
		(-9.74--9.76)x(2.10+2.10)/2	0.04		
		(-8.68--9.74)x(2.19+2.10)/2	2.27		
		(-8.17--8.68)x(2.26+2.19)/2	1.13		
		(-7.60--8.17)x(2.32+2.26)/2	1.31		
		(-6.57--7.60)x(2.42+2.32)/2	2.44		
		(-6.52--6.57)x(2.42+2.42)/2	0.12		
		(-6.43--6.52)x(2.44+2.42)/2	0.22		
		(-5.44--6.43)x(2.60+2.44)/2	2.49		
		(-4.97--5.44)x(2.77+2.60)/2	1.26		
		(-4.37--4.97)x(2.93+2.77)/2	1.71		
		(-3.37--4.37)x(3.19+2.93)/2	3.06		
		(-3.29--3.37)x(3.21+3.19)/2	0.26		
		(-3.12--3.29)x(3.25+3.21)/2	0.55		
		(-2.21--3.12)x(3.45+3.25)/2	3.05		
		(-1.77--2.21)x(3.50+3.45)/2	1.53		
		(-1.13--1.77)x(3.56+3.50)/2	2.26		
		(-0.17--1.13)x(3.65+3.56)/2	3.46		
		(-0.05--0.17)x(3.66+3.65)/2	0.44		
		(0.19--0.05)x(3.64+3.66)/2	0.88		
		(1.03-0.19)x(3.42+3.64)/2	2.97		
		(1.63-1.03)x(3.12+3.42)/2	1.96		
		(2.10-1.63)x(2.89+3.12)/2	1.41		
		(3.03-2.10)x(2.40+2.89)/2	2.46		
		(3.18-3.03)x(2.33+2.40)/2	0.35		
		(3.50-3.18)x(2.19+2.33)/2	0.72		
		(4.26-3.50)x(1.88+2.19)/2	1.55		
		(4.63-4.26)x(1.85+1.88)/2	0.69		
		(5.34-4.63)x(1.74+1.85)/2	1.27		
		(6.23-5.34)x(1.72+1.74)/2	1.54		
		(6.42-6.23)x(1.72+1.72)/2	0.33		
		(6.81-6.42)x(1.67+1.72)/2	0.66		
		(7.49-6.81)x(1.56+1.67)/2	1.10		
		(7.82-7.49)x(1.34+1.56)/2	0.48		
		(8.57-7.82)x(0.98+1.34)/2	0.87		
		(9.42-8.57)x(0.44+0.98)/2	0.60		
		(9.65-9.42)x(0.27+0.44)/2	0.08		
		(10.12-9.65)x(0.15+0.27)/2	0.10		
		(10.73-10.12)x(0.06+0.15)/2	0.06		
		(11.02-10.73)x(0.04+0.06)/2	0.01		
		(11.81-11.02)x(0.02+0.04)/2	0.02		
		(12.62-11.81)x(-0.01+0.02)/2	0.00		
		(12.89-12.62)x(-0.02+-0.01)/2	-0.00		
		(13.43-12.89)x(-0.01+-0.02)/2	-0.01		
		(13.96-13.43)x(0.02+-0.01)/2	0.00		
		(14.22-13.96)x(0.08+0.02)/2	0.01		
		(15.04-14.22)x(0.26+0.08)/2	0.14		
		(15.82-15.04)x(0.79+0.26)/2	0.41		
		(16.12-15.82)x(0.97+0.79)/2	0.26		
		(16.74-16.12)x(1.40+0.97)/2	0.73		
		(17.20-16.74)x(1.70+1.40)/2	0.71		
		(17.42-17.20)x(1.77+1.70)/2	0.38		
		(17.67-17.42)x(1.87+1.77)/2	0.46		
		(17.42-17.67)x(1.27+1.37)/2	-0.33		
		(17.20-17.42)x(1.20+1.27)/2	-0.27		
		(16.74-17.20)x(0.90+1.20)/2	-0.48		
		(16.12-16.74)x(0.47+0.90)/2	-0.42		
		(15.82-16.12)x(0.29+0.47)/2	-0.11		
		(15.04-15.82)x(-0.24+0.29)/2	-0.02		
		(14.22-15.04)x(-0.42+-0.24)/2	0.27		
		(13.96-14.22)x(-0.48+-0.42)/2	0.12		
		(13.43-13.96)x(-0.51+-0.48)/2	0.26		
		(12.89-13.43)x(-0.52+-0.51)/2	0.28		
		(12.62-12.89)x(-0.51+-0.52)/2	0.14		
		(11.81-12.62)x(-0.48+-0.51)/2	0.40		
		(11.02-11.81)x(-0.46+-0.48)/2	0.37		
		(10.73-11.02)x(-0.44+-0.46)/2	0.13		
		(10.12-10.73)x(-0.35+-0.44)/2	0.24		
		(9.65-10.12)x(-0.23+-0.35)/2	0.14		
		(9.42-9.65)x(-0.06+-0.23)/2	0.03		
		(8.57-9.42)x(0.48+-0.06)/2	-0.18		
		(7.82-8.57)x(0.84+0.48)/2	-0.49		
		(7.49-7.82)x(1.06+0.84)/2	-0.31		
		(6.81-7.49)x(1.17+1.06)/2	-0.76		
		(6.42-6.81)x(1.22+1.17)/2	-0.47		
		(6.23-6.42)x(1.22+1.22)/2	-0.23		
		(5.34-6.23)x(1.24+1.22)/2	-1.09		
		(4.63-5.34)x(1.35+1.24)/2	-0.92		
		A RIPORTARE mq	73.37		

		CALCOLO DELLE AREE		Foglio n. 140
BONIFICA				
N. SEZIONE PROG.	FIG.	ELEMENTI DI CALCOLO	AREA ELEMENTARE mq	AREA FIGURA mq	NOTE
		RIPORTO mq	73.37		
		(4.26-4.63)x(1.38+1.35)/2	-0.51		
		(3.50-4.26)x(1.69+1.38)/2	-1.17		
		(3.18-3.50)x(1.83+1.69)/2	-0.56		
		(3.03-3.18)x(1.90+1.83)/2	-0.28		
		(2.10-3.03)x(2.39+1.90)/2	-1.99		
		(1.63-2.10)x(2.62+2.39)/2	-1.18		
		(1.03-1.63)x(2.92+2.62)/2	-1.66		
		(0.19-1.03)x(3.14+2.92)/2	-2.55		
		(-0.05-0.19)x(3.16+3.14)/2	-0.76		
		(-0.17--0.05)x(3.15+3.16)/2	-0.38		
		(-1.13--0.17)x(3.06+3.15)/2	-2.98		
		(-1.77--1.13)x(3.00+3.06)/2	-1.94		
		(-2.21--1.77)x(2.95+3.00)/2	-1.31		
		(-3.12--2.21)x(2.75+2.95)/2	-2.59		
		(-3.29--3.12)x(2.71+2.75)/2	-0.46		
		(-3.37--3.29)x(2.69+2.71)/2	-0.22		
		(-4.37--3.37)x(2.43+2.69)/2	-2.56		
		(-4.97--4.37)x(2.27+2.43)/2	-1.41		
		(-5.44--4.97)x(2.10+2.27)/2	-1.03		
		(-6.43--5.44)x(1.94+2.10)/2	-2.00		
		(-6.52--6.43)x(1.92+1.94)/2	-0.17		
		(-6.57--6.52)x(1.92+1.92)/2	-0.10		
		(-7.60--6.57)x(1.82+1.92)/2	-1.93		
		(-8.17--7.60)x(1.76+1.82)/2	-1.02		
		(-8.68--8.17)x(1.69+1.76)/2	-0.88		
		(-9.74--8.68)x(1.60+1.69)/2	-1.74		
		(-9.76--9.74)x(1.60+1.60)/2	-0.03		
		(-9.77--9.76)x(1.60+1.60)/2	-0.02		
		(-10.84--9.77)x(1.65+1.60)/2	-1.74		
		(-11.37--10.84)x(1.70+1.65)/2	-0.89		
		(-11.91--11.37)x(1.76+1.70)/2	-0.93		
		(-12.96--11.91)x(1.94+1.76)/2	-1.94		
		(-12.99--12.96)x(1.94+1.94)/2	-0.06		
		(-13.05--12.99)x(1.94+1.94)/2	-0.12		
		(-14.07--13.05)x(1.88+1.94)/2	-1.95		
		(-14.56--14.07)x(1.86+1.88)/2	-0.92		
		(-15.15--14.56)x(1.82+1.86)/2	-1.09		
		(-16.16--15.15)x(1.77+1.82)/2	-1.81		
		(-16.23--16.16)x(1.77+1.77)/2	-0.12		
		(-16.26--16.23)x(1.77+1.77)/2	-0.05		
		(-16.36--16.26)x(1.77+1.77)/2	-0.18		
		(-17.07--16.36)x(1.77+1.77)/2	-1.26		
		(-17.31--17.07)x(1.78+1.77)/2	-0.43		
		(-17.76--17.31)x(1.74+1.78)/2	-0.79		
		(-18.38--17.76)x(1.68+1.74)/2	-1.06		
		(-19.36--18.38)x(1.56+1.68)/2	-1.59		
		(-19.46--19.36)x(1.54+1.56)/2	-0.16		
		(-19.67--19.46)x(1.51+1.54)/2	-0.32		
		(-20.54--19.67)x(1.37+1.51)/2	-1.25		
		(-20.96--20.54)x(1.27+1.37)/2	-0.55		
		(-21.62--20.96)x(1.10+1.27)/2	-0.78		
		(-21.83--21.62)x(1.08+1.10)/2	-0.23		
				19.72	
54 795.00	BO1	(-18.56--18.74)x(3.52+3.60)/2	0.64		
		(-17.90--18.56)x(3.20+3.52)/2	2.22		
		(-16.95--17.90)x(2.75+3.20)/2	2.83		
		(-16.83--16.95)x(2.69+2.75)/2	0.33		
		(-16.57--16.83)x(2.59+2.69)/2	0.69		
		(-15.95--16.57)x(2.37+2.59)/2	1.54		
		(-15.75--15.95)x(2.30+2.37)/2	0.47		
		(-15.14--15.75)x(2.10+2.30)/2	1.34		
		(-14.67--15.14)x(1.99+2.10)/2	0.96		
		(-14.33--14.67)x(1.93+1.99)/2	0.67		
		(-13.59--14.33)x(1.92+1.93)/2	1.42		
		(-13.51--13.59)x(1.92+1.92)/2	0.15		
		(-13.28--13.51)x(1.91+1.92)/2	0.44		
		(-12.51--13.28)x(1.87+1.91)/2	1.46		
		(-12.13--12.51)x(1.85+1.87)/2	0.71		
		(-11.43--12.13)x(1.84+1.85)/2	1.29		
		(-10.53--11.43)x(1.96+1.84)/2	1.71		
		(-10.35--10.53)x(1.97+1.96)/2	0.35		
		(-9.99--10.35)x(1.97+1.97)/2	0.71		
		(-9.27--9.99)x(1.95+1.97)/2	1.41		
		(-8.92--9.27)x(1.92+1.95)/2	0.68		
		(-8.19--8.92)x(1.90+1.92)/2	1.39		
		(-7.32--8.19)x(1.94+1.90)/2	1.67		
		(-7.11--7.32)x(1.95+1.94)/2	0.41		
		(-6.70--7.11)x(1.95+1.95)/2	0.80		
		(-6.04--6.70)x(1.96+1.95)/2	1.29		
		(-5.71--6.04)x(1.97+1.96)/2	0.65		
		(-4.96--5.71)x(1.96+1.97)/2	1.47		
		(-4.11--4.96)x(2.14+1.96)/2	1.74		
		(-3.88--4.11)x(2.18+2.14)/2	0.50		
		(-3.76--3.88)x(2.22+2.18)/2	0.26		
		(-3.41--3.76)x(2.28+2.22)/2	0.79		
		(-2.95--3.41)x(2.37+2.28)/2	1.07		
		(-2.80--2.95)x(2.41+2.37)/2	0.36		
		(-2.50--2.80)x(2.46+2.41)/2	0.73		
		(-1.72--2.50)x(2.62+2.46)/2	1.98		
		(-0.90--1.72)x(2.51+2.62)/2	2.10		
		(-0.64--0.90)x(2.50+2.51)/2	0.65		
		(-0.12--0.64)x(2.46+2.50)/2	1.29		
		(0.44--0.12)x(2.42+2.46)/2	1.37		
		(0.71-0.44)x(2.39+2.42)/2	0.65		
		(1.52-0.71)x(2.33+2.39)/2	1.91		
		(2.31-1.52)x(2.27+2.33)/2	1.82		
		(2.60-2.31)x(2.26+2.27)/2	0.66		
		(3.17-2.60)x(2.22+2.26)/2	1.28		
		(3.68-3.17)x(2.18+2.22)/2	1.12		
		(3.92-3.68)x(2.17+2.18)/2	0.52		
		(4.75-3.92)x(2.11+2.17)/2	1.78		
		(5.53-4.75)x(2.06+2.11)/2	1.63		
		(5.83-5.53)x(2.04+2.06)/2	0.61		
		(6.46-5.83)x(1.98+2.04)/2	1.27		
		A RIPORTARE mq	55.79		

		CALCOLO DELLE AREE		Foglio n. 141
BONIFICA				
N. SEZIONE PROG.	FIG.	ELEMENTI DI CALCOLO	AREA ELEMENTARE mq	AREA FIGURA mq	NOTE
		RIPORTO mq	55.79		
		(6.91-6.46)x(1.93+1.98)/2	0.88		
		(7.13-6.91)x(1.89+1.93)/2	0.42		
		(7.99-7.13)x(1.73+1.89)/2	1.56		
		(8.74-7.99)x(1.39+1.73)/2	1.17		
		(9.07-8.74)x(1.27+1.39)/2	0.44		
		(9.75-9.07)x(0.80+1.27)/2	0.70		
		(10.15-9.75)x(0.53+0.80)/2	0.27		
		(10.34-10.15)x(0.46+0.53)/2	0.09		
		(11.23-10.34)x(0.09+0.46)/2	0.24		
		(11.95-11.23)x(0.06+0.09)/2	0.05		
		(12.31-11.95)x(0.03+0.06)/2	0.02		
		(13.04-12.31)x(0.03+0.03)/2	0.02		
		(13.39-13.04)x(0.03+0.03)/2	0.01		
		(13.55-13.39)x(0.03+0.03)/2	0.00		
		(14.46-13.55)x(0.01+0.03)/2	0.02		
		(14.93-14.46)x(0.02+0.01)/2	0.01		
		(15.54-14.93)x(0.11+0.02)/2	0.04		
		(16.33-15.54)x(0.42+0.11)/2	0.21		
		(16.62-16.33)x(0.57+0.42)/2	0.14		
		(16.76-16.62)x(0.66+0.57)/2	0.09		
		(17.70-16.76)x(1.37+0.66)/2	0.95		
		(18.14-17.70)x(1.60+1.37)/2	0.65		
		(17.70-18.14)x(0.87+1.10)/2	-0.43		
		(16.76-17.70)x(0.16+0.87)/2	-0.48		
		(16.62-16.76)x(0.07+0.16)/2	-0.02		
		(16.33-16.62)x(-0.08+0.07)/2	0.00		
		(15.54-16.33)x(-0.39+-0.08)/2	0.19		
		(14.93-15.54)x(-0.48+-0.39)/2	0.27		
		(14.46-14.93)x(-0.49+-0.48)/2	0.23		
		(13.55-14.46)x(-0.47+-0.49)/2	0.44		
		(13.39-13.55)x(-0.47+-0.47)/2	0.08		
		(13.04-13.39)x(-0.47+-0.47)/2	0.16		
		(12.31-13.04)x(-0.47+-0.47)/2	0.34		
		(11.95-12.31)x(-0.44+-0.47)/2	0.16		
		(11.23-11.95)x(-0.41+-0.44)/2	0.31		
		(10.34-11.23)x(-0.04+-0.41)/2	0.20		
		(10.15-10.34)x(0.03+-0.04)/2	0.00		
		(9.75-10.15)x(0.30+0.03)/2	-0.07		
		(9.07-9.75)x(0.77+0.30)/2	-0.36		
		(8.74-9.07)x(0.89+0.77)/2	-0.27		
		(7.99-8.74)x(1.23+0.89)/2	-0.80		
		(7.13-7.99)x(1.39+1.23)/2	-1.13		
		(6.91-7.13)x(1.43+1.39)/2	-0.31		
		(6.46-6.91)x(1.48+1.43)/2	-0.65		
		(5.83-6.46)x(1.54+1.48)/2	-0.95		
		(5.53-5.83)x(1.56+1.54)/2	-0.46		
		(4.75-5.53)x(1.61+1.56)/2	-1.24		
		(3.92-4.75)x(1.67+1.61)/2	-1.36		
		(3.68-3.92)x(1.68+1.67)/2	-0.40		
		(3.17-3.68)x(1.72+1.68)/2	-0.87		
		(2.60-3.17)x(1.76+1.72)/2	-0.99		
		(2.31-2.60)x(1.77+1.76)/2	-0.51		
		(1.52-2.31)x(1.83+1.77)/2	-1.42		
		(0.71-1.52)x(1.89+1.83)/2	-1.51		
		(0.44-0.71)x(1.92+1.89)/2	-0.51		
		(-0.12-0.44)x(1.96+1.92)/2	-1.09		
		(-0.64--0.12)x(2.00+1.96)/2	-1.03		
		(-0.90--0.64)x(2.01+2.00)/2	-0.52		
		(-1.72--0.90)x(2.12+2.01)/2	-1.69		
		(-2.50--1.72)x(1.96+2.12)/2	-1.59		
		(-2.80--2.50)x(1.91+1.96)/2	-0.58		
		(-2.95--2.80)x(1.87+1.91)/2	-0.28		
		(-3.41--2.95)x(1.78+1.87)/2	-0.84		
		(-3.76--3.41)x(1.72+1.78)/2	-0.61		
		(-3.88--3.76)x(1.68+1.72)/2	-0.20		
		(-4.11--3.88)x(1.64+1.68)/2	-0.38		
		(-4.96--4.11)x(1.46+1.64)/2	-1.32		
		(-5.71--4.96)x(1.47+1.46)/2	-1.10		
		(-6.04--5.71)x(1.46+1.47)/2	-0.48		
		(-6.70--6.04)x(1.45+1.46)/2	-0.96		
		(-7.11--6.70)x(1.45+1.45)/2	-0.59		
		(-7.32--7.11)x(1.44+1.45)/2	-0.30		
		(-8.19--7.32)x(1.40+1.44)/2	-1.24		
		(-8.92--8.19)x(1.42+1.40)/2	-1.03		
		(-9.27--8.92)x(1.45+1.42)/2	-0.50		
		(-9.99--9.27)x(1.47+1.45)/2	-1.05		
		(-10.35--9.99)x(1.47+1.47)/2	-0.53		
		(-10.53--10.35)x(1.46+1.47)/2	-0.26		
		(-11.43--10.53)x(1.34+1.46)/2	-1.26		
		(-12.13--11.43)x(1.35+1.34)/2	-0.94		
		(-12.51--12.13)x(1.37+1.35)/2	-0.52		
		(-13.28--12.51)x(1.41+1.37)/2	-1.07		
		(-13.51--13.28)x(1.42+1.41)/2	-0.33		
		(-13.59--13.51)x(1.42+1.42)/2	-0.11		
		(-14.33--13.59)x(1.43+1.42)/2	-1.05		
		(-14.67--14.33)x(1.49+1.43)/2	-0.50		
		(-15.14--14.67)x(1.60+1.49)/2	-0.73		
		(-15.75--15.14)x(1.80+1.60)/2	-1.04		
		(-15.95--15.75)x(1.87+1.80)/2	-0.37		
		(-16.57--15.95)x(2.09+1.87)/2	-1.23		
		(-16.83--16.57)x(2.19+2.09)/2	-0.56		
		(-16.95--16.83)x(2.25+2.19)/2	-0.27		
		(-17.90--16.95)x(2.70+2.25)/2	-2.35		
		(-18.56--17.90)x(3.02+2.70)/2	-1.89		
		(-18.74--18.56)x(3.10+3.02)/2	-0.55		
				18.47	
55 810.00	BO1	(-17.78--18.36)x(3.90+3.90)/2	2.26		
		(-17.46--17.78)x(3.91+3.90)/2	1.25		
		(-16.81--17.46)x(3.77+3.91)/2	2.50		
		(-16.38--16.81)x(3.63+3.77)/2	1.59		
		(-16.16--16.38)x(3.56+3.63)/2	0.79		
		(-15.30--16.16)x(3.17+3.56)/2	2.89		
		(-14.55--15.30)x(3.08+3.17)/2	2.34		
		(-14.22--14.55)x(2.98+3.08)/2	1.00		
		A RIPORTARE mq	14.62		

		CALCOLO DELLE AREE		Foglio n. 142
BONIFICA				
N. SEZIONE PROG.	FIG.	ELEMENTI DI CALCOLO	AREA ELEMENTARE mq	AREA FIGURA mq	NOTE
		RIPORTO mq	14.62		
		(-13.54--14.22)x(3.03+2.98)/2	2.04		
		(-13.14--13.54)x(3.03+3.03)/2	1.21		
		(-12.94--13.14)x(3.04+3.03)/2	0.61		
		(-12.06--12.94)x(3.06+3.04)/2	2.68		
		(-11.33--12.06)x(3.12+3.06)/2	2.26		
		(-10.98--11.33)x(3.13+3.12)/2	1.09		
		(-10.26--10.98)x(3.18+3.13)/2	2.27		
		(-9.90--10.26)x(3.19+3.18)/2	1.15		
		(-9.72--9.90)x(3.17+3.19)/2	0.57		
		(-8.82--9.72)x(3.10+3.17)/2	2.82		
		(-8.37--8.82)x(3.06+3.10)/2	1.39		
		(-7.74--8.37)x(2.94+3.06)/2	1.89		
		(-6.99--7.74)x(2.73+2.94)/2	2.13		
		(-6.66--6.99)x(2.66+2.73)/2	0.89		
		(-6.49--6.66)x(2.63+2.66)/2	0.45		
		(-5.58--6.49)x(2.51+2.63)/2	2.34		
		(-4.88--5.58)x(2.40+2.51)/2	1.72		
		(-4.50--4.88)x(2.37+2.40)/2	0.91		
		(-3.72--4.50)x(2.41+2.37)/2	1.86		
		(-3.42--3.72)x(2.44+2.41)/2	0.73		
		(-3.27--3.42)x(2.44+2.44)/2	0.37		
		(-2.34--3.27)x(2.39+2.44)/2	2.25		
		(-1.66--2.34)x(2.36+2.39)/2	1.61		
		(-1.26--1.66)x(2.33+2.36)/2	0.94		
		(-0.45--1.26)x(2.33+2.33)/2	1.89		
		(-0.18--0.45)x(2.34+2.33)/2	0.63		
		(-0.05--0.18)x(2.35+2.34)/2	0.30		
		(0.90--0.05)x(2.44+2.35)/2	2.28		
		(1.57-0.90)x(2.38+2.44)/2	1.61		
		(1.98-1.57)x(2.37+2.38)/2	0.97		
		(2.82-1.98)x(2.32+2.37)/2	1.97		
		(3.06-2.82)x(2.30+2.32)/2	0.55		
		(3.18-3.06)x(2.29+2.30)/2	0.28		
		(4.14-3.18)x(2.21+2.29)/2	2.16		
		(4.79-4.14)x(2.18+2.21)/2	1.43		
		(5.22-4.79)x(2.15+2.18)/2	0.93		
		(6.09-5.22)x(2.07+2.15)/2	1.84		
		(6.30-6.09)x(2.04+2.07)/2	0.43		
		(6.40-6.30)x(2.03+2.04)/2	0.20		
		(7.38-6.40)x(1.92+2.03)/2	1.94		
		(8.01-7.38)x(1.87+1.92)/2	1.19		
		(8.46-8.01)x(1.83+1.87)/2	0.83		
		(9.36-8.46)x(1.47+1.83)/2	1.48		
		(9.54-9.36)x(1.39+1.47)/2	0.26		
		(10.30-9.54)x(0.76+1.39)/2	0.82		
		(10.62-10.30)x(0.55+0.76)/2	0.21		
		(11.24-10.62)x(0.29+0.55)/2	0.26		
		(11.70-11.24)x(0.10+0.29)/2	0.09		
		(12.63-11.70)x(-0.02+0.10)/2	0.04		
		(12.78-12.63)x(-0.04+-0.02)/2	-0.00		
		(12.85-12.78)x(-0.04+-0.04)/2	-0.00		
		(13.86-12.85)x(-0.04+-0.04)/2	-0.04		
		(14.46-13.86)x(-0.05+-0.04)/2	-0.03		
		(14.94-14.46)x(-0.06+-0.05)/2	-0.03		
		(15.90-14.94)x(-0.07+-0.06)/2	-0.06		
		(16.02-15.90)x(-0.07+-0.07)/2	-0.01		
		(16.07-16.02)x(-0.04+-0.07)/2	-0.00		
		(17.10-16.07)x(0.22+-0.04)/2	0.09		
		(17.69-17.10)x(0.77+0.22)/2	0.29		
		(18.18-17.69)x(1.20+0.77)/2	0.48		
		(18.51-18.18)x(1.40+1.20)/2	0.43		
		(18.18-18.51)x(0.70+0.90)/2	-0.26		
		(17.69-18.18)x(0.27+0.70)/2	-0.24		
		(17.10-17.69)x(-0.28+0.27)/2	0.00		
		(16.07-17.10)x(-0.54+-0.28)/2	0.42		
		(16.02-16.07)x(-0.57+-0.54)/2	0.03		
		(15.90-16.02)x(-0.57+-0.57)/2	0.07		
		(14.94-15.90)x(-0.56+-0.57)/2	0.54		
		(14.46-14.94)x(-0.55+-0.56)/2	0.27		
		(13.86-14.46)x(-0.54+-0.55)/2	0.33		
		(12.85-13.86)x(-0.54+-0.54)/2	0.55		
		(12.78-12.85)x(-0.54+-0.54)/2	0.04		
		(12.63-12.78)x(-0.52+-0.54)/2	0.08		
		(11.70-12.63)x(-0.40+-0.52)/2	0.43		
		(11.24-11.70)x(-0.21+-0.40)/2	0.14		
		(10.62-11.24)x(0.05+-0.21)/2	0.05		
		(10.30-10.62)x(0.26+0.05)/2	-0.05		
		(9.54-10.30)x(0.89+0.26)/2	-0.44		
		(9.36-9.54)x(0.97+0.89)/2	-0.17		
		(8.46-9.36)x(1.33+0.97)/2	-1.03		
		(8.01-8.46)x(1.37+1.33)/2	-0.61		
		(7.38-8.01)x(1.42+1.37)/2	-0.88		
		(6.40-7.38)x(1.53+1.42)/2	-1.45		
		(6.30-6.40)x(1.54+1.53)/2	-0.15		
		(6.09-6.30)x(1.57+1.54)/2	-0.33		
		(5.22-6.09)x(1.65+1.57)/2	-1.40		
		(4.79-5.22)x(1.68+1.65)/2	-0.72		
		(4.14-4.79)x(1.71+1.68)/2	-1.10		
		(3.18-4.14)x(1.79+1.71)/2	-1.68		
		(3.06-3.18)x(1.80+1.79)/2	-0.22		
		(2.82-3.06)x(1.82+1.80)/2	-0.43		
		(1.98-2.82)x(1.87+1.82)/2	-1.55		
		(1.57-1.98)x(1.88+1.87)/2	-0.77		
		(0.90-1.57)x(1.94+1.88)/2	-1.28		
		(-0.05-0.90)x(1.85+1.94)/2	-1.80		
		(-0.18--0.05)x(1.84+1.85)/2	-0.24		
		(-0.45--0.18)x(1.83+1.84)/2	-0.50		
		(-1.26--0.45)x(1.83+1.83)/2	-1.48		
		(-1.66--1.26)x(1.86+1.83)/2	-0.74		
		(-2.34--1.66)x(1.89+1.86)/2	-1.27		
		(-3.27--2.34)x(1.94+1.89)/2	-1.78		
		(-3.42--3.27)x(1.94+1.94)/2	-0.29		
		(-3.72--3.42)x(1.91+1.94)/2	-0.58		
		(-4.50--3.72)x(1.87+1.91)/2	-1.47		
		A RIPORTARE mq	54.55		

		CALCOLO DELLE AREE		Foglio n. 143
BONIFICA				
N. SEZIONE PROG.	FIG.	ELEMENTI DI CALCOLO	AREA ELEMENTARE mq	AREA FIGURA mq	NOTE
		RIPORTO mq	54.55		
		(-4.88--4.50)x(1.90+1.87)/2	-0.72		
		(-5.58--4.88)x(2.01+1.90)/2	-1.37		
		(-6.49--5.58)x(2.13+2.01)/2	-1.88		
		(-6.66--6.49)x(2.16+2.13)/2	-0.36		
		(-6.99--6.66)x(2.23+2.16)/2	-0.72		
		(-7.74--6.99)x(2.44+2.23)/2	-1.75		
		(-8.37--7.74)x(2.56+2.44)/2	-1.57		
		(-8.82--8.37)x(2.60+2.56)/2	-1.16		
		(-9.72--8.82)x(2.67+2.60)/2	-2.37		
		(-9.90--9.72)x(2.69+2.67)/2	-0.48		
		(-10.26--9.90)x(2.68+2.69)/2	-0.97		
		(-10.98--10.26)x(2.63+2.68)/2	-1.91		
		(-11.33--10.98)x(2.62+2.63)/2	-0.92		
		(-12.06--11.33)x(2.56+2.62)/2	-1.89		
		(-12.94--12.06)x(2.54+2.56)/2	-2.24		
		(-13.14--12.94)x(2.53+2.54)/2	-0.51		
		(-13.54--13.14)x(2.53+2.53)/2	-1.01		
		(-14.22--13.54)x(2.48+2.53)/2	-1.70		
		(-14.55--14.22)x(2.58+2.48)/2	-0.83		
		(-15.30--14.55)x(2.67+2.58)/2	-1.97		
		(-16.16--15.30)x(3.06+2.67)/2	-2.46		
		(-16.38--16.16)x(3.13+3.06)/2	-0.68		
		(-16.81--16.38)x(3.27+3.13)/2	-1.38		
		(-17.46--16.81)x(3.41+3.27)/2	-2.17		
		(-17.78--17.46)x(3.40+3.41)/2	-1.09		
		(-18.36--17.78)x(3.40+3.40)/2	-1.97		
				18.47	
56 825.00	BO1	(-18.12--18.42)x(3.89+3.91)/2	1.17		
		(-17.07--18.12)x(3.93+3.89)/2	4.11		
		(-17.03--17.07)x(3.94+3.93)/2	0.16		
		(-17.02--17.03)x(3.93+3.94)/2	0.04		
		(-15.95--17.02)x(3.92+3.93)/2	4.20		
		(-15.40--15.95)x(3.57+3.92)/2	2.06		
		(-14.87--15.40)x(3.31+3.57)/2	1.82		
		(-13.82--14.87)x(2.61+3.31)/2	3.11		
		(-13.79--13.82)x(2.59+2.61)/2	0.08		
		(-12.99--13.79)x(2.21+2.59)/2	1.92		
		(-12.71--12.99)x(2.13+2.21)/2	0.61		
		(-12.16--12.71)x(1.96+2.13)/2	1.12		
		(-11.63--12.16)x(1.80+1.96)/2	1.00		
		(-10.57--11.63)x(1.74+1.80)/2	1.88		
		(-10.55--10.57)x(1.74+1.74)/2	0.03		
		(-9.47--10.55)x(1.90+1.74)/2	1.97		
		(-8.93--9.47)x(1.90+1.90)/2	1.03		
		(-8.39--8.93)x(1.97+1.90)/2	1.04		
		(-7.32--8.39)x(2.17+1.97)/2	2.21		
		(-7.31--7.32)x(2.17+2.17)/2	0.02		
		(-6.23--7.31)x(2.17+2.17)/2	2.34		
		(-5.69--6.23)x(2.15+2.17)/2	1.17		
		(-5.15--5.69)x(2.09+2.15)/2	1.14		
		(-4.07--5.15)x(2.01+2.09)/2	2.21		
		(-2.99--4.07)x(1.97+2.01)/2	2.15		
		(-2.45--2.99)x(1.99+1.97)/2	1.07		
		(-1.91--2.45)x(2.02+1.99)/2	1.08		
		(-0.84--1.91)x(2.10+2.02)/2	2.20		
		(-0.83--0.84)x(2.10+2.10)/2	0.02		
		(-0.81--0.83)x(2.10+2.10)/2	0.04		
		(0.25--0.81)x(2.13+2.10)/2	2.24		
		(0.78-0.25)x(2.13+2.13)/2	1.13		
		(1.33-0.78)x(2.12+2.13)/2	1.17		
		(2.40-1.33)x(2.11+2.12)/2	2.26		
		(2.41-2.40)x(2.11+2.11)/2	0.02		
		(2.44-2.41)x(2.11+2.11)/2	0.06		
		(3.49-2.44)x(2.12+2.11)/2	2.22		
		(4.02-3.49)x(2.12+2.12)/2	1.12		
		(4.57-4.02)x(2.12+2.12)/2	1.17		
		(4.85-4.57)x(2.12+2.12)/2	0.59		
		(5.65-4.85)x(2.13+2.12)/2	1.70		
		(5.69-5.65)x(2.13+2.13)/2	0.09		
		(6.73-5.69)x(2.08+2.13)/2	2.19		
		(7.26-6.73)x(2.02+2.08)/2	1.09		
		(7.81-7.26)x(1.97+2.02)/2	1.10		
		(8.87-7.81)x(1.86+1.97)/2	2.03		
		(8.90-8.87)x(1.86+1.86)/2	0.06		
		(8.94-8.90)x(1.85+1.86)/2	0.07		
		(9.98-8.94)x(1.62+1.85)/2	1.80		
		(10.49-9.98)x(1.25+1.62)/2	0.73		
		(11.06-10.49)x(0.91+1.25)/2	0.62		
		(12.11-11.06)x(0.21+0.91)/2	0.59		
		(12.14-12.11)x(0.19+0.21)/2	0.01		
		(12.19-12.14)x(0.18+0.19)/2	0.01		
		(13.22-12.19)x(-0.07+0.18)/2	0.06		
		(13.73-13.22)x(-0.07+-0.07)/2	-0.04		
		(14.30-13.73)x(-0.08+-0.07)/2	-0.04		
		(15.35-14.30)x(-0.08+-0.08)/2	-0.08		
		(15.38-15.35)x(-0.08+-0.08)/2	-0.00		
		(15.44-15.38)x(-0.08+-0.08)/2	-0.00		
		(16.46-15.44)x(-0.10+-0.08)/2	-0.09		
		(16.97-16.46)x(0.01+-0.10)/2	-0.02		
		(17.54-16.97)x(0.10+0.01)/2	0.03		
		(18.58-17.54)x(0.73+0.10)/2	0.43		
		(18.62-18.58)x(0.75+0.73)/2	0.03		
		(18.69-18.62)x(0.79+0.75)/2	0.05		
		(19.13-18.69)x(1.03+0.79)/2	0.40		
		(18.69-19.13)x(0.29+0.53)/2	-0.18		
		(18.62-18.69)x(0.25+0.29)/2	-0.02		
		(18.58-18.62)x(0.23+0.25)/2	-0.01		
		(17.54-18.58)x(-0.40+0.23)/2	0.09		
		(16.97-17.54)x(-0.49+-0.40)/2	0.25		
		(16.46-16.97)x(-0.60+-0.49)/2	0.28		
		(15.44-16.46)x(-0.58+-0.60)/2	0.60		
		(15.38-15.44)x(-0.58+-0.58)/2	0.03		
		(15.35-15.38)x(-0.58+-0.58)/2	0.02		
		(14.30-15.35)x(-0.58+-0.58)/2	0.61		
		A RIPORTARE mq	69.47		

		CALCOLO DELLE AREE		Foglio n. 144
BONIFICA				
N. SEZIONE PROG.	FIG.	ELEMENTI DI CALCOLO	AREA ELEMENTARE mq	AREA FIGURA mq	NOTE
		RIPORTO mq	69.47		
		(13.73-14.30)x(-0.57+-0.58)/2	0.33		
		(13.22-13.73)x(-0.57+-0.57)/2	0.29		
		(12.19-13.22)x(-0.32+-0.57)/2	0.46		
		(12.14-12.19)x(-0.31+-0.32)/2	0.02		
		(12.11-12.14)x(-0.29+-0.31)/2	0.01		
		(11.06-12.11)x(0.41+-0.29)/2	-0.06		
		(10.49-11.06)x(0.75+0.41)/2	-0.33		
		(9.98-10.49)x(1.12+0.75)/2	-0.48		
		(8.94-9.98)x(1.35+1.12)/2	-1.28		
		(8.90-8.94)x(1.36+1.35)/2	-0.05		
		(8.87-8.90)x(1.36+1.36)/2	-0.04		
		(7.81-8.87)x(1.47+1.36)/2	-1.50		
		(7.26-7.81)x(1.52+1.47)/2	-0.82		
		(6.73-7.26)x(1.58+1.52)/2	-0.82		
		(5.69-6.73)x(1.63+1.58)/2	-1.67		
		(5.65-5.69)x(1.63+1.63)/2	-0.07		
		(4.85-5.65)x(1.62+1.63)/2	-1.30		
		(4.57-4.85)x(1.62+1.62)/2	-0.45		
		(4.02-4.57)x(1.62+1.62)/2	-0.89		
		(3.49-4.02)x(1.62+1.62)/2	-0.86		
		(2.44-3.49)x(1.61+1.62)/2	-1.70		
		(2.41-2.44)x(1.61+1.61)/2	-0.05		
		(2.40-2.41)x(1.61+1.61)/2	-0.02		
		(1.33-2.40)x(1.62+1.61)/2	-1.73		
		(0.78-1.33)x(1.63+1.62)/2	-0.89		
		(0.25-0.78)x(1.63+1.63)/2	-0.86		
		(-0.81-0.25)x(1.60+1.63)/2	-1.71		
		(-0.83--0.81)x(1.60+1.60)/2	-0.03		
		(-0.84--0.83)x(1.60+1.60)/2	-0.02		
		(-1.91--0.84)x(1.52+1.60)/2	-1.67		
		(-2.45--1.91)x(1.49+1.52)/2	-0.81		
		(-2.99--2.45)x(1.47+1.49)/2	-0.80		
		(-4.07--2.99)x(1.51+1.47)/2	-1.61		
		(-5.15--4.07)x(1.59+1.51)/2	-1.67		
		(-5.69--5.15)x(1.65+1.59)/2	-0.87		
		(-6.23--5.69)x(1.67+1.65)/2	-0.90		
		(-7.31--6.23)x(1.67+1.67)/2	-1.80		
		(-7.32--7.31)x(1.67+1.67)/2	-0.02		
		(-8.39--7.32)x(1.47+1.67)/2	-1.68		
		(-8.93--8.39)x(1.40+1.47)/2	-0.77		
		(-9.47--8.93)x(1.40+1.40)/2	-0.76		
		(-10.55--9.47)x(1.24+1.40)/2	-1.43		
		(-10.57--10.55)x(1.24+1.24)/2	-0.02		
		(-11.63--10.57)x(1.30+1.24)/2	-1.35		
		(-12.16--11.63)x(1.46+1.30)/2	-0.73		
		(-12.71--12.16)x(1.63+1.46)/2	-0.85		
		(-12.99--12.71)x(1.71+1.63)/2	-0.47		
		(-13.79--12.99)x(2.09+1.71)/2	-1.52		
		(-13.82--13.79)x(2.11+2.09)/2	-0.06		
		(-14.87--13.82)x(2.81+2.11)/2	-2.58		
		(-15.40--14.87)x(3.07+2.81)/2	-1.56		
		(-15.95--15.40)x(3.42+3.07)/2	-1.78		
		(-17.02--15.95)x(3.43+3.42)/2	-3.66		
		(-17.03--17.02)x(3.44+3.43)/2	-0.03		
		(-17.07--17.03)x(3.43+3.44)/2	-0.14		
		(-18.12--17.07)x(3.39+3.43)/2	-3.58		
		(-18.42--18.12)x(3.41+3.39)/2	-1.02		
				18.81	
57	BO1	(-17.73--18.36)x(4.00+3.99)/2	2.52		
840.00		(-17.36--17.73)x(4.01+4.00)/2	1.48		
		(-16.64--17.36)x(4.01+4.01)/2	2.89		
		(-16.29--16.64)x(4.01+4.01)/2	1.40		
		(-15.56--16.29)x(4.01+4.01)/2	2.93		
		(-14.66--15.56)x(3.77+4.01)/2	3.50		
		(-14.48--14.66)x(3.72+3.77)/2	0.67		
		(-14.13--14.48)x(3.47+3.72)/2	1.26		
		(-13.40--14.13)x(2.91+3.47)/2	2.33		
		(-13.04--13.40)x(2.74+2.91)/2	1.02		
		(-12.32--13.04)x(2.36+2.74)/2	1.84		
		(-11.41--12.32)x(1.92+2.36)/2	1.95		
		(-11.24--11.41)x(1.84+1.92)/2	0.32		
		(-10.90--11.24)x(1.74+1.84)/2	0.61		
		(-10.16--10.90)x(1.58+1.74)/2	1.23		
		(-9.79--10.16)x(1.60+1.58)/2	0.59		
		(-9.08--9.79)x(1.63+1.60)/2	1.15		
		(-8.16--9.08)x(1.67+1.63)/2	1.52		
		(-8.00--8.16)x(1.68+1.67)/2	0.27		
		(-7.66--8.00)x(1.70+1.68)/2	0.57		
		(-6.91--7.66)x(1.74+1.70)/2	1.29		
		(-6.54--6.91)x(1.79+1.74)/2	0.65		
		(-5.83--6.54)x(1.86+1.79)/2	1.30		
		(-4.91--5.83)x(1.97+1.86)/2	1.76		
		(-4.75--4.91)x(1.99+1.97)/2	0.32		
		(-4.43--4.75)x(2.03+1.99)/2	0.64		
		(-3.67--4.43)x(2.13+2.03)/2	1.58		
		(-3.29--3.67)x(2.19+2.13)/2	0.82		
		(-2.59--3.29)x(2.27+2.19)/2	1.56		
		(-1.66--2.59)x(2.33+2.27)/2	2.14		
		(-1.51--1.66)x(2.33+2.33)/2	0.35		
		(-1.20--1.51)x(2.33+2.33)/2	0.72		
		(-0.43--1.20)x(2.33+2.33)/2	1.79		
		(0.19--0.43)x(2.32+2.33)/2	1.44		
		(0.65-0.19)x(2.38+2.32)/2	1.08		
		(1.59-0.65)x(2.39+2.38)/2	2.24		
		(1.74-1.59)x(2.40+2.39)/2	0.36		
		(2.03-1.74)x(2.39+2.40)/2	0.69		
		(2.82-2.03)x(2.37+2.39)/2	1.88		
		(3.21-2.82)x(2.35+2.37)/2	0.92		
		(3.90-3.21)x(2.36+2.35)/2	1.62		
		(4.84-3.90)x(2.37+2.36)/2	2.22		
		(4.98-4.84)x(2.37+2.37)/2	0.33		
		(5.26-4.98)x(2.37+2.37)/2	0.66		
		(6.06-5.26)x(2.36+2.37)/2	1.89		
		(6.46-6.06)x(2.29+2.36)/2	0.93		
		A RIPORTARE mq	61.23		

		CALCOLO DELLE AREE		Foglio n. 145
BONIFICA				
N. SEZIONE PROG.	FIG.	ELEMENTI DI CALCOLO	AREA ELEMENTARE mq	AREA FIGURA mq	NOTE
		RIPORTO mq	61.23		
		(7.14-6.46)x(2.15+2.29)/2	1.51		
		(8.09-7.14)x(2.05+2.15)/2	2.00		
		(8.22-8.09)x(2.04+2.05)/2	0.27		
		(8.49-8.22)x(2.00+2.04)/2	0.55		
		(9.30-8.49)x(1.88+2.00)/2	1.57		
		(9.71-9.30)x(1.83+1.88)/2	0.76		
		(10.38-9.71)x(1.74+1.83)/2	1.20		
		(11.34-10.38)x(1.31+1.74)/2	1.46		
		(11.47-11.34)x(1.27+1.31)/2	0.17		
		(11.72-11.47)x(1.14+1.27)/2	0.30		
		(12.55-11.72)x(0.66+1.14)/2	0.75		
		(12.96-12.55)x(0.52+0.66)/2	0.24		
		(13.63-12.96)x(0.11+0.52)/2	0.21		
		(14.58-13.63)x(-0.02+0.11)/2	0.04		
		(14.71-14.58)x(-0.04+-0.02)/2	-0.00		
		(14.96-14.71)x(-0.05+-0.04)/2	-0.01		
		(15.79-14.96)x(-0.06+-0.05)/2	-0.05		
		(16.21-15.79)x(-0.07+-0.06)/2	-0.03		
		(16.87-16.21)x(-0.08+-0.07)/2	-0.05		
		(17.83-16.87)x(-0.00+-0.08)/2	-0.04		
		(18.19-17.95)x(0.06+0.00)/2	0.01		
		(19.03-18.19)x(0.33+0.06)/2	0.16		
		(19.63-19.03)x(0.64+0.33)/2	0.29		
		(19.71-19.63)x(0.69+0.64)/2	0.05		
		(19.63-19.71)x(0.14+0.19)/2	-0.01		
		(19.03-19.63)x(-0.17+0.14)/2	0.01		
		(18.19-19.03)x(-0.44+-0.17)/2	0.26		
		(17.95-18.19)x(-0.50+-0.44)/2	0.11		
		(17.83-17.95)x(-0.50+-0.50)/2	0.06		
		(16.87-17.83)x(-0.58+-0.50)/2	0.52		
		(16.21-16.87)x(-0.57+-0.58)/2	0.38		
		(15.79-16.21)x(-0.56+-0.57)/2	0.24		
		(14.96-15.79)x(-0.55+-0.56)/2	0.46		
		(14.71-14.96)x(-0.54+-0.55)/2	0.14		
		(14.58-14.71)x(-0.52+-0.54)/2	0.07		
		(13.63-14.58)x(-0.39+-0.52)/2	0.43		
		(12.96-13.63)x(0.02+-0.39)/2	0.12		
		(12.55-12.96)x(0.16+0.02)/2	-0.04		
		(11.72-12.55)x(0.64+0.16)/2	-0.33		
		(11.47-11.72)x(0.77+0.64)/2	-0.18		
		(11.34-11.47)x(0.81+0.77)/2	-0.10		
		(10.38-11.34)x(1.24+0.81)/2	-0.98		
		(9.71-10.38)x(1.33+1.24)/2	-0.86		
		(9.30-9.71)x(1.38+1.33)/2	-0.56		
		(8.49-9.30)x(1.50+1.38)/2	-1.17		
		(8.22-8.49)x(1.54+1.50)/2	-0.41		
		(8.09-8.22)x(1.55+1.54)/2	-0.20		
		(7.14-8.09)x(1.65+1.55)/2	-1.52		
		(6.46-7.14)x(1.79+1.65)/2	-1.17		
		(6.06-6.46)x(1.86+1.79)/2	-0.73		
		(5.26-6.06)x(1.87+1.86)/2	-1.49		
		(4.98-5.26)x(1.87+1.87)/2	-0.52		
		(4.84-4.98)x(1.87+1.87)/2	-0.26		
		(3.90-4.84)x(1.86+1.87)/2	-1.75		
		(3.21-3.90)x(1.85+1.86)/2	-1.28		
		(2.82-3.21)x(1.87+1.85)/2	-0.73		
		(2.03-2.82)x(1.89+1.87)/2	-1.49		
		(1.74-2.03)x(1.90+1.89)/2	-0.55		
		(1.59-1.74)x(1.89+1.90)/2	-0.28		
		(0.65-1.59)x(1.88+1.89)/2	-1.77		
		(0.19-0.65)x(1.82+1.88)/2	-0.85		
		(-0.43-0.19)x(1.83+1.82)/2	-1.13		
		(-1.20--0.43)x(1.83+1.83)/2	-1.41		
		(-1.51--1.20)x(1.83+1.83)/2	-0.57		
		(-1.66--1.51)x(1.83+1.83)/2	-0.27		
		(-2.59--1.66)x(1.77+1.83)/2	-1.67		
		(-3.29--2.59)x(1.69+1.77)/2	-1.21		
		(-3.67--3.29)x(1.63+1.69)/2	-0.63		
		(-4.43--3.67)x(1.53+1.63)/2	-1.20		
		(-4.75--4.43)x(1.49+1.53)/2	-0.48		
		(-4.91--4.75)x(1.47+1.49)/2	-0.24		
		(-5.83--4.91)x(1.36+1.47)/2	-1.30		
		(-6.54--5.83)x(1.29+1.36)/2	-0.94		
		(-6.91--6.54)x(1.24+1.29)/2	-0.47		
		(-7.66--6.91)x(1.20+1.24)/2	-0.92		
		(-8.00--7.66)x(1.18+1.20)/2	-0.40		
		(-8.16--8.00)x(1.17+1.18)/2	-0.19		
		(-9.08--8.16)x(1.13+1.17)/2	-1.06		
		(-9.79--9.08)x(1.10+1.13)/2	-0.79		
		(-10.16--9.79)x(1.08+1.10)/2	-0.40		
		(-10.90--10.16)x(1.24+1.08)/2	-0.86		
		(-11.24--10.90)x(1.34+1.24)/2	-0.44		
		(-11.41--11.24)x(1.42+1.34)/2	-0.23		
		(-12.32--11.41)x(1.86+1.42)/2	-1.49		
		(-13.04--12.32)x(2.24+1.86)/2	-1.48		
		(-13.40--13.04)x(2.41+2.24)/2	-0.84		
		(-14.13--13.40)x(2.97+2.41)/2	-1.96		
		(-14.48--14.13)x(3.22+2.97)/2	-1.08		
		(-14.66--14.48)x(3.27+3.22)/2	-0.58		
		(-15.56--14.66)x(3.51+3.27)/2	-3.05		
		(-16.29--15.56)x(3.51+3.51)/2	-2.56		
		(-16.64--16.29)x(3.51+3.51)/2	-1.23		
		(-17.36--16.64)x(3.51+3.51)/2	-2.53		
		(-17.73--17.36)x(3.50+3.51)/2	-1.30		
		(-18.36--17.73)x(3.49+3.50)/2	-2.20		
				19.05	
58 855.00	BO1	(-17.67--18.44)x(3.94+3.98)/2	3.05		
		(-17.36--17.67)x(3.92+3.94)/2	1.22		
		(-17.21--17.36)x(3.93+3.92)/2	0.59		
		(-16.28--17.21)x(3.92+3.93)/2	3.65		
		(-15.58--16.28)x(3.93+3.92)/2	2.75		
		(-15.20--15.58)x(3.93+3.93)/2	1.49		
		(-14.46--15.20)x(3.87+3.93)/2	2.89		
		(-14.12--14.46)x(3.82+3.87)/2	1.31		
		A RIPORTARE mq	16.95		

	CALCOLO DELLE AREE		Foglio n. 146

BONIFICA

N. SEZIONE PROG.	FIG.	ELEMENTI DI CALCOLO	AREA ELEMENTARE mq	AREA FIGURA mq	NOTE
		RIPORTO mq	16.95		
		(-13.95--14.12)x(3.71+3.82)/2	0.64		
		(-13.04--13.95)x(3.23+3.71)/2	3.16		
		(-12.31--13.04)x(2.98+3.23)/2	2.27		
		(-11.96--12.31)x(2.82+2.98)/2	1.01		
		(-11.25--11.96)x(2.47+2.82)/2	1.88		
		(-10.87--11.25)x(2.30+2.47)/2	0.91		
		(-10.68--10.87)x(2.26+2.30)/2	0.43		
		(-9.79--10.68)x(2.09+2.26)/2	1.94		
		(-9.05--9.79)x(1.90+2.09)/2	1.48		
		(-8.71--9.05)x(1.80+1.90)/2	0.63		
		(-8.04--8.71)x(1.71+1.80)/2	1.18		
		(-7.63--8.04)x(1.66+1.71)/2	0.69		
		(-7.42--7.63)x(1.67+1.66)/2	0.35		
		(-6.55--7.42)x(1.71+1.67)/2	1.47		
		(-5.79--6.55)x(1.74+1.71)/2	1.31		
		(-5.46--5.79)x(1.74+1.74)/2	0.57		
		(-5.30--5.46)x(1.74+1.74)/2	0.28		
		(-4.83--5.30)x(1.74+1.74)/2	0.82		
		(-4.49--4.83)x(1.75+1.74)/2	0.59		
		(-4.38--4.49)x(1.75+1.75)/2	0.19		
		(-4.16--4.38)x(1.75+1.75)/2	0.38		
		(-3.30--4.16)x(1.75+1.75)/2	1.51		
		(-2.53--3.30)x(1.76+1.75)/2	1.35		
		(-2.22--2.53)x(1.76+1.76)/2	0.55		
		(-1.61--2.22)x(1.79+1.76)/2	1.08		
		(-1.14--1.61)x(1.81+1.79)/2	0.85		
		(-0.89--1.14)x(1.82+1.81)/2	0.45		
		(-0.05--0.89)x(1.85+1.82)/2	1.54		
		(0.74--0.05)x(2.01+1.85)/2	1.52		
		(1.03-0.74)x(2.07+2.01)/2	0.59		
		(1.60-1.03)x(2.13+2.07)/2	1.20		
		(2.11-1.60)x(2.17+2.13)/2	1.10		
		(2.37-2.11)x(2.17+2.17)/2	0.56		
		(3.19-2.37)x(2.18+2.17)/2	1.78		
		(4.00-3.19)x(2.19+2.18)/2	1.77		
		(4.27-4.00)x(2.20+2.19)/2	0.59		
		(4.81-4.27)x(2.20+2.20)/2	1.19		
		(5.22-4.81)x(2.21+2.20)/2	0.90		
		(5.35-5.22)x(2.21+2.21)/2	0.29		
		(6.03-5.35)x(2.23+2.21)/2	1.51		
		(6.44-6.03)x(2.24+2.23)/2	0.92		
		(6.84-6.44)x(2.24+2.24)/2	0.90		
		(7.52-6.84)x(2.28+2.24)/2	1.54		
		(7.65-7.52)x(2.28+2.28)/2	0.30		
		(8.02-7.65)x(2.21+2.28)/2	0.83		
		(8.60-8.02)x(2.11+2.21)/2	1.25		
		(8.89-8.60)x(2.07+2.11)/2	0.61		
		(9.68-8.89)x(1.93+2.07)/2	1.58		
		(10.52-9.68)x(1.87+1.93)/2	1.60		
		(10.76-10.52)x(1.86+1.87)/2	0.45		
		(11.24-10.76)x(1.75+1.86)/2	0.87		
		(11.85-11.24)x(1.59+1.75)/2	1.02		
		(12.16-11.85)x(1.36+1.59)/2	0.46		
		(12.93-12.16)x(0.86+1.36)/2	0.85		
		(13.79-12.93)x(0.42+0.86)/2	0.55		
		(14.01-13.79)x(0.26+0.42)/2	0.07		
		(14.12-14.01)x(0.22+0.26)/2	0.03		
		(14.45-14.12)x(0.13+0.22)/2	0.06		
		(14.93-14.45)x(-0.05+0.13)/2	0.02		
		(15.09-14.93)x(-0.06+-0.05)/2	-0.01		
		(15.42-15.09)x(-0.07+-0.06)/2	-0.02		
		(16.17-15.42)x(-0.07+-0.07)/2	-0.05		
		(17.05-16.17)x(-0.07+-0.07)/2	-0.06		
		(17.25-17.05)x(-0.07+-0.07)/2	-0.01		
		(17.66-17.25)x(-0.06+-0.07)/2	-0.03		
		(18.34-17.66)x(-0.04+-0.06)/2	-0.03		
		(18.60-18.34)x(0.03+-0.04)/2	-0.00		
		(18.34-18.60)x(-0.54+-0.47)/2	0.13		
		(17.66-18.34)x(-0.56+-0.54)/2	0.37		
		(17.25-17.66)x(-0.57+-0.56)/2	0.23		
		(17.05-17.25)x(-0.57+-0.57)/2	0.11		
		(16.17-17.05)x(-0.57+-0.57)/2	0.50		
		(15.42-16.17)x(-0.57+-0.57)/2	0.43		
		(15.09-15.42)x(-0.56+-0.57)/2	0.19		
		(14.93-15.09)x(-0.55+-0.56)/2	0.09		
		(14.45-14.93)x(-0.37+-0.55)/2	0.22		
		(14.12-14.45)x(-0.28+-0.37)/2	0.11		
		(14.01-14.12)x(-0.24+-0.28)/2	0.03		
		(13.79-14.01)x(-0.08+-0.24)/2	0.04		
		(12.93-13.79)x(0.36+-0.08)/2	-0.12		
		(12.16-12.93)x(0.86+0.36)/2	-0.47		
		(11.85-12.16)x(1.09+0.86)/2	-0.30		
		(11.24-11.85)x(1.25+1.09)/2	-0.71		
		(10.76-11.24)x(1.36+1.25)/2	-0.63		
		(10.52-10.76)x(1.37+1.36)/2	-0.33		
		(9.68-10.52)x(1.43+1.37)/2	-1.18		
		(8.89-9.68)x(1.57+1.43)/2	-1.18		
		(8.60-8.89)x(1.61+1.57)/2	-0.46		
		(8.02-8.60)x(1.71+1.61)/2	-0.96		
		(7.65-8.02)x(1.78+1.71)/2	-0.65		
		(7.52-7.65)x(1.78+1.78)/2	-0.23		
		(6.84-7.52)x(1.74+1.78)/2	-1.20		
		(6.44-6.84)x(1.74+1.74)/2	-0.70		
		(6.03-6.44)x(1.73+1.74)/2	-0.71		
		(5.35-6.03)x(1.71+1.73)/2	-1.17		
		(5.22-5.35)x(1.71+1.71)/2	-0.22		
		(4.81-5.22)x(1.70+1.71)/2	-0.70		
		(4.27-4.81)x(1.70+1.70)/2	-0.92		
		(4.00-4.27)x(1.69+1.70)/2	-0.46		
		(3.19-4.00)x(1.68+1.69)/2	-1.36		
		(2.37-3.19)x(1.67+1.68)/2	-1.37		
		(2.11-2.37)x(1.67+1.67)/2	-0.43		
		(1.60-2.11)x(1.63+1.67)/2	-0.84		
		(1.03-1.60)x(1.57+1.63)/2	-0.91		
		A RIPORTARE mq	57.40		

		CALCOLO DELLE AREE		Foglio n. 147
BONIFICA				
N. SEZIONE PROG.	FIG.	ELEMENTI DI CALCOLO	AREA ELEMENTARE mq	AREA FIGURA mq	NOTE
		RIPORTO mq	57.40		
		(0.74-1.03)x(1.51+1.57)/2	-0.45		
		(-0.05-0.74)x(1.35+1.51)/2	-1.13		
		(-0.89--0.05)x(1.32+1.35)/2	-1.12		
		(-1.14--0.89)x(1.31+1.32)/2	-0.33		
		(-1.61--1.14)x(1.29+1.31)/2	-0.61		
		(-2.22--1.61)x(1.26+1.29)/2	-0.78		
		(-2.53--2.22)x(1.26+1.26)/2	-0.39		
		(-3.30--2.53)x(1.25+1.26)/2	-0.97		
		(-4.16--3.30)x(1.25+1.25)/2	-1.08		
		(-4.38--4.16)x(1.25+1.25)/2	-0.27		
		(-4.49--4.38)x(1.25+1.25)/2	-0.14		
		(-4.83--4.49)x(1.24+1.25)/2	-0.42		
		(-5.30--4.83)x(1.24+1.24)/2	-0.58		
		(-5.46--5.30)x(1.24+1.24)/2	-0.20		
		(-5.79--5.46)x(1.24+1.24)/2	-0.41		
		(-6.55--5.79)x(1.21+1.24)/2	-0.93		
		(-7.42--6.55)x(1.17+1.21)/2	-1.04		
		(-7.63--7.42)x(1.16+1.17)/2	-0.24		
		(-8.04--7.63)x(1.21+1.16)/2	-0.49		
		(-8.71--8.04)x(1.30+1.21)/2	-0.84		
		(-9.05--8.71)x(1.40+1.30)/2	-0.46		
		(-9.79--9.05)x(1.59+1.40)/2	-1.11		
		(-10.68--9.79)x(1.76+1.59)/2	-1.49		
		(-10.87--10.68)x(1.80+1.76)/2	-0.34		
		(-11.25--10.87)x(1.97+1.80)/2	-0.72		
		(-11.96--11.25)x(2.32+1.97)/2	-1.52		
		(-12.31--11.96)x(2.48+2.32)/2	-0.84		
		(-13.04--12.31)x(2.73+2.48)/2	-1.90		
		(-13.95--13.04)x(3.21+2.73)/2	-2.70		
		(-14.12--13.95)x(3.32+3.21)/2	-0.56		
		(-14.46--14.12)x(3.37+3.32)/2	-1.14		
		(-15.20--14.46)x(3.43+3.37)/2	-2.52		
		(-15.58--15.20)x(3.43+3.43)/2	-1.30		
		(-16.28--15.58)x(3.42+3.43)/2	-2.40		
		(-17.21--16.28)x(3.43+3.42)/2	-3.19		
		(-17.36--17.21)x(3.42+3.43)/2	-0.51		
		(-17.67--17.36)x(3.44+3.42)/2	-1.06		
		(-18.44--17.67)x(3.48+3.44)/2	-2.66		
				18.56	
59 870.00	BO1	(-18.17--18.72)x(3.82+3.84)/2	2.11		
		(-18.12--18.17)x(3.82+3.82)/2	0.19		
		(-18.02--18.12)x(3.83+3.82)/2	0.38		
		(-17.03--18.02)x(3.88+3.83)/2	3.82		
		(-16.53--17.03)x(3.87+3.88)/2	1.94		
		(-15.95--16.53)x(3.87+3.87)/2	2.24		
		(-14.89--15.95)x(3.89+3.87)/2	4.11		
		(-14.87--14.89)x(3.90+3.89)/2	0.08		
		(-14.82--14.87)x(3.90+3.90)/2	0.19		
		(-13.79--14.82)x(3.89+3.90)/2	4.01		
		(-13.25--13.79)x(3.53+3.89)/2	2.00		
		(-12.70--13.25)x(3.24+3.53)/2	1.86		
		(-11.63--12.70)x(2.68+3.24)/2	3.17		
		(-11.62--11.63)x(2.67+2.68)/2	0.03		
		(-10.54--11.62)x(2.03+2.67)/2	2.54		
		(-10.01--10.54)x(1.85+2.03)/2	1.03		
		(-9.46--10.01)x(1.71+1.85)/2	0.98		
		(-8.44--9.46)x(1.71+1.71)/2	1.74		
		(-8.37--8.44)x(1.71+1.71)/2	0.12		
		(-8.34--8.37)x(1.71+1.71)/2	0.05		
		(-7.29--8.34)x(1.68+1.71)/2	1.78		
		(-6.70--7.29)x(1.69+1.68)/2	0.99		
		(-6.21--6.70)x(1.70+1.69)/2	0.83		
		(-5.24--6.21)x(1.70+1.70)/2	1.65		
		(-5.13--5.24)x(1.70+1.70)/2	0.19		
		(-5.07--5.13)x(1.69+1.70)/2	0.10		
		(-4.04--5.07)x(1.67+1.69)/2	1.73		
		(-3.43--4.04)x(1.64+1.67)/2	1.01		
		(-2.96--3.43)x(1.63+1.64)/2	0.77		
		(-2.05--2.96)x(1.69+1.63)/2	1.51		
		(-1.88--2.05)x(1.70+1.69)/2	0.29		
		(-1.79--1.88)x(1.71+1.70)/2	0.15		
		(-0.80--1.79)x(1.73+1.71)/2	1.70		
		(-0.15--0.80)x(1.72+1.73)/2	1.12		
		(0.29--0.15)x(1.70+1.72)/2	0.75		
		(1.14-0.29)x(1.69+1.70)/2	1.44		
		(1.37-1.14)x(1.68+1.69)/2	0.39		
		(1.49-1.37)x(1.68+1.68)/2	0.20		
		(2.45-1.49)x(1.68+1.68)/2	1.61		
		(3.12-2.45)x(1.73+1.68)/2	1.14		
		(3.54-3.12)x(1.74+1.73)/2	0.73		
		(4.34-3.54)x(1.80+1.74)/2	1.42		
		(4.62-4.34)x(1.82+1.80)/2	0.51		
		(4.76-4.62)x(1.83+1.82)/2	0.26		
		(5.70-4.76)x(1.88+1.83)/2	1.74		
		(6.40-5.70)x(1.91+1.88)/2	1.33		
		(6.78-6.40)x(1.94+1.91)/2	0.73		
		(7.53-6.78)x(1.97+1.94)/2	1.47		
		(7.87-7.53)x(1.99+1.97)/2	0.67		
		(8.04-7.87)x(2.00+1.99)/2	0.34		
		(8.95-8.04)x(2.07+2.00)/2	1.85		
		(9.40-8.95)x(2.06+2.07)/2	0.93		
		(10.03-9.40)x(1.98+2.06)/2	1.27		
		(10.72-10.03)x(1.91+1.98)/2	1.34		
		(11.11-10.72)x(1.86+1.91)/2	0.74		
		(11.31-11.11)x(1.82+1.86)/2	0.37		
		(12.20-11.31)x(1.68+1.82)/2	1.56		
		(12.95-12.20)x(1.28+1.68)/2	1.11		
		(13.28-12.95)x(1.13+1.28)/2	0.40		
		(13.92-13.28)x(0.61+1.13)/2	0.56		
		(14.36-13.92)x(0.28+0.61)/2	0.20		
		(14.59-14.36)x(0.21+0.28)/2	0.06		
		(15.44-14.59)x(-0.00+0.21)/2	0.09		
		(16.23-15.44)x(-0.06+-0.00)/2	-0.02		
		(16.53-16.23)x(-0.10+-0.06)/2	-0.02		
		A RIPORTARE mq	71.58		

		CALCOLO DELLE AREE		Foglio n. 148
BONIFICA				

N. SEZIONE PROG.	FIG.	ELEMENTI DI CALCOLO	AREA ELEMENTARE mq	AREA FIGURA mq	NOTE
		RIPORTO mq	71.58		
		(17.08-16.53)x(-0.09+-0.10)/2	-0.05		
		(16.53-17.08)x(-0.60+-0.59)/2	0.33		
		(16.23-16.53)x(-0.56+-0.60)/2	0.17		
		(15.44-16.23)x(-0.50+-0.56)/2	0.42		
		(14.59-15.44)x(-0.29+-0.50)/2	0.34		
		(14.36-14.59)x(-0.22+-0.29)/2	0.06		
		(13.92-14.36)x(0.11+-0.22)/2	0.02		
		(13.28-13.92)x(0.63+0.11)/2	-0.24		
		(12.95-13.28)x(0.78+0.63)/2	-0.23		
		(12.20-12.95)x(1.18+0.78)/2	-0.73		
		(11.31-12.20)x(1.32+1.18)/2	-1.11		
		(11.11-11.31)x(1.36+1.32)/2	-0.27		
		(10.72-11.11)x(1.41+1.36)/2	-0.54		
		(10.03-10.72)x(1.48+1.41)/2	-1.00		
		(9.40-10.03)x(1.56+1.48)/2	-0.96		
		(8.95-9.40)x(1.57+1.56)/2	-0.70		
		(8.04-8.95)x(1.50+1.57)/2	-1.40		
		(7.87-8.04)x(1.49+1.50)/2	-0.25		
		(7.53-7.87)x(1.47+1.49)/2	-0.50		
		(6.78-7.53)x(1.44+1.47)/2	-1.09		
		(6.40-6.78)x(1.41+1.44)/2	-0.54		
		(5.70-6.40)x(1.38+1.41)/2	-0.98		
		(4.76-5.70)x(1.33+1.38)/2	-1.27		
		(4.62-4.76)x(1.32+1.33)/2	-0.19		
		(4.34-4.62)x(1.30+1.32)/2	-0.37		
		(3.54-4.34)x(1.24+1.30)/2	-1.02		
		(3.12-3.54)x(1.23+1.24)/2	-0.52		
		(2.45-3.12)x(1.18+1.23)/2	-0.81		
		(1.49-2.45)x(1.18+1.18)/2	-1.13		
		(1.37-1.49)x(1.18+1.18)/2	-0.14		
		(1.14-1.37)x(1.19+1.18)/2	-0.27		
		(0.29-1.14)x(1.20+1.19)/2	-1.02		
		(-0.15-0.29)x(1.22+1.20)/2	-0.53		
		(-0.80--0.15)x(1.23+1.22)/2	-0.80		
		(-1.79--0.80)x(1.21+1.23)/2	-1.21		
		(-1.88--1.79)x(1.20+1.21)/2	-0.11		
		(-2.05--1.88)x(1.19+1.20)/2	-0.20		
		(-2.96--2.05)x(1.13+1.19)/2	-1.06		
		(-3.43--2.96)x(1.14+1.13)/2	-0.53		
		(-4.04--3.43)x(1.17+1.14)/2	-0.70		
		(-5.07--4.04)x(1.19+1.17)/2	-1.22		
		(-5.13--5.07)x(1.20+1.19)/2	-0.07		
		(-5.24--5.13)x(1.20+1.20)/2	-0.13		
		(-6.21--5.24)x(1.20+1.20)/2	-1.16		
		(-6.70--6.21)x(1.19+1.20)/2	-0.59		
		(-7.29--6.70)x(1.18+1.19)/2	-0.70		
		(-8.34--7.29)x(1.21+1.18)/2	-1.25		
		(-8.37--8.34)x(1.21+1.21)/2	-0.04		
		(-8.44--8.37)x(1.21+1.21)/2	-0.08		
		(-9.46--8.44)x(1.21+1.21)/2	-1.23		
		(-10.01--9.46)x(1.35+1.21)/2	-0.70		
		(-10.54--10.01)x(1.53+1.35)/2	-0.76		
		(-11.62--10.54)x(2.17+1.53)/2	-2.00		
		(-11.63--11.62)x(2.18+2.17)/2	-0.02		
		(-12.70--11.63)x(2.74+2.18)/2	-2.63		
		(-13.25--12.70)x(3.03+2.74)/2	-1.59		
		(-13.79--13.25)x(3.39+3.03)/2	-1.73		
		(-14.82--13.79)x(3.40+3.39)/2	-3.50		
		(-14.87--14.82)x(3.40+3.40)/2	-0.17		
		(-14.89--14.87)x(3.39+3.40)/2	-0.07		
		(-15.95--14.89)x(3.37+3.39)/2	-3.58		
		(-16.53--15.95)x(3.37+3.37)/2	-1.95		
		(-17.03--16.53)x(3.38+3.37)/2	-1.69		
		(-18.02--17.03)x(3.33+3.38)/2	-3.32		
		(-18.12--18.02)x(3.32+3.33)/2	-0.33		
		(-18.17--18.12)x(3.32+3.32)/2	-0.17		
		(-18.72--18.17)x(3.34+3.32)/2	-1.83		
				17.94	
60 885.00	BO1	(-18.38--18.90)x(3.77+3.77)/2	1.96		
		(-17.82--18.38)x(3.77+3.77)/2	2.11		
		(-17.52--17.82)x(3.76+3.77)/2	1.13		
		(-16.73--17.52)x(3.69+3.76)/2	2.94		
		(-15.88--16.73)x(3.66+3.69)/2	3.12		
		(-15.65--15.88)x(3.65+3.66)/2	0.84		
		(-15.54--15.65)x(3.65+3.65)/2	0.40		
		(-15.21--15.54)x(3.67+3.65)/2	1.21		
		(-14.73--15.21)x(3.69+3.67)/2	1.77		
		(-14.57--14.73)x(3.70+3.69)/2	0.59		
		(-14.23--14.57)x(3.57+3.70)/2	1.24		
		(-13.48--14.23)x(3.41+3.57)/2	2.62		
		(-12.59--13.48)x(2.97+3.41)/2	2.84		
		(-12.40--12.59)x(2.88+2.97)/2	0.56		
		(-12.04--12.40)x(2.58+2.88)/2	0.98		
		(-11.32--12.04)x(2.05+2.58)/2	1.67		
		(-10.94--11.32)x(1.97+2.05)/2	0.76		
		(-10.23--10.94)x(1.84+1.97)/2	1.35		
		(-9.30--10.23)x(1.76+1.84)/2	1.67		
		(-9.15--9.30)x(1.75+1.76)/2	0.26		
		(-8.86--9.15)x(1.74+1.75)/2	0.51		
		(-8.07--8.86)x(1.70+1.74)/2	1.36		
		(-7.65--8.07)x(1.71+1.70)/2	0.72		
		(-6.98--7.65)x(1.69+1.71)/2	1.14		
		(-6.01--6.98)x(1.73+1.69)/2	1.66		
		(-5.90--6.01)x(1.74+1.73)/2	0.19		
		(-5.69--5.90)x(1.74+1.74)/2	0.37		
		(-4.82--5.69)x(1.78+1.74)/2	1.53		
		(-4.37--4.82)x(1.77+1.78)/2	0.80		
		(-3.73--4.37)x(1.75+1.77)/2	1.13		
		(-2.72--3.73)x(1.80+1.75)/2	1.79		
		(-2.65--2.72)x(1.80+1.80)/2	0.13		
		(-2.51--2.65)x(1.81+1.80)/2	0.25		
		(-1.57--2.51)x(1.82+1.81)/2	1.71		
		(-1.08--1.57)x(1.82+1.82)/2	0.89		
		(-0.48--1.08)x(1.82+1.82)/2	1.09		
		A RIPORTARE mq	45.29		

		CALCOLO DELLE AREE		Foglio n. 149
BONIFICA				
N. SEZIONE PROG.	FIG.	ELEMENTI DI CALCOLO	AREA ELEMENTARE mq	AREA FIGURA mq	NOTE
		RIPORTO mq	45.29		
		(0.57--0.48)x(1.89+1.82)/2	1.95		
		(0.60-0.57)x(1.89+1.89)/2	0.06		
		(0.66-0.60)x(1.90+1.89)/2	0.11		
		(1.68-0.66)x(2.16+1.90)/2	2.07		
		(2.21-1.68)x(2.17+2.16)/2	1.15		
		(2.77-2.21)x(2.20+2.17)/2	1.22		
		(3.84-2.77)x(2.12+2.20)/2	2.31		
		(3.85-3.84)x(2.12+2.12)/2	0.02		
		(4.65-3.85)x(2.12+2.12)/2	1.70		
		(4.93-4.65)x(2.10+2.12)/2	0.59		
		(5.50-4.93)x(2.10+2.10)/2	1.20		
		(6.02-5.50)x(2.09+2.10)/2	1.09		
		(7.01-6.02)x(2.08+2.09)/2	2.06		
		(7.10-7.01)x(2.08+2.08)/2	0.19		
		(7.15-7.10)x(2.08+2.08)/2	0.10		
		(8.18-7.15)x(2.05+2.08)/2	2.13		
		(8.79-8.18)x(2.03+2.05)/2	1.24		
		(9.27-8.79)x(2.02+2.03)/2	0.97		
		(10.19-9.27)x(1.88+2.02)/2	1.79		
		(10.35-10.19)x(1.86+1.88)/2	0.30		
		(10.44-10.35)x(1.86+1.86)/2	0.17		
		(11.43-10.44)x(1.84+1.86)/2	1.83		
		(12.08-11.43)x(1.79+1.84)/2	1.18		
		(12.52-12.08)x(1.77+1.79)/2	0.78		
		(13.36-12.52)x(1.46+1.77)/2	1.36		
		(13.54-13.36)x(1.39+1.46)/2	0.26		
		(13.60-13.54)x(1.37+1.39)/2	0.08		
		(14.35-13.60)x(0.82+1.37)/2	0.82		
		(14.68-14.35)x(0.64+0.82)/2	0.24		
		(15.16-14.68)x(0.44+0.64)/2	0.26		
		(15.71-15.16)x(0.09+0.44)/2	0.15		
		(15.16-15.71)x(-0.06+-0.41)/2	0.13		
		(14.68-15.16)x(0.14+-0.06)/2	-0.02		
		(14.35-14.68)x(0.32+0.14)/2	-0.08		
		(13.60-14.35)x(0.87+0.32)/2	-0.45		
		(13.54-13.60)x(0.89+0.87)/2	-0.05		
		(13.36-13.54)x(0.96+0.89)/2	-0.17		
		(12.52-13.36)x(1.27+0.96)/2	-0.94		
		(12.08-12.52)x(1.29+1.27)/2	-0.56		
		(11.43-12.08)x(1.34+1.29)/2	-0.85		
		(10.44-11.43)x(1.36+1.34)/2	-1.34		
		(10.35-10.44)x(1.36+1.36)/2	-0.12		
		(10.19-10.35)x(1.38+1.36)/2	-0.22		
		(9.27-10.19)x(1.52+1.38)/2	-1.33		
		(8.79-9.27)x(1.53+1.52)/2	-0.73		
		(8.18-8.79)x(1.55+1.53)/2	-0.94		
		(7.15-8.18)x(1.58+1.55)/2	-1.61		
		(7.10-7.15)x(1.58+1.58)/2	-0.08		
		(7.01-7.10)x(1.58+1.58)/2	-0.14		
		(6.02-7.01)x(1.59+1.58)/2	-1.57		
		(5.50-6.02)x(1.60+1.59)/2	-0.83		
		(4.93-5.50)x(1.60+1.60)/2	-0.91		
		(4.65-4.93)x(1.62+1.60)/2	-0.45		
		(3.85-4.65)x(1.62+1.62)/2	-1.30		
		(3.84-3.85)x(1.62+1.62)/2	-0.02		
		(2.77-3.84)x(1.70+1.62)/2	-1.78		
		(2.21-2.77)x(1.67+1.70)/2	-0.94		
		(1.68-2.21)x(1.66+1.67)/2	-0.88		
		(0.66-1.68)x(1.40+1.66)/2	-1.56		
		(0.60-0.66)x(1.39+1.40)/2	-0.08		
		(0.57-0.60)x(1.39+1.39)/2	-0.04		
		(-0.48-0.57)x(1.32+1.39)/2	-1.42		
		(-1.08--0.48)x(1.32+1.32)/2	-0.79		
		(-1.57--1.08)x(1.32+1.32)/2	-0.65		
		(-2.51--1.57)x(1.31+1.32)/2	-1.24		
		(-2.65--2.51)x(1.30+1.31)/2	-0.18		
		(-2.72--2.65)x(1.30+1.30)/2	-0.09		
		(-3.73--2.72)x(1.25+1.30)/2	-1.29		
		(-4.37--3.73)x(1.27+1.25)/2	-0.81		
		(-4.82--4.37)x(1.28+1.27)/2	-0.57		
		(-5.69--4.82)x(1.24+1.28)/2	-1.10		
		(-5.90--5.69)x(1.24+1.24)/2	-0.26		
		(-6.01--5.90)x(1.23+1.24)/2	-0.14		
		(-6.98--6.01)x(1.19+1.23)/2	-1.17		
		(-7.65--6.98)x(1.21+1.19)/2	-0.80		
		(-8.07--7.65)x(1.20+1.21)/2	-0.51		
		(-8.86--8.07)x(1.24+1.20)/2	-0.96		
		(-9.15--8.86)x(1.25+1.24)/2	-0.36		
		(-9.30--9.15)x(1.26+1.25)/2	-0.19		
		(-10.23--9.30)x(1.34+1.26)/2	-1.21		
		(-10.94--10.23)x(1.47+1.34)/2	-1.00		
		(-11.32--10.94)x(1.55+1.47)/2	-0.57		
		(-12.04--11.32)x(2.08+1.55)/2	-1.31		
		(-12.40--12.04)x(2.38+2.08)/2	-0.80		
		(-12.59--12.40)x(2.47+2.38)/2	-0.46		
		(-13.48--12.59)x(2.91+2.47)/2	-2.39		
		(-14.23--13.48)x(3.07+2.91)/2	-2.24		
		(-14.57--14.23)x(3.20+3.07)/2	-1.07		
		(-14.73--14.57)x(3.19+3.20)/2	-0.51		
		(-15.21--14.73)x(3.17+3.19)/2	-1.53		
		(-15.54--15.21)x(3.15+3.17)/2	-1.04		
		(-15.65--15.54)x(3.15+3.15)/2	-0.35		
		(-15.88--15.65)x(3.16+3.15)/2	-0.73		
		(-16.73--15.88)x(3.19+3.16)/2	-2.70		
		(-17.52--16.73)x(3.26+3.19)/2	-2.55		
		(-17.82--17.52)x(3.27+3.26)/2	-0.98		
		(-18.38--17.82)x(3.27+3.27)/2	-1.83		
		(-18.90--18.38)x(3.27+3.27)/2	-1.70		
				17.31	
61 900.00	BO1	(-17.55--18.30)x(4.01+4.11)/2	3.05		
		(-16.90--17.55)x(3.87+4.01)/2	2.56		
		(-16.46--16.90)x(3.75+3.87)/2	1.68		
		(-15.62--16.46)x(3.42+3.75)/2	3.01		
		(-15.38--15.62)x(3.35+3.42)/2	0.81		
		A RIPORTARE mq	11.11		

		CALCOLO DELLE AREE		Foglio n. 150
BONIFICA				
N. SEZIONE PROG.	FIG.	ELEMENTI DI CALCOLO	AREA ELEMENTARE mq	AREA FIGURA mq	NOTE
		RIPORTO mq	11.11		
		(-15.25--15.38)x(3.30+3.35)/2	0.43		
		(-14.29--15.25)x(3.05+3.30)/2	3.05		
		(-13.60--14.29)x(2.61+3.05)/2	1.95		
		(-13.21--13.60)x(2.42+2.61)/2	0.98		
		(-12.47--13.21)x(2.15+2.42)/2	1.69		
		(-12.12--12.47)x(2.00+2.15)/2	0.73		
		(-11.95--12.12)x(1.96+2.00)/2	0.34		
		(-11.04--11.95)x(1.84+1.96)/2	1.73		
		(-10.30--11.04)x(1.80+1.84)/2	1.35		
		(-9.96--10.30)x(1.78+1.80)/2	0.61		
		(-9.31--9.96)x(1.73+1.78)/2	1.14		
		(-8.87--9.31)x(1.70+1.73)/2	0.75		
		(-8.64--8.87)x(1.69+1.70)/2	0.39		
		(-7.79--8.64)x(1.64+1.69)/2	1.42		
		(-6.99--7.79)x(1.60+1.64)/2	1.30		
		(-6.70--6.99)x(1.59+1.60)/2	0.46		
		(-6.15--6.70)x(1.58+1.59)/2	0.87		
		(-5.62--6.15)x(1.57+1.58)/2	0.83		
		(-5.34--5.62)x(1.59+1.57)/2	0.44		
		(-4.54--5.34)x(1.60+1.59)/2	1.28		
		(-3.69--4.54)x(1.69+1.60)/2	1.40		
		(-3.45--3.69)x(1.72+1.69)/2	0.41		
		(-3.00--3.45)x(1.75+1.72)/2	0.78		
		(-2.37--3.00)x(1.78+1.75)/2	1.11		
		(-2.04--2.37)x(1.80+1.78)/2	0.59		
		(-1.28--2.04)x(1.83+1.80)/2	1.38		
		(-0.92--1.28)x(1.85+1.83)/2	0.66		
		(-0.20--0.92)x(1.89+1.85)/2	1.35		
		(0.16--0.20)x(1.91+1.89)/2	0.68		
		(0.88-0.16)x(1.95+1.91)/2	1.39		
		(1.26-0.88)x(1.97+1.95)/2	0.74		
		(1.97-1.26)x(2.01+1.97)/2	1.41		
		(2.91-1.97)x(2.05+2.01)/2	1.91		
		(3.05-2.91)x(2.06+2.05)/2	0.29		
		(3.31-3.05)x(2.06+2.06)/2	0.54		
		(4.14-3.31)x(2.05+2.06)/2	1.71		
		(4.57-4.14)x(2.04+2.05)/2	0.88		
		(5.22-4.57)x(2.04+2.04)/2	1.33		
		(6.22-5.22)x(2.02+2.04)/2	2.03		
		(6.30-6.22)x(2.02+2.02)/2	0.16		
		(6.47-6.30)x(2.01+2.02)/2	0.34		
		(7.39-6.47)x(1.98+2.01)/2	1.84		
		(7.87-7.39)x(1.96+1.98)/2	0.95		
		(8.47-7.87)x(1.93+1.96)/2	1.17		
		(9.52-8.47)x(1.89+1.93)/2	2.01		
		(9.56-9.52)x(1.88+1.89)/2	0.08		
		(9.63-9.56)x(1.88+1.88)/2	0.13		
		(10.64-9.63)x(1.83+1.88)/2	1.87		
		(11.17-10.64)x(1.76+1.83)/2	0.95		
		(11.72-11.17)x(1.66+1.76)/2	0.94		
		(12.78-11.72)x(1.62+1.66)/2	1.74		
		(12.81-12.78)x(1.61+1.62)/2	0.05		
		(12.82-12.81)x(1.61+1.61)/2	0.02		
		(13.79-12.82)x(1.44+1.61)/2	1.48		
		(12.82-13.79)x(1.11+0.94)/2	-0.99		
		(12.81-12.82)x(1.11+1.11)/2	-0.01		
		(12.78-12.81)x(1.12+1.11)/2	-0.03		
		(11.72-12.78)x(1.16+1.12)/2	-1.21		
		(11.17-11.72)x(1.26+1.16)/2	-0.67		
		(10.64-11.17)x(1.33+1.26)/2	-0.69		
		(9.63-10.64)x(1.38+1.33)/2	-1.37		
		(9.56-9.63)x(1.38+1.38)/2	-0.10		
		(9.52-9.56)x(1.39+1.38)/2	-0.06		
		(8.47-9.52)x(1.43+1.39)/2	-1.48		
		(7.87-8.47)x(1.46+1.43)/2	-0.87		
		(7.39-7.87)x(1.48+1.46)/2	-0.71		
		(6.47-7.39)x(1.51+1.48)/2	-1.38		
		(6.30-6.47)x(1.52+1.51)/2	-0.26		
		(6.22-6.30)x(1.52+1.52)/2	-0.12		
		(5.22-6.22)x(1.54+1.52)/2	-1.53		
		(4.57-5.22)x(1.54+1.54)/2	-1.00		
		(4.14-4.57)x(1.55+1.54)/2	-0.66		
		(3.31-4.14)x(1.56+1.55)/2	-1.29		
		(3.05-3.31)x(1.56+1.56)/2	-0.41		
		(2.91-3.05)x(1.55+1.56)/2	-0.22		
		(1.97-2.91)x(1.51+1.55)/2	-1.44		
		(1.26-1.97)x(1.47+1.51)/2	-1.06		
		(0.88-1.26)x(1.45+1.47)/2	-0.55		
		(0.16-0.88)x(1.41+1.45)/2	-1.03		
		(-0.20-0.16)x(1.39+1.41)/2	-0.50		
		(-0.92--0.20)x(1.35+1.39)/2	-0.99		
		(-1.28--0.92)x(1.33+1.35)/2	-0.48		
		(-2.04--1.28)x(1.30+1.33)/2	-1.00		
		(-2.37--2.04)x(1.28+1.30)/2	-0.43		
		(-3.00--2.37)x(1.25+1.28)/2	-0.80		
		(-3.45--3.00)x(1.22+1.25)/2	-0.56		
		(-3.69--3.45)x(1.19+1.22)/2	-0.29		
		(-4.54--3.69)x(1.10+1.19)/2	-0.97		
		(-5.34--4.54)x(1.09+1.10)/2	-0.88		
		(-5.62--5.34)x(1.07+1.09)/2	-0.30		
		(-6.15--5.62)x(1.08+1.07)/2	-0.57		
		(-6.70--6.15)x(1.09+1.08)/2	-0.60		
		(-6.99--6.70)x(1.10+1.09)/2	-0.32		
		(-7.79--6.99)x(1.14+1.10)/2	-0.90		
		(-8.64--7.79)x(1.19+1.14)/2	-0.99		
		(-8.87--8.64)x(1.20+1.19)/2	-0.27		
		(-9.31--8.87)x(1.23+1.20)/2	-0.53		
		(-9.96--9.31)x(1.28+1.23)/2	-0.82		
		(-10.30--9.96)x(1.30+1.28)/2	-0.44		
		(-11.04--10.30)x(1.34+1.30)/2	-0.98		
		(-11.95--11.04)x(1.46+1.34)/2	-1.27		
		(-12.12--11.95)x(1.50+1.46)/2	-0.25		
		(-12.47--12.12)x(1.65+1.50)/2	-0.55		
		(-13.21--12.47)x(1.92+1.65)/2	-1.32		
		A RIPORTARE mq	31.02		

		CALCOLO DELLE AREE		Foglio n. 151
BONIFICA				
N. SEZIONE PROG.	FIG.	ELEMENTI DI CALCOLO	AREA ELEMENTARE mq	AREA FIGURA mq	NOTE
		RIPORTO mq	31.02		
		(-13.60--13.21)x(2.11+1.92)/2	-0.79		
		(-14.29--13.60)x(2.55+2.11)/2	-1.61		
		(-15.25--14.29)x(2.80+2.55)/2	-2.57		
		(-15.38--15.25)x(2.85+2.80)/2	-0.37		
		(-15.62--15.38)x(2.92+2.85)/2	-0.69		
		(-16.46--15.62)x(3.25+2.92)/2	-2.59		
		(-16.90--16.46)x(3.37+3.25)/2	-1.46		
		(-17.55--16.90)x(3.51+3.37)/2	-2.24		
		(-18.30--17.55)x(3.61+3.51)/2	-2.67		
				16.03	
62 915.00	BO1	(-17.96--18.34)x(3.50+3.72)/2	1.37		
		(-17.30--17.96)x(3.10+3.50)/2	2.18		
		(-16.30--17.30)x(2.45+3.10)/2	2.78		
		(-16.22--16.30)x(2.39+2.45)/2	0.19		
		(-16.06--16.22)x(2.30+2.39)/2	0.38		
		(-15.13--16.06)x(1.86+2.30)/2	1.93		
		(-14.65--15.13)x(1.84+1.86)/2	0.89		
		(-14.05--14.65)x(1.77+1.84)/2	1.08		
		(-12.99--14.05)x(1.79+1.77)/2	1.89		
		(-12.97--12.99)x(1.79+1.79)/2	0.04		
		(-12.92--12.97)x(1.79+1.79)/2	0.09		
		(-11.88--12.92)x(1.80+1.79)/2	1.87		
		(-11.33--11.88)x(1.81+1.80)/2	0.99		
		(-10.80--11.33)x(1.82+1.81)/2	0.96		
		(-9.78--10.80)x(1.84+1.82)/2	1.87		
		(-9.71--9.78)x(1.84+1.84)/2	0.13		
		(-9.67--9.71)x(1.84+1.84)/2	0.07		
		(-8.63--9.67)x(1.81+1.84)/2	1.90		
		(-8.01--8.63)x(1.78+1.81)/2	1.11		
		(-7.54--8.01)x(1.74+1.78)/2	0.83		
		(-6.65--7.54)x(1.65+1.74)/2	1.51		
		(-6.46--6.65)x(1.63+1.65)/2	0.31		
		(-5.70--6.46)x(1.63+1.63)/2	1.24		
		(-5.37--5.70)x(1.61+1.63)/2	0.53		
		(-4.70--5.37)x(1.59+1.61)/2	1.07		
		(-4.29--4.70)x(1.58+1.59)/2	0.65		
		(-3.51--4.29)x(1.58+1.58)/2	1.23		
		(-3.20--3.51)x(1.59+1.58)/2	0.49		
		(-3.04--3.20)x(1.59+1.59)/2	0.25		
		(-2.12--3.04)x(1.59+1.59)/2	1.46		
		(-1.38--2.12)x(1.59+1.59)/2	1.18		
		(-1.03--1.38)x(1.59+1.59)/2	0.56		
		(-0.37--1.03)x(1.58+1.59)/2	1.05		
		(0.05--0.37)x(1.57+1.58)/2	0.66		
		(0.28-0.05)x(1.57+1.57)/2	0.36		
		(1.14-0.28)x(1.57+1.57)/2	1.35		
		(1.93-1.14)x(1.61+1.57)/2	1.26		
		(2.22-1.93)x(1.62+1.61)/2	0.47		
		(2.77-2.22)x(1.65+1.62)/2	0.90		
		(3.31-2.77)x(1.68+1.65)/2	0.90		
		(3.59-3.31)x(1.69+1.68)/2	0.47		
		(4.39-3.59)x(1.73+1.69)/2	1.37		
		(5.25-4.39)x(1.76+1.73)/2	1.50		
		(5.48-5.25)x(1.77+1.76)/2	0.41		
		(5.91-5.48)x(1.79+1.77)/2	0.77		
		(6.56-5.91)x(1.82+1.79)/2	1.17		
		(6.91-6.56)x(1.83+1.82)/2	0.64		
		(7.65-6.91)x(1.87+1.83)/2	1.37		
		(8.57-7.65)x(1.90+1.87)/2	1.73		
		(8.73-8.57)x(1.91+1.90)/2	0.30		
		(9.04-8.73)x(1.92+1.91)/2	0.59		
		(9.82-9.04)x(1.94+1.92)/2	1.51		
		(10.22-9.82)x(1.93+1.94)/2	0.77		
		(10.90-10.22)x(1.94+1.93)/2	1.32		
		(11.88-10.90)x(1.91+1.94)/2	1.89		
		(11.99-11.88)x(1.91+1.91)/2	0.21		
		(12.04-11.99)x(1.90+1.91)/2	0.10		
		(12.18-12.04)x(1.90+1.90)/2	0.27		
		(12.84-12.18)x(1.88+1.90)/2	1.25		
		(13.07-12.84)x(1.88+1.88)/2	0.43		
		(13.12-13.07)x(1.87+1.88)/2	0.09		
		(13.07-13.12)x(1.38+1.37)/2	-0.07		
		(12.84-13.07)x(1.38+1.38)/2	-0.32		
		(12.18-12.84)x(1.40+1.38)/2	-0.92		
		(12.04-12.18)x(1.40+1.40)/2	-0.20		
		(11.99-12.04)x(1.41+1.40)/2	-0.07		
		(11.88-11.99)x(1.41+1.41)/2	-0.16		
		(10.90-11.88)x(1.44+1.41)/2	-1.40		
		(10.22-10.90)x(1.43+1.44)/2	-0.98		
		(9.82-10.22)x(1.44+1.43)/2	-0.57		
		(9.04-9.82)x(1.42+1.44)/2	-1.12		
		(8.73-9.04)x(1.41+1.42)/2	-0.44		
		(8.57-8.73)x(1.40+1.41)/2	-0.22		
		(7.65-8.57)x(1.37+1.40)/2	-1.27		
		(6.91-7.65)x(1.33+1.37)/2	-1.00		
		(6.56-6.91)x(1.32+1.33)/2	-0.46		
		(5.91-6.56)x(1.29+1.32)/2	-0.85		
		(5.48-5.91)x(1.27+1.29)/2	-0.55		
		(5.25-5.48)x(1.26+1.27)/2	-0.29		
		(4.39-5.25)x(1.23+1.26)/2	-1.07		
		(3.59-4.39)x(1.19+1.23)/2	-0.97		
		(3.31-3.59)x(1.18+1.19)/2	-0.33		
		(2.77-3.31)x(1.15+1.18)/2	-0.63		
		(2.22-2.77)x(1.12+1.15)/2	-0.62		
		(1.93-2.22)x(1.11+1.12)/2	-0.32		
		(1.14-1.93)x(1.07+1.11)/2	-0.86		
		(0.28-1.14)x(1.07+1.07)/2	-0.92		
		(0.05-0.28)x(1.07+1.07)/2	-0.25		
		(-0.37-0.05)x(1.08+1.07)/2	-0.45		
		(-1.03--0.37)x(1.09+1.08)/2	-0.72		
		(-1.38--1.03)x(1.09+1.09)/2	-0.38		
		(-2.12--1.38)x(1.09+1.09)/2	-0.81		
		(-3.04--2.12)x(1.09+1.09)/2	-1.00		
		(-3.20--3.04)x(1.09+1.09)/2	-0.17		
		A RIPORTARE mq	37.75		

		CALCOLO DELLE AREE		Foglio n. 152
BONIFICA				
N. SEZIONE PROG.	FIG.	ELEMENTI DI CALCOLO	AREA ELEMENTARE mq	AREA FIGURA mq	NOTE
		RIPORTO mq	37.75		
		(-3.51--3.20)x(1.08+1.09)/2	-0.34		
		(-4.29--3.51)x(1.08+1.08)/2	-0.84		
		(-4.70--4.29)x(1.09+1.08)/2	-0.44		
		(-5.37--4.70)x(1.11+1.09)/2	-0.74		
		(-5.70--5.37)x(1.13+1.11)/2	-0.37		
		(-6.46--5.70)x(1.13+1.13)/2	-0.86		
		(-6.65--6.46)x(1.15+1.13)/2	-0.22		
		(-7.54--6.65)x(1.24+1.15)/2	-1.06		
		(-8.01--7.54)x(1.28+1.24)/2	-0.59		
		(-8.63--8.01)x(1.31+1.28)/2	-0.80		
		(-9.67--8.63)x(1.34+1.31)/2	-1.38		
		(-9.71--9.67)x(1.34+1.34)/2	-0.05		
		(-9.78--9.71)x(1.34+1.34)/2	-0.09		
		(-10.80--9.78)x(1.32+1.34)/2	-1.36		
		(-11.33--10.80)x(1.31+1.32)/2	-0.70		
		(-11.88--11.33)x(1.30+1.31)/2	-0.72		
		(-12.92--11.88)x(1.29+1.30)/2	-1.35		
		(-12.97--12.92)x(1.29+1.29)/2	-0.06		
		(-12.99--12.97)x(1.29+1.29)/2	-0.03		
		(-14.05--12.99)x(1.27+1.29)/2	-1.36		
		(-14.65--14.05)x(1.34+1.27)/2	-0.78		
		(-15.13--14.65)x(1.36+1.34)/2	-0.65		
		(-16.06--15.13)x(1.80+1.36)/2	-1.47		
		(-16.22--16.06)x(1.89+1.80)/2	-0.30		
		(-16.30--16.22)x(1.95+1.89)/2	-0.15		
		(-17.30--16.30)x(2.60+1.95)/2	-2.27		
		(-17.96--17.30)x(3.00+2.60)/2	-1.85		
		(-18.34--17.96)x(3.22+3.00)/2	-1.18		
				15.74	
63 930.00	B01	(-19.26--19.64)x(2.21+2.30)/2	0.86		
		(-19.06--19.26)x(2.17+2.21)/2	0.44		
		(-18.18--19.06)x(1.99+2.17)/2	1.83		
		(-17.40--18.18)x(1.90+1.99)/2	1.52		
		(-17.09--17.40)x(1.87+1.90)/2	0.58		
		(-16.52--17.09)x(1.83+1.87)/2	1.05		
		(-16.01--16.52)x(1.80+1.83)/2	0.93		
		(-15.73--16.01)x(1.81+1.80)/2	0.51		
		(-14.92--15.73)x(1.83+1.81)/2	1.47		
		(-14.07--14.92)x(1.86+1.83)/2	1.57		
		(-13.84--14.07)x(1.86+1.86)/2	0.43		
		(-13.40--13.84)x(1.85+1.86)/2	0.82		
		(-12.75--13.40)x(1.82+1.85)/2	1.19		
		(-12.40--12.75)x(1.80+1.82)/2	0.63		
		(-11.67--12.40)x(1.75+1.80)/2	1.30		
		(-11.31--11.67)x(1.75+1.75)/2	0.63		
		(-10.58--11.31)x(1.76+1.75)/2	1.28		
		(-10.28--10.58)x(1.77+1.76)/2	0.53		
		(-9.49--10.28)x(1.80+1.77)/2	1.41		
		(-9.07--9.49)x(1.80+1.80)/2	0.76		
		(-8.41--9.07)x(1.82+1.80)/2	1.19		
		(-7.41--8.41)x(1.81+1.82)/2	1.81		
		(-7.32--7.41)x(1.81+1.81)/2	0.16		
		(-7.16--7.32)x(1.80+1.81)/2	0.29		
		(-6.24--7.16)x(1.74+1.80)/2	1.63		
		(-5.74--6.24)x(1.71+1.74)/2	0.86		
		(-5.15--5.74)x(1.66+1.71)/2	0.99		
		(-4.08--5.15)x(1.60+1.66)/2	1.74		
		(-4.07--4.08)x(1.60+1.60)/2	0.02		
		(-4.04--4.07)x(1.60+1.60)/2	0.05		
		(-2.98--4.04)x(1.58+1.60)/2	1.69		
		(-2.41--2.98)x(1.60+1.58)/2	0.91		
		(-1.89--2.41)x(1.60+1.60)/2	0.83		
		(-0.92--1.89)x(1.72+1.60)/2	1.61		
		(-0.81--0.92)x(1.73+1.72)/2	0.19		
		(-0.75--0.81)x(1.73+1.73)/2	0.10		
		(0.28--0.75)x(1.81+1.73)/2	1.82		
		(0.92-0.28)x(1.82+1.81)/2	1.16		
		(1.36-0.92)x(1.84+1.82)/2	0.81		
		(2.20-1.36)x(1.84+1.84)/2	1.55		
		(2.45-2.20)x(1.85+1.84)/2	0.46		
		(2.58-2.45)x(1.85+1.85)/2	0.24		
		(3.53-2.58)x(1.85+1.85)/2	1.76		
		(4.25-3.53)x(1.86+1.85)/2	1.34		
		(4.62-4.25)x(1.86+1.86)/2	0.69		
		(5.32-4.62)x(1.87+1.86)/2	1.31		
		(5.70-5.32)x(1.88+1.87)/2	0.71		
		(5.91-5.70)x(1.89+1.88)/2	0.40		
		(6.79-5.91)x(1.92+1.89)/2	1.68		
		(7.21-6.79)x(1.94+1.92)/2	0.81		
		(7.88-7.21)x(1.94+1.94)/2	1.30		
		(8.44-7.88)x(1.96+1.94)/2	1.09		
		(8.96-8.44)x(1.98+1.96)/2	1.02		
		(9.24-8.96)x(1.99+1.98)/2	0.56		
		(10.05-9.24)x(2.00+1.99)/2	1.62		
		(10.91-10.05)x(2.00+2.00)/2	1.72		
		(11.13-10.91)x(2.00+2.00)/2	0.44		
		(11.56-11.13)x(1.95+2.00)/2	0.85		
		(12.22-11.56)x(1.86+1.95)/2	1.26		
		(12.57-12.22)x(1.85+1.86)/2	0.65		
		(13.30-12.57)x(1.80+1.85)/2	1.33		
		(14.24-13.30)x(1.71+1.80)/2	1.65		
		(14.39-14.24)x(1.71+1.71)/2	0.26		
		(14.68-14.39)x(1.62+1.71)/2	0.48		
		(15.47-14.68)x(1.35+1.62)/2	1.17		
		(15.90-15.47)x(1.05+1.35)/2	0.52		
		(16.56-15.90)x(0.64+1.05)/2	0.56		
		(17.57-16.56)x(0.10+0.64)/2	0.37		
		(17.65-17.57)x(0.05+0.10)/2	0.01		
		(17.80-17.65)x(0.03+0.05)/2	0.01		
		(18.73-17.80)x(-0.06+0.03)/2	-0.01		
		(19.23-18.73)x(-0.06+-0.06)/2	-0.03		
		(19.82-19.23)x(-0.05+-0.06)/2	-0.03		
		(20.90-19.82)x(-0.07+-0.05)/2	-0.06		
		(20.92-20.90)x(-0.07+-0.07)/2	-0.00		
		A RIPORTARE mq	65.29		

		CALCOLO DELLE AREE		Foglio n. 153
BONIFICA				
N. SEZIONE PROG.	FIG.	ELEMENTI DI CALCOLO	AREA ELEMENTARE mq	AREA FIGURA mq	NOTE
		RIPORTO mq	65.29		
		(21.99-20.92)x(0.03+-0.07)/2	-0.02		
		(22.56-21.99)x(0.20+0.03)/2	0.07		
		(23.07-22.56)x(0.36+0.20)/2	0.14		
		(24.04-23.07)x(0.80+0.36)/2	0.56		
		(24.16-24.04)x(0.85+0.80)/2	0.10		
		(24.22-24.16)x(0.89+0.85)/2	0.05		
		(25.24-24.22)x(1.24+0.89)/2	1.09		
		(25.74-25.24)x(1.46+1.24)/2	0.68		
		(26.33-25.74)x(1.68+1.46)/2	0.93		
		(27.16-26.33)x(1.77+1.68)/2	1.43		
		(27.42-27.16)x(1.80+1.77)/2	0.46		
		(27.55-27.42)x(1.83+1.80)/2	0.24		
		(27.82-27.55)x(1.89+1.83)/2	0.50		
		(27.55-27.82)x(1.33+1.39)/2	-0.37		
		(27.42-27.55)x(1.30+1.33)/2	-0.17		
		(27.16-27.42)x(1.27+1.30)/2	-0.33		
		(26.33-27.16)x(1.18+1.27)/2	-1.02		
		(25.74-26.33)x(0.96+1.18)/2	-0.63		
		(25.24-25.74)x(0.74+0.96)/2	-0.42		
		(24.22-25.24)x(0.39+0.74)/2	-0.58		
		(24.16-24.22)x(0.35+0.39)/2	-0.02		
		(24.04-24.16)x(0.30+0.35)/2	-0.04		
		(23.07-24.04)x(-0.14+0.30)/2	-0.08		
		(22.56-23.07)x(-0.30+-0.14)/2	0.11		
		(21.99-22.56)x(-0.47+-0.30)/2	0.22		
		(20.92-21.99)x(-0.57+-0.47)/2	0.56		
		(20.90-20.92)x(-0.57+-0.57)/2	0.01		
		(19.82-20.90)x(-0.55+-0.57)/2	0.60		
		(19.23-19.82)x(-0.56+-0.55)/2	0.33		
		(18.73-19.23)x(-0.56+-0.56)/2	0.28		
		(17.80-18.73)x(-0.47+-0.56)/2	0.48		
		(17.65-17.80)x(-0.45+-0.47)/2	0.07		
		(17.57-17.65)x(-0.40+-0.45)/2	0.03		
		(16.56-17.57)x(0.14+-0.40)/2	0.13		
		(15.90-16.56)x(0.55+0.14)/2	-0.23		
		(15.47-15.90)x(0.85+0.55)/2	-0.30		
		(14.68-15.47)x(1.12+0.85)/2	-0.78		
		(14.39-14.68)x(1.21+1.12)/2	-0.34		
		(14.24-14.39)x(1.21+1.21)/2	-0.18		
		(13.30-14.24)x(1.30+1.21)/2	-1.18		
		(12.57-13.30)x(1.35+1.30)/2	-0.97		
		(12.22-12.57)x(1.36+1.35)/2	-0.47		
		(11.56-12.22)x(1.45+1.36)/2	-0.93		
		(11.13-11.56)x(1.50+1.45)/2	-0.63		
		(10.91-11.13)x(1.50+1.50)/2	-0.33		
		(10.05-10.91)x(1.50+1.50)/2	-1.29		
		(9.24-10.05)x(1.49+1.50)/2	-1.21		
		(8.96-9.24)x(1.48+1.49)/2	-0.42		
		(8.44-8.96)x(1.46+1.48)/2	-0.76		
		(7.88-8.44)x(1.44+1.46)/2	-0.81		
		(7.21-7.88)x(1.44+1.44)/2	-0.96		
		(6.79-7.21)x(1.42+1.44)/2	-0.60		
		(5.91-6.79)x(1.39+1.42)/2	-1.24		
		(5.70-5.91)x(1.38+1.39)/2	-0.29		
		(5.32-5.70)x(1.37+1.38)/2	-0.52		
		(4.62-5.32)x(1.36+1.37)/2	-0.96		
		(4.25-4.62)x(1.36+1.36)/2	-0.50		
		(3.53-4.25)x(1.35+1.36)/2	-0.98		
		(2.58-3.53)x(1.35+1.35)/2	-1.28		
		(2.45-2.58)x(1.35+1.35)/2	-0.18		
		(2.20-2.45)x(1.34+1.35)/2	-0.34		
		(1.36-2.20)x(1.34+1.34)/2	-1.13		
		(0.92-1.36)x(1.32+1.34)/2	-0.59		
		(0.28-0.92)x(1.31+1.32)/2	-0.84		
		(-0.75-0.28)x(1.23+1.31)/2	-1.31		
		(-0.81--0.75)x(1.23+1.23)/2	-0.07		
		(-0.92--0.81)x(1.22+1.23)/2	-0.13		
		(-1.89--0.92)x(1.10+1.22)/2	-1.13		
		(-2.41--1.89)x(1.10+1.10)/2	-0.57		
		(-2.98--2.41)x(1.08+1.10)/2	-0.62		
		(-4.04--2.98)x(1.10+1.08)/2	-1.16		
		(-4.07--4.04)x(1.10+1.10)/2	-0.03		
		(-4.08--4.07)x(1.10+1.10)/2	-0.01		
		(-5.15--4.08)x(1.16+1.10)/2	-1.21		
		(-5.74--5.15)x(1.21+1.16)/2	-0.70		
		(-6.24--5.74)x(1.24+1.21)/2	-0.61		
		(-7.16--6.24)x(1.30+1.24)/2	-1.17		
		(-7.32--7.16)x(1.31+1.30)/2	-0.21		
		(-7.41--7.32)x(1.31+1.31)/2	-0.12		
		(-8.41--7.41)x(1.32+1.31)/2	-1.31		
		(-9.07--8.41)x(1.30+1.32)/2	-0.86		
		(-9.49--9.07)x(1.30+1.30)/2	-0.55		
		(-10.28--9.49)x(1.27+1.30)/2	-1.02		
		(-10.58--10.28)x(1.26+1.27)/2	-0.38		
		(-11.31--10.58)x(1.25+1.26)/2	-0.92		
		(-11.67--11.31)x(1.25+1.25)/2	-0.45		
		(-12.40--11.67)x(1.30+1.25)/2	-0.93		
		(-12.75--12.40)x(1.32+1.30)/2	-0.46		
		(-13.40--12.75)x(1.35+1.32)/2	-0.87		
		(-13.84--13.40)x(1.36+1.35)/2	-0.60		
		(-14.07--13.84)x(1.36+1.36)/2	-0.31		
		(-14.92--14.07)x(1.33+1.36)/2	-1.14		
		(-15.73--14.92)x(1.31+1.33)/2	-1.07		
		(-16.01--15.73)x(1.30+1.31)/2	-0.37		
		(-16.52--16.01)x(1.33+1.30)/2	-0.67		
		(-17.09--16.52)x(1.37+1.33)/2	-0.77		
		(-17.40--17.09)x(1.40+1.37)/2	-0.43		
		(-18.18--17.40)x(1.49+1.40)/2	-1.13		
		(-19.06--18.18)x(1.67+1.49)/2	-1.39		
		(-19.26--19.06)x(1.71+1.67)/2	-0.34		
		(-19.64--19.26)x(1.80+1.71)/2	-0.67		
				23.75	
64 945.00	BO1	(-18.53--18.68)x(2.32+2.38)/2 (-18.00--18.53)x(2.16+2.32)/2	0.35 1.19		
		A RIPORTARE mq	1.54		

	CALCOLO DELLE AREE		Foglio n. 154

BONIFICA

N. SEZIONE PROG.	FIG.	ELEMENTI DI CALCOLO	AREA ELEMENTARE mq	AREA FIGURA mq	NOTE
		RIPORTO mq	1.54		
		(-17.01--18.00)x(2.03+2.16)/2	2.07		
		(-16.91--17.01)x(2.02+2.03)/2	0.20		
		(-16.13--16.91)x(1.97+2.02)/2	1.56		
		(-15.83--16.13)x(1.96+1.97)/2	0.59		
		(-15.19--15.83)x(1.95+1.96)/2	1.25		
		(-14.74--15.19)x(1.95+1.95)/2	0.88		
		(-13.91--14.74)x(1.94+1.95)/2	1.61		
		(-13.65--13.91)x(1.94+1.94)/2	0.50		
		(-13.52--13.65)x(1.94+1.94)/2	0.25		
		(-12.57--13.52)x(1.94+1.94)/2	1.84		
		(-11.84--12.57)x(1.92+1.94)/2	1.41		
		(-11.48--11.84)x(1.92+1.92)/2	0.69		
		(-10.80--11.48)x(1.90+1.92)/2	1.30		
		(-10.39--10.80)x(1.90+1.90)/2	0.78		
		(-10.17--10.39)x(1.88+1.90)/2	0.42		
		(-9.31--10.17)x(1.86+1.88)/2	1.61		
		(-8.50--9.31)x(1.80+1.86)/2	1.48		
		(-8.22--8.50)x(1.79+1.80)/2	0.50		
		(-7.70--8.22)x(1.75+1.79)/2	0.92		
		(-7.13--7.70)x(1.72+1.75)/2	0.99		
		(-6.83--7.13)x(1.71+1.72)/2	0.51		
		(-6.05--6.83)x(1.68+1.71)/2	1.32		
		(-5.16--6.05)x(1.64+1.68)/2	1.48		
		(-4.96--5.16)x(1.64+1.64)/2	0.33		
		(-4.60--4.96)x(1.64+1.64)/2	0.59		
		(-3.88--4.60)x(1.63+1.64)/2	1.18		
		(-3.48--3.88)x(1.63+1.63)/2	0.65		
		(-2.79--3.48)x(1.62+1.63)/2	1.12		
		(-1.81--2.79)x(1.66+1.62)/2	1.61		
		(-1.70--1.81)x(1.66+1.66)/2	0.18		
		(-1.50--1.70)x(1.67+1.66)/2	0.33		
		(-0.62--1.50)x(1.71+1.67)/2	1.49		
		(-0.14--0.62)x(1.73+1.71)/2	0.83		
		(0.47--0.14)x(1.76+1.73)/2	1.06		
		(1.53-0.47)x(1.79+1.76)/2	1.88		
		(1.56-1.53)x(1.79+1.79)/2	0.05		
		(1.57-1.56)x(1.79+1.79)/2	0.02		
		(1.60-1.57)x(1.79+1.79)/2	0.05		
		(2.37-1.60)x(1.81+1.79)/2	1.39		
		(2.64-2.37)x(1.82+1.81)/2	0.49		
		(3.20-2.64)x(1.85+1.82)/2	1.03		
		(3.73-3.20)x(1.90+1.85)/2	0.99		
		(4.71-3.73)x(2.03+1.90)/2	1.93		
		(4.82-4.71)x(2.07+2.03)/2	0.23		
		(4.87-4.82)x(2.11+2.07)/2	0.10		
		(5.90-4.87)x(2.96+2.11)/2	2.61		
		(6.55-5.90)x(3.65+2.96)/2	2.15		
		(6.99-6.55)x(4.20+3.65)/2	1.73		
		(7.81-6.99)x(4.34+4.20)/2	3.50		
		(8.07-7.81)x(4.35+4.34)/2	1.13		
		(8.22-8.07)x(4.34+4.35)/2	0.65		
		(9.16-8.22)x(4.28+4.34)/2	4.05		
		(9.89-9.16)x(4.15+4.28)/2	3.08		
		(10.25-9.89)x(4.10+4.15)/2	1.48		
		(10.91-10.25)x(3.58+4.10)/2	2.53		
		(11.33-10.91)x(3.23+3.58)/2	1.43		
		(11.56-11.33)x(3.05+3.23)/2	0.72		
		(12.42-11.56)x(2.22+3.05)/2	2.27		
		(13.23-12.42)x(1.90+2.22)/2	1.67		
		(13.51-13.23)x(1.76+1.90)/2	0.51		
		(14.01-13.51)x(1.75+1.76)/2	0.88		
		(14.59-14.01)x(1.74+1.75)/2	1.01		
		(14.91-14.59)x(1.66+1.74)/2	0.54		
		(15.68-14.91)x(1.53+1.66)/2	1.23		
		(16.58-15.68)x(1.16+1.53)/2	1.21		
		(16.76-16.58)x(1.10+1.16)/2	0.20		
		(17.11-16.76)x(0.84+1.10)/2	0.34		
		(17.85-17.11)x(0.29+0.84)/2	0.42		
		(18.25-17.85)x(0.18+0.29)/2	0.09		
		(18.94-18.25)x(-0.08+0.18)/2	0.03		
		(19.92-18.94)x(-0.08+-0.08)/2	-0.08		
		(20.02-19.92)x(-0.08+-0.08)/2	-0.01		
		(20.07-20.02)x(-0.08+-0.08)/2	-0.00		
		(20.22-20.07)x(-0.08+-0.08)/2	-0.01		
		(20.88-20.22)x(-0.06+-0.08)/2	-0.05		
		(21.11-20.88)x(-0.06+-0.06)/2	-0.01		
		(21.59-21.11)x(0.00+-0.06)/2	-0.01		
		(22.20-21.59)x(0.05+0.00)/2	0.02		
		(23.26-22.20)x(0.33+0.05)/2	0.20		
		(23.28-23.26)x(0.34+0.33)/2	0.01		
		(23.32-23.28)x(0.34+0.34)/2	0.01		
		(24.37-23.32)x(0.41+0.34)/2	0.39		
		(24.94-24.37)x(0.68+0.41)/2	0.31		
		(25.46-24.94)x(0.86+0.68)/2	0.40		
		(26.42-25.46)x(1.52+0.86)/2	1.14		
		(26.54-26.42)x(1.60+1.52)/2	0.19		
		(26.61-26.54)x(1.60+1.60)/2	0.11		
		(27.63-26.61)x(1.79+1.60)/2	1.73		
		(28.28-27.63)x(1.92+1.79)/2	1.21		
		(28.71-28.28)x(2.00+1.92)/2	0.84		
		(29.07-28.71)x(2.03+2.00)/2	0.73		
		(28.71-29.07)x(1.50+1.53)/2	-0.55		
		(28.28-28.71)x(1.42+1.50)/2	-0.63		
		(27.63-28.28)x(1.29+1.42)/2	-0.88		
		(26.61-27.63)x(1.10+1.29)/2	-1.22		
		(26.54-26.61)x(1.10+1.10)/2	-0.08		
		(26.42-26.54)x(1.02+1.10)/2	-0.13		
		(25.46-26.42)x(0.36+1.02)/2	-0.66		
		(24.94-25.46)x(0.18+0.36)/2	-0.14		
		(24.37-24.94)x(-0.09+0.18)/2	-0.03		
		(23.32-24.37)x(-0.16+-0.09)/2	0.13		
		(23.28-23.32)x(-0.16+-0.16)/2	0.01		
		(23.26-23.28)x(-0.17+-0.16)/2	0.00		
		(22.20-23.26)x(-0.45+-0.17)/2	0.33		
		A RIPORTARE mq	81.96		

		CALCOLO DELLE AREE		Foglio n. 155
BONIFICA				

N. SEZIONE PROG.	FIG.	ELEMENTI DI CALCOLO	AREA ELEMENTARE mq	AREA FIGURA mq	NOTE
		RIPORTO mq	81.96		
		(21.59-22.20)x(-0.50+-0.45)/2	0.29		
		(21.11-21.59)x(-0.56+-0.50)/2	0.25		
		(20.88-21.11)x(-0.56+-0.56)/2	0.13		
		(20.22-20.88)x(-0.58+-0.56)/2	0.38		
		(20.07-20.22)x(-0.58+-0.58)/2	0.09		
		(20.02-20.07)x(-0.58+-0.58)/2	0.03		
		(19.92-20.02)x(-0.58+-0.58)/2	0.06		
		(18.94-19.92)x(-0.58+-0.58)/2	0.57		
		(18.25-18.94)x(-0.32+-0.58)/2	0.31		
		(17.85-18.25)x(-0.21+-0.32)/2	0.11		
		(17.11-17.85)x(0.34+-0.21)/2	-0.05		
		(16.76-17.11)x(0.60+0.34)/2	-0.16		
		(16.58-16.76)x(0.66+0.60)/2	-0.11		
		(15.68-16.58)x(1.03+0.66)/2	-0.76		
		(14.91-15.68)x(1.16+1.03)/2	-0.84		
		(14.59-14.91)x(1.24+1.16)/2	-0.38		
		(14.01-14.59)x(1.25+1.24)/2	-0.72		
		(13.51-14.01)x(1.26+1.25)/2	-0.63		
		(13.23-13.51)x(1.40+1.26)/2	-0.37		
		(12.42-13.23)x(1.72+1.40)/2	-1.26		
		(11.56-12.42)x(2.55+1.72)/2	-1.84		
		(11.33-11.56)x(2.73+2.55)/2	-0.61		
		(10.91-11.33)x(3.08+2.73)/2	-1.22		
		(10.25-10.91)x(3.60+3.08)/2	-2.20		
		(9.89-10.25)x(3.65+3.60)/2	-1.30		
		(9.16-9.89)x(3.78+3.65)/2	-2.71		
		(8.22-9.16)x(3.84+3.78)/2	-3.58		
		(8.07-8.22)x(3.85+3.84)/2	-0.58		
		(7.81-8.07)x(3.84+3.85)/2	-1.00		
		(6.99-7.81)x(3.70+3.84)/2	-3.09		
		(6.55-6.99)x(3.15+3.70)/2	-1.51		
		(5.90-6.55)x(2.46+3.15)/2	-1.82		
		(4.87-5.90)x(1.61+2.46)/2	-2.10		
		(4.82-4.87)x(1.57+1.61)/2	-0.08		
		(4.71-4.82)x(1.53+1.57)/2	-0.17		
		(3.73-4.71)x(1.40+1.53)/2	-1.44		
		(3.20-3.73)x(1.35+1.40)/2	-0.73		
		(2.64-3.20)x(1.32+1.35)/2	-0.75		
		(2.37-2.64)x(1.31+1.32)/2	-0.36		
		(1.60-2.37)x(1.29+1.31)/2	-1.00		
		(1.57-1.60)x(1.29+1.29)/2	-0.04		
		(1.56-1.57)x(1.29+1.29)/2	-0.01		
		(1.53-1.56)x(1.29+1.29)/2	-0.04		
		(0.47-1.53)x(1.26+1.29)/2	-1.35		
		(-0.14-0.47)x(1.23+1.26)/2	-0.76		
		(-0.62--0.14)x(1.21+1.23)/2	-0.59		
		(-1.50--0.62)x(1.17+1.21)/2	-1.05		
		(-1.70--1.50)x(1.16+1.17)/2	-0.23		
		(-1.81--1.70)x(1.16+1.16)/2	-0.13		
		(-2.79--1.81)x(1.12+1.16)/2	-1.12		
		(-3.48--2.79)x(1.13+1.12)/2	-0.78		
		(-3.88--3.48)x(1.13+1.13)/2	-0.45		
		(-4.60--3.88)x(1.14+1.13)/2	-0.82		
		(-4.96--4.60)x(1.14+1.14)/2	-0.41		
		(-5.16--4.96)x(1.14+1.14)/2	-0.23		
		(-6.05--5.16)x(1.18+1.14)/2	-1.03		
		(-6.83--6.05)x(1.21+1.18)/2	-0.93		
		(-7.13--6.83)x(1.22+1.21)/2	-0.36		
		(-7.70--7.13)x(1.25+1.22)/2	-0.70		
		(-8.22--7.70)x(1.29+1.25)/2	-0.66		
		(-8.50--8.22)x(1.30+1.29)/2	-0.36		
		(-9.31--8.50)x(1.36+1.30)/2	-1.08		
		(-10.17--9.31)x(1.38+1.36)/2	-1.18		
		(-10.39--10.17)x(1.40+1.38)/2	-0.31		
		(-10.80--10.39)x(1.40+1.40)/2	-0.57		
		(-11.48--10.80)x(1.42+1.40)/2	-0.96		
		(-11.84--11.48)x(1.42+1.42)/2	-0.51		
		(-12.57--11.84)x(1.44+1.42)/2	-1.04		
		(-13.52--12.57)x(1.44+1.44)/2	-1.37		
		(-13.65--13.52)x(1.44+1.44)/2	-0.19		
		(-13.91--13.65)x(1.44+1.44)/2	-0.37		
		(-14.74--13.91)x(1.45+1.44)/2	-1.20		
		(-15.19--14.74)x(1.45+1.45)/2	-0.65		
		(-15.83--15.19)x(1.46+1.45)/2	-0.93		
		(-16.13--15.83)x(1.47+1.46)/2	-0.44		
		(-16.91--16.13)x(1.52+1.47)/2	-1.17		
		(-17.01--16.91)x(1.53+1.52)/2	-0.15		
		(-18.00--17.01)x(1.66+1.53)/2	-1.58		
		(-18.53--18.00)x(1.82+1.66)/2	-0.92		
		(-18.68--18.53)x(1.88+1.82)/2	-0.28		
				23.86	
65 960.00	B01	(-15.67--15.82)x(3.82+3.83)/2	0.57		
		(-14.67--15.67)x(3.59+3.82)/2	3.71		
		(-14.59--14.67)x(3.57+3.59)/2	0.29		
		(-14.43--14.59)x(3.54+3.57)/2	0.57		
		(-13.50--14.43)x(3.17+3.54)/2	3.12		
		(-12.99--13.50)x(2.94+3.17)/2	1.56		
		(-12.41--12.99)x(2.69+2.94)/2	1.63		
		(-11.35--12.41)x(2.37+2.69)/2	2.68		
		(-11.32--11.35)x(2.37+2.37)/2	0.07		
		(-11.31--11.32)x(2.36+2.37)/2	0.02		
		(-10.24--11.31)x(2.21+2.36)/2	2.44		
		(-9.63--10.24)x(2.12+2.21)/2	1.32		
		(-9.15--9.63)x(2.05+2.12)/2	1.00		
		(-8.27--9.15)x(1.90+2.05)/2	1.74		
		(-8.06--8.27)x(1.87+1.90)/2	0.40		
		(-7.95--8.06)x(1.86+1.87)/2	0.21		
		(-6.98--7.95)x(1.77+1.86)/2	1.76		
		(-6.27--6.98)x(1.77+1.77)/2	1.26		
		(-5.89--6.27)x(1.78+1.77)/2	0.67		
		(-5.18--5.89)x(1.82+1.78)/2	1.28		
		(-4.80--5.18)x(1.83+1.82)/2	0.69		
		(-4.60--4.80)x(1.87+1.83)/2	0.37		
		(-3.71--4.60)x(2.00+1.87)/2	1.72		
		A RIPORTARE mq	29.08		

	CALCOLO DELLE AREE		Foglio n. 156

BONIFICA

N. SEZIONE PROG.	FIG.	ELEMENTI DI CALCOLO	AREA ELEMENTARE mq	AREA FIGURA mq	NOTE
		RIPORTO mq	29.08		
		(-3.29--3.71)x(2.03+2.00)/2	0.85		
		(-2.63--3.29)x(2.19+2.03)/2	1.39		
		(-2.10--2.63)x(2.26+2.19)/2	1.18		
		(-1.69--2.10)x(2.30+2.26)/2	0.93		
		(-1.54--1.69)x(2.34+2.30)/2	0.35		
		(-0.88--1.54)x(2.42+2.34)/2	1.57		
		(-0.45--0.88)x(2.51+2.42)/2	1.06		
		(-0.08--0.45)x(2.58+2.51)/2	0.94		
		(0.63--0.08)x(2.74+2.58)/2	1.89		
		(0.73-0.63)x(2.76+2.74)/2	0.27		
		(0.99-0.73)x(2.82+2.76)/2	0.73		
		(1.72-0.99)x(2.98+2.82)/2	2.12		
		(2.12-1.72)x(3.03+2.98)/2	1.20		
		(2.81-2.12)x(3.12+3.03)/2	2.12		
		(3.80-2.81)x(3.14+3.12)/2	3.10		
		(3.90-3.80)x(3.15+3.14)/2	0.31		
		(4.07-3.90)x(3.17+3.15)/2	0.54		
		(4.98-4.07)x(3.32+3.17)/2	2.95		
		(5.48-4.98)x(3.47+3.32)/2	1.70		
		(6.07-5.48)x(3.64+3.47)/2	2.10		
		(7.16-6.07)x(3.81+3.64)/2	4.06		
		(8.24-7.16)x(3.76+3.81)/2	4.09		
		(8.84-8.24)x(3.72+3.76)/2	2.24		
		(9.33-8.84)x(3.64+3.72)/2	1.80		
		(10.24-9.33)x(3.48+3.64)/2	3.24		
		(10.42-10.24)x(3.43+3.48)/2	0.62		
		(10.51-10.42)x(3.38+3.43)/2	0.31		
		(11.50-10.51)x(2.95+3.38)/2	3.13		
		(12.19-11.50)x(2.52+2.95)/2	1.89		
		(12.59-12.19)x(2.32+2.52)/2	0.97		
		(13.32-12.59)x(1.88+2.32)/2	1.53		
		(13.68-13.32)x(1.67+1.88)/2	0.64		
		(13.87-13.68)x(1.67+1.67)/2	0.32		
		(14.77-13.87)x(1.60+1.67)/2	1.47		
		(15.19-14.77)x(1.57+1.60)/2	0.67		
		(15.85-15.19)x(1.45+1.57)/2	1.00		
		(16.41-15.85)x(1.27+1.45)/2	0.76		
		(16.94-16.41)x(1.07+1.27)/2	0.62		
		(17.23-16.94)x(0.88+1.07)/2	0.28		
		(18.03-17.23)x(0.32+0.88)/2	0.48		
		(18.91-18.03)x(0.00+0.32)/2	0.14		
		(19.11-18.91)x(-0.08+0.00)/2	-0.01		
		(19.49-19.11)x(-0.09+-0.08)/2	-0.03		
		(20.20-19.49)x(-0.08+-0.09)/2	-0.06		
		(20.59-20.20)x(-0.08+-0.08)/2	-0.03		
		(21.29-20.59)x(-0.07+-0.08)/2	-0.05		
		(22.27-21.29)x(-0.08+-0.07)/2	-0.07		
		(22.38-22.27)x(-0.08+-0.08)/2	-0.01		
		(22.58-22.38)x(-0.07+-0.08)/2	-0.01		
		(23.46-22.58)x(-0.00+-0.07)/2	-0.03		
		(23.94-23.46)x(0.15+-0.00)/2	0.04		
		(24.55-23.94)x(0.31+0.15)/2	0.14		
		(25.62-24.55)x(0.71+0.31)/2	0.55		
		(25.64-25.62)x(0.72+0.71)/2	0.01		
		(25.66-25.64)x(0.73+0.72)/2	0.01		
		(26.72-25.66)x(1.39+0.73)/2	1.12		
		(27.30-26.72)x(1.62+1.39)/2	0.87		
		(27.81-27.30)x(1.78+1.62)/2	0.87		
		(28.75-27.81)x(2.01+1.78)/2	1.78		
		(28.90-28.75)x(2.04+2.01)/2	0.30		
		(28.98-28.90)x(2.04+2.04)/2	0.16		
		(29.34-28.98)x(2.06+2.04)/2	0.74		
		(28.98-29.34)x(1.54+1.56)/2	-0.56		
		(28.90-28.98)x(1.54+1.54)/2	-0.12		
		(28.75-28.90)x(1.51+1.54)/2	-0.23		
		(27.81-28.75)x(1.28+1.51)/2	-1.31		
		(27.30-27.81)x(1.12+1.28)/2	-0.61		
		(26.72-27.30)x(0.89+1.12)/2	-0.58		
		(25.66-26.72)x(0.23+0.89)/2	-0.59		
		(25.64-25.66)x(0.22+0.23)/2	-0.00		
		(25.62-25.64)x(0.21+0.22)/2	-0.00		
		(24.55-25.62)x(-0.19+0.21)/2	-0.01		
		(23.94-24.55)x(-0.35+-0.19)/2	0.16		
		(23.46-23.94)x(-0.50+-0.35)/2	0.20		
		(22.58-23.46)x(-0.57+-0.50)/2	0.47		
		(22.38-22.58)x(-0.58+-0.57)/2	0.11		
		(22.27-22.38)x(-0.58+-0.58)/2	0.06		
		(21.29-22.27)x(-0.57+-0.58)/2	0.56		
		(20.59-21.29)x(-0.58+-0.57)/2	0.40		
		(20.20-20.59)x(-0.58+-0.58)/2	0.23		
		(19.49-20.20)x(-0.59+-0.58)/2	0.42		
		(19.11-19.49)x(-0.58+-0.59)/2	0.22		
		(18.91-19.11)x(-0.50+-0.58)/2	0.11		
		(18.03-18.91)x(-0.18+-0.50)/2	0.30		
		(17.23-18.03)x(0.38+-0.18)/2	-0.08		
		(16.94-17.23)x(0.57+0.38)/2	-0.14		
		(16.41-16.94)x(0.77+0.57)/2	-0.36		
		(15.85-16.41)x(0.95+0.77)/2	-0.48		
		(15.19-15.85)x(1.07+0.95)/2	-0.67		
		(14.77-15.19)x(1.10+1.07)/2	-0.46		
		(13.87-14.77)x(1.17+1.10)/2	-1.02		
		(13.68-13.87)x(1.17+1.17)/2	-0.22		
		(13.32-13.68)x(1.38+1.17)/2	-0.46		
		(12.59-13.32)x(1.82+1.38)/2	-1.17		
		(12.19-12.59)x(2.02+1.82)/2	-0.77		
		(11.50-12.19)x(2.45+2.02)/2	-1.54		
		(10.51-11.50)x(2.88+2.45)/2	-2.64		
		(10.42-10.51)x(2.93+2.88)/2	-0.26		
		(10.24-10.42)x(2.98+2.93)/2	-0.53		
		(9.33-10.24)x(3.14+2.98)/2	-2.78		
		(8.84-9.33)x(3.22+3.14)/2	-1.56		
		(8.24-8.84)x(3.26+3.22)/2	-1.94		
		(7.16-8.24)x(3.31+3.26)/2	-3.55		
		(6.07-7.16)x(3.14+3.31)/2	-3.52		
		A RIPORTARE mq	68.01		

		CALCOLO DELLE AREE		Foglio n. 157
BONIFICA				
N. SEZIONE PROG.	FIG.	ELEMENTI DI CALCOLO	AREA ELEMENTARE mq	AREA FIGURA mq	NOTE
		RIPORTO mq	68.01		
		(5.48-6.07)x(2.97+3.14)/2	-1.80		
		(4.98-5.48)x(2.82+2.97)/2	-1.45		
		(4.07-4.98)x(2.67+2.82)/2	-2.50		
		(3.90-4.07)x(2.65+2.67)/2	-0.45		
		(3.80-3.90)x(2.64+2.65)/2	-0.26		
		(2.81-3.80)x(2.62+2.64)/2	-2.60		
		(2.12-2.81)x(2.53+2.62)/2	-1.78		
		(1.72-2.12)x(2.48+2.53)/2	-1.00		
		(0.99-1.72)x(2.32+2.48)/2	-1.75		
		(0.73-0.99)x(2.26+2.32)/2	-0.60		
		(0.63-0.73)x(2.24+2.26)/2	-0.22		
		(-0.08-0.63)x(2.08+2.24)/2	-1.53		
		(-0.45--0.08)x(2.01+2.08)/2	-0.76		
		(-0.88--0.45)x(1.92+2.01)/2	-0.84		
		(-1.54--0.88)x(1.84+1.92)/2	-1.24		
		(-1.69--1.54)x(1.80+1.84)/2	-0.27		
		(-2.10--1.69)x(1.76+1.80)/2	-0.73		
		(-2.63--2.10)x(1.69+1.76)/2	-0.91		
		(-3.29--2.63)x(1.53+1.69)/2	-1.06		
		(-3.71--3.29)x(1.50+1.53)/2	-0.64		
		(-4.60--3.71)x(1.37+1.50)/2	-1.28		
		(-4.80--4.60)x(1.33+1.37)/2	-0.27		
		(-5.18--4.80)x(1.32+1.33)/2	-0.50		
		(-5.89--5.18)x(1.28+1.32)/2	-0.92		
		(-6.27--5.89)x(1.27+1.28)/2	-0.48		
		(-6.98--6.27)x(1.27+1.27)/2	-0.90		
		(-7.95--6.98)x(1.36+1.27)/2	-1.28		
		(-8.06--7.95)x(1.37+1.36)/2	-0.15		
		(-8.27--8.06)x(1.40+1.37)/2	-0.29		
		(-9.15--8.27)x(1.55+1.40)/2	-1.30		
		(-9.63--9.15)x(1.62+1.55)/2	-0.76		
		(-10.24--9.63)x(1.71+1.62)/2	-1.02		
		(-11.31--10.24)x(1.86+1.71)/2	-1.91		
		(-11.32--11.31)x(1.87+1.86)/2	-0.02		
		(-11.35--11.32)x(1.87+1.87)/2	-0.06		
		(-12.41--11.35)x(2.19+1.87)/2	-2.15		
		(-12.99--12.41)x(2.44+2.19)/2	-1.34		
		(-13.50--12.99)x(2.67+2.44)/2	-1.30		
		(-14.43--13.50)x(3.04+2.67)/2	-2.66		
		(-14.59--14.43)x(3.07+3.04)/2	-0.49		
		(-14.67--14.59)x(3.09+3.07)/2	-0.25		
		(-15.67--14.67)x(3.32+3.09)/2	-3.21		
		(-15.82--15.67)x(3.33+3.32)/2	-0.50		
				22.58	
66 975.00	BO1	(-15.55--15.63)x(3.80+3.81)/2	0.30		
		(-14.99--15.55)x(3.70+3.80)/2	2.10		
		(-14.46--14.99)x(3.61+3.70)/2	1.94		
		(-14.17--14.46)x(3.56+3.61)/2	1.04		
		(-13.37--14.17)x(3.43+3.56)/2	2.80		
		(-12.49--13.37)x(3.42+3.43)/2	3.01		
		(-12.29--12.49)x(3.40+3.42)/2	0.68		
		(-11.92--12.29)x(3.36+3.40)/2	1.25		
		(-11.20--11.92)x(3.26+3.36)/2	2.38		
		(-10.80--11.20)x(3.21+3.26)/2	1.29		
		(-10.11--10.80)x(3.13+3.21)/2	2.19		
		(-9.12--10.11)x(3.03+3.13)/2	3.05		
		(-9.02--9.12)x(3.03+3.03)/2	0.30		
		(-8.98--9.02)x(3.02+3.03)/2	0.12		
		(-8.85--8.98)x(3.02+3.02)/2	0.39		
		(-8.18--8.85)x(2.99+3.02)/2	2.01		
		(-7.94--8.18)x(2.97+2.99)/2	0.72		
		(-7.43--7.94)x(2.89+2.97)/2	1.49		
		(-6.85--7.43)x(2.83+2.89)/2	1.66		
		(-5.79--6.85)x(2.54+2.83)/2	2.85		
		(-5.76--5.79)x(2.53+2.54)/2	0.08		
		(-5.74--5.76)x(2.53+2.53)/2	0.05		
		(-4.67--5.74)x(2.44+2.53)/2	2.66		
		(-4.06--4.67)x(2.37+2.44)/2	1.47		
		(-3.58--4.06)x(2.32+2.37)/2	1.13		
		(-2.72--3.58)x(2.23+2.32)/2	1.96		
		(-2.50--2.72)x(2.21+2.23)/2	0.49		
		(-2.37--2.50)x(2.20+2.21)/2	0.29		
		(-1.41--2.37)x(2.10+2.20)/2	2.06		
		(-0.69--1.41)x(2.03+2.10)/2	1.49		
		(-0.32--0.69)x(2.00+2.03)/2	0.75		
		(0.35--0.32)x(1.94+2.00)/2	1.32		
		(0.77-0.35)x(1.92+1.94)/2	0.81		
		(1.00-0.77)x(1.94+1.92)/2	0.44		
		(1.86-1.00)x(1.95+1.94)/2	1.67		
		(2.68-1.86)x(2.05+1.95)/2	1.64		
		(2.94-2.68)x(2.06+2.05)/2	0.53		
		(3.41-2.94)x(2.23+2.06)/2	1.01		
		(4.03-3.41)x(2.45+2.23)/2	1.45		
		(4.37-4.03)x(2.59+2.45)/2	0.86		
		(5.12-4.37)x(2.91+2.59)/2	2.06		
		(6.06-5.12)x(3.11+2.91)/2	2.83		
		(6.21-6.06)x(3.14+3.11)/2	0.47		
		(6.48-6.21)x(3.22+3.14)/2	0.86		
		(7.30-6.48)x(3.41+3.22)/2	2.72		
		(7.74-7.30)x(3.47+3.41)/2	1.51		
		(8.38-7.74)x(3.54+3.47)/2	2.24		
		(9.43-8.38)x(3.38+3.54)/2	3.63		
		(9.47-9.43)x(3.38+3.38)/2	0.14		
		(9.49-9.47)x(3.38+3.38)/2	0.07		
		(9.55-9.49)x(3.35+3.38)/2	0.20		
		(10.29-9.55)x(3.08+3.35)/2	2.38		
		(10.56-10.29)x(2.95+3.08)/2	0.81		
		(11.11-10.56)x(2.71+2.95)/2	1.56		
		(11.65-11.11)x(2.48+2.71)/2	1.40		
		(12.62-11.65)x(2.05+2.48)/2	2.20		
		(12.73-12.62)x(2.00+2.05)/2	0.22		
		(12.80-12.73)x(1.99+2.00)/2	0.14		
		(13.82-12.80)x(1.80+1.99)/2	1.93		
		(14.49-13.82)x(1.80+1.80)/2	1.21		
		A RIPORTARE mq	82.31		

	CALCOLO DELLE AREE		Foglio n. 158

BONIFICA

N. SEZIONE PROG.	FIG.	ELEMENTI DI CALCOLO	AREA ELEMENTARE mq	AREA FIGURA mq	NOTE
		RIPORTO mq	82.31		
		(14.91-14.49)x(1.79+1.80)/2	0.75		
		(15.68-14.91)x(1.73+1.79)/2	1.36		
		(16.00-15.68)x(1.69+1.73)/2	0.55		
		(16.17-16.00)x(1.64+1.69)/2	0.28		
		(17.09-16.17)x(1.45+1.64)/2	1.42		
		(17.86-17.09)x(0.86+1.45)/2	0.89		
		(18.17-17.86)x(0.62+0.86)/2	0.23		
		(18.75-18.17)x(0.39+0.62)/2	0.29		
		(19.26-18.75)x(0.22+0.39)/2	0.16		
		(19.54-19.26)x(0.17+0.22)/2	0.05		
		(20.35-19.54)x(0.02+0.17)/2	0.08		
		(21.23-20.35)x(-0.06+0.02)/2	-0.02		
		(21.44-21.23)x(-0.09+-0.06)/2	-0.02		
		(21.82-21.44)x(-0.09+-0.09)/2	-0.03		
		(22.53-21.82)x(-0.08+-0.09)/2	-0.06		
		(22.92-22.53)x(-0.03+-0.08)/2	-0.02		
		(24.60-23.61)x(0.27+0.03)/2	0.15		
		(24.70-24.60)x(0.29+0.27)/2	0.03		
		(24.88-24.70)x(0.35+0.29)/2	0.06		
		(25.79-24.88)x(0.64+0.35)/2	0.45		
		(26.29-25.79)x(1.00+0.64)/2	0.41		
		(26.88-26.29)x(1.30+1.00)/2	0.68		
		(27.95-26.88)x(1.88+1.30)/2	1.70		
		(27.96-27.95)x(1.89+1.88)/2	0.02		
		(28.76-27.96)x(1.94+1.89)/2	1.53		
		(29.05-28.76)x(1.97+1.94)/2	0.57		
		(29.64-29.05)x(2.04+1.97)/2	1.18		
		(29.05-29.64)x(1.47+1.54)/2	-0.89		
		(28.76-29.05)x(1.44+1.47)/2	-0.42		
		(27.96-28.76)x(1.39+1.44)/2	-1.13		
		(27.95-27.96)x(1.38+1.39)/2	-0.01		
		(26.88-27.95)x(0.80+1.38)/2	-1.17		
		(26.29-26.88)x(0.50+0.80)/2	-0.38		
		(25.79-26.29)x(0.14+0.50)/2	-0.16		
		(24.88-25.79)x(-0.15+0.14)/2	0.00		
		(24.70-24.88)x(-0.21+-0.15)/2	0.03		
		(24.60-24.70)x(-0.23+-0.21)/2	0.02		
		(23.61-24.60)x(-0.47+-0.23)/2	0.35		
		(22.92-23.61)x(-0.53+-0.47)/2	0.34		
		(22.53-22.92)x(-0.58+-0.53)/2	0.22		
		(21.82-22.53)x(-0.59+-0.58)/2	0.42		
		(21.44-21.82)x(-0.59+-0.59)/2	0.22		
		(21.23-21.44)x(-0.56+-0.59)/2	0.12		
		(20.35-21.23)x(-0.48+-0.56)/2	0.46		
		(19.54-20.35)x(-0.33+-0.48)/2	0.33		
		(19.26-19.54)x(-0.28+-0.33)/2	0.09		
		(18.75-19.26)x(-0.11+-0.28)/2	0.10		
		(18.17-18.75)x(0.12+-0.11)/2	-0.00		
		(17.86-18.17)x(0.36+0.12)/2	-0.07		
		(17.09-17.86)x(0.95+0.36)/2	-0.50		
		(16.17-17.09)x(1.14+0.95)/2	-0.96		
		(16.00-16.17)x(1.19+1.14)/2	-0.20		
		(15.68-16.00)x(1.23+1.19)/2	-0.39		
		(14.91-15.68)x(1.29+1.23)/2	-0.97		
		(14.49-14.91)x(1.30+1.29)/2	-0.54		
		(13.82-14.49)x(1.30+1.30)/2	-0.87		
		(12.80-13.82)x(1.49+1.30)/2	-1.42		
		(12.73-12.80)x(1.50+1.49)/2	-0.10		
		(12.62-12.73)x(1.55+1.50)/2	-0.17		
		(11.65-12.62)x(1.98+1.55)/2	-1.71		
		(11.11-11.65)x(2.21+1.98)/2	-1.13		
		(10.56-11.11)x(2.45+2.21)/2	-1.28		
		(10.29-10.56)x(2.58+2.45)/2	-0.68		
		(9.55-10.29)x(2.85+2.58)/2	-2.01		
		(9.49-9.55)x(2.88+2.85)/2	-0.17		
		(9.47-9.49)x(2.88+2.88)/2	-0.06		
		(9.43-9.47)x(2.88+2.88)/2	-0.12		
		(8.38-9.43)x(3.04+2.88)/2	-3.11		
		(7.74-8.38)x(2.97+3.04)/2	-1.92		
		(7.30-7.74)x(2.91+2.97)/2	-1.29		
		(6.48-7.30)x(2.72+2.91)/2	-2.31		
		(6.21-6.48)x(2.64+2.72)/2	-0.72		
		(6.06-6.21)x(2.61+2.64)/2	-0.39		
		(5.12-6.06)x(2.41+2.61)/2	-2.36		
		(4.37-5.12)x(2.09+2.41)/2	-1.69		
		(4.03-4.37)x(1.95+2.09)/2	-0.69		
		(3.41-4.03)x(1.73+1.95)/2	-1.14		
		(2.94-3.41)x(1.56+1.73)/2	-0.77		
		(2.68-2.94)x(1.55+1.56)/2	-0.40		
		(1.86-2.68)x(1.45+1.55)/2	-1.23		
		(1.00-1.86)x(1.44+1.45)/2	-1.24		
		(0.77-1.00)x(1.42+1.44)/2	-0.33		
		(0.35-0.77)x(1.44+1.42)/2	-0.60		
		(-0.32-0.35)x(1.50+1.44)/2	-0.98		
		(-0.69--0.32)x(1.53+1.50)/2	-0.56		
		(-1.41--0.69)x(1.60+1.53)/2	-1.13		
		(-2.37--1.41)x(1.70+1.60)/2	-1.58		
		(-2.50--2.37)x(1.71+1.70)/2	-0.22		
		(-2.72--2.50)x(1.73+1.71)/2	-0.38		
		(-3.58--2.72)x(1.82+1.73)/2	-1.53		
		(-4.06--3.58)x(1.87+1.82)/2	-0.89		
		(-4.67--4.06)x(1.94+1.87)/2	-1.16		
		(-5.74--4.67)x(2.03+1.94)/2	-2.12		
		(-5.76--5.74)x(2.03+2.03)/2	-0.04		
		(-5.79--5.76)x(2.04+2.03)/2	-0.06		
		(-6.85--5.79)x(2.33+2.04)/2	-2.32		
		(-7.43--6.85)x(2.39+2.33)/2	-1.37		
		(-7.94--7.43)x(2.47+2.39)/2	-1.24		
		(-8.18--7.94)x(2.49+2.47)/2	-0.60		
		(-8.85--8.18)x(2.52+2.49)/2	-1.68		
		(-8.98--8.85)x(2.52+2.52)/2	-0.33		
		(-9.02--8.98)x(2.53+2.52)/2	-0.10		
		(-9.12--9.02)x(2.53+2.53)/2	-0.25		
		(-10.11--9.12)x(2.63+2.53)/2	-2.55		
		A RIPORTARE mq	38.91		

		CALCOLO DELLE AREE		Foglio n. 159
BONIFICA				
N. SEZIONE PROG.	FIG.	ELEMENTI DI CALCOLO	AREA ELEMENTARE mq	AREA FIGURA mq	NOTE
		RIPORTO mq	38.91		
		(-10.80--10.11)x(2.71+2.63)/2	-1.84		
		(-11.20--10.80)x(2.76+2.71)/2	-1.09		
		(-11.92--11.20)x(2.86+2.76)/2	-2.02		
		(-12.29--11.92)x(2.90+2.86)/2	-1.07		
		(-12.49--12.29)x(2.92+2.90)/2	-0.58		
		(-13.37--12.49)x(2.93+2.92)/2	-2.57		
		(-14.17--13.37)x(3.06+2.93)/2	-2.40		
		(-14.46--14.17)x(3.11+3.06)/2	-0.89		
		(-14.99--14.46)x(3.20+3.11)/2	-1.67		
		(-15.55--14.99)x(3.30+3.20)/2	-1.82		
		(-15.63--15.55)x(3.31+3.30)/2	-0.26		
				22.70	
67 990.00	BO1	(-15.56--15.90)x(3.68+3.68)/2	1.25		
		(-15.46--15.56)x(3.68+3.68)/2	0.37		
		(-15.40--15.46)x(3.68+3.68)/2	0.22		
		(-14.37--15.40)x(3.69+3.68)/2	3.80		
		(-13.88--14.37)x(3.68+3.69)/2	1.81		
		(-13.28--13.88)x(3.68+3.68)/2	2.21		
		(-12.51--13.28)x(3.70+3.68)/2	2.84		
		(-12.19--12.51)x(3.71+3.70)/2	1.19		
		(-12.01--12.19)x(3.71+3.71)/2	0.67		
		(-11.10--12.01)x(3.69+3.71)/2	3.37		
		(-10.32--11.10)x(3.72+3.69)/2	2.89		
		(-10.01--10.32)x(3.74+3.72)/2	1.16		
		(-9.46--10.01)x(3.79+3.74)/2	2.07		
		(-8.93--9.46)x(3.85+3.79)/2	2.02		
		(-8.63--8.93)x(3.87+3.85)/2	1.16		
		(-7.84--8.63)x(3.92+3.87)/2	3.08		
		(-6.93--7.84)x(3.95+3.92)/2	3.58		
		(-6.75--6.93)x(3.96+3.95)/2	0.71		
		(-6.41--6.75)x(3.97+3.96)/2	1.35		
		(-5.66--6.41)x(4.00+3.97)/2	2.99		
		(-5.24--5.66)x(4.02+4.00)/2	1.68		
		(-4.57--5.24)x(4.04+4.02)/2	2.70		
		(-3.55--4.57)x(4.08+4.04)/2	4.14		
		(-3.48--3.55)x(4.09+4.08)/2	0.29		
		(-3.36--3.48)x(4.10+4.09)/2	0.49		
		(-2.39--3.36)x(4.20+4.10)/2	4.03		
		(-1.86--2.39)x(4.14+4.20)/2	2.21		
		(-1.31--1.86)x(4.09+4.14)/2	2.26		
		(-0.31--1.31)x(3.97+4.09)/2	4.03		
		(-0.22--0.31)x(3.95+3.97)/2	0.36		
		(-0.16--0.22)x(3.95+3.95)/2	0.24		
		(0.87--0.16)x(3.93+3.95)/2	4.06		
		(1.53-0.87)x(3.96+3.93)/2	2.60		
		(1.96-1.53)x(3.99+3.96)/2	1.71		
		(2.74-1.96)x(4.00+3.99)/2	3.12		
		(3.05-2.74)x(4.02+4.00)/2	1.24		
		(3.22-3.05)x(4.02+4.02)/2	0.68		
		(4.14-3.22)x(4.06+4.02)/2	3.72		
		(4.57-4.14)x(4.08+4.06)/2	1.75		
		(5.23-4.57)x(4.10+4.08)/2	2.70		
		(5.78-5.23)x(4.09+4.10)/2	2.25		
		(6.32-5.78)x(4.08+4.09)/2	2.21		
		(6.61-6.32)x(4.03+4.08)/2	1.18		
		(7.40-6.61)x(3.87+4.03)/2	3.12		
		(8.30-7.40)x(3.61+3.87)/2	3.37		
		(8.49-8.30)x(3.57+3.61)/2	0.68		
		(8.83-8.49)x(3.47+3.57)/2	1.20		
		(9.58-8.83)x(3.28+3.47)/2	2.53		
		(10.00-9.58)x(3.17+3.28)/2	1.35		
		(10.67-10.00)x(3.02+3.17)/2	2.07		
		(11.69-10.67)x(2.75+3.02)/2	2.94		
		(11.76-11.69)x(2.73+2.75)/2	0.19		
		(11.88-11.76)x(2.69+2.73)/2	0.33		
		(12.85-11.88)x(2.42+2.69)/2	2.48		
		(13.38-12.85)x(2.29+2.42)/2	1.25		
		(13.94-13.38)x(2.13+2.29)/2	1.24		
		(14.93-13.94)x(2.05+2.13)/2	2.07		
		(15.02-14.93)x(2.04+2.05)/2	0.18		
		(15.07-15.02)x(2.04+2.04)/2	0.10		
		(16.11-15.07)x(1.97+2.04)/2	2.09		
		(16.44-16.11)x(1.91+1.97)/2	0.64		
		(16.73-16.44)x(1.82+1.91)/2	0.54		
		(16.83-16.73)x(1.86+1.82)/2	0.18		
		(16.88-16.83)x(1.83+1.86)/2	0.09		
		(16.96-16.88)x(1.81+1.83)/2	0.15		
		(17.20-16.96)x(1.74+1.81)/2	0.43		
		(17.98-17.20)x(1.23+1.74)/2	1.16		
		(18.29-17.98)x(1.01+1.23)/2	0.35		
		(18.85-18.29)x(0.54+1.01)/2	0.43		
		(19.12-18.85)x(0.33+0.54)/2	0.12		
		(19.13-19.12)x(0.29+0.33)/2	0.00		
		(19.18-19.13)x(0.34+0.29)/2	0.02		
		(19.38-19.18)x(0.29+0.34)/2	0.06		
		(20.15-19.38)x(0.17+0.29)/2	0.18		
		(20.47-20.15)x(0.10+0.17)/2	0.04		
		(20.55-20.47)x(0.09+0.10)/2	0.01		
		(20.81-20.55)x(0.04+0.09)/2	0.02		
		(20.82-20.81)x(0.11+0.04)/2	0.00		
		(20.83-20.82)x(0.11+0.11)/2	0.00		
		(21.02-20.83)x(0.07+0.11)/2	0.02		
		(21.42-21.02)x(0.03+0.07)/2	0.02		
		(21.56-21.42)x(0.00+0.03)/2	0.00		
		(22.65-21.85)x(-0.05+0.00)/2	-0.02		
		(23.02-22.65)x(-0.02+-0.05)/2	-0.01		
		(23.73-23.02)x(0.05+-0.02)/2	0.01		
		(24.08-23.73)x(0.10+0.05)/2	0.03		
		(24.82-24.08)x(0.22+0.10)/2	0.12		
		(25.23-24.82)x(0.30+0.22)/2	0.11		
		(25.91-25.23)x(0.39+0.30)/2	0.23		
		(26.93-25.91)x(1.09+0.39)/2	0.75		
		(27.00-26.93)x(1.13+1.09)/2	0.08		
		(27.13-27.00)x(1.16+1.13)/2	0.15		
		A RIPORTARE mq	121.49		

		CALCOLO DELLE AREE		Foglio n. 160
BONIFICA				
N. SEZIONE PROG.	FIG.	ELEMENTI DI CALCOLO	AREA ELEMENTARE mq	AREA FIGURA mq	NOTE
		RIPORTO mq	121.49		
		(28.09-27.13)x(1.33+1.16)/2	1.20		
		(28.62-28.09)x(1.47+1.33)/2	0.74		
		(29.18-28.62)x(1.76+1.47)/2	0.90		
		(29.92-29.18)x(1.91+1.76)/2	1.36		
		(29.18-29.92)x(1.26+1.41)/2	-0.99		
		(28.62-29.18)x(0.97+1.26)/2	-0.62		
		(28.09-28.62)x(0.83+0.97)/2	-0.48		
		(27.13-28.09)x(0.66+0.83)/2	-0.72		
		(27.00-27.13)x(0.63+0.66)/2	-0.08		
		(26.93-27.00)x(0.59+0.63)/2	-0.04		
		(25.91-26.93)x(-0.11+0.59)/2	-0.24		
		(25.23-25.91)x(-0.20+-0.11)/2	0.11		
		(24.82-25.23)x(-0.28+-0.20)/2	0.10		
		(24.08-24.82)x(-0.40+-0.28)/2	0.25		
		(23.73-24.08)x(-0.45+-0.40)/2	0.15		
		(23.02-23.73)x(-0.52+-0.45)/2	0.34		
		(22.65-23.02)x(-0.55+-0.52)/2	0.20		
		(21.85-22.65)x(-0.50+-0.55)/2	0.42		
		(21.56-21.85)x(-0.50+-0.50)/2	0.15		
		(21.42-21.56)x(-0.47+-0.50)/2	0.07		
		(21.02-21.42)x(-0.43+-0.47)/2	0.18		
		(20.83-21.02)x(-0.39+-0.43)/2	0.08		
		(20.82-20.83)x(-0.39+-0.39)/2	0.00		
		(20.81-20.82)x(-0.46+-0.39)/2	0.00		
		(20.55-20.81)x(-0.41+-0.46)/2	0.11		
		(20.47-20.55)x(-0.40+-0.41)/2	0.03		
		(20.15-20.47)x(-0.33+-0.40)/2	0.12		
		(19.38-20.15)x(-0.21+-0.33)/2	0.21		
		(19.18-19.38)x(-0.16+-0.21)/2	0.04		
		(19.13-19.18)x(-0.21+-0.16)/2	0.01		
		(19.12-19.13)x(-0.17+-0.21)/2	0.00		
		(18.85-19.12)x(0.04+-0.17)/2	0.02		
		(18.29-18.85)x(0.51+0.04)/2	-0.15		
		(17.98-18.29)x(0.73+0.51)/2	-0.19		
		(17.20-17.98)x(1.24+0.73)/2	-0.77		
		(16.96-17.20)x(1.31+1.24)/2	-0.31		
		(16.88-16.96)x(1.33+1.31)/2	-0.11		
		(16.83-16.88)x(1.36+1.33)/2	-0.07		
		(16.73-16.83)x(1.32+1.36)/2	-0.13		
		(16.44-16.73)x(1.41+1.32)/2	-0.40		
		(16.11-16.44)x(1.47+1.41)/2	-0.48		
		(15.07-16.11)x(1.54+1.47)/2	-1.57		
		(15.02-15.07)x(1.54+1.54)/2	-0.08		
		(14.93-15.02)x(1.55+1.54)/2	-0.14		
		(13.94-14.93)x(1.63+1.55)/2	-1.57		
		(13.38-13.94)x(1.79+1.63)/2	-0.96		
		(12.85-13.38)x(1.92+1.79)/2	-0.98		
		(11.88-12.85)x(2.19+1.92)/2	-1.99		
		(11.76-11.88)x(2.23+2.19)/2	-0.27		
		(11.69-11.76)x(2.25+2.23)/2	-0.16		
		(10.67-11.69)x(2.52+2.25)/2	-2.43		
		(10.00-10.67)x(2.67+2.52)/2	-1.74		
		(9.58-10.00)x(2.78+2.67)/2	-1.14		
		(8.83-9.58)x(2.97+2.78)/2	-2.16		
		(8.49-8.83)x(3.07+2.97)/2	-1.03		
		(8.30-8.49)x(3.11+3.07)/2	-0.59		
		(7.40-8.30)x(3.37+3.11)/2	-2.92		
		(6.61-7.40)x(3.53+3.37)/2	-2.73		
		(6.32-6.61)x(3.58+3.53)/2	-1.03		
		(5.78-6.32)x(3.59+3.58)/2	-1.94		
		(5.23-5.78)x(3.60+3.59)/2	-1.98		
		(4.57-5.23)x(3.58+3.60)/2	-2.37		
		(4.14-4.57)x(3.56+3.58)/2	-1.54		
		(3.22-4.14)x(3.52+3.56)/2	-3.26		
		(3.05-3.22)x(3.52+3.52)/2	-0.60		
		(2.74-3.05)x(3.50+3.52)/2	-1.09		
		(1.96-2.74)x(3.49+3.50)/2	-2.73		
		(1.53-1.96)x(3.46+3.49)/2	-1.49		
		(0.87-1.53)x(3.43+3.46)/2	-2.27		
		(-0.16-0.87)x(3.45+3.43)/2	-3.54		
		(-0.22--0.16)x(3.45+3.45)/2	-0.21		
		(-0.31--0.22)x(3.47+3.45)/2	-0.31		
		(-1.31--0.31)x(3.59+3.47)/2	-3.53		
		(-1.86--1.31)x(3.64+3.59)/2	-1.99		
		(-2.39--1.86)x(3.70+3.64)/2	-1.95		
		(-3.36--2.39)x(3.60+3.70)/2	-3.54		
		(-3.48--3.36)x(3.59+3.60)/2	-0.43		
		(-3.55--3.48)x(3.58+3.59)/2	-0.25		
		(-4.57--3.55)x(3.54+3.58)/2	-3.63		
		(-5.24--4.57)x(3.52+3.54)/2	-2.37		
		(-5.66--5.24)x(3.50+3.52)/2	-1.47		
		(-6.41--5.66)x(3.47+3.50)/2	-2.61		
		(-6.75--6.41)x(3.46+3.47)/2	-1.18		
		(-6.93--6.75)x(3.45+3.46)/2	-0.62		
		(-7.84--6.93)x(3.42+3.45)/2	-3.13		
		(-8.63--7.84)x(3.37+3.42)/2	-2.68		
		(-8.93--8.63)x(3.35+3.37)/2	-1.01		
		(-9.46--8.93)x(3.29+3.35)/2	-1.76		
		(-10.01--9.46)x(3.24+3.29)/2	-1.80		
		(-10.32--10.01)x(3.22+3.24)/2	-1.00		
		(-11.10--10.32)x(3.19+3.22)/2	-2.50		
		(-12.01--11.10)x(3.21+3.19)/2	-2.91		
		(-12.19--12.01)x(3.21+3.21)/2	-0.58		
		(-12.51--12.19)x(3.20+3.21)/2	-1.03		
		(-13.28--12.51)x(3.18+3.20)/2	-2.46		
		(-13.88--13.28)x(3.18+3.18)/2	-1.91		
		(-14.37--13.88)x(3.19+3.18)/2	-1.56		
		(-15.40--14.37)x(3.18+3.19)/2	-3.28		
		(-15.46--15.40)x(3.18+3.18)/2	-0.19		
		(-15.56--15.46)x(3.18+3.18)/2	-0.32		
		(-15.90--15.56)x(3.18+3.18)/2	-1.08		
				22.91	
68 1005.00	BO1	(-15.39--15.73)x(3.82+3.84)/2 (-14.96--15.39)x(3.81+3.82)/2	1.30 1.64		
		A RIPORTARE mq	2.94		

	CALCOLO DELLE AREE		Foglio n. 161

BONIFICA

N. SEZIONE PROG.	FIG.	ELEMENTI DI CALCOLO	AREA ELEMENTARE mq	AREA FIGURA mq	NOTE
		RIPORTO mq	2.94		
		(-14.31--14.96)x(3.79+3.81)/2	2.47		
		(-13.26--14.31)x(3.74+3.79)/2	3.95		
		(-13.22--13.26)x(3.74+3.74)/2	0.15		
		(-13.13--13.22)x(3.74+3.74)/2	0.34		
		(-12.13--13.13)x(3.75+3.74)/2	3.75		
		(-11.56--12.13)x(3.74+3.75)/2	2.13		
		(-11.04--11.56)x(3.73+3.74)/2	1.94		
		(-10.10--11.04)x(3.69+3.73)/2	3.49		
		(-9.95--10.10)x(3.68+3.69)/2	0.55		
		(-9.86--9.95)x(3.68+3.68)/2	0.33		
		(-8.86--9.86)x(3.66+3.68)/2	3.67		
		(-8.16--8.86)x(3.67+3.66)/2	2.57		
		(-7.77--8.16)x(3.67+3.67)/2	1.43		
		(-7.06--7.77)x(3.80+3.67)/2	2.65		
		(-6.68--7.06)x(3.88+3.80)/2	1.46		
		(-6.46--6.68)x(3.93+3.88)/2	0.86		
		(-5.59--6.46)x(4.15+3.93)/2	3.51		
		(-4.76--5.59)x(4.35+4.15)/2	3.53		
		(-4.50--4.76)x(4.41+4.35)/2	1.14		
		(-4.03--4.50)x(4.53+4.41)/2	2.10		
		(-3.41--4.03)x(4.67+4.53)/2	2.85		
		(-3.06--3.41)x(4.73+4.67)/2	1.65		
		(-2.32--3.06)x(4.86+4.73)/2	3.55		
		(-1.36--2.32)x(4.83+4.86)/2	4.65		
		(-1.23--1.36)x(4.84+4.83)/2	0.63		
		(-1.17--1.23)x(4.84+4.84)/2	0.29		
		(-1.00--1.17)x(4.85+4.84)/2	0.82		
		(-0.37--1.00)x(4.89+4.85)/2	3.07		
		(-0.14--0.37)x(4.88+4.89)/2	1.12		
		(0.34--0.14)x(4.88+4.88)/2	2.34		
		(0.95-0.34)x(4.90+4.88)/2	2.98		
		(2.03-0.95)x(4.79+4.90)/2	5.23		
		(2.04-2.03)x(4.79+4.79)/2	0.05		
		(3.13-2.04)x(4.63+4.79)/2	5.13		
		(3.74-3.13)x(4.63+4.63)/2	2.82		
		(4.21-3.74)x(4.63+4.63)/2	2.18		
		(5.07-4.21)x(4.72+4.63)/2	4.02		
		(5.30-5.07)x(4.75+4.72)/2	1.09		
		(5.44-5.30)x(4.75+4.75)/2	0.67		
		(6.39-5.44)x(4.62+4.75)/2	4.45		
		(7.14-6.39)x(4.62+4.62)/2	3.46		
		(7.48-7.14)x(4.62+4.62)/2	1.57		
		(8.10-7.48)x(4.69+4.62)/2	2.89		
		(8.57-8.10)x(4.71+4.69)/2	2.21		
		(8.84-8.57)x(4.69+4.71)/2	1.27		
		(9.66-8.84)x(4.59+4.69)/2	3.80		
		(10.54-9.66)x(4.30+4.59)/2	3.91		
		(10.75-10.54)x(4.23+4.30)/2	0.90		
		(11.13-10.75)x(4.05+4.23)/2	1.57		
		(11.84-11.13)x(3.64+4.05)/2	2.73		
		(12.24-11.84)x(3.31+3.64)/2	1.39		
		(12.93-12.24)x(2.78+3.31)/2	2.10		
		(13.94-12.93)x(2.25+2.78)/2	2.54		
		(14.02-13.94)x(2.19+2.25)/2	0.18		
		(14.16-14.02)x(2.16+2.19)/2	0.30		
		(15.11-14.16)x(1.99+2.16)/2	1.97		
		(15.64-15.11)x(1.94+1.99)/2	1.04		
		(16.20-15.64)x(1.87+1.94)/2	1.07		
		(16.83-16.20)x(1.81+1.87)/2	1.16		
		(16.91-16.83)x(1.80+1.81)/2	0.14		
		(16.97-16.91)x(1.80+1.80)/2	0.11		
		(17.00-16.97)x(1.80+1.80)/2	0.05		
		(17.15-17.00)x(1.77+1.80)/2	0.27		
		(17.29-17.15)x(1.73+1.77)/2	0.25		
		(18.07-17.29)x(1.39+1.73)/2	1.22		
		(18.38-18.07)x(1.17+1.39)/2	0.40		
		(19.03-18.38)x(0.46+1.17)/2	0.53		
		(19.31-19.03)x(0.22+0.46)/2	0.10		
		(19.32-19.31)x(0.22+0.22)/2	0.00		
		(19.34-19.32)x(0.25+0.22)/2	0.00		
		(19.35-19.34)x(0.22+0.25)/2	0.00		
		(19.38-19.35)x(0.21+0.23)/2	0.01		
		(19.39-19.38)x(0.21+0.21)/2	0.00		
		(19.46-19.39)x(0.21+0.21)/2	0.01		
		(19.77-19.46)x(0.20+0.21)/2	0.06		
		(20.23-19.77)x(0.22+0.20)/2	0.10		
		(20.56-20.23)x(0.13+0.22)/2	0.06		
		(20.74-20.56)x(0.11+0.13)/2	0.02		
		(21.65-20.74)x(0.03+0.11)/2	0.06		
		(22.44-21.65)x(0.05+0.03)/2	0.03		
		(22.74-22.44)x(0.06+0.05)/2	0.02		
		(23.26-22.74)x(0.08+0.06)/2	0.04		
		(23.82-23.26)x(0.11+0.08)/2	0.05		
		(24.14-23.82)x(0.12+0.11)/2	0.04		
		(24.91-24.14)x(0.16+0.12)/2	0.11		
		(25.84-24.91)x(0.38+0.16)/2	0.25		
		(26.00-25.84)x(0.39+0.38)/2	0.06		
		(26.30-26.00)x(0.60+0.39)/2	0.15		
		(27.09-26.30)x(1.11+0.60)/2	0.68		
		(27.54-27.09)x(1.26+1.11)/2	0.53		
		(28.18-27.54)x(1.43+1.26)/2	0.86		
		(29.24-28.18)x(1.88+1.43)/2	1.75		
		(29.27-29.24)x(1.89+1.88)/2	0.06		
		(29.33-29.27)x(1.90+1.89)/2	0.11		
		(30.17-29.33)x(1.99+1.90)/2	1.63		
		(29.33-30.17)x(1.40+1.49)/2	-1.21		
		(29.27-29.33)x(1.39+1.40)/2	-0.08		
		(29.24-29.27)x(1.38+1.39)/2	-0.04		
		(28.18-29.24)x(0.93+1.38)/2	-1.22		
		(27.54-28.18)x(0.76+0.93)/2	-0.54		
		(27.09-27.54)x(0.61+0.76)/2	-0.31		
		(26.30-27.09)x(0.10+0.61)/2	-0.28		
		(26.00-26.30)x(-0.11+0.10)/2	0.00		
		(25.84-26.00)x(-0.12+-0.11)/2	0.02		
		A RIPORTARE mq	136.71		

		CALCOLO DELLE AREE		Foglio n. 162
BONIFICA				
N. SEZIONE PROG.	FIG.	ELEMENTI DI CALCOLO	AREA ELEMENTARE mq	AREA FIGURA mq	NOTE
		RIPORTO mq	136.71		
		(24.91-25.84)x(-0.34+-0.12)/2	0.21		
		(24.14-24.91)x(-0.38+-0.34)/2	0.28		
		(23.82-24.14)x(-0.39+-0.38)/2	0.12		
		(23.26-23.82)x(-0.42+-0.39)/2	0.23		
		(22.74-23.26)x(-0.44+-0.42)/2	0.22		
		(22.44-22.74)x(-0.45+-0.44)/2	0.13		
		(21.65-22.44)x(-0.47+-0.45)/2	0.36		
		(20.74-21.65)x(-0.39+-0.47)/2	0.39		
		(20.56-20.74)x(-0.37+-0.39)/2	0.07		
		(20.23-20.56)x(-0.28+-0.37)/2	0.11		
		(19.77-20.23)x(-0.30+-0.28)/2	0.13		
		(19.46-19.77)x(-0.29+-0.30)/2	0.09		
		(19.39-19.46)x(-0.29+-0.29)/2	0.02		
		(19.38-19.39)x(-0.29+-0.29)/2	0.00		
		(19.35-19.38)x(-0.27+-0.29)/2	0.01		
		(19.34-19.35)x(-0.25+-0.28)/2	0.00		
		(19.32-19.34)x(-0.28+-0.25)/2	0.01		
		(19.31-19.32)x(-0.28+-0.28)/2	0.00		
		(19.03-19.31)x(-0.04+-0.28)/2	0.04		
		(18.38-19.03)x(0.67+-0.04)/2	-0.20		
		(18.07-18.38)x(0.89+0.67)/2	-0.24		
		(17.29-18.07)x(1.23+0.89)/2	-0.83		
		(17.15-17.29)x(1.27+1.23)/2	-0.18		
		(17.00-17.15)x(1.30+1.27)/2	-0.19		
		(16.97-17.00)x(1.30+1.30)/2	-0.04		
		(16.91-16.97)x(1.30+1.30)/2	-0.08		
		(16.83-16.91)x(1.31+1.30)/2	-0.10		
		(16.20-16.83)x(1.37+1.31)/2	-0.84		
		(15.64-16.20)x(1.44+1.37)/2	-0.79		
		(15.11-15.64)x(1.49+1.44)/2	-0.78		
		(14.16-15.11)x(1.66+1.49)/2	-1.50		
		(14.02-14.16)x(1.69+1.66)/2	-0.23		
		(13.94-14.02)x(1.75+1.69)/2	-0.14		
		(12.93-13.94)x(2.28+1.75)/2	-2.04		
		(12.24-12.93)x(2.81+2.28)/2	-1.76		
		(11.84-12.24)x(3.14+2.81)/2	-1.19		
		(11.13-11.84)x(3.55+3.14)/2	-2.37		
		(10.75-11.13)x(3.73+3.55)/2	-1.38		
		(10.54-10.75)x(3.80+3.73)/2	-0.79		
		(9.66-10.54)x(4.09+3.80)/2	-3.47		
		(8.84-9.66)x(4.19+4.09)/2	-3.39		
		(8.57-8.84)x(4.21+4.19)/2	-1.13		
		(8.10-8.57)x(4.19+4.21)/2	-1.97		
		(7.48-8.10)x(4.12+4.19)/2	-2.58		
		(7.14-7.48)x(4.12+4.12)/2	-1.40		
		(6.39-7.14)x(4.12+4.12)/2	-3.09		
		(5.44-6.39)x(4.25+4.12)/2	-3.98		
		(5.30-5.44)x(4.25+4.25)/2	-0.60		
		(5.07-5.30)x(4.22+4.25)/2	-0.97		
		(4.21-5.07)x(4.13+4.22)/2	-3.59		
		(3.74-4.21)x(4.13+4.13)/2	-1.94		
		(3.13-3.74)x(4.13+4.13)/2	-2.52		
		(2.04-3.13)x(4.29+4.13)/2	-4.59		
		(2.03-2.04)x(4.29+4.29)/2	-0.04		
		(0.95-2.03)x(4.40+4.29)/2	-4.69		
		(0.34-0.95)x(4.38+4.40)/2	-2.68		
		(-0.14-0.34)x(4.38+4.38)/2	-2.10		
		(-0.37--0.14)x(4.39+4.38)/2	-1.01		
		(-1.00--0.37)x(4.35+4.39)/2	-2.75		
		(-1.17--1.00)x(4.34+4.35)/2	-0.74		
		(-1.23--1.17)x(4.34+4.34)/2	-0.26		
		(-1.36--1.23)x(4.33+4.34)/2	-0.56		
		(-2.32--1.36)x(4.36+4.33)/2	-4.17		
		(-3.06--2.32)x(4.23+4.36)/2	-3.18		
		(-3.41--3.06)x(4.17+4.23)/2	-1.47		
		(-4.03--3.41)x(4.03+4.17)/2	-2.54		
		(-4.50--4.03)x(3.91+4.03)/2	-1.87		
		(-4.76--4.50)x(3.85+3.91)/2	-1.01		
		(-5.59--4.76)x(3.65+3.85)/2	-3.11		
		(-6.46--5.59)x(3.43+3.65)/2	-3.08		
		(-6.68--6.46)x(3.38+3.43)/2	-0.75		
		(-7.06--6.68)x(3.30+3.38)/2	-1.27		
		(-7.77--7.06)x(3.17+3.30)/2	-2.30		
		(-8.16--7.77)x(3.17+3.17)/2	-1.24		
		(-8.86--8.16)x(3.16+3.17)/2	-2.22		
		(-9.86--8.86)x(3.18+3.16)/2	-3.17		
		(-9.95--9.86)x(3.18+3.18)/2	-0.29		
		(-10.10--9.95)x(3.19+3.18)/2	-0.48		
		(-11.04--10.10)x(3.23+3.19)/2	-3.02		
		(-11.56--11.04)x(3.24+3.23)/2	-1.68		
		(-12.13--11.56)x(3.25+3.24)/2	-1.85		
		(-13.13--12.13)x(3.24+3.25)/2	-3.25		
		(-13.22--13.13)x(3.24+3.24)/2	-0.29		
		(-13.26--13.22)x(3.24+3.24)/2	-0.13		
		(-14.31--13.26)x(3.29+3.24)/2	-3.43		
		(-14.96--14.31)x(3.31+3.29)/2	-2.15		
		(-15.39--14.96)x(3.32+3.31)/2	-1.43		
		(-15.73--15.39)x(3.34+3.32)/2	-1.13		
				22.90	
69 1020.00	BO1	(-15.36--15.62)x(3.95+3.96)/2	1.03		
		(-14.56--15.36)x(3.91+3.95)/2	3.14		
		(-14.27--14.56)x(3.90+3.91)/2	1.13		
		(-13.77--14.27)x(3.87+3.90)/2	1.94		
		(-13.18--13.77)x(3.83+3.87)/2	2.27		
		(-12.85--13.18)x(3.81+3.83)/2	1.26		
		(-12.09--12.85)x(3.76+3.81)/2	2.88		
		(-11.14--12.09)x(3.71+3.76)/2	3.55		
		(-11.00--11.14)x(3.71+3.71)/2	0.52		
		(-10.75--11.00)x(3.70+3.71)/2	0.93		
		(-9.91--10.75)x(3.67+3.70)/2	3.10		
		(-9.43--9.91)x(3.67+3.67)/2	1.76		
		(-8.82--9.43)x(3.67+3.67)/2	2.24		
		(-7.74--8.82)x(3.66+3.67)/2	3.96		
		(-7.73--7.74)x(3.66+3.66)/2	0.04		
		A RIPORTARE mq	29.75		

		CALCOLO DELLE AREE		Foglio n. 163
BONIFICA				
N. SEZIONE PROG.	FIG.	ELEMENTI DI CALCOLO	AREA ELEMENTARE mq	AREA FIGURA mq	NOTE
		RIPORTO mq	29.75		
		(-6.64--7.73)x(3.88+3.66)/2	4.11		
		(-6.13--6.64)x(4.01+3.88)/2	2.01		
		(-5.55--6.13)x(4.14+4.01)/2	2.36		
		(-4.72--5.55)x(4.33+4.14)/2	3.52		
		(-4.46--4.72)x(4.38+4.33)/2	1.13		
		(-4.31--4.46)x(4.42+4.38)/2	0.66		
		(-3.37--4.31)x(4.63+4.42)/2	4.25		
		(-2.60--3.37)x(4.77+4.63)/2	3.62		
		(-2.28--2.60)x(4.83+4.77)/2	1.54		
		(-1.71--2.28)x(4.90+4.83)/2	2.77		
		(-1.19--1.71)x(4.97+4.90)/2	2.57		
		(-0.90--1.19)x(4.97+4.97)/2	1.44		
		(-0.10--0.90)x(4.95+4.97)/2	3.97		
		(0.81--0.10)x(4.82+4.95)/2	4.45		
		(0.99-0.81)x(4.82+4.82)/2	0.87		
		(1.31-0.99)x(4.78+4.82)/2	1.54		
		(2.08-1.31)x(4.66+4.78)/2	3.63		
		(2.52-2.08)x(4.60+4.66)/2	2.04		
		(3.17-2.52)x(4.50+4.60)/2	2.96		
		(4.23-3.17)x(4.36+4.50)/2	4.70		
		(4.26-4.23)x(4.36+4.36)/2	0.13		
		(4.33-4.26)x(4.36+4.36)/2	0.31		
		(5.35-4.33)x(4.39+4.36)/2	4.46		
		(5.93-5.35)x(4.34+4.39)/2	2.53		
		(6.44-5.93)x(4.31+4.34)/2	2.21		
		(7.34-6.44)x(4.13+4.31)/2	3.80		
		(7.53-7.34)x(4.09+4.13)/2	0.78		
		(7.64-7.53)x(4.09+4.09)/2	0.45		
		(8.62-7.64)x(4.09+4.09)/2	4.01		
		(9.35-8.62)x(4.13+4.09)/2	3.00		
		(9.71-9.35)x(4.14+4.13)/2	1.49		
		(10.36-9.71)x(4.11+4.14)/2	2.68		
		(10.80-10.36)x(4.08+4.11)/2	1.80		
		(11.06-10.80)x(3.96+4.08)/2	1.05		
		(11.89-11.06)x(3.58+3.96)/2	3.13		
		(12.29-11.89)x(3.32+3.58)/2	1.38		
		(12.98-12.29)x(2.73+3.32)/2	2.09		
		(13.37-12.98)x(2.47+2.73)/2	1.01		
		(14.07-13.37)x(2.03+2.47)/2	1.58		
		(14.47-14.07)x(1.97+2.03)/2	0.80		
		(15.16-14.47)x(1.82+1.97)/2	1.31		
		(16.18-15.16)x(1.76+1.82)/2	1.83		
		(16.25-16.18)x(1.76+1.76)/2	0.12		
		(16.39-16.25)x(1.76+1.76)/2	0.25		
		(17.34-16.39)x(1.75+1.76)/2	1.67		
		(17.88-17.34)x(1.54+1.75)/2	0.89		
		(18.43-17.88)x(1.40+1.54)/2	0.81		
		(19.41-18.43)x(0.71+1.40)/2	1.03		
		(19.52-19.41)x(0.62+0.71)/2	0.07		
		(19.59-19.52)x(0.60+0.62)/2	0.04		
		(20.61-19.59)x(0.26+0.60)/2	0.44		
		(21.30-20.61)x(0.15+0.26)/2	0.14		
		(21.71-21.30)x(0.08+0.15)/2	0.05		
		(22.42-21.71)x(0.03+0.08)/2	0.04		
		(22.80-22.42)x(0.03+0.03)/2	0.01		
		(23.01-22.80)x(0.03+0.03)/2	0.01		
		(23.89-23.01)x(0.06+0.03)/2	0.04		
		(24.71-23.89)x(0.11+0.06)/2	0.07		
		(24.98-24.71)x(0.12+0.11)/2	0.03		
		(25.44-24.98)x(0.15+0.12)/2	0.06		
		(26.07-25.44)x(0.22+0.15)/2	0.12		
		(26.42-26.07)x(0.41+0.22)/2	0.11		
		(27.16-26.42)x(0.64+0.41)/2	0.39		
		(28.13-27.16)x(1.28+0.64)/2	0.93		
		(28.25-28.13)x(1.38+1.28)/2	0.16		
		(28.45-28.25)x(1.48+1.38)/2	0.29		
		(29.34-28.45)x(1.88+1.48)/2	1.50		
		(29.84-29.34)x(1.89+1.88)/2	0.94		
		(30.38-29.84)x(1.94+1.89)/2	1.03		
		(29.84-30.38)x(1.39+1.44)/2	-0.76		
		(29.34-29.84)x(1.38+1.39)/2	-0.69		
		(28.45-29.34)x(0.98+1.38)/2	-1.05		
		(28.25-28.45)x(0.88+0.98)/2	-0.19		
		(28.13-28.25)x(0.78+0.88)/2	-0.10		
		(27.16-28.13)x(0.14+0.78)/2	-0.45		
		(26.42-27.16)x(-0.09+0.14)/2	-0.02		
		(26.07-26.42)x(-0.28+-0.09)/2	0.06		
		(25.44-26.07)x(-0.35+-0.28)/2	0.20		
		(24.98-25.44)x(-0.38+-0.35)/2	0.17		
		(24.71-24.98)x(-0.39+-0.38)/2	0.10		
		(23.89-24.71)x(-0.44+-0.39)/2	0.34		
		(23.01-23.89)x(-0.47+-0.44)/2	0.40		
		(22.80-23.01)x(-0.47+-0.47)/2	0.10		
		(22.42-22.80)x(-0.47+-0.47)/2	0.18		
		(21.71-22.42)x(-0.42+-0.47)/2	0.32		
		(21.30-21.71)x(-0.35+-0.42)/2	0.16		
		(20.61-21.30)x(-0.24+-0.35)/2	0.20		
		(19.59-20.61)x(0.10+-0.24)/2	0.07		
		(19.52-19.59)x(0.12+0.10)/2	-0.01		
		(19.41-19.52)x(0.21+0.12)/2	-0.02		
		(18.43-19.41)x(0.90+0.21)/2	-0.54		
		(17.88-18.43)x(1.04+0.90)/2	-0.53		
		(17.34-17.88)x(1.25+1.04)/2	-0.62		
		(16.39-17.34)x(1.26+1.25)/2	-1.19		
		(16.25-16.39)x(1.26+1.26)/2	-0.18		
		(16.18-16.25)x(1.26+1.26)/2	-0.09		
		(15.16-16.18)x(1.32+1.26)/2	-1.32		
		(14.47-15.16)x(1.47+1.32)/2	-0.96		
		(14.07-14.47)x(1.53+1.47)/2	-0.60		
		(13.37-14.07)x(1.97+1.53)/2	-1.23		
		(12.98-13.37)x(2.23+1.97)/2	-0.82		
		(12.29-12.98)x(2.82+2.23)/2	-1.74		
		(11.89-12.29)x(3.08+2.82)/2	-1.18		
		(11.06-11.89)x(3.46+3.08)/2	-2.71		
		A RIPORTARE mq	122.26		

		CALCOLO DELLE AREE		Foglio n. 164
BONIFICA				
N. SEZIONE PROG.	FIG.	ELEMENTI DI CALCOLO	AREA ELEMENTARE mq	AREA FIGURA mq	NOTE
		RIPORTO mq	122.26		
		(10.80-11.06)x(3.58+3.46)/2	-0.92		
		(10.36-10.80)x(3.61+3.58)/2	-1.58		
		(9.71-10.36)x(3.64+3.61)/2	-2.36		
		(9.35-9.71)x(3.63+3.64)/2	-1.31		
		(8.62-9.35)x(3.59+3.63)/2	-2.64		
		(7.64-8.62)x(3.59+3.59)/2	-3.52		
		(7.53-7.64)x(3.59+3.59)/2	-0.39		
		(7.34-7.53)x(3.63+3.59)/2	-0.69		
		(6.44-7.34)x(3.81+3.63)/2	-3.35		
		(5.93-6.44)x(3.84+3.81)/2	-1.95		
		(5.35-5.93)x(3.89+3.84)/2	-2.24		
		(4.33-5.35)x(3.86+3.89)/2	-3.95		
		(4.26-4.33)x(3.86+3.86)/2	-0.27		
		(4.23-4.26)x(3.86+3.86)/2	-0.12		
		(3.17-4.23)x(4.00+3.86)/2	-4.17		
		(2.52-3.17)x(4.10+4.00)/2	-2.63		
		(2.08-2.52)x(4.16+4.10)/2	-1.82		
		(1.31-2.08)x(4.28+4.16)/2	-3.25		
		(0.99-1.31)x(4.32+4.28)/2	-1.38		
		(0.81-0.99)x(4.32+4.32)/2	-0.78		
		(-0.10-0.81)x(4.45+4.32)/2	-3.99		
		(-0.90--0.10)x(4.47+4.45)/2	-3.57		
		(-1.19--0.90)x(4.47+4.47)/2	-1.30		
		(-1.71--1.19)x(4.40+4.47)/2	-2.31		
		(-2.28--1.71)x(4.33+4.40)/2	-2.49		
		(-2.60--2.28)x(4.27+4.33)/2	-1.38		
		(-3.37--2.60)x(4.13+4.27)/2	-3.23		
		(-4.31--3.37)x(3.92+4.13)/2	-3.78		
		(-4.46--4.31)x(3.88+3.92)/2	-0.59		
		(-4.72--4.46)x(3.83+3.88)/2	-1.00		
		(-5.55--4.72)x(3.64+3.83)/2	-3.10		
		(-6.13--5.55)x(3.51+3.64)/2	-2.07		
		(-6.64--6.13)x(3.38+3.51)/2	-1.76		
		(-7.73--6.64)x(3.16+3.38)/2	-3.56		
		(-7.74--7.73)x(3.16+3.16)/2	-0.03		
		(-8.82--7.74)x(3.17+3.16)/2	-3.42		
		(-9.43--8.82)x(3.17+3.17)/2	-1.93		
		(-9.91--9.43)x(3.17+3.17)/2	-1.52		
		(-10.75--9.91)x(3.20+3.17)/2	-2.68		
		(-11.00--10.75)x(3.21+3.20)/2	-0.80		
		(-11.14--11.00)x(3.21+3.21)/2	-0.45		
		(-12.09--11.14)x(3.26+3.21)/2	-3.07		
		(-12.85--12.09)x(3.31+3.26)/2	-2.50		
		(-13.18--12.85)x(3.33+3.31)/2	-1.10		
		(-13.77--13.18)x(3.37+3.33)/2	-1.98		
		(-14.27--13.77)x(3.40+3.37)/2	-1.69		
		(-14.56--14.27)x(3.41+3.40)/2	-0.99		
		(-15.36--14.56)x(3.45+3.41)/2	-2.74		
		(-15.62--15.36)x(3.46+3.45)/2	-0.90		
				23.01	
70 1035.00	BO1	(-15.36--15.76)x(3.89+3.91)/2	1.56		
		(-15.11--15.36)x(3.88+3.89)/2	0.97		
		(-14.43--15.11)x(3.86+3.88)/2	2.63		
		(-14.27--14.43)x(3.86+3.86)/2	0.62		
		(-14.17--14.27)x(3.86+3.86)/2	0.39		
		(-13.18--14.17)x(3.83+3.86)/2	3.81		
		(-12.46--13.18)x(3.82+3.83)/2	2.75		
		(-12.09--12.46)x(3.81+3.82)/2	1.41		
		(-11.91--12.09)x(3.81+3.81)/2	0.69		
		(-11.43--11.91)x(3.79+3.81)/2	1.82		
		(-11.11--11.43)x(3.78+3.79)/2	1.21		
		(-11.00--11.11)x(3.78+3.78)/2	0.42		
		(-10.75--11.00)x(3.77+3.78)/2	0.94		
		(-9.90--10.75)x(3.74+3.77)/2	3.19		
		(-9.03--9.90)x(3.73+3.74)/2	3.25		
		(-8.81--9.03)x(3.72+3.73)/2	0.82		
		(-8.43--8.81)x(3.74+3.72)/2	1.42		
		(-7.72--8.43)x(3.77+3.74)/2	2.67		
		(-7.32--7.72)x(3.78+3.77)/2	1.51		
		(-6.63--7.32)x(3.79+3.78)/2	2.61		
		(-5.60--6.63)x(3.72+3.79)/2	3.87		
		(-5.54--5.60)x(3.72+3.72)/2	0.22		
		(-5.43--5.54)x(3.71+3.72)/2	0.41		
		(-4.45--5.43)x(3.62+3.71)/2	3.59		
		(-3.89--4.45)x(3.56+3.62)/2	2.01		
		(-3.36--3.89)x(3.51+3.56)/2	1.87		
		(-2.44--3.36)x(3.41+3.51)/2	3.18		
		(-2.27--2.44)x(3.40+3.41)/2	0.58		
		(-2.17--2.27)x(3.40+3.40)/2	0.34		
		(-1.18--2.17)x(3.46+3.40)/2	3.40		
		(-0.46--1.18)x(3.49+3.46)/2	2.50		
		(-0.09--0.46)x(3.49+3.49)/2	1.29		
		(0.56--0.09)x(3.49+3.49)/2	2.27		
		(1.01-0.56)x(3.49+3.49)/2	1.57		
		(1.26-1.01)x(3.50+3.49)/2	0.87		
		(2.10-1.26)x(3.51+3.50)/2	2.94		
		(2.97-2.10)x(3.56+3.51)/2	3.08		
		(3.19-2.97)x(3.57+3.56)/2	0.78		
		(3.56-3.19)x(3.58+3.57)/2	1.32		
		(4.28-3.56)x(3.62+3.58)/2	2.59		
		(4.69-4.28)x(3.60+3.62)/2	1.48		
		(5.37-4.69)x(3.65+3.60)/2	2.46		
		(6.40-5.37)x(3.86+3.65)/2	3.87		
		(6.46-6.40)x(3.87+3.86)/2	0.23		
		(6.49-6.46)x(3.88+3.87)/2	0.12		
		(6.56-6.49)x(3.90+3.88)/2	0.27		
		(7.29-6.56)x(4.09+3.90)/2	2.92		
		(7.55-7.29)x(4.13+4.09)/2	1.07		
		(8.12-7.55)x(4.14+4.13)/2	2.36		
		(8.64-8.12)x(4.17+4.14)/2	2.16		
		(9.56-8.64)x(3.98+4.17)/2	3.75		
		(9.73-9.56)x(3.93+3.98)/2	0.67		
		(9.83-9.73)x(3.90+3.93)/2	0.39		
		(10.82-9.83)x(3.52+3.90)/2	3.67		
		A RIPORTARE mq	98.79		

	CALCOLO DELLE AREE		Foglio n. 165

BONIFICA

N. SEZIONE PROG.	FIG.	ELEMENTI DI CALCOLO	AREA ELEMENTARE mq	AREA FIGURA mq	NOTE
		RIPORTO mq	98.79		
		(11.55-10.82)x(3.26+3.52)/2	2.47		
		(11.92-11.55)x(3.12+3.26)/2	1.18		
		(12.56-11.92)x(2.86+3.12)/2	1.91		
		(13.01-12.56)x(2.69+2.86)/2	1.25		
		(13.26-13.01)x(2.58+2.69)/2	0.66		
		(14.10-13.26)x(2.12+2.58)/2	1.97		
		(14.98-14.10)x(1.82+2.12)/2	1.73		
		(15.19-14.98)x(1.73+1.82)/2	0.37		
		(15.56-15.19)x(1.70+1.73)/2	0.63		
		(16.28-15.56)x(1.66+1.70)/2	1.21		
		(16.69-16.28)x(1.65+1.66)/2	0.68		
		(17.37-16.69)x(1.65+1.65)/2	1.12		
		(18.41-17.37)x(1.54+1.65)/2	1.66		
		(18.46-18.41)x(1.53+1.54)/2	0.08		
		(18.56-18.46)x(1.48+1.53)/2	0.15		
		(19.55-18.56)x(0.89+1.48)/2	1.17		
		(20.12-19.55)x(0.59+0.89)/2	0.42		
		(20.64-20.12)x(0.28+0.59)/2	0.23		
		(21.56-20.64)x(0.07+0.28)/2	0.16		
		(21.73-21.56)x(0.04+0.07)/2	0.01		
		(21.83-21.73)x(0.03+0.04)/2	0.00		
		(22.83-21.83)x(-0.04+0.03)/2	-0.01		
		(23.55-22.83)x(-0.06+-0.04)/2	-0.04		
		(23.92-23.55)x(-0.06+-0.06)/2	-0.02		
		(24.56-23.92)x(-0.09+-0.06)/2	-0.05		
		(25.01-24.56)x(-0.10+-0.09)/2	-0.04		
		(25.69-25.01)x(-0.06+-0.10)/2	-0.05		
		(26.10-25.69)x(0.01+-0.06)/2	-0.01		
		(26.98-26.10)x(0.40+0.01)/2	0.18		
		(27.19-26.98)x(0.49+0.40)/2	0.09		
		(27.56-27.19)x(0.68+0.49)/2	0.22		
		(28.28-27.56)x(1.09+0.68)/2	0.64		
		(28.69-28.28)x(1.37+1.09)/2	0.50		
		(29.37-28.69)x(1.79+1.37)/2	1.07		
		(30.41-29.37)x(1.94+1.79)/2	1.94		
		(30.46-30.41)x(1.96+1.94)/2	0.10		
		(30.56-30.46)x(1.98+1.96)/2	0.20		
		(30.46-30.56)x(0.96+0.98)/2	-0.10		
		(30.41-30.46)x(0.94+0.96)/2	-0.05		
		(29.37-30.41)x(0.79+0.94)/2	-0.90		
		(28.69-29.37)x(0.37+0.79)/2	-0.39		
		(28.28-28.69)x(0.09+0.37)/2	-0.09		
		(27.56-28.28)x(-0.32+0.09)/2	0.08		
		(27.19-27.56)x(-0.51+-0.32)/2	0.15		
		(26.98-27.19)x(-0.60+-0.51)/2	0.12		
		(26.10-26.98)x(-0.99+-0.60)/2	0.70		
		(25.69-26.10)x(-1.06+-0.99)/2	0.42		
		(25.01-25.69)x(-1.10+-1.06)/2	0.73		
		(24.56-25.01)x(-1.09+-1.10)/2	0.49		
		(23.92-24.56)x(-1.06+-1.09)/2	0.69		
		(23.55-23.92)x(-1.06+-1.06)/2	0.39		
		(22.83-23.55)x(-1.04+-1.06)/2	0.76		
		(21.83-22.83)x(-0.97+-1.04)/2	1.00		
		(21.73-21.83)x(-0.96+-0.97)/2	0.10		
		(21.56-21.73)x(-0.93+-0.96)/2	0.16		
		(20.64-21.56)x(-0.72+-0.93)/2	0.76		
		(20.12-20.64)x(-0.41+-0.72)/2	0.29		
		(19.55-20.12)x(-0.11+-0.41)/2	0.15		
		(18.56-19.55)x(0.48+-0.11)/2	-0.18		
		(18.46-18.56)x(0.53+0.48)/2	-0.05		
		(18.41-18.46)x(0.54+0.53)/2	-0.03		
		(17.37-18.41)x(0.65+0.54)/2	-0.62		
		(16.69-17.37)x(0.65+0.65)/2	-0.44		
		(16.28-16.69)x(0.66+0.65)/2	-0.27		
		(15.56-16.28)x(0.70+0.66)/2	-0.49		
		(15.19-15.56)x(0.73+0.70)/2	-0.26		
		(14.98-15.19)x(0.82+0.73)/2	-0.16		
		(14.10-14.98)x(1.12+0.82)/2	-0.85		
		(13.26-14.10)x(1.58+1.12)/2	-1.13		
		(13.01-13.26)x(1.69+1.58)/2	-0.41		
		(12.56-13.01)x(1.86+1.69)/2	-0.80		
		(11.92-12.56)x(2.12+1.86)/2	-1.27		
		(11.55-11.92)x(2.26+2.12)/2	-0.81		
		(10.82-11.55)x(2.52+2.26)/2	-1.74		
		(9.83-10.82)x(2.90+2.52)/2	-2.68		
		(9.73-9.83)x(2.93+2.90)/2	-0.29		
		(9.56-9.73)x(2.98+2.93)/2	-0.50		
		(8.64-9.56)x(3.17+2.98)/2	-2.83		
		(8.12-8.64)x(3.14+3.17)/2	-1.64		
		(7.55-8.12)x(3.13+3.14)/2	-1.79		
		(7.29-7.55)x(3.09+3.13)/2	-0.81		
		(6.56-7.29)x(2.90+3.09)/2	-2.19		
		(6.49-6.56)x(2.88+2.90)/2	-0.20		
		(6.46-6.49)x(2.87+2.88)/2	-0.09		
		(6.40-6.46)x(2.86+2.87)/2	-0.17		
		(5.37-6.40)x(2.65+2.86)/2	-2.84		
		(4.69-5.37)x(2.60+2.65)/2	-1.78		
		(4.28-4.69)x(2.62+2.60)/2	-1.07		
		(3.56-4.28)x(2.58+2.62)/2	-1.87		
		(3.19-3.56)x(2.57+2.58)/2	-0.95		
		(2.97-3.19)x(2.56+2.57)/2	-0.56		
		(2.10-2.97)x(2.51+2.56)/2	-2.21		
		(1.26-2.10)x(2.50+2.51)/2	-2.10		
		(1.01-1.26)x(2.49+2.50)/2	-0.62		
		(0.56-1.01)x(2.49+2.49)/2	-1.12		
		(-0.09-0.56)x(2.49+2.49)/2	-1.62		
		(-0.46--0.09)x(2.49+2.49)/2	-0.92		
		(-1.18--0.46)x(2.46+2.49)/2	-1.78		
		(-2.17--1.18)x(2.40+2.46)/2	-2.41		
		(-2.27--2.17)x(2.40+2.40)/2	-0.24		
		(-2.44--2.27)x(2.41+2.40)/2	-0.41		
		(-3.36--2.44)x(2.51+2.41)/2	-2.26		
		(-3.89--3.36)x(2.56+2.51)/2	-1.34		
		(-4.45--3.89)x(2.62+2.56)/2	-1.45		
		A RIPORTARE mq	77.78		

		CALCOLO DELLE AREE		Foglio n. 166
BONIFICA				
N. SEZIONE PROG.	FIG.	ELEMENTI DI CALCOLO	AREA ELEMENTARE mq	AREA FIGURA mq	NOTE
		RIPORTO mq	77.78		
		(-5.43--4.45)x(2.71+2.62)/2	-2.61		
		(-5.54--5.43)x(2.72+2.71)/2	-0.30		
		(-5.60--5.54)x(2.72+2.72)/2	-0.16		
		(-6.63--5.60)x(2.79+2.72)/2	-2.84		
		(-7.32--6.63)x(2.78+2.79)/2	-1.92		
		(-7.72--7.32)x(2.77+2.78)/2	-1.11		
		(-8.43--7.72)x(2.74+2.77)/2	-1.96		
		(-8.81--8.43)x(2.72+2.74)/2	-1.04		
		(-9.03--8.81)x(2.73+2.72)/2	-0.60		
		(-9.90--9.03)x(2.74+2.73)/2	-2.38		
		(-10.75--9.90)x(2.77+2.74)/2	-2.34		
		(-11.00--10.75)x(2.78+2.77)/2	-0.69		
		(-11.11--11.00)x(2.78+2.78)/2	-0.31		
		(-11.43--11.11)x(2.79+2.78)/2	-0.89		
		(-11.91--11.43)x(2.81+2.79)/2	-1.34		
		(-12.09--11.91)x(2.81+2.81)/2	-0.51		
		(-12.46--12.09)x(2.82+2.81)/2	-1.04		
		(-13.18--12.46)x(2.83+2.82)/2	-2.03		
		(-14.17--13.18)x(2.86+2.83)/2	-2.82		
		(-14.27--14.17)x(2.86+2.86)/2	-0.29		
		(-14.43--14.27)x(2.86+2.86)/2	-0.46		
		(-15.11--14.43)x(2.88+2.86)/2	-1.95		
		(-15.36--15.11)x(2.89+2.88)/2	-0.72		
		(-15.76--15.36)x(2.91+2.89)/2	-1.16		
				46.31	
71 1050.00	B01	(-15.54--16.09)x(3.71+3.73)/2	2.05		
		(-15.39--15.54)x(3.71+3.71)/2	0.56		
		(-15.12--15.39)x(3.70+3.71)/2	1.00		
		(-14.29--15.12)x(3.69+3.70)/2	3.07		
		(-13.82--14.29)x(3.69+3.69)/2	1.73		
		(-13.20--13.82)x(3.70+3.69)/2	2.29		
		(-12.13--13.20)x(3.75+3.70)/2	3.99		
		(-12.11--12.13)x(3.75+3.75)/2	0.08		
		(-12.10--12.11)x(3.75+3.75)/2	0.04		
		(-11.02--12.10)x(3.77+3.75)/2	4.06		
		(-10.38--11.02)x(3.77+3.77)/2	2.41		
		(-9.93--10.38)x(3.77+3.77)/2	1.70		
		(-9.15--9.93)x(3.78+3.77)/2	2.94		
		(-8.84--9.15)x(3.77+3.78)/2	1.17		
		(-8.65--8.84)x(3.77+3.77)/2	0.72		
		(-7.74--8.65)x(3.76+3.77)/2	3.43		
		(-6.93--7.74)x(3.78+3.76)/2	3.05		
		(-6.65--6.93)x(3.78+3.78)/2	1.06		
		(-6.17--6.65)x(3.82+3.78)/2	1.82		
		(-5.56--6.17)x(3.87+3.82)/2	2.35		
		(-5.21--5.56)x(3.87+3.87)/2	1.35		
		(-4.47--5.21)x(3.90+3.87)/2	2.87		
		(-3.49--4.47)x(3.93+3.90)/2	3.84		
		(-3.38--3.49)x(3.93+3.93)/2	0.43		
		(-3.19--3.38)x(3.94+3.93)/2	0.75		
		(-2.29--3.19)x(3.97+3.94)/2	3.56		
		(-1.77--2.29)x(3.98+3.97)/2	2.07		
		(-1.19--1.77)x(3.99+3.98)/2	2.31		
		(-0.20--1.19)x(3.92+3.99)/2	3.92		
		(-0.10--0.20)x(3.91+3.92)/2	0.39		
		(-0.04--0.10)x(3.91+3.91)/2	0.23		
		(0.99--0.04)x(3.85+3.91)/2	4.00		
		(1.47-0.99)x(3.82+3.85)/2	1.84		
		(2.08-1.47)x(3.80+3.82)/2	2.32		
		(2.78-2.08)x(3.77+3.80)/2	2.65		
		(3.17-2.78)x(3.75+3.77)/2	1.47		
		(3.40-3.17)x(3.73+3.75)/2	0.86		
		(4.27-3.40)x(3.65+3.73)/2	3.21		
		(5.12-4.27)x(3.55+3.65)/2	3.06		
		(5.36-5.12)x(3.52+3.55)/2	0.85		
		(5.76-5.36)x(3.48+3.52)/2	1.40		
		(6.45-5.76)x(3.41+3.48)/2	2.38		
		(6.85-6.45)x(3.51+3.41)/2	1.38		
		(7.54-6.85)x(3.72+3.51)/2	2.49		
		(8.57-7.54)x(3.82+3.72)/2	3.88		
		(8.63-8.57)x(3.82+3.82)/2	0.23		
		(8.75-8.63)x(3.82+3.82)/2	0.46		
		(9.72-8.75)x(3.85+3.82)/2	3.72		
		(10.29-9.72)x(3.82+3.85)/2	2.19		
		(10.82-10.29)x(3.82+3.82)/2	2.02		
		(11.73-10.82)x(3.61+3.82)/2	3.38		
		(11.91-11.73)x(3.57+3.61)/2	0.65		
		(12.01-11.91)x(3.55+3.57)/2	0.36		
		(13.00-12.01)x(3.36+3.55)/2	3.42		
		(13.73-13.00)x(2.97+3.36)/2	2.31		
		(14.09-13.73)x(2.79+2.97)/2	1.04		
		(14.71-14.09)x(2.27+2.79)/2	1.57		
		(15.18-14.71)x(1.89+2.27)/2	0.98		
		(15.46-15.18)x(1.85+1.89)/2	0.52		
		(16.28-15.46)x(1.67+1.85)/2	1.44		
		(17.18-16.28)x(1.66+1.67)/2	1.50		
		(17.37-17.18)x(1.66+1.66)/2	0.32		
		(17.69-17.37)x(1.65+1.66)/2	0.53		
		(18.46-17.69)x(1.59+1.65)/2	1.25		
		(18.90-18.46)x(1.37+1.59)/2	0.65		
		(19.55-18.90)x(1.13+1.37)/2	0.81		
		(19.85-19.55)x(0.93+1.13)/2	0.31		
		(20.64-19.85)x(0.47+0.93)/2	0.55		
		(20.68-20.64)x(0.46+0.47)/2	0.02		
		(21.73-20.68)x(0.15+0.46)/2	0.32		
		(22.34-21.73)x(0.06+0.15)/2	0.06		
		(22.83-22.34)x(0.01+0.06)/2	0.02		
		(23.66-22.83)x(-0.09+0.01)/2	-0.03		
		(23.92-23.66)x(-0.12+-0.09)/2	-0.03		
		(24.07-23.92)x(-0.11+-0.12)/2	-0.02		
		(25.01-24.07)x(-0.03+-0.11)/2	-0.07		
		(25.79-25.01)x(0.10+-0.03)/2	0.03		
		(26.10-25.79)x(0.16+0.10)/2	0.04		
		(26.64-26.10)x(0.32+0.16)/2	0.13		
		A RIPORTARE mq	123.71		

		CALCOLO DELLE AREE		Foglio n. 167
BONIFICA				
N. SEZIONE PROG.	FIG.	ELEMENTI DI CALCOLO	AREA ELEMENTARE mq	AREA FIGURA mq	NOTE
		RIPORTO mq	123.71		
		(27.19-26.64)x(0.51+0.32)/2	0.23		
		(27.51-27.19)x(0.68+0.51)/2	0.19		
		(28.29-27.51)x(1.08+0.68)/2	0.69		
		(29.23-28.29)x(1.53+1.08)/2	1.23		
		(29.38-29.23)x(1.61+1.53)/2	0.24		
		(29.44-29.38)x(1.63+1.61)/2	0.10		
		(29.63-29.44)x(1.68+1.63)/2	0.31		
		(30.24-29.63)x(1.86+1.68)/2	1.08		
		(30.47-30.24)x(1.92+1.86)/2	0.43		
		(30.71-30.47)x(1.96+1.92)/2	0.47		
		(30.47-30.71)x(0.92+0.96)/2	-0.23		
		(30.24-30.47)x(0.86+0.92)/2	-0.20		
		(29.63-30.24)x(0.68+0.86)/2	-0.47		
		(29.44-29.63)x(0.63+0.68)/2	-0.12		
		(29.38-29.44)x(0.61+0.63)/2	-0.04		
		(29.23-29.38)x(0.53+0.61)/2	-0.09		
		(28.29-29.23)x(0.08+0.53)/2	-0.29		
		(27.51-28.29)x(-0.32+0.08)/2	0.09		
		(27.19-27.51)x(-0.49+-0.32)/2	0.13		
		(26.64-27.19)x(-0.68+-0.49)/2	0.32		
		(26.10-26.64)x(-0.84+-0.68)/2	0.41		
		(25.79-26.10)x(-0.90+-0.84)/2	0.27		
		(25.01-25.79)x(-1.03+-0.90)/2	0.75		
		(24.07-25.01)x(-1.11+-1.03)/2	1.01		
		(23.92-24.07)x(-1.12+-1.11)/2	0.17		
		(23.66-23.92)x(-1.09+-1.12)/2	0.29		
		(22.83-23.66)x(-0.99+-1.09)/2	0.86		
		(22.34-22.83)x(-0.94+-0.99)/2	0.47		
		(21.73-22.34)x(-0.85+-0.94)/2	0.55		
		(20.68-21.73)x(-0.54+-0.85)/2	0.73		
		(20.64-20.68)x(-0.53+-0.54)/2	0.02		
		(19.85-20.64)x(-0.07+-0.53)/2	0.24		
		(19.55-19.85)x(0.13+-0.07)/2	-0.01		
		(18.90-19.55)x(0.37+0.13)/2	-0.16		
		(18.46-18.90)x(0.59+0.37)/2	-0.21		
		(17.69-18.46)x(0.65+0.59)/2	-0.48		
		(17.37-17.69)x(0.66+0.65)/2	-0.21		
		(17.18-17.37)x(0.66+0.66)/2	-0.13		
		(16.28-17.18)x(0.67+0.66)/2	-0.60		
		(15.46-16.28)x(0.85+0.67)/2	-0.62		
		(15.18-15.46)x(0.89+0.85)/2	-0.24		
		(14.71-15.18)x(1.27+0.89)/2	-0.51		
		(14.09-14.71)x(1.79+1.27)/2	-0.95		
		(13.73-14.09)x(1.97+1.79)/2	-0.68		
		(13.00-13.73)x(2.36+1.97)/2	-1.58		
		(12.01-13.00)x(2.55+2.36)/2	-2.43		
		(11.91-12.01)x(2.57+2.55)/2	-0.26		
		(11.73-11.91)x(2.61+2.57)/2	-0.47		
		(10.82-11.73)x(2.82+2.61)/2	-2.47		
		(10.29-10.82)x(2.82+2.82)/2	-1.49		
		(9.72-10.29)x(2.85+2.82)/2	-1.62		
		(8.75-9.72)x(2.82+2.85)/2	-2.75		
		(8.63-8.75)x(2.82+2.82)/2	-0.34		
		(8.57-8.63)x(2.82+2.82)/2	-0.17		
		(7.54-8.57)x(2.72+2.82)/2	-2.85		
		(6.85-7.54)x(2.51+2.72)/2	-1.80		
		(6.45-6.85)x(2.41+2.51)/2	-0.98		
		(5.76-6.45)x(2.48+2.41)/2	-1.69		
		(5.36-5.76)x(2.52+2.48)/2	-1.00		
		(5.12-5.36)x(2.55+2.52)/2	-0.61		
		(4.27-5.12)x(2.65+2.55)/2	-2.21		
		(3.40-4.27)x(2.73+2.65)/2	-2.34		
		(3.17-3.40)x(2.75+2.73)/2	-0.63		
		(2.78-3.17)x(2.77+2.75)/2	-1.08		
		(2.08-2.78)x(2.80+2.77)/2	-1.95		
		(1.47-2.08)x(2.82+2.80)/2	-1.71		
		(0.99-1.47)x(2.85+2.82)/2	-1.36		
		(-0.04-0.99)x(2.91+2.85)/2	-2.97		
		(-0.10--0.04)x(2.91+2.91)/2	-0.17		
		(-0.20--0.10)x(2.92+2.91)/2	-0.29		
		(-1.19--0.20)x(2.99+2.92)/2	-2.93		
		(-1.77--1.19)x(2.98+2.99)/2	-1.73		
		(-2.29--1.77)x(2.97+2.98)/2	-1.55		
		(-3.19--2.29)x(2.94+2.97)/2	-2.66		
		(-3.38--3.19)x(2.93+2.94)/2	-0.56		
		(-3.49--3.38)x(2.93+2.93)/2	-0.32		
		(-4.47--3.49)x(2.90+2.93)/2	-2.86		
		(-5.21--4.47)x(2.87+2.90)/2	-2.13		
		(-5.56--5.21)x(2.87+2.87)/2	-1.00		
		(-6.17--5.56)x(2.82+2.87)/2	-1.74		
		(-6.65--6.17)x(2.78+2.82)/2	-1.34		
		(-6.93--6.65)x(2.78+2.78)/2	-0.78		
		(-7.74--6.93)x(2.76+2.78)/2	-2.24		
		(-8.65--7.74)x(2.77+2.76)/2	-2.52		
		(-8.84--8.65)x(2.77+2.77)/2	-0.53		
		(-9.15--8.84)x(2.78+2.77)/2	-0.86		
		(-9.93--9.15)x(2.77+2.78)/2	-2.16		
		(-10.38--9.93)x(2.77+2.77)/2	-1.25		
		(-11.02--10.38)x(2.77+2.77)/2	-1.77		
		(-12.10--11.02)x(2.75+2.77)/2	-2.98		
		(-12.11--12.10)x(2.75+2.75)/2	-0.03		
		(-12.13--12.11)x(2.75+2.75)/2	-0.06		
		(-13.20--12.13)x(2.70+2.75)/2	-2.92		
		(-13.82--13.20)x(2.69+2.70)/2	-1.67		
		(-14.29--13.82)x(2.69+2.69)/2	-1.26		
		(-15.12--14.29)x(2.70+2.69)/2	-2.24		
		(-15.39--15.12)x(2.71+2.70)/2	-0.73		
		(-15.54--15.39)x(2.71+2.71)/2	-0.41		
		(-16.09--15.54)x(2.73+2.71)/2	-1.50		
				46.80	
72 1065.00	BO1	(-15.83--16.00)x(3.83+3.84)/2	0.65		
		(-15.44--15.83)x(3.82+3.83)/2	1.49		
		(-15.22--15.44)x(3.82+3.82)/2	0.84		
		(-14.35--15.22)x(3.81+3.82)/2	3.32		
		A RIPORTARE mq	6.30		

	CALCOLO DELLE AREE		Foglio n. 168

BONIFICA

N. SEZIONE PROG.	FIG.	ELEMENTI DI CALCOLO	AREA ELEMENTARE mq	AREA FIGURA mq	NOTE
		RIPORTO mq	6.30		
		(-13.49--14.35)x(3.77+3.81)/2	3.26		
		(-13.26--13.49)x(3.77+3.77)/2	0.87		
		(-12.86--13.26)x(3.74+3.77)/2	1.50		
		(-12.17--12.86)x(3.70+3.74)/2	2.57		
		(-11.76--12.17)x(3.67+3.70)/2	1.51		
		(-11.07--11.76)x(3.63+3.67)/2	2.52		
		(-10.03--11.07)x(3.62+3.63)/2	3.77		
		(-9.98--10.03)x(3.62+3.62)/2	0.18		
		(-9.89--9.98)x(3.62+3.62)/2	0.33		
		(-8.89--9.89)x(3.65+3.62)/2	3.63		
		(-8.30--8.89)x(3.64+3.65)/2	2.15		
		(-7.80--8.30)x(3.64+3.64)/2	1.82		
		(-6.93--7.80)x(3.64+3.64)/2	3.17		
		(-6.70--6.93)x(3.64+3.64)/2	0.84		
		(-6.57--6.70)x(3.65+3.64)/2	0.47		
		(-5.61--6.57)x(3.70+3.65)/2	3.53		
		(-4.84--5.61)x(3.96+3.70)/2	2.95		
		(-4.52--4.84)x(4.05+3.96)/2	1.28		
		(-4.37--4.52)x(4.12+4.05)/2	0.61		
		(-3.96--4.37)x(4.33+4.12)/2	1.73		
		(-3.57--3.96)x(4.51+4.33)/2	1.72		
		(-3.43--3.57)x(4.57+4.51)/2	0.64		
		(-3.12--3.43)x(4.70+4.57)/2	1.44		
		(-2.33--3.12)x(5.02+4.70)/2	3.84		
		(-1.39--2.33)x(5.06+5.02)/2	4.74		
		(-1.24--1.39)x(5.07+5.06)/2	0.76		
		(-0.99--1.24)x(5.04+5.07)/2	1.26		
		(-0.15--0.99)x(4.90+5.04)/2	4.17		
		(0.34--0.15)x(4.77+4.90)/2	2.37		
		(0.94-0.34)x(4.68+4.77)/2	2.83		
		(1.98-0.94)x(4.38+4.68)/2	4.71		
		(2.04-1.98)x(4.37+4.38)/2	0.26		
		(2.07-2.04)x(4.36+4.37)/2	0.13		
		(3.13-2.07)x(4.20+4.36)/2	4.54		
		(3.80-3.13)x(4.11+4.20)/2	2.78		
		(4.22-3.80)x(4.04+4.11)/2	1.71		
		(4.94-4.22)x(3.95+4.04)/2	2.88		
		(5.32-4.94)x(3.90+3.95)/2	1.49		
		(5.53-5.32)x(3.84+3.90)/2	0.81		
		(6.41-5.53)x(3.55+3.84)/2	3.25		
		(7.26-6.41)x(3.28+3.55)/2	2.90		
		(7.50-7.26)x(3.20+3.28)/2	0.78		
		(7.91-7.50)x(3.25+3.20)/2	1.32		
		(8.59-7.91)x(3.36+3.25)/2	2.25		
		(8.99-8.59)x(3.45+3.36)/2	1.36		
		(9.69-8.99)x(3.59+3.45)/2	2.46		
		(10.72-9.69)x(3.80+3.59)/2	3.81		
		(10.78-10.72)x(3.81+3.80)/2	0.23		
		(10.88-10.78)x(3.81+3.81)/2	0.38		
		(11.87-10.88)x(3.73+3.81)/2	3.73		
		(12.45-11.87)x(3.61+3.73)/2	2.13		
		(12.96-12.45)x(3.55+3.61)/2	1.83		
		(13.84-12.96)x(3.15+3.55)/2	2.95		
		(14.06-13.84)x(3.03+3.15)/2	0.68		
		(14.80-14.06)x(2.36+3.03)/2	1.99		
		(15.15-14.80)x(2.12+2.36)/2	0.78		
		(15.91-15.15)x(1.87+2.12)/2	1.52		
		(16.24-15.91)x(1.70+1.87)/2	0.59		
		(16.81-16.24)x(1.70+1.70)/2	0.97		
		(17.33-16.81)x(1.70+1.70)/2	0.88		
		(17.64-17.33)x(1.66+1.70)/2	0.52		
		(18.43-17.64)x(1.60+1.66)/2	1.29		
		(19.37-18.43)x(1.45+1.60)/2	1.43		
		(19.52-19.37)x(1.43+1.45)/2	0.22		
		(19.78-19.52)x(1.32+1.43)/2	0.36		
		(20.61-19.78)x(0.88+1.32)/2	0.91		
		(21.10-20.61)x(0.59+0.88)/2	0.36		
		(21.70-21.10)x(0.18+0.59)/2	0.23		
		(22.74-21.70)x(-0.09+0.18)/2	0.05		
		(22.80-22.74)x(-0.10+-0.09)/2	-0.01		
		(22.83-22.80)x(-0.10+-0.10)/2	-0.00		
		(23.89-22.83)x(-0.16+-0.10)/2	-0.14		
		(24.38-23.89)x(-0.15+-0.16)/2	-0.08		
		(24.98-24.38)x(-0.16+-0.15)/2	-0.09		
		(25.71-24.98)x(-0.16+-0.16)/2	-0.12		
		(26.07-25.71)x(-0.14+-0.16)/2	-0.05		
		(26.29-26.07)x(-0.08+-0.14)/2	-0.02		
		(27.17-26.29)x(0.12+-0.08)/2	0.02		
		(28.02-27.17)x(0.65+0.12)/2	0.33		
		(28.26-28.02)x(0.79+0.65)/2	0.17		
		(28.68-28.26)x(1.04+0.79)/2	0.38		
		(29.35-28.68)x(1.42+1.04)/2	0.82		
		(29.75-29.35)x(1.52+1.42)/2	0.59		
		(30.44-29.75)x(1.73+1.52)/2	1.12		
		(30.79-30.44)x(1.79+1.73)/2	0.62		
		(30.44-30.79)x(0.73+0.79)/2	-0.27		
		(29.75-30.44)x(0.52+0.73)/2	-0.43		
		(29.35-29.75)x(0.42+0.52)/2	-0.19		
		(28.68-29.35)x(0.04+0.42)/2	-0.15		
		(28.26-28.68)x(-0.21+0.04)/2	0.04		
		(28.02-28.26)x(-0.35+-0.21)/2	0.07		
		(27.17-28.02)x(-0.88+-0.35)/2	0.52		
		(26.29-27.17)x(-1.08+-0.88)/2	0.86		
		(26.07-26.29)x(-1.14+-1.08)/2	0.24		
		(25.71-26.07)x(-1.16+-1.14)/2	0.41		
		(24.98-25.71)x(-1.16+-1.16)/2	0.85		
		(24.38-24.98)x(-1.15+-1.16)/2	0.69		
		(23.89-24.38)x(-1.16+-1.15)/2	0.57		
		(22.83-23.89)x(-1.10+-1.16)/2	1.20		
		(22.80-22.83)x(-1.10+-1.10)/2	0.03		
		(22.74-22.80)x(-1.09+-1.10)/2	0.07		
		(21.70-22.74)x(-0.82+-1.09)/2	0.99		
		(21.10-21.70)x(-0.41+-0.82)/2	0.37		
		(20.61-21.10)x(-0.12+-0.41)/2	0.13		
		A RIPORTARE mq	139.77		

		CALCOLO DELLE AREE		Foglio n. 169
BONIFICA				
N. SEZIONE PROG.	FIG.	ELEMENTI DI CALCOLO	AREA ELEMENTARE mq	AREA FIGURA mq	NOTE
		RIPORTO mq	139.77		
		(19.78-20.61)x(0.32+-0.12)/2	-0.08		
		(19.52-19.78)x(0.43+0.32)/2	-0.10		
		(19.37-19.52)x(0.45+0.43)/2	-0.07		
		(18.43-19.37)x(0.60+0.45)/2	-0.49		
		(17.64-18.43)x(0.66+0.60)/2	-0.50		
		(17.33-17.64)x(0.70+0.66)/2	-0.21		
		(16.81-17.33)x(0.70+0.70)/2	-0.36		
		(16.24-16.81)x(0.70+0.70)/2	-0.40		
		(15.91-16.24)x(0.87+0.70)/2	-0.26		
		(15.15-15.91)x(1.12+0.87)/2	-0.76		
		(14.80-15.15)x(1.36+1.12)/2	-0.43		
		(14.06-14.80)x(2.03+1.36)/2	-1.25		
		(13.84-14.06)x(2.15+2.03)/2	-0.46		
		(12.96-13.84)x(2.55+2.15)/2	-2.07		
		(12.45-12.96)x(2.61+2.55)/2	-1.32		
		(11.87-12.45)x(2.73+2.61)/2	-1.55		
		(10.88-11.87)x(2.81+2.73)/2	-2.74		
		(10.78-10.88)x(2.81+2.81)/2	-0.28		
		(10.72-10.78)x(2.80+2.81)/2	-0.17		
		(9.69-10.72)x(2.59+2.80)/2	-2.78		
		(8.99-9.69)x(2.45+2.59)/2	-1.76		
		(8.59-8.99)x(2.36+2.45)/2	-0.96		
		(7.91-8.59)x(2.25+2.36)/2	-1.57		
		(7.50-7.91)x(2.20+2.25)/2	-0.91		
		(7.26-7.50)x(2.28+2.20)/2	-0.54		
		(6.41-7.26)x(2.55+2.28)/2	-2.05		
		(5.53-6.41)x(2.84+2.55)/2	-2.37		
		(5.32-5.53)x(2.90+2.84)/2	-0.60		
		(4.94-5.32)x(2.95+2.90)/2	-1.11		
		(4.22-4.94)x(3.04+2.95)/2	-2.16		
		(3.80-4.22)x(3.11+3.04)/2	-1.29		
		(3.13-3.80)x(3.20+3.11)/2	-2.11		
		(2.07-3.13)x(3.36+3.20)/2	-3.48		
		(2.04-2.07)x(3.37+3.36)/2	-0.10		
		(1.98-2.04)x(3.38+3.37)/2	-0.20		
		(0.94-1.98)x(3.68+3.38)/2	-3.67		
		(0.34-0.94)x(3.77+3.68)/2	-2.23		
		(-0.15-0.34)x(3.90+3.77)/2	-1.88		
		(-0.99--0.15)x(4.04+3.90)/2	-3.33		
		(-1.24--0.99)x(4.07+4.04)/2	-1.01		
		(-1.39--1.24)x(4.06+4.07)/2	-0.61		
		(-2.33--1.39)x(4.02+4.06)/2	-3.80		
		(-3.12--2.33)x(3.70+4.02)/2	-3.05		
		(-3.43--3.12)x(3.57+3.70)/2	-1.13		
		(-3.57--3.43)x(3.51+3.57)/2	-0.50		
		(-3.96--3.57)x(3.33+3.51)/2	-1.33		
		(-4.37--3.96)x(3.12+3.33)/2	-1.32		
		(-4.52--4.37)x(3.05+3.12)/2	-0.46		
		(-4.84--4.52)x(2.96+3.05)/2	-0.96		
		(-5.61--4.84)x(2.70+2.96)/2	-2.18		
		(-6.57--5.61)x(2.65+2.70)/2	-2.57		
		(-6.70--6.57)x(2.64+2.65)/2	-0.34		
		(-6.93--6.70)x(2.64+2.64)/2	-0.61		
		(-7.80--6.93)x(2.64+2.64)/2	-2.30		
		(-8.30--7.80)x(2.64+2.64)/2	-1.32		
		(-8.89--8.30)x(2.65+2.64)/2	-1.56		
		(-9.89--8.89)x(2.62+2.65)/2	-2.63		
		(-9.98--9.89)x(2.62+2.62)/2	-0.24		
		(-10.03--9.98)x(2.62+2.62)/2	-0.13		
		(-11.07--10.03)x(2.63+2.62)/2	-2.73		
		(-11.76--11.07)x(2.67+2.63)/2	-1.83		
		(-12.17--11.76)x(2.70+2.67)/2	-1.10		
		(-12.86--12.17)x(2.74+2.70)/2	-1.88		
		(-13.26--12.86)x(2.77+2.74)/2	-1.10		
		(-13.49--13.26)x(2.77+2.77)/2	-0.64		
		(-14.35--13.49)x(2.81+2.77)/2	-2.40		
		(-15.22--14.35)x(2.82+2.81)/2	-2.45		
		(-15.44--15.22)x(2.82+2.82)/2	-0.62		
		(-15.83--15.44)x(2.83+2.82)/2	-1.10		
		(-16.00--15.83)x(2.84+2.83)/2	-0.48		
				46.79	
73 1080.00	BO1	(-15.53--16.20)x(3.78+3.75)/2	2.52		
		(-14.93--15.53)x(3.81+3.78)/2	2.28		
		(-14.44--14.93)x(3.84+3.81)/2	1.87		
		(-13.60--14.44)x(3.81+3.84)/2	3.21		
		(-13.35--13.60)x(3.80+3.81)/2	0.95		
		(-13.19--13.35)x(3.79+3.80)/2	0.61		
		(-12.25--13.19)x(3.69+3.79)/2	3.52		
		(-11.46--12.25)x(3.65+3.69)/2	2.90		
		(-11.16--11.46)x(3.63+3.65)/2	1.09		
		(-10.65--11.16)x(3.61+3.63)/2	1.85		
		(-10.06--10.65)x(3.59+3.61)/2	2.12		
		(-9.43--10.06)x(3.62+3.59)/2	2.27		
		(-8.97--9.43)x(3.64+3.62)/2	1.67		
		(-7.98--8.97)x(3.67+3.64)/2	3.62		
		(-7.88--7.98)x(3.67+3.67)/2	0.37		
		(-7.70--7.88)x(3.67+3.67)/2	0.66		
		(-6.78--7.70)x(3.68+3.67)/2	3.38		
		(-6.24--6.78)x(3.70+3.68)/2	1.99		
		(-5.69--6.24)x(3.71+3.70)/2	2.04		
		(-4.75--5.69)x(3.83+3.71)/2	3.54		
		(-4.60--4.75)x(3.85+3.83)/2	0.58		
		(-4.51--4.60)x(3.88+3.85)/2	0.35		
		(-3.50--4.51)x(4.16+3.88)/2	4.06		
		(-2.77--3.50)x(4.36+4.16)/2	3.11		
		(-2.41--2.77)x(4.48+4.36)/2	1.59		
		(-1.80--2.41)x(4.60+4.48)/2	2.77		
		(-1.32--1.80)x(4.69+4.60)/2	2.23		
		(-1.03--1.32)x(4.70+4.69)/2	1.36		
		(-0.22--1.03)x(4.74+4.70)/2	3.82		
		(0.70--0.22)x(4.70+4.74)/2	4.34		
		(0.87-0.70)x(4.70+4.70)/2	0.80		
		(1.15-0.87)x(4.65+4.70)/2	1.31		
		(1.96-1.15)x(4.49+4.65)/2	3.70		
		A RIPORTARE mq	72.48		

		CALCOLO DELLE AREE		Foglio n. 170
BONIFICA				
N. SEZIONE PROG.	FIG.	ELEMENTI DI CALCOLO	AREA ELEMENTARE mq	AREA FIGURA mq	NOTE
		RIPORTO mq	72.48		
		(2.44-1.96)x(4.44+4.49)/2	2.14		
		(3.06-2.44)x(4.36+4.44)/2	2.73		
		(4.10-3.06)x(4.18+4.36)/2	4.44		
		(4.15-4.10)x(4.17+4.18)/2	0.21		
		(4.18-4.15)x(4.16+4.17)/2	0.12		
		(5.24-4.18)x(3.92+4.16)/2	4.28		
		(5.92-5.24)x(3.78+3.92)/2	2.62		
		(6.34-5.92)x(3.70+3.78)/2	1.57		
		(7.05-6.34)x(3.61+3.70)/2	2.60		
		(7.43-7.05)x(3.56+3.61)/2	1.36		
		(7.65-7.43)x(3.54+3.56)/2	0.78		
		(8.52-7.65)x(3.45+3.54)/2	3.04		
		(8.92-8.52)x(3.41+3.45)/2	1.37		
		(9.62-8.92)x(3.37+3.41)/2	2.37		
		(10.00-9.62)x(3.34+3.37)/2	1.27		
		(10.71-10.00)x(3.29+3.34)/2	2.35		
		(11.13-10.71)x(3.39+3.29)/2	1.40		
		(11.80-11.13)x(3.45+3.39)/2	2.29		
		(12.86-11.80)x(3.31+3.45)/2	3.58		
		(12.90-12.86)x(3.31+3.31)/2	0.13		
		(12.95-12.90)x(3.29+3.31)/2	0.16		
		(13.99-12.95)x(3.06+3.29)/2	3.30		
		(14.60-13.99)x(2.77+3.06)/2	1.78		
		(15.08-14.60)x(2.62+2.77)/2	1.29		
		(15.90-15.08)x(2.16+2.62)/2	1.96		
		(16.18-15.90)x(1.98+2.16)/2	0.58		
		(16.34-16.18)x(1.95+1.98)/2	0.31		
		(17.27-16.34)x(1.71+1.95)/2	1.70		
		(18.08-17.27)x(1.65+1.71)/2	1.36		
		(18.36-18.08)x(1.62+1.65)/2	0.46		
		(18.50-18.36)x(1.61+1.62)/2	0.23		
		(18.85-18.50)x(1.51+1.61)/2	0.55		
		(19.29-18.85)x(1.40+1.51)/2	0.64		
		(19.46-19.29)x(1.34+1.40)/2	0.23		
		(19.81-19.46)x(1.19+1.34)/2	0.44		
		(20.55-19.81)x(0.88+1.19)/2	0.77		
		(21.55-20.55)x(0.48+0.88)/2	0.68		
		(21.64-21.55)x(0.44+0.48)/2	0.04		
		(21.80-21.64)x(0.40+0.44)/2	0.07		
		(22.74-21.80)x(0.17+0.40)/2	0.27		
		(23.29-22.74)x(0.08+0.17)/2	0.07		
		(23.83-23.29)x(-0.02+0.08)/2	0.02		
		(24.75-23.83)x(-0.07+-0.02)/2	-0.04		
		(24.92-24.75)x(-0.08+-0.07)/2	-0.01		
		(25.02-24.92)x(-0.08+-0.08)/2	-0.01		
		(26.02-25.02)x(-0.06+-0.08)/2	-0.07		
		(26.76-26.02)x(-0.00+-0.06)/2	-0.02		
		(27.11-26.76)x(0.01+-0.00)/2	0.00		
		(27.71-27.11)x(0.26+0.01)/2	0.08		
		(28.20-27.71)x(0.52+0.26)/2	0.19		
		(28.50-28.20)x(0.65+0.52)/2	0.18		
		(29.30-28.50)x(1.02+0.65)/2	0.67		
		(29.67-29.30)x(1.19+1.02)/2	0.41		
		(30.39-29.67)x(1.46+1.19)/2	0.95		
		(30.66-30.39)x(1.55+1.46)/2	0.41		
		(30.83-30.66)x(1.60+1.55)/2	0.27		
		(30.66-30.83)x(0.55+0.60)/2	-0.10		
		(30.39-30.66)x(0.46+0.55)/2	-0.14		
		(29.67-30.39)x(0.19+0.46)/2	-0.23		
		(29.30-29.67)x(0.02+0.19)/2	-0.04		
		(28.50-29.30)x(-0.35+0.02)/2	0.13		
		(28.20-28.50)x(-0.48+-0.35)/2	0.12		
		(27.71-28.20)x(-0.74+-0.48)/2	0.30		
		(27.11-27.71)x(-0.99+-0.74)/2	0.52		
		(26.76-27.11)x(-1.00+-0.99)/2	0.35		
		(26.02-26.76)x(-1.06+-1.00)/2	0.76		
		(25.02-26.02)x(-1.08+-1.06)/2	1.07		
		(24.92-25.02)x(-1.08+-1.08)/2	0.11		
		(24.75-24.92)x(-1.07+-1.08)/2	0.18		
		(23.83-24.75)x(-1.02+-1.07)/2	0.96		
		(23.29-23.83)x(-0.92+-1.02)/2	0.52		
		(22.74-23.29)x(-0.83+-0.92)/2	0.48		
		(21.80-22.74)x(-0.60+-0.83)/2	0.67		
		(21.64-21.80)x(-0.56+-0.60)/2	0.09		
		(21.55-21.64)x(-0.52+-0.56)/2	0.05		
		(20.55-21.55)x(-0.12+-0.52)/2	0.32		
		(19.81-20.55)x(0.19+-0.12)/2	-0.03		
		(19.46-19.81)x(0.34+0.19)/2	-0.09		
		(19.29-19.46)x(0.40+0.34)/2	-0.06		
		(18.85-19.29)x(0.51+0.40)/2	-0.20		
		(18.50-18.85)x(0.61+0.51)/2	-0.20		
		(18.36-18.50)x(0.62+0.61)/2	-0.09		
		(18.08-18.36)x(0.65+0.62)/2	-0.18		
		(17.27-18.08)x(0.71+0.65)/2	-0.55		
		(16.34-17.27)x(0.95+0.71)/2	-0.77		
		(16.18-16.34)x(0.98+0.95)/2	-0.15		
		(15.90-16.18)x(1.16+0.98)/2	-0.30		
		(15.08-15.90)x(1.62+1.16)/2	-1.14		
		(14.60-15.08)x(1.77+1.62)/2	-0.81		
		(13.99-14.60)x(2.06+1.77)/2	-1.17		
		(12.95-13.99)x(2.29+2.06)/2	-2.26		
		(12.90-12.95)x(2.31+2.29)/2	-0.11		
		(12.86-12.90)x(2.31+2.31)/2	-0.09		
		(11.80-12.86)x(2.45+2.31)/2	-2.52		
		(11.13-11.80)x(2.39+2.45)/2	-1.62		
		(10.71-11.13)x(2.29+2.39)/2	-0.98		
		(10.00-10.71)x(2.34+2.29)/2	-1.64		
		(9.62-10.00)x(2.37+2.34)/2	-0.89		
		(8.92-9.62)x(2.41+2.37)/2	-1.67		
		(8.52-8.92)x(2.45+2.41)/2	-0.97		
		(7.65-8.52)x(2.54+2.45)/2	-2.17		
		(7.43-7.65)x(2.56+2.54)/2	-0.56		
		(7.05-7.43)x(2.61+2.56)/2	-0.98		
		(6.34-7.05)x(2.70+2.61)/2	-1.89		
		A RIPORTARE mq	115.08		

		CALCOLO DELLE AREE		Foglio n. 171
BONIFICA				
N. SEZIONE PROG.	FIG.	ELEMENTI DI CALCOLO	AREA ELEMENTARE mq	AREA FIGURA mq	NOTE
		RIPORTO mq	115.08		
		(5.92-6.34)x(2.78+2.70)/2	-1.15		
		(5.24-5.92)x(2.92+2.78)/2	-1.94		
		(4.18-5.24)x(3.16+2.92)/2	-3.22		
		(4.15-4.18)x(3.17+3.16)/2	-0.09		
		(4.10-4.15)x(3.18+3.17)/2	-0.16		
		(3.06-4.10)x(3.36+3.18)/2	-3.40		
		(2.44-3.06)x(3.44+3.36)/2	-2.11		
		(1.96-2.44)x(3.49+3.44)/2	-1.66		
		(1.15-1.96)x(3.65+3.49)/2	-2.89		
		(0.87-1.15)x(3.70+3.65)/2	-1.03		
		(0.70-0.87)x(3.70+3.70)/2	-0.63		
		(-0.22-0.70)x(3.74+3.70)/2	-3.42		
		(-1.03--0.22)x(3.70+3.74)/2	-3.01		
		(-1.32--1.03)x(3.69+3.70)/2	-1.07		
		(-1.80--1.32)x(3.60+3.69)/2	-1.75		
		(-2.41--1.80)x(3.48+3.60)/2	-2.16		
		(-2.77--2.41)x(3.36+3.48)/2	-1.23		
		(-3.50--2.77)x(3.16+3.36)/2	-2.38		
		(-4.51--3.50)x(2.88+3.16)/2	-3.05		
		(-4.60--4.51)x(2.85+2.88)/2	-0.26		
		(-4.75--4.60)x(2.83+2.85)/2	-0.43		
		(-5.69--4.75)x(2.71+2.83)/2	-2.60		
		(-6.24--5.69)x(2.70+2.71)/2	-1.49		
		(-6.78--6.24)x(2.68+2.70)/2	-1.45		
		(-7.70--6.78)x(2.67+2.68)/2	-2.46		
		(-7.88--7.70)x(2.67+2.67)/2	-0.48		
		(-7.98--7.88)x(2.67+2.67)/2	-0.27		
		(-8.97--7.98)x(2.64+2.67)/2	-2.63		
		(-9.43--8.97)x(2.62+2.64)/2	-1.21		
		(-10.06--9.43)x(2.59+2.62)/2	-1.64		
		(-10.65--10.06)x(2.61+2.59)/2	-1.53		
		(-11.16--10.65)x(2.63+2.61)/2	-1.34		
		(-11.46--11.16)x(2.65+2.63)/2	-0.79		
		(-12.25--11.46)x(2.69+2.65)/2	-2.11		
		(-13.19--12.25)x(2.79+2.69)/2	-2.58		
		(-13.35--13.19)x(2.80+2.79)/2	-0.45		
		(-13.60--13.35)x(2.81+2.80)/2	-0.70		
		(-14.44--13.60)x(2.84+2.81)/2	-2.37		
		(-14.93--14.44)x(2.81+2.84)/2	-1.38		
		(-15.53--14.93)x(2.78+2.81)/2	-1.68		
		(-16.20--15.53)x(2.75+2.78)/2	-1.85		
				47.03	
74 1095.00	BO1	(-15.65--16.15)x(3.82+3.83)/2	1.91		
		(-15.30--15.65)x(3.83+3.82)/2	1.34		
		(-14.56--15.30)x(3.85+3.83)/2	2.84		
		(-14.37--14.56)x(3.85+3.85)/2	0.73		
		(-13.46--14.37)x(3.87+3.85)/2	3.51		
		(-12.92--13.46)x(3.84+3.87)/2	2.08		
		(-12.37--12.92)x(3.82+3.84)/2	2.11		
		(-11.44--12.37)x(3.81+3.82)/2	3.55		
		(-11.27--11.44)x(3.81+3.81)/2	0.65		
		(-10.97--11.27)x(3.80+3.81)/2	1.14		
		(-10.91--10.97)x(3.79+3.80)/2	0.23		
		(-10.81--10.91)x(3.76+3.79)/2	0.38		
		(-10.77--10.81)x(3.75+3.76)/2	0.15		
		(-10.75--10.77)x(3.68+3.75)/2	0.07		
		(-10.74--10.75)x(3.76+3.68)/2	0.04		
		(-10.73--10.74)x(3.81+3.76)/2	0.04		
		(-10.69--10.73)x(3.82+3.77)/2	0.15		
		(-10.64--10.69)x(3.80+3.82)/2	0.19		
		(-10.38--10.64)x(3.80+3.80)/2	0.99		
		(-10.18--10.38)x(3.80+3.80)/2	0.76		
		(-9.43--10.18)x(3.80+3.80)/2	2.85		
		(-9.08--9.43)x(3.80+3.80)/2	1.33		
		(-8.50--9.08)x(3.80+3.80)/2	2.20		
		(-7.99--8.50)x(3.80+3.80)/2	1.94		
		(-7.69--7.99)x(3.81+3.80)/2	1.14		
		(-6.90--7.69)x(3.83+3.81)/2	3.02		
		(-6.54--6.90)x(3.84+3.83)/2	1.38		
		(-6.23--6.54)x(3.85+3.84)/2	1.19		
		(-6.10--6.23)x(3.85+3.85)/2	0.50		
		(-5.96--6.10)x(3.84+3.85)/2	0.54		
		(-5.89--5.96)x(3.82+3.84)/2	0.27		
		(-5.87--5.89)x(3.85+3.82)/2	0.08		
		(-5.85--5.87)x(3.80+3.85)/2	0.08		
		(-5.84--5.85)x(3.85+3.80)/2	0.04		
		(-5.83--5.84)x(3.83+3.85)/2	0.04		
		(-5.77--5.83)x(3.91+3.83)/2	0.23		
		(-5.74--5.77)x(3.91+3.91)/2	0.12		
		(-5.57--5.74)x(3.93+3.91)/2	0.67		
		(-4.71--5.57)x(4.01+3.93)/2	3.41		
		(-4.20--4.71)x(4.02+4.01)/2	2.05		
		(-3.61--4.20)x(4.04+4.02)/2	2.38		
		(-3.46--3.61)x(4.04+4.04)/2	0.61		
		(-3.18--3.46)x(4.18+4.04)/2	1.15		
		(-3.11--3.18)x(4.17+4.18)/2	0.29		
		(-3.07--3.11)x(3.77+4.17)/2	0.16		
		(-3.04--3.07)x(3.95+3.77)/2	0.12		
		(-3.03--3.04)x(3.92+3.95)/2	0.04		
		(-3.02--3.03)x(3.82+3.92)/2	0.04		
		(-3.01--3.02)x(3.87+3.85)/2	0.04		
		(-3.00--3.01)x(3.88+3.91)/2	0.04		
		(-2.97--3.00)x(3.85+3.85)/2	0.12		
		(-2.96--2.97)x(3.85+3.85)/2	0.04		
		(-2.95--2.96)x(4.31+3.85)/2	0.04		
		(-2.94--2.95)x(4.21+4.35)/2	0.04		
		(-2.93--2.94)x(4.22+4.21)/2	0.04		
		(-2.92--2.93)x(4.10+4.11)/2	0.04		
		(-2.91--2.92)x(4.15+4.10)/2	0.04		
		(-2.86--2.91)x(4.22+4.15)/2	0.21		
		(-2.72--2.86)x(4.26+4.22)/2	0.59		
		(-2.70--2.72)x(3.98+4.26)/2	0.08		
		(-2.68--2.70)x(4.21+3.98)/2	0.08		
		(-2.67--2.68)x(4.28+4.21)/2	0.04		
		A RIPORTARE mq	52.17		

		CALCOLO DELLE AREE		Foglio n. 172
BONIFICA				
N. SEZIONE PROG.	FIG.	ELEMENTI DI CALCOLO	AREA ELEMENTARE mq	AREA FIGURA mq	NOTE
		RIPORTO mq	52.17		
		(-2.66--2.67)x(4.21+4.17)/2	0.04		
		(-2.65--2.66)x(4.34+4.33)/2	0.04		
		(-2.64--2.65)x(3.78+4.30)/2	0.04		
		(-2.60--2.64)x(3.79+3.77)/2	0.15		
		(-2.59--2.60)x(3.91+3.83)/2	0.04		
		(-2.57--2.59)x(3.71+3.91)/2	0.08		
		(-2.53--2.57)x(4.12+3.71)/2	0.16		
		(-2.52--2.53)x(4.13+4.13)/2	0.04		
		(-1.75--2.52)x(4.25+4.13)/2	3.23		
		(-1.43--1.75)x(4.27+4.25)/2	1.36		
		(-0.96--1.43)x(4.23+4.27)/2	2.00		
		(-0.33--0.96)x(4.13+4.23)/2	2.63		
		(-0.16--0.33)x(4.14+4.13)/2	0.70		
		(0.30--0.16)x(4.15+4.14)/2	1.91		
		(0.76-0.30)x(4.16+4.15)/2	1.91		
		(1.04-0.76)x(4.18+4.16)/2	1.17		
		(1.86-1.04)x(4.26+4.18)/2	3.46		
		(2.78-1.86)x(4.35+4.26)/2	3.96		
		(2.95-2.78)x(4.36+4.35)/2	0.74		
		(3.03-2.95)x(4.37+4.36)/2	0.35		
		(3.24-3.03)x(4.39+4.37)/2	0.92		
		(3.83-3.24)x(4.45+4.39)/2	2.61		
		(4.05-3.83)x(4.47+4.45)/2	0.98		
		(4.53-4.05)x(4.45+4.47)/2	2.14		
		(5.14-4.53)x(4.47+4.45)/2	2.72		
		(6.17-5.14)x(4.34+4.47)/2	4.54		
		(6.23-6.17)x(4.33+4.34)/2	0.26		
		(6.27-6.23)x(4.32+4.33)/2	0.17		
		(7.33-6.27)x(4.27+4.32)/2	4.55		
		(8.02-7.33)x(4.22+4.27)/2	2.93		
		(8.42-8.02)x(4.20+4.22)/2	1.68		
		(9.11-8.42)x(4.20+4.20)/2	2.90		
		(9.52-9.11)x(4.21+4.20)/2	1.72		
		(9.76-9.52)x(4.23+4.21)/2	1.01		
		(10.61-9.76)x(4.34+4.23)/2	3.64		
		(11.51-10.61)x(4.36+4.34)/2	3.92		
		(11.71-11.51)x(4.37+4.36)/2	0.87		
		(12.04-11.71)x(4.30+4.37)/2	1.43		
		(12.59-12.04)x(4.17+4.30)/2	2.33		
		(12.80-12.59)x(4.13+4.17)/2	0.87		
		(13.25-12.80)x(3.96+4.13)/2	1.82		
		(13.89-13.25)x(3.76+3.96)/2	2.47		
		(14.98-13.89)x(3.10+3.76)/2	3.74		
		(14.99-14.98)x(3.10+3.10)/2	0.03		
		(15.00-14.99)x(3.09+3.10)/2	0.03		
		(16.08-15.00)x(2.31+3.09)/2	2.92		
		(16.74-16.08)x(2.01+2.31)/2	1.43		
		(17.18-16.74)x(1.79+2.01)/2	0.84		
		(17.91-17.18)x(1.72+1.79)/2	1.28		
		(18.27-17.91)x(1.69+1.72)/2	0.61		
		(18.48-18.27)x(1.68+1.69)/2	0.35		
		(19.37-18.48)x(1.61+1.68)/2	1.46		
		(20.23-19.37)x(1.44+1.61)/2	1.31		
		(20.46-20.23)x(1.41+1.44)/2	0.33		
		(20.85-20.46)x(1.13+1.41)/2	0.50		
		(21.55-20.85)x(0.57+1.13)/2	0.59		
		(21.97-21.55)x(0.36+0.57)/2	0.20		
		(22.65-21.97)x(-0.08+0.36)/2	0.10		
		(23.72-22.65)x(-0.13+-0.08)/2	-0.11		
		(23.74-23.72)x(-0.13+-0.13)/2	-0.00		
		(23.75-23.74)x(-0.13+-0.13)/2	-0.00		
		(23.78-23.75)x(-0.13+-0.13)/2	-0.00		
		(24.55-23.78)x(-0.14+-0.13)/2	-0.10		
		(24.84-24.55)x(-0.15+-0.14)/2	-0.04		
		(25.46-24.84)x(-0.15+-0.15)/2	-0.09		
		(25.93-25.46)x(-0.15+-0.15)/2	-0.07		
		(26.72-25.93)x(-0.14+-0.15)/2	-0.11		
		(27.02-26.72)x(-0.14+-0.14)/2	-0.04		
		(27.21-27.02)x(-0.07+-0.14)/2	-0.02		
		(28.12-27.21)x(0.16+-0.07)/2	0.04		
		(28.95-28.12)x(0.75+0.16)/2	0.38		
		(29.21-28.95)x(0.93+0.75)/2	0.22		
		(29.65-29.21)x(1.18+0.93)/2	0.46		
		(30.31-29.65)x(1.50+1.18)/2	0.88		
		(30.70-30.31)x(1.57+1.50)/2	0.60		
		(30.91-30.70)x(1.60+1.57)/2	0.33		
		(30.70-30.91)x(0.57+0.60)/2	-0.12		
		(30.31-30.70)x(0.50+0.57)/2	-0.21		
		(29.65-30.31)x(0.18+0.50)/2	-0.22		
		(29.21-29.65)x(-0.07+0.18)/2	-0.02		
		(28.95-29.21)x(-0.25+-0.07)/2	0.04		
		(28.12-28.95)x(-0.84+-0.25)/2	0.45		
		(27.21-28.12)x(-1.07+-0.84)/2	0.87		
		(27.02-27.21)x(-1.14+-1.07)/2	0.21		
		(26.72-27.02)x(-1.14+-1.14)/2	0.34		
		(25.93-26.72)x(-1.15+-1.14)/2	0.90		
		(25.46-25.93)x(-1.15+-1.15)/2	0.54		
		(24.84-25.46)x(-1.15+-1.15)/2	0.71		
		(24.55-24.84)x(-1.14+-1.15)/2	0.33		
		(23.78-24.55)x(-1.13+-1.14)/2	0.87		
		(23.75-23.78)x(-1.13+-1.13)/2	0.03		
		(23.74-23.75)x(-1.13+-1.13)/2	0.01		
		(23.72-23.74)x(-1.13+-1.13)/2	0.02		
		(22.65-23.72)x(-1.08+-1.13)/2	1.18		
		(21.97-22.65)x(-0.64+-1.08)/2	0.58		
		(21.55-21.97)x(-0.43+-0.64)/2	0.22		
		(20.85-21.55)x(0.13+-0.43)/2	0.10		
		(20.46-20.85)x(0.41+0.13)/2	-0.11		
		(20.23-20.46)x(0.44+0.41)/2	-0.10		
		(19.37-20.23)x(0.61+0.44)/2	-0.45		
		(18.48-19.37)x(0.68+0.61)/2	-0.57		
		(18.27-18.48)x(0.69+0.68)/2	-0.14		
		(17.91-18.27)x(0.72+0.69)/2	-0.25		
		(17.18-17.91)x(0.79+0.72)/2	-0.55		
		A RIPORTARE mq	145.37		

	CALCOLO DELLE AREE		Foglio n. 173

BONIFICA

N. SEZIONE PROG.	FIG.	ELEMENTI DI CALCOLO	AREA ELEMENTARE mq	AREA FIGURA mq	NOTE
		RIPORTO mq	145.37		
		(16.74-17.18)x(1.01+0.79)/2	-0.40		
		(16.08-16.74)x(1.31+1.01)/2	-0.77		
		(15.00-16.08)x(2.09+1.31)/2	-1.84		
		(14.99-15.00)x(2.10+2.09)/2	-0.02		
		(14.98-14.99)x(2.10+2.10)/2	-0.02		
		(13.89-14.98)x(2.76+2.10)/2	-2.65		
		(13.25-13.89)x(2.96+2.76)/2	-1.83		
		(12.80-13.25)x(3.13+2.96)/2	-1.37		
		(12.59-12.80)x(3.17+3.13)/2	-0.66		
		(12.04-12.59)x(3.30+3.17)/2	-1.78		
		(11.71-12.04)x(3.37+3.30)/2	-1.10		
		(11.51-11.71)x(3.36+3.37)/2	-0.67		
		(10.61-11.51)x(3.34+3.36)/2	-3.02		
		(9.76-10.61)x(3.23+3.34)/2	-2.79		
		(9.52-9.76)x(3.21+3.23)/2	-0.77		
		(9.11-9.52)x(3.20+3.21)/2	-1.31		
		(8.42-9.11)x(3.20+3.20)/2	-2.21		
		(8.02-8.42)x(3.22+3.20)/2	-1.28		
		(7.33-8.02)x(3.27+3.22)/2	-2.24		
		(6.27-7.33)x(3.32+3.27)/2	-3.49		
		(6.23-6.27)x(3.33+3.32)/2	-0.13		
		(6.17-6.23)x(3.34+3.33)/2	-0.20		
		(5.14-6.17)x(3.47+3.34)/2	-3.51		
		(4.53-5.14)x(3.45+3.47)/2	-2.11		
		(4.05-4.53)x(3.47+3.45)/2	-1.66		
		(3.83-4.05)x(3.45+3.47)/2	-0.76		
		(3.24-3.83)x(3.39+3.45)/2	-2.02		
		(3.03-3.24)x(3.37+3.39)/2	-0.71		
		(2.95-3.03)x(3.36+3.37)/2	-0.27		
		(2.78-2.95)x(3.35+3.36)/2	-0.57		
		(1.86-2.78)x(3.26+3.35)/2	-3.04		
		(1.04-1.86)x(3.18+3.26)/2	-2.64		
		(0.76-1.04)x(3.16+3.18)/2	-0.89		
		(0.30-0.76)x(3.15+3.16)/2	-1.45		
		(-0.16-0.30)x(3.14+3.15)/2	-1.45		
		(-0.33--0.16)x(3.13+3.14)/2	-0.53		
		(-0.96--0.33)x(3.23+3.13)/2	-2.00		
		(-1.43--0.96)x(3.27+3.23)/2	-1.53		
		(-1.75--1.43)x(3.25+3.27)/2	-1.04		
		(-2.52--1.75)x(3.13+3.25)/2	-2.46		
		(-2.53--2.52)x(3.13+3.13)/2	-0.03		
		(-2.57--2.53)x(2.71+3.12)/2	-0.12		
		(-2.59--2.57)x(2.91+2.71)/2	-0.06		
		(-2.60--2.59)x(2.83+2.91)/2	-0.03		
		(-2.64--2.60)x(2.77+2.79)/2	-0.11		
		(-2.65--2.64)x(3.30+2.78)/2	-0.03		
		(-2.66--2.65)x(3.33+3.34)/2	-0.03		
		(-2.67--2.66)x(3.17+3.21)/2	-0.03		
		(-2.68--2.67)x(3.21+3.28)/2	-0.03		
		(-2.70--2.68)x(2.98+3.21)/2	-0.06		
		(-2.72--2.70)x(3.26+2.98)/2	-0.06		
		(-2.86--2.72)x(3.22+3.26)/2	-0.45		
		(-2.91--2.86)x(3.15+3.22)/2	-0.16		
		(-2.92--2.91)x(3.10+3.15)/2	-0.03		
		(-2.93--2.92)x(3.11+3.10)/2	-0.03		
		(-2.94--2.93)x(3.21+3.22)/2	-0.03		
		(-2.95--2.94)x(3.35+3.21)/2	-0.03		
		(-2.96--2.95)x(2.85+3.31)/2	-0.03		
		(-2.97--2.96)x(2.85+2.85)/2	-0.03		
		(-3.00--2.97)x(2.85+2.85)/2	-0.09		
		(-3.01--3.00)x(2.91+2.88)/2	-0.03		
		(-3.02--3.01)x(2.85+2.87)/2	-0.03		
		(-3.03--3.02)x(2.92+2.82)/2	-0.03		
		(-3.04--3.03)x(2.95+2.92)/2	-0.03		
		(-3.07--3.04)x(2.77+2.95)/2	-0.09		
		(-3.11--3.07)x(3.17+2.77)/2	-0.12		
		(-3.18--3.11)x(3.18+3.17)/2	-0.22		
		(-3.46--3.18)x(3.04+3.18)/2	-0.87		
		(-3.61--3.46)x(3.04+3.04)/2	-0.46		
		(-4.20--3.61)x(3.02+3.04)/2	-1.79		
		(-4.71--4.20)x(3.01+3.02)/2	-1.54		
		(-5.57--4.71)x(2.93+3.01)/2	-2.55		
		(-5.74--5.57)x(2.91+2.93)/2	-0.50		
		(-5.77--5.74)x(2.91+2.91)/2	-0.09		
		(-5.83--5.77)x(2.83+2.91)/2	-0.17		
		(-5.84--5.83)x(2.85+2.83)/2	-0.03		
		(-5.85--5.84)x(2.80+2.85)/2	-0.03		
		(-5.87--5.85)x(2.85+2.80)/2	-0.06		
		(-5.89--5.87)x(2.82+2.85)/2	-0.06		
		(-5.96--5.89)x(2.84+2.82)/2	-0.20		
		(-6.10--5.96)x(2.85+2.84)/2	-0.40		
		(-6.23--6.10)x(2.85+2.85)/2	-0.37		
		(-6.54--6.23)x(2.84+2.85)/2	-0.88		
		(-6.90--6.54)x(2.83+2.84)/2	-1.02		
		(-7.69--6.90)x(2.81+2.83)/2	-2.23		
		(-7.99--7.69)x(2.80+2.81)/2	-0.84		
		(-8.50--7.99)x(2.80+2.80)/2	-1.43		
		(-9.08--8.50)x(2.80+2.80)/2	-1.62		
		(-9.43--9.08)x(2.80+2.80)/2	-0.98		
		(-10.18--9.43)x(2.80+2.80)/2	-2.10		
		(-10.38--10.18)x(2.80+2.80)/2	-0.56		
		(-10.64--10.38)x(2.80+2.80)/2	-0.73		
		(-10.69--10.64)x(2.82+2.80)/2	-0.14		
		(-10.73--10.69)x(2.77+2.82)/2	-0.11		
		(-10.74--10.73)x(2.76+2.81)/2	-0.03		
		(-10.75--10.74)x(2.68+2.76)/2	-0.03		
		(-10.77--10.75)x(2.75+2.68)/2	-0.05		
		(-10.81--10.77)x(2.76+2.75)/2	-0.11		
		(-10.91--10.81)x(2.79+2.76)/2	-0.28		
		(-10.97--10.91)x(2.80+2.79)/2	-0.17		
		(-11.27--10.97)x(2.81+2.80)/2	-0.84		
		(-11.44--11.27)x(2.81+2.81)/2	-0.48		
		(-12.37--11.44)x(2.82+2.81)/2	-2.62		
		(-12.92--12.37)x(2.84+2.82)/2	-1.56		
		A RIPORTARE mq	56.23		

		CALCOLO DELLE AREE		Foglio n. 174
BONIFICA				
N. SEZIONE PROG.	FIG.	ELEMENTI DI CALCOLO	AREA ELEMENTARE mq	AREA FIGURA mq	NOTE
		RIPORTO mq	56.23		
		(-13.46--12.92)x(2.87+2.84)/2	-1.54		
		(-14.37--13.46)x(2.85+2.87)/2	-2.60		
		(-14.56--14.37)x(2.85+2.85)/2	-0.54		
		(-15.30--14.56)x(2.83+2.85)/2	-2.10		
		(-15.65--15.30)x(2.82+2.83)/2	-0.99		
		(-16.15--15.65)x(2.83+2.82)/2	-1.41		
75	BO1	(-16.18--16.45)x(3.68+3.68)/2	0.99	47.05	
1110.00		(-15.80--16.18)x(3.68+3.68)/2	1.40		
		(-15.16--15.80)x(3.68+3.68)/2	2.36		
		(-14.70--15.16)x(3.69+3.68)/2	1.70		
		(-14.43--14.70)x(3.70+3.69)/2	1.00		
		(-13.61--14.43)x(3.73+3.70)/2	3.05		
		(-12.68--13.61)x(3.73+3.73)/2	3.47		
		(-12.51--12.68)x(3.73+3.73)/2	0.63		
		(-12.24--12.51)x(3.73+3.73)/2	1.01		
		(-11.42--12.24)x(3.73+3.73)/2	3.06		
		(-11.09--11.42)x(3.73+3.73)/2	1.23		
		(-10.95--11.09)x(3.73+3.73)/2	0.52		
		(-10.92--10.95)x(3.73+3.73)/2	0.11		
		(-10.90--10.92)x(3.73+3.73)/2	0.07		
		(-10.86--10.90)x(3.71+3.73)/2	0.15		
		(-10.84--10.86)x(3.65+3.71)/2	0.07		
		(-10.81--10.84)x(3.82+3.68)/2	0.11		
		(-10.80--10.81)x(3.71+3.72)/2	0.04		
		(-10.76--10.80)x(3.71+3.71)/2	0.15		
		(-10.63--10.76)x(3.73+3.71)/2	0.48		
		(-10.32--10.63)x(3.73+3.73)/2	1.16		
		(-9.32--10.32)x(3.74+3.73)/2	3.74		
		(-9.23--9.32)x(3.74+3.74)/2	0.34		
		(-9.17--9.23)x(3.74+3.74)/2	0.22		
		(-8.13--9.17)x(3.71+3.74)/2	3.87		
		(-7.42--8.13)x(3.72+3.71)/2	2.64		
		(-7.04--7.42)x(3.72+3.72)/2	1.41		
		(-6.40--7.04)x(3.72+3.72)/2	2.38		
		(-6.07--6.40)x(3.72+3.72)/2	1.23		
		(-6.02--6.07)x(3.72+3.72)/2	0.19		
		(-6.00--6.02)x(3.72+3.72)/2	0.07		
		(-5.95--6.00)x(3.78+3.72)/2	0.19		
		(-5.94--5.95)x(3.75+3.78)/2	0.04		
		(-5.92--5.94)x(3.85+3.75)/2	0.08		
		(-5.90--5.92)x(3.82+3.85)/2	0.08		
		(-5.88--5.90)x(3.77+3.80)/2	0.08		
		(-5.81--5.88)x(3.75+3.77)/2	0.26		
		(-5.67--5.81)x(3.75+3.75)/2	0.52		
		(-5.55--5.67)x(3.75+3.75)/2	0.45		
		(-5.27--5.55)x(3.80+3.75)/2	1.06		
		(-4.85--5.27)x(3.87+3.80)/2	1.61		
		(-3.91--4.85)x(3.98+3.87)/2	3.69		
		(-3.75--3.91)x(3.99+3.98)/2	0.64		
		(-3.49--3.75)x(4.01+3.99)/2	1.04		
		(-2.88--3.49)x(4.05+4.01)/2	2.46		
		(-2.79--2.88)x(4.05+4.05)/2	0.36		
		(-2.77--2.79)x(4.05+4.05)/2	0.08		
		(-2.76--2.77)x(4.05+4.05)/2	0.04		
		(-2.74--2.76)x(3.78+4.05)/2	0.08		
		(-2.73--2.74)x(3.86+3.78)/2	0.04		
		(-2.72--2.73)x(3.93+3.86)/2	0.04		
		(-2.71--2.72)x(3.92+3.93)/2	0.04		
		(-2.70--2.71)x(3.88+3.92)/2	0.04		
		(-2.69--2.70)x(4.01+4.00)/2	0.04		
		(-2.68--2.69)x(3.86+3.95)/2	0.04		
		(-2.65--2.68)x(3.86+3.85)/2	0.12		
		(-2.64--2.65)x(3.85+3.86)/2	0.04		
		(-2.63--2.64)x(4.24+3.85)/2	0.04		
		(-2.58--2.63)x(3.99+4.35)/2	0.21		
		(-2.43--2.58)x(4.13+4.02)/2	0.61		
		(-2.38--2.43)x(4.12+4.13)/2	0.21		
		(-2.37--2.38)x(3.87+4.12)/2	0.04		
		(-2.36--2.37)x(3.98+3.87)/2	0.04		
		(-2.35--2.36)x(4.09+3.98)/2	0.04		
		(-2.34--2.35)x(4.13+4.20)/2	0.04		
		(-2.33--2.34)x(4.32+4.31)/2	0.04		
		(-2.32--2.33)x(3.90+3.85)/2	0.04		
		(-2.22--2.32)x(3.85+3.80)/2	0.38		
		(-2.20--2.22)x(3.97+3.85)/2	0.08		
		(-2.19--2.20)x(4.02+3.97)/2	0.04		
		(-2.10--2.19)x(4.09+4.02)/2	0.36		
		(-1.87--2.10)x(4.11+4.09)/2	0.94		
		(-1.56--1.87)x(4.18+4.11)/2	1.28		
		(-0.57--1.56)x(4.28+4.18)/2	4.19		
		(-0.47--0.57)x(4.28+4.28)/2	0.43		
		(-0.41--0.47)x(4.29+4.28)/2	0.26		
		(0.63--0.41)x(4.35+4.29)/2	4.49		
		(1.34-0.63)x(4.39+4.35)/2	3.10		
		(1.72-1.34)x(4.40+4.39)/2	1.67		
		(2.35-1.72)x(4.41+4.40)/2	2.78		
		(2.82-2.35)x(4.42+4.41)/2	2.08		
		(3.10-2.82)x(4.42+4.42)/2	1.24		
		(3.91-3.10)x(4.42+4.42)/2	3.58		
		(4.85-3.91)x(4.32+4.42)/2	4.11		
		(5.01-4.85)x(4.31+4.32)/2	0.69		
		(5.27-5.01)x(4.25+4.31)/2	1.11		
		(6.10-5.27)x(4.01+4.25)/2	3.43		
		(6.60-6.10)x(3.84+4.01)/2	1.96		
		(7.20-6.60)x(3.68+3.84)/2	2.26		
		(7.47-7.20)x(3.60+3.68)/2	0.98		
		(8.19-7.47)x(3.49+3.60)/2	2.55		
		(8.27-8.19)x(3.48+3.49)/2	0.28		
		(8.29-8.27)x(3.48+3.48)/2	0.07		
		(8.35-8.29)x(3.51+3.48)/2	0.21		
		(9.39-8.35)x(3.86+3.51)/2	3.83		
		(10.11-9.39)x(4.10+3.86)/2	2.87		
		(10.48-10.11)x(4.25+4.10)/2	1.54		
		A RIPORTARE mq	106.11		

		CALCOLO DELLE AREE		Foglio n. 175
BONIFICA				
N. SEZIONE PROG.	FIG.	ELEMENTI DI CALCOLO	AREA ELEMENTARE mq	AREA FIGURA mq	NOTE
		RIPORTO mq	106.11		
		(11.11-10.48)x(4.28+4.25)/2	2.69		
		(11.58-11.11)x(4.29+4.28)/2	2.01		
		(11.86-11.58)x(4.28+4.29)/2	1.20		
		(12.67-11.86)x(4.23+4.28)/2	3.45		
		(13.61-12.67)x(4.07+4.23)/2	3.90		
		(13.77-13.61)x(4.05+4.07)/2	0.65		
		(14.03-13.77)x(3.89+4.05)/2	1.03		
		(14.86-14.03)x(3.32+3.89)/2	2.99		
		(15.36-14.86)x(2.87+3.32)/2	1.55		
		(15.96-15.36)x(2.34+2.87)/2	1.56		
		(16.95-15.96)x(1.77+2.34)/2	2.03		
		(17.05-16.95)x(1.72+1.77)/2	0.17		
		(17.12-17.05)x(1.71+1.72)/2	0.12		
		(18.15-17.12)x(1.56+1.71)/2	1.68		
		(18.62-18.15)x(1.53+1.56)/2	0.73		
		(19.24-18.62)x(1.48+1.53)/2	0.93		
		(19.87-19.24)x(1.43+1.48)/2	0.92		
		(20.34-19.87)x(1.38+1.43)/2	0.66		
		(20.62-20.34)x(1.19+1.38)/2	0.36		
		(21.43-20.62)x(0.76+1.19)/2	0.79		
		(22.37-21.43)x(0.13+0.76)/2	0.42		
		(22.53-22.37)x(0.02+0.13)/2	0.01		
		(22.79-22.53)x(-0.04+0.02)/2	-0.00		
		(23.62-22.79)x(-0.15+-0.04)/2	-0.08		
		(24.12-23.62)x(-0.14+-0.15)/2	-0.07		
		(24.72-24.12)x(-0.13+-0.14)/2	-0.08		
		(25.71-24.72)x(-0.09+-0.13)/2	-0.11		
		(25.81-25.71)x(-0.09+-0.09)/2	-0.01		
		(25.88-25.81)x(-0.09+-0.09)/2	-0.01		
		(26.91-25.88)x(-0.04+-0.09)/2	-0.07		
		(27.63-26.91)x(0.08+-0.04)/2	0.01		
		(28.00-27.63)x(0.11+0.08)/2	0.04		
		(28.63-28.00)x(0.45+0.11)/2	0.18		
		(29.10-28.63)x(0.72+0.45)/2	0.27		
		(29.77-29.10)x(1.14+0.72)/2	0.62		
		(30.19-29.77)x(1.39+1.14)/2	0.53		
		(31.00-30.19)x(1.62+1.39)/2	1.22		
		(30.19-31.00)x(0.39+0.62)/2	-0.41		
		(29.77-30.19)x(0.14+0.39)/2	-0.11		
		(29.10-29.77)x(-0.28+0.14)/2	0.05		
		(28.63-29.10)x(-0.55+-0.28)/2	0.20		
		(28.00-28.63)x(-0.89+-0.55)/2	0.45		
		(27.63-28.00)x(-0.92+-0.89)/2	0.33		
		(26.91-27.63)x(-1.04+-0.92)/2	0.71		
		(25.88-26.91)x(-1.09+-1.04)/2	1.10		
		(25.81-25.88)x(-1.09+-1.09)/2	0.08		
		(25.71-25.81)x(-1.09+-1.09)/2	0.11		
		(24.72-25.71)x(-1.13+-1.09)/2	1.10		
		(24.12-24.72)x(-1.14+-1.13)/2	0.68		
		(23.62-24.12)x(-1.15+-1.14)/2	0.57		
		(22.79-23.62)x(-1.04+-1.15)/2	0.91		
		(22.53-22.79)x(-0.98+-1.04)/2	0.26		
		(22.37-22.53)x(-0.87+-0.98)/2	0.15		
		(21.43-22.37)x(-0.24+-0.87)/2	0.52		
		(20.62-21.43)x(0.19+-0.24)/2	0.02		
		(20.34-20.62)x(0.38+0.19)/2	-0.08		
		(19.87-20.34)x(0.43+0.38)/2	-0.19		
		(19.24-19.87)x(0.48+0.43)/2	-0.29		
		(18.62-19.24)x(0.53+0.48)/2	-0.31		
		(18.15-18.62)x(0.56+0.53)/2	-0.26		
		(17.12-18.15)x(0.71+0.56)/2	-0.65		
		(17.05-17.12)x(0.72+0.71)/2	-0.05		
		(16.95-17.05)x(0.77+0.72)/2	-0.07		
		(15.96-16.95)x(1.34+0.77)/2	-1.04		
		(15.36-15.96)x(1.87+1.34)/2	-0.96		
		(14.86-15.36)x(2.32+1.87)/2	-1.05		
		(14.03-14.86)x(2.89+2.32)/2	-2.16		
		(13.77-14.03)x(3.05+2.89)/2	-0.77		
		(13.61-13.77)x(3.07+3.05)/2	-0.49		
		(12.67-13.61)x(3.23+3.07)/2	-2.96		
		(11.86-12.67)x(3.28+3.23)/2	-2.64		
		(11.58-11.86)x(3.29+3.28)/2	-0.92		
		(11.11-11.58)x(3.28+3.29)/2	-1.54		
		(10.48-11.11)x(3.25+3.28)/2	-2.06		
		(10.11-10.48)x(3.10+3.25)/2	-1.17		
		(9.39-10.11)x(2.86+3.10)/2	-2.15		
		(8.35-9.39)x(2.51+2.86)/2	-2.79		
		(8.29-8.35)x(2.48+2.51)/2	-0.15		
		(8.27-8.29)x(2.48+2.48)/2	-0.05		
		(8.19-8.27)x(2.49+2.48)/2	-0.20		
		(7.47-8.19)x(2.60+2.49)/2	-1.83		
		(7.20-7.47)x(2.68+2.60)/2	-0.71		
		(6.60-7.20)x(2.84+2.68)/2	-1.66		
		(6.10-6.60)x(3.01+2.84)/2	-1.46		
		(5.27-6.10)x(3.25+3.01)/2	-2.60		
		(5.01-5.27)x(3.31+3.25)/2	-0.85		
		(4.85-5.01)x(3.32+3.31)/2	-0.53		
		(3.91-4.85)x(3.42+3.32)/2	-3.17		
		(3.10-3.91)x(3.42+3.42)/2	-2.77		
		(2.82-3.10)x(3.42+3.42)/2	-0.96		
		(2.35-2.82)x(3.41+3.42)/2	-1.61		
		(1.72-2.35)x(3.40+3.41)/2	-2.15		
		(1.34-1.72)x(3.39+3.40)/2	-1.29		
		(0.63-1.34)x(3.35+3.39)/2	-2.39		
		(-0.41-0.63)x(3.29+3.35)/2	-3.45		
		(-0.47--0.41)x(3.28+3.29)/2	-0.20		
		(-0.57--0.47)x(3.28+3.28)/2	-0.33		
		(-1.56--0.57)x(3.18+3.28)/2	-3.20		
		(-1.87--1.56)x(3.11+3.18)/2	-0.97		
		(-2.10--1.87)x(3.09+3.11)/2	-0.71		
		(-2.19--2.10)x(3.02+3.09)/2	-0.27		
		(-2.20--2.19)x(2.97+3.02)/2	-0.03		
		(-2.22--2.20)x(2.85+2.97)/2	-0.06		
		(-2.32--2.22)x(2.80+2.85)/2	-0.28		
		A RIPORTARE mq	86.64		

		CALCOLO DELLE AREE		Foglio n. 176
BONIFICA				
N. SEZIONE PROG.	FIG.	ELEMENTI DI CALCOLO	AREA ELEMENTARE mq	AREA FIGURA mq	NOTE
		RIPORTO mq	86.64		
		(-2.33--2.32)x(2.85+2.90)/2	-0.03		
		(-2.34--2.33)x(3.31+3.32)/2	-0.03		
		(-2.35--2.34)x(3.20+3.13)/2	-0.03		
		(-2.36--2.35)x(2.98+3.09)/2	-0.03		
		(-2.37--2.36)x(2.87+2.98)/2	-0.03		
		(-2.38--2.37)x(3.12+2.87)/2	-0.03		
		(-2.43--2.38)x(3.13+3.12)/2	-0.16		
		(-2.58--2.43)x(3.02+3.13)/2	-0.46		
		(-2.63--2.58)x(3.35+2.99)/2	-0.16		
		(-2.64--2.63)x(2.85+3.24)/2	-0.03		
		(-2.65--2.64)x(2.86+2.85)/2	-0.03		
		(-2.68--2.65)x(2.85+2.86)/2	-0.09		
		(-2.69--2.68)x(2.95+2.86)/2	-0.03		
		(-2.70--2.69)x(3.00+3.01)/2	-0.03		
		(-2.71--2.70)x(2.92+2.88)/2	-0.03		
		(-2.72--2.71)x(2.93+2.92)/2	-0.03		
		(-2.73--2.72)x(2.86+2.93)/2	-0.03		
		(-2.74--2.73)x(2.78+2.86)/2	-0.03		
		(-2.76--2.74)x(3.05+2.78)/2	-0.06		
		(-2.77--2.76)x(3.05+3.05)/2	-0.03		
		(-2.79--2.77)x(3.05+3.05)/2	-0.06		
		(-2.88--2.79)x(3.05+3.05)/2	-0.27		
		(-3.49--2.88)x(3.01+3.05)/2	-1.85		
		(-3.75--3.49)x(2.99+3.01)/2	-0.78		
		(-3.91--3.75)x(2.98+2.99)/2	-0.48		
		(-4.85--3.91)x(2.87+2.98)/2	-2.75		
		(-5.27--4.85)x(2.80+2.87)/2	-1.19		
		(-5.55--5.27)x(2.75+2.80)/2	-0.78		
		(-5.67--5.55)x(2.75+2.75)/2	-0.33		
		(-5.81--5.67)x(2.75+2.75)/2	-0.38		
		(-5.88--5.81)x(2.77+2.75)/2	-0.19		
		(-5.90--5.88)x(2.80+2.77)/2	-0.06		
		(-5.92--5.90)x(2.85+2.82)/2	-0.06		
		(-5.94--5.92)x(2.75+2.85)/2	-0.06		
		(-5.95--5.94)x(2.78+2.75)/2	-0.03		
		(-6.00--5.95)x(2.72+2.78)/2	-0.14		
		(-6.02--6.00)x(2.72+2.72)/2	-0.05		
		(-6.07--6.02)x(2.72+2.72)/2	-0.14		
		(-6.40--6.07)x(2.72+2.72)/2	-0.90		
		(-7.04--6.40)x(2.72+2.72)/2	-1.74		
		(-7.42--7.04)x(2.72+2.72)/2	-1.03		
		(-8.13--7.42)x(2.71+2.72)/2	-1.93		
		(-9.17--8.13)x(2.74+2.71)/2	-2.83		
		(-9.23--9.17)x(2.74+2.74)/2	-0.16		
		(-9.32--9.23)x(2.74+2.74)/2	-0.25		
		(-10.32--9.32)x(2.73+2.74)/2	-2.74		
		(-10.63--10.32)x(2.73+2.73)/2	-0.85		
		(-10.76--10.63)x(2.71+2.73)/2	-0.35		
		(-10.80--10.76)x(2.71+2.71)/2	-0.11		
		(-10.81--10.80)x(2.72+2.71)/2	-0.03		
		(-10.84--10.81)x(2.68+2.82)/2	-0.08		
		(-10.86--10.84)x(2.71+2.65)/2	-0.05		
		(-10.90--10.86)x(2.73+2.71)/2	-0.11		
		(-10.92--10.90)x(2.73+2.73)/2	-0.05		
		(-10.95--10.92)x(2.73+2.73)/2	-0.08		
		(-11.09--10.95)x(2.73+2.73)/2	-0.38		
		(-11.42--11.09)x(2.73+2.73)/2	-0.90		
		(-12.24--11.42)x(2.73+2.73)/2	-2.24		
		(-12.51--12.24)x(2.73+2.73)/2	-0.74		
		(-12.68--12.51)x(2.73+2.73)/2	-0.46		
		(-13.61--12.68)x(2.73+2.73)/2	-2.54		
		(-14.43--13.61)x(2.70+2.73)/2	-2.23		
		(-14.70--14.43)x(2.69+2.70)/2	-0.73		
		(-15.16--14.70)x(2.68+2.69)/2	-1.24		
		(-15.80--15.16)x(2.68+2.68)/2	-1.72		
		(-16.18--15.80)x(2.68+2.68)/2	-1.02		
		(-16.45--16.18)x(2.68+2.68)/2	-0.72		
				47.45	
76 1125.00	B01	(-15.98--16.55)x(3.63+3.66)/2	2.08		
		(-15.97--15.98)x(3.63+3.63)/2	0.04		
		(-14.88--15.97)x(3.59+3.63)/2	3.93		
		(-14.22--14.88)x(3.57+3.59)/2	2.36		
		(-13.78--14.22)x(3.56+3.57)/2	1.57		
		(-13.07--13.78)x(3.57+3.56)/2	2.53		
		(-12.69--13.07)x(3.59+3.57)/2	1.36		
		(-12.46--12.69)x(3.59+3.59)/2	0.83		
		(-11.59--12.46)x(3.60+3.59)/2	3.13		
		(-11.37--11.59)x(3.60+3.60)/2	0.79		
		(-11.11--11.37)x(3.61+3.60)/2	0.94		
		(-11.06--11.11)x(3.61+3.61)/2	0.18		
		(-10.98--11.06)x(3.63+3.61)/2	0.29		
		(-10.96--10.98)x(3.64+3.63)/2	0.07		
		(-10.92--10.96)x(3.82+3.67)/2	0.15		
		(-10.91--10.92)x(3.62+3.77)/2	0.04		
		(-10.90--10.91)x(3.61+3.62)/2	0.04		
		(-10.82--10.90)x(3.62+3.61)/2	0.29		
		(-10.78--10.82)x(3.62+3.62)/2	0.14		
		(-10.50--10.78)x(3.62+3.62)/2	1.01		
		(-10.17--10.50)x(3.63+3.62)/2	1.20		
		(-9.40--10.17)x(3.66+3.63)/2	2.81		
		(-8.94--9.40)x(3.65+3.66)/2	1.68		
		(-8.31--8.94)x(3.65+3.65)/2	2.30		
		(-8.02--8.31)x(3.64+3.65)/2	1.06		
		(-7.26--8.02)x(3.65+3.64)/2	2.77		
		(-7.22--7.26)x(3.65+3.65)/2	0.15		
		(-7.21--7.22)x(3.65+3.65)/2	0.04		
		(-6.43--7.21)x(3.67+3.65)/2	2.85		
		(-6.30--6.43)x(3.68+3.67)/2	0.48		
		(-6.24--6.30)x(3.68+3.68)/2	0.22		
		(-6.14--6.24)x(3.68+3.68)/2	0.37		
		(-6.08--6.14)x(3.71+3.68)/2	0.22		
		(-6.05--6.08)x(3.71+3.71)/2	0.11		
		(-6.04--6.05)x(3.86+3.75)/2	0.04		
		(-6.02--6.04)x(3.84+3.86)/2	0.08		
		A RIPORTARE mq	38.15		

	CALCOLO DELLE AREE		Foglio n. 177

BONIFICA

N. SEZIONE PROG.	FIG.	ELEMENTI DI CALCOLO	AREA ELEMENTARE mq	AREA FIGURA mq	NOTE
		RIPORTO mq	38.15		
		(-6.00--6.02)x(3.73+3.84)/2	0.08		
		(-5.99--6.00)x(3.71+3.73)/2	0.04		
		(-5.92--5.99)x(3.71+3.71)/2	0.26		
		(-5.84--5.92)x(3.72+3.71)/2	0.30		
		(-5.63--5.84)x(3.74+3.72)/2	0.78		
		(-5.02--5.63)x(3.77+3.74)/2	2.29		
		(-4.36--5.02)x(3.78+3.77)/2	2.49		
		(-3.92--4.36)x(3.79+3.78)/2	1.67		
		(-3.66--3.92)x(3.79+3.79)/2	0.99		
		(-2.83--3.66)x(3.81+3.79)/2	3.15		
		(-2.61--2.83)x(3.84+3.81)/2	0.84		
		(-2.46--2.61)x(3.94+3.84)/2	0.58		
		(-2.45--2.46)x(3.98+3.94)/2	0.04		
		(-2.44--2.45)x(3.96+3.98)/2	0.04		
		(-2.43--2.44)x(3.90+3.96)/2	0.04		
		(-2.42--2.43)x(4.10+3.90)/2	0.04		
		(-2.41--2.42)x(4.12+4.10)/2	0.04		
		(-2.40--2.41)x(4.01+3.98)/2	0.04		
		(-2.39--2.40)x(3.97+3.87)/2	0.04		
		(-2.38--2.39)x(3.86+3.81)/2	0.04		
		(-2.36--2.38)x(3.86+3.86)/2	0.08		
		(-2.35--2.36)x(3.85+3.86)/2	0.04		
		(-2.34--2.35)x(4.17+3.85)/2	0.04		
		(-2.28--2.34)x(3.91+4.35)/2	0.25		
		(-2.27--2.28)x(3.78+3.91)/2	0.04		
		(-2.15--2.27)x(3.86+3.85)/2	0.46		
		(-2.07--2.15)x(3.90+3.86)/2	0.31		
		(-2.06--2.07)x(4.10+3.93)/2	0.04		
		(-2.05--2.06)x(4.29+3.99)/2	0.04		
		(-2.04--2.05)x(4.31+4.29)/2	0.04		
		(-2.03--2.04)x(4.00+3.91)/2	0.04		
		(-1.92--2.03)x(3.89+3.83)/2	0.42		
		(-1.90--1.92)x(3.83+3.89)/2	0.08		
		(-1.88--1.90)x(3.93+3.83)/2	0.08		
		(-1.70--1.88)x(3.84+3.93)/2	0.70		
		(-1.69--1.70)x(3.85+3.84)/2	0.04		
		(-1.65--1.69)x(3.85+3.85)/2	0.15		
		(-1.45--1.65)x(3.86+3.85)/2	0.77		
		(-0.63--1.45)x(3.91+3.86)/2	3.19		
		(-0.14--0.63)x(3.91+3.91)/2	1.92		
		(0.46--0.14)x(3.92+3.91)/2	2.35		
		(1.45-0.46)x(3.76+3.92)/2	3.80		
		(1.56-1.45)x(3.74+3.76)/2	0.41		
		(2.32-1.56)x(3.63+3.74)/2	2.80		
		(2.65-2.32)x(3.58+3.63)/2	1.19		
		(3.38-2.65)x(3.48+3.58)/2	2.58		
		(3.75-3.38)x(3.42+3.48)/2	1.28		
		(4.35-3.75)x(3.34+3.42)/2	2.03		
		(4.84-4.35)x(3.28+3.34)/2	1.62		
		(5.14-4.84)x(3.22+3.28)/2	0.97		
		(5.94-5.14)x(3.08+3.22)/2	2.52		
		(6.90-5.94)x(2.89+3.08)/2	2.87		
		(7.04-6.90)x(2.86+2.89)/2	0.40		
		(7.26-7.04)x(2.85+2.86)/2	0.63		
		(8.13-7.26)x(2.85+2.85)/2	2.48		
		(8.66-8.13)x(2.88+2.85)/2	1.52		
		(9.23-8.66)x(2.89+2.88)/2	1.64		
		(10.16-9.23)x(2.90+2.89)/2	2.69		
		(10.32-10.16)x(2.90+2.90)/2	0.46		
		(10.42-10.32)x(2.88+2.90)/2	0.29		
		(11.42-10.42)x(2.83+2.88)/2	2.85		
		(12.18-11.42)x(2.72+2.83)/2	2.11		
		(12.52-12.18)x(2.69+2.72)/2	0.92		
		(12.67-12.52)x(2.67+2.69)/2	0.40		
		(13.06-12.67)x(2.59+2.67)/2	1.03		
		(13.46-13.06)x(2.52+2.59)/2	1.02		
		(13.61-13.46)x(2.49+2.52)/2	0.38		
		(13.94-13.61)x(2.42+2.49)/2	0.81		
		(14.71-13.94)x(2.28+2.42)/2	1.81		
		(15.70-14.71)x(2.07+2.28)/2	2.15		
		(15.80-15.70)x(2.05+2.07)/2	0.21		
		(15.97-15.80)x(2.02+2.05)/2	0.35		
		(16.90-15.97)x(1.83+2.02)/2	1.79		
		(17.46-16.90)x(1.76+1.83)/2	1.01		
		(18.00-17.46)x(1.68+1.76)/2	0.93		
		(18.87-18.00)x(1.63+1.68)/2	1.44		
		(19.09-18.87)x(1.62+1.63)/2	0.36		
		(19.22-19.09)x(1.61+1.62)/2	0.21		
		(20.19-19.22)x(1.56+1.61)/2	1.54		
		(20.98-20.19)x(1.33+1.56)/2	1.14		
		(21.28-20.98)x(1.28+1.33)/2	0.39		
		(21.78-21.28)x(0.90+1.28)/2	0.55		
		(22.38-21.78)x(0.43+0.90)/2	0.40		
		(22.74-22.38)x(0.30+0.43)/2	0.13		
		(23.47-22.74)x(-0.03+0.30)/2	0.10		
		(23.80-23.47)x(-0.07+-0.03)/2	-0.02		
		(24.57-23.80)x(-0.07+-0.07)/2	-0.05		
		(24.68-24.57)x(-0.07+-0.07)/2	-0.01		
		(25.67-24.68)x(-0.07+-0.07)/2	-0.07		
		(26.26-25.67)x(-0.10+-0.07)/2	-0.05		
		(26.76-26.26)x(-0.11+-0.10)/2	-0.05		
		(27.58-26.76)x(0.08+-0.11)/2	-0.01		
		(27.86-27.58)x(0.14+0.08)/2	0.03		
		(28.02-27.86)x(0.21+0.14)/2	0.03		
		(28.95-28.02)x(0.43+0.21)/2	0.30		
		(29.78-28.95)x(0.90+0.43)/2	0.55		
		(30.05-29.78)x(1.03+0.90)/2	0.26		
		(30.49-30.05)x(1.24+1.03)/2	0.50		
		(31.05-30.49)x(1.48+1.24)/2	0.76		
		(30.49-31.05)x(0.24+0.48)/2	-0.20		
		(30.05-30.49)x(0.03+0.24)/2	-0.06		
		(29.78-30.05)x(-0.10+0.03)/2	0.01		
		(28.95-29.78)x(-0.57+-0.10)/2	0.28		
		(28.02-28.95)x(-0.79+-0.57)/2	0.63		
		A RIPORTARE mq	122.06		

		CALCOLO DELLE AREE		Foglio n. 178
BONIFICA				
N. SEZIONE PROG.	FIG.	ELEMENTI DI CALCOLO	AREA ELEMENTARE mq	AREA FIGURA mq	NOTE
		RIPORTO mq	122.06		
		(27.86-28.02)x(-0.86+-0.79)/2	0.13		
		(27.58-27.86)x(-0.92+-0.86)/2	0.25		
		(26.76-27.58)x(-1.11+-0.92)/2	0.83		
		(26.26-26.76)x(-1.10+-1.11)/2	0.55		
		(25.67-26.26)x(-1.07+-1.10)/2	0.64		
		(24.68-25.67)x(-1.07+-1.07)/2	1.06		
		(24.57-24.68)x(-1.07+-1.07)/2	0.12		
		(23.80-24.57)x(-1.07+-1.07)/2	0.82		
		(23.47-23.80)x(-1.03+-1.07)/2	0.35		
		(22.74-23.47)x(-0.70+-1.03)/2	0.63		
		(22.38-22.74)x(-0.57+-0.70)/2	0.23		
		(21.78-22.38)x(-0.10+-0.57)/2	0.20		
		(21.28-21.78)x(0.28+-0.10)/2	-0.05		
		(20.98-21.28)x(0.33+0.28)/2	-0.09		
		(20.19-20.98)x(0.56+0.33)/2	-0.35		
		(19.22-20.19)x(0.61+0.56)/2	-0.57		
		(19.09-19.22)x(0.62+0.61)/2	-0.08		
		(18.87-19.09)x(0.63+0.62)/2	-0.14		
		(18.00-18.87)x(0.68+0.63)/2	-0.57		
		(17.46-18.00)x(0.76+0.68)/2	-0.39		
		(16.90-17.46)x(0.83+0.76)/2	-0.45		
		(15.97-16.90)x(1.02+0.83)/2	-0.86		
		(15.80-15.97)x(1.05+1.02)/2	-0.18		
		(15.70-15.80)x(1.07+1.05)/2	-0.11		
		(14.71-15.70)x(1.28+1.07)/2	-1.16		
		(13.94-14.71)x(1.42+1.28)/2	-1.04		
		(13.61-13.94)x(1.49+1.42)/2	-0.48		
		(13.46-13.61)x(1.52+1.49)/2	-0.23		
		(13.06-13.46)x(1.59+1.52)/2	-0.62		
		(12.67-13.06)x(1.67+1.59)/2	-0.64		
		(12.52-12.67)x(1.69+1.67)/2	-0.25		
		(12.18-12.52)x(1.72+1.69)/2	-0.58		
		(11.42-12.18)x(1.83+1.72)/2	-1.35		
		(10.42-11.42)x(1.88+1.83)/2	-1.85		
		(10.32-10.42)x(1.90+1.88)/2	-0.19		
		(10.16-10.32)x(1.90+1.90)/2	-0.30		
		(9.23-10.16)x(1.89+1.90)/2	-1.76		
		(8.66-9.23)x(1.88+1.89)/2	-1.07		
		(8.13-8.66)x(1.85+1.88)/2	-0.99		
		(7.26-8.13)x(1.85+1.85)/2	-1.61		
		(7.04-7.26)x(1.86+1.85)/2	-0.41		
		(6.90-7.04)x(1.89+1.86)/2	-0.26		
		(5.94-6.90)x(2.08+1.89)/2	-1.91		
		(5.14-5.94)x(2.22+2.08)/2	-1.72		
		(4.84-5.14)x(2.28+2.22)/2	-0.67		
		(4.35-4.84)x(2.34+2.28)/2	-1.13		
		(3.75-4.35)x(2.42+2.34)/2	-1.43		
		(3.38-3.75)x(2.48+2.42)/2	-0.91		
		(2.65-3.38)x(2.58+2.48)/2	-1.85		
		(2.32-2.65)x(2.63+2.58)/2	-0.86		
		(1.56-2.32)x(2.74+2.63)/2	-2.04		
		(1.45-1.56)x(2.76+2.74)/2	-0.30		
		(0.46-1.45)x(2.92+2.76)/2	-2.81		
		(-0.14-0.46)x(2.91+2.92)/2	-1.75		
		(-0.63--0.14)x(2.91+2.91)/2	-1.43		
		(-1.45--0.63)x(2.86+2.91)/2	-2.37		
		(-1.65--1.45)x(2.85+2.86)/2	-0.57		
		(-1.69--1.65)x(2.85+2.85)/2	-0.11		
		(-1.70--1.69)x(2.84+2.85)/2	-0.03		
		(-1.88--1.70)x(2.93+2.84)/2	-0.52		
		(-1.90--1.88)x(2.83+2.93)/2	-0.06		
		(-1.92--1.90)x(2.89+2.83)/2	-0.06		
		(-2.03--1.92)x(2.83+2.89)/2	-0.31		
		(-2.04--2.03)x(2.91+3.00)/2	-0.03		
		(-2.05--2.04)x(3.29+3.31)/2	-0.03		
		(-2.06--2.05)x(2.99+3.29)/2	-0.03		
		(-2.07--2.06)x(2.93+3.10)/2	-0.03		
		(-2.15--2.07)x(2.86+2.90)/2	-0.23		
		(-2.27--2.15)x(2.85+2.86)/2	-0.34		
		(-2.28--2.27)x(2.91+2.78)/2	-0.03		
		(-2.34--2.28)x(3.35+2.91)/2	-0.19		
		(-2.35--2.34)x(2.85+3.17)/2	-0.03		
		(-2.36--2.35)x(2.86+2.85)/2	-0.03		
		(-2.38--2.36)x(2.86+2.86)/2	-0.06		
		(-2.39--2.38)x(2.81+2.86)/2	-0.03		
		(-2.40--2.39)x(2.87+2.97)/2	-0.03		
		(-2.41--2.40)x(2.98+3.01)/2	-0.03		
		(-2.42--2.41)x(3.10+3.12)/2	-0.03		
		(-2.43--2.42)x(2.90+3.10)/2	-0.03		
		(-2.44--2.43)x(2.96+2.90)/2	-0.03		
		(-2.45--2.44)x(2.98+2.96)/2	-0.03		
		(-2.46--2.45)x(2.94+2.98)/2	-0.03		
		(-2.61--2.46)x(2.84+2.94)/2	-0.43		
		(-2.83--2.61)x(2.81+2.84)/2	-0.62		
		(-3.66--2.83)x(2.79+2.81)/2	-2.32		
		(-3.92--3.66)x(2.79+2.79)/2	-0.73		
		(-4.36--3.92)x(2.78+2.79)/2	-1.23		
		(-5.02--4.36)x(2.77+2.78)/2	-1.83		
		(-5.63--5.02)x(2.74+2.77)/2	-1.68		
		(-5.84--5.63)x(2.72+2.74)/2	-0.57		
		(-5.92--5.84)x(2.71+2.72)/2	-0.22		
		(-5.99--5.92)x(2.71+2.71)/2	-0.19		
		(-6.00--5.99)x(2.73+2.71)/2	-0.03		
		(-6.02--6.00)x(2.84+2.73)/2	-0.06		
		(-6.04--6.02)x(2.86+2.84)/2	-0.06		
		(-6.05--6.04)x(2.75+2.86)/2	-0.03		
		(-6.08--6.05)x(2.71+2.71)/2	-0.08		
		(-6.14--6.08)x(2.68+2.71)/2	-0.16		
		(-6.24--6.14)x(2.68+2.68)/2	-0.27		
		(-6.30--6.24)x(2.68+2.68)/2	-0.16		
		(-6.43--6.30)x(2.67+2.68)/2	-0.35		
		(-7.21--6.43)x(2.65+2.67)/2	-2.07		
		(-7.22--7.21)x(2.65+2.65)/2	-0.03		
		(-7.26--7.22)x(2.65+2.65)/2	-0.11		
		A RIPORTARE mq	71.90		

	CALCOLO DELLE AREE		Foglio n. 179

BONIFICA

N. SEZIONE PROG.	FIG.	ELEMENTI DI CALCOLO	AREA ELEMENTARE mq	AREA FIGURA mq	NOTE
		RIPORTO mq	71.90		
		(-8.02--7.26)x(2.64+2.65)/2	-2.01		
		(-8.31--8.02)x(2.65+2.64)/2	-0.77		
		(-8.94--8.31)x(2.65+2.65)/2	-1.67		
		(-9.40--8.94)x(2.66+2.65)/2	-1.22		
		(-10.17--9.40)x(2.63+2.66)/2	-2.04		
		(-10.50--10.17)x(2.62+2.63)/2	-0.87		
		(-10.78--10.50)x(2.62+2.62)/2	-0.73		
		(-10.82--10.78)x(2.62+2.62)/2	-0.10		
		(-10.90--10.82)x(2.61+2.62)/2	-0.21		
		(-10.91--10.90)x(2.62+2.61)/2	-0.03		
		(-10.92--10.91)x(2.77+2.62)/2	-0.03		
		(-10.96--10.92)x(2.67+2.82)/2	-0.11		
		(-10.98--10.96)x(2.63+2.64)/2	-0.05		
		(-11.06--10.98)x(2.61+2.63)/2	-0.21		
		(-11.11--11.06)x(2.61+2.61)/2	-0.13		
		(-11.37--11.11)x(2.60+2.61)/2	-0.68		
		(-11.59--11.37)x(2.60+2.60)/2	-0.57		
		(-12.46--11.59)x(2.59+2.60)/2	-2.26		
		(-12.69--12.46)x(2.59+2.59)/2	-0.60		
		(-13.07--12.69)x(2.57+2.59)/2	-0.98		
		(-13.78--13.07)x(2.56+2.57)/2	-1.82		
		(-14.22--13.78)x(2.57+2.56)/2	-1.13		
		(-14.88--14.22)x(2.59+2.57)/2	-1.70		
		(-15.97--14.88)x(2.63+2.59)/2	-2.84		
		(-15.98--15.97)x(2.63+2.63)/2	-0.03		
		(-16.55--15.98)x(2.66+2.63)/2	-1.51		
				47.60	

Il Direttore dei Lavori	L'Impresa	

	CALCOLO DELLE AREE		Foglio n. 180

RIPORTO

N. SEZIONE PROG.	FIG.	ELEMENTI DI CALCOLO	AREA ELEMENTARE mq	AREA FIGURA mq	NOTE
76bis	RI1	(-10.25--14.47)x(3.81+3.81)/2	16.08		
1131.80		(-11.25--10.25)x(3.00+3.00)/2	-3.00		
		(-11.45--11.25)x(2.00+2.00)/2	-0.40		
		(-14.47--11.45)x(3.81+1.80)/2	-8.47		
				4.21	
76bis	RI2	(14.99-15.19)x(2.00+2.00)/2	-0.40		
1131.80		(31.06-14.99)x(3.00+3.00)/2	48.21		
		(31.00-31.06)x(1.32+1.33)/2	-0.08		
		(30.78-31.00)x(1.24+1.32)/2	-0.28		
		(30.64-30.78)x(1.18+1.24)/2	-0.17		
		(29.68-30.64)x(0.76+1.18)/2	-0.93		
		(28.88-29.68)x(0.40+0.76)/2	-0.46		
		(28.59-28.88)x(0.26+0.40)/2	-0.10		
		(28.11-28.59)x(0.12+0.26)/2	-0.09		
		(27.49-28.11)x(-0.02+0.12)/2	-0.03		
		(27.11-27.49)x(-0.06+-0.02)/2	0.02		
		(26.39-27.11)x(-0.13+-0.06)/2	0.07		
		(25.35-26.39)x(-0.12+-0.13)/2	0.13		
		(25.30-25.35)x(-0.12+-0.12)/2	0.01		
		(25.21-25.30)x(-0.11+-0.12)/2	0.01		
		(24.20-25.21)x(0.02+-0.11)/2	0.05		
		(23.59-24.20)x(0.14+0.02)/2	-0.05		
		(23.11-23.59)x(0.23+0.14)/2	-0.09		
		(22.31-23.11)x(0.56+0.23)/2	-0.32		
		(22.01-22.31)x(0.70+0.56)/2	-0.19		
		(21.30-22.01)x(1.07+0.70)/2	-0.63		
		(20.91-21.30)x(1.22+1.07)/2	-0.45		
		(20.06-20.91)x(1.50+1.22)/2	-1.16		
		(19.82-20.06)x(1.59+1.50)/2	-0.37		
		(19.42-19.82)x(1.63+1.59)/2	-0.64		
		(18.72-19.42)x(1.70+1.63)/2	-1.17		
		(18.30-18.72)x(1.73+1.70)/2	-0.72		
		(17.62-18.30)x(1.77+1.73)/2	-1.19		
		(17.46-17.62)x(1.80+1.77)/2	-0.29		
		(15.19-17.46)x(1.80+1.80)/2	-4.09		
				34.60	

Il Direttore dei Lavori	L'Impresa	

	CALCOLO DELLE LUNGHEZZE	Foglio n. 181

USURA

N. SEZIONE PROG.	FIG.	ELEMENTI DI CALCOLO	LUNGHEZZA ELEMENTARE ml	LUNGHEZZA FIGURA ml	NOTE
1	a1	(9.64-1.30)	8.34		
				8.34	
1	a2	(-9.34--1.20)	8.14		
				8.14	
2	a1	(9.56-1.25)	8.31		
				8.31	
2	a2	(-9.36--1.25)	8.11		
				8.11	
3	a1	(9.51-1.25)	8.26		
				8.26	
3	a2	(-9.46--1.25)	8.21		
				8.21	
4	a1	(9.56-1.25)	8.31		
				8.31	
4	a2	(-9.66--1.25)	8.41		
				8.41	
5	a1	(9.72-1.25)	8.47		
				8.47	
5	a2	(-9.96--1.25)	8.71		
				8.71	
6	a1	(9.99-1.25)	8.74		
				8.74	
6	a2	(-10.35--1.25)	9.10		
				9.10	
7	a1	(10.32-1.25)	9.07		
				9.07	
7	a2	(-10.70--1.25)	9.45		
				9.45	
8	a1	(-1.25--1.21)	0.04		
105.00		(-1.75--1.25)	0.50		
		(-9.25--1.75)	7.50		
		(-10.92--9.25)	1.67		
				9.71	
8	a2	(1.25-1.21)	0.04		
105.00		(1.75-1.25)	0.50		
		(9.25-1.75)	7.50		
		(10.60-9.25)	1.35		
				9.39	
9	a1	(1.25-1.21)	0.04		
120.00		(1.75-1.25)	0.50		
		(9.25-1.75)	7.50		
		(10.80-9.25)	1.55		
				9.59	
9	a2	(-1.25--1.21)	0.04		
120.00		(-1.75--1.25)	0.50		
		(-9.25--1.75)	7.50		
		(-11.00--9.25)	1.75		
				9.79	
10	a1	(1.25-1.21)	0.04		
135.00		(1.75-1.25)	0.50		
		(9.25-1.75)	7.50		
		(10.94-9.25)	1.69		
				9.73	
10	a2	(-1.25--1.21)	0.04		
135.00		(-1.75--1.25)	0.50		
		(-9.25--1.75)	7.50		
		(-10.99--9.25)	1.74		
				9.78	
11	a1	(1.25-1.21)	0.04		
150.00		(1.75-1.25)	0.50		
		(9.25-1.75)	7.50		
		(11.00-9.25)	1.75		
				9.79	
11	a2	(-1.25--1.21)	0.04		
150.00		(-1.75--1.25)	0.50		
		(-9.25--1.75)	7.50		
		(-11.30--9.25)	2.05		
				10.09	
12	a1	(1.25-1.21)	0.04		
165.00		(1.75-1.25)	0.50		
		(9.25-1.75)	7.50		
		(11.00-9.25)	1.75		
				9.79	
12	a2	(-1.25--1.21)	0.04		
165.00		(-1.75--1.25)	0.50		
		(-9.25--1.75)	7.50		
		(-12.24--9.25)	2.99		
				11.03	
13	a1	(1.25-1.21)	0.04		
180.00		(1.75-1.25)	0.50		
		(9.25-1.75)	7.50		
		(11.00-9.25)	1.75		
				9.79	
13	a2	(-1.25--1.21)	0.04		
180.00		(-1.75--1.25)	0.50		
		(-9.25--1.75)	7.50		
		(-13.37--9.25)	4.12		
				12.16	
14	a1	(1.25-1.21)	0.04		
195.00		(1.75-1.25)	0.50		
		(9.25-1.75)	7.50		
		(11.00-9.25)	1.75		
				9.79	
14	a2	(-1.25--1.21)	0.04		
195.00		(-1.75--1.25)	0.50		
		(-9.25--1.75)	7.50		
		(-14.37--9.25)	5.12		
				13.16	
15	a1	(1.25-1.21)	0.04		
210.00		(1.75-1.25)	0.50		
		(9.25-1.75)	7.50		
		(11.00-9.25)	1.75		
				9.79	
15	a2	(-1.25--1.21)	0.04		
210.00		(-1.75--1.25)	0.50		
		(-9.25--1.75)	7.50		
		A RIPORTARE ml	8.04		

		CALCOLO DELLE LUNGHEZZE		Foglio n. 182
USURA				
N. SEZIONE PROG.	FIG.	ELEMENTI DI CALCOLO	LUNGHEZZA ELEMENTARE ml	LUNGHEZZA FIGURA ml	NOTE
		RIPORTO ml	8.04		
		(-14.75--9.25)	5.50		
				13.54	
16	a1	(1.25-1.21)	0.04		
225.00		(1.75-1.25)	0.50		
		(9.25-1.75)	7.50		
		(11.00-9.25)	1.75		
				9.79	
16	a2	(-1.25--1.21)	0.04		
225.00		(-1.75--1.25)	0.50		
		(-9.25--1.75)	7.50		
		(-14.75--9.25)	5.50		
				13.54	
17	a1	(1.25-1.21)	0.04		
240.00		(1.75-1.25)	0.50		
		(9.25-1.75)	7.50		
		(11.00-9.25)	1.75		
				9.79	
17	a2	(-1.25--1.21)	0.04		
240.00		(-1.75--1.25)	0.50		
		(-9.25--1.75)	7.50		
		(-14.75--9.25)	5.50		
				13.54	
18	a1	(1.25-1.21)	0.04		
255.00		(1.75-1.25)	0.50		
		(9.25-1.75)	7.50		
		(10.99-9.25)	1.74		
				9.78	
18	a2	(-1.25--1.21)	0.04		
255.00		(-1.75--1.25)	0.50		
		(-9.25--1.75)	7.50		
		(-14.75--9.25)	5.50		
				13.54	
19	a1	(1.25-1.21)	0.04		
270.00		(1.75-1.25)	0.50		
		(9.25-1.75)	7.50		
		(11.21-9.25)	1.96		
				10.00	
19	a2	(-1.25--1.21)	0.04		
270.00		(-1.75--1.25)	0.50		
		(-9.25--1.75)	7.50		
		(-14.75--9.25)	5.50		
				13.54	
20	a1	(1.25-1.21)	0.04		
285.00		(1.75-1.25)	0.50		
		(9.25-1.75)	7.50		
		(11.93-9.25)	2.68		
				10.72	
20	a2	(-1.25--1.21)	0.04		
285.00		(-1.75--1.25)	0.50		
		(-9.25--1.75)	7.50		
		(-14.75--9.25)	5.50		
				13.54	
21	a1	(1.25-1.21)	0.04		
300.00		(1.75-1.25)	0.50		
		(9.25-1.75)	7.50		
		(12.86-9.25)	3.61		
				11.65	
21	a2	(-1.25--1.21)	0.04		
300.00		(-1.75--1.25)	0.50		
		(-9.25--1.75)	7.50		
		(-14.75--9.25)	5.50		
				13.54	
22	a1	(1.25-1.21)	0.04		
315.00		(1.75-1.25)	0.50		
		(9.25-1.75)	7.50		
		(13.82-9.25)	4.57		
				12.61	
22	a2	(-1.25--1.21)	0.04		
315.00		(-1.75--1.25)	0.50		
		(-9.25--1.75)	7.50		
		(-14.75--9.25)	5.50		
				13.54	
23	a1	(1.25-1.21)	0.04		
330.00		(1.75-1.25)	0.50		
		(9.25-1.75)	7.50		
		(14.51-9.25)	5.26		
				13.30	
23	a2	(-1.25--1.21)	0.04		
330.00		(-1.75--1.25)	0.50		
		(-9.25--1.75)	7.50		
		(-14.75--9.25)	5.50		
				13.54	
24	a1	(1.25-1.21)	0.04		
345.00		(1.75-1.25)	0.50		
		(9.25-1.75)	7.50		
		(14.75-9.25)	5.50		
				13.54	
24	a2	(-1.25--1.21)	0.04		
345.00		(-1.75--1.25)	0.50		
		(-9.25--1.75)	7.50		
		(-14.75--9.25)	5.50		
				13.54	
25	a1	(1.25-1.21)	0.04		
360.00		(1.75-1.25)	0.50		
		(9.25-1.75)	7.50		
		(14.75-9.25)	5.50		
				13.54	
25	a2	(-1.25--1.21)	0.04		
360.00		(-1.75--1.25)	0.50		
		(-9.25--1.75)	7.50		
		(-14.75--9.25)	5.50		
				13.54	
26	a1	(1.25-1.21)	0.04		
375.00		(1.75-1.25)	0.50		
		A RIPORTARE ml	0.54		

		CALCOLO DELLE LUNGHEZZE		Foglio n. 183
USURA				
N. SEZIONE PROG.	FIG.	ELEMENTI DI CALCOLO	LUNGHEZZA ELEMENTARE ml	LUNGHEZZA FIGURA ml	NOTE
		RIPORTO ml	0.54		
		(9.25-1.75)	7.50		
		(14.75-9.25)	5.50		
				13.54	
26	a2	(-1.25--1.21)	0.04		
375.00		(-1.75--1.25)	0.50		
		(-9.25--1.75)	7.50		
		(-14.75--9.25)	5.50		
				13.54	
27	a1	(1.25-1.21)	0.04		
390.00		(1.75-1.25)	0.50		
		(9.25-1.75)	7.50		
		(14.75-9.25)	5.50		
				13.54	
27	a2	(-1.25--1.21)	0.04		
390.00		(-1.75--1.25)	0.50		
		(-9.25--1.75)	7.50		
		(-14.75--9.25)	5.50		
				13.54	
28	a1	(1.25-1.21)	0.04		
405.00		(1.75-1.25)	0.50		
		(9.25-1.75)	7.50		
		(14.75-9.25)	5.50		
				13.54	
28	a2	(-1.25--1.21)	0.04		
405.00		(-1.75--1.25)	0.50		
		(-9.25--1.75)	7.50		
		(-14.75--9.25)	5.50		
				13.54	
29	a1	(1.25-1.21)	0.04		
420.00		(1.75-1.25)	0.50		
		(9.25-1.75)	7.50		
		(14.75-9.25)	5.50		
				13.54	
29	a2	(-1.25--1.21)	0.04		
420.00		(-1.75--1.25)	0.50		
		(-9.25--1.75)	7.50		
		(-14.87--9.25)	5.62		
				13.66	
30	a1	(1.25-1.21)	0.04		
435.00		(1.75-1.25)	0.50		
		(9.25-1.75)	7.50		
		(14.74-9.25)	5.49		
				13.53	
30	a2	(-1.25--1.21)	0.04		
435.00		(-1.75--1.25)	0.50		
		(-9.25--1.75)	7.50		
		(-16.29--9.25)	7.04		
				15.08	
31	a1	(1.25-1.21)	0.04		
450.00		(1.75-1.25)	0.50		
		(9.25-1.75)	7.50		
		(14.73-9.25)	5.48		
				13.52	
31	a2	(-1.25--1.21)	0.04		
450.00		(-1.75--1.25)	0.50		
		(-9.25--1.75)	7.50		
		(-11.00--9.25)	1.75		
				9.79	
32	a1	(1.25-1.21)	0.04		
465.00		(1.75-1.25)	0.50		
		(9.25-1.75)	7.50		
		(14.75-9.25)	5.50		
				13.54	
32	a2	(-1.25--1.21)	0.04		
465.00		(-1.75--1.25)	0.50		
		(-9.25--1.75)	7.50		
		(-11.00--9.25)	1.75		
				9.79	
33	a1	(1.25-1.21)	0.04		
480.00		(1.75-1.25)	0.50		
		(9.25-1.75)	7.50		
		(14.80-9.25)	5.55		
				13.59	
33	a2	(-1.25--1.21)	0.04		
480.00		(-1.75--1.25)	0.50		
		(-9.25--1.75)	7.50		
		(-11.00--9.25)	1.75		
				9.79	
34	a1	(1.25-1.21)	0.04		
495.00		(1.75-1.25)	0.50		
		(9.25-1.75)	7.50		
		(14.91-9.25)	5.66		
				13.70	
34	a2	(-1.25--1.21)	0.04		
495.00		(-1.75--1.25)	0.50		
		(-9.25--1.75)	7.50		
		(-11.00--9.25)	1.75		
				9.79	
35	a1	(1.25-1.21)	0.04		
510.00		(1.75-1.25)	0.50		
		(9.25-1.75)	7.50		
		(16.28-9.25)	7.03		
				15.07	
35	a2	(-1.25--1.21)	0.04		
510.00		(-1.75--1.25)	0.50		
		(-9.25--1.75)	7.50		
		(-11.00--9.25)	1.75		
				9.79	
36	a1	(1.25-1.21)	0.04		
525.00		(1.75-1.25)	0.50		
		(9.25-1.75)	7.50		
		(19.44-9.25)	10.19		
				18.23	
36	a2	(-1.25--1.21)	0.04		
		A RIPORTARE ml	0.04		

		CALCOLO DELLE LUNGHEZZE		Foglio n. 184
USURA				
N. SEZIONE PROG.	FIG.	ELEMENTI DI CALCOLO	LUNGHEZZA ELEMENTARE ml	LUNGHEZZA FIGURA ml	NOTE
		RIPORTO ml	0.04		
525.00		(-1.75--1.25)	0.50		
		(-9.25--1.75)	7.50		
		(-11.00--9.25)	1.75		
				9.79	
37	a1	(1.25-1.21)	0.04		
540.00		(1.75-1.25)	0.50		
		(9.25-1.75)	7.50		
		(11.00-9.25)	1.75		
				9.79	
37	a2	(-1.25--1.21)	0.04		
540.00		(-1.75--1.25)	0.50		
		(-9.25--1.75)	7.50		
		(-11.14--9.25)	1.89		
				9.93	
38	a1	(1.25-1.21)	0.04		
555.00		(1.75-1.25)	0.50		
		(9.25-1.75)	7.50		
		(11.00-9.25)	1.75		
				9.79	
38	a2	(-1.25--1.21)	0.04		
555.00		(-1.75--1.25)	0.50		
		(-9.25--1.75)	7.50		
		(-13.77--9.25)	4.52		
				12.56	
39	a1	(1.25-1.21)	0.04		
570.00		(1.75-1.25)	0.50		
		(9.25-1.75)	7.50		
		(11.00-9.25)	1.75		
				9.79	
39	a2	(-1.25--1.21)	0.04		
570.00		(-1.75--1.25)	0.50		
		(-9.25--1.75)	7.50		
		(-14.50--9.25)	5.25		
				13.29	
40	a1	(1.25-1.21)	0.04		
585.00		(1.75-1.25)	0.50		
		(9.25-1.75)	7.50		
		(11.00-9.25)	1.75		
				9.79	
40	a2	(-1.25--1.21)	0.04		
585.00		(-1.75--1.25)	0.50		
		(-9.25--1.75)	7.50		
		(-14.37--9.25)	5.12		
				13.16	
41	a1	(1.25-1.21)	0.04		
600.00		(1.75-1.25)	0.50		
		(9.25-1.75)	7.50		
		(11.00-9.25)	1.75		
				9.79	
41	a2	(-1.25--1.21)	0.04		
600.00		(-1.75--1.25)	0.50		
		(-9.25--1.75)	7.50		
		(-11.75--9.25)	2.50		
				10.54	
42	a1	(1.25-1.21)	0.04		
615.00		(1.75-1.25)	0.50		
		(9.25-1.75)	7.50		
		(11.00-9.25)	1.75		
				9.79	
42	a2	(-1.25--1.21)	0.04		
615.00		(-1.75--1.25)	0.50		
		(-9.25--1.75)	7.50		
		(-11.00--9.25)	1.75		
				9.79	
43	a1	(1.25-1.21)	0.04		
630.00		(1.75-1.25)	0.50		
		(9.25-1.75)	7.50		
		(11.00-9.25)	1.75		
				9.79	
43	a2	(-1.25--1.21)	0.04		
630.00		(-1.75--1.25)	0.50		
		(-9.25--1.75)	7.50		
		(-11.00--9.25)	1.75		
				9.79	
SP40	a1	(1.25-1.21)	0.04		
641.94		(1.75-1.25)	0.50		
		(9.25-1.75)	7.50		
		(11.00-9.25)	1.75		
				9.79	
SP40	a2	(-1.25--1.21)	0.04		
641.94		(-1.75--1.25)	0.50		
		(-9.25--1.75)	7.50		
		(-11.00--9.25)	1.75		
				9.79	
44	a1	(1.25-1.21)	0.04		
645.00		(1.75-1.25)	0.50		
		(9.25-1.75)	7.50		
		(11.00-9.25)	1.75		
				9.79	
44	a2	(-1.25--1.21)	0.04		
645.00		(-1.75--1.25)	0.50		
		(-9.25--1.75)	7.50		
		(-11.00--9.25)	1.75		
				9.79	
45	a1	(1.25-1.21)	0.04		
660.00		(1.75-1.25)	0.50		
		(9.25-1.75)	7.50		
		(12.00-9.25)	2.75		
				10.79	
45	a2	(-1.25--1.21)	0.04		
660.00		(-1.75--1.25)	0.50		
		(-9.25--1.75)	7.50		
		(-11.00--9.25)	1.75		
				9.79	
		A RIPORTARE ml			

		CALCOLO DELLE LUNGHEZZE		Foglio n. 185
USURA				
N. SEZIONE PROG.	FIG.	ELEMENTI DI CALCOLO	LUNGHEZZA ELEMENTARE ml	LUNGHEZZA FIGURA ml	NOTE
		RIPORTO ml			
46	a1	(1.25-1.21)	0.04		
675.00		(1.75-1.25)	0.50		
		(9.25-1.75)	7.50		
		(14.50-9.25)	5.25		
				13.29	
46	a2	(-1.25--1.21)	0.04		
675.00		(-1.75--1.25)	0.50		
		(-9.25--1.75)	7.50		
		(-11.00--9.25)	1.75		
				9.79	
47	a2	(-1.25--1.21)	0.04		
690.00		(-1.75--1.25)	0.50		
		(-9.25--1.75)	7.50		
		(-11.00--9.25)	1.75		
				9.79	
47	a1	(1.25-1.21)	0.04		
690.00		(1.75-1.25)	0.50		
		(9.25-1.75)	7.50		
		(14.50-9.25)	5.25		
				13.29	
48	a1	(1.25-1.25)	0.00		
705.00		(1.75-1.25)	0.50		
		(9.25-1.75)	7.50		
		(13.47-9.25)	4.22		
				12.22	
48	a2	(-1.25--1.25)	0.00		
705.00		(-1.75--1.25)	0.50		
		(-9.25--1.75)	7.50		
		(-11.00--9.25)	1.75		
				9.75	
49	a1	(1.25-1.21)	0.04		
720.00		(1.75-1.25)	0.50		
		(9.25-1.75)	7.50		
		(11.00-9.25)	1.75		
				9.79	
49	a2	(-1.25--1.21)	0.04		
720.00		(-1.75--1.25)	0.50		
		(-9.25--1.75)	7.50		
		(-11.00--9.25)	1.75		
				9.79	
50	a1	(1.25-1.21)	0.04		
735.00		(1.75-1.25)	0.50		
		(9.25-1.75)	7.50		
		(11.00-9.25)	1.75		
				9.79	
50	a2	(-1.25--1.21)	0.04		
735.00		(-1.75--1.25)	0.50		
		(-9.25--1.75)	7.50		
		(-11.00--9.25)	1.75		
				9.79	
51	a1	(1.25-1.21)	0.04		
750.00		(1.75-1.25)	0.50		
		(9.25-1.75)	7.50		
		(11.00-9.25)	1.75		
				9.79	
51	a2	(-1.25--1.21)	0.04		
750.00		(-1.75--1.25)	0.50		
		(-9.25--1.75)	7.50		
		(-11.00--9.25)	1.75		
				9.79	
52	a1	(1.25-1.21)	0.04		
765.00		(1.75-1.25)	0.50		
		(9.25-1.75)	7.50		
		(11.00-9.25)	1.75		
				9.79	
52	a2	(-1.25--1.21)	0.04		
765.00		(-1.75--1.25)	0.50		
		(-9.25--1.75)	7.50		
		(-16.26--9.25)	7.01		
				15.05	
53	a1	(1.25-1.21)	0.04		
780.00		(1.75-1.25)	0.50		
		(9.25-1.75)	7.50		
		(11.00-9.25)	1.75		
				9.79	
53	a2	(-1.25--1.21)	0.04		
780.00		(-1.75--1.25)	0.50		
		(-9.25--1.75)	7.50		
		(-14.88--9.25)	5.63		
				13.67	
54	a1	(1.25-1.21)	0.04		
795.00		(1.75-1.25)	0.50		
		(9.25-1.75)	7.50		
		(11.00-9.25)	1.75		
				9.79	
54	a2	(-1.25--1.21)	0.04		
795.00		(-1.75--1.25)	0.50		
		(-9.25--1.75)	7.50		
		(-14.75--9.25)	5.50		
				13.54	
55	a1	(1.25-1.21)	0.04		
810.00		(1.75-1.25)	0.50		
		(9.25-1.75)	7.50		
		(11.00-9.25)	1.75		
				9.79	
55	a2	(-1.25--1.21)	0.04		
810.00		(-1.75--1.25)	0.50		
		(-9.25--1.75)	7.50		
		(-14.75--9.25)	5.50		
				13.54	
56	a1	(1.25-1.21)	0.04		
825.00		(1.75-1.25)	0.50		
		(9.25-1.75)	7.50		
		(11.00-9.25)	1.75		
		A RIPORTARE ml	9.79		

		CALCOLO DELLE LUNGHEZZE		Foglio n. 186	
USURA					
N. SEZIONE PROG.	FIG.	ELEMENTI DI CALCOLO	LUNGHEZZA ELEMENTARE ml	LUNGHEZZA FIGURA ml	NOTE
		RIPORTO ml	9.79		
				9.79	
56	a2	(-1.25--1.21)	0.04		
825.00		(-1.75--1.25)	0.50		
		(-9.25--1.75)	7.50		
		(-14.75--9.25)	5.50		
				13.54	
57	a1	(1.25-1.21)	0.04		
840.00		(1.75-1.25)	0.50		
		(9.25-1.75)	7.50		
		(11.00-9.25)	1.75		
				9.79	
57	a2	(-1.25--1.21)	0.04		
840.00		(-1.75--1.25)	0.50		
		(-9.25--1.75)	7.50		
		(-14.75--9.25)	5.50		
				13.54	
58	a1	(1.25-1.21)	0.04		
855.00		(1.75-1.25)	0.50		
		(9.25-1.75)	7.50		
		(11.00-9.25)	1.75		
				9.79	
58	a2	(-1.25--1.21)	0.04		
855.00		(-1.75--1.25)	0.50		
		(-9.25--1.75)	7.50		
		(-14.75--9.25)	5.50		
				13.54	
59	a1	(1.25-1.21)	0.04		
870.00		(1.75-1.25)	0.50		
		(9.25-1.75)	7.50		
		(11.00-9.25)	1.75		
				9.79	
59	a2	(-1.25--1.21)	0.04		
870.00		(-1.75--1.25)	0.50		
		(-9.25--1.75)	7.50		
		(-14.75--9.25)	5.50		
				13.54	
60	a1	(1.25-1.21)	0.04		
885.00		(1.75-1.25)	0.50		
		(9.25-1.75)	7.50		
		(11.00-9.25)	1.75		
				9.79	
60	a2	(-1.25--1.21)	0.04		
885.00		(-1.75--1.25)	0.50		
		(-9.25--1.75)	7.50		
		(-14.75--9.25)	5.50		
				13.54	
61	a1	(1.25-1.21)	0.04		
900.00		(1.75-1.25)	0.50		
		(9.25-1.75)	7.50		
		(11.00-9.25)	1.75		
				9.79	
61	a2	(-1.25--1.21)	0.04		
900.00		(-1.75--1.25)	0.50		
		(-9.25--1.75)	7.50		
		(-14.58--9.25)	5.33		
				13.37	
62	a1	(1.25-1.21)	0.04		
915.00		(1.75-1.25)	0.50		
		(9.25-1.75)	7.50		
		(11.00-9.25)	1.75		
		(13.12-11.00)	2.12		
				11.91	
62	a2	(-1.25--1.21)	0.04		
915.00		(-1.75--1.25)	0.50		
		(-9.25--1.75)	7.50		
		(-13.96--9.25)	4.71		
				12.75	
63	a1	(1.25-1.21)	0.04		
930.00		(1.75-1.25)	0.50		
		(9.25-1.75)	7.50		
		(17.06-9.25)	7.81		
				15.85	
63	a2	(-1.25--1.21)	0.04		
930.00		(-1.75--1.25)	0.50		
		(-9.25--1.75)	7.50		
		(-13.01--9.25)	3.76		
				11.80	
64	a1	(1.25-1.21)	0.04		
945.00		(1.75-1.25)	0.50		
		(9.25-1.75)	7.50		
		(15.40-9.25)	6.15		
				14.19	
64	a2	(-1.25--1.21)	0.04		
945.00		(-1.75--1.25)	0.50		
		(-9.25--1.75)	7.50		
		(-12.08--9.25)	2.83		
				10.87	
65	a1	(1.25-1.21)	0.04		
960.00		(1.75-1.25)	0.50		
		(9.25-1.75)	7.50		
		(14.76-9.25)	5.51		
				13.55	
65	a2	(-1.25--1.21)	0.04		
960.00		(-1.75--1.25)	0.50		
		(-9.25--1.75)	7.50		
		(-11.30--9.25)	2.05		
				10.09	
66	a1	(1.25-1.21)	0.04		
975.00		(1.75-1.25)	0.50		
		(9.25-1.75)	7.50		
		(14.75-9.25)	5.50		
				13.54	
66	a2	(-1.25--1.21)	0.04		
975.00		(-1.75--1.25)	0.50		
		A RIPORTARE ml	0.54		

		CALCOLO DELLE LUNGHEZZE		Foglio n. 187
USURA				
N. SEZIONE PROG.	FIG.	ELEMENTI DI CALCOLO	LUNGHEZZA ELEMENTARE ml	LUNGHEZZA FIGURA ml	NOTE
		RIPORTO ml	0.54		
		(-9.25--1.75)	7.50		
		(-11.00--9.25)	1.75		
				9.79	
67	a1	(1.25-1.21)	0.04		
990.00		(1.75-1.25)	0.50		
		(9.25-1.75)	7.50		
		(14.75-9.25)	5.50		
				13.54	
67	a2	(-1.25--1.21)	0.04		
990.00		(-1.75--1.25)	0.50		
		(-9.25--1.75)	7.50		
		(-11.00--9.25)	1.75		
				9.79	
68	a1	(1.25-1.21)	0.04		
1005.00		(1.75-1.25)	0.50		
		(9.25-1.75)	7.50		
		(14.75-9.25)	5.50		
				13.54	
68	a2	(-1.25--1.21)	0.04		
1005.00		(-1.75--1.25)	0.50		
		(-9.25--1.75)	7.50		
		(-11.00--9.25)	1.75		
				9.79	
69	a1	(1.25-1.21)	0.04		
1020.00		(1.75-1.25)	0.50		
		(9.25-1.75)	7.50		
		(14.75-9.25)	5.50		
				13.54	
69	a2	(-1.25--1.21)	0.04		
1020.00		(-1.75--1.25)	0.50		
		(-9.25--1.75)	7.50		
		(-11.00--9.25)	1.75		
				9.79	
70	a1	(1.25-1.21)	0.04		
1035.00		(1.75-1.25)	0.50		
		(9.25-1.75)	7.50		
		(14.75-9.25)	5.50		
				13.54	
70	a2	(-1.25--1.21)	0.04		
1035.00		(-1.75--1.25)	0.50		
		(-9.25--1.75)	7.50		
		(-11.00--9.25)	1.75		
				9.79	
71	a1	(1.25-1.21)	0.04		
1050.00		(1.75-1.25)	0.50		
		(9.25-1.75)	7.50		
		(14.75-9.25)	5.50		
				13.54	
71	a2	(-1.25--1.21)	0.04		
1050.00		(-1.75--1.25)	0.50		
		(-9.25--1.75)	7.50		
		(-11.00--9.25)	1.75		
				9.79	
72	a1	(1.25-1.21)	0.04		
1065.00		(1.75-1.25)	0.50		
		(9.25-1.75)	7.50		
		(14.75-9.25)	5.50		
				13.54	
72	a2	(-1.25--1.21)	0.04		
1065.00		(-1.75--1.25)	0.50		
		(-9.25--1.75)	7.50		
		(-11.00--9.25)	1.75		
				9.79	
73	a1	(1.25-1.21)	0.04		
1080.00		(1.75-1.25)	0.50		
		(9.25-1.75)	7.50		
		(14.75-9.25)	5.50		
				13.54	
73	a2	(-1.25--1.21)	0.04		
1080.00		(-1.75--1.25)	0.50		
		(-9.25--1.75)	7.50		
		(-11.00--9.25)	1.75		
				9.79	
74	a1	(1.25-1.21)	0.04		
1095.00		(1.75-1.25)	0.50		
		(9.25-1.75)	7.50		
		(14.75-9.25)	5.50		
				13.54	
74	a2	(-1.25--1.21)	0.04		
1095.00		(-1.75--1.25)	0.50		
		(-9.25--1.75)	7.50		
		(-11.00--9.25)	1.75		
				9.79	
75	a1	(1.25-1.21)	0.04		
1110.00		(1.75-1.25)	0.50		
		(9.25-1.75)	7.50		
		(14.75-9.25)	5.50		
				13.54	
75	a2	(-1.25--1.21)	0.04		
1110.00		(-1.75--1.25)	0.50		
		(-9.25--1.75)	7.50		
		(-11.00--9.25)	1.75		
				9.79	
76	a1	(1.25-1.21)	0.04		
1125.00		(1.75-1.25)	0.50		
		(9.25-1.75)	7.50		
		(14.74-9.25)	5.49		
				13.53	
76	a2	(-1.25--1.21)	0.04		
1125.00		(-1.75--1.25)	0.50		
		(-9.25--1.75)	7.50		
		(-11.00--9.25)	1.75		
				9.79	
76bis	a2	(-1.25--11.00)	9.75		
		A RIPORTARE ml	9.75		

	CALCOLO DELLE LUNGHEZZE		Foglio n. 188

USURA

N. SEZIONE PROG.	FIG.	ELEMENTI DI CALCOLO	LUNGHEZZA ELEMENTARE ml	LUNGHEZZA FIGURA ml	NOTE
		RIPORTO ml	9.75		
76bis	a1	(14.74-1.25)	13.49	9.75 13.49	

Il Direttore dei Lavori	L'Impresa	

	CALCOLO DELLE LUNGHEZZE		Foglio n. 189

VEGETALE

N. SEZIONE PROG.	FIG.	ELEMENTI DI CALCOLO	LUNGHEZZA ELEMENTARE ml	LUNGHEZZA FIGURA ml	NOTE
1	b1	(11.34-9.79)	1.55		
0.00		(11.54-11.34)	0.20		
				1.75	
1	b2	(-11.04--9.49)	1.55		
0.00		(-12.11--11.04)	1.07		
				2.62	
2	b1	(11.26-9.71)	1.55		
15.00		(11.36-11.26)	0.10		
				1.65	
2	b2	(-11.06--9.51)	1.55		
15.00		(-11.74--11.06)	0.68		
				2.23	
3	b1	(11.21-9.66)	1.55		
30.00		(11.63-11.21)	0.42		
				1.97	
3	b2	(-11.16--9.61)	1.55		
30.00		(-11.89--11.16)	0.73		
				2.28	
4	b1	(11.38-9.71)	1.67		
				1.67	
4	b2	(-11.36--9.81)	1.55		
45.00		(-12.18--11.36)	0.82		
				2.37	
5	b1	(11.42-9.87)	1.55		
60.00		(11.42-11.42)	0.00		
				1.55	
5	b2	(-11.66--10.11)	1.55		
60.00		(-12.40--11.66)	0.74		
				2.29	
6	b1	(11.90-10.14)	1.76		
				1.76	
6	b2	(-12.05--10.50)	1.55		
75.00		(-12.81--12.05)	0.76		
				2.31	
7	b1	(12.02-10.47)	1.55		
90.00		(12.58-12.02)	0.56		
				2.11	
7	b2	(-12.40--10.85)	1.55		
90.00		(-13.15--12.40)	0.75		
				2.30	
9	b1	(-12.70--11.15)	1.55		
120.00		(-13.14--12.70)	0.44		
				1.99	
9	b2	(12.50-10.96)	1.54		
120.00		(13.18-12.50)	0.68		
				2.22	
10	b1	(-12.69--11.14)	1.55		
135.00		(-13.21--12.69)	0.52		
				2.07	
10	b2	(12.64-11.09)	1.55		
135.00		(13.27-12.64)	0.63		
				2.18	
11	b1	(-13.00--11.45)	1.55		
150.00		(-13.59--13.00)	0.59		
				2.14	
11	b2	(12.70-11.15)	1.55		
150.00		(12.99-12.70)	0.29		
				1.84	
12	b1	(-13.94--12.39)	1.55		
165.00		(-14.57--13.94)	0.63		
				2.18	
12	b2	(12.70-11.15)	1.55		
165.00		(13.39-12.70)	0.69		
				2.24	
13	b1	(-15.07--13.52)	1.55		
180.00		(-15.73--15.07)	0.66		
				2.21	
13	b2	(12.70-11.15)	1.55		
180.00		(13.16-12.70)	0.46		
				2.01	
14	b1	(-16.07--14.52)	1.55		
195.00		(-16.78--16.07)	0.71		
				2.26	
14	b2	(12.70-11.15)	1.55		
195.00		(13.39-12.70)	0.69		
				2.24	
15	b1	(-16.45--14.90)	1.55		
210.00		(-17.22--16.45)	0.77		
				2.32	
15	b2	(12.70-11.15)	1.55		
210.00		(13.29-12.70)	0.59		
				2.14	
16	b1	(-16.45--14.90)	1.55		
225.00		(-17.29--16.45)	0.84		
				2.39	
16	b2	(12.70-11.15)	1.55		
225.00		(13.54-12.70)	0.84		
				2.39	
17	b1	(-16.45--14.90)	1.55		
240.00		(-17.37--16.45)	0.92		
				2.47	
17	b2	(12.70-11.15)	1.55		
240.00		(13.79-12.70)	1.09		
				2.64	
18	b1	(-16.45--14.90)	1.55		
255.00		(-17.45--16.45)	1.00		
				2.55	
18	b2	(12.69-11.14)	1.55		
255.00		(13.76-12.69)	1.07		
				2.62	
19	b1	(-16.45--14.90)	1.55		
270.00		(-17.52--16.45)	1.07		
				2.62	
19	b2	(12.91-11.36)	1.55		
270.00		(14.04-12.91)	1.13		
				2.68	
		A RIPORTARE ml			

		CALCOLO DELLE LUNGHEZZE		Foglio n. 190
VEGETALE				
N. SEZIONE PROG.	FIG.	ELEMENTI DI CALCOLO	LUNGHEZZA ELEMENTARE ml	LUNGHEZZA FIGURA ml	NOTE
		RIPORTO ml			
20 285.00	b1	(-16.45--14.90) (-16.92--16.45)	1.55 0.47	2.02	
20 285.00	b2	(13.63-12.08) (14.85-13.63)	1.55 1.22	2.77	
21 300.00	b1	(-16.45--14.90) (-17.14--16.45)	1.55 0.69	2.24	
21 300.00	b2	(14.56-13.01) (15.74-14.56)	1.55 1.18	2.73	
22 315.00	b1	(-16.45--14.90) (-17.66--16.45)	1.55 1.21	2.76	
22 315.00	b2	(15.52-13.97) (16.99-15.52)	1.55 1.47	3.02	
23 330.00	b1	(-16.45--14.90) (-17.46--16.45)	1.55 1.01	2.56	
23 330.00	b2	(16.21-14.66) (17.31-16.21)	1.55 1.10	2.65	
24 345.00	b1	(-16.45--14.90) (-17.82--16.45)	1.55 1.37	2.92	
24 345.00	b2	(16.45-14.90) (17.91-16.45)	1.55 1.46	3.01	
25 360.00	b1	(-16.45--14.90) (-18.00--16.45)	1.55 1.55	3.10	
25 360.00	b2	(16.45-14.90) (17.90-16.45)	1.55 1.45	3.00	
26 375.00	b1	(-16.45--14.90) (-17.94--16.45)	1.55 1.49	3.04	
26 375.00	b2	(16.45-14.90) (18.20-16.45)	1.55 1.75	3.30	
27 390.00	b1	(-16.45--14.90) (-18.11--16.45)	1.55 1.66	3.21	
27 390.00	b2	(16.45-14.90) (18.30-16.45)	1.55 1.85	3.40	
28 405.00	b1	(-16.45--14.90) (-18.17--16.45)	1.55 1.72	3.27	
28 405.00	b2	(16.45-14.90) (18.45-16.45)	1.55 2.00	3.55	
29 420.00	b1	(-16.57--15.02) (-18.44--16.57)	1.55 1.87	3.42	
29 420.00	b2	(16.45-14.90) (18.53-16.45)	1.55 2.08	3.63	
30 435.00	b1	(-17.99--16.44) (-20.00--17.99)	1.55 2.01	3.56	
30 435.00	b2	(16.44-14.89) (18.53-16.44)	1.55 2.09	3.64	
31 450.00	b1	(-12.70--11.15) (-15.23--12.70)	1.55 2.53	4.08	
31 450.00	b2	(16.43-14.88) (18.56-16.43)	1.55 2.13	3.68	
32 465.00	b1	(-12.70--11.15) (-15.40--12.70)	1.55 2.70	4.25	
32 465.00	b2	(16.45-14.90) (18.66-16.45)	1.55 2.21	3.76	
33 480.00	b1	(-12.70--11.15) (-15.51--12.70)	1.55 2.81	4.36	
33 480.00	b2	(16.50-14.96) (18.82-16.50)	1.54 2.32	3.86	
34 495.00	b1	(-12.70--11.15) (-15.49--12.70)	1.55 2.79	4.34	
34 495.00	b2	(16.61-15.06) (19.03-16.61)	1.55 2.42	3.97	
35 510.00	b1	(-12.70--11.15) (-15.36--12.70)	1.55 2.66	4.21	
35 510.00	b2	(17.98-16.43) (20.48-17.98)	1.55 2.50	4.05	
36 525.00	b1	(-12.70--11.15) (-15.38--12.70)	1.55 2.68	4.23	
36 525.00	b2	(21.14-19.59) (23.73-21.14)	1.55 2.59	4.14	
37 540.00	b1	(-12.84--11.29) (-15.55--12.84)	1.55 2.71		
		A RIPORTARE ml	4.26		

	CALCOLO DELLE LUNGHEZZE		Foglio n. 191

VEGETALE

N. SEZIONE PROG.	FIG.	ELEMENTI DI CALCOLO	LUNGHEZZA ELEMENTARE ml	LUNGHEZZA FIGURA ml	NOTE
		RIPORTO ml	4.26		
				4.26	
37	b2	(12.70-11.15)	1.55		
540.00		(15.48-12.70)	2.78		
				4.33	
38	b1	(-26.44--13.92)	12.52		
555.00		(-28.09--26.44)	1.65		
				14.17	
38	b2	(12.70-11.15)	1.55		
555.00		(15.64-12.70)	2.94		
				4.49	
39	b1	(-25.05--14.65)	10.40		
570.00		(-26.75--25.05)	1.70		
				12.10	
39	b2	(12.70-11.15)	1.55		
570.00		(15.71-12.70)	3.01		
				4.56	
40	b1	(-26.54--14.52)	12.02		
585.00		(-28.90--26.54)	2.36		
				14.38	
40	b2	(12.70-11.15)	1.55		
585.00		(15.73-12.70)	3.03		
				4.58	
41	b1	(-27.91--11.90)	16.01		
600.00		(-30.24--27.91)	2.33		
				18.34	
41	b2	(12.70-11.15)	1.55		
600.00		(15.79-12.70)	3.09		
				4.64	
42	b1	(-29.82--11.15)	18.67		
615.00		(-32.01--29.82)	2.19		
				20.86	
43	b2	(-31.71--11.15)	20.56		
630.00		(-33.73--31.71)	2.02		
				22.58	
43	b1	(32.70-11.15)	21.55		
630.00		(34.69-32.70)	1.99		
				23.54	
SP40	b2	(-31.22--11.15)	20.07		
641.94		(-33.35--31.22)	2.13		
				22.20	
SP40	b1	(32.70-11.15)	21.55		
641.94		(35.06-32.70)	2.36		
				23.91	
44	b2	(-29.94--11.15)	18.79		
645.00		(-32.19--29.94)	2.25		
				21.04	
44	b1	(32.70-11.15)	21.55		
645.00		(34.94-32.70)	2.24		
				23.79	
45	b2	(-23.14--11.15)	11.99		
660.00		(-25.83--23.14)	2.69		
		(-26.38--25.83)	0.55		
				15.23	
45	b1	(33.70-12.15)	21.55		
660.00		(36.02-33.70)	2.32		
				23.87	
46	b2	(-12.70--11.15)	1.55		
675.00		(-13.04--12.70)	0.34		
		(-14.85--13.04)	1.81		
				3.70	
46	b1	(36.20-14.65)	21.55		
675.00		(38.41-36.20)	2.21		
				23.76	
47	b1	(36.08-14.65)	21.43		
690.00		(38.70-36.08)	2.62		
				24.05	
48	b2	(-12.70--11.15)	1.55		
705.00		(-16.29--12.70)	3.59		
				5.14	
48	b1	(15.17-13.62)	1.55		
705.00		(25.98-15.17)	10.81		
				12.36	
49	b2	(-12.70--11.15)	1.55		
720.00		(-16.53--12.70)	3.83		
				5.38	
49	b1	(19.33-11.75)	7.58		
				7.58	
50	b2	(-12.70--11.15)	1.55		
735.00		(-17.16--12.70)	4.46		
				6.01	
50	b1	(12.70-11.15)	1.55		
735.00		(13.31-12.70)	0.61		
		(13.60-13.31)	0.29		
				2.45	
51	b1	(-12.70--11.15)	1.55		
750.00		(-17.51--12.70)	4.81		
				6.36	
52	b1	(-17.96--16.41)	1.55		
765.00		(-23.21--17.96)	5.25		
				6.80	
52	b2	(12.70-11.15)	1.55		
765.00		(17.64-12.70)	4.94		
				6.49	
53	b1	(-16.58--15.03)	1.55		
780.00		(-22.45--16.58)	5.87		
				7.42	
53	b2	(12.70-11.15)	1.55		
780.00		(18.02-12.70)	5.32		
				6.87	
54	b1	(-16.45--14.90)	1.55		
795.00		(-19.07--16.45)	2.62		
				4.17	
54	b2	(12.70-11.15)	1.55		
795.00		(18.44-12.70)	5.74		
		A RIPORTARE ml	7.29		

		CALCOLO DELLE LUNGHEZZE		Foglio n. 192	
VEGETALE					
N. SEZIONE PROG.	FIG.	ELEMENTI DI CALCOLO	LUNGHEZZA ELEMENTARE ml	LUNGHEZZA FIGURA ml	NOTE
		RIPORTO ml	7.29		
				7.29	
55	b1	(-16.45--14.90)	1.55		
810.00		(-18.91--16.45)	2.46		
				4.01	
55	b2	(12.70-11.15)	1.55		
810.00		(18.79-12.70)	6.09		
				7.64	
56	b1	(-16.45--14.90)	1.55		
825.00		(-18.92--16.45)	2.47		
				4.02	
56	b2	(12.70-11.15)	1.55		
825.00		(19.43-12.70)	6.73		
				8.28	
57	b1	(-16.45--14.90)	1.55		
840.00		(-18.90--16.45)	2.45		
				4.00	
57	b2	(12.70-11.15)	1.55		
840.00		(19.98-12.70)	7.28		
				8.83	
58	b1	(-16.45--14.90)	1.55		
855.00		(-18.99--16.45)	2.54		
				4.09	
58	b2	(12.70-11.15)	1.55		
855.00		(18.60-12.70)	5.90		
				7.45	
59	b1	(-16.45--14.90)	1.55		
870.00		(-19.23--16.45)	2.78		
				4.33	
59	b2	(12.70-11.15)	1.55		
870.00		(17.08-12.70)	4.38		
				5.93	
60	b1	(-16.45--14.90)	1.55		
885.00		(-19.43--16.45)	2.98		
				4.53	
60	b2	(12.70-11.15)	1.55		
885.00		(15.71-12.70)	3.01		
				4.56	
61	b1	(-16.28--14.73)	1.55		
900.00		(-18.76--16.28)	2.48		
				4.03	
61	b2	(12.70-11.15)	1.55		
900.00		(13.79-12.70)	1.09		
				2.64	
62	b1	(-15.66--14.11)	1.55		
915.00		(-18.64--15.66)	2.98		
				4.53	
63	b1	(-14.71--13.16)	1.55		
930.00		(-20.04--14.71)	5.33		
				6.88	
63	b2	(18.76-17.21)	1.55		
930.00		(23.20-18.76)	4.44		
				5.99	
64	b2	(-13.78--12.23)	1.55		
945.00		(-19.02--13.78)	5.24		
				6.79	
64	b1	(17.10-15.56)	1.54		
945.00		(21.69-17.10)	4.59		
		(29.07-21.69)	7.38		
				13.51	
65	b2	(-13.00--11.45)	1.55		
960.00		(-16.30--13.00)	3.30		
				4.85	
65	b1	(16.46-14.91)	1.55		
960.00		(21.15-16.46)	4.69		
		(29.34-21.15)	8.19		
				14.43	
66	b2	(-12.70--11.15)	1.55		
975.00		(-16.06--12.70)	3.36		
				4.91	
66	b1	(16.45-14.90)	1.55		
975.00		(21.23-16.45)	4.78		
		(29.64-21.23)	8.41		
				14.74	
67	b2	(-12.70--11.15)	1.55		
990.00		(-16.43--12.70)	3.73		
				5.28	
67	b1	(16.45-14.90)	1.55		
990.00		(21.31-16.45)	4.86		
		(29.92-21.31)	8.61		
				15.02	
68	b2	(-12.70--11.15)	1.55		
1005.00		(-16.24--12.70)	3.54		
				5.09	
68	b1	(16.45-14.90)	1.55		
1005.00		(21.40-16.45)	4.95		
		(30.17-21.40)	8.77		
				15.27	
69	b2	(-12.70--11.15)	1.55		
1020.00		(-16.13--12.70)	3.43		
				4.98	
69	b1	(16.45-14.90)	1.55		
1020.00		(21.48-16.45)	5.03		
		(30.38-21.48)	8.90		
				15.48	
70	b2	(-12.70--11.15)	1.55		
1035.00		(-16.26--12.70)	3.56		
				5.11	
70	b1	(16.45-14.90)	1.55		
1035.00		(21.57-16.45)	5.12		
		(30.57-21.57)	9.00		
				15.67	
71	b2	(-12.70--11.15)	1.55		
1050.00		(-16.61--12.70)	3.91		
				5.46	
		A RIPORTARE ml			

	CALCOLO DELLE LUNGHEZZE		Foglio n. 193

VEGETALE

N. SEZIONE PROG.	FIG.	ELEMENTI DI CALCOLO	LUNGHEZZA ELEMENTARE ml	LUNGHEZZA FIGURA ml	NOTE
		RIPORTO ml			
71	b1	(16.45-14.90)	1.55		
1050.00		(21.65-16.45)	5.20		
		(30.71-21.65)	9.06		
				15.81	
72	b2	(-12.70--11.15)	1.55		
1065.00		(-16.49--12.70)	3.79		
				5.34	
72	b1	(16.45-14.90)	1.55		
1065.00		(21.74-16.45)	5.29		
		(30.79-21.74)	9.05		
				15.89	
73	b2	(-12.70--11.15)	1.55		
1080.00		(-16.76--12.70)	4.06		
				5.61	
73	b1	(16.45-14.90)	1.55		
1080.00		(21.82-16.45)	5.37		
		(30.83-21.82)	9.01		
				15.93	
74	b2	(-12.70--11.15)	1.55		
1095.00		(-16.68--12.70)	3.98		
				5.53	
74	b1	(16.45-14.90)	1.55		
1095.00		(21.90-16.45)	5.45		
		(30.91-21.90)	9.01		
				16.01	
75	b2	(-12.70--11.15)	1.55		
1110.00		(-16.99--12.70)	4.29		
				5.84	
75	b1	(16.45-14.90)	1.55		
1110.00		(21.98-16.45)	5.53		
		(31.00-21.98)	9.02		
				16.10	
76	b2	(-12.70--11.15)	1.55		
1125.00		(-17.05--12.70)	4.35		
				5.90	
76	b1	(16.44-14.89)	1.55		
1125.00		(22.07-16.44)	5.63		
		(31.05-22.07)	8.98		
				16.16	

Il Direttore dei Lavori	L'Impresa	

	CALCOLO DELLE LUNGHEZZE		Foglio n. 194

BINDER

N. SEZIONE PROG.	FIG.	ELEMENTI DI CALCOLO	LUNGHEZZA ELEMENTARE ml	LUNGHEZZA FIGURA ml	NOTE
1	c1	(-1.78--1.16)	0.62		
0.00		(-9.34--1.78)	7.56		
				8.18	
1	c2	(1.88-1.26)	0.62		
0.00		(9.64-1.88)	7.76		
				8.38	
2	c1	(1.83-1.21)	0.62		
15.00		(9.56-1.83)	7.73		
				8.35	
2	c2	(-1.83--1.21)	0.62		
15.00		(-9.36--1.83)	7.53		
				8.15	
3	c1	(1.83-1.21)	0.62		
30.00		(9.51-1.83)	7.68		
				8.30	
3	c2	(-1.83--1.21)	0.62		
30.00		(-9.46--1.83)	7.63		
				8.25	
4	c1	(1.83-1.21)	0.62		
45.00		(9.56-1.83)	7.73		
				8.35	
4	c2	(-1.83--1.21)	0.62		
45.00		(-9.66--1.83)	7.83		
				8.45	
5	c1	(-1.83--1.21)	0.62		
60.00		(-9.96--1.83)	8.13		
				8.75	
5	c2	(1.83-1.21)	0.62		
60.00		(9.72-1.83)	7.89		
				8.51	
6	c1	(-1.83--1.21)	0.62		
75.00		(-10.35--1.83)	8.52		
				9.14	
6	c2	(1.83-1.21)	0.62		
75.00		(9.99-1.83)	8.16		
				8.78	
7	c1	(-1.83--1.21)	0.62		
90.00		(-10.70--1.83)	8.87		
				9.49	
7	c2	(1.83-1.21)	0.62		
90.00		(10.32-1.83)	8.49		
				9.11	
8	c1	(1.21-1.05)	0.16		
105.00		(1.75-1.21)	0.54		
		(10.60-1.75)	8.85		
				9.55	
8	c2	(-1.21--1.05)	0.16		
105.00		(-1.75--1.21)	0.54		
		(-10.92--1.75)	9.17		
				9.87	
9	c1	(-1.21--1.05)	0.16		
120.00		(-1.75--1.21)	0.54		
		(-11.00--1.75)	9.25		
				9.95	
9	c2	(1.21-1.05)	0.16		
120.00		(1.75-1.21)	0.54		
		(10.80-1.75)	9.05		
				9.75	
10	c1	(-1.21--1.05)	0.16		
135.00		(-1.75--1.21)	0.54		
		(-10.99--1.75)	9.24		
				9.94	
10	c2	(1.21-1.05)	0.16		
135.00		(1.75-1.21)	0.54		
		(10.94-1.75)	9.19		
				9.89	
11	c1	(-1.21--1.05)	0.16		
150.00		(-1.75--1.21)	0.54		
		(-11.30--1.75)	9.55		
				10.25	
11	c2	(1.21-1.05)	0.16		
150.00		(1.75-1.21)	0.54		
		(11.00-1.75)	9.25		
				9.95	
12	c1	(-1.21--1.05)	0.16		
165.00		(-1.75--1.21)	0.54		
		(-12.24--1.75)	10.49		
				11.19	
12	c2	(1.21-1.05)	0.16		
165.00		(1.75-1.21)	0.54		
		(11.00-1.75)	9.25		
				9.95	
13	c1	(-1.21--1.05)	0.16		
180.00		(-1.75--1.21)	0.54		
		(-13.37--1.75)	11.62		
				12.32	
13	c2	(1.21-1.05)	0.16		
180.00		(1.75-1.21)	0.54		
		(11.00-1.75)	9.25		
				9.95	
14	c1	(-1.21--1.05)	0.16		
195.00		(-1.75--1.21)	0.54		
		(-14.37--1.75)	12.62		
				13.32	
14	c2	(1.21-1.05)	0.16		
195.00		(1.75-1.21)	0.54		
		(11.00-1.75)	9.25		
				9.95	
15	c1	(-1.21--1.05)	0.16		
210.00		(-1.75--1.21)	0.54		
		(-14.75--1.75)	13.00		
				13.70	
15	c2	(1.21-1.05)	0.16		
210.00		(1.75-1.21)	0.54		
		(11.00-1.75)	9.25		
				9.95	
		A RIPORTARE ml			

	CALCOLO DELLE LUNGHEZZE	Foglio n. 195

BINDER

N. SEZIONE PROG.	FIG.	ELEMENTI DI CALCOLO	LUNGHEZZA ELEMENTARE ml	LUNGHEZZA FIGURA ml	NOTE
		RIPORTO ml			
16 225.00	c1	(-1.21--1.05) (-1.75--1.21) (-14.75--1.75)	0.16 0.54 13.00	13.70	
16 225.00	c2	(1.21-1.05) (1.75-1.21) (11.00-1.75)	0.16 0.54 9.25	9.95	
17 240.00	c1	(-1.21--1.05) (-1.75--1.21) (-14.75--1.75)	0.16 0.54 13.00	13.70	
17 240.00	c2	(1.21-1.05) (1.75-1.21) (11.00-1.75)	0.16 0.54 9.25	9.95	
18 255.00	c1	(-1.21--1.05) (-1.75--1.21) (-14.75--1.75)	0.16 0.54 13.00	13.70	
18 255.00	c2	(1.21-1.05) (1.75-1.21) (10.99-1.75)	0.16 0.54 9.24	9.94	
19 270.00	c1	(-1.21--1.05) (-1.75--1.21) (-14.75--1.75)	0.16 0.54 13.00	13.70	
19 270.00	c2	(1.21-1.05) (1.75-1.21) (11.21-1.75)	0.16 0.54 9.46	10.16	
20 285.00	c1	(-1.21--1.05) (-1.75--1.21) (-14.75--1.75)	0.16 0.54 13.00	13.70	
20 285.00	c2	(1.21-1.05) (1.75-1.21) (11.93-1.75)	0.16 0.54 10.18	10.88	
21 300.00	c1	(-1.21--1.05) (-1.75--1.21) (-14.75--1.75)	0.16 0.54 13.00	13.70	
21 300.00	c2	(1.21-1.05) (1.75-1.21) (12.86-1.75)	0.16 0.54 11.11	11.81	
22 315.00	c1	(-1.21--1.05) (-1.75--1.21) (-14.75--1.75)	0.16 0.54 13.00	13.70	
22 315.00	c2	(1.21-1.05) (1.75-1.21) (13.82-1.75)	0.16 0.54 12.07	12.77	
23 330.00	c1	(-1.21--1.05) (-1.75--1.21) (-14.75--1.75)	0.16 0.54 13.00	13.70	
23 330.00	c2	(1.21-1.05) (1.75-1.21) (14.51-1.75)	0.16 0.54 12.76	13.46	
24 345.00	c1	(-1.21--1.05) (-1.75--1.21) (-14.75--1.75)	0.16 0.54 13.00	13.70	
24 345.00	c2	(1.21-1.05) (1.75-1.21) (14.75-1.75)	0.16 0.54 13.00	13.70	
25 360.00	c1	(-1.21--1.05) (-1.75--1.21) (-14.75--1.75)	0.16 0.54 13.00	13.70	
25 360.00	c2	(1.21-1.05) (1.75-1.21) (14.75-1.75)	0.16 0.54 13.00	13.70	
26 375.00	c1	(-1.21--1.05) (-1.75--1.21) (-14.75--1.75)	0.16 0.54 13.00	13.70	
26 375.00	c2	(1.21-1.05) (1.75-1.21) (14.75-1.75)	0.16 0.54 13.00	13.70	
27 390.00	c1	(-1.21--1.05) (-1.75--1.21) (-14.75--1.75)	0.16 0.54 13.00	13.70	
27 390.00	c2	(1.21-1.05) (1.75-1.21) (14.75-1.75)	0.16 0.54 13.00	13.70	
28 405.00	c1	(-1.21--1.05) (-1.75--1.21) (-14.75--1.75)	0.16 0.54 13.00	13.70	
28 405.00	c2	(1.21-1.05) (1.75-1.21) (14.75-1.75)	0.16 0.54 13.00	13.70	
		A RIPORTARE ml			

	CALCOLO DELLE LUNGHEZZE	Foglio n. 196

BINDER

N. SEZIONE PROG.	FIG.	ELEMENTI DI CALCOLO	LUNGHEZZA ELEMENTARE ml	LUNGHEZZA FIGURA ml	NOTE
		RIPORTO ml			
29	c1	(-1.21--1.05)	0.16		
420.00		(-1.75--1.21)	0.54		
		(-14.87--1.75)	13.12		
				13.82	
29	c2	(1.21-1.05)	0.16		
420.00		(1.75-1.21)	0.54		
		(14.75-1.75)	13.00		
				13.70	
30	c1	(-1.21--1.05)	0.16		
435.00		(-1.75--1.21)	0.54		
		(-16.29--1.75)	14.54		
				15.24	
30	c2	(1.21-1.05)	0.16		
435.00		(1.75-1.21)	0.54		
		(14.74-1.75)	12.99		
				13.69	
31	c1	(-1.21--1.05)	0.16		
450.00		(-1.75--1.21)	0.54		
		(-11.00--1.75)	9.25		
				9.95	
31	c2	(1.21-1.05)	0.16		
450.00		(1.75-1.21)	0.54		
		(14.73-1.75)	12.98		
				13.68	
32	c1	(-1.21--1.05)	0.16		
465.00		(-1.75--1.21)	0.54		
		(-11.00--1.75)	9.25		
				9.95	
32	c2	(1.21-1.05)	0.16		
465.00		(1.75-1.21)	0.54		
		(14.75-1.75)	13.00		
				13.70	
33	c1	(-1.21--1.05)	0.16		
480.00		(-1.75--1.21)	0.54		
		(-11.00--1.75)	9.25		
				9.95	
33	c2	(1.21-1.05)	0.16		
480.00		(1.75-1.21)	0.54		
		(14.80-1.75)	13.05		
				13.75	
34	c1	(-1.21--1.05)	0.16		
495.00		(-1.75--1.21)	0.54		
		(-11.00--1.75)	9.25		
				9.95	
34	c2	(1.21-1.05)	0.16		
495.00		(1.75-1.21)	0.54		
		(14.91-1.75)	13.16		
				13.86	
35	c1	(-1.21--1.05)	0.16		
510.00		(-1.75--1.21)	0.54		
		(-11.00--1.75)	9.25		
				9.95	
35	c2	(1.21-1.05)	0.16		
510.00		(1.75-1.21)	0.54		
		(16.28-1.75)	14.53		
				15.23	
36	c1	(-1.21--1.05)	0.16		
525.00		(-1.75--1.21)	0.54		
		(-11.00--1.75)	9.25		
				9.95	
36	c2	(1.21-1.05)	0.16		
525.00		(1.75-1.21)	0.54		
		(19.44-1.75)	17.69		
				18.39	
37	c1	(-1.21--1.05)	0.16		
540.00		(-1.75--1.21)	0.54		
		(-11.14--1.75)	9.39		
				10.09	
37	c2	(1.21-1.05)	0.16		
540.00		(1.75-1.21)	0.54		
		(11.00-1.75)	9.25		
				9.95	
38	c1	(-1.21--1.05)	0.16		
555.00		(-1.75--1.21)	0.54		
		(-13.77--1.75)	12.02		
				12.72	
38	c2	(1.21-1.05)	0.16		
555.00		(1.75-1.21)	0.54		
		(11.00-1.75)	9.25		
				9.95	
39	c1	(-1.21--1.05)	0.16		
570.00		(-1.75--1.21)	0.54		
		(-14.50--1.75)	12.75		
				13.45	
39	c2	(1.21-1.05)	0.16		
570.00		(1.75-1.21)	0.54		
		(11.00-1.75)	9.25		
				9.95	
40	c1	(-1.21--1.05)	0.16		
585.00		(-1.75--1.21)	0.54		
		(-14.37--1.75)	12.62		
				13.32	
40	c2	(1.21-1.05)	0.16		
585.00		(1.75-1.21)	0.54		
		(11.00-1.75)	9.25		
				9.95	
41	c1	(-1.21--1.05)	0.16		
600.00		(-1.75--1.21)	0.54		
		(-11.75--1.75)	10.00		
				10.70	
41	c2	(1.21-1.05)	0.16		
600.00		(1.75-1.21)	0.54		
		(11.00-1.75)	9.25		
				9.95	
		A RIPORTARE ml			

		CALCOLO DELLE LUNGHEZZE		Foglio n. 197
BINDER				
N. SEZIONE PROG.	FIG.	ELEMENTI DI CALCOLO	LUNGHEZZA ELEMENTARE ml	LUNGHEZZA FIGURA ml	NOTE
		RIPORTO ml			
42 615.00	c1	(-1.21--1.05) (-1.75--1.21) (-11.00--1.75)	0.16 0.54 9.25	9.95	
42 615.00	c2	(1.21-1.05) (1.75-1.21) (11.00-1.75)	0.16 0.54 9.25	9.95	
43 630.00	c1	(-1.21--1.05) (-1.75--1.21) (-11.00--1.75)	0.16 0.54 9.25	9.95	
43 630.00	c2	(1.21-1.05) (1.75-1.21) (11.00-1.75)	0.16 0.54 9.25	9.95	
SP40 641.94	c1	(-1.21--1.05) (-1.75--1.21) (-11.00--1.75)	0.16 0.54 9.25	9.95	
SP40 641.94	c2	(1.21-1.05) (1.75-1.21) (11.00-1.75)	0.16 0.54 9.25	9.95	
44 645.00	c1	(-1.21--1.05) (-1.75--1.21) (-11.00--1.75)	0.16 0.54 9.25	9.95	
44 645.00	c2	(1.21-1.05) (1.75-1.21) (11.00-1.75)	0.16 0.54 9.25	9.95	
45 660.00	c1	(-1.21--1.05) (-1.75--1.21) (-11.00--1.75)	0.16 0.54 9.25	9.95	
45 660.00	c2	(1.21-1.05) (1.75-1.21) (12.00-1.75)	0.16 0.54 10.25	10.95	
46 675.00	c1	(-1.21--1.05) (-1.75--1.21) (-11.00--1.75)	0.16 0.54 9.25	9.95	
46 675.00	c2	(1.21-1.05) (1.75-1.21) (14.50-1.75)	0.16 0.54 12.75	13.45	
47 690.00	c1	(-1.21--1.05) (-1.75--1.21) (-11.00--1.75)	0.16 0.54 9.25	9.95	
47 690.00	c2	(1.21-1.05) (1.75-1.21) (14.50-1.75)	0.16 0.54 12.75	13.45	
48 705.00	c1	(-1.75--1.25) (-11.00--1.75)	0.50 9.25	9.75	
48 705.00	c2	(1.75-1.25) (13.47-1.75)	0.50 11.72	12.22	
49 720.00	c1	(-1.21--1.05) (-1.75--1.21) (-11.00--1.75)	0.16 0.54 9.25	9.95	
49 720.00	c2	(1.21-1.05) (1.75-1.21) (11.00-1.75)	0.16 0.54 9.25	9.95	
50 735.00	c1	(-1.21--1.05) (-1.75--1.21) (-11.00--1.75)	0.16 0.54 9.25	9.95	
50 735.00	c2	(1.21-1.05) (1.75-1.21) (11.00-1.75)	0.16 0.54 9.25	9.95	
51 750.00	c1	(-1.21--1.05) (-1.75--1.21) (-11.00--1.75)	0.16 0.54 9.25	9.95	
51 750.00	c2	(1.21-1.05) (1.75-1.21) (11.00-1.75)	0.16 0.54 9.25	9.95	
52 765.00	c1	(-1.21--1.05) (-1.75--1.21) (-16.26--1.75)	0.16 0.54 14.51	15.21	
52 765.00	c2	(1.21-1.05) (1.75-1.21) (11.00-1.75)	0.16 0.54 9.25	9.95	
53 780.00	c1	(-1.21--1.05) (-1.75--1.21) (-14.88--1.75)	0.16 0.54 13.13	13.83	
53 780.00	c2	(1.21-1.05) (1.75-1.21) (11.00-1.75)	0.16 0.54 9.25	9.95	
54 795.00	c1	(-1.21--1.05) (-1.75--1.21)	0.16 0.54		
		A RIPORTARE ml	0.70		

		CALCOLO DELLE LUNGHEZZE		Foglio n. 198
BINDER				
N. SEZIONE PROG.	FIG.	ELEMENTI DI CALCOLO	LUNGHEZZA ELEMENTARE ml	LUNGHEZZA FIGURA ml	NOTE
		RIPORTO ml	0.70		
		(-14.75--1.75)	13.00		
				13.70	
54	c2	(1.21-1.05)	0.16		
795.00		(1.75-1.21)	0.54		
		(11.00-1.75)	9.25		
				9.95	
55	c1	(-1.21--1.05)	0.16		
810.00		(-1.75--1.21)	0.54		
		(-14.75--1.75)	13.00		
				13.70	
55	c2	(1.21-1.05)	0.16		
810.00		(1.75-1.21)	0.54		
		(11.00-1.75)	9.25		
				9.95	
56	c1	(-1.21--1.05)	0.16		
825.00		(-1.75--1.21)	0.54		
		(-14.75--1.75)	13.00		
				13.70	
56	c2	(1.21-1.05)	0.16		
825.00		(1.75-1.21)	0.54		
		(11.00-1.75)	9.25		
				9.95	
57	c1	(-1.21--1.05)	0.16		
840.00		(-1.75--1.21)	0.54		
		(-14.75--1.75)	13.00		
				13.70	
57	c2	(1.21-1.05)	0.16		
840.00		(1.75-1.21)	0.54		
		(11.00-1.75)	9.25		
				9.95	
58	c1	(-1.21--1.05)	0.16		
855.00		(-1.75--1.21)	0.54		
		(-14.75--1.75)	13.00		
				13.70	
58	c2	(1.21-1.05)	0.16		
855.00		(1.75-1.21)	0.54		
		(11.00-1.75)	9.25		
				9.95	
59	c1	(-1.21--1.05)	0.16		
870.00		(-1.75--1.21)	0.54		
		(-14.75--1.75)	13.00		
				13.70	
59	c2	(1.21-1.05)	0.16		
870.00		(1.75-1.21)	0.54		
		(11.00-1.75)	9.25		
				9.95	
60	c1	(-1.21--1.05)	0.16		
885.00		(-1.75--1.21)	0.54		
		(-14.75--1.75)	13.00		
				13.70	
60	c2	(1.21-1.05)	0.16		
885.00		(1.75-1.21)	0.54		
		(11.00-1.75)	9.25		
				9.95	
61	c1	(-1.21--1.05)	0.16		
900.00		(-1.75--1.21)	0.54		
		(-14.58--1.75)	12.83		
				13.53	
61	c2	(1.21-1.05)	0.16		
900.00		(1.75-1.21)	0.54		
		(11.00-1.75)	9.25		
				9.95	
62	c1	(1.21-1.05)	0.16		
915.00		(1.75-1.21)	0.54		
		(11.00-1.75)	9.25		
		(13.12-11.00)	2.12		
				12.07	
62	c2	(-1.21--1.05)	0.16		
915.00		(-1.75--1.21)	0.54		
		(-13.96--1.75)	12.21		
				12.91	
63	c1	(-1.21--1.05)	0.16		
930.00		(-1.75--1.21)	0.54		
		(-13.01--1.75)	11.26		
				11.96	
63	c2	(1.21-1.05)	0.16		
930.00		(1.75-1.21)	0.54		
		(17.06-1.75)	15.31		
				16.01	
64	c1	(-1.21--1.05)	0.16		
945.00		(-1.75--1.21)	0.54		
		(-12.08--1.75)	10.33		
				11.03	
64	c2	(1.21-1.05)	0.16		
945.00		(1.75-1.21)	0.54		
		(15.40-1.75)	13.65		
				14.35	
65	c1	(-1.21--1.05)	0.16		
960.00		(-1.75--1.21)	0.54		
		(-11.30--1.75)	9.55		
				10.25	
65	c2	(1.21-1.05)	0.16		
960.00		(1.75-1.21)	0.54		
		(14.76-1.75)	13.01		
				13.71	
66	c1	(-1.21--1.05)	0.16		
975.00		(-1.75--1.21)	0.54		
		(-11.00--1.75)	9.25		
				9.95	
66	c2	(1.21-1.05)	0.16		
975.00		(1.75-1.21)	0.54		
		(14.75-1.75)	13.00		
				13.70	
67	c1	(-1.21--1.05)	0.16		
		A RIPORTARE ml	0.16		

	CALCOLO DELLE LUNGHEZZE	Foglio n. 199

BINDER

N. SEZIONE PROG.	FIG.	ELEMENTI DI CALCOLO	LUNGHEZZA ELEMENTARE ml	LUNGHEZZA FIGURA ml	NOTE
		RIPORTO ml	0.16		
990.00		(-1.75--1.21)	0.54		
		(-11.00--1.75)	9.25		
				9.95	
67	c2	(1.21-1.05)	0.16		
990.00		(1.75-1.21)	0.54		
		(14.75-1.75)	13.00		
				13.70	
68	c1	(-1.21--1.05)	0.16		
1005.00		(-1.75--1.21)	0.54		
		(-11.00--1.75)	9.25		
				9.95	
68	c2	(1.21-1.05)	0.16		
1005.00		(1.75-1.21)	0.54		
		(14.75-1.75)	13.00		
				13.70	
69	c1	(-1.21--1.05)	0.16		
1020.00		(-1.75--1.21)	0.54		
		(-11.00--1.75)	9.25		
				9.95	
69	c2	(1.21-1.05)	0.16		
1020.00		(1.75-1.21)	0.54		
		(14.75-1.75)	13.00		
				13.70	
70	c1	(-1.21--1.05)	0.16		
1035.00		(-1.75--1.21)	0.54		
		(-11.00--1.75)	9.25		
				9.95	
70	c2	(1.21-1.05)	0.16		
1035.00		(1.75-1.21)	0.54		
		(14.75-1.75)	13.00		
				13.70	
71	c1	(-1.21--1.05)	0.16		
1050.00		(-1.75--1.21)	0.54		
		(-11.00--1.75)	9.25		
				9.95	
71	c2	(1.21-1.05)	0.16		
1050.00		(1.75-1.21)	0.54		
		(14.75-1.75)	13.00		
				13.70	
72	c1	(-1.21--1.05)	0.16		
1065.00		(-1.75--1.21)	0.54		
		(-11.00--1.75)	9.25		
				9.95	
72	c2	(1.21-1.05)	0.16		
1065.00		(1.75-1.21)	0.54		
		(14.75-1.75)	13.00		
				13.70	
73	c1	(-1.21--1.05)	0.16		
1080.00		(-1.75--1.21)	0.54		
		(-11.00--1.75)	9.25		
				9.95	
73	c2	(1.21-1.05)	0.16		
1080.00		(1.75-1.21)	0.54		
		(14.75-1.75)	13.00		
				13.70	
74	c1	(-1.21--1.05)	0.16		
1095.00		(-1.75--1.21)	0.54		
		(-11.00--1.75)	9.25		
				9.95	
74	c2	(1.21-1.05)	0.16		
1095.00		(1.75-1.21)	0.54		
		(14.75-1.75)	13.00		
				13.70	
75	c1	(-1.21--1.05)	0.16		
1110.00		(-1.75--1.21)	0.54		
		(-11.00--1.75)	9.25		
				9.95	
75	c2	(1.21-1.05)	0.16		
1110.00		(1.75-1.21)	0.54		
		(14.75-1.75)	13.00		
				13.70	
76	c1	(-1.21--1.05)	0.16		
1125.00		(-1.75--1.21)	0.54		
		(-11.00--1.75)	9.25		
				9.95	
76	c2	(1.21-1.05)	0.16		
1125.00		(1.75-1.21)	0.54		
		(14.74-1.75)	12.99		
				13.69	

Il Direttore dei Lavori	L'Impresa	

	CALCOLO DELLE LUNGHEZZE		Foglio n. 200

BASE

N. SEZIONE PROG.	FIG.	ELEMENTI DI CALCOLO	LUNGHEZZA ELEMENTARE ml	LUNGHEZZA FIGURA ml	NOTE
1	d1	(1.98-1.20)	0.78		
0.00		(9.64-1.98)	7.66		
				8.44	
1	d2	(-1.89--1.10)	0.79		
0.00		(-9.34--1.89)	7.45		
				8.24	
2	d1	(-1.94--1.15)	0.79		
15.00		(-9.36--1.94)	7.42		
				8.21	
2	d2	(1.94-1.15)	0.79		
15.00		(9.56-1.94)	7.62		
				8.41	
3	d1	(-1.94--1.15)	0.79		
30.00		(-9.46--1.94)	7.52		
				8.31	
3	d2	(1.94-1.15)	0.79		
30.00		(9.51-1.94)	7.57		
				8.36	
4	d1	(-1.94--1.15)	0.79		
45.00		(-9.66--1.94)	7.72		
				8.51	
4	d2	(1.94-1.15)	0.79		
45.00		(9.56-1.94)	7.62		
				8.41	
5	d1	(1.94-1.15)	0.79		
60.00		(9.72-1.94)	7.78		
				8.57	
5	d2	(-1.94--1.15)	0.79		
60.00		(-9.96--1.94)	8.02		
				8.81	
6	d1	(-1.94--1.15)	0.79		
75.00		(-10.35--1.94)	8.41		
				9.20	
6	d2	(1.94-1.15)	0.79		
75.00		(9.99-1.94)	8.05		
				8.84	
7	d1	(-1.94--1.15)	0.79		
90.00		(-10.70--1.94)	8.76		
				9.55	
7	d2	(1.94-1.15)	0.79		
90.00		(10.32-1.94)	8.38		
				9.17	
8	d1	(-1.75--1.15)	0.60		
105.00		(-10.92--1.75)	9.17		
				9.77	
8	d2	(1.75-1.15)	0.60		
105.00		(10.60-1.75)	8.85		
				9.45	
9	d1	(1.75-1.15)	0.60		
120.00		(10.80-1.75)	9.05		
				9.65	
9	d2	(-1.75--1.15)	0.60		
120.00		(-11.00--1.75)	9.25		
				9.85	
10	d1	(1.75-1.15)	0.60		
135.00		(10.94-1.75)	9.19		
				9.79	
10	d2	(-1.75--1.15)	0.60		
135.00		(-10.99--1.75)	9.24		
				9.84	
11	d1	(1.75-1.15)	0.60		
150.00		(11.00-1.75)	9.25		
				9.85	
11	d2	(-1.75--1.15)	0.60		
150.00		(-11.30--1.75)	9.55		
				10.15	
12	d1	(1.75-1.15)	0.60		
165.00		(11.00-1.75)	9.25		
				9.85	
12	d2	(-1.75--1.15)	0.60		
165.00		(-12.24--1.75)	10.49		
				11.09	
13	d1	(1.75-1.15)	0.60		
180.00		(11.00-1.75)	9.25		
				9.85	
13	d2	(-1.75--1.15)	0.60		
180.00		(-13.37--1.75)	11.62		
				12.22	
14	d1	(1.75-1.15)	0.60		
195.00		(11.00-1.75)	9.25		
				9.85	
14	d2	(-1.75--1.15)	0.60		
195.00		(-14.37--1.75)	12.62		
				13.22	
15	d1	(1.75-1.15)	0.60		
210.00		(11.00-1.75)	9.25		
				9.85	
15	d2	(-1.75--1.15)	0.60		
210.00		(-14.75--1.75)	13.00		
				13.60	
16	d1	(1.75-1.15)	0.60		
225.00		(11.00-1.75)	9.25		
				9.85	
16	d2	(-1.75--1.15)	0.60		
225.00		(-14.75--1.75)	13.00		
				13.60	
17	d1	(1.75-1.15)	0.60		
240.00		(11.00-1.75)	9.25		
				9.85	
17	d2	(-1.75--1.15)	0.60		
240.00		(-14.75--1.75)	13.00		
				13.60	
18	d1	(1.75-1.15)	0.60		
255.00		(10.99-1.75)	9.24		
				9.84	
18	d2	(-1.75--1.15)	0.60		
		A RIPORTARE ml	0.60		

		CALCOLO DELLE LUNGHEZZE		Foglio n. 201
BASE				
N. SEZIONE PROG.	FIG.	ELEMENTI DI CALCOLO	LUNGHEZZA ELEMENTARE ml	LUNGHEZZA FIGURA ml	NOTE
		RIPORTO ml	0.60		
255.00		(-14.75--1.75)	13.00		
				13.60	
19	d1	(1.75-1.15)	0.60		
270.00		(11.21-1.75)	9.46		
				10.06	
19	d2	(-1.75--1.15)	0.60		
270.00		(-14.75--1.75)	13.00		
				13.60	
20	d1	(1.75-1.15)	0.60		
285.00		(11.93-1.75)	10.18		
				10.78	
20	d2	(-1.75--1.15)	0.60		
285.00		(-14.75--1.75)	13.00		
				13.60	
21	d1	(1.75-1.15)	0.60		
300.00		(12.86-1.75)	11.11		
				11.71	
21	d2	(-1.75--1.15)	0.60		
300.00		(-14.75--1.75)	13.00		
				13.60	
22	d1	(1.75-1.15)	0.60		
315.00		(13.82-1.75)	12.07		
				12.67	
22	d2	(-1.75--1.15)	0.60		
315.00		(-14.75--1.75)	13.00		
				13.60	
23	d1	(1.75-1.15)	0.60		
330.00		(14.51-1.75)	12.76		
				13.36	
23	d2	(-1.75--1.15)	0.60		
330.00		(-14.75--1.75)	13.00		
				13.60	
24	d2	(-1.75--1.15)	0.60		
345.00		(-14.75--1.75)	13.00		
				13.60	
24	d1	(1.75-1.15)	0.60		
345.00		(14.75-1.75)	13.00		
				13.60	
25	d2	(-1.75--1.15)	0.60		
360.00		(-14.75--1.75)	13.00		
				13.60	
25	d1	(1.75-1.15)	0.60		
360.00		(14.75-1.75)	13.00		
				13.60	
26	d2	(-1.75--1.15)	0.60		
375.00		(-14.75--1.75)	13.00		
				13.60	
26	d1	(1.75-1.15)	0.60		
375.00		(14.75-1.75)	13.00		
				13.60	
27	d2	(-1.75--1.15)	0.60		
390.00		(-14.75--1.75)	13.00		
				13.60	
27	d1	(1.75-1.15)	0.60		
390.00		(14.75-1.75)	13.00		
				13.60	
28	d2	(-1.75--1.15)	0.60		
405.00		(-14.75--1.75)	13.00		
				13.60	
28	d1	(1.75-1.15)	0.60		
405.00		(14.75-1.75)	13.00		
				13.60	
29	d2	(-1.75--1.15)	0.60		
420.00		(-14.87--1.75)	13.12		
				13.72	
29	d1	(1.75-1.15)	0.60		
420.00		(14.75-1.75)	13.00		
				13.60	
30	d2	(-1.75--1.15)	0.60		
435.00		(-16.29--1.75)	14.54		
				15.14	
30	d1	(1.75-1.15)	0.60		
435.00		(14.74-1.75)	12.99		
				13.59	
31	d2	(-1.75--1.15)	0.60		
450.00		(-11.00--1.75)	9.25		
				9.85	
31	d1	(1.75-1.15)	0.60		
450.00		(14.73-1.75)	12.98		
				13.58	
32	d2	(-1.75--1.15)	0.60		
465.00		(-11.00--1.75)	9.25		
				9.85	
32	d1	(1.75-1.15)	0.60		
465.00		(14.75-1.75)	13.00		
				13.60	
33	d2	(-1.75--1.15)	0.60		
480.00		(-11.00--1.75)	9.25		
				9.85	
33	d1	(1.75-1.15)	0.60		
480.00		(14.80-1.75)	13.05		
				13.65	
34	d2	(-1.75--1.15)	0.60		
495.00		(-11.00--1.75)	9.25		
				9.85	
34	d1	(1.75-1.15)	0.60		
495.00		(14.91-1.75)	13.16		
				13.76	
35	d2	(-1.75--1.15)	0.60		
510.00		(-11.00--1.75)	9.25		
				9.85	
35	d1	(1.75-1.15)	0.60		
510.00		(16.28-1.75)	14.53		
				15.13	
		A RIPORTARE ml			

		CALCOLO DELLE LUNGHEZZE		Foglio n. 202
BASE				
N. SEZIONE PROG.	FIG.	ELEMENTI DI CALCOLO	LUNGHEZZA ELEMENTARE ml	LUNGHEZZA FIGURA ml	NOTE
		RIPORTO ml			
36 525.00	d1	(1.75-1.15) (19.44-1.75)	0.60 17.69	18.29	
36 525.00	d2	(-1.75--1.15) (-11.00--1.75)	0.60 9.25	9.85	
37 540.00	d2	(-1.75--1.15) (-11.14--1.75)	0.60 9.39	9.99	
37 540.00	d1	(1.75-1.15) (11.00-1.75)	0.60 9.25	9.85	
38 555.00	d2	(-1.75--1.15) (-13.77--1.75)	0.60 12.02	12.62	
38 555.00	d1	(1.75-1.15) (11.00-1.75)	0.60 9.25	9.85	
39 570.00	d2	(-1.75--1.15) (-14.50--1.75)	0.60 12.75	13.35	
39 570.00	d1	(1.75-1.15) (11.00-1.75)	0.60 9.25	9.85	
40 585.00	d2	(-1.75--1.15) (-14.37--1.75)	0.60 12.62	13.22	
40 585.00	d1	(1.75-1.15) (11.00-1.75)	0.60 9.25	9.85	
41 600.00	d1	(1.75-1.15) (11.00-1.75)	0.60 9.25	9.85	
41 600.00	d2	(-1.75--1.15) (-11.75--1.75)	0.60 10.00	10.60	
42 615.00	d2	(-1.75--1.15) (-11.00--1.75)	0.60 9.25	9.85	
42 615.00	d1	(1.75-1.15) (11.00-1.75)	0.60 9.25	9.85	
43 630.00	d2	(-1.75--1.15) (-11.00--1.75)	0.60 9.25	9.85	
43 630.00	d1	(1.75-1.15) (11.00-1.75)	0.60 9.25	9.85	
SP40 641.94	d2	(-1.75--1.15) (-11.00--1.75)	0.60 9.25	9.85	
SP40 641.94	d1	(1.75-1.15) (11.00-1.75)	0.60 9.25	9.85	
44 645.00	d2	(-1.75--1.15) (-11.00--1.75)	0.60 9.25	9.85	
44 645.00	d1	(1.75-1.15) (11.00-1.75)	0.60 9.25	9.85	
45 660.00	d2	(-1.75--1.15) (-11.00--1.75)	0.60 9.25	9.85	
45 660.00	d1	(1.75-1.15) (12.00-1.75)	0.60 10.25	10.85	
46 675.00	d2	(-1.75--1.15) (-11.00--1.75)	0.60 9.25	9.85	
46 675.00	d1	(1.75-1.15) (14.50-1.75)	0.60 12.75	13.35	
47 690.00	d2	(-1.75--1.15) (-11.00--1.75)	0.60 9.25	9.85	
47 690.00	d1	(1.75-1.15) (14.50-1.75)	0.60 12.75	13.35	
48 705.00	d1	(1.75-1.25) (13.47-1.75)	0.50 11.72	12.22	
48 705.00	d2	(-1.75--1.25) (-11.00--1.75)	0.50 9.25	9.75	
49 720.00	d1	(1.75-1.15) (11.00-1.75)	0.60 9.25	9.85	
49 720.00	d2	(-1.75--1.15) (-11.00--1.75)	0.60 9.25	9.85	
50 735.00	d2	(-1.75--1.15) (-11.00--1.75)	0.60 9.25	9.85	
50 735.00	d1	(1.75-1.15) (11.00-1.75)	0.60 9.25	9.85	
51 750.00	d2	(-1.75--1.15) (-11.00--1.75)	0.60 9.25	9.85	
51 750.00	d1	(1.75-1.15) (11.00-1.75)	0.60 9.25	9.85	
52 765.00	d2	(-1.75--1.15) (-16.26--1.75)	0.60 14.51		
		A RIPORTARE ml	15.11		

	CALCOLO DELLE LUNGHEZZE	Foglio n. 203

BASE

N. SEZIONE PROG.	FIG.	ELEMENTI DI CALCOLO	LUNGHEZZA ELEMENTARE ml	LUNGHEZZA FIGURA ml	NOTE
		RIPORTO ml	15.11		
				15.11	
52	d1	(1.75-1.15)	0.60		
765.00		(11.00-1.75)	9.25		
				9.85	
53	d2	(-1.75--1.15)	0.60		
780.00		(-14.88--1.75)	13.13		
				13.73	
53	d1	(1.75-1.15)	0.60		
780.00		(11.00-1.75)	9.25		
				9.85	
54	d2	(-1.75--1.15)	0.60		
795.00		(-14.75--1.75)	13.00		
				13.60	
54	d1	(1.75-1.15)	0.60		
795.00		(11.00-1.75)	9.25		
				9.85	
55	d2	(-1.75--1.15)	0.60		
810.00		(-14.75--1.75)	13.00		
				13.60	
55	d1	(1.75-1.15)	0.60		
810.00		(11.00-1.75)	9.25		
				9.85	
56	d2	(-1.75--1.15)	0.60		
825.00		(-14.75--1.75)	13.00		
				13.60	
56	d1	(1.75-1.15)	0.60		
825.00		(11.00-1.75)	9.25		
				9.85	
57	d2	(-1.75--1.15)	0.60		
840.00		(-14.75--1.75)	13.00		
				13.60	
57	d1	(1.75-1.15)	0.60		
840.00		(11.00-1.75)	9.25		
				9.85	
58	d1	(1.75-1.15)	0.60		
855.00		(11.00-1.75)	9.25		
				9.85	
58	d2	(-1.75--1.15)	0.60		
855.00		(-14.75--1.75)	13.00		
				13.60	
59	d2	(-1.75--1.15)	0.60		
870.00		(-14.75--1.75)	13.00		
				13.60	
59	d1	(1.75-1.15)	0.60		
870.00		(11.00-1.75)	9.25		
				9.85	
60	d2	(-1.75--1.15)	0.60		
885.00		(-14.75--1.75)	13.00		
				13.60	
60	d1	(1.75-1.15)	0.60		
885.00		(11.00-1.75)	9.25		
				9.85	
61	d2	(-1.75--1.15)	0.60		
900.00		(-14.58--1.75)	12.83		
				13.43	
61	d1	(1.75-1.15)	0.60		
900.00		(11.00-1.75)	9.25		
				9.85	
62	d2	(-1.75--1.15)	0.60		
915.00		(-13.96--1.75)	12.21		
				12.81	
62	d1	(1.75-1.15)	0.60		
915.00		(11.00-1.75)	9.25		
		(13.12-11.00)	2.12		
				11.97	
63	d2	(-1.75--1.15)	0.60		
930.00		(-13.01--1.75)	11.26		
				11.86	
63	d1	(1.75-1.15)	0.60		
930.00		(17.06-1.75)	15.31		
				15.91	
64	d2	(-1.75--1.15)	0.60		
945.00		(-12.08--1.75)	10.33		
				10.93	
64	d1	(1.75-1.15)	0.60		
945.00		(15.40-1.75)	13.65		
				14.25	
65	d2	(-1.75--1.15)	0.60		
960.00		(-11.30--1.75)	9.55		
				10.15	
65	d1	(1.75-1.15)	0.60		
960.00		(14.76-1.75)	13.01		
				13.61	
66	d2	(-1.75--1.15)	0.60		
975.00		(-11.00--1.75)	9.25		
				9.85	
66	d1	(1.75-1.15)	0.60		
975.00		(14.75-1.75)	13.00		
				13.60	
67	d2	(-1.75--1.15)	0.60		
990.00		(-11.00--1.75)	9.25		
				9.85	
67	d1	(1.75-1.15)	0.60		
990.00		(14.75-1.75)	13.00		
				13.60	
68	d2	(-1.75--1.15)	0.60		
1005.00		(-11.00--1.75)	9.25		
				9.85	
68	d1	(1.75-1.15)	0.60		
1005.00		(14.75-1.75)	13.00		
				13.60	
69	d2	(-1.75--1.15)	0.60		
1020.00		(-11.00--1.75)	9.25		
				9.85	
		A RIPORTARE ml			

	CALCOLO DELLE LUNGHEZZE		Foglio n. 204

BASE

N. SEZIONE PROG.	FIG.	ELEMENTI DI CALCOLO	LUNGHEZZA ELEMENTARE ml	LUNGHEZZA FIGURA ml	NOTE
		RIPORTO ml			
69 1020.00	d1	(1.75-1.15) (14.75-1.75)	0.60 13.00		
				13.60	
70 1035.00	d2	(-1.75--1.15) (-11.00--1.75)	0.60 9.25		
				9.85	
70 1035.00	d1	(1.75-1.15) (14.75-1.75)	0.60 13.00		
				13.60	
71 1050.00	d2	(-1.75--1.15) (-11.00--1.75)	0.60 9.25		
				9.85	
71 1050.00	d1	(1.75-1.15) (14.75-1.75)	0.60 13.00		
				13.60	
72 1065.00	d2	(-1.75--1.15) (-11.00--1.75)	0.60 9.25		
				9.85	
72 1065.00	d1	(1.75-1.15) (14.75-1.75)	0.60 13.00		
				13.60	
73 1080.00	d2	(-1.75--1.15) (-11.00--1.75)	0.60 9.25		
				9.85	
73 1080.00	d1	(1.75-1.15) (14.75-1.75)	0.60 13.00		
				13.60	
74 1095.00	d2	(-1.75--1.15) (-11.00--1.75)	0.60 9.25		
				9.85	
74 1095.00	d1	(1.75-1.15) (14.75-1.75)	0.60 13.00		
				13.60	
75 1110.00	d2	(-1.75--1.15) (-11.00--1.75)	0.60 9.25		
				9.85	
75 1110.00	d1	(1.75-1.15) (14.75-1.75)	0.60 13.00		
				13.60	
76 1125.00	d2	(-1.75--1.15) (-11.00--1.75)	0.60 9.25		
				9.85	
76 1125.00	d1	(1.75-1.15) (14.74-1.75)	0.60 12.99		
				13.59	

Il Direttore dei Lavori	L'Impresa	

	CALCOLO DELLE LUNGHEZZE		Foglio n. 205

FONDAZIONE

N. SEZIONE PROG.	FIG.	ELEMENTI DI CALCOLO	LUNGHEZZA ELEMENTARE ml	LUNGHEZZA FIGURA ml	NOTE
1	e1	(1.98-1.10)	0.88		
0.00		(9.49-1.98)	7.51		
				8.39	
1	e2	(-1.89--1.01)	0.88		
0.00		(-9.19--1.89)	7.30		
				8.18	
2	e1	(-1.94--1.06)	0.88		
15.00		(-9.21--1.94)	7.27		
				8.15	
2	e2	(1.94-1.06)	0.88		
15.00		(9.41-1.94)	7.47		
				8.35	
3	e1	(1.94-1.06)	0.88		
30.00		(9.36-1.94)	7.42		
				8.30	
3	e2	(-1.94--1.06)	0.88		
30.00		(-9.31--1.94)	7.37		
				8.25	
4	e1	(1.94-1.06)	0.88		
45.00		(9.41-1.94)	7.47		
				8.35	
4	e2	(-1.94--1.06)	0.88		
45.00		(-9.51--1.94)	7.57		
				8.45	
5	e1	(1.94-1.06)	0.88		
60.00		(9.57-1.94)	7.63		
				8.51	
5	e2	(-1.94--1.06)	0.88		
60.00		(-9.81--1.94)	7.87		
				8.75	
6	e1	(1.93-1.05)	0.88		
75.00		(9.84-1.93)	7.91		
				8.79	
6	e2	(-1.94--1.06)	0.88		
75.00		(-10.20--1.94)	8.26		
				9.14	
7	e1	(1.93-1.05)	0.88		
90.00		(10.17-1.93)	8.24		
				9.12	
7	e2	(-1.94--1.06)	0.88		
90.00		(-10.55--1.94)	8.61		
				9.49	
8	e1	(-1.05--0.68)	0.37		
105.00		(-1.75--1.05)	0.70		
		(-10.92--1.75)	9.17		
				10.24	
8	e2	(1.05-0.68)	0.37		
105.00		(1.75-1.05)	0.70		
		(10.60-1.75)	8.85		
				9.92	
9	e1	(1.05-0.68)	0.37		
120.00		(1.75-1.05)	0.70		
		(10.80-1.75)	9.05		
				10.12	
9	e2	(-1.05--0.68)	0.37		
120.00		(-1.75--1.05)	0.70		
		(-11.00--1.75)	9.25		
				10.32	
10	e1	(1.05-0.68)	0.37		
135.00		(1.75-1.05)	0.70		
		(10.94-1.75)	9.19		
				10.26	
10	e2	(-1.05--0.68)	0.37		
135.00		(-1.75--1.05)	0.70		
		(-10.99--1.75)	9.24		
				10.31	
11	e1	(1.05-0.68)	0.37		
150.00		(1.75-1.05)	0.70		
		(11.00-1.75)	9.25		
				10.32	
11	e2	(-1.05--0.68)	0.37		
150.00		(-1.75--1.05)	0.70		
		(-11.30--1.75)	9.55		
				10.62	
12	e1	(1.05-0.68)	0.37		
165.00		(1.75-1.05)	0.70		
		(11.00-1.75)	9.25		
				10.32	
12	e2	(-1.05--0.68)	0.37		
165.00		(-1.75--1.05)	0.70		
		(-12.24--1.75)	10.49		
				11.56	
13	e1	(1.05-0.68)	0.37		
180.00		(1.75-1.05)	0.70		
		(11.00-1.75)	9.25		
				10.32	
13	e2	(-1.05--0.68)	0.37		
180.00		(-1.75--1.05)	0.70		
		(-13.37--1.75)	11.62		
				12.69	
14	e1	(1.05-0.68)	0.37		
195.00		(1.75-1.05)	0.70		
		(11.00-1.75)	9.25		
				10.32	
14	e2	(-1.05--0.68)	0.37		
195.00		(-1.75--1.05)	0.70		
		(-14.37--1.75)	12.62		
				13.69	
15	e1	(1.05-0.68)	0.37		
210.00		(1.75-1.05)	0.70		
		(11.00-1.75)	9.25		
				10.32	
15	e2	(-1.05--0.68)	0.37		
210.00		(-1.75--1.05)	0.70		
		(-14.75--1.75)	13.00		
				14.07	
		A RIPORTARE ml			

		CALCOLO DELLE LUNGHEZZE		Foglio n. 206
FONDAZIONE				
N. SEZIONE PROG.	FIG.	ELEMENTI DI CALCOLO	LUNGHEZZA ELEMENTARE ml	LUNGHEZZA FIGURA ml	NOTE
		RIPORTO ml			
16 225.00	e1	(1.05-0.68) (1.75-1.05) (11.00-1.75)	0.37 0.70 9.25	10.32	
16 225.00	e2	(-1.05--0.68) (-1.75--1.05) (-14.75--1.75)	0.37 0.70 13.00	14.07	
17 240.00	e1	(1.05-0.68) (1.75-1.05) (11.00-1.75)	0.37 0.70 9.25	10.32	
17 240.00	e2	(-1.05--0.68) (-1.75--1.05) (-14.75--1.75)	0.37 0.70 13.00	14.07	
18 255.00	e1	(1.05-0.68) (1.75-1.05) (10.99-1.75)	0.37 0.70 9.24	10.31	
18 255.00	e2	(-1.05--0.68) (-1.75--1.05) (-14.75--1.75)	0.37 0.70 13.00	14.07	
19 270.00	e1	(1.05-0.68) (1.75-1.05) (11.21-1.75)	0.37 0.70 9.46	10.53	
19 270.00	e2	(-1.05--0.68) (-1.75--1.05) (-14.75--1.75)	0.37 0.70 13.00	14.07	
20 285.00	e1	(1.05-0.68) (1.75-1.05) (11.93-1.75)	0.37 0.70 10.18	11.25	
20 285.00	e2	(-1.05--0.68) (-1.75--1.05) (-14.75--1.75)	0.37 0.70 13.00	14.07	
21 300.00	e1	(1.05-0.68) (1.75-1.05) (12.86-1.75)	0.37 0.70 11.11	12.18	
21 300.00	e2	(-1.05--0.68) (-1.75--1.05) (-14.75--1.75)	0.37 0.70 13.00	14.07	
22 315.00	e1	(1.05-0.68) (1.75-1.05) (13.82-1.75)	0.37 0.70 12.07	13.14	
22 315.00	e2	(-1.05--0.68) (-1.75--1.05) (-14.75--1.75)	0.37 0.70 13.00	14.07	
23 330.00	e1	(1.05-0.68) (1.75-1.05) (14.51-1.75)	0.37 0.70 12.76	13.83	
23 330.00	e2	(-1.05--0.68) (-1.75--1.05) (-14.75--1.75)	0.37 0.70 13.00	14.07	
24 345.00	e2	(-1.05--0.68) (-1.75--1.05) (-14.75--1.75)	0.37 0.70 13.00	14.07	
24 345.00	e1	(1.05-0.68) (1.75-1.05) (14.75-1.75)	0.37 0.70 13.00	14.07	
25 360.00	e2	(-1.05--0.68) (-1.75--1.05) (-14.75--1.75)	0.37 0.70 13.00	14.07	
25 360.00	e1	(1.05-0.68) (1.75-1.05) (14.75-1.75)	0.37 0.70 13.00	14.07	
26 375.00	e2	(-1.05--0.68) (-1.75--1.05) (-14.75--1.75)	0.37 0.70 13.00	14.07	
26 375.00	e1	(1.05-0.68) (1.75-1.05) (14.75-1.75)	0.37 0.70 13.00	14.07	
27 390.00	e2	(-1.05--0.68) (-1.75--1.05) (-14.75--1.75)	0.37 0.70 13.00	14.07	
27 390.00	e1	(1.05-0.68) (1.75-1.05) (14.75-1.75)	0.37 0.70 13.00	14.07	
28 405.00	e2	(-1.05--0.68) (-1.75--1.05) (-14.75--1.75)	0.37 0.70 13.00	14.07	
28 405.00	e1	(1.05-0.68) (1.75-1.05) (14.75-1.75)	0.37 0.70 13.00	14.07	
		A RIPORTARE ml			

		CALCOLO DELLE LUNGHEZZE		Foglio n. 207
FONDAZIONE				
N. SEZIONE PROG.	FIG.	ELEMENTI DI CALCOLO	LUNGHEZZA ELEMENTARE ml	LUNGHEZZA FIGURA ml	NOTE
		RIPORTO ml			
29 420.00	e2	(-1.05--0.68) (-1.75--1.05) (-14.87--1.75)	0.37 0.70 13.12	14.19	
29 420.00	e1	(1.05-0.68) (1.75-1.05) (14.75-1.75)	0.37 0.70 13.00	14.07	
30 435.00	e2	(-1.05--0.68) (-1.75--1.05) (-16.29--1.75)	0.37 0.70 14.54	15.61	
30 435.00	e1	(1.05-0.68) (1.75-1.05) (14.74-1.75)	0.37 0.70 12.99	14.06	
31 450.00	e2	(-1.05--0.68) (-1.75--1.05) (-11.00--1.75)	0.37 0.70 9.25	10.32	
31 450.00	e1	(1.05-0.68) (1.75-1.05) (14.73-1.75)	0.37 0.70 12.98	14.05	
32 465.00	e2	(-1.05--0.68) (-1.75--1.05) (-11.00--1.75)	0.37 0.70 9.25	10.32	
32 465.00	e1	(1.05-0.68) (1.75-1.05) (14.75-1.75)	0.37 0.70 13.00	14.07	
33 480.00	e2	(-1.05--0.68) (-1.75--1.05) (-11.00--1.75)	0.37 0.70 9.25	10.32	
33 480.00	e1	(1.05-0.68) (1.75-1.05) (14.80-1.75)	0.37 0.70 13.05	14.12	
34 495.00	e2	(-1.05--0.68) (-1.75--1.05) (-11.00--1.75)	0.37 0.70 9.25	10.32	
34 495.00	e1	(1.05-0.68) (1.75-1.05) (14.91-1.75)	0.37 0.70 13.16	14.23	
35 510.00	e2	(-1.05--0.68) (-1.75--1.05) (-11.00--1.75)	0.37 0.70 9.25	10.32	
35 510.00	e1	(1.05-0.68) (1.75-1.05) (16.28-1.75)	0.37 0.70 14.53	15.60	
36 525.00	e1	(1.05-0.68) (1.75-1.05) (19.44-1.75)	0.37 0.70 17.69	18.76	
36 525.00	e2	(-1.05--0.68) (-1.75--1.05) (-11.00--1.75)	0.37 0.70 9.25	10.32	
37 540.00	e2	(-1.05--0.68) (-1.75--1.05) (-11.14--1.75)	0.37 0.70 9.39	10.46	
37 540.00	e1	(1.05-0.68) (1.75-1.05) (11.00-1.75)	0.37 0.70 9.25	10.32	
38 555.00	e2	(-1.05--0.68) (-1.75--1.05) (-13.77--1.75)	0.37 0.70 12.02	13.09	
38 555.00	e1	(1.05-0.68) (1.75-1.05) (11.00-1.75)	0.37 0.70 9.25	10.32	
39 570.00	e2	(-1.05--0.68) (-1.75--1.05) (-14.50--1.75)	0.37 0.70 12.75	13.82	
39 570.00	e1	(1.05-0.68) (1.75-1.05) (11.00-1.75)	0.37 0.70 9.25	10.32	
40 585.00	e2	(-1.05--0.68) (-1.75--1.05) (-14.37--1.75)	0.37 0.70 12.62	13.69	
40 585.00	e1	(1.05-0.68) (1.75-1.05) (11.00-1.75)	0.37 0.70 9.25	10.32	
41 600.00	e1	(1.05-0.68) (1.75-1.05) (11.00-1.75)	0.37 0.70 9.25	10.32	
41 600.00	e2	(-1.05--0.68) (-1.75--1.05) (-11.75--1.75)	0.37 0.70 10.00	11.07	
		A RIPORTARE ml			

		CALCOLO DELLE LUNGHEZZE		Foglio n. 208
FONDAZIONE				
N. SEZIONE PROG.	FIG.	ELEMENTI DI CALCOLO	LUNGHEZZA ELEMENTARE ml	LUNGHEZZA FIGURA ml	NOTE
		RIPORTO ml			
42	e2	(-1.05--0.68)	0.37		
615.00		(-1.75--1.05)	0.70		
		(-11.00--1.75)	9.25		
				10.32	
42	e1	(1.05-0.68)	0.37		
615.00		(1.75-1.05)	0.70		
		(11.00-1.75)	9.25		
				10.32	
43	e2	(-1.05--0.68)	0.37		
630.00		(-1.75--1.05)	0.70		
		(-11.00--1.75)	9.25		
				10.32	
43	e1	(1.05-0.68)	0.37		
630.00		(1.75-1.05)	0.70		
		(11.00-1.75)	9.25		
				10.32	
SP40	e2	(-1.05--0.68)	0.37		
641.94		(-1.75--1.05)	0.70		
		(-11.00--1.75)	9.25		
				10.32	
SP40	e1	(1.05-0.68)	0.37		
641.94		(1.75-1.05)	0.70		
		(11.00-1.75)	9.25		
				10.32	
44	e2	(-1.05--0.68)	0.37		
645.00		(-1.75--1.05)	0.70		
		(-11.00--1.75)	9.25		
				10.32	
44	e1	(1.05-0.68)	0.37		
645.00		(1.75-1.05)	0.70		
		(11.00-1.75)	9.25		
				10.32	
45	e2	(-1.05--0.68)	0.37		
660.00		(-1.75--1.05)	0.70		
		(-11.00--1.75)	9.25		
				10.32	
45	e1	(1.05-0.68)	0.37		
660.00		(1.75-1.05)	0.70		
		(12.00-1.75)	10.25		
				11.32	
46	e2	(-1.05--0.68)	0.37		
675.00		(-1.75--1.05)	0.70		
		(-11.00--1.75)	9.25		
				10.32	
46	e1	(1.05-0.68)	0.37		
675.00		(1.75-1.05)	0.70		
		(14.50-1.75)	12.75		
				13.82	
47	e2	(-1.05--0.68)	0.37		
690.00		(-1.75--1.05)	0.70		
		(-10.85--1.75)	9.10		
				10.17	
47	e1	(1.05-0.68)	0.37		
690.00		(1.75-1.05)	0.70		
		(14.50-1.75)	12.75		
				13.82	
48	e1	(1.75-1.25)	0.50		
705.00		(13.47-1.75)	11.72		
				12.22	
48	e2	(-1.75--1.25)	0.50		
705.00		(-11.00--1.75)	9.25		
				9.75	
49	e1	(1.05-0.68)	0.37		
720.00		(1.75-1.05)	0.70		
		(11.00-1.75)	9.25		
				10.32	
49	e2	(-1.05--0.68)	0.37		
720.00		(-1.75--1.05)	0.70		
		(-11.00--1.75)	9.25		
				10.32	
50	e2	(-1.05--0.68)	0.37		
735.00		(-1.75--1.05)	0.70		
		(-11.00--1.75)	9.25		
				10.32	
50	e1	(1.05-0.68)	0.37		
735.00		(1.75-1.05)	0.70		
		(11.00-1.75)	9.25		
				10.32	
51	e2	(-1.05--0.68)	0.37		
750.00		(-1.75--1.05)	0.70		
		(-11.00--1.75)	9.25		
				10.32	
51	e1	(1.05-0.68)	0.37		
750.00		(1.75-1.05)	0.70		
		(11.00-1.75)	9.25		
				10.32	
52	e2	(-1.05--0.68)	0.37		
765.00		(-1.75--1.05)	0.70		
		(-16.26--1.75)	14.51		
				15.58	
52	e1	(1.05-0.68)	0.37		
765.00		(1.75-1.05)	0.70		
		(11.00-1.75)	9.25		
				10.32	
53	e2	(-1.05--0.68)	0.37		
780.00		(-1.75--1.05)	0.70		
		(-14.88--1.75)	13.13		
				14.20	
53	e1	(1.05-0.68)	0.37		
780.00		(1.75-1.05)	0.70		
		(11.00-1.75)	9.25		
				10.32	
54	e2	(-1.05--0.68)	0.37		
795.00		(-1.75--1.05)	0.70		
		A RIPORTARE ml	1.07		

		CALCOLO DELLE LUNGHEZZE		Foglio n. 209
FONDAZIONE				
N. SEZIONE PROG.	FIG.	ELEMENTI DI CALCOLO	LUNGHEZZA ELEMENTARE ml	LUNGHEZZA FIGURA ml	NOTE
		RIPORTO ml	1.07		
		(-14.75--1.75)	13.00		
				14.07	
54	e1	(1.05-0.68)	0.37		
795.00		(1.75-1.05)	0.70		
		(11.00-1.75)	9.25		
				10.32	
55	e2	(-1.05--0.68)	0.37		
810.00		(-1.75--1.05)	0.70		
		(-14.75--1.75)	13.00		
				14.07	
55	e1	(1.05-0.68)	0.37		
810.00		(1.75-1.05)	0.70		
		(11.00-1.75)	9.25		
				10.32	
56	e2	(-1.05--0.68)	0.37		
825.00		(-1.75--1.05)	0.70		
		(-14.75--1.75)	13.00		
				14.07	
56	e1	(1.05-0.68)	0.37		
825.00		(1.75-1.05)	0.70		
		(11.00-1.75)	9.25		
				10.32	
57	e2	(-1.05--0.68)	0.37		
840.00		(-1.75--1.05)	0.70		
		(-14.75--1.75)	13.00		
				14.07	
57	e1	(1.05-0.68)	0.37		
840.00		(1.75-1.05)	0.70		
		(11.00-1.75)	9.25		
				10.32	
58	e1	(1.05-0.68)	0.37		
855.00		(1.75-1.05)	0.70		
		(11.00-1.75)	9.25		
				10.32	
58	e2	(-1.05--0.68)	0.37		
855.00		(-1.75--1.05)	0.70		
		(-14.75--1.75)	13.00		
				14.07	
59	e2	(-1.05--0.68)	0.37		
870.00		(-1.75--1.05)	0.70		
		(-14.75--1.75)	13.00		
				14.07	
59	e1	(1.05-0.68)	0.37		
870.00		(1.75-1.05)	0.70		
		(11.00-1.75)	9.25		
				10.32	
60	e2	(-1.05--0.68)	0.37		
885.00		(-1.75--1.05)	0.70		
		(-14.75--1.75)	13.00		
				14.07	
60	e1	(1.05-0.68)	0.37		
885.00		(1.75-1.05)	0.70		
		(11.00-1.75)	9.25		
				10.32	
61	e2	(-1.05--0.68)	0.37		
900.00		(-1.75--1.05)	0.70		
		(-14.58--1.75)	12.83		
				13.90	
61	e1	(1.05-0.68)	0.37		
900.00		(1.75-1.05)	0.70		
		(11.00-1.75)	9.25		
				10.32	
62	e2	(-1.05--0.68)	0.37		
915.00		(-1.75--1.05)	0.70		
		(-13.96--1.75)	12.21		
				13.28	
62	e1	(1.05-0.68)	0.37		
915.00		(1.75-1.05)	0.70		
		(11.00-1.75)	9.25		
		(13.13-11.00)	2.13		
				12.45	
63	e2	(-1.05--0.68)	0.37		
930.00		(-1.75--1.05)	0.70		
		(-13.01--1.75)	11.26		
				12.33	
63	e1	(1.05-0.68)	0.37		
930.00		(1.75-1.05)	0.70		
		(17.06-1.75)	15.31		
				16.38	
64	e2	(-1.05--0.68)	0.37		
945.00		(-1.75--1.05)	0.70		
		(-12.08--1.75)	10.33		
				11.40	
64	e1	(1.05-0.68)	0.37		
945.00		(1.75-1.05)	0.70		
		(15.40-1.75)	13.65		
				14.72	
65	e2	(-1.05--0.68)	0.37		
960.00		(-1.75--1.05)	0.70		
		(-11.30--1.75)	9.55		
				10.62	
65	e1	(1.05-0.68)	0.37		
960.00		(1.75-1.05)	0.70		
		(14.76-1.75)	13.01		
				14.08	
66	e2	(-1.05--0.68)	0.37		
975.00		(-1.75--1.05)	0.70		
		(-11.00--1.75)	9.25		
				10.32	
66	e1	(1.05-0.68)	0.37		
975.00		(1.75-1.05)	0.70		
		(14.75-1.75)	13.00		
				14.07	
67	e2	(-1.05--0.68)	0.37		
		A RIPORTARE ml	0.37		

	CALCOLO DELLE LUNGHEZZE	Foglio n. 210

FONDAZIONE

N. SEZIONE PROG.	FIG.	ELEMENTI DI CALCOLO	LUNGHEZZA ELEMENTARE ml	LUNGHEZZA FIGURA ml	NOTE
		RIPORTO ml	0.37		
990.00		(-1.75--1.05)	0.70		
		(-11.00--1.75)	9.25		
				10.32	
67	e1	(1.05-0.68)	0.37		
990.00		(1.75-1.05)	0.70		
		(14.75-1.75)	13.00		
				14.07	
68	e2	(-1.05--0.68)	0.37		
1005.00		(-1.75--1.05)	0.70		
		(-11.00--1.75)	9.25		
				10.32	
68	e1	(1.05-0.68)	0.37		
1005.00		(1.75-1.05)	0.70		
		(14.75-1.75)	13.00		
				14.07	
69	e2	(-1.05--0.68)	0.37		
1020.00		(-1.75--1.05)	0.70		
		(-11.00--1.75)	9.25		
				10.32	
69	e1	(1.05-0.68)	0.37		
1020.00		(1.75-1.05)	0.70		
		(14.75-1.75)	13.00		
				14.07	
70	e2	(-1.05--0.68)	0.37		
1035.00		(-1.75--1.05)	0.70		
		(-11.00--1.75)	9.25		
				10.32	
70	e1	(1.05-0.68)	0.37		
1035.00		(1.75-1.05)	0.70		
		(14.75-1.75)	13.00		
				14.07	
71	e2	(-1.05--0.68)	0.37		
1050.00		(-1.75--1.05)	0.70		
		(-11.00--1.75)	9.25		
				10.32	
71	e1	(1.05-0.68)	0.37		
1050.00		(1.75-1.05)	0.70		
		(14.75-1.75)	13.00		
				14.07	
72	e2	(-1.05--0.68)	0.37		
1065.00		(-1.75--1.05)	0.70		
		(-11.00--1.75)	9.25		
				10.32	
72	e1	(1.05-0.68)	0.37		
1065.00		(1.75-1.05)	0.70		
		(14.75-1.75)	13.00		
				14.07	
73	e2	(-1.05--0.68)	0.37		
1080.00		(-1.75--1.05)	0.70		
		(-11.00--1.75)	9.25		
				10.32	
73	e1	(1.05-0.68)	0.37		
1080.00		(1.75-1.05)	0.70		
		(14.75-1.75)	13.00		
				14.07	
74	e2	(-1.05--0.68)	0.37		
1095.00		(-1.75--1.05)	0.70		
		(-11.00--1.75)	9.25		
				10.32	
74	e1	(1.05-0.68)	0.37		
1095.00		(1.75-1.05)	0.70		
		(14.75-1.75)	13.00		
				14.07	
75	e2	(-1.05--0.68)	0.37		
1110.00		(-1.75--1.05)	0.70		
		(-11.00--1.75)	9.25		
				10.32	
75	e1	(1.05-0.68)	0.37		
1110.00		(1.75-1.05)	0.70		
		(14.75-1.75)	13.00		
				14.07	
76	e2	(-1.05--0.68)	0.37		
1125.00		(-1.75--1.05)	0.70		
		(-11.00--1.75)	9.25		
				10.32	
76	e1	(1.05-0.68)	0.37		
1125.00		(1.75-1.05)	0.70		
		(14.74-1.75)	12.99		
				14.06	

Il Direttore dei Lavori	L'Impresa	

	CALCOLO DELLE LUNGHEZZE		Foglio n. 211

SCOTICO

N. SEZIONE PROG.	FIG.	ELEMENTI DI CALCOLO	LUNGHEZZA ELEMENTARE ml	LUNGHEZZA FIGURA ml	NOTE
1	sc1	(-11.34--11.34)	0.00		
0.00		(-10.76--11.34)	0.58		
		(-10.76--10.76)	0.00		
				0.58	
2	sc1	(-16.38--16.38)	0.00		
15.00		(-16.07--16.38)	0.31		
		(-16.03--16.07)	0.04		
		(-16.00--16.03)	0.03		
		(-14.92--16.00)	1.08		
		(-14.10--14.92)	0.82		
		(-13.81--14.10)	0.29		
		(-13.38--13.81)	0.43		
		(-12.70--13.38)	0.68		
		(-12.21--12.70)	0.49		
		(-11.59--12.21)	0.62		
		(-10.78--11.59)	0.81		
		(-10.78--10.78)	0.00		
				5.60	
3	sc2	(-16.41--16.41)	0.00		
30.00		(-16.20--16.41)	0.21		
		(-15.57--16.20)	0.63		
		(-14.67--15.57)	0.90		
		(-14.46--14.67)	0.21		
		(-14.31--14.46)	0.15		
		(-13.35--14.31)	0.96		
		(-12.42--13.35)	0.93		
		(-12.24--12.42)	0.18		
		(-11.99--12.24)	0.25		
		(-11.40--11.99)	0.59		
		(-11.40--11.40)	0.00		
				5.01	
3	sc1	(-11.30--11.30)	0.00		
30.00		(-11.13--11.30)	0.17		
		(-10.58--11.13)	0.55		
		(-10.58--10.58)	0.00		
				0.72	
4	sc1	(-11.63--11.63)	0.00		
45.00		(-11.44--11.63)	0.19		
		(-10.96--11.44)	0.48		
		(-10.96--10.96)	0.00		
				0.67	
4	sc2	(-16.26--16.26)	0.00		
45.00		(-16.22--16.26)	0.04		
		(-15.96--16.22)	0.26		
		(-15.12--15.96)	0.84		
		(-14.52--15.12)	0.60		
		(-14.01--14.52)	0.51		
		(-13.27--14.01)	0.74		
		(-12.90--13.27)	0.37		
		(-12.63--12.90)	0.27		
		(-11.79--12.63)	0.84		
		(-11.65--11.79)	0.14		
		(-11.65--11.65)	0.00		
				4.61	
5	sc1	(-11.67--11.67)	0.00		
60.00		(-11.44--11.67)	0.23		
		(-11.44--11.44)	0.00		
				0.23	
5	sc2	(-16.16--16.16)	0.00		
60.00		(-15.77--16.16)	0.39		
		(-14.73--15.77)	1.04		
		(-14.66--14.73)	0.07		
		(-14.56--14.66)	0.10		
		(-13.55--14.56)	1.01		
		(-12.84--13.55)	0.71		
		(-12.44--12.84)	0.40		
		(-12.18--12.44)	0.26		
		(-12.18--12.18)	0.00		
				3.98	
6	sc1	(-12.06--12.06)	0.00		
75.00		(-11.96--12.06)	0.10		
		(-11.96--11.96)	0.00		
		(-11.95--11.96)	0.01		
		(-11.89--11.95)	0.06		
		(-11.82--11.89)	0.07		
		(-11.82--11.82)	0.00		
				0.24	
6	sc2	(-16.77--16.77)	0.00		
75.00		(-16.41--16.77)	0.36		
		(-15.89--16.41)	0.52		
		(-15.30--15.89)	0.59		
		(-14.89--15.30)	0.41		
		(-14.19--14.89)	0.70		
		(-13.20--14.19)	0.99		
		(-13.08--13.20)	0.12		
		(-12.80--13.08)	0.28		
		(-12.80--12.80)	0.00		
				3.97	
7	sc1	(-17.20--17.20)	0.00		
90.00		(-17.02--17.20)	0.18		
		(-16.86--17.02)	0.16		
		(-15.91--16.86)	0.95		
		(-14.99--15.91)	0.92		
		(-14.80--14.99)	0.19		
		(-14.53--14.80)	0.27		
		(-13.69--14.53)	0.84		
		(-13.11--13.69)	0.58		
		(-12.58--13.11)	0.53		
		(-12.29--12.58)	0.29		
		(-12.25--12.29)	0.04		
		(-12.05--12.25)	0.20		
		(-12.04--12.05)	0.01		
		(-12.04--12.04)	0.00		
		(-12.04--12.04)	0.00		
		(-12.04--12.04)	0.00		
		(-12.04--12.04)	0.00		
		A RIPORTARE ml	5.16		

		CALCOLO DELLE LUNGHEZZE		Foglio n. 212
SCOTICO				
N. SEZIONE PROG.	FIG.	ELEMENTI DI CALCOLO	LUNGHEZZA ELEMENTARE ml	LUNGHEZZA FIGURA ml	NOTE
		RIPORTO ml	5.16		
		(-12.03--12.04)	0.01		
		(-12.01--12.03)	0.02		
		(-11.98--12.01)	0.03		
		(-11.86--11.98)	0.12		
		(-11.65--11.86)	0.21		
		(-11.65--11.65)	0.00		
				5.55	
8	sc2	(-17.78--17.78)	0.00		
105.00		(-17.59--17.78)	0.19		
		(-16.93--17.59)	0.66		
		(-16.48--16.93)	0.45		
		(-16.30--16.48)	0.18		
		(-15.84--16.30)	0.46		
		(-15.51--15.84)	0.33		
		(-15.38--15.51)	0.13		
		(-15.06--15.38)	0.32		
		(-14.27--15.06)	0.79		
		(-13.19--14.27)	1.08		
		(-13.16--13.19)	0.03		
		(-13.12--13.16)	0.04		
		(-12.36--13.12)	0.76		
		(-12.24--12.36)	0.12		
		(-12.21--12.24)	0.03		
		(-12.20--12.21)	0.01		
		(-12.20--12.20)	0.00		
		(-12.17--12.20)	0.03		
		(-12.12--12.17)	0.05		
		(-11.92--12.12)	0.20		
		(-11.92--11.92)	0.00		
				5.86	
8	sc1	(11.60-11.60)	0.00		
105.00		(12.02-11.60)	0.42		
		(12.14-12.02)	0.12		
		(12.18-12.14)	0.04		
		(12.36-12.18)	0.18		
		(12.42-12.36)	0.06		
		(12.52-12.42)	0.10		
		(12.54-12.52)	0.02		
		(12.60-12.54)	0.06		
		(12.75-12.60)	0.15		
		(12.75-12.75)	0.00		
				1.15	
9	sc1	(12.39-12.39)	0.00		
120.00		(12.43-12.39)	0.04		
		(12.43-12.43)	0.00		
				0.04	
9	sc2	(-18.19--18.19)	0.00		
120.00		(-18.14--18.19)	0.05		
		(-17.13--18.14)	1.01		
		(-17.03--17.13)	0.10		
		(-16.96--17.03)	0.07		
		(-15.92--16.96)	1.04		
		(-15.10--15.92)	0.82		
		(-14.82--15.10)	0.28		
		(-14.40--14.82)	0.42		
		(-13.71--14.40)	0.69		
		(-13.24--13.71)	0.47		
		(-12.61--13.24)	0.63		
		(-12.34--12.61)	0.27		
		(-11.99--12.34)	0.35		
		(-11.97--11.99)	0.02		
		(-11.97--11.97)	0.00		
				6.22	
10	sc1	(12.10-12.10)	0.00		
135.00		(12.27-12.10)	0.17		
		(12.30-12.27)	0.03		
		(12.42-12.30)	0.12		
		(12.45-12.42)	0.03		
		(12.46-12.45)	0.01		
		(12.47-12.46)	0.01		
		(12.47-12.47)	0.00		
		(12.53-12.47)	0.06		
		(12.75-12.53)	0.22		
		(12.79-12.75)	0.04		
		(12.86-12.79)	0.07		
		(12.86-12.86)	0.00		
				0.76	
10	sc2	(-11.40--11.40)	0.00		
135.00		(-11.39--11.40)	0.01		
		(-11.39--11.39)	0.00		
		(-11.39--11.39)	0.00		
				0.01	
10	sc3	(-18.47--18.47)	0.00		
135.00		(-18.41--18.47)	0.06		
		(-17.54--18.41)	0.87		
		(-16.96--17.54)	0.58		
		(-16.44--16.96)	0.52		
		(-15.67--16.44)	0.77		
		(-15.33--15.67)	0.34		
		(-15.11--15.33)	0.22		
		(-14.23--15.11)	0.88		
		(-13.26--14.23)	0.97		
		(-13.12--13.26)	0.14		
		(-12.92--13.12)	0.20		
		(-12.02--12.92)	0.90		
		(-11.71--12.02)	0.31		
		(-11.57--11.71)	0.14		
		(-11.55--11.57)	0.02		
		(-11.46--11.55)	0.09		
		(-11.40--11.46)	0.06		
		(-11.40--11.40)	0.00		
				7.07	
11	sc1	(11.79-11.79)	0.00		
150.00		(11.79-11.79)	0.00		
		A RIPORTARE ml	0.00		

		CALCOLO DELLE LUNGHEZZE		Foglio n. 213
SCOTICO				
N. SEZIONE PROG.	FIG.	ELEMENTI DI CALCOLO	LUNGHEZZA ELEMENTARE ml	LUNGHEZZA FIGURA ml	NOTE
		RIPORTO ml	0.00		
		(12.17-11.79)	0.38		
		(12.71-12.17)	0.54		
		(12.83-12.71)	0.12		
		(12.87-12.83)	0.04		
		(12.92-12.87)	0.05		
		(12.94-12.92)	0.02		
		(12.94-12.94)	0.00		
				1.15	
11	sc2	(-11.48--11.48)	0.00		
150.00		(-11.46--11.48)	0.02		
		(-11.44--11.46)	0.02		
		(-11.44--11.44)	0.00		
		(-11.44--11.44)	0.00		
				0.04	
11	sc3	(-18.75--18.75)	0.00		
150.00		(-18.03--18.75)	0.72		
		(-16.93--18.03)	1.10		
		(-16.92--16.93)	0.01		
		(-16.91--16.92)	0.01		
		(-15.82--16.91)	1.09		
		(-15.34--15.82)	0.48		
		(-14.72--15.34)	0.62		
		(-14.15--14.72)	0.57		
		(-13.61--14.15)	0.54		
		(-13.25--13.61)	0.36		
		(-12.51--13.25)	0.74		
		(-12.19--12.51)	0.32		
		(-11.86--12.19)	0.33		
		(-11.75--11.86)	0.11		
		(-11.75--11.75)	0.00		
				7.00	
12	sc1	(11.42-11.42)	0.00		
165.00		(12.36-11.42)	0.94		
		(12.42-12.36)	0.06		
		(12.46-12.42)	0.04		
		(12.83-12.46)	0.37		
		(12.83-12.83)	0.00		
				1.41	
12	sc2	(-19.07--19.07)	0.00		
165.00		(-18.71--19.07)	0.36		
		(-18.48--18.71)	0.23		
		(-18.14--18.48)	0.34		
		(-17.38--18.14)	0.76		
		(-16.87--17.38)	0.51		
		(-16.27--16.87)	0.60		
		(-15.37--16.27)	0.90		
		(-15.17--15.37)	0.20		
		(-15.04--15.17)	0.13		
		(-14.07--15.04)	0.97		
		(-13.21--14.07)	0.86		
		(-12.96--13.21)	0.25		
		(-12.60--12.96)	0.36		
		(-11.86--12.60)	0.74		
		(-11.52--11.86)	0.34		
		(-11.39--11.52)	0.13		
		(-11.35--11.39)	0.04		
		(-11.34--11.35)	0.01		
		(-11.31--11.34)	0.03		
		(-11.20--11.31)	0.11		
		(-11.06--11.20)	0.14		
		(-10.76--11.06)	0.30		
		(-10.49--10.76)	0.27		
		(-10.35--10.49)	0.14		
		(-10.35--10.35)	0.00		
				8.72	
13	sc1	(11.34-11.34)	0.00		
180.00		(11.38-11.34)	0.04		
		(11.45-11.38)	0.07		
		(11.50-11.45)	0.05		
		(11.57-11.50)	0.07		
		(11.86-11.57)	0.29		
		(11.97-11.86)	0.11		
		(12.41-11.97)	0.44		
		(12.68-12.41)	0.27		
		(12.68-12.68)	0.00		
				1.34	
13	sc2	(-11.08--11.08)	0.00		
180.00		(-11.02--11.08)	0.06		
		(-11.01--11.02)	0.01		
		(-10.97--11.01)	0.04		
		(-10.76--10.97)	0.21		
		(-10.76--10.76)	0.00		
				0.32	
13	sc3	(-19.44--19.44)	0.00		
180.00		(-19.35--19.44)	0.09		
		(-18.90--19.35)	0.45		
		(-18.61--18.90)	0.29		
		(-17.80--18.61)	0.81		
		(-16.79--17.80)	1.01		
		(-16.70--16.79)	0.09		
		(-16.56--16.70)	0.14		
		(-15.60--16.56)	0.96		
		(-14.96--15.60)	0.64		
		(-14.49--14.96)	0.47		
		(-13.78--14.49)	0.71		
		(-13.39--13.78)	0.39		
		(-13.14--13.39)	0.25		
		(-12.29--13.14)	0.85		
		(-11.79--12.29)	0.50		
		(-11.79--11.79)	0.00		
				7.65	
14	sc1	(11.87-11.87)	0.00		
195.00		(11.87-11.87)	0.00		
		(11.90-11.87)	0.03		
		A RIPORTARE ml	0.03		

		CALCOLO DELLE LUNGHEZZE		Foglio n. 214
SCOTICO				
N. SEZIONE PROG.	FIG.	ELEMENTI DI CALCOLO	LUNGHEZZA ELEMENTARE ml	LUNGHEZZA FIGURA ml	NOTE
		RIPORTO ml	0.03		
		(11.91-11.90)	0.01		
		(11.95-11.91)	0.04		
		(12.05-11.95)	0.10		
		(12.26-12.05)	0.21		
		(12.65-12.26)	0.39		
		(12.77-12.65)	0.12		
		(12.89-12.77)	0.12		
		(12.89-12.89)	0.00		
				1.02	
14	sc2	(11.47-11.47)	0.00		
195.00		(11.55-11.47)	0.08		
		(11.73-11.55)	0.18		
		(11.76-11.73)	0.03		
		(11.78-11.76)	0.02		
		(11.87-11.78)	0.09		
		(11.87-11.87)	0.00		
		(11.87-11.87)	0.00		
				0.40	
14	sc3	(-5.38--5.38)	0.00		
195.00		(-5.38--5.38)	0.00		
		(-5.23--5.38)	0.15		
		(-4.97--5.23)	0.26		
		(-4.91--4.97)	0.06		
		(-4.91--4.91)	0.00		
				0.47	
14	sc4	(-6.59--6.59)	0.00		
195.00		(-6.54--6.59)	0.05		
		(-6.08--6.54)	0.46		
		(-5.69--6.08)	0.39		
		(-5.57--5.69)	0.12		
		(-5.53--5.57)	0.04		
		(-5.53--5.53)	0.00		
				1.06	
14	sc5	(-19.80--19.80)	0.00		
195.00		(-19.30--19.80)	0.50		
		(-18.49--19.30)	0.81		
		(-18.19--18.49)	0.30		
		(-17.74--18.19)	0.45		
		(-17.09--17.74)	0.65		
		(-16.67--17.09)	0.42		
		(-15.99--16.67)	0.68		
		(-14.94--15.99)	1.05		
		(-14.89--14.94)	0.05		
		(-14.11--14.89)	0.78		
		(-13.79--14.11)	0.32		
		(-13.04--13.79)	0.75		
		(-12.69--13.04)	0.35		
		(-12.14--12.69)	0.55		
		(-11.58--12.14)	0.56		
		(-11.30--11.58)	0.28		
		(-10.65--11.30)	0.65		
		(-10.49--10.65)	0.16		
		(-10.49--10.49)	0.00		
				9.31	
15	sc1	(11.44-11.44)	0.00		
210.00		(12.06-11.44)	0.62		
		(12.27-12.06)	0.21		
		(12.40-12.27)	0.13		
		(12.71-12.40)	0.31		
		(12.71-12.71)	0.00		
				1.27	
15	sc2	(-5.13--5.13)	0.00		
210.00		(-5.13--5.13)	0.00		
		(-5.12--5.13)	0.01		
		(-5.09--5.12)	0.03		
		(-4.96--5.09)	0.13		
		(-4.80--4.96)	0.16		
		(-4.41--4.80)	0.39		
		(-4.25--4.41)	0.16		
		(-3.87--4.25)	0.38		
		(-3.14--3.87)	0.73		
		(-2.06--3.14)	1.08		
		(-2.04--2.06)	0.02		
		(-2.04--2.04)	0.00		
		(-2.01--2.04)	0.03		
		(-0.94--2.01)	1.07		
		(-0.25--0.94)	0.69		
		(-0.05--0.25)	0.20		
		(-0.05--0.05)	0.00		
				5.08	
15	sc3	(-6.95--6.95)	0.00		
210.00		(-6.90--6.95)	0.05		
		(-6.84--6.90)	0.06		
		(-6.81--6.84)	0.03		
		(-6.64--6.81)	0.17		
		(-6.45--6.64)	0.19		
		(-5.68--6.45)	0.77		
		(-5.35--5.68)	0.33		
		(-5.27--5.35)	0.08		
		(-5.15--5.27)	0.12		
		(-5.13--5.15)	0.02		
		(-5.13--5.13)	0.00		
				1.82	
15	sc4	(-20.02--20.02)	0.00		
210.00		(-19.66--20.02)	0.36		
		(-18.90--19.66)	0.76		
		(-18.56--18.90)	0.34		
		(-18.33--18.56)	0.23		
		(-17.46--18.33)	0.87		
		(-16.53--17.46)	0.93		
		(-16.36--16.53)	0.17		
		(-16.09--16.36)	0.27		
		(-15.25--16.09)	0.84		
		(-14.72--15.25)	0.53		
		A RIPORTARE ml	5.30		

		CALCOLO DELLE LUNGHEZZE		Foglio n. 215
SCOTICO				
N. SEZIONE PROG.	FIG.	ELEMENTI DI CALCOLO	LUNGHEZZA ELEMENTARE ml	LUNGHEZZA FIGURA ml	NOTE
		RIPORTO ml	5.30		
		(-14.18--14.72)	0.54		
		(-14.18--14.18)	0.00		
				5.84	
16	sc1	(11.59-11.59)	0.00		
225.00		(11.68-11.59)	0.09		
		(11.91-11.68)	0.23		
		(12.44-11.91)	0.53		
		(12.98-12.44)	0.54		
		(12.98-12.98)	0.00		
				1.39	
16	sc2	(-6.70--6.70)	0.00		
225.00		(-6.61--6.70)	0.09		
		(-6.59--6.61)	0.02		
		(-6.31--6.59)	0.28		
		(-6.30--6.31)	0.01		
		(-6.27--6.30)	0.03		
		(-6.25--6.27)	0.02		
		(-6.18--6.25)	0.07		
		(-5.75--6.18)	0.43		
		(-5.69--5.75)	0.06		
		(-4.96--5.69)	0.73		
		(-4.80--4.96)	0.16		
		(-4.78--4.80)	0.02		
		(-4.77--4.78)	0.01		
		(-4.76--4.77)	0.01		
		(-4.75--4.76)	0.01		
		(-4.70--4.75)	0.05		
		(-4.50--4.70)	0.20		
		(-4.50--4.50)	0.00		
		(-4.16--4.50)	0.34		
		(-3.49--4.16)	0.67		
		(-3.07--3.49)	0.42		
		(-2.39--3.07)	0.68		
		(-1.96--2.39)	0.43		
		(-1.29--1.96)	0.67		
		(-0.24--1.29)	1.05		
		(-0.19--0.24)	0.05		
		(-0.16--0.19)	0.03		
		(0.91--0.16)	1.07		
		(1.64-0.91)	0.73		
		(1.83-1.64)	0.19		
		(1.83-1.83)	0.00		
				8.53	
16	sc3	(-6.99--6.99)	0.00		
225.00		(-6.94--6.99)	0.05		
		(-6.93--6.94)	0.01		
		(-6.89--6.93)	0.04		
		(-6.70--6.89)	0.19		
		(-6.70--6.70)	0.00		
		(-6.70--6.70)	0.00		
		(-6.70--6.70)	0.00		
				0.29	
16	sc4	(-19.93--19.93)	0.00		
225.00		(-18.89--19.93)	1.04		
		(-18.15--18.89)	0.74		
		(-17.79--18.15)	0.36		
		(-17.22--17.79)	0.57		
		(-16.69--17.22)	0.53		
		(-16.35--16.69)	0.34		
		(-15.59--16.35)	0.76		
		(-14.55--15.59)	1.04		
		(-14.49--14.55)	0.06		
		(-14.39--14.49)	0.10		
		(-13.39--14.39)	1.00		
		(-12.75--13.39)	0.64		
		(-12.29--12.75)	0.46		
		(-11.56--12.29)	0.73		
		(-11.19--11.56)	0.37		
		(-10.95--11.19)	0.24		
		(-10.09--10.95)	0.86		
		(-9.15--10.09)	0.94		
		(-8.99--9.15)	0.16		
		(-8.73--8.99)	0.26		
		(-8.52--8.73)	0.21		
		(-8.52--8.52)	0.00		
				11.41	
17	sc1	(11.63-11.63)	0.00		
240.00		(12.51-11.63)	0.88		
		(12.69-12.51)	0.18		
		(12.96-12.69)	0.27		
		(13.21-12.96)	0.25		
		(13.21-13.21)	0.00		
				1.58	
17	sc2	(-6.68--6.68)	0.00		
240.00		(-6.00--6.68)	0.68		
		(-5.40--6.00)	0.60		
		(-4.90--5.40)	0.50		
		(-4.11--4.90)	0.79		
		(-3.80--4.11)	0.31		
		(-3.61--3.80)	0.19		
		(-2.70--3.61)	0.91		
		(-1.82--2.70)	0.88		
		(-1.60--1.82)	0.22		
		(-1.26--1.60)	0.34		
		(-0.50--1.26)	0.76		
		(-0.03--0.50)	0.47		
		(0.60--0.03)	0.63		
		(1.58-0.60)	0.98		
		(1.69-1.58)	0.11		
		(1.76-1.69)	0.07		
		(2.67-1.76)	0.91		
		(2.67-2.67)	0.00		
				9.35	
17	sc3	(-19.79--19.79)	0.00		
		A RIPORTARE ml	0.00		

		CALCOLO DELLE LUNGHEZZE		Foglio n. 216
SCOTICO				
N. SEZIONE PROG.	FIG.	ELEMENTI DI CALCOLO	LUNGHEZZA ELEMENTARE ml	LUNGHEZZA FIGURA ml	NOTE
		RIPORTO ml	0.00		
240.00		(-19.73--19.79)	0.06		
		(-19.19--19.73)	0.54		
		(-18.33--19.19)	0.86		
		(-18.09--18.33)	0.24		
		(-17.94--18.09)	0.15		
		(-16.99--17.94)	0.95		
		(-16.15--16.99)	0.84		
		(-15.89--16.15)	0.26		
		(-15.48--15.89)	0.41		
		(-14.79--15.48)	0.69		
		(-14.36--14.79)	0.43		
		(-13.69--14.36)	0.67		
		(-13.40--13.69)	0.29		
		(-12.64--13.40)	0.76		
		(-12.61--12.64)	0.03		
		(-12.60--12.61)	0.01		
		(-12.57--12.60)	0.03		
		(-11.50--12.57)	1.07		
		(-10.78--11.50)	0.72		
		(-10.40--10.78)	0.38		
		(-9.79--10.40)	0.61		
		(-9.30--9.79)	0.49		
		(-8.99--9.30)	0.31		
		(-8.20--8.99)	0.79		
		(-7.19--8.20)	1.01		
		(-7.18--7.19)	0.01		
		(-7.18--7.18)	0.00		
				12.61	
18	sc1	(4.91-4.91)	0.00		
255.00		(5.48-4.91)	0.57		
		(5.80-5.48)	0.32		
		(6.31-5.80)	0.51		
		(6.90-6.31)	0.59		
		(7.26-6.90)	0.36		
		(8.00-7.26)	0.74		
		(9.05-8.00)	1.05		
		(9.10-9.05)	0.05		
		(9.17-9.10)	0.07		
		(10.19-9.17)	1.02		
		(10.83-10.19)	0.64		
		(11.29-10.83)	0.46		
		(12.03-11.29)	0.74		
		(12.39-12.03)	0.36		
		(12.61-12.39)	0.22		
		(13.23-12.61)	0.62		
		(13.23-13.23)	0.00		
				8.32	
18	sc2	(-19.58--19.58)	0.00		
255.00		(-19.49--19.58)	0.09		
		(-19.46--19.49)	0.03		
		(-19.45--19.46)	0.01		
		(-19.42--19.45)	0.03		
		(-18.66--19.42)	0.76		
		(-18.36--18.66)	0.30		
		(-17.71--18.36)	0.65		
		(-17.26--17.71)	0.45		
		(-16.56--17.26)	0.70		
		(-16.17--16.56)	0.39		
		(-15.92--16.17)	0.25		
		(-15.07--15.92)	0.85		
		(-14.14--15.07)	0.93		
		(-13.97--14.14)	0.17		
		(-13.70--13.97)	0.27		
		(-12.87--13.70)	0.83		
		(-12.35--12.87)	0.52		
		(-11.77--12.35)	0.58		
		(-10.84--11.77)	0.93		
		(-10.67--10.84)	0.17		
		(-10.57--10.67)	0.10		
		(-9.58--10.57)	0.99		
		(-8.79--9.58)	0.79		
		(-8.48--8.79)	0.31		
		(-7.98--8.48)	0.50		
		(-7.38--7.98)	0.60		
		(-7.00--7.38)	0.38		
		(-6.28--7.00)	0.72		
		(-5.22--6.28)	1.06		
		(-5.18--5.22)	0.04		
		(-5.12--5.18)	0.06		
		(-4.08--5.12)	1.04		
		(-3.44--4.08)	0.64		
		(-2.99--3.44)	0.45		
		(-2.26--2.99)	0.73		
		(-1.89--2.26)	0.37		
		(-1.65--1.89)	0.24		
		(-0.79--1.65)	0.86		
		(-0.41--0.79)	0.38		
		(0.31--0.41)	0.72		
		(0.60-0.31)	0.29		
		(1.41-0.60)	0.81		
		(1.91-1.41)	0.50		
		(2.51-1.91)	0.60		
		(3.45-2.51)	0.94		
		(3.60-3.45)	0.15		
		(3.70-3.60)	0.10		
		(4.57-3.70)	0.87		
		(4.57-4.57)	0.00		
				24.15	
19	sc1	(-19.08--19.08)	0.00		
270.00		(-18.60--19.08)	0.48		
		(-17.62--18.60)	0.98		
		(-17.51--17.62)	0.11		
		(-17.44--17.51)	0.07		
		(-16.41--17.44)	1.03		
		A RIPORTARE ml	2.67		

		CALCOLO DELLE LUNGHEZZE		Foglio n. 217
SCOTICO				
N. SEZIONE PROG.	FIG.	ELEMENTI DI CALCOLO	LUNGHEZZA ELEMENTARE ml	LUNGHEZZA FIGURA ml	NOTE
		RIPORTO ml	2.67		
		(-15.66--16.41)	0.75		
		(-15.31--15.66)	0.35		
		(-14.74--15.31)	0.57		
		(-14.21--14.74)	0.53		
		(-13.89--14.21)	0.32		
		(-13.12--13.89)	0.77		
		(-12.11--13.12)	1.01		
		(-12.02--12.11)	0.09		
		(-11.87--12.02)	0.15		
		(-10.92--11.87)	0.95		
		(-10.34--10.92)	0.58		
		(-9.82--10.34)	0.52		
		(-8.99--9.82)	0.83		
		(-8.73--8.99)	0.26		
		(-8.56--8.73)	0.17		
		(-7.63--8.56)	0.93		
		(-6.79--7.63)	0.84		
		(-6.53--6.79)	0.26		
		(-6.42--6.53)	0.11		
		(-6.12--6.42)	0.30		
		(-5.62--6.12)	0.50		
		(-5.43--5.62)	0.19		
		(-5.01--5.43)	0.42		
		(-4.34--5.01)	0.67		
		(-3.25--4.34)	1.09		
		(-3.24--3.25)	0.01		
		(-3.24--3.24)	0.00		
		(-2.14--3.24)	1.10		
		(-1.46--2.14)	0.68		
		(-1.04--1.46)	0.42		
		(-0.37--1.04)	0.67		
		(0.05--0.37)	0.42		
		(0.32-0.05)	0.27		
		(1.15-0.32)	0.83		
		(2.09-1.15)	0.94		
		(2.25-2.09)	0.16		
		(2.50-2.25)	0.25		
		(3.35-2.50)	0.85		
		(3.87-3.35)	0.52		
		(4.44-3.87)	0.57		
		(5.38-4.44)	0.94		
		(5.54-5.38)	0.16		
		(5.64-5.54)	0.10		
		(6.64-5.64)	1.00		
		(7.42-6.64)	0.78		
		(7.74-7.42)	0.32		
		(8.25-7.74)	0.51		
		(8.83-8.25)	0.58		
		(9.19-8.83)	0.36		
		(9.93-9.19)	0.74		
		(10.97-9.93)	1.04		
		(11.03-10.97)	0.06		
		(11.05-11.03)	0.02		
		(11.12-11.05)	0.07		
		(11.85-11.12)	0.73		
		(12.13-11.85)	0.28		
		(12.74-12.13)	0.61		
		(13.22-12.74)	0.48		
		(13.51-13.22)	0.29		
		(13.51-13.51)	0.00		
				32.59	
20 285.00	sc1	(-20.73--20.73)	0.00		
		(-20.68--20.73)	0.05		
		(-19.91--20.68)	0.77		
		(-18.92--19.91)	0.99		
		(-18.82--18.92)	0.10		
		(-18.65--18.82)	0.17		
		(-17.98--18.65)	0.67		
		(-17.72--17.98)	0.26		
		(-17.18--17.72)	0.54		
		(-16.62--17.18)	0.56		
		(-16.39--16.62)	0.23		
		(-15.76--16.39)	0.63		
		(-15.53--15.76)	0.23		
		(-15.38--15.53)	0.15		
		(-14.43--15.38)	0.95		
		(-13.61--14.43)	0.82		
		(-13.33--13.61)	0.28		
		(-12.88--13.33)	0.45		
		(-12.24--12.88)	0.64		
		(-11.62--12.24)	0.62		
		(-11.14--11.62)	0.48		
		(-10.08--11.14)	1.06		
		(-10.04--10.08)	0.04		
		(-9.99--10.04)	0.05		
		(-8.95--9.99)	1.04		
		(-8.31--8.95)	0.64		
		(-7.85--8.31)	0.46		
		(-7.10--7.85)	0.75		
		(-6.75--7.10)	0.35		
		(-6.54--6.75)	0.21		
		(-5.66--6.54)	0.88		
		(-4.77--5.66)	0.89		
		(-4.56--4.77)	0.21		
		(-4.21--4.56)	0.35		
		(-3.46--4.21)	0.75		
		(-3.01--3.46)	0.45		
		(-2.37--3.01)	0.64		
		(-1.32--2.37)	1.05		
		(-1.27--1.32)	0.05		
		(-1.24--1.27)	0.03		
		(-0.17--1.24)	1.07		
		(0.53--0.17)	0.70		
		(0.92-0.53)	0.39		
		A RIPORTARE ml	21.65		

		CALCOLO DELLE LUNGHEZZE		Foglio n. 218
SCOTICO				
N. SEZIONE PROG.	FIG.	ELEMENTI DI CALCOLO	LUNGHEZZA ELEMENTARE ml	LUNGHEZZA FIGURA ml	NOTE
		RIPORTO ml	21.65		
		(1.57-0.92)	0.65		
		(2.02-1.57)	0.45		
		(2.30-2.02)	0.28		
		(3.12-2.30)	0.82		
		(4.06-3.12)	0.94		
		(4.21-4.06)	0.15		
		(4.46-4.21)	0.25		
		(5.31-4.46)	0.85		
		(5.87-5.31)	0.56		
		(6.41-5.87)	0.54		
		(7.35-6.41)	0.94		
		(7.50-7.35)	0.15		
		(7.60-7.50)	0.10		
		(8.60-7.60)	1.00		
		(9.37-8.60)	0.77		
		(9.70-9.37)	0.33		
		(10.24-9.70)	0.54		
		(10.79-10.24)	0.55		
		(11.13-10.79)	0.34		
		(11.89-11.13)	0.76		
		(12.90-11.89)	1.01		
		(12.99-12.90)	0.09		
		(13.13-12.99)	0.14		
		(14.08-13.13)	0.95		
		(14.32-14.08)	0.24		
		(14.32-14.32)	0.00		
				35.05	
21	sc1	(-20.77--20.77)	0.00		
300.00		(-20.35--20.77)	0.42		
		(-20.09--20.35)	0.26		
		(-19.67--20.09)	0.42		
		(-19.00--19.67)	0.67		
		(-18.59--19.00)	0.41		
		(-17.90--18.59)	0.69		
		(-17.59--17.90)	0.31		
		(-16.81--17.59)	0.78		
		(-16.77--16.81)	0.04		
		(-15.71--16.77)	1.06		
		(-15.07--15.71)	0.64		
		(-14.61--15.07)	0.46		
		(-13.86--14.61)	0.75		
		(-13.52--13.86)	0.34		
		(-13.31--13.52)	0.21		
		(-12.42--13.31)	0.89		
		(-11.55--12.42)	0.87		
		(-11.33--11.55)	0.22		
		(-10.96--11.33)	0.37		
		(-10.23--10.96)	0.73		
		(-9.79--10.23)	0.44		
		(-9.13--9.79)	0.66		
		(-8.06--9.13)	1.07		
		(-8.04--8.06)	0.02		
		(-8.03--8.04)	0.01		
		(-6.94--8.03)	1.09		
		(-6.27--6.94)	0.67		
		(-5.85--6.27)	0.42		
		(-5.15--5.85)	0.70		
		(-4.75--5.15)	0.40		
		(-4.51--4.75)	0.24		
		(-3.66--4.51)	0.85		
		(-2.75--3.66)	0.91		
		(-2.56--2.75)	0.19		
		(-2.25--2.56)	0.31		
		(-1.46--2.25)	0.79		
		(-0.99--1.46)	0.47		
		(-0.37--0.99)	0.62		
		(-0.09--0.37)	0.28		
		(0.66--0.09)	0.75		
		(0.71-0.66)	0.05		
		(0.73-0.71)	0.02		
		(0.77-0.73)	0.04		
		(1.82-0.77)	1.05		
		(2.53-1.82)	0.71		
		(2.92-2.53)	0.39		
		(3.56-2.92)	0.64		
		(4.02-3.56)	0.46		
		(4.29-4.02)	0.27		
		(5.11-4.29)	0.82		
		(6.05-5.11)	0.94		
		(6.21-6.05)	0.16		
		(6.47-6.21)	0.26		
		(7.30-6.47)	0.83		
		(7.81-7.30)	0.51		
		(8.40-7.81)	0.59		
		(9.37-8.40)	0.97		
		(9.49-9.37)	0.12		
		(9.57-9.49)	0.08		
		(10.59-9.57)	1.02		
		(11.33-10.59)	0.74		
		(11.69-11.33)	0.36		
		(12.27-11.69)	0.58		
		(12.78-12.27)	0.51		
		(13.09-12.78)	0.31		
		(13.88-13.09)	0.79		
		(14.85-13.88)	0.97		
		(14.97-14.85)	0.12		
		(15.18-14.97)	0.21		
		(15.27-15.18)	0.09		
		(15.27-15.27)	0.00		
				36.04	
22	sc1	(-20.40--20.40)	0.00		
315.00		(-20.24--20.40)	0.16		
		(-19.99--20.24)	0.25		
		(-19.15--19.99)	0.84		
		A RIPORTARE ml	1.25		

		CALCOLO DELLE LUNGHEZZE		Foglio n. 219	
SCOTICO					
N. SEZIONE PROG.	FIG.	ELEMENTI DI CALCOLO	LUNGHEZZA ELEMENTARE ml	LUNGHEZZA FIGURA ml	NOTE
		RIPORTO ml	1.25		
		(-18.23--19.15)	0.92		
		(-18.05--18.23)	0.18		
		(-17.75--18.05)	0.30		
		(-16.96--17.75)	0.79		
		(-16.48--16.96)	0.48		
		(-15.86--16.48)	0.62		
		(-14.83--15.86)	1.03		
		(-14.77--14.83)	0.06		
		(-14.73--14.77)	0.04		
		(-13.67--14.73)	1.06		
		(-12.98--13.67)	0.69		
		(-12.58--12.98)	0.40		
		(-11.91--12.58)	0.67		
		(-11.48--11.91)	0.43		
		(-11.22--11.48)	0.26		
		(-10.39--11.22)	0.83		
		(-9.47--10.39)	0.92		
		(-9.29--9.47)	0.18		
		(-8.99--9.29)	0.30		
		(-8.20--8.99)	0.79		
		(-7.72--8.20)	0.48		
		(-7.10--7.72)	0.62		
		(-6.07--7.10)	1.03		
		(-6.01--6.07)	0.06		
		(-5.23--6.01)	0.78		
		(-4.91--5.23)	0.32		
		(-4.22--4.91)	0.69		
		(-3.82--4.22)	0.40		
		(-3.15--3.82)	0.67		
		(-2.72--3.15)	0.43		
		(-2.46--2.72)	0.26		
		(-1.63--2.46)	0.83		
		(-0.71--1.63)	0.92		
		(-0.53--0.71)	0.18		
		(-0.23--0.53)	0.30		
		(0.56--0.23)	0.79		
		(1.04-0.56)	0.48		
		(1.66-1.04)	0.62		
		(2.69-1.66)	1.03		
		(2.75-2.69)	0.06		
		(2.79-2.75)	0.04		
		(3.85-2.79)	1.06		
		(4.54-3.85)	0.69		
		(4.94-4.54)	0.40		
		(5.61-4.94)	0.67		
		(6.04-5.61)	0.43		
		(6.30-6.04)	0.26		
		(7.13-6.30)	0.83		
		(8.05-7.13)	0.92		
		(8.23-8.05)	0.18		
		(8.53-8.23)	0.30		
		(9.32-8.53)	0.79		
		(9.80-9.32)	0.48		
		(10.42-9.80)	0.62		
		(11.44-10.42)	1.02		
		(11.51-11.44)	0.07		
		(11.55-11.51)	0.04		
		(12.61-11.55)	1.06		
		(13.09-12.61)	0.48		
		(13.70-13.09)	0.61		
		(14.36-13.70)	0.66		
		(14.80-14.36)	0.44		
		(15.06-14.80)	0.26		
		(15.89-15.06)	0.83		
		(16.43-15.89)	0.54		
		(16.43-16.43)	0.00		
				36.83	
23 330.00	sc1	(-20.77--20.77)	0.00		
		(-20.36--20.77)	0.41		
		(-19.60--20.36)	0.76		
		(-19.27--19.60)	0.33		
		(-18.72--19.27)	0.55		
		(-18.17--18.72)	0.55		
		(-17.85--18.17)	0.32		
		(-17.08--17.85)	0.77		
		(-16.11--17.08)	0.97		
		(-15.99--16.11)	0.12		
		(-15.78--15.99)	0.21		
		(-14.89--15.78)	0.89		
		(-14.36--14.89)	0.53		
		(-13.80--14.36)	0.56		
		(-12.85--13.80)	0.95		
		(-12.70--12.85)	0.15		
		(-12.62--12.70)	0.08		
		(-11.61--12.62)	1.01		
		(-11.15--11.61)	0.46		
		(-10.52--11.15)	0.63		
		(-9.91--10.52)	0.61		
		(-9.42--9.91)	0.49		
		(-9.13--9.42)	0.29		
		(-8.33--9.13)	0.80		
		(-7.39--8.33)	0.94		
		(-7.23--7.39)	0.16		
		(-6.98--7.23)	0.25		
		(-6.14--6.98)	0.84		
		(-5.64--6.14)	0.50		
		(-5.04--5.64)	0.60		
		(-4.04--5.04)	1.00		
		(-3.95--4.04)	0.09		
		(-3.90--3.95)	0.05		
		(-2.86--3.90)	1.04		
		(-2.15--2.86)	0.71		
		(-1.76--2.15)	0.39		
		(-1.11--1.76)	0.65		
		A RIPORTARE ml	19.66		

		CALCOLO DELLE LUNGHEZZE		Foglio n. 220
SCOTICO				
N. SEZIONE PROG.	FIG.	ELEMENTI DI CALCOLO	LUNGHEZZA ELEMENTARE ml	LUNGHEZZA FIGURA ml	NOTE
		RIPORTO ml	19.66		
		(-0.67--1.11)	0.44		
		(-0.41--0.67)	0.26		
		(0.43--0.41)	0.84		
		(1.34-0.43)	0.91		
		(1.52-1.34)	0.18		
		(1.83-1.52)	0.31		
		(2.61-1.83)	0.78		
		(3.08-2.61)	0.47		
		(3.71-3.08)	0.63		
		(4.77-3.71)	1.06		
		(4.80-4.77)	0.03		
		(4.83-4.80)	0.03		
		(5.90-4.83)	1.07		
		(6.57-5.90)	0.67		
		(6.99-6.57)	0.42		
		(7.18-6.99)	0.19		
		(7.70-7.18)	0.52		
		(7.98-7.70)	0.28		
		(8.09-7.98)	0.11		
		(8.31-8.09)	0.22		
		(9.18-8.31)	0.87		
		(10.06-9.18)	0.88		
		(10.27-10.06)	0.21		
		(10.64-10.27)	0.37		
		(11.37-10.64)	0.73		
		(11.80-11.37)	0.43		
		(12.46-11.80)	0.66		
		(13.55-12.46)	1.09		
		(13.56-13.55)	0.01		
		(13.57-13.56)	0.01		
		(14.65-13.57)	1.08		
		(15.29-14.65)	0.64		
		(15.74-15.29)	0.45		
		(16.51-15.74)	0.77		
		(16.82-16.51)	0.31		
		(16.82-16.82)	0.00		
				37.59	
24 345.00	sc1	(-17.43--17.43)	0.00		
		(-17.17--17.43)	0.26		
		(-17.05--17.17)	0.12		
		(-16.71--17.05)	0.34		
		(-16.25--16.71)	0.46		
		(-16.08--16.25)	0.17		
		(-15.71--16.08)	0.37		
		(-14.99--15.71)	0.72		
		(-13.97--14.99)	1.02		
		(-13.89--13.97)	0.08		
		(-13.76--13.89)	0.13		
		(-12.80--13.76)	0.96		
		(-12.23--12.80)	0.57		
		(-11.71--12.23)	0.52		
		(-10.81--11.71)	0.90		
		(-10.61--10.81)	0.20		
		(-10.50--10.61)	0.11		
		(-9.52--10.50)	0.98		
		(-8.76--9.52)	0.76		
		(-8.43--8.76)	0.33		
		(-7.86--8.43)	0.57		
		(-7.33--7.86)	0.53		
		(-7.02--7.33)	0.31		
		(-6.24--7.02)	0.78		
		(-5.29--6.24)	0.95		
		(-5.15--5.29)	0.14		
		(-4.91--5.15)	0.24		
		(-4.05--4.91)	0.86		
		(-3.55--4.05)	0.50		
		(-2.96--3.55)	0.59		
		(-1.96--2.96)	1.00		
		(-1.89--1.96)	0.07		
		(-1.87--1.89)	0.02		
		(-1.09--1.87)	0.78		
		(-0.77--1.09)	0.32		
		(-0.29--0.77)	0.48		
		(0.32--0.29)	0.61		
		(0.50-0.32)	0.18		
		(1.00-0.50)	0.50		
		(1.41-1.00)	0.41		
		(2.10-1.41)	0.69		
		(2.51-2.10)	0.41		
		(3.40-2.51)	0.89		
		(3.60-3.40)	0.20		
		(3.95-3.60)	0.35		
		(4.69-3.95)	0.74		
		(5.13-4.69)	0.44		
		(5.79-5.13)	0.66		
		(6.87-5.79)	1.08		
		(6.88-6.87)	0.01		
		(6.90-6.88)	0.02		
		(7.97-6.90)	1.07		
		(8.61-7.97)	0.64		
		(9.07-8.61)	0.46		
		(9.85-9.07)	0.78		
		(10.16-9.85)	0.31		
		(10.34-10.16)	0.18		
		(11.25-10.34)	0.91		
		(12.08-11.25)	0.83		
		(12.35-12.08)	0.27		
		(12.80-12.35)	0.45		
		(13.44-12.80)	0.64		
		(13.82-13.44)	0.38		
		(14.53-13.82)	0.71		
		(15.56-14.53)	1.03		
		(15.63-15.56)	0.07		
		(15.75-15.63)	0.12		
		A RIPORTARE ml	33.18		

		CALCOLO DELLE LUNGHEZZE		Foglio n. 221
SCOTICO				
N. SEZIONE PROG.	FIG.	ELEMENTI DI CALCOLO	LUNGHEZZA ELEMENTARE ml	LUNGHEZZA FIGURA ml	NOTE
		RIPORTO ml	33.18		
		(16.72-15.75)	0.97		
		(17.29-16.72)	0.57		
		(17.40-17.29)	0.11		
		(17.40-17.40)	0.00		
				34.83	
25	sc1	(-17.71--17.71)	0.00		
360.00		(-17.62--17.71)	0.09		
		(-17.24--17.62)	0.38		
		(-17.01--17.24)	0.23		
		(-16.14--17.01)	0.87		
		(-15.28--16.14)	0.86		
		(-15.05--15.28)	0.23		
		(-14.66--15.05)	0.39		
		(-13.96--14.66)	0.70		
		(-13.55--13.96)	0.41		
		(-12.87--13.55)	0.68		
		(-11.82--12.87)	1.05		
		(-11.77--11.82)	0.05		
		(-11.69--11.77)	0.08		
		(-10.68--11.69)	1.01		
		(-10.09--10.68)	0.59		
		(-9.59--10.09)	0.50		
		(-8.72--9.59)	0.87		
		(-8.49--8.72)	0.23		
		(-8.36--8.49)	0.13		
		(-7.40--8.36)	0.96		
		(-6.63--7.40)	0.77		
		(-6.31--6.63)	0.32		
		(-5.75--6.31)	0.56		
		(-5.22--5.75)	0.53		
		(-4.91--5.22)	0.31		
		(-4.12--4.91)	0.79		
		(-3.76--4.12)	0.36		
		(-3.03--3.76)	0.73		
		(-2.79--3.03)	0.24		
		(-1.94--2.79)	0.85		
		(-1.45--1.94)	0.49		
		(-0.85--1.45)	0.60		
		(0.18--0.85)	1.03		
		(0.25-0.18)	0.07		
		(0.28-0.25)	0.03		
		(1.34-0.28)	1.06		
		(2.01-1.34)	0.67		
		(2.43-2.01)	0.42		
		(3.15-2.43)	0.72		
		(3.52-3.15)	0.37		
		(3.74-3.52)	0.22		
		(4.62-3.74)	0.88		
		(5.47-4.62)	0.85		
		(5.71-5.47)	0.24		
		(6.12-5.71)	0.41		
		(6.80-6.12)	0.68		
		(7.20-6.80)	0.40		
		(7.89-7.20)	0.69		
		(8.93-7.89)	1.04		
		(8.99-8.93)	0.06		
		(9.08-8.99)	0.09		
		(10.08-9.08)	1.00		
		(10.66-10.08)	0.58		
		(11.17-10.66)	0.51		
		(12.05-11.17)	0.88		
		(12.26-12.05)	0.21		
		(12.39-12.26)	0.13		
		(13.36-12.39)	0.97		
		(14.12-13.36)	0.76		
		(14.45-14.12)	0.33		
		(14.60-14.45)	0.15		
		(15.02-14.60)	0.42		
		(15.40-15.02)	0.38		
		(15.54-15.40)	0.14		
		(15.85-15.54)	0.31		
		(16.63-15.85)	0.78		
		(17.38-16.63)	0.75		
		(17.38-17.38)	0.00		
				35.09	
26	sc1	(-17.41--17.41)	0.00		
375.00		(-17.27--17.41)	0.14		
		(-16.55--17.27)	0.72		
		(-16.18--16.55)	0.37		
		(-15.53--16.18)	0.65		
		(-15.08--15.53)	0.45		
		(-14.83--15.08)	0.25		
		(-13.99--14.83)	0.84		
		(-13.11--13.99)	0.88		
		(-12.90--13.11)	0.21		
		(-12.54--12.90)	0.36		
		(-11.81--12.54)	0.73		
		(-11.38--11.81)	0.43		
		(-10.72--11.38)	0.66		
		(-9.66--10.72)	1.06		
		(-9.63--9.66)	0.03		
		(-9.61--9.63)	0.02		
		(-9.56--9.61)	0.05		
		(-8.81--9.56)	0.75		
		(-8.53--8.81)	0.28		
		(-7.94--8.53)	0.59		
		(-7.44--7.94)	0.50		
		(-6.58--7.44)	0.86		
		(-6.35--6.58)	0.23		
		(-6.22--6.35)	0.13		
		(-5.26--6.22)	0.96		
		(-4.50--5.26)	0.76		
		(-4.17--4.50)	0.33		
		(-3.59--4.17)	0.58		
		A RIPORTARE ml	13.82		

		CALCOLO DELLE LUNGHEZZE		Foglio n. 222
SCOTICO				
N. SEZIONE PROG.	FIG.	ELEMENTI DI CALCOLO	LUNGHEZZA ELEMENTARE ml	LUNGHEZZA FIGURA ml	NOTE
		RIPORTO ml	13.82		
		(-3.07--3.59)	0.52		
		(-2.78--3.07)	0.29		
		(-1.98--2.78)	0.80		
		(-1.05--1.98)	0.93		
		(-0.89--1.05)	0.16		
		(-0.61--0.89)	0.28		
		(0.20--0.61)	0.81		
		(0.67-0.20)	0.47		
		(1.29-0.67)	0.62		
		(2.37-1.29)	1.08		
		(2.38-2.37)	0.01		
		(2.39-2.38)	0.01		
		(3.48-2.39)	1.09		
		(4.11-3.48)	0.63		
		(4.57-4.11)	0.46		
		(5.36-4.57)	0.79		
		(5.66-5.36)	0.30		
		(5.83-5.66)	0.17		
		(6.75-5.83)	0.92		
		(7.56-6.75)	0.81		
		(7.84-7.56)	0.28		
		(8.34-7.84)	0.50		
		(8.93-8.34)	0.59		
		(9.57-8.93)	0.64		
		(10.03-9.57)	0.46		
		(11.00-10.03)	0.97		
		(11.12-11.00)	0.12		
		(11.32-11.12)	0.20		
		(12.21-11.32)	0.89		
		(12.72-12.21)	0.51		
		(13.30-12.72)	0.58		
		(14.31-13.30)	1.01		
		(14.39-14.31)	0.08		
		(14.44-14.39)	0.05		
		(15.49-14.44)	1.05		
		(16.16-15.49)	0.67		
		(16.58-16.16)	0.42		
		(17.29-16.58)	0.71		
		(17.64-17.29)	0.35		
		(17.64-17.64)	0.00		
				35.05	
27 390.00	sc1	(-17.64--17.64)	0.00		
		(-17.27--17.64)	0.37		
		(-16.38--17.27)	0.89		
		(-16.18--16.38)	0.20		
		(-16.06--16.18)	0.12		
		(-15.09--16.06)	0.97		
		(-14.63--15.09)	0.46		
		(-14.00--14.63)	0.63		
		(-13.38--14.00)	0.62		
		(-12.91--13.38)	0.47		
		(-12.64--12.91)	0.27		
		(-11.82--12.64)	0.82		
		(-10.92--11.82)	0.90		
		(-10.72--10.92)	0.20		
		(-10.38--10.72)	0.34		
		(-9.63--10.38)	0.75		
		(-9.21--9.63)	0.42		
		(-8.54--9.21)	0.67		
		(-7.49--8.54)	1.05		
		(-7.45--7.49)	0.04		
		(-7.38--7.45)	0.07		
		(-6.36--7.38)	1.02		
		(-5.78--6.36)	0.58		
		(-5.27--5.78)	0.51		
		(-4.38--5.27)	0.89		
		(-4.18--4.38)	0.20		
		(-4.06--4.18)	0.12		
		(-3.09--4.06)	0.97		
		(-2.35--3.09)	0.74		
		(-2.00--2.35)	0.35		
		(-1.38--2.00)	0.62		
		(-0.91--1.38)	0.47		
		(-0.63--0.91)	0.28		
		(0.19--0.63)	0.82		
		(1.08-0.19)	0.89		
		(1.28-1.08)	0.20		
		(1.62-1.28)	0.34		
		(2.37-1.62)	0.75		
		(2.79-2.37)	0.42		
		(3.46-2.79)	0.67		
		(3.77-3.46)	0.31		
		(4.55-3.77)	0.78		
		(4.62-4.55)	0.07		
		(5.64-4.62)	1.02		
		(6.22-5.64)	0.58		
		(6.73-6.22)	0.51		
		(7.62-6.73)	0.89		
		(7.82-7.62)	0.20		
		(7.94-7.82)	0.12		
		(8.91-7.94)	0.97		
		(9.65-8.91)	0.74		
		(10.00-9.65)	0.35		
		(10.62-10.00)	0.62		
		(11.09-10.62)	0.47		
		(11.37-11.09)	0.28		
		(12.19-11.37)	0.82		
		(13.08-12.19)	0.89		
		(13.28-13.08)	0.20		
		(13.62-13.28)	0.34		
		(14.37-13.62)	0.75		
		(14.80-14.37)	0.43		
		(15.46-14.80)	0.66		
		(16.51-15.46)	1.05		
		A RIPORTARE ml	34.15		

		CALCOLO DELLE LUNGHEZZE		Foglio n. 223	
SCOTICO					
N. SEZIONE PROG.	FIG.	ELEMENTI DI CALCOLO	LUNGHEZZA ELEMENTARE ml	LUNGHEZZA FIGURA ml	NOTE
		RIPORTO ml	34.15		
		(16.55-16.51)	0.04		
		(16.62-16.55)	0.07		
		(17.64-16.62)	1.02		
		(17.78-17.64)	0.14		
		(17.78-17.78)	0.00		
				35.42	
28	sc1	(-17.65--17.65)	0.00		
405.00		(-17.26--17.65)	0.39		
		(-17.24--17.26)	0.02		
		(-17.21--17.24)	0.03		
		(-16.15--17.21)	1.06		
		(-15.55--16.15)	0.60		
		(-15.06--15.55)	0.49		
		(-14.20--15.06)	0.86		
		(-13.97--14.20)	0.23		
		(-13.85--13.97)	0.12		
		(-12.88--13.85)	0.97		
		(-12.14--12.88)	0.74		
		(-11.79--12.14)	0.35		
		(-11.18--11.79)	0.61		
		(-10.70--11.18)	0.48		
		(-10.43--10.70)	0.27		
		(-9.61--10.43)	0.82		
		(-8.72--9.61)	0.89		
		(-8.52--8.72)	0.20		
		(-8.16--8.52)	0.36		
		(-7.43--8.16)	0.73		
		(-7.02--7.43)	0.41		
		(-6.34--7.02)	0.68		
		(-5.31--6.34)	1.03		
		(-5.25--5.31)	0.06		
		(-5.15--5.25)	0.10		
		(-4.16--5.15)	0.99		
		(-3.60--4.16)	0.56		
		(-3.07--3.60)	0.53		
		(-2.13--3.07)	0.94		
		(-1.98--2.13)	0.15		
		(-1.22--1.98)	0.76		
		(-0.89--1.22)	0.33		
		(-0.19--0.89)	0.70		
		(0.20--0.19)	0.39		
		(0.89-0.20)	0.69		
		(1.29-0.89)	0.40		
		(1.52-1.29)	0.23		
		(2.38-1.52)	0.86		
		(3.23-2.38)	0.85		
		(3.47-3.23)	0.24		
		(3.90-3.47)	0.43		
		(4.56-3.90)	0.66		
		(4.93-4.56)	0.37		
		(5.65-4.93)	0.72		
		(6.64-5.65)	0.99		
		(6.74-6.64)	0.10		
		(6.92-6.74)	0.18		
		(7.83-6.92)	0.91		
		(8.35-7.83)	0.52		
		(8.92-8.35)	0.57		
		(9.94-8.92)	1.02		
		(10.01-9.94)	0.07		
		(10.05-10.01)	0.04		
		(11.10-10.05)	1.05		
		(11.76-11.10)	0.66		
		(12.19-11.76)	0.43		
		(12.95-12.19)	0.76		
		(13.19-12.95)	0.24		
		(13.28-13.19)	0.09		
		(14.00-13.28)	0.72		
		(14.37-14.00)	0.37		
		(14.80-14.37)	0.43		
		(15.46-14.80)	0.66		
		(15.60-15.46)	0.14		
		(15.97-15.60)	0.37		
		(16.55-15.97)	0.58		
		(16.88-16.55)	0.33		
		(17.64-16.88)	0.76		
		(17.90-17.64)	0.26		
		(17.90-17.90)	0.00		
				35.55	
29	sc1	(-17.94--17.94)	0.00		
420.00		(-17.19--17.94)	0.75		
		(-16.72--17.19)	0.47		
		(-16.10--16.72)	0.62		
		(-15.02--16.10)	1.08		
		(-15.01--15.02)	0.01		
		(-14.99--15.01)	0.02		
		(-13.92--14.99)	1.07		
		(-13.32--13.92)	0.60		
		(-12.83--13.32)	0.49		
		(-11.96--12.83)	0.87		
		(-11.74--11.96)	0.22		
		(-11.62--11.74)	0.12		
		(-10.65--11.62)	0.97		
		(-9.92--10.65)	0.73		
		(-9.56--9.92)	0.36		
		(-8.92--9.56)	0.64		
		(-8.47--8.92)	0.45		
		(-8.22--8.47)	0.25		
		(-7.38--8.22)	0.84		
		(-6.99--7.38)	0.39		
		(-6.29--6.99)	0.70		
		(-5.89--6.29)	0.40		
		(-5.20--5.89)	0.69		
		(-4.82--5.20)	0.38		
		(-4.11--4.82)	0.71		
		A RIPORTARE ml	13.83		

		CALCOLO DELLE LUNGHEZZE		Foglio n. 224
SCOTICO				
N. SEZIONE PROG.	FIG.	ELEMENTI DI CALCOLO	LUNGHEZZA ELEMENTARE ml	LUNGHEZZA FIGURA ml	NOTE
		RIPORTO ml	13.83		
		(-3.12--4.11)	0.99		
		(-3.02--3.12)	0.10		
		(-2.86--3.02)	0.16		
		(-1.93--2.86)	0.93		
		(-1.42--1.93)	0.51		
		(-0.84--1.42)	0.58		
		(0.18--0.84)	1.02		
		(0.24-0.18)	0.06		
		(0.28-0.24)	0.04		
		(1.33-0.28)	1.05		
		(1.98-1.33)	0.65		
		(2.42-1.98)	0.44		
		(3.21-2.42)	0.79		
		(3.51-3.21)	0.30		
		(3.68-3.51)	0.17		
		(4.60-3.68)	0.92		
		(5.38-4.60)	0.78		
		(5.69-5.38)	0.31		
		(6.24-5.69)	0.55		
		(6.78-6.24)	0.54		
		(7.08-6.78)	0.30		
		(7.87-7.08)	0.79		
		(8.78-7.87)	0.91		
		(8.96-8.78)	0.18		
		(9.28-8.96)	0.32		
		(10.05-9.28)	0.77		
		(10.48-10.05)	0.43		
		(11.14-10.48)	0.66		
		(12.18-11.14)	1.04		
		(12.23-12.18)	0.05		
		(12.25-12.23)	0.02		
		(12.31-12.25)	0.06		
		(13.05-12.31)	0.74		
		(13.32-13.05)	0.27		
		(13.88-13.32)	0.56		
		(14.41-13.88)	0.53		
		(15.34-14.41)	0.93		
		(15.50-15.34)	0.16		
		(15.58-15.50)	0.08		
		(16.59-15.58)	1.01		
		(17.28-16.59)	0.69		
		(17.68-17.28)	0.40		
		(17.95-17.68)	0.27		
		(17.95-17.95)	0.00		
				35.89	
30 435.00	sc1	(-19.50--19.50)	0.00		
		(-19.28--19.50)	0.22		
		(-18.81--19.28)	0.47		
		(-18.19--18.81)	0.62		
		(-17.84--18.19)	0.35		
		(-17.10--17.84)	0.74		
		(-16.15--17.10)	0.95		
		(-16.01--16.15)	0.14		
		(-15.76--16.01)	0.25		
		(-14.92--15.76)	0.84		
		(-14.45--14.92)	0.47		
		(-13.83--14.45)	0.62		
		(-12.76--13.83)	1.07		
		(-12.74--12.76)	0.02		
		(-12.74--12.74)	0.00		
		(-12.71--12.74)	0.03		
		(-11.93--12.71)	0.78		
		(-11.66--11.93)	0.27		
		(-11.07--11.66)	0.59		
		(-10.57--11.07)	0.50		
		(-9.66--10.57)	0.91		
		(-9.48--9.66)	0.18		
		(-9.38--9.48)	0.10		
		(-8.39--9.38)	0.99		
		(-7.68--8.39)	0.71		
		(-7.30--7.68)	0.38		
		(-6.61--7.30)	0.69		
		(-6.21--6.61)	0.40		
		(-5.99--6.21)	0.22		
		(-5.12--5.99)	0.87		
		(-4.30--5.12)	0.82		
		(-4.03--4.30)	0.27		
		(-3.56--4.03)	0.47		
		(-2.95--3.56)	0.61		
		(-2.60--2.95)	0.35		
		(-1.86--2.60)	0.74		
		(-0.91--1.86)	0.95		
		(-0.77--0.91)	0.14		
		(-0.51--0.77)	0.26		
		(0.32--0.51)	0.83		
		(0.78-0.32)	0.46		
		(1.41-0.78)	0.63		
		(2.47-1.41)	1.06		
		(2.50-2.47)	0.03		
		(2.54-2.50)	0.04		
		(3.59-2.54)	1.05		
		(4.17-3.59)	0.58		
		(4.67-4.17)	0.50		
		(5.59-4.67)	0.92		
		(5.76-5.59)	0.17		
		(5.86-5.76)	0.10		
		(6.85-5.86)	0.99		
		(7.32-6.85)	0.47		
		(7.94-7.32)	0.62		
		(8.64-7.94)	0.70		
		(9.03-8.64)	0.39		
		(9.24-9.03)	0.21		
		(10.12-9.24)	0.88		
		(10.94-10.12)	0.82		
		A RIPORTARE ml	30.44		

		CALCOLO DELLE LUNGHEZZE		Foglio n. 225
SCOTICO				
N. SEZIONE PROG.	FIG.	ELEMENTI DI CALCOLO	LUNGHEZZA ELEMENTARE ml	LUNGHEZZA FIGURA ml	NOTE
		RIPORTO ml	30.44		
		(11.21-10.94)	0.27		
		(11.69-11.21)	0.48		
		(12.29-11.69)	0.60		
		(12.63-12.29)	0.34		
		(13.38-12.63)	0.75		
		(14.32-13.38)	0.94		
		(14.47-14.32)	0.15		
		(14.74-14.47)	0.27		
		(15.56-14.74)	0.82		
		(16.02-15.56)	0.46		
		(16.65-16.02)	0.63		
		(17.71-16.65)	1.06		
		(17.74-17.71)	0.03		
		(17.79-17.74)	0.05		
		(17.94-17.79)	0.15		
		(17.94-17.94)	0.00		
				37.44	
31	sc1	(-14.70--14.70)	0.00		
450.00		(-13.87--14.70)	0.83		
		(-13.72--13.87)	0.15		
		(-13.45--13.72)	0.27		
		(-12.63--13.45)	0.82		
		(-12.18--12.63)	0.45		
		(-11.54--12.18)	0.64		
		(-10.49--11.54)	1.05		
		(-10.45--10.49)	0.04		
		(-10.38--10.45)	0.07		
		(-9.37--10.38)	1.01		
		(-8.81--9.37)	0.56		
		(-8.28--8.81)	0.53		
		(-8.03--8.28)	0.25		
		(-7.31--8.03)	0.72		
		(-7.19--7.31)	0.12		
		(-7.12--7.19)	0.07		
		(-6.10--7.12)	1.02		
		(-5.44--6.10)	0.66		
		(-5.01--5.44)	0.43		
		(-4.25--5.01)	0.76		
		(-3.93--4.25)	0.32		
		(-3.75--3.93)	0.18		
		(-2.84--3.75)	0.91		
		(-2.07--2.84)	0.77		
		(-1.75--2.07)	0.32		
		(-1.18--1.75)	0.57		
		(-0.66--1.18)	0.52		
		(-0.38--0.66)	0.28		
		(0.42--0.38)	0.80		
		(1.30-0.42)	0.88		
		(1.51-1.30)	0.21		
		(1.61-1.51)	0.10		
		(1.89-1.61)	0.28		
		(2.41-1.89)	0.52		
		(2.60-2.41)	0.19		
		(2.99-2.60)	0.39		
		(3.69-2.99)	0.70		
		(4.68-3.69)	0.99		
		(4.78-4.68)	0.10		
		(4.96-4.78)	0.18		
		(5.86-4.96)	0.90		
		(6.36-5.86)	0.50		
		(6.95-6.36)	0.59		
		(8.02-6.95)	1.07		
		(8.04-8.02)	0.02		
		(8.05-8.04)	0.01		
		(9.13-8.05)	1.08		
		(9.73-9.13)	0.60		
		(10.21-9.73)	0.48		
		(11.09-10.21)	0.88		
		(11.30-11.09)	0.21		
		(11.42-11.30)	0.12		
		(12.39-11.42)	0.97		
		(13.10-12.39)	0.71		
		(13.48-13.10)	0.38		
		(14.16-13.48)	0.68		
		(14.57-14.16)	0.41		
		(14.79-14.57)	0.22		
		(15.65-14.79)	0.86		
		(16.47-15.65)	0.82		
		(16.74-16.47)	0.27		
		(17.23-16.74)	0.49		
		(17.83-17.23)	0.60		
		(17.98-17.83)	0.15		
		(17.98-17.98)	0.00		
				32.68	
32	sc1	(-14.78--14.78)	0.00		
465.00		(-14.66--14.78)	0.12		
		(-14.16--14.66)	0.50		
		(-13.57--14.16)	0.59		
		(-13.25--13.57)	0.32		
		(-12.49--13.25)	0.76		
		(-11.57--12.49)	0.92		
		(-11.40--11.57)	0.17		
		(-11.08--11.40)	0.32		
		(-10.31--11.08)	0.77		
		(-9.90--10.31)	0.41		
		(-9.23--9.90)	0.67		
		(-8.22--9.23)	1.01		
		(-8.14--8.22)	0.08		
		(-7.99--8.14)	0.15		
		(-7.05--7.99)	0.94		
		(-6.54--7.05)	0.51		
		(-5.96--6.54)	0.58		
		(-4.91--5.96)	1.05		
		(-4.88--4.91)	0.03		
		A RIPORTARE ml	9.90		

		CALCOLO DELLE LUNGHEZZE		Foglio n. 226
SCOTICO				
N. SEZIONE PROG.	FIG.	ELEMENTI DI CALCOLO	LUNGHEZZA ELEMENTARE ml	LUNGHEZZA FIGURA ml	NOTE
		RIPORTO ml	9.90		
		(-4.86--4.88)	0.02		
		(-3.79--4.86)	1.07		
		(-3.28--3.79)	0.51		
		(-2.70--3.28)	0.58		
		(-1.82--2.70)	0.88		
		(-1.62--1.82)	0.20		
		(-1.50--1.62)	0.12		
		(-0.53--1.50)	0.97		
		(0.17--0.53)	0.70		
		(0.56-0.17)	0.39		
		(1.26-0.56)	0.70		
		(1.65-1.26)	0.39		
		(1.85-1.65)	0.20		
		(2.73-1.85)	0.88		
		(3.53-2.73)	0.80		
		(3.82-3.53)	0.29		
		(4.35-3.82)	0.53		
		(4.91-4.35)	0.56		
		(5.21-4.91)	0.30		
		(5.99-5.21)	0.78		
		(6.89-5.99)	0.90		
		(7.08-6.89)	0.19		
		(7.43-7.08)	0.35		
		(8.17-7.43)	0.74		
		(8.57-8.17)	0.40		
		(9.26-8.57)	0.69		
		(10.25-9.26)	0.99		
		(10.34-10.25)	0.09		
		(10.52-10.34)	0.18		
		(11.43-10.52)	0.91		
		(11.92-11.43)	0.49		
		(12.52-11.92)	0.60		
		(13.60-12.52)	1.08		
		(13.60-13.60)	0.00		
		(13.60-13.60)	0.00		
		(14.69-13.60)	1.09		
		(15.21-14.69)	0.52		
		(15.78-15.21)	0.57		
		(16.69-15.78)	0.91		
		(16.86-16.69)	0.17		
		(16.96-16.86)	0.10		
		(17.95-16.96)	0.99		
		(18.13-17.95)	0.18		
		(18.13-18.13)	0.00		
				32.91	
33 480.00	sc1	(-14.97--14.97)	0.00		
		(-14.85--14.97)	0.12		
		(-14.49--14.85)	0.36		
		(-14.29--14.49)	0.20		
		(-13.40--14.29)	0.89		
		(-12.62--13.40)	0.78		
		(-12.31--12.62)	0.31		
		(-11.75--12.31)	0.56		
		(-11.23--11.75)	0.52		
		(-10.94--11.23)	0.29		
		(-10.14--10.94)	0.80		
		(-9.27--10.14)	0.87		
		(-9.05--9.27)	0.22		
		(-8.95--9.05)	0.10		
		(-8.65--8.95)	0.30		
		(-8.14--8.65)	0.51		
		(-7.97--8.14)	0.17		
		(-7.60--7.97)	0.37		
		(-6.88--7.60)	0.72		
		(-5.93--6.88)	0.95		
		(-5.79--5.93)	0.14		
		(-5.54--5.79)	0.25		
		(-4.71--5.54)	0.83		
		(-4.26--4.71)	0.45		
		(-3.62--4.26)	0.64		
		(-2.59--3.62)	1.03		
		(-2.54--2.59)	0.05		
		(-2.44--2.54)	0.10		
		(-1.45--2.44)	0.99		
		(-0.92--1.45)	0.53		
		(-0.36--0.92)	0.56		
		(0.66--0.36)	1.02		
		(0.72-0.66)	0.06		
		(0.76-0.72)	0.04		
		(1.81-0.76)	1.05		
		(2.43-1.81)	0.62		
		(2.90-2.43)	0.47		
		(3.76-2.90)	0.86		
		(3.98-3.76)	0.22		
		(4.10-3.98)	0.12		
		(5.07-4.10)	0.97		
		(5.77-5.07)	0.70		
		(6.15-5.77)	0.38		
		(6.87-6.15)	0.72		
		(7.24-6.87)	0.37		
		(7.44-7.24)	0.20		
		(8.33-7.44)	0.89		
		(9.11-8.33)	0.78		
		(9.41-9.11)	0.30		
		(9.56-9.41)	0.15		
		(9.97-9.56)	0.41		
		(10.36-9.97)	0.39		
		(10.50-10.36)	0.14		
		(10.79-10.50)	0.29		
		(11.59-10.79)	0.80		
		(12.46-11.59)	0.87		
		(12.67-12.46)	0.21		
		(13.07-12.67)	0.40		
		(13.76-13.07)	0.69		
		A RIPORTARE ml	28.73		

		CALCOLO DELLE LUNGHEZZE		Foglio n. 227
SCOTICO				
N. SEZIONE PROG.	FIG.	ELEMENTI DI CALCOLO	LUNGHEZZA ELEMENTARE ml	LUNGHEZZA FIGURA ml	NOTE
		RIPORTO ml	28.73		
		(14.13-13.76)	0.37		
		(14.84-14.13)	0.71		
		(15.80-14.84)	0.96		
		(15.93-15.80)	0.13		
		(16.17-15.93)	0.24		
		(17.02-16.17)	0.85		
		(17.47-17.02)	0.45		
		(18.10-17.47)	0.63		
		(18.27-18.10)	0.17		
		(18.27-18.27)	0.00		
				33.24	
34	sc1	(-14.97--14.97)	0.00		
495.00		(-14.28--14.97)	0.69		
		(-13.80--14.28)	0.48		
		(-13.20--13.80)	0.60		
		(-12.40--13.20)	0.80		
		(-12.11--12.40)	0.29		
		(-11.95--12.11)	0.16		
		(-11.02--11.95)	0.93		
		(-10.29--11.02)	0.73		
		(-9.94--10.29)	0.35		
		(-9.28--9.94)	0.66		
		(-8.85--9.28)	0.43		
		(-8.63--8.85)	0.22		
		(-7.77--8.63)	0.86		
		(-6.96--7.77)	0.81		
		(-6.68--6.96)	0.28		
		(-6.16--6.68)	0.52		
		(-5.60--6.16)	0.56		
		(-5.30--5.60)	0.30		
		(-4.51--5.30)	0.79		
		(-3.63--4.51)	0.88		
		(-3.43--3.63)	0.20		
		(-3.04--3.43)	0.39		
		(-2.34--3.04)	0.70		
		(-1.97--2.34)	0.37		
		(-1.25--1.97)	0.72		
		(-0.30--1.25)	0.95		
		(-0.17--0.30)	0.13		
		(0.08--0.17)	0.25		
		(0.92-0.08)	0.84		
		(1.36-0.92)	0.44		
		(2.00-1.36)	0.64		
		(3.03-2.00)	1.03		
		(3.09-3.03)	0.06		
		(3.20-3.09)	0.11		
		(4.17-3.20)	0.97		
		(4.73-4.17)	0.56		
		(5.26-4.73)	0.53		
		(6.32-5.26)	1.06		
		(6.34-6.32)	0.02		
		(6.36-6.34)	0.02		
		(7.43-6.36)	1.07		
		(8.02-7.43)	0.59		
		(8.52-8.02)	0.50		
		(9.44-8.52)	0.92		
		(9.60-9.44)	0.16		
		(9.69-9.60)	0.09		
		(10.69-9.69)	1.00		
		(11.35-10.69)	0.66		
		(11.77-11.35)	0.42		
		(12.56-11.77)	0.79		
		(12.86-12.56)	0.30		
		(13.02-12.86)	0.16		
		(13.94-13.02)	0.92		
		(14.68-13.94)	0.74		
		(15.03-14.68)	0.35		
		(15.68-15.03)	0.65		
		(16.11-15.68)	0.43		
		(16.34-16.11)	0.23		
		(17.20-16.34)	0.86		
		(18.01-17.20)	0.81		
		(18.29-18.01)	0.28		
		(18.46-18.29)	0.17		
		(18.46-18.46)	0.00		
				33.43	
35	sc1	(-14.85--14.85)	0.00		
510.00		(-14.58--14.85)	0.27		
		(-14.05--14.58)	0.53		
		(-13.03--14.05)	1.02		
		(-12.96--13.03)	0.07		
		(-12.93--12.96)	0.03		
		(-11.88--12.93)	1.05		
		(-11.27--11.88)	0.61		
		(-10.79--11.27)	0.48		
		(-9.89--10.79)	0.90		
		(-9.71--9.89)	0.18		
		(-9.61--9.71)	0.10		
		(-8.62--9.61)	0.99		
		(-7.95--8.62)	0.67		
		(-7.54--7.95)	0.41		
		(-6.75--7.54)	0.79		
		(-6.45--6.75)	0.30		
		(-6.30--6.45)	0.15		
		(-5.37--6.30)	0.93		
		(-4.64--5.37)	0.73		
		(-4.28--4.64)	0.36		
		(-3.61--4.28)	0.67		
		(-3.20--3.61)	0.41		
		(-2.98--3.20)	0.22		
		(-2.11--2.98)	0.87		
		(-1.32--2.11)	0.79		
		(-1.03--1.32)	0.29		
		(-0.89--1.03)	0.14		
		A RIPORTARE ml	13.96		

		CALCOLO DELLE LUNGHEZZE		Foglio n. 228
SCOTICO				
N. SEZIONE PROG.	FIG.	ELEMENTI DI CALCOLO	LUNGHEZZA ELEMENTARE ml	LUNGHEZZA FIGURA ml	NOTE
		RIPORTO ml	13.96		
		(-0.47--0.89)	0.42		
		(-0.08--0.47)	0.39		
		(0.06--0.08)	0.14		
		(0.34-0.06)	0.28		
		(1.14-0.34)	0.80		
		(1.99-1.14)	0.85		
		(2.23-1.99)	0.24		
		(2.66-2.23)	0.43		
		(3.31-2.66)	0.65		
		(3.65-3.31)	0.34		
		(4.39-3.65)	0.74		
		(5.31-4.39)	0.92		
		(5.48-5.31)	0.17		
		(5.80-5.48)	0.32		
		(6.56-5.80)	0.76		
		(6.97-6.56)	0.41		
		(7.65-6.97)	0.68		
		(8.62-7.65)	0.97		
		(8.73-8.62)	0.11		
		(8.94-8.73)	0.21		
		(9.59-8.94)	0.65		
		(9.82-9.59)	0.23		
		(10.40-9.82)	0.58		
		(10.90-10.40)	0.50		
		(11.21-10.90)	0.31		
		(11.99-11.21)	0.78		
		(12.01-11.99)	0.02		
		(12.08-12.01)	0.07		
		(13.07-12.08)	0.99		
		(13.60-13.07)	0.53		
		(14.16-13.60)	0.56		
		(15.22-14.16)	1.06		
		(15.24-15.22)	0.02		
		(15.26-15.24)	0.02		
		(16.33-15.26)	1.07		
		(16.91-16.33)	0.58		
		(17.41-16.91)	0.50		
		(17.65-17.41)	0.24		
		(18.36-17.65)	0.71		
		(18.46-18.36)	0.10		
		(18.50-18.46)	0.04		
		(18.57-18.50)	0.07		
		(19.58-18.57)	1.01		
		(19.90-19.58)	0.32		
		(19.90-19.90)	0.00		
				34.75	
36	sc2	(-14.86--14.86)	0.00		
525.00		(-14.86--14.86)	0.00		
		(-14.86--14.86)	0.00		
				0.00	
36	sc1	(-14.86--14.86)	0.00		
525.00		(-13.86--14.86)	1.00		
		(-13.78--13.86)	0.08		
		(-13.63--13.78)	0.15		
		(-12.70--13.63)	0.93		
		(-12.21--12.70)	0.49		
		(-11.61--12.21)	0.60		
		(-10.56--11.61)	1.05		
		(-10.53--10.56)	0.03		
		(-10.48--10.53)	0.05		
		(-9.45--10.48)	1.03		
		(-8.91--9.45)	0.54		
		(-8.36--8.91)	0.55		
		(-7.32--8.36)	1.04		
		(-7.28--7.32)	0.04		
		(-7.26--7.28)	0.02		
		(-6.19--7.26)	1.07		
		(-5.68--6.19)	0.51		
		(-5.11--5.68)	0.57		
		(-4.16--5.11)	0.95		
		(-4.03--4.16)	0.13		
		(-3.95--4.03)	0.08		
		(-2.94--3.95)	1.01		
		(-2.30--2.94)	0.64		
		(-1.86--2.30)	0.44		
		(-1.01--1.86)	0.85		
		(-0.77--1.01)	0.24		
		(-0.65--0.77)	0.12		
		(0.31--0.65)	0.96		
		(1.00-0.31)	0.69		
		(1.39-1.00)	0.39		
		(2.15-1.39)	0.76		
		(2.48-2.15)	0.33		
		(2.65-2.48)	0.17		
		(3.56-2.65)	0.91		
		(4.30-3.56)	0.74		
		(4.65-4.30)	0.35		
		(5.31-4.65)	0.66		
		(5.73-5.31)	0.42		
		(5.95-5.73)	0.22		
		(6.81-5.95)	0.86		
		(7.60-6.81)	0.79		
		(7.90-7.60)	0.30		
		(8.46-7.90)	0.56		
		(8.98-8.46)	0.52		
		(9.25-8.98)	0.27		
		(10.07-9.25)	0.82		
		(10.90-10.07)	0.83		
		(11.15-10.90)	0.25		
		(11.62-11.15)	0.47		
		(12.23-11.62)	0.61		
		(12.88-12.23)	0.65		
		(13.32-12.88)	0.44		
		(14.21-13.32)	0.89		
		A RIPORTARE ml	29.07		

		CALCOLO DELLE LUNGHEZZE		Foglio n. 229
SCOTICO				
N. SEZIONE PROG.	FIG.	ELEMENTI DI CALCOLO	LUNGHEZZA ELEMENTARE ml	LUNGHEZZA FIGURA ml	NOTE
		RIPORTO ml	29.07		
		(22.76-14.21)	8.55		
		(23.09-22.76)	0.33		
		(23.14-23.09)	0.05		
		(23.14-23.14)	0.00		
				38.00	
37	sc1	(-15.06--15.06)	0.00		
540.00		(-14.76--15.06)	0.30		
		(-14.57--14.76)	0.19		
		(-14.22--14.57)	0.35		
		(-13.49--14.22)	0.73		
		(-13.11--13.49)	0.38		
		(-12.41--13.11)	0.70		
		(-11.47--12.41)	0.94		
		(-11.32--11.47)	0.15		
		(-11.25--11.32)	0.07		
		(-11.04--11.25)	0.21		
		(-10.44--11.04)	0.60		
		(-10.24--10.44)	0.20		
		(-9.82--10.24)	0.42		
		(-9.16--9.82)	0.66		
		(-8.18--9.16)	0.98		
		(-8.07--8.18)	0.11		
		(-7.87--8.07)	0.20		
		(-6.99--7.87)	0.88		
		(-6.54--6.99)	0.45		
		(-5.91--6.54)	0.63		
		(-4.89--5.91)	1.02		
		(-4.82--4.89)	0.07		
		(-4.69--4.82)	0.13		
		(-3.74--4.69)	0.95		
		(-3.25--3.74)	0.49		
		(-2.66--3.25)	0.59		
		(-1.60--2.66)	1.06		
		(-1.57--1.60)	0.03		
		(-1.52--1.57)	0.05		
		(-0.49--1.52)	1.03		
		(0.04--0.49)	0.53		
		(0.59-0.04)	0.55		
		(1.66-0.59)	1.07		
		(1.68-1.66)	0.02		
		(1.69-1.68)	0.01		
		(2.76-1.69)	1.07		
		(3.33-2.76)	0.57		
		(3.84-3.33)	0.51		
		(4.84-3.84)	1.00		
		(4.93-4.84)	0.09		
		(4.97-4.93)	0.04		
		(6.01-4.97)	1.04		
		(6.62-6.01)	0.61		
		(7.09-6.62)	0.47		
		(7.33-7.09)	0.24		
		(8.01-7.33)	0.68		
		(8.13-8.01)	0.12		
		(8.18-8.13)	0.05		
		(8.26-8.18)	0.08		
		(9.26-8.26)	1.00		
		(9.91-9.26)	0.65		
		(10.34-9.91)	0.43		
		(11.19-10.34)	0.85		
		(11.43-11.19)	0.24		
		(11.55-11.43)	0.12		
		(12.51-11.55)	0.96		
		(13.20-12.51)	0.69		
		(13.59-13.20)	0.39		
		(14.36-13.59)	0.77		
		(14.68-14.36)	0.32		
		(14.84-14.68)	0.16		
		(14.95-14.84)	0.11		
		(14.95-14.95)	0.00		
				30.01	
38	sc1	(-27.53--27.53)	0.00		
555.00		(-27.24--27.53)	0.29		
		(-27.08--27.24)	0.16		
		(-26.16--27.08)	0.92		
		(-25.44--26.16)	0.72		
		(-25.07--25.44)	0.37		
		(-24.36--25.07)	0.71		
		(-23.99--24.36)	0.37		
		(-23.80--23.99)	0.19		
		(-22.91--23.80)	0.89		
		(-22.17--22.91)	0.74		
		(-21.83--22.17)	0.34		
		(-21.16--21.83)	0.67		
		(-20.74--21.16)	0.42		
		(-20.53--20.74)	0.21		
		(-19.66--20.53)	0.87		
		(-18.89--19.66)	0.77		
		(-18.58--18.89)	0.31		
		(-17.97--18.58)	0.61		
		(-17.62--17.97)	0.35		
		(-17.50--17.62)	0.12		
		(-16.81--17.50)	0.69		
		(-16.41--16.81)	0.40		
		(-15.62--16.41)	0.79		
		(-15.33--15.62)	0.29		
		(-14.78--15.33)	0.55		
		(-14.25--14.78)	0.53		
		(-13.98--14.25)	0.27		
		(-13.17--13.98)	0.81		
		(-12.34--13.17)	0.83		
		(-12.08--12.34)	0.26		
		(-11.58--12.08)	0.50		
		(-11.00--11.58)	0.58		
		(-10.70--11.00)	0.30		
		A RIPORTARE ml	16.83		

		CALCOLO DELLE LUNGHEZZE		Foglio n. 230
SCOTICO				
N. SEZIONE PROG.	FIG.	ELEMENTI DI CALCOLO	LUNGHEZZA ELEMENTARE ml	LUNGHEZZA FIGURA ml	NOTE
		RIPORTO ml	16.83		
		(-9.92--10.70)	0.78		
		(-9.07--9.92)	0.85		
		(-8.84--9.07)	0.23		
		(-8.39--8.84)	0.45		
		(-7.75--8.39)	0.64		
		(-7.43--7.75)	0.32		
		(-6.67--7.43)	0.76		
		(-5.79--6.67)	0.88		
		(-5.59--5.79)	0.20		
		(-5.19--5.59)	0.40		
		(-4.51--5.19)	0.68		
		(-4.15--4.51)	0.36		
		(-3.42--4.15)	0.73		
		(-2.52--3.42)	0.90		
		(-2.34--2.52)	0.18		
		(-2.00--2.34)	0.34		
		(-1.26--2.00)	0.74		
		(-0.88--1.26)	0.38		
		(-0.18--0.88)	0.70		
		(0.76--0.18)	0.94		
		(0.91-0.76)	0.15		
		(1.19-0.91)	0.28		
		(1.99-1.19)	0.80		
		(2.60-1.99)	0.61		
		(3.07-2.60)	0.47		
		(4.03-3.07)	0.96		
		(4.15-4.03)	0.12		
		(4.39-4.15)	0.24		
		(5.24-4.39)	0.85		
		(5.67-5.24)	0.43		
		(6.32-5.67)	0.65		
		(7.31-6.32)	0.99		
		(7.40-7.31)	0.09		
		(7.58-7.40)	0.18		
		(8.48-7.58)	0.90		
		(8.95-8.48)	0.47		
		(9.57-8.95)	0.62		
		(10.59-9.57)	1.02		
		(10.65-10.59)	0.06		
		(10.78-10.65)	0.13		
		(11.73-10.78)	0.95		
		(12.22-11.73)	0.49		
		(12.82-12.22)	0.60		
		(13.86-12.82)	1.04		
		(13.90-13.86)	0.04		
		(13.97-13.90)	0.07		
		(14.98-13.97)	1.01		
		(15.11-14.98)	0.13		
		(15.11-15.11)	0.00		
				42.64	
39 570.00	sc1	(-26.20--26.20)	0.00		
		(-25.80--26.20)	0.40		
		(-24.95--25.80)	0.85		
		(-24.71--24.95)	0.24		
		(-24.59--24.71)	0.12		
		(-23.63--24.59)	0.96		
		(-22.96--23.63)	0.67		
		(-22.55--22.96)	0.41		
		(-21.74--22.55)	0.81		
		(-21.47--21.74)	0.27		
		(-20.73--21.47)	0.74		
		(-20.39--20.73)	0.34		
		(-19.70--20.39)	0.69		
		(-19.31--19.70)	0.39		
		(-18.52--19.31)	0.79		
		(-18.22--18.52)	0.30		
		(-18.07--18.22)	0.15		
		(-17.14--18.07)	0.93		
		(-16.44--17.14)	0.70		
		(-16.06--16.44)	0.38		
		(-15.31--16.06)	0.75		
		(-14.98--15.31)	0.33		
		(-14.81--14.98)	0.17		
		(-13.90--14.81)	0.91		
		(-13.18--13.90)	0.72		
		(-12.81--13.18)	0.37		
		(-12.10--12.81)	0.71		
		(-11.73--12.10)	0.37		
		(-11.55--11.73)	0.18		
		(-10.65--11.55)	0.90		
		(-9.92--10.65)	0.73		
		(-9.57--9.92)	0.35		
		(-8.89--9.57)	0.68		
		(-8.49--8.89)	0.40		
		(-8.28--8.49)	0.21		
		(-7.40--8.28)	0.88		
		(-6.65--7.40)	0.75		
		(-6.32--6.65)	0.33		
		(-5.67--6.32)	0.65		
		(-5.24--5.67)	0.43		
		(-5.02--5.24)	0.22		
		(-4.16--5.02)	0.86		
		(-3.39--4.16)	0.77		
		(-3.08--3.39)	0.31		
		(-2.92--3.08)	0.16		
		(-2.46--2.92)	0.46		
		(-2.11--2.46)	0.35		
		(-2.00--2.11)	0.11		
		(-1.76--2.00)	0.24		
		(-0.91--1.76)	0.85		
		(-0.13--0.91)	0.78		
		(0.17--0.13)	0.30		
		(0.75-0.17)	0.58		
		(1.25-0.75)	0.50		
		A RIPORTARE ml	27.45		

		CALCOLO DELLE LUNGHEZZE		Foglio n. 231
SCOTICO				
N. SEZIONE PROG.	FIG.	ELEMENTI DI CALCOLO	LUNGHEZZA ELEMENTARE ml	LUNGHEZZA FIGURA ml	NOTE
		RIPORTO ml	27.45		
		(1.50-1.25)	0.25		
		(2.33-1.50)	0.83		
		(3.13-2.33)	0.80		
		(3.41-3.13)	0.28		
		(3.97-3.41)	0.56		
		(4.50-3.97)	0.53		
		(4.76-4.50)	0.26		
		(5.58-4.76)	0.82		
		(6.39-5.58)	0.81		
		(6.66-6.39)	0.27		
		(7.18-6.66)	0.52		
		(7.74-7.18)	0.56		
		(8.03-7.74)	0.29		
		(8.82-8.03)	0.79		
		(9.66-8.82)	0.84		
		(9.90-9.66)	0.24		
		(10.39-9.90)	0.49		
		(10.99-10.39)	0.60		
		(11.29-10.99)	0.30		
		(12.07-11.29)	0.78		
		(12.92-12.07)	0.85		
		(13.15-12.92)	0.23		
		(13.61-13.15)	0.46		
		(14.23-13.61)	0.62		
		(14.55-14.23)	0.32		
		(15.17-14.55)	0.62		
		(15.17-15.17)	0.00		
				41.37	
40 585.00	sc1	(-28.23--28.23)	0.00		
		(-27.57--28.23)	0.66		
		(-26.97--27.57)	0.60		
		(-26.49--26.97)	0.48		
		(-26.24--26.49)	0.25		
		(-25.52--26.24)	0.72		
		(-25.43--25.52)	0.09		
		(-25.41--25.43)	0.02		
		(-25.35--25.41)	0.06		
		(-24.32--25.35)	1.03		
		(-23.72--24.32)	0.60		
		(-23.24--23.72)	0.48		
		(-22.29--23.24)	0.95		
		(-22.16--22.29)	0.13		
		(-22.10--22.16)	0.06		
		(-21.08--22.10)	1.02		
		(-20.47--21.08)	0.61		
		(-20.00--20.47)	0.47		
		(-19.06--20.00)	0.94		
		(-18.92--19.06)	0.14		
		(-18.85--18.92)	0.07		
		(-17.84--18.85)	1.01		
		(-17.23--17.84)	0.61		
		(-16.76--17.23)	0.47		
		(-15.82--16.76)	0.94		
		(-15.68--15.82)	0.14		
		(-15.60--15.68)	0.08		
		(-14.59--15.60)	1.01		
		(-13.98--14.59)	0.61		
		(-13.51--13.98)	0.47		
		(-12.59--13.51)	0.92		
		(-12.43--12.59)	0.16		
		(-12.35--12.43)	0.08		
		(-11.35--12.35)	1.00		
		(-10.73--11.35)	0.62		
		(-10.27--10.73)	0.46		
		(-9.36--10.27)	0.91		
		(-9.19--9.36)	0.17		
		(-8.75--9.19)	0.44		
		(-8.56--8.75)	0.19		
		(-8.45--8.56)	0.11		
		(-8.27--8.45)	0.18		
		(-8.26--8.27)	0.01		
		(-8.23--8.26)	0.03		
		(-8.20--8.23)	0.03		
		(-8.11--8.20)	0.09		
		(-7.61--8.11)	0.50		
		(-7.03--7.61)	0.58		
		(-6.13--7.03)	0.90		
		(-5.95--6.13)	0.18		
		(-5.85--5.95)	0.10		
		(-4.86--5.85)	0.99		
		(-4.23--4.86)	0.63		
		(-3.78--4.23)	0.45		
		(-2.89--3.78)	0.89		
		(-2.70--2.89)	0.19		
		(-2.61--2.70)	0.09		
		(-1.62--2.61)	0.99		
		(-0.98--1.62)	0.64		
		(-0.54--0.98)	0.44		
		(0.34--0.54)	0.88		
		(0.54-0.34)	0.20		
		(1.30-0.54)	0.76		
		(1.53-1.30)	0.23		
		(1.65-1.53)	0.12		
		(1.73-1.65)	0.08		
		(1.78-1.73)	0.05		
		(1.80-1.78)	0.02		
		(1.80-1.80)	0.00		
		(1.81-1.80)	0.01		
		(1.83-1.81)	0.02		
		(2.25-1.83)	0.42		
		(2.39-2.25)	0.14		
		(2.70-2.39)	0.31		
		(3.57-2.70)	0.87		
		(3.78-3.57)	0.21		
		A RIPORTARE ml	32.01		

		CALCOLO DELLE LUNGHEZZE		Foglio n. 232
SCOTICO				
N. SEZIONE PROG.	FIG.	ELEMENTI DI CALCOLO	LUNGHEZZA ELEMENTARE ml	LUNGHEZZA FIGURA ml	NOTE
		RIPORTO ml	32.01		
		(3.89-3.78)	0.11		
		(4.87-3.89)	0.98		
		(5.52-4.87)	0.65		
		(5.95-5.52)	0.43		
		(6.80-5.95)	0.85		
		(7.03-6.80)	0.23		
		(7.14-7.03)	0.11		
		(8.11-7.14)	0.97		
		(8.77-8.11)	0.66		
		(9.19-8.77)	0.42		
		(10.03-9.19)	0.84		
		(10.27-10.03)	0.24		
		(11.02-10.27)	0.75		
		(11.35-11.02)	0.33		
		(12.01-11.35)	0.66		
		(12.43-12.01)	0.42		
		(13.27-12.43)	0.84		
		(13.51-13.27)	0.24		
		(13.64-13.51)	0.13		
		(14.60-13.64)	0.96		
		(15.17-14.60)	0.57		
		(15.17-15.17)	0.00		
				43.40	
41	sc1	(-36.23--36.23)	0.00		
600.00		(-34.71--36.23)	1.52		
		(-34.16--34.71)	0.55		
		(-33.63--34.16)	0.53		
		(-32.57--33.63)	1.06		
		(-32.55--32.57)	0.02		
		(-32.54--32.55)	0.01		
		(-31.47--32.54)	1.07		
		(-30.93--31.47)	0.54		
		(-30.39--30.93)	0.54		
		(-29.32--30.39)	1.07		
		(-29.31--29.32)	0.01		
		(-29.30--29.31)	0.01		
		(-28.23--29.30)	1.07		
		(-27.68--28.23)	0.55		
		(-27.15--27.68)	0.53		
		(-26.07--27.15)	1.08		
		(-26.07--26.07)	0.00		
		(-24.99--26.07)	1.08		
		(-24.45--24.99)	0.54		
		(-23.91--24.45)	0.54		
		(-22.83--23.91)	1.08		
		(-22.82--22.83)	0.01		
		(-22.81--22.82)	0.01		
		(-21.74--22.81)	1.07		
		(-21.21--21.74)	0.53		
		(-20.66--21.21)	0.55		
		(-19.59--20.66)	1.07		
		(-19.58--19.59)	0.01		
		(-19.56--19.58)	0.02		
		(-18.50--19.56)	1.06		
		(-17.98--18.50)	0.52		
		(-17.42--17.98)	0.56		
		(-16.36--17.42)	1.06		
		(-16.34--16.36)	0.02		
		(-16.31--16.34)	0.03		
		(-15.26--16.31)	1.05		
		(-14.74--15.26)	0.52		
		(-14.18--14.74)	0.56		
		(-13.12--14.18)	1.06		
		(-13.10--13.12)	0.02		
		(-13.09--13.10)	0.01		
		(-13.06--13.09)	0.03		
		(-12.28--13.06)	0.78		
		(-12.02--12.28)	0.26		
		(-11.50--12.02)	0.52		
		(-10.94--11.50)	0.56		
		(-9.89--10.94)	1.05		
		(-9.86--9.89)	0.03		
		(-9.81--9.86)	0.05		
		(-8.78--9.81)	1.03		
		(-8.27--8.78)	0.51		
		(-7.70--8.27)	0.57		
		(-6.65--7.70)	1.05		
		(-6.62--6.65)	0.03		
		(-6.56--6.62)	0.06		
		(-5.54--6.56)	1.02		
		(-5.03--5.54)	0.51		
		(-4.46--5.03)	0.57		
		(-3.41--4.46)	1.05		
		(-3.38--3.41)	0.03		
		(-3.30--3.38)	0.08		
		(-2.30--3.30)	1.00		
		(-1.80--2.30)	0.50		
		(-1.22--1.80)	0.58		
		(-0.18--1.22)	1.04		
		(-0.14--0.18)	0.04		
		(-0.05--0.14)	0.09		
		(0.94--0.05)	0.99		
		(1.44-0.94)	0.50		
		(2.02-1.44)	0.58		
		(3.06-2.02)	1.04		
		(3.10-3.06)	0.04		
		(3.20-3.10)	0.10		
		(4.18-3.20)	0.98		
		(4.68-4.18)	0.50		
		(5.27-4.68)	0.59		
		(5.56-5.27)	0.29		
		(6.35-5.56)	0.79		
		(6.45-6.35)	0.10		
		(7.43-6.45)	0.98		
		A RIPORTARE ml	43.66		

		CALCOLO DELLE LUNGHEZZE		Foglio n. 233
SCOTICO				
N. SEZIONE PROG.	FIG.	ELEMENTI DI CALCOLO	LUNGHEZZA ELEMENTARE ml	LUNGHEZZA FIGURA ml	NOTE
		RIPORTO ml	43.66		
		(7.91-7.43)	0.48		
		(8.51-7.91)	0.60		
		(9.53-8.51)	1.02		
		(9.59-9.53)	0.06		
		(9.70-9.59)	0.11		
		(10.67-9.70)	0.97		
		(11.15-10.67)	0.48		
		(11.75-11.15)	0.60		
		(12.77-11.75)	1.02		
		(12.83-12.77)	0.06		
		(12.95-12.83)	0.12		
		(13.91-12.95)	0.96		
		(14.38-13.91)	0.47		
		(14.99-14.38)	0.61		
		(15.25-14.99)	0.26		
		(15.25-15.25)	0.00		
				51.48	
42	sc1	(-31.43--31.43)	0.00		
615.00		(-31.01--31.43)	0.42		
		(-29.97--31.01)	1.04		
		(-29.93--29.97)	0.04		
		(-29.86--29.93)	0.07		
		(-28.86--29.86)	1.00		
		(-28.36--28.86)	0.50		
		(-27.78--28.36)	0.58		
		(-26.75--27.78)	1.03		
		(-26.70--26.75)	0.05		
		(-26.59--26.70)	0.11		
		(-25.62--26.59)	0.97		
		(-25.14--25.62)	0.48		
		(-24.54--25.14)	0.60		
		(-23.53--24.54)	1.01		
		(-23.46--23.53)	0.07		
		(-23.32--23.46)	0.14		
		(-22.38--23.32)	0.94		
		(-21.91--22.38)	0.47		
		(-21.30--21.91)	0.61		
		(-20.30--21.30)	1.00		
		(-20.22--20.30)	0.08		
		(-20.05--20.22)	0.17		
		(-19.14--20.05)	0.91		
		(-18.69--19.14)	0.45		
		(-18.06--18.69)	0.63		
		(-17.74--18.06)	0.32		
		(-16.98--17.74)	0.76		
		(-16.77--16.98)	0.21		
		(-15.90--16.77)	0.87		
		(-15.47--15.90)	0.43		
		(-14.82--15.47)	0.65		
		(-13.86--14.82)	0.96		
		(-13.74--13.86)	0.12		
		(-13.50--13.74)	0.24		
		(-12.66--13.50)	0.84		
		(-12.24--12.66)	0.42		
		(-11.58--12.24)	0.66		
		(-10.63--11.58)	0.95		
		(-10.50--10.63)	0.13		
		(-10.23--10.50)	0.27		
		(-9.42--10.23)	0.81		
		(-9.02--9.42)	0.40		
		(-8.34--9.02)	0.68		
		(-7.41--8.34)	0.93		
		(-7.26--7.41)	0.15		
		(-6.96--7.26)	0.30		
		(-6.18--6.96)	0.78		
		(-5.80--6.18)	0.38		
		(-5.10--5.80)	0.70		
		(-4.19--5.10)	0.91		
		(-4.02--4.19)	0.17		
		(-3.69--4.02)	0.33		
		(-2.94--3.69)	0.75		
		(-2.57--2.94)	0.37		
		(-1.86--2.57)	0.71		
		(-0.96--1.86)	0.90		
		(-0.78--0.96)	0.18		
		(-0.42--0.78)	0.36		
		(0.30--0.42)	0.72		
		(0.93-0.30)	0.63		
		(1.38-0.93)	0.45		
		(2.26-1.38)	0.88		
		(2.46-2.26)	0.20		
		(2.85-2.46)	0.39		
		(3.54-2.85)	0.69		
		(3.87-3.54)	0.33		
		(4.61-3.87)	0.74		
		(5.48-4.61)	0.87		
		(5.69-5.48)	0.21		
		(6.12-5.69)	0.43		
		(6.77-6.12)	0.65		
		(7.09-6.77)	0.32		
		(7.85-7.09)	0.76		
		(8.71-7.85)	0.86		
		(8.93-8.71)	0.22		
		(9.40-8.93)	0.47		
		(10.01-9.40)	0.61		
		(10.32-10.01)	0.31		
		(11.09-10.32)	0.77		
		(11.93-11.09)	0.84		
		(12.17-11.93)	0.24		
		(12.67-12.17)	0.50		
		(13.25-12.67)	0.58		
		(13.54-13.25)	0.29		
		(14.33-13.54)	0.79		
		(15.15-14.33)	0.82		
		A RIPORTARE ml	46.58		

		CALCOLO DELLE LUNGHEZZE		Foglio n. 234
SCOTICO				
N. SEZIONE PROG.	FIG.	ELEMENTI DI CALCOLO	LUNGHEZZA ELEMENTARE ml	LUNGHEZZA FIGURA ml	NOTE
		RIPORTO ml	46.58		
		(15.41-15.15)	0.26		
		(15.94-15.41)	0.53		
		(16.49-15.94)	0.55		
		(16.76-16.49)	0.27		
		(17.57-16.76)	0.81		
		(18.38-17.57)	0.81		
		(18.65-18.38)	0.27		
		(18.79-18.65)	0.14		
		(19.21-18.79)	0.42		
		(19.60-19.21)	0.39		
		(19.73-19.60)	0.13		
		(19.99-19.73)	0.26		
		(20.81-19.99)	0.82		
		(21.60-20.81)	0.79		
		(21.89-21.60)	0.29		
		(22.48-21.89)	0.59		
		(22.97-22.48)	0.49		
		(23.21-22.97)	0.24		
		(24.05-23.21)	0.84		
		(24.82-24.05)	0.77		
		(25.13-24.82)	0.31		
		(25.75-25.13)	0.62		
		(26.21-25.75)	0.46		
		(26.43-26.21)	0.22		
		(27.29-26.43)	0.86		
		(28.04-27.29)	0.75		
		(28.37-28.04)	0.33		
		(29.02-28.37)	0.65		
		(29.45-29.02)	0.43		
		(29.66-29.45)	0.21		
		(30.53-29.66)	0.87		
		(31.27-30.53)	0.74		
		(31.61-31.27)	0.34		
		(32.29-31.61)	0.68		
		(32.69-32.29)	0.40		
		(32.88-32.69)	0.19		
		(33.77-32.88)	0.89		
		(33.91-33.77)	0.14		
		(33.91-33.91)	0.00		
				65.34	
43 630.00	sc1	(-33.10--33.10)	0.00		
		(-32.69--33.10)	0.41		
		(-32.21--32.69)	0.48		
		(-31.61--32.21)	0.60		
		(-30.61--31.61)	1.00		
		(-30.53--30.61)	0.08		
		(-30.38--30.53)	0.15		
		(-29.45--30.38)	0.93		
		(-29.00--29.45)	0.45		
		(-28.37--29.00)	0.63		
		(-27.40--28.37)	0.97		
		(-27.29--27.40)	0.11		
		(-27.09--27.29)	0.20		
		(-26.22--27.09)	0.87		
		(-25.79--26.22)	0.43		
		(-25.14--25.79)	0.65		
		(-24.19--25.14)	0.95		
		(-24.06--24.19)	0.13		
		(-23.80--24.06)	0.26		
		(-22.98--23.80)	0.82		
		(-22.37--22.98)	0.61		
		(-21.90--22.37)	0.47		
		(-20.97--21.90)	0.93		
		(-20.82--20.97)	0.15		
		(-20.51--20.82)	0.31		
		(-19.74--20.51)	0.77		
		(-19.37--19.74)	0.37		
		(-18.66--19.37)	0.71		
		(-17.76--18.66)	0.90		
		(-17.58--17.76)	0.18		
		(-17.21--17.58)	0.37		
		(-16.51--17.21)	0.70		
		(-16.16--16.51)	0.35		
		(-15.43--16.16)	0.73		
		(-14.55--15.43)	0.88		
		(-14.35--14.55)	0.20		
		(-13.92--14.35)	0.43		
		(-13.27--13.92)	0.65		
		(-12.95--13.27)	0.32		
		(-12.19--12.95)	0.76		
		(-11.34--12.19)	0.85		
		(-11.11--11.34)	0.23		
		(-10.63--11.11)	0.48		
		(-10.03--10.63)	0.60		
		(-9.74--10.03)	0.29		
		(-8.95--9.74)	0.79		
		(-8.13--8.95)	0.82		
		(-7.87--8.13)	0.26		
		(-7.34--7.87)	0.53		
		(-6.79--7.34)	0.55		
		(-6.53--6.79)	0.26		
		(-5.72--6.53)	0.81		
		(-4.92--5.72)	0.80		
		(-4.64--4.92)	0.28		
		(-4.49--4.64)	0.15		
		(-4.05--4.49)	0.44		
		(-3.68--4.05)	0.37		
		(-3.56--3.68)	0.12		
		(-3.32--3.56)	0.24		
		(-2.48--3.32)	0.84		
		(-1.71--2.48)	0.77		
		(-1.40--1.71)	0.31		
		(-0.76--1.40)	0.64		
		(-0.32--0.76)	0.44		
		A RIPORTARE ml	32.78		

		CALCOLO DELLE LUNGHEZZE		Foglio n. 235
SCOTICO				
N. SEZIONE PROG.	FIG.	ELEMENTI DI CALCOLO	LUNGHEZZA ELEMENTARE ml	LUNGHEZZA FIGURA ml	NOTE
		RIPORTO ml	32.78		
		(-0.11--0.32)	0.21		
		(0.76--0.11)	0.87		
		(1.50-0.76)	0.74		
		(1.84-1.50)	0.34		
		(2.53-1.84)	0.69		
		(2.92-2.53)	0.39		
		(3.10-2.92)	0.18		
		(4.00-3.10)	0.90		
		(4.71-4.00)	0.71		
		(5.07-4.71)	0.36		
		(5.82-5.07)	0.75		
		(6.15-5.82)	0.33		
		(6.31-6.15)	0.16		
		(7.23-6.31)	0.92		
		(7.92-7.23)	0.69		
		(8.31-7.92)	0.39		
		(9.12-8.31)	0.81		
		(9.39-9.12)	0.27		
		(9.52-9.39)	0.13		
		(10.47-9.52)	0.95		
		(11.13-10.47)	0.66		
		(11.55-11.13)	0.42		
		(12.41-11.55)	0.86		
		(12.63-12.41)	0.22		
		(12.73-12.63)	0.10		
		(13.71-12.73)	0.98		
		(14.20-13.71)	0.49		
		(14.78-14.20)	0.58		
		(15.70-14.78)	0.92		
		(15.86-15.70)	0.16		
		(15.94-15.86)	0.08		
		(16.94-15.94)	1.00		
		(17.55-16.94)	0.61		
		(18.02-17.55)	0.47		
		(18.99-18.02)	0.97		
		(19.10-18.99)	0.11		
		(19.16-19.10)	0.06		
		(20.18-19.16)	1.02		
		(20.76-20.18)	0.58		
		(21.26-20.76)	0.50		
		(22.28-21.26)	1.02		
		(22.34-22.28)	0.06		
		(22.37-22.34)	0.03		
		(23.42-22.37)	1.05		
		(23.97-23.42)	0.55		
		(24.50-23.97)	0.53		
		(25.57-24.50)	1.07		
		(25.57-25.57)	0.00		
		(25.58-25.57)	0.01		
		(26.65-25.58)	1.07		
		(27.18-26.65)	0.53		
		(27.73-27.18)	0.55		
		(28.79-27.73)	1.06		
		(28.81-28.79)	0.02		
		(28.86-28.81)	0.05		
		(29.89-28.86)	1.03		
		(30.39-29.89)	0.50		
		(30.97-30.39)	0.58		
		(31.26-30.97)	0.29		
		(32.05-31.26)	0.79		
		(32.15-32.05)	0.10		
		(33.13-32.15)	0.98		
		(33.60-33.13)	0.47		
		(34.12-33.60)	0.52		
		(34.12-34.12)	0.00		
				67.22	
SP40 641.94	sc1	(-32.71--32.71)	0.00		
		(-32.26--32.71)	0.45		
		(-31.61--32.26)	0.65		
		(-31.18--31.61)	0.43		
		(-30.30--31.18)	0.88		
		(-30.10--30.30)	0.20		
		(-30.01--30.10)	0.09		
		(-29.03--30.01)	0.98		
		(-28.41--29.03)	0.62		
		(-27.95--28.41)	0.46		
		(-26.99--27.95)	0.96		
		(-26.87--26.99)	0.12		
		(-26.09--26.87)	0.78		
		(-25.79--26.09)	0.30		
		(-25.21--25.79)	0.58		
		(-24.71--25.21)	0.50		
		(-23.69--24.71)	1.02		
		(-23.63--23.69)	0.06		
		(-23.61--23.63)	0.02		
		(-22.56--23.61)	1.05		
		(-22.01--22.56)	0.55		
		(-21.48--22.01)	0.53		
		(-20.41--21.48)	1.07		
		(-20.40--20.41)	0.01		
		(-20.38--20.40)	0.02		
		(-19.32--20.38)	1.06		
		(-18.81--19.32)	0.51		
		(-18.24--18.81)	0.57		
		(-17.21--18.24)	1.03		
		(-17.16--17.21)	0.05		
		(-17.07--17.16)	0.09		
		(-16.09--17.07)	0.98		
		(-15.61--16.09)	0.48		
		(-15.01--15.61)	0.60		
		(-14.01--15.01)	1.00		
		(-13.93--14.01)	0.08		
		(-13.76--13.93)	0.17		
		(-12.85--13.76)	0.91		
		A RIPORTARE ml	19.86		

		CALCOLO DELLE LUNGHEZZE		Foglio n. 236
SCOTICO				
N. SEZIONE PROG.	FIG.	ELEMENTI DI CALCOLO	LUNGHEZZA ELEMENTARE ml	LUNGHEZZA FIGURA ml	NOTE
		RIPORTO ml	19.86		
		(-12.41--12.85)	0.44		
		(-11.77--12.41)	0.64		
		(-10.81--11.77)	0.96		
		(-10.69--10.81)	0.12		
		(-10.46--10.69)	0.23		
		(-9.62--10.46)	0.84		
		(-9.21--9.62)	0.41		
		(-8.54--9.21)	0.67		
		(-8.20--8.54)	0.34		
		(-7.46--8.20)	0.74		
		(-7.15--7.46)	0.31		
		(-6.38--7.15)	0.77		
		(-6.01--6.38)	0.37		
		(-5.30--6.01)	0.71		
		(-4.41--5.30)	0.89		
		(-4.22--4.41)	0.19		
		(-3.84--4.22)	0.38		
		(-3.14--3.84)	0.70		
		(-2.81--3.14)	0.33		
		(-2.07--2.81)	0.74		
		(-1.21--2.07)	0.86		
		(-0.99--1.21)	0.22		
		(-0.54--0.99)	0.45		
		(0.09--0.54)	0.63		
		(0.39-0.09)	0.30		
		(1.17-0.39)	0.78		
		(1.99-1.17)	0.82		
		(2.25-1.99)	0.26		
		(2.77-2.25)	0.52		
		(3.33-2.77)	0.56		
		(3.59-3.33)	0.26		
		(4.40-3.59)	0.81		
		(5.19-4.40)	0.79		
		(5.48-5.19)	0.29		
		(6.08-5.48)	0.60		
		(6.56-6.08)	0.48		
		(6.79-6.56)	0.23		
		(7.64-6.79)	0.85		
		(8.39-7.64)	0.75		
		(8.72-8.39)	0.33		
		(9.39-8.72)	0.67		
		(9.80-9.39)	0.41		
		(10.51-9.80)	0.71		
		(10.87-10.51)	0.36		
		(11.59-10.87)	0.72		
		(11.95-11.59)	0.36		
		(12.69-11.95)	0.74		
		(13.03-12.69)	0.34		
		(13.19-13.03)	0.16		
		(14.11-13.19)	0.92		
		(14.80-14.11)	0.69		
		(15.19-14.80)	0.39		
		(16.00-15.19)	0.81		
		(16.27-16.00)	0.27		
		(16.40-16.27)	0.13		
		(17.35-16.40)	0.95		
		(18.00-17.35)	0.65		
		(18.42-18.00)	0.42		
		(19.31-18.42)	0.89		
		(19.65-19.31)	0.34		
		(19.98-19.65)	0.33		
		(20.25-19.98)	0.27		
		(20.46-20.25)	0.21		
		(20.64-20.46)	0.18		
		(20.80-20.64)	0.16		
		(20.93-20.80)	0.13		
		(21.46-20.93)	0.53		
		(21.47-21.46)	0.01		
		(21.51-21.47)	0.04		
		(21.57-21.51)	0.06		
		(21.69-21.57)	0.12		
		(21.82-21.69)	0.13		
		(21.97-21.82)	0.15		
		(22.15-21.97)	0.18		
		(22.35-22.15)	0.20		
		(22.59-22.35)	0.24		
		(22.62-22.59)	0.03		
		(22.74-22.62)	0.12		
		(22.80-22.74)	0.06		
		(23.82-22.80)	1.02		
		(24.40-23.82)	0.58		
		(24.89-24.40)	0.49		
		(25.92-24.89)	1.03		
		(25.97-25.92)	0.05		
		(26.00-25.97)	0.03		
		(27.05-26.00)	1.05		
		(27.59-27.05)	0.54		
		(28.13-27.59)	0.54		
		(29.20-28.13)	1.07		
		(29.21-29.20)	0.01		
		(29.23-29.21)	0.02		
		(30.29-29.23)	1.06		
		(30.80-30.29)	0.51		
		(31.36-30.80)	0.56		
		(32.40-31.36)	1.04		
		(32.44-32.40)	0.04		
		(32.54-32.44)	0.10		
		(33.52-32.54)	0.98		
		(34.00-33.52)	0.48		
		(34.53-34.00)	0.53		
		(34.53-34.53)	0.00		
				67.24	
44	sc1	(-31.61--31.61)	0.00		
645.00		(-31.21--31.61)	0.40		
		A RIPORTARE ml	0.40		

		CALCOLO DELLE LUNGHEZZE		Foglio n. 237
SCOTICO				
N. SEZIONE PROG.	FIG.	ELEMENTI DI CALCOLO	LUNGHEZZA ELEMENTARE ml	LUNGHEZZA FIGURA ml	NOTE
		RIPORTO ml	0.40		
		(-31.10--31.21)	0.11		
		(-30.87--31.10)	0.23		
		(-30.02--30.87)	0.85		
		(-29.61--30.02)	0.41		
		(-28.94--29.61)	0.67		
		(-28.01--28.94)	0.93		
		(-27.86--28.01)	0.15		
		(-27.79--27.86)	0.07		
		(-27.56--27.79)	0.23		
		(-26.98--27.56)	0.58		
		(-26.78--26.98)	0.20		
		(-26.41--26.78)	0.37		
		(-25.71--26.41)	0.70		
		(-24.81--25.71)	0.90		
		(-24.63--24.81)	0.18		
		(-24.25--24.63)	0.38		
		(-23.55--24.25)	0.70		
		(-23.21--23.55)	0.34		
		(-22.47--23.21)	0.74		
		(-21.61--22.47)	0.86		
		(-21.39--21.61)	0.22		
		(-20.94--21.39)	0.45		
		(-20.32--20.94)	0.62		
		(-20.01--20.32)	0.31		
		(-19.24--20.01)	0.77		
		(-18.41--19.24)	0.83		
		(-18.16--18.41)	0.25		
		(-17.63--18.16)	0.53		
		(-17.08--17.63)	0.55		
		(-16.82--17.08)	0.26		
		(-16.00--16.82)	0.82		
		(-15.22--16.00)	0.78		
		(-14.92--15.22)	0.30		
		(-14.32--14.92)	0.60		
		(-14.09--14.32)	0.23		
		(-12.96--14.09)	1.13		
		(-12.02--12.96)	0.94		
		(-11.69--12.02)	0.33		
		(-11.01--11.69)	0.68		
		(-10.79--11.01)	0.22		
		(-10.61--10.79)	0.18		
		(-10.60--10.61)	0.01		
		(-10.59--10.60)	0.01		
		(-9.38--10.59)	1.21		
		(-8.90--9.38)	0.48		
		(-8.47--8.90)	0.43		
		(-8.47--8.47)	0.00		
		(-8.46--8.47)	0.01		
		(-8.34--8.46)	0.12		
		(-8.31--8.34)	0.03		
		(-8.21--8.31)	0.10		
		(-8.06--8.21)	0.15		
		(-8.01--8.06)	0.05		
		(-7.98--8.01)	0.03		
		(-7.38--7.98)	0.60		
		(-7.22--7.38)	0.16		
		(-6.30--7.22)	0.92		
		(-5.62--6.30)	0.68		
		(-5.22--5.62)	0.40		
		(-4.38--5.22)	0.84		
		(-4.14--4.38)	0.24		
		(-4.02--4.14)	0.12		
		(-3.06--4.02)	0.96		
		(-2.43--3.06)	0.63		
		(-1.98--2.43)	0.45		
		(-1.07--1.98)	0.91		
		(-0.91--1.07)	0.16		
		(-0.83--0.91)	0.08		
		(0.17--0.83)	1.00		
		(0.77-0.17)	0.60		
		(1.25-0.77)	0.48		
		(2.24-1.25)	0.99		
		(2.33-2.24)	0.09		
		(2.37-2.33)	0.04		
		(3.41-2.37)	1.04		
		(3.97-3.41)	0.56		
		(4.48-3.97)	0.51		
		(5.55-4.48)	1.07		
		(5.56-5.55)	0.01		
		(5.57-5.56)	0.01		
		(6.64-5.57)	1.07		
		(7.17-6.64)	0.53		
		(7.72-7.17)	0.55		
		(8.77-7.72)	1.05		
		(8.80-8.77)	0.03		
		(8.81-8.80)	0.01		
		(8.86-8.81)	0.05		
		(9.63-8.86)	0.77		
		(9.88-9.63)	0.25		
		(10.37-9.88)	0.49		
		(10.95-10.37)	0.58		
		(11.96-10.95)	1.01		
		(12.03-11.96)	0.07		
		(12.17-12.03)	0.14		
		(13.11-12.17)	0.94		
		(13.56-13.11)	0.45		
		(14.19-13.56)	0.63		
		(15.16-14.19)	0.97		
		(15.27-15.16)	0.11		
		(15.49-15.27)	0.22		
		(16.35-15.49)	0.86		
		(16.76-16.35)	0.41		
		(17.42-16.76)	0.66		
		(18.36-17.42)	0.94		
		A RIPORTARE ml	49.97		

		CALCOLO DELLE LUNGHEZZE		Foglio n. 238
SCOTICO				
N. SEZIONE PROG.	FIG.	ELEMENTI DI CALCOLO	LUNGHEZZA ELEMENTARE ml	LUNGHEZZA FIGURA ml	NOTE
		RIPORTO ml	49.97		
		(18.50-18.36)	0.14		
		(18.80-18.50)	0.30		
		(19.58-18.80)	0.78		
		(19.96-19.58)	0.38		
		(20.66-19.96)	0.70		
		(21.56-20.66)	0.90		
		(21.74-21.56)	0.18		
		(22.11-21.74)	0.37		
		(22.82-22.11)	0.71		
		(23.16-22.82)	0.34		
		(23.89-23.16)	0.73		
		(24.76-23.89)	0.87		
		(24.97-24.76)	0.21		
		(25.42-24.97)	0.45		
		(26.05-25.42)	0.63		
		(26.71-26.05)	0.66		
		(27.13-26.71)	0.42		
		(27.95-27.13)	0.82		
		(28.21-27.95)	0.26		
		(28.73-28.21)	0.52		
		(29.28-28.73)	0.55		
		(29.55-29.28)	0.27		
		(30.36-29.55)	0.81		
		(30.46-30.36)	0.10		
		(30.85-30.46)	0.39		
		(31.44-30.85)	0.59		
		(32.04-31.44)	0.60		
		(32.52-32.04)	0.48		
		(32.75-32.52)	0.23		
		(33.60-32.75)	0.85		
		(34.35-33.60)	0.75		
		(34.43-34.35)	0.08		
		(34.43-34.43)	0.00		
				66.04	
45 660.00	sc1	(-26.57--26.57)	0.00		
		(-26.25--26.57)	0.32		
		(-25.40--26.25)	0.85		
		(-25.17--25.40)	0.23		
		(-24.68--25.17)	0.49		
		(-24.09--24.68)	0.59		
		(-23.42--24.09)	0.67		
		(-23.01--23.42)	0.41		
		(-22.61--23.01)	0.40		
		(-21.94--22.61)	0.67		
		(-21.79--21.94)	0.15		
		(-21.35--21.79)	0.44		
		(-20.86--21.35)	0.49		
		(-20.62--20.86)	0.24		
		(-19.78--20.62)	0.84		
		(-19.03--19.78)	0.75		
		(-18.70--19.03)	0.33		
		(-18.02--18.70)	0.68		
		(-17.63--18.02)	0.39		
		(-17.44--17.63)	0.19		
		(-16.55--17.44)	0.89		
		(-15.84--16.55)	0.71		
		(-15.47--15.84)	0.37		
		(-14.69--15.47)	0.78		
		(-14.39--14.69)	0.30		
		(-13.65--14.39)	0.74		
		(-13.32--13.65)	0.33		
		(-12.66--13.32)	0.66		
		(-12.24--12.66)	0.42		
		(-11.35--12.24)	0.89		
		(-11.16--11.35)	0.19		
		(-11.07--11.16)	0.09		
		(-10.08--11.07)	0.99		
		(-9.47--10.08)	0.61		
		(-9.00--9.47)	0.47		
		(-8.02--9.00)	0.98		
		(-7.93--8.02)	0.09		
		(-7.88--7.93)	0.05		
		(-6.85--7.88)	1.03		
		(-6.29--6.85)	0.56		
		(-5.77--6.29)	0.52		
		(-4.70--5.77)	1.07		
		(-4.69--4.70)	0.01		
		(-4.69--4.69)	0.00		
		(-3.62--4.69)	1.07		
		(-3.10--3.62)	0.52		
		(-2.54--3.10)	0.56		
		(-1.51--2.54)	1.03		
		(-1.46--1.51)	0.05		
		(-1.45--1.46)	0.01		
		(-1.45--1.45)	0.00		
		(-1.37--1.45)	0.08		
		(-1.37--1.37)	0.00		
		(-1.16--1.37)	0.21		
		(-1.13--1.16)	0.03		
		(-0.98--1.13)	0.15		
		(-0.62--0.98)	0.36		
		(-0.38--0.62)	0.24		
		(0.08--0.38)	0.46		
		(0.69-0.08)	0.61		
		(1.67-0.69)	0.98		
		(1.77-1.67)	0.10		
		(1.79-1.77)	0.02		
		(1.79-1.79)	0.00		
		(1.95-1.79)	0.16		
		(2.06-1.95)	0.11		
		(2.11-2.06)	0.05		
		(2.26-2.11)	0.15		
		(2.63-2.26)	0.37		
		(2.85-2.63)	0.22		
		A RIPORTARE ml	29.42		

		CALCOLO DELLE LUNGHEZZE		Foglio n. 239
SCOTICO				
N. SEZIONE PROG.	FIG.	ELEMENTI DI CALCOLO	LUNGHEZZA ELEMENTARE ml	LUNGHEZZA FIGURA ml	NOTE
		RIPORTO ml	29.42		
		(3.27-2.85)	0.42		
		(3.93-3.27)	0.66		
		(4.26-3.93)	0.33		
		(5.00-4.26)	0.74		
		(5.30-5.00)	0.30		
		(6.08-5.30)	0.78		
		(6.44-6.08)	0.36		
		(6.56-6.44)	0.12		
		(6.58-6.56)	0.02		
		(6.61-6.58)	0.03		
		(6.65-6.61)	0.04		
		(6.76-6.65)	0.11		
		(6.90-6.76)	0.14		
		(7.16-6.90)	0.26		
		(8.04-7.16)	0.88		
		(8.24-8.04)	0.20		
		(8.64-8.24)	0.40		
		(9.31-8.64)	0.67		
		(9.68-9.31)	0.37		
		(9.90-9.68)	0.22		
		(9.98-9.90)	0.08		
		(10.17-9.98)	0.19		
		(10.22-10.17)	0.05		
		(10.22-10.22)	0.00		
		(10.39-10.22)	0.17		
		(11.23-10.39)	0.84		
		(11.47-11.23)	0.24		
		(11.97-11.47)	0.50		
		(12.55-11.97)	0.58		
		(12.82-12.55)	0.27		
		(13.62-12.82)	0.80		
		(14.42-13.62)	0.80		
		(14.70-14.42)	0.28		
		(15.30-14.70)	0.60		
		(15.78-15.30)	0.48		
		(16.01-15.78)	0.23		
		(16.86-16.01)	0.85		
		(17.60-16.86)	0.74		
		(17.93-17.60)	0.33		
		(18.63-17.93)	0.70		
		(19.01-18.63)	0.38		
		(19.19-19.01)	0.18		
		(20.09-19.19)	0.90		
		(20.79-20.09)	0.70		
		(21.17-20.79)	0.38		
		(21.36-21.17)	0.19		
		(21.96-21.36)	0.60		
		(22.18-21.96)	0.22		
		(22.24-22.18)	0.06		
		(22.38-22.24)	0.14		
		(23.32-22.38)	0.94		
		(23.97-23.32)	0.65		
		(24.40-23.97)	0.43		
		(25.30-24.40)	0.90		
		(25.48-25.30)	0.18		
		(25.56-25.48)	0.08		
		(26.55-25.56)	0.99		
		(27.16-26.55)	0.61		
		(27.63-27.16)	0.47		
		(28.63-27.63)	1.00		
		(28.71-28.63)	0.08		
		(28.75-28.71)	0.04		
		(29.79-28.75)	1.04		
		(30.34-29.79)	0.55		
		(30.87-30.34)	0.53		
		(31.93-30.87)	1.06		
		(31.94-31.93)	0.01		
		(31.96-31.94)	0.02		
		(33.02-31.96)	1.06		
		(33.53-33.02)	0.51		
		(34.10-33.53)	0.57		
		(35.48-34.10)	1.38		
		(35.48-35.48)	0.00		
				62.05	
46 675.00	sc1	(-14.85--14.85)	0.00		
		(-13.83--14.85)	1.02		
		(-13.26--13.83)	0.57		
		(-12.76--13.26)	0.50		
		(-11.68--12.76)	1.08		
		(-11.68--11.68)	0.00		
		(-11.68--11.68)	0.00		
		(-10.60--11.68)	1.08		
		(-10.09--10.60)	0.51		
		(-9.52--10.09)	0.57		
		(-8.51--9.52)	1.01		
		(-8.45--8.51)	0.06		
		(-8.32--8.45)	0.13		
		(-7.37--8.32)	0.95		
		(-6.92--7.37)	0.45		
		(-6.29--6.92)	0.63		
		(-5.33--6.29)	0.96		
		(-5.22--5.33)	0.11		
		(-4.97--5.22)	0.25		
		(-4.14--4.97)	0.83		
		(-3.75--4.14)	0.39		
		(-3.06--3.75)	0.69		
		(-2.16--3.06)	0.90		
		(-1.99--2.16)	0.17		
		(-1.62--1.99)	0.37		
		(-0.91--1.62)	0.71		
		(-0.27--0.91)	0.64		
		(0.17--0.27)	0.44		
		(1.01-0.17)	0.84		
		(1.24-1.01)	0.23		
		A RIPORTARE ml	16.09		

		CALCOLO DELLE LUNGHEZZE		Foglio n. 240
SCOTICO				
N. SEZIONE PROG.	FIG.	ELEMENTI DI CALCOLO	LUNGHEZZA ELEMENTARE ml	LUNGHEZZA FIGURA ml	NOTE
		RIPORTO ml	16.09		
		(1.73-1.24)	0.49		
		(2.32-1.73)	0.59		
		(2.60-2.32)	0.28		
		(3.40-2.60)	0.80		
		(4.19-3.40)	0.79		
		(4.47-4.19)	0.28		
		(5.09-4.47)	0.62		
		(5.55-5.09)	0.46		
		(5.77-5.55)	0.22		
		(6.63-5.77)	0.86		
		(7.28-6.63)	0.65		
		(7.64-7.28)	0.36		
		(7.71-7.64)	0.07		
		(8.44-7.71)	0.73		
		(8.78-8.44)	0.34		
		(8.95-8.78)	0.17		
		(9.86-8.95)	0.91		
		(10.12-9.86)	0.26		
		(10.17-10.12)	0.05		
		(10.26-10.17)	0.09		
		(10.29-10.26)	0.03		
		(10.30-10.29)	0.01		
		(10.31-10.30)	0.01		
		(10.33-10.31)	0.02		
		(10.79-10.33)	0.46		
		(10.94-10.79)	0.15		
		(11.79-10.94)	0.85		
		(12.01-11.79)	0.22		
		(12.12-12.01)	0.11		
		(13.09-12.12)	0.97		
		(13.70-13.09)	0.61		
		(14.17-13.70)	0.47		
		(15.14-14.17)	0.97		
		(15.24-15.14)	0.10		
		(15.29-15.24)	0.05		
		(16.32-15.29)	1.03		
		(16.85-16.32)	0.53		
		(17.40-16.85)	0.55		
		(18.46-17.40)	1.06		
		(18.47-18.46)	0.01		
		(18.50-18.47)	0.03		
		(19.55-18.50)	1.05		
		(20.05-19.55)	0.50		
		(20.63-20.05)	0.58		
		(21.64-20.63)	1.01		
		(21.70-21.64)	0.06		
		(21.85-21.70)	0.15		
		(22.78-21.85)	0.93		
		(23.22-22.78)	0.44		
		(23.86-23.22)	0.64		
		(24.81-23.86)	0.95		
		(24.94-24.81)	0.13		
		(25.20-24.94)	0.26		
		(26.01-25.20)	0.81		
		(26.40-26.01)	0.39		
		(27.09-26.40)	0.69		
		(27.98-27.09)	0.89		
		(28.17-27.98)	0.19		
		(28.55-28.17)	0.38		
		(29.24-28.55)	0.69		
		(29.57-29.24)	0.33		
		(30.32-29.57)	0.75		
		(31.16-30.32)	0.84		
		(31.40-31.16)	0.24		
		(31.91-31.40)	0.51		
		(32.47-31.91)	0.56		
		(32.74-32.47)	0.27		
		(33.55-32.74)	0.81		
		(34.33-33.55)	0.78		
		(34.63-34.33)	0.30		
		(34.78-34.63)	0.15		
		(37.75-34.78)	2.97		
		(37.75-37.75)	0.00		
				52.60	
47 690.00	sc1	(-5.87--5.87)	0.00		
		(-5.71--5.87)	0.16		
		(-5.59--5.71)	0.12		
		(-5.23--5.59)	0.36		
		(-4.78--5.23)	0.45		
		(-4.63--4.78)	0.15		
		(-4.35--4.63)	0.28		
		(-3.56--4.35)	0.79		
		(-2.77--3.56)	0.79		
		(-2.48--2.77)	0.29		
		(-1.85--2.48)	0.63		
		(-1.40--1.85)	0.45		
		(-1.19--1.40)	0.21		
		(-0.33--1.19)	0.86		
		(0.39--0.33)	0.72		
		(0.75-0.39)	0.36		
		(1.52-0.75)	0.77		
		(1.82-1.52)	0.30		
		(1.97-1.82)	0.15		
		(2.90-1.97)	0.93		
		(3.55-2.90)	0.65		
		(3.98-3.55)	0.43		
		(4.89-3.98)	0.91		
		(5.05-4.89)	0.16		
		(5.13-5.05)	0.08		
		(6.13-5.13)	1.00		
		(6.71-6.13)	0.58		
		(7.21-6.71)	0.50		
		(8.27-7.21)	1.06		
		(8.28-8.27)	0.01		
		A RIPORTARE ml	14.15		

		CALCOLO DELLE LUNGHEZZE		Foglio n. 241
SCOTICO				
N. SEZIONE PROG.	FIG.	ELEMENTI DI CALCOLO	LUNGHEZZA ELEMENTARE ml	LUNGHEZZA FIGURA ml	NOTE
		RIPORTO ml	14.15		
		(8.29-8.28)	0.01		
		(9.36-8.29)	1.07		
		(9.87-9.36)	0.51		
		(10.43-9.87)	0.56		
		(11.45-10.43)	1.02		
		(11.51-11.45)	0.06		
		(11.54-11.51)	0.03		
		(11.64-11.54)	0.10		
		(12.36-11.64)	0.72		
		(12.59-12.36)	0.23		
		(13.03-12.59)	0.44		
		(13.66-13.03)	0.63		
		(14.61-13.66)	0.95		
		(14.74-14.61)	0.13		
		(15.02-14.74)	0.28		
		(15.81-15.02)	0.79		
		(16.19-15.81)	0.38		
		(16.89-16.19)	0.70		
		(17.77-16.89)	0.88		
		(17.97-17.77)	0.20		
		(18.39-17.97)	0.42		
		(19.04-18.39)	0.65		
		(19.35-19.04)	0.31		
		(20.12-19.35)	0.77		
		(20.93-20.12)	0.81		
		(21.20-20.93)	0.27		
		(21.76-21.20)	0.56		
		(22.27-21.76)	0.51		
		(22.51-22.27)	0.24		
		(23.35-22.51)	0.84		
		(24.09-23.35)	0.74		
		(24.42-24.09)	0.33		
		(25.14-24.42)	0.72		
		(25.50-25.14)	0.36		
		(25.67-25.50)	0.17		
		(26.58-25.67)	0.91		
		(27.25-26.58)	0.67		
		(27.65-27.25)	0.40		
		(28.51-27.65)	0.86		
		(28.73-28.51)	0.22		
		(28.83-28.73)	0.10		
		(29.81-28.83)	0.98		
		(30.31-29.81)	0.50		
		(30.88-30.31)	0.57		
		(31.88-30.88)	1.00		
		(31.96-31.88)	0.08		
		(31.99-31.96)	0.03		
		(33.03-31.99)	1.04		
		(33.57-33.03)	0.54		
		(34.11-33.57)	0.54		
		(38.16-34.11)	4.05		
		(38.16-38.16)	0.00		
				44.03	
48 705.00	sc2	(-15.69--15.69)	0.00		
		(-15.64--15.69)	0.05		
		(-14.77--15.64)	0.87		
		(-14.37--14.77)	0.40		
		(-13.70--14.37)	0.67		
		(-12.80--13.70)	0.90		
		(-12.62--12.80)	0.18		
		(-12.24--12.62)	0.38		
		(-11.55--12.24)	0.69		
		(-11.22--11.55)	0.33		
		(-11.10--11.22)	0.12		
		(-11.10--11.10)	0.00		
				4.59	
48 705.00	sc1	(9.99-9.99)	0.00		
		(10.81-9.99)	0.82		
		(11.04-10.81)	0.23		
		(11.52-11.04)	0.48		
		(12.11-11.52)	0.59		
		(12.39-12.11)	0.28		
		(13.19-12.39)	0.80		
		(13.96-13.19)	0.77		
		(14.26-13.96)	0.30		
		(14.91-14.26)	0.65		
		(15.34-14.91)	0.43		
		(15.54-15.34)	0.20		
		(16.42-15.54)	0.88		
		(17.11-16.42)	0.69		
		(17.49-17.11)	0.38		
		(18.31-17.49)	0.82		
		(18.57-18.31)	0.26		
		(18.69-18.57)	0.12		
		(19.64-18.69)	0.95		
		(20.26-19.64)	0.62		
		(20.72-20.26)	0.46		
		(21.70-20.72)	0.98		
		(21.79-21.70)	0.09		
		(21.83-21.79)	0.04		
		(22.87-21.83)	1.04		
		(23.41-22.87)	0.54		
		(23.94-23.41)	0.53		
		(24.98-23.94)	1.04		
		(25.02-24.98)	0.04		
		(25.04-25.02)	0.02		
		(25.10-25.04)	0.06		
		(25.86-25.10)	0.76		
		(26.09-25.86)	0.23		
		(26.56-26.09)	0.47		
		(27.17-26.56)	0.61		
		(28.13-27.17)	0.96		
		(28.25-28.13)	0.12		
		(28.49-28.25)	0.24		
		A RIPORTARE ml	18.50		

		CALCOLO DELLE LUNGHEZZE		Foglio n. 242
SCOTICO				
N. SEZIONE PROG.	FIG.	ELEMENTI DI CALCOLO	LUNGHEZZA ELEMENTARE ml	LUNGHEZZA FIGURA ml	NOTE
		RIPORTO ml	18.50		
		(29.32-28.49)	0.83		
		(29.70-29.32)	0.38		
		(30.40-29.70)	0.70		
		(30.96-30.40)	0.56		
		(30.96-30.96)	0.00		
				20.97	
49 720.00	sc1	(-15.86--15.86)	0.00		
		(-15.81--15.86)	0.05		
		(-15.22--15.81)	0.59		
		(-14.54--15.22)	0.68		
		(-14.14--14.54)	0.40		
		(-13.37--14.14)	0.77		
		(-13.07--13.37)	0.30		
		(-12.41--13.07)	0.66		
		(-11.99--12.41)	0.42		
		(-11.79--11.99)	0.20		
		(-10.92--11.79)	0.87		
		(-10.22--10.92)	0.70		
		(-9.84--10.22)	0.38		
		(-9.02--9.84)	0.82		
		(-8.76--9.02)	0.26		
		(-8.65--8.76)	0.11		
		(-7.69--8.65)	0.96		
		(-7.07--7.69)	0.62		
		(-6.61--7.07)	0.46		
		(-5.63--6.61)	0.98		
		(-5.54--5.63)	0.09		
		(-5.50--5.54)	0.04		
		(-4.46--5.50)	1.04		
		(-3.92--4.46)	0.54		
		(-3.39--3.92)	0.53		
		(-2.35--3.39)	1.04		
		(-2.31--2.35)	0.04		
		(-2.23--2.31)	0.08		
		(-1.48--2.23)	0.75		
		(-1.24--1.48)	0.24		
		(-0.66--1.24)	0.58		
		(-0.16--0.66)	0.50		
		(0.16--0.16)	0.32		
		(0.47-0.16)	0.31		
		(0.47-0.47)	0.00		
				16.33	
49 720.00	sc2	(16.36-16.36)	0.00		
		(16.55-16.36)	0.19		
		(17.05-16.55)	0.50		
		(18.12-17.05)	1.07		
		(18.12-18.12)	0.00		
		(18.13-18.12)	0.01		
		(19.20-18.13)	1.07		
		(19.33-19.20)	0.13		
		(19.33-19.33)	0.00		
				2.97	
50 735.00	sc1	(-16.51--16.51)	0.00		
		(-15.90--16.51)	0.61		
		(-15.69--15.90)	0.21		
		(-15.59--15.69)	0.10		
		(-14.62--15.59)	0.97		
		(-14.01--14.62)	0.61		
		(-13.54--14.01)	0.47		
		(-12.53--13.54)	1.01		
		(-12.46--12.53)	0.07		
		(-12.43--12.46)	0.03		
		(-11.39--12.43)	1.04		
		(-10.85--11.39)	0.54		
		(-10.31--10.85)	0.54		
		(-9.27--10.31)	1.04		
		(-9.24--9.27)	0.03		
		(-9.16--9.24)	0.08		
		(-8.16--9.16)	1.00		
		(-7.69--8.16)	0.47		
		(-7.08--7.69)	0.61		
		(-6.11--7.08)	0.97		
		(-6.01--6.11)	0.10		
		(-5.79--6.01)	0.22		
		(-4.93--5.79)	0.86		
		(-4.53--4.93)	0.40		
		(-3.86--4.53)	0.67		
		(-2.95--3.86)	0.91		
		(-2.78--2.95)	0.17		
		(-2.69--2.78)	0.09		
		(-2.41--2.69)	0.28		
		(-1.87--2.41)	0.54		
		(-1.70--1.87)	0.17		
		(-1.37--1.70)	0.33		
		(-0.63--1.37)	0.74		
		(-0.24--0.63)	0.39		
		(0.21--0.24)	0.45		
		(0.40-0.21)	0.19		
		(0.50-0.40)	0.10		
		(0.57-0.50)	0.07		
		(0.96-0.57)	0.39		
		(1.53-0.96)	0.57		
		(1.99-1.53)	0.46		
		(2.31-1.99)	0.32		
		(2.35-2.31)	0.04		
		(2.39-2.35)	0.04		
		(2.40-2.39)	0.01		
		(2.60-2.40)	0.20		
		(3.37-2.60)	0.77		
		(3.68-3.37)	0.31		
		(4.33-3.68)	0.65		
		(4.75-4.33)	0.42		
		(4.99-4.75)	0.24		
		(5.25-4.99)	0.26		
		A RIPORTARE ml	21.76		

		CALCOLO DELLE LUNGHEZZE		Foglio n. 243
SCOTICO				
N. SEZIONE PROG.	FIG.	ELEMENTI DI CALCOLO	LUNGHEZZA ELEMENTARE ml	LUNGHEZZA FIGURA ml	NOTE
		RIPORTO ml	21.76		
		(5.63-5.25)	0.38		
		(5.81-5.63)	0.18		
		(5.82-5.81)	0.01		
		(5.83-5.82)	0.01		
		(5.87-5.83)	0.04		
		(5.89-5.87)	0.02		
		(5.91-5.89)	0.02		
		(5.91-5.91)	0.00		
		(5.91-5.91)	0.00		
		(6.00-5.91)	0.09		
		(6.00-6.00)	0.00		
		(6.03-6.00)	0.03		
		(6.08-6.03)	0.05		
		(6.14-6.08)	0.06		
		(6.15-6.14)	0.01		
		(6.46-6.15)	0.31		
		(6.55-6.46)	0.09		
		(6.60-6.55)	0.05		
		(6.60-6.60)	0.00		
		(6.77-6.60)	0.17		
		(7.00-6.77)	0.23		
		(7.00-7.00)	0.00		
		(7.10-7.00)	0.10		
		(7.71-7.10)	0.61		
		(7.98-7.71)	0.27		
		(8.11-7.98)	0.13		
		(9.06-8.11)	0.95		
		(9.69-9.06)	0.63		
		(10.14-9.69)	0.45		
		(11.08-10.14)	0.94		
		(11.21-11.08)	0.13		
		(11.27-11.21)	0.06		
		(12.29-11.27)	1.02		
		(12.85-12.29)	0.56		
		(13.36-12.85)	0.51		
		(14.44-13.36)	1.08		
		(14.44-14.44)	0.00		
		(14.45-14.44)	0.01		
		(15.52-14.45)	1.07		
		(16.07-15.52)	0.55		
		(16.25-16.07)	0.18		
		(16.25-16.25)	0.00		
				32.76	
51	sc1	(-16.95--16.95)	0.00		
750.00		(-16.28--16.95)	0.67		
		(-16.20--16.28)	0.08		
		(-16.03--16.20)	0.17		
		(-15.12--16.03)	0.91		
		(-14.69--15.12)	0.43		
		(-14.05--14.69)	0.64		
		(-13.11--14.05)	0.94		
		(-12.97--13.11)	0.14		
		(-12.68--12.97)	0.29		
		(-11.89--12.68)	0.79		
		(-11.52--11.89)	0.37		
		(-10.82--11.52)	0.70		
		(-9.93--10.82)	0.89		
		(-9.74--9.93)	0.19		
		(-9.33--9.74)	0.41		
		(-8.66--9.33)	0.67		
		(-8.35--8.66)	0.31		
		(-7.58--8.35)	0.77		
		(-7.19--7.58)	0.39		
		(-6.51--7.19)	0.68		
		(-5.97--6.51)	0.54		
		(-5.43--5.97)	0.54		
		(-5.17--5.43)	0.26		
		(-4.35--5.17)	0.82		
		(-3.59--4.35)	0.76		
		(-3.28--3.59)	0.31		
		(-2.62--3.28)	0.66		
		(-2.20--2.62)	0.42		
		(-2.00--2.20)	0.20		
		(-1.12--2.00)	0.88		
		(-0.41--1.12)	0.71		
		(-0.05--0.41)	0.36		
		(0.73--0.05)	0.78		
		(1.03-0.73)	0.30		
		(1.17-1.03)	0.14		
		(2.11-1.17)	0.94		
		(2.76-2.11)	0.65		
		(3.18-2.76)	0.42		
		(4.08-3.18)	0.90		
		(4.26-4.08)	0.18		
		(4.35-4.26)	0.09		
		(5.34-4.35)	0.99		
		(5.93-5.34)	0.59		
		(6.41-5.93)	0.48		
		(7.43-6.41)	1.02		
		(7.49-7.43)	0.06		
		(7.52-7.49)	0.03		
		(8.57-7.52)	1.05		
		(9.11-8.57)	0.54		
		(9.65-9.11)	0.54		
		(10.69-9.65)	1.04		
		(10.72-10.69)	0.03		
		(10.74-10.72)	0.02		
		(10.79-10.74)	0.05		
		(11.55-10.79)	0.76		
		(11.80-11.55)	0.25		
		(12.28-11.80)	0.48		
		(12.88-12.28)	0.60		
		(13.87-12.88)	0.99		
		(13.95-13.87)	0.08		
		A RIPORTARE ml	30.90		

		CALCOLO DELLE LUNGHEZZE		Foglio n. 244
SCOTICO				
N. SEZIONE PROG.	FIG.	ELEMENTI DI CALCOLO	LUNGHEZZA ELEMENTARE ml	LUNGHEZZA FIGURA ml	NOTE
		RIPORTO ml	30.90		
		(14.14-13.95)	0.19		
		(15.03-14.14)	0.89		
		(15.45-15.03)	0.42		
		(16.11-15.45)	0.66		
		(16.90-16.11)	0.79		
		(16.90-16.90)	0.00		
				33.85	
52	sc1	(-22.63--22.63)	0.00		
765.00		(-22.13--22.63)	0.50		
		(-21.78--22.13)	0.35		
		(-21.05--21.78)	0.73		
		(-20.19--21.05)	0.86		
		(-19.97--20.19)	0.22		
		(-19.51--19.97)	0.46		
		(-18.89--19.51)	0.62		
		(-18.60--18.89)	0.29		
		(-17.82--18.60)	0.78		
		(-17.00--17.82)	0.82		
		(-16.74--17.00)	0.26		
		(-16.18--16.74)	0.56		
		(-15.66--16.18)	0.52		
		(-15.41--15.66)	0.25		
		(-14.58--15.41)	0.83		
		(-13.82--14.58)	0.76		
		(-13.50--13.82)	0.32		
		(-12.85--13.50)	0.65		
		(-12.43--12.85)	0.42		
		(-11.72--12.43)	0.71		
		(-11.35--11.72)	0.37		
		(-10.63--11.35)	0.72		
		(-10.27--10.63)	0.36		
		(-9.52--10.27)	0.75		
		(-9.19--9.52)	0.33		
		(-9.04--9.19)	0.15		
		(-8.12--9.04)	0.92		
		(-7.45--8.12)	0.67		
		(-7.04--7.45)	0.41		
		(-6.19--7.04)	0.85		
		(-5.96--6.19)	0.23		
		(-5.85--5.96)	0.11		
		(-4.88--5.85)	0.97		
		(-4.26--4.88)	0.62		
		(-3.81--4.26)	0.45		
		(-2.86--3.81)	0.95		
		(-2.73--2.86)	0.13		
		(-2.67--2.73)	0.06		
		(-1.65--2.67)	1.02		
		(-1.07--1.65)	0.58		
		(-0.57--1.07)	0.50		
		(0.47--0.57)	1.04		
		(0.50-0.47)	0.03		
		(0.52-0.50)	0.02		
		(1.58-0.52)	1.06		
		(2.11-1.58)	0.53		
		(2.66-2.11)	0.55		
		(3.70-2.66)	1.04		
		(3.74-3.70)	0.04		
		(3.81-3.74)	0.07		
		(4.81-3.81)	1.00		
		(5.30-4.81)	0.49		
		(5.89-5.30)	0.59		
		(6.20-5.89)	0.31		
		(6.97-6.20)	0.77		
		(7.14-6.97)	0.17		
		(8.05-7.14)	0.91		
		(8.48-8.05)	0.43		
		(9.12-8.48)	0.64		
		(10.08-9.12)	0.96		
		(10.20-10.08)	0.12		
		(10.47-10.20)	0.27		
		(11.28-10.47)	0.81		
		(11.67-11.28)	0.39		
		(12.36-11.67)	0.69		
		(13.26-12.36)	0.90		
		(13.43-13.26)	0.17		
		(13.80-13.43)	0.37		
		(14.51-13.80)	0.71		
		(14.85-14.51)	0.34		
		(15.59-14.85)	0.74		
		(16.45-15.59)	0.86		
		(16.67-16.45)	0.22		
		(17.13-16.67)	0.46		
		(17.24-17.13)	0.11		
		(17.24-17.24)	0.00		
				39.87	
53	sc1	(-21.83--21.83)	0.00		
780.00		(-21.62--21.83)	0.21		
		(-20.96--21.62)	0.66		
		(-20.54--20.96)	0.42		
		(-19.67--20.54)	0.87		
		(-19.46--19.67)	0.21		
		(-19.36--19.46)	0.10		
		(-18.38--19.36)	0.98		
		(-17.76--18.38)	0.62		
		(-17.31--17.76)	0.45		
		(-17.07--17.31)	0.24		
		(-16.36--17.07)	0.71		
		(-16.26--16.36)	0.10		
		(-16.23--16.26)	0.03		
		(-16.16--16.23)	0.07		
		(-15.15--16.16)	1.01		
		(-14.56--15.15)	0.59		
		(-14.07--14.56)	0.49		
		(-13.05--14.07)	1.02		
		A RIPORTARE ml	8.78		

		CALCOLO DELLE LUNGHEZZE		Foglio n. 245
SCOTICO				
N. SEZIONE PROG.	FIG.	ELEMENTI DI CALCOLO	LUNGHEZZA ELEMENTARE ml	LUNGHEZZA FIGURA ml	NOTE
		RIPORTO ml	8.78		
		(-12.99--13.05)	0.06		
		(-12.96--12.99)	0.03		
		(-11.91--12.96)	1.05		
		(-11.37--11.91)	0.54		
		(-10.84--11.37)	0.53		
		(-9.77--10.84)	1.07		
		(-9.76--9.77)	0.01		
		(-9.74--9.76)	0.02		
		(-8.68--9.74)	1.06		
		(-8.17--8.68)	0.51		
		(-7.60--8.17)	0.57		
		(-6.57--7.60)	1.03		
		(-6.52--6.57)	0.05		
		(-6.43--6.52)	0.09		
		(-5.44--6.43)	0.99		
		(-4.97--5.44)	0.47		
		(-4.37--4.97)	0.60		
		(-3.37--4.37)	1.00		
		(-3.29--3.37)	0.08		
		(-3.12--3.29)	0.17		
		(-2.21--3.12)	0.91		
		(-1.77--2.21)	0.44		
		(-1.13--1.77)	0.64		
		(-0.17--1.13)	0.96		
		(-0.05--0.17)	0.12		
		(0.19--0.05)	0.24		
		(1.03-0.19)	0.84		
		(1.63-1.03)	0.60		
		(2.10-1.63)	0.47		
		(3.03-2.10)	0.93		
		(3.18-3.03)	0.15		
		(3.50-3.18)	0.32		
		(4.26-3.50)	0.76		
		(4.63-4.26)	0.37		
		(5.34-4.63)	0.71		
		(6.23-5.34)	0.89		
		(6.42-6.23)	0.19		
		(6.81-6.42)	0.39		
		(7.49-6.81)	0.68		
		(7.82-7.49)	0.33		
		(8.57-7.82)	0.75		
		(9.42-8.57)	0.85		
		(9.65-9.42)	0.23		
		(10.12-9.65)	0.47		
		(10.73-10.12)	0.61		
		(11.02-10.73)	0.29		
		(11.81-11.02)	0.79		
		(12.62-11.81)	0.81		
		(12.89-12.62)	0.27		
		(13.43-12.89)	0.54		
		(13.96-13.43)	0.53		
		(14.22-13.96)	0.26		
		(15.04-14.22)	0.82		
		(15.82-15.04)	0.78		
		(16.12-15.82)	0.30		
		(16.74-16.12)	0.62		
		(17.20-16.74)	0.46		
		(17.42-17.20)	0.22		
		(17.67-17.42)	0.25		
		(17.67-17.67)	0.00		
				39.50	
54 795.00	sc1	(-18.74--18.74)	0.00		
		(-18.56--18.74)	0.18		
		(-17.90--18.56)	0.66		
		(-16.95--17.90)	0.95		
		(-16.83--16.95)	0.12		
		(-16.57--16.83)	0.26		
		(-15.95--16.57)	0.62		
		(-15.75--15.95)	0.20		
		(-15.14--15.75)	0.61		
		(-14.67--15.14)	0.47		
		(-14.33--14.67)	0.34		
		(-13.59--14.33)	0.74		
		(-13.51--13.59)	0.08		
		(-13.28--13.51)	0.23		
		(-12.51--13.28)	0.77		
		(-12.13--12.51)	0.38		
		(-11.43--12.13)	0.70		
		(-10.53--11.43)	0.90		
		(-10.35--10.53)	0.18		
		(-9.99--10.35)	0.36		
		(-9.27--9.99)	0.72		
		(-8.92--9.27)	0.35		
		(-8.19--8.92)	0.73		
		(-7.32--8.19)	0.87		
		(-7.11--7.32)	0.21		
		(-6.70--7.11)	0.41		
		(-6.04--6.70)	0.66		
		(-5.71--6.04)	0.33		
		(-4.96--5.71)	0.75		
		(-4.11--4.96)	0.85		
		(-3.88--4.11)	0.23		
		(-3.76--3.88)	0.12		
		(-3.41--3.76)	0.35		
		(-2.95--3.41)	0.46		
		(-2.80--2.95)	0.15		
		(-2.50--2.80)	0.30		
		(-1.72--2.50)	0.78		
		(-0.90--1.72)	0.82		
		(-0.64--0.90)	0.26		
		(-0.12--0.64)	0.52		
		(0.44--0.12)	0.56		
		(0.71-0.44)	0.27		
		(1.52-0.71)	0.81		
		A RIPORTARE ml	20.26		

		CALCOLO DELLE LUNGHEZZE		Foglio n. 246
SCOTICO				
N. SEZIONE PROG.	FIG.	ELEMENTI DI CALCOLO	LUNGHEZZA ELEMENTARE ml	LUNGHEZZA FIGURA ml	NOTE
		RIPORTO ml	20.26		
		(2.31-1.52)	0.79		
		(2.60-2.31)	0.29		
		(3.17-2.60)	0.57		
		(3.68-3.17)	0.51		
		(3.92-3.68)	0.24		
		(4.75-3.92)	0.83		
		(5.53-4.75)	0.78		
		(5.83-5.53)	0.30		
		(6.46-5.83)	0.63		
		(6.91-6.46)	0.45		
		(7.13-6.91)	0.22		
		(7.99-7.13)	0.86		
		(8.74-7.99)	0.75		
		(9.07-8.74)	0.33		
		(9.75-9.07)	0.68		
		(10.15-9.75)	0.40		
		(10.34-10.15)	0.19		
		(11.23-10.34)	0.89		
		(11.95-11.23)	0.72		
		(12.31-11.95)	0.36		
		(13.04-12.31)	0.73		
		(13.39-13.04)	0.35		
		(13.55-13.39)	0.16		
		(14.46-13.55)	0.91		
		(14.93-14.46)	0.47		
		(15.54-14.93)	0.61		
		(16.33-15.54)	0.79		
		(16.62-16.33)	0.29		
		(16.76-16.62)	0.14		
		(17.70-16.76)	0.94		
		(18.14-17.70)	0.44		
		(18.14-18.14)	0.00		
				36.88	
55 810.00	sc1	(-18.36--18.36)	0.00		
		(-17.78--18.36)	0.58		
		(-17.46--17.78)	0.32		
		(-16.81--17.46)	0.65		
		(-16.38--16.81)	0.43		
		(-16.16--16.38)	0.22		
		(-15.30--16.16)	0.86		
		(-14.55--15.30)	0.75		
		(-14.22--14.55)	0.33		
		(-13.54--14.22)	0.68		
		(-13.14--13.54)	0.40		
		(-12.94--13.14)	0.20		
		(-12.06--12.94)	0.88		
		(-11.33--12.06)	0.73		
		(-10.98--11.33)	0.35		
		(-10.26--10.98)	0.72		
		(-9.90--10.26)	0.36		
		(-9.72--9.90)	0.18		
		(-8.82--9.72)	0.90		
		(-8.37--8.82)	0.45		
		(-7.74--8.37)	0.63		
		(-6.99--7.74)	0.75		
		(-6.66--6.99)	0.33		
		(-6.49--6.66)	0.17		
		(-5.58--6.49)	0.91		
		(-4.88--5.58)	0.70		
		(-4.50--4.88)	0.38		
		(-3.72--4.50)	0.78		
		(-3.42--3.72)	0.30		
		(-3.27--3.42)	0.15		
		(-2.34--3.27)	0.93		
		(-1.66--2.34)	0.68		
		(-1.26--1.66)	0.40		
		(-0.45--1.26)	0.81		
		(-0.18--0.45)	0.27		
		(-0.05--0.18)	0.13		
		(0.90--0.05)	0.95		
		(1.57-0.90)	0.67		
		(1.98-1.57)	0.41		
		(2.82-1.98)	0.84		
		(3.06-2.82)	0.24		
		(3.18-3.06)	0.12		
		(4.14-3.18)	0.96		
		(4.79-4.14)	0.65		
		(5.22-4.79)	0.43		
		(6.09-5.22)	0.87		
		(6.30-6.09)	0.21		
		(6.40-6.30)	0.10		
		(7.38-6.40)	0.98		
		(8.01-7.38)	0.63		
		(8.46-8.01)	0.45		
		(9.36-8.46)	0.90		
		(9.54-9.36)	0.18		
		(10.30-9.54)	0.76		
		(10.62-10.30)	0.32		
		(11.24-10.62)	0.62		
		(11.70-11.24)	0.46		
		(12.63-11.70)	0.93		
		(12.78-12.63)	0.15		
		(12.85-12.78)	0.07		
		(13.86-12.85)	1.01		
		(14.46-13.86)	0.60		
		(14.94-14.46)	0.48		
		(15.90-14.94)	0.96		
		(16.02-15.90)	0.12		
		(16.07-16.02)	0.05		
		(17.10-16.07)	1.03		
		(17.69-17.10)	0.59		
		(18.18-17.69)	0.49		
		(18.51-18.18)	0.33		
		(18.51-18.51)	0.00		
		A RIPORTARE ml	36.87		

		CALCOLO DELLE LUNGHEZZE		Foglio n. 247
SCOTICO				
N. SEZIONE PROG.	FIG.	ELEMENTI DI CALCOLO	LUNGHEZZA ELEMENTARE ml	LUNGHEZZA FIGURA ml	NOTE
		RIPORTO ml	36.87		
				36.87	
56	sc1	(-18.42--18.42)	0.00		
825.00		(-18.12--18.42)	0.30		
		(-17.07--18.12)	1.05		
		(-17.03--17.07)	0.04		
		(-17.02--17.03)	0.01		
		(-15.95--17.02)	1.07		
		(-15.40--15.95)	0.55		
		(-14.87--15.40)	0.53		
		(-13.82--14.87)	1.05		
		(-13.79--13.82)	0.03		
		(-12.99--13.79)	0.80		
		(-12.71--12.99)	0.28		
		(-12.16--12.71)	0.55		
		(-11.63--12.16)	0.53		
		(-10.57--11.63)	1.06		
		(-10.55--10.57)	0.02		
		(-10.55--10.55)	0.00		
		(-9.47--10.55)	1.08		
		(-8.93--9.47)	0.54		
		(-8.39--8.93)	0.54		
		(-7.32--8.39)	1.07		
		(-7.31--7.32)	0.01		
		(-7.31--7.31)	0.00		
		(-6.23--7.31)	1.08		
		(-5.69--6.23)	0.54		
		(-5.15--5.69)	0.54		
		(-4.07--5.15)	1.08		
		(-4.07--4.07)	0.00		
		(-4.07--4.07)	0.00		
		(-4.07--4.07)	0.00		
		(-2.99--4.07)	1.08		
		(-2.45--2.99)	0.54		
		(-1.91--2.45)	0.54		
		(-0.84--1.91)	1.07		
		(-0.83--0.84)	0.01		
		(-0.81--0.83)	0.02		
		(0.25--0.81)	1.06		
		(0.78-0.25)	0.53		
		(1.33-0.78)	0.55		
		(2.40-1.33)	1.07		
		(2.41-2.40)	0.01		
		(2.44-2.41)	0.03		
		(3.49-2.44)	1.05		
		(4.02-3.49)	0.53		
		(4.57-4.02)	0.55		
		(4.85-4.57)	0.28		
		(5.65-4.85)	0.80		
		(5.69-5.65)	0.04		
		(6.73-5.69)	1.04		
		(7.26-6.73)	0.53		
		(7.81-7.26)	0.55		
		(8.87-7.81)	1.06		
		(8.90-8.87)	0.03		
		(8.94-8.90)	0.04		
		(9.98-8.94)	1.04		
		(10.49-9.98)	0.51		
		(11.06-10.49)	0.57		
		(12.11-11.06)	1.05		
		(12.14-12.11)	0.03		
		(12.19-12.14)	0.05		
		(13.22-12.19)	1.03		
		(13.73-13.22)	0.51		
		(14.30-13.73)	0.57		
		(15.35-14.30)	1.05		
		(15.38-15.35)	0.03		
		(15.44-15.38)	0.06		
		(16.46-15.44)	1.02		
		(16.97-16.46)	0.51		
		(17.54-16.97)	0.57		
		(18.58-17.54)	1.04		
		(18.62-18.58)	0.04		
		(18.69-18.62)	0.07		
		(19.13-18.69)	0.44		
		(19.13-19.13)	0.00		
				37.55	
57	sc1	(-18.36--18.36)	0.00		
840.00		(-17.73--18.36)	0.63		
		(-17.36--17.73)	0.37		
		(-16.64--17.36)	0.72		
		(-16.29--16.64)	0.35		
		(-15.56--16.29)	0.73		
		(-14.66--15.56)	0.90		
		(-14.48--14.66)	0.18		
		(-14.13--14.48)	0.35		
		(-13.40--14.13)	0.73		
		(-13.04--13.40)	0.36		
		(-12.32--13.04)	0.72		
		(-11.41--12.32)	0.91		
		(-11.24--11.41)	0.17		
		(-10.90--11.24)	0.34		
		(-10.16--10.90)	0.74		
		(-9.79--10.16)	0.37		
		(-9.08--9.79)	0.71		
		(-8.16--9.08)	0.92		
		(-8.00--8.16)	0.16		
		(-7.66--8.00)	0.34		
		(-6.91--7.66)	0.75		
		(-6.54--6.91)	0.37		
		(-5.83--6.54)	0.71		
		(-4.91--5.83)	0.92		
		(-4.75--4.91)	0.16		
		(-4.43--4.75)	0.32		
		(-3.67--4.43)	0.76		
		A RIPORTARE ml	14.69		

		CALCOLO DELLE LUNGHEZZE		Foglio n. 248
SCOTICO				
N. SEZIONE PROG.	FIG.	ELEMENTI DI CALCOLO	LUNGHEZZA ELEMENTARE ml	LUNGHEZZA FIGURA ml	NOTE
		RIPORTO ml	14.69		
		(-3.29--3.67)	0.38		
		(-2.59--3.29)	0.70		
		(-1.66--2.59)	0.93		
		(-1.51--1.66)	0.15		
		(-1.20--1.51)	0.31		
		(-0.43--1.20)	0.77		
		(0.19--0.43)	0.62		
		(0.65-0.19)	0.46		
		(1.59-0.65)	0.94		
		(1.74-1.59)	0.15		
		(2.03-1.74)	0.29		
		(2.82-2.03)	0.79		
		(3.21-2.82)	0.39		
		(3.90-3.21)	0.69		
		(4.84-3.90)	0.94		
		(4.98-4.84)	0.14		
		(5.26-4.98)	0.28		
		(6.06-5.26)	0.80		
		(6.46-6.06)	0.40		
		(7.14-6.46)	0.68		
		(8.09-7.14)	0.95		
		(8.22-8.09)	0.13		
		(8.49-8.22)	0.27		
		(9.30-8.49)	0.81		
		(9.71-9.30)	0.41		
		(10.38-9.71)	0.67		
		(11.34-10.38)	0.96		
		(11.47-11.34)	0.13		
		(11.72-11.47)	0.25		
		(12.55-11.72)	0.83		
		(12.96-12.55)	0.41		
		(13.63-12.96)	0.67		
		(14.58-13.63)	0.95		
		(14.71-14.58)	0.13		
		(14.96-14.71)	0.25		
		(15.79-14.96)	0.83		
		(16.21-15.79)	0.42		
		(16.87-16.21)	0.66		
		(17.83-16.87)	0.96		
		(17.95-17.83)	0.12		
		(18.19-17.95)	0.24		
		(19.03-18.19)	0.84		
		(19.63-19.03)	0.60		
		(19.71-19.63)	0.08		
		(19.71-19.71)	0.00		
				38.07	
58	sc2	(-18.44--18.44)	0.00		
855.00		(-18.44--18.44)	0.00		
		(-18.44--18.44)	0.00		
				0.00	
58	sc1	(-18.44--18.44)	0.00		
855.00		(-17.67--18.44)	0.77		
		(-17.36--17.67)	0.31		
		(-17.21--17.36)	0.15		
		(-16.28--17.21)	0.93		
		(-15.58--16.28)	0.70		
		(-15.20--15.58)	0.38		
		(-14.46--15.20)	0.74		
		(-14.12--14.46)	0.34		
		(-13.95--14.12)	0.17		
		(-13.04--13.95)	0.91		
		(-12.31--13.04)	0.73		
		(-11.96--12.31)	0.35		
		(-11.25--11.96)	0.71		
		(-10.87--11.25)	0.38		
		(-10.68--10.87)	0.19		
		(-9.79--10.68)	0.89		
		(-9.05--9.79)	0.74		
		(-8.71--9.05)	0.34		
		(-8.04--8.71)	0.67		
		(-7.63--8.04)	0.41		
		(-7.42--7.63)	0.21		
		(-6.55--7.42)	0.87		
		(-5.79--6.55)	0.76		
		(-5.46--5.79)	0.33		
		(-5.30--5.46)	0.16		
		(-4.83--5.30)	0.47		
		(-4.49--4.83)	0.34		
		(-4.38--4.49)	0.11		
		(-4.16--4.38)	0.22		
		(-3.30--4.16)	0.86		
		(-2.53--3.30)	0.77		
		(-2.22--2.53)	0.31		
		(-1.61--2.22)	0.61		
		(-1.14--1.61)	0.47		
		(-0.89--1.14)	0.25		
		(-0.05--0.89)	0.84		
		(0.74--0.05)	0.79		
		(1.03-0.74)	0.29		
		(1.60-1.03)	0.57		
		(2.11-1.60)	0.51		
		(2.37-2.11)	0.26		
		(3.19-2.37)	0.82		
		(4.00-3.19)	0.81		
		(4.27-4.00)	0.27		
		(4.81-4.27)	0.54		
		(5.22-4.81)	0.41		
		(5.35-5.22)	0.13		
		(6.03-5.35)	0.68		
		(6.44-6.03)	0.41		
		(6.84-6.44)	0.40		
		(7.52-6.84)	0.68		
		(7.65-7.52)	0.13		
		(8.02-7.65)	0.37		
		A RIPORTARE ml	26.46		

		CALCOLO DELLE LUNGHEZZE		Foglio n. 249
SCOTICO				
N. SEZIONE PROG.	FIG.	ELEMENTI DI CALCOLO	LUNGHEZZA ELEMENTARE ml	LUNGHEZZA FIGURA ml	NOTE
		RIPORTO ml	26.46		
		(8.60-8.02)	0.58		
		(8.89-8.60)	0.29		
		(9.68-8.89)	0.79		
		(10.52-9.68)	0.84		
		(10.76-10.52)	0.24		
		(11.24-10.76)	0.48		
		(11.85-11.24)	0.61		
		(12.16-11.85)	0.31		
		(12.93-12.16)	0.77		
		(13.79-12.93)	0.86		
		(14.01-13.79)	0.22		
		(14.12-14.01)	0.11		
		(14.45-14.12)	0.33		
		(14.93-14.45)	0.48		
		(15.09-14.93)	0.16		
		(15.42-15.09)	0.33		
		(16.17-15.42)	0.75		
		(17.05-16.17)	0.88		
		(17.25-17.05)	0.20		
		(17.66-17.25)	0.41		
		(18.34-17.66)	0.68		
		(18.60-18.34)	0.26		
		(18.60-18.60)	0.00		
				37.04	
59	sc1	(-18.72--18.72)	0.00		
870.00		(-18.17--18.72)	0.55		
		(-18.12--18.17)	0.05		
		(-18.02--18.12)	0.10		
		(-17.03--18.02)	0.99		
		(-16.53--17.03)	0.50		
		(-15.95--16.53)	0.58		
		(-14.89--15.95)	1.06		
		(-14.87--14.89)	0.02		
		(-14.82--14.87)	0.05		
		(-13.79--14.82)	1.03		
		(-13.25--13.79)	0.54		
		(-12.70--13.25)	0.55		
		(-11.63--12.70)	1.07		
		(-11.62--11.63)	0.01		
		(-11.62--11.62)	0.00		
		(-10.54--11.62)	1.08		
		(-10.01--10.54)	0.53		
		(-9.46--10.01)	0.55		
		(-8.44--9.46)	1.02		
		(-8.37--8.44)	0.07		
		(-8.34--8.37)	0.03		
		(-7.29--8.34)	1.05		
		(-6.70--7.29)	0.59		
		(-6.21--6.70)	0.49		
		(-5.24--6.21)	0.97		
		(-5.13--5.24)	0.11		
		(-5.07--5.13)	0.06		
		(-4.04--5.07)	1.03		
		(-3.43--4.04)	0.61		
		(-2.96--3.43)	0.47		
		(-2.05--2.96)	0.91		
		(-1.88--2.05)	0.17		
		(-1.79--1.88)	0.09		
		(-0.80--1.79)	0.99		
		(-0.15--0.80)	0.65		
		(0.29--0.15)	0.44		
		(1.14-0.29)	0.85		
		(1.37-1.14)	0.23		
		(1.49-1.37)	0.12		
		(2.45-1.49)	0.96		
		(3.12-2.45)	0.67		
		(3.54-3.12)	0.42		
		(4.34-3.54)	0.80		
		(4.62-4.34)	0.28		
		(4.76-4.62)	0.14		
		(5.70-4.76)	0.94		
		(6.40-5.70)	0.70		
		(6.78-6.40)	0.38		
		(7.53-6.78)	0.75		
		(7.87-7.53)	0.34		
		(8.04-7.87)	0.17		
		(8.95-8.04)	0.91		
		(9.40-8.95)	0.45		
		(10.03-9.40)	0.63		
		(10.72-10.03)	0.69		
		(11.11-10.72)	0.39		
		(11.31-11.11)	0.20		
		(12.20-11.31)	0.89		
		(12.95-12.20)	0.75		
		(13.28-12.95)	0.33		
		(13.92-13.28)	0.64		
		(14.36-13.92)	0.44		
		(14.59-14.36)	0.23		
		(15.44-14.59)	0.85		
		(16.23-15.44)	0.79		
		(16.53-16.23)	0.30		
		(17.08-16.53)	0.55		
		(17.08-17.08)	0.00		
				35.80	
60	sc1	(-18.90--18.90)	0.00		
885.00		(-18.90--18.90)	0.00		
		(-18.38--18.90)	0.52		
		(-17.82--18.38)	0.56		
		(-17.52--17.82)	0.30		
		(-16.73--17.52)	0.79		
		(-15.88--16.73)	0.85		
		(-15.65--15.88)	0.23		
		(-15.54--15.65)	0.11		
		(-15.21--15.54)	0.33		
		A RIPORTARE ml	3.69		

		CALCOLO DELLE LUNGHEZZE		Foglio n. 250
SCOTICO				
N. SEZIONE PROG.	FIG.	ELEMENTI DI CALCOLO	LUNGHEZZA ELEMENTARE ml	LUNGHEZZA FIGURA ml	NOTE
		RIPORTO ml	3.69		
		(-14.73--15.21)	0.48		
		(-14.57--14.73)	0.16		
		(-14.23--14.57)	0.34		
		(-13.48--14.23)	0.75		
		(-12.59--13.48)	0.89		
		(-12.40--12.59)	0.19		
		(-12.04--12.40)	0.36		
		(-11.32--12.04)	0.72		
		(-10.94--11.32)	0.38		
		(-10.23--10.94)	0.71		
		(-9.30--10.23)	0.93		
		(-9.15--9.30)	0.15		
		(-8.86--9.15)	0.29		
		(-8.07--8.86)	0.79		
		(-7.65--8.07)	0.42		
		(-6.98--7.65)	0.67		
		(-6.01--6.98)	0.97		
		(-5.90--6.01)	0.11		
		(-5.69--5.90)	0.21		
		(-4.82--5.69)	0.87		
		(-4.37--4.82)	0.45		
		(-3.73--4.37)	0.64		
		(-2.72--3.73)	1.01		
		(-2.65--2.72)	0.07		
		(-2.51--2.65)	0.14		
		(-1.57--2.51)	0.94		
		(-1.08--1.57)	0.49		
		(-0.48--1.08)	0.60		
		(0.57--0.48)	1.05		
		(0.60-0.57)	0.03		
		(0.66-0.60)	0.06		
		(1.68-0.66)	1.02		
		(2.21-1.68)	0.53		
		(2.77-2.21)	0.56		
		(3.84-2.77)	1.07		
		(3.85-3.84)	0.01		
		(4.65-3.85)	0.80		
		(4.93-4.65)	0.28		
		(5.50-4.93)	0.57		
		(6.02-5.50)	0.52		
		(7.01-6.02)	0.99		
		(7.10-7.01)	0.09		
		(7.15-7.10)	0.05		
		(8.18-7.15)	1.03		
		(8.79-8.18)	0.61		
		(9.27-8.79)	0.48		
		(10.19-9.27)	0.92		
		(10.35-10.19)	0.16		
		(10.44-10.35)	0.09		
		(11.43-10.44)	0.99		
		(12.08-11.43)	0.65		
		(12.52-12.08)	0.44		
		(13.36-12.52)	0.84		
		(13.54-13.36)	0.18		
		(13.60-13.54)	0.06		
		(14.35-13.60)	0.75		
		(14.68-14.35)	0.33		
		(15.16-14.68)	0.48		
		(15.71-15.16)	0.55		
		(15.71-15.71)	0.00		
				34.61	
61 900.00	sc1	(-18.30--18.30)	0.00		
		(-17.55--18.30)	0.75		
		(-16.90--17.55)	0.65		
		(-16.46--16.90)	0.44		
		(-15.62--16.46)	0.84		
		(-15.38--15.62)	0.24		
		(-15.25--15.38)	0.13		
		(-14.29--15.25)	0.96		
		(-13.60--14.29)	0.69		
		(-13.21--13.60)	0.39		
		(-12.47--13.21)	0.74		
		(-12.12--12.47)	0.35		
		(-11.95--12.12)	0.17		
		(-11.04--11.95)	0.91		
		(-10.30--11.04)	0.74		
		(-9.96--10.30)	0.34		
		(-9.31--9.96)	0.65		
		(-8.87--9.31)	0.44		
		(-8.64--8.87)	0.23		
		(-7.79--8.64)	0.85		
		(-6.99--7.79)	0.80		
		(-6.70--6.99)	0.29		
		(-6.15--6.70)	0.55		
		(-5.62--6.15)	0.53		
		(-5.34--5.62)	0.28		
		(-4.54--5.34)	0.80		
		(-3.69--4.54)	0.85		
		(-3.45--3.69)	0.24		
		(-3.00--3.45)	0.45		
		(-2.37--3.00)	0.63		
		(-2.04--2.37)	0.33		
		(-1.28--2.04)	0.76		
		(-0.92--1.28)	0.36		
		(-0.20--0.92)	0.72		
		(0.16--0.20)	0.36		
		(0.88-0.16)	0.72		
		(1.26-0.88)	0.38		
		(1.97-1.26)	0.71		
		(2.91-1.97)	0.94		
		(3.05-2.91)	0.14		
		(3.31-3.05)	0.26		
		(4.14-3.31)	0.83		
		(4.57-4.14)	0.43		
		A RIPORTARE ml	22.87		

		CALCOLO DELLE LUNGHEZZE		Foglio n. 251
SCOTICO				
N. SEZIONE PROG.	FIG.	ELEMENTI DI CALCOLO	LUNGHEZZA ELEMENTARE ml	LUNGHEZZA FIGURA ml	NOTE
		RIPORTO ml	22.87		
		(5.22-4.57)	0.65		
		(6.22-5.22)	1.00		
		(6.30-6.22)	0.08		
		(6.47-6.30)	0.17		
		(7.39-6.47)	0.92		
		(7.87-7.39)	0.48		
		(8.47-7.87)	0.60		
		(9.52-8.47)	1.05		
		(9.56-9.52)	0.04		
		(9.63-9.56)	0.07		
		(10.64-9.63)	1.01		
		(11.17-10.64)	0.53		
		(11.72-11.17)	0.55		
		(12.78-11.72)	1.06		
		(12.81-12.78)	0.03		
		(12.82-12.81)	0.01		
		(13.79-12.82)	0.97		
		(13.79-13.79)	0.00		
				32.09	
62 915.00	sc1	(-18.34--18.34)	0.00		
		(-17.96--18.34)	0.38		
		(-17.30--17.96)	0.66		
		(-16.30--17.30)	1.00		
		(-16.22--16.30)	0.08		
		(-16.06--16.22)	0.16		
		(-15.13--16.06)	0.93		
		(-14.65--15.13)	0.48		
		(-14.05--14.65)	0.60		
		(-12.99--14.05)	1.06		
		(-12.97--12.99)	0.02		
		(-12.92--12.97)	0.05		
		(-11.88--12.92)	1.04		
		(-11.33--11.88)	0.55		
		(-10.80--11.33)	0.53		
		(-9.78--10.80)	1.02		
		(-9.71--9.78)	0.07		
		(-9.67--9.71)	0.04		
		(-8.63--9.67)	1.04		
		(-8.01--8.63)	0.62		
		(-7.54--8.01)	0.47		
		(-6.65--7.54)	0.89		
		(-6.46--6.65)	0.19		
		(-5.70--6.46)	0.76		
		(-5.37--5.70)	0.33		
		(-4.70--5.37)	0.67		
		(-4.29--4.70)	0.41		
		(-3.51--4.29)	0.78		
		(-3.20--3.51)	0.31		
		(-3.04--3.20)	0.16		
		(-2.12--3.04)	0.92		
		(-1.38--2.12)	0.74		
		(-1.03--1.38)	0.35		
		(-0.37--1.03)	0.66		
		(0.05--0.37)	0.42		
		(0.28-0.05)	0.23		
		(1.14-0.28)	0.86		
		(1.93-1.14)	0.79		
		(2.22-1.93)	0.29		
		(2.77-2.22)	0.55		
		(3.31-2.77)	0.54		
		(3.59-3.31)	0.28		
		(4.39-3.59)	0.80		
		(5.25-4.39)	0.86		
		(5.48-5.25)	0.23		
		(5.91-5.48)	0.43		
		(6.56-5.91)	0.65		
		(6.91-6.56)	0.35		
		(7.65-6.91)	0.74		
		(8.57-7.65)	0.92		
		(8.73-8.57)	0.16		
		(9.04-8.73)	0.31		
		(9.82-9.04)	0.78		
		(10.22-9.82)	0.40		
		(10.90-10.22)	0.68		
		(11.88-10.90)	0.98		
		(11.99-11.88)	0.11		
		(12.04-11.99)	0.05		
		(12.18-12.04)	0.14		
		(12.84-12.18)	0.66		
		(13.07-12.84)	0.23		
		(13.12-13.07)	0.05		
		(13.12-13.12)	0.00		
				31.46	
63 930.00	sc1	(-19.64--19.64)	0.00		
		(-19.26--19.64)	0.38		
		(-19.06--19.26)	0.20		
		(-18.18--19.06)	0.88		
		(-17.40--18.18)	0.78		
		(-17.09--17.40)	0.31		
		(-16.52--17.09)	0.57		
		(-16.01--16.52)	0.51		
		(-15.73--16.01)	0.28		
		(-14.92--15.73)	0.81		
		(-14.07--14.92)	0.85		
		(-13.84--14.07)	0.23		
		(-13.40--13.84)	0.44		
		(-12.75--13.40)	0.65		
		(-12.40--12.75)	0.35		
		(-11.67--12.40)	0.73		
		(-11.31--11.67)	0.36		
		(-10.58--11.31)	0.73		
		(-10.28--10.58)	0.30		
		(-9.49--10.28)	0.79		
		(-9.07--9.49)	0.42		
		A RIPORTARE ml	10.57		

		CALCOLO DELLE LUNGHEZZE		Foglio n. 252
SCOTICO				
N. SEZIONE PROG.	FIG.	ELEMENTI DI CALCOLO	LUNGHEZZA ELEMENTARE ml	LUNGHEZZA FIGURA ml	NOTE
		RIPORTO ml	10.57		
		(-8.41--9.07)	0.66		
		(-7.41--8.41)	1.00		
		(-7.32--7.41)	0.09		
		(-7.16--7.32)	0.16		
		(-6.24--7.16)	0.92		
		(-5.74--6.24)	0.50		
		(-5.15--5.74)	0.59		
		(-4.08--5.15)	1.07		
		(-4.07--4.08)	0.01		
		(-4.04--4.07)	0.03		
		(-2.98--4.04)	1.06		
		(-2.41--2.98)	0.57		
		(-1.89--2.41)	0.52		
		(-0.92--1.89)	0.97		
		(-0.81--0.92)	0.11		
		(-0.75--0.81)	0.06		
		(0.28--0.75)	1.03		
		(0.92-0.28)	0.64		
		(1.36-0.92)	0.44		
		(2.20-1.36)	0.84		
		(2.45-2.20)	0.25		
		(2.58-2.45)	0.13		
		(3.53-2.58)	0.95		
		(4.25-3.53)	0.72		
		(4.62-4.25)	0.37		
		(5.32-4.62)	0.70		
		(5.70-5.32)	0.38		
		(5.91-5.70)	0.21		
		(6.79-5.91)	0.88		
		(7.21-6.79)	0.42		
		(7.88-7.21)	0.67		
		(8.44-7.88)	0.56		
		(8.96-8.44)	0.52		
		(9.24-8.96)	0.28		
		(10.05-9.24)	0.81		
		(10.91-10.05)	0.86		
		(11.13-10.91)	0.22		
		(11.56-11.13)	0.43		
		(12.22-11.56)	0.66		
		(12.57-12.22)	0.35		
		(13.30-12.57)	0.73		
		(14.24-13.30)	0.94		
		(14.39-14.24)	0.15		
		(14.68-14.39)	0.29		
		(15.47-14.68)	0.79		
		(15.90-15.47)	0.43		
		(16.56-15.90)	0.66		
		(17.57-16.56)	1.01		
		(17.65-17.57)	0.08		
		(17.80-17.65)	0.15		
		(18.73-17.80)	0.93		
		(19.23-18.73)	0.50		
		(19.82-19.23)	0.59		
		(20.90-19.82)	1.08		
		(20.90-20.90)	0.00		
		(20.92-20.90)	0.02		
		(21.99-20.92)	1.07		
		(22.56-21.99)	0.57		
		(23.07-22.56)	0.51		
		(24.04-23.07)	0.97		
		(24.16-24.04)	0.12		
		(24.22-24.16)	0.06		
		(25.24-24.22)	1.02		
		(25.74-25.24)	0.50		
		(26.33-25.74)	0.59		
		(27.16-26.33)	0.83		
		(27.42-27.16)	0.26		
		(27.55-27.42)	0.13		
		(27.82-27.55)	0.27		
		(27.82-27.82)	0.00		
				47.46	
64 945.00	sc1	(-18.68--18.68)	0.00		
		(-18.53--18.68)	0.15		
		(-18.00--18.53)	0.53		
		(-17.01--18.00)	0.99		
		(-16.91--17.01)	0.10		
		(-16.13--16.91)	0.78		
		(-15.83--16.13)	0.30		
		(-15.19--15.83)	0.64		
		(-14.74--15.19)	0.45		
		(-13.91--14.74)	0.83		
		(-13.65--13.91)	0.26		
		(-13.52--13.65)	0.13		
		(-12.57--13.52)	0.95		
		(-11.84--12.57)	0.73		
		(-11.48--11.84)	0.36		
		(-10.80--11.48)	0.68		
		(-10.39--10.80)	0.41		
		(-10.17--10.39)	0.22		
		(-9.31--10.17)	0.86		
		(-8.50--9.31)	0.81		
		(-8.22--8.50)	0.28		
		(-7.70--8.22)	0.52		
		(-7.13--7.70)	0.57		
		(-6.83--7.13)	0.30		
		(-6.05--6.83)	0.78		
		(-5.16--6.05)	0.89		
		(-4.96--5.16)	0.20		
		(-4.60--4.96)	0.36		
		(-3.88--4.60)	0.72		
		(-3.48--3.88)	0.40		
		(-2.79--3.48)	0.69		
		(-1.81--2.79)	0.98		
		(-1.70--1.81)	0.11		
		A RIPORTARE ml	16.98		

		CALCOLO DELLE LUNGHEZZE		Foglio n. 253
SCOTICO				
N. SEZIONE PROG.	FIG.	ELEMENTI DI CALCOLO	LUNGHEZZA ELEMENTARE ml	LUNGHEZZA FIGURA ml	NOTE
		RIPORTO ml	16.98		
		(-1.50--1.70)	0.20		
		(-0.62--1.50)	0.88		
		(-0.14--0.62)	0.48		
		(0.47--0.14)	0.61		
		(1.53-0.47)	1.06		
		(1.56-1.53)	0.03		
		(1.57-1.56)	0.01		
		(1.60-1.57)	0.03		
		(2.37-1.60)	0.77		
		(2.64-2.37)	0.27		
		(3.20-2.64)	0.56		
		(3.73-3.20)	0.53		
		(4.71-3.73)	0.98		
		(4.82-4.71)	0.11		
		(4.87-4.82)	0.05		
		(5.90-4.87)	1.03		
		(6.55-5.90)	0.65		
		(6.99-6.55)	0.44		
		(7.81-6.99)	0.82		
		(8.07-7.81)	0.26		
		(8.22-8.07)	0.15		
		(9.16-8.22)	0.94		
		(9.89-9.16)	0.73		
		(10.25-9.89)	0.36		
		(10.91-10.25)	0.66		
		(11.33-10.91)	0.42		
		(11.56-11.33)	0.23		
		(12.42-11.56)	0.86		
		(13.23-12.42)	0.81		
		(13.51-13.23)	0.28		
		(14.01-13.51)	0.50		
		(14.59-14.01)	0.58		
		(14.91-14.59)	0.32		
		(15.68-14.91)	0.77		
		(16.58-15.68)	0.90		
		(16.76-16.58)	0.18		
		(17.11-16.76)	0.35		
		(17.85-17.11)	0.74		
		(18.25-17.85)	0.40		
		(18.94-18.25)	0.69		
		(19.92-18.94)	0.98		
		(20.02-19.92)	0.10		
		(20.07-20.02)	0.05		
		(20.22-20.07)	0.15		
		(20.88-20.22)	0.66		
		(21.11-20.88)	0.23		
		(21.59-21.11)	0.48		
		(22.20-21.59)	0.61		
		(23.26-22.20)	1.06		
		(23.28-23.26)	0.02		
		(23.32-23.28)	0.04		
		(24.37-23.32)	1.05		
		(24.94-24.37)	0.57		
		(25.46-24.94)	0.52		
		(26.42-25.46)	0.96		
		(26.54-26.42)	0.12		
		(26.61-26.54)	0.07		
		(27.63-26.61)	1.02		
		(28.28-27.63)	0.65		
		(28.71-28.28)	0.43		
		(29.07-28.71)	0.36		
		(29.07-29.07)	0.00		
				47.75	
65 960.00	sc1	(-15.82--15.82)	0.00		
		(-15.67--15.82)	0.15		
		(-14.67--15.67)	1.00		
		(-14.59--14.67)	0.08		
		(-14.43--14.59)	0.16		
		(-13.50--14.43)	0.93		
		(-12.99--13.50)	0.51		
		(-12.41--12.99)	0.58		
		(-11.35--12.41)	1.06		
		(-11.32--11.35)	0.03		
		(-11.31--11.32)	0.01		
		(-10.24--11.31)	1.07		
		(-9.63--10.24)	0.61		
		(-9.15--9.63)	0.48		
		(-8.27--9.15)	0.88		
		(-8.06--8.27)	0.21		
		(-7.95--8.06)	0.11		
		(-6.98--7.95)	0.97		
		(-6.27--6.98)	0.71		
		(-5.89--6.27)	0.38		
		(-5.18--5.89)	0.71		
		(-4.80--5.18)	0.38		
		(-4.60--4.80)	0.20		
		(-3.71--4.60)	0.89		
		(-3.29--3.71)	0.42		
		(-2.63--3.29)	0.66		
		(-2.10--2.63)	0.53		
		(-1.69--2.10)	0.41		
		(-1.54--1.69)	0.15		
		(-0.88--1.54)	0.66		
		(-0.45--0.88)	0.43		
		(-0.08--0.45)	0.37		
		(0.63--0.08)	0.71		
		(0.73-0.63)	0.10		
		(0.99-0.73)	0.26		
		(1.72-0.99)	0.73		
		(2.12-1.72)	0.40		
		(2.81-2.12)	0.69		
		(3.80-2.81)	0.99		
		(3.90-3.80)	0.10		
		(4.07-3.90)	0.17		
		A RIPORTARE ml	19.89		

		CALCOLO DELLE LUNGHEZZE		Foglio n. 254
SCOTICO				
N. SEZIONE PROG.	FIG.	ELEMENTI DI CALCOLO	LUNGHEZZA ELEMENTARE ml	LUNGHEZZA FIGURA ml	NOTE
		RIPORTO ml	19.89		
		(4.98-4.07)	0.91		
		(5.48-4.98)	0.50		
		(6.07-5.48)	0.59		
		(7.16-6.07)	1.09		
		(7.16-7.16)	0.00		
		(7.16-7.16)	0.00		
		(8.24-7.16)	1.08		
		(8.84-8.24)	0.60		
		(9.33-8.84)	0.49		
		(10.24-9.33)	0.91		
		(10.42-10.24)	0.18		
		(10.51-10.42)	0.09		
		(11.50-10.51)	0.99		
		(12.19-11.50)	0.69		
		(12.59-12.19)	0.40		
		(13.32-12.59)	0.73		
		(13.68-13.32)	0.36		
		(13.87-13.68)	0.19		
		(14.77-13.87)	0.90		
		(15.19-14.77)	0.42		
		(15.85-15.19)	0.66		
		(16.41-15.85)	0.56		
		(16.94-16.41)	0.53		
		(17.23-16.94)	0.29		
		(18.03-17.23)	0.80		
		(18.91-18.03)	0.88		
		(19.11-18.91)	0.20		
		(19.49-19.11)	0.38		
		(20.20-19.49)	0.71		
		(20.59-20.20)	0.39		
		(21.29-20.59)	0.70		
		(22.27-21.29)	0.98		
		(22.38-22.27)	0.11		
		(22.58-22.38)	0.20		
		(23.46-22.58)	0.88		
		(23.94-23.46)	0.48		
		(24.55-23.94)	0.61		
		(25.62-24.55)	1.07		
		(25.64-25.62)	0.02		
		(25.66-25.64)	0.02		
		(26.72-25.66)	1.06		
		(27.30-26.72)	0.58		
		(27.81-27.30)	0.51		
		(28.75-27.81)	0.94		
		(28.90-28.75)	0.15		
		(28.98-28.90)	0.08		
		(29.34-28.98)	0.36		
		(29.34-29.34)	0.00		
				45.16	
66 975.00	sc1	(-15.63--15.63)	0.00		
		(-15.55--15.63)	0.08		
		(-14.99--15.55)	0.56		
		(-14.46--14.99)	0.53		
		(-14.17--14.46)	0.29		
		(-13.37--14.17)	0.80		
		(-12.49--13.37)	0.88		
		(-12.29--12.49)	0.20		
		(-11.92--12.29)	0.37		
		(-11.20--11.92)	0.72		
		(-10.80--11.20)	0.40		
		(-10.11--10.80)	0.69		
		(-9.12--10.11)	0.99		
		(-9.02--9.12)	0.10		
		(-8.98--9.02)	0.04		
		(-8.85--8.98)	0.13		
		(-8.18--8.85)	0.67		
		(-7.94--8.18)	0.24		
		(-7.43--7.94)	0.51		
		(-6.85--7.43)	0.58		
		(-5.79--6.85)	1.06		
		(-5.76--5.79)	0.03		
		(-5.74--5.76)	0.02		
		(-4.67--5.74)	1.07		
		(-4.06--4.67)	0.61		
		(-3.58--4.06)	0.48		
		(-2.72--3.58)	0.86		
		(-2.50--2.72)	0.22		
		(-2.37--2.50)	0.13		
		(-1.41--2.37)	0.96		
		(-0.69--1.41)	0.72		
		(-0.32--0.69)	0.37		
		(0.35--0.32)	0.67		
		(0.77-0.35)	0.42		
		(1.00-0.77)	0.23		
		(1.86-1.00)	0.86		
		(2.68-1.86)	0.82		
		(2.94-2.68)	0.26		
		(3.41-2.94)	0.47		
		(4.03-3.41)	0.62		
		(4.37-4.03)	0.34		
		(5.12-4.37)	0.75		
		(6.06-5.12)	0.94		
		(6.21-6.06)	0.15		
		(6.48-6.21)	0.27		
		(7.30-6.48)	0.82		
		(7.74-7.30)	0.44		
		(8.38-7.74)	0.64		
		(9.43-8.38)	1.05		
		(9.47-9.43)	0.04		
		(9.49-9.47)	0.02		
		(9.55-9.49)	0.06		
		(10.29-9.55)	0.74		
		(10.56-10.29)	0.27		
		(11.11-10.56)	0.55		
		A RIPORTARE ml	26.74		

		CALCOLO DELLE LUNGHEZZE		Foglio n. 255
SCOTICO				
N. SEZIONE PROG.	FIG.	ELEMENTI DI CALCOLO	LUNGHEZZA ELEMENTARE ml	LUNGHEZZA FIGURA ml	NOTE
		RIPORTO ml	26.74		
		(11.65-11.11)	0.54		
		(12.62-11.65)	0.97		
		(12.73-12.62)	0.11		
		(12.80-12.73)	0.07		
		(13.82-12.80)	1.02		
		(14.49-13.82)	0.67		
		(14.91-14.49)	0.42		
		(15.68-14.91)	0.77		
		(16.00-15.68)	0.32		
		(16.17-16.00)	0.17		
		(17.09-16.17)	0.92		
		(17.86-17.09)	0.77		
		(18.17-17.86)	0.31		
		(18.75-18.17)	0.58		
		(19.26-18.75)	0.51		
		(19.54-19.26)	0.28		
		(20.35-19.54)	0.81		
		(21.23-20.35)	0.88		
		(21.44-21.23)	0.21		
		(21.82-21.44)	0.38		
		(22.53-21.82)	0.71		
		(22.92-22.53)	0.39		
		(23.61-22.92)	0.69		
		(24.60-23.61)	0.99		
		(24.70-24.60)	0.10		
		(24.88-24.70)	0.18		
		(25.79-24.88)	0.91		
		(26.29-25.79)	0.50		
		(26.88-26.29)	0.59		
		(27.95-26.88)	1.07		
		(27.96-27.95)	0.01		
		(28.76-27.96)	0.80		
		(29.05-28.76)	0.29		
		(29.64-29.05)	0.59		
		(29.64-29.64)	0.00		
				45.27	
67 990.00	sc1	(-15.90--15.90)	0.00		
		(-15.56--15.90)	0.34		
		(-15.46--15.56)	0.10		
		(-15.40--15.46)	0.06		
		(-14.37--15.40)	1.03		
		(-13.88--14.37)	0.49		
		(-13.28--13.88)	0.60		
		(-12.51--13.28)	0.77		
		(-12.19--12.51)	0.32		
		(-12.01--12.19)	0.18		
		(-11.10--12.01)	0.91		
		(-10.32--11.10)	0.78		
		(-10.01--10.32)	0.31		
		(-9.46--10.01)	0.55		
		(-8.93--9.46)	0.53		
		(-8.63--8.93)	0.30		
		(-7.84--8.63)	0.79		
		(-6.93--7.84)	0.91		
		(-6.75--6.93)	0.18		
		(-6.41--6.75)	0.34		
		(-5.66--6.41)	0.75		
		(-5.24--5.66)	0.42		
		(-4.57--5.24)	0.67		
		(-3.55--4.57)	1.02		
		(-3.48--3.55)	0.07		
		(-3.36--3.48)	0.12		
		(-2.39--3.36)	0.97		
		(-1.86--2.39)	0.53		
		(-1.31--1.86)	0.55		
		(-0.31--1.31)	1.00		
		(-0.22--0.31)	0.09		
		(-0.16--0.22)	0.06		
		(0.87--0.16)	1.03		
		(1.53-0.87)	0.66		
		(1.96-1.53)	0.43		
		(2.74-1.96)	0.78		
		(3.05-2.74)	0.31		
		(3.22-3.05)	0.17		
		(4.14-3.22)	0.92		
		(4.57-4.14)	0.43		
		(5.23-4.57)	0.66		
		(5.78-5.23)	0.55		
		(6.32-5.78)	0.54		
		(6.61-6.32)	0.29		
		(7.40-6.61)	0.79		
		(8.30-7.40)	0.90		
		(8.49-8.30)	0.19		
		(8.83-8.49)	0.34		
		(9.58-8.83)	0.75		
		(10.00-9.58)	0.42		
		(10.67-10.00)	0.67		
		(11.69-10.67)	1.02		
		(11.76-11.69)	0.07		
		(11.88-11.76)	0.12		
		(12.85-11.88)	0.97		
		(13.38-12.85)	0.53		
		(13.94-13.38)	0.56		
		(14.93-13.94)	0.99		
		(15.02-14.93)	0.09		
		(15.07-15.02)	0.05		
		(16.11-15.07)	1.04		
		(16.44-16.11)	0.33		
		(16.73-16.44)	0.29		
		(16.83-16.73)	0.10		
		(16.88-16.83)	0.05		
		(16.96-16.88)	0.08		
		(17.20-16.96)	0.24		
		(17.98-17.20)	0.78		
		A RIPORTARE ml	33.88		

		CALCOLO DELLE LUNGHEZZE		Foglio n. 256
SCOTICO				
N. SEZIONE PROG.	FIG.	ELEMENTI DI CALCOLO	LUNGHEZZA ELEMENTARE ml	LUNGHEZZA FIGURA ml	NOTE
		RIPORTO ml	33.88		
		(18.29-17.98)	0.31		
		(18.85-18.29)	0.56		
		(19.12-18.85)	0.27		
		(19.13-19.12)	0.01		
		(19.18-19.13)	0.05		
		(19.38-19.18)	0.20		
		(20.15-19.38)	0.77		
		(20.47-20.15)	0.32		
		(20.55-20.47)	0.08		
		(20.81-20.55)	0.26		
		(20.82-20.81)	0.01		
		(20.83-20.82)	0.01		
		(21.02-20.83)	0.19		
		(21.42-21.02)	0.40		
		(21.56-21.42)	0.14		
		(21.85-21.56)	0.29		
		(22.65-21.85)	0.80		
		(23.02-22.65)	0.37		
		(23.73-23.02)	0.71		
		(24.08-23.73)	0.35		
		(24.82-24.08)	0.74		
		(25.23-24.82)	0.41		
		(25.91-25.23)	0.68		
		(26.93-25.91)	1.02		
		(27.00-26.93)	0.07		
		(27.13-27.00)	0.13		
		(28.09-27.13)	0.96		
		(28.62-28.09)	0.53		
		(29.18-28.62)	0.56		
		(29.92-29.18)	0.74		
		(29.92-29.92)	0.00		
				45.82	
68 1005.00	sc1	(-15.73--15.73)	0.00		
		(-15.39--15.73)	0.34		
		(-14.96--15.39)	0.43		
		(-14.31--14.96)	0.65		
		(-13.26--14.31)	1.05		
		(-13.22--13.26)	0.04		
		(-13.13--13.22)	0.09		
		(-12.13--13.13)	1.00		
		(-11.56--12.13)	0.57		
		(-11.04--11.56)	0.52		
		(-10.10--11.04)	0.94		
		(-9.95--10.10)	0.15		
		(-9.86--9.95)	0.09		
		(-8.86--9.86)	1.00		
		(-8.16--8.86)	0.70		
		(-7.77--8.16)	0.39		
		(-7.06--7.77)	0.71		
		(-6.68--7.06)	0.38		
		(-6.46--6.68)	0.22		
		(-5.59--6.46)	0.87		
		(-4.76--5.59)	0.83		
		(-4.50--4.76)	0.26		
		(-4.03--4.50)	0.47		
		(-3.41--4.03)	0.62		
		(-3.06--3.41)	0.35		
		(-2.32--3.06)	0.74		
		(-1.36--2.32)	0.96		
		(-1.23--1.36)	0.13		
		(-1.17--1.23)	0.06		
		(-1.00--1.17)	0.17		
		(-0.37--1.00)	0.63		
		(-0.14--0.37)	0.23		
		(0.34--0.14)	0.48		
		(0.95-0.34)	0.61		
		(2.03-0.95)	1.08		
		(2.04-2.03)	0.01		
		(2.04-2.04)	0.00		
		(3.13-2.04)	1.09		
		(3.74-3.13)	0.61		
		(4.21-3.74)	0.47		
		(5.07-4.21)	0.86		
		(5.30-5.07)	0.23		
		(5.44-5.30)	0.14		
		(6.39-5.44)	0.95		
		(7.14-6.39)	0.75		
		(7.48-7.14)	0.34		
		(8.10-7.48)	0.62		
		(8.57-8.10)	0.47		
		(8.84-8.57)	0.27		
		(9.66-8.84)	0.82		
		(10.54-9.66)	0.88		
		(10.75-10.54)	0.21		
		(11.13-10.75)	0.38		
		(11.84-11.13)	0.71		
		(12.24-11.84)	0.40		
		(12.93-12.24)	0.69		
		(13.94-12.93)	1.01		
		(14.02-13.94)	0.08		
		(14.16-14.02)	0.14		
		(15.11-14.16)	0.95		
		(15.64-15.11)	0.53		
		(16.20-15.64)	0.56		
		(16.83-16.20)	0.63		
		(16.91-16.83)	0.08		
		(16.97-16.91)	0.06		
		(17.00-16.97)	0.03		
		(17.15-17.00)	0.15		
		(17.29-17.15)	0.14		
		(18.07-17.29)	0.78		
		(18.38-18.07)	0.31		
		(19.03-18.38)	0.65		
		(19.31-19.03)	0.28		
		A RIPORTARE ml	35.04		

		CALCOLO DELLE LUNGHEZZE		Foglio n. 257
SCOTICO				
N. SEZIONE PROG.	FIG.	ELEMENTI DI CALCOLO	LUNGHEZZA ELEMENTARE ml	LUNGHEZZA FIGURA ml	NOTE
		RIPORTO ml	35.04		
		(19.32-19.31)	0.01		
		(19.34-19.32)	0.02		
		(19.35-19.34)	0.01		
		(19.35-19.35)	0.00		
		(19.38-19.35)	0.03		
		(19.39-19.38)	0.01		
		(19.39-19.39)	0.00		
		(19.46-19.39)	0.07		
		(19.77-19.46)	0.31		
		(20.23-19.77)	0.46		
		(20.56-20.23)	0.33		
		(20.74-20.56)	0.18		
		(21.65-20.74)	0.91		
		(22.44-21.65)	0.79		
		(22.74-22.44)	0.30		
		(23.26-22.74)	0.52		
		(23.82-23.26)	0.56		
		(24.14-23.82)	0.32		
		(24.91-24.14)	0.77		
		(25.84-24.91)	0.93		
		(26.00-25.84)	0.16		
		(26.30-26.00)	0.30		
		(27.09-26.30)	0.79		
		(27.54-27.09)	0.45		
		(28.18-27.54)	0.64		
		(29.24-28.18)	1.06		
		(29.27-29.24)	0.03		
		(29.33-29.27)	0.06		
		(30.17-29.33)	0.84		
		(30.17-30.17)	0.00		
				45.90	
69	sc1	(-15.62--15.62)	0.00		
1020.00		(-15.36--15.62)	0.26		
		(-14.56--15.36)	0.80		
		(-14.27--14.56)	0.29		
		(-13.77--14.27)	0.50		
		(-13.18--13.77)	0.59		
		(-12.85--13.18)	0.33		
		(-12.09--12.85)	0.76		
		(-11.14--12.09)	0.95		
		(-11.00--11.14)	0.14		
		(-10.75--11.00)	0.25		
		(-9.91--10.75)	0.84		
		(-9.43--9.91)	0.48		
		(-8.82--9.43)	0.61		
		(-7.74--8.82)	1.08		
		(-7.73--7.74)	0.01		
		(-7.73--7.73)	0.00		
		(-6.64--7.73)	1.09		
		(-6.13--6.64)	0.51		
		(-5.55--6.13)	0.58		
		(-4.72--5.55)	0.83		
		(-4.46--4.72)	0.26		
		(-4.31--4.46)	0.15		
		(-3.37--4.31)	0.94		
		(-2.60--3.37)	0.77		
		(-2.28--2.60)	0.32		
		(-1.71--2.28)	0.57		
		(-1.19--1.71)	0.52		
		(-0.90--1.19)	0.29		
		(-0.10--0.90)	0.80		
		(0.81--0.10)	0.91		
		(0.99-0.81)	0.18		
		(1.31-0.99)	0.32		
		(2.08-1.31)	0.77		
		(2.52-2.08)	0.44		
		(3.17-2.52)	0.65		
		(4.23-3.17)	1.06		
		(4.26-4.23)	0.03		
		(4.33-4.26)	0.07		
		(5.35-4.33)	1.02		
		(5.93-5.35)	0.58		
		(6.44-5.93)	0.51		
		(7.34-6.44)	0.90		
		(7.53-7.34)	0.19		
		(7.64-7.53)	0.11		
		(8.62-7.64)	0.98		
		(9.35-8.62)	0.73		
		(9.71-9.35)	0.36		
		(10.36-9.71)	0.65		
		(10.80-10.36)	0.44		
		(11.06-10.80)	0.26		
		(11.89-11.06)	0.83		
		(12.29-11.89)	0.40		
		(12.98-12.29)	0.69		
		(13.37-12.98)	0.39		
		(14.07-13.37)	0.70		
		(14.47-14.07)	0.40		
		(15.16-14.47)	0.69		
		(16.18-15.16)	1.02		
		(16.25-16.18)	0.07		
		(16.39-16.25)	0.14		
		(17.34-16.39)	0.95		
		(17.88-17.34)	0.54		
		(18.43-17.88)	0.55		
		(19.41-18.43)	0.98		
		(19.52-19.41)	0.11		
		(19.59-19.52)	0.07		
		(20.61-19.59)	1.02		
		(21.30-20.61)	0.69		
		(21.71-21.30)	0.41		
		(22.42-21.71)	0.71		
		(22.80-22.42)	0.38		
		(23.01-22.80)	0.21		
		A RIPORTARE ml	38.63		

		CALCOLO DELLE LUNGHEZZE		Foglio n. 258
SCOTICO				
N. SEZIONE PROG.	FIG.	ELEMENTI DI CALCOLO	LUNGHEZZA ELEMENTARE ml	LUNGHEZZA FIGURA ml	NOTE
		RIPORTO ml	38.63		
		(23.89-23.01)	0.88		
		(24.71-23.89)	0.82		
		(24.98-24.71)	0.27		
		(25.44-24.98)	0.46		
		(26.07-25.44)	0.63		
		(26.42-26.07)	0.35		
		(27.16-26.42)	0.74		
		(28.13-27.16)	0.97		
		(28.25-28.13)	0.12		
		(28.45-28.25)	0.20		
		(29.34-28.45)	0.89		
		(29.84-29.34)	0.50		
		(30.38-29.84)	0.54		
		(30.38-30.38)	0.00		
				46.00	
70	sc1	(-15.76--15.76)	0.00		
1035.00		(-15.36--15.76)	0.40		
		(-15.11--15.36)	0.25		
		(-14.43--15.11)	0.68		
		(-14.27--14.43)	0.16		
		(-14.17--14.27)	0.10		
		(-13.18--14.17)	0.99		
		(-12.46--13.18)	0.72		
		(-12.09--12.46)	0.37		
		(-11.91--12.09)	0.18		
		(-11.43--11.91)	0.48		
		(-11.11--11.43)	0.32		
		(-11.00--11.11)	0.11		
		(-10.75--11.00)	0.25		
		(-9.90--10.75)	0.85		
		(-9.03--9.90)	0.87		
		(-8.81--9.03)	0.22		
		(-8.43--8.81)	0.38		
		(-7.72--8.43)	0.71		
		(-7.32--7.72)	0.40		
		(-6.63--7.32)	0.69		
		(-5.60--6.63)	1.03		
		(-5.54--5.60)	0.06		
		(-5.43--5.54)	0.11		
		(-4.45--5.43)	0.98		
		(-3.89--4.45)	0.56		
		(-3.36--3.89)	0.53		
		(-2.44--3.36)	0.92		
		(-2.27--2.44)	0.17		
		(-2.17--2.27)	0.10		
		(-1.18--2.17)	0.99		
		(-0.46--1.18)	0.72		
		(-0.09--0.46)	0.37		
		(0.56--0.09)	0.65		
		(1.01-0.56)	0.45		
		(1.26-1.01)	0.25		
		(2.10-1.26)	0.84		
		(2.97-2.10)	0.87		
		(3.19-2.97)	0.22		
		(3.56-3.19)	0.37		
		(4.28-3.56)	0.72		
		(4.69-4.28)	0.41		
		(5.37-4.69)	0.68		
		(6.40-5.37)	1.03		
		(6.46-6.40)	0.06		
		(6.49-6.46)	0.03		
		(6.56-6.49)	0.07		
		(7.29-6.56)	0.73		
		(7.55-7.29)	0.26		
		(8.12-7.55)	0.57		
		(8.64-8.12)	0.52		
		(9.56-8.64)	0.92		
		(9.73-9.56)	0.17		
		(9.83-9.73)	0.10		
		(10.82-9.83)	0.99		
		(11.55-10.82)	0.73		
		(11.92-11.55)	0.37		
		(12.56-11.92)	0.64		
		(13.01-12.56)	0.45		
		(13.26-13.01)	0.25		
		(14.10-13.26)	0.84		
		(14.98-14.10)	0.88		
		(15.19-14.98)	0.21		
		(15.56-15.19)	0.37		
		(16.28-15.56)	0.72		
		(16.69-16.28)	0.41		
		(17.37-16.69)	0.68		
		(18.41-17.37)	1.04		
		(18.46-18.41)	0.05		
		(18.56-18.46)	0.10		
		(19.55-18.56)	0.99		
		(20.12-19.55)	0.57		
		(20.64-20.12)	0.52		
		(21.56-20.64)	0.92		
		(21.73-21.56)	0.17		
		(21.83-21.73)	0.10		
		(22.83-21.83)	1.00		
		(23.55-22.83)	0.72		
		(23.92-23.55)	0.37		
		(24.56-23.92)	0.64		
		(25.01-24.56)	0.45		
		(25.69-25.01)	0.68		
		(26.10-25.69)	0.41		
		(26.98-26.10)	0.88		
		(27.19-26.98)	0.21		
		(27.56-27.19)	0.37		
		(28.28-27.56)	0.72		
		(28.69-28.28)	0.41		
		(29.37-28.69)	0.68		
		A RIPORTARE ml	45.13		

		CALCOLO DELLE LUNGHEZZE		Foglio n. 259
SCOTICO				
N. SEZIONE PROG.	FIG.	ELEMENTI DI CALCOLO	LUNGHEZZA ELEMENTARE ml	LUNGHEZZA FIGURA ml	NOTE
		RIPORTO ml	45.13		
		(30.41-29.37)	1.04		
		(30.46-30.41)	0.05		
		(30.56-30.46)	0.10		
		(30.56-30.56)	0.00		
				46.32	
71	sc1	(-16.09--16.09)	0.00		
1050.00		(-15.54--16.09)	0.55		
		(-15.39--15.54)	0.15		
		(-15.12--15.39)	0.27		
		(-14.29--15.12)	0.83		
		(-13.82--14.29)	0.47		
		(-13.20--13.82)	0.62		
		(-12.13--13.20)	1.07		
		(-12.11--12.13)	0.02		
		(-12.10--12.11)	0.01		
		(-11.02--12.10)	1.08		
		(-10.38--11.02)	0.64		
		(-9.93--10.38)	0.45		
		(-9.15--9.93)	0.78		
		(-8.84--9.15)	0.31		
		(-8.65--8.84)	0.19		
		(-7.74--8.65)	0.91		
		(-6.93--7.74)	0.81		
		(-6.65--6.93)	0.28		
		(-6.17--6.65)	0.48		
		(-5.56--6.17)	0.61		
		(-5.21--5.56)	0.35		
		(-4.47--5.21)	0.74		
		(-3.49--4.47)	0.98		
		(-3.38--3.49)	0.11		
		(-3.19--3.38)	0.19		
		(-2.29--3.19)	0.90		
		(-1.77--2.29)	0.52		
		(-1.19--1.77)	0.58		
		(-0.20--1.19)	0.99		
		(-0.10--0.20)	0.10		
		(-0.04--0.10)	0.06		
		(0.99--0.04)	1.03		
		(1.47-0.99)	0.48		
		(2.08-1.47)	0.61		
		(2.78-2.08)	0.70		
		(3.17-2.78)	0.39		
		(3.40-3.17)	0.23		
		(4.27-3.40)	0.87		
		(5.12-4.27)	0.85		
		(5.36-5.12)	0.24		
		(5.76-5.36)	0.40		
		(6.45-5.76)	0.69		
		(6.85-6.45)	0.40		
		(7.54-6.85)	0.69		
		(8.57-7.54)	1.03		
		(8.63-8.57)	0.06		
		(8.75-8.63)	0.12		
		(9.72-8.75)	0.97		
		(10.29-9.72)	0.57		
		(10.82-10.29)	0.53		
		(11.73-10.82)	0.91		
		(11.91-11.73)	0.18		
		(12.01-11.91)	0.10		
		(13.00-12.01)	0.99		
		(13.73-13.00)	0.73		
		(14.09-13.73)	0.36		
		(14.71-14.09)	0.62		
		(15.18-14.71)	0.47		
		(15.46-15.18)	0.28		
		(16.28-15.46)	0.82		
		(17.18-16.28)	0.90		
		(17.37-17.18)	0.19		
		(17.69-17.37)	0.32		
		(18.46-17.69)	0.77		
		(18.90-18.46)	0.44		
		(19.55-18.90)	0.65		
		(19.85-19.55)	0.30		
		(20.64-19.85)	0.79		
		(20.68-20.64)	0.04		
		(21.73-20.68)	1.05		
		(22.34-21.73)	0.61		
		(22.83-22.34)	0.49		
		(23.66-22.83)	0.83		
		(23.92-23.66)	0.26		
		(24.07-23.92)	0.15		
		(25.01-24.07)	0.94		
		(25.79-25.01)	0.78		
		(26.10-25.79)	0.31		
		(26.64-26.10)	0.54		
		(27.19-26.64)	0.55		
		(27.51-27.19)	0.32		
		(28.29-27.51)	0.78		
		(29.23-28.29)	0.94		
		(29.38-29.23)	0.15		
		(29.44-29.38)	0.06		
		(29.63-29.44)	0.19		
		(30.24-29.63)	0.61		
		(30.47-30.24)	0.23		
		(30.71-30.47)	0.24		
		(30.71-30.71)	0.00		
				46.80	
72	sc1	(-16.00--16.00)	0.00		
1065.00		(-15.83--16.00)	0.17		
		(-15.44--15.83)	0.39		
		(-15.22--15.44)	0.22		
		(-14.35--15.22)	0.87		
		(-13.49--14.35)	0.86		
		(-13.26--13.49)	0.23		
		A RIPORTARE ml	2.74		

		CALCOLO DELLE LUNGHEZZE		Foglio n. 260
SCOTICO				
N. SEZIONE PROG.	FIG.	ELEMENTI DI CALCOLO	LUNGHEZZA ELEMENTARE ml	LUNGHEZZA FIGURA ml	NOTE
		RIPORTO ml	2.74		
		(-12.86--13.26)	0.40		
		(-12.17--12.86)	0.69		
		(-11.76--12.17)	0.41		
		(-11.07--11.76)	0.69		
		(-10.03--11.07)	1.04		
		(-9.98--10.03)	0.05		
		(-9.89--9.98)	0.09		
		(-8.89--9.89)	1.00		
		(-8.30--8.89)	0.59		
		(-7.80--8.30)	0.50		
		(-6.93--7.80)	0.87		
		(-6.70--6.93)	0.23		
		(-6.57--6.70)	0.13		
		(-5.61--6.57)	0.96		
		(-4.84--5.61)	0.77		
		(-4.52--4.84)	0.32		
		(-4.37--4.52)	0.15		
		(-3.96--4.37)	0.41		
		(-3.57--3.96)	0.39		
		(-3.43--3.57)	0.14		
		(-3.12--3.43)	0.31		
		(-2.33--3.12)	0.79		
		(-1.39--2.33)	0.94		
		(-1.24--1.39)	0.15		
		(-0.99--1.24)	0.25		
		(-0.15--0.99)	0.84		
		(0.34--0.15)	0.49		
		(0.94-0.34)	0.60		
		(1.98-0.94)	1.04		
		(2.04-1.98)	0.06		
		(2.07-2.04)	0.03		
		(3.13-2.07)	1.06		
		(3.80-3.13)	0.67		
		(4.22-3.80)	0.42		
		(4.94-4.22)	0.72		
		(5.32-4.94)	0.38		
		(5.53-5.32)	0.21		
		(6.41-5.53)	0.88		
		(7.26-6.41)	0.85		
		(7.50-7.26)	0.24		
		(7.91-7.50)	0.41		
		(8.59-7.91)	0.68		
		(8.99-8.59)	0.40		
		(9.69-8.99)	0.70		
		(10.72-9.69)	1.03		
		(10.78-10.72)	0.06		
		(10.88-10.78)	0.10		
		(11.87-10.88)	0.99		
		(12.45-11.87)	0.58		
		(12.96-12.45)	0.51		
		(13.84-12.96)	0.88		
		(14.06-13.84)	0.22		
		(14.80-14.06)	0.74		
		(15.15-14.80)	0.35		
		(15.91-15.15)	0.76		
		(16.24-15.91)	0.33		
		(16.81-16.24)	0.57		
		(17.33-16.81)	0.52		
		(17.64-17.33)	0.31		
		(18.43-17.64)	0.79		
		(19.37-18.43)	0.94		
		(19.52-19.37)	0.15		
		(19.78-19.52)	0.26		
		(20.61-19.78)	0.83		
		(21.10-20.61)	0.49		
		(21.70-21.10)	0.60		
		(22.74-21.70)	1.04		
		(22.80-22.74)	0.06		
		(22.83-22.80)	0.03		
		(23.89-22.83)	1.06		
		(24.38-23.89)	0.49		
		(24.98-24.38)	0.60		
		(25.71-24.98)	0.73		
		(26.07-25.71)	0.36		
		(26.29-26.07)	0.22		
		(27.17-26.29)	0.88		
		(28.02-27.17)	0.85		
		(28.26-28.02)	0.24		
		(28.68-28.26)	0.42		
		(29.35-28.68)	0.67		
		(29.75-29.35)	0.40		
		(30.44-29.75)	0.69		
		(30.79-30.44)	0.35		
		(30.79-30.79)	0.00		
				46.79	
73 1080.00	sc1	(-16.20--16.20)	0.00		
		(-15.53--16.20)	0.67		
		(-14.93--15.53)	0.60		
		(-14.44--14.93)	0.49		
		(-13.60--14.44)	0.84		
		(-13.35--13.60)	0.25		
		(-13.19--13.35)	0.16		
		(-12.25--13.19)	0.94		
		(-11.46--12.25)	0.79		
		(-11.16--11.46)	0.30		
		(-10.65--11.16)	0.51		
		(-10.06--10.65)	0.59		
		(-9.43--10.06)	0.63		
		(-8.97--9.43)	0.46		
		(-7.98--8.97)	0.99		
		(-7.88--7.98)	0.10		
		(-7.70--7.88)	0.18		
		(-6.78--7.70)	0.92		
		(-6.24--6.78)	0.54		
		A RIPORTARE ml	9.96		

		CALCOLO DELLE LUNGHEZZE		Foglio n. 261
SCOTICO				
N. SEZIONE PROG.	FIG.	ELEMENTI DI CALCOLO	LUNGHEZZA ELEMENTARE ml	LUNGHEZZA FIGURA ml	NOTE
		RIPORTO ml	9.96		
		(-5.69--6.24)	0.55		
		(-4.75--5.69)	0.94		
		(-4.60--4.75)	0.15		
		(-4.51--4.60)	0.09		
		(-3.50--4.51)	1.01		
		(-2.77--3.50)	0.73		
		(-2.41--2.77)	0.36		
		(-1.80--2.41)	0.61		
		(-1.32--1.80)	0.48		
		(-1.03--1.32)	0.29		
		(-0.22--1.03)	0.81		
		(0.70--0.22)	0.92		
		(0.87-0.70)	0.17		
		(1.15-0.87)	0.28		
		(1.96-1.15)	0.81		
		(2.44-1.96)	0.48		
		(3.06-2.44)	0.62		
		(4.10-3.06)	1.04		
		(4.15-4.10)	0.05		
		(4.18-4.15)	0.03		
		(5.24-4.18)	1.06		
		(5.92-5.24)	0.68		
		(6.34-5.92)	0.42		
		(7.05-6.34)	0.71		
		(7.43-7.05)	0.38		
		(7.65-7.43)	0.22		
		(8.52-7.65)	0.87		
		(8.92-8.52)	0.40		
		(9.62-8.92)	0.70		
		(10.00-9.62)	0.38		
		(10.71-10.00)	0.71		
		(11.13-10.71)	0.42		
		(11.80-11.13)	0.67		
		(12.86-11.80)	1.06		
		(12.90-12.86)	0.04		
		(12.95-12.90)	0.05		
		(13.99-12.95)	1.04		
		(14.60-13.99)	0.61		
		(15.08-14.60)	0.48		
		(15.90-15.08)	0.82		
		(16.18-15.90)	0.28		
		(16.34-16.18)	0.16		
		(17.27-16.34)	0.93		
		(18.08-17.27)	0.81		
		(18.36-18.08)	0.28		
		(18.50-18.36)	0.14		
		(18.85-18.50)	0.35		
		(19.29-18.85)	0.44		
		(19.46-19.29)	0.17		
		(19.81-19.46)	0.35		
		(20.55-19.81)	0.74		
		(21.55-20.55)	1.00		
		(21.64-21.55)	0.09		
		(21.80-21.64)	0.16		
		(22.74-21.80)	0.94		
		(23.29-22.74)	0.55		
		(23.83-23.29)	0.54		
		(24.75-23.83)	0.92		
		(24.92-24.75)	0.17		
		(25.02-24.92)	0.10		
		(26.02-25.02)	1.00		
		(26.76-26.02)	0.74		
		(27.11-26.76)	0.35		
		(27.71-27.11)	0.60		
		(28.20-27.71)	0.49		
		(28.50-28.20)	0.30		
		(29.30-28.50)	0.80		
		(29.67-29.30)	0.37		
		(30.39-29.67)	0.72		
		(30.66-30.39)	0.27		
		(30.83-30.66)	0.17		
		(30.83-30.83)	0.00		
				47.03	
74 1095.00	sc1	(-16.15--16.15)	0.00		
		(-15.65--16.15)	0.50		
		(-15.30--15.65)	0.35		
		(-14.56--15.30)	0.74		
		(-14.37--14.56)	0.19		
		(-13.46--14.37)	0.91		
		(-12.92--13.46)	0.54		
		(-12.37--12.92)	0.55		
		(-11.44--12.37)	0.93		
		(-11.27--11.44)	0.17		
		(-10.97--11.27)	0.30		
		(-10.91--10.97)	0.06		
		(-10.81--10.91)	0.10		
		(-10.77--10.81)	0.04		
		(-10.75--10.77)	0.02		
		(-10.74--10.75)	0.01		
		(-10.73--10.74)	0.01		
		(-10.73--10.73)	0.00		
		(-10.69--10.73)	0.04		
		(-10.64--10.69)	0.05		
		(-10.38--10.64)	0.26		
		(-10.18--10.38)	0.20		
		(-9.43--10.18)	0.75		
		(-9.08--9.43)	0.35		
		(-8.50--9.08)	0.58		
		(-7.99--8.50)	0.51		
		(-7.69--7.99)	0.30		
		(-6.90--7.69)	0.79		
		(-6.54--6.90)	0.36		
		(-6.23--6.54)	0.31		
		(-6.10--6.23)	0.13		
		A RIPORTARE ml	10.05		

		CALCOLO DELLE LUNGHEZZE		Foglio n. 262
SCOTICO				
N. SEZIONE PROG.	FIG.	ELEMENTI DI CALCOLO	LUNGHEZZA ELEMENTARE ml	LUNGHEZZA FIGURA ml	NOTE
		RIPORTO ml	10.05		
		(-5.96--6.10)	0.14		
		(-5.89--5.96)	0.07		
		(-5.87--5.89)	0.02		
		(-5.85--5.87)	0.02		
		(-5.84--5.85)	0.01		
		(-5.83--5.84)	0.01		
		(-5.77--5.83)	0.06		
		(-5.77--5.77)	0.00		
		(-5.77--5.77)	0.00		
		(-5.77--5.77)	0.00		
		(-5.74--5.77)	0.03		
		(-5.57--5.74)	0.17		
		(-4.71--5.57)	0.86		
		(-4.20--4.71)	0.51		
		(-3.61--4.20)	0.59		
		(-3.46--3.61)	0.15		
		(-3.18--3.46)	0.28		
		(-3.11--3.18)	0.07		
		(-3.07--3.11)	0.04		
		(-3.04--3.07)	0.03		
		(-3.03--3.04)	0.01		
		(-3.02--3.03)	0.01		
		(-3.02--3.02)	0.00		
		(-3.01--3.02)	0.01		
		(-3.01--3.01)	0.00		
		(-3.01--3.01)	0.00		
		(-3.01--3.01)	0.00		
		(-3.01--3.01)	0.00		
		(-3.00--3.01)	0.01		
		(-3.00--3.00)	0.00		
		(-3.00--3.00)	0.00		
		(-3.00--3.00)	0.00		
		(-3.00--3.00)	0.00		
		(-3.00--3.00)	0.00		
		(-3.00--3.00)	0.00		
		(-2.97--3.00)	0.03		
		(-2.96--2.97)	0.01		
		(-2.95--2.96)	0.01		
		(-2.95--2.95)	0.00		
		(-2.94--2.95)	0.01		
		(-2.93--2.94)	0.01		
		(-2.93--2.93)	0.00		
		(-2.93--2.93)	0.00		
		(-2.92--2.93)	0.01		
		(-2.91--2.92)	0.01		
		(-2.86--2.91)	0.05		
		(-2.72--2.86)	0.14		
		(-2.70--2.72)	0.02		
		(-2.68--2.70)	0.02		
		(-2.67--2.68)	0.01		
		(-2.67--2.67)	0.00		
		(-2.66--2.67)	0.01		
		(-2.66--2.66)	0.00		
		(-2.66--2.66)	0.00		
		(-2.66--2.66)	0.00		
		(-2.66--2.66)	0.00		
		(-2.65--2.66)	0.01		
		(-2.65--2.65)	0.00		
		(-2.65--2.65)	0.00		
		(-2.64--2.65)	0.01		
		(-2.64--2.64)	0.00		
		(-2.64--2.64)	0.00		
		(-2.64--2.64)	0.00		
		(-2.60--2.64)	0.04		
		(-2.60--2.60)	0.00		
		(-2.59--2.60)	0.01		
		(-2.57--2.59)	0.02		
		(-2.53--2.57)	0.04		
		(-2.53--2.53)	0.00		
		(-2.53--2.53)	0.00		
		(-2.52--2.53)	0.01		
		(-1.75--2.52)	0.77		
		(-1.43--1.75)	0.32		
		(-0.96--1.43)	0.47		
		(-0.33--0.96)	0.63		
		(-0.16--0.33)	0.17		
		(0.30--0.16)	0.46		
		(0.76-0.30)	0.46		
		(1.04-0.76)	0.28		
		(1.86-1.04)	0.82		
		(2.78-1.86)	0.92		
		(2.95-2.78)	0.17		
		(3.03-2.95)	0.08		
		(3.24-3.03)	0.21		
		(3.83-3.24)	0.59		
		(4.05-3.83)	0.22		
		(4.53-4.05)	0.48		
		(5.14-4.53)	0.61		
		(6.17-5.14)	1.03		
		(6.23-6.17)	0.06		
		(6.27-6.23)	0.04		
		(7.33-6.27)	1.06		
		(8.02-7.33)	0.69		
		(8.42-8.02)	0.40		
		(9.11-8.42)	0.69		
		(9.52-9.11)	0.41		
		(9.76-9.52)	0.24		
		(10.61-9.76)	0.85		
		(11.51-10.61)	0.90		
		(11.71-11.51)	0.20		
		(12.04-11.71)	0.33		
		(12.59-12.04)	0.55		
		(12.80-12.59)	0.21		
		(13.25-12.80)	0.45		
		A RIPORTARE ml	29.40		

		CALCOLO DELLE LUNGHEZZE		Foglio n. 263
SCOTICO				
N. SEZIONE PROG.	FIG.	ELEMENTI DI CALCOLO	LUNGHEZZA ELEMENTARE ml	LUNGHEZZA FIGURA ml	NOTE
		RIPORTO ml	29.40		
		(13.89-13.25)	0.64		
		(14.98-13.89)	1.09		
		(14.99-14.98)	0.01		
		(15.00-14.99)	0.01		
		(16.08-15.00)	1.08		
		(16.74-16.08)	0.66		
		(17.18-16.74)	0.44		
		(17.91-17.18)	0.73		
		(18.27-17.91)	0.36		
		(18.48-18.27)	0.21		
		(19.37-18.48)	0.89		
		(20.23-19.37)	0.86		
		(20.46-20.23)	0.23		
		(20.85-20.46)	0.39		
		(21.55-20.85)	0.70		
		(21.97-21.55)	0.42		
		(22.65-21.97)	0.68		
		(23.72-22.65)	1.07		
		(23.74-23.72)	0.02		
		(23.75-23.74)	0.01		
		(23.78-23.75)	0.03		
		(24.55-23.78)	0.77		
		(24.84-24.55)	0.29		
		(25.46-24.84)	0.62		
		(25.93-25.46)	0.47		
		(26.72-25.93)	0.79		
		(27.02-26.72)	0.30		
		(27.21-27.02)	0.19		
		(28.12-27.21)	0.91		
		(28.95-28.12)	0.83		
		(29.21-28.95)	0.26		
		(29.65-29.21)	0.44		
		(30.31-29.65)	0.66		
		(30.70-30.31)	0.39		
		(30.91-30.70)	0.21		
		(30.91-30.91)	0.00		
				47.06	
75 1110.00	sc1	(-16.45--16.45)	0.00		
		(-16.18--16.45)	0.27		
		(-15.80--16.18)	0.38		
		(-15.16--15.80)	0.64		
		(-14.70--15.16)	0.46		
		(-14.43--14.70)	0.27		
		(-13.61--14.43)	0.82		
		(-12.68--13.61)	0.93		
		(-12.51--12.68)	0.17		
		(-12.24--12.51)	0.27		
		(-11.42--12.24)	0.82		
		(-11.09--11.42)	0.33		
		(-10.95--11.09)	0.14		
		(-10.92--10.95)	0.03		
		(-10.90--10.92)	0.02		
		(-10.86--10.90)	0.04		
		(-10.84--10.86)	0.02		
		(-10.84--10.84)	0.00		
		(-10.81--10.84)	0.03		
		(-10.81--10.81)	0.00		
		(-10.81--10.81)	0.00		
		(-10.80--10.81)	0.01		
		(-10.76--10.80)	0.04		
		(-10.63--10.76)	0.13		
		(-10.32--10.63)	0.31		
		(-9.32--10.32)	1.00		
		(-9.23--9.32)	0.09		
		(-9.17--9.23)	0.06		
		(-8.13--9.17)	1.04		
		(-7.42--8.13)	0.71		
		(-7.04--7.42)	0.38		
		(-6.40--7.04)	0.64		
		(-6.07--6.40)	0.33		
		(-6.02--6.07)	0.05		
		(-6.00--6.02)	0.02		
		(-6.00--6.00)	0.00		
		(-6.00--6.00)	0.00		
		(-5.95--6.00)	0.05		
		(-5.94--5.95)	0.01		
		(-5.92--5.94)	0.02		
		(-5.90--5.92)	0.02		
		(-5.90--5.90)	0.00		
		(-5.88--5.90)	0.02		
		(-5.81--5.88)	0.07		
		(-5.67--5.81)	0.14		
		(-5.55--5.67)	0.12		
		(-5.27--5.55)	0.28		
		(-4.85--5.27)	0.42		
		(-3.91--4.85)	0.94		
		(-3.75--3.91)	0.16		
		(-3.49--3.75)	0.26		
		(-2.88--3.49)	0.61		
		(-2.79--2.88)	0.09		
		(-2.77--2.79)	0.02		
		(-2.76--2.77)	0.01		
		(-2.74--2.76)	0.02		
		(-2.73--2.74)	0.01		
		(-2.72--2.73)	0.01		
		(-2.71--2.72)	0.01		
		(-2.70--2.71)	0.01		
		(-2.70--2.70)	0.00		
		(-2.69--2.70)	0.01		
		(-2.69--2.69)	0.00		
		(-2.69--2.69)	0.00		
		(-2.68--2.69)	0.01		
		(-2.68--2.68)	0.00		
		(-2.68--2.68)	0.00		
		A RIPORTARE ml	13.77		

		CALCOLO DELLE LUNGHEZZE		Foglio n. 264
SCOTICO				
N. SEZIONE PROG.	FIG.	ELEMENTI DI CALCOLO	LUNGHEZZA ELEMENTARE ml	LUNGHEZZA FIGURA ml	NOTE
		RIPORTO ml	13.77		
		(-2.68--2.68)	0.00		
		(-2.68--2.68)	0.00		
		(-2.65--2.68)	0.03		
		(-2.64--2.65)	0.01		
		(-2.63--2.64)	0.01		
		(-2.63--2.63)	0.00		
		(-2.58--2.63)	0.05		
		(-2.58--2.58)	0.00		
		(-2.58--2.58)	0.00		
		(-2.43--2.58)	0.15		
		(-2.38--2.43)	0.05		
		(-2.37--2.38)	0.01		
		(-2.36--2.37)	0.01		
		(-2.35--2.36)	0.01		
		(-2.35--2.35)	0.00		
		(-2.34--2.35)	0.01		
		(-2.34--2.34)	0.00		
		(-2.33--2.34)	0.01		
		(-2.33--2.33)	0.00		
		(-2.33--2.33)	0.00		
		(-2.33--2.33)	0.00		
		(-2.32--2.33)	0.01		
		(-2.32--2.32)	0.00		
		(-2.32--2.32)	0.00		
		(-2.22--2.32)	0.10		
		(-2.20--2.22)	0.02		
		(-2.19--2.20)	0.01		
		(-2.10--2.19)	0.09		
		(-1.87--2.10)	0.23		
		(-1.56--1.87)	0.31		
		(-0.57--1.56)	0.99		
		(-0.47--0.57)	0.10		
		(-0.41--0.47)	0.06		
		(0.63--0.41)	1.04		
		(1.34-0.63)	0.71		
		(1.72-1.34)	0.38		
		(2.35-1.72)	0.63		
		(2.82-2.35)	0.47		
		(3.10-2.82)	0.28		
		(3.91-3.10)	0.81		
		(4.85-3.91)	0.94		
		(5.01-4.85)	0.16		
		(5.27-5.01)	0.26		
		(6.10-5.27)	0.83		
		(6.60-6.10)	0.50		
		(7.20-6.60)	0.60		
		(7.47-7.20)	0.27		
		(8.19-7.47)	0.72		
		(8.27-8.19)	0.08		
		(8.29-8.27)	0.02		
		(8.35-8.29)	0.06		
		(9.39-8.35)	1.04		
		(10.11-9.39)	0.72		
		(10.48-10.11)	0.37		
		(11.11-10.48)	0.63		
		(11.58-11.11)	0.47		
		(11.86-11.58)	0.28		
		(12.67-11.86)	0.81		
		(13.61-12.67)	0.94		
		(13.77-13.61)	0.16		
		(14.03-13.77)	0.26		
		(14.86-14.03)	0.83		
		(15.36-14.86)	0.50		
		(15.96-15.36)	0.60		
		(16.95-15.96)	0.99		
		(17.05-16.95)	0.10		
		(17.12-17.05)	0.07		
		(18.15-17.12)	1.03		
		(18.62-18.15)	0.47		
		(19.24-18.62)	0.62		
		(19.87-19.24)	0.63		
		(20.34-19.87)	0.47		
		(20.62-20.34)	0.28		
		(21.43-20.62)	0.81		
		(22.37-21.43)	0.94		
		(22.53-22.37)	0.16		
		(22.79-22.53)	0.26		
		(23.62-22.79)	0.83		
		(24.12-23.62)	0.50		
		(24.72-24.12)	0.60		
		(25.71-24.72)	0.99		
		(25.81-25.71)	0.10		
		(25.88-25.81)	0.07		
		(26.91-25.88)	1.03		
		(27.63-26.91)	0.72		
		(28.00-27.63)	0.37		
		(28.63-28.00)	0.63		
		(29.10-28.63)	0.47		
		(29.77-29.10)	0.67		
		(30.19-29.77)	0.42		
		(31.00-30.19)	0.81		
		(31.00-31.00)	0.00		
				47.45	
76 1125.00	sc1	(-16.55--16.55)	0.00		
		(-15.98--16.55)	0.57		
		(-15.98--15.98)	0.00		
		(-15.97--15.98)	0.01		
		(-14.88--15.97)	1.09		
		(-14.22--14.88)	0.66		
		(-13.78--14.22)	0.44		
		(-13.07--13.78)	0.71		
		(-12.69--13.07)	0.38		
		(-12.46--12.69)	0.23		
		(-11.59--12.46)	0.87		
		A RIPORTARE ml	4.96		

		CALCOLO DELLE LUNGHEZZE		Foglio n. 265
SCOTICO				
N. SEZIONE PROG.	FIG.	ELEMENTI DI CALCOLO	LUNGHEZZA ELEMENTARE ml	LUNGHEZZA FIGURA ml	NOTE
		RIPORTO ml	4.96		
		(-11.37--11.59)	0.22		
		(-11.11--11.37)	0.26		
		(-11.06--11.11)	0.05		
		(-10.98--11.06)	0.08		
		(-10.96--10.98)	0.02		
		(-10.96--10.96)	0.00		
		(-10.92--10.96)	0.04		
		(-10.92--10.92)	0.00		
		(-10.91--10.92)	0.01		
		(-10.90--10.91)	0.01		
		(-10.82--10.90)	0.08		
		(-10.78--10.82)	0.04		
		(-10.50--10.78)	0.28		
		(-10.17--10.50)	0.33		
		(-9.40--10.17)	0.77		
		(-8.94--9.40)	0.46		
		(-8.31--8.94)	0.63		
		(-8.02--8.31)	0.29		
		(-7.26--8.02)	0.76		
		(-7.22--7.26)	0.04		
		(-7.21--7.22)	0.01		
		(-6.43--7.21)	0.78		
		(-6.30--6.43)	0.13		
		(-6.24--6.30)	0.06		
		(-6.14--6.24)	0.10		
		(-6.08--6.14)	0.06		
		(-6.05--6.08)	0.03		
		(-6.05--6.05)	0.00		
		(-6.04--6.05)	0.01		
		(-6.02--6.04)	0.02		
		(-6.00--6.02)	0.02		
		(-5.99--6.00)	0.01		
		(-5.92--5.99)	0.07		
		(-5.84--5.92)	0.08		
		(-5.63--5.84)	0.21		
		(-5.02--5.63)	0.61		
		(-4.36--5.02)	0.66		
		(-3.92--4.36)	0.44		
		(-3.66--3.92)	0.26		
		(-2.83--3.66)	0.83		
		(-2.61--2.83)	0.22		
		(-2.46--2.61)	0.15		
		(-2.45--2.46)	0.01		
		(-2.44--2.45)	0.01		
		(-2.43--2.44)	0.01		
		(-2.42--2.43)	0.01		
		(-2.41--2.42)	0.01		
		(-2.41--2.41)	0.00		
		(-2.40--2.41)	0.01		
		(-2.40--2.40)	0.00		
		(-2.39--2.40)	0.01		
		(-2.39--2.39)	0.00		
		(-2.39--2.39)	0.00		
		(-2.38--2.39)	0.01		
		(-2.36--2.38)	0.02		
		(-2.35--2.36)	0.01		
		(-2.34--2.35)	0.01		
		(-2.34--2.34)	0.00		
		(-2.28--2.34)	0.06		
		(-2.27--2.28)	0.01		
		(-2.27--2.27)	0.00		
		(-2.15--2.27)	0.12		
		(-2.07--2.15)	0.08		
		(-2.07--2.07)	0.00		
		(-2.06--2.07)	0.01		
		(-2.06--2.06)	0.00		
		(-2.05--2.06)	0.01		
		(-2.04--2.05)	0.01		
		(-2.04--2.04)	0.00		
		(-2.04--2.04)	0.00		
		(-2.04--2.04)	0.00		
		(-2.03--2.04)	0.01		
		(-2.03--2.03)	0.00		
		(-2.03--2.03)	0.00		
		(-1.92--2.03)	0.11		
		(-1.90--1.92)	0.02		
		(-1.88--1.90)	0.02		
		(-1.70--1.88)	0.18		
		(-1.69--1.70)	0.01		
		(-1.65--1.69)	0.04		
		(-1.45--1.65)	0.20		
		(-0.63--1.45)	0.82		
		(-0.14--0.63)	0.49		
		(0.46--0.14)	0.60		
		(1.45-0.46)	0.99		
		(1.56-1.45)	0.11		
		(2.32-1.56)	0.76		
		(2.65-2.32)	0.33		
		(3.38-2.65)	0.73		
		(3.75-3.38)	0.37		
		(4.35-3.75)	0.60		
		(4.84-4.35)	0.49		
		(5.14-4.84)	0.30		
		(5.94-5.14)	0.80		
		(6.90-5.94)	0.96		
		(7.04-6.90)	0.14		
		(7.26-7.04)	0.22		
		(8.13-7.26)	0.87		
		(8.66-8.13)	0.53		
		(9.23-8.66)	0.57		
		(10.16-9.23)	0.93		
		(10.32-10.16)	0.16		
		(10.42-10.32)	0.10		
		(11.42-10.42)	1.00		
		A RIPORTARE ml	27.97		

	CALCOLO DELLE LUNGHEZZE		Foglio n. 266

SCOTICO

N. SEZIONE PROG.	FIG.	ELEMENTI DI CALCOLO	LUNGHEZZA ELEMENTARE ml	LUNGHEZZA FIGURA ml	NOTE
		RIPORTO ml	27.97		
		(12.18-11.42)	0.76		
		(12.52-12.18)	0.34		
		(12.67-12.52)	0.15		
		(13.06-12.67)	0.39		
		(13.46-13.06)	0.40		
		(13.61-13.46)	0.15		
		(13.94-13.61)	0.33		
		(14.71-13.94)	0.77		
		(15.70-14.71)	0.99		
		(15.80-15.70)	0.10		
		(15.97-15.80)	0.17		
		(16.90-15.97)	0.93		
		(17.46-16.90)	0.56		
		(18.00-17.46)	0.54		
		(18.87-18.00)	0.87		
		(19.09-18.87)	0.22		
		(19.22-19.09)	0.13		
		(20.19-19.22)	0.97		
		(20.98-20.19)	0.79		
		(21.28-20.98)	0.30		
		(21.78-21.28)	0.50		
		(22.38-21.78)	0.60		
		(22.74-22.38)	0.36		
		(23.47-22.74)	0.73		
		(23.80-23.47)	0.33		
		(24.57-23.80)	0.77		
		(24.68-24.57)	0.11		
		(25.67-24.68)	0.99		
		(26.26-25.67)	0.59		
		(26.76-26.26)	0.50		
		(27.58-26.76)	0.82		
		(27.86-27.58)	0.28		
		(28.02-27.86)	0.16		
		(28.95-28.02)	0.93		
		(29.78-28.95)	0.83		
		(30.05-29.78)	0.27		
		(30.49-30.05)	0.44		
		(31.05-30.49)	0.56		
		(31.05-31.05)	0.00		
				47.60	

Il Direttore dei Lavori	L'Impresa	

	CALCOLO DELLE LUNGHEZZE		Foglio n. 267

SPARTITRAFFICO

N. SEZIONE PROG.	FIG.	ELEMENTI DI CALCOLO	LUNGHEZZA ELEMENTARE ml	LUNGHEZZA FIGURA ml	NOTE
1	st1	(-1.16--1.20)	0.04		
0.00		(1.25--1.16)	2.41		
		(1.30-1.25)	0.05		
				2.50	
1	st2	(1.30-0.73)	0.57		
				0.57	
1	st3	(-0.63--1.20)	0.57		
				0.57	
2	st1	(-1.21--1.25)	0.04		
15.00		(1.20--1.21)	2.41		
		(1.25-1.20)	0.05		
				2.50	
2	st2	(1.25-0.68)	0.57		
				0.57	
2	st3	(-0.68--1.25)	0.57		
				0.57	
3	st1	(-1.21--1.25)	0.04		
30.00		(1.20--1.21)	2.41		
		(1.25-1.20)	0.05		
				2.50	
3	st2	(-0.68--1.25)	0.57		
				0.57	
3	st3	(1.25-0.68)	0.57		
				0.57	
4	st1	(-1.21--1.25)	0.04		
45.00		(1.20--1.21)	2.41		
		(1.25-1.20)	0.05		
				2.50	
4	st2	(-0.68--1.25)	0.57		
				0.57	
4	st3	(1.25-0.68)	0.57		
				0.57	
5	st1	(-1.21--1.25)	0.04		
60.00		(1.20--1.21)	2.41		
		(1.25-1.20)	0.05		
				2.50	
5	st2	(-0.68--1.25)	0.57		
				0.57	
5	st3	(1.25-0.68)	0.57		
				0.57	
6	st1	(-1.21--1.25)	0.04		
75.00		(1.20--1.21)	2.41		
		(1.25-1.20)	0.05		
				2.50	
6	st2	(-0.68--1.25)	0.57		
				0.57	
6	st3	(1.25-0.68)	0.57		
				0.57	
7	st1	(-1.21--1.25)	0.04		
90.00		(1.20--1.21)	2.41		
		(1.25-1.20)	0.05		
				2.50	
7	st2	(-0.68--1.25)	0.57		
				0.57	
7	st3	(1.25-0.68)	0.57		
				0.57	
8	st1	(-1.20--1.25)	0.05		
105.00		(1.20--1.20)	2.40		
		(1.25-1.20)	0.05		
				2.50	
9	st1	(-1.20--1.25)	0.05		
120.00		(1.20--1.20)	2.40		
		(1.25-1.20)	0.05		
				2.50	
10	st1	(-1.20--1.25)	0.05		
135.00		(1.20--1.20)	2.40		
		(1.25-1.20)	0.05		
				2.50	
11	st1	(-1.20--1.25)	0.05		
150.00		(1.20--1.20)	2.40		
		(1.25-1.20)	0.05		
				2.50	
12	st1	(-1.20--1.25)	0.05		
165.00		(1.20--1.20)	2.40		
		(1.25-1.20)	0.05		
				2.50	
13	st1	(-1.20--1.25)	0.05		
180.00		(1.20--1.20)	2.40		
		(1.25-1.20)	0.05		
				2.50	
14	st1	(-1.20--1.25)	0.05		
195.00		(1.20--1.20)	2.40		
		(1.25-1.20)	0.05		
				2.50	
15	st1	(-1.20--1.25)	0.05		
210.00		(1.20--1.20)	2.40		
		(1.25-1.20)	0.05		
				2.50	
16	st1	(-1.20--1.25)	0.05		
225.00		(1.20--1.20)	2.40		
		(1.25-1.20)	0.05		
				2.50	
17	st1	(-1.20--1.25)	0.05		
240.00		(1.20--1.20)	2.40		
		(1.25-1.20)	0.05		
				2.50	
18	st1	(-1.20--1.25)	0.05		
255.00		(1.20--1.20)	2.40		
		(1.25-1.20)	0.05		
				2.50	
19	st1	(-1.20--1.25)	0.05		
270.00		(1.20--1.20)	2.40		
		(1.25-1.20)	0.05		
				2.50	
20	st1	(-1.20--1.25)	0.05		
285.00		(1.20--1.20)	2.40		
		A RIPORTARE ml	2.45		

		CALCOLO DELLE LUNGHEZZE		Foglio n. 268
SPARTITRAFFICO				
N. SEZIONE PROG.	FIG.	ELEMENTI DI CALCOLO	LUNGHEZZA ELEMENTARE ml	LUNGHEZZA FIGURA ml	NOTE
		RIPORTO ml	2.45		
		(1.25-1.20)	0.05		
				2.50	
21	st1	(-1.20--1.25)	0.05		
300.00		(1.20--1.20)	2.40		
		(1.25-1.20)	0.05		
				2.50	
22	st1	(-1.20--1.25)	0.05		
315.00		(1.20--1.20)	2.40		
		(1.25-1.20)	0.05		
				2.50	
23	st1	(-1.20--1.25)	0.05		
330.00		(1.20--1.20)	2.40		
		(1.25-1.20)	0.05		
				2.50	
24	st1	(-1.20--1.25)	0.05		
345.00		(1.20--1.20)	2.40		
		(1.25-1.20)	0.05		
				2.50	
25	st1	(-1.20--1.25)	0.05		
360.00		(1.20--1.20)	2.40		
		(1.25-1.20)	0.05		
				2.50	
26	st1	(-1.20--1.25)	0.05		
375.00		(1.20--1.20)	2.40		
		(1.25-1.20)	0.05		
				2.50	
27	st1	(-1.20--1.25)	0.05		
390.00		(1.20--1.20)	2.40		
		(1.25-1.20)	0.05		
				2.50	
28	st1	(-1.20--1.25)	0.05		
405.00		(1.20--1.20)	2.40		
		(1.25-1.20)	0.05		
				2.50	
29	st1	(-1.20--1.25)	0.05		
420.00		(1.20--1.20)	2.40		
		(1.25-1.20)	0.05		
				2.50	
30	st1	(-1.20--1.25)	0.05		
435.00		(1.20--1.20)	2.40		
		(1.25-1.20)	0.05		
				2.50	
31	st1	(-1.20--1.25)	0.05		
450.00		(1.20--1.20)	2.40		
		(1.25-1.20)	0.05		
				2.50	
32	st1	(-1.20--1.25)	0.05		
465.00		(1.20--1.20)	2.40		
		(1.25-1.20)	0.05		
				2.50	
33	st1	(-1.20--1.25)	0.05		
480.00		(1.20--1.20)	2.40		
		(1.25-1.20)	0.05		
				2.50	
34	st1	(-1.20--1.25)	0.05		
495.00		(1.20--1.20)	2.40		
		(1.25-1.20)	0.05		
				2.50	
35	st1	(-1.20--1.25)	0.05		
510.00		(1.20--1.20)	2.40		
		(1.25-1.20)	0.05		
				2.50	
36	st1	(-1.20--1.25)	0.05		
525.00		(1.20--1.20)	2.40		
		(1.25-1.20)	0.05		
				2.50	
37	st1	(-1.20--1.25)	0.05		
540.00		(1.20--1.20)	2.40		
		(1.25-1.20)	0.05		
				2.50	
38	st1	(-1.20--1.25)	0.05		
555.00		(1.20--1.20)	2.40		
		(1.25-1.20)	0.05		
				2.50	
39	st1	(-1.20--1.25)	0.05		
570.00		(1.20--1.20)	2.40		
		(1.25-1.20)	0.05		
				2.50	
40	st1	(-1.20--1.25)	0.05		
585.00		(1.20--1.20)	2.40		
		(1.25-1.20)	0.05		
				2.50	
41	st1	(-1.20--1.25)	0.05		
600.00		(1.20--1.20)	2.40		
		(1.25-1.20)	0.05		
				2.50	
42	st1	(-1.20--1.25)	0.05		
615.00		(1.20--1.20)	2.40		
		(1.25-1.20)	0.05		
				2.50	
43	st1	(-1.20--1.25)	0.05		
630.00		(1.20--1.20)	2.40		
		(1.25-1.20)	0.05		
				2.50	
SP40	st1	(-1.20--1.25)	0.05		
641.94		(1.20--1.20)	2.40		
		(1.25-1.20)	0.05		
				2.50	
44	st1	(-1.20--1.25)	0.05		
645.00		(1.20--1.20)	2.40		
		(1.25-1.20)	0.05		
				2.50	
45	st1	(-1.20--1.25)	0.05		
660.00		(1.20--1.20)	2.40		
		A RIPORTARE ml	2.45		

		CALCOLO DELLE LUNGHEZZE		Foglio n. 269
SPARTITRAFFICO				
N. SEZIONE PROG.	FIG.	ELEMENTI DI CALCOLO	LUNGHEZZA ELEMENTARE ml	LUNGHEZZA FIGURA ml	NOTE
		RIPORTO ml	2.45		
		(1.25-1.20)	0.05		
				2.50	
46	st1	(-1.20--1.25)	0.05		
675.00		(1.20--1.20)	2.40		
		(1.25-1.20)	0.05		
				2.50	
47	st1	(-1.20--1.25)	0.05		
690.00		(1.20--1.20)	2.40		
		(1.25-1.20)	0.05		
				2.50	
49	st1	(-1.20--1.25)	0.05		
720.00		(1.20--1.20)	2.40		
		(1.25-1.20)	0.05		
				2.50	
50	st1	(-1.20--1.25)	0.05		
735.00		(1.20--1.20)	2.40		
		(1.25-1.20)	0.05		
				2.50	
51	st1	(-1.20--1.25)	0.05		
750.00		(1.20--1.20)	2.40		
		(1.25-1.20)	0.05		
				2.50	
52	st1	(-1.20--1.25)	0.05		
765.00		(1.20--1.20)	2.40		
		(1.25-1.20)	0.05		
				2.50	
53	st1	(-1.20--1.25)	0.05		
780.00		(1.20--1.20)	2.40		
		(1.25-1.20)	0.05		
				2.50	
54	st1	(-1.20--1.25)	0.05		
795.00		(1.20--1.20)	2.40		
		(1.25-1.20)	0.05		
				2.50	
55	st1	(-1.20--1.25)	0.05		
810.00		(1.20--1.20)	2.40		
		(1.25-1.20)	0.05		
				2.50	
56	st1	(-1.20--1.25)	0.05		
825.00		(1.20--1.20)	2.40		
		(1.25-1.20)	0.05		
				2.50	
57	st1	(-1.20--1.25)	0.05		
840.00		(1.20--1.20)	2.40		
		(1.25-1.20)	0.05		
				2.50	
58	st1	(-1.20--1.25)	0.05		
855.00		(1.20--1.20)	2.40		
		(1.25-1.20)	0.05		
				2.50	
59	st1	(-1.20--1.25)	0.05		
870.00		(1.20--1.20)	2.40		
		(1.25-1.20)	0.05		
				2.50	
60	st1	(-1.20--1.25)	0.05		
885.00		(1.20--1.20)	2.40		
		(1.25-1.20)	0.05		
				2.50	
61	st1	(-1.20--1.25)	0.05		
900.00		(1.20--1.20)	2.40		
		(1.25-1.20)	0.05		
				2.50	
62	st1	(-1.20--1.25)	0.05		
915.00		(1.20--1.20)	2.40		
		(1.25-1.20)	0.05		
				2.50	
63	st1	(-1.20--1.25)	0.05		
930.00		(1.20--1.20)	2.40		
		(1.25-1.20)	0.05		
				2.50	
64	st1	(-1.20--1.25)	0.05		
945.00		(1.20--1.20)	2.40		
		(1.25-1.20)	0.05		
				2.50	
65	st1	(-1.20--1.25)	0.05		
960.00		(1.20--1.20)	2.40		
		(1.25-1.20)	0.05		
				2.50	
66	st1	(-1.20--1.25)	0.05		
975.00		(1.20--1.20)	2.40		
		(1.25-1.20)	0.05		
				2.50	
67	st1	(-1.20--1.25)	0.05		
990.00		(1.20--1.20)	2.40		
		(1.25-1.20)	0.05		
				2.50	
68	st1	(-1.20--1.25)	0.05		
1005.00		(1.20--1.20)	2.40		
		(1.25-1.20)	0.05		
				2.50	
69	st1	(-1.20--1.25)	0.05		
1020.00		(1.20--1.20)	2.40		
		(1.25-1.20)	0.05		
				2.50	
70	st1	(-1.20--1.25)	0.05		
1035.00		(1.20--1.20)	2.40		
		(1.25-1.20)	0.05		
				2.50	
71	st1	(-1.20--1.25)	0.05		
1050.00		(1.20--1.20)	2.40		
		(1.25-1.20)	0.05		
				2.50	
72	st1	(-1.20--1.25)	0.05		
1065.00		(1.20--1.20)	2.40		
		A RIPORTARE ml	2.45		

	CALCOLO DELLE LUNGHEZZE		Foglio n. 270

SPARTITRAFFICO

N. SEZIONE PROG.	FIG.	ELEMENTI DI CALCOLO	LUNGHEZZA ELEMENTARE ml	LUNGHEZZA FIGURA ml	NOTE
		RIPORTO ml	2.45		
		(1.25-1.20)	0.05		
				2.50	
73	st1	(-1.20--1.25)	0.05		
1080.00		(1.20--1.20)	2.40		
		(1.25-1.20)	0.05		
				2.50	
74	st1	(-1.20--1.25)	0.05		
1095.00		(1.20--1.20)	2.40		
		(1.25-1.20)	0.05		
				2.50	
75	st1	(-1.20--1.25)	0.05		
1110.00		(1.20--1.20)	2.40		
		(1.25-1.20)	0.05		
				2.50	
76	st1	(-1.20--1.25)	0.05		
1125.00		(1.20--1.20)	2.40		
		(1.25-1.20)	0.05		
				2.50	

Il Direttore dei Lavori	L'Impresa	

	COMPUTO DEI VOLUMI		Foglio n. 271

RILEVATO

DALLA SEZ. DA PROG.	ALLA SEZ. A PROG.	SEZIONE	FIGURA	AREA	DISTANZA SEZIONI m	DISTANZA DI CALCOLO m	VOLUME PARZIALE mc	VOLUME TOTALE mc
1	2	1	A1	0.03	15.00	7.50	0.225	
0.00	15.00	2	A1	1.15	15.00	7.50	8.625	
								8.850
2	3	2	A1	1.15	15.00	7.50	8.625	
15.00	30.00	3	A1	0.72	15.00	7.50	5.400	
		3	A2	0.03	15.00	7.50	0.225	
								14.250
3	4	3	A1	0.72	15.00	7.50	5.400	
30.00	45.00	3	A2	0.03	15.00	7.50	0.225	
		4	A1	0.68	15.00	7.50	5.100	
		4	A2	0.05	15.00	7.50	0.375	
								11.100
4	5	4	A1	0.68	15.00	7.50	5.100	
45.00	60.00	4	A2	0.05	15.00	7.50	0.375	
		5	A1	0.65	15.00	7.50	4.875	
								10.350
5	6	5	A1	0.65	15.00	7.50	4.875	
60.00	75.00	6	A1	0.73	15.00	7.50	5.475	
		6	A2	0.01	15.00	7.50	0.075	
								10.425
6	7	6	A1	0.73	15.00	7.50	5.475	
75.00	90.00	6	A2	0.01	15.00	7.50	0.075	
		7	A1	2.29	15.00	7.50	17.175	
								22.725
7	8	7	A1	2.29	15.00	7.50	17.175	
90.00	105.00	8	A1	1.78	15.00	7.50	13.350	
		8	A2	0.21	15.00	7.50	1.575	
								32.100
8	9	8	A1	1.78	15.00	7.50	13.350	
105.00	120.00	8	A2	0.21	15.00	7.50	1.575	
		9	A1	1.30	15.00	7.50	9.750	
								24.675
9	10	9	A1	1.30	15.00	7.50	9.750	
120.00	135.00	10	A1	4.43	15.00	7.50	33.225	
		10	A2	0.10	15.00	7.50	0.750	
								43.725
10	11	10	A1	4.43	15.00	7.50	33.225	
135.00	150.00	10	A2	0.10	15.00	7.50	0.750	
		11	A1	2.69	15.00	7.50	20.175	
		11	A2	0.22	15.00	7.50	1.650	
								55.800
11	12	11	A1	2.69	15.00	7.50	20.175	
150.00	165.00	11	A2	0.22	15.00	7.50	1.650	
		12	A1	5.63	15.00	7.50	42.225	
		12	A2	0.16	15.00	7.50	1.200	
								65.250
12	13	12	A1	5.63	15.00	7.50	42.225	
165.00	180.00	12	A2	0.16	15.00	7.50	1.200	
		13	A1	4.25	15.00	7.50	31.875	
		13	A2	0.02	15.00	7.50	0.150	
		13	A3	0.06	15.00	7.50	0.450	
								75.900
13	14	13	A1	4.25	15.00	7.50	31.875	
180.00	195.00	13	A2	0.02	15.00	7.50	0.150	
		13	A3	0.06	15.00	7.50	0.450	
		14	A1	6.60	15.00	7.50	49.500	
		14	A2	0.01	15.00	7.50	0.075	
		14	A3	0.05	15.00	7.50	0.375	
		14	A4	0.20	15.00	7.50	1.500	
								83.925
14	15	14	A1	6.60	15.00	7.50	49.500	
195.00	210.00	14	A2	0.01	15.00	7.50	0.075	
		14	A3	0.05	15.00	7.50	0.375	
		14	A4	0.20	15.00	7.50	1.500	
		15	A1	2.96	15.00	7.50	22.200	
		15	A2	0.07	15.00	7.50	0.525	
		15	A3	0.15	15.00	7.50	1.125	
		15	A4	0.09	15.00	7.50	0.675	
								75.975
15	16	15	A1	2.96	15.00	7.50	22.200	
210.00	225.00	15	A2	0.07	15.00	7.50	0.525	
		15	A3	0.15	15.00	7.50	1.125	
		15	A4	0.09	15.00	7.50	0.675	
		16	A1	4.72	15.00	7.50	35.400	
		16	A2	0.01	15.00	7.50	0.075	
		16	A3	0.97	15.00	7.50	7.275	
		16	A4	0.37	15.00	7.50	2.775	
								70.050
16	17	16	A1	4.72	15.00	7.50	35.400	
225.00	240.00	16	A2	0.01	15.00	7.50	0.075	
		16	A3	0.97	15.00	7.50	7.275	
		16	A4	0.37	15.00	7.50	2.775	
		17	A1	5.98	15.00	7.50	44.850	
		17	A2	1.29	15.00	7.50	9.675	
		17	A3	0.53	15.00	7.50	3.975	
								104.025
17	18	17	A1	5.98	15.00	7.50	44.850	
240.00	255.00	17	A2	1.29	15.00	7.50	9.675	
		17	A3	0.53	15.00	7.50	3.975	
		18	A1	8.01	15.00	7.50	60.075	
		18	A2	0.70	15.00	7.50	5.250	
								123.825
18	19	18	A1	8.01	15.00	7.50	60.075	
255.00	270.00	18	A2	0.70	15.00	7.50	5.250	
		19	A1	14.93	15.00	7.50	111.975	
								177.300
19	20	19	A1	14.93	15.00	7.50	111.975	
270.00	285.00	20	A1	28.83	15.00	7.50	216.225	
								328.200
20	21	20	A1	28.83	15.00	7.50	216.225	
285.00	300.00	21	A1	30.77	15.00	7.50	230.775	
								447.000
21	22	21	A1	30.77	15.00	7.50	230.775	
300.00	315.00	22	A1	34.09	15.00	7.50	255.675	
								486.450
22	23	22	A1	34.09	15.00	7.50	255.675	
							255.675	2271.900

		COMPUTO DEI VOLUMI				Foglio n. 272		
RILEVATO								
DALLA SEZ. DA PROG.	ALLA SEZ. A PROG.	SEZIONE	FIGURA	AREA	DISTANZA SEZIONI m	DISTANZA DI CALCOLO m	VOLUME PARZIALE mc	VOLUME TOTALE mc
						A RIPORTARE mc	255.675	2271.900
315.00	330.00	23	A1	37.42	15.00	7.50	280.650	
								536.325
23	24	23	A1	37.42	15.00	7.50	280.650	
330.00	345.00	24	A1	39.05	15.00	7.50	292.875	
								573.525
24	25	24	A1	39.05	15.00	7.50	292.875	
345.00	360.00	25	A1	41.91	15.00	7.50	314.325	
								607.200
25	26	25	A1	41.91	15.00	7.50	314.325	
360.00	375.00	26	A1	43.79	15.00	7.50	328.425	
								642.750
26	27	26	A1	43.79	15.00	7.50	328.425	
375.00	390.00	27	A1	45.67	15.00	7.50	342.525	
								670.950
27	28	27	A1	45.67	15.00	7.50	342.525	
390.00	405.00	28	A1	47.63	15.00	7.50	357.225	
								699.750
28	29	28	A1	47.63	15.00	7.50	357.225	
405.00	420.00	29	A1	51.63	15.00	7.50	387.225	
								744.450
29	30	29	A1	51.63	15.00	7.50	387.225	
420.00	435.00	30	A1	52.72	15.00	7.50	395.400	
								782.625
30	31	30	A1	52.72	15.00	7.50	395.400	
435.00	450.00	31	A1	51.11	15.00	7.50	383.325	
								778.725
31	32	31	A1	51.11	15.00	7.50	383.325	
450.00	465.00	32	A1	54.32	15.00	7.50	407.400	
								790.725
32	33	32	A1	54.32	15.00	7.50	407.400	
465.00	480.00	33	A1	54.99	15.00	7.50	412.425	
								819.825
33	34	33	A1	54.99	15.00	7.50	412.425	
480.00	495.00	34	A1	60.98	15.00	7.50	457.350	
								869.775
34	35	34	A1	60.98	15.00	7.50	457.350	
495.00	510.00	35	A1	57.79	15.00	7.50	433.425	
								890.775
35	36	35	A1	57.79	15.00	7.50	433.425	
510.00	525.00	36	A1	65.03	15.00	7.50	487.725	
								921.150
36	37	36	A1	65.03	15.00	7.50	487.725	
525.00	540.00	37	A1	56.31	15.00	7.50	422.325	
								910.050
37	38	37	A1	56.31	15.00	7.50	422.325	
540.00	555.00	38	A1	81.59	15.00	7.50	611.925	
								1034.250
38	39	38	A1	81.59	15.00	7.50	611.925	
555.00	570.00	39	A1	74.39	15.00	7.50	557.925	
								1169.850
39	40	39	A1	74.39	15.00	7.50	557.925	
570.00	585.00	40	A1	76.49	15.00	7.50	573.675	
								1131.600
40	41	40	A1	76.49	15.00	7.50	573.675	
585.00	600.00	41	A1	75.11	15.00	7.50	563.325	
								1137.000
41	42	41	A1	75.11	15.00	7.50	563.325	
600.00	615.00	42	A1	89.18	15.00	7.50	668.850	
								1232.175
42	43	42	A1	89.18	15.00	7.50	668.850	
615.00	630.00	43	A1	88.70	15.00	7.50	665.250	
								1334.100
43	SP40	43	A1	88.70	11.94	5.97	529.539	
630.00	641.94	SP40	A1	94.00	11.94	5.97	561.180	
								1090.719
SP40	44	SP40	A1	94.00	3.06	1.53	143.820	
641.94	645.00	44	A1	92.30	3.06	1.53	141.219	
								285.039
44	45	44	A1	92.30	15.00	7.50	692.250	
645.00	660.00	45	A1	117.56	15.00	7.50	881.700	
								1573.950
45	46	45	A1	117.56	15.00	7.50	881.700	
660.00	675.00	46	A1	96.46	15.00	7.50	723.450	
								1605.150
46	47	46	A1	96.46	15.00	7.50	723.450	
675.00	690.00	47	A1	94.46	15.00	7.50	708.450	
								1431.900
47	48	47	A1	94.46	15.00	7.50	708.450	
690.00	705.00	48	A1	7.38	15.00	7.50	55.350	
		48	A2	40.99	15.00	7.50	307.425	
								1071.225
48	49	48	A1	7.38	15.00	7.50	55.350	
705.00	720.00	48	A2	40.99	15.00	7.50	307.425	
		49	A1	27.74	15.00	7.50	208.050	
		49	A2	6.98	15.00	7.50	52.350	
								623.175
49	50	49	A1	27.74	15.00	7.50	208.050	
720.00	735.00	49	A2	6.98	15.00	7.50	52.350	
		50	A1	82.63	15.00	7.50	619.725	
								880.125
50	51	50	A1	82.63	15.00	7.50	619.725	
735.00	750.00	51	A1	91.66	15.00	7.50	687.450	
								1307.175
51	52	51	A1	91.66	15.00	7.50	687.450	
750.00	765.00	52	A1	106.96	15.00	7.50	802.200	
								1489.650
52	53	52	A1	106.96	15.00	7.50	802.200	
765.00	780.00	53	A1	104.50	15.00	7.50	783.750	
								1585.950
53	54	53	A1	104.50	15.00	7.50	783.750	
780.00	795.00	54	A1	112.06	15.00	7.50	840.450	
								1624.200
54	55	54	A1	112.06	15.00	7.50	840.450	
795.00	810.00	55	A1	100.19	15.00	7.50	751.425	
							1591.875	35117.733

	COMPUTO DEI VOLUMI		Foglio n. 273

RILEVATO

DALLA SEZ. DA PROG.	ALLA SEZ. A PROG.	SEZIONE	FIGURA	AREA	DISTANZA SEZIONI m	DISTANZA DI CALCOLO m	VOLUME PARZIALE mc	VOLUME TOTALE mc
						A RIPORTARE mc	1591.875	35117.733
								1591.875
55	56	55	A1	100.19	15.00	7.50	751.425	
810.00	825.00	56	A1	111.49	15.00	7.50	836.175	
								1587.600
56	57	56	A1	111.49	15.00	7.50	836.175	
825.00	840.00	57	A1	108.73	15.00	7.50	815.475	
								1651.650
57	58	57	A1	108.73	15.00	7.50	815.475	
840.00	855.00	58	A1	108.87	15.00	7.50	816.525	
								1632.000
58	59	58	A1	108.87	15.00	7.50	816.525	
855.00	870.00	59	A1	110.28	15.00	7.50	827.100	
								1643.625
59	60	59	A1	110.28	15.00	7.50	827.100	
870.00	885.00	60	A1	105.22	15.00	7.50	789.150	
								1616.250
60	61	60	A1	105.22	15.00	7.50	789.150	
885.00	900.00	61	A1	103.74	15.00	7.50	778.050	
								1567.200
61	62	61	A1	103.74	15.00	7.50	778.050	
900.00	915.00	62	A1	109.77	15.00	7.50	823.275	
								1601.325
62	63	62	A1	109.77	15.00	7.50	823.275	
915.00	930.00	63	A1	159.28	15.00	7.50	1194.600	
								2017.875
63	64	63	A1	159.28	15.00	7.50	1194.600	
930.00	945.00	64	A1	141.06	15.00	7.50	1057.950	
								2252.550
64	65	64	A1	141.06	15.00	7.50	1057.950	
945.00	960.00	65	A1	124.04	15.00	7.50	930.300	
								1988.250
65	66	65	A1	124.04	15.00	7.50	930.300	
960.00	975.00	66	A1	123.10	15.00	7.50	923.250	
								1853.550
66	67	66	A1	123.10	15.00	7.50	923.250	
975.00	990.00	67	A1	95.70	15.00	7.50	717.750	
								1641.000
67	68	67	A1	95.70	15.00	7.50	717.750	
990.00	1005.00	68	A1	82.67	15.00	7.50	620.025	
								1337.775
68	69	68	A1	82.67	15.00	7.50	620.025	
1005.00	1020.00	69	A1	87.56	15.00	7.50	656.700	
								1276.725
69	70	69	A1	87.56	15.00	7.50	656.700	
1020.00	1035.00	70	A1	104.69	15.00	7.50	785.175	
								1441.875
70	71	70	A1	104.69	15.00	7.50	785.175	
1035.00	1050.00	71	A1	101.65	15.00	7.50	762.375	
								1547.550
71	72	71	A1	101.65	15.00	7.50	762.375	
1050.00	1065.00	72	A1	98.17	15.00	7.50	736.275	
								1498.650
72	73	72	A1	98.17	15.00	7.50	736.275	
1065.00	1080.00	73	A1	101.23	15.00	7.50	759.225	
								1495.500
73	74	73	A1	101.23	15.00	7.50	759.225	
1080.00	1095.00	74	A1	95.36	15.00	7.50	715.200	
								1474.425
74	75	74	A1	95.36	15.00	7.50	715.200	
1095.00	1110.00	75	A1	100.48	15.00	7.50	753.600	
								1468.800
75	76	75	A1	100.48	15.00	7.50	753.600	
1110.00	1125.00	76	A1	119.73	15.00	7.50	897.975	
								1651.575
76	76bis	76	A1	119.73	6.80	3.40	407.082	
								407.082

Il Direttore dei Lavori	L'Impresa	TOTALE ARTICOLO	71362.440

	COMPUTO DEI VOLUMI		Foglio n. 274

STERRO

DALLA SEZ. DA PROG.	ALLA SEZ. A PROG.	SEZIONE	FIGURA	AREA	DISTANZA SEZIONI m	DISTANZA DI CALCOLO m	VOLUME PARZIALE mc	VOLUME TOTALE mc
1	2	1	B1	12.11	15.00	7.50	90.825	
0.00	15.00	2	B1	11.42	15.00	7.50	85.650	
								176.475
2	3	2	B1	11.42	15.00	7.50	85.650	
15.00	30.00	3	B1	11.35	15.00	7.50	85.125	
								170.775
3	4	3	B1	11.35	15.00	7.50	85.125	
30.00	45.00	4	B1	12.92	15.00	7.50	96.900	
								182.025
4	5	4	B1	12.92	15.00	7.50	96.900	
45.00	60.00	5	B1	0.01	15.00	7.50	0.075	
		5	B2	13.89	15.00	7.50	104.175	
								201.150
5	6	5	B1	0.01	15.00	7.50	0.075	
60.00	75.00	5	B2	13.89	15.00	7.50	104.175	
		6	B1	0.04	15.00	7.50	0.300	
		6	B2	13.86	15.00	7.50	103.950	
								208.500
6	7	6	B1	0.04	15.00	7.50	0.300	
75.00	90.00	6	B2	13.86	15.00	7.50	103.950	
		7	B1	13.34	15.00	7.50	100.050	
								204.300
7	8	7	B1	13.34	15.00	7.50	100.050	
90.00	105.00	8	B1	12.86	15.00	7.50	96.450	
								196.500
8	9	8	B1	12.86	15.00	7.50	96.450	
105.00	120.00	9	B1	10.97	15.00	7.50	82.275	
								178.725
9	10	9	B1	10.97	15.00	7.50	82.275	
120.00	135.00	10	B1	9.56	15.00	7.50	71.700	
								153.975
10	11	10	B1	9.56	15.00	7.50	71.700	
135.00	150.00	11	B1	0.05	15.00	7.50	0.375	
		11	B2	7.28	15.00	7.50	54.600	
								126.675
11	12	11	B1	0.05	15.00	7.50	0.375	
150.00	165.00	11	B2	7.28	15.00	7.50	54.600	
		12	B1	4.72	15.00	7.50	35.400	
								90.375
12	13	12	B1	4.72	15.00	7.50	35.400	
165.00	180.00	13	B1	0.06	15.00	7.50	0.450	
		13	B2	3.94	15.00	7.50	29.550	
								65.400
13	14	13	B1	0.06	15.00	7.50	0.450	
180.00	195.00	13	B2	3.94	15.00	7.50	29.550	
		14	B1	0.43	15.00	7.50	3.225	
		14	B2	1.76	15.00	7.50	13.200	
								46.425
14	15	14	B1	0.43	15.00	7.50	3.225	
195.00	210.00	14	B2	1.76	15.00	7.50	13.200	
		15	B1	1.31	15.00	7.50	9.825	
		15	B2	1.24	15.00	7.50	9.300	
								35.550
15	16	15	B1	1.31	15.00	7.50	9.825	
210.00	225.00	15	B2	1.24	15.00	7.50	9.300	
		16	B1	0.12	15.00	7.50	0.900	
		16	B2	0.43	15.00	7.50	3.225	
								23.250
16	17	16	B1	0.12	15.00	7.50	0.900	
225.00	240.00	16	B2	0.43	15.00	7.50	3.225	
		17	B1	0.15	15.00	7.50	1.125	
								5.250
17	18	17	B1	0.15	15.00	7.50	1.125	
								1.125
39	40	40	B1	0.18	15.00	7.50	1.350	
								1.350
40	41	40	B1	0.18	15.00	7.50	1.350	
								1.350
76	76bis	76bis	B1	45.98	6.80	3.40	156.332	
								156.332

Il Direttore dei Lavori	L'Impresa	TOTALE ARTICOLO	2225.507

	COMPUTO DEI VOLUMI		Foglio n. 275

BONIFICA

DALLA SEZ. DA PROG.	ALLA SEZ. A PROG.	SEZIONE	FIGURA	AREA	DISTANZA SEZIONI m	DISTANZA DI CALCOLO m	VOLUME PARZIALE mc	VOLUME TOTALE mc
1	2	1	BO1	0.29	15.00	7.50	2.175	
0.00	15.00	2	BO1	2.81	15.00	7.50	21.075	
								23.250
2	3	2	BO1	2.81	15.00	7.50	21.075	
15.00	30.00	3	BO2	2.52	15.00	7.50	18.900	
		3	BO1	0.36	15.00	7.50	2.700	
								42.675
3	4	3	BO2	2.52	15.00	7.50	18.900	
30.00	45.00	3	BO1	0.36	15.00	7.50	2.700	
		4	BO1	0.33	15.00	7.50	2.475	
		4	BO2	2.32	15.00	7.50	17.400	
								41.475
4	5	4	BO1	0.33	15.00	7.50	2.475	
45.00	60.00	4	BO2	2.32	15.00	7.50	17.400	
		5	BO1	0.11	15.00	7.50	0.825	
		5	BO2	1.99	15.00	7.50	14.925	
								35.625
5	6	5	BO1	0.11	15.00	7.50	0.825	
60.00	75.00	5	BO2	1.99	15.00	7.50	14.925	
		6	BO1	0.11	15.00	7.50	0.825	
		6	BO2	1.99	15.00	7.50	14.925	
								31.500
6	7	6	BO1	0.11	15.00	7.50	0.825	
75.00	90.00	6	BO2	1.99	15.00	7.50	14.925	
		7	BO1	2.78	15.00	7.50	20.850	
								36.600
7	8	7	BO1	2.78	15.00	7.50	20.850	
90.00	105.00	8	BO2	2.91	15.00	7.50	21.825	
		8	BO1	0.58	15.00	7.50	4.350	
								47.025
8	9	8	BO2	2.91	15.00	7.50	21.825	
105.00	120.00	8	BO1	0.58	15.00	7.50	4.350	
		9	BO1	0.02	15.00	7.50	0.150	
		9	BO2	3.12	15.00	7.50	23.400	
								49.725
9	10	9	BO1	0.02	15.00	7.50	0.150	
120.00	135.00	9	BO2	3.12	15.00	7.50	23.400	
		10	BO2	3.52	15.00	7.50	26.400	
		10	BO1	0.38	15.00	7.50	2.850	
								52.800
10	11	10	BO2	3.52	15.00	7.50	26.400	
135.00	150.00	10	BO1	0.38	15.00	7.50	2.850	
		11	BO1	0.58	15.00	7.50	4.350	
		11	BO2	0.02	15.00	7.50	0.150	
		11	BO3	3.50	15.00	7.50	26.250	
								60.000
11	12	11	BO1	0.58	15.00	7.50	4.350	
150.00	165.00	11	BO2	0.02	15.00	7.50	0.150	
		11	BO3	3.50	15.00	7.50	26.250	
		12	BO1	0.70	15.00	7.50	5.250	
		12	BO2	4.36	15.00	7.50	32.700	
								68.700
12	13	12	BO1	0.70	15.00	7.50	5.250	
165.00	180.00	12	BO2	4.36	15.00	7.50	32.700	
		13	BO1	0.68	15.00	7.50	5.100	
		13	BO2	0.17	15.00	7.50	1.275	
		13	BO3	3.84	15.00	7.50	28.800	
								73.125
13	14	13	BO1	0.68	15.00	7.50	5.100	
180.00	195.00	13	BO2	0.17	15.00	7.50	1.275	
		13	BO3	3.84	15.00	7.50	28.800	
		14	BO1	0.21	15.00	7.50	1.575	
		14	BO2	0.52	15.00	7.50	3.900	
		14	BO3	0.24	15.00	7.50	1.800	
		14	BO4	0.52	15.00	7.50	3.900	
		14	BO5	4.68	15.00	7.50	35.100	
								81.450
14	15	14	BO1	0.21	15.00	7.50	1.575	
195.00	210.00	14	BO2	0.52	15.00	7.50	3.900	
		14	BO3	0.24	15.00	7.50	1.800	
		14	BO4	0.52	15.00	7.50	3.900	
		14	BO5	4.68	15.00	7.50	35.100	
		15	BO1	0.62	15.00	7.50	4.650	
		15	BO2	0.91	15.00	7.50	6.825	
		15	BO3	2.55	15.00	7.50	19.125	
		15	BO4	2.93	15.00	7.50	21.975	
								98.850
15	16	15	BO1	0.62	15.00	7.50	4.650	
210.00	225.00	15	BO2	0.91	15.00	7.50	6.825	
		15	BO3	2.55	15.00	7.50	19.125	
		15	BO4	2.93	15.00	7.50	21.975	
		16	BO1	0.69	15.00	7.50	5.175	
		16	BO2	0.14	15.00	7.50	1.050	
		16	BO3	4.23	15.00	7.50	31.725	
		16	BO4	5.71	15.00	7.50	42.825	
								133.350
16	17	16	BO1	0.69	15.00	7.50	5.175	
225.00	240.00	16	BO2	0.14	15.00	7.50	1.050	
		16	BO3	4.23	15.00	7.50	31.725	
		16	BO4	5.71	15.00	7.50	42.825	
		17	BO1	0.78	15.00	7.50	5.850	
		17	BO2	4.68	15.00	7.50	35.100	
		17	BO3	6.26	15.00	7.50	46.950	
								168.675
17	18	17	BO1	0.78	15.00	7.50	5.850	
240.00	255.00	17	BO2	4.68	15.00	7.50	35.100	
		17	BO3	6.26	15.00	7.50	46.950	
		18	BO1	4.16	15.00	7.50	31.200	
		18	BO2	12.08	15.00	7.50	90.600	
								209.700
18	19	18	BO1	4.16	15.00	7.50	31.200	
255.00	270.00	18	BO2	12.08	15.00	7.50	90.600	
		19	BO1	16.34	15.00	7.50	122.550	
								244.350
19	20	19	BO1	16.34	15.00	7.50	122.550	
270.00	285.00	20	BO1	17.52	15.00	7.50	131.400	
							253.950	1498.875

	COMPUTO DEI VOLUMI		Foglio n. 276

BONIFICA

DALLA SEZ. DA PROG.	ALLA SEZ. A PROG.	SEZIONE	FIGURA	AREA	DISTANZA SEZIONI m	DISTANZA DI CALCOLO m	VOLUME PARZIALE mc	VOLUME TOTALE mc
						A RIPORTARE mc	253.950	1498.875
								253.950
20	21	20	BO1	17.52	15.00	7.50	131.400	
285.00	300.00	21	BO1	17.98	15.00	7.50	134.850	
								266.250
21	22	21	BO1	17.98	15.00	7.50	134.850	
300.00	315.00	22	BO1	18.45	15.00	7.50	138.375	
								273.225
22	23	22	BO1	18.45	15.00	7.50	138.375	
315.00	330.00	23	BO1	18.80	15.00	7.50	141.000	
								279.375
23	24	23	BO1	18.80	15.00	7.50	141.000	
330.00	345.00	24	BO1	17.45	15.00	7.50	130.875	
								271.875
24	25	24	BO1	17.45	15.00	7.50	130.875	
345.00	360.00	25	BO1	17.59	15.00	7.50	131.925	
								262.800
25	26	25	BO1	17.59	15.00	7.50	131.925	
360.00	375.00	26	BO1	17.53	15.00	7.50	131.475	
								263.400
26	27	26	BO1	17.53	15.00	7.50	131.475	
375.00	390.00	27	BO1	17.69	15.00	7.50	132.675	
								264.150
27	28	27	BO1	17.69	15.00	7.50	132.675	
390.00	405.00	28	BO1	17.80	15.00	7.50	133.500	
								266.175
28	29	28	BO1	17.80	15.00	7.50	133.500	
405.00	420.00	29	BO1	17.90	15.00	7.50	134.250	
								267.750
29	30	29	BO1	17.90	15.00	7.50	134.250	
420.00	435.00	30	BO1	18.68	15.00	7.50	140.100	
								274.350
30	31	30	BO1	18.68	15.00	7.50	140.100	
435.00	450.00	31	BO1	16.33	15.00	7.50	122.475	
								262.575
31	32	31	BO1	16.33	15.00	7.50	122.475	
450.00	465.00	32	BO1	16.46	15.00	7.50	123.450	
								245.925
32	33	32	BO1	16.46	15.00	7.50	123.450	
465.00	480.00	33	BO1	16.61	15.00	7.50	124.575	
								248.025
33	34	33	BO1	16.61	15.00	7.50	124.575	
480.00	495.00	34	BO1	16.74	15.00	7.50	125.550	
								250.125
34	35	34	BO1	16.74	15.00	7.50	125.550	
495.00	510.00	35	BO1	17.39	15.00	7.50	130.425	
								255.975
35	36	35	BO1	17.39	15.00	7.50	130.425	
510.00	525.00	36	BO1	19.48	15.00	7.50	146.100	
								276.525
36	37	36	BO1	19.48	15.00	7.50	146.100	
525.00	540.00	37	BO1	15.01	15.00	7.50	112.575	
								258.675
37	38	37	BO1	15.01	15.00	7.50	112.575	
540.00	555.00	38	BO1	21.30	15.00	7.50	159.750	
								272.325
38	39	38	BO1	21.30	15.00	7.50	159.750	
555.00	570.00	39	BO1	20.74	15.00	7.50	155.550	
								315.300
39	40	39	BO1	20.74	15.00	7.50	155.550	
570.00	585.00	40	BO1	21.65	15.00	7.50	162.375	
								317.925
40	41	40	BO1	21.65	15.00	7.50	162.375	
585.00	600.00	41	BO1	25.71	15.00	7.50	192.825	
								355.200
41	42	41	BO1	25.71	15.00	7.50	192.825	
600.00	615.00	42	BO1	32.82	15.00	7.50	246.150	
								438.975
42	43	42	BO1	32.82	15.00	7.50	246.150	
615.00	630.00	43	BO1	33.59	15.00	7.50	251.925	
								498.075
43	SP40	43	BO1	33.59	11.94	5.97	200.532	
630.00	641.94	SP40	BO1	33.65	11.94	5.97	200.890	
								401.422
SP40	44	SP40	BO1	33.65	3.06	1.53	51.484	
641.94	645.00	44	BO1	32.92	3.06	1.53	50.368	
								101.852
44	45	44	BO1	32.92	15.00	7.50	246.900	
645.00	660.00	45	BO1	31.04	15.00	7.50	232.800	
								479.700
45	46	45	BO1	31.04	15.00	7.50	232.800	
660.00	675.00	46	BO1	26.29	15.00	7.50	197.175	
								429.975
46	47	46	BO1	26.29	15.00	7.50	197.175	
675.00	690.00	47	BO1	21.99	15.00	7.50	164.925	
								362.100
47	48	47	BO1	21.99	15.00	7.50	164.925	
690.00	705.00	48	BO1	10.47	15.00	7.50	78.525	
		48	BO2	2.30	15.00	7.50	17.250	
								260.700
48	49	48	BO1	10.47	15.00	7.50	78.525	
705.00	720.00	48	BO2	2.30	15.00	7.50	17.250	
		49	BO1	8.14	15.00	7.50	61.050	
		49	BO2	1.50	15.00	7.50	11.250	
								168.075
49	50	49	BO1	8.14	15.00	7.50	61.050	
720.00	735.00	49	BO2	1.50	15.00	7.50	11.250	
		50	BO1	16.39	15.00	7.50	122.925	
								195.225
50	51	50	BO1	16.39	15.00	7.50	122.925	
735.00	750.00	51	BO1	16.90	15.00	7.50	126.750	
								249.675
51	52	51	BO1	16.90	15.00	7.50	126.750	
750.00	765.00	52	BO1	19.94	15.00	7.50	149.550	
								276.300
								11362.824

	COMPUTO DEI VOLUMI		Foglio n. 277

BONIFICA

DALLA SEZ. DA PROG.	ALLA SEZ. A PROG.	SEZIONE	FIGURA	AREA	DISTANZA SEZIONI m	DISTANZA DI CALCOLO m	VOLUME PARZIALE mc	VOLUME TOTALE mc
						A RIPORTARE mc		11362.824
52	53	52	BO1	19.94	15.00	7.50	149.550	
765.00	780.00	53	BO1	19.72	15.00	7.50	147.900	
								297.450
53	54	53	BO1	19.72	15.00	7.50	147.900	
780.00	795.00	54	BO1	18.47	15.00	7.50	138.525	
								286.425
54	55	54	BO1	18.47	15.00	7.50	138.525	
795.00	810.00	55	BO1	18.47	15.00	7.50	138.525	
								277.050
55	56	55	BO1	18.47	15.00	7.50	138.525	
810.00	825.00	56	BO1	18.81	15.00	7.50	141.075	
								279.600
56	57	56	BO1	18.81	15.00	7.50	141.075	
825.00	840.00	57	BO1	19.05	15.00	7.50	142.875	
								283.950
57	58	57	BO1	19.05	15.00	7.50	142.875	
840.00	855.00	58	BO1	18.56	15.00	7.50	139.200	
								282.075
58	59	58	BO1	18.56	15.00	7.50	139.200	
855.00	870.00	59	BO1	17.94	15.00	7.50	134.550	
								273.750
59	60	59	BO1	17.94	15.00	7.50	134.550	
870.00	885.00	60	BO1	17.31	15.00	7.50	129.825	
								264.375
60	61	60	BO1	17.31	15.00	7.50	129.825	
885.00	900.00	61	BO1	16.03	15.00	7.50	120.225	
								250.050
61	62	61	BO1	16.03	15.00	7.50	120.225	
900.00	915.00	62	BO1	15.74	15.00	7.50	118.050	
								238.275
62	63	62	BO1	15.74	15.00	7.50	118.050	
915.00	930.00	63	BO1	23.75	15.00	7.50	178.125	
								296.175
63	64	63	BO1	23.75	15.00	7.50	178.125	
930.00	945.00	64	BO1	23.86	15.00	7.50	178.950	
								357.075
64	65	64	BO1	23.86	15.00	7.50	178.950	
945.00	960.00	65	BO1	22.58	15.00	7.50	169.350	
								348.300
65	66	65	BO1	22.58	15.00	7.50	169.350	
960.00	975.00	66	BO1	22.70	15.00	7.50	170.250	
								339.600
66	67	66	BO1	22.70	15.00	7.50	170.250	
975.00	990.00	67	BO1	22.91	15.00	7.50	171.825	
								342.075
67	68	67	BO1	22.91	15.00	7.50	171.825	
990.00	1005.00	68	BO1	22.90	15.00	7.50	171.750	
								343.575
68	69	68	BO1	22.90	15.00	7.50	171.750	
1005.00	1020.00	69	BO1	23.01	15.00	7.50	172.575	
								344.325
69	70	69	BO1	23.01	15.00	7.50	172.575	
1020.00	1035.00	70	BO1	46.31	15.00	7.50	347.325	
								519.900
70	71	70	BO1	46.31	15.00	7.50	347.325	
1035.00	1050.00	71	BO1	46.80	15.00	7.50	351.000	
								698.325
71	72	71	BO1	46.80	15.00	7.50	351.000	
1050.00	1065.00	72	BO1	46.79	15.00	7.50	350.925	
								701.925
72	73	72	BO1	46.79	15.00	7.50	350.925	
1065.00	1080.00	73	BO1	47.03	15.00	7.50	352.725	
								703.650
73	74	73	BO1	47.03	15.00	7.50	352.725	
1080.00	1095.00	74	BO1	47.05	15.00	7.50	352.875	
								705.600
74	75	74	BO1	47.05	15.00	7.50	352.875	
1095.00	1110.00	75	BO1	47.45	15.00	7.50	355.875	
								708.750
75	76	75	BO1	47.45	15.00	7.50	355.875	
1110.00	1125.00	76	BO1	47.60	15.00	7.50	357.000	
								712.875
76	76bis	76	BO1	47.60	6.80	3.40	161.840	
								161.840

Il Direttore dei Lavori	L'Impresa	TOTALE ARTICOLO	21379.814

	COMPUTO DEI VOLUMI		Foglio n. 278

RIPORTO

DALLA SEZ. DA PROG.	ALLA SEZ. A PROG.	SEZIONE	FIGURA	AREA	DISTANZA SEZIONI m	DISTANZA DI CALCOLO m	VOLUME PARZIALE mc	VOLUME TOTALE mc
76	76bis	76bis	RI1	4.21	6.80	3.40	14.314	
1125.00	1131.80	76bis	RI2	34.60	6.80	3.40	117.640	
								131.954

Il Direttore dei Lavori	L'Impresa	TOTALE ARTICOLO	131.954

	COMPUTO DI SUPERFICI		Foglio n. 279

USURA

DALLA SEZ. DA PROG.	ALLA SEZ. A PROG.	SEZIONE	FIGURA	LUNGHEZZA	DISTANZA SEZIONI ml	DISTANZA DI CALCOLO ml	AREA PARZIALE mq	AREA TOTALE mq
1	2	1	a1	8.34	15.00	7.50	62.55	
0.00	15.00	1	a2	8.14	15.00	7.50	61.05	
		2	a1	8.31	15.00	7.50	62.33	
		2	a2	8.11	15.00	7.50	60.82	
								246.75
2	3	2	a1	8.31	15.00	7.50	62.33	
15.00	30.00	2	a2	8.11	15.00	7.50	60.82	
		3	a1	8.26	15.00	7.50	61.95	
		3	a2	8.21	15.00	7.50	61.58	
								246.68
3	4	3	a1	8.26	15.00	7.50	61.95	
30.00	45.00	3	a2	8.21	15.00	7.50	61.58	
		4	a1	8.31	15.00	7.50	62.33	
		4	a2	8.41	15.00	7.50	63.08	
								248.94
4	5	4	a1	8.31	15.00	7.50	62.33	
45.00	60.00	4	a2	8.41	15.00	7.50	63.08	
		5	a1	8.47	15.00	7.50	63.53	
		5	a2	8.71	15.00	7.50	65.33	
								254.27
5	6	5	a1	8.47	15.00	7.50	63.53	
60.00	75.00	5	a2	8.71	15.00	7.50	65.33	
		6	a1	8.74	15.00	7.50	65.55	
		6	a2	9.10	15.00	7.50	68.25	
								262.66
6	7	6	a1	8.74	15.00	7.50	65.55	
75.00	90.00	6	a2	9.10	15.00	7.50	68.25	
		7	a1	9.07	15.00	7.50	68.03	
		7	a2	9.45	15.00	7.50	70.88	
								272.71
7	8	7	a1	9.07	15.00	7.50	68.03	
90.00	105.00	7	a2	9.45	15.00	7.50	70.88	
		8	a1	9.71	15.00	7.50	72.83	
		8	a2	9.39	15.00	7.50	70.43	
								282.17
8	9	8	a1	9.71	15.00	7.50	72.83	
105.00	120.00	8	a2	9.39	15.00	7.50	70.43	
		9	a1	9.59	15.00	7.50	71.92	
		9	a2	9.79	15.00	7.50	73.42	
								288.60
9	10	9	a1	9.59	15.00	7.50	71.92	
120.00	135.00	9	a2	9.79	15.00	7.50	73.42	
		10	a1	9.73	15.00	7.50	72.98	
		10	a2	9.78	15.00	7.50	73.35	
								291.67
10	11	10	a1	9.73	15.00	7.50	72.98	
135.00	150.00	10	a2	9.78	15.00	7.50	73.35	
		11	a1	9.79	15.00	7.50	73.42	
		11	a2	10.09	15.00	7.50	75.67	
								295.42
11	12	11	a1	9.79	15.00	7.50	73.42	
150.00	165.00	11	a2	10.09	15.00	7.50	75.67	
		12	a1	9.79	15.00	7.50	73.42	
		12	a2	11.03	15.00	7.50	82.72	
								305.23
12	13	12	a1	9.79	15.00	7.50	73.42	
165.00	180.00	12	a2	11.03	15.00	7.50	82.72	
		13	a1	9.79	15.00	7.50	73.42	
		13	a2	12.16	15.00	7.50	91.20	
								320.76
13	14	13	a1	9.79	15.00	7.50	73.42	
180.00	195.00	13	a2	12.16	15.00	7.50	91.20	
		14	a1	9.79	15.00	7.50	73.42	
		14	a2	13.16	15.00	7.50	98.70	
								336.74
14	15	14	a1	9.79	15.00	7.50	73.42	
195.00	210.00	14	a2	13.16	15.00	7.50	98.70	
		15	a1	9.79	15.00	7.50	73.42	
		15	a2	13.54	15.00	7.50	101.55	
								347.09
15	16	15	a1	9.79	15.00	7.50	73.42	
210.00	225.00	15	a2	13.54	15.00	7.50	101.55	
		16	a1	9.79	15.00	7.50	73.42	
		16	a2	13.54	15.00	7.50	101.55	
								349.94
16	17	16	a1	9.79	15.00	7.50	73.42	
225.00	240.00	16	a2	13.54	15.00	7.50	101.55	
		17	a1	9.79	15.00	7.50	73.42	
		17	a2	13.54	15.00	7.50	101.55	
								349.94
17	18	17	a1	9.79	15.00	7.50	73.42	
240.00	255.00	17	a2	13.54	15.00	7.50	101.55	
		18	a1	9.78	15.00	7.50	73.35	
		18	a2	13.54	15.00	7.50	101.55	
								349.87
18	19	18	a1	9.78	15.00	7.50	73.35	
255.00	270.00	18	a2	13.54	15.00	7.50	101.55	
		19	a1	10.00	15.00	7.50	75.00	
		19	a2	13.54	15.00	7.50	101.55	
								351.45
19	20	19	a1	10.00	15.00	7.50	75.00	
270.00	285.00	19	a2	13.54	15.00	7.50	101.55	
		20	a1	10.72	15.00	7.50	80.40	
		20	a2	13.54	15.00	7.50	101.55	
								358.50
20	21	20	a1	10.72	15.00	7.50	80.40	
285.00	300.00	20	a2	13.54	15.00	7.50	101.55	
		21	a1	11.65	15.00	7.50	87.38	
		21	a2	13.54	15.00	7.50	101.55	
								370.88
21	22	21	a1	11.65	15.00	7.50	87.38	
300.00	315.00	21	a2	13.54	15.00	7.50	101.55	
		22	a1	12.61	15.00	7.50	94.57	
		22	a2	13.54	15.00	7.50	101.55	
								385.05
22	23	22	a1	12.61	15.00	7.50	94.57	
							94.57	6515.32

	COMPUTO DI SUPERFICI		Foglio n. 280

USURA

DALLA SEZ. DA PROG.	ALLA SEZ. A PROG.	SEZIONE	FIGURA	LUNGHEZZA	DISTANZA SEZIONI ml	DISTANZA DI CALCOLO ml	AREA PARZIALE mq	AREA TOTALE mq
						A RIPORTARE mq	94.57	6515.32
315.00	330.00	22	a2	13.54	15.00	7.50	101.55	
		23	a1	13.30	15.00	7.50	99.75	
		23	a2	13.54	15.00	7.50	101.55	
								397.42
23	24	23	a1	13.30	15.00	7.50	99.75	
330.00	345.00	23	a2	13.54	15.00	7.50	101.55	
		24	a1	13.54	15.00	7.50	101.55	
		24	a2	13.54	15.00	7.50	101.55	
								404.40
24	25	24	a1	13.54	15.00	7.50	101.55	
345.00	360.00	24	a2	13.54	15.00	7.50	101.55	
		25	a1	13.54	15.00	7.50	101.55	
		25	a2	13.54	15.00	7.50	101.55	
								406.20
25	26	25	a1	13.54	15.00	7.50	101.55	
360.00	375.00	25	a2	13.54	15.00	7.50	101.55	
		26	a1	13.54	15.00	7.50	101.55	
		26	a2	13.54	15.00	7.50	101.55	
								406.20
26	27	26	a1	13.54	15.00	7.50	101.55	
375.00	390.00	26	a2	13.54	15.00	7.50	101.55	
		27	a1	13.54	15.00	7.50	101.55	
		27	a2	13.54	15.00	7.50	101.55	
								406.20
27	28	27	a1	13.54	15.00	7.50	101.55	
390.00	405.00	27	a2	13.54	15.00	7.50	101.55	
		28	a1	13.54	15.00	7.50	101.55	
		28	a2	13.54	15.00	7.50	101.55	
								406.20
28	29	28	a1	13.54	15.00	7.50	101.55	
405.00	420.00	28	a2	13.54	15.00	7.50	101.55	
		29	a1	13.54	15.00	7.50	101.55	
		29	a2	13.66	15.00	7.50	102.45	
								407.10
29	30	29	a1	13.54	15.00	7.50	101.55	
420.00	435.00	29	a2	13.66	15.00	7.50	102.45	
		30	a1	13.53	15.00	7.50	101.47	
		30	a2	15.08	15.00	7.50	113.10	
								418.57
30	31	30	a1	13.53	15.00	7.50	101.47	
435.00	450.00	30	a2	15.08	15.00	7.50	113.10	
		31	a1	13.52	15.00	7.50	101.40	
		31	a2	9.79	15.00	7.50	73.42	
								389.39
31	32	31	a1	13.52	15.00	7.50	101.40	
450.00	465.00	31	a2	9.79	15.00	7.50	73.42	
		32	a1	13.54	15.00	7.50	101.55	
		32	a2	9.79	15.00	7.50	73.42	
								349.79
32	33	32	a1	13.54	15.00	7.50	101.55	
465.00	480.00	32	a2	9.79	15.00	7.50	73.42	
		33	a1	13.59	15.00	7.50	101.92	
		33	a2	9.79	15.00	7.50	73.42	
								350.31
33	34	33	a1	13.59	15.00	7.50	101.92	
480.00	495.00	33	a2	9.79	15.00	7.50	73.42	
		34	a1	13.70	15.00	7.50	102.75	
		34	a2	9.79	15.00	7.50	73.42	
								351.51
34	35	34	a1	13.70	15.00	7.50	102.75	
495.00	510.00	34	a2	9.79	15.00	7.50	73.42	
		35	a1	15.07	15.00	7.50	113.03	
		35	a2	9.79	15.00	7.50	73.42	
								362.62
35	36	35	a1	15.07	15.00	7.50	113.03	
510.00	525.00	35	a2	9.79	15.00	7.50	73.42	
		36	a1	18.23	15.00	7.50	136.72	
		36	a2	9.79	15.00	7.50	73.42	
								396.59
36	37	36	a1	18.23	15.00	7.50	136.72	
525.00	540.00	36	a2	9.79	15.00	7.50	73.42	
		37	a1	9.79	15.00	7.50	73.42	
		37	a2	9.93	15.00	7.50	74.47	
								358.03
37	38	37	a1	9.79	15.00	7.50	73.42	
540.00	555.00	37	a2	9.93	15.00	7.50	74.47	
		38	a1	9.79	15.00	7.50	73.42	
		38	a2	12.56	15.00	7.50	94.20	
								315.51
38	39	38	a1	9.79	15.00	7.50	73.42	
555.00	570.00	38	a2	12.56	15.00	7.50	94.20	
		39	a1	9.79	15.00	7.50	73.42	
		39	a2	13.29	15.00	7.50	99.67	
								340.71
39	40	39	a1	9.79	15.00	7.50	73.42	
570.00	585.00	39	a2	13.29	15.00	7.50	99.67	
		40	a1	9.79	15.00	7.50	73.42	
		40	a2	13.16	15.00	7.50	98.70	
								345.21
40	41	40	a1	9.79	15.00	7.50	73.42	
585.00	600.00	40	a2	13.16	15.00	7.50	98.70	
		41	a1	9.79	15.00	7.50	73.42	
		41	a2	10.54	15.00	7.50	79.05	
								324.59
41	42	41	a1	9.79	15.00	7.50	73.42	
600.00	615.00	41	a2	10.54	15.00	7.50	79.05	
		42	a1	9.79	15.00	7.50	73.42	
		42	a2	9.79	15.00	7.50	73.42	
								299.31
42	43	42	a1	9.79	15.00	7.50	73.42	
615.00	630.00	42	a2	9.79	15.00	7.50	73.42	
		43	a1	9.79	15.00	7.50	73.42	
		43	a2	9.79	15.00	7.50	73.42	
								293.68
								14244.86

	COMPUTO DI SUPERFICI		Foglio n. 281

USURA

DALLA SEZ. DA PROG.	ALLA SEZ. A PROG.	SEZIONE	FIGURA	LUNGHEZZA	DISTANZA SEZIONI ml	DISTANZA DI CALCOLO ml	AREA PARZIALE mq	AREA TOTALE mq
						A RIPORTARE mq		14244.86
43	SP40	43	a1	9.79	11.94	5.97	58.45	
630.00	641.94	43	a2	9.79	11.94	5.97	58.45	
		SP40	a1	9.79	11.94	5.97	58.45	
		SP40	a2	9.79	11.94	5.97	58.45	
								233.80
SP40	44	SP40	a1	9.79	3.06	1.53	14.98	
641.94	645.00	SP40	a2	9.79	3.06	1.53	14.98	
		44	a1	9.79	3.06	1.53	14.98	
		44	a2	9.79	3.06	1.53	14.98	
								59.92
44	45	44	a1	9.79	15.00	7.50	73.42	
645.00	660.00	44	a2	9.79	15.00	7.50	73.42	
		45	a1	10.79	15.00	7.50	80.92	
		45	a2	9.79	15.00	7.50	73.42	
								301.18
45	46	45	a1	10.79	15.00	7.50	80.92	
660.00	675.00	45	a2	9.79	15.00	7.50	73.42	
		46	a1	13.29	15.00	7.50	99.67	
		46	a2	9.79	15.00	7.50	73.42	
								327.43
46	47	46	a1	13.29	15.00	7.50	99.67	
675.00	690.00	46	a2	9.79	15.00	7.50	73.42	
		47	a2	9.79	15.00	7.50	73.42	
		47	a1	13.29	15.00	7.50	99.67	
								346.18
47	48	47	a2	9.79	15.00	7.50	73.42	
690.00	705.00	47	a1	13.29	15.00	7.50	99.67	
		48	a1	12.22	15.00	7.50	91.65	
		48	a2	9.75	15.00	7.50	73.13	
								337.87
48	49	48	a1	12.22	15.00	7.50	91.65	
705.00	720.00	48	a2	9.75	15.00	7.50	73.13	
		49	a1	9.79	15.00	7.50	73.42	
		49	a2	9.79	15.00	7.50	73.42	
								311.62
49	50	49	a1	9.79	15.00	7.50	73.42	
720.00	735.00	49	a2	9.79	15.00	7.50	73.42	
		50	a1	9.79	15.00	7.50	73.42	
		50	a2	9.79	15.00	7.50	73.42	
								293.68
50	51	50	a1	9.79	15.00	7.50	73.42	
735.00	750.00	50	a2	9.79	15.00	7.50	73.42	
		51	a1	9.79	15.00	7.50	73.42	
		51	a2	9.79	15.00	7.50	73.42	
								293.68
51	52	51	a1	9.79	15.00	7.50	73.42	
750.00	765.00	51	a2	9.79	15.00	7.50	73.42	
		52	a1	9.79	15.00	7.50	73.42	
		52	a2	15.05	15.00	7.50	112.88	
								333.14
52	53	52	a1	9.79	15.00	7.50	73.42	
765.00	780.00	52	a2	15.05	15.00	7.50	112.88	
		53	a1	9.79	15.00	7.50	73.42	
		53	a2	13.67	15.00	7.50	102.53	
								362.25
53	54	53	a1	9.79	15.00	7.50	73.42	
780.00	795.00	53	a2	13.67	15.00	7.50	102.53	
		54	a1	9.79	15.00	7.50	73.42	
		54	a2	13.54	15.00	7.50	101.55	
								350.92
54	55	54	a1	9.79	15.00	7.50	73.42	
795.00	810.00	54	a2	13.54	15.00	7.50	101.55	
		55	a1	9.79	15.00	7.50	73.42	
		55	a2	13.54	15.00	7.50	101.55	
								349.94
55	56	55	a1	9.79	15.00	7.50	73.42	
810.00	825.00	55	a2	13.54	15.00	7.50	101.55	
		56	a1	9.79	15.00	7.50	73.42	
		56	a2	13.54	15.00	7.50	101.55	
								349.94
56	57	56	a1	9.79	15.00	7.50	73.42	
825.00	840.00	56	a2	13.54	15.00	7.50	101.55	
		57	a1	9.79	15.00	7.50	73.42	
		57	a2	13.54	15.00	7.50	101.55	
								349.94
57	58	57	a1	9.79	15.00	7.50	73.42	
840.00	855.00	57	a2	13.54	15.00	7.50	101.55	
		58	a1	9.79	15.00	7.50	73.42	
		58	a2	13.54	15.00	7.50	101.55	
								349.94
58	59	58	a1	9.79	15.00	7.50	73.42	
855.00	870.00	58	a2	13.54	15.00	7.50	101.55	
		59	a1	9.79	15.00	7.50	73.42	
		59	a2	13.54	15.00	7.50	101.55	
								349.94
59	60	59	a1	9.79	15.00	7.50	73.42	
870.00	885.00	59	a2	13.54	15.00	7.50	101.55	
		60	a1	9.79	15.00	7.50	73.42	
		60	a2	13.54	15.00	7.50	101.55	
								349.94
60	61	60	a1	9.79	15.00	7.50	73.42	
885.00	900.00	60	a2	13.54	15.00	7.50	101.55	
		61	a1	9.79	15.00	7.50	73.42	
		61	a2	13.37	15.00	7.50	100.27	
								348.66
61	62	61	a1	9.79	15.00	7.50	73.42	
900.00	915.00	61	a2	13.37	15.00	7.50	100.27	
		62	a1	11.91	15.00	7.50	89.33	
		62	a2	12.75	15.00	7.50	95.63	
								358.65
62	63	62	a1	11.91	15.00	7.50	89.33	
915.00	930.00	62	a2	12.75	15.00	7.50	95.63	
		63	a1	15.85	15.00	7.50	118.88	
		63	a2	11.80	15.00	7.50	88.50	
							392.34	20995.82

	COMPUTO DI SUPERFICI		Foglio n. 282

USURA

DALLA SEZ. DA PROG.	ALLA SEZ. A PROG.	SEZIONE	FIGURA	LUNGHEZZA	DISTANZA SEZIONI ml	DISTANZA DI CALCOLO ml	AREA PARZIALE mq	AREA TOTALE mq
						A RIPORTARE mq	392.34	20995.82
								392.34
63	64	63	a1	15.85	15.00	7.50	118.88	
930.00	945.00	63	a2	11.80	15.00	7.50	88.50	
		64	a1	14.19	15.00	7.50	106.42	
		64	a2	10.87	15.00	7.50	81.52	
								395.32
64	65	64	a1	14.19	15.00	7.50	106.42	
945.00	960.00	64	a2	10.87	15.00	7.50	81.52	
		65	a1	13.55	15.00	7.50	101.63	
		65	a2	10.09	15.00	7.50	75.67	
								365.24
65	66	65	a1	13.55	15.00	7.50	101.63	
960.00	975.00	65	a2	10.09	15.00	7.50	75.67	
		66	a1	13.54	15.00	7.50	101.55	
		66	a2	9.79	15.00	7.50	73.42	
								352.27
66	67	66	a1	13.54	15.00	7.50	101.55	
975.00	990.00	66	a2	9.79	15.00	7.50	73.42	
		67	a1	13.54	15.00	7.50	101.55	
		67	a2	9.79	15.00	7.50	73.42	
								349.94
67	68	67	a1	13.54	15.00	7.50	101.55	
990.00	1005.00	67	a2	9.79	15.00	7.50	73.42	
		68	a1	13.54	15.00	7.50	101.55	
		68	a2	9.79	15.00	7.50	73.42	
								349.94
68	69	68	a1	13.54	15.00	7.50	101.55	
1005.00	1020.00	68	a2	9.79	15.00	7.50	73.42	
		69	a1	13.54	15.00	7.50	101.55	
		69	a2	9.79	15.00	7.50	73.42	
								349.94
69	70	69	a1	13.54	15.00	7.50	101.55	
1020.00	1035.00	69	a2	9.79	15.00	7.50	73.42	
		70	a1	13.54	15.00	7.50	101.55	
		70	a2	9.79	15.00	7.50	73.42	
								349.94
70	71	70	a1	13.54	15.00	7.50	101.55	
1035.00	1050.00	70	a2	9.79	15.00	7.50	73.42	
		71	a1	13.54	15.00	7.50	101.55	
		71	a2	9.79	15.00	7.50	73.42	
								349.94
71	72	71	a1	13.54	15.00	7.50	101.55	
1050.00	1065.00	71	a2	9.79	15.00	7.50	73.42	
		72	a1	13.54	15.00	7.50	101.55	
		72	a2	9.79	15.00	7.50	73.42	
								349.94
72	73	72	a1	13.54	15.00	7.50	101.55	
1065.00	1080.00	72	a2	9.79	15.00	7.50	73.42	
		73	a1	13.54	15.00	7.50	101.55	
		73	a2	9.79	15.00	7.50	73.42	
								349.94
73	74	73	a1	13.54	15.00	7.50	101.55	
1080.00	1095.00	73	a2	9.79	15.00	7.50	73.42	
		74	a1	13.54	15.00	7.50	101.55	
		74	a2	9.79	15.00	7.50	73.42	
								349.94
74	75	74	a1	13.54	15.00	7.50	101.55	
1095.00	1110.00	74	a2	9.79	15.00	7.50	73.42	
		75	a1	13.54	15.00	7.50	101.55	
		75	a2	9.79	15.00	7.50	73.42	
								349.94
75	76	75	a1	13.54	15.00	7.50	101.55	
1110.00	1125.00	75	a2	9.79	15.00	7.50	73.42	
		76	a1	13.53	15.00	7.50	101.47	
		76	a2	9.79	15.00	7.50	73.42	
								349.86
76	76bis	76	a1	13.53	6.80	3.40	46.00	
1125.00	1131.80	76	a2	9.79	6.80	3.40	33.29	
		76bis	a2	9.75	6.80	3.40	33.15	
		76bis	a1	13.49	6.80	3.40	45.87	
								158.31

Il Direttore dei Lavori	L'Impresa	TOTALE ARTICOLO	25766.28

	COMPUTO DI SUPERFICI		Foglio n. 283

VEGETALE

DALLA SEZ. DA PROG.	ALLA SEZ. A PROG.	SEZIONE	FIGURA	LUNGHEZZA	DISTANZA SEZIONI ml	DISTANZA DI CALCOLO ml	AREA PARZIALE mq	AREA TOTALE mq
1	2	1	b1	1.75	15.00	7.50	13.13	
0.00	15.00	1	b2	2.62	15.00	7.50	19.65	
		2	b1	1.65	15.00	7.50	12.38	
		2	b2	2.23	15.00	7.50	16.73	
								61.89
2	3	2	b1	1.65	15.00	7.50	12.38	
15.00	30.00	2	b2	2.23	15.00	7.50	16.73	
		3	b1	1.97	15.00	7.50	14.78	
		3	b2	2.28	15.00	7.50	17.10	
								60.99
3	4	3	b1	1.97	15.00	7.50	14.78	
30.00	45.00	3	b2	2.28	15.00	7.50	17.10	
		4	b1	1.67	15.00	7.50	12.52	
		4	b2	2.37	15.00	7.50	17.78	
								62.18
4	5	4	b1	1.67	15.00	7.50	12.52	
45.00	60.00	4	b2	2.37	15.00	7.50	17.78	
		5	b1	1.55	15.00	7.50	11.63	
		5	b2	2.29	15.00	7.50	17.18	
								59.11
5	6	5	b1	1.55	15.00	7.50	11.63	
60.00	75.00	5	b2	2.29	15.00	7.50	17.18	
		6	b1	1.76	15.00	7.50	13.20	
		6	b2	2.31	15.00	7.50	17.32	
								59.33
6	7	6	b1	1.76	15.00	7.50	13.20	
75.00	90.00	6	b2	2.31	15.00	7.50	17.32	
		7	b1	2.11	15.00	7.50	15.82	
		7	b2	2.30	15.00	7.50	17.25	
								63.59
7	8	7	b1	2.11	15.00	7.50	15.82	
90.00	105.00	7	b2	2.30	15.00	7.50	17.25	
								33.07
8	9	9	b1	1.99	15.00	7.50	14.93	
105.00	120.00	9	b2	2.22	15.00	7.50	16.65	
								31.58
9	10	9	b1	1.99	15.00	7.50	14.93	
120.00	135.00	9	b2	2.22	15.00	7.50	16.65	
		10	b1	2.07	15.00	7.50	15.52	
		10	b2	2.18	15.00	7.50	16.35	
								63.45
10	11	10	b1	2.07	15.00	7.50	15.52	
135.00	150.00	10	b2	2.18	15.00	7.50	16.35	
		11	b1	2.14	15.00	7.50	16.05	
		11	b2	1.84	15.00	7.50	13.80	
								61.72
11	12	11	b1	2.14	15.00	7.50	16.05	
150.00	165.00	11	b2	1.84	15.00	7.50	13.80	
		12	b1	2.18	15.00	7.50	16.35	
		12	b2	2.24	15.00	7.50	16.80	
								63.00
12	13	12	b1	2.18	15.00	7.50	16.35	
165.00	180.00	12	b2	2.24	15.00	7.50	16.80	
		13	b1	2.21	15.00	7.50	16.57	
		13	b2	2.01	15.00	7.50	15.07	
								64.79
13	14	13	b1	2.21	15.00	7.50	16.57	
180.00	195.00	13	b2	2.01	15.00	7.50	15.07	
		14	b1	2.26	15.00	7.50	16.95	
		14	b2	2.24	15.00	7.50	16.80	
								65.39
14	15	14	b1	2.26	15.00	7.50	16.95	
195.00	210.00	14	b2	2.24	15.00	7.50	16.80	
		15	b1	2.32	15.00	7.50	17.40	
		15	b2	2.14	15.00	7.50	16.05	
								67.20
15	16	15	b1	2.32	15.00	7.50	17.40	
210.00	225.00	15	b2	2.14	15.00	7.50	16.05	
		16	b1	2.39	15.00	7.50	17.93	
		16	b2	2.39	15.00	7.50	17.93	
								69.31
16	17	16	b1	2.39	15.00	7.50	17.93	
225.00	240.00	16	b2	2.39	15.00	7.50	17.93	
		17	b1	2.47	15.00	7.50	18.53	
		17	b2	2.64	15.00	7.50	19.80	
								74.19
17	18	17	b1	2.47	15.00	7.50	18.53	
240.00	255.00	17	b2	2.64	15.00	7.50	19.80	
		18	b1	2.55	15.00	7.50	19.13	
		18	b2	2.62	15.00	7.50	19.65	
								77.11
18	19	18	b1	2.55	15.00	7.50	19.13	
255.00	270.00	18	b2	2.62	15.00	7.50	19.65	
		19	b1	2.62	15.00	7.50	19.65	
		19	b2	2.68	15.00	7.50	20.10	
								78.53
19	20	19	b1	2.62	15.00	7.50	19.65	
270.00	285.00	19	b2	2.68	15.00	7.50	20.10	
		20	b1	2.02	15.00	7.50	15.15	
		20	b2	2.77	15.00	7.50	20.77	
								75.67
20	21	20	b1	2.02	15.00	7.50	15.15	
285.00	300.00	20	b2	2.77	15.00	7.50	20.77	
		21	b1	2.24	15.00	7.50	16.80	
		21	b2	2.73	15.00	7.50	20.48	
								73.20
21	22	21	b1	2.24	15.00	7.50	16.80	
300.00	315.00	21	b2	2.73	15.00	7.50	20.48	
		22	b1	2.76	15.00	7.50	20.70	
		22	b2	3.02	15.00	7.50	22.65	
								80.63
22	23	22	b1	2.76	15.00	7.50	20.70	
315.00	330.00	22	b2	3.02	15.00	7.50	22.65	
		23	b1	2.56	15.00	7.50	19.20	
		23	b2	2.65	15.00	7.50	19.88	
								82.43
								1428.36

	COMPUTO DI SUPERFICI		Foglio n. 284

VEGETALE

DALLA SEZ. DA PROG.	ALLA SEZ. A PROG.	SEZIONE	FIGURA	LUNGHEZZA	DISTANZA SEZIONI ml	DISTANZA DI CALCOLO ml	AREA PARZIALE mq	AREA TOTALE mq
						A RIPORTARE mq		1428.36
23	24	23	b1	2.56	15.00	7.50	19.20	
330.00	345.00	23	b2	2.65	15.00	7.50	19.88	
		24	b1	2.92	15.00	7.50	21.90	
		24	b2	3.01	15.00	7.50	22.57	
								83.55
24	25	24	b1	2.92	15.00	7.50	21.90	
345.00	360.00	24	b2	3.01	15.00	7.50	22.57	
		25	b1	3.10	15.00	7.50	23.25	
		25	b2	3.00	15.00	7.50	22.50	
								90.22
25	26	25	b1	3.10	15.00	7.50	23.25	
360.00	375.00	25	b2	3.00	15.00	7.50	22.50	
		26	b1	3.04	15.00	7.50	22.80	
		26	b2	3.30	15.00	7.50	24.75	
								93.30
26	27	26	b1	3.04	15.00	7.50	22.80	
375.00	390.00	26	b2	3.30	15.00	7.50	24.75	
		27	b1	3.21	15.00	7.50	24.07	
		27	b2	3.40	15.00	7.50	25.50	
								97.12
27	28	27	b1	3.21	15.00	7.50	24.07	
390.00	405.00	27	b2	3.40	15.00	7.50	25.50	
		28	b1	3.27	15.00	7.50	24.52	
		28	b2	3.55	15.00	7.50	26.63	
								100.72
28	29	28	b1	3.27	15.00	7.50	24.52	
405.00	420.00	28	b2	3.55	15.00	7.50	26.63	
		29	b1	3.42	15.00	7.50	25.65	
		29	b2	3.63	15.00	7.50	27.22	
								104.02
29	30	29	b1	3.42	15.00	7.50	25.65	
420.00	435.00	29	b2	3.63	15.00	7.50	27.22	
		30	b1	3.56	15.00	7.50	26.70	
		30	b2	3.64	15.00	7.50	27.30	
								106.87
30	31	30	b1	3.56	15.00	7.50	26.70	
435.00	450.00	30	b2	3.64	15.00	7.50	27.30	
		31	b1	4.08	15.00	7.50	30.60	
		31	b2	3.68	15.00	7.50	27.60	
								112.20
31	32	31	b1	4.08	15.00	7.50	30.60	
450.00	465.00	31	b2	3.68	15.00	7.50	27.60	
		32	b1	4.25	15.00	7.50	31.88	
		32	b2	3.76	15.00	7.50	28.20	
								118.28
32	33	32	b1	4.25	15.00	7.50	31.88	
465.00	480.00	32	b2	3.76	15.00	7.50	28.20	
		33	b1	4.36	15.00	7.50	32.70	
		33	b2	3.86	15.00	7.50	28.95	
								121.73
33	34	33	b1	4.36	15.00	7.50	32.70	
480.00	495.00	33	b2	3.86	15.00	7.50	28.95	
		34	b1	4.34	15.00	7.50	32.55	
		34	b2	3.97	15.00	7.50	29.78	
								123.98
34	35	34	b1	4.34	15.00	7.50	32.55	
495.00	510.00	34	b2	3.97	15.00	7.50	29.78	
		35	b1	4.21	15.00	7.50	31.57	
		35	b2	4.05	15.00	7.50	30.38	
								124.28
35	36	35	b1	4.21	15.00	7.50	31.57	
510.00	525.00	35	b2	4.05	15.00	7.50	30.38	
		36	b1	4.23	15.00	7.50	31.73	
		36	b2	4.14	15.00	7.50	31.05	
								124.73
36	37	36	b1	4.23	15.00	7.50	31.73	
525.00	540.00	36	b2	4.14	15.00	7.50	31.05	
		37	b1	4.26	15.00	7.50	31.95	
		37	b2	4.33	15.00	7.50	32.48	
								127.21
37	38	37	b1	4.26	15.00	7.50	31.95	
540.00	555.00	37	b2	4.33	15.00	7.50	32.48	
		38	b1	14.17	15.00	7.50	106.28	
		38	b2	4.49	15.00	7.50	33.68	
								204.39
38	39	38	b1	14.17	15.00	7.50	106.28	
555.00	570.00	38	b2	4.49	15.00	7.50	33.68	
		39	b1	12.10	15.00	7.50	90.75	
		39	b2	4.56	15.00	7.50	34.20	
								264.91
39	40	39	b1	12.10	15.00	7.50	90.75	
570.00	585.00	39	b2	4.56	15.00	7.50	34.20	
		40	b1	14.38	15.00	7.50	107.85	
		40	b2	4.58	15.00	7.50	34.35	
								267.15
40	41	40	b1	14.38	15.00	7.50	107.85	
585.00	600.00	40	b2	4.58	15.00	7.50	34.35	
		41	b1	18.34	15.00	7.50	137.55	
		41	b2	4.64	15.00	7.50	34.80	
								314.55
41	42	41	b1	18.34	15.00	7.50	137.55	
600.00	615.00	41	b2	4.64	15.00	7.50	34.80	
		42	b1	20.86	15.00	7.50	156.45	
								328.80
42	43	42	b1	20.86	15.00	7.50	156.45	
615.00	630.00	43	b2	22.58	15.00	7.50	169.35	
		43	b1	23.54	15.00	7.50	176.55	
								502.35
43	SP40	43	b2	22.58	11.94	5.97	134.80	
630.00	641.94	43	b1	23.54	11.94	5.97	140.53	
		SP40	b2	22.20	11.94	5.97	132.53	
		SP40	b1	23.91	11.94	5.97	142.74	
								550.60
SP40	44	SP40	b2	22.20	3.06	1.53	33.97	
							33.97	5389.32

	COMPUTO DI SUPERFICI		Foglio n. 285

VEGETALE

DALLA SEZ. DA PROG.	ALLA SEZ. A PROG.	SEZIONE	FIGURA	LUNGHEZZA	DISTANZA SEZIONI ml	DISTANZA DI CALCOLO ml	AREA PARZIALE mq	AREA TOTALE mq
						A RIPORTARE mq	33.97	5389.32
641.94	645.00	SP40	b1	23.91	3.06	1.53	36.58	
		44	b2	21.04	3.06	1.53	32.19	
		44	b1	23.79	3.06	1.53	36.40	
								139.14
44	45	44	b2	21.04	15.00	7.50	157.80	
645.00	660.00	44	b1	23.79	15.00	7.50	178.42	
		45	b2	15.23	15.00	7.50	114.23	
		45	b1	23.87	15.00	7.50	179.03	
								629.48
45	46	45	b2	15.23	15.00	7.50	114.23	
660.00	675.00	45	b1	23.87	15.00	7.50	179.03	
		46	b2	3.70	15.00	7.50	27.75	
		46	b1	23.76	15.00	7.50	178.20	
								499.21
46	47	46	b2	3.70	15.00	7.50	27.75	
675.00	690.00	46	b1	23.76	15.00	7.50	178.20	
		47	b1	24.05	15.00	7.50	180.38	
								386.33
47	48	47	b1	24.05	15.00	7.50	180.38	
690.00	705.00	48	b2	5.14	15.00	7.50	38.55	
		48	b1	12.36	15.00	7.50	92.70	
								311.63
48	49	48	b2	5.14	15.00	7.50	38.55	
705.00	720.00	48	b1	12.36	15.00	7.50	92.70	
		49	b2	5.38	15.00	7.50	40.35	
		49	b1	7.58	15.00	7.50	56.85	
								228.45
49	50	49	b2	5.38	15.00	7.50	40.35	
720.00	735.00	49	b1	7.58	15.00	7.50	56.85	
		50	b2	6.01	15.00	7.50	45.07	
		50	b1	2.45	15.00	7.50	18.38	
								160.65
50	51	50	b2	6.01	15.00	7.50	45.07	
735.00	750.00	50	b1	2.45	15.00	7.50	18.38	
		51	b1	6.36	15.00	7.50	47.70	
								111.15
51	52	51	b1	6.36	15.00	7.50	47.70	
750.00	765.00	52	b1	6.80	15.00	7.50	51.00	
		52	b2	6.49	15.00	7.50	48.68	
								147.38
52	53	52	b1	6.80	15.00	7.50	51.00	
765.00	780.00	52	b2	6.49	15.00	7.50	48.68	
		53	b1	7.42	15.00	7.50	55.65	
		53	b2	6.87	15.00	7.50	51.52	
								206.85
53	54	53	b1	7.42	15.00	7.50	55.65	
780.00	795.00	53	b2	6.87	15.00	7.50	51.52	
		54	b1	4.17	15.00	7.50	31.27	
		54	b2	7.29	15.00	7.50	54.67	
								193.11
54	55	54	b1	4.17	15.00	7.50	31.27	
795.00	810.00	54	b2	7.29	15.00	7.50	54.67	
		55	b1	4.01	15.00	7.50	30.07	
		55	b2	7.64	15.00	7.50	57.30	
								173.31
55	56	55	b1	4.01	15.00	7.50	30.07	
810.00	825.00	55	b2	7.64	15.00	7.50	57.30	
		56	b1	4.02	15.00	7.50	30.15	
		56	b2	8.28	15.00	7.50	62.10	
								179.62
56	57	56	b1	4.02	15.00	7.50	30.15	
825.00	840.00	56	b2	8.28	15.00	7.50	62.10	
		57	b1	4.00	15.00	7.50	30.00	
		57	b2	8.83	15.00	7.50	66.22	
								188.47
57	58	57	b1	4.00	15.00	7.50	30.00	
840.00	855.00	57	b2	8.83	15.00	7.50	66.22	
		58	b1	4.09	15.00	7.50	30.67	
		58	b2	7.45	15.00	7.50	55.88	
								182.77
58	59	58	b1	4.09	15.00	7.50	30.67	
855.00	870.00	58	b2	7.45	15.00	7.50	55.88	
		59	b1	4.33	15.00	7.50	32.48	
		59	b2	5.93	15.00	7.50	44.47	
								163.50
59	60	59	b1	4.33	15.00	7.50	32.48	
870.00	885.00	59	b2	5.93	15.00	7.50	44.47	
		60	b1	4.53	15.00	7.50	33.98	
		60	b2	4.56	15.00	7.50	34.20	
								145.13
60	61	60	b1	4.53	15.00	7.50	33.98	
885.00	900.00	60	b2	4.56	15.00	7.50	34.20	
		61	b1	4.03	15.00	7.50	30.23	
		61	b2	2.64	15.00	7.50	19.80	
								118.21
61	62	61	b1	4.03	15.00	7.50	30.23	
900.00	915.00	61	b2	2.64	15.00	7.50	19.80	
		62	b1	4.53	15.00	7.50	33.98	
								84.01
62	63	62	b1	4.53	15.00	7.50	33.98	
915.00	930.00	63	b1	6.88	15.00	7.50	51.60	
		63	b2	5.99	15.00	7.50	44.93	
								130.51
63	64	63	b1	6.88	15.00	7.50	51.60	
930.00	945.00	63	b2	5.99	15.00	7.50	44.93	
		64	b2	6.79	15.00	7.50	50.92	
		64	b1	13.51	15.00	7.50	101.33	
								248.78
64	65	64	b2	6.79	15.00	7.50	50.92	
945.00	960.00	64	b1	13.51	15.00	7.50	101.33	
		65	b2	4.85	15.00	7.50	36.38	
		65	b1	14.43	15.00	7.50	108.22	
								296.85
65	66	65	b2	4.85	15.00	7.50	36.38	
							36.38	10313.86

	COMPUTO DI SUPERFICI		Foglio n. 286

VEGETALE

DALLA SEZ. DA PROG.	ALLA SEZ. A PROG.	SEZIONE	FIGURA	LUNGHEZZA	DISTANZA SEZIONI ml	DISTANZA DI CALCOLO ml	AREA PARZIALE mq	AREA TOTALE mq
						A RIPORTARE mq	36.38	10313.86
960.00	975.00	65	b1	14.43	15.00	7.50	108.22	
		66	b2	4.91	15.00	7.50	36.83	
		66	b1	14.74	15.00	7.50	110.55	
								291.98
66	67	66	b2	4.91	15.00	7.50	36.83	
975.00	990.00	66	b1	14.74	15.00	7.50	110.55	
		67	b2	5.28	15.00	7.50	39.60	
		67	b1	15.02	15.00	7.50	112.65	
								299.63
67	68	67	b2	5.28	15.00	7.50	39.60	
990.00	1005.00	67	b1	15.02	15.00	7.50	112.65	
		68	b2	5.09	15.00	7.50	38.17	
		68	b1	15.27	15.00	7.50	114.52	
								304.94
68	69	68	b2	5.09	15.00	7.50	38.17	
1005.00	1020.00	68	b1	15.27	15.00	7.50	114.52	
		69	b2	4.98	15.00	7.50	37.35	
		69	b1	15.48	15.00	7.50	116.10	
								306.14
69	70	69	b2	4.98	15.00	7.50	37.35	
1020.00	1035.00	69	b1	15.48	15.00	7.50	116.10	
		70	b2	5.11	15.00	7.50	38.33	
		70	b1	15.67	15.00	7.50	117.53	
								309.31
70	71	70	b2	5.11	15.00	7.50	38.33	
1035.00	1050.00	70	b1	15.67	15.00	7.50	117.53	
		71	b2	5.46	15.00	7.50	40.95	
		71	b1	15.81	15.00	7.50	118.58	
								315.39
71	72	71	b2	5.46	15.00	7.50	40.95	
1050.00	1065.00	71	b1	15.81	15.00	7.50	118.58	
		72	b2	5.34	15.00	7.50	40.05	
		72	b1	15.89	15.00	7.50	119.18	
								318.76
72	73	72	b2	5.34	15.00	7.50	40.05	
1065.00	1080.00	72	b1	15.89	15.00	7.50	119.18	
		73	b2	5.61	15.00	7.50	42.08	
		73	b1	15.93	15.00	7.50	119.47	
								320.78
73	74	73	b2	5.61	15.00	7.50	42.08	
1080.00	1095.00	73	b1	15.93	15.00	7.50	119.47	
		74	b2	5.53	15.00	7.50	41.48	
		74	b1	16.01	15.00	7.50	120.08	
								323.11
74	75	74	b2	5.53	15.00	7.50	41.48	
1095.00	1110.00	74	b1	16.01	15.00	7.50	120.08	
		75	b2	5.84	15.00	7.50	43.80	
		75	b1	16.10	15.00	7.50	120.75	
								326.11
75	76	75	b2	5.84	15.00	7.50	43.80	
1110.00	1125.00	75	b1	16.10	15.00	7.50	120.75	
		76	b2	5.90	15.00	7.50	44.25	
		76	b1	16.16	15.00	7.50	121.20	
								330.00
76	76bis	76	b2	5.90	6.80	3.40	20.06	
1125.00	1131.80	76	b1	16.16	6.80	3.40	54.94	
								75.00

Il Direttore dei Lavori	L'Impresa	TOTALE ARTICOLO	13835.01

	COMPUTO DI SUPERFICI		Foglio n. 287

BINDER

DALLA SEZ. DA PROG.	ALLA SEZ. A PROG.	SEZIONE	FIGURA	LUNGHEZZA	DISTANZA SEZIONI ml	DISTANZA DI CALCOLO ml	AREA PARZIALE mq	AREA TOTALE mq
1	2	1	c1	8.18	15.00	7.50	61.35	
0.00	15.00	1	c2	8.38	15.00	7.50	62.85	
		2	c1	8.35	15.00	7.50	62.63	
		2	c2	8.15	15.00	7.50	61.13	
								247.96
2	3	2	c1	8.35	15.00	7.50	62.63	
15.00	30.00	2	c2	8.15	15.00	7.50	61.13	
		3	c1	8.30	15.00	7.50	62.25	
		3	c2	8.25	15.00	7.50	61.88	
								247.89
3	4	3	c1	8.30	15.00	7.50	62.25	
30.00	45.00	3	c2	8.25	15.00	7.50	61.88	
		4	c1	8.35	15.00	7.50	62.63	
		4	c2	8.45	15.00	7.50	63.37	
								250.13
4	5	4	c1	8.35	15.00	7.50	62.63	
45.00	60.00	4	c2	8.45	15.00	7.50	63.37	
		5	c1	8.75	15.00	7.50	65.63	
		5	c2	8.51	15.00	7.50	63.82	
								255.45
5	6	5	c1	8.75	15.00	7.50	65.63	
60.00	75.00	5	c2	8.51	15.00	7.50	63.82	
		6	c1	9.14	15.00	7.50	68.55	
		6	c2	8.78	15.00	7.50	65.85	
								263.85
6	7	6	c1	9.14	15.00	7.50	68.55	
75.00	90.00	6	c2	8.78	15.00	7.50	65.85	
		7	c1	9.49	15.00	7.50	71.17	
		7	c2	9.11	15.00	7.50	68.32	
								273.89
7	8	7	c1	9.49	15.00	7.50	71.17	
90.00	105.00	7	c2	9.11	15.00	7.50	68.32	
		8	c1	9.55	15.00	7.50	71.63	
		8	c2	9.87	15.00	7.50	74.02	
								285.14
8	9	8	c1	9.55	15.00	7.50	71.63	
105.00	120.00	8	c2	9.87	15.00	7.50	74.02	
		9	c1	9.95	15.00	7.50	74.63	
		9	c2	9.75	15.00	7.50	73.13	
								293.41
9	10	9	c1	9.95	15.00	7.50	74.63	
120.00	135.00	9	c2	9.75	15.00	7.50	73.13	
		10	c1	9.94	15.00	7.50	74.55	
		10	c2	9.89	15.00	7.50	74.18	
								296.49
10	11	10	c1	9.94	15.00	7.50	74.55	
135.00	150.00	10	c2	9.89	15.00	7.50	74.18	
		11	c1	10.25	15.00	7.50	76.88	
		11	c2	9.95	15.00	7.50	74.63	
								300.24
11	12	11	c1	10.25	15.00	7.50	76.88	
150.00	165.00	11	c2	9.95	15.00	7.50	74.63	
		12	c1	11.19	15.00	7.50	83.92	
		12	c2	9.95	15.00	7.50	74.63	
								310.06
12	13	12	c1	11.19	15.00	7.50	83.92	
165.00	180.00	12	c2	9.95	15.00	7.50	74.63	
		13	c1	12.32	15.00	7.50	92.40	
		13	c2	9.95	15.00	7.50	74.63	
								325.58
13	14	13	c1	12.32	15.00	7.50	92.40	
180.00	195.00	13	c2	9.95	15.00	7.50	74.63	
		14	c1	13.32	15.00	7.50	99.90	
		14	c2	9.95	15.00	7.50	74.63	
								341.56
14	15	14	c1	13.32	15.00	7.50	99.90	
195.00	210.00	14	c2	9.95	15.00	7.50	74.63	
		15	c1	13.70	15.00	7.50	102.75	
		15	c2	9.95	15.00	7.50	74.63	
								351.91
15	16	15	c1	13.70	15.00	7.50	102.75	
210.00	225.00	15	c2	9.95	15.00	7.50	74.63	
		16	c1	13.70	15.00	7.50	102.75	
		16	c2	9.95	15.00	7.50	74.63	
								354.76
16	17	16	c1	13.70	15.00	7.50	102.75	
225.00	240.00	16	c2	9.95	15.00	7.50	74.63	
		17	c1	13.70	15.00	7.50	102.75	
		17	c2	9.95	15.00	7.50	74.63	
								354.76
17	18	17	c1	13.70	15.00	7.50	102.75	
240.00	255.00	17	c2	9.95	15.00	7.50	74.63	
		18	c1	13.70	15.00	7.50	102.75	
		18	c2	9.94	15.00	7.50	74.55	
								354.68
18	19	18	c1	13.70	15.00	7.50	102.75	
255.00	270.00	18	c2	9.94	15.00	7.50	74.55	
		19	c1	13.70	15.00	7.50	102.75	
		19	c2	10.16	15.00	7.50	76.20	
								356.25
19	20	19	c1	13.70	15.00	7.50	102.75	
270.00	285.00	19	c2	10.16	15.00	7.50	76.20	
		20	c1	13.70	15.00	7.50	102.75	
		20	c2	10.88	15.00	7.50	81.60	
								363.30
20	21	20	c1	13.70	15.00	7.50	102.75	
285.00	300.00	20	c2	10.88	15.00	7.50	81.60	
		21	c1	13.70	15.00	7.50	102.75	
		21	c2	11.81	15.00	7.50	88.58	
								375.68
21	22	21	c1	13.70	15.00	7.50	102.75	
300.00	315.00	21	c2	11.81	15.00	7.50	88.58	
		22	c1	13.70	15.00	7.50	102.75	
		22	c2	12.77	15.00	7.50	95.77	
								389.85
22	23	22	c1	13.70	15.00	7.50	102.75	
							102.75	6592.84

	COMPUTO DI SUPERFICI		Foglio n. 288

BINDER

DALLA SEZ. DA PROG.	ALLA SEZ. A PROG.	SEZIONE	FIGURA	LUNGHEZZA	DISTANZA SEZIONI ml	DISTANZA DI CALCOLO ml	AREA PARZIALE mq	AREA TOTALE mq
						A RIPORTARE mq	102.75	6592.84
315.00	330.00	22	c2	12.77	15.00	7.50	95.77	
		23	c1	13.70	15.00	7.50	102.75	
		23	c2	13.46	15.00	7.50	100.95	
								402.22
23	24	23	c1	13.70	15.00	7.50	102.75	
330.00	345.00	23	c2	13.46	15.00	7.50	100.95	
		24	c1	13.70	15.00	7.50	102.75	
		24	c2	13.70	15.00	7.50	102.75	
								409.20
24	25	24	c1	13.70	15.00	7.50	102.75	
345.00	360.00	24	c2	13.70	15.00	7.50	102.75	
		25	c1	13.70	15.00	7.50	102.75	
		25	c2	13.70	15.00	7.50	102.75	
								411.00
25	26	25	c1	13.70	15.00	7.50	102.75	
360.00	375.00	25	c2	13.70	15.00	7.50	102.75	
		26	c1	13.70	15.00	7.50	102.75	
		26	c2	13.70	15.00	7.50	102.75	
								411.00
26	27	26	c1	13.70	15.00	7.50	102.75	
375.00	390.00	26	c2	13.70	15.00	7.50	102.75	
		27	c1	13.70	15.00	7.50	102.75	
		27	c2	13.70	15.00	7.50	102.75	
								411.00
27	28	27	c1	13.70	15.00	7.50	102.75	
390.00	405.00	27	c2	13.70	15.00	7.50	102.75	
		28	c1	13.70	15.00	7.50	102.75	
		28	c2	13.70	15.00	7.50	102.75	
								411.00
28	29	28	c1	13.70	15.00	7.50	102.75	
405.00	420.00	28	c2	13.70	15.00	7.50	102.75	
		29	c1	13.82	15.00	7.50	103.65	
		29	c2	13.70	15.00	7.50	102.75	
								411.90
29	30	29	c1	13.82	15.00	7.50	103.65	
420.00	435.00	29	c2	13.70	15.00	7.50	102.75	
		30	c1	15.24	15.00	7.50	114.30	
		30	c2	13.69	15.00	7.50	102.67	
								423.37
30	31	30	c1	15.24	15.00	7.50	114.30	
435.00	450.00	30	c2	13.69	15.00	7.50	102.67	
		31	c1	9.95	15.00	7.50	74.63	
		31	c2	13.68	15.00	7.50	102.60	
								394.20
31	32	31	c1	9.95	15.00	7.50	74.63	
450.00	465.00	31	c2	13.68	15.00	7.50	102.60	
		32	c1	9.95	15.00	7.50	74.63	
		32	c2	13.70	15.00	7.50	102.75	
								354.61
32	33	32	c1	9.95	15.00	7.50	74.63	
465.00	480.00	32	c2	13.70	15.00	7.50	102.75	
		33	c1	9.95	15.00	7.50	74.63	
		33	c2	13.75	15.00	7.50	103.13	
								355.14
33	34	33	c1	9.95	15.00	7.50	74.63	
480.00	495.00	33	c2	13.75	15.00	7.50	103.13	
		34	c1	9.95	15.00	7.50	74.63	
		34	c2	13.86	15.00	7.50	103.95	
								356.34
34	35	34	c1	9.95	15.00	7.50	74.63	
495.00	510.00	34	c2	13.86	15.00	7.50	103.95	
		35	c1	9.95	15.00	7.50	74.63	
		35	c2	15.23	15.00	7.50	114.23	
								367.44
35	36	35	c1	9.95	15.00	7.50	74.63	
510.00	525.00	35	c2	15.23	15.00	7.50	114.23	
		36	c1	9.95	15.00	7.50	74.63	
		36	c2	18.39	15.00	7.50	137.93	
								401.42
36	37	36	c1	9.95	15.00	7.50	74.63	
525.00	540.00	36	c2	18.39	15.00	7.50	137.93	
		37	c1	10.09	15.00	7.50	75.67	
		37	c2	9.95	15.00	7.50	74.63	
								362.86
37	38	37	c1	10.09	15.00	7.50	75.67	
540.00	555.00	37	c2	9.95	15.00	7.50	74.63	
		38	c1	12.72	15.00	7.50	95.40	
		38	c2	9.95	15.00	7.50	74.63	
								320.33
38	39	38	c1	12.72	15.00	7.50	95.40	
555.00	570.00	38	c2	9.95	15.00	7.50	74.63	
		39	c1	13.45	15.00	7.50	100.88	
		39	c2	9.95	15.00	7.50	74.63	
								345.54
39	40	39	c1	13.45	15.00	7.50	100.88	
570.00	585.00	39	c2	9.95	15.00	7.50	74.63	
		40	c1	13.32	15.00	7.50	99.90	
		40	c2	9.95	15.00	7.50	74.63	
								350.04
40	41	40	c1	13.32	15.00	7.50	99.90	
585.00	600.00	40	c2	9.95	15.00	7.50	74.63	
		41	c1	10.70	15.00	7.50	80.25	
		41	c2	9.95	15.00	7.50	74.63	
								329.41
41	42	41	c1	10.70	15.00	7.50	80.25	
600.00	615.00	41	c2	9.95	15.00	7.50	74.63	
		42	c1	9.95	15.00	7.50	74.63	
		42	c2	9.95	15.00	7.50	74.63	
								304.14
42	43	42	c1	9.95	15.00	7.50	74.63	
615.00	630.00	42	c2	9.95	15.00	7.50	74.63	
		43	c1	9.95	15.00	7.50	74.63	
		43	c2	9.95	15.00	7.50	74.63	
								298.52
								14423.52

	COMPUTO DI SUPERFICI		Foglio n. 289

BINDER

DALLA SEZ. DA PROG.	ALLA SEZ. A PROG.	SEZIONE	FIGURA	LUNGHEZZA	DISTANZA SEZIONI ml	DISTANZA DI CALCOLO ml	AREA PARZIALE mq	AREA TOTALE mq
						A RIPORTARE mq		14423.52
43	SP40	43	c1	9.95	11.94	5.97	59.40	
630.00	641.94	43	c2	9.95	11.94	5.97	59.40	
		SP40	c1	9.95	11.94	5.97	59.40	
		SP40	c2	9.95	11.94	5.97	59.40	
								237.60
SP40	44	SP40	c1	9.95	3.06	1.53	15.22	
641.94	645.00	SP40	c2	9.95	3.06	1.53	15.22	
		44	c1	9.95	3.06	1.53	15.22	
		44	c2	9.95	3.06	1.53	15.22	
								60.88
44	45	44	c1	9.95	15.00	7.50	74.63	
645.00	660.00	44	c2	9.95	15.00	7.50	74.63	
		45	c1	9.95	15.00	7.50	74.63	
		45	c2	10.95	15.00	7.50	82.13	
								306.02
45	46	45	c1	9.95	15.00	7.50	74.63	
660.00	675.00	45	c2	10.95	15.00	7.50	82.13	
		46	c1	9.95	15.00	7.50	74.63	
		46	c2	13.45	15.00	7.50	100.88	
								332.27
46	47	46	c1	9.95	15.00	7.50	74.63	
675.00	690.00	46	c2	13.45	15.00	7.50	100.88	
		47	c1	9.95	15.00	7.50	74.63	
		47	c2	13.45	15.00	7.50	100.88	
								351.02
47	48	47	c1	9.95	15.00	7.50	74.63	
690.00	705.00	47	c2	13.45	15.00	7.50	100.88	
		48	c1	9.75	15.00	7.50	73.13	
		48	c2	12.22	15.00	7.50	91.65	
								340.29
48	49	48	c1	9.75	15.00	7.50	73.13	
705.00	720.00	48	c2	12.22	15.00	7.50	91.65	
		49	c1	9.95	15.00	7.50	74.63	
		49	c2	9.95	15.00	7.50	74.63	
								314.04
49	50	49	c1	9.95	15.00	7.50	74.63	
720.00	735.00	49	c2	9.95	15.00	7.50	74.63	
		50	c1	9.95	15.00	7.50	74.63	
		50	c2	9.95	15.00	7.50	74.63	
								298.52
50	51	50	c1	9.95	15.00	7.50	74.63	
735.00	750.00	50	c2	9.95	15.00	7.50	74.63	
		51	c1	9.95	15.00	7.50	74.63	
		51	c2	9.95	15.00	7.50	74.63	
								298.52
51	52	51	c1	9.95	15.00	7.50	74.63	
750.00	765.00	51	c2	9.95	15.00	7.50	74.63	
		52	c1	15.21	15.00	7.50	114.08	
		52	c2	9.95	15.00	7.50	74.63	
								337.97
52	53	52	c1	15.21	15.00	7.50	114.08	
765.00	780.00	52	c2	9.95	15.00	7.50	74.63	
		53	c1	13.83	15.00	7.50	103.72	
		53	c2	9.95	15.00	7.50	74.63	
								367.06
53	54	53	c1	13.83	15.00	7.50	103.72	
780.00	795.00	53	c2	9.95	15.00	7.50	74.63	
		54	c1	13.70	15.00	7.50	102.75	
		54	c2	9.95	15.00	7.50	74.63	
								355.73
54	55	54	c1	13.70	15.00	7.50	102.75	
795.00	810.00	54	c2	9.95	15.00	7.50	74.63	
		55	c1	13.70	15.00	7.50	102.75	
		55	c2	9.95	15.00	7.50	74.63	
								354.76
55	56	55	c1	13.70	15.00	7.50	102.75	
810.00	825.00	55	c2	9.95	15.00	7.50	74.63	
		56	c1	13.70	15.00	7.50	102.75	
		56	c2	9.95	15.00	7.50	74.63	
								354.76
56	57	56	c1	13.70	15.00	7.50	102.75	
825.00	840.00	56	c2	9.95	15.00	7.50	74.63	
		57	c1	13.70	15.00	7.50	102.75	
		57	c2	9.95	15.00	7.50	74.63	
								354.76
57	58	57	c1	13.70	15.00	7.50	102.75	
840.00	855.00	57	c2	9.95	15.00	7.50	74.63	
		58	c1	13.70	15.00	7.50	102.75	
		58	c2	9.95	15.00	7.50	74.63	
								354.76
58	59	58	c1	13.70	15.00	7.50	102.75	
855.00	870.00	58	c2	9.95	15.00	7.50	74.63	
		59	c1	13.70	15.00	7.50	102.75	
		59	c2	9.95	15.00	7.50	74.63	
								354.76
59	60	59	c1	13.70	15.00	7.50	102.75	
870.00	885.00	59	c2	9.95	15.00	7.50	74.63	
		60	c1	13.70	15.00	7.50	102.75	
		60	c2	9.95	15.00	7.50	74.63	
								354.76
60	61	60	c1	13.70	15.00	7.50	102.75	
885.00	900.00	60	c2	9.95	15.00	7.50	74.63	
		61	c1	13.53	15.00	7.50	101.47	
		61	c2	9.95	15.00	7.50	74.63	
								353.48
61	62	61	c1	13.53	15.00	7.50	101.47	
900.00	915.00	61	c2	9.95	15.00	7.50	74.63	
		62	c1	12.07	15.00	7.50	90.53	
		62	c2	12.91	15.00	7.50	96.83	
								363.46
62	63	62	c1	12.07	15.00	7.50	90.53	
915.00	930.00	62	c2	12.91	15.00	7.50	96.83	
		63	c1	11.96	15.00	7.50	89.70	
		63	c2	16.01	15.00	7.50	120.08	
							397.14	21266.08

	COMPUTO DI SUPERFICI		Foglio n. 290

BINDER

DALLA SEZ. DA PROG.	ALLA SEZ. A PROG.	SEZIONE	FIGURA	LUNGHEZZA	DISTANZA SEZIONI ml	DISTANZA DI CALCOLO ml	AREA PARZIALE mq	AREA TOTALE mq
						A RIPORTARE mq	397.14	21266.08
								397.14
63	64	63	c1	11.96	15.00	7.50	89.70	
930.00	945.00	63	c2	16.01	15.00	7.50	120.08	
		64	c1	11.03	15.00	7.50	82.72	
		64	c2	14.35	15.00	7.50	107.63	
								400.13
64	65	64	c1	11.03	15.00	7.50	82.72	
945.00	960.00	64	c2	14.35	15.00	7.50	107.63	
		65	c1	10.25	15.00	7.50	76.88	
		65	c2	13.71	15.00	7.50	102.83	
								370.06
65	66	65	c1	10.25	15.00	7.50	76.88	
960.00	975.00	65	c2	13.71	15.00	7.50	102.83	
		66	c1	9.95	15.00	7.50	74.63	
		66	c2	13.70	15.00	7.50	102.75	
								357.09
66	67	66	c1	9.95	15.00	7.50	74.63	
975.00	990.00	66	c2	13.70	15.00	7.50	102.75	
		67	c1	9.95	15.00	7.50	74.63	
		67	c2	13.70	15.00	7.50	102.75	
								354.76
67	68	67	c1	9.95	15.00	7.50	74.63	
990.00	1005.00	67	c2	13.70	15.00	7.50	102.75	
		68	c1	9.95	15.00	7.50	74.63	
		68	c2	13.70	15.00	7.50	102.75	
								354.76
68	69	68	c1	9.95	15.00	7.50	74.63	
1005.00	1020.00	68	c2	13.70	15.00	7.50	102.75	
		69	c1	9.95	15.00	7.50	74.63	
		69	c2	13.70	15.00	7.50	102.75	
								354.76
69	70	69	c1	9.95	15.00	7.50	74.63	
1020.00	1035.00	69	c2	13.70	15.00	7.50	102.75	
		70	c1	9.95	15.00	7.50	74.63	
		70	c2	13.70	15.00	7.50	102.75	
								354.76
70	71	70	c1	9.95	15.00	7.50	74.63	
1035.00	1050.00	70	c2	13.70	15.00	7.50	102.75	
		71	c1	9.95	15.00	7.50	74.63	
		71	c2	13.70	15.00	7.50	102.75	
								354.76
71	72	71	c1	9.95	15.00	7.50	74.63	
1050.00	1065.00	71	c2	13.70	15.00	7.50	102.75	
		72	c1	9.95	15.00	7.50	74.63	
		72	c2	13.70	15.00	7.50	102.75	
								354.76
72	73	72	c1	9.95	15.00	7.50	74.63	
1065.00	1080.00	72	c2	13.70	15.00	7.50	102.75	
		73	c1	9.95	15.00	7.50	74.63	
		73	c2	13.70	15.00	7.50	102.75	
								354.76
73	74	73	c1	9.95	15.00	7.50	74.63	
1080.00	1095.00	73	c2	13.70	15.00	7.50	102.75	
		74	c1	9.95	15.00	7.50	74.63	
		74	c2	13.70	15.00	7.50	102.75	
								354.76
74	75	74	c1	9.95	15.00	7.50	74.63	
1095.00	1110.00	74	c2	13.70	15.00	7.50	102.75	
		75	c1	9.95	15.00	7.50	74.63	
		75	c2	13.70	15.00	7.50	102.75	
								354.76
75	76	75	c1	9.95	15.00	7.50	74.63	
1110.00	1125.00	75	c2	13.70	15.00	7.50	102.75	
		76	c1	9.95	15.00	7.50	74.63	
		76	c2	13.69	15.00	7.50	102.67	
								354.68
76	76bis	76	c1	9.95	6.80	3.40	33.83	
1125.00	1131.80	76	c2	13.69	6.80	3.40	46.55	
								80.38

Il Direttore dei Lavori	L'Impresa	TOTALE ARTICOLO	26021.26

	COMPUTO DI SUPERFICI		Foglio n. 291

BASE

DALLA SEZ. DA PROG.	ALLA SEZ. A PROG.	SEZIONE	FIGURA	LUNGHEZZA	DISTANZA SEZIONI ml	DISTANZA DI CALCOLO ml	AREA PARZIALE mq	AREA TOTALE mq
1	2	1	d1	8.44	15.00	7.50	63.30	
0.00	15.00	1	d2	8.24	15.00	7.50	61.80	
		2	d1	8.21	15.00	7.50	61.58	
		2	d2	8.41	15.00	7.50	63.08	
								249.76
2	3	2	d1	8.21	15.00	7.50	61.58	
15.00	30.00	2	d2	8.41	15.00	7.50	63.08	
		3	d1	8.31	15.00	7.50	62.33	
		3	d2	8.36	15.00	7.50	62.70	
								249.69
3	4	3	d1	8.31	15.00	7.50	62.33	
30.00	45.00	3	d2	8.36	15.00	7.50	62.70	
		4	d1	8.51	15.00	7.50	63.82	
		4	d2	8.41	15.00	7.50	63.08	
								251.93
4	5	4	d1	8.51	15.00	7.50	63.82	
45.00	60.00	4	d2	8.41	15.00	7.50	63.08	
		5	d1	8.57	15.00	7.50	64.28	
		5	d2	8.81	15.00	7.50	66.08	
								257.26
5	6	5	d1	8.57	15.00	7.50	64.28	
60.00	75.00	5	d2	8.81	15.00	7.50	66.08	
		6	d1	9.20	15.00	7.50	69.00	
		6	d2	8.84	15.00	7.50	66.30	
								265.66
6	7	6	d1	9.20	15.00	7.50	69.00	
75.00	90.00	6	d2	8.84	15.00	7.50	66.30	
		7	d1	9.55	15.00	7.50	71.63	
		7	d2	9.17	15.00	7.50	68.78	
								275.71
7	8	7	d1	9.55	15.00	7.50	71.63	
90.00	105.00	7	d2	9.17	15.00	7.50	68.78	
		8	d1	9.77	15.00	7.50	73.27	
		8	d2	9.45	15.00	7.50	70.88	
								284.56
8	9	8	d1	9.77	15.00	7.50	73.27	
105.00	120.00	8	d2	9.45	15.00	7.50	70.88	
		9	d1	9.65	15.00	7.50	72.38	
		9	d2	9.85	15.00	7.50	73.88	
								290.41
9	10	9	d1	9.65	15.00	7.50	72.38	
120.00	135.00	9	d2	9.85	15.00	7.50	73.88	
		10	d1	9.79	15.00	7.50	73.42	
		10	d2	9.84	15.00	7.50	73.80	
								293.48
10	11	10	d1	9.79	15.00	7.50	73.42	
135.00	150.00	10	d2	9.84	15.00	7.50	73.80	
		11	d1	9.85	15.00	7.50	73.88	
		11	d2	10.15	15.00	7.50	76.13	
								297.23
11	12	11	d1	9.85	15.00	7.50	73.88	
150.00	165.00	11	d2	10.15	15.00	7.50	76.13	
		12	d1	9.85	15.00	7.50	73.88	
		12	d2	11.09	15.00	7.50	83.17	
								307.06
12	13	12	d1	9.85	15.00	7.50	73.88	
165.00	180.00	12	d2	11.09	15.00	7.50	83.17	
		13	d1	9.85	15.00	7.50	73.88	
		13	d2	12.22	15.00	7.50	91.65	
								322.58
13	14	13	d1	9.85	15.00	7.50	73.88	
180.00	195.00	13	d2	12.22	15.00	7.50	91.65	
		14	d1	9.85	15.00	7.50	73.88	
		14	d2	13.22	15.00	7.50	99.15	
								338.56
14	15	14	d1	9.85	15.00	7.50	73.88	
195.00	210.00	14	d2	13.22	15.00	7.50	99.15	
		15	d1	9.85	15.00	7.50	73.88	
		15	d2	13.60	15.00	7.50	102.00	
								348.91
15	16	15	d1	9.85	15.00	7.50	73.88	
210.00	225.00	15	d2	13.60	15.00	7.50	102.00	
		16	d1	9.85	15.00	7.50	73.88	
		16	d2	13.60	15.00	7.50	102.00	
								351.76
16	17	16	d1	9.85	15.00	7.50	73.88	
225.00	240.00	16	d2	13.60	15.00	7.50	102.00	
		17	d1	9.85	15.00	7.50	73.88	
		17	d2	13.60	15.00	7.50	102.00	
								351.76
17	18	17	d1	9.85	15.00	7.50	73.88	
240.00	255.00	17	d2	13.60	15.00	7.50	102.00	
		18	d1	9.84	15.00	7.50	73.80	
		18	d2	13.60	15.00	7.50	102.00	
								351.68
18	19	18	d1	9.84	15.00	7.50	73.80	
255.00	270.00	18	d2	13.60	15.00	7.50	102.00	
		19	d1	10.06	15.00	7.50	75.45	
		19	d2	13.60	15.00	7.50	102.00	
								353.25
19	20	19	d1	10.06	15.00	7.50	75.45	
270.00	285.00	19	d2	13.60	15.00	7.50	102.00	
		20	d1	10.78	15.00	7.50	80.85	
		20	d2	13.60	15.00	7.50	102.00	
								360.30
20	21	20	d1	10.78	15.00	7.50	80.85	
285.00	300.00	20	d2	13.60	15.00	7.50	102.00	
		21	d1	11.71	15.00	7.50	87.83	
		21	d2	13.60	15.00	7.50	102.00	
								372.68
21	22	21	d1	11.71	15.00	7.50	87.83	
300.00	315.00	21	d2	13.60	15.00	7.50	102.00	
		22	d1	12.67	15.00	7.50	95.03	
		22	d2	13.60	15.00	7.50	102.00	
								386.86
22	23	22	d1	12.67	15.00	7.50	95.03	
							95.03	6561.09

	COMPUTO DI SUPERFICI		Foglio n. 292

BASE

DALLA SEZ. DA PROG.	ALLA SEZ. A PROG.	SEZIONE	FIGURA	LUNGHEZZA	DISTANZA SEZIONI ml	DISTANZA DI CALCOLO ml	AREA PARZIALE mq	AREA TOTALE mq
						A RIPORTARE mq	95.03	6561.09
315.00	330.00	22	d2	13.60	15.00	7.50	102.00	
		23	d1	13.36	15.00	7.50	100.20	
		23	d2	13.60	15.00	7.50	102.00	
								399.23
23	24	23	d1	13.36	15.00	7.50	100.20	
330.00	345.00	23	d2	13.60	15.00	7.50	102.00	
		24	d2	13.60	15.00	7.50	102.00	
		24	d1	13.60	15.00	7.50	102.00	
								406.20
24	25	24	d2	13.60	15.00	7.50	102.00	
345.00	360.00	24	d1	13.60	15.00	7.50	102.00	
		25	d2	13.60	15.00	7.50	102.00	
		25	d1	13.60	15.00	7.50	102.00	
								408.00
25	26	25	d2	13.60	15.00	7.50	102.00	
360.00	375.00	25	d1	13.60	15.00	7.50	102.00	
		26	d2	13.60	15.00	7.50	102.00	
		26	d1	13.60	15.00	7.50	102.00	
								408.00
26	27	26	d2	13.60	15.00	7.50	102.00	
375.00	390.00	26	d1	13.60	15.00	7.50	102.00	
		27	d2	13.60	15.00	7.50	102.00	
		27	d1	13.60	15.00	7.50	102.00	
								408.00
27	28	27	d2	13.60	15.00	7.50	102.00	
390.00	405.00	27	d1	13.60	15.00	7.50	102.00	
		28	d2	13.60	15.00	7.50	102.00	
		28	d1	13.60	15.00	7.50	102.00	
								408.00
28	29	28	d2	13.60	15.00	7.50	102.00	
405.00	420.00	28	d1	13.60	15.00	7.50	102.00	
		29	d2	13.72	15.00	7.50	102.90	
		29	d1	13.60	15.00	7.50	102.00	
								408.90
29	30	29	d2	13.72	15.00	7.50	102.90	
420.00	435.00	29	d1	13.60	15.00	7.50	102.00	
		30	d2	15.14	15.00	7.50	113.55	
		30	d1	13.59	15.00	7.50	101.92	
								420.37
30	31	30	d2	15.14	15.00	7.50	113.55	
435.00	450.00	30	d1	13.59	15.00	7.50	101.92	
		31	d2	9.85	15.00	7.50	73.88	
		31	d1	13.58	15.00	7.50	101.85	
								391.20
31	32	31	d2	9.85	15.00	7.50	73.88	
450.00	465.00	31	d1	13.58	15.00	7.50	101.85	
		32	d2	9.85	15.00	7.50	73.88	
		32	d1	13.60	15.00	7.50	102.00	
								351.61
32	33	32	d2	9.85	15.00	7.50	73.88	
465.00	480.00	32	d1	13.60	15.00	7.50	102.00	
		33	d2	9.85	15.00	7.50	73.88	
		33	d1	13.65	15.00	7.50	102.38	
								352.14
33	34	33	d2	9.85	15.00	7.50	73.88	
480.00	495.00	33	d1	13.65	15.00	7.50	102.38	
		34	d2	9.85	15.00	7.50	73.88	
		34	d1	13.76	15.00	7.50	103.20	
								353.34
34	35	34	d2	9.85	15.00	7.50	73.88	
495.00	510.00	34	d1	13.76	15.00	7.50	103.20	
		35	d2	9.85	15.00	7.50	73.88	
		35	d1	15.13	15.00	7.50	113.48	
								364.44
35	36	35	d2	9.85	15.00	7.50	73.88	
510.00	525.00	35	d1	15.13	15.00	7.50	113.48	
		36	d1	18.29	15.00	7.50	137.17	
		36	d2	9.85	15.00	7.50	73.88	
								398.41
36	37	36	d1	18.29	15.00	7.50	137.17	
525.00	540.00	36	d2	9.85	15.00	7.50	73.88	
		37	d2	9.99	15.00	7.50	74.92	
		37	d1	9.85	15.00	7.50	73.88	
								359.85
37	38	37	d2	9.99	15.00	7.50	74.92	
540.00	555.00	37	d1	9.85	15.00	7.50	73.88	
		38	d2	12.62	15.00	7.50	94.65	
		38	d1	9.85	15.00	7.50	73.88	
								317.33
38	39	38	d2	12.62	15.00	7.50	94.65	
555.00	570.00	38	d1	9.85	15.00	7.50	73.88	
		39	d2	13.35	15.00	7.50	100.13	
		39	d1	9.85	15.00	7.50	73.88	
								342.54
39	40	39	d2	13.35	15.00	7.50	100.13	
570.00	585.00	39	d1	9.85	15.00	7.50	73.88	
		40	d2	13.22	15.00	7.50	99.15	
		40	d1	9.85	15.00	7.50	73.88	
								347.04
40	41	40	d2	13.22	15.00	7.50	99.15	
585.00	600.00	40	d1	9.85	15.00	7.50	73.88	
		41	d1	9.85	15.00	7.50	73.88	
		41	d2	10.60	15.00	7.50	79.50	
								326.41
41	42	41	d1	9.85	15.00	7.50	73.88	
600.00	615.00	41	d2	10.60	15.00	7.50	79.50	
		42	d2	9.85	15.00	7.50	73.88	
		42	d1	9.85	15.00	7.50	73.88	
								301.14
42	43	42	d2	9.85	15.00	7.50	73.88	
615.00	630.00	42	d1	9.85	15.00	7.50	73.88	
		43	d2	9.85	15.00	7.50	73.88	
		43	d1	9.85	15.00	7.50	73.88	
								295.52
								14328.76

	COMPUTO DI SUPERFICI		Foglio n. 293

BASE

DALLA SEZ. DA PROG.	ALLA SEZ. A PROG.	SEZIONE	FIGURA	LUNGHEZZA	DISTANZA SEZIONI ml	DISTANZA DI CALCOLO ml	AREA PARZIALE mq	AREA TOTALE mq
						A RIPORTARE mq		14328.76
43	SP40	43	d2	9.85	11.94	5.97	58.80	
630.00	641.94	43	d1	9.85	11.94	5.97	58.80	
		SP40	d2	9.85	11.94	5.97	58.80	
		SP40	d1	9.85	11.94	5.97	58.80	
								235.20
SP40	44	SP40	d2	9.85	3.06	1.53	15.07	
641.94	645.00	SP40	d1	9.85	3.06	1.53	15.07	
		44	d2	9.85	3.06	1.53	15.07	
		44	d1	9.85	3.06	1.53	15.07	
								60.28
44	45	44	d2	9.85	15.00	7.50	73.88	
645.00	660.00	44	d1	9.85	15.00	7.50	73.88	
		45	d2	9.85	15.00	7.50	73.88	
		45	d1	10.85	15.00	7.50	81.38	
								303.02
45	46	45	d2	9.85	15.00	7.50	73.88	
660.00	675.00	45	d1	10.85	15.00	7.50	81.38	
		46	d2	9.85	15.00	7.50	73.88	
		46	d1	13.35	15.00	7.50	100.13	
								329.27
46	47	46	d2	9.85	15.00	7.50	73.88	
675.00	690.00	46	d1	13.35	15.00	7.50	100.13	
		47	d2	9.85	15.00	7.50	73.88	
		47	d1	13.35	15.00	7.50	100.13	
								348.02
47	48	47	d2	9.85	15.00	7.50	73.88	
690.00	705.00	47	d1	13.35	15.00	7.50	100.13	
		48	d1	12.22	15.00	7.50	91.65	
		48	d2	9.75	15.00	7.50	73.13	
								338.79
48	49	48	d1	12.22	15.00	7.50	91.65	
705.00	720.00	48	d2	9.75	15.00	7.50	73.13	
		49	d1	9.85	15.00	7.50	73.88	
		49	d2	9.85	15.00	7.50	73.88	
								312.54
49	50	49	d1	9.85	15.00	7.50	73.88	
720.00	735.00	49	d2	9.85	15.00	7.50	73.88	
		50	d2	9.85	15.00	7.50	73.88	
		50	d1	9.85	15.00	7.50	73.88	
								295.52
50	51	50	d2	9.85	15.00	7.50	73.88	
735.00	750.00	50	d1	9.85	15.00	7.50	73.88	
		51	d2	9.85	15.00	7.50	73.88	
		51	d1	9.85	15.00	7.50	73.88	
								295.52
51	52	51	d2	9.85	15.00	7.50	73.88	
750.00	765.00	51	d1	9.85	15.00	7.50	73.88	
		52	d2	15.11	15.00	7.50	113.32	
		52	d1	9.85	15.00	7.50	73.88	
								334.96
52	53	52	d2	15.11	15.00	7.50	113.32	
765.00	780.00	52	d1	9.85	15.00	7.50	73.88	
		53	d2	13.73	15.00	7.50	102.98	
		53	d1	9.85	15.00	7.50	73.88	
								364.06
53	54	53	d2	13.73	15.00	7.50	102.98	
780.00	795.00	53	d1	9.85	15.00	7.50	73.88	
		54	d2	13.60	15.00	7.50	102.00	
		54	d1	9.85	15.00	7.50	73.88	
								352.74
54	55	54	d2	13.60	15.00	7.50	102.00	
795.00	810.00	54	d1	9.85	15.00	7.50	73.88	
		55	d2	13.60	15.00	7.50	102.00	
		55	d1	9.85	15.00	7.50	73.88	
								351.76
55	56	55	d2	13.60	15.00	7.50	102.00	
810.00	825.00	55	d1	9.85	15.00	7.50	73.88	
		56	d2	13.60	15.00	7.50	102.00	
		56	d1	9.85	15.00	7.50	73.88	
								351.76
56	57	56	d2	13.60	15.00	7.50	102.00	
825.00	840.00	56	d1	9.85	15.00	7.50	73.88	
		57	d2	13.60	15.00	7.50	102.00	
		57	d1	9.85	15.00	7.50	73.88	
								351.76
57	58	57	d2	13.60	15.00	7.50	102.00	
840.00	855.00	57	d1	9.85	15.00	7.50	73.88	
		58	d1	9.85	15.00	7.50	73.88	
		58	d2	13.60	15.00	7.50	102.00	
								351.76
58	59	58	d1	9.85	15.00	7.50	73.88	
855.00	870.00	58	d2	13.60	15.00	7.50	102.00	
		59	d2	13.60	15.00	7.50	102.00	
		59	d1	9.85	15.00	7.50	73.88	
								351.76
59	60	59	d2	13.60	15.00	7.50	102.00	
870.00	885.00	59	d1	9.85	15.00	7.50	73.88	
		60	d2	13.60	15.00	7.50	102.00	
		60	d1	9.85	15.00	7.50	73.88	
								351.76
60	61	60	d2	13.60	15.00	7.50	102.00	
885.00	900.00	60	d1	9.85	15.00	7.50	73.88	
		61	d2	13.43	15.00	7.50	100.72	
		61	d1	9.85	15.00	7.50	73.88	
								350.48
61	62	61	d2	13.43	15.00	7.50	100.72	
900.00	915.00	61	d1	9.85	15.00	7.50	73.88	
		62	d2	12.81	15.00	7.50	96.08	
		62	d1	11.97	15.00	7.50	89.78	
								360.46
62	63	62	d2	12.81	15.00	7.50	96.08	
915.00	930.00	62	d1	11.97	15.00	7.50	89.78	
		63	d2	11.86	15.00	7.50	88.95	
		63	d1	15.91	15.00	7.50	119.33	
							394.14	21114.32

	COMPUTO DI SUPERFICI		Foglio n. 294

BASE

DALLA SEZ. DA PROG.	ALLA SEZ. A PROG.	SEZIONE	FIGURA	LUNGHEZZA	DISTANZA SEZIONI ml	DISTANZA DI CALCOLO ml	AREA PARZIALE mq	AREA TOTALE mq
						A RIPORTARE mq	394.14	21114.32
								394.14
63	64	63	d2	11.86	15.00	7.50	88.95	
930.00	945.00	63	d1	15.91	15.00	7.50	119.33	
		64	d2	10.93	15.00	7.50	81.97	
		64	d1	14.25	15.00	7.50	106.88	
								397.13
64	65	64	d2	10.93	15.00	7.50	81.97	
945.00	960.00	64	d1	14.25	15.00	7.50	106.88	
		65	d2	10.15	15.00	7.50	76.13	
		65	d1	13.61	15.00	7.50	102.07	
								367.05
65	66	65	d2	10.15	15.00	7.50	76.13	
960.00	975.00	65	d1	13.61	15.00	7.50	102.07	
		66	d2	9.85	15.00	7.50	73.88	
		66	d1	13.60	15.00	7.50	102.00	
								354.08
66	67	66	d2	9.85	15.00	7.50	73.88	
975.00	990.00	66	d1	13.60	15.00	7.50	102.00	
		67	d2	9.85	15.00	7.50	73.88	
		67	d1	13.60	15.00	7.50	102.00	
								351.76
67	68	67	d2	9.85	15.00	7.50	73.88	
990.00	1005.00	67	d1	13.60	15.00	7.50	102.00	
		68	d2	9.85	15.00	7.50	73.88	
		68	d1	13.60	15.00	7.50	102.00	
								351.76
68	69	68	d2	9.85	15.00	7.50	73.88	
1005.00	1020.00	68	d1	13.60	15.00	7.50	102.00	
		69	d2	9.85	15.00	7.50	73.88	
		69	d1	13.60	15.00	7.50	102.00	
								351.76
69	70	69	d2	9.85	15.00	7.50	73.88	
1020.00	1035.00	69	d1	13.60	15.00	7.50	102.00	
		70	d2	9.85	15.00	7.50	73.88	
		70	d1	13.60	15.00	7.50	102.00	
								351.76
70	71	70	d2	9.85	15.00	7.50	73.88	
1035.00	1050.00	70	d1	13.60	15.00	7.50	102.00	
		71	d2	9.85	15.00	7.50	73.88	
		71	d1	13.60	15.00	7.50	102.00	
								351.76
71	72	71	d2	9.85	15.00	7.50	73.88	
1050.00	1065.00	71	d1	13.60	15.00	7.50	102.00	
		72	d2	9.85	15.00	7.50	73.88	
		72	d1	13.60	15.00	7.50	102.00	
								351.76
72	73	72	d2	9.85	15.00	7.50	73.88	
1065.00	1080.00	72	d1	13.60	15.00	7.50	102.00	
		73	d2	9.85	15.00	7.50	73.88	
		73	d1	13.60	15.00	7.50	102.00	
								351.76
73	74	73	d2	9.85	15.00	7.50	73.88	
1080.00	1095.00	73	d1	13.60	15.00	7.50	102.00	
		74	d2	9.85	15.00	7.50	73.88	
		74	d1	13.60	15.00	7.50	102.00	
								351.76
74	75	74	d2	9.85	15.00	7.50	73.88	
1095.00	1110.00	74	d1	13.60	15.00	7.50	102.00	
		75	d2	9.85	15.00	7.50	73.88	
		75	d1	13.60	15.00	7.50	102.00	
								351.76
75	76	75	d2	9.85	15.00	7.50	73.88	
1110.00	1125.00	75	d1	13.60	15.00	7.50	102.00	
		76	d2	9.85	15.00	7.50	73.88	
		76	d1	13.59	15.00	7.50	101.92	
								351.68
76	76bis	76	d2	9.85	6.80	3.40	33.49	
1125.00	1131.80	76	d1	13.59	6.80	3.40	46.21	
								79.70

Il Direttore dei Lavori	L'Impresa	TOTALE ARTICOLO	25829.80

	COMPUTO DI SUPERFICI		Foglio n. 295

FONDAZIONE

DALLA SEZ. DA PROG.	ALLA SEZ. A PROG.	SEZIONE	FIGURA	LUNGHEZZA	DISTANZA SEZIONI ml	DISTANZA DI CALCOLO ml	AREA PARZIALE mq	AREA TOTALE mq
1	2	1	e1	8.39	15.00	7.50	62.93	
0.00	15.00	1	e2	8.18	15.00	7.50	61.35	
		2	e1	8.15	15.00	7.50	61.13	
		2	e2	8.35	15.00	7.50	62.63	
								248.04
2	3	2	e1	8.15	15.00	7.50	61.13	
15.00	30.00	2	e2	8.35	15.00	7.50	62.63	
		3	e1	8.30	15.00	7.50	62.25	
		3	e2	8.25	15.00	7.50	61.88	
								247.89
3	4	3	e1	8.30	15.00	7.50	62.25	
30.00	45.00	3	e2	8.25	15.00	7.50	61.88	
		4	e1	8.35	15.00	7.50	62.63	
		4	e2	8.45	15.00	7.50	63.37	
								250.13
4	5	4	e1	8.35	15.00	7.50	62.63	
45.00	60.00	4	e2	8.45	15.00	7.50	63.37	
		5	e1	8.51	15.00	7.50	63.82	
		5	e2	8.75	15.00	7.50	65.63	
								255.45
5	6	5	e1	8.51	15.00	7.50	63.82	
60.00	75.00	5	e2	8.75	15.00	7.50	65.63	
		6	e1	8.79	15.00	7.50	65.92	
		6	e2	9.14	15.00	7.50	68.55	
								263.92
6	7	6	e1	8.79	15.00	7.50	65.92	
75.00	90.00	6	e2	9.14	15.00	7.50	68.55	
		7	e1	9.12	15.00	7.50	68.40	
		7	e2	9.49	15.00	7.50	71.17	
								274.04
7	8	7	e1	9.12	15.00	7.50	68.40	
90.00	105.00	7	e2	9.49	15.00	7.50	71.17	
		8	e1	10.24	15.00	7.50	76.80	
		8	e2	9.92	15.00	7.50	74.40	
								290.77
8	9	8	e1	10.24	15.00	7.50	76.80	
105.00	120.00	8	e2	9.92	15.00	7.50	74.40	
		9	e1	10.12	15.00	7.50	75.90	
		9	e2	10.32	15.00	7.50	77.40	
								304.50
9	10	9	e1	10.12	15.00	7.50	75.90	
120.00	135.00	9	e2	10.32	15.00	7.50	77.40	
		10	e1	10.26	15.00	7.50	76.95	
		10	e2	10.31	15.00	7.50	77.33	
								307.58
10	11	10	e1	10.26	15.00	7.50	76.95	
135.00	150.00	10	e2	10.31	15.00	7.50	77.33	
		11	e1	10.32	15.00	7.50	77.40	
		11	e2	10.62	15.00	7.50	79.65	
								311.33
11	12	11	e1	10.32	15.00	7.50	77.40	
150.00	165.00	11	e2	10.62	15.00	7.50	79.65	
		12	e1	10.32	15.00	7.50	77.40	
		12	e2	11.56	15.00	7.50	86.70	
								321.15
12	13	12	e1	10.32	15.00	7.50	77.40	
165.00	180.00	12	e2	11.56	15.00	7.50	86.70	
		13	e1	10.32	15.00	7.50	77.40	
		13	e2	12.69	15.00	7.50	95.17	
								336.67
13	14	13	e1	10.32	15.00	7.50	77.40	
180.00	195.00	13	e2	12.69	15.00	7.50	95.17	
		14	e1	10.32	15.00	7.50	77.40	
		14	e2	13.69	15.00	7.50	102.67	
								352.64
14	15	14	e1	10.32	15.00	7.50	77.40	
195.00	210.00	14	e2	13.69	15.00	7.50	102.67	
		15	e1	10.32	15.00	7.50	77.40	
		15	e2	14.07	15.00	7.50	105.53	
								363.00
15	16	15	e1	10.32	15.00	7.50	77.40	
210.00	225.00	15	e2	14.07	15.00	7.50	105.53	
		16	e1	10.32	15.00	7.50	77.40	
		16	e2	14.07	15.00	7.50	105.53	
								365.86
16	17	16	e1	10.32	15.00	7.50	77.40	
225.00	240.00	16	e2	14.07	15.00	7.50	105.53	
		17	e1	10.32	15.00	7.50	77.40	
		17	e2	14.07	15.00	7.50	105.53	
								365.86
17	18	17	e1	10.32	15.00	7.50	77.40	
240.00	255.00	17	e2	14.07	15.00	7.50	105.53	
		18	e1	10.31	15.00	7.50	77.33	
		18	e2	14.07	15.00	7.50	105.53	
								365.79
18	19	18	e1	10.31	15.00	7.50	77.33	
255.00	270.00	18	e2	14.07	15.00	7.50	105.53	
		19	e1	10.53	15.00	7.50	78.97	
		19	e2	14.07	15.00	7.50	105.53	
								367.36
19	20	19	e1	10.53	15.00	7.50	78.97	
270.00	285.00	19	e2	14.07	15.00	7.50	105.53	
		20	e1	11.25	15.00	7.50	84.38	
		20	e2	14.07	15.00	7.50	105.53	
								374.41
20	21	20	e1	11.25	15.00	7.50	84.38	
285.00	300.00	20	e2	14.07	15.00	7.50	105.53	
		21	e1	12.18	15.00	7.50	91.35	
		21	e2	14.07	15.00	7.50	105.53	
								386.79
21	22	21	e1	12.18	15.00	7.50	91.35	
300.00	315.00	21	e2	14.07	15.00	7.50	105.53	
		22	e1	13.14	15.00	7.50	98.55	
		22	e2	14.07	15.00	7.50	105.53	
								400.96
22	23	22	e1	13.14	15.00	7.50	98.55	
							98.55	6754.14

	COMPUTO DI SUPERFICI		Foglio n. 296

FONDAZIONE

DALLA SEZ. DA PROG.	ALLA SEZ. A PROG.	SEZIONE	FIGURA	LUNGHEZZA	DISTANZA SEZIONI ml	DISTANZA DI CALCOLO ml	AREA PARZIALE mq	AREA TOTALE mq
						A RIPORTARE mq	98.55	6754.14
315.00	330.00	22	e2	14.07	15.00	7.50	105.53	
		23	e1	13.83	15.00	7.50	103.72	
		23	e2	14.07	15.00	7.50	105.53	
								413.33
23	24	23	e1	13.83	15.00	7.50	103.72	
330.00	345.00	23	e2	14.07	15.00	7.50	105.53	
		24	e2	14.07	15.00	7.50	105.53	
		24	e1	14.07	15.00	7.50	105.53	
								420.31
24	25	24	e2	14.07	15.00	7.50	105.53	
345.00	360.00	24	e1	14.07	15.00	7.50	105.53	
		25	e2	14.07	15.00	7.50	105.53	
		25	e1	14.07	15.00	7.50	105.53	
								422.12
25	26	25	e2	14.07	15.00	7.50	105.53	
360.00	375.00	25	e1	14.07	15.00	7.50	105.53	
		26	e2	14.07	15.00	7.50	105.53	
		26	e1	14.07	15.00	7.50	105.53	
								422.12
26	27	26	e2	14.07	15.00	7.50	105.53	
375.00	390.00	26	e1	14.07	15.00	7.50	105.53	
		27	e2	14.07	15.00	7.50	105.53	
		27	e1	14.07	15.00	7.50	105.53	
								422.12
27	28	27	e2	14.07	15.00	7.50	105.53	
390.00	405.00	27	e1	14.07	15.00	7.50	105.53	
		28	e2	14.07	15.00	7.50	105.53	
		28	e1	14.07	15.00	7.50	105.53	
								422.12
28	29	28	e2	14.07	15.00	7.50	105.53	
405.00	420.00	28	e1	14.07	15.00	7.50	105.53	
		29	e2	14.19	15.00	7.50	106.42	
		29	e1	14.07	15.00	7.50	105.53	
								423.01
29	30	29	e2	14.19	15.00	7.50	106.42	
420.00	435.00	29	e1	14.07	15.00	7.50	105.53	
		30	e2	15.61	15.00	7.50	117.07	
		30	e1	14.06	15.00	7.50	105.45	
								434.47
30	31	30	e2	15.61	15.00	7.50	117.07	
435.00	450.00	30	e1	14.06	15.00	7.50	105.45	
		31	e2	10.32	15.00	7.50	77.40	
		31	e1	14.05	15.00	7.50	105.38	
								405.30
31	32	31	e2	10.32	15.00	7.50	77.40	
450.00	465.00	31	e1	14.05	15.00	7.50	105.38	
		32	e2	10.32	15.00	7.50	77.40	
		32	e1	14.07	15.00	7.50	105.53	
								365.71
32	33	32	e2	10.32	15.00	7.50	77.40	
465.00	480.00	32	e1	14.07	15.00	7.50	105.53	
		33	e2	10.32	15.00	7.50	77.40	
		33	e1	14.12	15.00	7.50	105.90	
								366.23
33	34	33	e2	10.32	15.00	7.50	77.40	
480.00	495.00	33	e1	14.12	15.00	7.50	105.90	
		34	e2	10.32	15.00	7.50	77.40	
		34	e1	14.23	15.00	7.50	106.73	
								367.43
34	35	34	e2	10.32	15.00	7.50	77.40	
495.00	510.00	34	e1	14.23	15.00	7.50	106.73	
		35	e2	10.32	15.00	7.50	77.40	
		35	e1	15.60	15.00	7.50	117.00	
								378.53
35	36	35	e2	10.32	15.00	7.50	77.40	
510.00	525.00	35	e1	15.60	15.00	7.50	117.00	
		36	e1	18.76	15.00	7.50	140.70	
		36	e2	10.32	15.00	7.50	77.40	
								412.50
36	37	36	e1	18.76	15.00	7.50	140.70	
525.00	540.00	36	e2	10.32	15.00	7.50	77.40	
		37	e2	10.46	15.00	7.50	78.45	
		37	e1	10.32	15.00	7.50	77.40	
								373.95
37	38	37	e2	10.46	15.00	7.50	78.45	
540.00	555.00	37	e1	10.32	15.00	7.50	77.40	
		38	e2	13.09	15.00	7.50	98.17	
		38	e1	10.32	15.00	7.50	77.40	
								331.42
38	39	38	e2	13.09	15.00	7.50	98.17	
555.00	570.00	38	e1	10.32	15.00	7.50	77.40	
		39	e2	13.82	15.00	7.50	103.65	
		39	e1	10.32	15.00	7.50	77.40	
								356.62
39	40	39	e2	13.82	15.00	7.50	103.65	
570.00	585.00	39	e1	10.32	15.00	7.50	77.40	
		40	e2	13.69	15.00	7.50	102.67	
		40	e1	10.32	15.00	7.50	77.40	
								361.12
40	41	40	e2	13.69	15.00	7.50	102.67	
585.00	600.00	40	e1	10.32	15.00	7.50	77.40	
		41	e1	10.32	15.00	7.50	77.40	
		41	e2	11.07	15.00	7.50	83.03	
								340.50
41	42	41	e1	10.32	15.00	7.50	77.40	
600.00	615.00	41	e2	11.07	15.00	7.50	83.03	
		42	e2	10.32	15.00	7.50	77.40	
		42	e1	10.32	15.00	7.50	77.40	
								315.23
42	43	42	e2	10.32	15.00	7.50	77.40	
615.00	630.00	42	e1	10.32	15.00	7.50	77.40	
		43	e2	10.32	15.00	7.50	77.40	
		43	e1	10.32	15.00	7.50	77.40	
								309.60
								14817.88

	COMPUTO DI SUPERFICI		Foglio n. 297

FONDAZIONE

DALLA SEZ. DA PROG.	ALLA SEZ. A PROG.	SEZIONE	FIGURA	LUNGHEZZA	DISTANZA SEZIONI ml	DISTANZA DI CALCOLO ml	AREA PARZIALE mq	AREA TOTALE mq
						A RIPORTARE mq		14817.88
43	SP40	43	e2	10.32	11.94	5.97	61.61	
630.00	641.94	43	e1	10.32	11.94	5.97	61.61	
		SP40	e2	10.32	11.94	5.97	61.61	
		SP40	e1	10.32	11.94	5.97	61.61	
								246.44
SP40	44	SP40	e2	10.32	3.06	1.53	15.79	
641.94	645.00	SP40	e1	10.32	3.06	1.53	15.79	
		44	e2	10.32	3.06	1.53	15.79	
		44	e1	10.32	3.06	1.53	15.79	
								63.16
44	45	44	e2	10.32	15.00	7.50	77.40	
645.00	660.00	44	e1	10.32	15.00	7.50	77.40	
		45	e2	10.32	15.00	7.50	77.40	
		45	e1	11.32	15.00	7.50	84.90	
								317.10
45	46	45	e2	10.32	15.00	7.50	77.40	
660.00	675.00	45	e1	11.32	15.00	7.50	84.90	
		46	e2	10.32	15.00	7.50	77.40	
		46	e1	13.82	15.00	7.50	103.65	
								343.35
46	47	46	e2	10.32	15.00	7.50	77.40	
675.00	690.00	46	e1	13.82	15.00	7.50	103.65	
		47	e2	10.17	15.00	7.50	76.28	
		47	e1	13.82	15.00	7.50	103.65	
								360.98
47	48	47	e2	10.17	15.00	7.50	76.28	
690.00	705.00	47	e1	13.82	15.00	7.50	103.65	
		48	e1	12.22	15.00	7.50	91.65	
		48	e2	9.75	15.00	7.50	73.13	
								344.71
48	49	48	e1	12.22	15.00	7.50	91.65	
705.00	720.00	48	e2	9.75	15.00	7.50	73.13	
		49	e1	10.32	15.00	7.50	77.40	
		49	e2	10.32	15.00	7.50	77.40	
								319.58
49	50	49	e1	10.32	15.00	7.50	77.40	
720.00	735.00	49	e2	10.32	15.00	7.50	77.40	
		50	e2	10.32	15.00	7.50	77.40	
		50	e1	10.32	15.00	7.50	77.40	
								309.60
50	51	50	e2	10.32	15.00	7.50	77.40	
735.00	750.00	50	e1	10.32	15.00	7.50	77.40	
		51	e2	10.32	15.00	7.50	77.40	
		51	e1	10.32	15.00	7.50	77.40	
								309.60
51	52	51	e2	10.32	15.00	7.50	77.40	
750.00	765.00	51	e1	10.32	15.00	7.50	77.40	
		52	e2	15.58	15.00	7.50	116.85	
		52	e1	10.32	15.00	7.50	77.40	
								349.05
52	53	52	e2	15.58	15.00	7.50	116.85	
765.00	780.00	52	e1	10.32	15.00	7.50	77.40	
		53	e2	14.20	15.00	7.50	106.50	
		53	e1	10.32	15.00	7.50	77.40	
								378.15
53	54	53	e2	14.20	15.00	7.50	106.50	
780.00	795.00	53	e1	10.32	15.00	7.50	77.40	
		54	e2	14.07	15.00	7.50	105.53	
		54	e1	10.32	15.00	7.50	77.40	
								366.83
54	55	54	e2	14.07	15.00	7.50	105.53	
795.00	810.00	54	e1	10.32	15.00	7.50	77.40	
		55	e2	14.07	15.00	7.50	105.53	
		55	e1	10.32	15.00	7.50	77.40	
								365.86
55	56	55	e2	14.07	15.00	7.50	105.53	
810.00	825.00	55	e1	10.32	15.00	7.50	77.40	
		56	e2	14.07	15.00	7.50	105.53	
		56	e1	10.32	15.00	7.50	77.40	
								365.86
56	57	56	e2	14.07	15.00	7.50	105.53	
825.00	840.00	56	e1	10.32	15.00	7.50	77.40	
		57	e2	14.07	15.00	7.50	105.53	
		57	e1	10.32	15.00	7.50	77.40	
								365.86
57	58	57	e2	14.07	15.00	7.50	105.53	
840.00	855.00	57	e1	10.32	15.00	7.50	77.40	
		58	e1	10.32	15.00	7.50	77.40	
		58	e2	14.07	15.00	7.50	105.53	
								365.86
58	59	58	e1	10.32	15.00	7.50	77.40	
855.00	870.00	58	e2	14.07	15.00	7.50	105.53	
		59	e2	14.07	15.00	7.50	105.53	
		59	e1	10.32	15.00	7.50	77.40	
								365.86
59	60	59	e2	14.07	15.00	7.50	105.53	
870.00	885.00	59	e1	10.32	15.00	7.50	77.40	
		60	e2	14.07	15.00	7.50	105.53	
		60	e1	10.32	15.00	7.50	77.40	
								365.86
60	61	60	e2	14.07	15.00	7.50	105.53	
885.00	900.00	60	e1	10.32	15.00	7.50	77.40	
		61	e2	13.90	15.00	7.50	104.25	
		61	e1	10.32	15.00	7.50	77.40	
								364.58
61	62	61	e2	13.90	15.00	7.50	104.25	
900.00	915.00	61	e1	10.32	15.00	7.50	77.40	
		62	e2	13.28	15.00	7.50	99.60	
		62	e1	12.45	15.00	7.50	93.38	
								374.63
62	63	62	e2	13.28	15.00	7.50	99.60	
915.00	930.00	62	e1	12.45	15.00	7.50	93.38	
		63	e2	12.33	15.00	7.50	92.47	
		63	e1	16.38	15.00	7.50	122.85	
							408.30	21869.10

	COMPUTO DI SUPERFICI		Foglio n. 298

FONDAZIONE

DALLA SEZ. DA PROG.	ALLA SEZ. A PROG.	SEZIONE	FIGURA	LUNGHEZZA	DISTANZA SEZIONI ml	DISTANZA DI CALCOLO ml	AREA PARZIALE mq	AREA TOTALE mq
						A RIPORTARE mq	408.30	21869.10
								408.30
63	64	63	e2	12.33	15.00	7.50	92.47	
930.00	945.00	63	e1	16.38	15.00	7.50	122.85	
		64	e2	11.40	15.00	7.50	85.50	
		64	e1	14.72	15.00	7.50	110.40	
								411.22
64	65	64	e2	11.40	15.00	7.50	85.50	
945.00	960.00	64	e1	14.72	15.00	7.50	110.40	
		65	e2	10.62	15.00	7.50	79.65	
		65	e1	14.08	15.00	7.50	105.60	
								381.15
65	66	65	e2	10.62	15.00	7.50	79.65	
960.00	975.00	65	e1	14.08	15.00	7.50	105.60	
		66	e2	10.32	15.00	7.50	77.40	
		66	e1	14.07	15.00	7.50	105.53	
								368.18
66	67	66	e2	10.32	15.00	7.50	77.40	
975.00	990.00	66	e1	14.07	15.00	7.50	105.53	
		67	e2	10.32	15.00	7.50	77.40	
		67	e1	14.07	15.00	7.50	105.53	
								365.86
67	68	67	e2	10.32	15.00	7.50	77.40	
990.00	1005.00	67	e1	14.07	15.00	7.50	105.53	
		68	e2	10.32	15.00	7.50	77.40	
		68	e1	14.07	15.00	7.50	105.53	
								365.86
68	69	68	e2	10.32	15.00	7.50	77.40	
1005.00	1020.00	68	e1	14.07	15.00	7.50	105.53	
		69	e2	10.32	15.00	7.50	77.40	
		69	e1	14.07	15.00	7.50	105.53	
								365.86
69	70	69	e2	10.32	15.00	7.50	77.40	
1020.00	1035.00	69	e1	14.07	15.00	7.50	105.53	
		70	e2	10.32	15.00	7.50	77.40	
		70	e1	14.07	15.00	7.50	105.53	
								365.86
70	71	70	e2	10.32	15.00	7.50	77.40	
1035.00	1050.00	70	e1	14.07	15.00	7.50	105.53	
		71	e2	10.32	15.00	7.50	77.40	
		71	e1	14.07	15.00	7.50	105.53	
								365.86
71	72	71	e2	10.32	15.00	7.50	77.40	
1050.00	1065.00	71	e1	14.07	15.00	7.50	105.53	
		72	e2	10.32	15.00	7.50	77.40	
		72	e1	14.07	15.00	7.50	105.53	
								365.86
72	73	72	e2	10.32	15.00	7.50	77.40	
1065.00	1080.00	72	e1	14.07	15.00	7.50	105.53	
		73	e2	10.32	15.00	7.50	77.40	
		73	e1	14.07	15.00	7.50	105.53	
								365.86
73	74	73	e2	10.32	15.00	7.50	77.40	
1080.00	1095.00	73	e1	14.07	15.00	7.50	105.53	
		74	e2	10.32	15.00	7.50	77.40	
		74	e1	14.07	15.00	7.50	105.53	
								365.86
74	75	74	e2	10.32	15.00	7.50	77.40	
1095.00	1110.00	74	e1	14.07	15.00	7.50	105.53	
		75	e2	10.32	15.00	7.50	77.40	
		75	e1	14.07	15.00	7.50	105.53	
								365.86
75	76	75	e2	10.32	15.00	7.50	77.40	
1110.00	1125.00	75	e1	14.07	15.00	7.50	105.53	
		76	e2	10.32	15.00	7.50	77.40	
		76	e1	14.06	15.00	7.50	105.45	
								365.78
76	76bis	76	e2	10.32	6.80	3.40	35.09	
1125.00	1131.80	76	e1	14.06	6.80	3.40	47.80	
								82.89

Il Direttore dei Lavori	L'Impresa	TOTALE ARTICOLO	26771.06

	COMPUTO DI SUPERFICI		Foglio n. 299

SCOTICO

DALLA SEZ. DA PROG.	ALLA SEZ. A PROG.	SEZIONE	FIGURA	LUNGHEZZA	DISTANZA SEZIONI ml	DISTANZA DI CALCOLO ml	AREA PARZIALE mq	AREA TOTALE mq
1	2	1	sc1	0.58	15.00	7.50	4.35	
0.00	15.00	2	sc1	5.60	15.00	7.50	42.00	
								46.35
2	3	2	sc1	5.60	15.00	7.50	42.00	
15.00	30.00	3	sc2	5.01	15.00	7.50	37.57	
		3	sc1	0.72	15.00	7.50	5.40	
								84.97
3	4	3	sc2	5.01	15.00	7.50	37.57	
30.00	45.00	3	sc1	0.72	15.00	7.50	5.40	
		4	sc1	0.67	15.00	7.50	5.03	
		4	sc2	4.61	15.00	7.50	34.58	
								82.58
4	5	4	sc1	0.67	15.00	7.50	5.03	
45.00	60.00	4	sc2	4.61	15.00	7.50	34.58	
		5	sc1	0.23	15.00	7.50	1.73	
		5	sc2	3.98	15.00	7.50	29.85	
								71.19
5	6	5	sc1	0.23	15.00	7.50	1.73	
60.00	75.00	5	sc2	3.98	15.00	7.50	29.85	
		6	sc1	0.24	15.00	7.50	1.80	
		6	sc2	3.97	15.00	7.50	29.78	
								63.16
6	7	6	sc1	0.24	15.00	7.50	1.80	
75.00	90.00	6	sc2	3.97	15.00	7.50	29.78	
		7	sc1	5.55	15.00	7.50	41.63	
								73.21
7	8	7	sc1	5.55	15.00	7.50	41.63	
90.00	105.00	8	sc2	5.86	15.00	7.50	43.95	
		8	sc1	1.15	15.00	7.50	8.63	
								94.21
8	9	8	sc2	5.86	15.00	7.50	43.95	
105.00	120.00	8	sc1	1.15	15.00	7.50	8.63	
		9	sc1	0.04	15.00	7.50	0.30	
		9	sc2	6.22	15.00	7.50	46.65	
								99.53
9	10	9	sc1	0.04	15.00	7.50	0.30	
120.00	135.00	9	sc2	6.22	15.00	7.50	46.65	
		10	sc1	0.76	15.00	7.50	5.70	
		10	sc2	0.01	15.00	7.50	0.07	
		10	sc3	7.07	15.00	7.50	53.03	
								105.75
10	11	10	sc1	0.76	15.00	7.50	5.70	
135.00	150.00	10	sc2	0.01	15.00	7.50	0.07	
		10	sc3	7.07	15.00	7.50	53.03	
		11	sc1	1.15	15.00	7.50	8.63	
		11	sc2	0.04	15.00	7.50	0.30	
		11	sc3	7.00	15.00	7.50	52.50	
								120.23
11	12	11	sc1	1.15	15.00	7.50	8.63	
150.00	165.00	11	sc2	0.04	15.00	7.50	0.30	
		11	sc3	7.00	15.00	7.50	52.50	
		12	sc1	1.41	15.00	7.50	10.57	
		12	sc2	8.72	15.00	7.50	65.40	
								137.40
12	13	12	sc1	1.41	15.00	7.50	10.57	
165.00	180.00	12	sc2	8.72	15.00	7.50	65.40	
		13	sc1	1.34	15.00	7.50	10.05	
		13	sc2	0.32	15.00	7.50	2.40	
		13	sc3	7.65	15.00	7.50	57.38	
								145.80
13	14	13	sc1	1.34	15.00	7.50	10.05	
180.00	195.00	13	sc2	0.32	15.00	7.50	2.40	
		13	sc3	7.65	15.00	7.50	57.38	
		14	sc1	1.02	15.00	7.50	7.65	
		14	sc2	0.40	15.00	7.50	3.00	
		14	sc3	0.47	15.00	7.50	3.52	
		14	sc4	1.06	15.00	7.50	7.95	
		14	sc5	9.31	15.00	7.50	69.83	
								161.78
14	15	14	sc1	1.02	15.00	7.50	7.65	
195.00	210.00	14	sc2	0.40	15.00	7.50	3.00	
		14	sc3	0.47	15.00	7.50	3.52	
		14	sc4	1.06	15.00	7.50	7.95	
		14	sc5	9.31	15.00	7.50	69.83	
		15	sc1	1.27	15.00	7.50	9.53	
		15	sc2	5.08	15.00	7.50	38.10	
		15	sc3	1.82	15.00	7.50	13.65	
		15	sc4	5.84	15.00	7.50	43.80	
								197.03
15	16	15	sc1	1.27	15.00	7.50	9.53	
210.00	225.00	15	sc2	5.08	15.00	7.50	38.10	
		15	sc3	1.82	15.00	7.50	13.65	
		15	sc4	5.84	15.00	7.50	43.80	
		16	sc1	1.39	15.00	7.50	10.42	
		16	sc2	8.53	15.00	7.50	63.97	
		16	sc3	0.29	15.00	7.50	2.17	
		16	sc4	11.41	15.00	7.50	85.58	
								267.22
16	17	16	sc1	1.39	15.00	7.50	10.42	
225.00	240.00	16	sc2	8.53	15.00	7.50	63.97	
		16	sc3	0.29	15.00	7.50	2.17	
		16	sc4	11.41	15.00	7.50	85.58	
		17	sc1	1.58	15.00	7.50	11.85	
		17	sc2	9.35	15.00	7.50	70.13	
		17	sc3	12.61	15.00	7.50	94.57	
								338.69
17	18	17	sc1	1.58	15.00	7.50	11.85	
240.00	255.00	17	sc2	9.35	15.00	7.50	70.13	
		17	sc3	12.61	15.00	7.50	94.57	
		18	sc1	8.32	15.00	7.50	62.40	
		18	sc2	24.15	15.00	7.50	181.13	
								420.08
18	19	18	sc1	8.32	15.00	7.50	62.40	
255.00	270.00	18	sc2	24.15	15.00	7.50	181.13	
		19	sc1	32.59	15.00	7.50	244.43	
								487.96
								2997.14

		COMPUTO DI SUPERFICI				Foglio n. 300		
SCOTICO								
DALLA SEZ. DA PROG.	ALLA SEZ. A PROG.	SEZIONE	FIGURA	LUNGHEZZA	DISTANZA SEZIONI ml	DISTANZA DI CALCOLO ml	AREA PARZIALE mq	AREA TOTALE mq
						A RIPORTARE mq		2997.14
19	20	19	sc1	32.59	15.00	7.50	244.43	
270.00	285.00	20	sc1	35.05	15.00	7.50	262.88	
								507.31
20	21	20	sc1	35.05	15.00	7.50	262.88	
285.00	300.00	21	sc1	36.04	15.00	7.50	270.30	
								533.18
21	22	21	sc1	36.04	15.00	7.50	270.30	
300.00	315.00	22	sc1	36.83	15.00	7.50	276.22	
								546.52
22	23	22	sc1	36.83	15.00	7.50	276.22	
315.00	330.00	23	sc1	37.59	15.00	7.50	281.93	
								558.15
23	24	23	sc1	37.59	15.00	7.50	281.93	
330.00	345.00	24	sc1	34.83	15.00	7.50	261.22	
								543.15
24	25	24	sc1	34.83	15.00	7.50	261.22	
345.00	360.00	25	sc1	35.09	15.00	7.50	263.18	
								524.40
25	26	25	sc1	35.09	15.00	7.50	263.18	
360.00	375.00	26	sc1	35.05	15.00	7.50	262.88	
								526.06
26	27	26	sc1	35.05	15.00	7.50	262.88	
375.00	390.00	27	sc1	35.42	15.00	7.50	265.65	
								528.53
27	28	27	sc1	35.42	15.00	7.50	265.65	
390.00	405.00	28	sc1	35.55	15.00	7.50	266.63	
								532.28
28	29	28	sc1	35.55	15.00	7.50	266.63	
405.00	420.00	29	sc1	35.89	15.00	7.50	269.18	
								535.81
29	30	29	sc1	35.89	15.00	7.50	269.18	
420.00	435.00	30	sc1	37.44	15.00	7.50	280.80	
								549.98
30	31	30	sc1	37.44	15.00	7.50	280.80	
435.00	450.00	31	sc1	32.68	15.00	7.50	245.10	
								525.90
31	32	31	sc1	32.68	15.00	7.50	245.10	
450.00	465.00	32	sc1	32.91	15.00	7.50	246.82	
								491.92
32	33	32	sc1	32.91	15.00	7.50	246.82	
465.00	480.00	33	sc1	33.24	15.00	7.50	249.30	
								496.12
33	34	33	sc1	33.24	15.00	7.50	249.30	
480.00	495.00	34	sc1	33.43	15.00	7.50	250.72	
								500.02
34	35	34	sc1	33.43	15.00	7.50	250.72	
495.00	510.00	35	sc1	34.75	15.00	7.50	260.63	
								511.35
35	36	35	sc1	34.75	15.00	7.50	260.63	
510.00	525.00	36	sc2	0.00	15.00	7.50	0.00	
		36	sc1	38.00	15.00	7.50	285.00	
								545.63
36	37	36	sc2	0.00	15.00	7.50	0.00	
36	37	36	sc1	38.00	15.00	7.50	285.00	
525.00	540.00	37	sc1	30.01	15.00	7.50	225.08	
								510.08
37	38	37	sc1	30.01	15.00	7.50	225.08	
540.00	555.00	38	sc1	42.64	15.00	7.50	319.80	
								544.88
38	39	38	sc1	42.64	15.00	7.50	319.80	
555.00	570.00	39	sc1	41.37	15.00	7.50	310.27	
								630.07
39	40	39	sc1	41.37	15.00	7.50	310.27	
570.00	585.00	40	sc1	43.40	15.00	7.50	325.50	
								635.77
40	41	40	sc1	43.40	15.00	7.50	325.50	
585.00	600.00	41	sc1	51.48	15.00	7.50	386.10	
								711.60
41	42	41	sc1	51.48	15.00	7.50	386.10	
600.00	615.00	42	sc1	65.34	15.00	7.50	490.05	
								876.15
42	43	42	sc1	65.34	15.00	7.50	490.05	
615.00	630.00	43	sc1	67.22	15.00	7.50	504.15	
								994.20
43	SP40	43	sc1	67.22	11.94	5.97	401.30	
630.00	641.94	SP40	sc1	67.24	11.94	5.97	401.42	
								802.72
SP40	44	SP40	sc1	67.24	3.06	1.53	102.88	
641.94	645.00	44	sc1	66.04	3.06	1.53	101.04	
								203.92
44	45	44	sc1	66.04	15.00	7.50	495.30	
645.00	660.00	45	sc1	62.05	15.00	7.50	465.38	
								960.68
45	46	45	sc1	62.05	15.00	7.50	465.38	
660.00	675.00	46	sc1	52.60	15.00	7.50	394.50	
								859.88
46	47	46	sc1	52.60	15.00	7.50	394.50	
675.00	690.00	47	sc1	44.03	15.00	7.50	330.23	
								724.73
47	48	47	sc1	44.03	15.00	7.50	330.23	
690.00	705.00	48	sc2	4.59	15.00	7.50	34.42	
		48	sc1	20.97	15.00	7.50	157.27	
								521.92
48	49	48	sc2	4.59	15.00	7.50	34.42	
705.00	720.00	48	sc1	20.97	15.00	7.50	157.27	
		49	sc1	16.33	15.00	7.50	122.47	
		49	sc2	2.97	15.00	7.50	22.28	
								336.44
49	50	49	sc1	16.33	15.00	7.50	122.47	
720.00	735.00	49	sc2	2.97	15.00	7.50	22.28	
		50	sc1	32.76	15.00	7.50	245.70	
								390.45
50	51	50	sc1	32.76	15.00	7.50	245.70	
735.00	750.00	51	sc1	33.85	15.00	7.50	253.88	
							499.58	22156.52

	COMPUTO DI SUPERFICI		Foglio n. 301

SCOTICO

DALLA SEZ. DA PROG.	ALLA SEZ. A PROG.	SEZIONE	FIGURA	LUNGHEZZA	DISTANZA SEZIONI ml	DISTANZA DI CALCOLO ml	AREA PARZIALE mq	AREA TOTALE mq
						A RIPORTARE mq	499.58	22156.52
								499.58
51	52	51	sc1	33.85	15.00	7.50	253.88	
750.00	765.00	52	sc1	39.87	15.00	7.50	299.02	
								552.90
52	53	52	sc1	39.87	15.00	7.50	299.02	
765.00	780.00	53	sc1	39.50	15.00	7.50	296.25	
								595.27
53	54	53	sc1	39.50	15.00	7.50	296.25	
780.00	795.00	54	sc1	36.88	15.00	7.50	276.60	
								572.85
54	55	54	sc1	36.88	15.00	7.50	276.60	
795.00	810.00	55	sc1	36.87	15.00	7.50	276.52	
								553.12
55	56	55	sc1	36.87	15.00	7.50	276.52	
810.00	825.00	56	sc1	37.55	15.00	7.50	281.63	
								558.15
56	57	56	sc1	37.55	15.00	7.50	281.63	
825.00	840.00	57	sc1	38.07	15.00	7.50	285.52	
								567.15
57	58	57	sc1	38.07	15.00	7.50	285.52	
840.00	855.00	58	sc2	0.00	15.00	7.50	0.00	
		58	sc1	37.04	15.00	7.50	277.80	
								563.32
58	59	58	sc2	0.00	15.00	7.50	0.00	
58	59	58	sc1	37.04	15.00	7.50	277.80	
855.00	870.00	59	sc1	35.80	15.00	7.50	268.50	
								546.30
59	60	59	sc1	35.80	15.00	7.50	268.50	
870.00	885.00	60	sc1	34.61	15.00	7.50	259.57	
								528.07
60	61	60	sc1	34.61	15.00	7.50	259.57	
885.00	900.00	61	sc1	32.09	15.00	7.50	240.68	
								500.25
61	62	61	sc1	32.09	15.00	7.50	240.68	
900.00	915.00	62	sc1	31.46	15.00	7.50	235.95	
								476.63
62	63	62	sc1	31.46	15.00	7.50	235.95	
915.00	930.00	63	sc1	47.46	15.00	7.50	355.95	
								591.90
63	64	63	sc1	47.46	15.00	7.50	355.95	
930.00	945.00	64	sc1	47.75	15.00	7.50	358.13	
								714.08
64	65	64	sc1	47.75	15.00	7.50	358.13	
945.00	960.00	65	sc1	45.16	15.00	7.50	338.70	
								696.83
65	66	65	sc1	45.16	15.00	7.50	338.70	
960.00	975.00	66	sc1	45.27	15.00	7.50	339.53	
								678.23
66	67	66	sc1	45.27	15.00	7.50	339.53	
975.00	990.00	67	sc1	45.82	15.00	7.50	343.65	
								683.18
67	68	67	sc1	45.82	15.00	7.50	343.65	
990.00	1005.00	68	sc1	45.90	15.00	7.50	344.25	
								687.90
68	69	68	sc1	45.90	15.00	7.50	344.25	
1005.00	1020.00	69	sc1	46.00	15.00	7.50	345.00	
								689.25
69	70	69	sc1	46.00	15.00	7.50	345.00	
1020.00	1035.00	70	sc1	46.32	15.00	7.50	347.40	
								692.40
70	71	70	sc1	46.32	15.00	7.50	347.40	
1035.00	1050.00	71	sc1	46.80	15.00	7.50	351.00	
								698.40
71	72	71	sc1	46.80	15.00	7.50	351.00	
1050.00	1065.00	72	sc1	46.79	15.00	7.50	350.93	
								701.93
72	73	72	sc1	46.79	15.00	7.50	350.93	
1065.00	1080.00	73	sc1	47.03	15.00	7.50	352.73	
								703.66
73	74	73	sc1	47.03	15.00	7.50	352.73	
1080.00	1095.00	74	sc1	47.06	15.00	7.50	352.95	
								705.68
74	75	74	sc1	47.06	15.00	7.50	352.95	
1095.00	1110.00	75	sc1	47.45	15.00	7.50	355.88	
								708.83
75	76	75	sc1	47.45	15.00	7.50	355.88	
1110.00	1125.00	76	sc1	47.60	15.00	7.50	357.00	
								712.88
76	76bis	76	sc1	47.60	6.80	3.40	161.84	
								161.84

Il Direttore dei Lavori	L'Impresa	TOTALE ARTICOLO	37997.52

	COMPUTO DI SUPERFICI		Foglio n. 302

SPARTITRAFFICO

DALLA SEZ. DA PROG.	ALLA SEZ. A PROG.	SEZIONE	FIGURA	LUNGHEZZA	DISTANZA SEZIONI ml	DISTANZA DI CALCOLO ml	AREA PARZIALE mq	AREA TOTALE mq
1	2	1	st1	2.50	15.00	7.50	18.75	
0.00	15.00	1	st2	0.57	15.00	7.50	4.27	
		1	st3	0.57	15.00	7.50	4.27	
		2	st1	2.50	15.00	7.50	18.75	
		2	st2	0.57	15.00	7.50	4.27	
		2	st3	0.57	15.00	7.50	4.27	
								54.58
2	3	2	st1	2.50	15.00	7.50	18.75	
15.00	30.00	2	st2	0.57	15.00	7.50	4.27	
		2	st3	0.57	15.00	7.50	4.27	
		3	st1	2.50	15.00	7.50	18.75	
		3	st2	0.57	15.00	7.50	4.27	
		3	st3	0.57	15.00	7.50	4.27	
								54.58
3	4	3	st1	2.50	15.00	7.50	18.75	
30.00	45.00	3	st2	0.57	15.00	7.50	4.27	
		3	st3	0.57	15.00	7.50	4.27	
		4	st1	2.50	15.00	7.50	18.75	
		4	st2	0.57	15.00	7.50	4.27	
		4	st3	0.57	15.00	7.50	4.27	
								54.58
4	5	4	st1	2.50	15.00	7.50	18.75	
45.00	60.00	4	st2	0.57	15.00	7.50	4.27	
		4	st3	0.57	15.00	7.50	4.27	
		5	st1	2.50	15.00	7.50	18.75	
		5	st2	0.57	15.00	7.50	4.27	
		5	st3	0.57	15.00	7.50	4.27	
								54.58
5	6	5	st1	2.50	15.00	7.50	18.75	
60.00	75.00	5	st2	0.57	15.00	7.50	4.27	
		5	st3	0.57	15.00	7.50	4.27	
		6	st1	2.50	15.00	7.50	18.75	
		6	st2	0.57	15.00	7.50	4.27	
		6	st3	0.57	15.00	7.50	4.27	
								54.58
6	7	6	st1	2.50	15.00	7.50	18.75	
75.00	90.00	6	st2	0.57	15.00	7.50	4.27	
		6	st3	0.57	15.00	7.50	4.27	
		7	st1	2.50	15.00	7.50	18.75	
		7	st2	0.57	15.00	7.50	4.27	
		7	st3	0.57	15.00	7.50	4.27	
								54.58
7	8	7	st1	2.50	15.00	7.50	18.75	
90.00	105.00	7	st2	0.57	15.00	7.50	4.27	
		7	st3	0.57	15.00	7.50	4.27	
		8	st1	2.50	15.00	7.50	18.75	
								46.04
8	9	8	st1	2.50	15.00	7.50	18.75	
105.00	120.00	9	st1	2.50	15.00	7.50	18.75	
								37.50
9	10	9	st1	2.50	15.00	7.50	18.75	
120.00	135.00	10	st1	2.50	15.00	7.50	18.75	
								37.50
10	11	10	st1	2.50	15.00	7.50	18.75	
135.00	150.00	11	st1	2.50	15.00	7.50	18.75	
								37.50
11	12	11	st1	2.50	15.00	7.50	18.75	
150.00	165.00	12	st1	2.50	15.00	7.50	18.75	
								37.50
12	13	12	st1	2.50	15.00	7.50	18.75	
165.00	180.00	13	st1	2.50	15.00	7.50	18.75	
								37.50
13	14	13	st1	2.50	15.00	7.50	18.75	
180.00	195.00	14	st1	2.50	15.00	7.50	18.75	
								37.50
14	15	14	st1	2.50	15.00	7.50	18.75	
195.00	210.00	15	st1	2.50	15.00	7.50	18.75	
								37.50
15	16	15	st1	2.50	15.00	7.50	18.75	
210.00	225.00	16	st1	2.50	15.00	7.50	18.75	
								37.50
16	17	16	st1	2.50	15.00	7.50	18.75	
225.00	240.00	17	st1	2.50	15.00	7.50	18.75	
								37.50
17	18	17	st1	2.50	15.00	7.50	18.75	
240.00	255.00	18	st1	2.50	15.00	7.50	18.75	
								37.50
18	19	18	st1	2.50	15.00	7.50	18.75	
255.00	270.00	19	st1	2.50	15.00	7.50	18.75	
								37.50
19	20	19	st1	2.50	15.00	7.50	18.75	
270.00	285.00	20	st1	2.50	15.00	7.50	18.75	
								37.50
20	21	20	st1	2.50	15.00	7.50	18.75	
285.00	300.00	21	st1	2.50	15.00	7.50	18.75	
								37.50
21	22	21	st1	2.50	15.00	7.50	18.75	
300.00	315.00	22	st1	2.50	15.00	7.50	18.75	
								37.50
22	23	22	st1	2.50	15.00	7.50	18.75	
315.00	330.00	23	st1	2.50	15.00	7.50	18.75	
								37.50
23	24	23	st1	2.50	15.00	7.50	18.75	
330.00	345.00	24	st1	2.50	15.00	7.50	18.75	
								37.50
24	25	24	st1	2.50	15.00	7.50	18.75	
345.00	360.00	25	st1	2.50	15.00	7.50	18.75	
								37.50
25	26	25	st1	2.50	15.00	7.50	18.75	
360.00	375.00	26	st1	2.50	15.00	7.50	18.75	
								37.50
26	27	26	st1	2.50	15.00	7.50	18.75	
375.00	390.00	27	st1	2.50	15.00	7.50	18.75	
								37.50
27	28	27	st1	2.50	15.00	7.50	18.75	
390.00	405.00	28	st1	2.50	15.00	7.50	18.75	
							37.50	1123.52

	COMPUTO DI SUPERFICI		Foglio n. 303

SPARTITRAFFICO

DALLA SEZ. DA PROG.	ALLA SEZ. A PROG.	SEZIONE	FIGURA	LUNGHEZZA	DISTANZA SEZIONI ml	DISTANZA DI CALCOLO ml	AREA PARZIALE mq	AREA TOTALE mq
						A RIPORTARE mq	37.50	1123.52
								37.50
28	29	28	st1	2.50	15.00	7.50	18.75	
405.00	420.00	29	st1	2.50	15.00	7.50	18.75	
								37.50
29	30	29	st1	2.50	15.00	7.50	18.75	
420.00	435.00	30	st1	2.50	15.00	7.50	18.75	
								37.50
30	31	30	st1	2.50	15.00	7.50	18.75	
435.00	450.00	31	st1	2.50	15.00	7.50	18.75	
								37.50
31	32	31	st1	2.50	15.00	7.50	18.75	
450.00	465.00	32	st1	2.50	15.00	7.50	18.75	
								37.50
32	33	32	st1	2.50	15.00	7.50	18.75	
465.00	480.00	33	st1	2.50	15.00	7.50	18.75	
								37.50
33	34	33	st1	2.50	15.00	7.50	18.75	
480.00	495.00	34	st1	2.50	15.00	7.50	18.75	
								37.50
34	35	34	st1	2.50	15.00	7.50	18.75	
495.00	510.00	35	st1	2.50	15.00	7.50	18.75	
								37.50
35	36	35	st1	2.50	15.00	7.50	18.75	
510.00	525.00	36	st1	2.50	15.00	7.50	18.75	
								37.50
36	37	36	st1	2.50	15.00	7.50	18.75	
525.00	540.00	37	st1	2.50	15.00	7.50	18.75	
								37.50
37	38	37	st1	2.50	15.00	7.50	18.75	
540.00	555.00	38	st1	2.50	15.00	7.50	18.75	
								37.50
38	39	38	st1	2.50	15.00	7.50	18.75	
555.00	570.00	39	st1	2.50	15.00	7.50	18.75	
								37.50
39	40	39	st1	2.50	15.00	7.50	18.75	
570.00	585.00	40	st1	2.50	15.00	7.50	18.75	
								37.50
40	41	40	st1	2.50	15.00	7.50	18.75	
585.00	600.00	41	st1	2.50	15.00	7.50	18.75	
								37.50
41	42	41	st1	2.50	15.00	7.50	18.75	
600.00	615.00	42	st1	2.50	15.00	7.50	18.75	
								37.50
42	43	42	st1	2.50	15.00	7.50	18.75	
615.00	630.00	43	st1	2.50	15.00	7.50	18.75	
								37.50
43	SP40	43	st1	2.50	11.94	5.97	14.92	
630.00	641.94	SP40	st1	2.50	11.94	5.97	14.92	
								29.84
SP40	44	SP40	st1	2.50	3.06	1.53	3.83	
641.94	645.00	44	st1	2.50	3.06	1.53	3.83	
								7.66
44	45	44	st1	2.50	15.00	7.50	18.75	
645.00	660.00	45	st1	2.50	15.00	7.50	18.75	
								37.50
45	46	45	st1	2.50	15.00	7.50	18.75	
660.00	675.00	46	st1	2.50	15.00	7.50	18.75	
								37.50
46	47	46	st1	2.50	15.00	7.50	18.75	
675.00	690.00	47	st1	2.50	15.00	7.50	18.75	
								37.50
47	48	47	st1	2.50	15.00	7.50	18.75	
								18.75
48	49	49	st1	2.50	15.00	7.50	18.75	
								18.75
49	50	49	st1	2.50	15.00	7.50	18.75	
720.00	735.00	50	st1	2.50	15.00	7.50	18.75	
								37.50
50	51	50	st1	2.50	15.00	7.50	18.75	
735.00	750.00	51	st1	2.50	15.00	7.50	18.75	
								37.50
51	52	51	st1	2.50	15.00	7.50	18.75	
750.00	765.00	52	st1	2.50	15.00	7.50	18.75	
								37.50
52	53	52	st1	2.50	15.00	7.50	18.75	
765.00	780.00	53	st1	2.50	15.00	7.50	18.75	
								37.50
53	54	53	st1	2.50	15.00	7.50	18.75	
780.00	795.00	54	st1	2.50	15.00	7.50	18.75	
								37.50
54	55	54	st1	2.50	15.00	7.50	18.75	
795.00	810.00	55	st1	2.50	15.00	7.50	18.75	
								37.50
55	56	55	st1	2.50	15.00	7.50	18.75	
810.00	825.00	56	st1	2.50	15.00	7.50	18.75	
								37.50
56	57	56	st1	2.50	15.00	7.50	18.75	
825.00	840.00	57	st1	2.50	15.00	7.50	18.75	
								37.50
57	58	57	st1	2.50	15.00	7.50	18.75	
840.00	855.00	58	st1	2.50	15.00	7.50	18.75	
								37.50
58	59	58	st1	2.50	15.00	7.50	18.75	
855.00	870.00	59	st1	2.50	15.00	7.50	18.75	
								37.50
59	60	59	st1	2.50	15.00	7.50	18.75	
870.00	885.00	60	st1	2.50	15.00	7.50	18.75	
								37.50
60	61	60	st1	2.50	15.00	7.50	18.75	
885.00	900.00	61	st1	2.50	15.00	7.50	18.75	
								37.50
61	62	61	st1	2.50	15.00	7.50	18.75	
900.00	915.00	62	st1	2.50	15.00	7.50	18.75	
								37.50
								2361.02

	COMPUTO DI SUPERFICI		Foglio n. 304

SPARTITRAFFICO

DALLA SEZ. DA PROG.	ALLA SEZ. A PROG.	SEZIONE	FIGURA	LUNGHEZZA	DISTANZA SEZIONI ml	DISTANZA DI CALCOLO ml	AREA PARZIALE mq	AREA TOTALE mq
						A RIPORTARE mq		2361.02
62	63	62	st1	2.50	15.00	7.50	18.75	
915.00	930.00	63	st1	2.50	15.00	7.50	18.75	
								37.50
63	64	63	st1	2.50	15.00	7.50	18.75	
930.00	945.00	64	st1	2.50	15.00	7.50	18.75	
								37.50
64	65	64	st1	2.50	15.00	7.50	18.75	
945.00	960.00	65	st1	2.50	15.00	7.50	18.75	
								37.50
65	66	65	st1	2.50	15.00	7.50	18.75	
960.00	975.00	66	st1	2.50	15.00	7.50	18.75	
								37.50
66	67	66	st1	2.50	15.00	7.50	18.75	
975.00	990.00	67	st1	2.50	15.00	7.50	18.75	
								37.50
67	68	67	st1	2.50	15.00	7.50	18.75	
990.00	1005.00	68	st1	2.50	15.00	7.50	18.75	
								37.50
68	69	68	st1	2.50	15.00	7.50	18.75	
1005.00	1020.00	69	st1	2.50	15.00	7.50	18.75	
								37.50
69	70	69	st1	2.50	15.00	7.50	18.75	
1020.00	1035.00	70	st1	2.50	15.00	7.50	18.75	
								37.50
70	71	70	st1	2.50	15.00	7.50	18.75	
1035.00	1050.00	71	st1	2.50	15.00	7.50	18.75	
								37.50
71	72	71	st1	2.50	15.00	7.50	18.75	
1050.00	1065.00	72	st1	2.50	15.00	7.50	18.75	
								37.50
72	73	72	st1	2.50	15.00	7.50	18.75	
1065.00	1080.00	73	st1	2.50	15.00	7.50	18.75	
								37.50
73	74	73	st1	2.50	15.00	7.50	18.75	
1080.00	1095.00	74	st1	2.50	15.00	7.50	18.75	
								37.50
74	75	74	st1	2.50	15.00	7.50	18.75	
1095.00	1110.00	75	st1	2.50	15.00	7.50	18.75	
								37.50
75	76	75	st1	2.50	15.00	7.50	18.75	
1110.00	1125.00	76	st1	2.50	15.00	7.50	18.75	
								37.50
76	76bis	76	st1	2.50	6.80	3.40	8.50	
								8.50

Il Direttore dei Lavori	L'Impresa	TOTALE ARTICOLO	2894.52

	COMPUTO DEI VOLUMI		Foglio n. 305

Volume dalla sezione 1 alla sezione 76bis

ARTICOLO			VOLUME
A RILEVATO	mc		71362.440
B STERRO	mc		2225.507
BO BONIFICA	mc		21379.814
RI RIPORTO	mc		131.954
a USURA	mq		25766.28
b VEGETALE	mq		13835.01
c BINDER	mq		26021.26
d BASE	mq		25829.80
e FONDAZIONE	mq		26771.06
sc SCOTICO	mq		37997.52
st SPARTITRAFFICO	mq		2894.52

	CALCOLO DELLE AREE		Foglio n. 1

RILEVATO

N. SEZIONE PROG.	FIG.	ELEMENTI DI CALCOLO	AREA ELEMENTARE mq	AREA FIGURA mq	NOTE
130	A1	(30.46-3.55)x(4.13+4.13)/2	111.14		
1935.00		(35.12-30.46)x(1.02+4.13)/2	12.00		
		(37.12-35.12)x(1.02+1.02)/2	2.04		
		(38.62-37.12)x(0.02+1.02)/2	0.78		
		(38.15-38.62)x(0.02+0.02)/2	-0.01		
		(36.29-38.15)x(0.13+0.13)/2	-0.24		
		(33.52-36.29)x(0.63+0.63)/2	-1.75		
		(31.45-33.52)x(1.13+1.13)/2	-2.34		
		(29.95-31.45)x(1.63+1.63)/2	-2.44		
		(21.39-29.95)x(2.13+2.13)/2	-18.23		
		(16.06-21.39)x(2.13+2.13)/2	-11.35		
		(15.72-16.06)x(2.08+2.13)/2	-0.72		
		(14.73-15.72)x(1.83+2.08)/2	-1.94		
		(14.63-14.73)x(1.80+1.83)/2	-0.18		
		(14.59-14.63)x(1.79+1.80)/2	-0.07		
		(14.46-14.59)x(1.79+1.79)/2	-0.23		
		(13.79-14.46)x(1.75+1.79)/2	-1.19		
		(13.54-13.79)x(1.79+1.75)/2	-0.44		
		(13.02-13.54)x(1.89+1.79)/2	-0.96		
		(12.45-13.02)x(1.99+1.89)/2	-1.11		
		(11.46-12.45)x(2.13+1.99)/2	-2.04		
		(11.44-11.46)x(2.13+2.13)/2	-0.04		
		(6.32-11.44)x(2.13+2.13)/2	-10.91		
		(5.49-6.32)x(2.63+2.63)/2	-2.18		
		(4.92-5.49)x(3.13+3.13)/2	-1.78		
		(3.55-4.92)x(3.63+3.63)/2	-4.97		
				60.84	
131	A1	(1.25-1.75)x(8.19+8.19)/2	-4.09		
1950.00		(1.75-1.25)x(10.02+10.03)/2	5.01		
		(11.65-1.75)x(9.77+10.02)/2	97.96		
		(11.34-11.65)x(10.14+9.77)/2	-3.09		
		(12.61-11.34)x(10.14+10.14)/2	12.88		
		(23.35-12.61)x(2.98+10.14)/2	70.45		
		(22.75-23.35)x(2.94+2.98)/2	-1.78		
		(22.28-22.75)x(2.88+2.94)/2	-1.37		
		(22.01-22.28)x(2.82+2.88)/2	-0.77		
		(21.19-22.01)x(2.63+2.82)/2	-2.23		
		(20.30-21.19)x(2.40+2.63)/2	-2.24		
		(20.10-20.30)x(2.34+2.40)/2	-0.47		
		(20.00-20.10)x(2.30+2.34)/2	-0.23		
		(19.74-20.00)x(2.23+2.30)/2	-0.59		
		(19.20-19.74)x(2.08+2.23)/2	-1.16		
		(19.01-19.20)x(2.06+2.08)/2	-0.39		
		(18.59-19.01)x(2.03+2.06)/2	-0.86		
		(17.92-18.59)x(1.96+2.03)/2	-1.34		
		(16.88-17.92)x(1.83+1.96)/2	-1.97		
		(16.83-16.88)x(1.82+1.83)/2	-0.09		
		(16.73-16.83)x(1.82+1.82)/2	-0.18		
		(15.74-16.73)x(1.75+1.82)/2	-1.77		
		(15.17-15.74)x(1.80+1.75)/2	-1.01		
		(14.65-15.17)x(1.83+1.80)/2	-0.94		
		(13.73-14.65)x(1.89+1.83)/2	-1.71		
		(13.56-13.73)x(1.90+1.89)/2	-0.32		
		(13.46-13.56)x(1.91+1.90)/2	-0.19		
		(12.47-13.46)x(2.00+1.91)/2	-1.94		
		(11.75-12.47)x(2.05+2.00)/2	-1.46		
		(11.37-11.75)x(2.08+2.05)/2	-0.78		
		(10.72-11.37)x(2.09+2.08)/2	-1.36		
		(10.28-10.72)x(2.09+2.09)/2	-0.92		
		(10.04-10.28)x(2.10+2.09)/2	-0.50		
		(9.19-10.04)x(2.12+2.10)/2	-1.79		
		(8.80-9.19)x(2.14+2.12)/2	-0.83		
		(8.10-8.80)x(2.20+2.14)/2	-1.52		
		(7.71-8.10)x(2.25+2.20)/2	-0.87		
		(7.01-7.71)x(2.38+2.25)/2	-1.62		
		(6.62-7.01)x(2.67+2.38)/2	-0.98		
		(5.92-6.62)x(3.11+2.67)/2	-2.02		
		(4.91-5.92)x(3.64+3.11)/2	-3.41		
		(4.83-4.91)x(3.68+3.64)/2	-0.29		
		(4.70-4.83)x(3.70+3.68)/2	-0.48		
		(3.74-4.70)x(3.80+3.70)/2	-3.60		
		(3.20-3.74)x(3.87+3.80)/2	-2.07		
		(2.65-3.20)x(3.93+3.87)/2	-2.15		
		(1.75-2.65)x(4.07+3.93)/2	-3.60		
				125.32	
131	A2	(27.91-23.96)x(2.93+2.93)/2	11.57		
1950.00		(27.73-27.91)x(2.90+2.93)/2	-0.52		
		(27.14-27.73)x(2.92+2.90)/2	-1.72		
		(26.64-27.14)x(2.91+2.92)/2	-1.46		
		(25.76-26.64)x(2.88+2.91)/2	-2.55		
		(25.55-25.76)x(2.87+2.88)/2	-0.60		
		(25.43-25.55)x(2.87+2.87)/2	-0.34		
		(24.46-25.43)x(2.89+2.87)/2	-2.79		
		(23.96-24.46)x(2.93+2.89)/2	-1.46		
				0.13	
131	A3	(32.08-29.85)x(2.93+2.93)/2	6.53		
1950.00		(34.97-32.08)x(1.00+2.93)/2	5.68		
		(36.98-34.97)x(1.00+1.00)/2	2.01		
		(38.19-36.98)x(0.20+1.00)/2	0.73		
		(36.77-38.19)x(0.20+0.20)/2	-0.28		
		(34.78-36.77)x(0.43+0.43)/2	-0.86		
		(32.92-34.78)x(0.93+0.93)/2	-1.73		
		(31.81-32.92)x(1.43+1.43)/2	-1.59		
		(30.97-31.81)x(1.93+1.93)/2	-1.62		
		(29.85-30.97)x(2.43+2.43)/2	-2.72		
				6.15	
132	A1	(11.34-12.61)x(9.72+9.72)/2	-12.34		
1965.00		(11.65-11.34)x(9.35+9.72)/2	2.96		
		(1.75-11.65)x(9.60+9.35)/2	-93.80		
		(0.68-1.75)x(9.62+9.60)/2	-10.28		
		(-0.68-0.68)x(9.62+9.62)/2	-13.08		
		(-1.75--0.68)x(9.60+9.62)/2	-10.28		
		(-11.65--1.75)x(9.35+9.60)/2	-93.80		
		(-11.34--11.65)x(9.72+9.35)/2	2.96		
		(-12.61--11.34)x(9.72+9.72)/2	-12.34		
		(-20.45--12.61)x(4.49+9.72)/2	-55.70		
		A RIPORTARE mq	-295.70		

		CALCOLO DELLE AREE		Foglio n. 2
RILEVATO				
N. SEZIONE PROG.	FIG.	ELEMENTI DI CALCOLO	AREA ELEMENTARE mq	AREA FIGURA mq	NOTE
		RIPORTO mq	-295.70		
		(-20.31--20.45)x(4.49+4.49)/2	0.63		
		(-20.24--20.31)x(4.49+4.49)/2	0.31		
		(-20.11--20.24)x(4.49+4.49)/2	0.58		
		(-19.15--20.11)x(4.46+4.49)/2	4.30		
		(-18.60--19.15)x(4.46+4.46)/2	2.45		
		(-18.05--18.60)x(4.45+4.46)/2	2.45		
		(-17.10--18.05)x(4.45+4.45)/2	4.23		
		(-16.96--17.10)x(4.44+4.45)/2	0.62		
		(-16.89--16.96)x(4.45+4.44)/2	0.31		
		(-15.87--16.89)x(4.45+4.45)/2	4.54		
		(-15.18--15.87)x(4.45+4.45)/2	3.07		
		(-14.78--15.18)x(4.45+4.45)/2	1.78		
		(-14.09--14.78)x(4.44+4.45)/2	3.07		
		(-13.69--14.09)x(4.43+4.44)/2	1.77		
		(-13.47--13.69)x(4.42+4.43)/2	0.97		
		(-12.60--13.47)x(4.38+4.42)/2	3.83		
		(-11.76--12.60)x(4.36+4.38)/2	3.67		
		(-11.51--11.76)x(4.35+4.36)/2	1.09		
		(-11.08--11.51)x(4.35+4.35)/2	1.87		
		(-10.42--11.08)x(4.35+4.35)/2	2.87		
		(-10.05--10.42)x(4.36+4.35)/2	1.61		
		(-9.33--10.05)x(4.37+4.36)/2	3.14		
		(-8.33--9.33)x(4.35+4.37)/2	4.36		
		(-8.24--8.33)x(4.35+4.35)/2	0.39		
		(-8.20--8.24)x(4.35+4.35)/2	0.17		
		(-8.07--8.20)x(4.34+4.35)/2	0.56		
		(-7.39--8.07)x(4.30+4.34)/2	2.94		
		(-7.15--7.39)x(4.29+4.30)/2	1.03		
		(-6.62--7.15)x(4.26+4.29)/2	2.27		
		(-6.06--6.62)x(4.23+4.26)/2	2.38		
		(-5.06--6.06)x(4.19+4.23)/2	4.21		
		(-4.97--5.06)x(4.18+4.19)/2	0.38		
		(-4.91--4.97)x(4.18+4.18)/2	0.25		
		(-3.88--4.91)x(4.09+4.18)/2	4.26		
		(-3.20--3.88)x(4.05+4.09)/2	2.77		
		(-2.79--3.20)x(4.02+4.05)/2	1.65		
		(-2.06--2.79)x(3.96+4.02)/2	2.91		
		(-1.70--2.06)x(3.94+3.96)/2	1.42		
		(-1.49--1.70)x(3.94+3.94)/2	0.83		
		(-0.61--1.49)x(3.94+3.94)/2	3.47		
		(0.22--0.61)x(3.96+3.94)/2	3.28		
		(0.48-0.22)x(3.96+3.96)/2	1.03		
		(0.95-0.48)x(3.97+3.96)/2	1.86		
		(1.58-0.95)x(3.97+3.97)/2	2.50		
		(1.93-1.58)x(3.97+3.97)/2	1.39		
		(2.67-1.93)x(3.99+3.97)/2	2.95		
		(3.01-2.67)x(4.01+3.99)/2	1.36		
		(3.76-3.01)x(4.04+4.01)/2	3.02		
		(3.96-3.76)x(4.04+4.04)/2	0.81		
		(4.85-3.96)x(3.98+4.04)/2	3.57		
		(5.35-4.85)x(3.64+3.98)/2	1.91		
		(5.94-5.35)x(3.34+3.64)/2	2.06		
		(6.97-5.94)x(2.55+3.34)/2	3.03		
		(7.03-6.97)x(2.50+2.55)/2	0.15		
		(7.06-7.03)x(2.50+2.50)/2	0.07		
		(8.12-7.06)x(2.16+2.50)/2	2.47		
		(8.77-8.12)x(2.15+2.16)/2	1.40		
		(9.21-8.77)x(2.13+2.15)/2	0.94		
		(9.98-9.21)x(2.14+2.13)/2	1.64		
		(10.30-9.98)x(2.15+2.14)/2	0.69		
		(10.48-10.30)x(2.14+2.15)/2	0.39		
		(11.39-10.48)x(2.10+2.14)/2	1.93		
		(12.19-11.39)x(2.04+2.10)/2	1.66		
		(12.48-12.19)x(2.02+2.04)/2	0.59		
		(12.62-12.48)x(2.01+2.02)/2	0.28		
		(12.99-12.62)x(1.99+2.01)/2	0.74		
		(13.57-12.99)x(1.95+1.99)/2	1.14		
		(14.22-13.57)x(1.89+1.95)/2	1.25		
		(14.66-14.22)x(1.84+1.89)/2	0.82		
		(15.61-14.66)x(1.81+1.84)/2	1.73		
		(15.75-15.61)x(1.80+1.81)/2	0.25		
		(16.00-15.75)x(1.82+1.80)/2	0.45		
		(16.84-16.00)x(1.91+1.82)/2	1.57		
		(17.33-16.84)x(2.07+1.91)/2	0.98		
		(17.93-17.33)x(2.26+2.07)/2	1.30		
		(19.02-17.93)x(2.49+2.26)/2	2.59		
		(20.11-19.02)x(2.55+2.49)/2	2.75		
		(20.75-20.11)x(2.51+2.55)/2	1.62		
		(21.21-20.75)x(2.50+2.51)/2	1.15		
		(22.01-21.21)x(2.48+2.50)/2	1.99		
		(22.30-22.01)x(2.47+2.48)/2	0.72		
		(22.46-22.30)x(2.50+2.47)/2	0.40		
		(23.24-22.46)x(2.63+2.50)/2	2.00		
		(12.61-23.24)x(9.72+2.63)/2	-65.64		
				211.50	
132 1965.00	A2	(31.34-32.93)x(2.63+2.63)/2	-4.18		
		(32.09-31.34)x(2.19+2.19)/2	1.64		
		(32.99-32.09)x(1.69+1.69)/2	1.52		
		(34.81-32.99)x(1.19+1.19)/2	2.17		
		(36.77-34.81)x(0.69+0.69)/2	1.35		
		(38.44-36.77)x(0.19+0.19)/2	0.32		
		(38.65-38.44)x(0.15+0.15)/2	0.03		
		(37.15-38.65)x(1.15+0.15)/2	-0.97		
		(35.15-37.15)x(1.15+1.15)/2	-2.30		
		(32.93-35.15)x(2.63+1.15)/2	-4.20		
				4.62	
133 1980.00	A1	(-12.61--19.72)x(9.28+4.53)/2	49.09		
		(-11.34--12.61)x(9.27+9.28)/2	11.78		
		(-11.65--11.34)x(8.90+9.27)/2	-2.82		
		(-1.75--11.65)x(9.15+8.90)/2	89.35		
		(-0.68--1.75)x(9.18+9.15)/2	9.81		
		(0.68--0.68)x(9.18+9.18)/2	12.48		
		(1.75-0.68)x(9.15+9.18)/2	9.81		
		(11.65-1.75)x(8.90+9.15)/2	89.35		
		A RIPORTARE mq	268.85		

		CALCOLO DELLE AREE		Foglio n. 3
RILEVATO				
N. SEZIONE PROG.	FIG.	ELEMENTI DI CALCOLO	AREA ELEMENTARE mq	AREA FIGURA mq	NOTE
		RIPORTO mq	268.85		
		(11.34-11.65)x(9.27+8.90)/2	-2.82		
		(12.61-11.34)x(9.28+9.27)/2	11.78		
		(22.01-12.61)x(3.01+9.28)/2	57.76		
		(21.27-22.01)x(2.77+3.01)/2	-2.14		
		(21.22-21.27)x(2.75+2.77)/2	-0.14		
		(21.19-21.22)x(2.74+2.75)/2	-0.08		
		(20.13-21.19)x(2.30+2.74)/2	-2.67		
		(19.63-20.13)x(2.22+2.30)/2	-1.13		
		(19.04-19.63)x(2.11+2.22)/2	-1.28		
		(18.26-19.04)x(1.98+2.11)/2	-1.60		
		(17.95-18.26)x(1.93+1.98)/2	-0.61		
		(17.77-17.95)x(1.92+1.93)/2	-0.35		
		(16.86-17.77)x(1.86+1.92)/2	-1.72		
		(16.06-16.86)x(1.84+1.86)/2	-1.48		
		(15.77-16.06)x(1.83+1.84)/2	-0.53		
		(15.26-15.77)x(1.84+1.83)/2	-0.94		
		(14.68-15.26)x(1.87+1.84)/2	-1.08		
		(14.35-14.68)x(1.90+1.87)/2	-0.62		
		(13.59-14.35)x(1.94+1.90)/2	-1.46		
		(12.64-13.59)x(1.97+1.94)/2	-1.86		
		(12.50-12.64)x(1.98+1.97)/2	-0.28		
		(12.25-12.50)x(1.98+1.98)/2	-0.49		
		(11.41-12.25)x(2.01+1.98)/2	-1.68		
		(10.93-11.41)x(2.05+2.01)/2	-0.97		
		(10.32-10.93)x(2.10+2.05)/2	-1.27		
		(9.24-10.32)x(2.20+2.10)/2	-2.32		
		(9.22-9.24)x(2.20+2.20)/2	-0.04		
		(8.43-9.22)x(2.48+2.20)/2	-1.85		
		(8.13-8.43)x(2.63+2.48)/2	-0.77		
		(7.51-8.13)x(3.06+2.63)/2	-1.76		
		(7.04-7.51)x(3.37+3.06)/2	-1.51		
		(6.23-7.04)x(3.76+3.37)/2	-2.89		
		(5.95-6.23)x(3.87+3.76)/2	-1.07		
		(5.79-5.95)x(3.90+3.87)/2	-0.62		
		(4.86-5.79)x(4.05+3.90)/2	-3.70		
		(4.08-4.86)x(4.15+4.05)/2	-3.20		
		(3.77-4.08)x(4.18+4.15)/2	-1.29		
		(3.22-3.77)x(4.23+4.18)/2	-2.31		
		(2.68-3.22)x(4.27+4.23)/2	-2.29		
		(2.37-2.68)x(4.28+4.27)/2	-1.33		
		(1.59-2.37)x(4.30+4.28)/2	-3.35		
		(0.66-1.59)x(4.29+4.30)/2	-3.99		
		(0.50-0.66)x(4.30+4.29)/2	-0.69		
		(0.21-0.50)x(4.30+4.30)/2	-1.25		
		(-0.59-0.21)x(4.32+4.30)/2	-3.45		
		(-1.05--0.59)x(4.32+4.32)/2	-1.99		
		(-1.68--1.05)x(4.31+4.32)/2	-2.72		
		(-1.98--1.68)x(4.30+4.31)/2	-1.29		
		(-2.77--1.98)x(4.30+4.30)/2	-3.40		
		(-2.79--2.77)x(4.30+4.30)/2	-0.09		
		(-3.86--2.79)x(4.28+4.30)/2	-4.59		
		(-4.47--3.86)x(4.28+4.28)/2	-2.61		
		(-4.95--4.47)x(4.29+4.28)/2	-2.06		
		(-5.80--4.95)x(4.31+4.29)/2	-3.65		
		(-6.04--5.80)x(4.32+4.31)/2	-1.04		
		(-6.18--6.04)x(4.32+4.32)/2	-0.60		
		(-7.13--6.18)x(4.37+4.32)/2	-4.13		
		(-7.89--7.13)x(4.38+4.37)/2	-3.32		
		(-8.22--7.89)x(4.39+4.38)/2	-1.45		
		(-8.81--8.22)x(4.39+4.39)/2	-2.59		
		(-9.32--8.81)x(4.40+4.39)/2	-2.24		
		(-9.60--9.32)x(4.40+4.40)/2	-1.23		
		(-10.41--9.60)x(4.41+4.40)/2	-3.57		
		(-11.31--10.41)x(4.41+4.41)/2	-3.97		
		(-11.50--11.31)x(4.42+4.41)/2	-0.84		
		(-11.82--11.50)x(4.42+4.42)/2	-1.41		
		(-12.59--11.82)x(4.45+4.42)/2	-3.41		
		(-13.18--12.59)x(4.48+4.45)/2	-2.63		
		(-13.68--13.18)x(4.50+4.48)/2	-2.25		
		(-14.73--13.68)x(4.52+4.50)/2	-4.74		
		(-14.77--14.73)x(4.52+4.52)/2	-0.18		
		(-14.83--14.77)x(4.52+4.52)/2	-0.27		
		(-15.86--14.83)x(4.53+4.52)/2	-4.66		
		(-16.44--15.86)x(4.55+4.53)/2	-2.63		
		(-16.95--16.44)x(4.55+4.55)/2	-2.32		
		(-17.84--16.95)x(4.53+4.55)/2	-4.04		
		(-18.04--17.84)x(4.52+4.53)/2	-0.90		
		(-18.15--18.04)x(4.52+4.52)/2	-0.50		
		(-19.13--18.15)x(4.52+4.52)/2	-4.43		
		(-19.72--19.13)x(4.53+4.52)/2	-2.67		
				187.09	
133	A2	(23.26-22.41)x(3.10+3.10)/2	2.64		
1980.00		(22.90-23.26)x(3.08+3.10)/2	-1.11		
		(22.41-22.90)x(3.10+3.08)/2	-1.51		
				0.02	
133	A3	(29.59-23.47)x(3.10+3.10)/2	18.97		
1980.00		(28.85-29.59)x(2.96+3.10)/2	-2.24		
		(28.03-28.85)x(2.91+2.96)/2	-2.41		
		(27.76-28.03)x(2.87+2.91)/2	-0.78		
		(27.29-27.76)x(2.84+2.87)/2	-1.34		
		(26.67-27.29)x(2.83+2.84)/2	-1.76		
		(26.32-26.67)x(2.85+2.83)/2	-0.99		
		(25.58-26.32)x(2.88+2.85)/2	-2.12		
		(24.61-25.58)x(2.95+2.88)/2	-2.83		
		(24.49-24.61)x(2.96+2.95)/2	-0.35		
		(24.28-24.49)x(2.97+2.96)/2	-0.62		
		(23.47-24.28)x(3.10+2.97)/2	-2.46		
				1.07	
133	A4	(32.46-30.84)x(3.10+3.10)/2	5.02		
1980.00		(34.88-32.46)x(1.49+3.10)/2	5.55		
		(36.88-34.88)x(1.49+1.49)/2	2.98		
		(38.60-36.88)x(0.34+1.49)/2	1.57		
		(38.48-38.60)x(0.36+0.34)/2	-0.04		
		(37.33-38.48)x(0.36+0.36)/2	-0.41		
		A RIPORTARE mq	14.67		

AP02

		CALCOLO DELLE AREE		Foglio n. 4
RILEVATO				
N. SEZIONE PROG.	FIG.	ELEMENTI DI CALCOLO	AREA ELEMENTARE mq	AREA FIGURA mq	NOTE
		RIPORTO mq	14.67		
		(35.80-37.33)x(0.58+0.58)/2	-0.89		
		(33.76-35.80)x(1.08+1.08)/2	-2.20		
		(32.80-33.76)x(1.58+1.58)/2	-1.52		
		(32.02-32.80)x(2.08+2.08)/2	-1.62		
		(31.04-32.02)x(2.58+2.58)/2	-2.53		
		(30.84-31.04)x(3.10+3.08)/2	-0.62		
				5.29	
134	A1	(-12.61--19.05)x(8.83+4.53)/2	43.02		
1995.00		(-11.34--12.61)x(8.82+8.83)/2	11.21		
		(-11.65--11.34)x(8.45+8.82)/2	-2.68		
		(-1.75--11.65)x(8.70+8.45)/2	84.89		
		(-0.68--1.75)x(8.73+8.70)/2	9.33		
		(0.68--0.68)x(8.73+8.73)/2	11.87		
		(1.75-0.68)x(8.70+8.73)/2	9.33		
		(11.65-1.75)x(8.45+8.70)/2	84.89		
		(11.34-11.65)x(8.82+8.45)/2	-2.68		
		(12.61-11.34)x(8.83+8.82)/2	11.21		
		(22.24-12.61)x(2.40+8.83)/2	54.07		
		(21.64-22.24)x(2.39+2.40)/2	-1.44		
		(21.24-21.64)x(2.37+2.39)/2	-0.95		
		(20.53-21.24)x(2.35+2.37)/2	-1.68		
		(20.15-20.53)x(2.34+2.35)/2	-0.89		
		(19.92-20.15)x(2.34+2.34)/2	-0.54		
		(19.06-19.92)x(2.32+2.34)/2	-2.00		
		(18.21-19.06)x(2.15+2.32)/2	-1.90		
		(17.96-18.21)x(2.12+2.15)/2	-0.53		
		(17.53-17.96)x(2.03+2.12)/2	-0.89		
		(16.87-17.53)x(1.90+2.03)/2	-1.30		
		(16.50-16.87)x(1.87+1.90)/2	-0.70		
		(15.78-16.50)x(1.79+1.87)/2	-1.32		
		(14.79-15.78)x(1.84+1.79)/2	-1.80		
		(14.69-14.79)x(1.84+1.84)/2	-0.18		
		(14.65-14.69)x(1.85+1.84)/2	-0.07		
		(14.52-14.65)x(1.86+1.85)/2	-0.24		
		(13.85-14.52)x(1.93+1.86)/2	-1.27		
		(13.60-13.85)x(1.97+1.93)/2	-0.49		
		(13.08-13.60)x(2.03+1.97)/2	-1.04		
		(12.51-13.08)x(2.12+2.03)/2	-1.18		
		(11.51-12.51)x(2.16+2.12)/2	-2.14		
		(11.42-11.51)x(2.16+2.16)/2	-0.19		
		(11.37-11.42)x(2.17+2.16)/2	-0.11		
		(10.33-11.37)x(2.21+2.17)/2	-2.28		
		(9.66-10.33)x(2.38+2.21)/2	-1.54		
		(9.24-9.66)x(2.48+2.38)/2	-1.02		
		(8.50-9.24)x(2.85+2.48)/2	-1.97		
		(8.15-8.50)x(3.02+2.85)/2	-1.03		
		(7.95-8.15)x(3.16+3.02)/2	-0.62		
		(7.06-7.95)x(3.77+3.16)/2	-3.08		
		(6.24-7.06)x(4.15+3.77)/2	-3.25		
		(5.97-6.24)x(4.27+4.15)/2	-1.14		
		(5.49-5.97)x(4.29+4.27)/2	-2.05		
		(4.88-5.49)x(4.33+4.29)/2	-2.63		
		(4.53-4.88)x(4.33+4.33)/2	-1.52		
		(3.79-4.53)x(4.35+4.33)/2	-3.21		
		(3.44-3.79)x(4.36+4.35)/2	-1.52		
		(2.70-3.44)x(4.42+4.36)/2	-3.25		
		(2.48-2.70)x(4.43+4.42)/2	-0.97		
		(1.61-2.48)x(4.46+4.43)/2	-3.87		
		(1.11-1.61)x(4.47+4.46)/2	-2.23		
		(0.52-1.11)x(4.48+4.47)/2	-2.64		
		(-0.53-0.52)x(4.47+4.48)/2	-4.70		
		(-0.58--0.53)x(4.47+4.47)/2	-0.22		
		(-0.60--0.58)x(4.47+4.47)/2	-0.09		
		(-1.67--0.60)x(4.43+4.47)/2	-4.76		
		(-2.31--1.67)x(4.41+4.43)/2	-2.83		
		(-2.76--2.31)x(4.39+4.41)/2	-1.98		
		(-3.53--2.76)x(4.37+4.39)/2	-3.37		
		(-3.85--3.53)x(4.36+4.37)/2	-1.40		
		(-4.02--3.85)x(4.36+4.36)/2	-0.74		
		(-4.94--4.02)x(4.32+4.36)/2	-3.99		
		(-5.74--4.94)x(4.36+4.32)/2	-3.47		
		(-6.03--5.74)x(4.37+4.36)/2	-1.27		
		(-6.54--6.03)x(4.40+4.37)/2	-2.24		
		(-7.12--6.54)x(4.43+4.40)/2	-2.56		
		(-7.77--7.12)x(4.46+4.43)/2	-2.89		
		(-8.21--7.77)x(4.48+4.46)/2	-1.97		
		(-9.16--8.21)x(4.54+4.48)/2	-4.28		
		(-9.30--9.16)x(4.55+4.54)/2	-0.64		
		(-9.55--9.30)x(4.56+4.55)/2	-1.14		
		(-10.39--9.55)x(4.61+4.56)/2	-3.85		
		(-10.87--10.39)x(4.62+4.61)/2	-2.22		
		(-11.48--10.87)x(4.63+4.62)/2	-2.82		
		(-12.56--11.48)x(4.63+4.63)/2	-5.00		
		(-12.57--12.56)x(4.63+4.63)/2	-0.05		
		(-12.58--12.57)x(4.63+4.63)/2	-0.05		
		(-13.66--12.58)x(4.60+4.63)/2	-4.98		
		(-14.29--13.66)x(4.59+4.60)/2	-2.89		
		(-14.75--14.29)x(4.58+4.59)/2	-2.11		
		(-15.57--14.75)x(4.57+4.58)/2	-3.75		
		(-15.84--15.57)x(4.56+4.57)/2	-1.23		
		(-16.00--15.84)x(4.56+4.56)/2	-0.73		
		(-16.93--16.00)x(4.58+4.56)/2	-4.25		
		(-17.71--16.93)x(4.58+4.58)/2	-3.57		
		(-18.02--17.71)x(4.58+4.58)/2	-1.42		
		(-18.17--18.02)x(4.58+4.58)/2	-0.69		
		(-18.58--18.17)x(4.56+4.58)/2	-1.87		
		(-18.97--18.58)x(4.54+4.56)/2	-1.77		
		(-19.05--18.97)x(4.53+4.54)/2	-0.36		
				163.64	
134	A2	(32.96-32.23)x(2.44+2.44)/2	1.78		
1995.00		(34.59-32.96)x(1.36+2.44)/2	3.10		
		(36.59-34.59)x(1.36+1.36)/2	2.72		
		(38.09-36.59)x(0.36+1.36)/2	1.29		
		(37.55-38.09)x(0.36+0.36)/2	-0.19		
		A RIPORTARE mq	8.70		

		CALCOLO DELLE AREE		Foglio n. 5
RILEVATO				
N. SEZIONE PROG.	FIG.	ELEMENTI DI CALCOLO	AREA ELEMENTARE mq	AREA FIGURA mq	NOTE
		RIPORTO mq	8.70		
		(35.92-37.55)x(0.44+0.44)/2	-0.72		
		(34.34-35.92)x(0.94+0.94)/2	-1.49		
		(33.19-34.34)x(1.44+1.44)/2	-1.66		
		(32.23-33.19)x(1.94+1.94)/2	-1.86		
				2.97	
135	A1	(-12.61--18.58)x(8.38+4.39)/2	38.12		
2010.00		(-11.34--12.61)x(8.37+8.38)/2	10.64		
		(-11.65--11.34)x(8.00+8.37)/2	-2.54		
		(-1.75--11.65)x(8.25+8.00)/2	80.44		
		(-0.68--1.75)x(8.28+8.25)/2	8.84		
		(0.68--0.68)x(8.28+8.28)/2	11.26		
		(1.75-0.68)x(8.25+8.28)/2	8.84		
		(11.65-1.75)x(8.00+8.25)/2	80.44		
		(11.34-11.65)x(8.37+8.00)/2	-2.54		
		(12.61-11.34)x(8.38+8.37)/2	10.64		
		(21.52-12.61)x(2.44+8.38)/2	48.20		
		(21.25-21.52)x(2.36+2.44)/2	-0.65		
		(20.37-21.25)x(2.25+2.36)/2	-2.03		
		(20.16-20.37)x(2.21+2.25)/2	-0.47		
		(19.80-20.16)x(2.21+2.21)/2	-0.80		
		(19.07-19.80)x(2.21+2.21)/2	-1.61		
		(18.66-19.07)x(2.22+2.21)/2	-0.91		
		(17.98-18.66)x(2.24+2.22)/2	-1.52		
		(16.95-17.98)x(2.17+2.24)/2	-2.27		
		(16.89-16.95)x(2.17+2.17)/2	-0.13		
		(16.79-16.89)x(2.14+2.17)/2	-0.22		
		(15.80-16.79)x(1.91+2.14)/2	-2.00		
		(15.24-15.80)x(1.91+1.91)/2	-1.07		
		(14.71-15.24)x(1.91+1.91)/2	-1.01		
		(13.78-14.71)x(1.93+1.91)/2	-1.79		
		(13.62-13.78)x(1.94+1.93)/2	-0.31		
		(13.53-13.62)x(1.95+1.94)/2	-0.18		
		(12.53-13.53)x(2.10+1.95)/2	-2.02		
		(11.82-12.53)x(2.18+2.10)/2	-1.52		
		(11.44-11.82)x(2.21+2.18)/2	-0.83		
		(10.77-11.44)x(2.31+2.21)/2	-1.51		
		(10.35-10.77)x(2.38+2.31)/2	-0.98		
		(10.10-10.35)x(2.51+2.38)/2	-0.61		
		(9.26-10.10)x(2.90+2.51)/2	-2.27		
		(8.39-9.26)x(3.57+2.90)/2	-2.81		
		(8.16-8.39)x(3.77+3.57)/2	-0.84		
		(8.06-8.16)x(3.84+3.77)/2	-0.38		
		(7.76-8.06)x(3.98+3.84)/2	-1.17		
		(7.07-7.76)x(4.32+3.98)/2	-2.86		
		(6.68-7.07)x(4.36+4.32)/2	-1.69		
		(5.98-6.68)x(4.48+4.36)/2	-3.09		
		(4.97-5.98)x(4.51+4.48)/2	-4.54		
		(4.89-4.97)x(4.51+4.51)/2	-0.36		
		(4.75-4.89)x(4.51+4.51)/2	-0.63		
		(3.80-4.75)x(4.53+4.51)/2	-4.29		
		(3.26-3.80)x(4.55+4.53)/2	-2.45		
		(2.71-3.26)x(4.57+4.55)/2	-2.51		
		(1.74-2.71)x(4.57+4.57)/2	-4.43		
		(1.62-1.74)x(4.57+4.57)/2	-0.55		
		(1.55-1.62)x(4.57+4.57)/2	-0.32		
		(0.53-1.55)x(4.57+4.57)/2	-4.66		
		(-0.16-0.53)x(4.56+4.57)/2	-3.15		
		(-0.56--0.16)x(4.55+4.56)/2	-1.82		
		(-1.26--0.56)x(4.52+4.55)/2	-3.17		
		(-1.65--1.26)x(4.49+4.52)/2	-1.76		
		(-2.35--1.65)x(4.47+4.49)/2	-3.14		
		(-2.74--2.35)x(4.45+4.47)/2	-1.74		
		(-3.58--2.74)x(4.44+4.45)/2	-3.73		
		(-3.83--3.58)x(4.44+4.44)/2	-1.11		
		(-4.27--3.83)x(4.44+4.44)/2	-1.95		
		(-4.92--4.27)x(4.45+4.44)/2	-2.89		
		(-5.29--4.92)x(4.46+4.45)/2	-1.65		
		(-6.01--5.29)x(4.47+4.46)/2	-3.21		
		(-7.00--6.01)x(4.49+4.47)/2	-4.44		
		(-7.10--7.00)x(4.49+4.49)/2	-0.45		
		(-7.28--7.10)x(4.49+4.49)/2	-0.81		
		(-8.19--7.28)x(4.49+4.49)/2	-4.09		
		(-8.71--8.19)x(4.50+4.49)/2	-2.34		
		(-9.28--8.71)x(4.52+4.50)/2	-2.57		
		(-10.29--9.28)x(4.55+4.52)/2	-4.58		
		(-10.37--10.29)x(4.55+4.55)/2	-0.36		
		(-10.42--10.37)x(4.55+4.55)/2	-0.23		
		(-11.47--10.42)x(4.56+4.55)/2	-4.78		
		(-12.13--11.47)x(4.54+4.56)/2	-3.00		
		(-12.56--12.13)x(4.54+4.54)/2	-1.95		
		(-12.75--12.56)x(4.53+4.54)/2	-0.86		
		(-13.30--12.75)x(4.52+4.53)/2	-2.49		
		(-13.55--13.30)x(4.51+4.52)/2	-1.13		
		(-13.65--13.55)x(4.51+4.51)/2	-0.45		
		(-13.84--13.65)x(4.51+4.51)/2	-0.86		
		(-14.74--13.84)x(4.49+4.51)/2	-4.05		
		(-15.56--14.74)x(4.48+4.49)/2	-3.68		
		(-15.83--15.56)x(4.48+4.48)/2	-1.21		
		(-16.31--15.83)x(4.45+4.48)/2	-2.14		
		(-16.92--16.31)x(4.43+4.45)/2	-2.71		
		(-17.27--16.92)x(4.42+4.43)/2	-1.55		
		(-18.01--17.27)x(4.40+4.42)/2	-3.26		
		(-18.58--18.01)x(4.39+4.40)/2	-2.51		
				142.23	
135	A2	(34.91-36.91)x(1.46+1.46)/2	-2.92		
2010.00		(33.29-34.91)x(2.54+1.46)/2	-3.24		
		(32.60-33.29)x(2.54+2.54)/2	-1.75		
		(33.44-32.60)x(2.04+2.04)/2	1.71		
		(34.37-33.44)x(1.54+1.54)/2	1.43		
		(36.10-34.37)x(1.04+1.04)/2	1.80		
		(38.12-36.10)x(0.54+0.54)/2	1.09		
		(38.41-38.12)x(0.46+0.46)/2	0.13		
		(36.91-38.41)x(1.46+0.46)/2	-1.44		
				3.19	
		A RIPORTARE mq			

		CALCOLO DELLE AREE		Foglio n. 6
RILEVATO				
N. SEZIONE PROG.	FIG.	ELEMENTI DI CALCOLO	AREA ELEMENTARE mq	AREA FIGURA mq	NOTE
		RIPORTO mq			
136	A1	(-12.61--17.34)x(7.93+4.77)/2	30.04		
2025.00		(-11.34--12.61)x(7.92+7.93)/2	10.06		
		(-11.65--11.34)x(7.55+7.92)/2	-2.40		
		(-1.75--11.65)x(7.80+7.55)/2	75.98		
		(-0.68--1.75)x(7.83+7.80)/2	8.36		
		(0.68--0.68)x(7.83+7.83)/2	10.65		
		(1.75-0.68)x(7.80+7.83)/2	8.36		
		(11.65-1.75)x(7.55+7.80)/2	75.98		
		(11.34-11.65)x(7.92+7.55)/2	-2.40		
		(12.61-11.34)x(7.93+7.92)/2	10.06		
		(20.65-12.61)x(2.56+7.93)/2	42.17		
		(20.18-20.65)x(2.53+2.56)/2	-1.20		
		(19.10-20.18)x(2.54+2.53)/2	-2.74		
		(19.09-19.10)x(2.54+2.54)/2	-0.03		
		(19.06-19.09)x(2.54+2.54)/2	-0.08		
		(18.00-19.06)x(2.51+2.54)/2	-2.68		
		(17.39-18.00)x(2.46+2.51)/2	-1.52		
		(16.90-17.39)x(2.43+2.46)/2	-1.20		
		(16.05-16.90)x(2.36+2.43)/2	-2.04		
		(15.81-16.05)x(2.34+2.36)/2	-0.56		
		(15.68-15.81)x(2.35+2.34)/2	-0.30		
		(14.72-15.68)x(2.40+2.35)/2	-2.28		
		(13.97-14.72)x(2.43+2.40)/2	-1.81		
		(13.63-13.97)x(2.45+2.43)/2	-0.83		
		(13.04-13.63)x(2.43+2.45)/2	-1.44		
		(12.54-13.04)x(2.41+2.43)/2	-1.21		
		(12.26-12.54)x(2.41+2.41)/2	-0.67		
		(11.45-12.26)x(2.40+2.41)/2	-1.95		
		(10.55-11.45)x(2.39+2.40)/2	-2.16		
		(10.36-10.55)x(2.39+2.39)/2	-0.45		
		(10.03-10.36)x(2.40+2.39)/2	-0.79		
		(9.27-10.03)x(2.45+2.40)/2	-1.84		
		(8.84-9.27)x(2.68+2.45)/2	-1.10		
		(8.18-8.84)x(2.95+2.68)/2	-1.86		
		(7.13-8.18)x(3.86+2.95)/2	-3.58		
		(7.09-7.13)x(3.90+3.86)/2	-0.16		
		(7.02-7.09)x(3.93+3.90)/2	-0.27		
		(6.00-7.02)x(4.30+3.93)/2	-4.20		
		(5.42-6.00)x(4.32+4.30)/2	-2.50		
		(4.91-5.42)x(4.36+4.32)/2	-2.21		
		(4.01-4.91)x(4.39+4.36)/2	-3.94		
		(3.82-4.01)x(4.40+4.39)/2	-0.84		
		(3.07-3.82)x(4.44+4.40)/2	-3.31		
		(2.73-3.07)x(4.46+4.44)/2	-1.51		
		(2.00-2.73)x(4.50+4.46)/2	-3.27		
		(1.64-2.00)x(4.53+4.50)/2	-1.63		
		(1.01-1.64)x(4.54+4.53)/2	-2.86		
		(0.55-1.01)x(4.54+4.54)/2	-2.09		
		(0.29-0.55)x(4.54+4.54)/2	-1.18		
		(-0.54-0.29)x(4.55+4.54)/2	-3.77		
		(-1.43--0.54)x(4.55+4.55)/2	-4.05		
		(-1.63--1.43)x(4.55+4.55)/2	-0.91		
		(-2.00--1.63)x(4.54+4.55)/2	-1.68		
		(-2.73--2.00)x(4.54+4.54)/2	-3.31		
		(-3.14--2.73)x(4.55+4.54)/2	-1.86		
		(-3.82--3.14)x(4.56+4.55)/2	-3.10		
		(-4.85--3.82)x(4.57+4.56)/2	-4.70		
		(-4.91--4.85)x(4.57+4.57)/2	-0.27		
		(-5.01--4.91)x(4.57+4.57)/2	-0.46		
		(-6.00--5.01)x(4.58+4.57)/2	-4.53		
		(-6.56--6.00)x(4.59+4.58)/2	-2.57		
		(-7.09--6.56)x(4.60+4.59)/2	-2.44		
		(-7.34--7.09)x(4.60+4.60)/2	-1.15		
		(-8.02--7.34)x(4.62+4.60)/2	-3.13		
		(-8.14--8.02)x(4.62+4.62)/2	-0.55		
		(-8.18--8.14)x(4.62+4.62)/2	-0.18		
		(-8.27--8.18)x(4.62+4.62)/2	-0.42		
		(-9.27--8.27)x(4.65+4.62)/2	-4.63		
		(-9.98--9.27)x(4.68+4.65)/2	-3.31		
		(-10.36--9.98)x(4.70+4.68)/2	-1.78		
		(-11.03--10.36)x(4.70+4.70)/2	-3.15		
		(-11.45--11.03)x(4.70+4.70)/2	-1.97		
		(-11.69--11.45)x(4.70+4.70)/2	-1.13		
		(-12.54--11.69)x(4.67+4.70)/2	-3.98		
		(-13.40--12.54)x(4.71+4.67)/2	-4.03		
		(-13.63--13.40)x(4.71+4.71)/2	-1.08		
		(-14.04--13.63)x(4.72+4.71)/2	-1.93		
		(-14.72--14.04)x(4.72+4.72)/2	-3.21		
		(-15.11--14.72)x(4.72+4.72)/2	-1.84		
		(-15.81--15.11)x(4.74+4.72)/2	-3.31		
		(-16.82--15.81)x(4.77+4.74)/2	-4.80		
		(-16.90--16.82)x(4.77+4.77)/2	-0.38		
		(-17.05--16.90)x(4.77+4.77)/2	-0.72		
		(-17.34--17.05)x(4.77+4.77)/2	-1.38		
				120.86	
136	A2	(33.90-30.40)x(2.58+2.58)/2	9.03		
2025.00		(36.15-33.90)x(1.08+2.58)/2	4.12		
		(33.94-36.15)x(1.08+1.08)/2	-2.39		
		(32.65-33.94)x(1.58+1.58)/2	-2.04		
		(30.40-32.65)x(2.08+2.08)/2	-4.68		
				4.04	
136	A3	(36.31-36.15)x(0.98+1.08)/2	0.16		
2025.00		(38.31-36.31)x(0.98+0.98)/2	1.96		
		(39.81-38.31)x(-0.02+0.98)/2	0.72		
		(39.44-39.81)x(-0.02+-0.02)/2	0.01		
		(37.79-39.44)x(0.08+0.08)/2	-0.13		
		(36.15-37.79)x(0.58+0.58)/2	-0.95		
				1.77	
137	A1	(-12.61--16.68)x(7.48+4.76)/2	24.91		
2040.00		(-11.34--12.61)x(7.47+7.48)/2	9.49		
		(-11.65--11.34)x(7.10+7.47)/2	-2.26		
		(-1.75--11.65)x(7.35+7.10)/2	71.53		
		(-0.68--1.75)x(7.38+7.35)/2	7.88		
		(0.68--0.68)x(7.38+7.38)/2	10.04		
		A RIPORTARE mq	121.59		

		CALCOLO DELLE AREE		Foglio n. 7
RILEVATO				
N. SEZIONE PROG.	FIG.	ELEMENTI DI CALCOLO	AREA ELEMENTARE mq	AREA FIGURA mq	NOTE
		RIPORTO mq	121.59		
		(1.75-0.68)x(7.35+7.38)/2	7.88		
		(11.65-1.75)x(7.10+7.35)/2	71.53		
		(11.34-11.65)x(7.47+7.10)/2	-2.26		
		(12.61-11.34)x(7.48+7.47)/2	9.49		
		(19.25-12.61)x(3.05+7.48)/2	34.96		
		(19.10-19.25)x(3.04+3.05)/2	-0.46		
		(18.32-19.10)x(3.19+3.04)/2	-2.43		
		(18.01-18.32)x(3.26+3.19)/2	-1.00		
		(17.29-18.01)x(3.51+3.26)/2	-2.44		
		(16.92-17.29)x(3.64+3.51)/2	-1.32		
		(16.13-16.92)x(3.68+3.64)/2	-2.89		
		(15.83-16.13)x(3.71+3.68)/2	-1.11		
		(15.31-15.83)x(3.71+3.71)/2	-1.93		
		(14.74-15.31)x(3.71+3.71)/2	-2.11		
		(14.42-14.74)x(3.72+3.71)/2	-1.19		
		(13.65-14.42)x(3.74+3.72)/2	-2.87		
		(12.70-13.65)x(3.96+3.74)/2	-3.66		
		(12.56-12.70)x(3.98+3.96)/2	-0.56		
		(12.30-12.56)x(4.07+3.98)/2	-1.05		
		(11.47-12.30)x(4.28+4.07)/2	-3.47		
		(10.99-11.47)x(4.31+4.28)/2	-2.06		
		(10.38-10.99)x(4.37+4.31)/2	-2.65		
		(9.29-10.38)x(4.39+4.37)/2	-4.77		
		(9.28-9.29)x(4.39+4.39)/2	-0.04		
		(8.20-9.28)x(4.40+4.39)/2	-4.75		
		(7.57-8.20)x(4.41+4.40)/2	-2.78		
		(7.10-7.57)x(4.41+4.41)/2	-2.07		
		(6.28-7.10)x(4.41+4.41)/2	-3.62		
		(6.01-6.28)x(4.41+4.41)/2	-1.19		
		(5.86-6.01)x(4.41+4.41)/2	-0.66		
		(4.92-5.86)x(4.41+4.41)/2	-4.15		
		(4.15-4.92)x(4.42+4.41)/2	-3.40		
		(3.83-4.15)x(4.43+4.42)/2	-1.42		
		(3.27-3.83)x(4.43+4.43)/2	-2.48		
		(2.74-3.27)x(4.44+4.43)/2	-2.35		
		(2.44-2.74)x(4.44+4.44)/2	-1.33		
		(1.65-2.44)x(4.47+4.44)/2	-3.52		
		(0.73-1.65)x(4.50+4.47)/2	-4.13		
		(0.56-0.73)x(4.50+4.50)/2	-0.76		
		(0.27-0.56)x(4.51+4.50)/2	-1.31		
		(-0.53-0.27)x(4.52+4.51)/2	-3.61		
		(-0.98--0.53)x(4.54+4.52)/2	-2.04		
		(-1.62--0.98)x(4.56+4.54)/2	-2.91		
		(-1.92--1.62)x(4.58+4.56)/2	-1.37		
		(-2.71--1.92)x(4.60+4.58)/2	-3.63		
		(-2.74--2.71)x(4.60+4.60)/2	-0.14		
		(-3.80--2.74)x(4.58+4.60)/2	-4.87		
		(-4.40--3.80)x(4.58+4.58)/2	-2.75		
		(-4.89--4.40)x(4.58+4.58)/2	-2.24		
		(-5.75--4.89)x(4.58+4.58)/2	-3.94		
		(-5.98--5.75)x(4.58+4.58)/2	-1.05		
		(-6.11--5.98)x(4.58+4.58)/2	-0.60		
		(-7.07--6.11)x(4.57+4.58)/2	-4.39		
		(-7.82--7.07)x(4.55+4.57)/2	-3.42		
		(-8.16--7.82)x(4.53+4.55)/2	-1.54		
		(-8.76--8.16)x(4.52+4.53)/2	-2.71		
		(-9.25--8.76)x(4.51+4.52)/2	-2.21		
		(-9.53--9.25)x(4.50+4.51)/2	-1.26		
		(-10.34--9.53)x(4.50+4.50)/2	-3.65		
		(-11.25--10.34)x(4.49+4.50)/2	-4.09		
		(-11.43--11.25)x(4.49+4.49)/2	-0.81		
		(-11.77--11.43)x(4.49+4.49)/2	-1.53		
		(-12.53--11.77)x(4.49+4.49)/2	-3.41		
		(-13.12--12.53)x(4.50+4.49)/2	-2.65		
		(-13.62--13.12)x(4.50+4.50)/2	-2.25		
		(-14.67--13.62)x(4.53+4.50)/2	-4.74		
		(-14.71--14.67)x(4.53+4.53)/2	-0.18		
		(-14.78--14.71)x(4.53+4.53)/2	-0.32		
		(-15.80--14.78)x(4.66+4.53)/2	-4.69		
		(-16.38--15.80)x(4.72+4.66)/2	-2.72		
		(-16.68--16.38)x(4.76+4.72)/2	-1.42		
				88.12	
137 2040.00	A2	(33.09-21.78)x(3.07+3.07)/2	34.72		
		(35.91-33.09)x(1.18+3.07)/2	5.99		
		(33.65-35.91)x(1.18+1.18)/2	-2.67		
		(32.44-33.65)x(1.57+1.57)/2	-1.90		
		(30.39-32.44)x(2.07+2.07)/2	-4.24		
		(21.78-30.39)x(2.57+2.57)/2	-22.13		
				9.77	
137 2040.00	A3	(38.32-37.52)x(0.91+0.91)/2	0.73		
		(39.82-38.32)x(-0.09+0.91)/2	0.61		
		(38.65-39.82)x(-0.09+-0.09)/2	0.11		
		(37.52-38.65)x(0.41+0.41)/2	-0.46		
				0.99	
138 2055.00	A1	(-12.61--16.17)x(7.04+4.67)/2	20.84		
		(-11.34--12.61)x(7.03+7.04)/2	8.93		
		(-11.65--11.34)x(6.67+7.03)/2	-2.12		
		(-1.75--11.65)x(6.91+6.67)/2	67.22		
		(-0.68--1.75)x(6.94+6.91)/2	7.41		
		(0.68--0.68)x(6.94+6.94)/2	9.44		
		(1.75-0.68)x(6.91+6.94)/2	7.41		
		(11.65-1.75)x(6.67+6.91)/2	67.22		
		(11.34-11.65)x(7.03+6.67)/2	-2.12		
		(12.61-11.34)x(7.04+7.03)/2	8.93		
		(16.97-12.61)x(4.13+7.04)/2	24.35		
		(16.94-16.97)x(4.13+4.13)/2	-0.12		
		(16.57-16.94)x(4.14+4.13)/2	-1.53		
		(15.84-16.57)x(4.18+4.14)/2	-3.04		
		(14.86-15.84)x(4.24+4.18)/2	-4.13		
		(14.75-14.86)x(4.24+4.24)/2	-0.47		
		(14.57-14.75)x(4.25+4.24)/2	-0.76		
		(13.66-14.57)x(4.29+4.25)/2	-3.89		
		(13.15-13.66)x(4.32+4.29)/2	-2.20		
		(12.57-13.15)x(4.34+4.32)/2	-2.51		
		A RIPORTARE mq	198.86		

		CALCOLO DELLE AREE		Foglio n. 8
RILEVATO				
N. SEZIONE PROG.	FIG.	ELEMENTI DI CALCOLO	AREA ELEMENTARE mq	AREA FIGURA mq	NOTE
		RIPORTO mq	198.86		
		(12.30-12.57)x(4.35+4.34)/2	-1.17		
		(11.56-12.30)x(4.36+4.35)/2	-3.22		
		(11.50-11.56)x(4.36+4.36)/2	-0.26		
		(11.48-11.50)x(4.36+4.36)/2	-0.09		
		(11.44-11.48)x(4.36+4.36)/2	-0.17		
		(10.39-11.44)x(4.38+4.36)/2	-4.59		
		(9.73-10.39)x(4.39+4.38)/2	-2.89		
		(9.30-9.73)x(4.40+4.39)/2	-1.89		
		(8.55-9.30)x(4.40+4.40)/2	-3.30		
		(8.21-8.55)x(4.40+4.40)/2	-1.50		
		(8.02-8.21)x(4.40+4.40)/2	-0.84		
		(7.12-8.02)x(4.42+4.40)/2	-3.97		
		(6.31-7.12)x(4.45+4.42)/2	-3.59		
		(6.03-6.31)x(4.46+4.45)/2	-1.25		
		(5.54-6.03)x(4.48+4.46)/2	-2.19		
		(4.94-5.54)x(4.49+4.48)/2	-2.69		
		(4.60-4.94)x(4.51+4.49)/2	-1.53		
		(3.85-4.60)x(4.53+4.51)/2	-3.39		
		(2.88-3.85)x(4.58+4.53)/2	-4.42		
		(2.76-2.88)x(4.58+4.58)/2	-0.55		
		(2.54-2.76)x(4.59+4.58)/2	-1.01		
		(1.67-2.54)x(4.63+4.59)/2	-4.01		
		(1.17-1.67)x(4.62+4.63)/2	-2.31		
		(0.58-1.17)x(4.62+4.62)/2	-2.73		
		(-0.47-0.58)x(4.65+4.62)/2	-4.87		
		(-0.51--0.47)x(4.66+4.65)/2	-0.19		
		(-0.54--0.51)x(4.66+4.66)/2	-0.14		
		(-1.60--0.54)x(4.70+4.66)/2	-4.96		
		(-2.25--1.60)x(4.72+4.70)/2	-3.06		
		(-2.69--2.25)x(4.73+4.72)/2	-2.08		
		(-3.48--2.69)x(4.75+4.73)/2	-3.74		
		(-3.79--3.48)x(4.76+4.75)/2	-1.47		
		(-3.96--3.79)x(4.76+4.76)/2	-0.81		
		(-4.88--3.96)x(4.75+4.76)/2	-4.37		
		(-5.67--4.88)x(4.70+4.75)/2	-3.73		
		(-5.97--5.67)x(4.69+4.70)/2	-1.41		
		(-6.49--5.97)x(4.66+4.69)/2	-2.43		
		(-7.06--6.49)x(4.64+4.66)/2	-2.65		
		(-7.71--7.06)x(4.65+4.64)/2	-3.02		
		(-8.15--7.71)x(4.64+4.65)/2	-2.04		
		(-9.09--8.15)x(4.64+4.64)/2	-4.36		
		(-9.24--9.09)x(4.64+4.64)/2	-0.70		
		(-9.50--9.24)x(4.63+4.64)/2	-1.21		
		(-10.33--9.50)x(4.62+4.63)/2	-3.84		
		(-10.80--10.33)x(4.65+4.62)/2	-2.18		
		(-11.42--10.80)x(4.67+4.65)/2	-2.89		
		(-12.51--11.42)x(4.71+4.67)/2	-5.11		
		(-13.60--12.51)x(4.68+4.71)/2	-5.12		
		(-14.22--13.60)x(4.66+4.68)/2	-2.90		
		(-14.69--14.22)x(4.66+4.66)/2	-2.19		
		(-15.52--14.69)x(4.65+4.66)/2	-3.86		
		(-15.78--15.52)x(4.65+4.65)/2	-1.21		
		(-15.93--15.78)x(4.66+4.65)/2	-0.70		
		(-16.17--15.93)x(4.67+4.66)/2	-1.12		
				66.94	
138 2055.00	A2	(32.21-17.58)x(4.09+4.09)/2	59.84		
		(36.39-32.21)x(1.30+4.09)/2	11.27		
		(38.39-36.39)x(1.30+1.30)/2	2.60		
		(39.89-38.39)x(0.30+1.30)/2	1.20		
		(38.41-39.89)x(0.30+0.30)/2	-0.44		
		(36.91-38.41)x(0.59+0.59)/2	-0.89		
		(34.55-36.91)x(1.09+1.09)/2	-2.57		
		(33.34-34.55)x(1.59+1.59)/2	-1.92		
		(31.22-33.34)x(2.09+2.09)/2	-4.43		
		(23.78-31.22)x(2.59+2.59)/2	-19.27		
		(22.60-23.78)x(3.09+3.09)/2	-3.65		
		(17.58-22.60)x(3.59+3.59)/2	-18.02		
				23.72	
139 2070.00	A1	(-12.61--14.98)x(6.63+5.05)/2	13.84		
		(-11.34--12.61)x(6.63+6.63)/2	8.42		
		(-11.65--11.34)x(6.26+6.63)/2	-2.00		
		(-1.75--11.65)x(6.51+6.26)/2	63.21		
		(-0.68--1.75)x(6.54+6.51)/2	6.98		
		(0.68--0.68)x(6.54+6.54)/2	8.89		
		(1.75-0.68)x(6.51+6.54)/2	6.98		
		(11.65-1.75)x(6.26+6.51)/2	63.21		
		(11.34-11.65)x(6.63+6.26)/2	-2.00		
		(12.61-11.34)x(6.63+6.63)/2	8.42		
		(16.20-12.61)x(4.24+6.63)/2	19.51		
		(15.86-16.20)x(4.28+4.24)/2	-1.45		
		(15.30-15.86)x(4.30+4.28)/2	-2.40		
		(14.77-15.30)x(4.34+4.30)/2	-2.29		
		(13.83-14.77)x(4.37+4.34)/2	-4.09		
		(13.68-13.83)x(4.38+4.37)/2	-0.66		
		(13.59-13.68)x(4.39+4.38)/2	-0.39		
		(12.59-13.59)x(4.44+4.39)/2	-4.42		
		(11.88-12.59)x(4.45+4.44)/2	-3.16		
		(11.50-11.88)x(4.47+4.45)/2	-1.69		
		(10.82-11.50)x(4.50+4.47)/2	-3.05		
		(10.41-10.82)x(4.51+4.50)/2	-1.85		
		(10.17-10.41)x(4.51+4.51)/2	-1.08		
		(9.32-10.17)x(4.51+4.51)/2	-3.83		
		(8.46-9.32)x(4.52+4.51)/2	-3.88		
		(8.23-8.46)x(4.52+4.52)/2	-1.04		
		(7.81-8.23)x(4.52+4.52)/2	-1.90		
		(7.14-7.81)x(4.52+4.52)/2	-3.03		
		(6.52-7.14)x(4.50+4.52)/2	-2.80		
		(6.05-6.52)x(4.49+4.50)/2	-2.11		
		(5.04-6.05)x(4.51+4.49)/2	-4.54		
		(4.95-5.04)x(4.51+4.51)/2	-0.41		
		(4.81-4.95)x(4.52+4.51)/2	-0.63		
		(3.86-4.81)x(4.54+4.52)/2	-4.30		
		(3.33-3.86)x(4.56+4.54)/2	-2.41		
		(2.77-3.33)x(4.58+4.56)/2	-2.56		
		A RIPORTARE mq	135.49		

		CALCOLO DELLE AREE		Foglio n. 9
RILEVATO				
N. SEZIONE PROG.	FIG.	ELEMENTI DI CALCOLO	AREA ELEMENTARE mq	AREA FIGURA mq	NOTE
		RIPORTO mq	135.49		
		(1.80-2.77)x(4.59+4.58)/2	-4.45		
		(1.68-1.80)x(4.59+4.59)/2	-0.55		
		(1.62-1.68)x(4.59+4.59)/2	-0.28		
		(0.59-1.62)x(4.60+4.59)/2	-4.73		
		(-0.09-0.59)x(4.62+4.60)/2	-3.13		
		(-0.50--0.09)x(4.62+4.62)/2	-1.89		
		(-1.21--0.50)x(4.66+4.62)/2	-3.29		
		(-1.59--1.21)x(4.68+4.66)/2	-1.77		
		(-1.80--1.59)x(4.70+4.68)/2	-0.98		
		(-2.68--1.80)x(4.78+4.70)/2	-4.17		
		(-3.51--2.68)x(4.82+4.78)/2	-3.98		
		(-3.77--3.51)x(4.84+4.82)/2	-1.26		
		(-4.22--3.77)x(4.84+4.84)/2	-2.18		
		(-4.86--4.22)x(4.83+4.84)/2	-3.09		
		(-5.22--4.86)x(4.84+4.83)/2	-1.74		
		(-5.95--5.22)x(4.84+4.84)/2	-3.53		
		(-6.94--5.95)x(4.88+4.84)/2	-4.81		
		(-7.04--6.94)x(4.89+4.88)/2	-0.49		
		(-7.23--7.04)x(4.90+4.89)/2	-0.93		
		(-8.13--7.23)x(4.92+4.90)/2	-4.42		
		(-8.65--8.13)x(4.96+4.92)/2	-2.57		
		(-9.22--8.65)x(4.99+4.96)/2	-2.84		
		(-10.24--9.22)x(5.09+4.99)/2	-5.14		
		(-10.31--10.24)x(5.10+5.09)/2	-0.36		
		(-10.36--10.31)x(5.10+5.10)/2	-0.25		
		(-11.40--10.36)x(5.09+5.10)/2	-5.30		
		(-12.07--11.40)x(5.06+5.09)/2	-3.40		
		(-12.49--12.07)x(5.05+5.06)/2	-2.12		
		(-12.69--12.49)x(5.05+5.05)/2	-1.01		
		(-13.25--12.69)x(5.04+5.05)/2	-2.83		
		(-13.49--13.25)x(5.04+5.04)/2	-1.21		
		(-13.58--13.49)x(5.04+5.04)/2	-0.45		
		(-13.78--13.58)x(5.04+5.04)/2	-1.01		
		(-14.68--13.78)x(5.04+5.04)/2	-4.54		
		(-14.98--14.68)x(5.05+5.04)/2	-1.51		
				49.28	
139 2070.00	A2	(32.64-16.86)x(4.16+4.16)/2	65.64		
		(37.05-32.64)x(1.22+4.16)/2	11.86		
		(39.05-37.05)x(1.22+1.22)/2	2.44		
		(40.55-39.05)x(0.22+1.22)/2	1.08		
		(38.22-40.55)x(0.22+0.22)/2	-0.51		
		(36.69-38.22)x(0.66+0.66)/2	-1.01		
		(33.29-36.69)x(1.16+1.16)/2	-3.94		
		(32.16-33.29)x(1.66+1.66)/2	-1.88		
		(31.09-32.16)x(2.16+2.16)/2	-2.31		
		(25.33-31.09)x(2.66+2.66)/2	-15.32		
		(21.74-25.33)x(3.16+3.16)/2	-11.34		
		(16.86-21.74)x(3.66+3.66)/2	-17.86		
				26.85	
140 2085.00	A1	(-12.61--13.67)x(6.27+5.56)/2	6.27		
		(-11.34--12.61)x(6.26+6.27)/2	7.96		
		(-11.65--11.34)x(5.90+6.26)/2	-1.88		
		(-1.75--11.65)x(6.15+5.90)/2	59.65		
		(-0.68--1.75)x(6.17+6.15)/2	6.59		
		(0.68--0.68)x(6.17+6.17)/2	8.39		
		(1.75-0.68)x(6.15+6.17)/2	6.59		
		(11.65-1.75)x(5.90+6.15)/2	59.65		
		(11.34-11.65)x(6.26+5.90)/2	-1.88		
		(12.61-11.34)x(6.27+6.26)/2	7.96		
		(15.27-12.61)x(4.49+6.27)/2	14.31		
		(14.79-15.27)x(4.50+4.49)/2	-2.16		
		(14.04-14.79)x(4.50+4.50)/2	-3.38		
		(13.69-14.04)x(4.50+4.50)/2	-1.57		
		(13.09-13.69)x(4.52+4.50)/2	-2.71		
		(12.60-13.09)x(4.53+4.52)/2	-2.22		
		(12.33-12.60)x(4.53+4.53)/2	-1.22		
		(11.51-12.33)x(4.55+4.53)/2	-3.72		
		(10.62-11.51)x(4.54+4.55)/2	-4.05		
		(10.42-10.62)x(4.54+4.54)/2	-0.91		
		(10.08-10.42)x(4.54+4.54)/2	-1.54		
		(9.33-10.08)x(4.52+4.54)/2	-3.40		
		(8.91-9.33)x(4.54+4.52)/2	-1.90		
		(8.24-8.91)x(4.55+4.54)/2	-3.05		
		(7.19-8.24)x(4.60+4.55)/2	-4.80		
		(7.15-7.19)x(4.60+4.60)/2	-0.18		
		(7.07-7.15)x(4.61+4.60)/2	-0.37		
		(6.06-7.07)x(4.67+4.61)/2	-4.69		
		(5.48-6.06)x(4.71+4.67)/2	-2.72		
		(4.97-5.48)x(4.75+4.71)/2	-2.41		
		(4.07-4.97)x(4.78+4.75)/2	-4.29		
		(3.88-4.07)x(4.79+4.78)/2	-0.91		
		(3.77-3.88)x(4.79+4.79)/2	-0.53		
		(2.79-3.77)x(4.83+4.79)/2	-4.71		
		(2.06-2.79)x(4.87+4.83)/2	-3.54		
		(1.70-2.06)x(4.88+4.87)/2	-1.76		
		(1.53-1.70)x(4.88+4.88)/2	-0.83		
		(1.06-1.53)x(4.88+4.88)/2	-2.29		
		(0.73-1.06)x(4.88+4.88)/2	-1.61		
		(0.61-0.73)x(4.87+4.88)/2	-0.58		
		(0.35-0.61)x(4.87+4.87)/2	-1.27		
		(-0.48-0.35)x(4.86+4.87)/2	-4.04		
		(-1.36--0.48)x(4.90+4.86)/2	-4.29		
		(-1.57--1.36)x(4.91+4.90)/2	-1.03		
		(-1.95--1.57)x(4.93+4.91)/2	-1.87		
		(-2.66--1.95)x(4.96+4.93)/2	-3.51		
		(-3.07--2.66)x(4.96+4.96)/2	-2.03		
		(-3.75--3.07)x(4.96+4.96)/2	-3.37		
		(-4.78--3.75)x(4.93+4.96)/2	-5.09		
		(-4.85--4.78)x(4.93+4.93)/2	-0.35		
		(-4.96--4.85)x(4.93+4.93)/2	-0.54		
		(-5.94--4.96)x(4.93+4.93)/2	-4.83		
		(-6.49--5.94)x(4.94+4.93)/2	-2.71		
		(-7.03--6.49)x(4.95+4.94)/2	-2.67		
		(-7.97--7.03)x(5.05+4.95)/2	-4.70		
		A RIPORTARE mq	63.26		

		CALCOLO DELLE AREE		Foglio n. 10
RILEVATO				
N. SEZIONE PROG.	FIG.	ELEMENTI DI CALCOLO	AREA ELEMENTARE mq	AREA FIGURA mq	NOTE
		RIPORTO mq	63.26		
		(-8.12--7.97)x(5.06+5.05)/2	-0.76		
		(-8.20--8.12)x(5.07+5.06)/2	-0.41		
		(-9.21--8.20)x(5.23+5.07)/2	-5.20		
		(-9.91--9.21)x(5.25+5.23)/2	-3.67		
		(-10.30--9.91)x(5.28+5.25)/2	-2.05		
		(-10.98--10.30)x(5.43+5.28)/2	-3.64		
		(-11.39--10.98)x(5.54+5.43)/2	-2.25		
		(-11.62--11.39)x(5.56+5.54)/2	-1.28		
		(-12.48--11.62)x(5.65+5.56)/2	-4.82		
		(-13.33--12.48)x(5.58+5.65)/2	-4.77		
		(-13.57--13.33)x(5.57+5.58)/2	-1.34		
		(-13.67--13.57)x(5.56+5.57)/2	-0.56		
				32.51	
140	A2	(32.66-15.82)x(4.49+4.49)/2	75.61		
2085.00		(37.64-32.66)x(1.17+4.49)/2	14.09		
		(39.64-37.64)x(1.17+1.17)/2	2.34		
		(41.14-39.64)x(0.17+1.17)/2	1.00		
		(38.68-41.14)x(0.17+0.17)/2	-0.42		
		(37.24-38.68)x(0.49+0.49)/2	-0.71		
		(34.82-37.24)x(0.99+0.99)/2	-2.40		
		(33.58-34.82)x(1.49+1.49)/2	-1.85		
		(31.99-33.58)x(1.99+1.99)/2	-3.16		
		(29.75-31.99)x(2.49+2.49)/2	-5.58		
		(25.16-29.75)x(2.99+2.99)/2	-13.72		
		(23.54-25.16)x(3.49+3.49)/2	-5.65		
		(15.82-23.54)x(3.99+3.99)/2	-30.80		
				28.75	
141	A1	(-12.61--11.34)x(5.94+5.94)/2	-7.54		
2100.00		(-13.25--12.61)x(5.52+5.94)/2	-3.67		
		(-12.89--13.25)x(5.51+5.52)/2	1.99		
		(-12.46--12.89)x(5.51+5.51)/2	2.37		
		(-11.72--12.46)x(5.46+5.51)/2	4.06		
		(-11.37--11.72)x(5.44+5.46)/2	1.91		
		(-11.18--11.37)x(5.50+5.44)/2	1.04		
		(-10.61--11.18)x(5.60+5.50)/2	3.16		
		(-11.65--10.61)x(5.57+5.60)/2	-5.81		
		(-11.34--11.65)x(5.94+5.57)/2	1.78		
				0.71	
141	A2	(11.34-12.61)x(5.94+5.94)/2	-7.54		
2100.00		(11.65-11.34)x(5.57+5.94)/2	1.78		
		(1.75-11.65)x(5.82+5.57)/2	-56.38		
		(0.68-1.75)x(5.85+5.82)/2	-6.24		
		(-0.68-0.68)x(5.85+5.85)/2	-7.96		
		(-1.75--0.68)x(5.82+5.85)/2	-6.24		
		(-6.77--1.75)x(5.69+5.82)/2	-28.89		
		(-6.05--6.77)x(5.47+5.69)/2	4.02		
		(-5.92--6.05)x(5.44+5.47)/2	0.71		
		(-5.70--5.92)x(5.38+5.44)/2	1.19		
		(-4.83--5.70)x(5.15+5.38)/2	4.58		
		(-4.26--4.83)x(5.13+5.15)/2	2.93		
		(-3.74--4.26)x(5.10+5.13)/2	2.66		
		(-2.69--3.74)x(5.06+5.10)/2	5.33		
		(-2.65--2.69)x(5.06+5.06)/2	0.20		
		(-2.63--2.65)x(5.06+5.06)/2	0.10		
		(-1.56--2.63)x(5.02+5.06)/2	5.39		
		(-0.91--1.56)x(4.98+5.02)/2	3.25		
		(-0.47--0.91)x(4.96+4.98)/2	2.19		
		(0.32--0.47)x(4.89+4.96)/2	3.89		
		(0.62-0.32)x(4.87+4.89)/2	1.46		
		(0.80-0.62)x(4.86+4.87)/2	0.88		
		(1.71-0.80)x(4.81+4.86)/2	4.40		
		(2.51-1.71)x(4.79+4.81)/2	3.84		
		(2.80-2.51)x(4.78+4.79)/2	1.39		
		(3.33-2.80)x(4.76+4.78)/2	2.53		
		(3.89-3.33)x(4.75+4.76)/2	2.66		
		(4.22-3.89)x(4.74+4.75)/2	1.57		
		(4.99-4.22)x(4.72+4.74)/2	3.64		
		(5.93-4.99)x(4.69+4.72)/2	4.42		
		(6.08-5.93)x(4.69+4.69)/2	0.70		
		(6.34-6.08)x(4.68+4.69)/2	1.22		
		(7.17-6.34)x(4.65+4.68)/2	3.87		
		(7.64-7.17)x(4.63+4.65)/2	2.18		
		(8.26-7.64)x(4.61+4.63)/2	2.86		
		(9.34-8.26)x(4.59+4.61)/2	4.97		
		(9.35-9.34)x(4.59+4.59)/2	0.05		
		(10.44-9.35)x(4.64+4.59)/2	5.03		
		(11.06-10.44)x(4.63+4.64)/2	2.87		
		(11.53-11.06)x(4.63+4.63)/2	2.18		
		(12.35-11.53)x(4.58+4.63)/2	3.78		
		(12.62-12.35)x(4.56+4.58)/2	1.23		
		(12.77-12.62)x(4.56+4.56)/2	0.68		
		(13.71-12.77)x(4.55+4.56)/2	4.28		
		(14.15-13.71)x(4.54+4.55)/2	2.00		
		(14.73-14.15)x(4.53+4.54)/2	2.63		
		(12.61-14.73)x(5.94+4.53)/2	-11.10		
				18.81	
141	A3	(17.39-32.15)x(4.51+4.51)/2	-66.57		
2100.00		(24.81-17.39)x(4.01+4.01)/2	29.75		
		(25.97-24.81)x(3.51+3.51)/2	4.07		
		(33.21-25.97)x(3.01+3.01)/2	21.79		
		(33.98-33.21)x(2.51+2.51)/2	1.93		
		(34.74-33.98)x(2.01+2.01)/2	1.53		
		(35.60-34.74)x(1.51+1.51)/2	1.30		
		(37.16-35.60)x(1.01+1.01)/2	1.58		
		(38.62-37.16)x(0.51+0.51)/2	0.74		
		(40.58-38.62)x(0.22+0.22)/2	0.43		
		(39.12-40.58)x(1.20+0.22)/2	-1.04		
		(37.12-39.12)x(1.20+1.20)/2	-2.40		
		(32.15-37.12)x(4.51+1.20)/2	-14.19		
				21.08	
142	A1	(-14.31--14.66)x(5.61+5.38)/2	1.92		
2115.00		(-13.05--14.31)x(5.61+5.61)/2	7.07		
		(-13.24--13.05)x(5.37+5.61)/2	-1.04		
		(-13.54--13.24)x(5.38+5.37)/2	-1.61		
		A RIPORTARE mq	6.34		

	CALCOLO DELLE AREE		Foglio n. 11

RILEVATO

N. SEZIONE PROG.	FIG.	ELEMENTI DI CALCOLO	AREA ELEMENTARE mq	AREA FIGURA mq	NOTE
		RIPORTO mq	6.34		
		(-14.16--13.54)x(5.37+5.38)/2	-3.33		
		(-14.63--14.16)x(5.38+5.37)/2	-2.53		
		(-14.66--14.63)x(5.38+5.38)/2	-0.16		
				0.32	
142	A2	(-1.75--11.02)x(5.53+5.30)/2	50.20		
2115.00		(-0.68--1.75)x(5.56+5.53)/2	5.93		
		(0.68--0.68)x(5.56+5.56)/2	7.56		
		(1.75-0.68)x(5.53+5.56)/2	5.93		
		(13.35-1.75)x(5.24+5.53)/2	62.47		
		(13.04-13.35)x(5.61+5.24)/2	-1.68		
		(14.31-13.04)x(5.61+5.61)/2	7.12		
		(15.71-14.31)x(4.68+5.61)/2	7.20		
		(14.93-15.71)x(4.70+4.68)/2	-3.66		
		(14.82-14.93)x(4.71+4.70)/2	-0.52		
		(14.62-14.82)x(4.71+4.71)/2	-0.94		
		(13.73-14.62)x(4.71+4.71)/2	-4.19		
		(13.22-13.73)x(4.72+4.71)/2	-2.40		
		(12.63-13.22)x(4.72+4.72)/2	-2.78		
		(11.61-12.63)x(4.77+4.72)/2	-4.84		
		(11.54-11.61)x(4.78+4.77)/2	-0.33		
		(11.50-11.54)x(4.78+4.78)/2	-0.19		
		(10.45-11.50)x(4.88+4.78)/2	-5.07		
		(9.79-10.45)x(4.88+4.88)/2	-3.22		
		(9.36-9.79)x(4.89+4.88)/2	-2.10		
		(9.16-9.36)x(4.89+4.89)/2	-0.98		
		(8.60-9.16)x(4.91+4.89)/2	-2.74		
		(8.36-8.60)x(4.91+4.91)/2	-1.18		
		(8.27-8.36)x(4.92+4.91)/2	-0.44		
		(8.08-8.27)x(4.92+4.92)/2	-0.93		
		(7.18-8.08)x(4.97+4.92)/2	-4.45		
		(6.37-7.18)x(5.00+4.97)/2	-4.04		
		(6.09-6.37)x(5.01+5.00)/2	-1.40		
		(5.60-6.09)x(5.01+5.01)/2	-2.45		
		(5.00-5.60)x(5.01+5.01)/2	-3.01		
		(4.66-5.00)x(5.02+5.01)/2	-1.71		
		(3.91-4.66)x(5.03+5.02)/2	-3.77		
		(2.95-3.91)x(5.06+5.03)/2	-4.84		
		(2.82-2.95)x(5.06+5.06)/2	-0.66		
		(2.59-2.82)x(5.07+5.06)/2	-1.16		
		(1.73-2.59)x(5.10+5.07)/2	-4.37		
		(1.24-1.73)x(5.13+5.10)/2	-2.51		
		(0.64-1.24)x(5.15+5.13)/2	-3.08		
		(-0.42-0.64)x(5.17+5.15)/2	-5.47		
		(-0.45--0.42)x(5.17+5.17)/2	-0.16		
		(-0.47--0.45)x(5.17+5.17)/2	-0.10		
		(-1.54--0.47)x(5.21+5.17)/2	-5.55		
		(-2.18--1.54)x(5.21+5.21)/2	-3.33		
		(-2.63--2.18)x(5.21+5.21)/2	-2.34		
		(-3.43--2.63)x(5.19+5.21)/2	-4.16		
		(-3.72--3.43)x(5.19+5.19)/2	-1.51		
		(-3.89--3.72)x(5.19+5.19)/2	-0.88		
		(-4.81--3.89)x(5.18+5.19)/2	-4.77		
		(-5.60--4.81)x(5.20+5.18)/2	-4.10		
		(-5.90--5.60)x(5.20+5.20)/2	-1.56		
		(-6.44--5.90)x(5.20+5.20)/2	-2.81		
		(-7.00--6.44)x(5.20+5.20)/2	-2.91		
		(-7.31--7.00)x(5.21+5.20)/2	-1.61		
		(-8.09--7.31)x(5.22+5.21)/2	-4.07		
		(-9.02--8.09)x(5.23+5.22)/2	-4.86		
		(-9.18--9.02)x(5.23+5.23)/2	-0.84		
		(-9.25--9.18)x(5.23+5.23)/2	-0.37		
		(-9.45--9.25)x(5.24+5.23)/2	-1.05		
		(-10.05--9.45)x(5.26+5.24)/2	-3.15		
		(-10.27--10.05)x(5.26+5.26)/2	-1.16		
		(-10.73--10.27)x(5.29+5.26)/2	-2.43		
		(-11.02--10.73)x(5.30+5.29)/2	-1.54		
				10.04	
142	A2	(16.29-32.84)x(4.65+4.65)/2	-76.96		
2115.00		(24.55-16.29)x(4.15+4.15)/2	34.28		
		(25.72-24.55)x(3.65+3.65)/2	4.27		
		(29.21-25.72)x(3.15+3.15)/2	10.99		
		(33.64-29.21)x(2.65+2.65)/2	11.74		
		(34.47-33.64)x(2.15+2.15)/2	1.78		
		(35.32-34.47)x(1.65+1.65)/2	1.40		
		(36.73-35.32)x(1.15+1.15)/2	1.62		
		(38.25-36.73)x(0.65+0.65)/2	0.99		
		(41.42-38.25)x(0.15+0.15)/2	0.48		
		(41.62-41.42)x(0.13+0.15)/2	0.03		
		(40.12-41.62)x(1.13+0.13)/2	-0.94		
		(38.12-40.12)x(1.13+1.13)/2	-2.26		
		(32.84-38.12)x(4.65+1.13)/2	-15.26		
				27.84	
143	A1	(-1.75--3.05)x(5.28+5.25)/2	6.84		
2130.00		(-0.68--1.75)x(5.30+5.28)/2	5.66		
		(0.68--0.68)x(5.30+5.30)/2	7.21		
		(1.75-0.68)x(5.28+5.30)/2	5.66		
		(15.15-1.75)x(4.94+5.28)/2	68.47		
		(14.84-15.15)x(5.31+4.94)/2	-1.59		
		(16.11-14.84)x(5.31+5.31)/2	6.74		
		(16.97-16.11)x(4.74+5.31)/2	4.32		
		(16.89-16.97)x(4.74+4.74)/2	-0.38		
		(15.92-16.89)x(4.74+4.74)/2	-4.60		
		(15.37-15.92)x(4.75+4.74)/2	-2.61		
		(14.83-15.37)x(4.76+4.75)/2	-2.57		
		(13.88-14.83)x(4.75+4.76)/2	-4.52		
		(13.74-13.88)x(4.75+4.75)/2	-0.67		
		(13.66-13.74)x(4.75+4.75)/2	-0.38		
		(12.65-13.66)x(4.75+4.75)/2	-4.80		
		(11.95-12.65)x(4.79+4.75)/2	-3.34		
		(11.56-11.95)x(4.82+4.79)/2	-1.87		
		(10.87-11.56)x(4.87+4.82)/2	-3.34		
		(10.47-10.87)x(4.89+4.87)/2	-1.95		
		(10.24-10.47)x(4.90+4.89)/2	-1.13		
		(9.38-10.24)x(4.93+4.90)/2	-4.23		
		A RIPORTARE mq	66.92		

		CALCOLO DELLE AREE		Foglio n. 12
RILEVATO				
N. SEZIONE PROG.	FIG.	ELEMENTI DI CALCOLO	AREA ELEMENTARE mq	AREA FIGURA mq	NOTE
		RIPORTO mq	66.92		
		(8.53-9.38)x(4.97+4.93)/2	-4.21		
		(8.29-8.53)x(4.98+4.97)/2	-1.19		
		(7.87-8.29)x(4.99+4.98)/2	-2.09		
		(7.20-7.87)x(5.00+4.99)/2	-3.35		
		(6.82-7.20)x(5.00+5.00)/2	-1.90		
		(6.11-6.82)x(5.00+5.00)/2	-3.55		
		(5.11-6.11)x(4.98+5.00)/2	-4.99		
		(5.02-5.11)x(4.97+4.98)/2	-0.45		
		(4.86-5.02)x(4.97+4.97)/2	-0.80		
		(3.93-4.86)x(4.98+4.97)/2	-4.63		
		(3.37-3.93)x(4.99+4.98)/2	-2.79		
		(2.84-3.37)x(5.02+4.99)/2	-2.65		
		(1.85-2.84)x(5.10+5.02)/2	-5.01		
		(1.74-1.85)x(5.11+5.10)/2	-0.56		
		(1.69-1.74)x(5.12+5.11)/2	-0.26		
		(0.65-1.69)x(5.17+5.12)/2	-5.35		
		(-0.03-0.65)x(5.17+5.17)/2	-3.52		
		(-0.44--0.03)x(5.18+5.17)/2	-2.12		
		(-1.16--0.44)x(5.18+5.18)/2	-3.73		
		(-1.53--1.16)x(5.17+5.18)/2	-1.91		
		(-1.74--1.53)x(5.17+5.17)/2	-1.09		
		(-2.62--1.74)x(5.14+5.17)/2	-4.54		
		(-3.05--2.62)x(5.25+5.14)/2	-2.23		
				4.00	
144	A1	(-0.68--0.72)x(5.09+5.09)/2	0.20		
2145.00		(0.68--0.68)x(5.09+5.09)/2	6.92		
		(1.75-0.68)x(5.06+5.09)/2	5.43		
		(3.35-1.75)x(5.02+5.06)/2	8.06		
		(2.85-3.35)x(5.02+5.02)/2	-2.51		
		(2.13-2.85)x(5.03+5.02)/2	-3.62		
		(1.76-2.13)x(5.04+5.03)/2	-1.86		
		(1.11-1.76)x(5.04+5.04)/2	-3.28		
		(0.67-1.11)x(5.04+5.04)/2	-2.22		
		(0.42-0.67)x(5.04+5.04)/2	-1.26		
		(-0.42-0.42)x(5.06+5.04)/2	-4.24		
		(-0.72--0.42)x(5.09+5.06)/2	-1.52		
				0.10	
144	A2	(14.84-14.91)x(5.09+5.01)/2	-0.35		
2145.00		(16.11-14.84)x(5.10+5.09)/2	6.47		
		(16.35-16.11)x(4.93+5.10)/2	1.20		
		(16.15-16.35)x(4.95+4.93)/2	-0.99		
		(15.99-16.15)x(4.95+4.95)/2	-0.79		
		(15.94-15.99)x(4.96+4.95)/2	-0.25		
		(15.81-15.94)x(4.97+4.96)/2	-0.65		
		(14.91-15.81)x(5.01+4.97)/2	-4.49		
				0.15	
145	A1	(13.14-13.19)x(4.96+4.89)/2	-0.25		
2160.00		(14.41-13.14)x(4.96+4.96)/2	6.30		
		(14.58-14.41)x(4.85+4.96)/2	0.83		
		(14.55-14.58)x(4.85+4.85)/2	-0.15		
		(13.77-14.55)x(4.84+4.85)/2	-3.78		
		(13.19-13.77)x(4.89+4.84)/2	-2.82		
				0.13	
152	A1	(-12.61--12.88)x(4.75+4.57)/2	1.26		
2265.00		(-11.34--12.61)x(4.74+4.75)/2	6.03		
		(-11.55--11.34)x(4.49+4.74)/2	-0.97		
		(-12.29--11.55)x(4.50+4.49)/2	-3.33		
		(-12.88--12.29)x(4.57+4.50)/2	-2.68		
				0.31	
152	A2	(11.34-11.45)x(4.74+4.62)/2	-0.51		
2265.00		(12.61-11.34)x(4.75+4.74)/2	6.03		
		(12.80-12.61)x(4.62+4.75)/2	0.89		
		(12.79-12.80)x(4.62+4.62)/2	-0.05		
		(12.53-12.79)x(4.62+4.62)/2	-1.20		
		(11.70-12.53)x(4.61+4.62)/2	-3.83		
		(11.45-11.70)x(4.62+4.61)/2	-1.15		
				0.18	
153	A1	(11.34-11.36)x(4.77+4.76)/2	-0.10		
2280.00		(12.61-11.34)x(4.78+4.77)/2	6.06		
		(12.69-12.61)x(4.72+4.78)/2	0.38		
		(12.51-12.69)x(4.73+4.72)/2	-0.85		
		(11.71-12.51)x(4.74+4.73)/2	-3.79		
		(11.36-11.71)x(4.76+4.74)/2	-1.66		
				0.04	
154	A1	(-1.75--2.54)x(4.69+4.67)/2	3.70		
2295.00		(-0.68--1.75)x(4.71+4.69)/2	5.03		
		(0.68--0.68)x(4.71+4.71)/2	6.41		
		(1.75-0.68)x(4.69+4.71)/2	5.03		
		(6.54-1.75)x(4.57+4.69)/2	22.18		
		(6.28-6.54)x(4.54+4.57)/2	-1.18		
		(5.75-6.28)x(4.48+4.54)/2	-2.39		
		(5.19-5.75)x(4.44+4.48)/2	-2.50		
		(4.86-5.19)x(4.45+4.44)/2	-1.47		
		(4.09-4.86)x(4.48+4.45)/2	-3.44		
		(3.15-4.09)x(4.51+4.48)/2	-4.23		
		(3.00-3.15)x(4.52+4.51)/2	-0.68		
		(2.74-3.00)x(4.52+4.52)/2	-1.18		
		(1.91-2.74)x(4.54+4.52)/2	-3.76		
		(1.44-1.91)x(4.58+4.54)/2	-2.14		
		(0.82-1.44)x(4.61+4.58)/2	-2.85		
		(0.53-0.82)x(4.63+4.61)/2	-1.34		
		(-0.26-0.53)x(4.65+4.63)/2	-3.67		
		(-0.27--0.26)x(4.65+4.65)/2	-0.05		
		(-1.36--0.27)x(4.64+4.65)/2	-5.06		
		(-1.98--1.36)x(4.65+4.64)/2	-2.88		
		(-2.45--1.98)x(4.66+4.65)/2	-2.19		
		(-2.54--2.45)x(4.67+4.66)/2	-0.42		
				0.92	
155	A1	(-1.75--4.28)x(4.72+4.65)/2	11.85		
2310.00		(-0.68--1.75)x(4.74+4.72)/2	5.06		
		(0.68--0.68)x(4.74+4.74)/2	6.45		
		(1.75-0.68)x(4.72+4.74)/2	5.06		
		(11.65-1.75)x(4.47+4.72)/2	45.49		
		(11.34-11.65)x(4.83+4.47)/2	-1.44		
		A RIPORTARE mq	72.47		

		CALCOLO DELLE AREE		Foglio n. 13
RILEVATO				
N. SEZIONE PROG.	FIG.	ELEMENTI DI CALCOLO	AREA ELEMENTARE mq	AREA FIGURA mq	NOTE
		RIPORTO mq	72.47		
		(12.61-11.34)x(4.84+4.83)/2	6.14		
		(13.30-12.61)x(4.38+4.84)/2	3.18		
		(13.16-13.30)x(4.38+4.38)/2	-0.61		
		(12.83-13.16)x(4.38+4.38)/2	-1.45		
		(12.15-12.83)x(4.40+4.38)/2	-2.99		
		(11.74-12.15)x(4.41+4.40)/2	-1.81		
		(11.03-11.74)x(4.42+4.41)/2	-3.13		
		(10.65-11.03)x(4.42+4.42)/2	-1.68		
		(10.44-10.65)x(4.42+4.42)/2	-0.93		
		(9.56-10.44)x(4.43+4.42)/2	-3.89		
		(8.73-9.56)x(4.43+4.43)/2	-3.68		
		(8.47-8.73)x(4.43+4.43)/2	-1.15		
		(8.02-8.47)x(4.42+4.43)/2	-1.99		
		(7.38-8.02)x(4.41+4.42)/2	-2.83		
		(7.02-7.38)x(4.41+4.41)/2	-1.59		
		(6.29-7.02)x(4.42+4.41)/2	-3.22		
		(5.31-6.29)x(4.43+4.42)/2	-4.34		
		(5.20-5.31)x(4.43+4.43)/2	-0.49		
		(5.01-5.20)x(4.44+4.43)/2	-0.84		
		(4.11-5.01)x(4.45+4.44)/2	-4.00		
		(3.60-4.11)x(4.45+4.45)/2	-2.27		
		(3.02-3.60)x(4.46+4.45)/2	-2.58		
		(2.01-3.02)x(4.48+4.46)/2	-4.51		
		(1.93-2.01)x(4.48+4.48)/2	-0.36		
		(1.89-1.93)x(4.48+4.48)/2	-0.18		
		(0.84-1.89)x(4.53+4.48)/2	-4.73		
		(0.17-0.84)x(4.56+4.53)/2	-3.05		
		(-0.25-0.17)x(4.59+4.56)/2	-1.92		
		(-1.00--0.25)x(4.62+4.59)/2	-3.45		
		(-1.34--1.00)x(4.63+4.62)/2	-1.57		
		(-1.54--1.34)x(4.64+4.63)/2	-0.93		
		(-2.43--1.54)x(4.65+4.64)/2	-4.13		
		(-3.25--2.43)x(4.65+4.65)/2	-3.81		
		(-3.52--3.25)x(4.65+4.65)/2	-1.26		
		(-4.01--3.52)x(4.65+4.65)/2	-2.28		
		(-4.28--4.01)x(4.65+4.65)/2	-1.26		
				2.88	
156	A1	(-12.61--12.87)x(4.87+4.70)/2	1.24		
2325.00		(-11.34--12.61)x(4.87+4.87)/2	6.18		
		(-11.52--11.34)x(4.66+4.87)/2	-0.86		
		(-12.23--11.52)x(4.69+4.66)/2	-3.32		
		(-12.87--12.23)x(4.70+4.69)/2	-3.00		
				0.24	
156	A2	(-1.75--7.43)x(4.75+4.61)/2	26.58		
2325.00		(-0.68--1.75)x(4.77+4.75)/2	5.09		
		(0.68--0.68)x(4.77+4.77)/2	6.49		
		(1.75-0.68)x(4.75+4.77)/2	5.09		
		(11.65-1.75)x(4.50+4.75)/2	45.79		
		(11.34-11.65)x(4.87+4.50)/2	-1.45		
		(12.61-11.34)x(4.87+4.87)/2	6.18		
		(13.34-12.61)x(4.39+4.87)/2	3.38		
		(13.30-13.34)x(4.39+4.39)/2	-0.18		
		(12.85-13.30)x(4.40+4.39)/2	-1.98		
		(12.59-12.85)x(4.40+4.40)/2	-1.14		
		(11.76-12.59)x(4.41+4.40)/2	-3.66		
		(10.88-11.76)x(4.44+4.41)/2	-3.89		
		(10.67-10.88)x(4.44+4.44)/2	-0.93		
		(10.29-10.67)x(4.45+4.44)/2	-1.69		
		(9.58-10.29)x(4.48+4.45)/2	-3.17		
		(9.17-9.58)x(4.49+4.48)/2	-1.84		
		(8.49-9.17)x(4.50+4.49)/2	-3.06		
		(8.17-8.49)x(4.51+4.50)/2	-1.44		
		(7.40-8.17)x(4.51+4.51)/2	-3.47		
		(7.28-7.40)x(4.51+4.51)/2	-0.54		
		(6.31-7.28)x(4.51+4.51)/2	-4.37		
		(5.75-6.31)x(4.50+4.51)/2	-2.52		
		(5.22-5.75)x(4.48+4.50)/2	-2.38		
		(4.28-5.22)x(4.48+4.48)/2	-4.21		
		(4.13-4.28)x(4.48+4.48)/2	-0.67		
		(4.04-4.13)x(4.48+4.48)/2	-0.40		
		(3.03-4.04)x(4.48+4.48)/2	-4.52		
		(2.33-3.03)x(4.49+4.48)/2	-3.14		
		(1.94-2.33)x(4.49+4.49)/2	-1.75		
		(1.27-1.94)x(4.50+4.49)/2	-3.01		
		(0.85-1.27)x(4.50+4.50)/2	-1.89		
		(0.62-0.85)x(4.50+4.50)/2	-1.03		
		(-0.24-0.62)x(4.48+4.50)/2	-3.86		
		(-1.09--0.24)x(4.45+4.48)/2	-3.80		
		(-1.33--1.09)x(4.45+4.45)/2	-1.07		
		(-1.74--1.33)x(4.45+4.45)/2	-1.82		
		(-2.42--1.74)x(4.46+4.45)/2	-3.03		
		(-2.80--2.42)x(4.48+4.46)/2	-1.70		
		(-3.51--2.80)x(4.51+4.48)/2	-3.19		
		(-4.51--3.51)x(4.55+4.51)/2	-4.53		
		(-4.60--4.51)x(4.55+4.55)/2	-0.41		
		(-4.75--4.60)x(4.56+4.55)/2	-0.68		
		(-5.69--4.75)x(4.57+4.56)/2	-4.29		
		(-6.22--5.69)x(4.57+4.57)/2	-2.42		
		(-6.78--6.22)x(4.59+4.57)/2	-2.56		
		(-7.43--6.78)x(4.61+4.59)/2	-2.99		
				3.92	
157	A1	(-12.61--13.03)x(4.90+4.62)/2	2.00		
2340.00		(-11.34--12.61)x(4.90+4.90)/2	6.22		
		(-11.62--11.34)x(4.56+4.90)/2	-1.32		
		(-12.22--11.62)x(4.59+4.56)/2	-2.75		
		(-12.62--12.22)x(4.60+4.59)/2	-1.84		
		(-13.03--12.62)x(4.62+4.60)/2	-1.89		
				0.42	
157	A2	(-1.75--8.10)x(4.78+4.62)/2	29.84		
2340.00		(-0.68--1.75)x(4.80+4.78)/2	5.13		
		(0.68--0.68)x(4.80+4.80)/2	6.53		
		(1.75-0.68)x(4.78+4.80)/2	5.13		
		(11.65-1.75)x(4.53+4.78)/2	46.08		
		(11.34-11.65)x(4.90+4.53)/2	-1.46		
		A RIPORTARE mq	91.25		

	CALCOLO DELLE AREE		Foglio n. 14

RILEVATO

N. SEZIONE PROG.	FIG.	ELEMENTI DI CALCOLO	AREA ELEMENTARE mq	AREA FIGURA mq	NOTE
		RIPORTO mq	91.25		
		(12.61-11.34)x(4.90+4.90)/2	6.22		
		(13.49-12.61)x(4.32+4.90)/2	4.06		
		(13.04-13.49)x(4.30+4.32)/2	-1.94		
		(12.87-13.04)x(4.30+4.30)/2	-0.73		
		(12.56-12.87)x(4.29+4.30)/2	-1.33		
		(11.77-12.56)x(4.28+4.29)/2	-3.39		
		(11.33-11.77)x(4.29+4.28)/2	-1.89		
		(10.68-11.33)x(4.30+4.29)/2	-2.79		
		(9.62-10.68)x(4.33+4.30)/2	-4.57		
		(9.59-9.62)x(4.33+4.33)/2	-0.13		
		(9.55-9.59)x(4.33+4.33)/2	-0.17		
		(8.50-9.55)x(4.35+4.33)/2	-4.56		
		(7.91-8.50)x(4.36+4.35)/2	-2.57		
		(7.41-7.91)x(4.37+4.36)/2	-2.18		
		(6.54-7.41)x(4.36+4.37)/2	-3.80		
		(6.32-6.54)x(4.36+4.36)/2	-0.96		
		(6.20-6.32)x(4.36+4.36)/2	-0.52		
		(5.23-6.20)x(4.35+4.36)/2	-4.22		
		(4.48-5.23)x(4.37+4.35)/2	-3.27		
		(4.14-4.48)x(4.37+4.37)/2	-1.49		
		(3.54-4.14)x(4.38+4.37)/2	-2.62		
		(3.05-3.54)x(4.40+4.38)/2	-2.15		
		(2.38-3.05)x(4.43+4.40)/2	-2.96		
		(1.96-2.38)x(4.44+4.43)/2	-1.86		
		(1.06-1.96)x(4.46+4.44)/2	-4.00		
		(0.87-1.06)x(4.46+4.46)/2	-0.85		
		(0.53-0.87)x(4.48+4.46)/2	-1.52		
		(-0.22-0.53)x(4.52+4.48)/2	-3.38		
		(-0.65--0.22)x(4.53+4.52)/2	-1.95		
		(-1.31--0.65)x(4.54+4.53)/2	-2.99		
		(-2.36--1.31)x(4.56+4.54)/2	-4.78		
		(-2.40--2.36)x(4.57+4.56)/2	-0.18		
		(-2.48--2.40)x(4.57+4.57)/2	-0.37		
		(-3.49--2.48)x(4.57+4.57)/2	-4.62		
		(-4.07--3.49)x(4.58+4.57)/2	-2.65		
		(-4.58--4.07)x(4.60+4.58)/2	-2.34		
		(-5.49--4.58)x(4.63+4.60)/2	-4.20		
		(-5.67--5.49)x(4.63+4.63)/2	-0.83		
		(-5.78--5.67)x(4.63+4.63)/2	-0.51		
		(-6.76--5.78)x(4.62+4.63)/2	-4.53		
		(-7.49--6.76)x(4.62+4.62)/2	-3.37		
		(-7.86--7.49)x(4.62+4.62)/2	-1.71		
		(-8.10--7.86)x(4.62+4.62)/2	-1.11		
				5.54	
158 2355.00	A1	(-12.61--12.98)x(4.93+4.68)/2	1.78		
		(-11.34--12.61)x(4.93+4.93)/2	6.26		
		(-11.62--11.34)x(4.59+4.93)/2	-1.33		
		(-12.18--11.62)x(4.64+4.59)/2	-2.58		
		(-12.20--12.18)x(4.64+4.64)/2	-0.09		
		(-12.25--12.20)x(4.64+4.64)/2	-0.23		
		(-12.98--12.25)x(4.68+4.64)/2	-3.40		
				0.41	
158 2355.00	A2	(-1.75--11.31)x(4.81+4.57)/2	44.84		
		(-0.68--1.75)x(4.84+4.81)/2	5.16		
		(0.68--0.68)x(4.84+4.84)/2	6.58		
		(1.75-0.68)x(4.81+4.84)/2	5.16		
		(11.65-1.75)x(4.56+4.81)/2	46.38		
		(11.34-11.65)x(4.93+4.56)/2	-1.47		
		(12.61-11.34)x(4.93+4.93)/2	6.26		
		(13.69-12.61)x(4.21+4.93)/2	4.94		
		(13.48-13.69)x(4.22+4.21)/2	-0.89		
		(12.88-13.48)x(4.24+4.22)/2	-2.54		
		(11.82-12.88)x(4.26+4.24)/2	-4.51		
		(11.79-11.82)x(4.27+4.26)/2	-0.13		
		(11.77-11.79)x(4.27+4.27)/2	-0.09		
		(10.70-11.77)x(4.29+4.27)/2	-4.58		
		(10.06-10.70)x(4.28+4.29)/2	-2.74		
		(9.61-10.06)x(4.28+4.28)/2	-1.93		
		(8.81-9.61)x(4.27+4.28)/2	-3.42		
		(8.52-8.81)x(4.27+4.27)/2	-1.24		
		(8.35-8.52)x(4.28+4.27)/2	-0.73		
		(7.43-8.35)x(4.31+4.28)/2	-3.95		
		(6.64-7.43)x(4.32+4.31)/2	-3.41		
		(6.34-6.64)x(4.33+4.32)/2	-1.30		
		(5.81-6.34)x(4.33+4.33)/2	-2.29		
		(5.25-5.81)x(4.33+4.33)/2	-2.42		
		(4.93-5.25)x(4.34+4.33)/2	-1.39		
		(4.16-4.93)x(4.37+4.34)/2	-3.35		
		(3.22-4.16)x(4.37+4.37)/2	-4.11		
		(3.07-3.22)x(4.37+4.37)/2	-0.66		
		(2.80-3.07)x(4.36+4.37)/2	-1.18		
		(1.98-2.80)x(4.30+4.36)/2	-3.55		
		(1.51-1.98)x(4.32+4.30)/2	-2.03		
		(0.88-1.51)x(4.34+4.32)/2	-2.73		
		(-0.20-0.88)x(4.36+4.34)/2	-4.70		
		(-0.21--0.20)x(4.36+4.36)/2	-0.04		
		(-1.30--0.21)x(4.43+4.36)/2	-4.79		
		(-1.91--1.30)x(4.45+4.43)/2	-2.71		
		(-2.39--1.91)x(4.46+4.45)/2	-2.14		
		(-2.61--2.39)x(4.46+4.46)/2	-0.98		
		(-3.22--2.61)x(4.49+4.46)/2	-2.73		
		(-3.41--3.22)x(4.50+4.49)/2	-0.85		
		(-3.48--3.41)x(4.50+4.50)/2	-0.31		
		(-3.62--3.48)x(4.50+4.50)/2	-0.63		
		(-4.57--3.62)x(4.49+4.50)/2	-4.27		
		(-5.33--4.57)x(4.50+4.49)/2	-3.42		
		(-5.66--5.33)x(4.51+4.50)/2	-1.49		
		(-6.23--5.66)x(4.50+4.51)/2	-2.57		
		(-6.75--6.23)x(4.49+4.50)/2	-2.34		
		(-7.05--6.75)x(4.49+4.49)/2	-1.35		
		(-7.84--7.05)x(4.50+4.49)/2	-3.55		
		(-8.76--7.84)x(4.52+4.50)/2	-4.15		
		(-8.93--8.76)x(4.53+4.52)/2	-0.77		
		(-9.24--8.93)x(4.53+4.53)/2	-1.40		
		A RIPORTARE mq	17.49		

		CALCOLO DELLE AREE		Foglio n. 15
RILEVATO				
N. SEZIONE PROG.	FIG.	ELEMENTI DI CALCOLO	AREA ELEMENTARE mq	AREA FIGURA mq	NOTE
		RIPORTO mq	17.49		
		(-10.02--9.24)x(4.54+4.53)/2	-3.54		
		(-10.47--10.02)x(4.55+4.54)/2	-2.05		
		(-11.11--10.47)x(4.55+4.55)/2	-2.91		
		(-11.31--11.11)x(4.57+4.55)/2	-0.91		
				8.08	
159	A1	(-12.61--13.61)x(4.96+4.29)/2	4.63		
2370.00		(-11.34--12.61)x(4.96+4.96)/2	6.30		
		(-11.65--11.34)x(4.59+4.96)/2	-1.48		
		(-1.75--11.65)x(4.84+4.59)/2	46.68		
		(-0.68--1.75)x(4.87+4.84)/2	5.19		
		(0.68--0.68)x(4.87+4.87)/2	6.62		
		(1.75-0.68)x(4.84+4.87)/2	5.19		
		(11.65-1.75)x(4.59+4.84)/2	46.68		
		(11.35-11.65)x(4.96+4.59)/2	-1.43		
		(12.61-11.35)x(4.96+4.96)/2	6.25		
		(13.75-12.61)x(4.21+4.96)/2	5.23		
		(12.90-13.75)x(4.26+4.21)/2	-3.60		
		(12.22-12.90)x(4.28+4.26)/2	-2.90		
		(11.81-12.22)x(4.29+4.28)/2	-1.76		
		(11.08-11.81)x(4.26+4.29)/2	-3.12		
		(10.72-11.08)x(4.24+4.26)/2	-1.53		
		(10.01-10.72)x(4.21+4.24)/2	-3.00		
		(9.62-10.01)x(4.19+4.21)/2	-1.64		
		(8.79-9.62)x(4.18+4.19)/2	-3.47		
		(8.53-8.79)x(4.18+4.18)/2	-1.09		
		(8.08-8.53)x(4.18+4.18)/2	-1.88		
		(7.44-8.08)x(4.19+4.18)/2	-2.68		
		(7.08-7.44)x(4.19+4.19)/2	-1.51		
		(6.35-7.08)x(4.20+4.19)/2	-3.06		
		(5.37-6.35)x(4.21+4.20)/2	-4.12		
		(5.26-5.37)x(4.21+4.21)/2	-0.46		
		(5.07-5.26)x(4.21+4.21)/2	-0.80		
		(4.17-5.07)x(4.21+4.21)/2	-3.79		
		(3.66-4.17)x(4.24+4.21)/2	-2.15		
		(3.08-3.66)x(4.27+4.24)/2	-2.47		
		(2.06-3.08)x(4.27+4.27)/2	-4.36		
		(1.99-2.06)x(4.27+4.27)/2	-0.30		
		(1.95-1.99)x(4.27+4.27)/2	-0.17		
		(0.90-1.95)x(4.31+4.27)/2	-4.50		
		(0.24-0.90)x(4.32+4.31)/2	-2.85		
		(-0.19-0.24)x(4.32+4.32)/2	-1.86		
		(-0.95--0.19)x(4.29+4.32)/2	-3.27		
		(-1.28--0.95)x(4.27+4.29)/2	-1.41		
		(-1.47--1.28)x(4.28+4.27)/2	-0.81		
		(-2.37--1.47)x(4.28+4.28)/2	-3.85		
		(-3.18--2.37)x(4.28+4.28)/2	-3.47		
		(-3.46--3.18)x(4.28+4.28)/2	-1.20		
		(-3.96--3.46)x(4.27+4.28)/2	-2.14		
		(-4.55--3.96)x(4.26+4.27)/2	-2.52		
		(-4.89--4.55)x(4.25+4.26)/2	-1.45		
		(-5.64--4.89)x(4.22+4.25)/2	-3.18		
		(-6.60--5.64)x(4.23+4.22)/2	-4.06		
		(-6.73--6.60)x(4.23+4.23)/2	-0.55		
		(-6.97--6.73)x(4.24+4.23)/2	-1.02		
		(-7.82--6.97)x(4.25+4.24)/2	-3.61		
		(-8.40--7.82)x(4.26+4.25)/2	-2.47		
		(-8.92--8.40)x(4.30+4.26)/2	-2.23		
		(-9.98--8.92)x(4.37+4.30)/2	-4.60		
		(-10.01--9.98)x(4.37+4.37)/2	-0.13		
		(-10.02--10.01)x(4.37+4.37)/2	-0.04		
		(-11.10--10.02)x(4.38+4.37)/2	-4.73		
		(-11.73--11.10)x(4.36+4.38)/2	-2.75		
		(-12.19--11.73)x(4.33+4.36)/2	-2.00		
		(-12.98--12.19)x(4.30+4.33)/2	-3.41		
		(-13.28--12.98)x(4.29+4.30)/2	-1.29		
		(-13.44--13.28)x(4.29+4.29)/2	-0.69		
		(-13.61--13.44)x(4.29+4.29)/2	-0.73		
				13.18	
160	A1	(-12.61--13.67)x(4.99+4.28)/2	4.91		
2385.00		(-11.34--12.61)x(4.99+4.99)/2	6.34		
		(-11.65--11.34)x(4.62+4.99)/2	-1.49		
		(-1.75--11.65)x(4.87+4.62)/2	46.98		
		(-0.68--1.75)x(4.90+4.87)/2	5.23		
		(0.68--0.68)x(4.90+4.90)/2	6.66		
		(1.75-0.68)x(4.87+4.90)/2	5.23		
		(11.65-1.75)x(4.62+4.87)/2	46.98		
		(11.35-11.65)x(4.99+4.62)/2	-1.44		
		(12.61-11.35)x(4.99+4.99)/2	6.29		
		(13.78-12.61)x(4.22+4.99)/2	5.39		
		(13.35-13.78)x(4.22+4.22)/2	-1.81		
		(12.91-13.35)x(4.22+4.22)/2	-1.86		
		(12.66-12.91)x(4.22+4.22)/2	-1.05		
		(11.82-12.66)x(4.23+4.22)/2	-3.55		
		(10.95-11.82)x(4.23+4.23)/2	-3.68		
		(10.73-10.95)x(4.24+4.23)/2	-0.93		
		(10.34-10.73)x(4.24+4.24)/2	-1.65		
		(9.64-10.34)x(4.24+4.24)/2	-2.97		
		(9.24-9.64)x(4.23+4.24)/2	-1.69		
		(8.55-9.24)x(4.22+4.23)/2	-2.92		
		(7.53-8.55)x(4.18+4.22)/2	-4.28		
		(7.46-7.53)x(4.17+4.18)/2	-0.29		
		(7.34-7.46)x(4.17+4.17)/2	-0.50		
		(6.37-7.34)x(4.17+4.17)/2	-4.04		
		(5.82-6.37)x(4.16+4.17)/2	-2.29		
		(5.28-5.82)x(4.15+4.16)/2	-2.24		
		(5.02-5.28)x(4.15+4.15)/2	-1.08		
		(4.33-5.02)x(4.16+4.15)/2	-2.87		
		(4.22-4.33)x(4.16+4.16)/2	-0.46		
		(4.19-4.22)x(4.16+4.16)/2	-0.12		
		(4.11-4.19)x(4.16+4.16)/2	-0.33		
		(3.10-4.11)x(4.15+4.16)/2	-4.20		
		(2.40-3.10)x(4.16+4.15)/2	-2.91		
		(2.01-2.40)x(4.17+4.16)/2	-1.62		
		(1.32-2.01)x(4.19+4.17)/2	-2.88		
		A RIPORTARE mq	78.86		

		CALCOLO DELLE AREE		Foglio n. 16
RILEVATO				

N. SEZIONE PROG.	FIG.	ELEMENTI DI CALCOLO	AREA ELEMENTARE mq	AREA FIGURA mq	NOTE
		RIPORTO mq	78.86		
		(0.92-1.32)x(4.19+4.19)/2	-1.68		
		(0.69-0.92)x(4.19+4.19)/2	-0.96		
		(-0.18-0.69)x(4.20+4.19)/2	-3.65		
		(-1.02--0.18)x(4.19+4.20)/2	-3.52		
		(-1.27--1.02)x(4.19+4.19)/2	-1.05		
		(-1.69--1.27)x(4.18+4.19)/2	-1.76		
		(-2.36--1.69)x(4.15+4.18)/2	-2.79		
		(-2.74--2.36)x(4.15+4.15)/2	-1.58		
		(-3.45--2.74)x(4.14+4.15)/2	-2.94		
		(-4.45--3.45)x(4.12+4.14)/2	-4.13		
		(-4.54--4.45)x(4.12+4.12)/2	-0.37		
		(-4.70--4.54)x(4.12+4.12)/2	-0.66		
		(-5.63--4.70)x(4.16+4.12)/2	-3.85		
		(-6.16--5.63)x(4.20+4.16)/2	-2.22		
		(-6.72--6.16)x(4.24+4.20)/2	-2.36		
		(-7.71--6.72)x(4.28+4.24)/2	-4.22		
		(-7.81--7.71)x(4.29+4.28)/2	-0.43		
		(-7.87--7.81)x(4.29+4.29)/2	-0.26		
		(-8.90--7.87)x(4.26+4.29)/2	-4.40		
		(-9.58--8.90)x(4.27+4.26)/2	-2.90		
		(-9.99--9.58)x(4.28+4.27)/2	-1.75		
		(-10.71--9.99)x(4.28+4.28)/2	-3.08		
		(-11.08--10.71)x(4.29+4.28)/2	-1.59		
		(-11.29--11.08)x(4.29+4.29)/2	-0.90		
		(-12.17--11.29)x(4.28+4.29)/2	-3.77		
		(-13.00--12.17)x(4.28+4.28)/2	-3.55		
		(-13.26--13.00)x(4.28+4.28)/2	-1.11		
		(-13.38--13.26)x(4.28+4.28)/2	-0.51		
		(-13.67--13.38)x(4.28+4.28)/2	-1.24		
				15.63	
161 2400.00	A1	(-12.61--13.61)x(5.02+4.36)/2	4.69		
		(-11.34--12.61)x(5.02+5.02)/2	6.38		
		(-11.65--11.34)x(4.65+5.02)/2	-1.50		
		(-1.75--11.65)x(4.90+4.65)/2	47.27		
		(-0.68--1.75)x(4.93+4.90)/2	5.26		
		(0.68--0.68)x(4.93+4.93)/2	6.70		
		(1.75-0.68)x(4.90+4.93)/2	5.26		
		(6.07-1.75)x(4.79+4.90)/2	20.93		
		(5.29-6.07)x(4.72+4.79)/2	-3.71		
		(4.55-5.29)x(4.64+4.72)/2	-3.46		
		(4.20-4.55)x(4.60+4.64)/2	-1.62		
		(3.59-4.20)x(4.52+4.60)/2	-2.78		
		(3.11-3.59)x(4.46+4.52)/2	-2.16		
		(2.84-3.11)x(4.42+4.46)/2	-1.20		
		(2.02-2.84)x(4.26+4.42)/2	-3.56		
		(1.13-2.02)x(4.25+4.26)/2	-3.79		
		(0.93-1.13)x(4.24+4.25)/2	-0.85		
		(0.58-0.93)x(4.24+4.24)/2	-1.48		
		(-0.16-0.58)x(4.23+4.24)/2	-3.13		
		(-0.76--0.16)x(4.23+4.23)/2	-2.54		
		(-1.25--0.76)x(4.22+4.23)/2	-2.07		
		(-2.29--1.25)x(4.20+4.22)/2	-4.38		
		(-2.34--2.29)x(4.20+4.20)/2	-0.21		
		(-2.43--2.34)x(4.20+4.20)/2	-0.38		
		(-3.43--2.43)x(4.19+4.20)/2	-4.20		
		(-4.00--3.43)x(4.19+4.19)/2	-2.39		
		(-4.52--4.00)x(4.19+4.19)/2	-2.18		
		(-5.44--4.52)x(4.20+4.19)/2	-3.86		
		(-5.61--5.44)x(4.20+4.20)/2	-0.71		
		(-5.71--5.61)x(4.20+4.20)/2	-0.42		
		(-6.70--5.71)x(4.22+4.20)/2	-4.17		
		(-7.42--6.70)x(4.23+4.22)/2	-3.04		
		(-7.79--7.42)x(4.24+4.23)/2	-1.57		
		(-8.45--7.79)x(4.25+4.24)/2	-2.80		
		(-8.88--8.45)x(4.26+4.25)/2	-1.83		
		(-9.13--8.88)x(4.26+4.26)/2	-1.06		
		(-9.97--9.13)x(4.26+4.26)/2	-3.58		
		(-10.84--9.97)x(4.28+4.26)/2	-3.71		
		(-11.07--10.84)x(4.28+4.28)/2	-0.98		
		(-11.45--11.07)x(4.30+4.28)/2	-1.63		
		(-12.16--11.45)x(4.32+4.30)/2	-3.06		
		(-12.56--12.16)x(4.34+4.32)/2	-1.73		
		(-13.25--12.56)x(4.36+4.34)/2	-3.00		
		(-13.61--13.25)x(4.36+4.36)/2	-1.57		
				10.18	
161 2400.00	A2	(11.35-11.44)x(5.02+4.91)/2	-0.45		
		(12.61-11.35)x(5.02+5.02)/2	6.33		
		(13.44-12.61)x(4.47+5.02)/2	3.94		
		(13.10-13.44)x(4.57+4.47)/2	-1.54		
		(12.93-13.10)x(4.64+4.57)/2	-0.78		
		(12.61-12.93)x(4.72+4.64)/2	-1.50		
		(11.84-12.61)x(4.94+4.72)/2	-3.72		
		(11.44-11.84)x(4.91+4.94)/2	-1.97		
				0.31	
162 2415.00	A1	(-12.61--13.69)x(5.05+4.33)/2	5.07		
		(-11.34--12.61)x(5.05+5.05)/2	6.41		
		(-11.65--11.34)x(4.68+5.05)/2	-1.51		
		(-1.75--11.65)x(4.93+4.68)/2	47.57		
		(-0.68--1.75)x(4.96+4.93)/2	5.29		
		(0.68--0.68)x(4.96+4.96)/2	6.75		
		(1.75-0.68)x(4.93+4.96)/2	5.29		
		(11.65-1.75)x(4.68+4.93)/2	47.57		
		(11.35-11.65)x(5.05+4.68)/2	-1.46		
		(12.61-11.35)x(5.05+5.05)/2	6.36		
		(14.04-12.61)x(4.10+5.05)/2	6.54		
		(13.55-14.04)x(4.10+4.10)/2	-2.01		
		(12.94-13.55)x(4.11+4.10)/2	-2.50		
		(12.66-12.94)x(4.12+4.11)/2	-1.15		
		(11.88-12.66)x(4.15+4.12)/2	-3.23		
		(11.86-11.88)x(4.15+4.15)/2	-0.08		
		(11.85-11.86)x(4.15+4.15)/2	-0.04		
		(11.84-11.85)x(4.15+4.15)/2	-0.04		
		(10.76-11.84)x(4.16+4.15)/2	-4.49		
		(10.13-10.76)x(4.17+4.16)/2	-2.62		
		A RIPORTARE mq	117.72		

		CALCOLO DELLE AREE		Foglio n. 17
RILEVATO				
N. SEZIONE PROG.	FIG.	ELEMENTI DI CALCOLO	AREA ELEMENTARE mq	AREA FIGURA mq	NOTE
		RIPORTO mq	117.72		
		(9.67-10.13)x(4.18+4.17)/2	-1.92		
		(8.87-9.67)x(4.19+4.18)/2	-3.35		
		(8.58-8.87)x(4.19+4.19)/2	-1.22		
		(8.42-8.58)x(4.19+4.19)/2	-0.67		
		(7.49-8.42)x(4.21+4.19)/2	-3.91		
		(6.71-7.49)x(4.21+4.21)/2	-3.28		
		(6.40-6.71)x(4.20+4.21)/2	-1.30		
		(5.86-6.40)x(4.19+4.20)/2	-2.27		
		(5.31-5.86)x(4.18+4.19)/2	-2.30		
		(5.00-5.31)x(4.18+4.18)/2	-1.30		
		(4.22-5.00)x(4.17+4.18)/2	-3.26		
		(3.29-4.22)x(4.17+4.17)/2	-3.88		
		(3.13-3.29)x(4.17+4.17)/2	-0.67		
		(2.85-3.13)x(4.17+4.17)/2	-1.17		
		(2.04-2.85)x(4.17+4.17)/2	-3.38		
		(1.57-2.04)x(4.18+4.17)/2	-1.96		
		(0.95-1.57)x(4.20+4.18)/2	-2.60		
		(-0.14-0.95)x(4.25+4.20)/2	-4.61		
		(-0.16--0.14)x(4.25+4.25)/2	-0.08		
		(-1.23--0.16)x(4.29+4.25)/2	-4.57		
		(-1.85--1.23)x(4.32+4.29)/2	-2.67		
		(-2.33--1.85)x(4.34+4.32)/2	-2.08		
		(-3.17--2.33)x(4.37+4.34)/2	-3.66		
		(-3.42--3.17)x(4.38+4.37)/2	-1.09		
		(-3.56--3.42)x(4.38+4.38)/2	-0.61		
		(-4.51--3.56)x(4.40+4.38)/2	-4.17		
		(-5.27--4.51)x(4.40+4.40)/2	-3.34		
		(-5.60--5.27)x(4.40+4.40)/2	-1.45		
		(-5.75--5.60)x(4.39+4.40)/2	-0.66		
		(-6.18--5.75)x(4.39+4.39)/2	-1.89		
		(-6.55--6.18)x(4.38+4.39)/2	-1.62		
		(-6.69--6.55)x(4.38+4.38)/2	-0.61		
		(-6.98--6.69)x(4.37+4.38)/2	-1.27		
		(-7.78--6.98)x(4.35+4.37)/2	-3.49		
		(-8.69--7.78)x(4.33+4.35)/2	-3.95		
		(-8.87--8.69)x(4.33+4.33)/2	-0.78		
		(-9.18--8.87)x(4.32+4.33)/2	-1.34		
		(-9.96--9.18)x(4.32+4.32)/2	-3.37		
		(-10.40--9.96)x(4.32+4.32)/2	-1.90		
		(-11.05--10.40)x(4.32+4.32)/2	-2.81		
		(-12.11--11.05)x(4.33+4.32)/2	-4.58		
		(-12.14--12.11)x(4.33+4.33)/2	-0.13		
		(-12.19--12.14)x(4.33+4.33)/2	-0.22		
		(-13.23--12.19)x(4.34+4.33)/2	-4.51		
		(-13.69--13.23)x(4.33+4.34)/2	-1.99		
				15.83	
163 2430.00	A1	(-12.61--13.65)x(5.09+4.39)/2	4.93		
		(-11.34--12.61)x(5.08+5.09)/2	6.46		
		(-11.65--11.34)x(4.72+5.08)/2	-1.52		
		(-1.75--11.65)x(4.96+4.72)/2	47.92		
		(-0.68--1.75)x(4.99+4.96)/2	5.32		
		(0.68--0.68)x(4.99+4.99)/2	6.79		
		(1.75-0.68)x(4.96+4.99)/2	5.32		
		(11.65-1.75)x(4.72+4.96)/2	47.92		
		(11.35-11.65)x(5.08+4.72)/2	-1.47		
		(12.61-11.35)x(5.09+5.08)/2	6.41		
		(13.72-12.61)x(4.35+5.09)/2	5.24		
		(12.96-13.72)x(4.34+4.35)/2	-3.30		
		(12.28-12.96)x(4.35+4.34)/2	-2.95		
		(11.87-12.28)x(4.35+4.35)/2	-1.78		
		(11.14-11.87)x(4.34+4.35)/2	-3.17		
		(10.78-11.14)x(4.35+4.34)/2	-1.56		
		(10.57-10.78)x(4.34+4.35)/2	-0.91		
		(9.69-10.57)x(4.34+4.34)/2	-3.82		
		(8.86-9.69)x(4.32+4.34)/2	-3.59		
		(8.60-8.86)x(4.32+4.32)/2	-1.12		
		(8.13-8.60)x(4.33+4.32)/2	-2.03		
		(7.50-8.13)x(4.33+4.33)/2	-2.73		
		(6.87-7.50)x(4.34+4.33)/2	-2.73		
		(6.41-6.87)x(4.35+4.34)/2	-2.00		
		(5.44-6.41)x(4.36+4.35)/2	-4.22		
		(5.32-5.44)x(4.36+4.36)/2	-0.52		
		(5.12-5.32)x(4.36+4.36)/2	-0.87		
		(4.23-5.12)x(4.35+4.36)/2	-3.88		
		(3.73-4.23)x(4.36+4.35)/2	-2.18		
		(3.14-3.73)x(4.36+4.36)/2	-2.57		
		(2.11-3.14)x(4.36+4.36)/2	-4.49		
		(2.05-2.11)x(4.36+4.36)/2	-0.26		
		(2.02-2.05)x(4.36+4.36)/2	-0.13		
		(0.96-2.02)x(4.36+4.36)/2	-4.62		
		(0.31-0.96)x(4.35+4.36)/2	-2.83		
		(-0.13-0.31)x(4.35+4.35)/2	-1.91		
		(-0.90--0.13)x(4.35+4.35)/2	-3.35		
		(-1.22--0.90)x(4.35+4.35)/2	-1.39		
		(-1.40--1.22)x(4.35+4.35)/2	-0.78		
		(-2.31--1.40)x(4.34+4.35)/2	-3.95		
		(-3.11--2.31)x(4.34+4.34)/2	-3.47		
		(-3.40--3.11)x(4.34+4.34)/2	-1.26		
		(-3.91--3.40)x(4.33+4.34)/2	-2.21		
		(-4.49--3.91)x(4.32+4.33)/2	-2.51		
		(-4.82--4.49)x(4.32+4.32)/2	-1.43		
		(-5.58--4.82)x(4.32+4.32)/2	-3.28		
		(-6.53--5.58)x(4.31+4.32)/2	-4.10		
		(-6.67--6.53)x(4.31+4.31)/2	-0.60		
		(-6.91--6.67)x(4.32+4.31)/2	-1.04		
		(-7.76--6.91)x(4.35+4.32)/2	-3.68		
		(-8.25--7.76)x(4.36+4.35)/2	-2.13		
		(-8.85--8.25)x(4.37+4.36)/2	-2.62		
		(-9.92--8.85)x(4.38+4.37)/2	-4.68		
		(-9.94--9.92)x(4.38+4.38)/2	-0.09		
		(-9.96--9.94)x(4.38+4.38)/2	-0.09		
		(-11.03--9.96)x(4.38+4.38)/2	-4.69		
		(-11.54--11.03)x(4.38+4.38)/2	-2.23		
		(-12.13--11.54)x(4.35+4.38)/2	-2.58		
		A RIPORTARE mq	20.99		

		CALCOLO DELLE AREE		Foglio n. 18
RILEVATO				
N. SEZIONE PROG.	FIG.	ELEMENTI DI CALCOLO	AREA ELEMENTARE mq	AREA FIGURA mq	NOTE
		RIPORTO mq	20.99		
		(-12.93--12.13)x(4.37+4.35)/2	-3.49		
		(-13.22--12.93)x(4.38+4.37)/2	-1.27		
		(-13.38--13.22)x(4.38+4.38)/2	-0.70		
		(-13.65--13.38)x(4.39+4.38)/2	-1.18		
				14.35	
164	A1	(-12.61--13.81)x(5.12+4.31)/2	5.66		
2445.00		(-11.34--12.61)x(5.11+5.12)/2	6.50		
		(-11.65--11.34)x(4.75+5.11)/2	-1.53		
		(-1.75--11.65)x(4.99+4.75)/2	48.21		
		(-0.68--1.75)x(5.02+4.99)/2	5.36		
		(0.68--0.68)x(5.02+5.02)/2	6.83		
		(1.75-0.68)x(4.99+5.02)/2	5.36		
		(11.65-1.75)x(4.75+4.99)/2	48.21		
		(11.35-11.65)x(5.11+4.75)/2	-1.48		
		(12.61-11.35)x(5.12+5.11)/2	6.44		
		(13.75-12.61)x(4.36+5.12)/2	5.40		
		(13.41-13.75)x(4.36+4.36)/2	-1.48		
		(12.97-13.41)x(4.37+4.36)/2	-1.92		
		(12.73-12.97)x(4.37+4.37)/2	-1.05		
		(11.88-12.73)x(4.38+4.37)/2	-3.72		
		(11.02-11.88)x(4.36+4.38)/2	-3.76		
		(10.79-11.02)x(4.36+4.36)/2	-1.00		
		(10.40-10.79)x(4.36+4.36)/2	-1.70		
		(9.70-10.40)x(4.37+4.36)/2	-3.06		
		(9.31-9.70)x(4.38+4.37)/2	-1.71		
		(8.61-9.31)x(4.41+4.38)/2	-3.08		
		(7.60-8.61)x(4.47+4.41)/2	-4.48		
		(7.52-7.60)x(4.48+4.47)/2	-0.36		
		(7.39-7.52)x(4.48+4.48)/2	-0.58		
		(6.43-7.39)x(4.50+4.48)/2	-4.31		
		(5.88-6.43)x(4.49+4.50)/2	-2.47		
		(5.34-5.88)x(4.47+4.49)/2	-2.42		
		(4.38-5.34)x(4.43+4.47)/2	-4.27		
		(4.25-4.38)x(4.43+4.43)/2	-0.58		
		(4.17-4.25)x(4.43+4.43)/2	-0.35		
		(3.16-4.17)x(4.41+4.43)/2	-4.46		
		(2.46-3.16)x(4.40+4.41)/2	-3.08		
		(2.07-2.46)x(4.39+4.40)/2	-1.71		
		(1.88-2.07)x(4.40+4.39)/2	-0.84		
		(1.37-1.88)x(4.38+4.40)/2	-2.24		
		(1.08-1.37)x(4.37+4.38)/2	-1.27		
		(0.98-1.08)x(4.37+4.37)/2	-0.44		
		(0.75-0.98)x(4.37+4.37)/2	-1.01		
		(-0.11-0.75)x(4.36+4.37)/2	-3.75		
		(-0.96--0.11)x(4.38+4.36)/2	-3.71		
		(-1.20--0.96)x(4.39+4.38)/2	-1.05		
		(-1.64--1.20)x(4.39+4.39)/2	-1.93		
		(-2.29--1.64)x(4.38+4.39)/2	-2.85		
		(-2.67--2.29)x(4.39+4.38)/2	-1.67		
		(-3.39--2.67)x(4.40+4.39)/2	-3.16		
		(-4.38--3.39)x(4.38+4.40)/2	-4.35		
		(-4.48--4.38)x(4.38+4.38)/2	-0.44		
		(-4.65--4.48)x(4.38+4.38)/2	-0.74		
		(-5.57--4.65)x(4.36+4.38)/2	-4.02		
		(-6.09--5.57)x(4.36+4.36)/2	-2.27		
		(-6.66--6.09)x(4.35+4.36)/2	-2.48		
		(-7.65--6.66)x(4.35+4.35)/2	-4.31		
		(-7.75--7.65)x(4.35+4.35)/2	-0.43		
		(-7.80--7.75)x(4.35+4.35)/2	-0.22		
		(-8.84--7.80)x(4.37+4.35)/2	-4.53		
		(-9.51--8.84)x(4.36+4.37)/2	-2.92		
		(-9.93--9.51)x(4.35+4.36)/2	-1.83		
		(-10.66--9.93)x(4.36+4.35)/2	-3.18		
		(-11.02--10.66)x(4.35+4.36)/2	-1.57		
		(-11.22--11.02)x(4.35+4.35)/2	-0.87		
		(-12.11--11.22)x(4.34+4.35)/2	-3.87		
		(-12.93--12.11)x(4.33+4.34)/2	-3.55		
		(-13.20--12.93)x(4.32+4.33)/2	-1.17		
		(-13.67--13.20)x(4.32+4.32)/2	-2.03		
		(-13.81--13.67)x(4.31+4.32)/2	-0.60		
				14.11	
165	A1	(-12.61--13.69)x(5.15+4.42)/2	5.17		
2460.00		(-11.34--12.61)x(5.14+5.15)/2	6.53		
		(-11.65--11.34)x(4.78+5.14)/2	-1.54		
		(-1.75--11.65)x(5.02+4.78)/2	48.51		
		(-0.68--1.75)x(5.05+5.02)/2	5.39		
		(0.68--0.68)x(5.05+5.05)/2	6.87		
		(1.75-0.68)x(5.02+5.05)/2	5.39		
		(11.65-1.75)x(4.78+5.02)/2	48.51		
		(11.35-11.65)x(5.14+4.78)/2	-1.49		
		(12.61-11.35)x(5.15+5.14)/2	6.48		
		(14.00-12.61)x(4.22+5.15)/2	6.51		
		(13.17-14.00)x(4.25+4.22)/2	-3.52		
		(12.99-13.17)x(4.25+4.25)/2	-0.76		
		(12.67-12.99)x(4.26+4.25)/2	-1.36		
		(11.90-12.67)x(4.28+4.26)/2	-3.29		
		(11.46-11.90)x(4.28+4.28)/2	-1.88		
		(10.81-11.46)x(4.28+4.28)/2	-2.78		
		(9.75-10.81)x(4.27+4.28)/2	-4.53		
		(9.72-9.75)x(4.27+4.27)/2	-0.13		
		(9.66-9.72)x(4.27+4.27)/2	-0.26		
		(8.63-9.66)x(4.33+4.27)/2	-4.43		
		(8.04-8.63)x(4.37+4.33)/2	-2.57		
		(7.54-8.04)x(4.41+4.37)/2	-2.19		
		(6.65-7.54)x(4.52+4.41)/2	-3.97		
		(6.45-6.65)x(4.54+4.52)/2	-0.91		
		(6.33-6.45)x(4.54+4.54)/2	-0.54		
		(5.35-6.33)x(4.52+4.54)/2	-4.44		
		(4.62-5.35)x(4.49+4.52)/2	-3.29		
		(4.26-4.62)x(4.47+4.49)/2	-1.61		
		(3.64-4.26)x(4.45+4.47)/2	-2.77		
		(3.17-3.64)x(4.43+4.45)/2	-2.09		
		(2.91-3.17)x(4.43+4.43)/2	-1.15		
		(2.08-2.91)x(4.40+4.43)/2	-3.66		
		A RIPORTARE mq	84.20		

		CALCOLO DELLE AREE		Foglio n. 19
RILEVATO				
N. SEZIONE PROG.	FIG.	ELEMENTI DI CALCOLO	AREA ELEMENTARE mq	AREA FIGURA mq	NOTE
		RIPORTO mq	84.20		
		(1.20-2.08)x(4.38+4.40)/2	-3.86		
		(0.99-1.20)x(4.38+4.38)/2	-0.92		
		(0.63-0.99)x(4.37+4.38)/2	-1.57		
		(-0.10-0.63)x(4.35+4.37)/2	-3.18		
		(-0.51--0.10)x(4.35+4.35)/2	-1.78		
		(-1.19--0.51)x(4.33+4.35)/2	-2.95		
		(-2.22--1.19)x(4.35+4.33)/2	-4.47		
		(-2.28--2.22)x(4.35+4.35)/2	-0.26		
		(-2.38--2.28)x(4.35+4.35)/2	-0.44		
		(-3.37--2.38)x(4.39+4.35)/2	-4.33		
		(-3.91--3.37)x(4.40+4.39)/2	-2.37		
		(-4.46--3.91)x(4.39+4.40)/2	-2.42		
		(-5.38--4.46)x(4.38+4.39)/2	-4.03		
		(-5.55--5.38)x(4.38+4.38)/2	-0.74		
		(-5.65--5.55)x(4.38+4.38)/2	-0.44		
		(-6.64--5.65)x(4.37+4.38)/2	-4.33		
		(-7.36--6.64)x(4.38+4.37)/2	-3.15		
		(-7.73--7.36)x(4.38+4.38)/2	-1.62		
		(-8.39--7.73)x(4.41+4.38)/2	-2.90		
		(-8.82--8.39)x(4.43+4.41)/2	-1.90		
		(-9.07--8.82)x(4.43+4.43)/2	-1.11		
		(-9.91--9.07)x(4.44+4.43)/2	-3.73		
		(-10.78--9.91)x(4.40+4.44)/2	-3.85		
		(-11.00--10.78)x(4.39+4.40)/2	-0.97		
		(-11.40--11.00)x(4.38+4.39)/2	-1.75		
		(-12.09--11.40)x(4.38+4.38)/2	-3.02		
		(-12.49--12.09)x(4.39+4.38)/2	-1.75		
		(-13.19--12.49)x(4.42+4.39)/2	-3.08		
		(-13.69--13.19)x(4.42+4.42)/2	-2.21		
				15.07	
166 2475.00	A1	(-12.61--13.72)x(5.18+4.43)/2	5.33		
		(-11.34--12.61)x(5.17+5.18)/2	6.57		
		(-11.65--11.34)x(4.81+5.17)/2	-1.55		
		(-1.75--11.65)x(5.05+4.81)/2	48.81		
		(-0.68--1.75)x(5.08+5.05)/2	5.42		
		(0.68--0.68)x(5.08+5.08)/2	6.91		
		(1.75-0.68)x(5.05+5.08)/2	5.42		
		(11.65-1.75)x(4.81+5.05)/2	48.81		
		(11.35-11.65)x(5.17+4.81)/2	-1.50		
		(12.61-11.35)x(5.18+5.17)/2	6.52		
		(14.21-12.61)x(4.11+5.18)/2	7.43		
		(14.09-14.21)x(4.11+4.11)/2	-0.49		
		(13.62-14.09)x(4.13+4.11)/2	-1.94		
		(13.00-13.62)x(4.15+4.13)/2	-2.57		
		(11.93-13.00)x(4.16+4.15)/2	-4.45		
		(11.91-11.93)x(4.16+4.16)/2	-0.08		
		(10.82-11.91)x(4.14+4.16)/2	-4.52		
		(10.19-10.82)x(4.13+4.14)/2	-2.61		
		(9.73-10.19)x(4.13+4.13)/2	-1.90		
		(9.52-9.73)x(4.12+4.13)/2	-0.87		
		(8.92-9.52)x(4.12+4.12)/2	-2.47		
		(8.72-8.92)x(4.11+4.12)/2	-0.82		
		(8.64-8.72)x(4.12+4.11)/2	-0.33		
		(8.48-8.64)x(4.12+4.12)/2	-0.66		
		(7.55-8.48)x(4.17+4.12)/2	-3.85		
		(6.77-7.55)x(4.19+4.17)/2	-3.26		
		(6.46-6.77)x(4.20+4.19)/2	-1.30		
		(5.91-6.46)x(4.21+4.20)/2	-2.31		
		(5.37-5.91)x(4.21+4.21)/2	-2.27		
		(5.06-5.37)x(4.21+4.21)/2	-1.31		
		(4.28-5.06)x(4.22+4.21)/2	-3.29		
		(3.35-4.28)x(4.21+4.22)/2	-3.92		
		(3.19-3.35)x(4.21+4.21)/2	-0.67		
		(2.90-3.19)x(4.22+4.21)/2	-1.22		
		(2.10-2.90)x(4.22+4.22)/2	-3.38		
		(1.64-2.10)x(4.23+4.22)/2	-1.94		
		(1.01-1.64)x(4.24+4.23)/2	-2.67		
		(-0.07-1.01)x(4.24+4.24)/2	-4.58		
		(-0.08--0.07)x(4.24+4.24)/2	-0.04		
		(-0.11--0.08)x(4.24+4.24)/2	-0.13		
		(-1.17--0.11)x(4.24+4.24)/2	-4.49		
		(-1.78--1.17)x(4.25+4.24)/2	-2.59		
		(-2.26--1.78)x(4.25+4.25)/2	-2.04		
		(-3.11--2.26)x(4.27+4.25)/2	-3.62		
		(-3.35--3.11)x(4.27+4.27)/2	-1.02		
		(-3.49--3.35)x(4.27+4.27)/2	-0.60		
		(-4.45--3.49)x(4.30+4.27)/2	-4.11		
		(-5.20--4.45)x(4.33+4.30)/2	-3.24		
		(-5.54--5.20)x(4.35+4.33)/2	-1.48		
		(-6.12--5.54)x(4.35+4.35)/2	-2.52		
		(-6.63--6.12)x(4.35+4.35)/2	-2.22		
		(-6.91--6.63)x(4.36+4.35)/2	-1.22		
		(-7.72--6.91)x(4.38+4.36)/2	-3.54		
		(-8.62--7.72)x(4.41+4.38)/2	-3.96		
		(-8.81--8.62)x(4.41+4.41)/2	-0.84		
		(-8.89--8.81)x(4.41+4.41)/2	-0.35		
		(-9.13--8.89)x(4.41+4.41)/2	-1.06		
		(-9.69--9.13)x(4.42+4.41)/2	-2.47		
		(-9.90--9.69)x(4.41+4.42)/2	-0.93		
		(-10.33--9.90)x(4.41+4.41)/2	-1.90		
		(-10.99--10.33)x(4.40+4.41)/2	-2.91		
		(-12.04--10.99)x(4.42+4.40)/2	-4.63		
		(-12.08--12.04)x(4.42+4.42)/2	-0.18		
		(-12.14--12.08)x(4.42+4.42)/2	-0.27		
		(-13.17--12.14)x(4.43+4.42)/2	-4.56		
		(-13.72--13.17)x(4.43+4.43)/2	-2.44		
				19.13	
167 2490.00	A1	(-12.61--13.97)x(5.21+4.30)/2	6.47		
		(-11.34--12.61)x(5.20+5.21)/2	6.61		
		(-11.65--11.34)x(4.84+5.20)/2	-1.56		
		(-1.75--11.65)x(5.09+4.84)/2	49.15		
		(-0.68--1.75)x(5.11+5.09)/2	5.46		
		(0.68--0.68)x(5.11+5.11)/2	6.95		
		(1.75-0.68)x(5.09+5.11)/2	5.46		
		A RIPORTARE mq	78.54		

		CALCOLO DELLE AREE		Foglio n. 20
RILEVATO				
N. SEZIONE PROG.	FIG.	ELEMENTI DI CALCOLO	AREA ELEMENTARE mq	AREA FIGURA mq	NOTE
		RIPORTO mq	78.54		
		(11.65-1.75)x(4.84+5.09)/2	49.15		
		(11.35-11.65)x(5.20+4.84)/2	-1.51		
		(12.61-11.35)x(5.21+5.20)/2	6.56		
		(14.48-12.61)x(3.97+5.21)/2	8.58		
		(14.20-14.48)x(3.97+3.97)/2	-1.11		
		(14.11-14.20)x(3.97+3.97)/2	-0.36		
		(14.06-14.11)x(3.96+3.97)/2	-0.20		
		(13.02-14.06)x(3.95+3.96)/2	-4.11		
		(12.35-13.02)x(3.95+3.95)/2	-2.65		
		(11.93-12.35)x(3.95+3.95)/2	-1.66		
		(11.19-11.93)x(3.96+3.95)/2	-2.93		
		(10.84-11.19)x(3.97+3.96)/2	-1.39		
		(10.64-10.84)x(3.97+3.97)/2	-0.79		
		(9.75-10.64)x(3.96+3.97)/2	-3.53		
		(8.93-9.75)x(3.99+3.96)/2	-3.26		
		(8.66-8.93)x(3.99+3.99)/2	-1.08		
		(8.18-8.66)x(4.02+3.99)/2	-1.92		
		(7.57-8.18)x(4.04+4.02)/2	-2.46		
		(7.22-7.57)x(4.06+4.04)/2	-1.42		
		(6.48-7.22)x(4.08+4.06)/2	-3.01		
		(5.51-6.48)x(4.11+4.08)/2	-3.97		
		(5.39-5.51)x(4.12+4.11)/2	-0.49		
		(5.17-5.39)x(4.12+4.12)/2	-0.91		
		(4.29-5.17)x(4.12+4.12)/2	-3.63		
		(3.73-4.29)x(4.14+4.12)/2	-2.31		
		(3.20-3.73)x(4.14+4.14)/2	-2.19		
		(2.16-3.20)x(4.14+4.14)/2	-4.31		
		(2.11-2.16)x(4.14+4.14)/2	-0.21		
		(2.09-2.11)x(4.14+4.14)/2	-0.08		
		(1.02-2.09)x(4.11+4.14)/2	-4.41		
		(0.37-1.02)x(4.11+4.11)/2	-2.67		
		(-0.07-0.37)x(4.10+4.11)/2	-1.81		
		(-0.85--0.07)x(4.10+4.10)/2	-3.20		
		(-1.16--0.85)x(4.09+4.10)/2	-1.27		
		(-1.34--1.16)x(4.10+4.09)/2	-0.74		
		(-2.25--1.34)x(4.11+4.10)/2	-3.74		
		(-3.05--2.25)x(4.15+4.11)/2	-3.30		
		(-3.34--3.05)x(4.16+4.15)/2	-1.20		
		(-3.85--3.34)x(4.18+4.16)/2	-2.13		
		(-4.43--3.85)x(4.19+4.18)/2	-2.43		
		(-4.76--4.43)x(4.20+4.19)/2	-1.38		
		(-5.52--4.76)x(4.20+4.20)/2	-3.19		
		(-6.47--5.52)x(4.20+4.20)/2	-3.99		
		(-6.61--6.47)x(4.20+4.20)/2	-0.59		
		(-6.86--6.61)x(4.20+4.20)/2	-1.05		
		(-7.70--6.86)x(4.19+4.20)/2	-3.52		
		(-8.18--7.70)x(4.21+4.19)/2	-2.02		
		(-8.79--8.18)x(4.22+4.21)/2	-2.57		
		(-9.87--8.79)x(4.27+4.22)/2	-4.58		
		(-9.88--9.87)x(4.27+4.27)/2	-0.04		
		(-9.89--9.88)x(4.27+4.27)/2	-0.04		
		(-10.97--9.89)x(4.30+4.27)/2	-4.63		
		(-11.60--10.97)x(4.30+4.30)/2	-2.71		
		(-12.06--11.60)x(4.31+4.30)/2	-1.98		
		(-12.88--12.06)x(4.31+4.31)/2	-3.53		
		(-13.15--12.88)x(4.31+4.31)/2	-1.16		
		(-13.31--13.15)x(4.31+4.31)/2	-0.69		
		(-13.97--13.31)x(4.30+4.31)/2	-2.84		
				23.93	
168 2505.00	A1	(-12.61--14.11)x(5.24+4.24)/2	7.11		
		(-11.34--12.61)x(5.23+5.24)/2	6.65		
		(-11.65--11.34)x(4.87+5.23)/2	-1.57		
		(-1.75--11.65)x(5.12+4.87)/2	49.45		
		(-0.68--1.75)x(5.14+5.12)/2	5.49		
		(0.68--0.68)x(5.14+5.14)/2	6.99		
		(1.75-0.68)x(5.12+5.14)/2	5.49		
		(11.65-1.75)x(4.87+5.12)/2	49.45		
		(11.35-11.65)x(5.23+4.87)/2	-1.52		
		(12.61-11.35)x(5.24+5.23)/2	6.60		
		(14.63-12.61)x(3.89+5.24)/2	9.22		
		(14.50-14.63)x(3.90+3.89)/2	-0.51		
		(14.13-14.50)x(3.90+3.90)/2	-1.44		
		(13.46-14.13)x(3.91+3.90)/2	-2.62		
		(13.03-13.46)x(3.92+3.91)/2	-1.68		
		(12.79-13.03)x(3.92+3.92)/2	-0.94		
		(11.94-12.79)x(3.93+3.92)/2	-3.34		
		(11.08-11.94)x(3.93+3.93)/2	-3.38		
		(10.85-11.08)x(3.93+3.93)/2	-0.90		
		(10.45-10.85)x(3.91+3.93)/2	-1.57		
		(9.76-10.45)x(3.87+3.91)/2	-2.68		
		(9.37-9.76)x(3.85+3.87)/2	-1.51		
		(8.67-9.37)x(3.82+3.85)/2	-2.68		
		(7.66-8.67)x(3.82+3.82)/2	-3.86		
		(7.58-7.66)x(3.82+3.82)/2	-0.31		
		(7.44-7.58)x(3.82+3.82)/2	-0.53		
		(6.49-7.44)x(3.84+3.82)/2	-3.64		
		(5.95-6.49)x(3.85+3.84)/2	-2.08		
		(5.40-5.95)x(3.86+3.85)/2	-2.12		
		(4.43-5.40)x(3.83+3.86)/2	-3.73		
		(4.31-4.43)x(3.83+3.83)/2	-0.46		
		(4.24-4.31)x(3.83+3.83)/2	-0.27		
		(3.22-4.24)x(3.82+3.83)/2	-3.90		
		(2.53-3.22)x(3.84+3.82)/2	-2.64		
		(2.13-2.53)x(3.85+3.84)/2	-1.54		
		(1.42-2.13)x(3.86+3.85)/2	-2.74		
		(1.04-1.42)x(3.86+3.86)/2	-1.47		
		(0.82-1.04)x(3.87+3.86)/2	-0.85		
		(-0.05-0.82)x(3.87+3.87)/2	-3.37		
		(-0.89--0.05)x(3.89+3.87)/2	-3.26		
		(-1.14--0.89)x(3.90+3.89)/2	-0.97		
		(-1.26--1.14)x(3.90+3.90)/2	-0.47		
		(-1.58--1.26)x(3.92+3.90)/2	-1.25		
		(-2.06--1.58)x(3.94+3.92)/2	-1.89		
		(-2.23--2.06)x(3.95+3.94)/2	-0.67		
		A RIPORTARE mq	78.09		

		CALCOLO DELLE AREE		Foglio n. 21
RILEVATO				
N. SEZIONE PROG.	FIG.	ELEMENTI DI CALCOLO	AREA ELEMENTARE mq	AREA FIGURA mq	NOTE
		RIPORTO mq	78.09		
		(-2.60--2.23)x(3.97+3.95)/2	-1.47		
		(-3.32--2.60)x(4.02+3.97)/2	-2.88		
		(-4.31--3.32)x(4.06+4.02)/2	-4.00		
		(-4.41--4.31)x(4.07+4.06)/2	-0.41		
		(-4.59--4.41)x(4.07+4.07)/2	-0.73		
		(-5.50--4.59)x(4.10+4.07)/2	-3.72		
		(-6.02--5.50)x(4.10+4.10)/2	-2.13		
		(-6.60--6.02)x(4.11+4.10)/2	-2.38		
		(-7.60--6.60)x(4.10+4.11)/2	-4.11		
		(-7.69--7.60)x(4.10+4.10)/2	-0.37		
		(-7.73--7.69)x(4.10+4.10)/2	-0.16		
		(-8.78--7.73)x(4.14+4.10)/2	-4.33		
		(-9.44--8.78)x(4.18+4.14)/2	-2.75		
		(-9.87--9.44)x(4.22+4.18)/2	-1.81		
		(-10.61--9.87)x(4.24+4.22)/2	-3.13		
		(-10.96--10.61)x(4.25+4.24)/2	-1.49		
		(-11.16--10.96)x(4.25+4.25)/2	-0.85		
		(-12.05--11.16)x(4.24+4.25)/2	-3.78		
		(-12.87--12.05)x(4.26+4.24)/2	-3.48		
		(-13.14--12.87)x(4.26+4.26)/2	-1.15		
		(-13.62--13.14)x(4.25+4.26)/2	-2.04		
		(-14.11--13.62)x(4.24+4.25)/2	-2.08		
				28.84	
169 2520.00	A1	(-12.61--14.14)x(5.27+4.25)/2	7.28		
		(-11.34--12.61)x(5.27+5.27)/2	6.69		
		(-11.65--11.34)x(4.90+5.27)/2	-1.58		
		(-1.75--11.65)x(5.15+4.90)/2	49.75		
		(-0.68--1.75)x(5.17+5.15)/2	5.52		
		(0.68--0.68)x(5.17+5.17)/2	7.03		
		(1.75-0.68)x(5.15+5.17)/2	5.52		
		(11.65-1.75)x(4.90+5.15)/2	49.75		
		(11.35-11.65)x(5.27+4.90)/2	-1.53		
		(12.61-11.35)x(5.27+5.27)/2	6.64		
		(14.50-12.61)x(4.01+5.27)/2	8.77		
		(14.14-14.50)x(4.03+4.01)/2	-1.45		
		(13.24-14.14)x(4.04+4.03)/2	-3.63		
		(13.05-13.24)x(4.04+4.04)/2	-0.77		
		(12.96-13.05)x(4.04+4.04)/2	-0.36		
		(12.72-12.96)x(4.05+4.04)/2	-0.97		
		(12.16-12.72)x(4.06+4.05)/2	-2.27		
		(11.96-12.16)x(4.06+4.06)/2	-0.81		
		(11.53-11.96)x(4.05+4.06)/2	-1.74		
		(10.87-11.53)x(4.04+4.05)/2	-2.67		
		(9.82-10.87)x(4.03+4.04)/2	-4.24		
		(9.78-9.82)x(4.03+4.03)/2	-0.16		
		(9.71-9.78)x(4.03+4.03)/2	-0.28		
		(8.69-9.71)x(4.02+4.03)/2	-4.11		
		(8.11-8.69)x(4.00+4.02)/2	-2.33		
		(7.60-8.11)x(3.98+4.00)/2	-2.03		
		(6.70-7.60)x(3.95+3.98)/2	-3.57		
		(6.51-6.70)x(3.95+3.95)/2	-0.75		
		(6.40-6.51)x(3.95+3.95)/2	-0.43		
		(5.42-6.40)x(3.96+3.95)/2	-3.88		
		(4.68-5.42)x(3.97+3.96)/2	-2.93		
		(4.33-4.68)x(3.98+3.97)/2	-1.39		
		(3.69-4.33)x(4.01+3.98)/2	-2.56		
		(3.23-3.69)x(4.04+4.01)/2	-1.85		
		(2.97-3.23)x(4.04+4.04)/2	-1.05		
		(2.14-2.97)x(4.06+4.04)/2	-3.36		
		(1.26-2.14)x(4.04+4.06)/2	-3.56		
		(1.05-1.26)x(4.04+4.04)/2	-0.85		
		(0.68-1.05)x(4.03+4.04)/2	-1.49		
		(-0.04-0.68)x(4.01+4.03)/2	-2.89		
		(-0.45--0.04)x(4.01+4.01)/2	-1.64		
		(-1.13--0.45)x(3.99+4.01)/2	-2.72		
		(-2.16--1.13)x(3.99+3.99)/2	-4.11		
		(-2.22--2.16)x(3.99+3.99)/2	-0.24		
		(-2.32--2.22)x(3.99+3.99)/2	-0.40		
		(-3.31--2.32)x(4.00+3.99)/2	-3.96		
		(-3.87--3.31)x(4.01+4.00)/2	-2.24		
		(-4.40--3.87)x(4.02+4.01)/2	-2.13		
		(-5.33--4.40)x(4.03+4.02)/2	-3.74		
		(-5.49--5.33)x(4.03+4.03)/2	-0.64		
		(-5.58--5.49)x(4.03+4.03)/2	-0.36		
		(-6.58--5.58)x(4.05+4.03)/2	-4.04		
		(-7.05--6.58)x(4.06+4.05)/2	-1.91		
		(-7.67--7.05)x(4.07+4.06)/2	-2.52		
		(-8.34--7.67)x(4.08+4.07)/2	-2.73		
		(-8.76--8.34)x(4.09+4.08)/2	-1.72		
		(-9.00--8.76)x(4.10+4.09)/2	-0.98		
		(-9.85--9.00)x(4.12+4.10)/2	-3.49		
		(-10.71--9.85)x(4.14+4.12)/2	-3.55		
		(-10.94--10.71)x(4.14+4.14)/2	-0.95		
		(-11.35--10.94)x(4.15+4.14)/2	-1.70		
		(-12.03--11.35)x(4.17+4.15)/2	-2.83		
		(-12.42--12.03)x(4.17+4.17)/2	-1.63		
		(-13.12--12.42)x(4.19+4.17)/2	-2.93		
		(-14.13--13.12)x(4.25+4.19)/2	-4.26		
		(-14.14--14.13)x(4.25+4.25)/2	-0.04		
				28.00	
170 2535.00	A1	(-12.61--14.42)x(5.30+4.09)/2	8.50		
		(-11.34--12.61)x(5.30+5.30)/2	6.73		
		(-11.65--11.34)x(4.93+5.30)/2	-1.59		
		(-1.75--11.65)x(5.18+4.93)/2	50.04		
		(-0.68--1.75)x(5.20+5.18)/2	5.55		
		(0.68--0.68)x(5.20+5.20)/2	7.07		
		(1.75-0.68)x(5.18+5.20)/2	5.55		
		(11.65-1.75)x(4.93+5.18)/2	50.04		
		(11.35-11.65)x(5.30+4.93)/2	-1.53		
		(12.61-11.35)x(5.30+5.30)/2	6.68		
		(14.40-12.61)x(4.11+5.30)/2	8.42		
		(14.16-14.40)x(4.12+4.11)/2	-0.99		
		(13.68-14.16)x(4.12+4.12)/2	-1.98		
		(13.07-13.68)x(4.12+4.12)/2	-2.51		
		A RIPORTARE mq	139.98		

		CALCOLO DELLE AREE		Foglio n. 22
RILEVATO				
N. SEZIONE PROG.	FIG.	ELEMENTI DI CALCOLO	AREA ELEMENTARE mq	AREA FIGURA mq	NOTE
		RIPORTO mq	139.98		
		(11.98-13.07)x(4.12+4.12)/2	-4.49		
		(11.97-11.98)x(4.12+4.12)/2	-0.04		
		(10.88-11.97)x(4.07+4.12)/2	-4.46		
		(10.26-10.88)x(4.05+4.07)/2	-2.52		
		(9.79-10.26)x(4.03+4.05)/2	-1.90		
		(8.97-9.79)x(4.01+4.03)/2	-3.30		
		(8.70-8.97)x(4.00+4.01)/2	-1.08		
		(8.55-8.70)x(4.00+4.00)/2	-0.60		
		(7.61-8.55)x(4.01+4.00)/2	-3.76		
		(7.17-7.61)x(4.01+4.01)/2	-1.76		
		(6.52-7.17)x(4.01+4.01)/2	-2.61		
		(5.96-6.52)x(4.03+4.01)/2	-2.25		
		(5.43-5.96)x(4.04+4.03)/2	-2.14		
		(-14.42-5.43)x(4.09+4.04)/2	-80.69		
				28.38	
171 2550.00	A1	(-12.61--14.32)x(5.33+4.19)/2	8.14		
		(-11.34--12.61)x(5.33+5.33)/2	6.77		
		(-11.65--11.34)x(4.96+5.33)/2	-1.59		
		(-1.75--11.65)x(5.21+4.96)/2	50.34		
		(-0.68--1.75)x(5.24+5.21)/2	5.59		
		(0.68--0.68)x(5.24+5.24)/2	7.13		
		(1.76-0.68)x(5.21+5.24)/2	5.64		
		(11.65-1.76)x(4.96+5.21)/2	50.29		
		(11.35-11.65)x(5.33+4.96)/2	-1.54		
		(12.61-11.35)x(5.33+5.33)/2	6.72		
		(14.42-12.61)x(4.12+5.33)/2	8.55		
		(14.25-14.42)x(4.13+4.12)/2	-0.70		
		(14.17-14.25)x(4.13+4.13)/2	-0.33		
		(14.13-14.17)x(4.14+4.13)/2	-0.17		
		(13.08-14.13)x(4.15+4.14)/2	-4.35		
		(12.42-13.08)x(4.14+4.15)/2	-2.74		
		(11.99-12.42)x(4.14+4.14)/2	-1.78		
		(11.24-11.99)x(4.15+4.14)/2	-3.11		
		(10.90-11.24)x(4.15+4.15)/2	-1.41		
		(10.71-10.90)x(4.14+4.15)/2	-0.79		
		(9.81-10.71)x(4.12+4.14)/2	-3.72		
		(9.00-9.81)x(4.11+4.12)/2	-3.33		
		(8.72-9.00)x(4.11+4.11)/2	-1.15		
		(8.23-8.72)x(4.09+4.11)/2	-2.01		
		(7.63-8.23)x(4.07+4.09)/2	-2.45		
		(7.28-7.63)x(4.07+4.07)/2	-1.42		
		(6.54-7.28)x(4.05+4.07)/2	-3.00		
		(-14.32-6.54)x(4.19+4.05)/2	-85.94		
				27.64	
172 2565.00	A1	(-12.61--14.50)x(5.36+4.10)/2	8.94		
		(-11.34--12.61)x(5.36+5.36)/2	6.81		
		(-11.65--11.34)x(4.99+5.36)/2	-1.60		
		(-1.75--11.65)x(5.24+4.99)/2	50.64		
		(-0.68--1.75)x(5.27+5.24)/2	5.62		
		(0.68--0.68)x(5.27+5.27)/2	7.17		
		(1.76-0.68)x(5.24+5.27)/2	5.68		
		(11.65-1.76)x(4.99+5.24)/2	50.59		
		(11.35-11.65)x(5.36+4.99)/2	-1.55		
		(12.61-11.35)x(5.36+5.36)/2	6.75		
		(14.80-12.61)x(3.90+5.36)/2	10.14		
		(14.19-14.80)x(3.90+3.90)/2	-2.38		
		(13.51-14.19)x(3.89+3.90)/2	-2.65		
		(13.10-13.51)x(3.89+3.89)/2	-1.59		
		(12.86-13.10)x(3.89+3.89)/2	-0.93		
		(12.01-12.86)x(3.89+3.89)/2	-3.31		
		(11.15-12.01)x(3.91+3.89)/2	-3.35		
		(10.92-11.15)x(3.92+3.91)/2	-0.90		
		(10.50-10.92)x(3.92+3.92)/2	-1.65		
		(9.82-10.50)x(3.93+3.92)/2	-2.67		
		(9.44-9.82)x(3.93+3.93)/2	-1.49		
		(8.73-9.44)x(3.94+3.93)/2	-2.79		
		(7.73-8.73)x(3.96+3.94)/2	-3.95		
		(7.64-7.73)x(3.96+3.96)/2	-0.36		
		(7.49-7.64)x(3.96+3.96)/2	-0.59		
		(6.55-7.49)x(3.96+3.96)/2	-3.72		
		(6.02-6.55)x(3.97+3.96)/2	-2.10		
		(5.46-6.02)x(3.98+3.97)/2	-2.23		
		(4.48-5.46)x(4.02+3.98)/2	-3.92		
		(4.37-4.48)x(4.03+4.02)/2	-0.44		
		(4.31-4.37)x(4.03+4.03)/2	-0.24		
		(3.28-4.31)x(4.06+4.03)/2	-4.17		
		(2.60-3.28)x(4.06+4.06)/2	-2.76		
		(2.39-2.60)x(4.07+4.06)/2	-0.85		
		(-14.50-2.39)x(4.10+4.07)/2	-69.00		
				31.15	
173 2580.00	A1	(-12.61--14.54)x(5.39+4.10)/2	9.16		
		(-11.34--12.61)x(5.39+5.39)/2	6.85		
		(-11.65--11.34)x(5.02+5.39)/2	-1.61		
		(-1.75--11.65)x(5.27+5.02)/2	50.94		
		(-0.68--1.75)x(5.30+5.27)/2	5.65		
		(0.68--0.68)x(5.30+5.30)/2	7.21		
		(1.76-0.68)x(5.27+5.30)/2	5.71		
		(11.65-1.76)x(5.02+5.27)/2	50.88		
		(11.35-11.65)x(5.39+5.02)/2	-1.56		
		(12.61-11.35)x(5.39+5.39)/2	6.79		
		(14.49-12.61)x(4.14+5.39)/2	8.96		
		(14.20-14.49)x(4.14+4.14)/2	-1.20		
		(13.31-14.20)x(4.15+4.14)/2	-3.69		
		(13.11-13.31)x(4.15+4.15)/2	-0.83		
		(12.77-13.11)x(4.15+4.15)/2	-1.41		
		(12.02-12.77)x(4.15+4.15)/2	-3.11		
		(11.59-12.02)x(4.15+4.15)/2	-1.78		
		(10.93-11.59)x(4.15+4.15)/2	-2.74		
		(9.88-10.93)x(4.17+4.15)/2	-4.37		
		(9.84-9.88)x(4.17+4.17)/2	-0.17		
		(9.82-9.84)x(4.17+4.17)/2	-0.08		
		(9.76-9.82)x(4.17+4.17)/2	-0.25		
		(9.02-9.76)x(4.18+4.17)/2	-3.09		
		(8.75-9.02)x(4.18+4.18)/2	-1.13		
		A RIPORTARE mq	125.13		

		CALCOLO DELLE AREE		Foglio n. 23
RILEVATO				
N. SEZIONE PROG.	FIG.	ELEMENTI DI CALCOLO	AREA ELEMENTARE mq	AREA FIGURA mq	NOTE
		RIPORTO mq	125.13		
		(8.17-8.75)x(4.17+4.18)/2	-2.42		
		(7.66-8.17)x(4.17+4.17)/2	-2.13		
		(6.75-7.66)x(4.18+4.17)/2	-3.80		
		(6.57-6.75)x(4.18+4.18)/2	-0.75		
		(6.46-6.57)x(4.18+4.18)/2	-0.46		
		(5.48-6.46)x(4.17+4.18)/2	-4.09		
		(4.75-5.48)x(4.18+4.17)/2	-3.05		
		(4.39-4.75)x(4.18+4.18)/2	-1.50		
		(3.75-4.39)x(4.18+4.18)/2	-2.68		
		(3.30-3.75)x(4.18+4.18)/2	-1.88		
		(3.04-3.30)x(4.18+4.18)/2	-1.09		
		(2.21-3.04)x(4.18+4.18)/2	-3.47		
		(1.33-2.21)x(4.18+4.18)/2	-3.68		
		(1.12-1.33)x(4.18+4.18)/2	-0.88		
		(0.74-1.12)x(4.18+4.18)/2	-1.59		
		(0.02-0.74)x(4.17+4.18)/2	-3.01		
		(-0.38-0.02)x(4.18+4.17)/2	-1.67		
		(-1.07--0.38)x(4.19+4.18)/2	-2.89		
		(-2.09--1.07)x(4.15+4.19)/2	-4.25		
		(-2.16--2.09)x(4.15+4.15)/2	-0.29		
		(-2.27--2.16)x(4.15+4.15)/2	-0.46		
		(-3.25--2.27)x(4.14+4.15)/2	-4.06		
		(-3.80--3.25)x(4.14+4.14)/2	-2.28		
		(-4.34--3.80)x(4.13+4.14)/2	-2.23		
		(-5.28--4.34)x(4.16+4.13)/2	-3.90		
		(-5.43--5.28)x(4.16+4.16)/2	-0.62		
		(-5.51--5.43)x(4.16+4.16)/2	-0.33		
		(-6.52--5.51)x(4.18+4.16)/2	-4.21		
		(-7.22--6.52)x(4.19+4.18)/2	-2.93		
		(-7.61--7.22)x(4.19+4.19)/2	-1.63		
		(-8.29--7.61)x(4.18+4.19)/2	-2.85		
		(-8.70--8.29)x(4.17+4.18)/2	-1.71		
		(-9.39--8.70)x(4.20+4.17)/2	-2.89		
		(-9.79--9.39)x(4.22+4.20)/2	-1.68		
		(-14.54--9.79)x(4.10+4.22)/2	-19.76		
				28.01	
174 2595.00	A1	(-12.61--14.43)x(5.40+4.18)/2	8.72		
		(-11.34--12.61)x(5.39+5.40)/2	6.85		
		(-11.65--11.34)x(5.03+5.39)/2	-1.62		
		(-1.75--11.65)x(5.30+5.03)/2	51.13		
		(-0.69--1.75)x(5.33+5.30)/2	5.63		
		(0.68--0.69)x(5.32+5.33)/2	7.30		
		(1.81-0.68)x(5.30+5.32)/2	6.00		
		(11.71-1.81)x(5.13+5.30)/2	51.63		
		(11.41-11.71)x(5.49+5.13)/2	-1.59		
		(12.67-11.41)x(5.50+5.49)/2	6.92		
		(14.91-12.67)x(4.00+5.50)/2	10.64		
		(14.21-14.91)x(4.01+4.00)/2	-2.80		
		(13.73-14.21)x(4.00+4.01)/2	-1.92		
		(13.12-13.73)x(4.01+4.00)/2	-2.44		
		(12.05-13.12)x(4.02+4.01)/2	-4.30		
		(12.03-12.05)x(4.02+4.02)/2	-0.08		
		(12.02-12.03)x(4.02+4.02)/2	-0.04		
		(10.94-12.02)x(4.04+4.02)/2	-4.35		
		(10.32-10.94)x(4.05+4.04)/2	-2.51		
		(9.85-10.32)x(4.06+4.05)/2	-1.91		
		(9.04-9.85)x(4.07+4.06)/2	-3.29		
		(8.76-9.04)x(4.07+4.07)/2	-1.14		
		(8.61-8.76)x(4.07+4.07)/2	-0.61		
		(7.67-8.61)x(4.09+4.07)/2	-3.84		
		(6.90-7.67)x(4.09+4.09)/2	-3.15		
		(6.58-6.90)x(4.10+4.09)/2	-1.31		
		(6.03-6.58)x(4.10+4.10)/2	-2.25		
		(5.49-6.03)x(4.10+4.10)/2	-2.21		
		(5.19-5.49)x(4.10+4.10)/2	-1.23		
		(4.40-5.19)x(4.09+4.10)/2	-3.24		
		(4.03-4.40)x(4.09+4.09)/2	-1.51		
		(3.31-4.03)x(4.10+4.09)/2	-2.95		
		(3.01-3.31)x(4.11+4.10)/2	-1.23		
		(2.22-3.01)x(4.12+4.11)/2	-3.25		
		(1.77-2.22)x(4.13+4.12)/2	-1.86		
		(1.13-1.77)x(4.15+4.13)/2	-2.65		
		(0.06-1.13)x(4.16+4.15)/2	-4.45		
		(0.04-0.06)x(4.16+4.16)/2	-0.08		
		(-0.00-0.04)x(4.16+4.16)/2	-0.17		
		(-1.05--0.00)x(4.16+4.16)/2	-4.37		
		(-1.64--1.05)x(4.17+4.16)/2	-2.46		
		(-2.14--1.64)x(4.18+4.17)/2	-2.09		
		(-3.01--2.14)x(4.19+4.18)/2	-3.64		
		(-3.23--3.01)x(4.20+4.19)/2	-0.92		
		(-3.35--3.23)x(4.20+4.20)/2	-0.50		
		(-4.32--3.35)x(4.20+4.20)/2	-4.07		
		(-5.06--4.32)x(4.22+4.20)/2	-3.12		
		(-5.41--5.06)x(4.23+4.22)/2	-1.48		
		(-6.03--5.41)x(4.25+4.23)/2	-2.63		
		(-6.50--6.03)x(4.26+4.25)/2	-2.00		
		(-6.77--6.50)x(4.27+4.26)/2	-1.15		
		(-7.59--6.77)x(4.28+4.27)/2	-3.51		
		(-8.48--7.59)x(4.28+4.28)/2	-3.81		
		(-8.68--8.48)x(4.28+4.28)/2	-0.86		
		(-9.04--8.68)x(4.27+4.28)/2	-1.54		
		(-9.77--9.04)x(4.26+4.27)/2	-3.11		
		(-10.19--9.77)x(4.26+4.26)/2	-1.79		
		(-10.86--10.19)x(4.25+4.26)/2	-2.85		
		(-11.90--10.86)x(4.23+4.25)/2	-4.41		
		(-11.95--11.90)x(4.23+4.23)/2	-0.21		
		(-12.05--11.95)x(4.23+4.23)/2	-0.42		
		(-13.04--12.05)x(4.21+4.23)/2	-4.18		
		(-13.60--13.04)x(4.20+4.21)/2	-2.35		
		(-14.13--13.60)x(4.19+4.20)/2	-2.22		
		(-14.38--14.13)x(4.18+4.19)/2	-1.05		
		(-14.43--14.38)x(4.18+4.18)/2	-0.21		
				29.89	
175	A1	(-12.61--14.92)x(5.38+3.83)/2	10.64		
		A RIPORTARE mq	10.64		

		CALCOLO DELLE AREE		Foglio n. 24
RILEVATO				
N. SEZIONE PROG.	FIG.	ELEMENTI DI CALCOLO	AREA ELEMENTARE mq	AREA FIGURA mq	NOTE
		RIPORTO mq	10.64		
2610.00		(-11.34--12.61)x(5.37+5.38)/2	6.83		
		(-11.65--11.34)x(5.00+5.37)/2	-1.61		
		(-1.75--11.65)x(5.33+5.00)/2	51.13		
		(-0.69--1.75)x(5.36+5.33)/2	5.67		
		(0.67--0.69)x(5.35+5.36)/2	7.28		
		(1.93-0.67)x(5.34+5.35)/2	6.73		
		(11.82-1.93)x(5.32+5.34)/2	52.71		
		(11.53-11.82)x(5.67+5.32)/2	-1.59		
		(12.79-11.53)x(5.67+5.67)/2	7.14		
		(14.97-12.79)x(4.22+5.67)/2	10.78		
		(14.48-14.97)x(4.22+4.22)/2	-2.07		
		(14.24-14.48)x(4.22+4.22)/2	-1.01		
		(14.11-14.24)x(4.22+4.22)/2	-0.55		
		(13.15-14.11)x(4.22+4.22)/2	-4.05		
		(12.41-13.15)x(4.21+4.22)/2	-3.12		
		(12.06-12.41)x(4.20+4.21)/2	-1.47		
		(11.44-12.06)x(4.19+4.20)/2	-2.60		
		(10.97-11.44)x(4.18+4.19)/2	-1.97		
		(10.72-10.97)x(4.17+4.18)/2	-1.04		
		(9.88-10.72)x(4.13+4.17)/2	-3.49		
		(9.02-9.88)x(4.08+4.13)/2	-3.53		
		(8.80-9.02)x(4.07+4.08)/2	-0.90		
		(8.40-8.80)x(4.04+4.07)/2	-1.62		
		(7.71-8.40)x(4.00+4.04)/2	-2.77		
		(7.32-7.71)x(3.97+4.00)/2	-1.55		
		(6.62-7.32)x(3.92+3.97)/2	-2.76		
		(5.62-6.62)x(3.89+3.92)/2	-3.91		
		(5.53-5.62)x(3.89+3.89)/2	-0.35		
		(5.36-5.53)x(3.89+3.89)/2	-0.66		
		(4.44-5.36)x(3.86+3.89)/2	-3.56		
		(3.93-4.44)x(3.85+3.86)/2	-1.97		
		(3.35-3.93)x(3.83+3.85)/2	-2.23		
		(2.32-3.35)x(3.83+3.83)/2	-3.94		
		(2.26-2.32)x(3.83+3.83)/2	-0.23		
		(2.23-2.26)x(3.83+3.83)/2	-0.11		
		(1.17-2.23)x(3.80+3.83)/2	-4.04		
		(0.53-1.17)x(3.79+3.80)/2	-2.43		
		(0.08-0.53)x(3.78+3.79)/2	-1.70		
		(-0.72-0.08)x(3.77+3.78)/2	-3.02		
		(-1.01--0.72)x(3.76+3.77)/2	-1.09		
		(-1.73--1.01)x(3.77+3.76)/2	-2.71		
		(-2.10--1.73)x(3.77+3.77)/2	-1.39		
		(-2.86--2.10)x(3.78+3.77)/2	-2.87		
		(-3.18--2.86)x(3.78+3.78)/2	-1.21		
		(-3.76--3.18)x(3.79+3.78)/2	-2.20		
		(-4.27--3.76)x(3.80+3.79)/2	-1.94		
		(-4.56--4.27)x(3.80+3.80)/2	-1.10		
		(-5.36--4.56)x(3.80+3.80)/2	-3.04		
		(-6.26--5.36)x(3.78+3.80)/2	-3.41		
		(-6.45--6.26)x(3.78+3.78)/2	-0.72		
		(-6.80--6.45)x(3.77+3.78)/2	-1.32		
		(-7.54--6.80)x(3.76+3.77)/2	-2.79		
		(-7.96--7.54)x(3.75+3.76)/2	-1.58		
		(-8.63--7.96)x(3.74+3.75)/2	-2.51		
		(-9.65--8.63)x(3.74+3.74)/2	-3.81		
		(-9.72--9.65)x(3.74+3.74)/2	-0.26		
		(-9.84--9.72)x(3.74+3.74)/2	-0.45		
		(-10.81--9.84)x(3.75+3.74)/2	-3.63		
		(-11.35--10.81)x(3.75+3.75)/2	-2.02		
		(-11.90--11.35)x(3.76+3.75)/2	-2.07		
		(-12.88--11.90)x(3.77+3.76)/2	-3.69		
		(-12.99--12.88)x(3.77+3.77)/2	-0.41		
		(-13.05--12.99)x(3.78+3.77)/2	-0.23		
		(-14.08--13.05)x(3.81+3.78)/2	-3.91		
		(-14.74--14.08)x(3.83+3.81)/2	-2.52		
		(-14.92--14.74)x(3.83+3.83)/2	-0.69		
				39.49	
176 2625.00	A1	(-12.61--14.77)x(5.35+3.91)/2	10.00		
		(-11.34--12.61)x(5.35+5.35)/2	6.79		
		(-11.65--11.34)x(4.97+5.35)/2	-1.60		
		(-1.75--11.65)x(5.36+4.97)/2	51.13		
		(-0.69--1.75)x(5.40+5.36)/2	5.70		
		(0.66--0.69)x(5.37+5.40)/2	7.27		
		(2.05-0.66)x(5.38+5.37)/2	7.47		
		(11.93-2.05)x(5.51+5.38)/2	53.80		
		(11.65-11.93)x(5.85+5.51)/2	-1.59		
		(12.91-11.65)x(5.85+5.85)/2	7.37		
		(15.92-12.91)x(3.85+5.85)/2	14.60		
		(15.41-15.92)x(3.84+3.85)/2	-1.96		
		(14.45-15.41)x(3.86+3.84)/2	-3.70		
		(14.32-14.45)x(3.86+3.86)/2	-0.50		
		(14.09-14.32)x(3.86+3.86)/2	-0.89		
		(13.24-14.09)x(3.85+3.86)/2	-3.28		
		(12.78-13.24)x(3.86+3.85)/2	-1.77		
		(12.15-12.78)x(3.87+3.86)/2	-2.43		
		(11.85-12.15)x(3.88+3.87)/2	-1.16		
		(11.06-11.85)x(3.89+3.88)/2	-3.07		
		(10.99-11.06)x(3.88+3.89)/2	-0.27		
		(9.98-10.99)x(3.88+3.88)/2	-3.92		
		(9.43-9.98)x(3.87+3.88)/2	-2.13		
		(8.89-9.43)x(3.87+3.87)/2	-2.09		
		(7.89-8.89)x(3.84+3.87)/2	-3.86		
		(7.80-7.89)x(3.84+3.84)/2	-0.35		
		(7.75-7.80)x(3.84+3.84)/2	-0.19		
		(6.72-7.75)x(3.79+3.84)/2	-3.93		
		(6.08-6.72)x(3.76+3.79)/2	-2.42		
		(5.63-6.08)x(3.74+3.76)/2	-1.69		
		(4.80-5.63)x(3.74+3.74)/2	-3.10		
		(4.54-4.80)x(3.73+3.74)/2	-0.97		
		(4.41-4.54)x(3.74+3.73)/2	-0.49		
		(3.46-4.41)x(3.74+3.74)/2	-3.55		
		(2.73-3.46)x(3.75+3.74)/2	-2.73		
		(2.37-2.73)x(3.76+3.75)/2	-1.35		
		(1.70-2.37)x(3.78+3.76)/2	-2.53		
		A RIPORTARE mq	106.61		

		CALCOLO DELLE AREE		Foglio n. 25
RILEVATO				
N. SEZIONE PROG.	FIG.	ELEMENTI DI CALCOLO	AREA ELEMENTARE mq	AREA FIGURA mq	NOTE
		RIPORTO mq	106.61		
		(1.28-1.70)x(3.79+3.78)/2	-1.59		
		(1.06-1.28)x(3.79+3.79)/2	-0.83		
		(0.20-1.06)x(3.82+3.79)/2	-3.27		
		(-0.62-0.20)x(3.84+3.82)/2	-3.14		
		(-0.89--0.62)x(3.84+3.84)/2	-1.04		
		(-1.39--0.89)x(3.85+3.84)/2	-1.92		
		(-1.98--1.39)x(3.86+3.85)/2	-2.27		
		(-2.29--1.98)x(3.87+3.86)/2	-1.20		
		(-3.06--2.29)x(3.88+3.87)/2	-2.98		
		(-3.97--3.06)x(3.88+3.88)/2	-3.53		
		(-4.15--3.97)x(3.89+3.88)/2	-0.70		
		(-4.49--4.15)x(3.89+3.89)/2	-1.32		
		(-5.24--4.49)x(3.88+3.89)/2	-2.91		
		(-5.64--5.24)x(3.88+3.88)/2	-1.55		
		(-6.32--5.64)x(3.88+3.88)/2	-2.64		
		(-6.65--6.32)x(3.87+3.88)/2	-1.28		
		(-7.41--6.65)x(3.87+3.87)/2	-2.94		
		(-7.58--7.41)x(3.87+3.87)/2	-0.66		
		(-8.50--7.58)x(3.86+3.87)/2	-3.56		
		(-8.99--8.50)x(3.86+3.86)/2	-1.89		
		(-9.58--8.99)x(3.86+3.86)/2	-2.28		
		(-10.66--9.58)x(3.87+3.86)/2	-4.17		
		(-10.67--10.66)x(3.87+3.87)/2	-0.04		
		(-10.68--10.67)x(3.87+3.87)/2	-0.04		
		(-11.76--10.68)x(3.88+3.87)/2	-4.19		
		(-12.34--11.76)x(3.90+3.88)/2	-2.26		
		(-12.84--12.34)x(3.90+3.90)/2	-1.95		
		(-13.78--12.84)x(3.92+3.90)/2	-3.68		
		(-13.93--13.78)x(3.92+3.92)/2	-0.59		
		(-14.01--13.93)x(3.92+3.92)/2	-0.31		
		(-14.77--14.01)x(3.91+3.92)/2	-2.98		
				42.90	
177 2640.00	A1	(-12.61--15.06)x(5.33+3.70)/2	11.06		
		(-11.34--12.61)x(5.33+5.33)/2	6.77		
		(-11.66--11.34)x(4.95+5.33)/2	-1.64		
		(-1.75--11.66)x(5.38+4.95)/2	51.19		
		(-0.69--1.75)x(5.43+5.38)/2	5.73		
		(0.65--0.69)x(5.39+5.43)/2	7.25		
		(2.17-0.65)x(5.43+5.39)/2	8.22		
		(12.04-2.17)x(5.69+5.43)/2	54.88		
		(11.77-12.04)x(6.02+5.69)/2	-1.58		
		(13.03-11.77)x(6.03+6.02)/2	7.59		
		(16.48-13.03)x(3.73+6.03)/2	16.84		
		(2.14-16.48)x(3.63+3.73)/2	-52.77		
		(1.68-2.14)x(3.61+3.63)/2	-1.67		
		(1.52-1.68)x(3.61+3.61)/2	-0.58		
		(1.20-1.52)x(3.62+3.61)/2	-1.16		
		(0.43-1.20)x(3.66+3.62)/2	-2.80		
		(0.04-0.43)x(3.66+3.66)/2	-1.43		
		(-0.65-0.04)x(3.68+3.66)/2	-2.53		
		(-1.60--0.65)x(3.70+3.68)/2	-3.51		
		(-1.73--1.60)x(3.70+3.70)/2	-0.48		
		(-1.99--1.73)x(3.70+3.70)/2	-0.96		
		(-2.82--1.99)x(3.72+3.70)/2	-3.08		
		(-3.24--2.82)x(3.72+3.72)/2	-1.56		
		(-3.90--3.24)x(3.73+3.72)/2	-2.46		
		(-4.88--3.90)x(3.73+3.73)/2	-3.66		
		(-4.98--4.88)x(3.73+3.73)/2	-0.37		
		(-5.17--4.98)x(3.73+3.73)/2	-0.71		
		(-6.06--5.17)x(3.74+3.73)/2	-3.32		
		(-6.53--6.06)x(3.74+3.74)/2	-1.76		
		(-7.15--6.53)x(3.74+3.74)/2	-2.32		
		(-8.17--7.15)x(3.75+3.74)/2	-3.82		
		(-8.23--8.17)x(3.75+3.75)/2	-0.23		
		(-8.35--8.23)x(3.75+3.75)/2	-0.45		
		(-9.31--8.35)x(3.73+3.75)/2	-3.59		
		(-9.81--9.31)x(3.72+3.73)/2	-1.86		
		(-10.40--9.81)x(3.72+3.72)/2	-2.19		
		(-11.45--10.40)x(3.70+3.72)/2	-3.90		
		(-11.48--11.45)x(3.70+3.70)/2	-0.11		
		(-11.49--11.48)x(3.70+3.70)/2	-0.04		
		(-11.54--11.49)x(3.70+3.70)/2	-0.18		
		(-12.30--11.54)x(3.68+3.70)/2	-2.80		
		(-12.56--12.30)x(3.68+3.68)/2	-0.96		
		(-13.09--12.56)x(3.68+3.68)/2	-1.95		
		(-13.65--13.09)x(3.67+3.68)/2	-2.06		
		(-14.72--13.65)x(3.69+3.67)/2	-3.94		
		(-14.73--14.72)x(3.69+3.69)/2	-0.04		
		(-15.06--14.73)x(3.70+3.69)/2	-1.22		
				49.84	
178 2655.00	A1	(-12.61--13.93)x(5.31+4.43)/2	6.43		
		(-11.34--12.61)x(5.31+5.31)/2	6.74		
		(-11.66--11.34)x(4.92+5.31)/2	-1.64		
		(-1.75--11.66)x(5.41+4.92)/2	51.19		
		(-0.70--1.75)x(5.46+5.41)/2	5.71		
		(0.65--0.70)x(5.42+5.46)/2	7.34		
		(2.29-0.65)x(5.47+5.42)/2	8.93		
		(12.16-2.29)x(5.82+5.47)/2	55.72		
		(11.89-12.16)x(6.15+5.82)/2	-1.62		
		(13.15-11.89)x(6.16+6.15)/2	7.76		
		(18.21-13.15)x(2.78+6.16)/2	22.62		
		(18.09-18.21)x(2.78+2.78)/2	-0.33		
		(17.41-18.09)x(2.79+2.78)/2	-1.89		
		(17.01-17.41)x(2.82+2.79)/2	-1.12		
		(16.82-17.01)x(2.84+2.82)/2	-0.54		
		(15.93-16.82)x(2.94+2.84)/2	-2.57		
		(15.22-15.93)x(2.93+2.94)/2	-2.08		
		(14.85-15.22)x(2.97+2.93)/2	-1.09		
		(14.10-14.85)x(2.92+2.97)/2	-2.21		
		(13.78-14.10)x(2.93+2.92)/2	-0.94		
		(13.62-13.78)x(2.96+2.93)/2	-0.47		
		(12.70-13.62)x(3.07+2.96)/2	-2.77		
		(12.02-12.70)x(3.15+3.07)/2	-2.11		
		(11.62-12.02)x(3.22+3.15)/2	-1.27		
		A RIPORTARE mq	149.79		

		CALCOLO DELLE AREE		Foglio n. 26
RILEVATO				
N. SEZIONE PROG.	FIG.	ELEMENTI DI CALCOLO	AREA ELEMENTARE mq	AREA FIGURA mq	NOTE
		RIPORTO mq	149.79		
		(10.79-11.62)x(3.40+3.22)/2	-2.75		
		(10.54-10.79)x(3.44+3.40)/2	-0.85		
		(10.42-10.54)x(3.44+3.44)/2	-0.41		
		(9.46-10.42)x(3.48+3.44)/2	-3.32		
		(8.82-9.46)x(3.51+3.48)/2	-2.24		
		(8.38-8.82)x(3.52+3.51)/2	-1.55		
		(7.47-8.38)x(3.60+3.52)/2	-3.24		
		(7.31-7.47)x(3.60+3.60)/2	-0.58		
		(7.23-7.31)x(3.60+3.60)/2	-0.29		
		(6.23-7.23)x(3.61+3.60)/2	-3.60		
		(5.63-6.23)x(3.63+3.61)/2	-2.17		
		(5.15-5.63)x(3.65+3.63)/2	-1.75		
		(4.16-5.15)x(3.64+3.65)/2	-3.61		
		(4.07-4.16)x(3.64+3.64)/2	-0.33		
		(4.03-4.07)x(3.64+3.64)/2	-0.15		
		(2.99-4.03)x(3.69+3.64)/2	-3.81		
		(2.43-2.99)x(3.66+3.69)/2	-2.06		
		(1.92-2.43)x(3.66+3.66)/2	-1.87		
		(1.65-1.92)x(3.66+3.66)/2	-0.99		
		(0.85-1.65)x(3.63+3.66)/2	-2.92		
		(0.84-0.85)x(3.63+3.63)/2	-0.04		
		(0.83-0.84)x(3.63+3.63)/2	-0.04		
		(-0.24-0.83)x(3.62+3.63)/2	-3.88		
		(-0.77--0.24)x(3.61+3.62)/2	-1.92		
		(-1.32--0.77)x(3.59+3.61)/2	-1.98		
		(-2.37--1.32)x(3.56+3.59)/2	-3.75		
		(-2.40--2.37)x(3.56+3.56)/2	-0.11		
		(-2.46--2.40)x(3.56+3.56)/2	-0.21		
		(-3.48--2.46)x(3.57+3.56)/2	-3.64		
		(-3.97--3.48)x(3.61+3.57)/2	-1.76		
		(-4.55--3.97)x(3.65+3.61)/2	-2.11		
		(-5.56--4.55)x(3.70+3.65)/2	-3.71		
		(-5.63--5.56)x(3.71+3.70)/2	-0.26		
		(-5.77--5.63)x(3.74+3.71)/2	-0.52		
		(-6.71--5.77)x(3.97+3.74)/2	-3.62		
		(-7.16--6.71)x(4.16+3.97)/2	-1.83		
		(-7.79--7.16)x(4.35+4.16)/2	-2.68		
		(-8.76--7.79)x(4.58+4.35)/2	-4.33		
		(-8.87--8.76)x(4.60+4.58)/2	-0.50		
		(-9.09--8.87)x(4.61+4.60)/2	-1.01		
		(-9.95--9.09)x(4.62+4.61)/2	-3.97		
		(-10.36--9.95)x(4.52+4.62)/2	-1.87		
		(-11.02--10.36)x(4.42+4.52)/2	-2.95		
		(-13.93--11.02)x(4.43+4.42)/2	-12.88		
				51.73	
179 2670.00	A1	(-12.61--14.01)x(5.29+4.35)/2	6.75		
		(-11.34--12.61)x(5.28+5.29)/2	6.71		
		(-11.66--11.34)x(4.90+5.28)/2	-1.63		
		(-1.75--11.66)x(5.44+4.90)/2	51.23		
		(-0.70--1.75)x(5.50+5.44)/2	5.74		
		(0.64--0.70)x(5.44+5.50)/2	7.33		
		(2.41-0.64)x(5.52+5.44)/2	9.70		
		(12.28-2.41)x(5.96+5.52)/2	56.65		
		(12.01-12.28)x(6.28+5.96)/2	-1.65		
		(13.27-12.01)x(6.28+6.28)/2	7.91		
		(17.23-13.27)x(3.65+6.28)/2	19.66		
		(3.60-17.23)x(4.01+3.65)/2	-52.20		
		(3.34-3.60)x(4.00+4.01)/2	-1.04		
		(2.53-3.34)x(3.94+4.00)/2	-3.22		
		(1.79-2.53)x(3.94+3.94)/2	-2.92		
		(1.46-1.79)x(3.95+3.94)/2	-1.30		
		(0.71-1.46)x(3.95+3.95)/2	-2.96		
		(0.38-0.71)x(3.96+3.95)/2	-1.31		
		(0.24-0.38)x(3.96+3.96)/2	-0.55		
		(-0.69-0.24)x(3.99+3.96)/2	-3.70		
		(-1.31--0.69)x(3.95+3.99)/2	-2.46		
		(-1.76--1.31)x(3.91+3.95)/2	-1.77		
		(-2.78--1.76)x(3.86+3.91)/2	-3.96		
		(-2.84--2.78)x(3.86+3.86)/2	-0.23		
		(-3.64--2.84)x(3.90+3.86)/2	-3.10		
		(-3.91--3.64)x(3.92+3.90)/2	-1.06		
		(-4.41--3.91)x(3.94+3.92)/2	-1.96		
		(-4.98--4.41)x(3.98+3.94)/2	-2.26		
		(-5.96--4.98)x(4.05+3.98)/2	-3.93		
		(-6.05--5.96)x(4.06+4.05)/2	-0.36		
		(-6.27--6.05)x(4.06+4.06)/2	-0.89		
		(-7.13--6.27)x(4.09+4.06)/2	-3.50		
		(-7.51--7.13)x(4.13+4.09)/2	-1.56		
		(-8.20--7.51)x(4.18+4.13)/2	-2.87		
		(-9.06--8.20)x(4.23+4.18)/2	-3.62		
		(-9.27--9.06)x(4.24+4.23)/2	-0.89		
		(-9.75--9.27)x(4.25+4.24)/2	-2.04		
		(-10.34--9.75)x(4.26+4.25)/2	-2.51		
		(-10.61--10.34)x(4.27+4.26)/2	-1.15		
		(-11.42--10.61)x(4.29+4.27)/2	-3.47		
		(-12.16--11.42)x(4.32+4.29)/2	-3.19		
		(-12.49--12.16)x(4.33+4.32)/2	-1.43		
		(-13.24--12.49)x(4.34+4.33)/2	-3.25		
		(-13.56--13.24)x(4.34+4.34)/2	-1.39		
		(-13.71--13.56)x(4.35+4.34)/2	-0.65		
		(-14.01--13.71)x(4.35+4.35)/2	-1.30		
				44.40	
180 2685.00	A1	(-12.61--15.00)x(5.27+3.67)/2	10.68		
		(-11.34--12.61)x(5.26+5.27)/2	6.69		
		(-11.67--11.34)x(4.87+5.26)/2	-1.67		
		(-1.75--11.67)x(5.47+4.87)/2	51.29		
		(-0.70--1.75)x(5.53+5.47)/2	5.78		
		(0.64--0.70)x(5.47+5.53)/2	7.37		
		(2.54-0.64)x(5.57+5.47)/2	10.49		
		(12.39-2.54)x(6.09+5.57)/2	57.43		
		(12.13-12.39)x(6.41+6.09)/2	-1.62		
		(13.39-12.13)x(6.41+6.41)/2	8.08		
		(17.27-13.39)x(3.83+6.41)/2	19.87		
		(14.48-17.27)x(3.72+3.83)/2	-10.53		
		A RIPORTARE mq	163.86		

		CALCOLO DELLE AREE		Foglio n. 27
RILEVATO				
N. SEZIONE PROG.	FIG.	ELEMENTI DI CALCOLO	AREA ELEMENTARE mq	AREA FIGURA mq	NOTE
		RIPORTO mq	163.86		
		(14.07-14.48)x(3.69+3.72)/2	-1.52		
		(13.39-14.07)x(3.70+3.69)/2	-2.51		
		(13.00-13.39)x(3.69+3.70)/2	-1.44		
		(12.02-13.00)x(3.70+3.69)/2	-3.62		
		(11.93-12.02)x(3.70+3.70)/2	-0.33		
		(11.90-11.93)x(3.70+3.70)/2	-0.11		
		(10.87-11.90)x(3.69+3.70)/2	-3.81		
		(10.29-10.87)x(3.71+3.69)/2	-2.15		
		(9.80-10.29)x(3.72+3.71)/2	-1.82		
		(8.91-9.80)x(3.73+3.72)/2	-3.32		
		(8.73-8.91)x(3.73+3.73)/2	-0.67		
		(8.29-8.73)x(3.74+3.73)/2	-1.64		
		(7.67-8.29)x(3.75+3.74)/2	-2.32		
		(7.41-7.67)x(3.75+3.75)/2	-0.97		
		(6.60-7.41)x(3.74+3.75)/2	-3.03		
		(5.92-6.60)x(3.72+3.74)/2	-2.54		
		(5.53-5.92)x(3.71+3.72)/2	-1.45		
		(4.57-5.53)x(3.75+3.71)/2	-3.58		
		(4.52-4.57)x(3.75+3.75)/2	-0.19		
		(-6.20-4.52)x(3.60+3.75)/2	-39.40		
		(-6.60--6.20)x(3.60+3.60)/2	-1.44		
		(-7.26--6.60)x(3.60+3.60)/2	-2.38		
		(-7.95--7.26)x(3.61+3.60)/2	-2.49		
		(-8.33--7.95)x(3.62+3.61)/2	-1.37		
		(-9.02--8.33)x(3.63+3.62)/2	-2.50		
		(-9.40--9.02)x(3.63+3.63)/2	-1.38		
		(-10.33--9.40)x(3.64+3.63)/2	-3.38		
		(-10.46--10.33)x(3.65+3.64)/2	-0.47		
		(-10.52--10.46)x(3.65+3.65)/2	-0.22		
		(-11.53--10.52)x(3.66+3.65)/2	-3.69		
		(-12.01--11.53)x(3.66+3.66)/2	-1.76		
		(-12.60--12.01)x(3.67+3.66)/2	-2.16		
		(-13.51--12.60)x(3.67+3.67)/2	-3.34		
		(-13.66--13.51)x(3.67+3.67)/2	-0.55		
		(-14.05--13.66)x(3.67+3.67)/2	-1.43		
		(-14.73--14.05)x(3.67+3.67)/2	-2.50		
		(-15.00--14.73)x(3.67+3.67)/2	-0.99		
				55.39	
181 2700.00	A1	(-12.61--14.35)x(5.25+4.08)/2	8.12		
		(-11.34--12.61)x(5.24+5.25)/2	6.66		
		(-11.67--11.34)x(4.85+5.24)/2	-1.66		
		(-1.75--11.67)x(5.50+4.85)/2	51.34		
		(-0.71--1.75)x(5.56+5.50)/2	5.75		
		(0.63--0.71)x(5.49+5.56)/2	7.40		
		(2.66-0.63)x(5.62+5.49)/2	11.28		
		(12.51-2.66)x(6.23+5.62)/2	58.36		
		(12.25-12.51)x(6.54+6.23)/2	-1.66		
		(13.51-12.25)x(6.55+6.54)/2	8.25		
		(17.37-13.51)x(3.98+6.55)/2	20.32		
		(8.60-17.37)x(3.79+3.98)/2	-34.07		
		(8.59-8.60)x(3.79+3.79)/2	-0.04		
		(8.42-8.59)x(3.79+3.79)/2	-0.64		
		(7.76-8.42)x(3.78+3.79)/2	-2.50		
		(7.15-7.76)x(3.77+3.78)/2	-2.30		
		(6.70-7.15)x(3.75+3.77)/2	-1.69		
		(6.43-6.70)x(3.75+3.75)/2	-1.01		
		(5.64-6.43)x(3.75+3.75)/2	-2.96		
		(5.41-5.64)x(3.75+3.75)/2	-0.86		
		(4.58-5.41)x(3.73+3.75)/2	-3.10		
		(4.28-4.58)x(3.74+3.73)/2	-1.12		
		(3.52-4.28)x(3.75+3.74)/2	-2.85		
		(2.85-3.52)x(3.76+3.75)/2	-2.52		
		(2.46-2.85)x(3.77+3.76)/2	-1.47		
		(1.41-2.46)x(3.77+3.77)/2	-3.96		
		(1.40-1.41)x(3.77+3.77)/2	-0.04		
		(1.36-1.40)x(3.77+3.77)/2	-0.15		
		(0.34-1.36)x(3.76+3.77)/2	-3.84		
		(-0.02-0.34)x(3.76+3.76)/2	-1.35		
		(-0.72--0.02)x(3.74+3.76)/2	-2.63		
		(-1.46--0.72)x(3.73+3.74)/2	-2.76		
		(-1.78--1.46)x(3.72+3.73)/2	-1.19		
		(-2.69--1.78)x(3.72+3.72)/2	-3.39		
		(-2.84--2.69)x(3.72+3.72)/2	-0.56		
		(-2.90--2.84)x(3.72+3.72)/2	-0.22		
		(-3.90--2.90)x(3.75+3.72)/2	-3.74		
		(-4.33--3.90)x(3.75+3.75)/2	-1.61		
		(-4.96--4.33)x(3.75+3.75)/2	-2.36		
		(-5.77--4.96)x(3.76+3.75)/2	-3.04		
		(-6.02--5.77)x(3.77+3.76)/2	-0.94		
		(-6.74--6.02)x(3.77+3.77)/2	-2.71		
		(-7.08--6.74)x(3.78+3.77)/2	-1.28		
		(-7.20--7.08)x(3.77+3.78)/2	-0.45		
		(-8.14--7.20)x(3.76+3.77)/2	-3.54		
		(-8.64--8.14)x(3.75+3.76)/2	-1.88		
		(-9.20--8.64)x(3.74+3.75)/2	-2.10		
		(-10.07--9.20)x(3.75+3.74)/2	-3.26		
		(-10.26--10.07)x(3.75+3.75)/2	-0.71		
		(-10.79--10.26)x(3.79+3.75)/2	-2.00		
		(-11.32--10.79)x(3.86+3.79)/2	-2.03		
		(-12.05--11.32)x(3.96+3.86)/2	-2.85		
		(-12.38--12.05)x(4.05+3.96)/2	-1.32		
		(-12.95--12.38)x(4.07+4.05)/2	-2.31		
		(-13.44--12.95)x(4.09+4.07)/2	-2.00		
		(-14.35--13.44)x(4.08+4.09)/2	-3.72		
				53.09	
182 2715.00	A1	(-12.61--14.50)x(5.23+3.97)/2	8.69		
		(-11.34--12.61)x(5.23+5.23)/2	6.64		
		(-11.67--11.34)x(4.83+5.23)/2	-1.66		
		(-1.75--11.67)x(5.52+4.83)/2	51.34		
		(-0.71--1.75)x(5.60+5.52)/2	5.78		
		(0.63--0.71)x(5.52+5.60)/2	7.45		
		(2.75-0.63)x(5.66+5.52)/2	11.85		
		(12.60-2.75)x(6.35+5.66)/2	59.15		
		(12.34-12.60)x(6.66+6.35)/2	-1.69		
		A RIPORTARE mq	147.55		

		CALCOLO DELLE AREE		Foglio n. 28
RILEVATO				
N. SEZIONE PROG.	FIG.	ELEMENTI DI CALCOLO	AREA ELEMENTARE mq	AREA FIGURA mq	NOTE
		RIPORTO mq	147.55		
		(13.61-12.34)x(6.67+6.66)/2	8.46		
		(17.87-13.61)x(3.83+6.67)/2	22.37		
		(8.21-17.87)x(4.00+3.83)/2	-37.82		
		(7.23-8.21)x(3.98+4.00)/2	-3.91		
		(7.16-7.23)x(3.98+3.98)/2	-0.28		
		(6.90-7.16)x(3.98+3.98)/2	-1.03		
		(6.10-6.90)x(3.97+3.98)/2	-3.18		
		(5.86-6.10)x(3.96+3.97)/2	-0.95		
		(5.05-5.86)x(3.94+3.96)/2	-3.20		
		(4.48-5.05)x(3.92+3.94)/2	-2.24		
		(4.00-4.48)x(3.91+3.92)/2	-1.88		
		(3.11-4.00)x(3.88+3.91)/2	-3.47		
		(2.94-3.11)x(3.87+3.88)/2	-0.66		
		(2.84-2.94)x(3.87+3.87)/2	-0.39		
		(2.40-2.84)x(3.86+3.87)/2	-1.70		
		(1.99-2.40)x(3.86+3.86)/2	-1.58		
		(1.89-1.99)x(3.86+3.86)/2	-0.39		
		(1.73-1.89)x(3.86+3.86)/2	-0.62		
		(0.84-1.73)x(3.85+3.86)/2	-3.43		
		(0.36-0.84)x(3.85+3.85)/2	-1.85		
		(-0.22-0.36)x(3.84+3.85)/2	-2.23		
		(-1.02--0.22)x(3.85+3.84)/2	-3.08		
		(-1.27--1.02)x(3.85+3.85)/2	-0.96		
		(-2.09--1.27)x(3.84+3.85)/2	-3.15		
		(-2.32--2.09)x(3.83+3.84)/2	-0.88		
		(-2.39--2.32)x(3.83+3.83)/2	-0.27		
		(-3.37--2.39)x(3.82+3.83)/2	-3.75		
		(-3.77--3.37)x(3.82+3.82)/2	-1.53		
		(-4.43--3.77)x(3.83+3.82)/2	-2.52		
		(-5.14--4.43)x(3.82+3.83)/2	-2.72		
		(-5.48--5.14)x(3.82+3.82)/2	-1.30		
		(-6.52--5.48)x(3.79+3.82)/2	-3.96		
		(-6.53--6.52)x(3.79+3.79)/2	-0.04		
		(-6.59--6.53)x(3.80+3.79)/2	-0.23		
		(-7.59--6.59)x(3.81+3.80)/2	-3.80		
		(-7.89--7.59)x(3.82+3.81)/2	-1.14		
		(-8.64--7.89)x(3.85+3.82)/2	-2.88		
		(-9.27--8.64)x(3.89+3.85)/2	-2.44		
		(-9.69--9.27)x(3.90+3.89)/2	-1.64		
		(-10.64--9.69)x(3.93+3.90)/2	-3.72		
		(-10.75--10.64)x(3.94+3.93)/2	-0.43		
		(-11.09--10.75)x(3.94+3.94)/2	-1.34		
		(-11.80--11.09)x(3.94+3.94)/2	-2.80		
		(-12.02--11.80)x(3.94+3.94)/2	-0.87		
		(-12.85--12.02)x(3.96+3.94)/2	-3.28		
		(-13.39--12.85)x(3.96+3.96)/2	-2.14		
		(-13.90--13.39)x(3.97+3.96)/2	-2.02		
		(-14.50--13.90)x(3.97+3.97)/2	-2.38		
				52.30	
183 2730.00	A1	(-12.61--14.48)x(5.28+4.04)/2	8.71		
		(-11.34--12.61)x(5.28+5.28)/2	6.71		
		(-11.67--11.34)x(4.88+5.28)/2	-1.68		
		(-1.75--11.67)x(5.58+4.88)/2	51.88		
		(-0.71--1.75)x(5.65+5.58)/2	5.84		
		(0.63--0.71)x(5.57+5.65)/2	7.52		
		(2.76-0.63)x(5.72+5.57)/2	12.02		
		(12.61-2.76)x(6.41+5.72)/2	59.74		
		(12.35-12.61)x(6.72+6.41)/2	-1.71		
		(13.62-12.35)x(6.72+6.72)/2	8.53		
		(18.01-13.62)x(3.79+6.72)/2	23.07		
		(9.00-18.01)x(4.02+3.79)/2	-35.18		
		(8.01-9.00)x(4.00+4.02)/2	-3.97		
		(7.68-8.01)x(4.00+4.00)/2	-1.32		
		(6.97-7.68)x(3.99+4.00)/2	-2.84		
		(6.37-6.97)x(4.00+3.99)/2	-2.40		
		(5.92-6.37)x(4.00+4.00)/2	-1.80		
		(5.05-5.92)x(4.02+4.00)/2	-3.49		
		(4.87-5.05)x(4.02+4.02)/2	-0.72		
		(4.19-4.87)x(4.03+4.02)/2	-2.74		
		(3.83-4.19)x(4.03+4.03)/2	-1.45		
		(3.73-3.83)x(4.03+4.03)/2	-0.40		
		(2.78-3.73)x(4.04+4.03)/2	-3.83		
		(2.41-2.78)x(4.04+4.04)/2	-1.49		
		(1.73-2.41)x(4.03+4.04)/2	-2.74		
		(1.10-1.73)x(4.01+4.03)/2	-2.53		
		(0.69-1.10)x(3.99+4.01)/2	-1.64		
		(-0.22-0.69)x(3.96+3.99)/2	-3.62		
		(-0.36--0.22)x(3.95+3.96)/2	-0.55		
		(-0.45--0.36)x(3.95+3.95)/2	-0.36		
		(-0.90--0.45)x(3.95+3.95)/2	-1.78		
		(-1.32--0.90)x(3.94+3.95)/2	-1.66		
		(-1.41--1.32)x(3.94+3.94)/2	-0.35		
		(-1.54--1.41)x(3.94+3.94)/2	-0.51		
		(-2.45--1.54)x(3.94+3.94)/2	-3.59		
		(-2.86--2.45)x(3.95+3.94)/2	-1.62		
		(-3.50--2.86)x(3.95+3.95)/2	-2.53		
		(-4.17--3.50)x(3.95+3.95)/2	-2.65		
		(-4.55--4.17)x(3.96+3.95)/2	-1.50		
		(-5.49--4.55)x(3.96+3.96)/2	-3.72		
		(-5.59--5.49)x(3.96+3.96)/2	-0.40		
		(-5.99--5.59)x(3.96+3.96)/2	-1.58		
		(-6.64--5.99)x(3.96+3.96)/2	-2.57		
		(-6.81--6.64)x(3.96+3.96)/2	-0.67		
		(-7.69--6.81)x(3.96+3.96)/2	-3.48		
		(-8.13--7.69)x(3.96+3.96)/2	-1.74		
		(-8.73--8.13)x(3.96+3.96)/2	-2.38		
		(-9.44--8.73)x(3.96+3.96)/2	-2.81		
		(-9.78--9.44)x(3.97+3.96)/2	-1.35		
		(-10.76--9.78)x(3.99+3.97)/2	-3.90		
		(-10.83--10.76)x(3.99+3.99)/2	-0.28		
		(-11.09--10.83)x(4.00+3.99)/2	-1.04		
		(-11.87--11.09)x(4.02+4.00)/2	-3.13		
		(-12.08--11.87)x(4.02+4.02)/2	-0.84		
		(-12.92--12.08)x(4.03+4.02)/2	-3.38		
		A RIPORTARE mq	58.10		

		CALCOLO DELLE AREE		Foglio n. 29
RILEVATO				
N. SEZIONE PROG.	FIG.	ELEMENTI DI CALCOLO	AREA ELEMENTARE mq	AREA FIGURA mq	NOTE
		RIPORTO mq	58.10		
		(-13.40--12.92)x(4.03+4.03)/2	-1.93		
		(-13.97--13.40)x(4.03+4.03)/2	-2.30		
		(-14.48--13.97)x(4.04+4.03)/2	-2.06		
				51.81	
184	A1	(-12.61--14.51)x(5.39+4.13)/2	9.04		
2745.00		(-11.34--12.61)x(5.39+5.39)/2	6.85		
		(-11.67--11.34)x(4.99+5.39)/2	-1.71		
		(-1.75--11.67)x(5.69+4.99)/2	52.97		
		(-0.71--1.75)x(5.76+5.69)/2	5.95		
		(0.63--0.71)x(5.68+5.76)/2	7.66		
		(2.75-0.63)x(5.83+5.68)/2	12.20		
		(12.60-2.75)x(6.52+5.83)/2	60.82		
		(12.35-12.60)x(6.82+6.52)/2	-1.67		
		(13.61-12.35)x(6.83+6.82)/2	8.60		
		(17.84-13.61)x(4.01+6.83)/2	22.93		
		(15.52-17.84)x(4.11+4.01)/2	-9.42		
		(15.12-15.52)x(4.04+4.11)/2	-1.63		
		(14.48-15.12)x(3.95+4.04)/2	-2.56		
		(13.56-14.48)x(3.98+3.95)/2	-3.65		
		(13.44-13.56)x(3.98+3.98)/2	-0.48		
		(12.88-13.44)x(3.99+3.98)/2	-2.23		
		(12.40-12.88)x(3.99+3.99)/2	-1.92		
		(12.29-12.40)x(4.00+3.99)/2	-0.44		
		(11.36-12.29)x(4.02+4.00)/2	-3.73		
		(11.03-11.36)x(4.02+4.02)/2	-1.33		
		(10.31-11.03)x(4.03+4.02)/2	-2.90		
		(9.76-10.31)x(4.03+4.03)/2	-2.22		
		(9.27-9.76)x(4.04+4.03)/2	-1.98		
		(8.50-9.27)x(4.05+4.04)/2	-3.11		
		(8.23-8.50)x(4.05+4.05)/2	-1.09		
		(7.23-8.23)x(4.05+4.05)/2	-4.05		
		(7.19-7.23)x(4.05+4.05)/2	-0.16		
		(7.01-7.19)x(4.05+4.05)/2	-0.73		
		(6.15-7.01)x(4.05+4.05)/2	-3.48		
		(5.97-6.15)x(4.05+4.05)/2	-0.73		
		(5.11-5.97)x(4.06+4.05)/2	-3.49		
		(4.70-5.11)x(4.05+4.06)/2	-1.66		
		(4.07-4.70)x(4.05+4.05)/2	-2.55		
		(3.43-4.07)x(4.05+4.05)/2	-2.59		
		(3.03-3.43)x(4.05+4.05)/2	-1.62		
		(2.17-3.03)x(4.05+4.05)/2	-3.48		
		(1.98-2.17)x(4.05+4.05)/2	-0.77		
		(1.13-1.98)x(4.06+4.05)/2	-3.45		
		(0.94-1.13)x(4.06+4.06)/2	-0.77		
		(0.90-0.94)x(4.05+4.06)/2	-0.16		
		(-0.10-0.90)x(4.02+4.05)/2	-4.04		
		(-0.36--0.10)x(4.03+4.02)/2	-1.05		
		(-1.14--0.36)x(4.02+4.03)/2	-3.14		
		(-1.63--1.14)x(4.03+4.02)/2	-1.97		
		(-2.18--1.63)x(4.03+4.03)/2	-2.22		
		(-2.89--2.18)x(4.03+4.03)/2	-2.86		
		(-3.22--2.89)x(4.03+4.03)/2	-1.33		
		(-3.45--3.22)x(4.02+4.03)/2	-0.93		
		(-4.26--3.45)x(4.03+4.02)/2	-3.26		
		(-4.74--4.26)x(4.03+4.03)/2	-1.93		
		(-5.30--4.74)x(4.04+4.03)/2	-2.26		
		(-5.42--5.30)x(4.04+4.04)/2	-0.48		
		(-6.35--5.42)x(4.05+4.04)/2	-3.76		
		(-6.69--6.35)x(4.05+4.05)/2	-1.38		
		(-7.39--6.69)x(4.06+4.05)/2	-2.84		
		(-7.96--7.39)x(4.06+4.06)/2	-2.31		
		(-8.43--7.96)x(4.06+4.06)/2	-1.91		
		(-9.22--8.43)x(4.07+4.06)/2	-3.21		
		(-9.47--9.22)x(4.07+4.07)/2	-1.02		
		(-10.49--9.47)x(4.07+4.07)/2	-4.15		
		(-10.51--10.49)x(4.07+4.07)/2	-0.08		
		(-10.62--10.51)x(4.07+4.07)/2	-0.45		
		(-11.55--10.62)x(4.08+4.07)/2	-3.79		
		(-11.75--11.55)x(4.08+4.08)/2	-0.82		
		(-12.59--11.75)x(4.09+4.08)/2	-3.43		
		(-13.02--12.59)x(4.10+4.09)/2	-1.76		
		(-13.63--13.02)x(4.11+4.10)/2	-2.50		
		(-14.28--13.63)x(4.13+4.11)/2	-2.68		
		(-14.51--14.28)x(4.13+4.13)/2	-0.95		
				52.75	
185	A1	(-12.61--14.66)x(5.56+4.19)/2	9.99		
2760.00		(-11.34--12.61)x(5.55+5.56)/2	7.05		
		(-11.67--11.34)x(5.16+5.55)/2	-1.77		
		(-1.75--11.67)x(5.85+5.16)/2	54.61		
		(-0.71--1.75)x(5.93+5.85)/2	6.13		
		(0.63--0.71)x(5.84+5.93)/2	7.89		
		(2.76-0.63)x(5.99+5.84)/2	12.60		
		(12.61-2.76)x(6.68+5.99)/2	62.40		
		(12.36-12.61)x(6.99+6.68)/2	-1.71		
		(13.62-12.36)x(7.00+6.99)/2	8.81		
		(18.28-13.62)x(3.89+7.00)/2	25.37		
		(18.10-18.28)x(3.90+3.89)/2	-0.70		
		(17.16-18.10)x(3.91+3.90)/2	-3.67		
		(16.96-17.16)x(3.90+3.91)/2	-0.78		
		(16.12-16.96)x(3.87+3.90)/2	-3.26		
		(15.74-16.12)x(3.87+3.87)/2	-1.47		
		(15.08-15.74)x(3.87+3.87)/2	-2.55		
		(14.52-15.08)x(3.88+3.87)/2	-2.17		
		(14.05-14.52)x(3.89+3.88)/2	-1.83		
		(13.30-14.05)x(3.91+3.89)/2	-2.93		
		(13.01-13.30)x(3.91+3.91)/2	-1.13		
		(12.79-13.01)x(3.92+3.91)/2	-0.86		
		(11.97-12.79)x(3.94+3.92)/2	-3.22		
		(11.33-11.97)x(3.95+3.94)/2	-2.52		
		(10.94-11.33)x(3.97+3.95)/2	-1.54		
		(10.87-10.94)x(3.97+3.97)/2	-0.28		
		(9.90-10.87)x(4.00+3.97)/2	-3.87		
		(9.65-9.90)x(4.01+4.00)/2	-1.00		
		(8.86-9.65)x(4.06+4.01)/2	-3.19		
		A RIPORTARE mq	154.40		

		CALCOLO DELLE AREE		Foglio n. 30
RILEVATO				
N. SEZIONE PROG.	FIG.	ELEMENTI DI CALCOLO	AREA ELEMENTARE mq	AREA FIGURA mq	NOTE
		RIPORTO mq	154.40		
		(8.43-8.86)x(4.10+4.06)/2	-1.75		
		(7.83-8.43)x(4.16+4.10)/2	-2.48		
		(7.21-7.83)x(4.19+4.16)/2	-2.59		
		(6.79-7.21)x(4.22+4.19)/2	-1.77		
		(5.99-6.79)x(4.24+4.22)/2	-3.38		
		(5.75-5.99)x(4.25+4.24)/2	-1.02		
		(4.77-5.75)x(4.25+4.25)/2	-4.17		
		(4.72-4.77)x(4.25+4.25)/2	-0.21		
		(4.38-4.72)x(4.26+4.25)/2	-1.45		
		(3.68-4.38)x(4.28+4.26)/2	-2.99		
		(3.56-3.68)x(4.28+4.28)/2	-0.51		
		(2.64-3.56)x(4.28+4.28)/2	-3.94		
		(2.34-2.64)x(4.28+4.28)/2	-1.28		
		(1.61-2.34)x(4.26+4.28)/2	-3.12		
		(1.12-1.61)x(4.22+4.26)/2	-2.08		
		(0.57-1.12)x(4.19+4.22)/2	-2.31		
		(-0.10-0.57)x(4.17+4.19)/2	-2.80		
		(-0.47--0.10)x(4.15+4.17)/2	-1.54		
		(-1.32--0.47)x(4.12+4.15)/2	-3.51		
		(-1.50--1.32)x(4.11+4.12)/2	-0.74		
		(-2.54--1.50)x(4.08+4.11)/2	-4.26		
		(-2.56--2.54)x(4.08+4.08)/2	-0.08		
		(-3.58--2.56)x(4.08+4.08)/2	-4.16		
		(-3.75--3.58)x(4.08+4.08)/2	-0.69		
		(-4.61--3.75)x(4.09+4.08)/2	-3.51		
		(-4.97--4.61)x(4.08+4.09)/2	-1.47		
		(-5.65--4.97)x(4.07+4.08)/2	-2.77		
		(-6.15--5.65)x(4.08+4.07)/2	-2.04		
		(-6.69--6.15)x(4.07+4.08)/2	-2.20		
		(-7.41--6.69)x(4.08+4.07)/2	-2.93		
		(-7.72--7.41)x(4.09+4.08)/2	-1.27		
		(-8.63--7.72)x(4.11+4.09)/2	-3.73		
		(-8.76--8.63)x(4.11+4.11)/2	-0.53		
		(-9.51--8.76)x(4.13+4.11)/2	-3.09		
		(-9.80--9.51)x(4.13+4.13)/2	-1.20		
		(-9.85--9.80)x(4.13+4.13)/2	-0.21		
		(-10.83--9.85)x(4.16+4.13)/2	-4.06		
		(-11.07--10.83)x(4.16+4.16)/2	-1.00		
		(-11.87--11.07)x(4.17+4.16)/2	-3.33		
		(-12.28--11.87)x(4.18+4.17)/2	-1.71		
		(-12.91--12.28)x(4.19+4.18)/2	-2.64		
		(-13.50--12.91)x(4.20+4.19)/2	-2.48		
		(-13.94--13.50)x(4.20+4.20)/2	-1.85		
		(-14.66--13.94)x(4.19+4.20)/2	-3.02		
				56.53	
186 2775.00	A1	(-12.61--14.94)x(5.78+4.23)/2	11.66		
		(-11.34--12.61)x(5.78+5.78)/2	7.34		
		(-11.67--11.34)x(5.38+5.78)/2	-1.84		
		(-1.75--11.67)x(6.08+5.38)/2	56.84		
		(-0.71--1.75)x(6.15+6.08)/2	6.36		
		(0.63--0.71)x(6.07+6.15)/2	8.19		
		(2.76-0.63)x(6.22+6.07)/2	13.09		
		(12.61-2.76)x(6.91+6.22)/2	64.67		
		(12.35-12.61)x(7.21+6.91)/2	-1.84		
		(13.62-12.35)x(7.22+7.21)/2	9.16		
		(18.77-13.62)x(3.78+7.22)/2	28.33		
		(18.60-18.77)x(3.79+3.78)/2	-0.64		
		(10.94-18.60)x(4.13+3.79)/2	-30.33		
		(10.79-10.94)x(4.14+4.13)/2	-0.62		
		(9.90-10.79)x(4.17+4.14)/2	-3.70		
		(9.60-9.90)x(4.19+4.17)/2	-1.25		
		(8.87-9.60)x(4.21+4.19)/2	-3.07		
		(8.77-8.87)x(4.21+4.21)/2	-0.42		
		(7.84-8.77)x(4.25+4.21)/2	-3.93		
		(7.59-7.84)x(4.26+4.25)/2	-1.06		
		(6.80-7.59)x(4.29+4.26)/2	-3.38		
		(6.42-6.80)x(4.29+4.29)/2	-1.63		
		(5.77-6.42)x(4.30+4.29)/2	-2.79		
		(5.24-5.77)x(4.29+4.30)/2	-2.28		
		(4.74-5.24)x(4.29+4.29)/2	-2.15		
		(4.07-4.74)x(4.28+4.29)/2	-2.87		
		(3.71-4.07)x(4.28+4.28)/2	-1.54		
		(2.89-3.71)x(4.30+4.28)/2	-3.52		
		(2.67-2.89)x(4.30+4.30)/2	-0.95		
		(1.72-2.67)x(4.30+4.30)/2	-4.08		
		(1.64-1.72)x(4.31+4.30)/2	-0.34		
		(1.09-1.64)x(4.31+4.31)/2	-2.37		
		(0.61-1.09)x(4.31+4.31)/2	-2.07		
		(0.54-0.61)x(4.32+4.31)/2	-0.30		
		(-0.43-0.54)x(4.32+4.32)/2	-4.19		
		(-0.64--0.43)x(4.32+4.32)/2	-0.91		
		(-1.46--0.64)x(4.30+4.32)/2	-3.53		
		(-1.81--1.46)x(4.29+4.30)/2	-1.50		
		(-2.49--1.81)x(4.27+4.29)/2	-2.91		
		(-2.99--2.49)x(4.25+4.27)/2	-2.13		
		(-3.52--2.99)x(4.24+4.25)/2	-2.25		
		(-4.16--3.52)x(4.22+4.24)/2	-2.71		
		(-4.56--4.16)x(4.21+4.22)/2	-1.69		
		(-5.34--4.56)x(4.20+4.21)/2	-3.28		
		(-5.59--5.34)x(4.20+4.20)/2	-1.05		
		(-6.51--5.59)x(4.19+4.20)/2	-3.86		
		(-6.62--6.51)x(4.19+4.19)/2	-0.46		
		(-7.41--6.62)x(4.18+4.19)/2	-3.31		
		(-7.66--7.41)x(4.18+4.18)/2	-1.04		
		(-8.55--7.66)x(4.18+4.18)/2	-3.72		
		(-8.69--8.55)x(4.18+4.18)/2	-0.59		
		(-8.86--8.69)x(4.18+4.18)/2	-0.71		
		(-9.72--8.86)x(4.19+4.18)/2	-3.60		
		(-10.04--9.72)x(4.19+4.19)/2	-1.34		
		(-10.75--10.04)x(4.20+4.19)/2	-2.98		
		(-11.22--10.75)x(4.21+4.20)/2	-1.98		
		(-11.79--11.22)x(4.21+4.21)/2	-2.40		
		(-12.39--11.79)x(4.21+4.21)/2	-2.53		
		(-12.82--12.39)x(4.21+4.21)/2	-1.81		
		A RIPORTARE mq	70.19		

		CALCOLO DELLE AREE		Foglio n. 31
RILEVATO				
N. SEZIONE PROG.	FIG.	ELEMENTI DI CALCOLO	AREA ELEMENTARE mq	AREA FIGURA mq	NOTE
		RIPORTO mq	70.19		
		(-13.57--12.82)x(4.22+4.21)/2	-3.16		
		(-13.85--13.57)x(4.22+4.22)/2	-1.18		
		(-14.74--13.85)x(4.23+4.22)/2	-3.76		
		(-14.88--14.74)x(4.23+4.23)/2	-0.59		
		(-14.94--14.88)x(4.23+4.23)/2	-0.25		
				61.25	
187 2790.00	A1	(-12.61--15.34)x(6.06+4.24)/2	14.06		
		(-11.34--12.61)x(6.06+6.06)/2	7.70		
		(-11.67--11.34)x(5.66+6.06)/2	-1.93		
		(-1.75--11.67)x(6.35+5.66)/2	59.57		
		(-0.71--1.75)x(6.43+6.35)/2	6.65		
		(0.63--0.71)x(6.34+6.43)/2	8.56		
		(2.76-0.63)x(6.49+6.34)/2	13.66		
		(12.61-2.76)x(7.18+6.49)/2	67.32		
		(12.36-12.61)x(7.49+7.18)/2	-1.83		
		(13.62-12.36)x(7.49+7.49)/2	9.44		
		(19.34-13.62)x(3.68+7.49)/2	31.95		
		(19.18-19.34)x(3.69+3.68)/2	-0.59		
		(8.26-19.18)x(4.25+3.69)/2	-43.35		
		(7.40-8.26)x(4.24+4.25)/2	-3.65		
		(7.23-7.40)x(4.23+4.24)/2	-0.72		
		(7.21-7.23)x(4.23+4.23)/2	-0.08		
		(6.20-7.21)x(4.23+4.23)/2	-4.27		
		(6.08-6.20)x(4.23+4.23)/2	-0.51		
		(5.17-6.08)x(4.22+4.23)/2	-3.84		
		(4.94-5.17)x(4.23+4.22)/2	-0.97		
		(4.14-4.94)x(4.24+4.23)/2	-3.39		
		(3.80-4.14)x(4.25+4.24)/2	-1.44		
		(3.11-3.80)x(4.28+4.25)/2	-2.94		
		(2.67-3.11)x(4.30+4.28)/2	-1.89		
		(2.08-2.67)x(4.32+4.30)/2	-2.54		
		(1.53-2.08)x(4.34+4.32)/2	-2.38		
		(1.05-1.53)x(4.35+4.34)/2	-2.09		
		(0.40-1.05)x(4.36+4.35)/2	-2.83		
		(0.02-0.40)x(4.37+4.36)/2	-1.66		
		(-0.74-0.02)x(4.38+4.37)/2	-3.33		
		(-1.01--0.74)x(4.38+4.38)/2	-1.18		
		(-1.88--1.01)x(4.37+4.38)/2	-3.81		
		(-2.04--1.88)x(4.37+4.37)/2	-0.70		
		(-3.01--2.04)x(4.36+4.37)/2	-4.23		
		(-3.07--3.01)x(4.36+4.36)/2	-0.26		
		(-3.57--3.07)x(4.36+4.36)/2	-2.18		
		(-4.10--3.57)x(4.35+4.36)/2	-2.31		
		(-4.15--4.10)x(4.35+4.35)/2	-0.22		
		(-5.13--4.15)x(4.33+4.35)/2	-4.25		
		(-5.29--5.13)x(4.32+4.33)/2	-0.69		
		(-6.16--5.29)x(4.30+4.32)/2	-3.75		
		(-6.42--6.16)x(4.30+4.30)/2	-1.12		
		(-7.19--6.42)x(4.30+4.30)/2	-3.31		
		(-7.56--7.19)x(4.31+4.30)/2	-1.59		
		(-8.22--7.56)x(4.30+4.31)/2	-2.84		
		(-8.70--8.22)x(4.30+4.30)/2	-2.06		
		(-9.25--8.70)x(4.28+4.30)/2	-2.36		
		(-9.70--9.25)x(4.27+4.28)/2	-1.92		
		(-10.27--9.70)x(4.27+4.27)/2	-2.43		
		(-10.97--10.27)x(4.26+4.27)/2	-2.99		
		(-11.30--10.97)x(4.26+4.26)/2	-1.41		
		(-12.11--11.30)x(4.25+4.26)/2	-3.45		
		(-12.33--12.11)x(4.25+4.25)/2	-0.94		
		(-13.24--12.33)x(4.25+4.25)/2	-3.87		
		(-13.36--13.24)x(4.24+4.25)/2	-0.51		
		(-14.38--13.36)x(4.24+4.24)/2	-4.32		
		(-14.39--14.38)x(4.23+4.24)/2	-0.04		
		(-14.54--14.39)x(4.24+4.23)/2	-0.64		
		(-15.34--14.54)x(4.24+4.24)/2	-3.39		
				69.91	
188 2805.00	A1	(-12.61--15.90)x(6.50+4.31)/2	17.78		
		(-11.34--12.61)x(6.50+6.50)/2	8.25		
		(-11.67--11.34)x(6.11+6.50)/2	-2.08		
		(-1.75--11.67)x(6.69+6.11)/2	63.49		
		(-0.70--1.75)x(6.75+6.69)/2	7.06		
		(0.64--0.70)x(6.69+6.75)/2	9.00		
		(2.52-0.64)x(6.78+6.69)/2	12.66		
		(12.38-2.52)x(7.24+6.78)/2	69.12		
		(12.11-12.38)x(7.56+7.24)/2	-2.00		
		(13.38-12.11)x(7.56+7.56)/2	9.60		
		(19.12-13.38)x(3.74+7.56)/2	32.43		
		(7.21-19.12)x(4.48+3.74)/2	-48.95		
		(7.03-7.21)x(4.47+4.48)/2	-0.81		
		(6.17-7.03)x(4.45+4.47)/2	-3.84		
		(6.00-6.17)x(4.45+4.45)/2	-0.76		
		(5.06-6.00)x(4.43+4.45)/2	-4.17		
		(4.97-5.06)x(4.43+4.43)/2	-0.40		
		(3.96-4.97)x(4.41+4.43)/2	-4.46		
		(3.94-3.96)x(4.41+4.41)/2	-0.09		
		(3.77-3.94)x(4.41+4.41)/2	-0.75		
		(2.92-3.77)x(4.40+4.41)/2	-3.74		
		(2.85-2.92)x(4.40+4.40)/2	-0.31		
		(1.89-2.85)x(4.40+4.40)/2	-4.22		
		(1.75-1.89)x(4.40+4.40)/2	-0.62		
		(0.86-1.75)x(4.41+4.40)/2	-3.92		
		(0.64-0.86)x(4.42+4.41)/2	-0.97		
		(-0.17-0.64)x(4.43+4.42)/2	-3.58		
		(-0.46--0.17)x(4.44+4.43)/2	-1.29		
		(-1.20--0.46)x(4.45+4.44)/2	-3.29		
		(-1.57--1.20)x(4.45+4.45)/2	-1.65		
		(-2.22--1.57)x(4.45+4.45)/2	-2.89		
		(-2.67--2.22)x(4.44+4.45)/2	-2.00		
		(-3.25--2.67)x(4.44+4.44)/2	-2.58		
		(-3.78--3.25)x(4.44+4.44)/2	-2.35		
		(-4.28--3.78)x(4.45+4.44)/2	-2.22		
		(-4.88--4.28)x(4.44+4.45)/2	-2.67		
		(-5.31--4.88)x(4.44+4.44)/2	-1.91		
		(-5.99--5.31)x(4.44+4.44)/2	-3.02		
		A RIPORTARE mq	117.85		

		CALCOLO DELLE AREE		Foglio n. 32
RILEVATO				
N. SEZIONE PROG.	FIG.	ELEMENTI DI CALCOLO	AREA ELEMENTARE mq	AREA FIGURA mq	NOTE
		RIPORTO mq	117.85		
		(-6.33--5.99)x(4.44+4.44)/2	-1.51		
		(-7.09--6.33)x(4.44+4.44)/2	-3.37		
		(-7.36--7.09)x(4.44+4.44)/2	-1.20		
		(-8.20--7.36)x(4.43+4.44)/2	-3.73		
		(-8.39--8.20)x(4.43+4.43)/2	-0.84		
		(-9.30--8.39)x(4.43+4.43)/2	-4.03		
		(-9.42--9.30)x(4.43+4.43)/2	-0.53		
		(-10.41--9.42)x(4.43+4.43)/2	-4.39		
		(-10.45--10.41)x(4.43+4.43)/2	-0.18		
		(-10.48--10.45)x(4.43+4.43)/2	-0.13		
		(-10.94--10.48)x(4.43+4.43)/2	-2.04		
		(-11.44--10.94)x(4.43+4.43)/2	-2.21		
		(-11.47--11.44)x(4.43+4.43)/2	-0.13		
		(-11.51--11.47)x(4.43+4.43)/2	-0.18		
		(-12.50--11.51)x(4.40+4.43)/2	-4.37		
		(-12.62--12.50)x(4.40+4.40)/2	-0.53		
		(-13.53--12.62)x(4.37+4.40)/2	-3.99		
		(-13.72--13.53)x(4.37+4.37)/2	-0.83		
		(-14.56--13.72)x(4.34+4.37)/2	-3.66		
		(-14.83--14.56)x(4.33+4.34)/2	-1.17		
		(-15.58--14.83)x(4.31+4.33)/2	-3.24		
		(-15.90--15.58)x(4.31+4.31)/2	-1.38		
				74.21	
189 2820.00	A1	(-12.61--16.56)x(6.99+4.36)/2	22.42		
		(-11.34--12.61)x(6.99+6.99)/2	8.88		
		(-11.66--11.34)x(6.61+6.99)/2	-2.18		
		(-1.75--11.66)x(7.08+6.61)/2	67.83		
		(-0.70--1.75)x(7.13+7.08)/2	7.46		
		(0.66--0.70)x(7.09+7.13)/2	9.67		
		(2.27-0.66)x(7.13+7.09)/2	11.45		
		(12.15-2.27)x(7.36+7.13)/2	71.58		
		(11.87-12.15)x(7.69+7.36)/2	-2.11		
		(13.13-11.87)x(7.70+7.69)/2	9.70		
		(19.14-13.13)x(3.69+7.70)/2	34.23		
		(5.52-19.14)x(4.23+3.69)/2	-53.94		
		(5.08-5.52)x(4.21+4.23)/2	-1.86		
		(4.43-5.08)x(4.19+4.21)/2	-2.73		
		(4.06-4.43)x(4.18+4.19)/2	-1.55		
		(3.35-4.06)x(4.15+4.18)/2	-2.96		
		(3.03-3.35)x(4.14+4.15)/2	-1.33		
		(2.27-3.03)x(4.12+4.14)/2	-3.14		
		(2.00-2.27)x(4.11+4.12)/2	-1.11		
		(1.18-2.00)x(4.10+4.11)/2	-3.37		
		(0.98-1.18)x(4.10+4.10)/2	-0.82		
		(0.10-0.98)x(4.10+4.10)/2	-3.61		
		(-0.05-0.10)x(4.10+4.10)/2	-0.61		
		(-0.98--0.05)x(4.12+4.10)/2	-3.82		
		(-1.08--0.98)x(4.12+4.12)/2	-0.41		
		(-2.07--1.08)x(4.14+4.12)/2	-4.09		
		(-2.10--2.07)x(4.14+4.14)/2	-0.12		
		(-2.75--2.10)x(4.16+4.14)/2	-2.70		
		(-3.13--2.75)x(4.18+4.16)/2	-1.58		
		(-3.15--3.13)x(4.18+4.18)/2	-0.08		
		(-4.16--3.15)x(4.21+4.18)/2	-4.24		
		(-4.24--4.16)x(4.21+4.21)/2	-0.34		
		(-5.18--4.24)x(4.25+4.21)/2	-3.98		
		(-5.32--5.18)x(4.26+4.25)/2	-0.60		
		(-6.21--5.32)x(4.30+4.26)/2	-3.81		
		(-6.40--6.21)x(4.31+4.30)/2	-0.82		
		(-7.24--6.40)x(4.34+4.31)/2	-3.63		
		(-7.49--7.24)x(4.35+4.34)/2	-1.09		
		(-8.26--7.49)x(4.38+4.35)/2	-3.36		
		(-8.57--8.26)x(4.40+4.38)/2	-1.36		
		(-9.29--8.57)x(4.45+4.40)/2	-3.19		
		(-9.65--9.29)x(4.44+4.45)/2	-1.60		
		(-10.32--9.65)x(4.43+4.44)/2	-2.97		
		(-10.74--10.32)x(4.43+4.43)/2	-1.86		
		(-11.34--10.74)x(4.40+4.43)/2	-2.65		
		(-11.89--11.34)x(4.38+4.40)/2	-2.41		
		(-12.37--11.89)x(4.37+4.38)/2	-2.10		
		(-12.91--12.37)x(4.37+4.37)/2	-2.36		
		(-13.40--12.91)x(4.37+4.37)/2	-2.14		
		(-13.99--13.40)x(4.37+4.37)/2	-2.58		
		(-14.42--13.99)x(4.37+4.37)/2	-1.88		
		(-15.07--14.42)x(4.36+4.37)/2	-2.84		
		(-15.45--15.07)x(4.36+4.36)/2	-1.66		
		(-16.16--15.45)x(4.36+4.36)/2	-3.10		
		(-16.48--16.16)x(4.36+4.36)/2	-1.40		
		(-16.56--16.48)x(4.36+4.36)/2	-0.35		
				90.78	
190 2835.00	A1	(-12.61--17.25)x(7.49+4.40)/2	27.58		
		(-11.34--12.61)x(7.49+7.49)/2	9.51		
		(-11.65--11.34)x(7.11+7.49)/2	-2.26		
		(-1.75--11.65)x(7.48+7.11)/2	72.22		
		(-0.69--1.75)x(7.52+7.48)/2	7.95		
		(0.67--0.69)x(7.50+7.52)/2	10.21		
		(2.03-0.67)x(7.50+7.50)/2	10.20		
		(11.91-2.03)x(7.49+7.50)/2	74.05		
		(11.62-11.91)x(7.84+7.49)/2	-2.22		
		(12.89-11.62)x(7.85+7.84)/2	9.96		
		(18.73-12.89)x(3.95+7.85)/2	34.46		
		(9.51-18.73)x(4.19+3.95)/2	-37.53		
		(9.42-9.51)x(4.20+4.19)/2	-0.38		
		(8.48-9.42)x(4.25+4.20)/2	-3.97		
		(8.35-8.48)x(4.25+4.25)/2	-0.55		
		(7.46-8.35)x(4.26+4.25)/2	-3.79		
		(7.28-7.46)x(4.26+4.26)/2	-0.77		
		(6.43-7.28)x(4.27+4.26)/2	-3.63		
		(5.65-6.43)x(4.27+4.27)/2	-3.33		
		(5.40-5.65)x(4.28+4.27)/2	-1.07		
		(5.14-5.40)x(4.28+4.28)/2	-1.11		
		(4.38-5.14)x(4.30+4.28)/2	-3.26		
		(4.06-4.38)x(4.30+4.30)/2	-1.38		
		(3.35-4.06)x(4.32+4.30)/2	-3.06		
		A RIPORTARE mq	187.83		

		CALCOLO DELLE AREE		Foglio n. 33
RILEVATO				
N. SEZIONE PROG.	FIG.	ELEMENTI DI CALCOLO	AREA ELEMENTARE mq	AREA FIGURA mq	NOTE
		RIPORTO mq	187.83		
		(2.99-3.35)x(4.32+4.32)/2	-1.56		
		(2.33-2.99)x(4.34+4.32)/2	-2.86		
		(1.92-2.33)x(4.35+4.34)/2	-1.78		
		(1.30-1.92)x(4.37+4.35)/2	-2.70		
		(0.85-1.30)x(4.37+4.37)/2	-1.97		
		(0.27-0.85)x(4.39+4.37)/2	-2.54		
		(-0.22-0.27)x(4.40+4.39)/2	-2.15		
		(-0.75--0.22)x(4.43+4.40)/2	-2.34		
		(-1.29--0.75)x(4.44+4.43)/2	-2.39		
		(-1.78--1.29)x(4.46+4.44)/2	-2.18		
		(-2.36--1.78)x(4.49+4.46)/2	-2.60		
		(-2.81--2.36)x(4.50+4.49)/2	-2.02		
		(-3.44--2.81)x(4.52+4.50)/2	-2.84		
		(-3.83--3.44)x(4.53+4.52)/2	-1.76		
		(-4.51--3.83)x(4.53+4.53)/2	-3.08		
		(-4.86--4.51)x(4.53+4.53)/2	-1.59		
		(-5.58--4.86)x(4.52+4.53)/2	-3.26		
		(-5.88--5.58)x(4.51+4.52)/2	-1.35		
		(-6.65--5.88)x(4.48+4.51)/2	-3.46		
		(-6.91--6.65)x(4.48+4.48)/2	-1.16		
		(-7.72--6.91)x(4.45+4.48)/2	-3.62		
		(-7.94--7.72)x(4.44+4.45)/2	-0.98		
		(-8.79--7.94)x(4.42+4.44)/2	-3.77		
		(-8.96--8.79)x(4.42+4.42)/2	-0.75		
		(-9.86--8.96)x(4.43+4.42)/2	-3.98		
		(-9.99--9.86)x(4.44+4.43)/2	-0.58		
		(-10.94--9.99)x(4.46+4.44)/2	-4.23		
		(-11.01--10.94)x(4.46+4.46)/2	-0.31		
		(-12.01--11.01)x(4.46+4.46)/2	-4.46		
		(-12.04--12.01)x(4.46+4.46)/2	-0.13		
		(-12.07--12.04)x(4.46+4.46)/2	-0.13		
		(-12.82--12.07)x(4.45+4.46)/2	-3.34		
		(-13.06--12.82)x(4.45+4.45)/2	-1.07		
		(-13.07--13.06)x(4.45+4.45)/2	-0.04		
		(-13.08--13.07)x(4.45+4.45)/2	-0.04		
		(-14.09--13.08)x(4.42+4.45)/2	-4.48		
		(-14.15--14.09)x(4.42+4.42)/2	-0.27		
		(-15.12--14.15)x(4.41+4.42)/2	-4.28		
		(-15.22--15.12)x(4.41+4.41)/2	-0.44		
		(-16.15--15.22)x(4.41+4.41)/2	-4.10		
		(-16.29--16.15)x(4.41+4.41)/2	-0.62		
		(-17.17--16.29)x(4.40+4.41)/2	-3.88		
		(-17.25--17.17)x(4.40+4.40)/2	-0.35		
				96.39	
191 2850.00	A1	(-12.61--18.04)x(7.99+4.36)/2	33.53		
		(-11.34--12.61)x(7.98+7.99)/2	10.14		
		(-11.65--11.34)x(7.62+7.98)/2	-2.42		
		(-1.75--11.65)x(7.87+7.62)/2	76.68		
		(-0.68--1.75)x(7.90+7.87)/2	8.44		
		(0.68--0.68)x(7.90+7.90)/2	10.74		
		(1.78-0.68)x(7.87+7.90)/2	8.67		
		(11.68-1.78)x(7.64+7.87)/2	76.77		
		(11.38-11.68)x(8.00+7.64)/2	-2.35		
		(12.64-11.38)x(8.01+8.00)/2	10.09		
		(18.71-12.64)x(3.96+8.01)/2	36.33		
		(8.91-18.71)x(4.33+3.96)/2	-40.62		
		(8.10-8.91)x(4.31+4.33)/2	-3.50		
		(7.89-8.10)x(4.32+4.31)/2	-0.91		
		(7.03-7.89)x(4.34+4.32)/2	-3.72		
		(6.86-7.03)x(4.34+4.34)/2	-0.74		
		(5.97-6.86)x(4.35+4.34)/2	-3.87		
		(5.83-5.97)x(4.35+4.35)/2	-0.61		
		(5.71-5.83)x(4.35+4.35)/2	-0.52		
		(4.81-5.71)x(4.37+4.35)/2	-3.92		
		(3.83-4.81)x(4.35+4.37)/2	-4.27		
		(3.78-3.83)x(4.35+4.35)/2	-0.22		
		(2.77-3.78)x(4.38+4.35)/2	-4.41		
		(2.76-2.77)x(4.38+4.38)/2	-0.04		
		(2.46-2.76)x(4.38+4.38)/2	-1.31		
		(1.73-2.46)x(4.39+4.38)/2	-3.20		
		(1.70-1.73)x(4.39+4.39)/2	-0.13		
		(0.70-1.70)x(4.40+4.39)/2	-4.39		
		(0.63-0.70)x(4.40+4.40)/2	-0.31		
		(-0.32-0.63)x(4.40+4.40)/2	-4.18		
		(-0.43--0.32)x(4.40+4.40)/2	-0.48		
		(-1.35--0.43)x(4.39+4.40)/2	-4.04		
		(-1.50--1.35)x(4.39+4.39)/2	-0.66		
		(-2.37--1.50)x(4.39+4.39)/2	-3.82		
		(-2.57--2.37)x(4.39+4.39)/2	-0.88		
		(-3.40--2.57)x(4.38+4.39)/2	-3.64		
		(-3.63--3.40)x(4.39+4.38)/2	-1.01		
		(-4.43--3.63)x(4.39+4.39)/2	-3.51		
		(-4.70--4.43)x(4.39+4.39)/2	-1.19		
		(-5.45--4.70)x(4.40+4.39)/2	-3.30		
		(-5.77--5.45)x(4.40+4.40)/2	-1.41		
		(-6.48--5.77)x(4.41+4.40)/2	-3.13		
		(-6.83--6.48)x(4.41+4.41)/2	-1.54		
		(-7.51--6.83)x(4.43+4.41)/2	-3.01		
		(-7.90--7.51)x(4.43+4.43)/2	-1.73		
		(-8.53--7.90)x(4.45+4.43)/2	-2.80		
		(-8.97--8.53)x(4.45+4.45)/2	-1.96		
		(-9.56--8.97)x(4.47+4.45)/2	-2.63		
		(-10.04--9.56)x(4.47+4.47)/2	-2.15		
		(-10.58--10.04)x(4.47+4.47)/2	-2.41		
		(-11.10--10.58)x(4.47+4.47)/2	-2.32		
		(-11.61--11.10)x(4.47+4.47)/2	-2.28		
		(-12.17--11.61)x(4.46+4.47)/2	-2.50		
		(-12.64--12.17)x(4.46+4.46)/2	-2.10		
		(-13.07--12.64)x(4.45+4.46)/2	-1.92		
		(-13.66--13.07)x(4.44+4.45)/2	-2.62		
		(-14.30--13.66)x(4.42+4.44)/2	-2.84		
		(-14.69--14.30)x(4.42+4.42)/2	-1.72		
		(-15.37--14.69)x(4.40+4.42)/2	-3.00		
		(-15.71--15.37)x(4.38+4.40)/2	-1.49		
		A RIPORTARE mq	117.66		

		CALCOLO DELLE AREE		Foglio n. 34
RILEVATO				
N. SEZIONE PROG.	FIG.	ELEMENTI DI CALCOLO	AREA ELEMENTARE mq	AREA FIGURA mq	NOTE
		RIPORTO mq	117.66		
		(-16.44--15.71)x(4.37+4.38)/2	-3.19		
		(-16.74--16.44)x(4.36+4.37)/2	-1.31		
		(-17.50--16.74)x(4.35+4.36)/2	-3.31		
		(-17.77--17.50)x(4.35+4.35)/2	-1.17		
		(-18.04--17.77)x(4.36+4.35)/2	-1.18		
				107.50	
192	A1	(-12.61--18.80)x(8.47+4.34)/2	39.65		
2865.00		(-11.34--12.61)x(8.47+8.47)/2	10.76		
		(-11.64--11.34)x(8.11+8.47)/2	-2.49		
		(-1.75--11.64)x(8.27+8.11)/2	81.00		
		(-0.68--1.75)x(8.28+8.27)/2	8.85		
		(0.69--0.68)x(8.29+8.28)/2	11.35		
		(1.78-0.69)x(8.26+8.29)/2	9.02		
		(11.68-1.78)x(7.97+8.26)/2	80.34		
		(11.37-11.68)x(8.34+7.97)/2	-2.53		
		(12.64-11.37)x(8.34+8.34)/2	10.59		
		(19.36-12.64)x(3.86+8.34)/2	40.99		
		(-11.31-19.36)x(4.37+3.86)/2	-126.21		
		(-12.19--11.31)x(4.36+4.37)/2	-3.84		
		(-12.38--12.19)x(4.36+4.36)/2	-0.83		
		(-13.21--12.38)x(4.36+4.36)/2	-3.62		
		(-13.98--13.21)x(4.36+4.36)/2	-3.36		
		(-14.24--13.98)x(4.36+4.36)/2	-1.13		
		(-14.52--14.24)x(4.36+4.36)/2	-1.22		
		(-15.27--14.52)x(4.37+4.36)/2	-3.27		
		(-15.59--15.27)x(4.37+4.37)/2	-1.40		
		(-16.29--15.59)x(4.37+4.37)/2	-3.06		
		(-16.65--16.29)x(4.37+4.37)/2	-1.57		
		(-17.32--16.65)x(4.37+4.37)/2	-2.93		
		(-17.72--17.32)x(4.37+4.37)/2	-1.75		
		(-18.34--17.72)x(4.35+4.37)/2	-2.70		
		(-18.79--18.34)x(4.34+4.35)/2	-1.96		
		(-18.80--18.79)x(4.34+4.34)/2	-0.04		
				128.64	
193	A1	(-12.61--19.76)x(9.04+4.27)/2	47.58		
2880.00		(-11.34--12.61)x(9.03+9.04)/2	11.47		
		(-11.63--11.34)x(8.68+9.03)/2	-2.57		
		(-1.75--11.63)x(8.65+8.68)/2	85.61		
		(-0.67--1.75)x(8.64+8.65)/2	9.34		
		(0.69--0.67)x(8.67+8.64)/2	11.77		
		(1.84-0.69)x(8.62+8.67)/2	9.94		
		(11.74-1.84)x(8.24+8.62)/2	83.46		
		(11.43-11.74)x(8.61+8.24)/2	-2.61		
		(12.70-11.43)x(8.62+8.61)/2	10.94		
		(19.82-12.70)x(3.87+8.62)/2	44.46		
		(-11.81-19.82)x(4.28+3.87)/2	-128.89		
		(-12.76--11.81)x(4.27+4.28)/2	-4.06		
		(-12.84--12.76)x(4.27+4.27)/2	-0.34		
		(-13.84--12.84)x(4.27+4.27)/2	-4.27		
		(-13.86--13.84)x(4.27+4.27)/2	-0.09		
		(-13.88--13.86)x(4.27+4.27)/2	-0.09		
		(-14.30--13.88)x(4.28+4.27)/2	-1.80		
		(-14.86--14.30)x(4.30+4.28)/2	-2.40		
		(-14.89--14.86)x(4.30+4.30)/2	-0.13		
		(-14.92--14.89)x(4.30+4.30)/2	-0.13		
		(-15.92--14.92)x(4.28+4.30)/2	-4.29		
		(-16.00--15.92)x(4.28+4.28)/2	-0.34		
		(-16.94--16.00)x(4.28+4.28)/2	-4.02		
		(-17.08--16.94)x(4.28+4.28)/2	-0.60		
		(-17.97--17.08)x(4.29+4.28)/2	-3.81		
		(-18.16--17.97)x(4.28+4.29)/2	-0.81		
		(-19.00--18.16)x(4.27+4.28)/2	-3.59		
		(-19.23--19.00)x(4.27+4.27)/2	-0.98		
		(-19.76--19.23)x(4.27+4.27)/2	-2.26		
				146.49	
194	A1	(-12.61--20.52)x(9.55+4.27)/2	54.66		
2895.00		(-11.34--12.61)x(9.54+9.55)/2	12.12		
		(-11.62--11.34)x(9.21+9.54)/2	-2.62		
		(-1.75--11.62)x(8.97+9.21)/2	89.72		
		(-0.66--1.75)x(8.95+8.97)/2	9.77		
		(0.70--0.66)x(8.99+8.95)/2	12.20		
		(1.92-0.70)x(8.93+8.99)/2	10.93		
		(11.83-1.92)x(8.45+8.93)/2	86.12		
		(11.51-11.83)x(8.83+8.45)/2	-2.76		
		(12.78-11.51)x(8.84+8.83)/2	11.22		
		(20.34-12.78)x(3.80+8.84)/2	47.78		
		(-8.56-20.34)x(4.35+3.80)/2	-117.77		
		(-9.10--8.56)x(4.36+4.35)/2	-2.35		
		(-9.59--9.10)x(4.36+4.36)/2	-2.14		
		(-10.21--9.59)x(4.36+4.36)/2	-2.70		
		(-10.62--10.21)x(4.36+4.36)/2	-1.79		
		(-11.31--10.62)x(4.34+4.36)/2	-3.00		
		(-11.65--11.31)x(4.34+4.34)/2	-1.48		
		(-12.41--11.65)x(4.34+4.34)/2	-3.30		
		(-12.67--12.41)x(4.34+4.34)/2	-1.13		
		(-13.51--12.67)x(4.35+4.34)/2	-3.65		
		(-13.70--13.51)x(4.35+4.35)/2	-0.83		
		(-14.61--13.70)x(4.34+4.35)/2	-3.95		
		(-14.73--14.61)x(4.33+4.34)/2	-0.52		
		(-14.83--14.73)x(4.33+4.33)/2	-0.43		
		(-15.76--14.83)x(4.31+4.33)/2	-4.02		
		(-16.40--15.76)x(4.29+4.31)/2	-2.75		
		(-16.78--16.40)x(4.28+4.29)/2	-1.63		
		(-16.81--16.78)x(4.28+4.28)/2	-0.13		
		(-17.81--16.81)x(4.27+4.28)/2	-4.28		
		(-17.91--17.81)x(4.27+4.27)/2	-0.43		
		(-18.84--17.91)x(4.27+4.27)/2	-3.97		
		(-19.01--18.84)x(4.27+4.27)/2	-0.73		
		(-19.87--19.01)x(4.28+4.27)/2	-3.68		
		(-20.12--19.87)x(4.27+4.28)/2	-1.07		
		(-20.52--20.12)x(4.27+4.27)/2	-1.71		
				159.70	
195	A1	(-12.61--20.97)x(10.01+4.43)/2	60.36		
2910.00		(-11.34--12.61)x(10.00+10.01)/2	12.71		
		A RIPORTARE mq	73.07		

		CALCOLO DELLE AREE		Foglio n. 35
RILEVATO				
N. SEZIONE PROG.	FIG.	ELEMENTI DI CALCOLO	AREA ELEMENTARE mq	AREA FIGURA mq	NOTE
		RIPORTO mq	73.07		
		(-11.61--11.34)x(9.68+10.00)/2	-2.66		
		(-1.75--11.61)x(9.24+9.68)/2	93.28		
		(-0.64--1.75)x(9.19+9.24)/2	10.23		
		(0.70--0.64)x(9.25+9.19)/2	12.35		
		(1.99-0.70)x(9.18+9.25)/2	11.89		
		(11.90-1.99)x(8.61+9.18)/2	88.15		
		(11.58-11.90)x(8.99+8.61)/2	-2.82		
		(12.85-11.58)x(9.00+8.99)/2	11.42		
		(20.53-12.85)x(3.87+9.00)/2	49.42		
		(12.87-20.53)x(4.05+3.87)/2	-30.33		
		(12.50-12.87)x(4.13+4.05)/2	-1.51		
		(11.84-12.50)x(4.21+4.13)/2	-2.75		
		(11.36-11.84)x(4.21+4.21)/2	-2.02		
		(10.81-11.36)x(4.24+4.21)/2	-2.32		
		(10.22-10.81)x(4.26+4.24)/2	-2.51		
		(9.78-10.22)x(4.27+4.26)/2	-1.88		
		(9.08-9.78)x(4.26+4.27)/2	-2.99		
		(8.75-9.08)x(4.27+4.26)/2	-1.41		
		(7.94-8.75)x(4.28+4.27)/2	-3.46		
		(7.72-7.94)x(4.28+4.28)/2	-0.94		
		(6.81-7.72)x(4.29+4.28)/2	-3.90		
		(6.69-6.81)x(4.29+4.29)/2	-0.51		
		(5.67-6.69)x(4.30+4.29)/2	-4.38		
		(5.66-5.67)x(4.30+4.30)/2	-0.04		
		(5.61-5.66)x(4.30+4.30)/2	-0.21		
		(4.63-5.61)x(4.30+4.30)/2	-4.21		
		(4.53-4.63)x(4.30+4.30)/2	-0.43		
		(3.60-4.53)x(4.30+4.30)/2	-4.00		
		(3.39-3.60)x(4.31+4.30)/2	-0.90		
		(2.57-3.39)x(4.31+4.31)/2	-3.53		
		(1.90-2.57)x(4.31+4.31)/2	-2.89		
		(1.54-1.90)x(4.31+4.31)/2	-1.55		
		(1.12-1.54)x(4.31+4.31)/2	-1.81		
		(0.51-1.12)x(4.32+4.31)/2	-2.63		
		(-0.02-0.51)x(4.33+4.32)/2	-2.29		
		(-0.52--0.02)x(4.33+4.33)/2	-2.17		
		(-1.16--0.52)x(4.35+4.33)/2	-2.78		
		(-1.55--1.16)x(4.35+4.35)/2	-1.70		
		(-2.30--1.55)x(4.37+4.35)/2	-3.27		
		(-2.58--2.30)x(4.37+4.37)/2	-1.22		
		(-3.44--2.58)x(4.42+4.37)/2	-3.78		
		(-3.61--3.44)x(4.42+4.42)/2	-0.75		
		(-4.57--3.61)x(4.57+4.42)/2	-4.32		
		(-4.64--4.57)x(4.57+4.57)/2	-0.32		
		(-5.24--4.64)x(4.63+4.57)/2	-2.76		
		(-5.67--5.24)x(4.69+4.63)/2	-2.00		
		(-5.71--5.67)x(4.68+4.69)/2	-0.19		
		(-6.70--5.71)x(4.64+4.68)/2	-4.61		
		(-6.85--6.70)x(4.60+4.64)/2	-0.69		
		(-7.73--6.85)x(4.54+4.60)/2	-4.02		
		(-7.99--7.73)x(4.52+4.54)/2	-1.18		
		(-8.76--7.99)x(4.50+4.52)/2	-3.47		
		(-9.12--8.76)x(4.52+4.50)/2	-1.62		
		(-9.79--9.12)x(4.56+4.52)/2	-3.04		
		(-10.26--9.79)x(4.58+4.56)/2	-2.15		
		(-10.82--10.26)x(4.60+4.58)/2	-2.57		
		(-11.40--10.82)x(4.59+4.60)/2	-2.67		
		(-11.85--11.40)x(4.57+4.59)/2	-2.06		
		(-12.54--11.85)x(4.56+4.57)/2	-3.15		
		(-12.88--12.54)x(4.55+4.56)/2	-1.55		
		(-13.68--12.88)x(4.54+4.55)/2	-3.64		
		(-13.91--13.68)x(4.54+4.54)/2	-1.04		
		(-14.81--13.91)x(4.50+4.54)/2	-4.07		
		(-14.93--14.81)x(4.50+4.50)/2	-0.54		
		(-15.95--14.93)x(4.47+4.50)/2	-4.57		
		(-15.96--15.95)x(4.47+4.47)/2	-0.04		
		(-15.98--15.96)x(4.47+4.47)/2	-0.09		
		(-16.09--15.98)x(4.46+4.47)/2	-0.49		
		(-16.92--16.09)x(4.45+4.46)/2	-3.70		
		(-16.99--16.92)x(4.45+4.45)/2	-0.31		
		(-17.09--16.99)x(4.45+4.45)/2	-0.45		
		(-18.02--17.09)x(4.43+4.45)/2	-4.13		
		(-18.23--18.02)x(4.43+4.43)/2	-0.93		
		(-19.05--18.23)x(4.42+4.43)/2	-3.63		
		(-19.37--19.05)x(4.42+4.42)/2	-1.41		
		(-20.08--19.37)x(4.43+4.42)/2	-3.14		
		(-20.50--20.08)x(4.42+4.43)/2	-1.86		
		(-20.97--20.50)x(4.43+4.42)/2	-2.08		
				164.77	
196 2925.00	A1	(-12.61--21.11)x(10.41+4.74)/2	64.39		
		(-11.34--12.61)x(10.40+10.41)/2	13.21		
		(-11.60--11.34)x(10.09+10.40)/2	-2.66		
		(-1.75--11.60)x(9.46+10.09)/2	96.28		
		(-0.63--1.75)x(9.39+9.46)/2	10.56		
		(0.71--0.63)x(9.47+9.39)/2	12.64		
		(2.03-0.71)x(9.38+9.47)/2	12.44		
		(11.95-2.03)x(8.71+9.38)/2	89.73		
		(11.62-11.95)x(9.10+8.71)/2	-2.94		
		(12.89-11.62)x(9.11+9.10)/2	11.56		
		(21.03-12.89)x(3.68+9.11)/2	52.06		
		(10.19-21.03)x(4.05+3.68)/2	-41.90		
		(9.31-10.19)x(4.08+4.05)/2	-3.58		
		(9.16-9.31)x(4.08+4.08)/2	-0.61		
		(8.20-9.16)x(4.12+4.08)/2	-3.94		
		(8.12-8.20)x(4.12+4.12)/2	-0.33		
		(8.11-8.12)x(4.12+4.12)/2	-0.04		
		(7.09-8.11)x(4.16+4.12)/2	-4.22		
		(6.92-7.09)x(4.16+4.16)/2	-0.71		
		(6.06-6.92)x(4.18+4.16)/2	-3.59		
		(5.73-6.06)x(4.19+4.18)/2	-1.38		
		(5.02-5.73)x(4.19+4.19)/2	-2.97		
		(4.53-5.02)x(4.19+4.19)/2	-2.05		
		(3.99-4.53)x(4.19+4.19)/2	-2.26		
		(3.34-3.99)x(4.20+4.19)/2	-2.73		
		A RIPORTARE mq	286.96		

		CALCOLO DELLE AREE		Foglio n. 36
RILEVATO				
N. SEZIONE PROG.	FIG.	ELEMENTI DI CALCOLO	AREA ELEMENTARE mq	AREA FIGURA mq	NOTE
		RIPORTO mq	286.96		
		(2.95-3.34)x(4.20+4.20)/2	-1.64		
		(2.15-2.95)x(4.21+4.20)/2	-3.36		
		(1.92-2.15)x(4.22+4.21)/2	-0.97		
		(0.95-1.92)x(4.23+4.22)/2	-4.10		
		(0.88-0.95)x(4.23+4.23)/2	-0.30		
		(0.83-0.88)x(4.23+4.23)/2	-0.21		
		(0.42-0.83)x(4.23+4.23)/2	-1.73		
		(-0.08-0.42)x(4.24+4.23)/2	-2.12		
		(-0.15--0.08)x(4.24+4.24)/2	-0.30		
		(-0.24--0.15)x(4.25+4.24)/2	-0.38		
		(-1.18--0.24)x(4.26+4.25)/2	-4.00		
		(-1.43--1.18)x(4.27+4.26)/2	-1.07		
		(-2.22--1.43)x(4.30+4.27)/2	-3.39		
		(-2.62--2.22)x(4.33+4.30)/2	-1.73		
		(-3.25--2.62)x(4.37+4.33)/2	-2.74		
		(-3.82--3.25)x(4.41+4.37)/2	-2.50		
		(-4.29--3.82)x(4.43+4.41)/2	-2.08		
		(-5.01--4.29)x(4.46+4.43)/2	-3.20		
		(-5.32--5.01)x(4.47+4.46)/2	-1.38		
		(-6.20--5.32)x(4.49+4.47)/2	-3.94		
		(-6.36--6.20)x(4.49+4.49)/2	-0.72		
		(-7.36--6.36)x(4.51+4.49)/2	-4.50		
		(-7.39--7.36)x(4.51+4.51)/2	-0.14		
		(-7.40--7.39)x(4.51+4.51)/2	-0.05		
		(-8.43--7.40)x(4.49+4.51)/2	-4.63		
		(-8.59--8.43)x(4.49+4.49)/2	-0.72		
		(-9.46--8.59)x(4.49+4.49)/2	-3.91		
		(-9.78--9.46)x(4.49+4.49)/2	-1.44		
		(-10.49--9.78)x(4.50+4.49)/2	-3.19		
		(-10.97--10.49)x(4.51+4.50)/2	-2.16		
		(-11.53--10.97)x(4.52+4.51)/2	-2.53		
		(-12.17--11.53)x(4.54+4.52)/2	-2.90		
		(-12.56--12.17)x(4.55+4.54)/2	-1.77		
		(-13.36--12.56)x(4.57+4.55)/2	-3.65		
		(-13.60--13.36)x(4.58+4.57)/2	-1.10		
		(-14.55--13.60)x(4.60+4.58)/2	-4.36		
		(-14.63--14.55)x(4.60+4.60)/2	-0.37		
		(-15.14--14.63)x(4.62+4.60)/2	-2.35		
		(-15.67--15.14)x(4.63+4.62)/2	-2.45		
		(-15.75--15.67)x(4.64+4.63)/2	-0.37		
		(-16.70--15.75)x(4.68+4.64)/2	-4.43		
		(-16.94--16.70)x(4.69+4.68)/2	-1.12		
		(-17.73--16.94)x(4.74+4.69)/2	-3.72		
		(-18.34--17.73)x(4.75+4.74)/2	-2.89		
		(-18.77--18.34)x(4.75+4.75)/2	-2.04		
		(-19.32--18.77)x(4.75+4.75)/2	-2.61		
		(-19.80--19.32)x(4.75+4.75)/2	-2.28		
		(-20.52--19.80)x(4.75+4.75)/2	-3.42		
		(-20.84--20.52)x(4.74+4.75)/2	-1.52		
		(-21.11--20.84)x(4.74+4.74)/2	-1.28		
				177.20	
197 2940.00	A1	(-12.61--21.47)x(10.62+4.71)/2	67.91		
		(-11.34--12.61)x(10.62+10.62)/2	13.49		
		(-11.60--11.34)x(10.31+10.62)/2	-2.72		
		(-1.75--11.60)x(9.62+10.31)/2	98.16		
		(-0.63--1.75)x(9.54+9.62)/2	10.73		
		(0.71--0.63)x(9.62+9.54)/2	12.84		
		(2.03-0.71)x(9.53+9.62)/2	12.64		
		(11.95-2.03)x(8.84+9.53)/2	91.12		
		(11.62-11.95)x(9.23+8.84)/2	-2.98		
		(12.89-11.62)x(9.24+9.23)/2	11.73		
		(21.21-12.89)x(3.68+9.24)/2	53.75		
		(-17.08-21.21)x(4.72+3.68)/2	-160.82		
		(-17.63--17.08)x(4.73+4.72)/2	-2.60		
		(-18.12--17.63)x(4.72+4.73)/2	-2.32		
		(-18.90--18.12)x(4.73+4.72)/2	-3.69		
		(-19.16--18.90)x(4.73+4.73)/2	-1.23		
		(-20.17--19.16)x(4.72+4.73)/2	-4.77		
		(-20.20--20.17)x(4.72+4.72)/2	-0.14		
		(-20.22--20.20)x(4.72+4.72)/2	-0.09		
		(-20.35--20.22)x(4.72+4.72)/2	-0.61		
		(-21.11--20.35)x(4.71+4.72)/2	-3.58		
		(-21.24--21.11)x(4.72+4.71)/2	-0.61		
		(-21.44--21.24)x(4.72+4.72)/2	-0.94		
		(-21.47--21.44)x(4.71+4.72)/2	-0.14		
				185.13	
198 2955.00	A1	(-12.61--21.30)x(10.72+4.93)/2	68.00		
		(-11.34--12.61)x(10.72+10.72)/2	13.61		
		(-11.60--11.34)x(10.41+10.72)/2	-2.75		
		(-1.75--11.60)x(9.72+10.41)/2	99.14		
		(-0.63--1.75)x(9.64+9.72)/2	10.84		
		(0.71--0.63)x(9.72+9.64)/2	12.97		
		(2.00-0.71)x(9.63+9.72)/2	12.48		
		(11.92-2.00)x(8.94+9.63)/2	92.11		
		(11.59-11.92)x(9.34+8.94)/2	-3.02		
		(12.86-11.59)x(9.34+9.34)/2	11.86		
		(21.37-12.86)x(3.66+9.34)/2	55.32		
		(-2.41-21.37)x(4.50+3.66)/2	-97.02		
		(-2.90--2.41)x(4.52+4.50)/2	-2.21		
		(-3.46--2.90)x(4.53+4.52)/2	-2.53		
		(-4.26--3.46)x(4.55+4.53)/2	-3.63		
		(-4.51--4.26)x(4.56+4.55)/2	-1.14		
		(-4.67--4.51)x(4.57+4.56)/2	-0.73		
		(-5.37--4.67)x(4.61+4.57)/2	-3.21		
		(-5.53--5.37)x(4.61+4.61)/2	-0.74		
		(-5.56--5.53)x(4.61+4.61)/2	-0.14		
		(-5.62--5.56)x(4.61+4.61)/2	-0.28		
		(-6.61--5.62)x(4.62+4.61)/2	-4.57		
		(-6.98--6.61)x(4.62+4.62)/2	-1.71		
		(-7.66--6.98)x(4.62+4.62)/2	-3.14		
		(-8.33--7.66)x(4.64+4.62)/2	-3.10		
		(-8.71--8.33)x(4.65+4.64)/2	-1.77		
		(-9.69--8.71)x(4.67+4.65)/2	-4.57		
		(-9.77--9.69)x(4.67+4.67)/2	-0.37		
		A RIPORTARE mq	239.70		

		CALCOLO DELLE AREE		Foglio n. 37
RILEVATO				
N. SEZIONE PROG.	FIG.	ELEMENTI DI CALCOLO	AREA ELEMENTARE mq	AREA FIGURA mq	NOTE
		RIPORTO mq	239.70		
		(-10.03--9.77)x(4.68+4.67)/2	-1.22		
		(-10.82--10.03)x(4.69+4.68)/2	-3.70		
		(-11.05--10.82)x(4.69+4.69)/2	-1.08		
		(-11.87--11.05)x(4.71+4.69)/2	-3.85		
		(-12.40--11.87)x(4.72+4.71)/2	-2.50		
		(-12.92--12.40)x(4.72+4.72)/2	-2.45		
		(-13.76--12.92)x(4.74+4.72)/2	-3.97		
		(-13.97--13.76)x(4.74+4.74)/2	-1.00		
		(-14.69--13.97)x(4.74+4.74)/2	-3.41		
		(-15.02--14.69)x(4.74+4.74)/2	-1.56		
		(-15.12--15.02)x(4.74+4.74)/2	-0.47		
		(-16.07--15.12)x(4.76+4.74)/2	-4.51		
		(-16.48--16.07)x(4.76+4.76)/2	-1.95		
		(-17.12--16.48)x(4.78+4.76)/2	-3.05		
		(-17.83--17.12)x(4.79+4.78)/2	-3.40		
		(-18.17--17.83)x(4.80+4.79)/2	-1.63		
		(-19.19--18.17)x(4.85+4.80)/2	-4.92		
		(-19.23--19.19)x(4.85+4.85)/2	-0.19		
		(-19.34--19.23)x(4.85+4.85)/2	-0.53		
		(-20.28--19.34)x(4.89+4.85)/2	-4.58		
		(-20.55--20.28)x(4.90+4.89)/2	-1.32		
		(-21.30--20.55)x(4.93+4.90)/2	-3.69		
				184.72	
199 2970.00	A1	(-12.61--21.70)x(10.77+4.71)/2	70.36		
		(-11.34--12.61)x(10.77+10.77)/2	13.68		
		(-11.60--11.34)x(10.46+10.77)/2	-2.76		
		(-1.75--11.60)x(9.77+10.46)/2	99.63		
		(-0.63--1.75)x(9.69+9.77)/2	10.90		
		(0.71--0.63)x(9.77+9.69)/2	13.04		
		(1.98-0.71)x(9.68+9.77)/2	12.35		
		(11.21-1.98)x(9.04+9.68)/2	86.39		
		(10.98-11.21)x(7.11+9.04)/2	-1.86		
		(10.81-10.98)x(7.08+7.11)/2	-1.21		
		(10.43-10.81)x(7.05+7.08)/2	-2.68		
		(9.75-10.43)x(7.03+7.05)/2	-4.79		
		(9.36-9.75)x(7.04+7.03)/2	-2.74		
		(8.68-9.36)x(7.07+7.04)/2	-4.80		
		(7.94-8.68)x(6.86+7.07)/2	-5.15		
		(7.62-7.94)x(6.76+6.86)/2	-2.18		
		(7.50-7.62)x(6.70+6.76)/2	-0.81		
		(6.56-7.50)x(6.15+6.70)/2	-6.04		
		(6.04-6.56)x(5.87+6.15)/2	-3.13		
		(5.49-6.04)x(5.59+5.87)/2	-3.15		
		(4.57-5.49)x(5.41+5.59)/2	-5.06		
		(4.43-4.57)x(5.39+5.41)/2	-0.76		
		(4.05-4.43)x(5.39+5.39)/2	-2.05		
		(3.37-4.05)x(5.40+5.39)/2	-3.67		
		(3.11-3.37)x(5.40+5.40)/2	-1.40		
		(2.31-3.11)x(5.39+5.40)/2	-4.32		
		(1.65-2.31)x(5.38+5.39)/2	-3.55		
		(1.24-1.65)x(5.36+5.38)/2	-2.20		
		(0.19-1.24)x(5.37+5.36)/2	-5.63		
		(0.18-0.19)x(5.37+5.37)/2	-0.05		
		(0.16-0.18)x(5.37+5.37)/2	-0.11		
		(-0.88-0.16)x(5.33+5.37)/2	-5.56		
		(-1.28--0.88)x(5.32+5.33)/2	-2.13		
		(-1.95--1.28)x(5.30+5.32)/2	-3.56		
		(-2.74--1.95)x(5.25+5.30)/2	-4.17		
		(-3.01--2.74)x(5.24+5.25)/2	-1.42		
		(-3.72--3.01)x(5.09+5.24)/2	-3.67		
		(-4.07--3.72)x(5.02+5.09)/2	-1.77		
		(-4.20--4.07)x(4.96+5.02)/2	-0.65		
		(-5.14--4.20)x(4.59+4.96)/2	-4.49		
		(-5.67--5.14)x(4.50+4.59)/2	-2.41		
		(-6.20--5.67)x(4.42+4.50)/2	-2.36		
		(-7.13--6.20)x(4.45+4.42)/2	-4.12		
		(-7.26--7.13)x(4.46+4.45)/2	-0.58		
		(-7.61--7.26)x(4.46+4.46)/2	-1.56		
		(-8.32--7.61)x(4.49+4.46)/2	-3.18		
		(-9.01--8.32)x(4.54+4.49)/2	-3.12		
		(-9.39--9.01)x(4.53+4.54)/2	-1.72		
		(-10.06--9.39)x(4.52+4.53)/2	-3.03		
		(-10.45--10.06)x(4.53+4.52)/2	-1.76		
		(-11.50--10.45)x(4.54+4.53)/2	-4.76		
		(-11.51--11.50)x(4.54+4.54)/2	-0.05		
		(-11.52--11.51)x(4.54+4.54)/2	-0.05		
		(-12.58--11.52)x(4.57+4.54)/2	-4.83		
		(-12.98--12.58)x(4.57+4.57)/2	-1.83		
		(-13.64--12.98)x(4.57+4.57)/2	-3.02		
		(-14.44--13.64)x(4.58+4.57)/2	-3.66		
		(-14.70--14.44)x(4.58+4.58)/2	-1.19		
		(-15.38--14.70)x(4.59+4.58)/2	-3.12		
		(-15.76--15.38)x(4.60+4.59)/2	-1.75		
		(-15.91--15.76)x(4.60+4.60)/2	-0.69		
		(-16.83--15.91)x(4.63+4.60)/2	-4.25		
		(-17.37--16.83)x(4.64+4.63)/2	-2.50		
		(-17.89--17.37)x(4.64+4.64)/2	-2.41		
		(-18.83--17.89)x(4.66+4.64)/2	-4.37		
		(-18.95--18.83)x(4.67+4.66)/2	-0.56		
		(-19.27--18.95)x(4.67+4.67)/2	-1.49		
		(-20.02--19.27)x(4.68+4.67)/2	-3.51		
		(-20.30--20.02)x(4.69+4.68)/2	-1.31		
		(-21.08--20.30)x(4.70+4.69)/2	-3.66		
		(-21.70--21.08)x(4.71+4.70)/2	-2.92		
				133.06	
200 2985.00	A1	(-12.61--21.64)x(10.76+4.74)/2	69.98		
		(-11.34--12.61)x(10.76+10.76)/2	13.67		
		(-11.60--11.34)x(10.45+10.76)/2	-2.76		
		(-1.75--11.60)x(9.76+10.45)/2	99.53		
		(-0.63--1.75)x(9.68+9.76)/2	10.89		
		(0.71--0.63)x(9.77+9.68)/2	13.03		
		(1.96-0.71)x(9.68+9.77)/2	12.16		
		(11.20-1.96)x(9.03+9.68)/2	86.44		
		(10.63-11.20)x(3.44+9.03)/2	-3.55		
		A RIPORTARE mq	299.39		

		CALCOLO DELLE AREE		Foglio n. 38
RILEVATO				
N. SEZIONE PROG.	FIG.	ELEMENTI DI CALCOLO	AREA ELEMENTARE mq	AREA FIGURA mq	NOTE
		RIPORTO mq	299.39		
		(10.23-10.63)x(3.53+3.44)/2	-1.39		
		(9.69-10.23)x(3.64+3.53)/2	-1.94		
		(9.43-9.69)x(3.64+3.64)/2	-0.95		
		(8.61-9.43)x(3.68+3.64)/2	-3.00		
		(7.84-8.61)x(3.99+3.68)/2	-2.95		
		(7.53-7.84)x(4.16+3.99)/2	-1.26		
		(6.89-7.53)x(4.51+4.16)/2	-2.77		
		(6.46-6.89)x(4.80+4.51)/2	-2.00		
		(6.25-6.46)x(4.84+4.80)/2	-1.01		
		(5.38-6.25)x(4.96+4.84)/2	-4.26		
		(4.93-5.38)x(5.00+4.96)/2	-2.24		
		(4.30-4.93)x(5.04+5.00)/2	-3.16		
		(3.55-4.30)x(5.10+5.04)/2	-3.80		
		(3.22-3.55)x(5.14+5.10)/2	-1.69		
		(3.07-3.22)x(5.17+5.14)/2	-0.77		
		(2.15-3.07)x(5.27+5.17)/2	-4.80		
		(1.48-2.15)x(5.37+5.27)/2	-3.56		
		(1.07-1.48)x(5.42+5.37)/2	-2.21		
		(0.21-1.07)x(5.25+5.42)/2	-4.59		
		(-0.01-0.21)x(5.20+5.25)/2	-1.15		
		(-0.11--0.01)x(5.18+5.20)/2	-0.52		
		(-1.08--0.11)x(5.02+5.18)/2	-4.95		
		(-1.70--1.08)x(4.99+5.02)/2	-3.10		
		(-2.16--1.70)x(4.94+4.99)/2	-2.28		
		(-3.13--2.16)x(4.84+4.94)/2	-4.74		
		(-3.24--3.13)x(4.82+4.84)/2	-0.53		
		(-3.29--3.24)x(4.81+4.82)/2	-0.24		
		(-4.32--3.29)x(4.65+4.81)/2	-4.87		
		(-4.88--4.32)x(4.62+4.65)/2	-2.60		
		(-5.39--4.88)x(4.59+4.62)/2	-2.35		
		(-6.47--5.39)x(4.53+4.59)/2	-4.92		
		(-7.55--6.47)x(4.48+4.53)/2	-4.87		
		(-8.06--7.55)x(4.44+4.48)/2	-2.27		
		(-8.63--8.06)x(4.41+4.44)/2	-2.52		
		(-9.65--8.63)x(4.41+4.41)/2	-4.50		
		(-9.70--9.65)x(4.40+4.41)/2	-0.22		
		(-9.81--9.70)x(4.41+4.40)/2	-0.48		
		(-10.78--9.81)x(4.48+4.41)/2	-4.31		
		(-11.24--10.78)x(4.50+4.48)/2	-2.07		
		(-11.86--11.24)x(4.54+4.50)/2	-2.80		
		(-12.83--11.86)x(4.56+4.54)/2	-4.41		
		(-12.93--12.83)x(4.56+4.56)/2	-0.46		
		(-12.99--12.93)x(4.57+4.56)/2	-0.27		
		(-13.15--12.99)x(4.57+4.57)/2	-0.73		
		(-13.80--13.15)x(4.59+4.57)/2	-2.98		
		(-14.01--13.80)x(4.60+4.59)/2	-0.96		
		(-14.42--14.01)x(4.61+4.60)/2	-1.89		
		(-15.09--14.42)x(4.61+4.61)/2	-3.09		
		(-16.01--15.09)x(4.62+4.61)/2	-4.25		
		(-16.17--16.01)x(4.63+4.62)/2	-0.74		
		(-16.49--16.17)x(4.64+4.63)/2	-1.48		
		(-17.24--16.49)x(4.66+4.64)/2	-3.49		
		(-17.60--17.24)x(4.67+4.66)/2	-1.68		
		(-18.32--17.60)x(4.68+4.67)/2	-3.37		
		(-19.19--18.32)x(4.69+4.68)/2	-4.08		
		(-19.40--19.19)x(4.69+4.69)/2	-0.98		
		(-19.83--19.40)x(4.70+4.69)/2	-2.02		
		(-20.48--19.83)x(4.72+4.70)/2	-3.06		
		(-20.78--20.48)x(4.72+4.72)/2	-1.42		
		(-21.55--20.78)x(4.74+4.72)/2	-3.64		
		(-21.64--21.55)x(4.74+4.74)/2	-0.43		
				149.32	
201 3000.00	A1	(-12.61--22.03)x(10.70+4.42)/2	71.22		
		(-11.34--12.61)x(10.70+10.70)/2	13.59		
		(-11.60--11.34)x(10.39+10.70)/2	-2.74		
		(-1.75--11.60)x(9.70+10.39)/2	98.94		
		(-0.63--1.75)x(9.62+9.70)/2	10.82		
		(0.71--0.63)x(9.71+9.62)/2	12.95		
		(1.94-0.71)x(9.62+9.71)/2	11.89		
		(11.17-1.94)x(8.97+9.62)/2	85.79		
		(10.69-11.17)x(3.49+8.97)/2	-2.99		
		(10.06-10.69)x(3.29+3.49)/2	-2.14		
		(9.27-10.06)x(3.23+3.29)/2	-2.58		
		(8.96-9.27)x(3.24+3.23)/2	-1.00		
		(8.45-8.96)x(3.23+3.24)/2	-1.65		
		(7.87-8.45)x(3.23+3.23)/2	-1.87		
		(7.52-7.87)x(3.18+3.23)/2	-1.12		
		(6.77-7.52)x(3.13+3.18)/2	-2.37		
		(5.78-6.77)x(3.07+3.13)/2	-3.07		
		(5.68-5.78)x(3.07+3.07)/2	-0.31		
		(5.52-5.68)x(3.07+3.07)/2	-0.49		
		(4.59-5.52)x(3.09+3.07)/2	-2.86		
		(4.03-4.59)x(3.08+3.09)/2	-1.73		
		(3.49-4.03)x(3.08+3.08)/2	-1.66		
		(2.58-3.49)x(3.06+3.08)/2	-2.79		
		(2.40-2.58)x(3.06+3.06)/2	-0.55		
		(2.29-2.40)x(3.06+3.06)/2	-0.34		
		(1.30-2.29)x(3.07+3.06)/2	-3.03		
		(0.54-1.30)x(3.14+3.07)/2	-2.36		
		(0.21-0.54)x(3.20+3.14)/2	-1.05		
		(0.06-0.21)x(3.23+3.20)/2	-0.48		
		(-0.35-0.06)x(3.26+3.23)/2	-1.33		
		(-0.74--0.35)x(3.30+3.26)/2	-1.28		
		(-0.89--0.74)x(3.31+3.30)/2	-0.50		
		(-1.20--0.89)x(3.32+3.31)/2	-1.03		
		(-1.98--1.20)x(3.35+3.32)/2	-2.60		
		(-2.95--1.98)x(3.41+3.35)/2	-3.28		
		(-3.07--2.95)x(3.41+3.41)/2	-0.41		
		(-3.28--3.07)x(3.43+3.41)/2	-0.72		
		(-4.17--3.28)x(3.51+3.43)/2	-3.09		
		(-4.69--4.17)x(3.58+3.51)/2	-1.84		
		(-5.26--4.69)x(3.63+3.58)/2	-2.05		
		(-6.22--5.26)x(3.77+3.63)/2	-3.55		
		(-6.36--6.22)x(3.79+3.77)/2	-0.53		
		A RIPORTARE mq	243.81		

		CALCOLO DELLE AREE		Foglio n. 39
RILEVATO				

N. SEZIONE PROG.	FIG.	ELEMENTI DI CALCOLO	AREA ELEMENTARE mq	AREA FIGURA mq	NOTE
		RIPORTO mq	243.81		
		(-6.44--6.36)x(3.79+3.79)/2	-0.30		
		(-7.45--6.44)x(3.91+3.79)/2	-3.89		
		(-8.18--7.45)x(3.95+3.91)/2	-2.87		
		(-8.54--8.18)x(3.97+3.95)/2	-1.43		
		(-9.15--8.54)x(4.00+3.97)/2	-2.43		
		(-9.64--9.15)x(4.03+4.00)/2	-1.97		
		(-9.93--9.64)x(4.05+4.03)/2	-1.17		
		(-10.73--9.93)x(4.10+4.05)/2	-3.26		
		(-11.67--10.73)x(4.18+4.10)/2	-3.89		
		(-11.83--11.67)x(4.19+4.18)/2	-0.67		
		(-12.08--11.83)x(4.21+4.19)/2	-1.05		
		(-12.92--12.08)x(4.31+4.21)/2	-3.58		
		(-13.42--12.92)x(4.36+4.31)/2	-2.17		
		(-14.02--13.42)x(4.39+4.36)/2	-2.62		
		(-15.02--14.02)x(4.28+4.39)/2	-4.33		
		(-15.11--15.02)x(4.27+4.28)/2	-0.38		
		(-15.17--15.11)x(4.27+4.27)/2	-0.26		
		(-16.20--15.17)x(4.27+4.27)/2	-4.40		
		(-16.91--16.20)x(4.25+4.27)/2	-3.02		
		(-17.30--16.91)x(4.24+4.25)/2	-1.66		
		(-17.95--17.30)x(4.28+4.24)/2	-2.77		
		(-18.39--17.95)x(4.31+4.28)/2	-1.89		
		(-19.07--18.39)x(4.34+4.31)/2	-2.94		
		(-19.49--19.07)x(4.36+4.34)/2	-1.83		
		(-20.40--19.49)x(4.37+4.36)/2	-3.97		
		(-20.58--20.40)x(4.37+4.37)/2	-0.79		
		(-20.89--20.58)x(4.37+4.37)/2	-1.35		
		(-21.68--20.89)x(4.39+4.37)/2	-3.46		
		(-22.03--21.68)x(4.42+4.39)/2	-1.54		
				177.92	
201b 3005.94	A1	(-12.61--22.03)x(10.70+4.42)/2	71.22		
		(-11.34--12.61)x(10.70+10.70)/2	13.59		
		(-11.60--11.34)x(10.39+10.70)/2	-2.74		
		(-1.75--11.60)x(9.70+10.39)/2	98.94		
		(-0.63--1.75)x(9.62+9.70)/2	10.82		
		(0.71--0.63)x(9.71+9.62)/2	12.95		
		(1.94-0.71)x(9.62+9.71)/2	11.89		
		(11.17-1.94)x(8.97+9.62)/2	85.79		
		(10.69-11.17)x(3.49+8.97)/2	-2.99		
		(10.06-10.69)x(3.29+3.49)/2	-2.14		
		(9.27-10.06)x(3.23+3.29)/2	-2.58		
		(8.96-9.27)x(3.24+3.23)/2	-1.00		
		(8.45-8.96)x(3.23+3.24)/2	-1.65		
		(7.87-8.45)x(3.23+3.23)/2	-1.87		
		(7.52-7.87)x(3.18+3.23)/2	-1.12		
		(6.77-7.52)x(3.13+3.18)/2	-2.37		
		(5.78-6.77)x(3.07+3.13)/2	-3.07		
		(5.68-5.78)x(3.07+3.07)/2	-0.31		
		(5.52-5.68)x(3.07+3.07)/2	-0.49		
		(4.59-5.52)x(3.09+3.07)/2	-2.86		
		(4.03-4.59)x(3.08+3.09)/2	-1.73		
		(3.49-4.03)x(3.08+3.08)/2	-1.66		
		(2.58-3.49)x(3.06+3.08)/2	-2.79		
		(2.40-2.58)x(3.06+3.06)/2	-0.55		
		(2.29-2.40)x(3.06+3.06)/2	-0.34		
		(1.30-2.29)x(3.07+3.06)/2	-3.03		
		(0.54-1.30)x(3.14+3.07)/2	-2.36		
		(0.21-0.54)x(3.20+3.14)/2	-1.05		
		(0.06-0.21)x(3.23+3.20)/2	-0.48		
		(-0.35-0.06)x(3.26+3.23)/2	-1.33		
		(-0.74--0.35)x(3.30+3.26)/2	-1.28		
		(-0.89--0.74)x(3.31+3.30)/2	-0.50		
		(-1.20--0.89)x(3.32+3.31)/2	-1.03		
		(-1.98--1.20)x(3.35+3.32)/2	-2.60		
		(-2.95--1.98)x(3.41+3.35)/2	-3.28		
		(-3.07--2.95)x(3.41+3.41)/2	-0.41		
		(-3.28--3.07)x(3.43+3.41)/2	-0.72		
		(-4.17--3.28)x(3.51+3.43)/2	-3.09		
		(-4.69--4.17)x(3.58+3.51)/2	-1.84		
		(-5.26--4.69)x(3.63+3.58)/2	-2.05		
		(-6.22--5.26)x(3.77+3.63)/2	-3.55		
		(-6.36--6.22)x(3.79+3.77)/2	-0.53		
		(-6.44--6.36)x(3.79+3.79)/2	-0.30		
		(-7.45--6.44)x(3.91+3.79)/2	-3.89		
		(-8.18--7.45)x(3.95+3.91)/2	-2.87		
		(-8.54--8.18)x(3.97+3.95)/2	-1.43		
		(-9.15--8.54)x(4.00+3.97)/2	-2.43		
		(-9.64--9.15)x(4.03+4.00)/2	-1.97		
		(-9.93--9.64)x(4.05+4.03)/2	-1.17		
		(-10.73--9.93)x(4.10+4.05)/2	-3.26		
		(-11.67--10.73)x(4.18+4.10)/2	-3.89		
		(-11.83--11.67)x(4.19+4.18)/2	-0.67		
		(-12.08--11.83)x(4.21+4.19)/2	-1.05		
		(-12.92--12.08)x(4.31+4.21)/2	-3.58		
		(-13.42--12.92)x(4.36+4.31)/2	-2.17		
		(-14.02--13.42)x(4.39+4.36)/2	-2.62		
		(-15.02--14.02)x(4.28+4.39)/2	-4.33		
		(-15.11--15.02)x(4.27+4.28)/2	-0.38		
		(-15.17--15.11)x(4.27+4.27)/2	-0.26		
		(-16.20--15.17)x(4.27+4.27)/2	-4.40		
		(-16.91--16.20)x(4.25+4.27)/2	-3.02		
		(-17.30--16.91)x(4.24+4.25)/2	-1.66		
		(-17.95--17.30)x(4.28+4.24)/2	-2.77		
		(-18.39--17.95)x(4.31+4.28)/2	-1.89		
		(-19.07--18.39)x(4.34+4.31)/2	-2.94		
		(-19.49--19.07)x(4.36+4.34)/2	-1.83		
		(-20.40--19.49)x(4.37+4.36)/2	-3.97		
		(-20.58--20.40)x(4.37+4.37)/2	-0.79		
		(-20.89--20.58)x(4.37+4.37)/2	-1.35		
		(-21.68--20.89)x(4.39+4.37)/2	-3.46		
		(-22.03--21.68)x(4.42+4.39)/2	-1.54		
				177.92	

Il Direttore dei Lavori	L'Impresa	

	CALCOLO DELLE AREE		Foglio n. 40

STERRO

N. SEZIONE PROG.	FIG.	ELEMENTI DI CALCOLO	AREA ELEMENTARE mq	AREA FIGURA mq	NOTE
131	B1	(28.77-27.91)x(3.06+2.93)/2	2.58		
1950.00		(28.82-28.77)x(3.07+3.06)/2	0.15		
		(28.86-28.82)x(3.06+3.07)/2	0.12		
		(29.85-28.86)x(2.93+3.06)/2	2.97		
		(27.96-29.85)x(2.93+2.93)/2	-5.54		
		(27.91-27.96)x(2.93+2.93)/2	-0.15		
				0.13	
132	B1	(24.17-23.24)x(2.75+2.63)/2	2.50		
1965.00		(24.48-24.17)x(2.80+2.75)/2	0.86		
		(24.62-24.48)x(2.81+2.80)/2	0.39		
		(25.02-24.62)x(2.80+2.81)/2	1.12		
		(25.42-25.02)x(2.79+2.80)/2	1.12		
		(25.57-25.42)x(2.79+2.79)/2	0.42		
		(25.88-25.57)x(2.80+2.79)/2	0.87		
		(26.66-25.88)x(2.81+2.80)/2	2.19		
		(27.59-26.66)x(2.85+2.81)/2	2.63		
		(27.75-27.59)x(2.85+2.85)/2	0.46		
		(28.03-27.75)x(2.90+2.85)/2	0.81		
		(28.84-28.03)x(3.06+2.90)/2	2.41		
		(29.30-28.84)x(3.12+3.06)/2	1.42		
		(29.93-29.30)x(3.26+3.12)/2	2.01		
		(31.01-29.93)x(2.90+3.26)/2	3.33		
		(31.02-31.01)x(2.90+2.90)/2	0.03		
		(31.04-31.02)x(2.89+2.90)/2	0.06		
		(31.43-31.04)x(2.63+2.89)/2	1.08		
		(23.24-31.43)x(2.63+2.63)/2	-21.54		
				2.17	
133	B1	(29.74-29.59)x(3.13+3.10)/2	0.47		
1980.00		(29.95-29.74)x(3.18+3.13)/2	0.66		
		(30.30-29.95)x(3.17+3.18)/2	1.11		
		(30.84-30.30)x(3.10+3.17)/2	1.69		
		(29.59-30.84)x(3.10+3.10)/2	-3.88		
				0.05	
134	B1	(23.35-22.73)x(2.50+2.44)/2	1.53		
1995.00		(23.42-23.35)x(2.50+2.50)/2	0.18		
		(23.54-23.42)x(2.53+2.50)/2	0.30		
		(24.51-23.54)x(2.79+2.53)/2	2.58		
		(25.06-24.51)x(2.88+2.79)/2	1.56		
		(25.60-25.06)x(2.99+2.88)/2	1.58		
		(26.55-25.60)x(2.93+2.99)/2	2.81		
		(26.69-26.55)x(2.91+2.93)/2	0.41		
		(26.77-26.69)x(2.90+2.91)/2	0.23		
		(27.78-26.77)x(2.77+2.90)/2	2.86		
		(28.48-27.78)x(2.72+2.77)/2	1.92		
		(28.87-28.48)x(2.68+2.72)/2	1.05		
		(29.56-28.87)x(2.76+2.68)/2	1.88		
		(29.96-29.56)x(2.82+2.76)/2	1.12		
		(30.19-29.96)x(2.83+2.82)/2	0.65		
		(31.05-30.19)x(2.81+2.83)/2	2.43		
		(31.90-31.05)x(2.53+2.81)/2	2.27		
		(32.14-31.90)x(2.49+2.53)/2	0.60		
		(32.23-32.14)x(2.44+2.49)/2	0.22		
		(22.73-32.23)x(2.44+2.44)/2	-23.18		
				3.00	
135	B1	(22.08-21.90)x(2.60+2.54)/2	0.46		
2010.00		(22.34-22.08)x(2.67+2.60)/2	0.69		
		(22.80-22.34)x(2.75+2.67)/2	1.25		
		(23.43-22.80)x(2.84+2.75)/2	1.76		
		(23.79-23.43)x(2.85+2.84)/2	1.02		
		(24.52-23.79)x(2.88+2.85)/2	2.09		
		(25.50-24.52)x(2.95+2.88)/2	2.86		
		(25.61-25.50)x(2.96+2.95)/2	0.33		
		(25.81-25.61)x(2.97+2.96)/2	0.59		
		(26.70-25.81)x(3.05+2.97)/2	2.68		
		(27.27-26.70)x(3.04+3.05)/2	1.74		
		(27.79-27.27)x(3.02+3.04)/2	1.58		
		(28.82-27.79)x(2.96+3.02)/2	3.08		
		(28.87-28.82)x(2.96+2.96)/2	0.15		
		(28.89-28.87)x(2.96+2.96)/2	0.06		
		(28.92-28.89)x(2.96+2.96)/2	0.09		
		(29.98-28.92)x(3.02+2.96)/2	3.17		
		(30.63-29.98)x(3.11+3.02)/2	1.99		
		(31.07-30.63)x(3.17+3.11)/2	1.38		
		(31.83-31.07)x(2.94+3.17)/2	2.32		
		(32.16-31.83)x(2.81+2.94)/2	0.95		
		(32.34-32.16)x(2.70+2.81)/2	0.50		
		(32.60-32.34)x(2.54+2.70)/2	0.68		
		(21.90-32.60)x(2.54+2.54)/2	-27.18		
				4.24	
136	B1	(21.27-21.17)x(2.58+2.58)/2	0.26		
2025.00		(22.06-21.27)x(2.64+2.58)/2	2.06		
		(22.36-22.06)x(2.67+2.64)/2	0.80		
		(23.08-22.36)x(2.75+2.67)/2	1.95		
		(23.45-23.08)x(2.79+2.75)/2	1.02		
		(24.23-23.45)x(2.79+2.79)/2	2.18		
		(24.54-24.23)x(2.80+2.79)/2	0.87		
		(25.07-24.54)x(2.77+2.80)/2	1.48		
		(25.63-25.07)x(2.74+2.77)/2	1.54		
		(25.95-25.63)x(2.74+2.74)/2	0.88		
		(26.72-25.95)x(2.74+2.74)/2	2.11		
		(27.66-26.72)x(2.77+2.74)/2	2.59		
		(27.81-27.66)x(2.78+2.77)/2	0.42		
		(28.08-27.81)x(2.78+2.78)/2	0.75		
		(28.90-28.08)x(2.78+2.78)/2	2.28		
		(29.37-28.90)x(2.71+2.78)/2	1.29		
		(29.99-29.37)x(2.64+2.71)/2	1.66		
		(30.40-29.99)x(2.58+2.64)/2	1.07		
		(21.17-30.40)x(2.58+2.58)/2	-23.81		
				1.40	
136	B2	(36.21-36.16)x(1.06+1.08)/2	0.05		
2025.00		(36.53-36.21)x(0.99+1.06)/2	0.33		
		(36.57-36.53)x(0.98+0.99)/2	0.04		
		(36.31-36.57)x(0.98+0.98)/2	-0.25		
		(36.16-36.31)x(1.08+0.98)/2	-0.15		
				0.02	
137	B1	(20.19-19.76)x(3.08+3.07)/2	1.32		
		A RIPORTARE mq	1.32		

	CALCOLO DELLE AREE		Foglio n. 41

STERRO

N. SEZIONE PROG.	FIG.	ELEMENTI DI CALCOLO	AREA ELEMENTARE mq	AREA FIGURA mq	NOTE
		RIPORTO mq	1.32		
2040.00		(21.26-20.19)x(3.10+3.08)/2	3.31		
		(21.28-21.26)x(3.10+3.10)/2	0.06		
		(21.33-21.28)x(3.09+3.10)/2	0.15		
		(21.78-21.33)x(3.07+3.09)/2	1.39		
		(19.76-21.78)x(3.07+3.07)/2	-6.20		
				0.03	
137	B2	(36.37-35.91)x(1.14+1.18)/2	0.53		
2040.00		(36.50-36.37)x(1.13+1.14)/2	0.15		
		(36.55-36.50)x(1.12+1.13)/2	0.06		
		(36.65-36.55)x(1.09+1.12)/2	0.11		
		(37.52-36.65)x(0.91+1.09)/2	0.87		
		(36.32-37.52)x(0.91+0.91)/2	-1.09		
		(35.91-36.32)x(1.18+0.91)/2	-0.43		
				0.20	
141	B1	(-10.28--10.61)x(5.65+5.60)/2	1.86		
2100.00		(-9.47--10.28)x(5.80+5.65)/2	4.64		
		(-9.19--9.47)x(5.87+5.80)/2	1.63		
		(-8.71--9.19)x(5.90+5.87)/2	2.82		
		(-8.10--8.71)x(5.92+5.90)/2	3.61		
		(-7.76--8.10)x(5.87+5.92)/2	2.00		
		(-7.01--7.76)x(5.77+5.87)/2	4.37		
		(-6.77--7.01)x(5.69+5.77)/2	1.38		
		(-10.61--6.77)x(5.60+5.69)/2	-21.68		
				0.63	
142	B1	(-12.45--13.24)x(5.34+5.37)/2	4.23		
2115.00		(-12.44--12.45)x(5.34+5.34)/2	0.05		
		(-11.36--12.44)x(5.31+5.34)/2	5.75		
		(-11.02--11.36)x(5.30+5.31)/2	1.80		
		(-13.35--11.02)x(5.24+5.30)/2	-12.28		
		(-13.24--13.35)x(5.37+5.24)/2	0.58		
				0.13	
143	B1	(-23.98--24.43)x(3.96+3.92)/2	1.77		
2130.00		(-23.34--23.98)x(4.02+3.96)/2	2.55		
		(-22.26--23.34)x(4.25+4.02)/2	4.47		
		(-22.25--22.26)x(4.26+4.25)/2	0.04		
		(-22.22--22.25)x(4.27+4.26)/2	0.13		
		(-21.16--22.22)x(4.77+4.27)/2	4.79		
		(-20.55--21.16)x(5.01+4.77)/2	2.98		
		(-20.07--20.55)x(5.22+5.01)/2	2.46		
		(-19.21--20.07)x(5.36+5.22)/2	4.55		
		(-19.04--19.21)x(5.38+5.36)/2	0.91		
		(-18.98--19.04)x(5.39+5.38)/2	0.32		
		(-18.24--18.98)x(5.52+5.39)/2	4.04		
		(-17.89--18.24)x(5.59+5.52)/2	1.94		
		(-17.44--17.89)x(5.66+5.59)/2	2.53		
		(-16.80--17.44)x(5.80+5.66)/2	3.67		
		(-16.64--16.80)x(5.83+5.80)/2	0.93		
		(-16.20--16.64)x(5.93+5.83)/2	2.59		
		(-15.70--16.20)x(6.02+5.93)/2	2.99		
		(-15.04--15.70)x(6.00+6.02)/2	3.97		
		(-14.61--15.04)x(6.00+6.00)/2	2.58		
		(-13.71--14.61)x(5.90+6.00)/2	5.35		
		(-13.52--13.71)x(5.88+5.90)/2	1.12		
		(-13.19--13.52)x(5.88+5.88)/2	1.94		
		(-12.43--13.19)x(5.88+5.88)/2	4.47		
		(-12.00--12.43)x(5.88+5.88)/2	2.53		
		(-11.34--12.00)x(5.89+5.88)/2	3.88		
		(-10.29--11.34)x(5.90+5.89)/2	6.19		
		(-10.25--10.29)x(5.91+5.90)/2	0.24		
		(-10.19--10.25)x(5.91+5.91)/2	0.35		
		(-9.16--10.19)x(5.94+5.91)/2	6.10		
		(-8.58--9.16)x(5.89+5.94)/2	3.43		
		(-8.07--8.58)x(5.87+5.89)/2	3.00		
		(-7.18--8.07)x(5.74+5.87)/2	5.17		
		(-6.98--7.18)x(5.73+5.74)/2	1.15		
		(-6.87--6.98)x(5.72+5.73)/2	0.63		
		(-5.89--6.87)x(5.67+5.72)/2	5.58		
		(-5.16--5.89)x(5.57+5.67)/2	4.10		
		(-4.80--5.16)x(5.55+5.57)/2	2.00		
		(-4.17--4.80)x(5.48+5.55)/2	3.47		
		(-3.71--4.17)x(5.38+5.48)/2	2.50		
		(-3.45--3.71)x(5.34+5.38)/2	1.39		
		(-3.05--3.45)x(5.25+5.34)/2	2.12		
		(-15.15--3.05)x(4.94+5.25)/2	-61.65		
		(-14.84--15.15)x(5.31+4.94)/2	1.59		
		(-16.11--14.84)x(5.31+5.31)/2	-6.74		
		(-18.20--16.11)x(3.92+5.31)/2	-9.65		
		(-24.43--18.20)x(3.92+3.92)/2	-24.42		
				16.05	
144	B1	(-21.82--22.23)x(4.06+3.98)/2	1.65		
2145.00		(-21.14--21.82)x(4.17+4.06)/2	2.80		
		(-20.82--21.14)x(4.30+4.17)/2	1.36		
		(-20.05--20.82)x(4.68+4.30)/2	3.46		
		(-19.95--20.05)x(4.73+4.68)/2	0.47		
		(-18.96--19.95)x(5.15+4.73)/2	4.89		
		(-18.40--18.96)x(5.27+5.15)/2	2.92		
		(-17.87--18.40)x(5.39+5.27)/2	2.82		
		(-16.94--17.87)x(5.51+5.39)/2	5.07		
		(-16.78--16.94)x(5.53+5.51)/2	0.88		
		(-16.69--16.78)x(5.54+5.53)/2	0.50		
		(-15.69--16.69)x(5.62+5.54)/2	5.58		
		(-14.98--15.69)x(5.68+5.62)/2	4.01		
		(-14.60--14.98)x(5.70+5.68)/2	2.16		
		(-13.93--14.60)x(5.71+5.70)/2	3.82		
		(-13.51--13.93)x(5.72+5.71)/2	2.40		
		(-13.27--13.51)x(5.72+5.72)/2	1.37		
		(-12.42--13.27)x(5.70+5.72)/2	4.85		
		(-11.56--12.42)x(5.69+5.70)/2	4.90		
		(-11.33--11.56)x(5.69+5.69)/2	1.31		
		(-10.92--11.33)x(5.70+5.69)/2	2.33		
		(-10.24--10.92)x(5.68+5.70)/2	3.87		
		(-9.85--10.24)x(5.65+5.68)/2	2.21		
		(-9.15--9.85)x(5.62+5.65)/2	3.94		
		(-8.13--9.15)x(5.59+5.62)/2	5.72		
		A RIPORTARE mq	75.29		

		CALCOLO DELLE AREE		Foglio n. 42
STERRO				
N. SEZIONE PROG.	FIG.	ELEMENTI DI CALCOLO	AREA ELEMENTARE mq	AREA FIGURA mq	NOTE
		RIPORTO mq	75.29		
		(-8.06--8.13)x(5.59+5.59)/2	0.39		
		(-7.92--8.06)x(5.58+5.59)/2	0.78		
		(-6.96--7.92)x(5.57+5.58)/2	5.35		
		(-6.42--6.96)x(5.57+5.57)/2	3.01		
		(-5.87--6.42)x(5.57+5.57)/2	3.06		
		(-4.91--5.87)x(5.56+5.57)/2	5.34		
		(-4.78--4.91)x(5.56+5.56)/2	0.72		
		(-4.71--4.78)x(5.56+5.56)/2	0.39		
		(-3.69--4.71)x(5.57+5.56)/2	5.68		
		(-3.00--3.69)x(5.52+5.57)/2	3.83		
		(-2.60--3.00)x(5.47+5.52)/2	2.20		
		(-2.42--2.60)x(5.41+5.47)/2	0.98		
		(-1.90--2.42)x(5.28+5.41)/2	2.78		
		(-1.61--1.90)x(5.19+5.28)/2	1.52		
		(-1.51--1.61)x(5.17+5.19)/2	0.52		
		(-1.29--1.51)x(5.15+5.17)/2	1.14		
		(-0.72--1.29)x(5.09+5.15)/2	2.92		
		(-1.75--0.72)x(5.06+5.09)/2	-5.23		
		(-15.15--1.75)x(4.73+5.06)/2	-65.59		
		(-14.84--15.15)x(5.09+4.73)/2	1.52		
		(-16.11--14.84)x(5.10+5.09)/2	-6.47		
		(-17.78--16.11)x(3.98+5.10)/2	-7.58		
		(-22.23--17.78)x(3.98+3.98)/2	-17.71		
				14.84	
144 2145.00	B2	(3.84-3.35)x(5.02+5.02)/2	2.46		
		(3.94-3.84)x(5.02+5.02)/2	0.50		
		(4.12-3.94)x(5.02+5.02)/2	0.90		
		(5.03-4.12)x(5.01+5.02)/2	4.56		
		(5.55-5.03)x(5.01+5.01)/2	2.61		
		(6.12-5.55)x(5.01+5.01)/2	2.86		
		(7.13-6.12)x(5.00+5.01)/2	5.06		
		(7.21-7.13)x(5.00+5.00)/2	0.40		
		(7.26-7.21)x(5.00+5.00)/2	0.25		
		(8.30-7.26)x(5.00+5.00)/2	5.20		
		(8.97-8.30)x(5.00+5.00)/2	3.35		
		(9.39-8.97)x(5.00+5.00)/2	2.10		
		(10.14-9.39)x(5.00+5.00)/2	3.75		
		(10.48-10.14)x(4.99+5.00)/2	1.70		
		(10.68-10.48)x(4.99+4.99)/2	1.00		
		(11.57-10.68)x(4.99+4.99)/2	4.44		
		(12.39-11.57)x(5.01+4.99)/2	4.10		
		(12.67-12.39)x(5.01+5.01)/2	1.40		
		(13.14-12.67)x(5.03+5.01)/2	2.36		
		(13.76-13.14)x(5.04+5.03)/2	3.12		
		(14.10-13.76)x(5.03+5.04)/2	1.71		
		(14.85-14.10)x(5.01+5.03)/2	3.76		
		(14.91-14.85)x(5.01+5.01)/2	0.30		
		(15.15-14.91)x(4.73+5.01)/2	1.17		
		(3.35-15.15)x(5.02+4.73)/2	-57.53		
				1.53	
145 2160.00	B1	(-21.38--22.22)x(4.09+3.99)/2	3.39		
		(-21.13--21.38)x(4.10+4.09)/2	1.02		
		(-20.69--21.13)x(4.27+4.10)/2	1.84		
		(-20.04--20.69)x(4.52+4.27)/2	2.86		
		(-19.67--20.04)x(4.72+4.52)/2	1.71		
		(-18.95--19.67)x(5.08+4.72)/2	3.53		
		(-17.95--18.95)x(5.66+5.08)/2	5.37		
		(-17.85--17.95)x(5.72+5.66)/2	0.57		
		(-17.68--17.85)x(5.83+5.72)/2	0.98		
		(-16.76--17.68)x(6.39+5.83)/2	5.62		
		(-16.24--16.76)x(6.41+6.39)/2	3.33		
		(-15.67--16.24)x(6.48+6.41)/2	3.67		
		(-14.67--15.67)x(6.04+6.48)/2	6.26		
		(-14.58--14.67)x(6.00+6.04)/2	0.54		
		(-14.53--14.58)x(5.99+6.00)/2	0.30		
		(-13.49--14.53)x(5.62+5.99)/2	6.04		
		(-12.82--13.49)x(5.65+5.62)/2	3.78		
		(-12.40--12.82)x(5.67+5.65)/2	2.38		
		(-11.66--12.40)x(5.69+5.67)/2	4.20		
		(-11.31--11.66)x(5.71+5.69)/2	1.99		
		(-11.11--11.31)x(5.71+5.71)/2	1.14		
		(-10.22--11.11)x(5.75+5.71)/2	5.10		
		(-9.40--10.22)x(5.73+5.75)/2	4.71		
		(-9.13--9.40)x(5.73+5.73)/2	1.55		
		(-8.65--9.13)x(5.71+5.73)/2	2.75		
		(-8.04--8.65)x(5.68+5.71)/2	3.47		
		(-7.40--8.04)x(5.66+5.68)/2	3.63		
		(-6.95--7.40)x(5.63+5.66)/2	2.54		
		(-5.98--6.95)x(5.60+5.63)/2	5.45		
		(-5.86--5.98)x(5.60+5.60)/2	0.67		
		(-5.65--5.86)x(5.60+5.60)/2	1.18		
		(-4.77--5.65)x(5.60+5.60)/2	4.93		
		(-4.27--4.77)x(5.58+5.60)/2	2.79		
		(-3.68--4.27)x(5.56+5.58)/2	3.29		
		(-2.64--3.68)x(5.51+5.56)/2	5.76		
		(-2.59--2.64)x(5.51+5.51)/2	0.28		
		(-2.56--2.59)x(5.51+5.51)/2	0.17		
		(-1.50--2.56)x(5.41+5.51)/2	5.79		
		(-0.85--1.50)x(5.34+5.41)/2	3.49		
		(-0.41--0.85)x(5.31+5.34)/2	2.34		
		(0.37--0.41)x(5.24+5.31)/2	4.11		
		(0.68-0.37)x(5.21+5.24)/2	1.62		
		(0.86-0.68)x(5.21+5.21)/2	0.94		
		(1.78-0.86)x(5.20+5.21)/2	4.79		
		(2.57-1.78)x(5.17+5.20)/2	4.10		
		(2.87-2.57)x(5.15+5.17)/2	1.55		
		(3.38-2.87)x(5.12+5.15)/2	2.62		
		(3.96-3.38)x(5.08+5.12)/2	2.96		
		(4.28-3.96)x(5.08+5.08)/2	1.63		
		(5.05-4.28)x(5.08+5.08)/2	3.91		
		(6.00-5.05)x(5.08+5.08)/2	4.83		
		(6.14-6.00)x(5.08+5.08)/2	0.71		
		(6.39-6.14)x(5.08+5.08)/2	1.27		
		(7.23-6.39)x(5.08+5.08)/2	4.27		
		A RIPORTARE mq	159.72		

		CALCOLO DELLE AREE		Foglio n. 43
STERRO				
N. SEZIONE PROG.	FIG.	ELEMENTI DI CALCOLO	AREA ELEMENTARE mq	AREA FIGURA mq	NOTE
		RIPORTO mq	159.72		
		(7.71-7.23)x(5.08+5.08)/2	2.44		
		(8.32-7.71)x(5.07+5.08)/2	3.10		
		(9.40-8.32)x(5.05+5.07)/2	5.46		
		(9.41-9.40)x(5.05+5.05)/2	0.05		
		(9.42-9.41)x(5.05+5.05)/2	0.05		
		(10.50-9.42)x(5.04+5.05)/2	5.45		
		(11.01-10.50)x(5.04+5.04)/2	2.57		
		(11.59-11.01)x(5.02+5.04)/2	2.92		
		(12.40-11.59)x(4.96+5.02)/2	4.04		
		(12.68-12.40)x(4.94+4.96)/2	1.39		
		(12.84-12.68)x(4.93+4.94)/2	0.79		
		(13.19-12.84)x(4.89+4.93)/2	1.72		
		(13.45-13.19)x(4.59+4.89)/2	1.23		
		(1.75-13.45)x(4.89+4.59)/2	-55.46		
		(0.68-1.75)x(4.91+4.89)/2	-5.24		
		(-0.68-0.68)x(4.91+4.91)/2	-6.68		
		(-1.75--0.68)x(4.89+4.91)/2	-5.24		
		(-13.44--1.75)x(4.59+4.89)/2	-55.41		
		(-13.14--13.44)x(4.96+4.59)/2	1.43		
		(-14.40--13.14)x(4.96+4.96)/2	-6.25		
		(-15.87--14.40)x(3.99+4.96)/2	-6.58		
		(-22.22--15.87)x(3.99+3.99)/2	-25.34		
				26.16	
146 2175.00	B1	(-21.43--22.20)x(3.91+3.88)/2	3.00		
		(-21.11--21.43)x(3.92+3.91)/2	1.25		
		(-20.93--21.11)x(3.96+3.92)/2	0.71		
		(-20.02--20.93)x(4.10+3.96)/2	3.67		
		(-19.22--20.02)x(4.52+4.10)/2	3.45		
		(-18.93--19.22)x(4.65+4.52)/2	1.33		
		(-18.42--18.93)x(4.93+4.65)/2	2.44		
		(-17.99--18.42)x(5.15+4.93)/2	2.17		
		(-17.84--17.99)x(5.22+5.15)/2	0.78		
		(-17.19--17.84)x(5.36+5.22)/2	3.44		
		(-16.75--17.19)x(5.39+5.36)/2	2.37		
		(-16.39--16.75)x(5.42+5.39)/2	1.95		
		(-15.66--16.39)x(5.55+5.42)/2	4.00		
		(-15.59--15.66)x(5.56+5.55)/2	0.39		
		(-15.41--15.59)x(5.59+5.56)/2	1.00		
		(-14.57--15.41)x(5.72+5.59)/2	4.75		
		(-14.09--14.57)x(5.78+5.72)/2	2.76		
		(-13.48--14.09)x(5.86+5.78)/2	3.55		
		(-13.19--13.48)x(5.89+5.86)/2	1.70		
		(-12.40--13.19)x(5.95+5.89)/2	4.68		
		(-12.39--12.40)x(5.95+5.95)/2	0.06		
		(-12.38--12.39)x(5.95+5.95)/2	0.06		
		(-11.30--12.38)x(5.87+5.95)/2	6.38		
		(-10.67--11.30)x(5.81+5.87)/2	3.68		
		(-10.21--10.67)x(5.78+5.81)/2	2.67		
		(-9.39--10.21)x(5.70+5.78)/2	4.71		
		(-9.12--9.39)x(5.66+5.70)/2	1.53		
		(-8.96--9.12)x(5.66+5.66)/2	0.91		
		(-8.02--8.96)x(5.61+5.66)/2	5.30		
		(-7.25--8.02)x(5.63+5.61)/2	4.33		
		(-6.93--7.25)x(5.63+5.63)/2	1.80		
		(-6.39--6.93)x(5.61+5.63)/2	3.03		
		(-5.84--6.39)x(5.60+5.61)/2	3.08		
		(-5.54--5.84)x(5.59+5.60)/2	1.68		
		(-4.75--5.54)x(5.58+5.59)/2	4.41		
		(-3.82--4.75)x(5.54+5.58)/2	5.17		
		(-3.66--3.82)x(5.53+5.54)/2	0.89		
		(-3.38--3.66)x(5.51+5.53)/2	1.55		
		(-2.57--3.38)x(5.47+5.51)/2	4.45		
		(-2.11--2.57)x(5.43+5.47)/2	2.51		
		(-1.48--2.11)x(5.39+5.43)/2	3.41		
		(-0.40--1.48)x(5.30+5.39)/2	5.77		
		(-0.39--0.40)x(5.30+5.30)/2	0.05		
		(-0.37--0.39)x(5.30+5.30)/2	0.11		
		(0.70--0.37)x(5.20+5.30)/2	5.62		
		(1.31-0.70)x(5.20+5.20)/2	3.17		
		(1.79-1.31)x(5.19+5.20)/2	2.49		
		(2.64-1.79)x(5.17+5.19)/2	4.40		
		(2.88-2.64)x(5.17+5.17)/2	1.24		
		(3.02-2.88)x(5.17+5.17)/2	0.72		
		(3.97-3.02)x(5.16+5.17)/2	4.91		
		(4.73-3.97)x(5.14+5.16)/2	3.91		
		(5.06-4.73)x(5.13+5.14)/2	1.69		
		(5.22-5.06)x(5.12+5.13)/2	0.82		
		(5.65-5.22)x(5.12+5.12)/2	2.20		
		(6.02-5.65)x(5.13+5.12)/2	1.90		
		(6.15-6.02)x(5.13+5.13)/2	0.67		
		(6.44-6.15)x(5.13+5.13)/2	1.49		
		(7.24-6.44)x(5.14+5.13)/2	4.11		
		(8.15-7.24)x(5.12+5.14)/2	4.67		
		(8.33-8.15)x(5.11+5.12)/2	0.92		
		(8.66-8.33)x(5.11+5.11)/2	1.69		
		(9.42-8.66)x(5.10+5.11)/2	3.88		
		(9.86-9.42)x(5.09+5.10)/2	2.24		
		(10.52-9.86)x(5.08+5.09)/2	3.36		
		(11.57-10.52)x(5.10+5.08)/2	5.34		
		(11.61-11.57)x(5.10+5.10)/2	0.20		
		(11.67-11.61)x(5.10+5.10)/2	0.31		
		(12.70-11.67)x(5.09+5.10)/2	5.25		
		(12.94-12.70)x(5.09+5.09)/2	1.22		
		(12.61-12.94)x(4.87+5.09)/2	-1.64		
		(11.34-12.61)x(4.86+4.87)/2	-6.18		
		(11.65-11.34)x(4.50+4.86)/2	1.45		
		(1.75-11.65)x(4.75+4.50)/2	-45.79		
		(0.68-1.75)x(4.77+4.75)/2	-5.09		
		(-0.68-0.68)x(4.77+4.77)/2	-6.49		
		(-1.75--0.68)x(4.75+4.77)/2	-5.09		
		(-11.65--1.75)x(4.50+4.75)/2	-45.79		
		(-11.34--11.65)x(4.86+4.50)/2	1.45		
		(-12.61--11.34)x(4.87+4.86)/2	-6.18		
		(-14.09--12.61)x(3.88+4.87)/2	-6.48		
		A RIPORTARE mq	59.52		

		CALCOLO DELLE AREE		Foglio n. 44
STERRO				
N. SEZIONE PROG.	FIG.	ELEMENTI DI CALCOLO	AREA ELEMENTARE mq	AREA FIGURA mq	NOTE
		RIPORTO mq	59.52		
		(-22.20--14.09)x(3.88+3.88)/2	-31.47		
				28.05	
147	B1	(-19.16--20.01)x(4.17+3.94)/2	3.45		
2190.00		(-18.91--19.16)x(4.26+4.17)/2	1.05		
		(-18.18--18.91)x(4.60+4.26)/2	3.23		
		(-17.82--18.18)x(4.77+4.60)/2	1.69		
		(-17.07--17.82)x(5.08+4.77)/2	3.69		
		(-16.73--17.07)x(5.26+5.08)/2	1.76		
		(-16.15--16.73)x(5.33+5.26)/2	3.07		
		(-15.64--16.15)x(5.36+5.33)/2	2.73		
		(-15.35--15.64)x(5.37+5.36)/2	1.56		
		(-14.55--15.35)x(5.43+5.37)/2	4.32		
		(-13.64--14.55)x(5.45+5.43)/2	4.95		
		(-13.46--13.64)x(5.45+5.45)/2	0.98		
		(-13.14--13.46)x(5.46+5.45)/2	1.75		
		(-12.37--13.14)x(5.51+5.46)/2	4.22		
		(-11.93--12.37)x(5.53+5.51)/2	2.43		
		(-11.28--11.93)x(5.56+5.53)/2	3.60		
		(-10.22--11.28)x(5.68+5.56)/2	5.96		
		(-10.19--10.22)x(5.68+5.68)/2	0.17		
		(-10.13--10.19)x(5.69+5.68)/2	0.34		
		(-9.10--10.13)x(5.76+5.69)/2	5.90		
		(-8.51--9.10)x(5.69+5.76)/2	3.38		
		(-8.01--8.51)x(5.63+5.69)/2	2.83		
		(-7.12--8.01)x(5.45+5.63)/2	4.93		
		(-6.92--7.12)x(5.43+5.45)/2	1.09		
		(-6.80--6.92)x(5.43+5.43)/2	0.65		
		(-5.83--6.80)x(5.44+5.43)/2	5.27		
		(-5.09--5.83)x(5.43+5.44)/2	4.02		
		(-4.74--5.09)x(5.46+5.43)/2	1.91		
		(-4.12--4.74)x(5.38+5.46)/2	3.36		
		(-3.65--4.12)x(5.32+5.38)/2	2.51		
		(-3.38--3.65)x(5.30+5.32)/2	1.43		
		(-2.56--3.38)x(5.24+5.30)/2	4.32		
		(-1.67--2.56)x(5.25+5.24)/2	4.67		
		(-1.47--1.67)x(5.25+5.25)/2	1.05		
		(-1.11--1.47)x(5.24+5.25)/2	1.89		
		(-0.38--1.11)x(5.21+5.24)/2	3.81		
		(0.23--0.38)x(5.19+5.21)/2	3.17		
		(0.72-0.23)x(5.17+5.19)/2	2.54		
		(1.75-0.72)x(5.14+5.17)/2	5.31		
		(1.81-1.75)x(5.13+5.14)/2	0.31		
		(1.90-1.81)x(5.13+5.13)/2	0.46		
		(2.90-1.90)x(5.11+5.13)/2	5.12		
		(3.46-2.90)x(5.08+5.11)/2	2.85		
		(3.99-3.46)x(5.06+5.08)/2	2.69		
		(4.91-3.99)x(5.03+5.06)/2	4.64		
		(5.08-4.91)x(5.03+5.03)/2	0.86		
		(5.17-5.08)x(5.03+5.03)/2	0.45		
		(6.17-5.17)x(5.00+5.03)/2	5.02		
		(6.88-6.17)x(5.02+5.00)/2	3.56		
		(7.26-6.88)x(5.03+5.02)/2	1.91		
		(7.92-7.26)x(5.00+5.03)/2	3.31		
		(8.35-7.92)x(4.99+5.00)/2	2.15		
		(8.59-8.35)x(4.99+4.99)/2	1.20		
		(9.44-8.59)x(5.00+4.99)/2	4.25		
		(10.31-9.44)x(4.99+5.00)/2	4.35		
		(10.53-10.31)x(4.98+4.99)/2	1.10		
		(10.93-10.53)x(4.99+4.98)/2	1.99		
		(11.62-10.93)x(5.00+4.99)/2	3.45		
		(12.02-11.62)x(5.00+5.00)/2	2.00		
		(12.71-12.02)x(4.99+5.00)/2	3.45		
		(12.95-12.71)x(4.99+4.99)/2	1.20		
		(12.61-12.95)x(4.77+4.99)/2	-1.66		
		(11.34-12.61)x(4.76+4.77)/2	-6.05		
		(11.65-11.34)x(4.40+4.76)/2	1.42		
		(1.75-11.65)x(4.64+4.40)/2	-44.75		
		(0.68-1.75)x(4.67+4.64)/2	-4.98		
		(-0.68-0.68)x(4.67+4.67)/2	-6.35		
		(-1.75--0.68)x(4.64+4.67)/2	-4.98		
		(-11.65--1.75)x(4.40+4.64)/2	-44.75		
		(-11.34--11.65)x(4.76+4.40)/2	1.42		
		(-12.61--11.34)x(4.77+4.76)/2	-6.05		
		(-13.85--12.61)x(3.94+4.77)/2	-5.40		
		(-20.01--13.85)x(3.94+3.94)/2	-24.27		
				24.91	
148	B1	(-22.91--23.26)x(3.80+3.78)/2	1.33		
2205.00		(-22.17--22.91)x(3.90+3.80)/2	2.85		
		(-21.75--22.17)x(4.13+3.90)/2	1.69		
		(-21.08--21.75)x(4.46+4.13)/2	2.88		
		(-20.04--21.08)x(5.12+4.46)/2	4.98		
		(-19.99--20.04)x(5.15+5.12)/2	0.26		
		(-19.90--19.99)x(5.18+5.15)/2	0.46		
		(-18.90--19.90)x(5.37+5.18)/2	5.28		
		(-18.33--18.90)x(5.26+5.37)/2	3.03		
		(-17.81--18.33)x(5.12+5.26)/2	2.70		
		(-16.89--17.81)x(4.75+5.12)/2	4.54		
		(-16.72--16.89)x(4.69+4.75)/2	0.80		
		(-16.62--16.72)x(4.72+4.69)/2	0.47		
		(-15.63--16.62)x(5.09+4.72)/2	4.86		
		(-14.91--15.63)x(5.19+5.09)/2	3.70		
		(-14.54--14.91)x(5.28+5.19)/2	1.94		
		(-13.88--14.54)x(5.34+5.28)/2	3.50		
		(-13.45--13.88)x(5.44+5.34)/2	2.32		
		(-13.20--13.45)x(5.43+5.44)/2	1.36		
		(-12.36--13.20)x(5.47+5.43)/2	4.58		
		(-11.49--12.36)x(5.32+5.47)/2	4.69		
		(-11.27--11.49)x(5.31+5.32)/2	1.17		
		(-10.87--11.27)x(5.30+5.31)/2	2.12		
		(-10.17--10.87)x(5.34+5.30)/2	3.72		
		(-9.78--10.17)x(5.30+5.34)/2	2.07		
		(-9.08--9.78)x(5.33+5.30)/2	3.72		
		(-8.07--9.08)x(5.24+5.33)/2	5.34		
		(-7.99--8.07)x(5.24+5.24)/2	0.42		
		A RIPORTARE mq	76.78		

		CALCOLO DELLE AREE		Foglio n. 45
STERRO				
N. SEZIONE PROG.	FIG.	ELEMENTI DI CALCOLO	AREA ELEMENTARE mq	AREA FIGURA mq	NOTE
		RIPORTO mq	76.78		
		(-7.86--7.99)x(5.23+5.24)/2	0.68		
		(-6.90--7.86)x(5.33+5.23)/2	5.07		
		(-6.36--6.90)x(5.30+5.33)/2	2.87		
		(-5.81--6.36)x(5.31+5.30)/2	2.92		
		(-5.56--5.81)x(5.32+5.31)/2	1.33		
		(-4.85--5.56)x(5.19+5.32)/2	3.73		
		(-4.76--4.85)x(5.18+5.19)/2	0.47		
		(-4.72--4.76)x(5.17+5.18)/2	0.21		
		(-4.65--4.72)x(5.16+5.17)/2	0.36		
		(-3.63--4.65)x(5.14+5.16)/2	5.25		
		(-2.94--3.63)x(5.12+5.14)/2	3.54		
		(-2.54--2.94)x(5.11+5.12)/2	2.05		
		(-1.85--2.54)x(5.11+5.11)/2	3.53		
		(-1.45--1.85)x(5.11+5.11)/2	2.04		
		(-1.23--1.45)x(5.11+5.11)/2	1.12		
		(-0.36--1.23)x(5.11+5.11)/2	4.45		
		(0.49--0.36)x(5.11+5.11)/2	4.34		
		(0.73-0.49)x(5.11+5.11)/2	1.23		
		(1.16-0.73)x(5.11+5.11)/2	2.20		
		(1.82-1.16)x(5.13+5.11)/2	3.38		
		(2.20-1.82)x(5.13+5.13)/2	1.95		
		(2.91-2.20)x(5.13+5.13)/2	3.64		
		(3.91-2.91)x(5.12+5.13)/2	5.13		
		(4.00-3.91)x(5.12+5.12)/2	0.46		
		(4.17-4.00)x(5.12+5.12)/2	0.87		
		(5.09-4.17)x(5.10+5.12)/2	4.70		
		(5.62-5.09)x(5.09+5.10)/2	2.70		
		(6.18-5.62)x(5.08+5.09)/2	2.85		
		(7.18-6.18)x(5.08+5.08)/2	5.08		
		(7.27-7.18)x(5.09+5.08)/2	0.46		
		(7.33-7.27)x(5.08+5.09)/2	0.31		
		(8.36-7.33)x(5.08+5.08)/2	5.23		
		(9.04-8.36)x(5.07+5.08)/2	3.45		
		(9.46-9.04)x(5.06+5.07)/2	2.13		
		(10.19-9.46)x(5.05+5.06)/2	3.69		
		(10.55-10.19)x(5.04+5.05)/2	1.82		
		(10.75-10.55)x(5.04+5.04)/2	1.01		
		(11.64-10.75)x(5.05+5.04)/2	4.49		
		(12.46-11.64)x(5.05+5.05)/2	4.14		
		(12.73-12.46)x(5.04+5.05)/2	1.36		
		(12.85-12.73)x(5.04+5.04)/2	0.60		
		(13.11-12.85)x(5.03+5.04)/2	1.31		
		(12.61-13.11)x(4.70+5.03)/2	-2.43		
		(12.18-12.61)x(4.70+4.70)/2	-2.02		
		(11.34-12.18)x(4.70+4.70)/2	-3.95		
		(11.65-11.34)x(4.33+4.70)/2	1.40		
		(11.00-11.65)x(4.35+4.33)/2	-2.82		
		(1.75-11.00)x(4.58+4.35)/2	-41.30		
		(0.68-1.75)x(4.61+4.58)/2	-4.92		
		(-0.68-0.68)x(4.61+4.61)/2	-6.27		
		(-1.75--0.68)x(4.58+4.61)/2	-4.92		
		(-11.65--1.75)x(4.33+4.58)/2	-44.10		
		(-11.34--11.65)x(4.70+4.33)/2	1.40		
		(-12.61--11.34)x(4.70+4.70)/2	-5.97		
		(-14.00--12.61)x(3.78+4.70)/2	-5.89		
		(-23.26--14.00)x(3.78+3.78)/2	-35.00		
				28.14	
149 2220.00	B1	(-20.15--20.39)x(3.68+3.68)/2	0.88		
		(-19.97--20.15)x(3.68+3.68)/2	0.66		
		(-19.35--19.97)x(3.76+3.68)/2	2.31		
		(-18.88--19.35)x(3.93+3.76)/2	1.81		
		(-18.55--18.88)x(4.09+3.93)/2	1.32		
		(-17.79--18.55)x(4.49+4.09)/2	3.26		
		(-17.75--17.79)x(4.52+4.49)/2	0.18		
		(-17.63--17.75)x(4.59+4.52)/2	0.55		
		(-16.70--17.63)x(5.09+4.59)/2	4.50		
		(-16.18--16.70)x(5.14+5.09)/2	2.66		
		(-15.61--16.18)x(5.21+5.14)/2	2.95		
		(-14.62--15.61)x(5.18+5.21)/2	5.14		
		(-14.52--14.62)x(5.17+5.18)/2	0.52		
		(-14.47--14.52)x(5.17+5.17)/2	0.26		
		(-13.43--14.47)x(5.13+5.17)/2	5.36		
		(-12.76--13.43)x(5.13+5.13)/2	3.44		
		(-12.34--12.76)x(5.13+5.13)/2	2.15		
		(-11.61--12.34)x(5.15+5.13)/2	3.75		
		(-11.25--11.61)x(5.16+5.15)/2	1.86		
		(-10.55--11.25)x(5.17+5.16)/2	3.62		
		(-10.16--10.55)x(5.17+5.17)/2	2.02		
		(-9.33--10.16)x(5.18+5.17)/2	4.30		
		(-9.07--9.33)x(5.18+5.18)/2	1.35		
		(-8.60--9.07)x(5.20+5.18)/2	2.44		
		(-7.98--8.60)x(5.20+5.20)/2	3.22		
		(-7.62--7.98)x(5.18+5.20)/2	1.87		
		(-6.89--7.62)x(5.14+5.18)/2	3.77		
		(-5.91--6.89)x(5.11+5.14)/2	5.02		
		(-5.80--5.91)x(5.11+5.11)/2	0.56		
		(-5.59--5.80)x(5.10+5.11)/2	1.07		
		(-4.71--5.59)x(5.07+5.10)/2	4.47		
		(-4.20--4.71)x(5.05+5.07)/2	2.58		
		(-3.62--4.20)x(5.03+5.05)/2	2.92		
		(-2.59--3.62)x(4.96+5.03)/2	5.14		
		(-2.53--2.59)x(4.96+4.96)/2	0.30		
		(-2.49--2.53)x(4.96+4.96)/2	0.20		
		(-1.43--2.49)x(4.94+4.96)/2	5.25		
		(-0.78--1.43)x(4.99+4.94)/2	3.23		
		(-0.34--0.78)x(5.01+4.99)/2	2.20		
		(0.42--0.34)x(5.07+5.01)/2	3.83		
		(0.75-0.42)x(5.09+5.07)/2	1.68		
		(0.93-0.75)x(5.09+5.09)/2	0.92		
		(1.84-0.93)x(5.08+5.09)/2	4.63		
		(2.64-1.84)x(5.06+5.08)/2	4.06		
		(2.93-2.64)x(5.06+5.06)/2	1.47		
		(3.43-2.93)x(5.05+5.06)/2	2.53		
		(4.02-3.43)x(5.05+5.05)/2	2.98		
		A RIPORTARE mq	121.19		

		CALCOLO DELLE AREE		Foglio n. 46
STERRO				
N. SEZIONE PROG.	FIG.	ELEMENTI DI CALCOLO	AREA ELEMENTARE mq	AREA FIGURA mq	NOTE
		RIPORTO mq	121.19		
		(4.35-4.02)x(5.04+5.05)/2	1.66		
		(5.11-4.35)x(5.02+5.04)/2	3.82		
		(6.06-5.11)x(5.02+5.02)/2	4.77		
		(6.20-6.06)x(5.02+5.02)/2	0.70		
		(6.44-6.20)x(5.02+5.02)/2	1.20		
		(7.29-6.44)x(5.01+5.02)/2	4.26		
		(7.86-7.29)x(5.00+5.01)/2	2.85		
		(8.38-7.86)x(4.98+5.00)/2	2.59		
		(9.45-8.38)x(4.97+4.98)/2	5.32		
		(9.47-9.45)x(4.96+4.97)/2	0.10		
		(9.48-9.47)x(4.96+4.96)/2	0.05		
		(10.56-9.48)x(4.95+4.96)/2	5.35		
		(11.19-10.56)x(4.92+4.95)/2	3.11		
		(11.65-11.19)x(4.91+4.92)/2	2.26		
		(12.46-11.65)x(4.88+4.91)/2	3.96		
		(12.74-12.46)x(4.87+4.88)/2	1.36		
		(12.90-12.74)x(4.87+4.87)/2	0.78		
		(12.61-12.90)x(4.68+4.87)/2	-1.38		
		(11.34-12.61)x(4.67+4.68)/2	-5.94		
		(11.65-11.34)x(4.31+4.67)/2	1.39		
		(1.75-11.65)x(4.55+4.31)/2	-43.86		
		(0.68-1.75)x(4.58+4.55)/2	-4.88		
		(-0.68-0.68)x(4.58+4.58)/2	-6.23		
		(-1.75--0.68)x(4.55+4.58)/2	-4.88		
		(-11.65--1.75)x(4.31+4.55)/2	-43.86		
		(-11.34--11.65)x(4.67+4.31)/2	1.39		
		(-12.61--11.34)x(4.68+4.67)/2	-5.94		
		(-14.11--12.61)x(3.68+4.68)/2	-6.27		
		(-20.39--14.11)x(3.68+3.68)/2	-23.11		
				21.76	
150 2235.00	B1	(-18.37--18.87)x(3.60+3.51)/2	1.78		
		(-17.78--18.37)x(3.72+3.60)/2	2.16		
		(-17.44--17.78)x(3.87+3.72)/2	1.29		
		(-16.69--17.44)x(4.18+3.87)/2	3.02		
		(-16.33--16.69)x(4.41+4.18)/2	1.55		
		(-15.60--16.33)x(4.91+4.41)/2	3.40		
		(-15.36--15.60)x(4.98+4.91)/2	1.19		
		(-14.51--15.36)x(5.18+4.98)/2	4.32		
		(-14.02--14.51)x(5.19+5.18)/2	2.54		
		(-13.42--14.02)x(5.20+5.19)/2	3.12		
		(-12.35--13.42)x(5.20+5.20)/2	5.56		
		(-12.33--12.35)x(5.20+5.20)/2	0.10		
		(-12.31--12.33)x(5.20+5.20)/2	0.10		
		(-11.23--12.31)x(5.17+5.20)/2	5.60		
		(-10.60--11.23)x(5.16+5.17)/2	3.25		
		(-10.14--10.60)x(5.13+5.16)/2	2.37		
		(-9.34--10.14)x(5.09+5.13)/2	4.09		
		(-9.05--9.34)x(5.08+5.09)/2	1.47		
		(-8.89--9.05)x(5.07+5.08)/2	0.81		
		(-7.96--8.89)x(5.04+5.07)/2	4.70		
		(-7.18--7.96)x(5.02+5.04)/2	3.92		
		(-6.87--7.18)x(5.01+5.02)/2	1.55		
		(-6.33--6.87)x(5.02+5.01)/2	2.71		
		(-5.78--6.33)x(5.03+5.02)/2	2.76		
		(-5.47--5.78)x(5.03+5.03)/2	1.56		
		(-4.69--5.47)x(5.02+5.03)/2	3.92		
		(-3.76--4.69)x(5.00+5.02)/2	4.66		
		(-3.60--3.76)x(5.00+5.00)/2	0.80		
		(-3.32--3.60)x(5.00+5.00)/2	1.40		
		(-2.51--3.32)x(4.99+5.00)/2	4.05		
		(-2.05--2.51)x(5.00+4.99)/2	2.30		
		(-1.42--2.05)x(5.00+5.00)/2	3.15		
		(-0.34--1.42)x(5.01+5.00)/2	5.41		
		(-0.33--0.34)x(5.01+5.01)/2	0.05		
		(-0.32--0.33)x(5.01+5.01)/2	0.05		
		(0.76--0.32)x(5.01+5.01)/2	5.41		
		(1.37-0.76)x(4.99+5.01)/2	3.05		
		(1.85-1.37)x(4.98+4.99)/2	2.39		
		(2.08-1.85)x(4.98+4.98)/2	1.15		
		(2.69-2.08)x(4.96+4.98)/2	3.03		
		(2.88-2.69)x(4.95+4.96)/2	0.94		
		(2.94-2.88)x(4.95+4.95)/2	0.30		
		(3.08-2.94)x(4.95+4.95)/2	0.69		
		(4.03-3.08)x(4.93+4.95)/2	4.69		
		(4.80-4.03)x(4.91+4.93)/2	3.79		
		(5.12-4.80)x(4.90+4.91)/2	1.57		
		(5.70-5.12)x(4.89+4.90)/2	2.84		
		(6.21-5.70)x(4.88+4.89)/2	2.49		
		(6.51-6.21)x(4.87+4.88)/2	1.46		
		(7.30-6.51)x(4.85+4.87)/2	3.84		
		(8.22-7.30)x(4.84+4.85)/2	4.46		
		(8.40-8.22)x(4.83+4.84)/2	0.87		
		(8.71-8.40)x(4.83+4.83)/2	1.50		
		(9.49-8.71)x(4.82+4.83)/2	3.76		
		(9.93-9.49)x(4.82+4.82)/2	2.12		
		(10.58-9.93)x(4.82+4.82)/2	3.13		
		(11.64-10.58)x(4.81+4.82)/2	5.10		
		(11.67-11.64)x(4.81+4.81)/2	0.14		
		(11.72-11.67)x(4.81+4.81)/2	0.24		
		(12.76-11.72)x(4.81+4.81)/2	5.00		
		(12.80-12.76)x(4.81+4.81)/2	0.19		
		(12.61-12.80)x(4.69+4.81)/2	-0.90		
		(11.34-12.61)x(4.68+4.69)/2	-5.95		
		(11.65-11.34)x(4.32+4.68)/2	1.40		
		(1.75-11.65)x(4.56+4.32)/2	-43.96		
		(0.68-1.75)x(4.59+4.56)/2	-4.90		
		(-0.68-0.68)x(4.59+4.59)/2	-6.24		
		(-1.75--0.68)x(4.56+4.59)/2	-4.90		
		(-11.65--1.75)x(4.32+4.56)/2	-43.96		
		(-11.34--11.65)x(4.68+4.32)/2	1.40		
		(-12.61--11.34)x(4.69+4.68)/2	-5.95		
		(-14.37--12.61)x(3.51+4.69)/2	-7.22		
		(-18.87--14.37)x(3.51+3.51)/2	-15.80		
				17.88	
		A RIPORTARE mq			

	CALCOLO DELLE AREE		Foglio n. 47

STERRO

N. SEZIONE PROG.	FIG.	ELEMENTI DI CALCOLO	AREA ELEMENTARE mq	AREA FIGURA mq	NOTE
		RIPORTO mq			
151	B1	(-12.31--12.94)x(4.89+4.94)/2	3.10		
2250.00		(-11.87--12.31)x(4.88+4.89)/2	2.15		
		(-11.22--11.87)x(4.86+4.88)/2	3.17		
		(-10.16--11.22)x(4.91+4.86)/2	5.18		
		(-10.13--10.16)x(4.92+4.91)/2	0.15		
		(-10.08--10.13)x(4.92+4.92)/2	0.25		
		(-9.04--10.08)x(4.92+4.92)/2	5.12		
		(-8.45--9.04)x(4.92+4.92)/2	2.90		
		(-7.95--8.45)x(4.93+4.92)/2	2.46		
		(-7.07--7.95)x(4.91+4.93)/2	4.33		
		(-6.86--7.07)x(4.91+4.91)/2	1.03		
		(-6.73--6.86)x(4.91+4.91)/2	0.64		
		(-5.77--6.73)x(4.92+4.91)/2	4.72		
		(-5.02--5.77)x(4.92+4.92)/2	3.69		
		(-4.68--5.02)x(4.93+4.92)/2	1.67		
		(-4.06--4.68)x(4.91+4.93)/2	3.05		
		(-3.59--4.06)x(4.90+4.91)/2	2.31		
		(-2.91--3.59)x(4.88+4.90)/2	3.33		
		(-2.49--2.91)x(4.86+4.88)/2	2.05		
		(-1.60--2.49)x(4.83+4.86)/2	4.31		
		(-1.40--1.60)x(4.83+4.83)/2	0.97		
		(-1.05--1.40)x(4.81+4.83)/2	1.69		
		(-0.31--1.05)x(4.79+4.81)/2	3.55		
		(0.11--0.31)x(4.79+4.79)/2	2.01		
		(0.78-0.11)x(4.79+4.79)/2	3.21		
		(1.82-0.78)x(4.79+4.79)/2	4.98		
		(1.87-1.82)x(4.79+4.79)/2	0.24		
		(1.95-1.87)x(4.79+4.79)/2	0.38		
		(2.96-1.95)x(4.80+4.79)/2	4.84		
		(3.53-2.96)x(4.81+4.80)/2	2.74		
		(4.05-3.53)x(4.82+4.81)/2	2.50		
		(4.96-4.05)x(4.84+4.82)/2	4.40		
		(5.14-4.96)x(4.84+4.84)/2	0.87		
		(5.24-5.14)x(4.83+4.84)/2	0.48		
		(6.23-5.24)x(4.81+4.83)/2	4.77		
		(6.95-6.23)x(4.78+4.81)/2	3.45		
		(7.32-6.95)x(4.76+4.78)/2	1.76		
		(7.97-7.32)x(4.75+4.76)/2	3.09		
		(8.41-7.97)x(4.74+4.75)/2	2.09		
		(8.66-8.41)x(4.74+4.74)/2	1.19		
		(9.50-8.66)x(4.74+4.74)/2	3.98		
		(10.37-9.50)x(4.75+4.74)/2	4.13		
		(10.59-10.37)x(4.75+4.75)/2	1.05		
		(10.98-10.59)x(4.74+4.75)/2	1.85		
		(11.68-10.98)x(4.73+4.74)/2	3.31		
		(12.08-11.68)x(4.73+4.73)/2	1.89		
		(12.62-12.08)x(4.72+4.73)/2	2.55		
		(12.61-12.62)x(4.72+4.72)/2	-0.05		
		(11.34-12.61)x(4.71+4.72)/2	-5.99		
		(11.65-11.34)x(4.35+4.71)/2	1.40		
		(1.75-11.65)x(4.59+4.35)/2	-44.25		
		(0.68-1.75)x(4.62+4.59)/2	-4.93		
		(-0.68-0.68)x(4.62+4.62)/2	-6.28		
		(-1.75--0.68)x(4.59+4.62)/2	-4.93		
		(-11.65--1.75)x(4.35+4.59)/2	-44.25		
		(-11.34--11.65)x(4.71+4.35)/2	1.40		
		(-12.61--11.34)x(4.72+4.71)/2	-5.99		
		(-12.94--12.61)x(4.94+4.72)/2	-1.59		
				8.12	
152	B1	(-11.42--11.55)x(4.48+4.49)/2	0.58		
2265.00		(-11.20--11.42)x(4.47+4.48)/2	0.98		
		(-10.82--11.20)x(4.49+4.47)/2	1.70		
		(-10.11--10.82)x(4.52+4.49)/2	3.20		
		(-9.71--10.11)x(4.53+4.52)/2	1.81		
		(-9.02--9.71)x(4.55+4.53)/2	3.13		
		(-8.70--9.02)x(4.59+4.55)/2	1.46		
		(-7.93--8.70)x(4.70+4.59)/2	3.58		
		(-7.81--7.93)x(4.72+4.70)/2	0.57		
		(-6.84--7.81)x(4.90+4.72)/2	4.67		
		(-6.29--6.84)x(4.93+4.90)/2	2.70		
		(-5.75--6.29)x(4.96+4.93)/2	2.67		
		(-4.80--5.75)x(4.95+4.96)/2	4.71		
		(-4.66--4.80)x(4.95+4.95)/2	0.69		
		(-4.58--4.66)x(4.95+4.95)/2	0.40		
		(-3.57--4.58)x(4.88+4.95)/2	4.96		
		(-2.87--3.57)x(4.85+4.88)/2	3.41		
		(-2.48--2.87)x(4.84+4.85)/2	1.89		
		(-1.79--2.48)x(4.84+4.84)/2	3.34		
		(-1.39--1.79)x(4.83+4.84)/2	1.93		
		(-1.16--1.39)x(4.83+4.83)/2	1.11		
		(-0.30--1.16)x(4.82+4.83)/2	4.15		
		(0.55--0.30)x(4.82+4.82)/2	4.10		
		(0.79-0.55)x(4.81+4.82)/2	1.16		
		(1.21-0.79)x(4.80+4.81)/2	2.02		
		(1.88-1.21)x(4.79+4.80)/2	3.21		
		(2.26-1.88)x(4.75+4.79)/2	1.81		
		(2.97-2.26)x(4.67+4.75)/2	3.34		
		(3.97-2.97)x(4.66+4.67)/2	4.67		
		(4.06-3.97)x(4.66+4.66)/2	0.42		
		(4.22-4.06)x(4.67+4.66)/2	0.75		
		(5.15-4.22)x(4.71+4.67)/2	4.36		
		(5.68-5.15)x(4.71+4.71)/2	2.50		
		(6.25-5.68)x(4.70+4.71)/2	2.68		
		(7.23-6.25)x(4.68+4.70)/2	4.60		
		(7.34-7.23)x(4.68+4.68)/2	0.51		
		(7.39-7.34)x(4.68+4.68)/2	0.23		
		(8.43-7.39)x(4.69+4.68)/2	4.87		
		(9.11-8.43)x(4.67+4.69)/2	3.18		
		(9.52-9.11)x(4.66+4.67)/2	1.91		
		(10.24-9.52)x(4.64+4.66)/2	3.35		
		(10.61-10.24)x(4.63+4.64)/2	1.71		
		(11.31-10.61)x(4.62+4.63)/2	3.24		
		(11.45-11.31)x(4.62+4.62)/2	0.65		
		(11.65-11.45)x(4.38+4.62)/2	0.90		
		A RIPORTARE mq	109.81		

		CALCOLO DELLE AREE		Foglio n. 48
STERRO				
N. SEZIONE PROG.	FIG.	ELEMENTI DI CALCOLO	AREA ELEMENTARE mq	AREA FIGURA mq	NOTE
		RIPORTO mq	109.81		
		(1.75-11.65)x(4.62+4.38)/2	-44.55		
		(0.68-1.75)x(4.65+4.62)/2	-4.96		
		(-0.68-0.68)x(4.65+4.65)/2	-6.32		
		(-1.75--0.68)x(4.62+4.65)/2	-4.96		
		(-11.65--1.75)x(4.38+4.62)/2	-44.55		
		(-11.55--11.65)x(4.49+4.38)/2	0.44		
				4.91	
153	B1	(-12.69--12.79)x(4.90+4.90)/2	0.49		
2280.00		(-12.28--12.69)x(4.92+4.90)/2	2.01		
		(-11.56--12.28)x(4.92+4.92)/2	3.54		
		(-11.19--11.56)x(4.93+4.92)/2	1.82		
		(-10.98--11.19)x(4.92+4.93)/2	1.03		
		(-10.10--10.98)x(4.92+4.92)/2	4.33		
		(-9.27--10.10)x(4.89+4.92)/2	4.07		
		(-9.01--9.27)x(4.88+4.89)/2	1.27		
		(-8.55--9.01)x(4.87+4.88)/2	2.24		
		(-7.92--8.55)x(4.87+4.87)/2	3.07		
		(-7.56--7.92)x(4.87+4.87)/2	1.75		
		(-6.83--7.56)x(4.88+4.87)/2	3.56		
		(-5.85--6.83)x(4.92+4.88)/2	4.80		
		(-5.74--5.85)x(4.92+4.92)/2	0.54		
		(-5.54--5.74)x(4.93+4.92)/2	0.99		
		(-4.65--5.54)x(4.95+4.93)/2	4.40		
		(-4.14--4.65)x(4.94+4.95)/2	2.52		
		(-3.55--4.14)x(4.92+4.94)/2	2.91		
		(-2.53--3.55)x(4.85+4.92)/2	4.98		
		(-2.46--2.53)x(4.84+4.85)/2	0.34		
		(-2.42--2.46)x(4.84+4.84)/2	0.19		
		(-1.37--2.42)x(4.80+4.84)/2	5.06		
		(-0.71--1.37)x(4.76+4.80)/2	3.15		
		(-0.28--0.71)x(4.73+4.76)/2	2.04		
		(0.48--0.28)x(4.69+4.73)/2	3.58		
		(0.62-0.48)x(4.68+4.69)/2	0.66		
		(-0.68-0.62)x(4.68+4.68)/2	-6.08		
		(-1.75--0.68)x(4.66+4.68)/2	-5.00		
		(-11.65--1.75)x(4.41+4.66)/2	-44.90		
		(-11.34--11.65)x(4.77+4.41)/2	1.42		
		(-12.61--11.34)x(4.78+4.77)/2	-6.06		
		(-12.79--12.61)x(4.90+4.78)/2	-0.87		
				3.85	
153	B2	(1.90-1.07)x(4.67+4.67)/2	3.88		
2280.00		(2.71-1.90)x(4.67+4.67)/2	3.78		
		(2.99-2.71)x(4.67+4.67)/2	1.31		
		(3.48-2.99)x(4.67+4.67)/2	2.29		
		(4.08-3.48)x(4.66+4.67)/2	2.80		
		(4.42-4.08)x(4.67+4.66)/2	1.59		
		(5.17-4.42)x(4.69+4.67)/2	3.51		
		(5.52-5.17)x(4.69+4.69)/2	1.64		
		(6.26-5.52)x(4.72+4.69)/2	3.48		
		(6.49-6.26)x(4.74+4.72)/2	1.09		
		(7.35-6.49)x(4.80+4.74)/2	4.10		
		(7.84-7.35)x(4.81+4.80)/2	2.35		
		(8.44-7.84)x(4.83+4.81)/2	2.89		
		(9.50-8.44)x(4.81+4.83)/2	5.11		
		(9.53-9.50)x(4.81+4.81)/2	0.14		
		(9.55-9.53)x(4.81+4.81)/2	0.10		
		(10.62-9.55)x(4.79+4.81)/2	5.14		
		(11.26-10.62)x(4.76+4.79)/2	3.06		
		(11.36-11.26)x(4.76+4.76)/2	0.48		
		(11.65-11.36)x(4.41+4.76)/2	1.33		
		(1.75-11.65)x(4.66+4.41)/2	-44.90		
		(1.07-1.75)x(4.67+4.66)/2	-3.17		
				2.00	
154	B1	(-12.30--12.77)x(4.95+4.92)/2	2.32		
2295.00		(-12.26--12.30)x(4.95+4.95)/2	0.20		
		(-12.24--12.26)x(4.95+4.95)/2	0.10		
		(-11.17--12.24)x(5.00+4.95)/2	5.32		
		(-10.53--11.17)x(4.99+5.00)/2	3.20		
		(-10.08--10.53)x(4.99+4.99)/2	2.25		
		(-9.29--10.08)x(4.98+4.99)/2	3.94		
		(-8.99--9.29)x(4.98+4.98)/2	1.49		
		(-8.82--8.99)x(4.98+4.98)/2	0.85		
		(-7.90--8.82)x(4.95+4.98)/2	4.57		
		(-7.11--7.90)x(4.93+4.95)/2	3.90		
		(-6.81--7.11)x(4.93+4.93)/2	1.48		
		(-6.28--6.81)x(4.92+4.93)/2	2.61		
		(-5.72--6.28)x(4.89+4.92)/2	2.75		
		(-5.40--5.72)x(4.87+4.89)/2	1.56		
		(-4.63--5.40)x(4.83+4.87)/2	3.73		
		(-3.69--4.63)x(4.77+4.83)/2	4.51		
		(-3.54--3.69)x(4.76+4.77)/2	0.71		
		(-3.27--3.54)x(4.74+4.76)/2	1.28		
		(-2.54--3.27)x(4.67+4.74)/2	3.43		
		(-11.65--2.54)x(4.44+4.67)/2	-41.50		
		(-11.34--11.65)x(4.80+4.44)/2	1.43		
		(-12.61--11.34)x(4.81+4.80)/2	-6.10		
		(-12.77--12.61)x(4.92+4.81)/2	-0.78		
				3.25	
154	B2	(6.57-6.54)x(4.57+4.57)/2	0.14		
2295.00		(7.37-6.57)x(4.66+4.57)/2	3.69		
		(8.28-7.37)x(4.71+4.66)/2	4.26		
		(8.46-8.28)x(4.72+4.71)/2	0.85		
		(8.76-8.46)x(4.81+4.72)/2	1.43		
		(9.55-8.76)x(5.08+4.81)/2	3.91		
		(9.99-9.55)x(5.29+5.08)/2	2.28		
		(10.64-9.99)x(5.59+5.29)/2	3.54		
		(11.71-10.64)x(5.85+5.59)/2	6.12		
		(11.73-11.71)x(5.86+5.85)/2	0.12		
		(11.77-11.73)x(5.86+5.86)/2	0.23		
		(12.82-11.77)x(5.92+5.86)/2	6.18		
		(13.42-12.82)x(5.89+5.92)/2	3.54		
		(13.91-13.42)x(5.88+5.89)/2	2.88		
		(14.78-13.91)x(5.81+5.88)/2	5.09		
		(15.00-14.78)x(5.80+5.81)/2	1.28		
		A RIPORTARE mq	45.54		

	CALCOLO DELLE AREE		Foglio n. 49

STERRO

N. SEZIONE PROG.	FIG.	ELEMENTI DI CALCOLO	AREA ELEMENTARE mq	AREA FIGURA mq	NOTE
		RIPORTO mq	45.54		
		(15.13-15.00)x(5.80+5.80)/2	0.75		
		(16.09-15.13)x(5.82+5.80)/2	5.58		
		(16.84-16.09)x(5.77+5.82)/2	4.35		
		(17.18-16.84)x(5.75+5.77)/2	1.96		
		(17.79-17.18)x(5.74+5.75)/2	3.50		
		(18.27-17.79)x(5.70+5.74)/2	2.75		
		(18.94-18.27)x(5.59+5.70)/2	3.78		
		(19.36-18.94)x(5.44+5.59)/2	2.32		
		(20.26-19.36)x(5.17+5.44)/2	4.77		
		(20.45-20.26)x(5.12+5.17)/2	0.98		
		(20.80-20.45)x(5.03+5.12)/2	1.78		
		(21.54-20.80)x(4.82+5.03)/2	3.64		
		(21.97-21.54)x(4.73+4.82)/2	2.05		
		(22.63-21.97)x(4.53+4.73)/2	3.06		
		(23.68-22.63)x(4.31+4.53)/2	4.64		
		(23.72-23.68)x(4.30+4.31)/2	0.17		
		(23.80-23.72)x(4.29+4.30)/2	0.34		
		(24.82-23.80)x(4.10+4.29)/2	4.28		
		(25.10-24.82)x(4.08+4.10)/2	1.15		
		(13.70-25.10)x(4.08+4.08)/2	-46.51		
		(12.61-13.70)x(4.81+4.08)/2	-4.85		
		(11.34-12.61)x(4.80+4.81)/2	-6.10		
		(11.65-11.34)x(4.44+4.80)/2	1.43		
		(6.54-11.65)x(4.57+4.44)/2	-23.02		
				18.34	
155	B1	(-12.25--12.76)x(4.97+4.94)/2	2.53		
2310.00		(-11.80--12.25)x(4.96+4.97)/2	2.23		
		(-11.16--11.80)x(4.95+4.96)/2	3.17		
		(-10.09--11.16)x(4.89+4.95)/2	5.26		
		(-10.07--10.09)x(4.89+4.89)/2	0.10		
		(-10.03--10.07)x(4.89+4.89)/2	0.20		
		(-8.98--10.03)x(4.82+4.89)/2	5.10		
		(-8.38--8.98)x(4.78+4.82)/2	2.88		
		(-7.89--8.38)x(4.75+4.78)/2	2.33		
		(-7.02--7.89)x(4.72+4.75)/2	4.12		
		(-6.80--7.02)x(4.71+4.72)/2	1.04		
		(-6.67--6.80)x(4.71+4.71)/2	0.61		
		(-5.70--6.67)x(4.68+4.71)/2	4.55		
		(-5.25--5.70)x(4.66+4.68)/2	2.10		
		(-4.61--5.25)x(4.65+4.66)/2	2.98		
		(-4.28--4.61)x(4.65+4.65)/2	1.53		
		(-11.65--4.28)x(4.47+4.65)/2	-33.61		
		(-11.34--11.65)x(4.83+4.47)/2	1.44		
		(-12.61--11.34)x(4.84+4.83)/2	-6.14		
		(-12.76--12.61)x(4.94+4.84)/2	-0.73		
				1.69	
156	B1	(-11.36--11.52)x(4.65+4.66)/2	0.74		
2325.00		(-11.14--11.36)x(4.64+4.65)/2	1.02		
		(-11.04--11.14)x(4.64+4.64)/2	0.46		
		(-10.77--11.04)x(4.62+4.64)/2	1.25		
		(-10.24--10.77)x(4.61+4.62)/2	2.45		
		(-10.05--10.24)x(4.60+4.61)/2	0.87		
		(-9.65--10.05)x(4.60+4.60)/2	1.84		
		(-8.96--9.65)x(4.59+4.60)/2	3.17		
		(-7.93--8.96)x(4.62+4.59)/2	4.74		
		(-7.87--7.93)x(4.62+4.62)/2	0.28		
		(-7.76--7.87)x(4.62+4.62)/2	0.51		
		(-7.43--7.76)x(4.61+4.62)/2	1.52		
		(-11.65--7.43)x(4.50+4.61)/2	-19.22		
		(-11.52--11.65)x(4.66+4.50)/2	0.60		
				0.23	
157	B1	(-11.51--11.62)x(4.56+4.56)/2	0.50		
2340.00		(-11.13--11.51)x(4.55+4.56)/2	1.73		
		(-10.91--11.13)x(4.56+4.55)/2	1.00		
		(-10.04--10.91)x(4.61+4.56)/2	3.99		
		(-9.20--10.04)x(4.62+4.61)/2	3.88		
		(-8.95--9.20)x(4.63+4.62)/2	1.16		
		(-8.50--8.95)x(4.62+4.63)/2	2.08		
		(-8.10--8.50)x(4.62+4.62)/2	1.85		
		(-11.65--8.10)x(4.53+4.62)/2	-16.24		
		(-11.62--11.65)x(4.56+4.53)/2	0.14		
				0.09	
161	B1	(6.26-6.07)x(4.81+4.79)/2	0.91		
2400.00		(6.38-6.26)x(4.82+4.81)/2	0.58		
		(6.60-6.38)x(4.83+4.82)/2	1.06		
		(7.47-6.60)x(4.84+4.83)/2	4.21		
		(7.97-7.47)x(4.79+4.84)/2	2.41		
		(8.40-7.97)x(4.74+4.79)/2	2.05		
		(6.07-8.40)x(4.79+4.74)/2	-11.10		
				0.12	
161	B2	(9.61-8.80)x(4.76+4.72)/2	3.84		
2400.00		(9.66-9.61)x(4.77+4.76)/2	0.24		
		(9.68-9.66)x(4.77+4.77)/2	0.10		
		(10.75-9.68)x(4.86+4.77)/2	5.15		
		(11.39-10.75)x(4.91+4.86)/2	3.13		
		(11.44-11.39)x(4.91+4.91)/2	0.25		
		(11.65-11.44)x(4.65+4.91)/2	1.00		
		(8.80-11.65)x(4.72+4.65)/2	-13.35		
				0.36	
172	B1	(-11.99--12.52)x(5.66+5.36)/2	2.92		
2565.00		(-11.09--11.99)x(6.10+5.66)/2	5.29		
		(-10.90--11.09)x(6.23+6.10)/2	1.17		
		(-10.56--10.90)x(6.34+6.23)/2	2.14		
		(-9.81--10.56)x(6.55+6.34)/2	4.83		
		(-9.38--9.81)x(6.50+6.55)/2	2.81		
		(-8.72--9.38)x(6.54+6.50)/2	4.30		
		(-7.67--8.72)x(6.80+6.54)/2	7.00		
		(-7.62--7.67)x(6.81+6.80)/2	0.34		
		(-7.55--7.62)x(6.82+6.81)/2	0.48		
		(-6.53--7.55)x(6.96+6.82)/2	7.03		
		(-5.96--6.53)x(6.98+6.96)/2	3.97		
		(-5.44--5.96)x(6.99+6.98)/2	3.63		
		(-4.54--5.44)x(6.87+6.99)/2	6.24		
		(-4.35--4.54)x(6.84+6.87)/2	1.30		
		A RIPORTARE mq	53.45		

		CALCOLO DELLE AREE		Foglio n. 50
STERRO				
N. SEZIONE PROG.	FIG.	ELEMENTI DI CALCOLO	AREA ELEMENTARE mq	AREA FIGURA mq	NOTE
		RIPORTO mq	53.45		
		(-3.60--4.35)x(6.50+6.84)/2	5.00		
		(-3.26--3.60)x(6.29+6.50)/2	2.17		
		(-2.54--3.26)x(5.95+6.29)/2	4.41		
		(-2.17--2.54)x(5.75+5.95)/2	2.16		
		(-1.53--2.17)x(5.39+5.75)/2	3.56		
		(-1.30--1.53)x(5.25+5.39)/2	1.22		
		(-1.75--1.30)x(5.24+5.25)/2	-2.36		
		(-11.65--1.75)x(4.99+5.24)/2	-50.64		
		(-11.34--11.65)x(5.36+4.99)/2	1.60		
		(-12.52--11.34)x(5.36+5.36)/2	-6.32		
				14.25	
199	B1	(4.43-4.20)x(5.39+5.39)/2	1.24		
2970.00		(4.57-4.43)x(5.41+5.39)/2	0.76		
		(5.49-4.57)x(5.59+5.41)/2	5.06		
		(6.04-5.49)x(5.87+5.59)/2	3.15		
		(6.56-6.04)x(6.15+5.87)/2	3.13		
		(7.50-6.56)x(6.70+6.15)/2	6.04		
		(7.62-7.50)x(6.76+6.70)/2	0.81		
		(7.94-7.62)x(6.86+6.76)/2	2.18		
		(8.68-7.94)x(7.07+6.86)/2	5.15		
		(9.36-8.68)x(7.04+7.07)/2	4.80		
		(9.75-9.36)x(7.03+7.04)/2	2.74		
		(10.43-9.75)x(7.05+7.03)/2	4.79		
		(10.81-10.43)x(7.08+7.05)/2	2.68		
		(11.83-10.81)x(7.24+7.08)/2	7.30		
		(11.87-11.83)x(7.25+7.24)/2	0.29		
		(11.89-11.87)x(7.25+7.25)/2	0.15		
		(12.93-11.89)x(7.30+7.25)/2	7.57		
		(13.35-12.93)x(7.21+7.30)/2	3.05		
		(14.00-13.35)x(7.05+7.21)/2	4.63		
		(14.81-14.00)x(7.13+7.05)/2	5.74		
		(15.06-14.81)x(7.14+7.13)/2	1.78		
		(15.71-15.06)x(7.14+7.14)/2	4.64		
		(16.12-15.71)x(7.13+7.14)/2	2.93		
		(16.28-16.12)x(7.11+7.13)/2	1.14		
		(17.19-16.28)x(7.02+7.11)/2	6.43		
		(17.74-17.19)x(6.79+7.02)/2	3.80		
		(18.03-17.74)x(6.64+6.79)/2	1.95		
		(12.78-18.03)x(3.14+6.64)/2	-25.67		
		(7.58-12.78)x(3.14+3.14)/2	-16.33		
		(4.20-7.58)x(5.39+3.14)/2	-14.42		
				37.51	
200	B1	(3.07-3.00)x(5.17+5.18)/2	0.36		
2985.00		(3.22-3.07)x(5.14+5.17)/2	0.77		
		(3.55-3.22)x(5.10+5.14)/2	1.69		
		(4.30-3.55)x(5.04+5.10)/2	3.80		
		(4.93-4.30)x(5.00+5.04)/2	3.16		
		(5.38-4.93)x(4.96+5.00)/2	2.24		
		(6.25-5.38)x(4.84+4.96)/2	4.26		
		(6.46-6.25)x(4.80+4.84)/2	1.01		
		(6.89-6.46)x(4.51+4.80)/2	2.00		
		(7.53-6.89)x(4.16+4.51)/2	2.77		
		(7.84-7.53)x(3.99+4.16)/2	1.26		
		(8.61-7.84)x(3.68+3.99)/2	2.95		
		(9.43-8.61)x(3.64+3.68)/2	3.00		
		(9.69-9.43)x(3.64+3.64)/2	0.95		
		(10.23-9.69)x(3.53+3.64)/2	1.94		
		(10.77-10.23)x(3.41+3.53)/2	1.87		
		(11.02-10.77)x(3.28+3.41)/2	0.84		
		(11.84-11.02)x(3.03+3.28)/2	2.59		
		(12.61-11.84)x(3.03+3.03)/2	2.33		
		(12.92-12.61)x(3.03+3.03)/2	0.94		
		(13.57-12.92)x(3.00+3.03)/2	1.96		
		(13.89-13.57)x(2.98+3.00)/2	0.96		
		(14.00-13.89)x(2.98+2.98)/2	0.33		
		(14.02-14.00)x(2.98+2.98)/2	0.06		
		(12.76-14.02)x(2.14+2.98)/2	-3.23		
		(7.56-12.76)x(2.14+2.14)/2	-11.13		
		(3.00-7.56)x(5.18+2.14)/2	-16.69		
				12.99	
201	B1	(5.52-4.87)x(3.07+3.08)/2	2.00		
3000.00		(5.68-5.52)x(3.07+3.07)/2	0.49		
		(5.78-5.68)x(3.07+3.07)/2	0.31		
		(6.77-5.78)x(3.13+3.07)/2	3.07		
		(7.52-6.77)x(3.18+3.13)/2	2.37		
		(7.87-7.52)x(3.23+3.18)/2	1.12		
		(8.45-7.87)x(3.23+3.23)/2	1.87		
		(8.96-8.45)x(3.24+3.23)/2	1.65		
		(9.27-8.96)x(3.23+3.24)/2	1.00		
		(10.06-9.27)x(3.29+3.23)/2	2.58		
		(11.01-10.06)x(3.59+3.29)/2	3.27		
		(11.15-11.01)x(3.62+3.59)/2	0.50		
		(11.39-11.15)x(3.65+3.62)/2	0.87		
		(12.25-11.39)x(3.82+3.65)/2	3.21		
		(12.76-12.25)x(3.89+3.82)/2	1.97		
		(13.34-12.76)x(3.96+3.89)/2	2.28		
		(14.32-13.34)x(4.15+3.96)/2	3.97		
		(14.43-14.32)x(4.18+4.15)/2	0.46		
		(14.50-14.43)x(4.20+4.18)/2	0.29		
		(15.53-14.50)x(4.56+4.20)/2	4.51		
		(16.25-15.53)x(4.51+4.56)/2	3.27		
		(16.62-16.25)x(4.48+4.51)/2	1.66		
		(17.25-16.62)x(4.41+4.48)/2	2.80		
		(17.37-17.25)x(4.39+4.41)/2	0.53		
		(12.74-17.37)x(1.30+4.39)/2	-13.17		
		(7.54-12.74)x(1.30+1.30)/2	-6.76		
		(4.87-7.54)x(3.08+1.30)/2	-5.85		
				20.27	
201b	B1	(5.52-4.87)x(3.07+3.08)/2	2.00		
3005.94		(5.68-5.52)x(3.07+3.07)/2	0.49		
		(5.78-5.68)x(3.07+3.07)/2	0.31		
		(6.77-5.78)x(3.13+3.07)/2	3.07		
		(7.52-6.77)x(3.18+3.13)/2	2.37		
		(7.87-7.52)x(3.23+3.18)/2	1.12		
		A RIPORTARE mq	9.36		

	CALCOLO DELLE AREE		Foglio n. 51

STERRO

N. SEZIONE PROG.	FIG.	ELEMENTI DI CALCOLO	AREA ELEMENTARE mq	AREA FIGURA mq	NOTE
		RIPORTO mq	9.36		
		(8.45-7.87)x(3.23+3.23)/2	1.87		
		(8.96-8.45)x(3.24+3.23)/2	1.65		
		(9.27-8.96)x(3.23+3.24)/2	1.00		
		(10.06-9.27)x(3.29+3.23)/2	2.58		
		(11.01-10.06)x(3.59+3.29)/2	3.27		
		(11.15-11.01)x(3.62+3.59)/2	0.50		
		(11.39-11.15)x(3.65+3.62)/2	0.87		
		(12.25-11.39)x(3.82+3.65)/2	3.21		
		(12.76-12.25)x(3.89+3.82)/2	1.97		
		(13.34-12.76)x(3.96+3.89)/2	2.28		
		(14.32-13.34)x(4.15+3.96)/2	3.97		
		(14.43-14.32)x(4.18+4.15)/2	0.46		
		(14.50-14.43)x(4.20+4.18)/2	0.29		
		(15.53-14.50)x(4.56+4.20)/2	4.51		
		(16.25-15.53)x(4.51+4.56)/2	3.27		
		(16.62-16.25)x(4.48+4.51)/2	1.66		
		(17.25-16.62)x(4.41+4.48)/2	2.80		
		(17.37-17.25)x(4.39+4.41)/2	0.53		
		(12.74-17.37)x(1.30+4.39)/2	-13.17		
		(7.54-12.74)x(1.30+1.30)/2	-6.76		
		(4.87-7.54)x(3.08+1.30)/2	-5.85		
				20.27	

Il Direttore dei Lavori	L'Impresa	

	CALCOLO DELLE AREE		Foglio n. 52

BONIFICA

N. SEZIONE PROG.	FIG.	ELEMENTI DI CALCOLO	AREA ELEMENTARE mq	AREA FIGURA mq	NOTE
131	BO1	(1.48-1.25)x(4.10+4.12)/2	0.95		
1950.00		(1.56-1.48)x(4.10+4.10)/2	0.33		
		(1.69-1.56)x(4.08+4.10)/2	0.53		
		(2.65-1.69)x(3.93+4.08)/2	3.84		
		(3.20-2.65)x(3.87+3.93)/2	2.15		
		(3.74-3.20)x(3.80+3.87)/2	2.07		
		(4.70-3.74)x(3.70+3.80)/2	3.60		
		(4.83-4.70)x(3.68+3.70)/2	0.48		
		(4.91-4.83)x(3.64+3.68)/2	0.29		
		(5.92-4.91)x(3.11+3.64)/2	3.41		
		(6.62-5.92)x(2.67+3.11)/2	2.02		
		(7.01-6.62)x(2.38+2.67)/2	0.98		
		(7.71-7.01)x(2.25+2.38)/2	1.62		
		(8.10-7.71)x(2.20+2.25)/2	0.87		
		(8.80-8.10)x(2.14+2.20)/2	1.52		
		(9.19-8.80)x(2.12+2.14)/2	0.83		
		(10.04-9.19)x(2.10+2.12)/2	1.79		
		(10.28-10.04)x(2.09+2.10)/2	0.50		
		(10.72-10.28)x(2.09+2.09)/2	0.92		
		(11.37-10.72)x(2.08+2.09)/2	1.36		
		(11.75-11.37)x(2.05+2.08)/2	0.78		
		(12.47-11.75)x(2.00+2.05)/2	1.46		
		(13.46-12.47)x(1.91+2.00)/2	1.94		
		(13.56-13.46)x(1.90+1.91)/2	0.19		
		(13.73-13.56)x(1.89+1.90)/2	0.32		
		(14.65-13.73)x(1.83+1.89)/2	1.71		
		(15.17-14.65)x(1.80+1.83)/2	0.94		
		(15.74-15.17)x(1.75+1.80)/2	1.01		
		(16.73-15.74)x(1.82+1.75)/2	1.77		
		(16.83-16.73)x(1.82+1.82)/2	0.18		
		(16.88-16.83)x(1.83+1.82)/2	0.09		
		(17.92-16.88)x(1.96+1.83)/2	1.97		
		(18.59-17.92)x(2.03+1.96)/2	1.34		
		(19.01-18.59)x(2.06+2.03)/2	0.86		
		(19.20-19.01)x(2.08+2.06)/2	0.39		
		(19.74-19.20)x(2.23+2.08)/2	1.16		
		(20.00-19.74)x(2.30+2.23)/2	0.59		
		(20.10-20.00)x(2.34+2.30)/2	0.23		
		(20.30-20.10)x(2.40+2.34)/2	0.47		
		(21.19-20.30)x(2.63+2.40)/2	2.24		
		(22.01-21.19)x(2.82+2.63)/2	2.23		
		(22.28-22.01)x(2.88+2.82)/2	0.77		
		(22.75-22.28)x(2.94+2.88)/2	1.37		
		(23.35-22.75)x(2.98+2.94)/2	1.78		
		(22.75-23.35)x(1.94+1.98)/2	-1.18		
		(22.28-22.75)x(1.88+1.94)/2	-0.90		
		(22.01-22.28)x(1.82+1.88)/2	-0.50		
		(21.19-22.01)x(1.63+1.82)/2	-1.41		
		(20.30-21.19)x(1.40+1.63)/2	-1.35		
		(20.10-20.30)x(1.34+1.40)/2	-0.27		
		(20.00-20.10)x(1.30+1.34)/2	-0.13		
		(19.74-20.00)x(1.23+1.30)/2	-0.33		
		(19.20-19.74)x(1.08+1.23)/2	-0.62		
		(19.01-19.20)x(1.06+1.08)/2	-0.20		
		(18.59-19.01)x(1.03+1.06)/2	-0.44		
		(17.92-18.59)x(0.96+1.03)/2	-0.67		
		(16.88-17.92)x(0.83+0.96)/2	-0.93		
		(16.83-16.88)x(0.82+0.83)/2	-0.04		
		(16.73-16.83)x(0.82+0.82)/2	-0.08		
		(15.74-16.73)x(0.75+0.82)/2	-0.78		
		(15.17-15.74)x(0.80+0.75)/2	-0.44		
		(14.65-15.17)x(0.83+0.80)/2	-0.42		
		(13.73-14.65)x(0.89+0.83)/2	-0.79		
		(13.56-13.73)x(0.90+0.89)/2	-0.15		
		(13.46-13.56)x(0.91+0.90)/2	-0.09		
		(12.47-13.46)x(1.00+0.91)/2	-0.95		
		(11.75-12.47)x(1.05+1.00)/2	-0.74		
		(11.37-11.75)x(1.08+1.05)/2	-0.40		
		(10.72-11.37)x(1.09+1.08)/2	-0.71		
		(10.28-10.72)x(1.09+1.09)/2	-0.48		
		(10.04-10.28)x(1.10+1.09)/2	-0.26		
		(9.19-10.04)x(1.12+1.10)/2	-0.94		
		(8.80-9.19)x(1.14+1.12)/2	-0.44		
		(8.10-8.80)x(1.20+1.14)/2	-0.82		
		(7.71-8.10)x(1.25+1.20)/2	-0.48		
		(7.01-7.71)x(1.38+1.25)/2	-0.92		
		(6.62-7.01)x(1.67+1.38)/2	-0.59		
		(5.92-6.62)x(2.11+1.67)/2	-1.32		
		(4.91-5.92)x(2.64+2.11)/2	-2.40		
		(4.83-4.91)x(2.68+2.64)/2	-0.21		
		(4.70-4.83)x(2.70+2.68)/2	-0.35		
		(3.74-4.70)x(2.80+2.70)/2	-2.64		
		(3.20-3.74)x(2.87+2.80)/2	-1.53		
		(2.65-3.20)x(2.93+2.87)/2	-1.60		
		(1.69-2.65)x(3.08+2.93)/2	-2.88		
		(1.56-1.69)x(3.10+3.08)/2	-0.40		
		(1.48-1.56)x(3.10+3.10)/2	-0.25		
		(1.25-1.48)x(3.12+3.10)/2	-0.72		
				22.10	
132	BO1	(-20.31--20.45)x(4.49+4.49)/2	0.63		
1965.00		(-20.24--20.31)x(4.49+4.49)/2	0.31		
		(-20.11--20.24)x(4.49+4.49)/2	0.58		
		(-19.15--20.11)x(4.46+4.49)/2	4.30		
		(-18.60--19.15)x(4.46+4.46)/2	2.45		
		(-18.05--18.60)x(4.45+4.46)/2	2.45		
		(-17.10--18.05)x(4.45+4.45)/2	4.23		
		(-16.96--17.10)x(4.44+4.45)/2	0.62		
		(-16.89--16.96)x(4.45+4.44)/2	0.31		
		(-15.87--16.89)x(4.45+4.45)/2	4.54		
		(-15.18--15.87)x(4.45+4.45)/2	3.07		
		(-14.78--15.18)x(4.45+4.45)/2	1.78		
		(-14.09--14.78)x(4.44+4.45)/2	3.07		
		(-13.69--14.09)x(4.43+4.44)/2	1.77		
		(-13.47--13.69)x(4.42+4.43)/2	0.97		
		(-12.60--13.47)x(4.38+4.42)/2	3.83		
		(-11.76--12.60)x(4.36+4.38)/2	3.67		
		A RIPORTARE mq	38.58		

	CALCOLO DELLE AREE		Foglio n. 53

BONIFICA

N. SEZIONE PROG.	FIG.	ELEMENTI DI CALCOLO	AREA ELEMENTARE mq	AREA FIGURA mq	NOTE
		RIPORTO mq	38.58		
		(-11.51--11.76)x(4.35+4.36)/2	1.09		
		(-11.08--11.51)x(4.35+4.35)/2	1.87		
		(-10.42--11.08)x(4.35+4.35)/2	2.87		
		(-10.05--10.42)x(4.36+4.35)/2	1.61		
		(-9.33--10.05)x(4.37+4.36)/2	3.14		
		(-8.33--9.33)x(4.35+4.37)/2	4.36		
		(-8.24--8.33)x(4.35+4.35)/2	0.39		
		(-8.20--8.24)x(4.35+4.35)/2	0.17		
		(-8.07--8.20)x(4.34+4.35)/2	0.56		
		(-7.39--8.07)x(4.30+4.34)/2	2.94		
		(-7.15--7.39)x(4.29+4.30)/2	1.03		
		(-6.62--7.15)x(4.26+4.29)/2	2.27		
		(-6.06--6.62)x(4.23+4.26)/2	2.38		
		(-5.06--6.06)x(4.19+4.23)/2	4.21		
		(-4.97--5.06)x(4.18+4.19)/2	0.38		
		(-4.91--4.97)x(4.18+4.18)/2	0.25		
		(-3.88--4.91)x(4.09+4.18)/2	4.26		
		(-3.20--3.88)x(4.05+4.09)/2	2.77		
		(-2.79--3.20)x(4.02+4.05)/2	1.65		
		(-2.06--2.79)x(3.96+4.02)/2	2.91		
		(-1.70--2.06)x(3.94+3.96)/2	1.42		
		(-1.49--1.70)x(3.94+3.94)/2	0.83		
		(-0.61--1.49)x(3.94+3.94)/2	3.47		
		(0.22--0.61)x(3.96+3.94)/2	3.28		
		(0.48-0.22)x(3.96+3.96)/2	1.03		
		(0.95-0.48)x(3.97+3.96)/2	1.86		
		(1.58-0.95)x(3.97+3.97)/2	2.50		
		(1.93-1.58)x(3.97+3.97)/2	1.39		
		(2.67-1.93)x(3.99+3.97)/2	2.95		
		(3.01-2.67)x(4.01+3.99)/2	1.36		
		(3.76-3.01)x(4.04+4.01)/2	3.02		
		(3.96-3.76)x(4.04+4.04)/2	0.81		
		(4.85-3.96)x(3.98+4.04)/2	3.57		
		(5.35-4.85)x(3.64+3.98)/2	1.91		
		(5.94-5.35)x(3.34+3.64)/2	2.06		
		(6.97-5.94)x(2.55+3.34)/2	3.03		
		(7.03-6.97)x(2.50+2.55)/2	0.15		
		(7.06-7.03)x(2.50+2.50)/2	0.07		
		(8.12-7.06)x(2.16+2.50)/2	2.47		
		(8.77-8.12)x(2.15+2.16)/2	1.40		
		(9.21-8.77)x(2.13+2.15)/2	0.94		
		(9.98-9.21)x(2.14+2.13)/2	1.64		
		(10.30-9.98)x(2.15+2.14)/2	0.69		
		(10.48-10.30)x(2.14+2.15)/2	0.39		
		(11.39-10.48)x(2.10+2.14)/2	1.93		
		(12.19-11.39)x(2.04+2.10)/2	1.66		
		(12.48-12.19)x(2.02+2.04)/2	0.59		
		(12.62-12.48)x(2.01+2.02)/2	0.28		
		(12.99-12.62)x(1.99+2.01)/2	0.74		
		(13.57-12.99)x(1.95+1.99)/2	1.14		
		(14.22-13.57)x(1.89+1.95)/2	1.25		
		(14.66-14.22)x(1.84+1.89)/2	0.82		
		(15.61-14.66)x(1.81+1.84)/2	1.73		
		(15.75-15.61)x(1.80+1.81)/2	0.25		
		(16.00-15.75)x(1.82+1.80)/2	0.45		
		(16.84-16.00)x(1.91+1.82)/2	1.57		
		(17.33-16.84)x(2.07+1.91)/2	0.98		
		(17.93-17.33)x(2.26+2.07)/2	1.30		
		(19.00-17.93)x(2.48+2.26)/2	2.54		
		(19.02-19.00)x(2.49+2.48)/2	0.05		
		(19.04-19.02)x(2.49+2.49)/2	0.05		
		(20.11-19.04)x(2.55+2.49)/2	2.70		
		(20.75-20.11)x(2.51+2.55)/2	1.62		
		(21.21-20.75)x(2.50+2.51)/2	1.15		
		(22.01-21.21)x(2.48+2.50)/2	1.99		
		(22.30-22.01)x(2.47+2.48)/2	0.72		
		(22.46-22.30)x(2.50+2.47)/2	0.40		
		(23.24-22.46)x(2.63+2.50)/2	2.00		
		(22.46-23.24)x(1.50+1.63)/2	-1.22		
		(22.30-22.46)x(1.47+1.50)/2	-0.24		
		(22.01-22.30)x(1.48+1.47)/2	-0.43		
		(21.21-22.01)x(1.50+1.48)/2	-1.19		
		(20.75-21.21)x(1.51+1.50)/2	-0.69		
		(20.11-20.75)x(1.55+1.51)/2	-0.98		
		(19.04-20.11)x(1.49+1.55)/2	-1.63		
		(19.02-19.04)x(1.49+1.49)/2	-0.03		
		(19.00-19.02)x(1.48+1.49)/2	-0.03		
		(17.93-19.00)x(1.26+1.48)/2	-1.47		
		(17.33-17.93)x(1.07+1.26)/2	-0.70		
		(16.84-17.33)x(0.91+1.07)/2	-0.49		
		(16.00-16.84)x(0.82+0.91)/2	-0.73		
		(15.75-16.00)x(0.80+0.82)/2	-0.20		
		(15.61-15.75)x(0.81+0.80)/2	-0.11		
		(14.66-15.61)x(0.84+0.81)/2	-0.78		
		(14.22-14.66)x(0.89+0.84)/2	-0.38		
		(13.57-14.22)x(0.95+0.89)/2	-0.60		
		(12.99-13.57)x(0.99+0.95)/2	-0.56		
		(12.62-12.99)x(1.01+0.99)/2	-0.37		
		(12.48-12.62)x(1.02+1.01)/2	-0.14		
		(12.19-12.48)x(1.04+1.02)/2	-0.30		
		(11.39-12.19)x(1.10+1.04)/2	-0.86		
		(10.48-11.39)x(1.14+1.10)/2	-1.02		
		(10.30-10.48)x(1.15+1.14)/2	-0.21		
		(9.98-10.30)x(1.14+1.15)/2	-0.37		
		(9.21-9.98)x(1.13+1.14)/2	-0.87		
		(8.77-9.21)x(1.15+1.13)/2	-0.50		
		(8.12-8.77)x(1.16+1.15)/2	-0.75		
		(7.06-8.12)x(1.50+1.16)/2	-1.41		
		(7.03-7.06)x(1.50+1.50)/2	-0.04		
		(6.97-7.03)x(1.55+1.50)/2	-0.09		
		(5.94-6.97)x(2.34+1.55)/2	-2.00		
		(5.35-5.94)x(2.64+2.34)/2	-1.47		
		(4.85-5.35)x(2.98+2.64)/2	-1.41		
		(3.96-4.85)x(3.04+2.98)/2	-2.68		
		A RIPORTARE mq	122.89		

		CALCOLO DELLE AREE		Foglio n. 54
BONIFICA				
N. SEZIONE PROG.	FIG.	ELEMENTI DI CALCOLO	AREA ELEMENTARE mq	AREA FIGURA mq	NOTE
		RIPORTO mq	122.89		
		(3.76-3.96)x(3.04+3.04)/2	-0.61		
		(3.01-3.76)x(3.01+3.04)/2	-2.27		
		(2.67-3.01)x(2.99+3.01)/2	-1.02		
		(1.93-2.67)x(2.97+2.99)/2	-2.21		
		(1.58-1.93)x(2.97+2.97)/2	-1.04		
		(0.95-1.58)x(2.97+2.97)/2	-1.87		
		(0.48-0.95)x(2.96+2.97)/2	-1.39		
		(0.22-0.48)x(2.96+2.96)/2	-0.77		
		(-0.61-0.22)x(2.94+2.96)/2	-2.45		
		(-1.49--0.61)x(2.94+2.94)/2	-2.59		
		(-1.70--1.49)x(2.94+2.94)/2	-0.62		
		(-2.06--1.70)x(2.96+2.94)/2	-1.06		
		(-2.79--2.06)x(3.02+2.96)/2	-2.18		
		(-3.20--2.79)x(3.05+3.02)/2	-1.24		
		(-3.88--3.20)x(3.09+3.05)/2	-2.09		
		(-4.91--3.88)x(3.18+3.09)/2	-3.23		
		(-4.97--4.91)x(3.18+3.18)/2	-0.19		
		(-5.06--4.97)x(3.19+3.18)/2	-0.29		
		(-6.06--5.06)x(3.23+3.19)/2	-3.21		
		(-6.62--6.06)x(3.26+3.23)/2	-1.82		
		(-7.15--6.62)x(3.29+3.26)/2	-1.74		
		(-7.39--7.15)x(3.30+3.29)/2	-0.79		
		(-8.07--7.39)x(3.34+3.30)/2	-2.26		
		(-8.20--8.07)x(3.35+3.34)/2	-0.43		
		(-8.24--8.20)x(3.35+3.35)/2	-0.13		
		(-8.33--8.24)x(3.35+3.35)/2	-0.30		
		(-9.33--8.33)x(3.37+3.35)/2	-3.36		
		(-10.05--9.33)x(3.36+3.37)/2	-2.42		
		(-10.42--10.05)x(3.35+3.36)/2	-1.24		
		(-11.08--10.42)x(3.35+3.35)/2	-2.21		
		(-11.51--11.08)x(3.35+3.35)/2	-1.44		
		(-11.76--11.51)x(3.36+3.35)/2	-0.84		
		(-12.60--11.76)x(3.38+3.36)/2	-2.83		
		(-13.47--12.60)x(3.42+3.38)/2	-2.96		
		(-13.69--13.47)x(3.43+3.42)/2	-0.75		
		(-14.09--13.69)x(3.44+3.43)/2	-1.37		
		(-14.78--14.09)x(3.45+3.44)/2	-2.38		
		(-15.18--14.78)x(3.45+3.45)/2	-1.38		
		(-15.87--15.18)x(3.45+3.45)/2	-2.38		
		(-16.89--15.87)x(3.45+3.45)/2	-3.52		
		(-16.96--16.89)x(3.44+3.45)/2	-0.24		
		(-17.10--16.96)x(3.45+3.44)/2	-0.48		
		(-18.05--17.10)x(3.45+3.45)/2	-3.28		
		(-18.60--18.05)x(3.46+3.45)/2	-1.90		
		(-19.15--18.60)x(3.46+3.46)/2	-1.90		
		(-20.11--19.15)x(3.49+3.46)/2	-3.34		
		(-20.24--20.11)x(3.49+3.49)/2	-0.45		
		(-20.31--20.24)x(3.49+3.49)/2	-0.24		
		(-20.45--20.31)x(3.49+3.49)/2	-0.49		
				43.69	
133 1980.00	BO1	(-19.13--19.72)x(4.52+4.53)/2	2.67		
		(-18.15--19.13)x(4.52+4.52)/2	4.43		
		(-18.04--18.15)x(4.52+4.52)/2	0.50		
		(-17.84--18.04)x(4.53+4.52)/2	0.90		
		(-16.95--17.84)x(4.55+4.53)/2	4.04		
		(-16.44--16.95)x(4.55+4.55)/2	2.32		
		(-15.86--16.44)x(4.53+4.55)/2	2.63		
		(-14.83--15.86)x(4.52+4.53)/2	4.66		
		(-14.77--14.83)x(4.52+4.52)/2	0.27		
		(-14.73--14.77)x(4.52+4.52)/2	0.18		
		(-13.68--14.73)x(4.50+4.52)/2	4.74		
		(-13.18--13.68)x(4.48+4.50)/2	2.25		
		(-12.59--13.18)x(4.45+4.48)/2	2.63		
		(-11.82--12.59)x(4.42+4.45)/2	3.41		
		(-11.50--11.82)x(4.42+4.42)/2	1.41		
		(-11.31--11.50)x(4.41+4.42)/2	0.84		
		(-10.41--11.31)x(4.41+4.41)/2	3.97		
		(-9.60--10.41)x(4.40+4.41)/2	3.57		
		(-9.32--9.60)x(4.40+4.40)/2	1.23		
		(-8.81--9.32)x(4.39+4.40)/2	2.24		
		(-8.22--8.81)x(4.39+4.39)/2	2.59		
		(-7.89--8.22)x(4.38+4.39)/2	1.45		
		(-7.13--7.89)x(4.37+4.38)/2	3.32		
		(-6.18--7.13)x(4.32+4.37)/2	4.13		
		(-6.04--6.18)x(4.32+4.32)/2	0.60		
		(-5.80--6.04)x(4.31+4.32)/2	1.04		
		(-4.95--5.80)x(4.29+4.31)/2	3.65		
		(-4.47--4.95)x(4.28+4.29)/2	2.06		
		(-3.86--4.47)x(4.28+4.28)/2	2.61		
		(-2.79--3.86)x(4.30+4.28)/2	4.59		
		(-2.77--2.79)x(4.30+4.30)/2	0.09		
		(-1.98--2.77)x(4.30+4.30)/2	3.40		
		(-1.68--1.98)x(4.31+4.30)/2	1.29		
		(-1.05--1.68)x(4.32+4.31)/2	2.72		
		(-0.59--1.05)x(4.32+4.32)/2	1.99		
		(0.21--0.59)x(4.30+4.32)/2	3.45		
		(0.50-0.21)x(4.30+4.30)/2	1.25		
		(0.66-0.50)x(4.29+4.30)/2	0.69		
		(1.59-0.66)x(4.30+4.29)/2	3.99		
		(2.37-1.59)x(4.28+4.30)/2	3.35		
		(2.68-2.37)x(4.27+4.28)/2	1.33		
		(3.22-2.68)x(4.23+4.27)/2	2.29		
		(3.77-3.22)x(4.18+4.23)/2	2.31		
		(4.08-3.77)x(4.15+4.18)/2	1.29		
		(4.86-4.08)x(4.05+4.15)/2	3.20		
		(5.79-4.86)x(3.90+4.05)/2	3.70		
		(5.95-5.79)x(3.87+3.90)/2	0.62		
		(6.23-5.95)x(3.76+3.87)/2	1.07		
		(7.04-6.23)x(3.37+3.76)/2	2.89		
		(7.51-7.04)x(3.06+3.37)/2	1.51		
		(8.13-7.51)x(2.63+3.06)/2	1.76		
		(8.43-8.13)x(2.48+2.63)/2	0.77		
		(9.22-8.43)x(2.20+2.48)/2	1.85		
		(9.24-9.22)x(2.20+2.20)/2	0.04		
		A RIPORTARE mq	121.78		

		CALCOLO DELLE AREE		Foglio n. 55
BONIFICA				
N. SEZIONE PROG.	FIG.	ELEMENTI DI CALCOLO	AREA ELEMENTARE mq	AREA FIGURA mq	NOTE
		RIPORTO mq	121.78		
		(10.32-9.24)x(2.10+2.20)/2	2.32		
		(10.93-10.32)x(2.05+2.10)/2	1.27		
		(11.41-10.93)x(2.01+2.05)/2	0.97		
		(12.25-11.41)x(1.98+2.01)/2	1.68		
		(12.50-12.25)x(1.98+1.98)/2	0.49		
		(12.64-12.50)x(1.97+1.98)/2	0.28		
		(13.59-12.64)x(1.94+1.97)/2	1.86		
		(14.35-13.59)x(1.90+1.94)/2	1.46		
		(14.68-14.35)x(1.87+1.90)/2	0.62		
		(15.26-14.68)x(1.84+1.87)/2	1.08		
		(15.77-15.26)x(1.83+1.84)/2	0.94		
		(16.06-15.77)x(1.84+1.83)/2	0.53		
		(16.86-16.06)x(1.86+1.84)/2	1.48		
		(17.77-16.86)x(1.92+1.86)/2	1.72		
		(17.95-17.77)x(1.93+1.92)/2	0.35		
		(18.26-17.95)x(1.98+1.93)/2	0.61		
		(19.04-18.26)x(2.11+1.98)/2	1.60		
		(19.63-19.04)x(2.22+2.11)/2	1.28		
		(20.13-19.63)x(2.30+2.22)/2	1.13		
		(21.19-20.13)x(2.74+2.30)/2	2.67		
		(21.22-21.19)x(2.75+2.74)/2	0.08		
		(21.27-21.22)x(2.77+2.75)/2	0.14		
		(22.01-21.27)x(3.01+2.77)/2	2.14		
		(21.27-22.01)x(1.77+2.01)/2	-1.40		
		(21.22-21.27)x(1.75+1.77)/2	-0.09		
		(21.19-21.22)x(1.74+1.75)/2	-0.05		
		(20.13-21.19)x(1.30+1.74)/2	-1.61		
		(19.63-20.13)x(1.22+1.30)/2	-0.63		
		(19.04-19.63)x(1.11+1.22)/2	-0.69		
		(18.26-19.04)x(0.98+1.11)/2	-0.82		
		(17.95-18.26)x(0.93+0.98)/2	-0.30		
		(17.77-17.95)x(0.92+0.93)/2	-0.17		
		(16.86-17.77)x(0.86+0.92)/2	-0.81		
		(16.06-16.86)x(0.84+0.86)/2	-0.68		
		(15.77-16.06)x(0.83+0.84)/2	-0.24		
		(15.26-15.77)x(0.84+0.83)/2	-0.43		
		(14.68-15.26)x(0.87+0.84)/2	-0.50		
		(14.35-14.68)x(0.90+0.87)/2	-0.29		
		(13.59-14.35)x(0.94+0.90)/2	-0.70		
		(12.64-13.59)x(0.97+0.94)/2	-0.91		
		(12.50-12.64)x(0.98+0.97)/2	-0.14		
		(12.25-12.50)x(0.98+0.98)/2	-0.24		
		(11.41-12.25)x(1.01+0.98)/2	-0.84		
		(10.93-11.41)x(1.05+1.01)/2	-0.49		
		(10.32-10.93)x(1.10+1.05)/2	-0.66		
		(9.24-10.32)x(1.20+1.10)/2	-1.24		
		(9.22-9.24)x(1.20+1.20)/2	-0.02		
		(8.43-9.22)x(1.48+1.20)/2	-1.06		
		(8.13-8.43)x(1.63+1.48)/2	-0.47		
		(7.51-8.13)x(2.06+1.63)/2	-1.14		
		(7.04-7.51)x(2.37+2.06)/2	-1.04		
		(6.23-7.04)x(2.76+2.37)/2	-2.08		
		(5.95-6.23)x(2.87+2.76)/2	-0.79		
		(5.79-5.95)x(2.90+2.87)/2	-0.46		
		(4.86-5.79)x(3.05+2.90)/2	-2.77		
		(4.08-4.86)x(3.15+3.05)/2	-2.42		
		(3.77-4.08)x(3.18+3.15)/2	-0.98		
		(3.22-3.77)x(3.23+3.18)/2	-1.76		
		(2.68-3.22)x(3.27+3.23)/2	-1.76		
		(2.37-2.68)x(3.28+3.27)/2	-1.02		
		(1.59-2.37)x(3.30+3.28)/2	-2.57		
		(0.66-1.59)x(3.29+3.30)/2	-3.06		
		(0.50-0.66)x(3.30+3.29)/2	-0.53		
		(0.21-0.50)x(3.30+3.30)/2	-0.96		
		(-0.59-0.21)x(3.32+3.30)/2	-2.65		
		(-1.05--0.59)x(3.32+3.32)/2	-1.53		
		(-1.68--1.05)x(3.31+3.32)/2	-2.09		
		(-1.98--1.68)x(3.30+3.31)/2	-0.99		
		(-2.77--1.98)x(3.30+3.30)/2	-2.61		
		(-2.79--2.77)x(3.30+3.30)/2	-0.07		
		(-3.86--2.79)x(3.28+3.30)/2	-3.52		
		(-4.47--3.86)x(3.28+3.28)/2	-2.00		
		(-4.95--4.47)x(3.29+3.28)/2	-1.58		
		(-5.80--4.95)x(3.31+3.29)/2	-2.80		
		(-6.04--5.80)x(3.32+3.31)/2	-0.80		
		(-6.18--6.04)x(3.32+3.32)/2	-0.46		
		(-7.13--6.18)x(3.37+3.32)/2	-3.18		
		(-7.89--7.13)x(3.38+3.37)/2	-2.56		
		(-8.22--7.89)x(3.39+3.38)/2	-1.12		
		(-8.81--8.22)x(3.39+3.39)/2	-2.00		
		(-9.32--8.81)x(3.40+3.39)/2	-1.73		
		(-9.60--9.32)x(3.40+3.40)/2	-0.95		
		(-10.41--9.60)x(3.41+3.40)/2	-2.76		
		(-11.31--10.41)x(3.41+3.41)/2	-3.07		
		(-11.50--11.31)x(3.42+3.41)/2	-0.65		
		(-11.82--11.50)x(3.42+3.42)/2	-1.09		
		(-12.59--11.82)x(3.45+3.42)/2	-2.64		
		(-13.18--12.59)x(3.48+3.45)/2	-2.04		
		(-13.68--13.18)x(3.50+3.48)/2	-1.75		
		(-14.73--13.68)x(3.52+3.50)/2	-3.69		
		(-14.77--14.73)x(3.52+3.52)/2	-0.14		
		(-14.83--14.77)x(3.52+3.52)/2	-0.21		
		(-15.86--14.83)x(3.53+3.52)/2	-3.63		
		(-16.44--15.86)x(3.55+3.53)/2	-2.05		
		(-16.95--16.44)x(3.55+3.55)/2	-1.81		
		(-17.84--16.95)x(3.53+3.55)/2	-3.15		
		(-18.04--17.84)x(3.52+3.53)/2	-0.70		
		(-18.15--18.04)x(3.52+3.52)/2	-0.39		
		(-19.13--18.15)x(3.52+3.52)/2	-3.45		
		(-19.72--19.13)x(3.53+3.52)/2	-2.08		
				41.72	
134 1995.00	BO1	(-18.97--19.05)x(4.54+4.53)/2	0.36		
		(-18.58--18.97)x(4.56+4.54)/2	1.77		
		(-18.17--18.58)x(4.58+4.56)/2	1.87		
		A RIPORTARE mq	4.00		

		CALCOLO DELLE AREE		Foglio n. 56
BONIFICA				
N. SEZIONE PROG.	FIG.	ELEMENTI DI CALCOLO	AREA ELEMENTARE mq	AREA FIGURA mq	NOTE
		RIPORTO mq	4.00		
		(-18.02--18.17)x(4.58+4.58)/2	0.69		
		(-17.71--18.02)x(4.58+4.58)/2	1.42		
		(-16.93--17.71)x(4.58+4.58)/2	3.57		
		(-16.00--16.93)x(4.56+4.58)/2	4.25		
		(-15.84--16.00)x(4.56+4.56)/2	0.73		
		(-15.57--15.84)x(4.57+4.56)/2	1.23		
		(-14.75--15.57)x(4.58+4.57)/2	3.75		
		(-14.29--14.75)x(4.59+4.58)/2	2.11		
		(-13.66--14.29)x(4.60+4.59)/2	2.89		
		(-12.58--13.66)x(4.63+4.60)/2	4.98		
		(-12.57--12.58)x(4.63+4.63)/2	0.05		
		(-12.56--12.57)x(4.63+4.63)/2	0.05		
		(-11.48--12.56)x(4.63+4.63)/2	5.00		
		(-10.87--11.48)x(4.62+4.63)/2	2.82		
		(-10.39--10.87)x(4.61+4.62)/2	2.22		
		(-9.55--10.39)x(4.56+4.61)/2	3.85		
		(-9.30--9.55)x(4.55+4.56)/2	1.14		
		(-9.16--9.30)x(4.54+4.55)/2	0.64		
		(-8.21--9.16)x(4.48+4.54)/2	4.28		
		(-7.77--8.21)x(4.46+4.48)/2	1.97		
		(-7.12--7.77)x(4.43+4.46)/2	2.89		
		(-6.54--7.12)x(4.40+4.43)/2	2.56		
		(-6.03--6.54)x(4.37+4.40)/2	2.24		
		(-5.74--6.03)x(4.36+4.37)/2	1.27		
		(-4.94--5.74)x(4.32+4.36)/2	3.47		
		(-4.02--4.94)x(4.36+4.32)/2	3.99		
		(-3.85--4.02)x(4.36+4.36)/2	0.74		
		(-3.53--3.85)x(4.37+4.36)/2	1.40		
		(-2.76--3.53)x(4.39+4.37)/2	3.37		
		(-2.31--2.76)x(4.41+4.39)/2	1.98		
		(-1.67--2.31)x(4.43+4.41)/2	2.83		
		(-0.60--1.67)x(4.47+4.43)/2	4.76		
		(-0.58--0.60)x(4.47+4.47)/2	0.09		
		(-0.53--0.58)x(4.47+4.47)/2	0.22		
		(0.52--0.53)x(4.48+4.47)/2	4.70		
		(1.11-0.52)x(4.47+4.48)/2	2.64		
		(1.61-1.11)x(4.46+4.47)/2	2.23		
		(2.48-1.61)x(4.43+4.46)/2	3.87		
		(2.70-2.48)x(4.42+4.43)/2	0.97		
		(3.44-2.70)x(4.36+4.42)/2	3.25		
		(3.79-3.44)x(4.35+4.36)/2	1.52		
		(4.53-3.79)x(4.33+4.35)/2	3.21		
		(4.88-4.53)x(4.33+4.33)/2	1.52		
		(5.49-4.88)x(4.29+4.33)/2	2.63		
		(5.97-5.49)x(4.27+4.29)/2	2.05		
		(6.24-5.97)x(4.15+4.27)/2	1.14		
		(7.06-6.24)x(3.77+4.15)/2	3.25		
		(7.95-7.06)x(3.16+3.77)/2	3.08		
		(8.15-7.95)x(3.02+3.16)/2	0.62		
		(8.50-8.15)x(2.85+3.02)/2	1.03		
		(9.24-8.50)x(2.48+2.85)/2	1.97		
		(9.66-9.24)x(2.38+2.48)/2	1.02		
		(10.33-9.66)x(2.21+2.38)/2	1.54		
		(11.37-10.33)x(2.17+2.21)/2	2.28		
		(11.42-11.37)x(2.16+2.17)/2	0.11		
		(11.51-11.42)x(2.16+2.16)/2	0.19		
		(12.51-11.51)x(2.12+2.16)/2	2.14		
		(13.08-12.51)x(2.03+2.12)/2	1.18		
		(13.60-13.08)x(1.97+2.03)/2	1.04		
		(13.85-13.60)x(1.93+1.97)/2	0.49		
		(14.52-13.85)x(1.86+1.93)/2	1.27		
		(14.65-14.52)x(1.85+1.86)/2	0.24		
		(14.69-14.65)x(1.84+1.85)/2	0.07		
		(14.79-14.69)x(1.84+1.84)/2	0.18		
		(15.78-14.79)x(1.79+1.84)/2	1.80		
		(16.50-15.78)x(1.87+1.79)/2	1.32		
		(16.87-16.50)x(1.90+1.87)/2	0.70		
		(17.53-16.87)x(2.03+1.90)/2	1.30		
		(17.96-17.53)x(2.12+2.03)/2	0.89		
		(18.21-17.96)x(2.15+2.12)/2	0.53		
		(19.06-18.21)x(2.32+2.15)/2	1.90		
		(19.92-19.06)x(2.34+2.32)/2	2.00		
		(20.15-19.92)x(2.34+2.34)/2	0.54		
		(20.53-20.15)x(2.35+2.34)/2	0.89		
		(21.24-20.53)x(2.37+2.35)/2	1.68		
		(21.64-21.24)x(2.39+2.37)/2	0.95		
		(22.24-21.64)x(2.40+2.39)/2	1.44		
		(21.64-22.24)x(1.39+1.40)/2	-0.84		
		(21.24-21.64)x(1.37+1.39)/2	-0.55		
		(20.53-21.24)x(1.35+1.37)/2	-0.97		
		(20.15-20.53)x(1.34+1.35)/2	-0.51		
		(19.92-20.15)x(1.34+1.34)/2	-0.31		
		(19.06-19.92)x(1.32+1.34)/2	-1.14		
		(18.21-19.06)x(1.15+1.32)/2	-1.05		
		(17.96-18.21)x(1.12+1.15)/2	-0.28		
		(17.53-17.96)x(1.03+1.12)/2	-0.46		
		(16.87-17.53)x(0.90+1.03)/2	-0.64		
		(16.50-16.87)x(0.87+0.90)/2	-0.33		
		(15.78-16.50)x(0.79+0.87)/2	-0.60		
		(14.79-15.78)x(0.84+0.79)/2	-0.81		
		(14.69-14.79)x(0.84+0.84)/2	-0.08		
		(14.65-14.69)x(0.85+0.84)/2	-0.03		
		(14.52-14.65)x(0.86+0.85)/2	-0.11		
		(13.85-14.52)x(0.93+0.86)/2	-0.60		
		(13.60-13.85)x(0.97+0.93)/2	-0.24		
		(13.08-13.60)x(1.03+0.97)/2	-0.52		
		(12.51-13.08)x(1.12+1.03)/2	-0.61		
		(11.51-12.51)x(1.16+1.12)/2	-1.14		
		(11.42-11.51)x(1.16+1.16)/2	-0.10		
		(11.37-11.42)x(1.17+1.16)/2	-0.06		
		(10.33-11.37)x(1.21+1.17)/2	-1.24		
		(9.66-10.33)x(1.38+1.21)/2	-0.87		
		(9.24-9.66)x(1.48+1.38)/2	-0.60		
		(8.50-9.24)x(1.85+1.48)/2	-1.23		
		A RIPORTARE mq	134.90		

		CALCOLO DELLE AREE		Foglio n. 57
BONIFICA				
N. SEZIONE PROG.	FIG.	ELEMENTI DI CALCOLO	AREA ELEMENTARE mq	AREA FIGURA mq	NOTE
		RIPORTO mq	134.90		
		(8.15-8.50)x(2.02+1.85)/2	-0.68		
		(7.95-8.15)x(2.16+2.02)/2	-0.42		
		(7.06-7.95)x(2.77+2.16)/2	-2.19		
		(6.24-7.06)x(3.15+2.77)/2	-2.43		
		(5.97-6.24)x(3.27+3.15)/2	-0.87		
		(5.49-5.97)x(3.29+3.27)/2	-1.57		
		(4.88-5.49)x(3.33+3.29)/2	-2.02		
		(4.53-4.88)x(3.33+3.33)/2	-1.17		
		(3.79-4.53)x(3.35+3.33)/2	-2.47		
		(3.44-3.79)x(3.36+3.35)/2	-1.17		
		(2.70-3.44)x(3.42+3.36)/2	-2.51		
		(2.48-2.70)x(3.43+3.42)/2	-0.75		
		(1.61-2.48)x(3.46+3.43)/2	-3.00		
		(1.11-1.61)x(3.47+3.46)/2	-1.73		
		(0.52-1.11)x(3.48+3.47)/2	-2.05		
		(-0.53-0.52)x(3.47+3.48)/2	-3.65		
		(-0.58--0.53)x(3.47+3.47)/2	-0.17		
		(-0.60--0.58)x(3.47+3.47)/2	-0.07		
		(-1.67--0.60)x(3.43+3.47)/2	-3.69		
		(-2.31--1.67)x(3.41+3.43)/2	-2.19		
		(-2.76--2.31)x(3.39+3.41)/2	-1.53		
		(-3.53--2.76)x(3.37+3.39)/2	-2.60		
		(-3.85--3.53)x(3.36+3.37)/2	-1.08		
		(-4.02--3.85)x(3.36+3.36)/2	-0.57		
		(-4.94--4.02)x(3.32+3.36)/2	-3.07		
		(-5.74--4.94)x(3.36+3.32)/2	-2.67		
		(-6.03--5.74)x(3.37+3.36)/2	-0.98		
		(-6.54--6.03)x(3.40+3.37)/2	-1.73		
		(-7.12--6.54)x(3.43+3.40)/2	-1.98		
		(-7.77--7.12)x(3.46+3.43)/2	-2.24		
		(-8.21--7.77)x(3.48+3.46)/2	-1.53		
		(-9.16--8.21)x(3.54+3.48)/2	-3.33		
		(-9.30--9.16)x(3.55+3.54)/2	-0.50		
		(-9.55--9.30)x(3.56+3.55)/2	-0.89		
		(-10.39--9.55)x(3.61+3.56)/2	-3.01		
		(-10.87--10.39)x(3.62+3.61)/2	-1.74		
		(-11.48--10.87)x(3.63+3.62)/2	-2.21		
		(-12.56--11.48)x(3.63+3.63)/2	-3.92		
		(-12.57--12.56)x(3.63+3.63)/2	-0.04		
		(-12.58--12.57)x(3.63+3.63)/2	-0.04		
		(-13.66--12.58)x(3.60+3.63)/2	-3.90		
		(-14.29--13.66)x(3.59+3.60)/2	-2.26		
		(-14.75--14.29)x(3.58+3.59)/2	-1.65		
		(-15.57--14.75)x(3.57+3.58)/2	-2.93		
		(-15.84--15.57)x(3.56+3.57)/2	-0.96		
		(-16.00--15.84)x(3.56+3.56)/2	-0.57		
		(-16.93--16.00)x(3.58+3.56)/2	-3.32		
		(-17.71--16.93)x(3.58+3.58)/2	-2.79		
		(-18.02--17.71)x(3.58+3.58)/2	-1.11		
		(-18.17--18.02)x(3.58+3.58)/2	-0.54		
		(-18.58--18.17)x(3.56+3.58)/2	-1.46		
		(-18.97--18.58)x(3.54+3.56)/2	-1.38		
		(-19.05--18.97)x(3.53+3.54)/2	-0.28		
				41.29	
135 2010.00	BO1	(-18.01--18.58)x(4.40+4.39)/2	2.51		
		(-17.27--18.01)x(4.42+4.40)/2	3.26		
		(-16.92--17.27)x(4.43+4.42)/2	1.55		
		(-16.31--16.92)x(4.45+4.43)/2	2.71		
		(-15.83--16.31)x(4.48+4.45)/2	2.14		
		(-15.56--15.83)x(4.48+4.48)/2	1.21		
		(-14.74--15.56)x(4.49+4.48)/2	3.68		
		(-13.84--14.74)x(4.51+4.49)/2	4.05		
		(-13.65--13.84)x(4.51+4.51)/2	0.86		
		(-13.55--13.65)x(4.51+4.51)/2	0.45		
		(-13.30--13.55)x(4.52+4.51)/2	1.13		
		(-12.75--13.30)x(4.53+4.52)/2	2.49		
		(-12.56--12.75)x(4.54+4.53)/2	0.86		
		(-12.13--12.56)x(4.54+4.54)/2	1.95		
		(-11.47--12.13)x(4.56+4.54)/2	3.00		
		(-10.42--11.47)x(4.55+4.56)/2	4.78		
		(-10.37--10.42)x(4.55+4.55)/2	0.23		
		(-10.29--10.37)x(4.55+4.55)/2	0.36		
		(-9.28--10.29)x(4.52+4.55)/2	4.58		
		(-8.71--9.28)x(4.50+4.52)/2	2.57		
		(-8.19--8.71)x(4.49+4.50)/2	2.34		
		(-7.28--8.19)x(4.49+4.49)/2	4.09		
		(-7.10--7.28)x(4.49+4.49)/2	0.81		
		(-7.00--7.10)x(4.49+4.49)/2	0.45		
		(-6.01--7.00)x(4.47+4.49)/2	4.44		
		(-5.29--6.01)x(4.46+4.47)/2	3.21		
		(-4.92--5.29)x(4.45+4.46)/2	1.65		
		(-4.27--4.92)x(4.44+4.45)/2	2.89		
		(-3.83--4.27)x(4.44+4.44)/2	1.95		
		(-3.58--3.83)x(4.44+4.44)/2	1.11		
		(-2.74--3.58)x(4.45+4.44)/2	3.73		
		(-2.35--2.74)x(4.47+4.45)/2	1.74		
		(-1.65--2.35)x(4.49+4.47)/2	3.14		
		(-1.26--1.65)x(4.52+4.49)/2	1.76		
		(-0.56--1.26)x(4.55+4.52)/2	3.17		
		(-0.16--0.56)x(4.56+4.55)/2	1.82		
		(0.53--0.16)x(4.57+4.56)/2	3.15		
		(1.55-0.53)x(4.57+4.57)/2	4.66		
		(1.62-1.55)x(4.57+4.57)/2	0.32		
		(1.74-1.62)x(4.57+4.57)/2	0.55		
		(2.71-1.74)x(4.57+4.57)/2	4.43		
		(3.26-2.71)x(4.55+4.57)/2	2.51		
		(3.80-3.26)x(4.53+4.55)/2	2.45		
		(4.75-3.80)x(4.51+4.53)/2	4.29		
		(4.89-4.75)x(4.51+4.51)/2	0.63		
		(4.97-4.89)x(4.51+4.51)/2	0.36		
		(5.98-4.97)x(4.48+4.51)/2	4.54		
		(6.68-5.98)x(4.36+4.48)/2	3.09		
		(7.07-6.68)x(4.32+4.36)/2	1.69		
		(7.76-7.07)x(3.98+4.32)/2	2.86		
		A RIPORTARE mq	118.20		

		CALCOLO DELLE AREE		Foglio n. 58
BONIFICA				
N. SEZIONE PROG.	FIG.	ELEMENTI DI CALCOLO	AREA ELEMENTARE mq	AREA FIGURA mq	NOTE
		RIPORTO mq	118.20		
		(8.06-7.76)x(3.84+3.98)/2	1.17		
		(8.16-8.06)x(3.77+3.84)/2	0.38		
		(8.39-8.16)x(3.57+3.77)/2	0.84		
		(9.26-8.39)x(2.90+3.57)/2	2.81		
		(10.10-9.26)x(2.51+2.90)/2	2.27		
		(10.35-10.10)x(2.38+2.51)/2	0.61		
		(10.77-10.35)x(2.31+2.38)/2	0.98		
		(11.44-10.77)x(2.21+2.31)/2	1.51		
		(11.82-11.44)x(2.18+2.21)/2	0.83		
		(12.53-11.82)x(2.10+2.18)/2	1.52		
		(13.53-12.53)x(1.95+2.10)/2	2.02		
		(13.62-13.53)x(1.94+1.95)/2	0.18		
		(13.78-13.62)x(1.93+1.94)/2	0.31		
		(14.71-13.78)x(1.91+1.93)/2	1.79		
		(15.24-14.71)x(1.91+1.91)/2	1.01		
		(15.80-15.24)x(1.91+1.91)/2	1.07		
		(16.79-15.80)x(2.14+1.91)/2	2.00		
		(16.89-16.79)x(2.17+2.14)/2	0.22		
		(16.95-16.89)x(2.17+2.17)/2	0.13		
		(17.98-16.95)x(2.24+2.17)/2	2.27		
		(18.66-17.98)x(2.22+2.24)/2	1.52		
		(19.07-18.66)x(2.21+2.22)/2	0.91		
		(19.80-19.07)x(2.21+2.21)/2	1.61		
		(20.16-19.80)x(2.21+2.21)/2	0.80		
		(20.37-20.16)x(2.25+2.21)/2	0.47		
		(21.25-20.37)x(2.36+2.25)/2	2.03		
		(21.52-21.25)x(2.44+2.36)/2	0.65		
		(21.25-21.52)x(1.36+1.44)/2	-0.38		
		(20.37-21.25)x(1.25+1.36)/2	-1.15		
		(20.16-20.37)x(1.21+1.25)/2	-0.26		
		(19.80-20.16)x(1.21+1.21)/2	-0.44		
		(19.07-19.80)x(1.21+1.21)/2	-0.88		
		(18.66-19.07)x(1.22+1.21)/2	-0.50		
		(17.98-18.66)x(1.24+1.22)/2	-0.84		
		(16.95-17.98)x(1.17+1.24)/2	-1.24		
		(16.89-16.95)x(1.17+1.17)/2	-0.07		
		(16.79-16.89)x(1.14+1.17)/2	-0.12		
		(15.80-16.79)x(0.91+1.14)/2	-1.01		
		(15.24-15.80)x(0.91+0.91)/2	-0.51		
		(14.71-15.24)x(0.91+0.91)/2	-0.48		
		(13.78-14.71)x(0.93+0.91)/2	-0.86		
		(13.62-13.78)x(0.94+0.93)/2	-0.15		
		(13.53-13.62)x(0.95+0.94)/2	-0.09		
		(12.53-13.53)x(1.10+0.95)/2	-1.02		
		(11.82-12.53)x(1.18+1.10)/2	-0.81		
		(11.44-11.82)x(1.21+1.18)/2	-0.45		
		(10.77-11.44)x(1.31+1.21)/2	-0.84		
		(10.35-10.77)x(1.38+1.31)/2	-0.56		
		(10.10-10.35)x(1.51+1.38)/2	-0.36		
		(9.26-10.10)x(1.90+1.51)/2	-1.43		
		(8.39-9.26)x(2.57+1.90)/2	-1.94		
		(8.16-8.39)x(2.77+2.57)/2	-0.61		
		(8.06-8.16)x(2.84+2.77)/2	-0.28		
		(7.76-8.06)x(2.98+2.84)/2	-0.87		
		(7.07-7.76)x(3.32+2.98)/2	-2.17		
		(6.68-7.07)x(3.36+3.32)/2	-1.30		
		(5.98-6.68)x(3.48+3.36)/2	-2.39		
		(4.97-5.98)x(3.51+3.48)/2	-3.53		
		(4.89-4.97)x(3.51+3.51)/2	-0.28		
		(4.75-4.89)x(3.51+3.51)/2	-0.49		
		(3.80-4.75)x(3.53+3.51)/2	-3.34		
		(3.26-3.80)x(3.55+3.53)/2	-1.91		
		(2.71-3.26)x(3.57+3.55)/2	-1.96		
		(1.74-2.71)x(3.57+3.57)/2	-3.46		
		(1.62-1.74)x(3.57+3.57)/2	-0.43		
		(1.55-1.62)x(3.57+3.57)/2	-0.25		
		(0.53-1.55)x(3.57+3.57)/2	-3.64		
		(-0.16-0.53)x(3.56+3.57)/2	-2.46		
		(-0.56--0.16)x(3.55+3.56)/2	-1.42		
		(-1.26--0.56)x(3.52+3.55)/2	-2.47		
		(-1.65--1.26)x(3.49+3.52)/2	-1.37		
		(-2.35--1.65)x(3.47+3.49)/2	-2.44		
		(-2.74--2.35)x(3.45+3.47)/2	-1.35		
		(-3.58--2.74)x(3.44+3.45)/2	-2.89		
		(-3.83--3.58)x(3.44+3.44)/2	-0.86		
		(-4.27--3.83)x(3.44+3.44)/2	-1.51		
		(-4.92--4.27)x(3.45+3.44)/2	-2.24		
		(-5.29--4.92)x(3.46+3.45)/2	-1.28		
		(-6.01--5.29)x(3.47+3.46)/2	-2.49		
		(-7.00--6.01)x(3.49+3.47)/2	-3.45		
		(-7.10--7.00)x(3.49+3.49)/2	-0.35		
		(-7.28--7.10)x(3.49+3.49)/2	-0.63		
		(-8.19--7.28)x(3.49+3.49)/2	-3.18		
		(-8.71--8.19)x(3.50+3.49)/2	-1.82		
		(-9.28--8.71)x(3.52+3.50)/2	-2.00		
		(-10.29--9.28)x(3.55+3.52)/2	-3.57		
		(-10.37--10.29)x(3.55+3.55)/2	-0.28		
		(-10.42--10.37)x(3.55+3.55)/2	-0.18		
		(-11.47--10.42)x(3.56+3.55)/2	-3.73		
		(-12.13--11.47)x(3.54+3.56)/2	-2.34		
		(-12.56--12.13)x(3.54+3.54)/2	-1.52		
		(-12.75--12.56)x(3.53+3.54)/2	-0.67		
		(-13.30--12.75)x(3.52+3.53)/2	-1.94		
		(-13.55--13.30)x(3.51+3.52)/2	-0.88		
		(-13.65--13.55)x(3.51+3.51)/2	-0.35		
		(-13.84--13.65)x(3.51+3.51)/2	-0.67		
		(-14.74--13.84)x(3.49+3.51)/2	-3.15		
		(-15.56--14.74)x(3.48+3.49)/2	-2.86		
		(-15.83--15.56)x(3.48+3.48)/2	-0.94		
		(-16.31--15.83)x(3.45+3.48)/2	-1.66		
		(-16.92--16.31)x(3.43+3.45)/2	-2.10		
		(-17.27--16.92)x(3.42+3.43)/2	-1.20		
		(-18.01--17.27)x(3.40+3.42)/2	-2.52		
		(-18.58--18.01)x(3.39+3.40)/2	-1.94		
		A RIPORTARE mq	40.10		

		CALCOLO DELLE AREE		Foglio n. 59
BONIFICA				
N. SEZIONE PROG.	FIG.	ELEMENTI DI CALCOLO	AREA ELEMENTARE mq	AREA FIGURA mq	NOTE
		RIPORTO mq	40.10		
				40.10	
136 2025.00	B01	(-17.05--17.34)x(4.77+4.77)/2	1.38		
		(-16.90--17.05)x(4.77+4.77)/2	0.72		
		(-16.82--16.90)x(4.77+4.77)/2	0.38		
		(-15.81--16.82)x(4.74+4.77)/2	4.80		
		(-15.11--15.81)x(4.72+4.74)/2	3.31		
		(-14.72--15.11)x(4.72+4.72)/2	1.84		
		(-14.04--14.72)x(4.72+4.72)/2	3.21		
		(-13.63--14.04)x(4.71+4.72)/2	1.93		
		(-13.40--13.63)x(4.71+4.71)/2	1.08		
		(-12.54--13.40)x(4.67+4.71)/2	4.03		
		(-11.69--12.54)x(4.70+4.67)/2	3.98		
		(-11.45--11.69)x(4.70+4.70)/2	1.13		
		(-11.03--11.45)x(4.70+4.70)/2	1.97		
		(-10.36--11.03)x(4.70+4.70)/2	3.15		
		(-9.98--10.36)x(4.68+4.70)/2	1.78		
		(-9.27--9.98)x(4.65+4.68)/2	3.31		
		(-8.27--9.27)x(4.62+4.65)/2	4.63		
		(-8.18--8.27)x(4.62+4.62)/2	0.42		
		(-8.14--8.18)x(4.62+4.62)/2	0.18		
		(-8.02--8.14)x(4.62+4.62)/2	0.55		
		(-7.34--8.02)x(4.60+4.62)/2	3.13		
		(-7.09--7.34)x(4.60+4.60)/2	1.15		
		(-6.56--7.09)x(4.59+4.60)/2	2.44		
		(-6.00--6.56)x(4.58+4.59)/2	2.57		
		(-5.01--6.00)x(4.57+4.58)/2	4.53		
		(-4.91--5.01)x(4.57+4.57)/2	0.46		
		(-4.85--4.91)x(4.57+4.57)/2	0.27		
		(-3.82--4.85)x(4.56+4.57)/2	4.70		
		(-3.14--3.82)x(4.55+4.56)/2	3.10		
		(-2.73--3.14)x(4.54+4.55)/2	1.86		
		(-2.00--2.73)x(4.54+4.54)/2	3.31		
		(-1.63--2.00)x(4.55+4.54)/2	1.68		
		(-1.43--1.63)x(4.55+4.55)/2	0.91		
		(-0.54--1.43)x(4.55+4.55)/2	4.05		
		(0.29--0.54)x(4.54+4.55)/2	3.77		
		(0.55-0.29)x(4.54+4.54)/2	1.18		
		(1.01-0.55)x(4.54+4.54)/2	2.09		
		(1.64-1.01)x(4.53+4.54)/2	2.86		
		(2.00-1.64)x(4.50+4.53)/2	1.63		
		(2.73-2.00)x(4.46+4.50)/2	3.27		
		(3.07-2.73)x(4.44+4.46)/2	1.51		
		(3.82-3.07)x(4.40+4.44)/2	3.31		
		(4.01-3.82)x(4.39+4.40)/2	0.84		
		(4.91-4.01)x(4.36+4.39)/2	3.94		
		(5.42-4.91)x(4.32+4.36)/2	2.21		
		(6.00-5.42)x(4.30+4.32)/2	2.50		
		(7.02-6.00)x(3.93+4.30)/2	4.20		
		(7.09-7.02)x(3.90+3.93)/2	0.27		
		(7.13-7.09)x(3.86+3.90)/2	0.16		
		(8.18-7.13)x(2.95+3.86)/2	3.58		
		(8.84-8.18)x(2.68+2.95)/2	1.86		
		(9.27-8.84)x(2.45+2.68)/2	1.10		
		(10.03-9.27)x(2.40+2.45)/2	1.84		
		(10.36-10.03)x(2.39+2.40)/2	0.79		
		(10.55-10.36)x(2.39+2.39)/2	0.45		
		(11.45-10.55)x(2.40+2.39)/2	2.16		
		(12.26-11.45)x(2.41+2.40)/2	1.95		
		(12.54-12.26)x(2.41+2.41)/2	0.67		
		(13.04-12.54)x(2.43+2.41)/2	1.21		
		(13.63-13.04)x(2.45+2.43)/2	1.44		
		(13.97-13.63)x(2.43+2.45)/2	0.83		
		(14.72-13.97)x(2.40+2.43)/2	1.81		
		(15.68-14.72)x(2.35+2.40)/2	2.28		
		(15.81-15.68)x(2.34+2.35)/2	0.30		
		(16.05-15.81)x(2.36+2.34)/2	0.56		
		(16.90-16.05)x(2.43+2.36)/2	2.04		
		(17.39-16.90)x(2.46+2.43)/2	1.20		
		(18.00-17.39)x(2.51+2.46)/2	1.52		
		(19.06-18.00)x(2.54+2.51)/2	2.68		
		(19.09-19.06)x(2.54+2.54)/2	0.08		
		(19.10-19.09)x(2.54+2.54)/2	0.03		
		(20.18-19.10)x(2.53+2.54)/2	2.74		
		(20.65-20.18)x(2.56+2.53)/2	1.20		
		(20.18-20.65)x(1.53+1.56)/2	-0.73		
		(19.10-20.18)x(1.54+1.53)/2	-1.66		
		(19.09-19.10)x(1.54+1.54)/2	-0.02		
		(19.06-19.09)x(1.54+1.54)/2	-0.05		
		(18.00-19.06)x(1.51+1.54)/2	-1.62		
		(17.39-18.00)x(1.46+1.51)/2	-0.91		
		(16.90-17.39)x(1.43+1.46)/2	-0.71		
		(16.05-16.90)x(1.36+1.43)/2	-1.19		
		(15.81-16.05)x(1.34+1.36)/2	-0.32		
		(15.68-15.81)x(1.35+1.34)/2	-0.17		
		(14.72-15.68)x(1.40+1.35)/2	-1.32		
		(13.97-14.72)x(1.43+1.40)/2	-1.06		
		(13.63-13.97)x(1.45+1.43)/2	-0.49		
		(13.04-13.63)x(1.43+1.45)/2	-0.85		
		(12.54-13.04)x(1.41+1.43)/2	-0.71		
		(12.26-12.54)x(1.41+1.41)/2	-0.39		
		(11.45-12.26)x(1.40+1.41)/2	-1.14		
		(10.55-11.45)x(1.39+1.40)/2	-1.26		
		(10.36-10.55)x(1.39+1.39)/2	-0.26		
		(10.03-10.36)x(1.40+1.39)/2	-0.46		
		(9.27-10.03)x(1.45+1.40)/2	-1.08		
		(8.84-9.27)x(1.68+1.45)/2	-0.67		
		(8.18-8.84)x(1.95+1.68)/2	-1.20		
		(7.13-8.18)x(2.86+1.95)/2	-2.53		
		(7.09-7.13)x(2.90+2.86)/2	-0.12		
		(7.02-7.09)x(2.93+2.90)/2	-0.20		
		(6.00-7.02)x(3.30+2.93)/2	-3.18		
		(5.42-6.00)x(3.32+3.30)/2	-1.92		
		(4.91-5.42)x(3.36+3.32)/2	-1.70		
		(4.01-4.91)x(3.39+3.36)/2	-3.04		
		A RIPORTARE mq	115.04		

		CALCOLO DELLE AREE		Foglio n. 60
BONIFICA				
N. SEZIONE PROG.	FIG.	ELEMENTI DI CALCOLO	AREA ELEMENTARE mq	AREA FIGURA mq	NOTE
		RIPORTO mq	115.04		
		(3.82-4.01)x(3.40+3.39)/2	-0.65		
		(3.07-3.82)x(3.44+3.40)/2	-2.56		
		(2.73-3.07)x(3.46+3.44)/2	-1.17		
		(2.00-2.73)x(3.50+3.46)/2	-2.54		
		(1.64-2.00)x(3.53+3.50)/2	-1.27		
		(1.01-1.64)x(3.54+3.53)/2	-2.23		
		(0.55-1.01)x(3.54+3.54)/2	-1.63		
		(0.29-0.55)x(3.54+3.54)/2	-0.92		
		(-0.54-0.29)x(3.55+3.54)/2	-2.94		
		(-1.43--0.54)x(3.55+3.55)/2	-3.16		
		(-1.63--1.43)x(3.55+3.55)/2	-0.71		
		(-2.00--1.63)x(3.54+3.55)/2	-1.31		
		(-2.73--2.00)x(3.54+3.54)/2	-2.58		
		(-3.14--2.73)x(3.55+3.54)/2	-1.45		
		(-3.82--3.14)x(3.56+3.55)/2	-2.42		
		(-4.85--3.82)x(3.57+3.56)/2	-3.67		
		(-4.91--4.85)x(3.57+3.57)/2	-0.21		
		(-5.01--4.91)x(3.57+3.57)/2	-0.36		
		(-6.00--5.01)x(3.58+3.57)/2	-3.54		
		(-6.56--6.00)x(3.59+3.58)/2	-2.01		
		(-7.09--6.56)x(3.60+3.59)/2	-1.91		
		(-7.34--7.09)x(3.60+3.60)/2	-0.90		
		(-8.02--7.34)x(3.62+3.60)/2	-2.45		
		(-8.14--8.02)x(3.62+3.62)/2	-0.43		
		(-8.18--8.14)x(3.62+3.62)/2	-0.14		
		(-8.27--8.18)x(3.62+3.62)/2	-0.33		
		(-9.27--8.27)x(3.65+3.62)/2	-3.63		
		(-9.98--9.27)x(3.68+3.65)/2	-2.60		
		(-10.36--9.98)x(3.70+3.68)/2	-1.40		
		(-11.03--10.36)x(3.70+3.70)/2	-2.48		
		(-11.45--11.03)x(3.70+3.70)/2	-1.55		
		(-11.69--11.45)x(3.70+3.70)/2	-0.89		
		(-12.54--11.69)x(3.67+3.70)/2	-3.13		
		(-13.40--12.54)x(3.71+3.67)/2	-3.17		
		(-13.63--13.40)x(3.71+3.71)/2	-0.85		
		(-14.04--13.63)x(3.72+3.71)/2	-1.52		
		(-14.72--14.04)x(3.72+3.72)/2	-2.53		
		(-15.11--14.72)x(3.72+3.72)/2	-1.45		
		(-15.81--15.11)x(3.74+3.72)/2	-2.61		
		(-16.82--15.81)x(3.77+3.74)/2	-3.79		
		(-16.90--16.82)x(3.77+3.77)/2	-0.30		
		(-17.05--16.90)x(3.77+3.77)/2	-0.57		
		(-17.34--17.05)x(3.77+3.77)/2	-1.09		
				37.99	
137 2040.00	BO1	(-16.38--16.68)x(4.72+4.76)/2	1.42		
		(-15.80--16.38)x(4.66+4.72)/2	2.72		
		(-14.78--15.80)x(4.53+4.66)/2	4.69		
		(-14.71--14.78)x(4.53+4.53)/2	0.32		
		(-14.67--14.71)x(4.53+4.53)/2	0.18		
		(-13.62--14.67)x(4.50+4.53)/2	4.74		
		(-13.12--13.62)x(4.50+4.50)/2	2.25		
		(-12.53--13.12)x(4.49+4.50)/2	2.65		
		(-11.77--12.53)x(4.49+4.49)/2	3.41		
		(-11.43--11.77)x(4.49+4.49)/2	1.53		
		(-11.25--11.43)x(4.49+4.49)/2	0.81		
		(-10.34--11.25)x(4.50+4.49)/2	4.09		
		(-9.53--10.34)x(4.50+4.50)/2	3.65		
		(-9.25--9.53)x(4.51+4.50)/2	1.26		
		(-8.76--9.25)x(4.52+4.51)/2	2.21		
		(-8.16--8.76)x(4.53+4.52)/2	2.71		
		(-7.82--8.16)x(4.55+4.53)/2	1.54		
		(-7.07--7.82)x(4.57+4.55)/2	3.42		
		(-6.11--7.07)x(4.58+4.57)/2	4.39		
		(-5.98--6.11)x(4.58+4.58)/2	0.60		
		(-5.75--5.98)x(4.58+4.58)/2	1.05		
		(-4.89--5.75)x(4.58+4.58)/2	3.94		
		(-4.40--4.89)x(4.58+4.58)/2	2.24		
		(-3.80--4.40)x(4.58+4.58)/2	2.75		
		(-2.74--3.80)x(4.60+4.58)/2	4.87		
		(-2.71--2.74)x(4.60+4.60)/2	0.14		
		(-1.92--2.71)x(4.58+4.60)/2	3.63		
		(-1.62--1.92)x(4.56+4.58)/2	1.37		
		(-0.98--1.62)x(4.54+4.56)/2	2.91		
		(-0.53--0.98)x(4.52+4.54)/2	2.04		
		(0.27--0.53)x(4.51+4.52)/2	3.61		
		(0.56-0.27)x(4.50+4.51)/2	1.31		
		(0.73-0.56)x(4.50+4.50)/2	0.76		
		(1.65-0.73)x(4.47+4.50)/2	4.13		
		(2.44-1.65)x(4.44+4.47)/2	3.52		
		(2.74-2.44)x(4.44+4.44)/2	1.33		
		(3.27-2.74)x(4.43+4.44)/2	2.35		
		(3.83-3.27)x(4.43+4.43)/2	2.48		
		(4.15-3.83)x(4.42+4.43)/2	1.42		
		(4.92-4.15)x(4.41+4.42)/2	3.40		
		(5.86-4.92)x(4.41+4.41)/2	4.15		
		(6.01-5.86)x(4.41+4.41)/2	0.66		
		(6.28-6.01)x(4.41+4.41)/2	1.19		
		(7.10-6.28)x(4.41+4.41)/2	3.62		
		(7.57-7.10)x(4.41+4.41)/2	2.07		
		(8.20-7.57)x(4.40+4.41)/2	2.78		
		(9.28-8.20)x(4.39+4.40)/2	4.75		
		(9.29-9.28)x(4.39+4.39)/2	0.04		
		(10.38-9.29)x(4.37+4.39)/2	4.77		
		(10.99-10.38)x(4.31+4.37)/2	2.65		
		(11.47-10.99)x(4.28+4.31)/2	2.06		
		(12.30-11.47)x(4.07+4.28)/2	3.47		
		(12.56-12.30)x(3.98+4.07)/2	1.05		
		(12.70-12.56)x(3.96+3.98)/2	0.56		
		(13.65-12.70)x(3.74+3.96)/2	3.66		
		(14.42-13.65)x(3.72+3.74)/2	2.87		
		(14.74-14.42)x(3.71+3.72)/2	1.19		
		(15.31-14.74)x(3.71+3.71)/2	2.11		
		(15.83-15.31)x(3.71+3.71)/2	1.93		
		(16.13-15.83)x(3.68+3.71)/2	1.11		
		A RIPORTARE mq	144.53		

		CALCOLO DELLE AREE		Foglio n. 61
BONIFICA				
N. SEZIONE PROG.	FIG.	ELEMENTI DI CALCOLO	AREA ELEMENTARE mq	AREA FIGURA mq	NOTE
		RIPORTO mq	144.53		
		(16.92-16.13)x(3.64+3.68)/2	2.89		
		(17.29-16.92)x(3.51+3.64)/2	1.32		
		(18.01-17.29)x(3.26+3.51)/2	2.44		
		(18.32-18.01)x(3.19+3.26)/2	1.00		
		(19.10-18.32)x(3.04+3.19)/2	2.43		
		(19.25-19.10)x(3.05+3.04)/2	0.46		
		(19.10-19.25)x(2.04+2.05)/2	-0.31		
		(18.32-19.10)x(2.19+2.04)/2	-1.65		
		(18.01-18.32)x(2.26+2.19)/2	-0.69		
		(17.29-18.01)x(2.51+2.26)/2	-1.72		
		(16.92-17.29)x(2.64+2.51)/2	-0.95		
		(16.13-16.92)x(2.68+2.64)/2	-2.10		
		(15.83-16.13)x(2.71+2.68)/2	-0.81		
		(15.31-15.83)x(2.71+2.71)/2	-1.41		
		(14.74-15.31)x(2.71+2.71)/2	-1.54		
		(14.42-14.74)x(2.72+2.71)/2	-0.87		
		(13.65-14.42)x(2.74+2.72)/2	-2.10		
		(12.70-13.65)x(2.96+2.74)/2	-2.71		
		(12.56-12.70)x(2.98+2.96)/2	-0.42		
		(12.30-12.56)x(3.07+2.98)/2	-0.79		
		(11.47-12.30)x(3.28+3.07)/2	-2.64		
		(10.99-11.47)x(3.31+3.28)/2	-1.58		
		(10.38-10.99)x(3.37+3.31)/2	-2.04		
		(9.29-10.38)x(3.39+3.37)/2	-3.68		
		(9.28-9.29)x(3.39+3.39)/2	-0.03		
		(8.20-9.28)x(3.40+3.39)/2	-3.67		
		(7.57-8.20)x(3.41+3.40)/2	-2.15		
		(7.10-7.57)x(3.41+3.41)/2	-1.60		
		(6.28-7.10)x(3.41+3.41)/2	-2.80		
		(6.01-6.28)x(3.41+3.41)/2	-0.92		
		(5.86-6.01)x(3.41+3.41)/2	-0.51		
		(4.92-5.86)x(3.41+3.41)/2	-3.21		
		(4.15-4.92)x(3.42+3.41)/2	-2.63		
		(3.83-4.15)x(3.43+3.42)/2	-1.10		
		(3.27-3.83)x(3.43+3.43)/2	-1.92		
		(2.74-3.27)x(3.44+3.43)/2	-1.82		
		(2.44-2.74)x(3.44+3.44)/2	-1.03		
		(1.65-2.44)x(3.47+3.44)/2	-2.73		
		(0.73-1.65)x(3.50+3.47)/2	-3.21		
		(0.56-0.73)x(3.50+3.50)/2	-0.59		
		(0.27-0.56)x(3.51+3.50)/2	-1.02		
		(-0.53-0.27)x(3.52+3.51)/2	-2.81		
		(-0.98--0.53)x(3.54+3.52)/2	-1.59		
		(-1.62--0.98)x(3.56+3.54)/2	-2.27		
		(-1.92--1.62)x(3.58+3.56)/2	-1.07		
		(-2.71--1.92)x(3.60+3.58)/2	-2.84		
		(-2.74--2.71)x(3.60+3.60)/2	-0.11		
		(-3.80--2.74)x(3.58+3.60)/2	-3.81		
		(-4.40--3.80)x(3.58+3.58)/2	-2.15		
		(-4.89--4.40)x(3.58+3.58)/2	-1.75		
		(-5.75--4.89)x(3.58+3.58)/2	-3.08		
		(-5.98--5.75)x(3.58+3.58)/2	-0.82		
		(-6.11--5.98)x(3.58+3.58)/2	-0.47		
		(-7.07--6.11)x(3.57+3.58)/2	-3.43		
		(-7.82--7.07)x(3.55+3.57)/2	-2.67		
		(-8.16--7.82)x(3.53+3.55)/2	-1.20		
		(-8.76--8.16)x(3.52+3.53)/2	-2.11		
		(-9.25--8.76)x(3.51+3.52)/2	-1.72		
		(-9.53--9.25)x(3.50+3.51)/2	-0.98		
		(-10.34--9.53)x(3.50+3.50)/2	-2.84		
		(-11.25--10.34)x(3.49+3.50)/2	-3.18		
		(-11.43--11.25)x(3.49+3.49)/2	-0.63		
		(-11.77--11.43)x(3.49+3.49)/2	-1.19		
		(-12.53--11.77)x(3.49+3.49)/2	-2.65		
		(-13.12--12.53)x(3.50+3.49)/2	-2.06		
		(-13.62--13.12)x(3.50+3.50)/2	-1.75		
		(-14.67--13.62)x(3.53+3.50)/2	-3.69		
		(-14.71--14.67)x(3.53+3.53)/2	-0.14		
		(-14.78--14.71)x(3.53+3.53)/2	-0.25		
		(-15.80--14.78)x(3.66+3.53)/2	-3.67		
		(-16.38--15.80)x(3.72+3.66)/2	-2.14		
		(-16.68--16.38)x(3.76+3.72)/2	-1.12		
				35.93	
138 2055.00	BO1	(-15.93--16.17)x(4.66+4.67)/2	1.12		
		(-15.78--15.93)x(4.65+4.66)/2	0.70		
		(-15.52--15.78)x(4.65+4.65)/2	1.21		
		(-14.69--15.52)x(4.66+4.65)/2	3.86		
		(-14.22--14.69)x(4.66+4.66)/2	2.19		
		(-13.60--14.22)x(4.68+4.66)/2	2.90		
		(-12.51--13.60)x(4.71+4.68)/2	5.12		
		(-11.42--12.51)x(4.67+4.71)/2	5.11		
		(-10.80--11.42)x(4.65+4.67)/2	2.89		
		(-10.33--10.80)x(4.62+4.65)/2	2.18		
		(-9.50--10.33)x(4.63+4.62)/2	3.84		
		(-9.24--9.50)x(4.64+4.63)/2	1.21		
		(-9.09--9.24)x(4.64+4.64)/2	0.70		
		(-8.15--9.09)x(4.64+4.64)/2	4.36		
		(-7.71--8.15)x(4.65+4.64)/2	2.04		
		(-7.06--7.71)x(4.64+4.65)/2	3.02		
		(-6.49--7.06)x(4.66+4.64)/2	2.65		
		(-5.97--6.49)x(4.69+4.66)/2	2.43		
		(-5.67--5.97)x(4.70+4.69)/2	1.41		
		(-4.88--5.67)x(4.75+4.70)/2	3.73		
		(-3.96--4.88)x(4.76+4.75)/2	4.37		
		(-3.79--3.96)x(4.76+4.76)/2	0.81		
		(-3.48--3.79)x(4.75+4.76)/2	1.47		
		(-2.69--3.48)x(4.73+4.75)/2	3.74		
		(-2.25--2.69)x(4.72+4.73)/2	2.08		
		(-1.60--2.25)x(4.70+4.72)/2	3.06		
		(-0.54--1.60)x(4.66+4.70)/2	4.96		
		(-0.51--0.54)x(4.66+4.66)/2	0.14		
		(-0.47--0.51)x(4.65+4.66)/2	0.19		
		(0.58--0.47)x(4.62+4.65)/2	4.87		
		(1.17-0.58)x(4.62+4.62)/2	2.73		
		A RIPORTARE mq	81.09		

		CALCOLO DELLE AREE		Foglio n. 62
BONIFICA				
N. SEZIONE PROG.	FIG.	ELEMENTI DI CALCOLO	AREA ELEMENTARE mq	AREA FIGURA mq	NOTE
		RIPORTO mq	81.09		
		(1.67-1.17)x(4.63+4.62)/2	2.31		
		(2.54-1.67)x(4.59+4.63)/2	4.01		
		(2.76-2.54)x(4.58+4.59)/2	1.01		
		(2.88-2.76)x(4.58+4.58)/2	0.55		
		(3.85-2.88)x(4.53+4.58)/2	4.42		
		(4.60-3.85)x(4.51+4.53)/2	3.39		
		(4.94-4.60)x(4.49+4.51)/2	1.53		
		(5.54-4.94)x(4.48+4.49)/2	2.69		
		(6.03-5.54)x(4.46+4.48)/2	2.19		
		(6.31-6.03)x(4.45+4.46)/2	1.25		
		(7.12-6.31)x(4.42+4.45)/2	3.59		
		(8.02-7.12)x(4.40+4.42)/2	3.97		
		(8.21-8.02)x(4.40+4.40)/2	0.84		
		(8.55-8.21)x(4.40+4.40)/2	1.50		
		(9.30-8.55)x(4.40+4.40)/2	3.30		
		(9.73-9.30)x(4.39+4.40)/2	1.89		
		(10.39-9.73)x(4.38+4.39)/2	2.89		
		(11.44-10.39)x(4.36+4.38)/2	4.59		
		(11.48-11.44)x(4.36+4.36)/2	0.17		
		(11.50-11.48)x(4.36+4.36)/2	0.09		
		(11.56-11.50)x(4.36+4.36)/2	0.26		
		(12.30-11.56)x(4.35+4.36)/2	3.22		
		(12.57-12.30)x(4.34+4.35)/2	1.17		
		(13.15-12.57)x(4.32+4.34)/2	2.51		
		(13.66-13.15)x(4.29+4.32)/2	2.20		
		(14.57-13.66)x(4.25+4.29)/2	3.89		
		(14.75-14.57)x(4.24+4.25)/2	0.76		
		(14.86-14.75)x(4.24+4.24)/2	0.47		
		(15.84-14.86)x(4.18+4.24)/2	4.13		
		(16.57-15.84)x(4.14+4.18)/2	3.04		
		(16.94-16.57)x(4.13+4.14)/2	1.53		
		(16.97-16.94)x(4.13+4.13)/2	0.12		
		(16.94-16.97)x(3.13+3.13)/2	-0.09		
		(16.57-16.94)x(3.14+3.13)/2	-1.16		
		(15.84-16.57)x(3.18+3.14)/2	-2.31		
		(14.86-15.84)x(3.24+3.18)/2	-3.15		
		(14.75-14.86)x(3.24+3.24)/2	-0.36		
		(14.57-14.75)x(3.25+3.24)/2	-0.58		
		(13.66-14.57)x(3.29+3.25)/2	-2.98		
		(13.15-13.66)x(3.32+3.29)/2	-1.69		
		(12.57-13.15)x(3.34+3.32)/2	-1.93		
		(12.30-12.57)x(3.35+3.34)/2	-0.90		
		(11.56-12.30)x(3.36+3.35)/2	-2.48		
		(11.50-11.56)x(3.36+3.36)/2	-0.20		
		(11.48-11.50)x(3.36+3.36)/2	-0.07		
		(11.44-11.48)x(3.36+3.36)/2	-0.13		
		(10.39-11.44)x(3.38+3.36)/2	-3.54		
		(9.73-10.39)x(3.39+3.38)/2	-2.23		
		(9.30-9.73)x(3.40+3.39)/2	-1.46		
		(8.55-9.30)x(3.40+3.40)/2	-2.55		
		(8.21-8.55)x(3.40+3.40)/2	-1.16		
		(8.02-8.21)x(3.40+3.40)/2	-0.65		
		(7.12-8.02)x(3.42+3.40)/2	-3.07		
		(6.31-7.12)x(3.45+3.42)/2	-2.78		
		(6.03-6.31)x(3.46+3.45)/2	-0.97		
		(5.54-6.03)x(3.48+3.46)/2	-1.70		
		(4.94-5.54)x(3.49+3.48)/2	-2.09		
		(4.60-4.94)x(3.51+3.49)/2	-1.19		
		(3.85-4.60)x(3.53+3.51)/2	-2.64		
		(2.88-3.85)x(3.58+3.53)/2	-3.45		
		(2.76-2.88)x(3.58+3.58)/2	-0.43		
		(2.54-2.76)x(3.59+3.58)/2	-0.79		
		(1.67-2.54)x(3.63+3.59)/2	-3.14		
		(1.17-1.67)x(3.62+3.63)/2	-1.81		
		(0.58-1.17)x(3.62+3.62)/2	-2.14		
		(-0.47-0.58)x(3.65+3.62)/2	-3.82		
		(-0.51--0.47)x(3.66+3.65)/2	-0.15		
		(-0.54--0.51)x(3.66+3.66)/2	-0.11		
		(-1.60--0.54)x(3.70+3.66)/2	-3.90		
		(-2.25--1.60)x(3.72+3.70)/2	-2.41		
		(-2.69--2.25)x(3.73+3.72)/2	-1.64		
		(-3.48--2.69)x(3.75+3.73)/2	-2.95		
		(-3.79--3.48)x(3.76+3.75)/2	-1.16		
		(-3.96--3.79)x(3.76+3.76)/2	-0.64		
		(-4.88--3.96)x(3.75+3.76)/2	-3.45		
		(-5.67--4.88)x(3.70+3.75)/2	-2.94		
		(-5.97--5.67)x(3.69+3.70)/2	-1.11		
		(-6.49--5.97)x(3.66+3.69)/2	-1.91		
		(-7.06--6.49)x(3.64+3.66)/2	-2.08		
		(-7.71--7.06)x(3.65+3.64)/2	-2.37		
		(-8.15--7.71)x(3.64+3.65)/2	-1.60		
		(-9.09--8.15)x(3.64+3.64)/2	-3.42		
		(-9.24--9.09)x(3.64+3.64)/2	-0.55		
		(-9.50--9.24)x(3.63+3.64)/2	-0.95		
		(-10.33--9.50)x(3.62+3.63)/2	-3.01		
		(-10.80--10.33)x(3.65+3.62)/2	-1.71		
		(-11.42--10.80)x(3.67+3.65)/2	-2.27		
		(-12.51--11.42)x(3.71+3.67)/2	-4.02		
		(-13.60--12.51)x(3.68+3.71)/2	-4.03		
		(-14.22--13.60)x(3.66+3.68)/2	-2.28		
		(-14.69--14.22)x(3.66+3.66)/2	-1.72		
		(-15.52--14.69)x(3.65+3.66)/2	-3.03		
		(-15.78--15.52)x(3.65+3.65)/2	-0.95		
		(-15.93--15.78)x(3.66+3.65)/2	-0.55		
		(-16.17--15.93)x(3.67+3.66)/2	-0.88		
				33.14	
139 2070.00	BO1	(-14.68--14.98)x(5.04+5.05)/2	1.51		
		(-13.78--14.68)x(5.04+5.04)/2	4.54		
		(-13.58--13.78)x(5.04+5.04)/2	1.01		
		(-13.49--13.58)x(5.04+5.04)/2	0.45		
		(-13.25--13.49)x(5.04+5.04)/2	1.21		
		(-12.69--13.25)x(5.05+5.04)/2	2.83		
		(-12.49--12.69)x(5.05+5.05)/2	1.01		
		(-12.07--12.49)x(5.06+5.05)/2	2.12		
		A RIPORTARE mq	14.68		

	CALCOLO DELLE AREE		Foglio n. 63

BONIFICA

N. SEZIONE PROG.	FIG.	ELEMENTI DI CALCOLO	AREA ELEMENTARE mq	AREA FIGURA mq	NOTE
		RIPORTO mq	14.68		
		(-11.40--12.07)x(5.09+5.06)/2	3.40		
		(-10.36--11.40)x(5.10+5.09)/2	5.30		
		(-10.31--10.36)x(5.10+5.10)/2	0.25		
		(-10.24--10.31)x(5.09+5.10)/2	0.36		
		(-9.22--10.24)x(4.99+5.09)/2	5.14		
		(-8.65--9.22)x(4.96+4.99)/2	2.84		
		(-8.13--8.65)x(4.92+4.96)/2	2.57		
		(-7.23--8.13)x(4.90+4.92)/2	4.42		
		(-7.04--7.23)x(4.89+4.90)/2	0.93		
		(-6.94--7.04)x(4.88+4.89)/2	0.49		
		(-5.95--6.94)x(4.84+4.88)/2	4.81		
		(-5.22--5.95)x(4.84+4.84)/2	3.53		
		(-4.86--5.22)x(4.83+4.84)/2	1.74		
		(-4.22--4.86)x(4.84+4.83)/2	3.09		
		(-3.77--4.22)x(4.84+4.84)/2	2.18		
		(-3.51--3.77)x(4.82+4.84)/2	1.26		
		(-2.68--3.51)x(4.78+4.82)/2	3.98		
		(-1.80--2.68)x(4.70+4.78)/2	4.17		
		(-1.59--1.80)x(4.68+4.70)/2	0.98		
		(-1.21--1.59)x(4.66+4.68)/2	1.77		
		(-0.50--1.21)x(4.62+4.66)/2	3.29		
		(-0.09--0.50)x(4.62+4.62)/2	1.89		
		(0.59--0.09)x(4.60+4.62)/2	3.13		
		(1.62-0.59)x(4.59+4.60)/2	4.73		
		(1.68-1.62)x(4.59+4.59)/2	0.28		
		(1.80-1.68)x(4.59+4.59)/2	0.55		
		(2.77-1.80)x(4.58+4.59)/2	4.45		
		(3.33-2.77)x(4.56+4.58)/2	2.56		
		(3.86-3.33)x(4.54+4.56)/2	2.41		
		(4.81-3.86)x(4.52+4.54)/2	4.30		
		(4.95-4.81)x(4.51+4.52)/2	0.63		
		(5.04-4.95)x(4.51+4.51)/2	0.41		
		(6.05-5.04)x(4.49+4.51)/2	4.54		
		(6.52-6.05)x(4.50+4.49)/2	2.11		
		(7.14-6.52)x(4.52+4.50)/2	2.80		
		(7.81-7.14)x(4.52+4.52)/2	3.03		
		(8.23-7.81)x(4.52+4.52)/2	1.90		
		(8.46-8.23)x(4.52+4.52)/2	1.04		
		(9.32-8.46)x(4.51+4.52)/2	3.88		
		(10.17-9.32)x(4.51+4.51)/2	3.83		
		(10.41-10.17)x(4.51+4.51)/2	1.08		
		(10.82-10.41)x(4.50+4.51)/2	1.85		
		(11.50-10.82)x(4.47+4.50)/2	3.05		
		(11.88-11.50)x(4.45+4.47)/2	1.69		
		(12.59-11.88)x(4.44+4.45)/2	3.16		
		(13.59-12.59)x(4.39+4.44)/2	4.42		
		(13.68-13.59)x(4.38+4.39)/2	0.39		
		(13.83-13.68)x(4.37+4.38)/2	0.66		
		(14.77-13.83)x(4.34+4.37)/2	4.09		
		(15.30-14.77)x(4.30+4.34)/2	2.29		
		(15.86-15.30)x(4.28+4.30)/2	2.40		
		(16.20-15.86)x(4.24+4.28)/2	1.45		
		(15.86-16.20)x(3.28+3.24)/2	-1.11		
		(15.30-15.86)x(3.30+3.28)/2	-1.84		
		(14.77-15.30)x(3.34+3.30)/2	-1.76		
		(13.83-14.77)x(3.37+3.34)/2	-3.15		
		(13.68-13.83)x(3.38+3.37)/2	-0.51		
		(13.59-13.68)x(3.39+3.38)/2	-0.30		
		(12.59-13.59)x(3.44+3.39)/2	-3.42		
		(11.88-12.59)x(3.45+3.44)/2	-2.45		
		(11.50-11.88)x(3.47+3.45)/2	-1.31		
		(10.82-11.50)x(3.50+3.47)/2	-2.37		
		(10.41-10.82)x(3.51+3.50)/2	-1.44		
		(10.17-10.41)x(3.51+3.51)/2	-0.84		
		(9.32-10.17)x(3.51+3.51)/2	-2.98		
		(8.46-9.32)x(3.52+3.51)/2	-3.02		
		(8.23-8.46)x(3.52+3.52)/2	-0.81		
		(7.81-8.23)x(3.52+3.52)/2	-1.48		
		(7.14-7.81)x(3.52+3.52)/2	-2.36		
		(6.52-7.14)x(3.50+3.52)/2	-2.18		
		(6.05-6.52)x(3.49+3.50)/2	-1.64		
		(5.04-6.05)x(3.51+3.49)/2	-3.53		
		(4.95-5.04)x(3.51+3.51)/2	-0.32		
		(4.81-4.95)x(3.52+3.51)/2	-0.49		
		(3.86-4.81)x(3.54+3.52)/2	-3.35		
		(3.33-3.86)x(3.56+3.54)/2	-1.88		
		(2.77-3.33)x(3.58+3.56)/2	-2.00		
		(1.80-2.77)x(3.59+3.58)/2	-3.48		
		(1.68-1.80)x(3.59+3.59)/2	-0.43		
		(1.62-1.68)x(3.59+3.59)/2	-0.22		
		(0.59-1.62)x(3.60+3.59)/2	-3.70		
		(-0.09-0.59)x(3.62+3.60)/2	-2.45		
		(-0.50--0.09)x(3.62+3.62)/2	-1.48		
		(-1.21--0.50)x(3.66+3.62)/2	-2.58		
		(-1.59--1.21)x(3.68+3.66)/2	-1.39		
		(-1.80--1.59)x(3.70+3.68)/2	-0.77		
		(-2.68--1.80)x(3.78+3.70)/2	-3.29		
		(-3.51--2.68)x(3.82+3.78)/2	-3.15		
		(-3.77--3.51)x(3.84+3.82)/2	-1.00		
		(-4.22--3.77)x(3.84+3.84)/2	-1.73		
		(-4.86--4.22)x(3.83+3.84)/2	-2.45		
		(-5.22--4.86)x(3.84+3.83)/2	-1.38		
		(-5.95--5.22)x(3.84+3.84)/2	-2.80		
		(-6.94--5.95)x(3.88+3.84)/2	-3.82		
		(-7.04--6.94)x(3.89+3.88)/2	-0.39		
		(-7.23--7.04)x(3.90+3.89)/2	-0.74		
		(-8.13--7.23)x(3.92+3.90)/2	-3.52		
		(-8.65--8.13)x(3.96+3.92)/2	-2.05		
		(-9.22--8.65)x(3.99+3.96)/2	-2.27		
		(-10.24--9.22)x(4.09+3.99)/2	-4.12		
		(-10.31--10.24)x(4.10+4.09)/2	-0.29		
		(-10.36--10.31)x(4.10+4.10)/2	-0.20		
		(-11.40--10.36)x(4.09+4.10)/2	-4.26		
		(-12.07--11.40)x(4.06+4.09)/2	-2.73		
		A RIPORTARE mq	42.95		

		CALCOLO DELLE AREE		Foglio n. 64
BONIFICA				
N. SEZIONE PROG.	FIG.	ELEMENTI DI CALCOLO	AREA ELEMENTARE mq	AREA FIGURA mq	NOTE
		RIPORTO mq	42.95		
		(-12.49--12.07)x(4.05+4.06)/2	-1.70		
		(-12.69--12.49)x(4.05+4.05)/2	-0.81		
		(-13.25--12.69)x(4.04+4.05)/2	-2.27		
		(-13.49--13.25)x(4.04+4.04)/2	-0.97		
		(-13.58--13.49)x(4.04+4.04)/2	-0.36		
		(-13.78--13.58)x(4.04+4.04)/2	-0.81		
		(-14.68--13.78)x(4.04+4.04)/2	-3.64		
		(-14.98--14.68)x(4.05+4.04)/2	-1.21		
				31.18	
140	B01	(-13.57--13.67)x(5.57+5.56)/2	0.56		
2085.00		(-13.33--13.57)x(5.58+5.57)/2	1.34		
		(-12.48--13.33)x(5.65+5.58)/2	4.77		
		(-11.62--12.48)x(5.56+5.65)/2	4.82		
		(-11.39--11.62)x(5.54+5.56)/2	1.28		
		(-10.98--11.39)x(5.43+5.54)/2	2.25		
		(-10.30--10.98)x(5.28+5.43)/2	3.64		
		(-9.91--10.30)x(5.25+5.28)/2	2.05		
		(-9.21--9.91)x(5.23+5.25)/2	3.67		
		(-8.20--9.21)x(5.07+5.23)/2	5.20		
		(-8.12--8.20)x(5.06+5.07)/2	0.41		
		(-7.97--8.12)x(5.05+5.06)/2	0.76		
		(-7.03--7.97)x(4.95+5.05)/2	4.70		
		(-6.49--7.03)x(4.94+4.95)/2	2.67		
		(-5.94--6.49)x(4.93+4.94)/2	2.71		
		(-4.96--5.94)x(4.93+4.93)/2	4.83		
		(-4.85--4.96)x(4.93+4.93)/2	0.54		
		(-4.78--4.85)x(4.93+4.93)/2	0.35		
		(-3.75--4.78)x(4.96+4.93)/2	5.09		
		(-3.07--3.75)x(4.96+4.96)/2	3.37		
		(-2.66--3.07)x(4.96+4.96)/2	2.03		
		(-1.95--2.66)x(4.93+4.96)/2	3.51		
		(-1.57--1.95)x(4.91+4.93)/2	1.87		
		(-1.36--1.57)x(4.90+4.91)/2	1.03		
		(-0.48--1.36)x(4.86+4.90)/2	4.29		
		(0.35--0.48)x(4.87+4.86)/2	4.04		
		(0.61-0.35)x(4.87+4.87)/2	1.27		
		(0.73-0.61)x(4.88+4.87)/2	0.58		
		(1.06-0.73)x(4.88+4.88)/2	1.61		
		(1.53-1.06)x(4.88+4.88)/2	2.29		
		(1.70-1.53)x(4.88+4.88)/2	0.83		
		(2.06-1.70)x(4.87+4.88)/2	1.76		
		(2.79-2.06)x(4.83+4.87)/2	3.54		
		(3.77-2.79)x(4.79+4.83)/2	4.71		
		(3.88-3.77)x(4.79+4.79)/2	0.53		
		(4.07-3.88)x(4.78+4.79)/2	0.91		
		(4.97-4.07)x(4.75+4.78)/2	4.29		
		(5.48-4.97)x(4.71+4.75)/2	2.41		
		(6.06-5.48)x(4.67+4.71)/2	2.72		
		(7.07-6.06)x(4.61+4.67)/2	4.69		
		(7.15-7.07)x(4.60+4.61)/2	0.37		
		(7.19-7.15)x(4.60+4.60)/2	0.18		
		(8.24-7.19)x(4.55+4.60)/2	4.80		
		(8.91-8.24)x(4.54+4.55)/2	3.05		
		(9.33-8.91)x(4.52+4.54)/2	1.90		
		(10.08-9.33)x(4.54+4.52)/2	3.40		
		(10.42-10.08)x(4.54+4.54)/2	1.54		
		(10.62-10.42)x(4.54+4.54)/2	0.91		
		(11.51-10.62)x(4.55+4.54)/2	4.05		
		(12.33-11.51)x(4.53+4.55)/2	3.72		
		(12.60-12.33)x(4.53+4.53)/2	1.22		
		(13.09-12.60)x(4.52+4.53)/2	2.22		
		(13.69-13.09)x(4.50+4.52)/2	2.71		
		(14.04-13.69)x(4.50+4.50)/2	1.57		
		(14.79-14.04)x(4.50+4.50)/2	3.38		
		(15.27-14.79)x(4.49+4.50)/2	2.16		
		(14.79-15.27)x(3.50+3.49)/2	-1.68		
		(14.04-14.79)x(3.50+3.50)/2	-2.63		
		(13.69-14.04)x(3.50+3.50)/2	-1.22		
		(13.09-13.69)x(3.52+3.50)/2	-2.11		
		(12.60-13.09)x(3.53+3.52)/2	-1.73		
		(12.33-12.60)x(3.53+3.53)/2	-0.95		
		(11.51-12.33)x(3.55+3.53)/2	-2.90		
		(10.62-11.51)x(3.54+3.55)/2	-3.16		
		(10.42-10.62)x(3.54+3.54)/2	-0.71		
		(10.08-10.42)x(3.54+3.54)/2	-1.20		
		(9.33-10.08)x(3.52+3.54)/2	-2.65		
		(8.91-9.33)x(3.54+3.52)/2	-1.48		
		(8.24-8.91)x(3.55+3.54)/2	-2.38		
		(7.19-8.24)x(3.60+3.55)/2	-3.75		
		(7.15-7.19)x(3.60+3.60)/2	-0.14		
		(7.07-7.15)x(3.61+3.60)/2	-0.29		
		(6.06-7.07)x(3.67+3.61)/2	-3.68		
		(5.48-6.06)x(3.71+3.67)/2	-2.14		
		(4.97-5.48)x(3.75+3.71)/2	-1.90		
		(4.07-4.97)x(3.78+3.75)/2	-3.39		
		(3.88-4.07)x(3.79+3.78)/2	-0.72		
		(3.77-3.88)x(3.79+3.79)/2	-0.42		
		(2.79-3.77)x(3.83+3.79)/2	-3.73		
		(2.06-2.79)x(3.87+3.83)/2	-2.81		
		(1.70-2.06)x(3.88+3.87)/2	-1.40		
		(1.53-1.70)x(3.88+3.88)/2	-0.66		
		(1.06-1.53)x(3.88+3.88)/2	-1.82		
		(0.73-1.06)x(3.88+3.88)/2	-1.28		
		(0.61-0.73)x(3.87+3.88)/2	-0.46		
		(0.35-0.61)x(3.87+3.87)/2	-1.01		
		(-0.48-0.35)x(3.86+3.87)/2	-3.21		
		(-1.36--0.48)x(3.90+3.86)/2	-3.41		
		(-1.57--1.36)x(3.91+3.90)/2	-0.82		
		(-1.95--1.57)x(3.93+3.91)/2	-1.49		
		(-2.66--1.95)x(3.96+3.93)/2	-2.80		
		(-3.07--2.66)x(3.96+3.96)/2	-1.62		
		(-3.75--3.07)x(3.96+3.96)/2	-2.69		
		(-4.78--3.75)x(3.93+3.96)/2	-4.06		
		(-4.85--4.78)x(3.93+3.93)/2	-0.28		
		A RIPORTARE mq	66.32		

		CALCOLO DELLE AREE		Foglio n. 65
BONIFICA				
N. SEZIONE PROG.	FIG.	ELEMENTI DI CALCOLO	AREA ELEMENTARE mq	AREA FIGURA mq	NOTE
		RIPORTO mq	66.32		
		(-4.96--4.85)x(3.93+3.93)/2	-0.43		
		(-5.94--4.96)x(3.93+3.93)/2	-3.85		
		(-6.49--5.94)x(3.94+3.93)/2	-2.16		
		(-7.03--6.49)x(3.95+3.94)/2	-2.13		
		(-7.97--7.03)x(4.05+3.95)/2	-3.76		
		(-8.12--7.97)x(4.06+4.05)/2	-0.61		
		(-8.20--8.12)x(4.07+4.06)/2	-0.33		
		(-9.21--8.20)x(4.23+4.07)/2	-4.19		
		(-9.91--9.21)x(4.25+4.23)/2	-2.97		
		(-10.30--9.91)x(4.28+4.25)/2	-1.66		
		(-10.98--10.30)x(4.43+4.28)/2	-2.96		
		(-11.39--10.98)x(4.54+4.43)/2	-1.84		
		(-11.62--11.39)x(4.56+4.54)/2	-1.05		
		(-12.48--11.62)x(4.65+4.56)/2	-3.96		
		(-13.33--12.48)x(4.58+4.65)/2	-3.92		
		(-13.57--13.33)x(4.57+4.58)/2	-1.10		
		(-13.67--13.57)x(4.56+4.57)/2	-0.46		
				28.94	
141	BO1	(-6.05--6.77)x(5.47+5.69)/2	4.02		
2100.00		(-5.92--6.05)x(5.44+5.47)/2	0.71		
		(-5.70--5.92)x(5.38+5.44)/2	1.19		
		(-4.83--5.70)x(5.15+5.38)/2	4.58		
		(-4.26--4.83)x(5.13+5.15)/2	2.93		
		(-3.74--4.26)x(5.10+5.13)/2	2.66		
		(-2.69--3.74)x(5.06+5.10)/2	5.33		
		(-2.65--2.69)x(5.06+5.06)/2	0.20		
		(-2.63--2.65)x(5.06+5.06)/2	0.10		
		(-1.56--2.63)x(5.02+5.06)/2	5.39		
		(-0.91--1.56)x(4.98+5.02)/2	3.25		
		(-0.47--0.91)x(4.96+4.98)/2	2.19		
		(0.32--0.47)x(4.89+4.96)/2	3.89		
		(0.62-0.32)x(4.87+4.89)/2	1.46		
		(0.80-0.62)x(4.86+4.87)/2	0.88		
		(1.71-0.80)x(4.81+4.86)/2	4.40		
		(2.51-1.71)x(4.79+4.81)/2	3.84		
		(2.80-2.51)x(4.78+4.79)/2	1.39		
		(3.33-2.80)x(4.76+4.78)/2	2.53		
		(3.89-3.33)x(4.75+4.76)/2	2.66		
		(4.22-3.89)x(4.74+4.75)/2	1.57		
		(4.99-4.22)x(4.72+4.74)/2	3.64		
		(5.93-4.99)x(4.69+4.72)/2	4.42		
		(6.08-5.93)x(4.69+4.69)/2	0.70		
		(6.34-6.08)x(4.68+4.69)/2	1.22		
		(7.17-6.34)x(4.65+4.68)/2	3.87		
		(7.64-7.17)x(4.63+4.65)/2	2.18		
		(8.26-7.64)x(4.61+4.63)/2	2.86		
		(9.34-8.26)x(4.59+4.61)/2	4.97		
		(9.35-9.34)x(4.59+4.59)/2	0.05		
		(10.44-9.35)x(4.64+4.59)/2	5.03		
		(11.06-10.44)x(4.63+4.64)/2	2.87		
		(11.53-11.06)x(4.63+4.63)/2	2.18		
		(12.35-11.53)x(4.58+4.63)/2	3.78		
		(12.62-12.35)x(4.56+4.58)/2	1.23		
		(12.77-12.62)x(4.56+4.56)/2	0.68		
		(13.71-12.77)x(4.55+4.56)/2	4.28		
		(14.15-13.71)x(4.54+4.55)/2	2.00		
		(14.73-14.15)x(4.53+4.54)/2	2.63		
		(14.15-14.73)x(3.54+3.53)/2	-2.05		
		(13.71-14.15)x(3.55+3.54)/2	-1.56		
		(12.77-13.71)x(3.56+3.55)/2	-3.34		
		(12.62-12.77)x(3.56+3.56)/2	-0.53		
		(12.35-12.62)x(3.58+3.56)/2	-0.96		
		(11.53-12.35)x(3.63+3.58)/2	-2.96		
		(11.06-11.53)x(3.63+3.63)/2	-1.71		
		(10.44-11.06)x(3.64+3.63)/2	-2.25		
		(9.35-10.44)x(3.59+3.64)/2	-3.94		
		(9.34-9.35)x(3.59+3.59)/2	-0.04		
		(8.26-9.34)x(3.61+3.59)/2	-3.89		
		(7.64-8.26)x(3.63+3.61)/2	-2.24		
		(7.17-7.64)x(3.65+3.63)/2	-1.71		
		(6.34-7.17)x(3.68+3.65)/2	-3.04		
		(6.08-6.34)x(3.69+3.68)/2	-0.96		
		(5.93-6.08)x(3.69+3.69)/2	-0.55		
		(4.99-5.93)x(3.72+3.69)/2	-3.48		
		(4.22-4.99)x(3.74+3.72)/2	-2.87		
		(3.89-4.22)x(3.75+3.74)/2	-1.24		
		(3.33-3.89)x(3.76+3.75)/2	-2.10		
		(2.80-3.33)x(3.78+3.76)/2	-2.00		
		(2.51-2.80)x(3.79+3.78)/2	-1.10		
		(1.71-2.51)x(3.81+3.79)/2	-3.04		
		(0.80-1.71)x(3.86+3.81)/2	-3.49		
		(0.62-0.80)x(3.87+3.86)/2	-0.70		
		(0.32-0.62)x(3.89+3.87)/2	-1.16		
		(-0.47-0.32)x(3.96+3.89)/2	-3.10		
		(-0.91--0.47)x(3.98+3.96)/2	-1.75		
		(-1.56--0.91)x(4.02+3.98)/2	-2.60		
		(-2.63--1.56)x(4.06+4.02)/2	-4.32		
		(-2.65--2.63)x(4.06+4.06)/2	-0.08		
		(-2.69--2.65)x(4.06+4.06)/2	-0.16		
		(-3.74--2.69)x(4.10+4.06)/2	-4.28		
		(-4.26--3.74)x(4.13+4.10)/2	-2.14		
		(-4.83--4.26)x(4.15+4.13)/2	-2.36		
		(-5.70--4.83)x(4.38+4.15)/2	-3.71		
		(-5.92--5.70)x(4.44+4.38)/2	-0.97		
		(-6.05--5.92)x(4.47+4.44)/2	-0.58		
		(-6.77--6.05)x(4.69+4.47)/2	-3.30		
				21.50	
141	BO2	(-12.89--13.25)x(5.51+5.52)/2	1.99		
2100.00		(-12.46--12.89)x(5.51+5.51)/2	2.37		
		(-11.72--12.46)x(5.46+5.51)/2	4.06		
		(-11.37--11.72)x(5.44+5.46)/2	1.91		
		(-11.18--11.37)x(5.50+5.44)/2	1.04		
		(-10.61--11.18)x(5.60+5.50)/2	3.16		
		(-11.18--10.61)x(4.50+4.60)/2	-2.59		
		A RIPORTARE mq	11.94		

		CALCOLO DELLE AREE		Foglio n. 66
BONIFICA				
N. SEZIONE PROG.	FIG.	ELEMENTI DI CALCOLO	AREA ELEMENTARE mq	AREA FIGURA mq	NOTE
		RIPORTO mq	11.94		
		(-11.37--11.18)x(4.44+4.50)/2	-0.85		
		(-11.72--11.37)x(4.46+4.44)/2	-1.56		
		(-12.46--11.72)x(4.51+4.46)/2	-3.32		
		(-12.89--12.46)x(4.51+4.51)/2	-1.94		
		(-13.25--12.89)x(4.52+4.51)/2	-1.63		
				2.64	
142	BO1	(-10.73--11.02)x(5.29+5.30)/2	1.54		
2115.00		(-10.27--10.73)x(5.26+5.29)/2	2.43		
		(-10.05--10.27)x(5.26+5.26)/2	1.16		
		(-9.45--10.05)x(5.24+5.26)/2	3.15		
		(-9.25--9.45)x(5.23+5.24)/2	1.05		
		(-9.18--9.25)x(5.23+5.23)/2	0.37		
		(-9.02--9.18)x(5.23+5.23)/2	0.84		
		(-8.09--9.02)x(5.22+5.23)/2	4.86		
		(-7.31--8.09)x(5.21+5.22)/2	4.07		
		(-7.00--7.31)x(5.20+5.21)/2	1.61		
		(-6.44--7.00)x(5.20+5.20)/2	2.91		
		(-5.90--6.44)x(5.20+5.20)/2	2.81		
		(-5.60--5.90)x(5.20+5.20)/2	1.56		
		(-4.81--5.60)x(5.18+5.20)/2	4.10		
		(-3.89--4.81)x(5.19+5.18)/2	4.77		
		(-3.72--3.89)x(5.19+5.19)/2	0.88		
		(-3.43--3.72)x(5.19+5.19)/2	1.51		
		(-2.63--3.43)x(5.21+5.19)/2	4.16		
		(-2.18--2.63)x(5.21+5.21)/2	2.34		
		(-1.54--2.18)x(5.21+5.21)/2	3.33		
		(-0.47--1.54)x(5.17+5.21)/2	5.55		
		(-0.45--0.47)x(5.17+5.17)/2	0.10		
		(-0.42--0.45)x(5.17+5.17)/2	0.16		
		(0.64--0.42)x(5.15+5.17)/2	5.47		
		(1.24-0.64)x(5.13+5.15)/2	3.08		
		(1.73-1.24)x(5.10+5.13)/2	2.51		
		(2.59-1.73)x(5.07+5.10)/2	4.37		
		(2.82-2.59)x(5.06+5.07)/2	1.16		
		(2.95-2.82)x(5.06+5.06)/2	0.66		
		(3.91-2.95)x(5.03+5.06)/2	4.84		
		(4.66-3.91)x(5.02+5.03)/2	3.77		
		(5.00-4.66)x(5.01+5.02)/2	1.71		
		(5.60-5.00)x(5.01+5.01)/2	3.01		
		(6.09-5.60)x(5.01+5.01)/2	2.45		
		(6.37-6.09)x(5.00+5.01)/2	1.40		
		(7.18-6.37)x(4.97+5.00)/2	4.04		
		(8.08-7.18)x(4.92+4.97)/2	4.45		
		(8.27-8.08)x(4.92+4.92)/2	0.93		
		(8.36-8.27)x(4.91+4.92)/2	0.44		
		(8.60-8.36)x(4.91+4.91)/2	1.18		
		(9.16-8.60)x(4.89+4.91)/2	2.74		
		(9.36-9.16)x(4.89+4.89)/2	0.98		
		(9.79-9.36)x(4.88+4.89)/2	2.10		
		(10.45-9.79)x(4.88+4.88)/2	3.22		
		(11.50-10.45)x(4.78+4.88)/2	5.07		
		(11.54-11.50)x(4.78+4.78)/2	0.19		
		(11.61-11.54)x(4.77+4.78)/2	0.33		
		(12.63-11.61)x(4.72+4.77)/2	4.84		
		(13.22-12.63)x(4.72+4.72)/2	2.78		
		(13.73-13.22)x(4.71+4.72)/2	2.40		
		(14.62-13.73)x(4.71+4.71)/2	4.19		
		(14.82-14.62)x(4.71+4.71)/2	0.94		
		(14.93-14.82)x(4.70+4.71)/2	0.52		
		(15.71-14.93)x(4.68+4.70)/2	3.66		
		(14.93-15.71)x(3.70+3.68)/2	-2.88		
		(14.82-14.93)x(3.71+3.70)/2	-0.41		
		(14.62-14.82)x(3.71+3.71)/2	-0.74		
		(13.73-14.62)x(3.71+3.71)/2	-3.30		
		(13.22-13.73)x(3.72+3.71)/2	-1.89		
		(12.63-13.22)x(3.72+3.72)/2	-2.19		
		(11.61-12.63)x(3.77+3.72)/2	-3.82		
		(11.54-11.61)x(3.78+3.77)/2	-0.26		
		(11.50-11.54)x(3.78+3.78)/2	-0.15		
		(10.45-11.50)x(3.88+3.78)/2	-4.02		
		(9.79-10.45)x(3.88+3.88)/2	-2.56		
		(9.36-9.79)x(3.89+3.88)/2	-1.67		
		(9.16-9.36)x(3.89+3.89)/2	-0.78		
		(8.60-9.16)x(3.91+3.89)/2	-2.18		
		(8.36-8.60)x(3.91+3.91)/2	-0.94		
		(8.27-8.36)x(3.92+3.91)/2	-0.35		
		(8.08-8.27)x(3.92+3.92)/2	-0.74		
		(7.18-8.08)x(3.97+3.92)/2	-3.55		
		(6.37-7.18)x(4.00+3.97)/2	-3.23		
		(6.09-6.37)x(4.01+4.00)/2	-1.12		
		(5.60-6.09)x(4.01+4.01)/2	-1.96		
		(5.00-5.60)x(4.01+4.01)/2	-2.41		
		(4.66-5.00)x(4.02+4.01)/2	-1.37		
		(3.91-4.66)x(4.03+4.02)/2	-3.02		
		(2.95-3.91)x(4.06+4.03)/2	-3.88		
		(2.82-2.95)x(4.06+4.06)/2	-0.53		
		(2.59-2.82)x(4.07+4.06)/2	-0.93		
		(1.73-2.59)x(4.10+4.07)/2	-3.51		
		(1.24-1.73)x(4.13+4.10)/2	-2.02		
		(0.64-1.24)x(4.15+4.13)/2	-2.48		
		(-0.42-0.64)x(4.17+4.15)/2	-4.41		
		(-0.45--0.42)x(4.17+4.17)/2	-0.13		
		(-0.47--0.45)x(4.17+4.17)/2	-0.08		
		(-1.54--0.47)x(4.21+4.17)/2	-4.48		
		(-2.18--1.54)x(4.21+4.21)/2	-2.69		
		(-2.63--2.18)x(4.21+4.21)/2	-1.89		
		(-3.43--2.63)x(4.19+4.21)/2	-3.36		
		(-3.72--3.43)x(4.19+4.19)/2	-1.22		
		(-3.89--3.72)x(4.19+4.19)/2	-0.71		
		(-4.81--3.89)x(4.18+4.19)/2	-3.85		
		(-5.60--4.81)x(4.20+4.18)/2	-3.31		
		(-5.90--5.60)x(4.20+4.20)/2	-1.26		
		(-6.44--5.90)x(4.20+4.20)/2	-2.27		
		(-7.00--6.44)x(4.20+4.20)/2	-2.35		
		A RIPORTARE mq	43.79		

		CALCOLO DELLE AREE		Foglio n. 67	
BONIFICA					
N. SEZIONE PROG.	FIG.	ELEMENTI DI CALCOLO	AREA ELEMENTARE mq	AREA FIGURA mq	NOTE
		RIPORTO mq	43.79		
		(-7.31--7.00)x(4.21+4.20)/2	-1.30		
		(-8.09--7.31)x(4.22+4.21)/2	-3.29		
		(-9.02--8.09)x(4.23+4.22)/2	-3.93		
		(-9.18--9.02)x(4.23+4.23)/2	-0.68		
		(-9.25--9.18)x(4.23+4.23)/2	-0.30		
		(-9.45--9.25)x(4.24+4.23)/2	-0.85		
		(-10.05--9.45)x(4.26+4.24)/2	-2.55		
		(-10.27--10.05)x(4.26+4.26)/2	-0.94		
		(-10.73--10.27)x(4.29+4.26)/2	-1.97		
		(-11.02--10.73)x(4.30+4.29)/2	-1.25		
				26.73	
142	BO2	(-14.63--14.66)x(5.38+5.38)/2	0.16		
2115.00		(-14.16--14.63)x(5.37+5.38)/2	2.53		
		(-13.54--14.16)x(5.38+5.37)/2	3.33		
		(-13.24--13.54)x(5.37+5.38)/2	1.61		
		(-13.54--13.24)x(4.38+4.37)/2	-1.31		
		(-14.16--13.54)x(4.37+4.38)/2	-2.71		
		(-14.63--14.16)x(4.38+4.37)/2	-2.06		
		(-14.66--14.63)x(4.38+4.38)/2	-0.13		
				1.42	
143	BO1	(-2.62--3.05)x(5.14+5.25)/2	2.23		
2130.00		(-1.74--2.62)x(5.17+5.14)/2	4.54		
		(-1.53--1.74)x(5.17+5.17)/2	1.09		
		(-1.16--1.53)x(5.18+5.17)/2	1.91		
		(-0.44--1.16)x(5.18+5.18)/2	3.73		
		(-0.03--0.44)x(5.17+5.18)/2	2.12		
		(0.65--0.03)x(5.17+5.17)/2	3.52		
		(1.69-0.65)x(5.12+5.17)/2	5.35		
		(1.74-1.69)x(5.11+5.12)/2	0.26		
		(1.85-1.74)x(5.10+5.11)/2	0.56		
		(2.84-1.85)x(5.02+5.10)/2	5.01		
		(3.37-2.84)x(4.99+5.02)/2	2.65		
		(3.93-3.37)x(4.98+4.99)/2	2.79		
		(4.86-3.93)x(4.97+4.98)/2	4.63		
		(5.02-4.86)x(4.97+4.97)/2	0.80		
		(5.11-5.02)x(4.98+4.97)/2	0.45		
		(6.11-5.11)x(5.00+4.98)/2	4.99		
		(6.82-6.11)x(5.00+5.00)/2	3.55		
		(7.20-6.82)x(5.00+5.00)/2	1.90		
		(7.87-7.20)x(4.99+5.00)/2	3.35		
		(8.29-7.87)x(4.98+4.99)/2	2.09		
		(8.53-8.29)x(4.97+4.98)/2	1.19		
		(9.38-8.53)x(4.93+4.97)/2	4.21		
		(10.24-9.38)x(4.90+4.93)/2	4.23		
		(10.47-10.24)x(4.89+4.90)/2	1.13		
		(10.87-10.47)x(4.87+4.89)/2	1.95		
		(11.56-10.87)x(4.82+4.87)/2	3.34		
		(11.95-11.56)x(4.79+4.82)/2	1.87		
		(12.65-11.95)x(4.75+4.79)/2	3.34		
		(13.66-12.65)x(4.75+4.75)/2	4.80		
		(13.74-13.66)x(4.75+4.75)/2	0.38		
		(13.88-13.74)x(4.75+4.75)/2	0.67		
		(14.83-13.88)x(4.76+4.75)/2	4.52		
		(15.37-14.83)x(4.75+4.76)/2	2.57		
		(15.92-15.37)x(4.74+4.75)/2	2.61		
		(16.89-15.92)x(4.74+4.74)/2	4.60		
		(16.97-16.89)x(4.74+4.74)/2	0.38		
		(16.89-16.97)x(3.74+3.74)/2	-0.30		
		(15.92-16.89)x(3.74+3.74)/2	-3.63		
		(15.37-15.92)x(3.75+3.74)/2	-2.06		
		(14.83-15.37)x(3.76+3.75)/2	-2.03		
		(13.88-14.83)x(3.75+3.76)/2	-3.57		
		(13.74-13.88)x(3.75+3.75)/2	-0.53		
		(13.66-13.74)x(3.75+3.75)/2	-0.30		
		(12.65-13.66)x(3.75+3.75)/2	-3.79		
		(11.95-12.65)x(3.79+3.75)/2	-2.64		
		(11.56-11.95)x(3.82+3.79)/2	-1.48		
		(10.87-11.56)x(3.87+3.82)/2	-2.65		
		(10.47-10.87)x(3.89+3.87)/2	-1.55		
		(10.24-10.47)x(3.90+3.89)/2	-0.90		
		(9.38-10.24)x(3.93+3.90)/2	-3.37		
		(8.53-9.38)x(3.97+3.93)/2	-3.36		
		(8.29-8.53)x(3.98+3.97)/2	-0.95		
		(7.87-8.29)x(3.99+3.98)/2	-1.67		
		(7.20-7.87)x(4.00+3.99)/2	-2.68		
		(6.82-7.20)x(4.00+4.00)/2	-1.52		
		(6.11-6.82)x(4.00+4.00)/2	-2.84		
		(5.11-6.11)x(3.98+4.00)/2	-3.99		
		(5.02-5.11)x(3.97+3.98)/2	-0.36		
		(4.86-5.02)x(3.97+3.97)/2	-0.64		
		(3.93-4.86)x(3.98+3.97)/2	-3.70		
		(3.37-3.93)x(3.99+3.98)/2	-2.23		
		(2.84-3.37)x(4.02+3.99)/2	-2.12		
		(1.85-2.84)x(4.10+4.02)/2	-4.02		
		(1.74-1.85)x(4.11+4.10)/2	-0.45		
		(1.69-1.74)x(4.12+4.11)/2	-0.21		
		(0.65-1.69)x(4.17+4.12)/2	-4.31		
		(-0.03-0.65)x(4.17+4.17)/2	-2.84		
		(-0.44--0.03)x(4.18+4.17)/2	-1.71		
		(-1.16--0.44)x(4.18+4.18)/2	-3.01		
		(-1.53--1.16)x(4.17+4.18)/2	-1.54		
		(-1.74--1.53)x(4.17+4.17)/2	-0.88		
		(-2.62--1.74)x(4.14+4.17)/2	-3.66		
		(-3.05--2.62)x(4.25+4.14)/2	-1.80		
				20.02	
144	BO1	(15.81-14.91)x(4.97+5.01)/2	4.49		
2145.00		(15.94-15.81)x(4.96+4.97)/2	0.65		
		(15.99-15.94)x(4.95+4.96)/2	0.25		
		(16.15-15.99)x(4.95+4.95)/2	0.79		
		(16.35-16.15)x(4.93+4.95)/2	0.99		
		(16.15-16.35)x(3.95+3.93)/2	-0.79		
		(15.99-16.15)x(3.95+3.95)/2	-0.63		
		(15.94-15.99)x(3.96+3.95)/2	-0.20		
		(15.81-15.94)x(3.97+3.96)/2	-0.52		
		A RIPORTARE mq	5.03		

		CALCOLO DELLE AREE		Foglio n. 68
BONIFICA				

N. SEZIONE PROG.	FIG.	ELEMENTI DI CALCOLO	AREA ELEMENTARE mq	AREA FIGURA mq	NOTE
		RIPORTO mq	5.03		
		(14.91-15.81)x(4.01+3.97)/2	-3.59		
				1.44	
144	BO2	(-0.42--0.72)x(5.06+5.09)/2	1.52		
2145.00		(0.42--0.42)x(5.04+5.06)/2	4.24		
		(0.67-0.42)x(5.04+5.04)/2	1.26		
		(1.11-0.67)x(5.04+5.04)/2	2.22		
		(1.76-1.11)x(5.04+5.04)/2	3.28		
		(2.13-1.76)x(5.03+5.04)/2	1.86		
		(2.85-2.13)x(5.02+5.03)/2	3.62		
		(3.35-2.85)x(5.02+5.02)/2	2.51		
		(2.85-3.35)x(4.02+4.02)/2	-2.01		
		(2.13-2.85)x(4.03+4.02)/2	-2.90		
		(1.76-2.13)x(4.04+4.03)/2	-1.49		
		(1.11-1.76)x(4.04+4.04)/2	-2.63		
		(0.67-1.11)x(4.04+4.04)/2	-1.78		
		(0.42-0.67)x(4.04+4.04)/2	-1.01		
		(-0.42-0.42)x(4.06+4.04)/2	-3.40		
		(-0.72--0.42)x(4.09+4.06)/2	-1.22		
				4.07	
145	BO1	(13.77-13.19)x(4.84+4.89)/2	2.82		
2160.00		(14.55-13.77)x(4.85+4.84)/2	3.78		
		(14.58-14.55)x(4.85+4.85)/2	0.15		
		(14.55-14.58)x(3.85+3.85)/2	-0.12		
		(13.77-14.55)x(3.84+3.85)/2	-3.00		
		(13.19-13.77)x(3.89+3.84)/2	-2.24		
				1.39	
152	BO1	(11.70-11.45)x(4.61+4.62)/2	1.15		
2265.00		(12.53-11.70)x(4.62+4.61)/2	3.83		
		(12.79-12.53)x(4.62+4.62)/2	1.20		
		(12.80-12.79)x(4.62+4.62)/2	0.05		
		(12.79-12.80)x(3.62+3.62)/2	-0.04		
		(12.53-12.79)x(3.62+3.62)/2	-0.94		
		(11.70-12.53)x(3.61+3.62)/2	-3.00		
		(11.45-11.70)x(3.62+3.61)/2	-0.90		
				1.35	
152	BO2	(-12.29--12.88)x(4.50+4.57)/2	2.68		
2265.00		(-11.55--12.29)x(4.49+4.50)/2	3.33		
		(-12.29--11.55)x(3.50+3.49)/2	-2.59		
		(-12.88--12.29)x(3.57+3.50)/2	-2.09		
				1.33	
154	BO1	(-2.45--2.54)x(4.66+4.67)/2	0.42		
2295.00		(-1.98--2.45)x(4.65+4.66)/2	2.19		
		(-1.36--1.98)x(4.64+4.65)/2	2.88		
		(-0.27--1.36)x(4.65+4.64)/2	5.06		
		(-0.26--0.27)x(4.65+4.65)/2	0.05		
		(0.53--0.26)x(4.63+4.65)/2	3.67		
		(0.82-0.53)x(4.61+4.63)/2	1.34		
		(1.44-0.82)x(4.58+4.61)/2	2.85		
		(1.91-1.44)x(4.54+4.58)/2	2.14		
		(2.74-1.91)x(4.52+4.54)/2	3.76		
		(3.00-2.74)x(4.52+4.52)/2	1.18		
		(3.15-3.00)x(4.51+4.52)/2	0.68		
		(4.09-3.15)x(4.48+4.51)/2	4.23		
		(4.86-4.09)x(4.45+4.48)/2	3.44		
		(5.19-4.86)x(4.44+4.45)/2	1.47		
		(5.75-5.19)x(4.48+4.44)/2	2.50		
		(6.28-5.75)x(4.54+4.48)/2	2.39		
		(6.54-6.28)x(4.57+4.54)/2	1.18		
		(6.28-6.54)x(3.54+3.57)/2	-0.92		
		(5.75-6.28)x(3.48+3.54)/2	-1.86		
		(5.19-5.75)x(3.44+3.48)/2	-1.94		
		(4.86-5.19)x(3.45+3.44)/2	-1.14		
		(4.09-4.86)x(3.48+3.45)/2	-2.67		
		(3.15-4.09)x(3.51+3.48)/2	-3.29		
		(3.00-3.15)x(3.52+3.51)/2	-0.53		
		(2.74-3.00)x(3.52+3.52)/2	-0.92		
		(1.91-2.74)x(3.54+3.52)/2	-2.93		
		(1.44-1.91)x(3.58+3.54)/2	-1.67		
		(0.82-1.44)x(3.61+3.58)/2	-2.23		
		(0.53-0.82)x(3.63+3.61)/2	-1.05		
		(-0.26-0.53)x(3.65+3.63)/2	-2.88		
		(-0.27--0.26)x(3.65+3.65)/2	-0.04		
		(-1.36--0.27)x(3.64+3.65)/2	-3.97		
		(-1.98--1.36)x(3.65+3.64)/2	-2.26		
		(-2.45--1.98)x(3.66+3.65)/2	-1.72		
		(-2.54--2.45)x(3.67+3.66)/2	-0.33		
				9.08	
155	BO1	(-4.01--4.28)x(4.65+4.65)/2	1.26		
2310.00		(-3.52--4.01)x(4.65+4.65)/2	2.28		
		(-3.25--3.52)x(4.65+4.65)/2	1.26		
		(-2.43--3.25)x(4.65+4.65)/2	3.81		
		(-1.54--2.43)x(4.64+4.65)/2	4.13		
		(-1.34--1.54)x(4.63+4.64)/2	0.93		
		(-1.00--1.34)x(4.62+4.63)/2	1.57		
		(-0.25--1.00)x(4.59+4.62)/2	3.45		
		(0.17--0.25)x(4.56+4.59)/2	1.92		
		(0.84-0.17)x(4.53+4.56)/2	3.05		
		(1.89-0.84)x(4.48+4.53)/2	4.73		
		(1.93-1.89)x(4.48+4.48)/2	0.18		
		(2.01-1.93)x(4.48+4.48)/2	0.36		
		(3.02-2.01)x(4.46+4.48)/2	4.51		
		(3.60-3.02)x(4.45+4.46)/2	2.58		
		(4.11-3.60)x(4.45+4.45)/2	2.27		
		(5.01-4.11)x(4.44+4.45)/2	4.00		
		(5.20-5.01)x(4.43+4.44)/2	0.84		
		(5.31-5.20)x(4.43+4.43)/2	0.49		
		(6.29-5.31)x(4.42+4.43)/2	4.34		
		(7.02-6.29)x(4.41+4.42)/2	3.22		
		(7.38-7.02)x(4.41+4.41)/2	1.59		
		(8.02-7.38)x(4.42+4.41)/2	2.83		
		(8.47-8.02)x(4.43+4.42)/2	1.99		
		(8.73-8.47)x(4.43+4.43)/2	1.15		
		(9.56-8.73)x(4.43+4.43)/2	3.68		
		(10.44-9.56)x(4.42+4.43)/2	3.89		
		A RIPORTARE mq	66.31		

		CALCOLO DELLE AREE		Foglio n. 69
BONIFICA				
N. SEZIONE PROG.	FIG.	ELEMENTI DI CALCOLO	AREA ELEMENTARE mq	AREA FIGURA mq	NOTE
		RIPORTO mq	66.31		
		(10.65-10.44)x(4.42+4.42)/2	0.93		
		(11.03-10.65)x(4.42+4.42)/2	1.68		
		(11.74-11.03)x(4.41+4.42)/2	3.13		
		(12.15-11.74)x(4.40+4.41)/2	1.81		
		(12.83-12.15)x(4.38+4.40)/2	2.99		
		(13.16-12.83)x(4.38+4.38)/2	1.45		
		(13.30-13.16)x(4.38+4.38)/2	0.61		
		(13.16-13.30)x(3.38+3.38)/2	-0.47		
		(12.83-13.16)x(3.38+3.38)/2	-1.12		
		(12.15-12.83)x(3.40+3.38)/2	-2.31		
		(11.74-12.15)x(3.41+3.40)/2	-1.40		
		(11.03-11.74)x(3.42+3.41)/2	-2.42		
		(10.65-11.03)x(3.42+3.42)/2	-1.30		
		(10.44-10.65)x(3.42+3.42)/2	-0.72		
		(9.56-10.44)x(3.43+3.42)/2	-3.01		
		(8.73-9.56)x(3.43+3.43)/2	-2.85		
		(8.47-8.73)x(3.43+3.43)/2	-0.89		
		(8.02-8.47)x(3.42+3.43)/2	-1.54		
		(7.38-8.02)x(3.41+3.42)/2	-2.19		
		(7.02-7.38)x(3.41+3.41)/2	-1.23		
		(6.29-7.02)x(3.42+3.41)/2	-2.49		
		(5.31-6.29)x(3.43+3.42)/2	-3.36		
		(5.20-5.31)x(3.43+3.43)/2	-0.38		
		(5.01-5.20)x(3.44+3.43)/2	-0.65		
		(4.11-5.01)x(3.45+3.44)/2	-3.10		
		(3.60-4.11)x(3.45+3.45)/2	-1.76		
		(3.02-3.60)x(3.46+3.45)/2	-2.00		
		(2.01-3.02)x(3.48+3.46)/2	-3.50		
		(1.93-2.01)x(3.48+3.48)/2	-0.28		
		(1.89-1.93)x(3.48+3.48)/2	-0.14		
		(0.84-1.89)x(3.53+3.48)/2	-3.68		
		(0.17-0.84)x(3.56+3.53)/2	-2.38		
		(-0.25-0.17)x(3.59+3.56)/2	-1.50		
		(-1.00--0.25)x(3.62+3.59)/2	-2.70		
		(-1.34--1.00)x(3.63+3.62)/2	-1.23		
		(-1.54--1.34)x(3.64+3.63)/2	-0.73		
		(-2.43--1.54)x(3.65+3.64)/2	-3.24		
		(-3.25--2.43)x(3.65+3.65)/2	-2.99		
		(-3.52--3.25)x(3.65+3.65)/2	-0.99		
		(-4.01--3.52)x(3.65+3.65)/2	-1.79		
		(-4.28--4.01)x(3.65+3.65)/2	-0.99		
				17.58	
156 2325.00	BO1	(-6.78--7.43)x(4.59+4.61)/2	2.99		
		(-6.22--6.78)x(4.57+4.59)/2	2.56		
		(-5.69--6.22)x(4.57+4.57)/2	2.42		
		(-4.75--5.69)x(4.56+4.57)/2	4.29		
		(-4.60--4.75)x(4.55+4.56)/2	0.68		
		(-4.51--4.60)x(4.55+4.55)/2	0.41		
		(-3.51--4.51)x(4.51+4.55)/2	4.53		
		(-2.80--3.51)x(4.48+4.51)/2	3.19		
		(-2.42--2.80)x(4.46+4.48)/2	1.70		
		(-1.74--2.42)x(4.45+4.46)/2	3.03		
		(-1.33--1.74)x(4.45+4.45)/2	1.82		
		(-1.09--1.33)x(4.45+4.45)/2	1.07		
		(-0.24--1.09)x(4.48+4.45)/2	3.80		
		(0.62--0.24)x(4.50+4.48)/2	3.86		
		(0.85-0.62)x(4.50+4.50)/2	1.03		
		(1.27-0.85)x(4.50+4.50)/2	1.89		
		(1.94-1.27)x(4.49+4.50)/2	3.01		
		(2.33-1.94)x(4.49+4.49)/2	1.75		
		(3.03-2.33)x(4.48+4.49)/2	3.14		
		(4.04-3.03)x(4.48+4.48)/2	4.52		
		(4.13-4.04)x(4.48+4.48)/2	0.40		
		(4.28-4.13)x(4.48+4.48)/2	0.67		
		(5.22-4.28)x(4.48+4.48)/2	4.21		
		(5.75-5.22)x(4.50+4.48)/2	2.38		
		(6.31-5.75)x(4.51+4.50)/2	2.52		
		(7.28-6.31)x(4.51+4.51)/2	4.37		
		(7.40-7.28)x(4.51+4.51)/2	0.54		
		(8.17-7.40)x(4.51+4.51)/2	3.47		
		(8.49-8.17)x(4.50+4.51)/2	1.44		
		(9.17-8.49)x(4.49+4.50)/2	3.06		
		(9.58-9.17)x(4.48+4.49)/2	1.84		
		(10.29-9.58)x(4.45+4.48)/2	3.17		
		(10.67-10.29)x(4.44+4.45)/2	1.69		
		(10.88-10.67)x(4.44+4.44)/2	0.93		
		(11.76-10.88)x(4.41+4.44)/2	3.89		
		(12.59-11.76)x(4.40+4.41)/2	3.66		
		(12.85-12.59)x(4.40+4.40)/2	1.14		
		(13.30-12.85)x(4.39+4.40)/2	1.98		
		(13.34-13.30)x(4.39+4.39)/2	0.18		
		(13.30-13.34)x(3.39+3.39)/2	-0.14		
		(12.85-13.30)x(3.40+3.39)/2	-1.53		
		(12.59-12.85)x(3.40+3.40)/2	-0.88		
		(11.76-12.59)x(3.41+3.40)/2	-2.83		
		(10.88-11.76)x(3.44+3.41)/2	-3.01		
		(10.67-10.88)x(3.44+3.44)/2	-0.72		
		(10.29-10.67)x(3.45+3.44)/2	-1.31		
		(9.58-10.29)x(3.48+3.45)/2	-2.46		
		(9.17-9.58)x(3.49+3.48)/2	-1.43		
		(8.49-9.17)x(3.50+3.49)/2	-2.38		
		(8.17-8.49)x(3.51+3.50)/2	-1.12		
		(7.40-8.17)x(3.51+3.51)/2	-2.70		
		(7.28-7.40)x(3.51+3.51)/2	-0.42		
		(6.31-7.28)x(3.51+3.51)/2	-3.40		
		(5.75-6.31)x(3.50+3.51)/2	-1.96		
		(5.22-5.75)x(3.48+3.50)/2	-1.85		
		(4.28-5.22)x(3.48+3.48)/2	-3.27		
		(4.13-4.28)x(3.48+3.48)/2	-0.52		
		(4.04-4.13)x(3.48+3.48)/2	-0.31		
		(3.03-4.04)x(3.48+3.48)/2	-3.51		
		(2.33-3.03)x(3.49+3.48)/2	-2.44		
		(1.94-2.33)x(3.49+3.49)/2	-1.36		
		(1.27-1.94)x(3.50+3.49)/2	-2.34		
		A RIPORTARE mq	51.34		

		CALCOLO DELLE AREE		Foglio n. 70
BONIFICA				
N. SEZIONE PROG.	FIG.	ELEMENTI DI CALCOLO	AREA ELEMENTARE mq	AREA FIGURA mq	NOTE
		RIPORTO mq	51.34		
		(0.85-1.27)x(3.50+3.50)/2	-1.47		
		(0.62-0.85)x(3.50+3.50)/2	-0.80		
		(-0.24-0.62)x(3.48+3.50)/2	-3.00		
		(-1.09--0.24)x(3.45+3.48)/2	-2.95		
		(-1.33--1.09)x(3.45+3.45)/2	-0.83		
		(-1.74--1.33)x(3.45+3.45)/2	-1.41		
		(-2.42--1.74)x(3.46+3.45)/2	-2.35		
		(-2.80--2.42)x(3.48+3.46)/2	-1.32		
		(-3.51--2.80)x(3.51+3.48)/2	-2.48		
		(-4.51--3.51)x(3.55+3.51)/2	-3.53		
		(-4.60--4.51)x(3.55+3.55)/2	-0.32		
		(-4.75--4.60)x(3.56+3.55)/2	-0.53		
		(-5.69--4.75)x(3.57+3.56)/2	-3.35		
		(-6.22--5.69)x(3.57+3.57)/2	-1.89		
		(-6.78--6.22)x(3.59+3.57)/2	-2.00		
		(-7.43--6.78)x(3.61+3.59)/2	-2.34		
				20.77	
157	BO1	(-7.86--8.10)x(4.62+4.62)/2	1.11		
2340.00		(-7.49--7.86)x(4.62+4.62)/2	1.71		
		(-6.76--7.49)x(4.62+4.62)/2	3.37		
		(-5.78--6.76)x(4.63+4.62)/2	4.53		
		(-5.67--5.78)x(4.63+4.63)/2	0.51		
		(-5.49--5.67)x(4.63+4.63)/2	0.83		
		(-4.58--5.49)x(4.60+4.63)/2	4.20		
		(-4.07--4.58)x(4.58+4.60)/2	2.34		
		(-3.49--4.07)x(4.57+4.58)/2	2.65		
		(-2.48--3.49)x(4.57+4.57)/2	4.62		
		(-2.40--2.48)x(4.57+4.57)/2	0.37		
		(-2.36--2.40)x(4.56+4.57)/2	0.18		
		(-1.31--2.36)x(4.54+4.56)/2	4.78		
		(-0.65--1.31)x(4.53+4.54)/2	2.99		
		(-0.22--0.65)x(4.52+4.53)/2	1.95		
		(0.53--0.22)x(4.48+4.52)/2	3.38		
		(0.87-0.53)x(4.46+4.48)/2	1.52		
		(1.06-0.87)x(4.46+4.46)/2	0.85		
		(1.96-1.06)x(4.44+4.46)/2	4.00		
		(2.38-1.96)x(4.43+4.44)/2	1.86		
		(3.05-2.38)x(4.40+4.43)/2	2.96		
		(3.54-3.05)x(4.38+4.40)/2	2.15		
		(4.14-3.54)x(4.37+4.38)/2	2.62		
		(4.48-4.14)x(4.37+4.37)/2	1.49		
		(5.23-4.48)x(4.35+4.37)/2	3.27		
		(6.20-5.23)x(4.36+4.35)/2	4.22		
		(6.32-6.20)x(4.36+4.36)/2	0.52		
		(6.54-6.32)x(4.36+4.36)/2	0.96		
		(7.41-6.54)x(4.37+4.36)/2	3.80		
		(7.91-7.41)x(4.36+4.37)/2	2.18		
		(8.50-7.91)x(4.35+4.36)/2	2.57		
		(9.55-8.50)x(4.33+4.35)/2	4.56		
		(9.59-9.55)x(4.33+4.33)/2	0.17		
		(9.62-9.59)x(4.33+4.33)/2	0.13		
		(10.68-9.62)x(4.30+4.33)/2	4.57		
		(11.33-10.68)x(4.29+4.30)/2	2.79		
		(11.77-11.33)x(4.28+4.29)/2	1.89		
		(12.56-11.77)x(4.29+4.28)/2	3.39		
		(12.87-12.56)x(4.30+4.29)/2	1.33		
		(13.04-12.87)x(4.30+4.30)/2	0.73		
		(13.49-13.04)x(4.32+4.30)/2	1.94		
		(13.04-13.49)x(3.30+3.32)/2	-1.49		
		(12.87-13.04)x(3.30+3.30)/2	-0.56		
		(12.56-12.87)x(3.29+3.30)/2	-1.02		
		(11.77-12.56)x(3.28+3.29)/2	-2.60		
		(11.33-11.77)x(3.29+3.28)/2	-1.45		
		(10.68-11.33)x(3.30+3.29)/2	-2.14		
		(9.62-10.68)x(3.33+3.30)/2	-3.51		
		(9.59-9.62)x(3.33+3.33)/2	-0.10		
		(9.55-9.59)x(3.33+3.33)/2	-0.13		
		(8.50-9.55)x(3.35+3.33)/2	-3.51		
		(7.91-8.50)x(3.36+3.35)/2	-1.98		
		(7.41-7.91)x(3.37+3.36)/2	-1.68		
		(6.54-7.41)x(3.36+3.37)/2	-2.93		
		(6.32-6.54)x(3.36+3.36)/2	-0.74		
		(6.20-6.32)x(3.36+3.36)/2	-0.40		
		(5.23-6.20)x(3.35+3.36)/2	-3.25		
		(4.48-5.23)x(3.37+3.35)/2	-2.52		
		(4.14-4.48)x(3.37+3.37)/2	-1.15		
		(3.54-4.14)x(3.38+3.37)/2	-2.02		
		(3.05-3.54)x(3.40+3.38)/2	-1.66		
		(2.38-3.05)x(3.43+3.40)/2	-2.29		
		(1.96-2.38)x(3.44+3.43)/2	-1.44		
		(1.06-1.96)x(3.46+3.44)/2	-3.10		
		(0.87-1.06)x(3.46+3.46)/2	-0.66		
		(0.53-0.87)x(3.48+3.46)/2	-1.18		
		(-0.22-0.53)x(3.52+3.48)/2	-2.63		
		(-0.65--0.22)x(3.53+3.52)/2	-1.52		
		(-1.31--0.65)x(3.54+3.53)/2	-2.33		
		(-2.36--1.31)x(3.56+3.54)/2	-3.73		
		(-2.40--2.36)x(3.57+3.56)/2	-0.14		
		(-2.48--2.40)x(3.57+3.57)/2	-0.29		
		(-3.49--2.48)x(3.57+3.57)/2	-3.61		
		(-4.07--3.49)x(3.58+3.57)/2	-2.07		
		(-4.58--4.07)x(3.60+3.58)/2	-1.83		
		(-5.49--4.58)x(3.63+3.60)/2	-3.29		
		(-5.67--5.49)x(3.63+3.63)/2	-0.65		
		(-5.78--5.67)x(3.63+3.63)/2	-0.40		
		(-6.76--5.78)x(3.62+3.63)/2	-3.55		
		(-7.49--6.76)x(3.62+3.62)/2	-2.64		
		(-7.86--7.49)x(3.62+3.62)/2	-1.34		
		(-8.10--7.86)x(3.62+3.62)/2	-0.87		
				21.59	
158	BO1	(-11.11--11.31)x(4.55+4.57)/2	0.91		
2355.00		(-10.47--11.11)x(4.55+4.55)/2	2.91		
		(-10.02--10.47)x(4.54+4.55)/2	2.05		
		(-9.24--10.02)x(4.53+4.54)/2	3.54		
		A RIPORTARE mq	9.41		

		CALCOLO DELLE AREE		Foglio n. 71
BONIFICA				
N. SEZIONE PROG.	FIG.	ELEMENTI DI CALCOLO	AREA ELEMENTARE mq	AREA FIGURA mq	NOTE
		RIPORTO mq	9.41		
		(-8.93--9.24)x(4.53+4.53)/2	1.40		
		(-8.76--8.93)x(4.52+4.53)/2	0.77		
		(-7.84--8.76)x(4.50+4.52)/2	4.15		
		(-7.05--7.84)x(4.49+4.50)/2	3.55		
		(-6.75--7.05)x(4.49+4.49)/2	1.35		
		(-6.23--6.75)x(4.50+4.49)/2	2.34		
		(-5.66--6.23)x(4.51+4.50)/2	2.57		
		(-5.33--5.66)x(4.50+4.51)/2	1.49		
		(-4.57--5.33)x(4.49+4.50)/2	3.42		
		(-3.62--4.57)x(4.50+4.49)/2	4.27		
		(-3.48--3.62)x(4.50+4.50)/2	0.63		
		(-3.41--3.48)x(4.50+4.50)/2	0.31		
		(-3.22--3.41)x(4.49+4.50)/2	0.85		
		(-2.61--3.22)x(4.46+4.49)/2	2.73		
		(-2.39--2.61)x(4.46+4.46)/2	0.98		
		(-1.91--2.39)x(4.45+4.46)/2	2.14		
		(-1.30--1.91)x(4.43+4.45)/2	2.71		
		(-0.21--1.30)x(4.36+4.43)/2	4.79		
		(-0.20--0.21)x(4.36+4.36)/2	0.04		
		(0.88--0.20)x(4.34+4.36)/2	4.70		
		(1.51-0.88)x(4.32+4.34)/2	2.73		
		(1.98-1.51)x(4.30+4.32)/2	2.03		
		(2.80-1.98)x(4.36+4.30)/2	3.55		
		(3.07-2.80)x(4.37+4.36)/2	1.18		
		(3.22-3.07)x(4.37+4.37)/2	0.66		
		(4.16-3.22)x(4.37+4.37)/2	4.11		
		(4.93-4.16)x(4.34+4.37)/2	3.35		
		(5.25-4.93)x(4.33+4.34)/2	1.39		
		(5.81-5.25)x(4.33+4.33)/2	2.42		
		(6.34-5.81)x(4.33+4.33)/2	2.29		
		(6.64-6.34)x(4.32+4.33)/2	1.30		
		(7.43-6.64)x(4.31+4.32)/2	3.41		
		(8.35-7.43)x(4.28+4.31)/2	3.95		
		(8.52-8.35)x(4.27+4.28)/2	0.73		
		(8.81-8.52)x(4.27+4.27)/2	1.24		
		(9.61-8.81)x(4.28+4.27)/2	3.42		
		(10.06-9.61)x(4.28+4.28)/2	1.93		
		(10.70-10.06)x(4.29+4.28)/2	2.74		
		(11.77-10.70)x(4.27+4.29)/2	4.58		
		(11.79-11.77)x(4.27+4.27)/2	0.09		
		(11.82-11.79)x(4.26+4.27)/2	0.13		
		(12.88-11.82)x(4.24+4.26)/2	4.51		
		(13.48-12.88)x(4.22+4.24)/2	2.54		
		(13.69-13.48)x(4.21+4.22)/2	0.89		
		(13.48-13.69)x(3.22+3.21)/2	-0.68		
		(12.88-13.48)x(3.24+3.22)/2	-1.94		
		(11.82-12.88)x(3.26+3.24)/2	-3.45		
		(11.79-11.82)x(3.27+3.26)/2	-0.10		
		(11.77-11.79)x(3.27+3.27)/2	-0.07		
		(10.70-11.77)x(3.29+3.27)/2	-3.51		
		(10.06-10.70)x(3.28+3.29)/2	-2.10		
		(9.61-10.06)x(3.28+3.28)/2	-1.48		
		(8.81-9.61)x(3.27+3.28)/2	-2.62		
		(8.52-8.81)x(3.27+3.27)/2	-0.95		
		(8.35-8.52)x(3.28+3.27)/2	-0.56		
		(7.43-8.35)x(3.31+3.28)/2	-3.03		
		(6.64-7.43)x(3.32+3.31)/2	-2.62		
		(6.34-6.64)x(3.33+3.32)/2	-1.00		
		(5.81-6.34)x(3.33+3.33)/2	-1.76		
		(5.25-5.81)x(3.33+3.33)/2	-1.86		
		(4.93-5.25)x(3.34+3.33)/2	-1.07		
		(4.16-4.93)x(3.37+3.34)/2	-2.58		
		(3.22-4.16)x(3.37+3.37)/2	-3.17		
		(3.07-3.22)x(3.37+3.37)/2	-0.51		
		(2.80-3.07)x(3.36+3.37)/2	-0.91		
		(1.98-2.80)x(3.30+3.36)/2	-2.73		
		(1.51-1.98)x(3.32+3.30)/2	-1.56		
		(0.88-1.51)x(3.34+3.32)/2	-2.10		
		(-0.20-0.88)x(3.36+3.34)/2	-3.62		
		(-0.21--0.20)x(3.36+3.36)/2	-0.03		
		(-1.30--0.21)x(3.43+3.36)/2	-3.70		
		(-1.91--1.30)x(3.45+3.43)/2	-2.10		
		(-2.39--1.91)x(3.46+3.45)/2	-1.66		
		(-2.61--2.39)x(3.46+3.46)/2	-0.76		
		(-3.22--2.61)x(3.49+3.46)/2	-2.12		
		(-3.41--3.22)x(3.50+3.49)/2	-0.66		
		(-3.48--3.41)x(3.50+3.50)/2	-0.24		
		(-3.62--3.48)x(3.50+3.50)/2	-0.49		
		(-4.57--3.62)x(3.49+3.50)/2	-3.32		
		(-5.33--4.57)x(3.50+3.49)/2	-2.66		
		(-5.66--5.33)x(3.51+3.50)/2	-1.16		
		(-6.23--5.66)x(3.50+3.51)/2	-2.00		
		(-6.75--6.23)x(3.49+3.50)/2	-1.82		
		(-7.05--6.75)x(3.49+3.49)/2	-1.05		
		(-7.84--7.05)x(3.50+3.49)/2	-2.76		
		(-8.76--7.84)x(3.52+3.50)/2	-3.23		
		(-8.93--8.76)x(3.53+3.52)/2	-0.60		
		(-9.24--8.93)x(3.53+3.53)/2	-1.09		
		(-10.02--9.24)x(3.54+3.53)/2	-2.76		
		(-10.47--10.02)x(3.55+3.54)/2	-1.60		
		(-11.11--10.47)x(3.55+3.55)/2	-2.27		
		(-11.31--11.11)x(3.57+3.55)/2	-0.71		
				25.00	
158 2355.00	BO2	(-12.25--12.98)x(4.64+4.68)/2	3.40		
		(-12.20--12.25)x(4.64+4.64)/2	0.23		
		(-12.18--12.20)x(4.64+4.64)/2	0.09		
		(-11.62--12.18)x(4.59+4.64)/2	2.58		
		(-12.18--11.62)x(3.64+3.59)/2	-2.02		
		(-12.20--12.18)x(3.64+3.64)/2	-0.07		
		(-12.25--12.20)x(3.64+3.64)/2	-0.18		
		(-12.98--12.25)x(3.68+3.64)/2	-2.67		
				1.36	
159 2370.00	BO1	(-13.44--13.61)x(4.29+4.29)/2	0.73		
		(-13.28--13.44)x(4.29+4.29)/2	0.69		
		A RIPORTARE mq	1.42		

		CALCOLO DELLE AREE		Foglio n. 72
BONIFICA				
N. SEZIONE PROG.	FIG.	ELEMENTI DI CALCOLO	AREA ELEMENTARE mq	AREA FIGURA mq	NOTE
		RIPORTO mq	1.42		
		(-12.98--13.28)x(4.30+4.29)/2	1.29		
		(-12.19--12.98)x(4.33+4.30)/2	3.41		
		(-11.73--12.19)x(4.36+4.33)/2	2.00		
		(-11.10--11.73)x(4.38+4.36)/2	2.75		
		(-10.02--11.10)x(4.37+4.38)/2	4.73		
		(-10.01--10.02)x(4.37+4.37)/2	0.04		
		(-9.98--10.01)x(4.37+4.37)/2	0.13		
		(-8.92--9.98)x(4.30+4.37)/2	4.60		
		(-8.40--8.92)x(4.26+4.30)/2	2.23		
		(-7.82--8.40)x(4.25+4.26)/2	2.47		
		(-6.97--7.82)x(4.24+4.25)/2	3.61		
		(-6.73--6.97)x(4.23+4.24)/2	1.02		
		(-6.60--6.73)x(4.23+4.23)/2	0.55		
		(-5.64--6.60)x(4.22+4.23)/2	4.06		
		(-4.89--5.64)x(4.25+4.22)/2	3.18		
		(-4.55--4.89)x(4.26+4.25)/2	1.45		
		(-3.96--4.55)x(4.27+4.26)/2	2.52		
		(-3.46--3.96)x(4.28+4.27)/2	2.14		
		(-3.18--3.46)x(4.28+4.28)/2	1.20		
		(-2.37--3.18)x(4.28+4.28)/2	3.47		
		(-1.47--2.37)x(4.28+4.28)/2	3.85		
		(-1.28--1.47)x(4.27+4.28)/2	0.81		
		(-0.95--1.28)x(4.29+4.27)/2	1.41		
		(-0.19--0.95)x(4.32+4.29)/2	3.27		
		(0.24--0.19)x(4.32+4.32)/2	1.86		
		(0.90-0.24)x(4.31+4.32)/2	2.85		
		(1.95-0.90)x(4.27+4.31)/2	4.50		
		(1.99-1.95)x(4.27+4.27)/2	0.17		
		(2.06-1.99)x(4.27+4.27)/2	0.30		
		(3.08-2.06)x(4.27+4.27)/2	4.36		
		(3.66-3.08)x(4.24+4.27)/2	2.47		
		(4.17-3.66)x(4.21+4.24)/2	2.15		
		(5.07-4.17)x(4.21+4.21)/2	3.79		
		(5.26-5.07)x(4.21+4.21)/2	0.80		
		(5.37-5.26)x(4.21+4.21)/2	0.46		
		(6.35-5.37)x(4.20+4.21)/2	4.12		
		(7.08-6.35)x(4.19+4.20)/2	3.06		
		(7.44-7.08)x(4.19+4.19)/2	1.51		
		(8.08-7.44)x(4.18+4.19)/2	2.68		
		(8.53-8.08)x(4.18+4.18)/2	1.88		
		(8.79-8.53)x(4.18+4.18)/2	1.09		
		(9.62-8.79)x(4.19+4.18)/2	3.47		
		(10.01-9.62)x(4.21+4.19)/2	1.64		
		(10.72-10.01)x(4.24+4.21)/2	3.00		
		(11.08-10.72)x(4.26+4.24)/2	1.53		
		(11.81-11.08)x(4.29+4.26)/2	3.12		
		(12.22-11.81)x(4.28+4.29)/2	1.76		
		(12.90-12.22)x(4.26+4.28)/2	2.90		
		(13.75-12.90)x(4.21+4.26)/2	3.60		
		(12.90-13.75)x(3.26+3.21)/2	-2.75		
		(12.22-12.90)x(3.28+3.26)/2	-2.22		
		(11.81-12.22)x(3.29+3.28)/2	-1.35		
		(11.08-11.81)x(3.26+3.29)/2	-2.39		
		(10.72-11.08)x(3.24+3.26)/2	-1.17		
		(10.01-10.72)x(3.21+3.24)/2	-2.29		
		(9.62-10.01)x(3.19+3.21)/2	-1.25		
		(8.79-9.62)x(3.18+3.19)/2	-2.64		
		(8.53-8.79)x(3.18+3.18)/2	-0.83		
		(8.08-8.53)x(3.18+3.18)/2	-1.43		
		(7.44-8.08)x(3.19+3.18)/2	-2.04		
		(7.08-7.44)x(3.19+3.19)/2	-1.15		
		(6.35-7.08)x(3.20+3.19)/2	-2.33		
		(5.37-6.35)x(3.21+3.20)/2	-3.14		
		(5.26-5.37)x(3.21+3.21)/2	-0.35		
		(5.07-5.26)x(3.21+3.21)/2	-0.61		
		(4.17-5.07)x(3.21+3.21)/2	-2.89		
		(3.66-4.17)x(3.24+3.21)/2	-1.64		
		(3.08-3.66)x(3.27+3.24)/2	-1.89		
		(2.06-3.08)x(3.27+3.27)/2	-3.34		
		(1.99-2.06)x(3.27+3.27)/2	-0.23		
		(1.95-1.99)x(3.27+3.27)/2	-0.13		
		(0.90-1.95)x(3.31+3.27)/2	-3.45		
		(0.24-0.90)x(3.32+3.31)/2	-2.19		
		(-0.19-0.24)x(3.32+3.32)/2	-1.43		
		(-0.95--0.19)x(3.29+3.32)/2	-2.51		
		(-1.28--0.95)x(3.27+3.29)/2	-1.08		
		(-1.47--1.28)x(3.28+3.27)/2	-0.62		
		(-2.37--1.47)x(3.28+3.28)/2	-2.95		
		(-3.18--2.37)x(3.28+3.28)/2	-2.66		
		(-3.46--3.18)x(3.28+3.28)/2	-0.92		
		(-3.96--3.46)x(3.27+3.28)/2	-1.64		
		(-4.55--3.96)x(3.26+3.27)/2	-1.93		
		(-4.89--4.55)x(3.25+3.26)/2	-1.11		
		(-5.64--4.89)x(3.22+3.25)/2	-2.43		
		(-6.60--5.64)x(3.23+3.22)/2	-3.10		
		(-6.73--6.60)x(3.23+3.23)/2	-0.42		
		(-6.97--6.73)x(3.24+3.23)/2	-0.78		
		(-7.82--6.97)x(3.25+3.24)/2	-2.76		
		(-8.40--7.82)x(3.26+3.25)/2	-1.89		
		(-8.92--8.40)x(3.30+3.26)/2	-1.71		
		(-9.98--8.92)x(3.37+3.30)/2	-3.54		
		(-10.01--9.98)x(3.37+3.37)/2	-0.10		
		(-10.02--10.01)x(3.37+3.37)/2	-0.03		
		(-11.10--10.02)x(3.38+3.37)/2	-3.65		
		(-11.73--11.10)x(3.36+3.38)/2	-2.12		
		(-12.19--11.73)x(3.33+3.36)/2	-1.54		
		(-12.98--12.19)x(3.30+3.33)/2	-2.62		
		(-13.28--12.98)x(3.29+3.30)/2	-0.99		
		(-13.44--13.28)x(3.29+3.29)/2	-0.53		
		(-13.61--13.44)x(3.29+3.29)/2	-0.56		
				27.36	
160 2385.00	B01	(-13.38--13.67)x(4.28+4.28)/2	1.24		
		(-13.26--13.38)x(4.28+4.28)/2	0.51		
		(-13.00--13.26)x(4.28+4.28)/2	1.11		
		A RIPORTARE mq	2.86		

	CALCOLO DELLE AREE		Foglio n. 73

BONIFICA

N. SEZIONE PROG.	FIG.	ELEMENTI DI CALCOLO	AREA ELEMENTARE mq	AREA FIGURA mq	NOTE
		RIPORTO mq	2.86		
		(-12.17--13.00)x(4.28+4.28)/2	3.55		
		(-11.29--12.17)x(4.29+4.28)/2	3.77		
		(-11.08--11.29)x(4.29+4.29)/2	0.90		
		(-10.71--11.08)x(4.28+4.29)/2	1.59		
		(-9.99--10.71)x(4.28+4.28)/2	3.08		
		(-9.58--9.99)x(4.27+4.28)/2	1.75		
		(-8.90--9.58)x(4.26+4.27)/2	2.90		
		(-7.87--8.90)x(4.29+4.26)/2	4.40		
		(-7.81--7.87)x(4.29+4.29)/2	0.26		
		(-7.71--7.81)x(4.28+4.29)/2	0.43		
		(-6.72--7.71)x(4.24+4.28)/2	4.22		
		(-6.16--6.72)x(4.20+4.24)/2	2.36		
		(-5.63--6.16)x(4.16+4.20)/2	2.22		
		(-4.70--5.63)x(4.12+4.16)/2	3.85		
		(-4.54--4.70)x(4.12+4.12)/2	0.66		
		(-4.45--4.54)x(4.12+4.12)/2	0.37		
		(-3.45--4.45)x(4.14+4.12)/2	4.13		
		(-2.74--3.45)x(4.15+4.14)/2	2.94		
		(-2.36--2.74)x(4.15+4.15)/2	1.58		
		(-1.69--2.36)x(4.18+4.15)/2	2.79		
		(-1.27--1.69)x(4.19+4.18)/2	1.76		
		(-1.02--1.27)x(4.19+4.19)/2	1.05		
		(-0.18--1.02)x(4.20+4.19)/2	3.52		
		(0.69--0.18)x(4.19+4.20)/2	3.65		
		(0.92-0.69)x(4.19+4.19)/2	0.96		
		(1.32-0.92)x(4.19+4.19)/2	1.68		
		(2.01-1.32)x(4.17+4.19)/2	2.88		
		(2.40-2.01)x(4.16+4.17)/2	1.62		
		(3.10-2.40)x(4.15+4.16)/2	2.91		
		(4.11-3.10)x(4.16+4.15)/2	4.20		
		(4.19-4.11)x(4.16+4.16)/2	0.33		
		(4.22-4.19)x(4.16+4.16)/2	0.12		
		(4.33-4.22)x(4.16+4.16)/2	0.46		
		(5.02-4.33)x(4.15+4.16)/2	2.87		
		(5.28-5.02)x(4.15+4.15)/2	1.08		
		(5.82-5.28)x(4.16+4.15)/2	2.24		
		(6.37-5.82)x(4.17+4.16)/2	2.29		
		(7.34-6.37)x(4.17+4.17)/2	4.04		
		(7.46-7.34)x(4.17+4.17)/2	0.50		
		(7.53-7.46)x(4.18+4.17)/2	0.29		
		(8.55-7.53)x(4.22+4.18)/2	4.28		
		(9.24-8.55)x(4.23+4.22)/2	2.92		
		(9.64-9.24)x(4.24+4.23)/2	1.69		
		(10.34-9.64)x(4.24+4.24)/2	2.97		
		(10.73-10.34)x(4.24+4.24)/2	1.65		
		(10.95-10.73)x(4.23+4.24)/2	0.93		
		(11.82-10.95)x(4.23+4.23)/2	3.68		
		(12.66-11.82)x(4.22+4.23)/2	3.55		
		(12.91-12.66)x(4.22+4.22)/2	1.05		
		(13.35-12.91)x(4.22+4.22)/2	1.86		
		(13.78-13.35)x(4.22+4.22)/2	1.81		
		(13.35-13.78)x(3.22+3.22)/2	-1.38		
		(12.91-13.35)x(3.22+3.22)/2	-1.42		
		(12.66-12.91)x(3.22+3.22)/2	-0.81		
		(11.82-12.66)x(3.23+3.22)/2	-2.71		
		(10.95-11.82)x(3.23+3.23)/2	-2.81		
		(10.73-10.95)x(3.24+3.23)/2	-0.71		
		(10.34-10.73)x(3.24+3.24)/2	-1.26		
		(9.64-10.34)x(3.24+3.24)/2	-2.27		
		(9.24-9.64)x(3.23+3.24)/2	-1.29		
		(8.55-9.24)x(3.22+3.23)/2	-2.23		
		(7.53-8.55)x(3.18+3.22)/2	-3.26		
		(7.46-7.53)x(3.17+3.18)/2	-0.22		
		(7.34-7.46)x(3.17+3.17)/2	-0.38		
		(6.37-7.34)x(3.17+3.17)/2	-3.07		
		(5.82-6.37)x(3.16+3.17)/2	-1.74		
		(5.28-5.82)x(3.15+3.16)/2	-1.70		
		(5.02-5.28)x(3.15+3.15)/2	-0.82		
		(4.33-5.02)x(3.16+3.15)/2	-2.18		
		(4.22-4.33)x(3.16+3.16)/2	-0.35		
		(4.19-4.22)x(3.16+3.16)/2	-0.09		
		(4.11-4.19)x(3.16+3.16)/2	-0.25		
		(3.10-4.11)x(3.15+3.16)/2	-3.19		
		(2.40-3.10)x(3.16+3.15)/2	-2.21		
		(2.01-2.40)x(3.17+3.16)/2	-1.23		
		(1.32-2.01)x(3.19+3.17)/2	-2.19		
		(0.92-1.32)x(3.19+3.19)/2	-1.28		
		(0.69-0.92)x(3.19+3.19)/2	-0.73		
		(-0.18-0.69)x(3.20+3.19)/2	-2.78		
		(-1.02--0.18)x(3.19+3.20)/2	-2.68		
		(-1.27--1.02)x(3.19+3.19)/2	-0.80		
		(-1.69--1.27)x(3.18+3.19)/2	-1.34		
		(-2.36--1.69)x(3.15+3.18)/2	-2.12		
		(-2.74--2.36)x(3.15+3.15)/2	-1.20		
		(-3.45--2.74)x(3.14+3.15)/2	-2.23		
		(-4.45--3.45)x(3.12+3.14)/2	-3.13		
		(-4.54--4.45)x(3.12+3.12)/2	-0.28		
		(-4.70--4.54)x(3.12+3.12)/2	-0.50		
		(-5.63--4.70)x(3.16+3.12)/2	-2.92		
		(-6.16--5.63)x(3.20+3.16)/2	-1.69		
		(-6.72--6.16)x(3.24+3.20)/2	-1.80		
		(-7.71--6.72)x(3.28+3.24)/2	-3.23		
		(-7.81--7.71)x(3.29+3.28)/2	-0.33		
		(-7.87--7.81)x(3.29+3.29)/2	-0.20		
		(-8.90--7.87)x(3.26+3.29)/2	-3.37		
		(-9.58--8.90)x(3.27+3.26)/2	-2.22		
		(-9.99--9.58)x(3.28+3.27)/2	-1.34		
		(-10.71--9.99)x(3.28+3.28)/2	-2.36		
		(-11.08--10.71)x(3.29+3.28)/2	-1.22		
		(-11.29--11.08)x(3.29+3.29)/2	-0.69		
		(-12.17--11.29)x(3.28+3.29)/2	-2.89		
		(-13.00--12.17)x(3.28+3.28)/2	-2.72		
		(-13.26--13.00)x(3.28+3.28)/2	-0.85		
		(-13.38--13.26)x(3.28+3.28)/2	-0.39		
		A RIPORTARE mq	28.39		

		CALCOLO DELLE AREE		Foglio n. 74	
BONIFICA					
N. SEZIONE PROG.	FIG.	ELEMENTI DI CALCOLO	AREA ELEMENTARE mq	AREA FIGURA mq	NOTE
		RIPORTO mq	28.39		
		(-13.67--13.38)x(3.28+3.28)/2	-0.95		
				27.44	
161	BO1	(11.84-11.44)x(4.94+4.91)/2	1.97		
2400.00		(12.61-11.84)x(4.72+4.94)/2	3.72		
		(12.93-12.61)x(4.64+4.72)/2	1.50		
		(13.10-12.93)x(4.57+4.64)/2	0.78		
		(13.44-13.10)x(4.47+4.57)/2	1.54		
		(13.10-13.44)x(3.57+3.47)/2	-1.20		
		(12.93-13.10)x(3.64+3.57)/2	-0.61		
		(12.61-12.93)x(3.72+3.64)/2	-1.18		
		(11.84-12.61)x(3.94+3.72)/2	-2.95		
		(11.44-11.84)x(3.91+3.94)/2	-1.57		
				2.00	
161	BO2	(-13.25--13.61)x(4.36+4.36)/2	1.57		
2400.00		(-12.56--13.25)x(4.34+4.36)/2	3.00		
		(-12.16--12.56)x(4.32+4.34)/2	1.73		
		(-11.45--12.16)x(4.30+4.32)/2	3.06		
		(-11.07--11.45)x(4.28+4.30)/2	1.63		
		(-10.84--11.07)x(4.28+4.28)/2	0.98		
		(-9.97--10.84)x(4.26+4.28)/2	3.71		
		(-9.13--9.97)x(4.26+4.26)/2	3.58		
		(-8.88--9.13)x(4.26+4.26)/2	1.06		
		(-8.45--8.88)x(4.25+4.26)/2	1.83		
		(-7.79--8.45)x(4.24+4.25)/2	2.80		
		(-7.42--7.79)x(4.23+4.24)/2	1.57		
		(-6.70--7.42)x(4.22+4.23)/2	3.04		
		(-5.71--6.70)x(4.20+4.22)/2	4.17		
		(-5.61--5.71)x(4.20+4.20)/2	0.42		
		(-5.44--5.61)x(4.20+4.20)/2	0.71		
		(-4.52--5.44)x(4.19+4.20)/2	3.86		
		(-4.00--4.52)x(4.19+4.19)/2	2.18		
		(-3.43--4.00)x(4.19+4.19)/2	2.39		
		(-2.43--3.43)x(4.20+4.19)/2	4.20		
		(-2.34--2.43)x(4.20+4.20)/2	0.38		
		(-2.29--2.34)x(4.20+4.20)/2	0.21		
		(-1.25--2.29)x(4.22+4.20)/2	4.38		
		(-0.76--1.25)x(4.23+4.22)/2	2.07		
		(-0.16--0.76)x(4.23+4.23)/2	2.54		
		(0.58--0.16)x(4.24+4.23)/2	3.13		
		(0.93-0.58)x(4.24+4.24)/2	1.48		
		(1.13-0.93)x(4.25+4.24)/2	0.85		
		(2.02-1.13)x(4.26+4.25)/2	3.79		
		(2.84-2.02)x(4.42+4.26)/2	3.56		
		(3.11-2.84)x(4.46+4.42)/2	1.20		
		(3.59-3.11)x(4.52+4.46)/2	2.16		
		(4.20-3.59)x(4.60+4.52)/2	2.78		
		(4.55-4.20)x(4.64+4.60)/2	1.62		
		(5.29-4.55)x(4.72+4.64)/2	3.46		
		(6.07-5.29)x(4.79+4.72)/2	3.71		
		(5.29-6.07)x(3.72+3.79)/2	-2.93		
		(4.55-5.29)x(3.64+3.72)/2	-2.72		
		(4.20-4.55)x(3.60+3.64)/2	-1.27		
		(3.59-4.20)x(3.52+3.60)/2	-2.17		
		(3.11-3.59)x(3.46+3.52)/2	-1.68		
		(2.84-3.11)x(3.42+3.46)/2	-0.93		
		(2.02-2.84)x(3.26+3.42)/2	-2.74		
		(1.13-2.02)x(3.25+3.26)/2	-2.90		
		(0.93-1.13)x(3.24+3.25)/2	-0.65		
		(0.58-0.93)x(3.24+3.24)/2	-1.13		
		(-0.16-0.58)x(3.23+3.24)/2	-2.39		
		(-0.76--0.16)x(3.23+3.23)/2	-1.94		
		(-1.25--0.76)x(3.22+3.23)/2	-1.58		
		(-2.29--1.25)x(3.20+3.22)/2	-3.34		
		(-2.34--2.29)x(3.20+3.20)/2	-0.16		
		(-2.43--2.34)x(3.20+3.20)/2	-0.29		
		(-3.43--2.43)x(3.19+3.20)/2	-3.20		
		(-4.00--3.43)x(3.19+3.19)/2	-1.82		
		(-4.52--4.00)x(3.19+3.19)/2	-1.66		
		(-5.44--4.52)x(3.20+3.19)/2	-2.94		
		(-5.61--5.44)x(3.20+3.20)/2	-0.54		
		(-5.71--5.61)x(3.20+3.20)/2	-0.32		
		(-6.70--5.71)x(3.22+3.20)/2	-3.18		
		(-7.42--6.70)x(3.23+3.22)/2	-2.32		
		(-7.79--7.42)x(3.24+3.23)/2	-1.20		
		(-8.45--7.79)x(3.25+3.24)/2	-2.14		
		(-8.88--8.45)x(3.26+3.25)/2	-1.40		
		(-9.13--8.88)x(3.26+3.26)/2	-0.81		
		(-9.97--9.13)x(3.26+3.26)/2	-2.74		
		(-10.84--9.97)x(3.28+3.26)/2	-2.84		
		(-11.07--10.84)x(3.28+3.28)/2	-0.75		
		(-11.45--11.07)x(3.30+3.28)/2	-1.25		
		(-12.16--11.45)x(3.32+3.30)/2	-2.35		
		(-12.56--12.16)x(3.34+3.32)/2	-1.33		
		(-13.25--12.56)x(3.36+3.34)/2	-2.31		
		(-13.61--13.25)x(3.36+3.36)/2	-1.21		
				19.68	
162	BO1	(-13.23--13.69)x(4.34+4.33)/2	1.99		
2415.00		(-12.19--13.23)x(4.33+4.34)/2	4.51		
		(-12.14--12.19)x(4.33+4.33)/2	0.22		
		(-12.11--12.14)x(4.33+4.33)/2	0.13		
		(-11.05--12.11)x(4.32+4.33)/2	4.58		
		(-10.40--11.05)x(4.32+4.32)/2	2.81		
		(-9.96--10.40)x(4.32+4.32)/2	1.90		
		(-9.18--9.96)x(4.32+4.32)/2	3.37		
		(-8.87--9.18)x(4.33+4.32)/2	1.34		
		(-8.69--8.87)x(4.33+4.33)/2	0.78		
		(-7.78--8.69)x(4.35+4.33)/2	3.95		
		(-6.98--7.78)x(4.37+4.35)/2	3.49		
		(-6.69--6.98)x(4.38+4.37)/2	1.27		
		(-6.55--6.69)x(4.38+4.38)/2	0.61		
		(-6.18--6.55)x(4.39+4.38)/2	1.62		
		(-5.75--6.18)x(4.39+4.39)/2	1.89		
		(-5.60--5.75)x(4.40+4.39)/2	0.66		
		(-5.27--5.60)x(4.40+4.40)/2	1.45		
		A RIPORTARE mq	36.57		

		CALCOLO DELLE AREE		Foglio n. 75
BONIFICA				
N. SEZIONE PROG.	FIG.	ELEMENTI DI CALCOLO	AREA ELEMENTARE mq	AREA FIGURA mq	NOTE
		RIPORTO mq	36.57		
		(-4.51--5.27)x(4.40+4.40)/2	3.34		
		(-3.56--4.51)x(4.38+4.40)/2	4.17		
		(-3.42--3.56)x(4.38+4.38)/2	0.61		
		(-3.17--3.42)x(4.37+4.38)/2	1.09		
		(-2.33--3.17)x(4.34+4.37)/2	3.66		
		(-1.85--2.33)x(4.32+4.34)/2	2.08		
		(-1.23--1.85)x(4.29+4.32)/2	2.67		
		(-0.16--1.23)x(4.25+4.29)/2	4.57		
		(-0.14--0.16)x(4.25+4.25)/2	0.08		
		(0.95--0.14)x(4.20+4.25)/2	4.61		
		(1.57-0.95)x(4.18+4.20)/2	2.60		
		(2.04-1.57)x(4.17+4.18)/2	1.96		
		(2.85-2.04)x(4.17+4.17)/2	3.38		
		(3.13-2.85)x(4.17+4.17)/2	1.17		
		(3.29-3.13)x(4.17+4.17)/2	0.67		
		(4.22-3.29)x(4.17+4.17)/2	3.88		
		(5.00-4.22)x(4.18+4.17)/2	3.26		
		(5.31-5.00)x(4.18+4.18)/2	1.30		
		(5.86-5.31)x(4.19+4.18)/2	2.30		
		(6.40-5.86)x(4.20+4.19)/2	2.27		
		(6.71-6.40)x(4.21+4.20)/2	1.30		
		(7.49-6.71)x(4.21+4.21)/2	3.28		
		(8.42-7.49)x(4.19+4.21)/2	3.91		
		(8.58-8.42)x(4.19+4.19)/2	0.67		
		(8.87-8.58)x(4.19+4.19)/2	1.22		
		(9.67-8.87)x(4.18+4.19)/2	3.35		
		(10.13-9.67)x(4.17+4.18)/2	1.92		
		(10.76-10.13)x(4.16+4.17)/2	2.62		
		(11.84-10.76)x(4.15+4.16)/2	4.49		
		(11.85-11.84)x(4.15+4.15)/2	0.04		
		(11.86-11.85)x(4.15+4.15)/2	0.04		
		(11.88-11.86)x(4.15+4.15)/2	0.08		
		(12.66-11.88)x(4.12+4.15)/2	3.23		
		(12.94-12.66)x(4.11+4.12)/2	1.15		
		(13.55-12.94)x(4.10+4.11)/2	2.50		
		(14.03-13.55)x(4.10+4.10)/2	1.97		
		(14.04-14.03)x(3.10+4.10)/2	0.04		
		(14.03-14.04)x(3.10+3.10)/2	-0.03		
		(13.55-14.03)x(3.10+3.10)/2	-1.49		
		(12.94-13.55)x(3.11+3.10)/2	-1.89		
		(12.66-12.94)x(3.12+3.11)/2	-0.87		
		(11.88-12.66)x(3.15+3.12)/2	-2.45		
		(11.86-11.88)x(3.15+3.15)/2	-0.06		
		(11.85-11.86)x(3.15+3.15)/2	-0.03		
		(11.84-11.85)x(3.15+3.15)/2	-0.03		
		(10.76-11.84)x(3.16+3.15)/2	-3.41		
		(10.13-10.76)x(3.17+3.16)/2	-1.99		
		(9.67-10.13)x(3.18+3.17)/2	-1.46		
		(8.87-9.67)x(3.19+3.18)/2	-2.55		
		(8.58-8.87)x(3.19+3.19)/2	-0.93		
		(8.42-8.58)x(3.19+3.19)/2	-0.51		
		(7.49-8.42)x(3.21+3.19)/2	-2.98		
		(6.71-7.49)x(3.21+3.21)/2	-2.50		
		(6.40-6.71)x(3.20+3.21)/2	-0.99		
		(5.86-6.40)x(3.19+3.20)/2	-1.73		
		(5.31-5.86)x(3.18+3.19)/2	-1.75		
		(5.00-5.31)x(3.18+3.18)/2	-0.99		
		(4.22-5.00)x(3.17+3.18)/2	-2.48		
		(3.29-4.22)x(3.17+3.17)/2	-2.95		
		(3.13-3.29)x(3.17+3.17)/2	-0.51		
		(2.85-3.13)x(3.17+3.17)/2	-0.89		
		(2.04-2.85)x(3.17+3.17)/2	-2.57		
		(1.57-2.04)x(3.18+3.17)/2	-1.49		
		(0.95-1.57)x(3.20+3.18)/2	-1.98		
		(-0.14-0.95)x(3.25+3.20)/2	-3.52		
		(-0.16--0.14)x(3.25+3.25)/2	-0.06		
		(-1.23--0.16)x(3.29+3.25)/2	-3.50		
		(-1.85--1.23)x(3.32+3.29)/2	-2.05		
		(-2.33--1.85)x(3.34+3.32)/2	-1.60		
		(-3.17--2.33)x(3.37+3.34)/2	-2.82		
		(-3.42--3.17)x(3.38+3.37)/2	-0.84		
		(-3.56--3.42)x(3.38+3.38)/2	-0.47		
		(-4.51--3.56)x(3.40+3.38)/2	-3.22		
		(-5.27--4.51)x(3.40+3.40)/2	-2.58		
		(-5.60--5.27)x(3.40+3.40)/2	-1.12		
		(-5.75--5.60)x(3.39+3.40)/2	-0.51		
		(-6.18--5.75)x(3.39+3.39)/2	-1.46		
		(-6.55--6.18)x(3.38+3.39)/2	-1.25		
		(-6.69--6.55)x(3.38+3.38)/2	-0.47		
		(-6.98--6.69)x(3.37+3.38)/2	-0.98		
		(-7.78--6.98)x(3.35+3.37)/2	-2.69		
		(-8.69--7.78)x(3.33+3.35)/2	-3.04		
		(-8.87--8.69)x(3.33+3.33)/2	-0.60		
		(-9.18--8.87)x(3.32+3.33)/2	-1.03		
		(-9.96--9.18)x(3.32+3.32)/2	-2.59		
		(-10.40--9.96)x(3.32+3.32)/2	-1.46		
		(-11.05--10.40)x(3.32+3.32)/2	-2.16		
		(-12.11--11.05)x(3.33+3.32)/2	-3.52		
		(-12.14--12.11)x(3.33+3.33)/2	-0.10		
		(-12.19--12.14)x(3.33+3.33)/2	-0.17		
		(-13.23--12.19)x(3.34+3.33)/2	-3.47		
		(-13.69--13.23)x(3.33+3.34)/2	-1.53		
				27.73	
163 2430.00	BO1	(-13.38--13.65)x(4.38+4.39)/2	1.18		
		(-13.22--13.38)x(4.38+4.38)/2	0.70		
		(-12.93--13.22)x(4.37+4.38)/2	1.27		
		(-12.13--12.93)x(4.35+4.37)/2	3.49		
		(-11.54--12.13)x(4.38+4.35)/2	2.58		
		(-11.03--11.54)x(4.38+4.38)/2	2.23		
		(-9.96--11.03)x(4.38+4.38)/2	4.69		
		(-9.94--9.96)x(4.38+4.38)/2	0.09		
		(-9.92--9.94)x(4.38+4.38)/2	0.09		
		(-8.85--9.92)x(4.37+4.38)/2	4.68		
		(-8.25--8.85)x(4.36+4.37)/2	2.62		
		A RIPORTARE mq	23.62		

	CALCOLO DELLE AREE		Foglio n. 76

BONIFICA

N. SEZIONE PROG.	FIG.	ELEMENTI DI CALCOLO	AREA ELEMENTARE mq	AREA FIGURA mq	NOTE
		RIPORTO mq	23.62		
		(-7.76--8.25)x(4.35+4.36)/2	2.13		
		(-6.91--7.76)x(4.32+4.35)/2	3.68		
		(-6.67--6.91)x(4.31+4.32)/2	1.04		
		(-6.53--6.67)x(4.31+4.31)/2	0.60		
		(-5.58--6.53)x(4.32+4.31)/2	4.10		
		(-4.82--5.58)x(4.32+4.32)/2	3.28		
		(-4.49--4.82)x(4.32+4.32)/2	1.43		
		(-3.91--4.49)x(4.33+4.32)/2	2.51		
		(-3.40--3.91)x(4.34+4.33)/2	2.21		
		(-3.11--3.40)x(4.34+4.34)/2	1.26		
		(-2.31--3.11)x(4.34+4.34)/2	3.47		
		(-1.40--2.31)x(4.35+4.34)/2	3.95		
		(-1.22--1.40)x(4.35+4.35)/2	0.78		
		(-0.90--1.22)x(4.35+4.35)/2	1.39		
		(-0.13--0.90)x(4.35+4.35)/2	3.35		
		(0.31--0.13)x(4.35+4.35)/2	1.91		
		(0.96-0.31)x(4.36+4.35)/2	2.83		
		(2.02-0.96)x(4.36+4.36)/2	4.62		
		(2.05-2.02)x(4.36+4.36)/2	0.13		
		(2.11-2.05)x(4.36+4.36)/2	0.26		
		(3.14-2.11)x(4.36+4.36)/2	4.49		
		(3.73-3.14)x(4.36+4.36)/2	2.57		
		(4.23-3.73)x(4.35+4.36)/2	2.18		
		(5.12-4.23)x(4.36+4.35)/2	3.88		
		(5.32-5.12)x(4.36+4.36)/2	0.87		
		(5.44-5.32)x(4.36+4.36)/2	0.52		
		(6.41-5.44)x(4.35+4.36)/2	4.22		
		(6.87-6.41)x(4.34+4.35)/2	2.00		
		(7.50-6.87)x(4.33+4.34)/2	2.73		
		(8.13-7.50)x(4.33+4.33)/2	2.73		
		(8.60-8.13)x(4.32+4.33)/2	2.03		
		(8.86-8.60)x(4.32+4.32)/2	1.12		
		(9.69-8.86)x(4.34+4.32)/2	3.59		
		(10.57-9.69)x(4.34+4.34)/2	3.82		
		(10.78-10.57)x(4.35+4.34)/2	0.91		
		(11.14-10.78)x(4.34+4.35)/2	1.56		
		(11.87-11.14)x(4.35+4.34)/2	3.17		
		(12.28-11.87)x(4.35+4.35)/2	1.78		
		(12.96-12.28)x(4.34+4.35)/2	2.95		
		(13.72-12.96)x(4.35+4.34)/2	3.30		
		(12.96-13.72)x(3.34+3.35)/2	-2.54		
		(12.28-12.96)x(3.35+3.34)/2	-2.27		
		(11.87-12.28)x(3.35+3.35)/2	-1.37		
		(11.14-11.87)x(3.34+3.35)/2	-2.44		
		(10.78-11.14)x(3.35+3.34)/2	-1.20		
		(10.57-10.78)x(3.34+3.35)/2	-0.70		
		(9.69-10.57)x(3.34+3.34)/2	-2.94		
		(8.86-9.69)x(3.32+3.34)/2	-2.76		
		(8.60-8.86)x(3.32+3.32)/2	-0.86		
		(8.13-8.60)x(3.33+3.32)/2	-1.56		
		(7.50-8.13)x(3.33+3.33)/2	-2.10		
		(6.87-7.50)x(3.34+3.33)/2	-2.10		
		(6.41-6.87)x(3.35+3.34)/2	-1.54		
		(5.44-6.41)x(3.36+3.35)/2	-3.25		
		(5.32-5.44)x(3.36+3.36)/2	-0.40		
		(5.12-5.32)x(3.36+3.36)/2	-0.67		
		(4.23-5.12)x(3.35+3.36)/2	-2.99		
		(3.73-4.23)x(3.36+3.35)/2	-1.68		
		(3.14-3.73)x(3.36+3.36)/2	-1.98		
		(2.11-3.14)x(3.36+3.36)/2	-3.46		
		(2.05-2.11)x(3.36+3.36)/2	-0.20		
		(2.02-2.05)x(3.36+3.36)/2	-0.10		
		(0.96-2.02)x(3.36+3.36)/2	-3.56		
		(0.31-0.96)x(3.35+3.36)/2	-2.18		
		(-0.13-0.31)x(3.35+3.35)/2	-1.47		
		(-0.90--0.13)x(3.35+3.35)/2	-2.58		
		(-1.22--0.90)x(3.35+3.35)/2	-1.07		
		(-1.40--1.22)x(3.35+3.35)/2	-0.60		
		(-2.31--1.40)x(3.34+3.35)/2	-3.04		
		(-3.11--2.31)x(3.34+3.34)/2	-2.67		
		(-3.40--3.11)x(3.34+3.34)/2	-0.97		
		(-3.91--3.40)x(3.33+3.34)/2	-1.70		
		(-4.49--3.91)x(3.32+3.33)/2	-1.93		
		(-4.82--4.49)x(3.32+3.32)/2	-1.10		
		(-5.58--4.82)x(3.32+3.32)/2	-2.52		
		(-6.53--5.58)x(3.31+3.32)/2	-3.15		
		(-6.67--6.53)x(3.31+3.31)/2	-0.46		
		(-6.91--6.67)x(3.32+3.31)/2	-0.80		
		(-7.76--6.91)x(3.35+3.32)/2	-2.83		
		(-8.25--7.76)x(3.36+3.35)/2	-1.64		
		(-8.85--8.25)x(3.37+3.36)/2	-2.02		
		(-9.92--8.85)x(3.38+3.37)/2	-3.61		
		(-9.94--9.92)x(3.38+3.38)/2	-0.07		
		(-9.96--9.94)x(3.38+3.38)/2	-0.07		
		(-11.03--9.96)x(3.38+3.38)/2	-3.62		
		(-11.54--11.03)x(3.38+3.38)/2	-1.72		
		(-12.13--11.54)x(3.35+3.38)/2	-1.99		
		(-12.93--12.13)x(3.37+3.35)/2	-2.69		
		(-13.22--12.93)x(3.38+3.37)/2	-0.98		
		(-13.38--13.22)x(3.38+3.38)/2	-0.54		
		(-13.65--13.38)x(3.39+3.38)/2	-0.91		
				27.37	
164 2445.00	BO1	(-13.67--13.81)x(4.32+4.31)/2	0.60		
		(-13.20--13.67)x(4.32+4.32)/2	2.03		
		(-12.93--13.20)x(4.33+4.32)/2	1.17		
		(-12.11--12.93)x(4.34+4.33)/2	3.55		
		(-11.22--12.11)x(4.35+4.34)/2	3.87		
		(-11.02--11.22)x(4.35+4.35)/2	0.87		
		(-10.66--11.02)x(4.36+4.35)/2	1.57		
		(-9.93--10.66)x(4.35+4.36)/2	3.18		
		(-9.51--9.93)x(4.36+4.35)/2	1.83		
		(-8.84--9.51)x(4.37+4.36)/2	2.92		
		(-7.80--8.84)x(4.35+4.37)/2	4.53		
		(-7.75--7.80)x(4.35+4.35)/2	0.22		
		A RIPORTARE mq	26.34		

		CALCOLO DELLE AREE		Foglio n. 77
BONIFICA				
N. SEZIONE PROG.	FIG.	ELEMENTI DI CALCOLO	AREA ELEMENTARE mq	AREA FIGURA mq	NOTE
		RIPORTO mq	26.34		
		(-7.65--7.75)x(4.35+4.35)/2	0.43		
		(-6.66--7.65)x(4.35+4.35)/2	4.31		
		(-6.09--6.66)x(4.36+4.35)/2	2.48		
		(-5.57--6.09)x(4.36+4.36)/2	2.27		
		(-4.65--5.57)x(4.38+4.36)/2	4.02		
		(-4.48--4.65)x(4.38+4.38)/2	0.74		
		(-4.38--4.48)x(4.38+4.38)/2	0.44		
		(-3.39--4.38)x(4.40+4.38)/2	4.35		
		(-2.67--3.39)x(4.39+4.40)/2	3.16		
		(-2.29--2.67)x(4.38+4.39)/2	1.67		
		(-1.64--2.29)x(4.39+4.38)/2	2.85		
		(-1.20--1.64)x(4.39+4.39)/2	1.93		
		(-0.96--1.20)x(4.38+4.39)/2	1.05		
		(-0.11--0.96)x(4.36+4.38)/2	3.71		
		(0.75--0.11)x(4.37+4.36)/2	3.75		
		(0.98-0.75)x(4.37+4.37)/2	1.01		
		(1.08-0.98)x(4.37+4.37)/2	0.44		
		(1.37-1.08)x(4.38+4.37)/2	1.27		
		(1.88-1.37)x(4.40+4.38)/2	2.24		
		(2.07-1.88)x(4.39+4.40)/2	0.84		
		(2.46-2.07)x(4.40+4.39)/2	1.71		
		(3.16-2.46)x(4.41+4.40)/2	3.08		
		(4.17-3.16)x(4.43+4.41)/2	4.46		
		(4.25-4.17)x(4.43+4.43)/2	0.35		
		(4.38-4.25)x(4.43+4.43)/2	0.58		
		(5.34-4.38)x(4.47+4.43)/2	4.27		
		(5.88-5.34)x(4.49+4.47)/2	2.42		
		(6.43-5.88)x(4.50+4.49)/2	2.47		
		(7.39-6.43)x(4.48+4.50)/2	4.31		
		(7.52-7.39)x(4.48+4.48)/2	0.58		
		(7.60-7.52)x(4.47+4.48)/2	0.36		
		(8.61-7.60)x(4.41+4.47)/2	4.48		
		(9.31-8.61)x(4.38+4.41)/2	3.08		
		(9.70-9.31)x(4.37+4.38)/2	1.71		
		(10.40-9.70)x(4.36+4.37)/2	3.06		
		(10.79-10.40)x(4.36+4.36)/2	1.70		
		(11.02-10.79)x(4.36+4.36)/2	1.00		
		(11.88-11.02)x(4.38+4.36)/2	3.76		
		(12.73-11.88)x(4.37+4.38)/2	3.72		
		(12.97-12.73)x(4.37+4.37)/2	1.05		
		(13.41-12.97)x(4.36+4.37)/2	1.92		
		(13.75-13.41)x(4.36+4.36)/2	1.48		
		(13.41-13.75)x(3.36+3.36)/2	-1.14		
		(12.97-13.41)x(3.37+3.36)/2	-1.48		
		(12.73-12.97)x(3.37+3.37)/2	-0.81		
		(11.88-12.73)x(3.38+3.37)/2	-2.87		
		(11.02-11.88)x(3.36+3.38)/2	-2.90		
		(10.79-11.02)x(3.36+3.36)/2	-0.77		
		(10.40-10.79)x(3.36+3.36)/2	-1.31		
		(9.70-10.40)x(3.37+3.36)/2	-2.36		
		(9.31-9.70)x(3.38+3.37)/2	-1.32		
		(8.61-9.31)x(3.41+3.38)/2	-2.38		
		(7.60-8.61)x(3.47+3.41)/2	-3.47		
		(7.52-7.60)x(3.48+3.47)/2	-0.28		
		(7.39-7.52)x(3.48+3.48)/2	-0.45		
		(6.43-7.39)x(3.50+3.48)/2	-3.35		
		(5.88-6.43)x(3.49+3.50)/2	-1.92		
		(5.34-5.88)x(3.47+3.49)/2	-1.88		
		(4.38-5.34)x(3.43+3.47)/2	-3.31		
		(4.25-4.38)x(3.43+3.43)/2	-0.45		
		(4.17-4.25)x(3.43+3.43)/2	-0.27		
		(3.16-4.17)x(3.41+3.43)/2	-3.45		
		(2.46-3.16)x(3.40+3.41)/2	-2.38		
		(2.07-2.46)x(3.39+3.40)/2	-1.32		
		(1.88-2.07)x(3.40+3.39)/2	-0.65		
		(1.37-1.88)x(3.38+3.40)/2	-1.73		
		(1.08-1.37)x(3.37+3.38)/2	-0.98		
		(0.98-1.08)x(3.37+3.37)/2	-0.34		
		(0.75-0.98)x(3.37+3.37)/2	-0.78		
		(-0.11-0.75)x(3.36+3.37)/2	-2.89		
		(-0.96--0.11)x(3.38+3.36)/2	-2.86		
		(-1.20--0.96)x(3.39+3.38)/2	-0.81		
		(-1.64--1.20)x(3.39+3.39)/2	-1.49		
		(-2.29--1.64)x(3.38+3.39)/2	-2.20		
		(-2.67--2.29)x(3.39+3.38)/2	-1.29		
		(-3.39--2.67)x(3.40+3.39)/2	-2.44		
		(-4.38--3.39)x(3.38+3.40)/2	-3.36		
		(-4.48--4.38)x(3.38+3.38)/2	-0.34		
		(-4.65--4.48)x(3.38+3.38)/2	-0.57		
		(-5.57--4.65)x(3.36+3.38)/2	-3.10		
		(-6.09--5.57)x(3.36+3.36)/2	-1.75		
		(-6.66--6.09)x(3.35+3.36)/2	-1.91		
		(-7.65--6.66)x(3.35+3.35)/2	-3.32		
		(-7.75--7.65)x(3.35+3.35)/2	-0.33		
		(-7.80--7.75)x(3.35+3.35)/2	-0.17		
		(-8.84--7.80)x(3.37+3.35)/2	-3.49		
		(-9.51--8.84)x(3.36+3.37)/2	-2.25		
		(-9.93--9.51)x(3.35+3.36)/2	-1.41		
		(-10.66--9.93)x(3.36+3.35)/2	-2.45		
		(-11.02--10.66)x(3.35+3.36)/2	-1.21		
		(-11.22--11.02)x(3.35+3.35)/2	-0.67		
		(-12.11--11.22)x(3.34+3.35)/2	-2.98		
		(-12.93--12.11)x(3.33+3.34)/2	-2.73		
		(-13.20--12.93)x(3.32+3.33)/2	-0.90		
		(-13.67--13.20)x(3.32+3.32)/2	-1.56		
		(-13.81--13.67)x(3.31+3.32)/2	-0.46		
				27.56	
165 2460.00	B01	(-13.19--13.69)x(4.42+4.42)/2	2.21		
		(-12.49--13.19)x(4.39+4.42)/2	3.08		
		(-12.09--12.49)x(4.38+4.39)/2	1.75		
		(-11.40--12.09)x(4.38+4.38)/2	3.02		
		(-11.00--11.40)x(4.39+4.38)/2	1.75		
		(-10.78--11.00)x(4.40+4.39)/2	0.97		
		(-9.91--10.78)x(4.44+4.40)/2	3.85		
		A RIPORTARE mq	16.63		

		CALCOLO DELLE AREE		Foglio n. 78
BONIFICA				
N. SEZIONE PROG.	FIG.	ELEMENTI DI CALCOLO	AREA ELEMENTARE mq	AREA FIGURA mq	NOTE
		RIPORTO mq	16.63		
		(-9.07--9.91)x(4.43+4.44)/2	3.73		
		(-8.82--9.07)x(4.43+4.43)/2	1.11		
		(-8.39--8.82)x(4.41+4.43)/2	1.90		
		(-7.73--8.39)x(4.38+4.41)/2	2.90		
		(-7.36--7.73)x(4.38+4.38)/2	1.62		
		(-6.64--7.36)x(4.37+4.38)/2	3.15		
		(-5.65--6.64)x(4.38+4.37)/2	4.33		
		(-5.55--5.65)x(4.38+4.38)/2	0.44		
		(-5.38--5.55)x(4.38+4.38)/2	0.74		
		(-4.46--5.38)x(4.39+4.38)/2	4.03		
		(-3.91--4.46)x(4.40+4.39)/2	2.42		
		(-3.37--3.91)x(4.39+4.40)/2	2.37		
		(-2.38--3.37)x(4.35+4.39)/2	4.33		
		(-2.28--2.38)x(4.35+4.35)/2	0.44		
		(-2.22--2.28)x(4.35+4.35)/2	0.26		
		(-1.19--2.22)x(4.33+4.35)/2	4.47		
		(-0.51--1.19)x(4.35+4.33)/2	2.95		
		(-0.10--0.51)x(4.35+4.35)/2	1.78		
		(0.63--0.10)x(4.37+4.35)/2	3.18		
		(0.99-0.63)x(4.38+4.37)/2	1.57		
		(1.20-0.99)x(4.38+4.38)/2	0.92		
		(2.08-1.20)x(4.40+4.38)/2	3.86		
		(2.91-2.08)x(4.43+4.40)/2	3.66		
		(3.17-2.91)x(4.43+4.43)/2	1.15		
		(3.64-3.17)x(4.45+4.43)/2	2.09		
		(4.26-3.64)x(4.47+4.45)/2	2.77		
		(4.62-4.26)x(4.49+4.47)/2	1.61		
		(5.35-4.62)x(4.52+4.49)/2	3.29		
		(6.33-5.35)x(4.54+4.52)/2	4.44		
		(6.45-6.33)x(4.54+4.54)/2	0.54		
		(6.65-6.45)x(4.52+4.54)/2	0.91		
		(7.54-6.65)x(4.41+4.52)/2	3.97		
		(8.04-7.54)x(4.37+4.41)/2	2.19		
		(8.63-8.04)x(4.33+4.37)/2	2.57		
		(9.66-8.63)x(4.27+4.33)/2	4.43		
		(9.72-9.66)x(4.27+4.27)/2	0.26		
		(9.75-9.72)x(4.27+4.27)/2	0.13		
		(10.81-9.75)x(4.28+4.27)/2	4.53		
		(11.46-10.81)x(4.28+4.28)/2	2.78		
		(11.90-11.46)x(4.28+4.28)/2	1.88		
		(12.67-11.90)x(4.26+4.28)/2	3.29		
		(12.99-12.67)x(4.25+4.26)/2	1.36		
		(13.17-12.99)x(4.25+4.25)/2	0.76		
		(14.00-13.17)x(4.22+4.25)/2	3.52		
		(13.17-14.00)x(3.25+3.22)/2	-2.69		
		(12.99-13.17)x(3.25+3.25)/2	-0.58		
		(12.67-12.99)x(3.26+3.25)/2	-1.04		
		(11.90-12.67)x(3.28+3.26)/2	-2.52		
		(11.46-11.90)x(3.28+3.28)/2	-1.44		
		(10.81-11.46)x(3.28+3.28)/2	-2.13		
		(9.75-10.81)x(3.27+3.28)/2	-3.47		
		(9.72-9.75)x(3.27+3.27)/2	-0.10		
		(9.66-9.72)x(3.27+3.27)/2	-0.20		
		(8.63-9.66)x(3.33+3.27)/2	-3.40		
		(8.04-8.63)x(3.37+3.33)/2	-1.98		
		(7.54-8.04)x(3.41+3.37)/2	-1.69		
		(6.65-7.54)x(3.52+3.41)/2	-3.08		
		(6.45-6.65)x(3.54+3.52)/2	-0.71		
		(6.33-6.45)x(3.54+3.54)/2	-0.42		
		(5.35-6.33)x(3.52+3.54)/2	-3.46		
		(4.62-5.35)x(3.49+3.52)/2	-2.56		
		(4.26-4.62)x(3.47+3.49)/2	-1.25		
		(3.64-4.26)x(3.45+3.47)/2	-2.15		
		(3.17-3.64)x(3.43+3.45)/2	-1.62		
		(2.91-3.17)x(3.43+3.43)/2	-0.89		
		(2.08-2.91)x(3.40+3.43)/2	-2.83		
		(1.20-2.08)x(3.38+3.40)/2	-2.98		
		(0.99-1.20)x(3.38+3.38)/2	-0.71		
		(0.63-0.99)x(3.37+3.38)/2	-1.21		
		(-0.10-0.63)x(3.35+3.37)/2	-2.45		
		(-0.51--0.10)x(3.35+3.35)/2	-1.37		
		(-1.19--0.51)x(3.33+3.35)/2	-2.27		
		(-2.22--1.19)x(3.35+3.33)/2	-3.44		
		(-2.28--2.22)x(3.35+3.35)/2	-0.20		
		(-2.38--2.28)x(3.35+3.35)/2	-0.34		
		(-3.37--2.38)x(3.39+3.35)/2	-3.34		
		(-3.91--3.37)x(3.40+3.39)/2	-1.83		
		(-4.46--3.91)x(3.39+3.40)/2	-1.87		
		(-5.38--4.46)x(3.38+3.39)/2	-3.11		
		(-5.55--5.38)x(3.38+3.38)/2	-0.57		
		(-5.65--5.55)x(3.38+3.38)/2	-0.34		
		(-6.64--5.65)x(3.37+3.38)/2	-3.34		
		(-7.36--6.64)x(3.38+3.37)/2	-2.43		
		(-7.73--7.36)x(3.38+3.38)/2	-1.25		
		(-8.39--7.73)x(3.41+3.38)/2	-2.24		
		(-8.82--8.39)x(3.43+3.41)/2	-1.47		
		(-9.07--8.82)x(3.43+3.43)/2	-0.86		
		(-9.91--9.07)x(3.44+3.43)/2	-2.89		
		(-10.78--9.91)x(3.40+3.44)/2	-2.98		
		(-11.00--10.78)x(3.39+3.40)/2	-0.75		
		(-11.40--11.00)x(3.38+3.39)/2	-1.35		
		(-12.09--11.40)x(3.38+3.38)/2	-2.33		
		(-12.49--12.09)x(3.39+3.38)/2	-1.35		
		(-13.19--12.49)x(3.42+3.39)/2	-2.38		
		(-13.69--13.19)x(3.42+3.42)/2	-1.71		
				27.69	
166 2475.00	B01	(-13.17--13.72)x(4.43+4.43)/2	2.44		
		(-12.14--13.17)x(4.42+4.43)/2	4.56		
		(-12.08--12.14)x(4.42+4.42)/2	0.27		
		(-12.04--12.08)x(4.42+4.42)/2	0.18		
		(-10.99--12.04)x(4.40+4.42)/2	4.63		
		(-10.33--10.99)x(4.41+4.40)/2	2.91		
		(-9.90--10.33)x(4.41+4.41)/2	1.90		
		(-9.69--9.90)x(4.42+4.41)/2	0.93		
		A RIPORTARE mq	17.82		

		CALCOLO DELLE AREE		Foglio n. 79
BONIFICA				
N. SEZIONE PROG.	FIG.	ELEMENTI DI CALCOLO	AREA ELEMENTARE mq	AREA FIGURA mq	NOTE
		RIPORTO mq	17.82		
		(-9.13--9.69)x(4.41+4.42)/2	2.47		
		(-8.89--9.13)x(4.41+4.41)/2	1.06		
		(-8.81--8.89)x(4.41+4.41)/2	0.35		
		(-8.62--8.81)x(4.41+4.41)/2	0.84		
		(-7.72--8.62)x(4.38+4.41)/2	3.96		
		(-6.91--7.72)x(4.36+4.38)/2	3.54		
		(-6.63--6.91)x(4.35+4.36)/2	1.22		
		(-6.12--6.63)x(4.35+4.35)/2	2.22		
		(-5.54--6.12)x(4.35+4.35)/2	2.52		
		(-5.20--5.54)x(4.33+4.35)/2	1.48		
		(-4.45--5.20)x(4.30+4.33)/2	3.24		
		(-3.49--4.45)x(4.27+4.30)/2	4.11		
		(-3.35--3.49)x(4.27+4.27)/2	0.60		
		(-3.11--3.35)x(4.27+4.27)/2	1.02		
		(-2.26--3.11)x(4.25+4.27)/2	3.62		
		(-1.78--2.26)x(4.25+4.25)/2	2.04		
		(-1.17--1.78)x(4.24+4.25)/2	2.59		
		(-0.11--1.17)x(4.24+4.24)/2	4.49		
		(-0.08--0.11)x(4.24+4.24)/2	0.13		
		(-0.07--0.08)x(4.24+4.24)/2	0.04		
		(1.01--0.07)x(4.24+4.24)/2	4.58		
		(1.64-1.01)x(4.23+4.24)/2	2.67		
		(2.10-1.64)x(4.22+4.23)/2	1.94		
		(2.90-2.10)x(4.22+4.22)/2	3.38		
		(3.19-2.90)x(4.21+4.22)/2	1.22		
		(3.35-3.19)x(4.21+4.21)/2	0.67		
		(4.28-3.35)x(4.22+4.21)/2	3.92		
		(5.06-4.28)x(4.21+4.22)/2	3.29		
		(5.37-5.06)x(4.21+4.21)/2	1.31		
		(5.91-5.37)x(4.21+4.21)/2	2.27		
		(6.46-5.91)x(4.20+4.21)/2	2.31		
		(6.77-6.46)x(4.19+4.20)/2	1.30		
		(7.55-6.77)x(4.17+4.19)/2	3.26		
		(8.48-7.55)x(4.12+4.17)/2	3.85		
		(8.64-8.48)x(4.12+4.12)/2	0.66		
		(8.72-8.64)x(4.11+4.12)/2	0.33		
		(8.92-8.72)x(4.12+4.11)/2	0.82		
		(9.52-8.92)x(4.12+4.12)/2	2.47		
		(9.73-9.52)x(4.13+4.12)/2	0.87		
		(10.19-9.73)x(4.13+4.13)/2	1.90		
		(10.82-10.19)x(4.14+4.13)/2	2.61		
		(11.91-10.82)x(4.16+4.14)/2	4.52		
		(11.93-11.91)x(4.16+4.16)/2	0.08		
		(13.00-11.93)x(4.15+4.16)/2	4.45		
		(13.62-13.00)x(4.13+4.15)/2	2.57		
		(14.09-13.62)x(4.11+4.13)/2	1.94		
		(14.21-14.09)x(4.11+4.11)/2	0.49		
		(14.09-14.21)x(3.11+3.11)/2	-0.37		
		(13.62-14.09)x(3.13+3.11)/2	-1.47		
		(13.00-13.62)x(3.15+3.13)/2	-1.95		
		(11.93-13.00)x(3.16+3.15)/2	-3.38		
		(11.91-11.93)x(3.16+3.16)/2	-0.06		
		(10.82-11.91)x(3.14+3.16)/2	-3.43		
		(10.19-10.82)x(3.13+3.14)/2	-1.98		
		(9.73-10.19)x(3.13+3.13)/2	-1.44		
		(9.52-9.73)x(3.12+3.13)/2	-0.66		
		(8.92-9.52)x(3.12+3.12)/2	-1.87		
		(8.72-8.92)x(3.11+3.12)/2	-0.62		
		(8.64-8.72)x(3.12+3.11)/2	-0.25		
		(8.48-8.64)x(3.12+3.12)/2	-0.50		
		(7.55-8.48)x(3.17+3.12)/2	-2.92		
		(6.77-7.55)x(3.19+3.17)/2	-2.48		
		(6.46-6.77)x(3.20+3.19)/2	-0.99		
		(5.91-6.46)x(3.21+3.20)/2	-1.76		
		(5.37-5.91)x(3.21+3.21)/2	-1.73		
		(5.06-5.37)x(3.21+3.21)/2	-1.00		
		(4.28-5.06)x(3.22+3.21)/2	-2.51		
		(3.35-4.28)x(3.21+3.22)/2	-2.99		
		(3.19-3.35)x(3.21+3.21)/2	-0.51		
		(2.90-3.19)x(3.22+3.21)/2	-0.93		
		(2.10-2.90)x(3.22+3.22)/2	-2.58		
		(1.64-2.10)x(3.23+3.22)/2	-1.48		
		(1.01-1.64)x(3.24+3.23)/2	-2.04		
		(-0.07-1.01)x(3.24+3.24)/2	-3.50		
		(-0.08--0.07)x(3.24+3.24)/2	-0.03		
		(-0.11--0.08)x(3.24+3.24)/2	-0.10		
		(-1.17--0.11)x(3.24+3.24)/2	-3.43		
		(-1.78--1.17)x(3.25+3.24)/2	-1.98		
		(-2.26--1.78)x(3.25+3.25)/2	-1.56		
		(-3.11--2.26)x(3.27+3.25)/2	-2.77		
		(-3.35--3.11)x(3.27+3.27)/2	-0.78		
		(-3.49--3.35)x(3.27+3.27)/2	-0.46		
		(-4.45--3.49)x(3.30+3.27)/2	-3.15		
		(-5.20--4.45)x(3.33+3.30)/2	-2.49		
		(-5.54--5.20)x(3.35+3.33)/2	-1.14		
		(-6.12--5.54)x(3.35+3.35)/2	-1.94		
		(-6.63--6.12)x(3.35+3.35)/2	-1.71		
		(-6.91--6.63)x(3.36+3.35)/2	-0.94		
		(-7.72--6.91)x(3.38+3.36)/2	-2.73		
		(-8.62--7.72)x(3.41+3.38)/2	-3.06		
		(-8.81--8.62)x(3.41+3.41)/2	-0.65		
		(-8.89--8.81)x(3.41+3.41)/2	-0.27		
		(-9.13--8.89)x(3.41+3.41)/2	-0.82		
		(-9.69--9.13)x(3.42+3.41)/2	-1.91		
		(-9.90--9.69)x(3.41+3.42)/2	-0.72		
		(-10.33--9.90)x(3.41+3.41)/2	-1.47		
		(-10.99--10.33)x(3.40+3.41)/2	-2.25		
		(-12.04--10.99)x(3.42+3.40)/2	-3.58		
		(-12.08--12.04)x(3.42+3.42)/2	-0.14		
		(-12.14--12.08)x(3.42+3.42)/2	-0.21		
		(-13.17--12.14)x(3.43+3.42)/2	-3.53		
		(-13.72--13.17)x(3.43+3.43)/2	-1.89		
				27.93	
167	B01	(-13.31--13.97)x(4.31+4.30)/2	2.84		
		A RIPORTARE mq	2.84		

		CALCOLO DELLE AREE		Foglio n. 80
BONIFICA				
N. SEZIONE PROG.	FIG.	ELEMENTI DI CALCOLO	AREA ELEMENTARE mq	AREA FIGURA mq	NOTE
		RIPORTO mq	2.84		
2490.00		(-13.15--13.31)x(4.31+4.31)/2	0.69		
		(-12.88--13.15)x(4.31+4.31)/2	1.16		
		(-12.06--12.88)x(4.31+4.31)/2	3.53		
		(-11.60--12.06)x(4.30+4.31)/2	1.98		
		(-10.97--11.60)x(4.30+4.30)/2	2.71		
		(-9.89--10.97)x(4.27+4.30)/2	4.63		
		(-9.88--9.89)x(4.27+4.27)/2	0.04		
		(-9.87--9.88)x(4.27+4.27)/2	0.04		
		(-8.79--9.87)x(4.22+4.27)/2	4.58		
		(-8.18--8.79)x(4.21+4.22)/2	2.57		
		(-7.70--8.18)x(4.19+4.21)/2	2.02		
		(-6.86--7.70)x(4.20+4.19)/2	3.52		
		(-6.61--6.86)x(4.20+4.20)/2	1.05		
		(-6.47--6.61)x(4.20+4.20)/2	0.59		
		(-5.52--6.47)x(4.20+4.20)/2	3.99		
		(-4.76--5.52)x(4.20+4.20)/2	3.19		
		(-4.43--4.76)x(4.19+4.20)/2	1.38		
		(-3.85--4.43)x(4.18+4.19)/2	2.43		
		(-3.34--3.85)x(4.16+4.18)/2	2.13		
		(-3.05--3.34)x(4.15+4.16)/2	1.20		
		(-2.25--3.05)x(4.11+4.15)/2	3.30		
		(-1.34--2.25)x(4.10+4.11)/2	3.74		
		(-1.16--1.34)x(4.09+4.10)/2	0.74		
		(-0.85--1.16)x(4.10+4.09)/2	1.27		
		(-0.07--0.85)x(4.10+4.10)/2	3.20		
		(0.37--0.07)x(4.11+4.10)/2	1.81		
		(1.02-0.37)x(4.11+4.11)/2	2.67		
		(2.09-1.02)x(4.14+4.11)/2	4.41		
		(2.11-2.09)x(4.14+4.14)/2	0.08		
		(2.16-2.11)x(4.14+4.14)/2	0.21		
		(3.20-2.16)x(4.14+4.14)/2	4.31		
		(3.73-3.20)x(4.14+4.14)/2	2.19		
		(4.29-3.73)x(4.12+4.14)/2	2.31		
		(5.17-4.29)x(4.12+4.12)/2	3.63		
		(5.39-5.17)x(4.12+4.12)/2	0.91		
		(5.51-5.39)x(4.11+4.12)/2	0.49		
		(6.48-5.51)x(4.08+4.11)/2	3.97		
		(7.22-6.48)x(4.06+4.08)/2	3.01		
		(7.57-7.22)x(4.04+4.06)/2	1.42		
		(8.18-7.57)x(4.02+4.04)/2	2.46		
		(8.66-8.18)x(3.99+4.02)/2	1.92		
		(8.93-8.66)x(3.99+3.99)/2	1.08		
		(9.75-8.93)x(3.96+3.99)/2	3.26		
		(10.64-9.75)x(3.97+3.96)/2	3.53		
		(10.84-10.64)x(3.97+3.97)/2	0.79		
		(11.19-10.84)x(3.96+3.97)/2	1.39		
		(11.93-11.19)x(3.95+3.96)/2	2.93		
		(12.35-11.93)x(3.95+3.95)/2	1.66		
		(13.02-12.35)x(3.95+3.95)/2	2.65		
		(14.06-13.02)x(3.96+3.95)/2	4.11		
		(14.11-14.06)x(3.97+3.96)/2	0.20		
		(14.20-14.11)x(3.97+3.97)/2	0.36		
		(14.48-14.20)x(3.97+3.97)/2	1.11		
		(14.20-14.48)x(2.97+2.97)/2	-0.83		
		(14.11-14.20)x(2.97+2.97)/2	-0.27		
		(14.06-14.11)x(2.96+2.97)/2	-0.15		
		(13.02-14.06)x(2.95+2.96)/2	-3.07		
		(12.35-13.02)x(2.95+2.95)/2	-1.98		
		(11.93-12.35)x(2.95+2.95)/2	-1.24		
		(11.19-11.93)x(2.96+2.95)/2	-2.19		
		(10.84-11.19)x(2.97+2.96)/2	-1.04		
		(10.64-10.84)x(2.97+2.97)/2	-0.59		
		(9.75-10.64)x(2.96+2.97)/2	-2.64		
		(8.93-9.75)x(2.99+2.96)/2	-2.44		
		(8.66-8.93)x(2.99+2.99)/2	-0.81		
		(8.18-8.66)x(3.02+2.99)/2	-1.44		
		(7.57-8.18)x(3.04+3.02)/2	-1.85		
		(7.22-7.57)x(3.06+3.04)/2	-1.07		
		(6.48-7.22)x(3.08+3.06)/2	-2.27		
		(5.51-6.48)x(3.11+3.08)/2	-3.00		
		(5.39-5.51)x(3.12+3.11)/2	-0.37		
		(5.17-5.39)x(3.12+3.12)/2	-0.69		
		(4.29-5.17)x(3.12+3.12)/2	-2.75		
		(3.73-4.29)x(3.14+3.12)/2	-1.75		
		(3.20-3.73)x(3.14+3.14)/2	-1.66		
		(2.16-3.20)x(3.14+3.14)/2	-3.27		
		(2.11-2.16)x(3.14+3.14)/2	-0.16		
		(2.09-2.11)x(3.14+3.14)/2	-0.06		
		(1.02-2.09)x(3.11+3.14)/2	-3.34		
		(0.37-1.02)x(3.11+3.11)/2	-2.02		
		(-0.07-0.37)x(3.10+3.11)/2	-1.37		
		(-0.85--0.07)x(3.10+3.10)/2	-2.42		
		(-1.16--0.85)x(3.09+3.10)/2	-0.96		
		(-1.34--1.16)x(3.10+3.09)/2	-0.56		
		(-2.25--1.34)x(3.11+3.10)/2	-2.83		
		(-3.05--2.25)x(3.15+3.11)/2	-2.50		
		(-3.34--3.05)x(3.16+3.15)/2	-0.91		
		(-3.85--3.34)x(3.18+3.16)/2	-1.62		
		(-4.43--3.85)x(3.19+3.18)/2	-1.85		
		(-4.76--4.43)x(3.20+3.19)/2	-1.05		
		(-5.52--4.76)x(3.20+3.20)/2	-2.43		
		(-6.47--5.52)x(3.20+3.20)/2	-3.04		
		(-6.61--6.47)x(3.20+3.20)/2	-0.45		
		(-6.86--6.61)x(3.20+3.20)/2	-0.80		
		(-7.70--6.86)x(3.19+3.20)/2	-2.68		
		(-8.18--7.70)x(3.21+3.19)/2	-1.54		
		(-8.79--8.18)x(3.22+3.21)/2	-1.96		
		(-9.87--8.79)x(3.27+3.22)/2	-3.50		
		(-9.88--9.87)x(3.27+3.27)/2	-0.03		
		(-9.89--9.88)x(3.27+3.27)/2	-0.03		
		(-10.97--9.89)x(3.30+3.27)/2	-3.55		
		(-11.60--10.97)x(3.30+3.30)/2	-2.08		
		(-12.06--11.60)x(3.31+3.30)/2	-1.52		
		(-12.88--12.06)x(3.31+3.31)/2	-2.71		
		A RIPORTARE mq	32.05		

		CALCOLO DELLE AREE		Foglio n. 81
BONIFICA				
N. SEZIONE PROG.	FIG.	ELEMENTI DI CALCOLO	AREA ELEMENTARE mq	AREA FIGURA mq	NOTE
		RIPORTO mq	32.05		
		(-13.15--12.88)x(3.31+3.31)/2	-0.89		
		(-13.31--13.15)x(3.31+3.31)/2	-0.53		
		(-13.97--13.31)x(3.30+3.31)/2	-2.18		
				28.45	
168	BO1	(-13.62--14.11)x(4.25+4.24)/2	2.08		
2505.00		(-13.14--13.62)x(4.26+4.25)/2	2.04		
		(-12.87--13.14)x(4.26+4.26)/2	1.15		
		(-12.05--12.87)x(4.24+4.26)/2	3.48		
		(-11.16--12.05)x(4.25+4.24)/2	3.78		
		(-10.96--11.16)x(4.25+4.25)/2	0.85		
		(-10.61--10.96)x(4.24+4.25)/2	1.49		
		(-9.87--10.61)x(4.22+4.24)/2	3.13		
		(-9.44--9.87)x(4.18+4.22)/2	1.81		
		(-8.78--9.44)x(4.14+4.18)/2	2.75		
		(-7.73--8.78)x(4.10+4.14)/2	4.33		
		(-7.69--7.73)x(4.10+4.10)/2	0.16		
		(-7.60--7.69)x(4.10+4.10)/2	0.37		
		(-6.60--7.60)x(4.11+4.10)/2	4.11		
		(-6.02--6.60)x(4.10+4.11)/2	2.38		
		(-5.50--6.02)x(4.10+4.10)/2	2.13		
		(-4.59--5.50)x(4.07+4.10)/2	3.72		
		(-4.41--4.59)x(4.07+4.07)/2	0.73		
		(-4.31--4.41)x(4.06+4.07)/2	0.41		
		(-3.32--4.31)x(4.02+4.06)/2	4.00		
		(-2.60--3.32)x(3.97+4.02)/2	2.88		
		(-2.23--2.60)x(3.95+3.97)/2	1.47		
		(-2.06--2.23)x(3.94+3.95)/2	0.67		
		(-1.58--2.06)x(3.92+3.94)/2	1.89		
		(-1.26--1.58)x(3.90+3.92)/2	1.25		
		(-1.14--1.26)x(3.90+3.90)/2	0.47		
		(-0.89--1.14)x(3.89+3.90)/2	0.97		
		(-0.05--0.89)x(3.87+3.89)/2	3.26		
		(0.82--0.05)x(3.87+3.87)/2	3.37		
		(1.04-0.82)x(3.86+3.87)/2	0.85		
		(1.42-1.04)x(3.86+3.86)/2	1.47		
		(2.13-1.42)x(3.85+3.86)/2	2.74		
		(2.53-2.13)x(3.84+3.85)/2	1.54		
		(3.22-2.53)x(3.82+3.84)/2	2.64		
		(4.24-3.22)x(3.83+3.82)/2	3.90		
		(4.31-4.24)x(3.83+3.83)/2	0.27		
		(4.43-4.31)x(3.83+3.83)/2	0.46		
		(5.40-4.43)x(3.86+3.83)/2	3.73		
		(5.95-5.40)x(3.85+3.86)/2	2.12		
		(6.49-5.95)x(3.84+3.85)/2	2.08		
		(7.44-6.49)x(3.82+3.84)/2	3.64		
		(7.58-7.44)x(3.82+3.82)/2	0.53		
		(7.66-7.58)x(3.82+3.82)/2	0.31		
		(8.67-7.66)x(3.82+3.82)/2	3.86		
		(9.37-8.67)x(3.85+3.82)/2	2.68		
		(9.76-9.37)x(3.87+3.85)/2	1.51		
		(10.45-9.76)x(3.91+3.87)/2	2.68		
		(10.85-10.45)x(3.93+3.91)/2	1.57		
		(11.08-10.85)x(3.93+3.93)/2	0.90		
		(11.94-11.08)x(3.93+3.93)/2	3.38		
		(12.79-11.94)x(3.92+3.93)/2	3.34		
		(13.03-12.79)x(3.92+3.92)/2	0.94		
		(13.46-13.03)x(3.91+3.92)/2	1.68		
		(14.13-13.46)x(3.90+3.91)/2	2.62		
		(14.50-14.13)x(3.90+3.90)/2	1.44		
		(14.63-14.50)x(3.89+3.90)/2	0.51		
		(14.50-14.63)x(2.90+2.89)/2	-0.38		
		(14.13-14.50)x(2.90+2.90)/2	-1.07		
		(13.46-14.13)x(2.91+2.90)/2	-1.95		
		(13.03-13.46)x(2.92+2.91)/2	-1.25		
		(12.79-13.03)x(2.92+2.92)/2	-0.70		
		(11.94-12.79)x(2.93+2.92)/2	-2.49		
		(11.08-11.94)x(2.93+2.93)/2	-2.52		
		(10.85-11.08)x(2.93+2.93)/2	-0.67		
		(10.45-10.85)x(2.91+2.93)/2	-1.17		
		(9.76-10.45)x(2.87+2.91)/2	-1.99		
		(9.37-9.76)x(2.85+2.87)/2	-1.12		
		(8.67-9.37)x(2.82+2.85)/2	-1.98		
		(7.66-8.67)x(2.82+2.82)/2	-2.85		
		(7.58-7.66)x(2.82+2.82)/2	-0.23		
		(7.44-7.58)x(2.82+2.82)/2	-0.39		
		(6.49-7.44)x(2.84+2.82)/2	-2.69		
		(5.95-6.49)x(2.85+2.84)/2	-1.54		
		(5.40-5.95)x(2.86+2.85)/2	-1.57		
		(4.43-5.40)x(2.83+2.86)/2	-2.76		
		(4.31-4.43)x(2.83+2.83)/2	-0.34		
		(4.24-4.31)x(2.83+2.83)/2	-0.20		
		(3.22-4.24)x(2.82+2.83)/2	-2.88		
		(2.53-3.22)x(2.84+2.82)/2	-1.95		
		(2.13-2.53)x(2.85+2.84)/2	-1.14		
		(1.42-2.13)x(2.86+2.85)/2	-2.03		
		(1.04-1.42)x(2.86+2.86)/2	-1.09		
		(0.82-1.04)x(2.87+2.86)/2	-0.63		
		(-0.05-0.82)x(2.87+2.87)/2	-2.50		
		(-0.89--0.05)x(2.89+2.87)/2	-2.42		
		(-1.14--0.89)x(2.90+2.89)/2	-0.72		
		(-1.26--1.14)x(2.90+2.90)/2	-0.35		
		(-1.58--1.26)x(2.92+2.90)/2	-0.93		
		(-2.06--1.58)x(2.94+2.92)/2	-1.41		
		(-2.23--2.06)x(2.95+2.94)/2	-0.50		
		(-2.60--2.23)x(2.97+2.95)/2	-1.10		
		(-3.32--2.60)x(3.02+2.97)/2	-2.16		
		(-4.31--3.32)x(3.06+3.02)/2	-3.01		
		(-4.41--4.31)x(3.07+3.06)/2	-0.31		
		(-4.59--4.41)x(3.07+3.07)/2	-0.55		
		(-5.50--4.59)x(3.10+3.07)/2	-2.81		
		(-6.02--5.50)x(3.10+3.10)/2	-1.61		
		(-6.60--6.02)x(3.11+3.10)/2	-1.80		
		(-7.60--6.60)x(3.10+3.11)/2	-3.10		
		(-7.69--7.60)x(3.10+3.10)/2	-0.28		
		A RIPORTARE mq	49.38		

		CALCOLO DELLE AREE		Foglio n. 82
BONIFICA				
N. SEZIONE PROG.	FIG.	ELEMENTI DI CALCOLO	AREA ELEMENTARE mq	AREA FIGURA mq	NOTE
		RIPORTO mq	49.38		
		(-7.73--7.69)x(3.10+3.10)/2	-0.12		
		(-8.78--7.73)x(3.14+3.10)/2	-3.28		
		(-9.44--8.78)x(3.18+3.14)/2	-2.09		
		(-9.87--9.44)x(3.22+3.18)/2	-1.38		
		(-10.61--9.87)x(3.24+3.22)/2	-2.39		
		(-10.96--10.61)x(3.25+3.24)/2	-1.14		
		(-11.16--10.96)x(3.25+3.25)/2	-0.65		
		(-12.05--11.16)x(3.24+3.25)/2	-2.89		
		(-12.87--12.05)x(3.26+3.24)/2	-2.66		
		(-13.14--12.87)x(3.26+3.26)/2	-0.88		
		(-13.62--13.14)x(3.25+3.26)/2	-1.56		
		(-14.11--13.62)x(3.24+3.25)/2	-1.59		
				28.75	
169 2520.00	B01	(-14.13--14.14)x(4.25+4.25)/2	0.04		
		(-13.12--14.13)x(4.19+4.25)/2	4.26		
		(-12.42--13.12)x(4.17+4.19)/2	2.93		
		(-12.03--12.42)x(4.17+4.17)/2	1.63		
		(-11.35--12.03)x(4.15+4.17)/2	2.83		
		(-10.94--11.35)x(4.14+4.15)/2	1.70		
		(-10.71--10.94)x(4.14+4.14)/2	0.95		
		(-9.85--10.71)x(4.12+4.14)/2	3.55		
		(-9.00--9.85)x(4.10+4.12)/2	3.49		
		(-8.76--9.00)x(4.09+4.10)/2	0.98		
		(-8.34--8.76)x(4.08+4.09)/2	1.72		
		(-7.67--8.34)x(4.07+4.08)/2	2.73		
		(-7.05--7.67)x(4.06+4.07)/2	2.52		
		(-6.58--7.05)x(4.05+4.06)/2	1.91		
		(-5.58--6.58)x(4.03+4.05)/2	4.04		
		(-5.49--5.58)x(4.03+4.03)/2	0.36		
		(-5.33--5.49)x(4.03+4.03)/2	0.64		
		(-4.40--5.33)x(4.02+4.03)/2	3.74		
		(-3.87--4.40)x(4.01+4.02)/2	2.13		
		(-3.31--3.87)x(4.00+4.01)/2	2.24		
		(-2.32--3.31)x(3.99+4.00)/2	3.96		
		(-2.22--2.32)x(3.99+3.99)/2	0.40		
		(-2.16--2.22)x(3.99+3.99)/2	0.24		
		(-1.13--2.16)x(3.99+3.99)/2	4.11		
		(-0.45--1.13)x(4.01+3.99)/2	2.72		
		(-0.04--0.45)x(4.01+4.01)/2	1.64		
		(0.68--0.04)x(4.03+4.01)/2	2.89		
		(1.05-0.68)x(4.04+4.03)/2	1.49		
		(1.26-1.05)x(4.04+4.04)/2	0.85		
		(2.14-1.26)x(4.06+4.04)/2	3.56		
		(2.97-2.14)x(4.04+4.06)/2	3.36		
		(3.23-2.97)x(4.04+4.04)/2	1.05		
		(3.69-3.23)x(4.01+4.04)/2	1.85		
		(4.33-3.69)x(3.98+4.01)/2	2.56		
		(4.68-4.33)x(3.97+3.98)/2	1.39		
		(5.42-4.68)x(3.96+3.97)/2	2.93		
		(6.40-5.42)x(3.95+3.96)/2	3.88		
		(6.51-6.40)x(3.95+3.95)/2	0.43		
		(6.70-6.51)x(3.95+3.95)/2	0.75		
		(7.60-6.70)x(3.98+3.95)/2	3.57		
		(8.11-7.60)x(4.00+3.98)/2	2.03		
		(8.69-8.11)x(4.02+4.00)/2	2.33		
		(9.71-8.69)x(4.03+4.02)/2	4.11		
		(9.78-9.71)x(4.03+4.03)/2	0.28		
		(9.82-9.78)x(4.03+4.03)/2	0.16		
		(10.87-9.82)x(4.04+4.03)/2	4.24		
		(11.53-10.87)x(4.05+4.04)/2	2.67		
		(11.96-11.53)x(4.06+4.05)/2	1.74		
		(12.16-11.96)x(4.06+4.06)/2	0.81		
		(12.72-12.16)x(4.05+4.06)/2	2.27		
		(12.96-12.72)x(4.04+4.05)/2	0.97		
		(13.05-12.96)x(4.04+4.04)/2	0.36		
		(13.24-13.05)x(4.04+4.04)/2	0.77		
		(14.14-13.24)x(4.03+4.04)/2	3.63		
		(14.50-14.14)x(4.01+4.03)/2	1.45		
		(14.14-14.50)x(3.03+3.01)/2	-1.09		
		(13.24-14.14)x(3.04+3.03)/2	-2.73		
		(13.05-13.24)x(3.04+3.04)/2	-0.58		
		(12.96-13.05)x(3.04+3.04)/2	-0.27		
		(12.72-12.96)x(3.05+3.04)/2	-0.73		
		(12.16-12.72)x(3.06+3.05)/2	-1.71		
		(11.96-12.16)x(3.06+3.06)/2	-0.61		
		(11.53-11.96)x(3.05+3.06)/2	-1.31		
		(10.87-11.53)x(3.04+3.05)/2	-2.01		
		(9.82-10.87)x(3.03+3.04)/2	-3.19		
		(9.78-9.82)x(3.03+3.03)/2	-0.12		
		(9.71-9.78)x(3.03+3.03)/2	-0.21		
		(8.69-9.71)x(3.02+3.03)/2	-3.09		
		(8.11-8.69)x(3.00+3.02)/2	-1.75		
		(7.60-8.11)x(2.98+3.00)/2	-1.52		
		(6.70-7.60)x(2.95+2.98)/2	-2.67		
		(6.51-6.70)x(2.95+2.95)/2	-0.56		
		(6.40-6.51)x(2.95+2.95)/2	-0.32		
		(5.42-6.40)x(2.96+2.95)/2	-2.90		
		(4.68-5.42)x(2.97+2.96)/2	-2.19		
		(4.33-4.68)x(2.98+2.97)/2	-1.04		
		(3.69-4.33)x(3.01+2.98)/2	-1.92		
		(3.23-3.69)x(3.04+3.01)/2	-1.39		
		(2.97-3.23)x(3.04+3.04)/2	-0.79		
		(2.14-2.97)x(3.06+3.04)/2	-2.53		
		(1.26-2.14)x(3.04+3.06)/2	-2.68		
		(1.05-1.26)x(3.04+3.04)/2	-0.64		
		(0.68-1.05)x(3.03+3.04)/2	-1.12		
		(-0.04-0.68)x(3.01+3.03)/2	-2.17		
		(-0.45--0.04)x(3.01+3.01)/2	-1.23		
		(-1.13--0.45)x(2.99+3.01)/2	-2.04		
		(-2.16--1.13)x(2.99+2.99)/2	-3.08		
		(-2.22--2.16)x(2.99+2.99)/2	-0.18		
		(-2.32--2.22)x(2.99+2.99)/2	-0.30		
		(-3.31--2.32)x(3.00+2.99)/2	-2.97		
		(-3.87--3.31)x(3.01+3.00)/2	-1.68		
		A RIPORTARE mq	60.52		

		CALCOLO DELLE AREE		Foglio n. 83
BONIFICA				
N. SEZIONE PROG.	FIG.	ELEMENTI DI CALCOLO	AREA ELEMENTARE mq	AREA FIGURA mq	NOTE
		RIPORTO mq	60.52		
		(-4.40--3.87)x(3.02+3.01)/2	-1.60		
		(-5.33--4.40)x(3.03+3.02)/2	-2.81		
		(-5.49--5.33)x(3.03+3.03)/2	-0.48		
		(-5.58--5.49)x(3.03+3.03)/2	-0.27		
		(-6.58--5.58)x(3.05+3.03)/2	-3.04		
		(-7.05--6.58)x(3.06+3.05)/2	-1.44		
		(-7.67--7.05)x(3.07+3.06)/2	-1.90		
		(-8.34--7.67)x(3.08+3.07)/2	-2.06		
		(-8.76--8.34)x(3.09+3.08)/2	-1.30		
		(-9.00--8.76)x(3.10+3.09)/2	-0.74		
		(-9.85--9.00)x(3.12+3.10)/2	-2.64		
		(-10.71--9.85)x(3.14+3.12)/2	-2.69		
		(-10.94--10.71)x(3.14+3.14)/2	-0.72		
		(-11.35--10.94)x(3.15+3.14)/2	-1.29		
		(-12.03--11.35)x(3.17+3.15)/2	-2.15		
		(-12.42--12.03)x(3.17+3.17)/2	-1.24		
		(-13.12--12.42)x(3.19+3.17)/2	-2.23		
		(-14.13--13.12)x(3.25+3.19)/2	-3.25		
		(-14.14--14.13)x(3.25+3.25)/2	-0.03		
				28.64	
170 2535.00	BO1	(3.25-3.05)x(5.02+5.15)/2	1.02		
		(3.42-3.25)x(4.92+5.02)/2	0.84		
		(4.34-3.42)x(4.35+4.92)/2	4.26		
		(5.13-4.34)x(4.14+4.35)/2	3.35		
		(5.43-5.13)x(4.04+4.14)/2	1.23		
		(5.96-5.43)x(4.03+4.04)/2	2.14		
		(6.52-5.96)x(4.01+4.03)/2	2.25		
		(7.17-6.52)x(4.01+4.01)/2	2.61		
		(7.61-7.17)x(4.01+4.01)/2	1.76		
		(8.55-7.61)x(4.00+4.01)/2	3.76		
		(8.70-8.55)x(4.00+4.00)/2	0.60		
		(8.97-8.70)x(4.01+4.00)/2	1.08		
		(9.79-8.97)x(4.03+4.01)/2	3.30		
		(10.26-9.79)x(4.05+4.03)/2	1.90		
		(10.88-10.26)x(4.07+4.05)/2	2.52		
		(11.97-10.88)x(4.12+4.07)/2	4.46		
		(11.98-11.97)x(4.12+4.12)/2	0.04		
		(13.07-11.98)x(4.12+4.12)/2	4.49		
		(13.68-13.07)x(4.12+4.12)/2	2.51		
		(14.16-13.68)x(4.12+4.12)/2	1.98		
		(14.40-14.16)x(4.11+4.12)/2	0.99		
		(14.16-14.40)x(3.12+3.11)/2	-0.75		
		(13.68-14.16)x(3.12+3.12)/2	-1.50		
		(13.07-13.68)x(3.12+3.12)/2	-1.90		
		(11.98-13.07)x(3.12+3.12)/2	-3.40		
		(11.97-11.98)x(3.12+3.12)/2	-0.03		
		(10.88-11.97)x(3.07+3.12)/2	-3.37		
		(10.26-10.88)x(3.05+3.07)/2	-1.90		
		(9.79-10.26)x(3.03+3.05)/2	-1.43		
		(8.97-9.79)x(3.01+3.03)/2	-2.48		
		(8.70-8.97)x(3.00+3.01)/2	-0.81		
		(8.55-8.70)x(3.00+3.00)/2	-0.45		
		(7.61-8.55)x(3.01+3.00)/2	-2.82		
		(7.17-7.61)x(3.01+3.01)/2	-1.32		
		(6.52-7.17)x(3.01+3.01)/2	-1.96		
		(5.96-6.52)x(3.03+3.01)/2	-1.69		
		(5.43-5.96)x(3.04+3.03)/2	-1.61		
		(5.13-5.43)x(3.14+3.04)/2	-0.93		
		(4.34-5.13)x(3.35+3.14)/2	-2.56		
		(3.42-4.34)x(3.92+3.35)/2	-3.34		
		(3.25-3.42)x(4.02+3.92)/2	-0.67		
		(3.05-3.25)x(4.15+4.02)/2	-0.82		
				11.35	
171 2550.00	BO1	(3.27-2.77)x(4.93+5.18)/2	2.53		
		(3.86-3.27)x(4.64+4.93)/2	2.82		
		(4.36-3.86)x(4.42+4.64)/2	2.27		
		(5.22-4.36)x(4.18+4.42)/2	3.70		
		(5.45-5.22)x(4.12+4.18)/2	0.95		
		(5.57-5.45)x(4.11+4.12)/2	0.49		
		(6.54-5.57)x(4.05+4.11)/2	3.96		
		(7.28-6.54)x(4.07+4.05)/2	3.00		
		(7.63-7.28)x(4.07+4.07)/2	1.42		
		(8.23-7.63)x(4.09+4.07)/2	2.45		
		(8.72-8.23)x(4.11+4.09)/2	2.01		
		(9.00-8.72)x(4.11+4.11)/2	1.15		
		(9.81-9.00)x(4.12+4.11)/2	3.33		
		(10.71-9.81)x(4.14+4.12)/2	3.72		
		(10.90-10.71)x(4.15+4.14)/2	0.79		
		(11.24-10.90)x(4.15+4.15)/2	1.41		
		(11.99-11.24)x(4.14+4.15)/2	3.11		
		(12.42-11.99)x(4.14+4.14)/2	1.78		
		(13.08-12.42)x(4.15+4.14)/2	2.74		
		(14.13-13.08)x(4.14+4.15)/2	4.35		
		(14.17-14.13)x(4.13+4.14)/2	0.17		
		(14.25-14.17)x(4.13+4.13)/2	0.33		
		(14.42-14.25)x(4.12+4.13)/2	0.70		
		(14.25-14.42)x(3.13+3.12)/2	-0.53		
		(14.17-14.25)x(3.13+3.13)/2	-0.25		
		(14.13-14.17)x(3.14+3.13)/2	-0.13		
		(13.08-14.13)x(3.15+3.14)/2	-3.30		
		(12.42-13.08)x(3.14+3.15)/2	-2.08		
		(11.99-12.42)x(3.14+3.14)/2	-1.35		
		(11.24-11.99)x(3.15+3.14)/2	-2.36		
		(10.90-11.24)x(3.15+3.15)/2	-1.07		
		(10.71-10.90)x(3.14+3.15)/2	-0.60		
		(9.81-10.71)x(3.12+3.14)/2	-2.82		
		(9.00-9.81)x(3.11+3.12)/2	-2.52		
		(8.72-9.00)x(3.11+3.11)/2	-0.87		
		(8.23-8.72)x(3.09+3.11)/2	-1.52		
		(7.63-8.23)x(3.07+3.09)/2	-1.85		
		(7.28-7.63)x(3.07+3.07)/2	-1.07		
		(6.54-7.28)x(3.05+3.07)/2	-2.26		
		(5.57-6.54)x(3.11+3.05)/2	-2.99		
		(5.45-5.57)x(3.12+3.11)/2	-0.37		
		A RIPORTARE mq	21.24		

		CALCOLO DELLE AREE		Foglio n. 84
BONIFICA				
N. SEZIONE PROG.	FIG.	ELEMENTI DI CALCOLO	AREA ELEMENTARE mq	AREA FIGURA mq	NOTE
		RIPORTO mq	21.24		
		(5.22-5.45)x(3.18+3.12)/2	-0.72		
		(4.36-5.22)x(3.42+3.18)/2	-2.84		
		(3.86-4.36)x(3.64+3.42)/2	-1.77		
		(3.27-3.86)x(3.93+3.64)/2	-2.23		
		(2.77-3.27)x(4.18+3.93)/2	-2.03		
				11.65	
172	BO1	(2.60-2.39)x(4.06+4.07)/2	0.85		
2565.00		(3.28-2.60)x(4.06+4.06)/2	2.76		
		(4.31-3.28)x(4.03+4.06)/2	4.17		
		(4.37-4.31)x(4.03+4.03)/2	0.24		
		(4.48-4.37)x(4.02+4.03)/2	0.44		
		(5.46-4.48)x(3.98+4.02)/2	3.92		
		(6.02-5.46)x(3.97+3.98)/2	2.23		
		(6.55-6.02)x(3.96+3.97)/2	2.10		
		(7.49-6.55)x(3.96+3.96)/2	3.72		
		(7.64-7.49)x(3.96+3.96)/2	0.59		
		(7.73-7.64)x(3.96+3.96)/2	0.36		
		(8.73-7.73)x(3.94+3.96)/2	3.95		
		(9.44-8.73)x(3.93+3.94)/2	2.79		
		(9.82-9.44)x(3.93+3.93)/2	1.49		
		(10.50-9.82)x(3.92+3.93)/2	2.67		
		(10.92-10.50)x(3.92+3.92)/2	1.65		
		(11.15-10.92)x(3.91+3.92)/2	0.90		
		(12.01-11.15)x(3.89+3.91)/2	3.35		
		(12.86-12.01)x(3.89+3.89)/2	3.31		
		(13.10-12.86)x(3.89+3.89)/2	0.93		
		(13.51-13.10)x(3.89+3.89)/2	1.59		
		(14.19-13.51)x(3.90+3.89)/2	2.65		
		(14.80-14.19)x(3.90+3.90)/2	2.38		
		(14.19-14.80)x(2.90+2.90)/2	-1.77		
		(13.51-14.19)x(2.89+2.90)/2	-1.97		
		(13.10-13.51)x(2.89+2.89)/2	-1.18		
		(12.86-13.10)x(2.89+2.89)/2	-0.69		
		(12.01-12.86)x(2.89+2.89)/2	-2.46		
		(11.15-12.01)x(2.91+2.89)/2	-2.49		
		(10.92-11.15)x(2.92+2.91)/2	-0.67		
		(10.50-10.92)x(2.92+2.92)/2	-1.23		
		(9.82-10.50)x(2.93+2.92)/2	-1.99		
		(9.44-9.82)x(2.93+2.93)/2	-1.11		
		(8.73-9.44)x(2.94+2.93)/2	-2.08		
		(7.73-8.73)x(2.96+2.94)/2	-2.95		
		(7.64-7.73)x(2.96+2.96)/2	-0.27		
		(7.49-7.64)x(2.96+2.96)/2	-0.44		
		(6.55-7.49)x(2.96+2.96)/2	-2.78		
		(6.02-6.55)x(2.97+2.96)/2	-1.57		
		(5.46-6.02)x(2.98+2.97)/2	-1.67		
		(4.48-5.46)x(3.02+2.98)/2	-2.94		
		(4.37-4.48)x(3.03+3.02)/2	-0.33		
		(4.31-4.37)x(3.03+3.03)/2	-0.18		
		(3.28-4.31)x(3.06+3.03)/2	-3.14		
		(2.39-3.28)x(3.07+3.06)/2	-2.73		
				12.40	
173	BO1	(-9.39--9.79)x(4.20+4.22)/2	1.68		
2580.00		(-8.70--9.39)x(4.17+4.20)/2	2.89		
		(-8.29--8.70)x(4.18+4.17)/2	1.71		
		(-7.61--8.29)x(4.19+4.18)/2	2.85		
		(-7.22--7.61)x(4.19+4.19)/2	1.63		
		(-6.52--7.22)x(4.18+4.19)/2	2.93		
		(-5.51--6.52)x(4.16+4.18)/2	4.21		
		(-5.43--5.51)x(4.16+4.16)/2	0.33		
		(-5.28--5.43)x(4.16+4.16)/2	0.62		
		(-4.34--5.28)x(4.13+4.16)/2	3.90		
		(-3.80--4.34)x(4.14+4.13)/2	2.23		
		(-3.25--3.80)x(4.14+4.14)/2	2.28		
		(-2.27--3.25)x(4.15+4.14)/2	4.06		
		(-2.16--2.27)x(4.15+4.15)/2	0.46		
		(-2.09--2.16)x(4.15+4.15)/2	0.29		
		(-1.07--2.09)x(4.19+4.15)/2	4.25		
		(-0.38--1.07)x(4.18+4.19)/2	2.89		
		(0.02--0.38)x(4.17+4.18)/2	1.67		
		(0.74-0.02)x(4.18+4.17)/2	3.01		
		(1.12-0.74)x(4.18+4.18)/2	1.59		
		(1.33-1.12)x(4.18+4.18)/2	0.88		
		(2.21-1.33)x(4.18+4.18)/2	3.68		
		(3.04-2.21)x(4.18+4.18)/2	3.47		
		(3.30-3.04)x(4.18+4.18)/2	1.09		
		(3.75-3.30)x(4.18+4.18)/2	1.88		
		(4.39-3.75)x(4.18+4.18)/2	2.68		
		(4.75-4.39)x(4.18+4.18)/2	1.50		
		(5.48-4.75)x(4.17+4.18)/2	3.05		
		(6.46-5.48)x(4.18+4.17)/2	4.09		
		(6.57-6.46)x(4.18+4.18)/2	0.46		
		(6.75-6.57)x(4.18+4.18)/2	0.75		
		(7.66-6.75)x(4.17+4.18)/2	3.80		
		(8.17-7.66)x(4.17+4.17)/2	2.13		
		(8.75-8.17)x(4.18+4.17)/2	2.42		
		(9.02-8.75)x(4.18+4.18)/2	1.13		
		(9.76-9.02)x(4.17+4.18)/2	3.09		
		(9.82-9.76)x(4.17+4.17)/2	0.25		
		(9.84-9.82)x(4.17+4.17)/2	0.08		
		(9.88-9.84)x(4.17+4.17)/2	0.17		
		(10.93-9.88)x(4.15+4.17)/2	4.37		
		(11.59-10.93)x(4.15+4.15)/2	2.74		
		(12.02-11.59)x(4.15+4.15)/2	1.78		
		(12.77-12.02)x(4.15+4.15)/2	3.11		
		(13.11-12.77)x(4.15+4.15)/2	1.41		
		(13.31-13.11)x(4.15+4.15)/2	0.83		
		(14.20-13.31)x(4.14+4.15)/2	3.69		
		(14.49-14.20)x(4.14+4.14)/2	1.20		
		(14.20-14.49)x(3.14+3.14)/2	-0.91		
		(13.31-14.20)x(3.15+3.14)/2	-2.80		
		(13.11-13.31)x(3.15+3.15)/2	-0.63		
		(12.77-13.11)x(3.15+3.15)/2	-1.07		
		(12.02-12.77)x(3.15+3.15)/2	-2.36		
		A RIPORTARE mq	93.44		

		CALCOLO DELLE AREE		Foglio n. 85
BONIFICA				
N. SEZIONE PROG.	FIG.	ELEMENTI DI CALCOLO	AREA ELEMENTARE mq	AREA FIGURA mq	NOTE
		RIPORTO mq	93.44		
		(11.59-12.02)x(3.15+3.15)/2	-1.35		
		(10.93-11.59)x(3.15+3.15)/2	-2.08		
		(9.88-10.93)x(3.17+3.15)/2	-3.32		
		(9.84-9.88)x(3.17+3.17)/2	-0.13		
		(9.82-9.84)x(3.17+3.17)/2	-0.06		
		(9.76-9.82)x(3.17+3.17)/2	-0.19		
		(9.02-9.76)x(3.18+3.17)/2	-2.35		
		(8.75-9.02)x(3.18+3.18)/2	-0.86		
		(8.17-8.75)x(3.17+3.18)/2	-1.84		
		(7.66-8.17)x(3.17+3.17)/2	-1.62		
		(6.75-7.66)x(3.18+3.17)/2	-2.89		
		(6.57-6.75)x(3.18+3.18)/2	-0.57		
		(6.46-6.57)x(3.18+3.18)/2	-0.35		
		(5.48-6.46)x(3.17+3.18)/2	-3.11		
		(4.75-5.48)x(3.18+3.17)/2	-2.32		
		(4.39-4.75)x(3.18+3.18)/2	-1.14		
		(3.75-4.39)x(3.18+3.18)/2	-2.04		
		(3.30-3.75)x(3.18+3.18)/2	-1.43		
		(3.04-3.30)x(3.18+3.18)/2	-0.83		
		(2.21-3.04)x(3.18+3.18)/2	-2.64		
		(1.33-2.21)x(3.18+3.18)/2	-2.80		
		(1.12-1.33)x(3.18+3.18)/2	-0.67		
		(0.74-1.12)x(3.18+3.18)/2	-1.21		
		(0.02-0.74)x(3.17+3.18)/2	-2.29		
		(-0.38-0.02)x(3.18+3.17)/2	-1.27		
		(-1.07--0.38)x(3.19+3.18)/2	-2.20		
		(-2.09--1.07)x(3.15+3.19)/2	-3.23		
		(-2.16--2.09)x(3.15+3.15)/2	-0.22		
		(-2.27--2.16)x(3.15+3.15)/2	-0.35		
		(-3.25--2.27)x(3.14+3.15)/2	-3.08		
		(-3.80--3.25)x(3.14+3.14)/2	-1.73		
		(-4.34--3.80)x(3.13+3.14)/2	-1.69		
		(-5.28--4.34)x(3.16+3.13)/2	-2.96		
		(-5.43--5.28)x(3.16+3.16)/2	-0.47		
		(-5.51--5.43)x(3.16+3.16)/2	-0.25		
		(-6.52--5.51)x(3.18+3.16)/2	-3.20		
		(-7.22--6.52)x(3.19+3.18)/2	-2.23		
		(-7.61--7.22)x(3.19+3.19)/2	-1.24		
		(-8.29--7.61)x(3.18+3.19)/2	-2.17		
		(-8.70--8.29)x(3.17+3.18)/2	-1.30		
		(-9.39--8.70)x(3.20+3.17)/2	-2.20		
		(-9.79--9.39)x(3.22+3.20)/2	-1.28		
				24.28	
174	B01	(-14.38--14.43)x(4.18+4.18)/2	0.21		
2595.00		(-14.13--14.38)x(4.19+4.18)/2	1.05		
		(-13.60--14.13)x(4.20+4.19)/2	2.22		
		(-13.04--13.60)x(4.21+4.20)/2	2.35		
		(-12.05--13.04)x(4.23+4.21)/2	4.18		
		(-11.95--12.05)x(4.23+4.23)/2	0.42		
		(-11.90--11.95)x(4.23+4.23)/2	0.21		
		(-10.86--11.90)x(4.25+4.23)/2	4.41		
		(-10.19--10.86)x(4.26+4.25)/2	2.85		
		(-9.77--10.19)x(4.26+4.26)/2	1.79		
		(-9.04--9.77)x(4.27+4.26)/2	3.11		
		(-8.68--9.04)x(4.28+4.27)/2	1.54		
		(-8.48--8.68)x(4.28+4.28)/2	0.86		
		(-7.59--8.48)x(4.28+4.28)/2	3.81		
		(-6.77--7.59)x(4.27+4.28)/2	3.51		
		(-6.50--6.77)x(4.26+4.27)/2	1.15		
		(-6.03--6.50)x(4.25+4.26)/2	2.00		
		(-5.41--6.03)x(4.23+4.25)/2	2.63		
		(-5.06--5.41)x(4.22+4.23)/2	1.48		
		(-4.32--5.06)x(4.20+4.22)/2	3.12		
		(-3.35--4.32)x(4.20+4.20)/2	4.07		
		(-3.23--3.35)x(4.20+4.20)/2	0.50		
		(-3.01--3.23)x(4.19+4.20)/2	0.92		
		(-2.14--3.01)x(4.18+4.19)/2	3.64		
		(-1.64--2.14)x(4.17+4.18)/2	2.09		
		(-1.05--1.64)x(4.16+4.17)/2	2.46		
		(-0.00--1.05)x(4.16+4.16)/2	4.37		
		(0.04--0.00)x(4.16+4.16)/2	0.17		
		(0.06-0.04)x(4.16+4.16)/2	0.08		
		(1.13-0.06)x(4.15+4.16)/2	4.45		
		(1.77-1.13)x(4.13+4.15)/2	2.65		
		(2.22-1.77)x(4.12+4.13)/2	1.86		
		(3.01-2.22)x(4.11+4.12)/2	3.25		
		(3.31-3.01)x(4.10+4.11)/2	1.23		
		(4.03-3.31)x(4.09+4.10)/2	2.95		
		(4.40-4.03)x(4.09+4.09)/2	1.51		
		(5.19-4.40)x(4.10+4.09)/2	3.24		
		(5.49-5.19)x(4.10+4.10)/2	1.23		
		(6.03-5.49)x(4.10+4.10)/2	2.21		
		(6.58-6.03)x(4.10+4.10)/2	2.25		
		(6.90-6.58)x(4.09+4.10)/2	1.31		
		(7.67-6.90)x(4.09+4.09)/2	3.15		
		(8.61-7.67)x(4.07+4.09)/2	3.84		
		(8.76-8.61)x(4.07+4.07)/2	0.61		
		(9.04-8.76)x(4.07+4.07)/2	1.14		
		(9.85-9.04)x(4.06+4.07)/2	3.29		
		(10.32-9.85)x(4.05+4.06)/2	1.91		
		(10.94-10.32)x(4.04+4.05)/2	2.51		
		(12.02-10.94)x(4.02+4.04)/2	4.35		
		(12.03-12.02)x(4.02+4.02)/2	0.04		
		(12.05-12.03)x(4.02+4.02)/2	0.08		
		(13.12-12.05)x(4.01+4.02)/2	4.30		
		(13.73-13.12)x(4.00+4.01)/2	2.44		
		(14.21-13.73)x(4.01+4.00)/2	1.92		
		(14.91-14.21)x(4.00+4.01)/2	2.80		
		(14.21-14.91)x(3.01+3.00)/2	-2.10		
		(13.73-14.21)x(3.00+3.01)/2	-1.44		
		(13.12-13.73)x(3.01+3.00)/2	-1.83		
		(12.05-13.12)x(3.02+3.01)/2	-3.23		
		(12.03-12.05)x(3.02+3.02)/2	-0.06		
		(12.02-12.03)x(3.02+3.02)/2	-0.03		
		A RIPORTARE mq	113.03		

		CALCOLO DELLE AREE		Foglio n. 86
BONIFICA				
N. SEZIONE PROG.	FIG.	ELEMENTI DI CALCOLO	AREA ELEMENTARE mq	AREA FIGURA mq	NOTE
		RIPORTO mq	113.03		
		(10.94-12.02)x(3.04+3.02)/2	-3.27		
		(10.32-10.94)x(3.05+3.04)/2	-1.89		
		(9.85-10.32)x(3.06+3.05)/2	-1.44		
		(9.04-9.85)x(3.07+3.06)/2	-2.48		
		(8.76-9.04)x(3.07+3.07)/2	-0.86		
		(8.61-8.76)x(3.07+3.07)/2	-0.46		
		(7.67-8.61)x(3.09+3.07)/2	-2.90		
		(6.90-7.67)x(3.09+3.09)/2	-2.38		
		(6.58-6.90)x(3.10+3.09)/2	-0.99		
		(6.03-6.58)x(3.10+3.10)/2	-1.70		
		(5.49-6.03)x(3.10+3.10)/2	-1.67		
		(5.19-5.49)x(3.10+3.10)/2	-0.93		
		(4.40-5.19)x(3.09+3.10)/2	-2.45		
		(4.03-4.40)x(3.09+3.09)/2	-1.14		
		(3.31-4.03)x(3.10+3.09)/2	-2.23		
		(3.01-3.31)x(3.11+3.10)/2	-0.93		
		(2.22-3.01)x(3.12+3.11)/2	-2.46		
		(1.77-2.22)x(3.13+3.12)/2	-1.41		
		(1.13-1.77)x(3.15+3.13)/2	-2.01		
		(0.06-1.13)x(3.16+3.15)/2	-3.38		
		(0.04-0.06)x(3.16+3.16)/2	-0.06		
		(-0.00-0.04)x(3.16+3.16)/2	-0.13		
		(-1.05--0.00)x(3.16+3.16)/2	-3.32		
		(-1.64--1.05)x(3.17+3.16)/2	-1.87		
		(-2.14--1.64)x(3.18+3.17)/2	-1.59		
		(-3.01--2.14)x(3.19+3.18)/2	-2.77		
		(-3.23--3.01)x(3.20+3.19)/2	-0.70		
		(-3.35--3.23)x(3.20+3.20)/2	-0.38		
		(-4.32--3.35)x(3.20+3.20)/2	-3.10		
		(-5.06--4.32)x(3.22+3.20)/2	-2.38		
		(-5.41--5.06)x(3.23+3.22)/2	-1.13		
		(-6.03--5.41)x(3.25+3.23)/2	-2.01		
		(-6.50--6.03)x(3.26+3.25)/2	-1.53		
		(-6.77--6.50)x(3.27+3.26)/2	-0.88		
		(-7.59--6.77)x(3.28+3.27)/2	-2.69		
		(-8.48--7.59)x(3.28+3.28)/2	-2.92		
		(-8.68--8.48)x(3.28+3.28)/2	-0.66		
		(-9.04--8.68)x(3.27+3.28)/2	-1.18		
		(-9.77--9.04)x(3.26+3.27)/2	-2.38		
		(-10.19--9.77)x(3.26+3.26)/2	-1.37		
		(-10.86--10.19)x(3.25+3.26)/2	-2.18		
		(-11.90--10.86)x(3.23+3.25)/2	-3.37		
		(-11.95--11.90)x(3.23+3.23)/2	-0.16		
		(-12.05--11.95)x(3.23+3.23)/2	-0.32		
		(-13.04--12.05)x(3.21+3.23)/2	-3.19		
		(-13.60--13.04)x(3.20+3.21)/2	-1.79		
		(-14.13--13.60)x(3.19+3.20)/2	-1.69		
		(-14.38--14.13)x(3.18+3.19)/2	-0.80		
		(-14.43--14.38)x(3.18+3.18)/2	-0.16		
				29.34	
175 2610.00	BO1	(-14.74--14.92)x(3.83+3.83)/2	0.69		
		(-14.08--14.74)x(3.81+3.83)/2	2.52		
		(-13.05--14.08)x(3.78+3.81)/2	3.91		
		(-12.99--13.05)x(3.77+3.78)/2	0.23		
		(-12.88--12.99)x(3.77+3.77)/2	0.41		
		(-11.90--12.88)x(3.76+3.77)/2	3.69		
		(-11.35--11.90)x(3.75+3.76)/2	2.07		
		(-10.81--11.35)x(3.75+3.75)/2	2.02		
		(-9.84--10.81)x(3.74+3.75)/2	3.63		
		(-9.72--9.84)x(3.74+3.74)/2	0.45		
		(-9.65--9.72)x(3.74+3.74)/2	0.26		
		(-8.63--9.65)x(3.74+3.74)/2	3.81		
		(-7.96--8.63)x(3.75+3.74)/2	2.51		
		(-7.54--7.96)x(3.76+3.75)/2	1.58		
		(-6.80--7.54)x(3.77+3.76)/2	2.79		
		(-6.45--6.80)x(3.78+3.77)/2	1.32		
		(-6.26--6.45)x(3.78+3.78)/2	0.72		
		(-5.36--6.26)x(3.80+3.78)/2	3.41		
		(-4.56--5.36)x(3.80+3.80)/2	3.04		
		(-4.27--4.56)x(3.80+3.80)/2	1.10		
		(-3.76--4.27)x(3.79+3.80)/2	1.94		
		(-3.18--3.76)x(3.78+3.79)/2	2.20		
		(-2.86--3.18)x(3.78+3.78)/2	1.21		
		(-2.10--2.86)x(3.77+3.78)/2	2.87		
		(-1.73--2.10)x(3.77+3.77)/2	1.39		
		(-1.01--1.73)x(3.76+3.77)/2	2.71		
		(-0.72--1.01)x(3.77+3.76)/2	1.09		
		(0.08--0.72)x(3.78+3.77)/2	3.02		
		(0.53-0.08)x(3.79+3.78)/2	1.70		
		(1.17-0.53)x(3.80+3.79)/2	2.43		
		(2.23-1.17)x(3.83+3.80)/2	4.04		
		(2.26-2.23)x(3.83+3.83)/2	0.11		
		(2.32-2.26)x(3.83+3.83)/2	0.23		
		(3.35-2.32)x(3.83+3.83)/2	3.94		
		(3.93-3.35)x(3.85+3.83)/2	2.23		
		(4.44-3.93)x(3.86+3.85)/2	1.97		
		(5.36-4.44)x(3.89+3.86)/2	3.56		
		(5.53-5.36)x(3.89+3.89)/2	0.66		
		(5.62-5.53)x(3.89+3.89)/2	0.35		
		(6.62-5.62)x(3.92+3.89)/2	3.91		
		(7.32-6.62)x(3.97+3.92)/2	2.76		
		(7.71-7.32)x(4.00+3.97)/2	1.55		
		(8.40-7.71)x(4.04+4.00)/2	2.77		
		(8.80-8.40)x(4.07+4.04)/2	1.62		
		(9.02-8.80)x(4.08+4.07)/2	0.90		
		(9.88-9.02)x(4.13+4.08)/2	3.53		
		(10.72-9.88)x(4.17+4.13)/2	3.49		
		(10.97-10.72)x(4.18+4.17)/2	1.04		
		(11.44-10.97)x(4.19+4.18)/2	1.97		
		(12.06-11.44)x(4.20+4.19)/2	2.60		
		(12.41-12.06)x(4.21+4.20)/2	1.47		
		(13.15-12.41)x(4.22+4.21)/2	3.12		
		(14.11-13.15)x(4.22+4.22)/2	4.05		
		(14.24-14.11)x(4.22+4.22)/2	0.55		
		A RIPORTARE mq	113.14		

		CALCOLO DELLE AREE		Foglio n. 87
BONIFICA				
N. SEZIONE PROG.	FIG.	ELEMENTI DI CALCOLO	AREA ELEMENTARE mq	AREA FIGURA mq	NOTE
		RIPORTO mq	113.14		
		(14.48-14.24)x(4.22+4.22)/2	1.01		
		(14.97-14.48)x(4.22+4.22)/2	2.07		
		(14.48-14.97)x(3.22+3.22)/2	-1.58		
		(14.24-14.48)x(3.22+3.22)/2	-0.77		
		(14.11-14.24)x(3.22+3.22)/2	-0.42		
		(13.15-14.11)x(3.22+3.22)/2	-3.09		
		(12.41-13.15)x(3.21+3.22)/2	-2.38		
		(12.06-12.41)x(3.20+3.21)/2	-1.12		
		(11.44-12.06)x(3.19+3.20)/2	-1.98		
		(10.97-11.44)x(3.18+3.19)/2	-1.50		
		(10.72-10.97)x(3.17+3.18)/2	-0.79		
		(9.88-10.72)x(3.13+3.17)/2	-2.65		
		(9.02-9.88)x(3.08+3.13)/2	-2.67		
		(8.80-9.02)x(3.07+3.08)/2	-0.68		
		(8.40-8.80)x(3.04+3.07)/2	-1.22		
		(7.71-8.40)x(3.00+3.04)/2	-2.08		
		(7.32-7.71)x(2.97+3.00)/2	-1.16		
		(6.62-7.32)x(2.92+2.97)/2	-2.06		
		(5.62-6.62)x(2.89+2.92)/2	-2.91		
		(5.53-5.62)x(2.89+2.89)/2	-0.26		
		(5.36-5.53)x(2.89+2.89)/2	-0.49		
		(4.44-5.36)x(2.86+2.89)/2	-2.64		
		(3.93-4.44)x(2.85+2.86)/2	-1.46		
		(3.35-3.93)x(2.83+2.85)/2	-1.65		
		(2.32-3.35)x(2.83+2.83)/2	-2.91		
		(2.26-2.32)x(2.83+2.83)/2	-0.17		
		(2.23-2.26)x(2.83+2.83)/2	-0.08		
		(1.17-2.23)x(2.80+2.83)/2	-2.98		
		(0.53-1.17)x(2.79+2.80)/2	-1.79		
		(0.08-0.53)x(2.78+2.79)/2	-1.25		
		(-0.72-0.08)x(2.77+2.78)/2	-2.22		
		(-1.01--0.72)x(2.76+2.77)/2	-0.80		
		(-1.73--1.01)x(2.77+2.76)/2	-1.99		
		(-2.10--1.73)x(2.77+2.77)/2	-1.02		
		(-2.86--2.10)x(2.78+2.77)/2	-2.11		
		(-3.18--2.86)x(2.78+2.78)/2	-0.89		
		(-3.76--3.18)x(2.79+2.78)/2	-1.62		
		(-4.27--3.76)x(2.80+2.79)/2	-1.43		
		(-4.56--4.27)x(2.80+2.80)/2	-0.81		
		(-5.36--4.56)x(2.80+2.80)/2	-2.24		
		(-6.26--5.36)x(2.78+2.80)/2	-2.51		
		(-6.45--6.26)x(2.78+2.78)/2	-0.53		
		(-6.80--6.45)x(2.77+2.78)/2	-0.97		
		(-7.54--6.80)x(2.76+2.77)/2	-2.05		
		(-7.96--7.54)x(2.75+2.76)/2	-1.16		
		(-8.63--7.96)x(2.74+2.75)/2	-1.84		
		(-9.65--8.63)x(2.74+2.74)/2	-2.79		
		(-9.72--9.65)x(2.74+2.74)/2	-0.19		
		(-9.84--9.72)x(2.74+2.74)/2	-0.33		
		(-10.81--9.84)x(2.75+2.74)/2	-2.66		
		(-11.35--10.81)x(2.75+2.75)/2	-1.48		
		(-11.90--11.35)x(2.76+2.75)/2	-1.52		
		(-12.88--11.90)x(2.77+2.76)/2	-2.71		
		(-12.99--12.88)x(2.77+2.77)/2	-0.30		
		(-13.05--12.99)x(2.78+2.77)/2	-0.17		
		(-14.08--13.05)x(2.81+2.78)/2	-2.88		
		(-14.74--14.08)x(2.83+2.81)/2	-1.86		
		(-14.92--14.74)x(2.83+2.83)/2	-0.51		
				29.89	
176 2625.00	BO1	(-14.01--14.77)x(3.92+3.91)/2	2.98		
		(-13.93--14.01)x(3.92+3.92)/2	0.31		
		(-13.78--13.93)x(3.92+3.92)/2	0.59		
		(-12.84--13.78)x(3.90+3.92)/2	3.68		
		(-12.34--12.84)x(3.90+3.90)/2	1.95		
		(-11.76--12.34)x(3.88+3.90)/2	2.26		
		(-10.68--11.76)x(3.87+3.88)/2	4.19		
		(-10.67--10.68)x(3.87+3.87)/2	0.04		
		(-10.66--10.67)x(3.87+3.87)/2	0.04		
		(-9.58--10.66)x(3.86+3.87)/2	4.17		
		(-8.99--9.58)x(3.86+3.86)/2	2.28		
		(-8.50--8.99)x(3.86+3.86)/2	1.89		
		(-7.58--8.50)x(3.87+3.86)/2	3.56		
		(-7.41--7.58)x(3.87+3.87)/2	0.66		
		(-6.65--7.41)x(3.87+3.87)/2	2.94		
		(-6.32--6.65)x(3.88+3.87)/2	1.28		
		(-5.64--6.32)x(3.88+3.88)/2	2.64		
		(-5.24--5.64)x(3.88+3.88)/2	1.55		
		(-4.49--5.24)x(3.89+3.88)/2	2.91		
		(-4.15--4.49)x(3.89+3.89)/2	1.32		
		(-3.97--4.15)x(3.88+3.89)/2	0.70		
		(-3.06--3.97)x(3.88+3.88)/2	3.53		
		(-2.29--3.06)x(3.87+3.88)/2	2.98		
		(-1.98--2.29)x(3.86+3.87)/2	1.20		
		(-1.39--1.98)x(3.85+3.86)/2	2.27		
		(-0.89--1.39)x(3.84+3.85)/2	1.92		
		(-0.62--0.89)x(3.84+3.84)/2	1.04		
		(0.20--0.62)x(3.82+3.84)/2	3.14		
		(1.06-0.20)x(3.79+3.82)/2	3.27		
		(1.28-1.06)x(3.79+3.79)/2	0.83		
		(1.70-1.28)x(3.78+3.79)/2	1.59		
		(2.37-1.70)x(3.76+3.78)/2	2.53		
		(2.73-2.37)x(3.75+3.76)/2	1.35		
		(3.46-2.73)x(3.74+3.75)/2	2.73		
		(4.41-3.46)x(3.74+3.74)/2	3.55		
		(4.54-4.41)x(3.73+3.74)/2	0.49		
		(4.80-4.54)x(3.74+3.73)/2	0.97		
		(5.63-4.80)x(3.74+3.74)/2	3.10		
		(6.08-5.63)x(3.76+3.74)/2	1.69		
		(6.72-6.08)x(3.79+3.76)/2	2.42		
		(7.75-6.72)x(3.84+3.79)/2	3.93		
		(7.80-7.75)x(3.84+3.84)/2	0.19		
		(7.89-7.80)x(3.84+3.84)/2	0.35		
		(8.89-7.89)x(3.87+3.84)/2	3.86		
		(9.43-8.89)x(3.87+3.87)/2	2.09		
		A RIPORTARE mq	92.96		

		CALCOLO DELLE AREE		Foglio n. 88
BONIFICA				
N. SEZIONE PROG.	FIG.	ELEMENTI DI CALCOLO	AREA ELEMENTARE mq	AREA FIGURA mq	NOTE
		RIPORTO mq	92.96		
		(9.98-9.43)x(3.88+3.87)/2	2.13		
		(10.99-9.98)x(3.88+3.88)/2	3.92		
		(11.06-10.99)x(3.89+3.88)/2	0.27		
		(11.85-11.06)x(3.88+3.89)/2	3.07		
		(12.15-11.85)x(3.87+3.88)/2	1.16		
		(12.78-12.15)x(3.86+3.87)/2	2.43		
		(13.24-12.78)x(3.85+3.86)/2	1.77		
		(14.09-13.24)x(3.86+3.85)/2	3.28		
		(14.32-14.09)x(3.86+3.86)/2	0.89		
		(14.45-14.32)x(3.86+3.86)/2	0.50		
		(15.41-14.45)x(3.84+3.86)/2	3.70		
		(15.92-15.41)x(3.85+3.84)/2	1.96		
		(15.41-15.92)x(2.84+2.85)/2	-1.45		
		(14.45-15.41)x(2.86+2.84)/2	-2.74		
		(14.32-14.45)x(2.86+2.86)/2	-0.37		
		(14.09-14.32)x(2.86+2.86)/2	-0.66		
		(13.24-14.09)x(2.85+2.86)/2	-2.43		
		(12.78-13.24)x(2.86+2.85)/2	-1.31		
		(12.15-12.78)x(2.87+2.86)/2	-1.80		
		(11.85-12.15)x(2.88+2.87)/2	-0.86		
		(11.06-11.85)x(2.89+2.88)/2	-2.28		
		(10.99-11.06)x(2.88+2.89)/2	-0.20		
		(9.98-10.99)x(2.88+2.88)/2	-2.91		
		(9.43-9.98)x(2.87+2.88)/2	-1.58		
		(8.89-9.43)x(2.87+2.87)/2	-1.55		
		(7.89-8.89)x(2.84+2.87)/2	-2.86		
		(7.80-7.89)x(2.84+2.84)/2	-0.26		
		(7.75-7.80)x(2.84+2.84)/2	-0.14		
		(6.72-7.75)x(2.79+2.84)/2	-2.90		
		(6.08-6.72)x(2.76+2.79)/2	-1.78		
		(5.63-6.08)x(2.74+2.76)/2	-1.24		
		(4.80-5.63)x(2.74+2.74)/2	-2.27		
		(4.54-4.80)x(2.73+2.74)/2	-0.71		
		(4.41-4.54)x(2.74+2.73)/2	-0.36		
		(3.46-4.41)x(2.74+2.74)/2	-2.60		
		(2.73-3.46)x(2.75+2.74)/2	-2.00		
		(2.37-2.73)x(2.76+2.75)/2	-0.99		
		(1.70-2.37)x(2.78+2.76)/2	-1.86		
		(1.28-1.70)x(2.79+2.78)/2	-1.17		
		(1.06-1.28)x(2.79+2.79)/2	-0.61		
		(0.20-1.06)x(2.82+2.79)/2	-2.41		
		(-0.62-0.20)x(2.84+2.82)/2	-2.32		
		(-0.89--0.62)x(2.84+2.84)/2	-0.77		
		(-1.39--0.89)x(2.85+2.84)/2	-1.42		
		(-1.98--1.39)x(2.86+2.85)/2	-1.68		
		(-2.29--1.98)x(2.87+2.86)/2	-0.89		
		(-3.06--2.29)x(2.88+2.87)/2	-2.21		
		(-3.97--3.06)x(2.88+2.88)/2	-2.62		
		(-4.15--3.97)x(2.89+2.88)/2	-0.52		
		(-4.49--4.15)x(2.89+2.89)/2	-0.98		
		(-5.24--4.49)x(2.88+2.89)/2	-2.16		
		(-5.64--5.24)x(2.88+2.88)/2	-1.15		
		(-6.32--5.64)x(2.88+2.88)/2	-1.96		
		(-6.65--6.32)x(2.87+2.88)/2	-0.95		
		(-7.41--6.65)x(2.87+2.87)/2	-2.18		
		(-7.58--7.41)x(2.87+2.87)/2	-0.49		
		(-8.50--7.58)x(2.86+2.87)/2	-2.64		
		(-8.99--8.50)x(2.86+2.86)/2	-1.40		
		(-9.58--8.99)x(2.86+2.86)/2	-1.69		
		(-10.66--9.58)x(2.87+2.86)/2	-3.09		
		(-10.67--10.66)x(2.87+2.87)/2	-0.03		
		(-10.68--10.67)x(2.87+2.87)/2	-0.03		
		(-11.76--10.68)x(2.88+2.87)/2	-3.11		
		(-12.34--11.76)x(2.90+2.88)/2	-1.68		
		(-12.84--12.34)x(2.90+2.90)/2	-1.45		
		(-13.78--12.84)x(2.92+2.90)/2	-2.74		
		(-13.93--13.78)x(2.92+2.92)/2	-0.44		
		(-14.01--13.93)x(2.92+2.92)/2	-0.23		
		(-14.77--14.01)x(2.91+2.92)/2	-2.22		
				30.69	
177 2640.00	B01	(-14.73--15.06)x(3.69+3.70)/2	1.22		
		(-14.72--14.73)x(3.69+3.69)/2	0.04		
		(-13.65--14.72)x(3.67+3.69)/2	3.94		
		(-13.09--13.65)x(3.68+3.67)/2	2.06		
		(-12.56--13.09)x(3.68+3.68)/2	1.95		
		(-12.30--12.56)x(3.68+3.68)/2	0.96		
		(-11.54--12.30)x(3.70+3.68)/2	2.80		
		(-11.49--11.54)x(3.70+3.70)/2	0.18		
		(-11.48--11.49)x(3.70+3.70)/2	0.04		
		(-11.45--11.48)x(3.70+3.70)/2	0.11		
		(-10.40--11.45)x(3.72+3.70)/2	3.90		
		(-9.81--10.40)x(3.72+3.72)/2	2.19		
		(-9.31--9.81)x(3.73+3.72)/2	1.86		
		(-8.35--9.31)x(3.75+3.73)/2	3.59		
		(-8.23--8.35)x(3.75+3.75)/2	0.45		
		(-8.17--8.23)x(3.75+3.75)/2	0.23		
		(-7.15--8.17)x(3.74+3.75)/2	3.82		
		(-6.53--7.15)x(3.74+3.74)/2	2.32		
		(-6.06--6.53)x(3.74+3.74)/2	1.76		
		(-5.17--6.06)x(3.73+3.74)/2	3.32		
		(-4.98--5.17)x(3.73+3.73)/2	0.71		
		(-4.88--4.98)x(3.73+3.73)/2	0.37		
		(-3.90--4.88)x(3.73+3.73)/2	3.66		
		(-3.24--3.90)x(3.72+3.73)/2	2.46		
		(-2.82--3.24)x(3.72+3.72)/2	1.56		
		(-1.99--2.82)x(3.70+3.72)/2	3.08		
		(-1.73--1.99)x(3.70+3.70)/2	0.96		
		(-1.60--1.73)x(3.70+3.70)/2	0.48		
		(-0.65--1.60)x(3.68+3.70)/2	3.51		
		(0.04--0.65)x(3.66+3.68)/2	2.53		
		(0.43-0.04)x(3.66+3.66)/2	1.43		
		(1.20-0.43)x(3.62+3.66)/2	2.80		
		(1.52-1.20)x(3.61+3.62)/2	1.16		
		(1.68-1.52)x(3.61+3.61)/2	0.58		
		A RIPORTARE mq	62.03		

		CALCOLO DELLE AREE		Foglio n. 89
BONIFICA				
N. SEZIONE PROG.	FIG.	ELEMENTI DI CALCOLO	AREA ELEMENTARE mq	AREA FIGURA mq	NOTE
		RIPORTO mq	62.03		
		(2.14-1.68)x(3.63+3.61)/2	1.67		
		(1.68-2.14)x(2.61+2.63)/2	-1.21		
		(1.52-1.68)x(2.61+2.61)/2	-0.42		
		(1.20-1.52)x(2.62+2.61)/2	-0.84		
		(0.43-1.20)x(2.66+2.62)/2	-2.03		
		(0.04-0.43)x(2.66+2.66)/2	-1.04		
		(-0.65-0.04)x(2.68+2.66)/2	-1.84		
		(-1.60--0.65)x(2.70+2.68)/2	-2.56		
		(-1.73--1.60)x(2.70+2.70)/2	-0.35		
		(-1.99--1.73)x(2.70+2.70)/2	-0.70		
		(-2.82--1.99)x(2.72+2.70)/2	-2.25		
		(-3.24--2.82)x(2.72+2.72)/2	-1.14		
		(-3.90--3.24)x(2.73+2.72)/2	-1.80		
		(-4.88--3.90)x(2.73+2.73)/2	-2.68		
		(-4.98--4.88)x(2.73+2.73)/2	-0.27		
		(-5.17--4.98)x(2.73+2.73)/2	-0.52		
		(-6.06--5.17)x(2.74+2.73)/2	-2.43		
		(-6.53--6.06)x(2.74+2.74)/2	-1.29		
		(-7.15--6.53)x(2.74+2.74)/2	-1.70		
		(-8.17--7.15)x(2.75+2.74)/2	-2.80		
		(-8.23--8.17)x(2.75+2.75)/2	-0.17		
		(-8.35--8.23)x(2.75+2.75)/2	-0.33		
		(-9.31--8.35)x(2.73+2.75)/2	-2.63		
		(-9.81--9.31)x(2.72+2.73)/2	-1.36		
		(-10.40--9.81)x(2.72+2.72)/2	-1.60		
		(-11.45--10.40)x(2.70+2.72)/2	-2.85		
		(-11.48--11.45)x(2.70+2.70)/2	-0.08		
		(-11.49--11.48)x(2.70+2.70)/2	-0.03		
		(-11.54--11.49)x(2.70+2.70)/2	-0.13		
		(-12.30--11.54)x(2.68+2.70)/2	-2.04		
		(-12.56--12.30)x(2.68+2.68)/2	-0.70		
		(-13.09--12.56)x(2.68+2.68)/2	-1.42		
		(-13.65--13.09)x(2.67+2.68)/2	-1.50		
		(-14.72--13.65)x(2.69+2.67)/2	-2.87		
		(-14.73--14.72)x(2.69+2.69)/2	-0.03		
		(-15.06--14.73)x(2.70+2.69)/2	-0.89		
				17.20	
178 2655.00	BO1	(-12.40--12.83)x(4.79+5.16)/2	2.14		
		(-12.10--12.40)x(4.56+4.79)/2	1.40		
		(-11.96--12.10)x(4.52+4.56)/2	0.64		
		(-11.02--11.96)x(4.42+4.52)/2	4.20		
		(-10.36--11.02)x(4.52+4.42)/2	2.95		
		(-9.95--10.36)x(4.62+4.52)/2	1.87		
		(-9.09--9.95)x(4.61+4.62)/2	3.97		
		(-8.87--9.09)x(4.60+4.61)/2	1.01		
		(-8.76--8.87)x(4.58+4.60)/2	0.50		
		(-7.79--8.76)x(4.35+4.58)/2	4.33		
		(-7.16--7.79)x(4.16+4.35)/2	2.68		
		(-6.71--7.16)x(3.97+4.16)/2	1.83		
		(-5.77--6.71)x(3.74+3.97)/2	3.62		
		(-5.63--5.77)x(3.71+3.74)/2	0.52		
		(-5.56--5.63)x(3.70+3.71)/2	0.26		
		(-4.55--5.56)x(3.65+3.70)/2	3.71		
		(-3.97--4.55)x(3.61+3.65)/2	2.11		
		(-3.48--3.97)x(3.57+3.61)/2	1.76		
		(-2.46--3.48)x(3.56+3.57)/2	3.64		
		(-2.40--2.46)x(3.56+3.56)/2	0.21		
		(-2.37--2.40)x(3.56+3.56)/2	0.11		
		(-1.32--2.37)x(3.59+3.56)/2	3.75		
		(-0.77--1.32)x(3.61+3.59)/2	1.98		
		(-0.24--0.77)x(3.62+3.61)/2	1.92		
		(0.83--0.24)x(3.63+3.62)/2	3.88		
		(0.84-0.83)x(3.63+3.63)/2	0.04		
		(0.85-0.84)x(3.63+3.63)/2	0.04		
		(1.65-0.85)x(3.66+3.63)/2	2.92		
		(1.92-1.65)x(3.66+3.66)/2	0.99		
		(2.43-1.92)x(3.66+3.66)/2	1.87		
		(2.99-2.43)x(3.69+3.66)/2	2.06		
		(4.03-2.99)x(3.64+3.69)/2	3.81		
		(4.07-4.03)x(3.64+3.64)/2	0.15		
		(4.16-4.07)x(3.64+3.64)/2	0.33		
		(5.15-4.16)x(3.65+3.64)/2	3.61		
		(5.63-5.15)x(3.63+3.65)/2	1.75		
		(6.23-5.63)x(3.61+3.63)/2	2.17		
		(7.23-6.23)x(3.60+3.61)/2	3.60		
		(7.31-7.23)x(3.60+3.60)/2	0.29		
		(7.47-7.31)x(3.60+3.60)/2	0.58		
		(8.38-7.47)x(3.52+3.60)/2	3.24		
		(8.82-8.38)x(3.51+3.52)/2	1.55		
		(9.46-8.82)x(3.48+3.51)/2	2.24		
		(10.42-9.46)x(3.44+3.48)/2	3.32		
		(10.54-10.42)x(3.44+3.44)/2	0.41		
		(10.79-10.54)x(3.40+3.44)/2	0.85		
		(11.62-10.79)x(3.22+3.40)/2	2.75		
		(12.02-11.62)x(3.15+3.22)/2	1.27		
		(12.70-12.02)x(3.07+3.15)/2	2.11		
		(13.62-12.70)x(2.96+3.07)/2	2.77		
		(13.78-13.62)x(2.93+2.96)/2	0.47		
		(14.10-13.78)x(2.92+2.93)/2	0.94		
		(14.85-14.10)x(2.97+2.92)/2	2.21		
		(15.22-14.85)x(2.93+2.97)/2	1.09		
		(15.93-15.22)x(2.94+2.93)/2	2.08		
		(16.82-15.93)x(2.84+2.94)/2	2.57		
		(17.01-16.82)x(2.82+2.84)/2	0.54		
		(17.41-17.01)x(2.79+2.82)/2	1.12		
		(18.09-17.41)x(2.78+2.79)/2	1.89		
		(18.21-18.09)x(2.78+2.78)/2	0.33		
		(18.09-18.21)x(1.78+1.78)/2	-0.21		
		(17.41-18.09)x(1.79+1.78)/2	-1.21		
		(17.01-17.41)x(1.82+1.79)/2	-0.72		
		(16.82-17.01)x(1.84+1.82)/2	-0.35		
		(15.93-16.82)x(1.94+1.84)/2	-1.68		
		(15.22-15.93)x(1.93+1.94)/2	-1.37		
		(14.85-15.22)x(1.97+1.93)/2	-0.72		
		A RIPORTARE mq	106.69		

		CALCOLO DELLE AREE		Foglio n. 90
BONIFICA				
N. SEZIONE PROG.	FIG.	ELEMENTI DI CALCOLO	AREA ELEMENTARE mq	AREA FIGURA mq	NOTE
		RIPORTO mq	106.69		
		(14.10-14.85)x(1.92+1.97)/2	-1.46		
		(13.78-14.10)x(1.93+1.92)/2	-0.62		
		(13.62-13.78)x(1.96+1.93)/2	-0.31		
		(12.70-13.62)x(2.07+1.96)/2	-1.85		
		(12.02-12.70)x(2.15+2.07)/2	-1.43		
		(11.62-12.02)x(2.22+2.15)/2	-0.87		
		(10.79-11.62)x(2.40+2.22)/2	-1.92		
		(10.54-10.79)x(2.44+2.40)/2	-0.60		
		(10.42-10.54)x(2.44+2.44)/2	-0.29		
		(9.46-10.42)x(2.48+2.44)/2	-2.36		
		(8.82-9.46)x(2.51+2.48)/2	-1.60		
		(8.38-8.82)x(2.52+2.51)/2	-1.11		
		(7.47-8.38)x(2.60+2.52)/2	-2.33		
		(7.31-7.47)x(2.60+2.60)/2	-0.42		
		(7.23-7.31)x(2.60+2.60)/2	-0.21		
		(6.23-7.23)x(2.61+2.60)/2	-2.60		
		(5.63-6.23)x(2.63+2.61)/2	-1.57		
		(5.15-5.63)x(2.65+2.63)/2	-1.27		
		(4.16-5.15)x(2.64+2.65)/2	-2.62		
		(4.07-4.16)x(2.64+2.64)/2	-0.24		
		(4.03-4.07)x(2.64+2.64)/2	-0.11		
		(2.99-4.03)x(2.69+2.64)/2	-2.77		
		(2.43-2.99)x(2.66+2.69)/2	-1.50		
		(1.92-2.43)x(2.66+2.66)/2	-1.36		
		(1.65-1.92)x(2.66+2.66)/2	-0.72		
		(0.85-1.65)x(2.63+2.66)/2	-2.12		
		(0.84-0.85)x(2.63+2.63)/2	-0.03		
		(0.83-0.84)x(2.63+2.63)/2	-0.03		
		(-0.24-0.83)x(2.62+2.63)/2	-2.81		
		(-0.77--0.24)x(2.61+2.62)/2	-1.39		
		(-1.32--0.77)x(2.59+2.61)/2	-1.43		
		(-2.37--1.32)x(2.56+2.59)/2	-2.70		
		(-2.40--2.37)x(2.56+2.56)/2	-0.08		
		(-2.46--2.40)x(2.56+2.56)/2	-0.15		
		(-3.48--2.46)x(2.57+2.56)/2	-2.62		
		(-3.97--3.48)x(2.61+2.57)/2	-1.27		
		(-4.55--3.97)x(2.65+2.61)/2	-1.53		
		(-5.56--4.55)x(2.70+2.65)/2	-2.70		
		(-5.63--5.56)x(2.71+2.70)/2	-0.19		
		(-5.77--5.63)x(2.74+2.71)/2	-0.38		
		(-6.71--5.77)x(2.97+2.74)/2	-2.68		
		(-7.16--6.71)x(3.16+2.97)/2	-1.38		
		(-7.79--7.16)x(3.35+3.16)/2	-2.05		
		(-8.76--7.79)x(3.58+3.35)/2	-3.36		
		(-8.87--8.76)x(3.60+3.58)/2	-0.39		
		(-9.09--8.87)x(3.61+3.60)/2	-0.79		
		(-9.95--9.09)x(3.62+3.61)/2	-3.11		
		(-10.36--9.95)x(3.52+3.62)/2	-1.46		
		(-11.02--10.36)x(3.42+3.52)/2	-2.29		
		(-11.96--11.02)x(3.52+3.42)/2	-3.26		
		(-12.10--11.96)x(3.56+3.52)/2	-0.50		
		(-12.40--12.10)x(3.79+3.56)/2	-1.10		
		(-12.83--12.40)x(4.16+3.79)/2	-1.71		
				31.04	
179 2670.00	BO1	(-13.71--14.01)x(4.35+4.35)/2	1.30		
		(-13.56--13.71)x(4.34+4.35)/2	0.65		
		(-13.24--13.56)x(4.34+4.34)/2	1.39		
		(-12.49--13.24)x(4.33+4.34)/2	3.25		
		(-12.16--12.49)x(4.32+4.33)/2	1.43		
		(-11.42--12.16)x(4.29+4.32)/2	3.19		
		(-10.61--11.42)x(4.27+4.29)/2	3.47		
		(-10.34--10.61)x(4.26+4.27)/2	1.15		
		(-9.75--10.34)x(4.25+4.26)/2	2.51		
		(-9.27--9.75)x(4.24+4.25)/2	2.04		
		(-9.06--9.27)x(4.23+4.24)/2	0.89		
		(-8.20--9.06)x(4.18+4.23)/2	3.62		
		(-7.51--8.20)x(4.13+4.18)/2	2.87		
		(-7.13--7.51)x(4.09+4.13)/2	1.56		
		(-6.27--7.13)x(4.06+4.09)/2	3.50		
		(-6.05--6.27)x(4.06+4.06)/2	0.89		
		(-5.96--6.05)x(4.05+4.06)/2	0.36		
		(-4.98--5.96)x(3.98+4.05)/2	3.93		
		(-4.41--4.98)x(3.94+3.98)/2	2.26		
		(-3.91--4.41)x(3.92+3.94)/2	1.96		
		(-3.64--3.91)x(3.90+3.92)/2	1.06		
		(-2.84--3.64)x(3.86+3.90)/2	3.10		
		(-2.78--2.84)x(3.86+3.86)/2	0.23		
		(-1.76--2.78)x(3.91+3.86)/2	3.96		
		(-1.31--1.76)x(3.95+3.91)/2	1.77		
		(-0.69--1.31)x(3.99+3.95)/2	2.46		
		(0.24--0.69)x(3.96+3.99)/2	3.70		
		(0.38-0.24)x(3.96+3.96)/2	0.55		
		(0.71-0.38)x(3.95+3.96)/2	1.31		
		(1.46-0.71)x(3.95+3.95)/2	2.96		
		(1.79-1.46)x(3.94+3.95)/2	1.30		
		(2.53-1.79)x(3.94+3.94)/2	2.92		
		(3.34-2.53)x(4.00+3.94)/2	3.22		
		(3.60-3.34)x(4.01+4.00)/2	1.04		
		(3.34-3.60)x(3.00+3.01)/2	-0.78		
		(2.53-3.34)x(2.94+3.00)/2	-2.41		
		(1.79-2.53)x(2.94+2.94)/2	-2.18		
		(1.46-1.79)x(2.95+2.94)/2	-0.97		
		(0.71-1.46)x(2.95+2.95)/2	-2.21		
		(0.38-0.71)x(2.96+2.95)/2	-0.98		
		(0.24-0.38)x(2.96+2.96)/2	-0.41		
		(-0.69-0.24)x(2.99+2.96)/2	-2.77		
		(-1.31--0.69)x(2.95+2.99)/2	-1.84		
		(-1.76--1.31)x(2.91+2.95)/2	-1.32		
		(-2.78--1.76)x(2.86+2.91)/2	-2.94		
		(-2.84--2.78)x(2.86+2.86)/2	-0.17		
		(-3.64--2.84)x(2.90+2.86)/2	-2.30		
		(-3.91--3.64)x(2.92+2.90)/2	-0.79		
		(-4.41--3.91)x(2.94+2.92)/2	-1.46		
		(-4.98--4.41)x(2.98+2.94)/2	-1.69		
		A RIPORTARE mq	46.58		

		CALCOLO DELLE AREE		Foglio n. 91
BONIFICA				
N. SEZIONE PROG.	FIG.	ELEMENTI DI CALCOLO	AREA ELEMENTARE mq	AREA FIGURA mq	NOTE
		RIPORTO mq	46.58		
		(-5.96--4.98)x(3.05+2.98)/2	-2.95		
		(-6.05--5.96)x(3.06+3.05)/2	-0.27		
		(-6.27--6.05)x(3.06+3.06)/2	-0.67		
		(-7.13--6.27)x(3.09+3.06)/2	-2.64		
		(-7.51--7.13)x(3.13+3.09)/2	-1.18		
		(-8.20--7.51)x(3.18+3.13)/2	-2.18		
		(-9.06--8.20)x(3.23+3.18)/2	-2.76		
		(-9.27--9.06)x(3.24+3.23)/2	-0.68		
		(-9.75--9.27)x(3.25+3.24)/2	-1.56		
		(-10.34--9.75)x(3.26+3.25)/2	-1.92		
		(-10.61--10.34)x(3.27+3.26)/2	-0.88		
		(-11.42--10.61)x(3.29+3.27)/2	-2.66		
		(-12.16--11.42)x(3.32+3.29)/2	-2.45		
		(-12.49--12.16)x(3.33+3.32)/2	-1.10		
		(-13.24--12.49)x(3.34+3.33)/2	-2.50		
		(-13.56--13.24)x(3.34+3.34)/2	-1.07		
		(-13.71--13.56)x(3.35+3.34)/2	-0.50		
		(-14.01--13.71)x(3.35+3.35)/2	-1.00		
				17.61	
180 2685.00	BO1	(-14.73--15.00)x(3.67+3.67)/2	0.99		
		(-14.05--14.73)x(3.67+3.67)/2	2.50		
		(-13.66--14.05)x(3.67+3.67)/2	1.43		
		(-13.51--13.66)x(3.67+3.67)/2	0.55		
		(-12.60--13.51)x(3.67+3.67)/2	3.34		
		(-12.01--12.60)x(3.66+3.67)/2	2.16		
		(-11.53--12.01)x(3.66+3.66)/2	1.76		
		(-10.52--11.53)x(3.65+3.66)/2	3.69		
		(-10.46--10.52)x(3.65+3.65)/2	0.22		
		(-10.33--10.46)x(3.64+3.65)/2	0.47		
		(-9.40--10.33)x(3.63+3.64)/2	3.38		
		(-9.02--9.40)x(3.63+3.63)/2	1.38		
		(-8.33--9.02)x(3.62+3.63)/2	2.50		
		(-7.95--8.33)x(3.61+3.62)/2	1.37		
		(-7.26--7.95)x(3.60+3.61)/2	2.49		
		(-6.60--7.26)x(3.60+3.60)/2	2.38		
		(-6.20--6.60)x(3.60+3.60)/2	1.44		
		(-6.03--6.20)x(3.66+3.60)/2	0.62		
		(-5.13--6.03)x(3.84+3.66)/2	3.38		
		(-4.54--5.13)x(4.12+3.84)/2	2.35		
		(-4.06--4.54)x(4.29+4.12)/2	2.02		
		(-3.05--4.06)x(4.81+4.29)/2	4.60		
		(-3.00--3.05)x(4.83+4.81)/2	0.24		
		(-2.88--3.00)x(4.87+4.83)/2	0.58		
		(-1.93--2.88)x(5.14+4.87)/2	4.75		
		(-1.55--1.93)x(5.21+5.14)/2	1.97		
		(-0.87--1.55)x(5.36+5.21)/2	3.59		
		(-0.06--0.87)x(5.39+5.36)/2	4.35		
		(0.20--0.06)x(5.38+5.39)/2	1.40		
		(0.84-0.20)x(5.31+5.38)/2	3.42		
		(1.27-0.84)x(5.24+5.31)/2	2.27		
		(1.44-1.27)x(5.15+5.24)/2	0.88		
		(2.33-1.44)x(4.74+5.15)/2	4.40		
		(2.93-2.33)x(4.39+4.74)/2	2.74		
		(3.40-2.93)x(4.15+4.39)/2	2.01		
		(4.43-3.40)x(3.77+4.15)/2	4.08		
		(4.47-4.43)x(3.75+3.77)/2	0.15		
		(4.57-4.47)x(3.75+3.75)/2	0.38		
		(5.53-4.57)x(3.71+3.75)/2	3.58		
		(5.92-5.53)x(3.72+3.71)/2	1.45		
		(6.60-5.92)x(3.74+3.72)/2	2.54		
		(7.41-6.60)x(3.75+3.74)/2	3.03		
		(7.67-7.41)x(3.75+3.75)/2	0.97		
		(8.29-7.67)x(3.74+3.75)/2	2.32		
		(8.73-8.29)x(3.73+3.74)/2	1.64		
		(8.91-8.73)x(3.73+3.73)/2	0.67		
		(9.80-8.91)x(3.72+3.73)/2	3.32		
		(10.29-9.80)x(3.71+3.72)/2	1.82		
		(10.87-10.29)x(3.69+3.71)/2	2.15		
		(11.90-10.87)x(3.70+3.69)/2	3.81		
		(11.93-11.90)x(3.70+3.70)/2	0.11		
		(12.02-11.93)x(3.70+3.70)/2	0.33		
		(13.00-12.02)x(3.69+3.70)/2	3.62		
		(13.39-13.00)x(3.70+3.69)/2	1.44		
		(14.07-13.39)x(3.69+3.70)/2	2.51		
		(13.00-14.07)x(2.69+2.71)/2	-2.89		
		(12.02-13.00)x(2.70+2.69)/2	-2.64		
		(11.93-12.02)x(2.70+2.70)/2	-0.24		
		(11.90-11.93)x(2.70+2.70)/2	-0.08		
		(10.87-11.90)x(2.69+2.70)/2	-2.78		
		(10.29-10.87)x(2.71+2.69)/2	-1.57		
		(9.80-10.29)x(2.72+2.71)/2	-1.33		
		(8.91-9.80)x(2.73+2.72)/2	-2.43		
		(8.73-8.91)x(2.73+2.73)/2	-0.49		
		(8.29-8.73)x(2.74+2.73)/2	-1.20		
		(7.67-8.29)x(2.75+2.74)/2	-1.70		
		(7.41-7.67)x(2.75+2.75)/2	-0.71		
		(6.60-7.41)x(2.74+2.75)/2	-2.22		
		(5.92-6.60)x(2.72+2.74)/2	-1.86		
		(5.53-5.92)x(2.71+2.72)/2	-1.06		
		(4.57-5.53)x(2.75+2.71)/2	-2.62		
		(-6.20-4.57)x(2.60+2.75)/2	-28.81		
		(-6.60--6.20)x(2.60+2.60)/2	-1.04		
		(-7.26--6.60)x(2.60+2.60)/2	-1.72		
		(-7.95--7.26)x(2.61+2.60)/2	-1.80		
		(-8.33--7.95)x(2.62+2.61)/2	-0.99		
		(-9.02--8.33)x(2.63+2.62)/2	-1.81		
		(-9.40--9.02)x(2.63+2.63)/2	-1.00		
		(-10.33--9.40)x(2.64+2.63)/2	-2.45		
		(-10.46--10.33)x(2.65+2.64)/2	-0.34		
		(-10.52--10.46)x(2.65+2.65)/2	-0.16		
		(-11.53--10.52)x(2.66+2.65)/2	-2.68		
		(-12.01--11.53)x(2.66+2.66)/2	-1.28		
		(-12.60--12.01)x(2.67+2.66)/2	-1.57		
		(-13.51--12.60)x(2.67+2.67)/2	-2.43		
		A RIPORTARE mq	43.64		

		CALCOLO DELLE AREE		Foglio n. 92
BONIFICA				
N. SEZIONE PROG.	FIG.	ELEMENTI DI CALCOLO	AREA ELEMENTARE mq	AREA FIGURA mq	NOTE
		RIPORTO mq	43.64		
		(-13.66--13.51)x(2.67+2.67)/2	-0.40		
		(-14.05--13.66)x(2.67+2.67)/2	-1.04		
		(-14.73--14.05)x(2.67+2.67)/2	-1.82		
		(-15.00--14.73)x(2.67+2.67)/2	-0.72		
				39.66	
181	BO1	(-13.44--14.35)x(4.09+4.08)/2	3.72		
2700.00		(-12.95--13.44)x(4.07+4.09)/2	2.00		
		(-12.38--12.95)x(4.05+4.07)/2	2.31		
		(-12.05--12.38)x(3.96+4.05)/2	1.32		
		(-11.32--12.05)x(3.86+3.96)/2	2.85		
		(-10.79--11.32)x(3.79+3.86)/2	2.03		
		(-10.26--10.79)x(3.75+3.79)/2	2.00		
		(-10.07--10.26)x(3.75+3.75)/2	0.71		
		(-9.20--10.07)x(3.74+3.75)/2	3.26		
		(-8.64--9.20)x(3.75+3.74)/2	2.10		
		(-8.14--8.64)x(3.76+3.75)/2	1.88		
		(-7.20--8.14)x(3.77+3.76)/2	3.54		
		(-7.08--7.20)x(3.78+3.77)/2	0.45		
		(-6.74--7.08)x(3.77+3.78)/2	1.28		
		(-6.02--6.74)x(3.77+3.77)/2	2.71		
		(-5.77--6.02)x(3.76+3.77)/2	0.94		
		(-4.96--5.77)x(3.75+3.76)/2	3.04		
		(-4.33--4.96)x(3.75+3.75)/2	2.36		
		(-3.90--4.33)x(3.75+3.75)/2	1.61		
		(-2.90--3.90)x(3.72+3.75)/2	3.74		
		(-2.84--2.90)x(3.72+3.72)/2	0.22		
		(-2.69--2.84)x(3.72+3.72)/2	0.56		
		(-1.78--2.69)x(3.72+3.72)/2	3.39		
		(-1.46--1.78)x(3.73+3.72)/2	1.19		
		(-0.72--1.46)x(3.74+3.73)/2	2.76		
		(-0.02--0.72)x(3.76+3.74)/2	2.63		
		(0.34--0.02)x(3.76+3.76)/2	1.35		
		(1.36-0.34)x(3.77+3.76)/2	3.84		
		(1.40-1.36)x(3.77+3.77)/2	0.15		
		(1.41-1.40)x(3.77+3.77)/2	0.04		
		(2.46-1.41)x(3.77+3.77)/2	3.96		
		(2.85-2.46)x(3.76+3.77)/2	1.47		
		(3.52-2.85)x(3.75+3.76)/2	2.52		
		(4.28-3.52)x(3.74+3.75)/2	2.85		
		(4.58-4.28)x(3.73+3.74)/2	1.12		
		(5.41-4.58)x(3.75+3.73)/2	3.10		
		(5.64-5.41)x(3.75+3.75)/2	0.86		
		(6.43-5.64)x(3.75+3.75)/2	2.96		
		(6.70-6.43)x(3.75+3.75)/2	1.01		
		(7.15-6.70)x(3.77+3.75)/2	1.69		
		(7.76-7.15)x(3.78+3.77)/2	2.30		
		(8.30-7.76)x(3.79+3.78)/2	2.04		
		(7.76-8.30)x(2.78+2.79)/2	-1.50		
		(7.15-7.76)x(2.77+2.78)/2	-1.69		
		(6.70-7.15)x(2.75+2.77)/2	-1.24		
		(6.43-6.70)x(2.75+2.75)/2	-0.74		
		(5.64-6.43)x(2.75+2.75)/2	-2.17		
		(5.41-5.64)x(2.75+2.75)/2	-0.63		
		(4.58-5.41)x(2.73+2.75)/2	-2.27		
		(4.28-4.58)x(2.74+2.73)/2	-0.82		
		(3.52-4.28)x(2.75+2.74)/2	-2.09		
		(2.85-3.52)x(2.76+2.75)/2	-1.85		
		(2.46-2.85)x(2.77+2.76)/2	-1.08		
		(1.41-2.46)x(2.77+2.77)/2	-2.91		
		(1.40-1.41)x(2.77+2.77)/2	-0.03		
		(1.36-1.40)x(2.77+2.77)/2	-0.11		
		(0.34-1.36)x(2.76+2.77)/2	-2.82		
		(-0.02-0.34)x(2.76+2.76)/2	-0.99		
		(-0.72--0.02)x(2.74+2.76)/2	-1.92		
		(-1.46--0.72)x(2.73+2.74)/2	-2.02		
		(-1.78--1.46)x(2.72+2.73)/2	-0.87		
		(-2.69--1.78)x(2.72+2.72)/2	-2.48		
		(-2.84--2.69)x(2.72+2.72)/2	-0.41		
		(-2.90--2.84)x(2.72+2.72)/2	-0.16		
		(-3.90--2.90)x(2.75+2.72)/2	-2.74		
		(-4.33--3.90)x(2.75+2.75)/2	-1.18		
		(-4.96--4.33)x(2.75+2.75)/2	-1.73		
		(-5.77--4.96)x(2.76+2.75)/2	-2.23		
		(-6.02--5.77)x(2.77+2.76)/2	-0.69		
		(-6.74--6.02)x(2.77+2.77)/2	-1.99		
		(-7.08--6.74)x(2.78+2.77)/2	-0.94		
		(-7.20--7.08)x(2.77+2.78)/2	-0.33		
		(-8.14--7.20)x(2.76+2.77)/2	-2.60		
		(-8.64--8.14)x(2.75+2.76)/2	-1.38		
		(-9.20--8.64)x(2.74+2.75)/2	-1.54		
		(-10.07--9.20)x(2.75+2.74)/2	-2.39		
		(-10.26--10.07)x(2.75+2.75)/2	-0.52		
		(-10.79--10.26)x(2.79+2.75)/2	-1.47		
		(-11.32--10.79)x(2.86+2.79)/2	-1.50		
		(-12.05--11.32)x(2.96+2.86)/2	-2.12		
		(-12.38--12.05)x(3.05+2.96)/2	-0.99		
		(-12.95--12.38)x(3.07+3.05)/2	-1.74		
		(-13.44--12.95)x(3.09+3.07)/2	-1.51		
		(-14.35--13.44)x(3.08+3.09)/2	-2.81		
				22.66	
182	BO1	(-13.90--14.50)x(3.97+3.97)/2	2.38		
2715.00		(-13.39--13.90)x(3.96+3.97)/2	2.02		
		(-12.85--13.39)x(3.96+3.96)/2	2.14		
		(-12.02--12.85)x(3.94+3.96)/2	3.28		
		(-11.80--12.02)x(3.94+3.94)/2	0.87		
		(-11.09--11.80)x(3.94+3.94)/2	2.80		
		(-10.75--11.09)x(3.94+3.94)/2	1.34		
		(-10.64--10.75)x(3.93+3.94)/2	0.43		
		(-9.69--10.64)x(3.90+3.93)/2	3.72		
		(-9.27--9.69)x(3.89+3.90)/2	1.64		
		(-8.64--9.27)x(3.85+3.89)/2	2.44		
		(-7.89--8.64)x(3.82+3.85)/2	2.88		
		(-7.59--7.89)x(3.81+3.82)/2	1.14		
		(-6.59--7.59)x(3.80+3.81)/2	3.80		
		A RIPORTARE mq	30.88		

		CALCOLO DELLE AREE		Foglio n. 93
BONIFICA				
N. SEZIONE PROG.	FIG.	ELEMENTI DI CALCOLO	AREA ELEMENTARE mq	AREA FIGURA mq	NOTE
		RIPORTO mq	30.88		
		(-6.53--6.59)x(3.79+3.80)/2	0.23		
		(-6.52--6.53)x(3.79+3.79)/2	0.04		
		(-5.48--6.52)x(3.82+3.79)/2	3.96		
		(-5.14--5.48)x(3.82+3.82)/2	1.30		
		(-4.43--5.14)x(3.83+3.82)/2	2.72		
		(-3.77--4.43)x(3.82+3.83)/2	2.52		
		(-3.37--3.77)x(3.82+3.82)/2	1.53		
		(-2.39--3.37)x(3.83+3.82)/2	3.75		
		(-2.32--2.39)x(3.83+3.83)/2	0.27		
		(-2.09--2.32)x(3.84+3.83)/2	0.88		
		(-1.27--2.09)x(3.85+3.84)/2	3.15		
		(-1.02--1.27)x(3.85+3.85)/2	0.96		
		(-0.22--1.02)x(3.84+3.85)/2	3.08		
		(0.36--0.22)x(3.85+3.84)/2	2.23		
		(0.84-0.36)x(3.85+3.85)/2	1.85		
		(1.73-0.84)x(3.86+3.85)/2	3.43		
		(1.89-1.73)x(3.86+3.86)/2	0.62		
		(1.99-1.89)x(3.86+3.86)/2	0.39		
		(2.40-1.99)x(3.86+3.86)/2	1.58		
		(2.84-2.40)x(3.87+3.86)/2	1.70		
		(2.94-2.84)x(3.87+3.87)/2	0.39		
		(3.11-2.94)x(3.88+3.87)/2	0.66		
		(4.00-3.11)x(3.91+3.88)/2	3.47		
		(4.48-4.00)x(3.92+3.91)/2	1.88		
		(5.05-4.48)x(3.94+3.92)/2	2.24		
		(5.86-5.05)x(3.96+3.94)/2	3.20		
		(6.10-5.86)x(3.97+3.96)/2	0.95		
		(6.90-6.10)x(3.98+3.97)/2	3.18		
		(7.16-6.90)x(3.98+3.98)/2	1.03		
		(7.23-7.16)x(3.98+3.98)/2	0.28		
		(8.21-7.23)x(4.00+3.98)/2	3.91		
		(7.23-8.21)x(2.98+3.00)/2	-2.93		
		(7.16-7.23)x(2.98+2.98)/2	-0.21		
		(6.90-7.16)x(2.98+2.98)/2	-0.77		
		(6.10-6.90)x(2.97+2.98)/2	-2.38		
		(5.86-6.10)x(2.96+2.97)/2	-0.71		
		(5.05-5.86)x(2.94+2.96)/2	-2.39		
		(4.48-5.05)x(2.92+2.94)/2	-1.67		
		(4.00-4.48)x(2.91+2.92)/2	-1.40		
		(3.11-4.00)x(2.88+2.91)/2	-2.58		
		(2.94-3.11)x(2.87+2.88)/2	-0.49		
		(2.84-2.94)x(2.87+2.87)/2	-0.29		
		(2.40-2.84)x(2.86+2.87)/2	-1.26		
		(1.99-2.40)x(2.86+2.86)/2	-1.17		
		(1.89-1.99)x(2.86+2.86)/2	-0.29		
		(1.73-1.89)x(2.86+2.86)/2	-0.46		
		(0.84-1.73)x(2.85+2.86)/2	-2.54		
		(0.36-0.84)x(2.85+2.85)/2	-1.37		
		(-0.22-0.36)x(2.84+2.85)/2	-1.65		
		(-1.02--0.22)x(2.85+2.84)/2	-2.28		
		(-1.27--1.02)x(2.85+2.85)/2	-0.71		
		(-2.09--1.27)x(2.84+2.85)/2	-2.33		
		(-2.32--2.09)x(2.83+2.84)/2	-0.65		
		(-2.39--2.32)x(2.83+2.83)/2	-0.20		
		(-3.37--2.39)x(2.82+2.83)/2	-2.77		
		(-3.77--3.37)x(2.82+2.82)/2	-1.13		
		(-4.43--3.77)x(2.83+2.82)/2	-1.86		
		(-5.14--4.43)x(2.82+2.83)/2	-2.01		
		(-5.48--5.14)x(2.82+2.82)/2	-0.96		
		(-6.52--5.48)x(2.79+2.82)/2	-2.92		
		(-6.53--6.52)x(2.79+2.79)/2	-0.03		
		(-6.59--6.53)x(2.80+2.79)/2	-0.17		
		(-7.59--6.59)x(2.81+2.80)/2	-2.80		
		(-7.89--7.59)x(2.82+2.81)/2	-0.84		
		(-8.64--7.89)x(2.85+2.82)/2	-2.13		
		(-9.27--8.64)x(2.89+2.85)/2	-1.81		
		(-9.69--9.27)x(2.90+2.89)/2	-1.22		
		(-10.64--9.69)x(2.93+2.90)/2	-2.77		
		(-10.75--10.64)x(2.94+2.93)/2	-0.32		
		(-11.09--10.75)x(2.94+2.94)/2	-1.00		
		(-11.80--11.09)x(2.94+2.94)/2	-2.09		
		(-12.02--11.80)x(2.94+2.94)/2	-0.65		
		(-12.85--12.02)x(2.96+2.94)/2	-2.45		
		(-13.39--12.85)x(2.96+2.96)/2	-1.60		
		(-13.90--13.39)x(2.97+2.96)/2	-1.51		
		(-14.50--13.90)x(2.97+2.97)/2	-1.78		
				22.71	
183 2730.00	B01	(-13.97--14.48)x(4.03+4.04)/2	2.06		
		(-13.40--13.97)x(4.03+4.03)/2	2.30		
		(-12.92--13.40)x(4.03+4.03)/2	1.93		
		(-12.08--12.92)x(4.02+4.03)/2	3.38		
		(-11.87--12.08)x(4.02+4.02)/2	0.84		
		(-11.09--11.87)x(4.00+4.02)/2	3.13		
		(-10.83--11.09)x(3.99+4.00)/2	1.04		
		(-10.76--10.83)x(3.99+3.99)/2	0.28		
		(-9.78--10.76)x(3.97+3.99)/2	3.90		
		(-9.44--9.78)x(3.96+3.97)/2	1.35		
		(-8.73--9.44)x(3.96+3.96)/2	2.81		
		(-8.13--8.73)x(3.96+3.96)/2	2.38		
		(-7.69--8.13)x(3.96+3.96)/2	1.74		
		(-6.81--7.69)x(3.96+3.96)/2	3.48		
		(-6.64--6.81)x(3.96+3.96)/2	0.67		
		(-5.99--6.64)x(3.96+3.96)/2	2.57		
		(-5.59--5.99)x(3.96+3.96)/2	1.58		
		(-5.49--5.59)x(3.96+3.96)/2	0.40		
		(-4.55--5.49)x(3.96+3.96)/2	3.72		
		(-4.17--4.55)x(3.95+3.96)/2	1.50		
		(-3.50--4.17)x(3.95+3.95)/2	2.65		
		(-2.86--3.50)x(3.95+3.95)/2	2.53		
		(-2.45--2.86)x(3.94+3.95)/2	1.62		
		(-1.54--2.45)x(3.94+3.94)/2	3.59		
		(-1.41--1.54)x(3.94+3.94)/2	0.51		
		(-1.32--1.41)x(3.94+3.94)/2	0.35		
		(-0.90--1.32)x(3.95+3.94)/2	1.66		
		A RIPORTARE mq	53.97		

		CALCOLO DELLE AREE		Foglio n. 94	
BONIFICA					
N. SEZIONE PROG.	FIG.	ELEMENTI DI CALCOLO	AREA ELEMENTARE mq	AREA FIGURA mq	NOTE
		RIPORTO mq	53.97		
		(-0.45--0.90)x(3.95+3.95)/2	1.78		
		(-0.36--0.45)x(3.95+3.95)/2	0.36		
		(-0.22--0.36)x(3.96+3.95)/2	0.55		
		(0.69--0.22)x(3.99+3.96)/2	3.62		
		(1.10-0.69)x(4.01+3.99)/2	1.64		
		(1.73-1.10)x(4.03+4.01)/2	2.53		
		(2.41-1.73)x(4.04+4.03)/2	2.74		
		(2.78-2.41)x(4.04+4.04)/2	1.49		
		(3.73-2.78)x(4.03+4.04)/2	3.83		
		(3.83-3.73)x(4.03+4.03)/2	0.40		
		(4.19-3.83)x(4.03+4.03)/2	1.45		
		(4.87-4.19)x(4.02+4.03)/2	2.74		
		(5.05-4.87)x(4.02+4.02)/2	0.72		
		(5.92-5.05)x(4.00+4.02)/2	3.49		
		(6.37-5.92)x(4.00+4.00)/2	1.80		
		(6.97-6.37)x(3.99+4.00)/2	2.40		
		(7.68-6.97)x(4.00+3.99)/2	2.84		
		(8.01-7.68)x(4.00+4.00)/2	1.32		
		(9.00-8.01)x(4.02+4.00)/2	3.97		
		(9.06-9.00)x(4.02+4.02)/2	0.24		
		(9.16-9.06)x(4.03+4.02)/2	0.40		
		(8.01-9.16)x(3.00+3.03)/2	-3.47		
		(7.68-8.01)x(3.00+3.00)/2	-0.99		
		(6.97-7.68)x(2.99+3.00)/2	-2.13		
		(6.37-6.97)x(3.00+2.99)/2	-1.80		
		(5.92-6.37)x(3.00+3.00)/2	-1.35		
		(5.05-5.92)x(3.02+3.00)/2	-2.62		
		(4.87-5.05)x(3.02+3.02)/2	-0.54		
		(4.19-4.87)x(3.03+3.02)/2	-2.06		
		(3.83-4.19)x(3.03+3.03)/2	-1.09		
		(3.73-3.83)x(3.03+3.03)/2	-0.30		
		(2.78-3.73)x(3.04+3.03)/2	-2.88		
		(2.41-2.78)x(3.04+3.04)/2	-1.12		
		(1.73-2.41)x(3.03+3.04)/2	-2.06		
		(1.10-1.73)x(3.01+3.03)/2	-1.90		
		(0.69-1.10)x(2.99+3.01)/2	-1.23		
		(-0.22-0.69)x(2.96+2.99)/2	-2.71		
		(-0.36--0.22)x(2.95+2.96)/2	-0.41		
		(-0.45--0.36)x(2.95+2.95)/2	-0.27		
		(-0.90--0.45)x(2.95+2.95)/2	-1.33		
		(-1.32--0.90)x(2.94+2.95)/2	-1.24		
		(-1.41--1.32)x(2.94+2.94)/2	-0.26		
		(-1.54--1.41)x(2.94+2.94)/2	-0.38		
		(-2.45--1.54)x(2.94+2.94)/2	-2.68		
		(-2.86--2.45)x(2.95+2.94)/2	-1.21		
		(-3.50--2.86)x(2.95+2.95)/2	-1.89		
		(-4.17--3.50)x(2.95+2.95)/2	-1.98		
		(-4.55--4.17)x(2.96+2.95)/2	-1.12		
		(-5.49--4.55)x(2.96+2.96)/2	-2.78		
		(-5.59--5.49)x(2.96+2.96)/2	-0.30		
		(-5.99--5.59)x(2.96+2.96)/2	-1.18		
		(-6.64--5.99)x(2.96+2.96)/2	-1.92		
		(-6.81--6.64)x(2.96+2.96)/2	-0.50		
		(-7.69--6.81)x(2.96+2.96)/2	-2.60		
		(-8.13--7.69)x(2.96+2.96)/2	-1.30		
		(-8.73--8.13)x(2.96+2.96)/2	-1.78		
		(-9.44--8.73)x(2.96+2.96)/2	-2.10		
		(-9.78--9.44)x(2.97+2.96)/2	-1.01		
		(-10.76--9.78)x(2.99+2.97)/2	-2.92		
		(-10.83--10.76)x(2.99+2.99)/2	-0.21		
		(-11.09--10.83)x(3.00+2.99)/2	-0.78		
		(-11.87--11.09)x(3.02+3.00)/2	-2.35		
		(-12.08--11.87)x(3.02+3.02)/2	-0.63		
		(-12.92--12.08)x(3.03+3.02)/2	-2.54		
		(-13.40--12.92)x(3.03+3.03)/2	-1.45		
		(-13.97--13.40)x(3.03+3.03)/2	-1.73		
		(-14.48--13.97)x(3.04+3.03)/2	-1.55		
				23.63	
184 2745.00	BO1	(-14.28--14.51)x(4.13+4.13)/2	0.95		
		(-13.63--14.28)x(4.11+4.13)/2	2.68		
		(-13.02--13.63)x(4.10+4.11)/2	2.50		
		(-12.59--13.02)x(4.09+4.10)/2	1.76		
		(-11.75--12.59)x(4.08+4.09)/2	3.43		
		(-11.55--11.75)x(4.08+4.08)/2	0.82		
		(-10.62--11.55)x(4.07+4.08)/2	3.79		
		(-10.51--10.62)x(4.07+4.07)/2	0.45		
		(-10.49--10.51)x(4.07+4.07)/2	0.08		
		(-9.47--10.49)x(4.07+4.07)/2	4.15		
		(-9.22--9.47)x(4.07+4.07)/2	1.02		
		(-8.43--9.22)x(4.06+4.07)/2	3.21		
		(-7.96--8.43)x(4.06+4.06)/2	1.91		
		(-7.39--7.96)x(4.06+4.06)/2	2.31		
		(-6.69--7.39)x(4.05+4.06)/2	2.84		
		(-6.35--6.69)x(4.05+4.05)/2	1.38		
		(-5.42--6.35)x(4.04+4.05)/2	3.76		
		(-5.30--5.42)x(4.04+4.04)/2	0.48		
		(-4.74--5.30)x(4.03+4.04)/2	2.26		
		(-4.26--4.74)x(4.03+4.03)/2	1.93		
		(-3.45--4.26)x(4.02+4.03)/2	3.26		
		(-3.22--3.45)x(4.03+4.02)/2	0.93		
		(-2.89--3.22)x(4.03+4.03)/2	1.33		
		(-2.18--2.89)x(4.03+4.03)/2	2.86		
		(-1.63--2.18)x(4.03+4.03)/2	2.22		
		(-1.14--1.63)x(4.02+4.03)/2	1.97		
		(-0.36--1.14)x(4.03+4.02)/2	3.14		
		(-0.10--0.36)x(4.02+4.03)/2	1.05		
		(0.90--0.10)x(4.05+4.02)/2	4.04		
		(0.94-0.90)x(4.06+4.05)/2	0.16		
		(1.13-0.94)x(4.06+4.06)/2	0.77		
		(1.98-1.13)x(4.05+4.06)/2	3.45		
		(2.17-1.98)x(4.05+4.05)/2	0.77		
		(3.03-2.17)x(4.05+4.05)/2	3.48		
		(3.43-3.03)x(4.05+4.05)/2	1.62		
		(4.07-3.43)x(4.05+4.05)/2	2.59		
		A RIPORTARE mq	75.35		

		CALCOLO DELLE AREE		Foglio n. 95
BONIFICA				
N. SEZIONE PROG.	FIG.	ELEMENTI DI CALCOLO	AREA ELEMENTARE mq	AREA FIGURA mq	NOTE
		RIPORTO mq	75.35		
		(4.70-4.07)x(4.05+4.05)/2	2.55		
		(5.11-4.70)x(4.06+4.05)/2	1.66		
		(5.97-5.11)x(4.05+4.06)/2	3.49		
		(6.15-5.97)x(4.05+4.05)/2	0.73		
		(7.01-6.15)x(4.05+4.05)/2	3.48		
		(7.19-7.01)x(4.05+4.05)/2	0.73		
		(7.23-7.19)x(4.05+4.05)/2	0.16		
		(8.23-7.23)x(4.05+4.05)/2	4.05		
		(8.50-8.23)x(4.05+4.05)/2	1.09		
		(9.27-8.50)x(4.04+4.05)/2	3.11		
		(9.76-9.27)x(4.03+4.04)/2	1.98		
		(10.31-9.76)x(4.03+4.03)/2	2.22		
		(11.03-10.31)x(4.02+4.03)/2	2.90		
		(11.36-11.03)x(4.02+4.02)/2	1.33		
		(12.29-11.36)x(4.00+4.02)/2	3.73		
		(12.40-12.29)x(3.99+4.00)/2	0.44		
		(12.88-12.40)x(3.99+3.99)/2	1.92		
		(13.44-12.88)x(3.98+3.99)/2	2.23		
		(13.56-13.44)x(3.98+3.98)/2	0.48		
		(14.48-13.56)x(3.95+3.98)/2	3.65		
		(15.12-14.48)x(4.04+3.95)/2	2.56		
		(15.52-15.12)x(4.11+4.04)/2	1.63		
		(14.48-15.52)x(2.95+2.94)/2	-3.06		
		(13.56-14.48)x(2.98+2.95)/2	-2.73		
		(13.44-13.56)x(2.98+2.98)/2	-0.36		
		(12.88-13.44)x(2.99+2.98)/2	-1.67		
		(12.40-12.88)x(2.99+2.99)/2	-1.44		
		(12.29-12.40)x(3.00+2.99)/2	-0.33		
		(11.36-12.29)x(3.02+3.00)/2	-2.80		
		(11.03-11.36)x(3.02+3.02)/2	-1.00		
		(10.31-11.03)x(3.03+3.02)/2	-2.18		
		(9.76-10.31)x(3.03+3.03)/2	-1.67		
		(9.27-9.76)x(3.04+3.03)/2	-1.49		
		(8.50-9.27)x(3.05+3.04)/2	-2.34		
		(8.23-8.50)x(3.05+3.05)/2	-0.82		
		(7.23-8.23)x(3.05+3.05)/2	-3.05		
		(7.19-7.23)x(3.05+3.05)/2	-0.12		
		(7.01-7.19)x(3.05+3.05)/2	-0.55		
		(6.15-7.01)x(3.05+3.05)/2	-2.62		
		(5.97-6.15)x(3.05+3.05)/2	-0.55		
		(5.11-5.97)x(3.06+3.05)/2	-2.63		
		(4.70-5.11)x(3.05+3.06)/2	-1.25		
		(4.07-4.70)x(3.05+3.05)/2	-1.92		
		(3.43-4.07)x(3.05+3.05)/2	-1.95		
		(3.03-3.43)x(3.05+3.05)/2	-1.22		
		(2.17-3.03)x(3.05+3.05)/2	-2.62		
		(1.98-2.17)x(3.05+3.05)/2	-0.58		
		(1.13-1.98)x(3.06+3.05)/2	-2.60		
		(0.94-1.13)x(3.06+3.06)/2	-0.58		
		(0.90-0.94)x(3.05+3.06)/2	-0.12		
		(-0.10-0.90)x(3.02+3.05)/2	-3.04		
		(-0.36--0.10)x(3.03+3.02)/2	-0.79		
		(-1.14--0.36)x(3.02+3.03)/2	-2.36		
		(-1.63--1.14)x(3.03+3.02)/2	-1.48		
		(-2.18--1.63)x(3.03+3.03)/2	-1.67		
		(-2.89--2.18)x(3.03+3.03)/2	-2.15		
		(-3.22--2.89)x(3.03+3.03)/2	-1.00		
		(-3.45--3.22)x(3.02+3.03)/2	-0.70		
		(-4.26--3.45)x(3.03+3.02)/2	-2.45		
		(-4.74--4.26)x(3.03+3.03)/2	-1.45		
		(-5.30--4.74)x(3.04+3.03)/2	-1.70		
		(-5.42--5.30)x(3.04+3.04)/2	-0.36		
		(-6.35--5.42)x(3.05+3.04)/2	-2.83		
		(-6.69--6.35)x(3.05+3.05)/2	-1.04		
		(-7.39--6.69)x(3.06+3.05)/2	-2.14		
		(-7.96--7.39)x(3.06+3.06)/2	-1.74		
		(-8.43--7.96)x(3.06+3.06)/2	-1.44		
		(-9.22--8.43)x(3.07+3.06)/2	-2.42		
		(-9.47--9.22)x(3.07+3.07)/2	-0.77		
		(-10.49--9.47)x(3.07+3.07)/2	-3.13		
		(-10.51--10.49)x(3.07+3.07)/2	-0.06		
		(-10.62--10.51)x(3.07+3.07)/2	-0.34		
		(-11.55--10.62)x(3.08+3.07)/2	-2.86		
		(-11.75--11.55)x(3.08+3.08)/2	-0.62		
		(-12.59--11.75)x(3.09+3.08)/2	-2.59		
		(-13.02--12.59)x(3.10+3.09)/2	-1.33		
		(-13.63--13.02)x(3.11+3.10)/2	-1.89		
		(-14.28--13.63)x(3.13+3.11)/2	-2.03		
		(-14.51--14.28)x(3.13+3.13)/2	-0.72		
				30.12	
185 2760.00	BO1	(-13.94--14.66)x(4.20+4.19)/2	3.02		
		(-13.50--13.94)x(4.20+4.20)/2	1.85		
		(-12.91--13.50)x(4.19+4.20)/2	2.48		
		(-12.28--12.91)x(4.18+4.19)/2	2.64		
		(-11.87--12.28)x(4.17+4.18)/2	1.71		
		(-11.07--11.87)x(4.16+4.17)/2	3.33		
		(-10.83--11.07)x(4.16+4.16)/2	1.00		
		(-9.85--10.83)x(4.13+4.16)/2	4.06		
		(-9.80--9.85)x(4.13+4.13)/2	0.21		
		(-9.51--9.80)x(4.13+4.13)/2	1.20		
		(-8.76--9.51)x(4.11+4.13)/2	3.09		
		(-8.63--8.76)x(4.11+4.11)/2	0.53		
		(-7.72--8.63)x(4.09+4.11)/2	3.73		
		(-7.41--7.72)x(4.08+4.09)/2	1.27		
		(-6.69--7.41)x(4.07+4.08)/2	2.93		
		(-6.15--6.69)x(4.08+4.07)/2	2.20		
		(-5.65--6.15)x(4.07+4.08)/2	2.04		
		(-4.97--5.65)x(4.08+4.07)/2	2.77		
		(-4.61--4.97)x(4.09+4.08)/2	1.47		
		(-3.75--4.61)x(4.08+4.09)/2	3.51		
		(-3.58--3.75)x(4.08+4.08)/2	0.69		
		(-2.56--3.58)x(4.08+4.08)/2	4.16		
		(-2.54--2.56)x(4.08+4.08)/2	0.08		
		(-1.50--2.54)x(4.11+4.08)/2	4.26		
		A RIPORTARE mq	54.23		

		CALCOLO DELLE AREE		Foglio n. 96
BONIFICA				
N. SEZIONE PROG.	FIG.	ELEMENTI DI CALCOLO	AREA ELEMENTARE mq	AREA FIGURA mq	NOTE
		RIPORTO mq	54.23		
		(-1.32--1.50)x(4.12+4.11)/2	0.74		
		(-0.47--1.32)x(4.15+4.12)/2	3.51		
		(-0.10--0.47)x(4.17+4.15)/2	1.54		
		(0.57--0.10)x(4.19+4.17)/2	2.80		
		(1.12-0.57)x(4.22+4.19)/2	2.31		
		(1.61-1.12)x(4.26+4.22)/2	2.08		
		(2.34-1.61)x(4.28+4.26)/2	3.12		
		(2.64-2.34)x(4.28+4.28)/2	1.28		
		(3.56-2.64)x(4.28+4.28)/2	3.94		
		(3.68-3.56)x(4.28+4.28)/2	0.51		
		(4.38-3.68)x(4.26+4.28)/2	2.99		
		(4.72-4.38)x(4.25+4.26)/2	1.45		
		(4.77-4.72)x(4.25+4.25)/2	0.21		
		(5.75-4.77)x(4.25+4.25)/2	4.17		
		(5.99-5.75)x(4.24+4.25)/2	1.02		
		(6.79-5.99)x(4.22+4.24)/2	3.38		
		(7.21-6.79)x(4.19+4.22)/2	1.77		
		(7.83-7.21)x(4.16+4.19)/2	2.59		
		(8.43-7.83)x(4.10+4.16)/2	2.48		
		(8.86-8.43)x(4.06+4.10)/2	1.75		
		(9.65-8.86)x(4.01+4.06)/2	3.19		
		(9.90-9.65)x(4.00+4.01)/2	1.00		
		(10.87-9.90)x(3.97+4.00)/2	3.87		
		(10.94-10.87)x(3.97+3.97)/2	0.28		
		(11.33-10.94)x(3.95+3.97)/2	1.54		
		(11.97-11.33)x(3.94+3.95)/2	2.52		
		(12.79-11.97)x(3.92+3.94)/2	3.22		
		(13.01-12.79)x(3.91+3.92)/2	0.86		
		(13.30-13.01)x(3.91+3.91)/2	1.13		
		(14.05-13.30)x(3.89+3.91)/2	2.93		
		(14.52-14.05)x(3.88+3.89)/2	1.83		
		(15.08-14.52)x(3.87+3.88)/2	2.17		
		(15.74-15.08)x(3.87+3.87)/2	2.55		
		(16.12-15.74)x(3.87+3.87)/2	1.47		
		(16.96-16.12)x(3.90+3.87)/2	3.26		
		(17.16-16.96)x(3.91+3.90)/2	0.78		
		(18.18-17.16)x(3.90+3.91)/2	3.98		
		(18.19-18.18)x(3.90+3.90)/2	0.04		
		(18.26-18.19)x(3.90+3.90)/2	0.27		
		(18.19-18.26)x(2.90+2.90)/2	-0.20		
		(18.18-18.19)x(2.90+2.90)/2	-0.03		
		(17.16-18.18)x(2.91+2.90)/2	-2.96		
		(16.96-17.16)x(2.90+2.91)/2	-0.58		
		(16.12-16.96)x(2.87+2.90)/2	-2.42		
		(15.74-16.12)x(2.87+2.87)/2	-1.09		
		(15.08-15.74)x(2.87+2.87)/2	-1.89		
		(14.52-15.08)x(2.88+2.87)/2	-1.61		
		(14.05-14.52)x(2.89+2.88)/2	-1.36		
		(13.30-14.05)x(2.91+2.89)/2	-2.18		
		(13.01-13.30)x(2.91+2.91)/2	-0.84		
		(12.79-13.01)x(2.92+2.91)/2	-0.64		
		(11.97-12.79)x(2.94+2.92)/2	-2.40		
		(11.33-11.97)x(2.95+2.94)/2	-1.88		
		(10.94-11.33)x(2.97+2.95)/2	-1.15		
		(10.87-10.94)x(2.97+2.97)/2	-0.21		
		(9.90-10.87)x(3.00+2.97)/2	-2.90		
		(9.65-9.90)x(3.01+3.00)/2	-0.75		
		(8.86-9.65)x(3.06+3.01)/2	-2.40		
		(8.43-8.86)x(3.10+3.06)/2	-1.32		
		(7.83-8.43)x(3.16+3.10)/2	-1.88		
		(7.21-7.83)x(3.19+3.16)/2	-1.97		
		(6.79-7.21)x(3.22+3.19)/2	-1.35		
		(5.99-6.79)x(3.24+3.22)/2	-2.58		
		(5.75-5.99)x(3.25+3.24)/2	-0.78		
		(4.77-5.75)x(3.25+3.25)/2	-3.19		
		(4.72-4.77)x(3.25+3.25)/2	-0.16		
		(4.38-4.72)x(3.26+3.25)/2	-1.11		
		(3.68-4.38)x(3.28+3.26)/2	-2.29		
		(3.56-3.68)x(3.28+3.28)/2	-0.39		
		(2.64-3.56)x(3.28+3.28)/2	-3.02		
		(2.34-2.64)x(3.28+3.28)/2	-0.98		
		(1.61-2.34)x(3.26+3.28)/2	-2.39		
		(1.12-1.61)x(3.22+3.26)/2	-1.59		
		(0.57-1.12)x(3.19+3.22)/2	-1.76		
		(-0.10-0.57)x(3.17+3.19)/2	-2.13		
		(-0.47--0.10)x(3.15+3.17)/2	-1.17		
		(-1.32--0.47)x(3.12+3.15)/2	-2.66		
		(-1.50--1.32)x(3.11+3.12)/2	-0.56		
		(-2.54--1.50)x(3.08+3.11)/2	-3.22		
		(-2.56--2.54)x(3.08+3.08)/2	-0.06		
		(-3.58--2.56)x(3.08+3.08)/2	-3.14		
		(-3.75--3.58)x(3.08+3.08)/2	-0.52		
		(-4.61--3.75)x(3.09+3.08)/2	-2.65		
		(-4.97--4.61)x(3.08+3.09)/2	-1.11		
		(-5.65--4.97)x(3.07+3.08)/2	-2.09		
		(-6.15--5.65)x(3.08+3.07)/2	-1.54		
		(-6.69--6.15)x(3.07+3.08)/2	-1.66		
		(-7.41--6.69)x(3.08+3.07)/2	-2.21		
		(-7.72--7.41)x(3.09+3.08)/2	-0.96		
		(-8.63--7.72)x(3.11+3.09)/2	-2.82		
		(-8.76--8.63)x(3.11+3.11)/2	-0.40		
		(-9.51--8.76)x(3.13+3.11)/2	-2.34		
		(-9.80--9.51)x(3.13+3.13)/2	-0.91		
		(-9.85--9.80)x(3.13+3.13)/2	-0.16		
		(-10.83--9.85)x(3.16+3.13)/2	-3.08		
		(-11.07--10.83)x(3.16+3.16)/2	-0.76		
		(-11.87--11.07)x(3.17+3.16)/2	-2.53		
		(-12.28--11.87)x(3.18+3.17)/2	-1.30		
		(-12.91--12.28)x(3.19+3.18)/2	-2.01		
		(-13.50--12.91)x(3.20+3.19)/2	-1.89		
		(-13.94--13.50)x(3.20+3.20)/2	-1.41		
		(-14.66--13.94)x(3.19+3.20)/2	-2.30		
				32.92	
186	BO1	(-14.88--14.94)x(4.23+4.23)/2	0.25		
		A RIPORTARE mq	0.25		

		CALCOLO DELLE AREE		Foglio n. 97
BONIFICA				
N. SEZIONE PROG.	FIG.	ELEMENTI DI CALCOLO	AREA ELEMENTARE mq	AREA FIGURA mq	NOTE
		RIPORTO mq	0.25		
2775.00		(-14.74--14.88)x(4.23+4.23)/2	0.59		
		(-13.85--14.74)x(4.22+4.23)/2	3.76		
		(-13.57--13.85)x(4.22+4.22)/2	1.18		
		(-12.82--13.57)x(4.21+4.22)/2	3.16		
		(-12.39--12.82)x(4.21+4.21)/2	1.81		
		(-11.79--12.39)x(4.21+4.21)/2	2.53		
		(-11.22--11.79)x(4.21+4.21)/2	2.40		
		(-10.75--11.22)x(4.20+4.21)/2	1.98		
		(-10.04--10.75)x(4.19+4.20)/2	2.98		
		(-9.72--10.04)x(4.19+4.19)/2	1.34		
		(-8.86--9.72)x(4.18+4.19)/2	3.60		
		(-8.69--8.86)x(4.18+4.18)/2	0.71		
		(-8.55--8.69)x(4.18+4.18)/2	0.59		
		(-7.66--8.55)x(4.18+4.18)/2	3.72		
		(-7.41--7.66)x(4.18+4.18)/2	1.04		
		(-6.62--7.41)x(4.19+4.18)/2	3.31		
		(-6.51--6.62)x(4.19+4.19)/2	0.46		
		(-5.59--6.51)x(4.20+4.19)/2	3.86		
		(-5.34--5.59)x(4.20+4.20)/2	1.05		
		(-4.56--5.34)x(4.21+4.20)/2	3.28		
		(-4.16--4.56)x(4.22+4.21)/2	1.69		
		(-3.52--4.16)x(4.24+4.22)/2	2.71		
		(-2.99--3.52)x(4.25+4.24)/2	2.25		
		(-2.49--2.99)x(4.27+4.25)/2	2.13		
		(-1.81--2.49)x(4.29+4.27)/2	2.91		
		(-1.46--1.81)x(4.30+4.29)/2	1.50		
		(-0.64--1.46)x(4.32+4.30)/2	3.53		
		(-0.43--0.64)x(4.32+4.32)/2	0.91		
		(0.54--0.43)x(4.32+4.32)/2	4.19		
		(0.61-0.54)x(4.31+4.32)/2	0.30		
		(1.09-0.61)x(4.31+4.31)/2	2.07		
		(1.64-1.09)x(4.31+4.31)/2	2.37		
		(1.72-1.64)x(4.30+4.31)/2	0.34		
		(2.67-1.72)x(4.30+4.30)/2	4.08		
		(2.89-2.67)x(4.30+4.30)/2	0.95		
		(3.71-2.89)x(4.28+4.30)/2	3.52		
		(4.07-3.71)x(4.28+4.28)/2	1.54		
		(4.74-4.07)x(4.29+4.28)/2	2.87		
		(5.24-4.74)x(4.29+4.29)/2	2.15		
		(5.77-5.24)x(4.30+4.29)/2	2.28		
		(6.42-5.77)x(4.29+4.30)/2	2.79		
		(6.80-6.42)x(4.29+4.29)/2	1.63		
		(7.59-6.80)x(4.26+4.29)/2	3.38		
		(7.84-7.59)x(4.25+4.26)/2	1.06		
		(8.77-7.84)x(4.21+4.25)/2	3.93		
		(8.87-8.77)x(4.21+4.21)/2	0.42		
		(9.60-8.87)x(4.19+4.21)/2	3.07		
		(9.90-9.60)x(4.17+4.19)/2	1.25		
		(10.79-9.90)x(4.14+4.17)/2	3.70		
		(10.94-10.79)x(4.13+4.14)/2	0.62		
		(9.90-10.94)x(3.67+3.63)/2	-3.80		
		(9.60-9.90)x(3.69+3.67)/2	-1.10		
		(8.87-9.60)x(3.71+3.69)/2	-2.70		
		(8.77-8.87)x(3.71+3.71)/2	-0.37		
		(7.84-8.77)x(3.75+3.71)/2	-3.47		
		(7.59-7.84)x(3.76+3.75)/2	-0.94		
		(6.80-7.59)x(3.79+3.76)/2	-2.98		
		(6.42-6.80)x(3.79+3.79)/2	-1.44		
		(5.77-6.42)x(3.80+3.79)/2	-2.47		
		(5.24-5.77)x(3.79+3.80)/2	-2.01		
		(4.74-5.24)x(3.79+3.79)/2	-1.90		
		(4.07-4.74)x(3.78+3.79)/2	-2.54		
		(3.71-4.07)x(3.78+3.78)/2	-1.36		
		(2.89-3.71)x(3.80+3.78)/2	-3.11		
		(2.67-2.89)x(3.80+3.80)/2	-0.84		
		(1.72-2.67)x(3.80+3.80)/2	-3.61		
		(1.64-1.72)x(3.81+3.80)/2	-0.30		
		(1.09-1.64)x(3.81+3.81)/2	-2.10		
		(0.61-1.09)x(3.81+3.81)/2	-1.83		
		(0.54-0.61)x(3.82+3.81)/2	-0.27		
		(-0.43-0.54)x(3.82+3.82)/2	-3.71		
		(-0.64--0.43)x(3.82+3.82)/2	-0.80		
		(-1.46--0.64)x(3.80+3.82)/2	-3.12		
		(-1.81--1.46)x(3.79+3.80)/2	-1.33		
		(-2.49--1.81)x(3.77+3.79)/2	-2.57		
		(-2.99--2.49)x(3.75+3.77)/2	-1.88		
		(-3.52--2.99)x(3.74+3.75)/2	-1.98		
		(-4.16--3.52)x(3.72+3.74)/2	-2.39		
		(-4.56--4.16)x(3.71+3.72)/2	-1.49		
		(-5.34--4.56)x(3.70+3.71)/2	-2.89		
		(-5.59--5.34)x(3.70+3.70)/2	-0.93		
		(-6.51--5.59)x(3.69+3.70)/2	-3.40		
		(-6.62--6.51)x(3.69+3.69)/2	-0.41		
		(-7.41--6.62)x(3.68+3.69)/2	-2.91		
		(-7.66--7.41)x(3.68+3.68)/2	-0.92		
		(-8.55--7.66)x(3.68+3.68)/2	-3.28		
		(-8.69--8.55)x(3.68+3.68)/2	-0.52		
		(-8.86--8.69)x(3.68+3.68)/2	-0.63		
		(-9.72--8.86)x(3.69+3.68)/2	-3.17		
		(-10.04--9.72)x(3.69+3.69)/2	-1.18		
		(-10.75--10.04)x(3.70+3.69)/2	-2.62		
		(-11.22--10.75)x(3.71+3.70)/2	-1.74		
		(-11.79--11.22)x(3.71+3.71)/2	-2.11		
		(-12.39--11.79)x(3.71+3.71)/2	-2.23		
		(-12.82--12.39)x(3.71+3.71)/2	-1.60		
		(-13.57--12.82)x(3.72+3.71)/2	-2.79		
		(-13.85--13.57)x(3.72+3.72)/2	-1.04		
		(-14.74--13.85)x(3.73+3.72)/2	-3.32		
		(-14.88--14.74)x(3.73+3.73)/2	-0.52		
		(-14.94--14.88)x(3.73+3.73)/2	-0.22		
				12.90	
187 2790.00	BO1	(-14.54--15.34)x(4.24+4.24)/2	3.39		
		(-14.39--14.54)x(4.23+4.24)/2	0.64		
		(-14.38--14.39)x(4.24+4.23)/2	0.04		
		A RIPORTARE mq	4.07		

		CALCOLO DELLE AREE		Foglio n. 98
BONIFICA				
N. SEZIONE PROG.	FIG.	ELEMENTI DI CALCOLO	AREA ELEMENTARE mq	AREA FIGURA mq	NOTE
		RIPORTO mq	4.07		
		(-13.36--14.38)x(4.24+4.24)/2	4.32		
		(-13.24--13.36)x(4.25+4.24)/2	0.51		
		(-12.33--13.24)x(4.25+4.25)/2	3.87		
		(-12.11--12.33)x(4.25+4.25)/2	0.94		
		(-11.30--12.11)x(4.26+4.25)/2	3.45		
		(-10.97--11.30)x(4.26+4.26)/2	1.41		
		(-10.27--10.97)x(4.27+4.26)/2	2.99		
		(-9.70--10.27)x(4.27+4.27)/2	2.43		
		(-9.25--9.70)x(4.28+4.27)/2	1.92		
		(-8.70--9.25)x(4.30+4.28)/2	2.36		
		(-8.22--8.70)x(4.30+4.30)/2	2.06		
		(-7.56--8.22)x(4.31+4.30)/2	2.84		
		(-7.19--7.56)x(4.30+4.31)/2	1.59		
		(-6.42--7.19)x(4.30+4.30)/2	3.31		
		(-6.16--6.42)x(4.30+4.30)/2	1.12		
		(-5.29--6.16)x(4.32+4.30)/2	3.75		
		(-5.13--5.29)x(4.33+4.32)/2	0.69		
		(-4.15--5.13)x(4.35+4.33)/2	4.25		
		(-4.10--4.15)x(4.35+4.35)/2	0.22		
		(-3.57--4.10)x(4.36+4.35)/2	2.31		
		(-3.07--3.57)x(4.36+4.36)/2	2.18		
		(-3.01--3.07)x(4.36+4.36)/2	0.26		
		(-2.04--3.01)x(4.37+4.36)/2	4.23		
		(-1.88--2.04)x(4.37+4.37)/2	0.70		
		(-1.01--1.88)x(4.38+4.37)/2	3.81		
		(-0.74--1.01)x(4.38+4.38)/2	1.18		
		(0.02--0.74)x(4.37+4.38)/2	3.33		
		(0.40-0.02)x(4.36+4.37)/2	1.66		
		(1.05-0.40)x(4.35+4.36)/2	2.83		
		(1.53-1.05)x(4.34+4.35)/2	2.09		
		(2.08-1.53)x(4.32+4.34)/2	2.38		
		(2.67-2.08)x(4.30+4.32)/2	2.54		
		(3.11-2.67)x(4.28+4.30)/2	1.89		
		(3.80-3.11)x(4.25+4.28)/2	2.94		
		(4.14-3.80)x(4.24+4.25)/2	1.44		
		(4.94-4.14)x(4.23+4.24)/2	3.39		
		(5.17-4.94)x(4.22+4.23)/2	0.97		
		(6.08-5.17)x(4.23+4.22)/2	3.84		
		(6.20-6.08)x(4.23+4.23)/2	0.51		
		(7.21-6.20)x(4.23+4.23)/2	4.27		
		(7.23-7.21)x(4.23+4.23)/2	0.08		
		(7.40-7.23)x(4.24+4.23)/2	0.72		
		(8.26-7.40)x(4.25+4.24)/2	3.65		
		(7.40-8.26)x(3.74+3.75)/2	-3.22		
		(7.23-7.40)x(3.73+3.74)/2	-0.63		
		(7.21-7.23)x(3.73+3.73)/2	-0.07		
		(6.20-7.21)x(3.73+3.73)/2	-3.77		
		(6.08-6.20)x(3.73+3.73)/2	-0.45		
		(5.17-6.08)x(3.72+3.73)/2	-3.39		
		(4.94-5.17)x(3.73+3.72)/2	-0.86		
		(4.14-4.94)x(3.74+3.73)/2	-2.99		
		(3.80-4.14)x(3.75+3.74)/2	-1.27		
		(3.11-3.80)x(3.78+3.75)/2	-2.60		
		(2.67-3.11)x(3.80+3.78)/2	-1.67		
		(2.08-2.67)x(3.82+3.80)/2	-2.25		
		(1.53-2.08)x(3.84+3.82)/2	-2.11		
		(1.05-1.53)x(3.85+3.84)/2	-1.85		
		(0.40-1.05)x(3.86+3.85)/2	-2.51		
		(0.02-0.40)x(3.87+3.86)/2	-1.47		
		(-0.74-0.02)x(3.88+3.87)/2	-2.94		
		(-1.01--0.74)x(3.88+3.88)/2	-1.05		
		(-1.88--1.01)x(3.87+3.88)/2	-3.37		
		(-2.04--1.88)x(3.87+3.87)/2	-0.62		
		(-3.01--2.04)x(3.86+3.87)/2	-3.75		
		(-3.07--3.01)x(3.86+3.86)/2	-0.23		
		(-3.57--3.07)x(3.86+3.86)/2	-1.93		
		(-4.10--3.57)x(3.85+3.86)/2	-2.04		
		(-4.15--4.10)x(3.85+3.85)/2	-0.19		
		(-5.13--4.15)x(3.83+3.85)/2	-3.76		
		(-5.29--5.13)x(3.82+3.83)/2	-0.61		
		(-6.16--5.29)x(3.80+3.82)/2	-3.31		
		(-6.42--6.16)x(3.80+3.80)/2	-0.99		
		(-7.19--6.42)x(3.80+3.80)/2	-2.93		
		(-7.56--7.19)x(3.81+3.80)/2	-1.41		
		(-8.22--7.56)x(3.80+3.81)/2	-2.51		
		(-8.70--8.22)x(3.80+3.80)/2	-1.82		
		(-9.25--8.70)x(3.78+3.80)/2	-2.08		
		(-9.70--9.25)x(3.77+3.78)/2	-1.70		
		(-10.27--9.70)x(3.77+3.77)/2	-2.15		
		(-10.97--10.27)x(3.76+3.77)/2	-2.64		
		(-11.30--10.97)x(3.76+3.76)/2	-1.24		
		(-12.11--11.30)x(3.75+3.76)/2	-3.04		
		(-12.33--12.11)x(3.75+3.75)/2	-0.83		
		(-13.24--12.33)x(3.75+3.75)/2	-3.41		
		(-13.36--13.24)x(3.74+3.75)/2	-0.45		
		(-14.38--13.36)x(3.74+3.74)/2	-3.81		
		(-14.39--14.38)x(3.73+3.74)/2	-0.04		
		(-14.54--14.39)x(3.74+3.73)/2	-0.56		
		(-15.34--14.54)x(3.74+3.74)/2	-2.99		
				11.79	
188	BO1	(-15.58--15.90)x(4.31+4.31)/2	1.38		
2805.00		(-14.83--15.58)x(4.33+4.31)/2	3.24		
		(-14.56--14.83)x(4.34+4.33)/2	1.17		
		(-13.72--14.56)x(4.37+4.34)/2	3.66		
		(-13.53--13.72)x(4.37+4.37)/2	0.83		
		(-12.62--13.53)x(4.40+4.37)/2	3.99		
		(-12.50--12.62)x(4.40+4.40)/2	0.53		
		(-11.51--12.50)x(4.43+4.40)/2	4.37		
		(-11.47--11.51)x(4.43+4.43)/2	0.18		
		(-11.44--11.47)x(4.43+4.43)/2	0.13		
		(-10.94--11.44)x(4.43+4.43)/2	2.21		
		(-10.48--10.94)x(4.43+4.43)/2	2.04		
		(-10.45--10.48)x(4.43+4.43)/2	0.13		
		(-10.41--10.45)x(4.43+4.43)/2	0.18		
		A RIPORTARE mq	24.04		

		CALCOLO DELLE AREE		Foglio n. 99
BONIFICA				
N. SEZIONE PROG.	FIG.	ELEMENTI DI CALCOLO	AREA ELEMENTARE mq	AREA FIGURA mq	NOTE
		RIPORTO mq	24.04		
		(-9.42--10.41)x(4.43+4.43)/2	4.39		
		(-9.30--9.42)x(4.43+4.43)/2	0.53		
		(-8.39--9.30)x(4.43+4.43)/2	4.03		
		(-8.20--8.39)x(4.43+4.43)/2	0.84		
		(-7.36--8.20)x(4.44+4.43)/2	3.73		
		(-7.09--7.36)x(4.44+4.44)/2	1.20		
		(-6.33--7.09)x(4.44+4.44)/2	3.37		
		(-5.99--6.33)x(4.44+4.44)/2	1.51		
		(-5.31--5.99)x(4.44+4.44)/2	3.02		
		(-4.88--5.31)x(4.44+4.44)/2	1.91		
		(-4.28--4.88)x(4.45+4.44)/2	2.67		
		(-3.78--4.28)x(4.44+4.45)/2	2.22		
		(-3.25--3.78)x(4.44+4.44)/2	2.35		
		(-2.67--3.25)x(4.44+4.44)/2	2.58		
		(-2.22--2.67)x(4.45+4.44)/2	2.00		
		(-1.57--2.22)x(4.45+4.45)/2	2.89		
		(-1.20--1.57)x(4.45+4.45)/2	1.65		
		(-0.46--1.20)x(4.44+4.45)/2	3.29		
		(-0.17--0.46)x(4.43+4.44)/2	1.29		
		(0.64--0.17)x(4.42+4.43)/2	3.58		
		(0.86-0.64)x(4.41+4.42)/2	0.97		
		(1.75-0.86)x(4.40+4.41)/2	3.92		
		(1.89-1.75)x(4.40+4.40)/2	0.62		
		(2.85-1.89)x(4.40+4.40)/2	4.22		
		(2.92-2.85)x(4.40+4.40)/2	0.31		
		(3.77-2.92)x(4.41+4.40)/2	3.74		
		(3.94-3.77)x(4.41+4.41)/2	0.75		
		(3.96-3.94)x(4.41+4.41)/2	0.09		
		(4.97-3.96)x(4.43+4.41)/2	4.46		
		(5.06-4.97)x(4.43+4.43)/2	0.40		
		(6.00-5.06)x(4.45+4.43)/2	4.17		
		(6.17-6.00)x(4.45+4.45)/2	0.76		
		(7.03-6.17)x(4.47+4.45)/2	3.84		
		(7.21-7.03)x(4.48+4.47)/2	0.81		
		(6.17-7.21)x(3.95+3.97)/2	-4.12		
		(6.00-6.17)x(3.95+3.95)/2	-0.67		
		(5.06-6.00)x(3.93+3.95)/2	-3.70		
		(4.97-5.06)x(3.93+3.93)/2	-0.35		
		(3.96-4.97)x(3.91+3.93)/2	-3.96		
		(3.94-3.96)x(3.91+3.91)/2	-0.08		
		(3.77-3.94)x(3.91+3.91)/2	-0.66		
		(2.92-3.77)x(3.90+3.91)/2	-3.32		
		(2.85-2.92)x(3.90+3.90)/2	-0.27		
		(1.89-2.85)x(3.90+3.90)/2	-3.74		
		(1.75-1.89)x(3.90+3.90)/2	-0.55		
		(0.86-1.75)x(3.91+3.90)/2	-3.48		
		(0.64-0.86)x(3.92+3.91)/2	-0.86		
		(-0.17-0.64)x(3.93+3.92)/2	-3.18		
		(-0.46--0.17)x(3.94+3.93)/2	-1.14		
		(-1.20--0.46)x(3.95+3.94)/2	-2.92		
		(-1.57--1.20)x(3.95+3.95)/2	-1.46		
		(-2.22--1.57)x(3.95+3.95)/2	-2.57		
		(-2.67--2.22)x(3.94+3.95)/2	-1.78		
		(-3.25--2.67)x(3.94+3.94)/2	-2.29		
		(-3.78--3.25)x(3.94+3.94)/2	-2.09		
		(-4.28--3.78)x(3.95+3.94)/2	-1.97		
		(-4.88--4.28)x(3.94+3.95)/2	-2.37		
		(-5.31--4.88)x(3.94+3.94)/2	-1.69		
		(-5.99--5.31)x(3.94+3.94)/2	-2.68		
		(-6.33--5.99)x(3.94+3.94)/2	-1.34		
		(-7.09--6.33)x(3.94+3.94)/2	-2.99		
		(-7.36--7.09)x(3.94+3.94)/2	-1.06		
		(-8.20--7.36)x(3.93+3.94)/2	-3.31		
		(-8.39--8.20)x(3.93+3.93)/2	-0.75		
		(-9.30--8.39)x(3.93+3.93)/2	-3.58		
		(-9.42--9.30)x(3.93+3.93)/2	-0.47		
		(-10.41--9.42)x(3.93+3.93)/2	-3.89		
		(-10.45--10.41)x(3.93+3.93)/2	-0.16		
		(-10.48--10.45)x(3.93+3.93)/2	-0.12		
		(-10.94--10.48)x(3.93+3.93)/2	-1.81		
		(-11.44--10.94)x(3.93+3.93)/2	-1.97		
		(-11.47--11.44)x(3.93+3.93)/2	-0.12		
		(-11.51--11.47)x(3.93+3.93)/2	-0.16		
		(-12.50--11.51)x(3.90+3.93)/2	-3.88		
		(-12.62--12.50)x(3.90+3.90)/2	-0.47		
		(-13.53--12.62)x(3.87+3.90)/2	-3.54		
		(-13.72--13.53)x(3.87+3.87)/2	-0.74		
		(-14.56--13.72)x(3.84+3.87)/2	-3.24		
		(-14.83--14.56)x(3.83+3.84)/2	-1.04		
		(-15.58--14.83)x(3.81+3.83)/2	-2.87		
		(-15.90--15.58)x(3.81+3.81)/2	-1.22		
				11.52	
189 2820.00	BO1	(-16.48--16.56)x(4.36+4.36)/2	0.35		
		(-16.16--16.48)x(4.36+4.36)/2	1.40		
		(-15.45--16.16)x(4.36+4.36)/2	3.10		
		(-15.07--15.45)x(4.36+4.36)/2	1.66		
		(-14.42--15.07)x(4.37+4.36)/2	2.84		
		(-13.99--14.42)x(4.37+4.37)/2	1.88		
		(-13.40--13.99)x(4.37+4.37)/2	2.58		
		(-12.91--13.40)x(4.37+4.37)/2	2.14		
		(-12.37--12.91)x(4.37+4.37)/2	2.36		
		(-11.89--12.37)x(4.38+4.37)/2	2.10		
		(-11.34--11.89)x(4.40+4.38)/2	2.41		
		(-10.74--11.34)x(4.43+4.40)/2	2.65		
		(-10.32--10.74)x(4.43+4.43)/2	1.86		
		(-9.65--10.32)x(4.44+4.43)/2	2.97		
		(-9.29--9.65)x(4.45+4.44)/2	1.60		
		(-8.57--9.29)x(4.40+4.45)/2	3.19		
		(-8.26--8.57)x(4.38+4.40)/2	1.36		
		(-7.49--8.26)x(4.35+4.38)/2	3.36		
		(-7.24--7.49)x(4.34+4.35)/2	1.09		
		(-6.40--7.24)x(4.31+4.34)/2	3.63		
		(-6.21--6.40)x(4.30+4.31)/2	0.82		
		(-5.32--6.21)x(4.26+4.30)/2	3.81		
		A RIPORTARE mq	49.16		

		CALCOLO DELLE AREE		Foglio n. 100
BONIFICA				
N. SEZIONE PROG.	FIG.	ELEMENTI DI CALCOLO	AREA ELEMENTARE mq	AREA FIGURA mq	NOTE
		RIPORTO mq	49.16		
		(-5.18--5.32)x(4.25+4.26)/2	0.60		
		(-4.24--5.18)x(4.21+4.25)/2	3.98		
		(-4.16--4.24)x(4.21+4.21)/2	0.34		
		(-3.15--4.16)x(4.18+4.21)/2	4.24		
		(-3.13--3.15)x(4.18+4.18)/2	0.08		
		(-2.75--3.13)x(4.16+4.18)/2	1.58		
		(-2.10--2.75)x(4.14+4.16)/2	2.70		
		(-2.07--2.10)x(4.14+4.14)/2	0.12		
		(-1.08--2.07)x(4.12+4.14)/2	4.09		
		(-0.98--1.08)x(4.12+4.12)/2	0.41		
		(-0.05--0.98)x(4.10+4.12)/2	3.82		
		(0.10--0.05)x(4.10+4.10)/2	0.61		
		(0.98-0.10)x(4.10+4.10)/2	3.61		
		(1.18-0.98)x(4.10+4.10)/2	0.82		
		(2.00-1.18)x(4.11+4.10)/2	3.37		
		(2.27-2.00)x(4.12+4.11)/2	1.11		
		(3.03-2.27)x(4.14+4.12)/2	3.14		
		(3.35-3.03)x(4.15+4.14)/2	1.33		
		(4.06-3.35)x(4.18+4.15)/2	2.96		
		(4.43-4.06)x(4.19+4.18)/2	1.55		
		(5.08-4.43)x(4.21+4.19)/2	2.73		
		(5.52-5.08)x(4.23+4.21)/2	1.86		
		(5.08-5.52)x(3.71+3.73)/2	-1.64		
		(4.43-5.08)x(3.69+3.71)/2	-2.41		
		(4.06-4.43)x(3.68+3.69)/2	-1.36		
		(3.35-4.06)x(3.65+3.68)/2	-2.60		
		(3.03-3.35)x(3.64+3.65)/2	-1.17		
		(2.27-3.03)x(3.62+3.64)/2	-2.76		
		(2.00-2.27)x(3.61+3.62)/2	-0.98		
		(1.18-2.00)x(3.60+3.61)/2	-2.96		
		(0.98-1.18)x(3.60+3.60)/2	-0.72		
		(0.10-0.98)x(3.60+3.60)/2	-3.17		
		(-0.05-0.10)x(3.60+3.60)/2	-0.54		
		(-0.98--0.05)x(3.62+3.60)/2	-3.36		
		(-1.08--0.98)x(3.62+3.62)/2	-0.36		
		(-2.07--1.08)x(3.64+3.62)/2	-3.59		
		(-2.10--2.07)x(3.64+3.64)/2	-0.11		
		(-2.75--2.10)x(3.66+3.64)/2	-2.37		
		(-3.13--2.75)x(3.68+3.66)/2	-1.39		
		(-3.15--3.13)x(3.68+3.68)/2	-0.07		
		(-4.16--3.15)x(3.71+3.68)/2	-3.73		
		(-4.24--4.16)x(3.71+3.71)/2	-0.30		
		(-5.18--4.24)x(3.75+3.71)/2	-3.51		
		(-5.32--5.18)x(3.76+3.75)/2	-0.53		
		(-6.21--5.32)x(3.80+3.76)/2	-3.36		
		(-6.40--6.21)x(3.81+3.80)/2	-0.72		
		(-7.24--6.40)x(3.84+3.81)/2	-3.21		
		(-7.49--7.24)x(3.85+3.84)/2	-0.96		
		(-8.26--7.49)x(3.88+3.85)/2	-2.98		
		(-8.57--8.26)x(3.90+3.88)/2	-1.21		
		(-9.29--8.57)x(3.95+3.90)/2	-2.83		
		(-9.65--9.29)x(3.94+3.95)/2	-1.42		
		(-10.32--9.65)x(3.93+3.94)/2	-2.64		
		(-10.74--10.32)x(3.93+3.93)/2	-1.65		
		(-11.34--10.74)x(3.90+3.93)/2	-2.35		
		(-11.89--11.34)x(3.88+3.90)/2	-2.14		
		(-12.37--11.89)x(3.87+3.88)/2	-1.86		
		(-12.91--12.37)x(3.87+3.87)/2	-2.09		
		(-13.40--12.91)x(3.87+3.87)/2	-1.90		
		(-13.99--13.40)x(3.87+3.87)/2	-2.28		
		(-14.42--13.99)x(3.87+3.87)/2	-1.66		
		(-15.07--14.42)x(3.86+3.87)/2	-2.51		
		(-15.45--15.07)x(3.86+3.86)/2	-1.47		
		(-16.16--15.45)x(3.86+3.86)/2	-2.74		
		(-16.48--16.16)x(3.86+3.86)/2	-1.24		
		(-16.56--16.48)x(3.86+3.86)/2	-0.31		
				11.05	
190 2835.00	BO1	(-17.17--17.25)x(4.40+4.40)/2	0.35		
		(-16.29--17.17)x(4.41+4.40)/2	3.88		
		(-16.15--16.29)x(4.41+4.41)/2	0.62		
		(-15.22--16.15)x(4.41+4.41)/2	4.10		
		(-15.12--15.22)x(4.41+4.41)/2	0.44		
		(-14.15--15.12)x(4.42+4.41)/2	4.28		
		(-14.09--14.15)x(4.42+4.42)/2	0.27		
		(-13.08--14.09)x(4.45+4.42)/2	4.48		
		(-13.07--13.08)x(4.45+4.45)/2	0.04		
		(-13.06--13.07)x(4.45+4.45)/2	0.04		
		(-12.82--13.06)x(4.45+4.45)/2	1.07		
		(-12.07--12.82)x(4.46+4.45)/2	3.34		
		(-12.04--12.07)x(4.46+4.46)/2	0.13		
		(-12.01--12.04)x(4.46+4.46)/2	0.13		
		(-11.01--12.01)x(4.46+4.46)/2	4.46		
		(-10.94--11.01)x(4.46+4.46)/2	0.31		
		(-9.99--10.94)x(4.44+4.46)/2	4.23		
		(-9.86--9.99)x(4.43+4.44)/2	0.58		
		(-8.96--9.86)x(4.42+4.43)/2	3.98		
		(-8.79--8.96)x(4.42+4.42)/2	0.75		
		(-7.94--8.79)x(4.44+4.42)/2	3.77		
		(-7.72--7.94)x(4.45+4.44)/2	0.98		
		(-6.91--7.72)x(4.48+4.45)/2	3.62		
		(-6.65--6.91)x(4.48+4.48)/2	1.16		
		(-5.88--6.65)x(4.51+4.48)/2	3.46		
		(-5.58--5.88)x(4.52+4.51)/2	1.35		
		(-4.86--5.58)x(4.53+4.52)/2	3.26		
		(-4.51--4.86)x(4.53+4.53)/2	1.59		
		(-3.83--4.51)x(4.53+4.53)/2	3.08		
		(-3.44--3.83)x(4.52+4.53)/2	1.76		
		(-2.81--3.44)x(4.50+4.52)/2	2.84		
		(-2.36--2.81)x(4.49+4.50)/2	2.02		
		(-1.78--2.36)x(4.46+4.49)/2	2.60		
		(-1.29--1.78)x(4.44+4.46)/2	2.18		
		(-0.75--1.29)x(4.43+4.44)/2	2.39		
		(-0.22--0.75)x(4.40+4.43)/2	2.34		
		(0.27--0.22)x(4.39+4.40)/2	2.15		
		A RIPORTARE mq	78.03		

		CALCOLO DELLE AREE		Foglio n. 101
BONIFICA				
N. SEZIONE PROG.	FIG.	ELEMENTI DI CALCOLO	AREA ELEMENTARE mq	AREA FIGURA mq	NOTE
		RIPORTO mq	78.03		
		(0.85-0.27)x(4.37+4.39)/2	2.54		
		(1.30-0.85)x(4.37+4.37)/2	1.97		
		(1.92-1.30)x(4.35+4.37)/2	2.70		
		(2.33-1.92)x(4.34+4.35)/2	1.78		
		(2.99-2.33)x(4.32+4.34)/2	2.86		
		(3.35-2.99)x(4.32+4.32)/2	1.56		
		(4.06-3.35)x(4.30+4.32)/2	3.06		
		(4.38-4.06)x(4.30+4.30)/2	1.38		
		(5.14-4.38)x(4.28+4.30)/2	3.26		
		(5.40-5.14)x(4.28+4.28)/2	1.11		
		(5.65-5.40)x(4.27+4.28)/2	1.07		
		(6.43-5.65)x(4.27+4.27)/2	3.33		
		(7.28-6.43)x(4.26+4.27)/2	3.63		
		(7.46-7.28)x(4.26+4.26)/2	0.77		
		(8.35-7.46)x(4.25+4.26)/2	3.79		
		(8.48-8.35)x(4.25+4.25)/2	0.55		
		(9.42-8.48)x(4.20+4.25)/2	3.97		
		(9.51-9.42)x(4.19+4.20)/2	0.38		
		(8.48-9.51)x(3.75+3.69)/2	-3.83		
		(8.35-8.48)x(3.75+3.75)/2	-0.49		
		(7.46-8.35)x(3.76+3.75)/2	-3.34		
		(7.28-7.46)x(3.76+3.76)/2	-0.68		
		(6.43-7.28)x(3.77+3.76)/2	-3.20		
		(5.65-6.43)x(3.77+3.77)/2	-2.94		
		(5.40-5.65)x(3.78+3.77)/2	-0.94		
		(5.14-5.40)x(3.78+3.78)/2	-0.98		
		(4.38-5.14)x(3.80+3.78)/2	-2.88		
		(4.06-4.38)x(3.80+3.80)/2	-1.22		
		(3.35-4.06)x(3.82+3.80)/2	-2.71		
		(2.99-3.35)x(3.82+3.82)/2	-1.38		
		(2.33-2.99)x(3.84+3.82)/2	-2.53		
		(1.92-2.33)x(3.85+3.84)/2	-1.58		
		(1.30-1.92)x(3.87+3.85)/2	-2.39		
		(0.85-1.30)x(3.87+3.87)/2	-1.74		
		(0.27-0.85)x(3.89+3.87)/2	-2.25		
		(-0.22-0.27)x(3.90+3.89)/2	-1.91		
		(-0.75--0.22)x(3.93+3.90)/2	-2.07		
		(-1.29--0.75)x(3.94+3.93)/2	-2.12		
		(-1.78--1.29)x(3.96+3.94)/2	-1.94		
		(-2.36--1.78)x(3.99+3.96)/2	-2.31		
		(-2.81--2.36)x(4.00+3.99)/2	-1.80		
		(-3.44--2.81)x(4.02+4.00)/2	-2.53		
		(-3.83--3.44)x(4.03+4.02)/2	-1.57		
		(-4.51--3.83)x(4.03+4.03)/2	-2.74		
		(-4.86--4.51)x(4.03+4.03)/2	-1.41		
		(-5.58--4.86)x(4.02+4.03)/2	-2.90		
		(-5.88--5.58)x(4.01+4.02)/2	-1.20		
		(-6.65--5.88)x(3.98+4.01)/2	-3.08		
		(-6.91--6.65)x(3.98+3.98)/2	-1.03		
		(-7.72--6.91)x(3.95+3.98)/2	-3.21		
		(-7.94--7.72)x(3.94+3.95)/2	-0.87		
		(-8.79--7.94)x(3.92+3.94)/2	-3.34		
		(-8.96--8.79)x(3.92+3.92)/2	-0.67		
		(-9.86--8.96)x(3.93+3.92)/2	-3.53		
		(-9.99--9.86)x(3.94+3.93)/2	-0.51		
		(-10.94--9.99)x(3.96+3.94)/2	-3.75		
		(-11.01--10.94)x(3.96+3.96)/2	-0.28		
		(-12.01--11.01)x(3.96+3.96)/2	-3.96		
		(-12.04--12.01)x(3.96+3.96)/2	-0.12		
		(-12.07--12.04)x(3.96+3.96)/2	-0.12		
		(-12.82--12.07)x(3.95+3.96)/2	-2.97		
		(-13.06--12.82)x(3.95+3.95)/2	-0.95		
		(-13.07--13.06)x(3.95+3.95)/2	-0.04		
		(-13.08--13.07)x(3.95+3.95)/2	-0.04		
		(-14.09--13.08)x(3.92+3.95)/2	-3.97		
		(-14.15--14.09)x(3.92+3.92)/2	-0.24		
		(-15.12--14.15)x(3.91+3.92)/2	-3.80		
		(-15.22--15.12)x(3.91+3.91)/2	-0.39		
		(-16.15--15.22)x(3.91+3.91)/2	-3.64		
		(-16.29--16.15)x(3.91+3.91)/2	-0.55		
		(-17.17--16.29)x(3.90+3.91)/2	-3.44		
		(-17.25--17.17)x(3.90+3.90)/2	-0.31		
				13.35	
191 2850.00	BO1	(-17.77--18.04)x(4.35+4.36)/2	1.18		
		(-17.50--17.77)x(4.35+4.35)/2	1.17		
		(-16.74--17.50)x(4.36+4.35)/2	3.31		
		(-16.44--16.74)x(4.37+4.36)/2	1.31		
		(-15.71--16.44)x(4.38+4.37)/2	3.19		
		(-15.37--15.71)x(4.40+4.38)/2	1.49		
		(-14.69--15.37)x(4.42+4.40)/2	3.00		
		(-14.30--14.69)x(4.42+4.42)/2	1.72		
		(-13.66--14.30)x(4.44+4.42)/2	2.84		
		(-13.07--13.66)x(4.45+4.44)/2	2.62		
		(-12.64--13.07)x(4.46+4.45)/2	1.92		
		(-12.17--12.64)x(4.46+4.46)/2	2.10		
		(-11.61--12.17)x(4.47+4.46)/2	2.50		
		(-11.10--11.61)x(4.47+4.47)/2	2.28		
		(-10.58--11.10)x(4.47+4.47)/2	2.32		
		(-10.04--10.58)x(4.47+4.47)/2	2.41		
		(-9.56--10.04)x(4.47+4.47)/2	2.15		
		(-8.97--9.56)x(4.45+4.47)/2	2.63		
		(-8.53--8.97)x(4.45+4.45)/2	1.96		
		(-7.90--8.53)x(4.43+4.45)/2	2.80		
		(-7.51--7.90)x(4.43+4.43)/2	1.73		
		(-6.83--7.51)x(4.41+4.43)/2	3.01		
		(-6.48--6.83)x(4.41+4.41)/2	1.54		
		(-5.77--6.48)x(4.40+4.41)/2	3.13		
		(-5.45--5.77)x(4.40+4.40)/2	1.41		
		(-4.70--5.45)x(4.39+4.40)/2	3.30		
		(-4.43--4.70)x(4.39+4.39)/2	1.19		
		(-3.63--4.43)x(4.39+4.39)/2	3.51		
		(-3.40--3.63)x(4.38+4.39)/2	1.01		
		(-2.57--3.40)x(4.39+4.38)/2	3.64		
		(-2.37--2.57)x(4.39+4.39)/2	0.88		
		A RIPORTARE mq	69.25		

		CALCOLO DELLE AREE		Foglio n. 102
BONIFICA				
N. SEZIONE PROG.	FIG.	ELEMENTI DI CALCOLO	AREA ELEMENTARE mq	AREA FIGURA mq	NOTE
		RIPORTO mq	69.25		
		(-1.50--2.37)x(4.39+4.39)/2	3.82		
		(-1.35--1.50)x(4.39+4.39)/2	0.66		
		(-0.43--1.35)x(4.40+4.39)/2	4.04		
		(-0.32--0.43)x(4.40+4.40)/2	0.48		
		(0.63--0.32)x(4.40+4.40)/2	4.18		
		(0.70-0.63)x(4.40+4.40)/2	0.31		
		(1.70-0.70)x(4.39+4.40)/2	4.39		
		(1.73-1.70)x(4.39+4.39)/2	0.13		
		(2.46-1.73)x(4.38+4.39)/2	3.20		
		(2.76-2.46)x(4.38+4.38)/2	1.31		
		(2.77-2.76)x(4.38+4.38)/2	0.04		
		(3.78-2.77)x(4.35+4.38)/2	4.41		
		(3.83-3.78)x(4.35+4.35)/2	0.22		
		(4.81-3.83)x(4.37+4.35)/2	4.27		
		(5.71-4.81)x(4.35+4.37)/2	3.92		
		(5.83-5.71)x(4.35+4.35)/2	0.52		
		(5.97-5.83)x(4.35+4.35)/2	0.61		
		(6.86-5.97)x(4.34+4.35)/2	3.87		
		(7.03-6.86)x(4.34+4.34)/2	0.74		
		(7.89-7.03)x(4.32+4.34)/2	3.72		
		(8.10-7.89)x(4.31+4.32)/2	0.91		
		(8.91-8.10)x(4.33+4.31)/2	3.50		
		(8.10-8.91)x(3.81+3.83)/2	-3.09		
		(7.89-8.10)x(3.82+3.81)/2	-0.80		
		(7.03-7.89)x(3.84+3.82)/2	-3.29		
		(6.86-7.03)x(3.84+3.84)/2	-0.65		
		(5.97-6.86)x(3.85+3.84)/2	-3.42		
		(5.83-5.97)x(3.85+3.85)/2	-0.54		
		(5.71-5.83)x(3.85+3.85)/2	-0.46		
		(4.81-5.71)x(3.87+3.85)/2	-3.47		
		(3.83-4.81)x(3.85+3.87)/2	-3.78		
		(3.78-3.83)x(3.85+3.85)/2	-0.19		
		(2.77-3.78)x(3.88+3.85)/2	-3.90		
		(2.76-2.77)x(3.88+3.88)/2	-0.04		
		(2.46-2.76)x(3.88+3.88)/2	-1.16		
		(1.73-2.46)x(3.89+3.88)/2	-2.84		
		(1.70-1.73)x(3.89+3.89)/2	-0.12		
		(0.70-1.70)x(3.90+3.89)/2	-3.90		
		(0.63-0.70)x(3.90+3.90)/2	-0.27		
		(-0.32-0.63)x(3.90+3.90)/2	-3.70		
		(-0.43--0.32)x(3.90+3.90)/2	-0.43		
		(-1.35--0.43)x(3.89+3.90)/2	-3.58		
		(-1.50--1.35)x(3.89+3.89)/2	-0.58		
		(-2.37--1.50)x(3.89+3.89)/2	-3.38		
		(-2.57--2.37)x(3.89+3.89)/2	-0.78		
		(-3.40--2.57)x(3.88+3.89)/2	-3.22		
		(-3.63--3.40)x(3.89+3.88)/2	-0.89		
		(-4.43--3.63)x(3.89+3.89)/2	-3.11		
		(-4.70--4.43)x(3.89+3.89)/2	-1.05		
		(-5.45--4.70)x(3.90+3.89)/2	-2.92		
		(-5.77--5.45)x(3.90+3.90)/2	-1.25		
		(-6.48--5.77)x(3.91+3.90)/2	-2.77		
		(-6.83--6.48)x(3.91+3.91)/2	-1.37		
		(-7.51--6.83)x(3.93+3.91)/2	-2.67		
		(-7.90--7.51)x(3.93+3.93)/2	-1.53		
		(-8.53--7.90)x(3.95+3.93)/2	-2.48		
		(-8.97--8.53)x(3.95+3.95)/2	-1.74		
		(-9.56--8.97)x(3.97+3.95)/2	-2.34		
		(-10.04--9.56)x(3.97+3.97)/2	-1.91		
		(-10.58--10.04)x(3.97+3.97)/2	-2.14		
		(-11.10--10.58)x(3.97+3.97)/2	-2.06		
		(-11.61--11.10)x(3.97+3.97)/2	-2.02		
		(-12.17--11.61)x(3.96+3.97)/2	-2.22		
		(-12.64--12.17)x(3.96+3.96)/2	-1.86		
		(-13.07--12.64)x(3.95+3.96)/2	-1.70		
		(-13.66--13.07)x(3.94+3.95)/2	-2.33		
		(-14.30--13.66)x(3.92+3.94)/2	-2.52		
		(-14.69--14.30)x(3.92+3.92)/2	-1.53		
		(-15.37--14.69)x(3.90+3.92)/2	-2.66		
		(-15.71--15.37)x(3.88+3.90)/2	-1.32		
		(-16.44--15.71)x(3.87+3.88)/2	-2.83		
		(-16.74--16.44)x(3.86+3.87)/2	-1.16		
		(-17.50--16.74)x(3.85+3.86)/2	-2.93		
		(-17.77--17.50)x(3.85+3.85)/2	-1.04		
		(-18.04--17.77)x(3.86+3.85)/2	-1.04		
				13.52	
192 2865.00	B01	(-18.34--18.79)x(4.35+4.34)/2	1.96		
		(-17.72--18.34)x(4.37+4.35)/2	2.70		
		(-17.32--17.72)x(4.37+4.37)/2	1.75		
		(-16.65--17.32)x(4.37+4.37)/2	2.93		
		(-16.29--16.65)x(4.37+4.37)/2	1.57		
		(-15.59--16.29)x(4.37+4.37)/2	3.06		
		(-15.27--15.59)x(4.37+4.37)/2	1.40		
		(-14.52--15.27)x(4.36+4.37)/2	3.27		
		(-14.24--14.52)x(4.36+4.36)/2	1.22		
		(-13.98--14.24)x(4.36+4.36)/2	1.13		
		(-13.21--13.98)x(4.36+4.36)/2	3.36		
		(-12.38--13.21)x(4.36+4.36)/2	3.62		
		(-12.19--12.38)x(4.36+4.36)/2	0.83		
		(-11.31--12.19)x(4.37+4.36)/2	3.84		
		(-12.19--11.31)x(3.86+3.87)/2	-3.40		
		(-12.38--12.19)x(3.86+3.86)/2	-0.73		
		(-13.21--12.38)x(3.86+3.86)/2	-3.20		
		(-13.98--13.21)x(3.86+3.86)/2	-2.97		
		(-14.24--13.98)x(3.86+3.86)/2	-1.00		
		(-14.52--14.24)x(3.86+3.86)/2	-1.08		
		(-15.27--14.52)x(3.87+3.86)/2	-2.90		
		(-15.59--15.27)x(3.87+3.87)/2	-1.24		
		(-16.29--15.59)x(3.87+3.87)/2	-2.71		
		(-16.65--16.29)x(3.87+3.87)/2	-1.39		
		(-17.32--16.65)x(3.87+3.87)/2	-2.59		
		(-17.72--17.32)x(3.87+3.87)/2	-1.55		
		(-18.34--17.72)x(3.85+3.87)/2	-2.39		
		(-18.79--18.34)x(3.84+3.85)/2	-1.73		
		A RIPORTARE mq	3.76		

		CALCOLO DELLE AREE		Foglio n. 103
BONIFICA				
N. SEZIONE PROG.	FIG.	ELEMENTI DI CALCOLO	AREA ELEMENTARE mq	AREA FIGURA mq	NOTE
		RIPORTO mq	3.76		
		(-18.80--18.79)x(3.84+3.84)/2	-0.04		
		(-18.79--18.80)x(4.34+3.84)/2	0.04		
				3.76	
193	BO1	(-19.23--19.76)x(4.27+4.27)/2	2.26		
2880.00		(-19.00--19.23)x(4.27+4.27)/2	0.98		
		(-18.16--19.00)x(4.28+4.27)/2	3.59		
		(-17.97--18.16)x(4.29+4.28)/2	0.81		
		(-17.08--17.97)x(4.28+4.29)/2	3.81		
		(-16.94--17.08)x(4.28+4.28)/2	0.60		
		(-16.00--16.94)x(4.28+4.28)/2	4.02		
		(-15.92--16.00)x(4.28+4.28)/2	0.34		
		(-14.92--15.92)x(4.30+4.28)/2	4.29		
		(-14.89--14.92)x(4.30+4.30)/2	0.13		
		(-14.86--14.89)x(4.30+4.30)/2	0.13		
		(-14.30--14.86)x(4.28+4.30)/2	2.40		
		(-13.88--14.30)x(4.27+4.28)/2	1.80		
		(-13.86--13.88)x(4.27+4.27)/2	0.09		
		(-13.84--13.86)x(4.27+4.27)/2	0.09		
		(-12.84--13.84)x(4.27+4.27)/2	4.27		
		(-12.76--12.84)x(4.27+4.27)/2	0.34		
		(-11.81--12.76)x(4.28+4.27)/2	4.06		
		(-12.76--11.81)x(3.77+3.78)/2	-3.59		
		(-12.84--12.76)x(3.77+3.77)/2	-0.30		
		(-13.84--12.84)x(3.77+3.77)/2	-3.77		
		(-13.86--13.84)x(3.77+3.77)/2	-0.08		
		(-13.88--13.86)x(3.77+3.77)/2	-0.08		
		(-14.30--13.88)x(3.78+3.77)/2	-1.59		
		(-14.86--14.30)x(3.80+3.78)/2	-2.12		
		(-14.89--14.86)x(3.80+3.80)/2	-0.11		
		(-14.92--14.89)x(3.80+3.80)/2	-0.11		
		(-15.92--14.92)x(3.78+3.80)/2	-3.79		
		(-16.00--15.92)x(3.78+3.78)/2	-0.30		
		(-16.94--16.00)x(3.78+3.78)/2	-3.55		
		(-17.08--16.94)x(3.78+3.78)/2	-0.53		
		(-17.97--17.08)x(3.79+3.78)/2	-3.37		
		(-18.16--17.97)x(3.78+3.79)/2	-0.72		
		(-19.00--18.16)x(3.77+3.78)/2	-3.17		
		(-19.23--19.00)x(3.77+3.77)/2	-0.87		
		(-19.76--19.23)x(3.77+3.77)/2	-2.00		
				3.96	
194	BO1	(-20.12--20.52)x(4.27+4.27)/2	1.71		
2895.00		(-19.87--20.12)x(4.28+4.27)/2	1.07		
		(-19.01--19.87)x(4.27+4.28)/2	3.68		
		(-18.84--19.01)x(4.27+4.27)/2	0.73		
		(-17.91--18.84)x(4.27+4.27)/2	3.97		
		(-17.81--17.91)x(4.27+4.27)/2	0.43		
		(-16.81--17.81)x(4.28+4.27)/2	4.28		
		(-16.78--16.81)x(4.28+4.28)/2	0.13		
		(-16.40--16.78)x(4.29+4.28)/2	1.63		
		(-15.76--16.40)x(4.31+4.29)/2	2.75		
		(-14.83--15.76)x(4.33+4.31)/2	4.02		
		(-14.73--14.83)x(4.33+4.33)/2	0.43		
		(-14.61--14.73)x(4.34+4.33)/2	0.52		
		(-13.70--14.61)x(4.35+4.34)/2	3.95		
		(-13.51--13.70)x(4.35+4.35)/2	0.83		
		(-12.67--13.51)x(4.34+4.35)/2	3.65		
		(-12.41--12.67)x(4.34+4.34)/2	1.13		
		(-11.65--12.41)x(4.34+4.34)/2	3.30		
		(-11.31--11.65)x(4.34+4.34)/2	1.48		
		(-10.62--11.31)x(4.36+4.34)/2	3.00		
		(-10.21--10.62)x(4.36+4.36)/2	1.79		
		(-9.59--10.21)x(4.36+4.36)/2	2.70		
		(-9.10--9.59)x(4.36+4.36)/2	2.14		
		(-8.56--9.10)x(4.35+4.36)/2	2.35		
		(-9.10--8.56)x(3.66+3.65)/2	-1.97		
		(-9.59--9.10)x(3.66+3.66)/2	-1.79		
		(-10.21--9.59)x(3.66+3.66)/2	-2.27		
		(-10.62--10.21)x(3.66+3.66)/2	-1.50		
		(-11.31--10.62)x(3.64+3.66)/2	-2.52		
		(-11.65--11.31)x(3.64+3.64)/2	-1.24		
		(-12.41--11.65)x(3.64+3.64)/2	-2.77		
		(-12.67--12.41)x(3.64+3.64)/2	-0.95		
		(-13.51--12.67)x(3.65+3.64)/2	-3.06		
		(-13.70--13.51)x(3.65+3.65)/2	-0.69		
		(-14.61--13.70)x(3.64+3.65)/2	-3.32		
		(-14.73--14.61)x(3.63+3.64)/2	-0.44		
		(-14.83--14.73)x(3.63+3.63)/2	-0.36		
		(-15.76--14.83)x(3.61+3.63)/2	-3.37		
		(-16.40--15.76)x(3.59+3.61)/2	-2.30		
		(-16.78--16.40)x(3.58+3.59)/2	-1.36		
		(-16.81--16.78)x(3.58+3.58)/2	-0.11		
		(-17.81--16.81)x(3.57+3.58)/2	-3.58		
		(-17.91--17.81)x(3.57+3.57)/2	-0.36		
		(-18.84--17.91)x(3.57+3.57)/2	-3.32		
		(-19.01--18.84)x(3.57+3.57)/2	-0.61		
		(-19.87--19.01)x(3.58+3.57)/2	-3.07		
		(-20.12--19.87)x(3.57+3.58)/2	-0.89		
		(-20.52--20.12)x(3.57+3.57)/2	-1.43		
				8.39	
195	BO1	(-20.50--20.97)x(4.42+4.43)/2	2.08		
2910.00		(-20.08--20.50)x(4.43+4.42)/2	1.86		
		(-19.37--20.08)x(4.42+4.43)/2	3.14		
		(-19.05--19.37)x(4.42+4.42)/2	1.41		
		(-18.23--19.05)x(4.43+4.42)/2	3.63		
		(-18.02--18.23)x(4.43+4.43)/2	0.93		
		(-17.09--18.02)x(4.45+4.43)/2	4.13		
		(-16.99--17.09)x(4.45+4.45)/2	0.45		
		(-16.92--16.99)x(4.45+4.45)/2	0.31		
		(-16.09--16.92)x(4.46+4.45)/2	3.70		
		(-15.98--16.09)x(4.47+4.46)/2	0.49		
		(-15.96--15.98)x(4.47+4.47)/2	0.09		
		(-15.95--15.96)x(4.47+4.47)/2	0.04		
		(-14.93--15.95)x(4.50+4.47)/2	4.57		
		(-14.81--14.93)x(4.50+4.50)/2	0.54		
		A RIPORTARE mq	27.37		

	CALCOLO DELLE AREE		Foglio n. 104

BONIFICA

N. SEZIONE PROG.	FIG.	ELEMENTI DI CALCOLO	AREA ELEMENTARE mq	AREA FIGURA mq	NOTE
		RIPORTO mq	27.37		
		(-13.91--14.81)x(4.54+4.50)/2	4.07		
		(-13.68--13.91)x(4.54+4.54)/2	1.04		
		(-12.88--13.68)x(4.55+4.54)/2	3.64		
		(-12.54--12.88)x(4.56+4.55)/2	1.55		
		(-11.85--12.54)x(4.57+4.56)/2	3.15		
		(-11.40--11.85)x(4.59+4.57)/2	2.06		
		(-10.82--11.40)x(4.60+4.59)/2	2.67		
		(-10.26--10.82)x(4.58+4.60)/2	2.57		
		(-9.79--10.26)x(4.56+4.58)/2	2.15		
		(-9.12--9.79)x(4.52+4.56)/2	3.04		
		(-8.76--9.12)x(4.50+4.52)/2	1.62		
		(-7.99--8.76)x(4.52+4.50)/2	3.47		
		(-7.73--7.99)x(4.54+4.52)/2	1.18		
		(-6.85--7.73)x(4.60+4.54)/2	4.02		
		(-6.70--6.85)x(4.64+4.60)/2	0.69		
		(-5.71--6.70)x(4.68+4.64)/2	4.61		
		(-5.67--5.71)x(4.69+4.68)/2	0.19		
		(-5.24--5.67)x(4.63+4.69)/2	2.00		
		(-4.64--5.24)x(4.57+4.63)/2	2.76		
		(-4.57--4.64)x(4.57+4.57)/2	0.32		
		(-3.61--4.57)x(4.42+4.57)/2	4.32		
		(-3.44--3.61)x(4.42+4.42)/2	0.75		
		(-2.58--3.44)x(4.37+4.42)/2	3.78		
		(-2.30--2.58)x(4.37+4.37)/2	1.22		
		(-1.55--2.30)x(4.35+4.37)/2	3.27		
		(-1.16--1.55)x(4.35+4.35)/2	1.70		
		(-0.52--1.16)x(4.33+4.35)/2	2.78		
		(-0.02--0.52)x(4.33+4.33)/2	2.17		
		(0.51--0.02)x(4.32+4.33)/2	2.29		
		(1.12-0.51)x(4.31+4.32)/2	2.63		
		(1.54-1.12)x(4.31+4.31)/2	1.81		
		(1.90-1.54)x(4.31+4.31)/2	1.55		
		(2.57-1.90)x(4.31+4.31)/2	2.89		
		(3.39-2.57)x(4.31+4.31)/2	3.53		
		(3.60-3.39)x(4.30+4.31)/2	0.90		
		(4.53-3.60)x(4.30+4.30)/2	4.00		
		(4.63-4.53)x(4.30+4.30)/2	0.43		
		(5.61-4.63)x(4.30+4.30)/2	4.21		
		(5.66-5.61)x(4.30+4.30)/2	0.21		
		(5.67-5.66)x(4.30+4.30)/2	0.04		
		(6.69-5.67)x(4.29+4.30)/2	4.38		
		(6.81-6.69)x(4.29+4.29)/2	0.51		
		(7.72-6.81)x(4.28+4.29)/2	3.90		
		(7.94-7.72)x(4.28+4.28)/2	0.94		
		(8.75-7.94)x(4.27+4.28)/2	3.46		
		(9.08-8.75)x(4.26+4.27)/2	1.41		
		(9.78-9.08)x(4.27+4.26)/2	2.99		
		(10.22-9.78)x(4.26+4.27)/2	1.88		
		(10.81-10.22)x(4.24+4.26)/2	2.51		
		(11.36-10.81)x(4.21+4.24)/2	2.32		
		(11.84-11.36)x(4.21+4.21)/2	2.02		
		(12.50-11.84)x(4.13+4.21)/2	2.75		
		(12.87-12.50)x(4.05+4.13)/2	1.51		
		(12.50-12.87)x(3.43+3.35)/2	-1.25		
		(11.84-12.50)x(3.51+3.43)/2	-2.29		
		(11.36-11.84)x(3.51+3.51)/2	-1.68		
		(10.81-11.36)x(3.54+3.51)/2	-1.94		
		(10.22-10.81)x(3.56+3.54)/2	-2.09		
		(9.78-10.22)x(3.57+3.56)/2	-1.57		
		(9.08-9.78)x(3.56+3.57)/2	-2.50		
		(8.75-9.08)x(3.57+3.56)/2	-1.18		
		(7.94-8.75)x(3.58+3.57)/2	-2.90		
		(7.72-7.94)x(3.58+3.58)/2	-0.79		
		(6.81-7.72)x(3.59+3.58)/2	-3.26		
		(6.69-6.81)x(3.59+3.59)/2	-0.43		
		(5.67-6.69)x(3.60+3.59)/2	-3.67		
		(5.66-5.67)x(3.60+3.60)/2	-0.04		
		(5.61-5.66)x(3.60+3.60)/2	-0.18		
		(4.63-5.61)x(3.60+3.60)/2	-3.53		
		(4.53-4.63)x(3.60+3.60)/2	-0.36		
		(3.60-4.53)x(3.60+3.60)/2	-3.35		
		(3.39-3.60)x(3.61+3.60)/2	-0.76		
		(2.57-3.39)x(3.61+3.61)/2	-2.96		
		(1.90-2.57)x(3.61+3.61)/2	-2.42		
		(1.54-1.90)x(3.61+3.61)/2	-1.30		
		(1.12-1.54)x(3.61+3.61)/2	-1.52		
		(0.51-1.12)x(3.62+3.61)/2	-2.21		
		(-0.02-0.51)x(3.63+3.62)/2	-1.92		
		(-0.52--0.02)x(3.63+3.63)/2	-1.81		
		(-1.16--0.52)x(3.65+3.63)/2	-2.33		
		(-1.55--1.16)x(3.65+3.65)/2	-1.42		
		(-2.30--1.55)x(3.67+3.65)/2	-2.74		
		(-2.58--2.30)x(3.67+3.67)/2	-1.03		
		(-3.44--2.58)x(3.72+3.67)/2	-3.18		
		(-3.61--3.44)x(3.72+3.72)/2	-0.63		
		(-4.57--3.61)x(3.87+3.72)/2	-3.64		
		(-4.64--4.57)x(3.87+3.87)/2	-0.27		
		(-5.24--4.64)x(3.93+3.87)/2	-2.34		
		(-5.67--5.24)x(3.99+3.93)/2	-1.70		
		(-5.71--5.67)x(3.98+3.99)/2	-0.16		
		(-6.70--5.71)x(3.94+3.98)/2	-3.92		
		(-6.85--6.70)x(3.90+3.94)/2	-0.59		
		(-7.73--6.85)x(3.84+3.90)/2	-3.41		
		(-7.99--7.73)x(3.82+3.84)/2	-1.00		
		(-8.76--7.99)x(3.80+3.82)/2	-2.93		
		(-9.12--8.76)x(3.82+3.80)/2	-1.37		
		(-9.79--9.12)x(3.86+3.82)/2	-2.57		
		(-10.26--9.79)x(3.88+3.86)/2	-1.82		
		(-10.82--10.26)x(3.90+3.88)/2	-2.18		
		(-11.40--10.82)x(3.89+3.90)/2	-2.26		
		(-11.85--11.40)x(3.87+3.89)/2	-1.75		
		(-12.54--11.85)x(3.86+3.87)/2	-2.67		
		(-12.88--12.54)x(3.85+3.86)/2	-1.31		
		(-13.68--12.88)x(3.84+3.85)/2	-3.08		
		A RIPORTARE mq	51.02		

		CALCOLO DELLE AREE		Foglio n. 105
BONIFICA				
N. SEZIONE PROG.	FIG.	ELEMENTI DI CALCOLO	AREA ELEMENTARE mq	AREA FIGURA mq	NOTE
		RIPORTO mq	51.02		
		(-13.91--13.68)x(3.84+3.84)/2	-0.88		
		(-14.81--13.91)x(3.80+3.84)/2	-3.44		
		(-14.93--14.81)x(3.80+3.80)/2	-0.46		
		(-15.95--14.93)x(3.77+3.80)/2	-3.86		
		(-15.96--15.95)x(3.77+3.77)/2	-0.04		
		(-15.98--15.96)x(3.77+3.77)/2	-0.08		
		(-16.09--15.98)x(3.76+3.77)/2	-0.41		
		(-16.92--16.09)x(3.75+3.76)/2	-3.12		
		(-16.99--16.92)x(3.75+3.75)/2	-0.26		
		(-17.09--16.99)x(3.75+3.75)/2	-0.38		
		(-18.02--17.09)x(3.73+3.75)/2	-3.48		
		(-18.23--18.02)x(3.73+3.73)/2	-0.78		
		(-19.05--18.23)x(3.72+3.73)/2	-3.05		
		(-19.37--19.05)x(3.72+3.72)/2	-1.19		
		(-20.08--19.37)x(3.73+3.72)/2	-2.64		
		(-20.50--20.08)x(3.72+3.73)/2	-1.56		
		(-20.97--20.50)x(3.73+3.72)/2	-1.75		
				23.64	
196	BO1	(-20.84--21.11)x(4.74+4.74)/2	1.28		
2925.00		(-20.52--20.84)x(4.75+4.74)/2	1.52		
		(-19.80--20.52)x(4.75+4.75)/2	3.42		
		(-19.32--19.80)x(4.75+4.75)/2	2.28		
		(-18.77--19.32)x(4.75+4.75)/2	2.61		
		(-18.34--18.77)x(4.75+4.75)/2	2.04		
		(-17.73--18.34)x(4.74+4.75)/2	2.89		
		(-16.94--17.73)x(4.69+4.74)/2	3.72		
		(-16.70--16.94)x(4.68+4.69)/2	1.12		
		(-15.75--16.70)x(4.64+4.68)/2	4.43		
		(-15.67--15.75)x(4.63+4.64)/2	0.37		
		(-15.14--15.67)x(4.62+4.63)/2	2.45		
		(-14.63--15.14)x(4.60+4.62)/2	2.35		
		(-14.55--14.63)x(4.60+4.60)/2	0.37		
		(-13.60--14.55)x(4.58+4.60)/2	4.36		
		(-13.36--13.60)x(4.57+4.58)/2	1.10		
		(-12.56--13.36)x(4.55+4.57)/2	3.65		
		(-12.17--12.56)x(4.54+4.55)/2	1.77		
		(-11.53--12.17)x(4.52+4.54)/2	2.90		
		(-10.97--11.53)x(4.51+4.52)/2	2.53		
		(-10.49--10.97)x(4.50+4.51)/2	2.16		
		(-9.78--10.49)x(4.49+4.50)/2	3.19		
		(-9.46--9.78)x(4.49+4.49)/2	1.44		
		(-8.59--9.46)x(4.49+4.49)/2	3.91		
		(-8.43--8.59)x(4.49+4.49)/2	0.72		
		(-7.40--8.43)x(4.51+4.49)/2	4.63		
		(-7.39--7.40)x(4.51+4.51)/2	0.05		
		(-7.36--7.39)x(4.51+4.51)/2	0.14		
		(-6.36--7.36)x(4.49+4.51)/2	4.50		
		(-6.20--6.36)x(4.49+4.49)/2	0.72		
		(-5.32--6.20)x(4.47+4.49)/2	3.94		
		(-5.01--5.32)x(4.46+4.47)/2	1.38		
		(-4.29--5.01)x(4.43+4.46)/2	3.20		
		(-3.82--4.29)x(4.41+4.43)/2	2.08		
		(-3.25--3.82)x(4.37+4.41)/2	2.50		
		(-2.62--3.25)x(4.33+4.37)/2	2.74		
		(-2.22--2.62)x(4.30+4.33)/2	1.73		
		(-1.43--2.22)x(4.27+4.30)/2	3.39		
		(-1.18--1.43)x(4.26+4.27)/2	1.07		
		(-0.24--1.18)x(4.25+4.26)/2	4.00		
		(-0.15--0.24)x(4.24+4.25)/2	0.38		
		(-0.08--0.15)x(4.24+4.24)/2	0.30		
		(0.42--0.08)x(4.23+4.24)/2	2.12		
		(0.83-0.42)x(4.23+4.23)/2	1.73		
		(0.88-0.83)x(4.23+4.23)/2	0.21		
		(0.95-0.88)x(4.23+4.23)/2	0.30		
		(1.92-0.95)x(4.22+4.23)/2	4.10		
		(2.15-1.92)x(4.21+4.22)/2	0.97		
		(2.95-2.15)x(4.20+4.21)/2	3.36		
		(3.34-2.95)x(4.20+4.20)/2	1.64		
		(3.99-3.34)x(4.19+4.20)/2	2.73		
		(4.53-3.99)x(4.19+4.19)/2	2.26		
		(5.02-4.53)x(4.19+4.19)/2	2.05		
		(5.73-5.02)x(4.19+4.19)/2	2.97		
		(6.06-5.73)x(4.18+4.19)/2	1.38		
		(6.92-6.06)x(4.16+4.18)/2	3.59		
		(7.09-6.92)x(4.16+4.16)/2	0.71		
		(8.11-7.09)x(4.12+4.16)/2	4.22		
		(8.12-8.11)x(4.12+4.12)/2	0.04		
		(8.20-8.12)x(4.12+4.12)/2	0.33		
		(9.16-8.20)x(4.08+4.12)/2	3.94		
		(9.31-9.16)x(4.08+4.08)/2	0.61		
		(10.19-9.31)x(4.05+4.08)/2	3.58		
		(9.31-10.19)x(3.38+3.35)/2	-2.96		
		(9.16-9.31)x(3.38+3.38)/2	-0.51		
		(8.20-9.16)x(3.42+3.38)/2	-3.26		
		(8.12-8.20)x(3.42+3.42)/2	-0.27		
		(8.11-8.12)x(3.42+3.42)/2	-0.03		
		(7.09-8.11)x(3.46+3.42)/2	-3.51		
		(6.92-7.09)x(3.46+3.46)/2	-0.59		
		(6.06-6.92)x(3.48+3.46)/2	-2.98		
		(5.73-6.06)x(3.49+3.48)/2	-1.15		
		(5.02-5.73)x(3.49+3.49)/2	-2.48		
		(4.53-5.02)x(3.49+3.49)/2	-1.71		
		(3.99-4.53)x(3.49+3.49)/2	-1.88		
		(3.34-3.99)x(3.50+3.49)/2	-2.27		
		(2.95-3.34)x(3.50+3.50)/2	-1.36		
		(2.15-2.95)x(3.51+3.50)/2	-2.80		
		(1.92-2.15)x(3.52+3.51)/2	-0.81		
		(0.95-1.92)x(3.53+3.52)/2	-3.42		
		(0.88-0.95)x(3.53+3.53)/2	-0.25		
		(0.83-0.88)x(3.53+3.53)/2	-0.18		
		(0.42-0.83)x(3.53+3.53)/2	-1.45		
		(-0.08-0.42)x(3.54+3.53)/2	-1.77		
		(-0.15--0.08)x(3.54+3.54)/2	-0.25		
		(-0.24--0.15)x(3.55+3.54)/2	-0.32		
		A RIPORTARE mq	101.96		

		CALCOLO DELLE AREE		Foglio n. 106
BONIFICA				
N. SEZIONE PROG.	FIG.	ELEMENTI DI CALCOLO	AREA ELEMENTARE mq	AREA FIGURA mq	NOTE
		RIPORTO mq	101.96		
		(-1.18--0.24)x(3.56+3.55)/2	-3.34		
		(-1.43--1.18)x(3.57+3.56)/2	-0.89		
		(-2.22--1.43)x(3.60+3.57)/2	-2.83		
		(-2.62--2.22)x(3.63+3.60)/2	-1.45		
		(-3.25--2.62)x(3.67+3.63)/2	-2.30		
		(-3.82--3.25)x(3.71+3.67)/2	-2.10		
		(-4.29--3.82)x(3.73+3.71)/2	-1.75		
		(-5.01--4.29)x(3.76+3.73)/2	-2.70		
		(-5.32--5.01)x(3.77+3.76)/2	-1.17		
		(-6.20--5.32)x(3.79+3.77)/2	-3.33		
		(-6.36--6.20)x(3.79+3.79)/2	-0.61		
		(-7.36--6.36)x(3.81+3.79)/2	-3.80		
		(-7.39--7.36)x(3.81+3.81)/2	-0.11		
		(-7.40--7.39)x(3.81+3.81)/2	-0.04		
		(-8.43--7.40)x(3.79+3.81)/2	-3.91		
		(-8.59--8.43)x(3.79+3.79)/2	-0.61		
		(-9.46--8.59)x(3.79+3.79)/2	-3.30		
		(-9.78--9.46)x(3.79+3.79)/2	-1.21		
		(-10.49--9.78)x(3.80+3.79)/2	-2.69		
		(-10.97--10.49)x(3.81+3.80)/2	-1.83		
		(-11.53--10.97)x(3.82+3.81)/2	-2.14		
		(-12.17--11.53)x(3.84+3.82)/2	-2.45		
		(-12.56--12.17)x(3.85+3.84)/2	-1.50		
		(-13.36--12.56)x(3.87+3.85)/2	-3.09		
		(-13.60--13.36)x(3.88+3.87)/2	-0.93		
		(-14.55--13.60)x(3.90+3.88)/2	-3.70		
		(-14.63--14.55)x(3.90+3.90)/2	-0.31		
		(-15.14--14.63)x(3.92+3.90)/2	-1.99		
		(-15.67--15.14)x(3.93+3.92)/2	-2.08		
		(-15.75--15.67)x(3.94+3.93)/2	-0.31		
		(-16.70--15.75)x(3.98+3.94)/2	-3.76		
		(-16.94--16.70)x(3.99+3.98)/2	-0.96		
		(-17.73--16.94)x(4.04+3.99)/2	-3.17		
		(-18.34--17.73)x(4.05+4.04)/2	-2.47		
		(-18.77--18.34)x(4.05+4.05)/2	-1.74		
		(-19.32--18.77)x(4.05+4.05)/2	-2.23		
		(-19.80--19.32)x(4.05+4.05)/2	-1.94		
		(-20.52--19.80)x(4.05+4.05)/2	-2.92		
		(-20.84--20.52)x(4.04+4.05)/2	-1.29		
		(-21.11--20.84)x(4.04+4.04)/2	-1.09		
				21.92	
197 2940.00	BO1	(-21.44--21.47)x(4.72+4.71)/2	0.14		
		(-21.24--21.44)x(4.72+4.72)/2	0.94		
		(-21.11--21.24)x(4.71+4.72)/2	0.61		
		(-20.35--21.11)x(4.72+4.71)/2	3.58		
		(-20.22--20.35)x(4.72+4.72)/2	0.61		
		(-20.20--20.22)x(4.72+4.72)/2	0.09		
		(-20.17--20.20)x(4.72+4.72)/2	0.14		
		(-19.16--20.17)x(4.73+4.72)/2	4.77		
		(-18.90--19.16)x(4.73+4.73)/2	1.23		
		(-18.12--18.90)x(4.72+4.73)/2	3.69		
		(-17.63--18.12)x(4.73+4.72)/2	2.32		
		(-17.08--17.63)x(4.72+4.73)/2	2.60		
		(-17.63--17.08)x(4.03+4.02)/2	-2.21		
		(-18.12--17.63)x(4.02+4.03)/2	-1.97		
		(-18.90--18.12)x(4.03+4.02)/2	-3.14		
		(-19.16--18.90)x(4.03+4.03)/2	-1.05		
		(-20.17--19.16)x(4.02+4.03)/2	-4.07		
		(-20.20--20.17)x(4.02+4.02)/2	-0.12		
		(-20.22--20.20)x(4.02+4.02)/2	-0.08		
		(-20.35--20.22)x(4.02+4.02)/2	-0.52		
		(-21.11--20.35)x(4.01+4.02)/2	-3.05		
		(-21.24--21.11)x(4.02+4.01)/2	-0.52		
		(-21.44--21.24)x(4.02+4.02)/2	-0.80		
		(-21.47--21.44)x(4.01+4.02)/2	-0.12		
				3.07	
198 2955.00	BO1	(-20.55--21.30)x(4.90+4.93)/2	3.69		
		(-20.28--20.55)x(4.89+4.90)/2	1.32		
		(-19.34--20.28)x(4.85+4.89)/2	4.58		
		(-19.23--19.34)x(4.85+4.85)/2	0.53		
		(-19.19--19.23)x(4.85+4.85)/2	0.19		
		(-18.17--19.19)x(4.80+4.85)/2	4.92		
		(-17.83--18.17)x(4.79+4.80)/2	1.63		
		(-17.12--17.83)x(4.78+4.79)/2	3.40		
		(-16.48--17.12)x(4.76+4.78)/2	3.05		
		(-16.07--16.48)x(4.76+4.76)/2	1.95		
		(-15.12--16.07)x(4.74+4.76)/2	4.51		
		(-15.02--15.12)x(4.74+4.74)/2	0.47		
		(-14.69--15.02)x(4.74+4.74)/2	1.56		
		(-13.97--14.69)x(4.74+4.74)/2	3.41		
		(-13.76--13.97)x(4.74+4.74)/2	1.00		
		(-12.92--13.76)x(4.72+4.74)/2	3.97		
		(-12.40--12.92)x(4.72+4.72)/2	2.45		
		(-11.87--12.40)x(4.71+4.72)/2	2.50		
		(-11.05--11.87)x(4.69+4.71)/2	3.85		
		(-10.82--11.05)x(4.69+4.69)/2	1.08		
		(-10.03--10.82)x(4.68+4.69)/2	3.70		
		(-9.77--10.03)x(4.67+4.68)/2	1.22		
		(-9.69--9.77)x(4.67+4.67)/2	0.37		
		(-8.71--9.69)x(4.65+4.67)/2	4.57		
		(-8.33--8.71)x(4.64+4.65)/2	1.77		
		(-7.66--8.33)x(4.62+4.64)/2	3.10		
		(-6.98--7.66)x(4.62+4.62)/2	3.14		
		(-6.61--6.98)x(4.62+4.62)/2	1.71		
		(-5.62--6.61)x(4.61+4.62)/2	4.57		
		(-5.56--5.62)x(4.61+4.61)/2	0.28		
		(-5.53--5.56)x(4.61+4.61)/2	0.14		
		(-5.37--5.53)x(4.61+4.61)/2	0.74		
		(-4.67--5.37)x(4.57+4.61)/2	3.21		
		(-4.51--4.67)x(4.56+4.57)/2	0.73		
		(-4.26--4.51)x(4.55+4.56)/2	1.14		
		(-3.46--4.26)x(4.53+4.55)/2	3.63		
		(-2.90--3.46)x(4.52+4.53)/2	2.53		
		(-2.41--2.90)x(4.50+4.52)/2	2.21		
		A RIPORTARE mq	88.82		

		CALCOLO DELLE AREE		Foglio n. 107
BONIFICA				
N. SEZIONE PROG.	FIG.	ELEMENTI DI CALCOLO	AREA ELEMENTARE mq	AREA FIGURA mq	NOTE
		RIPORTO mq	88.82		
		(-2.90--2.41)x(3.82+3.80)/2	-1.87		
		(-3.46--2.90)x(3.83+3.82)/2	-2.14		
		(-4.26--3.46)x(3.85+3.83)/2	-3.07		
		(-4.51--4.26)x(3.86+3.85)/2	-0.96		
		(-4.67--4.51)x(3.87+3.86)/2	-0.62		
		(-5.37--4.67)x(3.91+3.87)/2	-2.72		
		(-5.53--5.37)x(3.91+3.91)/2	-0.63		
		(-5.56--5.53)x(3.91+3.91)/2	-0.12		
		(-5.62--5.56)x(3.91+3.91)/2	-0.23		
		(-6.61--5.62)x(3.92+3.91)/2	-3.88		
		(-6.98--6.61)x(3.92+3.92)/2	-1.45		
		(-7.66--6.98)x(3.92+3.92)/2	-2.67		
		(-8.33--7.66)x(3.94+3.92)/2	-2.63		
		(-8.71--8.33)x(3.95+3.94)/2	-1.50		
		(-9.69--8.71)x(3.97+3.95)/2	-3.88		
		(-9.77--9.69)x(3.97+3.97)/2	-0.32		
		(-10.03--9.77)x(3.98+3.97)/2	-1.03		
		(-10.82--10.03)x(3.99+3.98)/2	-3.15		
		(-11.05--10.82)x(3.99+3.99)/2	-0.92		
		(-11.87--11.05)x(4.01+3.99)/2	-3.28		
		(-12.40--11.87)x(4.02+4.01)/2	-2.13		
		(-12.92--12.40)x(4.02+4.02)/2	-2.09		
		(-13.76--12.92)x(4.04+4.02)/2	-3.39		
		(-13.97--13.76)x(4.04+4.04)/2	-0.85		
		(-14.69--13.97)x(4.04+4.04)/2	-2.91		
		(-15.02--14.69)x(4.04+4.04)/2	-1.33		
		(-15.12--15.02)x(4.04+4.04)/2	-0.40		
		(-16.07--15.12)x(4.06+4.04)/2	-3.85		
		(-16.48--16.07)x(4.06+4.06)/2	-1.66		
		(-17.12--16.48)x(4.08+4.06)/2	-2.60		
		(-17.83--17.12)x(4.09+4.08)/2	-2.90		
		(-18.17--17.83)x(4.10+4.09)/2	-1.39		
		(-19.19--18.17)x(4.15+4.10)/2	-4.21		
		(-19.23--19.19)x(4.15+4.15)/2	-0.17		
		(-19.34--19.23)x(4.15+4.15)/2	-0.46		
		(-20.28--19.34)x(4.19+4.15)/2	-3.92		
		(-20.55--20.28)x(4.20+4.19)/2	-1.13		
		(-21.30--20.55)x(4.23+4.20)/2	-3.16		
				13.20	
199 2970.00	BO1	(-21.08--21.70)x(4.70+4.71)/2	2.92		
		(-20.30--21.08)x(4.69+4.70)/2	3.66		
		(-20.02--20.30)x(4.68+4.69)/2	1.31		
		(-19.27--20.02)x(4.67+4.68)/2	3.51		
		(-18.95--19.27)x(4.67+4.67)/2	1.49		
		(-18.83--18.95)x(4.66+4.67)/2	0.56		
		(-17.89--18.83)x(4.64+4.66)/2	4.37		
		(-17.37--17.89)x(4.64+4.64)/2	2.41		
		(-16.83--17.37)x(4.63+4.64)/2	2.50		
		(-15.91--16.83)x(4.60+4.63)/2	4.25		
		(-15.76--15.91)x(4.60+4.60)/2	0.69		
		(-15.38--15.76)x(4.59+4.60)/2	1.75		
		(-14.70--15.38)x(4.58+4.59)/2	3.12		
		(-14.44--14.70)x(4.58+4.58)/2	1.19		
		(-13.64--14.44)x(4.57+4.58)/2	3.66		
		(-12.98--13.64)x(4.57+4.57)/2	3.02		
		(-12.58--12.98)x(4.57+4.57)/2	1.83		
		(-11.52--12.58)x(4.54+4.57)/2	4.83		
		(-11.51--11.52)x(4.54+4.54)/2	0.05		
		(-11.50--11.51)x(4.54+4.54)/2	0.05		
		(-10.45--11.50)x(4.53+4.54)/2	4.76		
		(-10.06--10.45)x(4.52+4.53)/2	1.76		
		(-9.39--10.06)x(4.53+4.52)/2	3.03		
		(-9.01--9.39)x(4.54+4.53)/2	1.72		
		(-8.32--9.01)x(4.49+4.54)/2	3.12		
		(-7.61--8.32)x(4.46+4.49)/2	3.18		
		(-7.26--7.61)x(4.46+4.46)/2	1.56		
		(-7.13--7.26)x(4.45+4.46)/2	0.58		
		(-6.20--7.13)x(4.42+4.45)/2	4.12		
		(-5.67--6.20)x(4.50+4.42)/2	2.36		
		(-5.14--5.67)x(4.59+4.50)/2	2.41		
		(-4.20--5.14)x(4.96+4.59)/2	4.49		
		(-4.07--4.20)x(5.02+4.96)/2	0.65		
		(-3.72--4.07)x(5.09+5.02)/2	1.77		
		(-3.01--3.72)x(5.24+5.09)/2	3.67		
		(-2.74--3.01)x(5.25+5.24)/2	1.42		
		(-1.95--2.74)x(5.30+5.25)/2	4.17		
		(-1.28--1.95)x(5.32+5.30)/2	3.56		
		(-0.88--1.28)x(5.33+5.32)/2	2.13		
		(0.16--0.88)x(5.37+5.33)/2	5.56		
		(0.18-0.16)x(5.37+5.37)/2	0.11		
		(0.19-0.18)x(5.37+5.37)/2	0.05		
		(1.24-0.19)x(5.36+5.37)/2	5.63		
		(1.65-1.24)x(5.38+5.36)/2	2.20		
		(2.31-1.65)x(5.39+5.38)/2	3.55		
		(3.11-2.31)x(5.40+5.39)/2	4.32		
		(3.37-3.11)x(5.40+5.40)/2	1.40		
		(4.05-3.37)x(5.39+5.40)/2	3.67		
		(4.20-4.05)x(5.39+5.39)/2	0.81		
		(4.05-4.20)x(4.69+4.69)/2	-0.70		
		(3.37-4.05)x(4.70+4.69)/2	-3.19		
		(3.11-3.37)x(4.70+4.70)/2	-1.22		
		(2.31-3.11)x(4.69+4.70)/2	-3.76		
		(1.65-2.31)x(4.68+4.69)/2	-3.09		
		(1.24-1.65)x(4.66+4.68)/2	-1.91		
		(0.19-1.24)x(4.67+4.66)/2	-4.90		
		(0.18-0.19)x(4.67+4.67)/2	-0.05		
		(0.16-0.18)x(4.67+4.67)/2	-0.09		
		(-0.88-0.16)x(4.63+4.67)/2	-4.84		
		(-1.28--0.88)x(4.62+4.63)/2	-1.85		
		(-1.95--1.28)x(4.60+4.62)/2	-3.09		
		(-2.74--1.95)x(4.55+4.60)/2	-3.61		
		(-3.01--2.74)x(4.54+4.55)/2	-1.23		
		(-3.72--3.01)x(4.39+4.54)/2	-3.17		
		(-4.07--3.72)x(4.32+4.39)/2	-1.52		
		A RIPORTARE mq	86.71		

		CALCOLO DELLE AREE		Foglio n. 108
BONIFICA				
N. SEZIONE PROG.	FIG.	ELEMENTI DI CALCOLO	AREA ELEMENTARE mq	AREA FIGURA mq	NOTE
		RIPORTO mq	86.71		
		(-4.20--4.07)x(4.26+4.32)/2	-0.56		
		(-5.14--4.20)x(3.89+4.26)/2	-3.83		
		(-5.67--5.14)x(3.80+3.89)/2	-2.04		
		(-6.20--5.67)x(3.72+3.80)/2	-1.99		
		(-7.13--6.20)x(3.75+3.72)/2	-3.47		
		(-7.26--7.13)x(3.76+3.75)/2	-0.49		
		(-7.61--7.26)x(3.76+3.76)/2	-1.32		
		(-8.32--7.61)x(3.79+3.76)/2	-2.68		
		(-9.01--8.32)x(3.84+3.79)/2	-2.63		
		(-9.39--9.01)x(3.83+3.84)/2	-1.46		
		(-10.06--9.39)x(3.82+3.83)/2	-2.56		
		(-10.45--10.06)x(3.83+3.82)/2	-1.49		
		(-11.50--10.45)x(3.84+3.83)/2	-4.03		
		(-11.51--11.50)x(3.84+3.84)/2	-0.04		
		(-11.52--11.51)x(3.84+3.84)/2	-0.04		
		(-12.58--11.52)x(3.87+3.84)/2	-4.09		
		(-12.98--12.58)x(3.87+3.87)/2	-1.55		
		(-13.64--12.98)x(3.87+3.87)/2	-2.55		
		(-14.44--13.64)x(3.88+3.87)/2	-3.10		
		(-14.70--14.44)x(3.88+3.88)/2	-1.01		
		(-15.38--14.70)x(3.89+3.88)/2	-2.64		
		(-15.76--15.38)x(3.90+3.89)/2	-1.48		
		(-15.91--15.76)x(3.90+3.90)/2	-0.59		
		(-16.83--15.91)x(3.93+3.90)/2	-3.60		
		(-17.37--16.83)x(3.94+3.93)/2	-2.12		
		(-17.89--17.37)x(3.94+3.94)/2	-2.05		
		(-18.83--17.89)x(3.96+3.94)/2	-3.71		
		(-18.95--18.83)x(3.97+3.96)/2	-0.48		
		(-19.27--18.95)x(3.97+3.97)/2	-1.27		
		(-20.02--19.27)x(3.98+3.97)/2	-2.98		
		(-20.30--20.02)x(3.99+3.98)/2	-1.12		
		(-21.08--20.30)x(4.00+3.99)/2	-3.12		
		(-21.70--21.08)x(4.01+4.00)/2	-2.48		
				18.14	
200 2985.00	B01	(-21.55--21.64)x(4.74+4.74)/2	0.43		
		(-20.78--21.55)x(4.72+4.74)/2	3.64		
		(-20.48--20.78)x(4.72+4.72)/2	1.42		
		(-19.83--20.48)x(4.70+4.72)/2	3.06		
		(-19.40--19.83)x(4.69+4.70)/2	2.02		
		(-19.19--19.40)x(4.69+4.69)/2	0.98		
		(-18.32--19.19)x(4.68+4.69)/2	4.08		
		(-17.60--18.32)x(4.67+4.68)/2	3.37		
		(-17.24--17.60)x(4.66+4.67)/2	1.68		
		(-16.49--17.24)x(4.64+4.66)/2	3.49		
		(-16.17--16.49)x(4.63+4.64)/2	1.48		
		(-16.01--16.17)x(4.62+4.63)/2	0.74		
		(-15.09--16.01)x(4.61+4.62)/2	4.25		
		(-14.42--15.09)x(4.61+4.61)/2	3.09		
		(-14.01--14.42)x(4.60+4.61)/2	1.89		
		(-13.80--14.01)x(4.59+4.60)/2	0.96		
		(-13.15--13.80)x(4.57+4.59)/2	2.98		
		(-12.99--13.15)x(4.57+4.57)/2	0.73		
		(-12.93--12.99)x(4.56+4.57)/2	0.27		
		(-12.83--12.93)x(4.56+4.56)/2	0.46		
		(-11.86--12.83)x(4.54+4.56)/2	4.41		
		(-11.24--11.86)x(4.50+4.54)/2	2.80		
		(-10.78--11.24)x(4.48+4.50)/2	2.07		
		(-9.81--10.78)x(4.41+4.48)/2	4.31		
		(-9.70--9.81)x(4.40+4.41)/2	0.48		
		(-9.65--9.70)x(4.41+4.40)/2	0.22		
		(-8.63--9.65)x(4.41+4.41)/2	4.50		
		(-8.06--8.63)x(4.44+4.41)/2	2.52		
		(-7.55--8.06)x(4.48+4.44)/2	2.27		
		(-6.47--7.55)x(4.53+4.48)/2	4.87		
		(-5.39--6.47)x(4.59+4.53)/2	4.92		
		(-4.88--5.39)x(4.62+4.59)/2	2.35		
		(-4.32--4.88)x(4.65+4.62)/2	2.60		
		(-3.29--4.32)x(4.81+4.65)/2	4.87		
		(-3.24--3.29)x(4.82+4.81)/2	0.24		
		(-3.13--3.24)x(4.84+4.82)/2	0.53		
		(-2.16--3.13)x(4.94+4.84)/2	4.74		
		(-1.70--2.16)x(4.99+4.94)/2	2.28		
		(-1.08--1.70)x(5.02+4.99)/2	3.10		
		(-0.11--1.08)x(5.18+5.02)/2	4.95		
		(-0.01--0.11)x(5.20+5.18)/2	0.52		
		(0.21--0.01)x(5.25+5.20)/2	1.15		
		(1.07-0.21)x(5.42+5.25)/2	4.59		
		(1.48-1.07)x(5.37+5.42)/2	2.21		
		(2.15-1.48)x(5.27+5.37)/2	3.56		
		(3.00-2.15)x(5.18+5.27)/2	4.44		
		(2.15-3.00)x(4.57+4.48)/2	-3.85		
		(1.48-2.15)x(4.67+4.57)/2	-3.10		
		(1.07-1.48)x(4.72+4.67)/2	-1.92		
		(0.21-1.07)x(4.55+4.72)/2	-3.99		
		(-0.01-0.21)x(4.50+4.55)/2	-1.00		
		(-0.11--0.01)x(4.48+4.50)/2	-0.45		
		(-1.08--0.11)x(4.32+4.48)/2	-4.27		
		(-1.70--1.08)x(4.29+4.32)/2	-2.67		
		(-2.16--1.70)x(4.24+4.29)/2	-1.96		
		(-3.13--2.16)x(4.14+4.24)/2	-4.06		
		(-3.24--3.13)x(4.12+4.14)/2	-0.45		
		(-3.29--3.24)x(4.11+4.12)/2	-0.21		
		(-4.32--3.29)x(3.95+4.11)/2	-4.15		
		(-4.88--4.32)x(3.92+3.95)/2	-2.20		
		(-5.39--4.88)x(3.89+3.92)/2	-1.99		
		(-6.47--5.39)x(3.83+3.89)/2	-4.17		
		(-7.55--6.47)x(3.78+3.83)/2	-4.11		
		(-8.06--7.55)x(3.74+3.78)/2	-1.92		
		(-8.63--8.06)x(3.71+3.74)/2	-2.12		
		(-9.65--8.63)x(3.71+3.71)/2	-3.78		
		(-9.70--9.65)x(3.70+3.71)/2	-0.19		
		(-9.81--9.70)x(3.71+3.70)/2	-0.41		
		(-10.78--9.81)x(3.78+3.71)/2	-3.63		
		(-11.24--10.78)x(3.80+3.78)/2	-1.74		
		A RIPORTARE mq	58.18		

		CALCOLO DELLE AREE		Foglio n. 109
BONIFICA				
N. SEZIONE PROG.	FIG.	ELEMENTI DI CALCOLO	AREA ELEMENTARE mq	AREA FIGURA mq	NOTE
		RIPORTO mq	58.18		
		(-11.86--11.24)x(3.84+3.80)/2	-2.37		
		(-12.83--11.86)x(3.86+3.84)/2	-3.73		
		(-12.93--12.83)x(3.86+3.86)/2	-0.39		
		(-12.99--12.93)x(3.87+3.86)/2	-0.23		
		(-13.15--12.99)x(3.87+3.87)/2	-0.62		
		(-13.80--13.15)x(3.89+3.87)/2	-2.52		
		(-14.01--13.80)x(3.90+3.89)/2	-0.82		
		(-14.42--14.01)x(3.91+3.90)/2	-1.60		
		(-15.09--14.42)x(3.91+3.91)/2	-2.62		
		(-16.01--15.09)x(3.92+3.91)/2	-3.60		
		(-16.17--16.01)x(3.93+3.92)/2	-0.63		
		(-16.49--16.17)x(3.94+3.93)/2	-1.26		
		(-17.24--16.49)x(3.96+3.94)/2	-2.96		
		(-17.60--17.24)x(3.97+3.96)/2	-1.43		
		(-18.32--17.60)x(3.98+3.97)/2	-2.86		
		(-19.19--18.32)x(3.99+3.98)/2	-3.47		
		(-19.40--19.19)x(3.99+3.99)/2	-0.84		
		(-19.83--19.40)x(4.00+3.99)/2	-1.72		
		(-20.48--19.83)x(4.02+4.00)/2	-2.61		
		(-20.78--20.48)x(4.02+4.02)/2	-1.21		
		(-21.55--20.78)x(4.04+4.02)/2	-3.10		
		(-21.64--21.55)x(4.04+4.04)/2	-0.36		
				17.23	
201	B01	(-21.68--22.03)x(4.39+4.42)/2	1.54		
3000.00		(-20.89--21.68)x(4.37+4.39)/2	3.46		
		(-20.58--20.89)x(4.37+4.37)/2	1.35		
		(-20.40--20.58)x(4.37+4.37)/2	0.79		
		(-19.49--20.40)x(4.36+4.37)/2	3.97		
		(-19.07--19.49)x(4.34+4.36)/2	1.83		
		(-18.39--19.07)x(4.31+4.34)/2	2.94		
		(-17.95--18.39)x(4.28+4.31)/2	1.89		
		(-17.30--17.95)x(4.24+4.28)/2	2.77		
		(-16.91--17.30)x(4.25+4.24)/2	1.66		
		(-16.20--16.91)x(4.27+4.25)/2	3.02		
		(-15.17--16.20)x(4.27+4.27)/2	4.40		
		(-15.11--15.17)x(4.27+4.27)/2	0.26		
		(-15.02--15.11)x(4.28+4.27)/2	0.38		
		(-14.02--15.02)x(4.39+4.28)/2	4.33		
		(-13.42--14.02)x(4.36+4.39)/2	2.62		
		(-12.92--13.42)x(4.31+4.36)/2	2.17		
		(-12.08--12.92)x(4.21+4.31)/2	3.58		
		(-11.83--12.08)x(4.19+4.21)/2	1.05		
		(-11.67--11.83)x(4.18+4.19)/2	0.67		
		(-10.73--11.67)x(4.10+4.18)/2	3.89		
		(-9.93--10.73)x(4.05+4.10)/2	3.26		
		(-9.64--9.93)x(4.03+4.05)/2	1.17		
		(-9.15--9.64)x(4.00+4.03)/2	1.97		
		(-8.54--9.15)x(3.97+4.00)/2	2.43		
		(-8.18--8.54)x(3.95+3.97)/2	1.43		
		(-7.45--8.18)x(3.91+3.95)/2	2.87		
		(-6.44--7.45)x(3.79+3.91)/2	3.89		
		(-6.36--6.44)x(3.79+3.79)/2	0.30		
		(-6.22--6.36)x(3.77+3.79)/2	0.53		
		(-5.26--6.22)x(3.63+3.77)/2	3.55		
		(-4.69--5.26)x(3.58+3.63)/2	2.05		
		(-4.17--4.69)x(3.51+3.58)/2	1.84		
		(-3.28--4.17)x(3.43+3.51)/2	3.09		
		(-3.07--3.28)x(3.41+3.43)/2	0.72		
		(-2.95--3.07)x(3.41+3.41)/2	0.41		
		(-1.98--2.95)x(3.35+3.41)/2	3.28		
		(-1.20--1.98)x(3.32+3.35)/2	2.60		
		(-0.89--1.20)x(3.31+3.32)/2	1.03		
		(-0.74--0.89)x(3.30+3.31)/2	0.50		
		(-0.35--0.74)x(3.26+3.30)/2	1.28		
		(0.06--0.35)x(3.23+3.26)/2	1.33		
		(0.21-0.06)x(3.20+3.23)/2	0.48		
		(0.54-0.21)x(3.14+3.20)/2	1.05		
		(1.30-0.54)x(3.07+3.14)/2	2.36		
		(2.29-1.30)x(3.06+3.07)/2	3.03		
		(2.40-2.29)x(3.06+3.06)/2	0.34		
		(2.58-2.40)x(3.06+3.06)/2	0.55		
		(3.49-2.58)x(3.08+3.06)/2	2.79		
		(4.03-3.49)x(3.08+3.08)/2	1.66		
		(4.59-4.03)x(3.09+3.08)/2	1.73		
		(4.87-4.59)x(3.08+3.09)/2	0.86		
		(4.03-4.87)x(2.38+2.39)/2	-2.00		
		(3.49-4.03)x(2.38+2.38)/2	-1.29		
		(2.58-3.49)x(2.36+2.38)/2	-2.16		
		(2.40-2.58)x(2.36+2.36)/2	-0.42		
		(2.29-2.40)x(2.36+2.36)/2	-0.26		
		(1.30-2.29)x(2.37+2.36)/2	-2.34		
		(0.54-1.30)x(2.44+2.37)/2	-1.83		
		(0.21-0.54)x(2.50+2.44)/2	-0.82		
		(0.06-0.21)x(2.53+2.50)/2	-0.38		
		(-0.35-0.06)x(2.56+2.53)/2	-1.04		
		(-0.74--0.35)x(2.60+2.56)/2	-1.01		
		(-0.89--0.74)x(2.61+2.60)/2	-0.39		
		(-1.20--0.89)x(2.62+2.61)/2	-0.81		
		(-1.98--1.20)x(2.65+2.62)/2	-2.06		
		(-2.95--1.98)x(2.71+2.65)/2	-2.60		
		(-3.07--2.95)x(2.71+2.71)/2	-0.33		
		(-3.28--3.07)x(2.73+2.71)/2	-0.57		
		(-4.17--3.28)x(2.81+2.73)/2	-2.47		
		(-4.69--4.17)x(2.88+2.81)/2	-1.48		
		(-5.26--4.69)x(2.93+2.88)/2	-1.66		
		(-6.22--5.26)x(3.07+2.93)/2	-2.88		
		(-6.36--6.22)x(3.09+3.07)/2	-0.43		
		(-6.44--6.36)x(3.09+3.09)/2	-0.25		
		(-7.45--6.44)x(3.21+3.09)/2	-3.18		
		(-8.18--7.45)x(3.25+3.21)/2	-2.36		
		(-8.54--8.18)x(3.27+3.25)/2	-1.17		
		(-9.15--8.54)x(3.30+3.27)/2	-2.00		
		(-9.64--9.15)x(3.33+3.30)/2	-1.62		
		(-9.93--9.64)x(3.35+3.33)/2	-0.97		
		A RIPORTARE mq	62.17		

		CALCOLO DELLE AREE		Foglio n. 110
BONIFICA				
N. SEZIONE PROG.	FIG.	ELEMENTI DI CALCOLO	AREA ELEMENTARE mq	AREA FIGURA mq	NOTE
		RIPORTO mq	62.17		
		(-10.73--9.93)x(3.40+3.35)/2	-2.70		
		(-11.67--10.73)x(3.48+3.40)/2	-3.23		
		(-11.83--11.67)x(3.49+3.48)/2	-0.56		
		(-12.08--11.83)x(3.51+3.49)/2	-0.88		
		(-12.92--12.08)x(3.61+3.51)/2	-2.99		
		(-13.42--12.92)x(3.66+3.61)/2	-1.82		
		(-14.02--13.42)x(3.69+3.66)/2	-2.20		
		(-15.02--14.02)x(3.58+3.69)/2	-3.63		
		(-15.11--15.02)x(3.57+3.58)/2	-0.32		
		(-15.17--15.11)x(3.57+3.57)/2	-0.21		
		(-16.20--15.17)x(3.57+3.57)/2	-3.68		
		(-16.91--16.20)x(3.55+3.57)/2	-2.53		
		(-17.30--16.91)x(3.54+3.55)/2	-1.38		
		(-17.95--17.30)x(3.58+3.54)/2	-2.31		
		(-18.39--17.95)x(3.61+3.58)/2	-1.58		
		(-19.07--18.39)x(3.64+3.61)/2	-2.46		
		(-19.49--19.07)x(3.66+3.64)/2	-1.53		
		(-20.40--19.49)x(3.67+3.66)/2	-3.34		
		(-20.58--20.40)x(3.67+3.67)/2	-0.66		
		(-20.89--20.58)x(3.67+3.67)/2	-1.14		
		(-21.68--20.89)x(3.69+3.67)/2	-2.91		
		(-22.03--21.68)x(3.72+3.69)/2	-1.30		
				18.81	
201b 3005.94	B01	(-21.68--22.03)x(4.39+4.42)/2	1.54		
		(-20.89--21.68)x(4.37+4.39)/2	3.46		
		(-20.58--20.89)x(4.37+4.37)/2	1.35		
		(-20.40--20.58)x(4.37+4.37)/2	0.79		
		(-19.49--20.40)x(4.36+4.37)/2	3.97		
		(-19.07--19.49)x(4.34+4.36)/2	1.83		
		(-18.39--19.07)x(4.31+4.34)/2	2.94		
		(-17.95--18.39)x(4.28+4.31)/2	1.89		
		(-17.30--17.95)x(4.24+4.28)/2	2.77		
		(-16.91--17.30)x(4.25+4.24)/2	1.66		
		(-16.20--16.91)x(4.27+4.25)/2	3.02		
		(-15.17--16.20)x(4.27+4.27)/2	4.40		
		(-15.11--15.17)x(4.27+4.27)/2	0.26		
		(-15.02--15.11)x(4.28+4.27)/2	0.38		
		(-14.02--15.02)x(4.39+4.28)/2	4.33		
		(-13.42--14.02)x(4.36+4.39)/2	2.62		
		(-12.92--13.42)x(4.31+4.36)/2	2.17		
		(-12.08--12.92)x(4.21+4.31)/2	3.58		
		(-11.83--12.08)x(4.19+4.21)/2	1.05		
		(-11.67--11.83)x(4.18+4.19)/2	0.67		
		(-10.73--11.67)x(4.10+4.18)/2	3.89		
		(-9.93--10.73)x(4.05+4.10)/2	3.26		
		(-9.64--9.93)x(4.03+4.05)/2	1.17		
		(-9.15--9.64)x(4.00+4.03)/2	1.97		
		(-8.54--9.15)x(3.97+4.00)/2	2.43		
		(-8.18--8.54)x(3.95+3.97)/2	1.43		
		(-7.45--8.18)x(3.91+3.95)/2	2.87		
		(-6.44--7.45)x(3.79+3.91)/2	3.89		
		(-6.36--6.44)x(3.79+3.79)/2	0.30		
		(-6.22--6.36)x(3.77+3.79)/2	0.53		
		(-5.26--6.22)x(3.63+3.77)/2	3.55		
		(-4.69--5.26)x(3.58+3.63)/2	2.05		
		(-4.17--4.69)x(3.51+3.58)/2	1.84		
		(-3.28--4.17)x(3.43+3.51)/2	3.09		
		(-3.07--3.28)x(3.41+3.43)/2	0.72		
		(-2.95--3.07)x(3.41+3.41)/2	0.41		
		(-1.98--2.95)x(3.35+3.41)/2	3.28		
		(-1.20--1.98)x(3.32+3.35)/2	2.60		
		(-0.89--1.20)x(3.31+3.32)/2	1.03		
		(-0.74--0.89)x(3.30+3.31)/2	0.50		
		(-0.35--0.74)x(3.26+3.30)/2	1.28		
		(0.06--0.35)x(3.23+3.26)/2	1.33		
		(0.21-0.06)x(3.20+3.23)/2	0.48		
		(0.54-0.21)x(3.14+3.20)/2	1.05		
		(1.30-0.54)x(3.07+3.14)/2	2.36		
		(2.29-1.30)x(3.06+3.07)/2	3.03		
		(2.40-2.29)x(3.06+3.06)/2	0.34		
		(2.58-2.40)x(3.06+3.06)/2	0.55		
		(3.49-2.58)x(3.08+3.06)/2	2.79		
		(4.03-3.49)x(3.08+3.08)/2	1.66		
		(4.59-4.03)x(3.09+3.08)/2	1.73		
		(4.87-4.59)x(3.08+3.09)/2	0.86		
		(4.03-4.87)x(2.38+2.39)/2	-2.00		
		(3.49-4.03)x(2.38+2.38)/2	-1.29		
		(2.58-3.49)x(2.36+2.38)/2	-2.16		
		(2.40-2.58)x(2.36+2.36)/2	-0.42		
		(2.29-2.40)x(2.36+2.36)/2	-0.26		
		(1.30-2.29)x(2.37+2.36)/2	-2.34		
		(0.54-1.30)x(2.44+2.37)/2	-1.83		
		(0.21-0.54)x(2.50+2.44)/2	-0.82		
		(0.06-0.21)x(2.53+2.50)/2	-0.38		
		(-0.35-0.06)x(2.56+2.53)/2	-1.04		
		(-0.74--0.35)x(2.60+2.56)/2	-1.01		
		(-0.89--0.74)x(2.61+2.60)/2	-0.39		
		(-1.20--0.89)x(2.62+2.61)/2	-0.81		
		(-1.98--1.20)x(2.65+2.62)/2	-2.06		
		(-2.95--1.98)x(2.71+2.65)/2	-2.60		
		(-3.07--2.95)x(2.71+2.71)/2	-0.33		
		(-3.28--3.07)x(2.73+2.71)/2	-0.57		
		(-4.17--3.28)x(2.81+2.73)/2	-2.47		
		(-4.69--4.17)x(2.88+2.81)/2	-1.48		
		(-5.26--4.69)x(2.93+2.88)/2	-1.66		
		(-6.22--5.26)x(3.07+2.93)/2	-2.88		
		(-6.36--6.22)x(3.09+3.07)/2	-0.43		
		(-6.44--6.36)x(3.09+3.09)/2	-0.25		
		(-7.45--6.44)x(3.21+3.09)/2	-3.18		
		(-8.18--7.45)x(3.25+3.21)/2	-2.36		
		(-8.54--8.18)x(3.27+3.25)/2	-1.17		
		(-9.15--8.54)x(3.30+3.27)/2	-2.00		
		(-9.64--9.15)x(3.33+3.30)/2	-1.62		
		(-9.93--9.64)x(3.35+3.33)/2	-0.97		
		A RIPORTARE mq	62.17		

	CALCOLO DELLE AREE		Foglio n. 111

BONIFICA

N. SEZIONE PROG.	FIG.	ELEMENTI DI CALCOLO	AREA ELEMENTARE mq	AREA FIGURA mq	NOTE
		RIPORTO mq	62.17		
		(-10.73--9.93)x(3.40+3.35)/2	-2.70		
		(-11.67--10.73)x(3.48+3.40)/2	-3.23		
		(-11.83--11.67)x(3.49+3.48)/2	-0.56		
		(-12.08--11.83)x(3.51+3.49)/2	-0.88		
		(-12.92--12.08)x(3.61+3.51)/2	-2.99		
		(-13.42--12.92)x(3.66+3.61)/2	-1.82		
		(-14.02--13.42)x(3.69+3.66)/2	-2.20		
		(-15.02--14.02)x(3.58+3.69)/2	-3.63		
		(-15.11--15.02)x(3.57+3.58)/2	-0.32		
		(-15.17--15.11)x(3.57+3.57)/2	-0.21		
		(-16.20--15.17)x(3.57+3.57)/2	-3.68		
		(-16.91--16.20)x(3.55+3.57)/2	-2.53		
		(-17.30--16.91)x(3.54+3.55)/2	-1.38		
		(-17.95--17.30)x(3.58+3.54)/2	-2.31		
		(-18.39--17.95)x(3.61+3.58)/2	-1.58		
		(-19.07--18.39)x(3.64+3.61)/2	-2.46		
		(-19.49--19.07)x(3.66+3.64)/2	-1.53		
		(-20.40--19.49)x(3.67+3.66)/2	-3.34		
		(-20.58--20.40)x(3.67+3.67)/2	-0.66		
		(-20.89--20.58)x(3.67+3.67)/2	-1.14		
		(-21.68--20.89)x(3.69+3.67)/2	-2.91		
		(-22.03--21.68)x(3.72+3.69)/2	-1.30		
				18.81	

Il Direttore dei Lavori	L'Impresa	

	CALCOLO DELLE AREE		Foglio n. 112

RIPORTO

N. SEZIONE PROG.	FIG.	ELEMENTI DI CALCOLO	AREA ELEMENTARE mq	AREA FIGURA mq	NOTE
200	RI1	(12.66-12.76)x(2.24+2.24)/2	-0.22		
2985.00		(11.66-12.66)x(3.44+3.44)/2	-3.44		
		(23.63-11.66)x(4.42+4.42)/2	52.91		
		(23.59-23.63)x(4.42+4.42)/2	-0.18		
		(22.85-23.59)x(4.25+4.42)/2	-3.21		
		(22.62-22.85)x(4.19+4.25)/2	-0.97		
		(22.15-22.62)x(4.04+4.19)/2	-1.93		
		(21.54-22.15)x(3.85+4.04)/2	-2.41		
		(20.56-21.54)x(3.59+3.85)/2	-3.65		
		(20.46-20.56)x(3.57+3.59)/2	-0.36		
		(20.25-20.46)x(3.53+3.57)/2	-0.75		
		(19.38-20.25)x(3.39+3.53)/2	-3.01		
		(18.97-19.38)x(3.34+3.39)/2	-1.38		
		(18.31-18.97)x(3.24+3.34)/2	-2.17		
		(17.38-18.31)x(3.12+3.24)/2	-2.96		
		(17.23-17.38)x(3.10+3.12)/2	-0.47		
		(16.91-17.23)x(3.10+3.10)/2	-0.99		
		(16.34-16.91)x(3.09+3.10)/2	-1.76		
		(16.15-16.34)x(3.07+3.09)/2	-0.59		
		(15.52-16.15)x(3.06+3.07)/2	-1.93		
		(15.07-15.52)x(3.03+3.06)/2	-1.37		
		(14.71-15.07)x(3.01+3.03)/2	-1.09		
		(14.02-14.71)x(2.98+3.01)/2	-2.07		
		(12.76-14.02)x(2.14+2.98)/2	-3.23		
				12.77	
201	RI1	(12.64-12.74)x(1.40+1.40)/2	-0.14		
3000.00		(11.64-12.64)x(2.60+2.60)/2	-2.60		
		(17.37-11.64)x(4.39+4.39)/2	25.15		
		(12.74-17.37)x(1.30+4.39)/2	-13.17		
				9.24	
201b	RI1	(12.64-12.74)x(1.40+1.40)/2	-0.14		
3005.94		(11.64-12.64)x(2.60+2.60)/2	-2.60		
		(17.37-11.64)x(4.39+4.39)/2	25.15		
		(12.74-17.37)x(1.30+4.39)/2	-13.17		
				9.24	

Il Direttore dei Lavori	L'Impresa	

	CALCOLO DELLE AREE		Foglio n. 113

SPIANAMENTO

N. SEZIONE PROG.	FIG.	ELEMENTI DI CALCOLO	AREA ELEMENTARE mq	AREA FIGURA mq	NOTE
170	SP1	(-22.24--22.58)x(4.13+4.11)/2	1.40		
2535.00		(-21.83--22.24)x(4.19+4.13)/2	1.71		
		(-21.11--21.83)x(4.38+4.19)/2	3.09		
		(-20.74--21.11)x(4.48+4.38)/2	1.64		
		(-20.53--20.74)x(4.57+4.48)/2	0.95		
		(-19.65--20.53)x(4.95+4.57)/2	4.19		
		(-18.82--19.65)x(5.38+4.95)/2	4.29		
		(-18.56--18.82)x(5.51+5.38)/2	1.42		
		(-18.11--18.56)x(5.75+5.51)/2	2.53		
		(-17.47--18.11)x(6.09+5.75)/2	3.79		
		(-17.11--17.47)x(6.23+6.09)/2	2.22		
		(-16.38--17.11)x(6.51+6.23)/2	4.65		
		(-15.40--16.38)x(6.54+6.51)/2	6.39		
		(-15.29--15.40)x(6.54+6.54)/2	0.72		
		(-15.10--15.29)x(6.57+6.54)/2	1.25		
		(-14.20--15.10)x(6.67+6.57)/2	5.96		
		(-13.69--14.20)x(6.72+6.67)/2	3.41		
		(-13.11--13.69)x(6.76+6.72)/2	3.91		
		(-12.84--13.11)x(6.84+6.76)/2	1.84		
		(-12.09--12.84)x(6.94+6.84)/2	5.17		
		(-12.04--12.09)x(6.95+6.94)/2	0.35		
		(-12.02--12.04)x(6.95+6.95)/2	0.14		
		(-11.98--12.02)x(6.96+6.95)/2	0.28		
		(-10.93--11.98)x(7.09+6.96)/2	7.38		
		(-10.27--10.93)x(7.06+7.09)/2	4.67		
		(-9.84--10.27)x(7.03+7.06)/2	3.03		
		(-9.08--9.84)x(7.12+7.03)/2	5.38		
		(-8.75--9.08)x(7.17+7.12)/2	2.36		
		(-8.56--8.75)x(7.17+7.17)/2	1.36		
		(-7.66--8.56)x(7.17+7.17)/2	6.45		
		(-6.85--7.66)x(7.15+7.17)/2	5.80		
		(-6.56--6.85)x(7.12+7.15)/2	2.07		
		(-6.07--6.56)x(7.21+7.12)/2	3.51		
		(-5.47--6.07)x(7.32+7.21)/2	4.36		
		(-5.13--5.47)x(7.40+7.32)/2	2.50		
		(-4.38--5.13)x(7.48+7.40)/2	5.58		
		(-3.42--4.38)x(7.58+7.48)/2	7.23		
		(-3.29--3.42)x(7.60+7.58)/2	0.99		
		(-3.06--3.29)x(7.65+7.60)/2	1.75		
		(-2.20--3.06)x(7.68+7.65)/2	6.59		
		(-1.71--2.20)x(7.54+7.68)/2	3.73		
		(-1.11--1.71)x(7.43+7.54)/2	4.49		
		(-0.05--1.11)x(6.95+7.43)/2	7.62		
		(-0.02--0.05)x(6.94+6.95)/2	0.21		
		(-0.00--0.02)x(6.93+6.94)/2	0.14		
		(1.07--0.00)x(6.35+6.93)/2	7.10		
		(1.71-1.07)x(6.01+6.35)/2	3.96		
		(2.16-1.71)x(5.72+6.01)/2	2.64		
		(2.95-2.16)x(5.21+5.72)/2	4.32		
		(3.25-2.95)x(5.02+5.21)/2	1.53		
		(3.42-3.25)x(4.92+5.02)/2	0.84		
		(4.34-3.42)x(4.35+4.92)/2	4.26		
		(5.13-4.34)x(4.14+4.35)/2	3.35		
		(5.43-5.13)x(4.04+4.14)/2	1.23		
		(-22.58-5.43)x(4.11+4.04)/2	-114.14		
				63.59	
171	SP1	(-29.45--30.35)x(4.36+4.30)/2	3.90		
2550.00		(-28.64--29.45)x(4.62+4.36)/2	3.64		
		(-28.36--28.64)x(4.69+4.62)/2	1.30		
		(-27.87--28.36)x(4.89+4.69)/2	2.35		
		(-27.27--27.87)x(5.16+4.89)/2	3.02		
		(-26.93--27.27)x(5.35+5.16)/2	1.79		
		(-26.18--26.93)x(5.73+5.35)/2	4.16		
		(-25.22--26.18)x(6.34+5.73)/2	5.79		
		(-25.09--25.22)x(6.41+6.34)/2	0.83		
		(-24.86--25.09)x(6.54+6.41)/2	1.49		
		(-24.00--24.86)x(6.95+6.54)/2	5.80		
		(-23.51--24.00)x(7.01+6.95)/2	3.42		
		(-22.91--23.51)x(7.11+7.01)/2	4.24		
		(-21.85--22.91)x(7.15+7.11)/2	7.56		
		(-21.82--21.85)x(7.15+7.15)/2	0.21		
		(-21.80--21.82)x(7.16+7.15)/2	0.14		
		(-20.73--21.80)x(7.31+7.16)/2	7.74		
		(-20.09--20.73)x(7.22+7.31)/2	4.65		
		(-19.64--20.09)x(7.15+7.22)/2	3.23		
		(-18.84--19.64)x(6.92+7.15)/2	5.63		
		(-18.55--18.84)x(6.83+6.92)/2	1.99		
		(-17.82--18.55)x(6.85+6.83)/2	4.99		
		(-17.45--17.82)x(6.91+6.85)/2	2.55		
		(-16.67--17.45)x(6.94+6.91)/2	5.40		
		(-16.36--16.67)x(6.96+6.94)/2	2.15		
		(-15.84--16.36)x(6.92+6.96)/2	3.61		
		(-15.27--15.84)x(6.88+6.92)/2	3.93		
		(-14.95--15.27)x(6.77+6.88)/2	2.18		
		(-14.18--14.95)x(6.47+6.77)/2	5.10		
		(-13.24--14.18)x(6.15+6.47)/2	5.93		
		(-13.09--13.24)x(6.10+6.15)/2	0.92		
		(-12.83--13.09)x(6.06+6.10)/2	1.58		
		(-12.00--12.83)x(5.99+6.06)/2	5.00		
		(-11.53--12.00)x(6.20+5.99)/2	2.86		
		(-10.91--11.53)x(6.46+6.20)/2	3.92		
		(-9.82--10.91)x(7.01+6.46)/2	7.34		
		(-8.73--9.82)x(7.34+7.01)/2	7.82		
		(-8.11--8.73)x(7.45+7.34)/2	4.58		
		(-7.64--8.11)x(7.53+7.45)/2	3.52		
		(-6.81--7.64)x(7.47+7.53)/2	6.23		
		(-6.55--6.81)x(7.42+7.47)/2	1.94		
		(-6.40--6.55)x(7.43+7.42)/2	1.11		
		(-5.46--6.40)x(7.34+7.43)/2	6.94		
		(-4.69--5.46)x(7.23+7.34)/2	5.61		
		(-4.37--4.69)x(7.19+7.23)/2	2.31		
		(-3.80--4.37)x(7.21+7.19)/2	4.10		
		(-3.28--3.80)x(7.21+7.21)/2	3.75		
		(-2.98--3.28)x(7.27+7.21)/2	2.17		
		(-2.19--2.98)x(7.39+7.27)/2	5.79		
		(-1.27--2.19)x(7.24+7.39)/2	6.73		
		A RIPORTARE mq	192.94		

	CALCOLO DELLE AREE		Foglio n. 114

SPIANAMENTO

N. SEZIONE PROG.	FIG.	ELEMENTI DI CALCOLO	AREA ELEMENTARE mq	AREA FIGURA mq	NOTE
		RIPORTO mq	192.94		
		(-1.10--1.27)x(7.21+7.24)/2	1.23		
		(-0.79--1.10)x(7.02+7.21)/2	2.21		
		(-0.01--0.79)x(6.49+7.02)/2	5.27		
		(0.44--0.01)x(6.28+6.49)/2	2.87		
		(1.08-0.44)x(5.90+6.28)/2	3.90		
		(1.39-1.08)x(5.78+5.90)/2	1.81		
		(2.18-1.39)x(5.48+5.78)/2	4.45		
		(2.22-2.18)x(5.46+5.48)/2	0.22		
		(3.27-2.22)x(4.93+5.46)/2	5.45		
		(3.86-3.27)x(4.64+4.93)/2	2.82		
		(4.36-3.86)x(4.42+4.64)/2	2.27		
		(5.22-4.36)x(4.18+4.42)/2	3.70		
		(5.45-5.22)x(4.12+4.18)/2	0.95		
		(5.57-5.45)x(4.11+4.12)/2	0.49		
		(6.54-5.57)x(4.05+4.11)/2	3.96		
		(-30.35-6.54)x(4.30+4.05)/2	-154.02		
				80.52	
172	SP1	(-15.26--15.44)x(4.11+4.10)/2	0.74		
2565.00		(-14.51--15.26)x(4.32+4.11)/2	3.16		
		(-14.17--14.51)x(4.42+4.32)/2	1.49		
		(-13.57--14.17)x(4.74+4.42)/2	2.75		
		(-13.08--13.57)x(5.04+4.74)/2	2.40		
		(-12.80--13.08)x(5.20+5.04)/2	1.43		
		(-11.99--12.80)x(5.66+5.20)/2	4.40		
		(-11.09--11.99)x(6.10+5.66)/2	5.29		
		(-10.90--11.09)x(6.23+6.10)/2	1.17		
		(-10.56--10.90)x(6.34+6.23)/2	2.14		
		(-9.81--10.56)x(6.55+6.34)/2	4.83		
		(-9.38--9.81)x(6.50+6.55)/2	2.81		
		(-8.72--9.38)x(6.54+6.50)/2	4.30		
		(-7.67--8.72)x(6.80+6.54)/2	7.00		
		(-7.62--7.67)x(6.81+6.80)/2	0.34		
		(-7.55--7.62)x(6.82+6.81)/2	0.48		
		(-6.53--7.55)x(6.96+6.82)/2	7.03		
		(-5.96--6.53)x(6.98+6.96)/2	3.97		
		(-5.44--5.96)x(6.99+6.98)/2	3.63		
		(-4.54--5.44)x(6.87+6.99)/2	6.24		
		(-4.35--4.54)x(6.84+6.87)/2	1.30		
		(-3.60--4.35)x(6.50+6.84)/2	5.00		
		(-3.26--3.60)x(6.29+6.50)/2	2.17		
		(-2.54--3.26)x(5.95+6.29)/2	4.41		
		(-2.17--2.54)x(5.75+5.95)/2	2.16		
		(-1.53--2.17)x(5.39+5.75)/2	3.56		
		(-1.08--1.53)x(5.13+5.39)/2	2.37		
		(-0.82--1.08)x(4.99+5.13)/2	1.32		
		(0.01--0.82)x(4.48+4.99)/2	3.93		
		(0.89-0.01)x(4.23+4.48)/2	3.83		
		(1.10-0.89)x(4.16+4.23)/2	0.88		
		(1.48-1.10)x(4.12+4.16)/2	1.57		
		(2.19-1.48)x(4.07+4.12)/2	2.91		
		(2.39-2.19)x(4.07+4.07)/2	0.81		
		(-15.44-2.39)x(4.10+4.07)/2	-72.84		
				28.98	
173	SP1	(-17.31--17.42)x(4.07+4.03)/2	0.45		
2580.00		(-16.33--17.31)x(4.42+4.07)/2	4.16		
		(-15.78--16.33)x(4.70+4.42)/2	2.51		
		(-15.24--15.78)x(4.96+4.70)/2	2.61		
		(-14.31--15.24)x(5.30+4.96)/2	4.77		
		(-14.15--14.31)x(5.36+5.30)/2	0.85		
		(-14.07--14.15)x(5.37+5.36)/2	0.43		
		(-13.06--14.07)x(5.48+5.37)/2	5.48		
		(-12.36--13.06)x(5.25+5.48)/2	3.76		
		(-11.97--12.36)x(5.11+5.25)/2	2.02		
		(-11.30--11.97)x(4.83+5.11)/2	3.33		
		(-10.88--11.30)x(4.64+4.83)/2	1.99		
		(-10.64--10.88)x(4.54+4.64)/2	1.10		
		(-9.79--10.64)x(4.22+4.54)/2	3.72		
		(-17.42--9.79)x(4.03+4.22)/2	-31.47		
				5.71	
177	SP1	(2.60-2.14)x(3.66+3.63)/2	1.68		
2640.00		(3.32-2.60)x(3.81+3.66)/2	2.69		
		(3.68-3.32)x(3.90+3.81)/2	1.39		
		(4.38-3.68)x(4.18+3.90)/2	2.83		
		(4.76-4.38)x(4.35+4.18)/2	1.62		
		(4.96-4.76)x(4.43+4.35)/2	0.88		
		(5.85-4.96)x(4.87+4.43)/2	4.14		
		(6.28-5.85)x(5.12+4.87)/2	2.15		
		(6.93-6.28)x(5.57+5.12)/2	3.47		
		(7.57-6.93)x(5.83+5.57)/2	3.65		
		(8.01-7.57)x(5.96+5.83)/2	2.59		
		(8.24-8.01)x(5.97+5.96)/2	1.37		
		(9.10-8.24)x(5.98+5.97)/2	5.14		
		(9.88-9.10)x(5.99+5.98)/2	4.67		
		(10.18-9.88)x(5.96+5.99)/2	1.79		
		(10.75-10.18)x(6.13+5.96)/2	3.45		
		(11.26-10.75)x(6.23+6.13)/2	3.15		
		(11.53-11.26)x(6.27+6.23)/2	1.69		
		(12.35-11.53)x(6.31+6.27)/2	5.16		
		(13.17-12.35)x(6.34+6.31)/2	5.19		
		(13.43-13.17)x(6.33+6.34)/2	1.65		
		(13.94-13.43)x(6.34+6.33)/2	3.23		
		(14.51-13.94)x(6.31+6.34)/2	3.61		
		(14.81-14.51)x(6.32+6.31)/2	1.89		
		(15.59-14.81)x(6.32+6.32)/2	4.93		
		(16.45-15.59)x(6.26+6.32)/2	5.41		
		(16.68-16.45)x(6.23+6.26)/2	1.44		
		(17.12-16.68)x(6.24+6.23)/2	2.74		
		(17.60-17.12)x(6.21+6.24)/2	2.99		
		(17.76-17.60)x(6.20+6.21)/2	0.99		
		(18.41-17.76)x(6.15+6.20)/2	4.01		
		(18.84-18.41)x(6.17+6.15)/2	2.65		
		(19.21-18.84)x(6.17+6.17)/2	2.28		
		(19.93-19.21)x(6.26+6.17)/2	4.47		
		(20.02-19.93)x(6.26+6.26)/2	0.56		
		A RIPORTARE mq	101.55		

		CALCOLO DELLE AREE		Foglio n. 115	
SPIANAMENTO					
N. SEZIONE PROG.	FIG.	ELEMENTI DI CALCOLO	AREA ELEMENTARE mq	AREA FIGURA mq	NOTE
		RIPORTO mq	101.55		
		(20.30-20.02)x(6.26+6.26)/2	1.75		
		(21.01-20.30)x(6.22+6.26)/2	4.43		
		(21.37-21.01)x(6.18+6.22)/2	2.23		
		(22.09-21.37)x(6.11+6.18)/2	4.42		
		(23.01-22.09)x(5.85+6.11)/2	5.50		
		(23.18-23.01)x(5.79+5.85)/2	0.99		
		(23.49-23.18)x(5.64+5.79)/2	1.77		
		(24.26-23.49)x(5.26+5.64)/2	4.20		
		(24.87-24.26)x(4.90+5.26)/2	3.10		
		(25.34-24.87)x(4.65+4.90)/2	2.24		
		(26.30-25.34)x(4.19+4.65)/2	4.24		
		(26.42-26.30)x(4.12+4.19)/2	0.50		
		(26.67-26.42)x(4.03+4.12)/2	1.02		
		(27.51-26.67)x(3.80+4.03)/2	3.29		
		(2.14-27.51)x(3.63+3.80)/2	-94.25		
				46.98	
178 2655.00	SP1	(-41.21--42.20)x(4.64+4.53)/2	4.54		
		(-40.74--41.21)x(4.73+4.64)/2	2.20		
		(-40.14--40.74)x(4.84+4.73)/2	2.87		
		(-39.14--40.14)x(5.05+4.84)/2	4.95		
		(-39.06--39.14)x(5.07+5.05)/2	0.40		
		(-38.89--39.06)x(5.11+5.07)/2	0.87		
		(-37.98--38.89)x(5.34+5.11)/2	4.75		
		(-37.54--37.98)x(5.44+5.34)/2	2.37		
		(-36.90--37.54)x(5.57+5.44)/2	3.52		
		(-35.94--36.90)x(5.78+5.57)/2	5.45		
		(-35.82--35.94)x(5.80+5.78)/2	0.69		
		(-35.76--35.82)x(5.81+5.80)/2	0.35		
		(-35.58--35.76)x(5.85+5.81)/2	1.05		
		(-34.95--35.58)x(5.98+5.85)/2	3.73		
		(-34.75--34.95)x(6.01+5.98)/2	1.20		
		(-34.34--34.75)x(6.08+6.01)/2	2.48		
		(-33.67--34.34)x(6.18+6.08)/2	4.11		
		(-32.74--33.67)x(6.33+6.18)/2	5.82		
		(-32.59--32.74)x(6.35+6.33)/2	0.95		
		(-32.27--32.59)x(6.40+6.35)/2	2.04		
		(-31.51--32.27)x(6.50+6.40)/2	4.90		
		(-31.14--31.51)x(6.60+6.50)/2	2.42		
		(-30.43--31.14)x(6.74+6.60)/2	4.74		
		(-29.55--30.43)x(7.19+6.74)/2	6.13		
		(-29.35--29.55)x(7.26+7.19)/2	1.44		
		(-28.96--29.35)x(7.48+7.26)/2	2.87		
		(-28.28--28.96)x(7.87+7.48)/2	5.22		
		(-27.95--28.28)x(8.04+7.87)/2	2.63		
		(-27.20--27.95)x(8.43+8.04)/2	6.18		
		(-26.35--27.20)x(8.71+8.43)/2	7.28		
		(-26.12--26.35)x(8.82+8.71)/2	2.02		
		(-25.64--26.12)x(8.92+8.82)/2	4.26		
		(-25.04--25.64)x(9.01+8.92)/2	5.38		
		(-24.75--25.04)x(9.03+9.01)/2	2.62		
		(-23.96--24.75)x(9.08+9.03)/2	7.15		
		(-23.15--23.96)x(9.10+9.08)/2	7.36		
		(-22.88--23.15)x(9.10+9.10)/2	2.46		
		(-22.33--22.88)x(9.16+9.10)/2	5.02		
		(-21.81--22.33)x(9.23+9.16)/2	4.78		
		(-21.55--21.81)x(9.26+9.23)/2	2.40		
		(-20.73--21.55)x(9.45+9.26)/2	7.67		
		(-19.95--20.73)x(9.41+9.45)/2	7.36		
		(-19.65--19.95)x(9.41+9.41)/2	2.82		
		(-19.02--19.65)x(9.43+9.41)/2	5.93		
		(-18.57--19.02)x(9.40+9.43)/2	4.24		
		(-18.35--18.57)x(9.34+9.40)/2	2.06		
		(-17.49--18.35)x(9.11+9.34)/2	7.93		
		(-17.06--17.49)x(9.01+9.11)/2	3.90		
		(-16.41--17.06)x(8.83+9.01)/2	5.80		
		(-15.71--16.41)x(8.44+8.83)/2	6.04		
		(-15.34--15.71)x(8.22+8.44)/2	3.08		
		(-15.16--15.34)x(8.08+8.22)/2	1.47		
		(-14.26--15.16)x(7.19+8.08)/2	6.87		
		(-13.56--14.26)x(6.10+7.19)/2	4.65		
		(-13.18--13.56)x(5.45+6.10)/2	2.19		
		(-12.40--13.18)x(4.79+5.45)/2	3.99		
		(-12.10--12.40)x(4.56+4.79)/2	1.40		
		(-11.96--12.10)x(4.52+4.56)/2	0.64		
		(-11.02--11.96)x(4.42+4.52)/2	4.20		
		(-42.20--11.02)x(4.53+4.42)/2	-139.53		
				84.31	
179 2670.00	SP1	(4.20-3.60)x(4.18+4.01)/2	2.46		
		(4.67-4.20)x(4.36+4.18)/2	2.01		
		(4.89-4.67)x(4.43+4.36)/2	0.97		
		(5.75-4.89)x(4.69+4.43)/2	3.92		
		(6.44-5.75)x(4.84+4.69)/2	3.29		
		(6.82-6.44)x(4.92+4.84)/2	1.85		
		(7.68-6.82)x(5.12+4.92)/2	4.32		
		(7.89-7.68)x(5.16+5.12)/2	1.08		
		(7.98-7.89)x(5.17+5.16)/2	0.46		
		(8.96-7.98)x(5.33+5.17)/2	5.15		
		(9.53-8.96)x(5.42+5.33)/2	3.06		
		(10.04-9.53)x(5.51+5.42)/2	2.79		
		(11.08-10.04)x(5.50+5.51)/2	5.73		
		(11.11-11.08)x(5.50+5.50)/2	0.16		
		(11.17-11.11)x(5.50+5.50)/2	0.33		
		(12.18-11.17)x(5.31+5.50)/2	5.46		
		(12.63-12.18)x(5.32+5.31)/2	2.39		
		(13.26-12.63)x(5.31+5.32)/2	3.35		
		(14.18-13.26)x(5.32+5.31)/2	4.89		
		(14.33-14.18)x(5.31+5.32)/2	0.80		
		(14.41-14.33)x(5.31+5.31)/2	0.42		
		(14.66-14.41)x(5.31+5.31)/2	1.33		
		(15.23-14.66)x(5.24+5.31)/2	3.01		
		(15.40-15.23)x(5.23+5.24)/2	0.89		
		(15.73-15.40)x(5.20+5.23)/2	1.72		
		(16.47-15.73)x(5.17+5.20)/2	3.84		
		(17.28-16.47)x(5.08+5.17)/2	4.15		
		A RIPORTARE mq	69.83		

		CALCOLO DELLE AREE		Foglio n. 116	
SPIANAMENTO					
N. SEZIONE PROG.	FIG.	ELEMENTI DI CALCOLO	AREA ELEMENTARE mq	AREA FIGURA mq	NOTE
		RIPORTO mq	69.83		
		(17.55-17.28)x(5.08+5.08)/2	1.37		
		(18.14-17.55)x(4.91+5.08)/2	2.95		
		(18.62-18.14)x(4.74+4.91)/2	2.32		
		(18.83-18.62)x(4.66+4.74)/2	0.99		
		(19.69-18.83)x(4.18+4.66)/2	3.80		
		(20.38-19.69)x(3.94+4.18)/2	2.80		
		(20.76-20.38)x(3.77+3.94)/2	1.46		
		(21.63-20.76)x(3.58+3.77)/2	3.20		
		(21.84-21.63)x(3.54+3.58)/2	0.75		
		(21.93-21.84)x(3.54+3.54)/2	0.32		
		(22.17-21.93)x(3.52+3.54)/2	0.85		
		(3.60-22.17)x(4.01+3.52)/2	-69.92		
				20.72	
180	SP1	(-6.03--6.20)x(3.66+3.60)/2	0.62		
2685.00		(-5.13--6.03)x(3.84+3.66)/2	3.38		
		(-4.54--5.13)x(4.12+3.84)/2	2.35		
		(-4.06--4.54)x(4.29+4.12)/2	2.02		
		(-3.05--4.06)x(4.81+4.29)/2	4.60		
		(-3.00--3.05)x(4.83+4.81)/2	0.24		
		(-2.88--3.00)x(4.87+4.83)/2	0.58		
		(-1.93--2.88)x(5.14+4.87)/2	4.75		
		(-1.55--1.93)x(5.21+5.14)/2	1.97		
		(-0.87--1.55)x(5.36+5.21)/2	3.59		
		(-0.06--0.87)x(5.39+5.36)/2	4.35		
		(0.20--0.06)x(5.38+5.39)/2	1.40		
		(0.84-0.20)x(5.31+5.38)/2	3.42		
		(1.27-0.84)x(5.24+5.31)/2	2.27		
		(1.44-1.27)x(5.15+5.24)/2	0.88		
		(2.33-1.44)x(4.74+5.15)/2	4.40		
		(2.93-2.33)x(4.39+4.74)/2	2.74		
		(3.40-2.93)x(4.15+4.39)/2	2.01		
		(4.43-3.40)x(3.77+4.15)/2	4.08		
		(4.47-4.43)x(3.75+3.77)/2	0.15		
		(4.52-4.47)x(3.75+3.75)/2	0.19		
		(-6.20-4.52)x(3.60+3.75)/2	-39.40		
				10.59	
180	SP2	(14.89-14.48)x(3.76+3.72)/2	1.53		
2685.00		(15.13-14.89)x(3.77+3.76)/2	0.90		
		(15.74-15.13)x(3.84+3.77)/2	2.32		
		(16.20-15.74)x(3.88+3.84)/2	1.78		
		(16.38-16.20)x(3.96+3.88)/2	0.71		
		(17.26-16.38)x(4.28+3.96)/2	3.63		
		(17.88-17.26)x(4.65+4.28)/2	2.77		
		(18.33-17.88)x(4.90+4.65)/2	2.15		
		(19.37-18.33)x(5.42+4.90)/2	5.37		
		(19.40-19.37)x(5.43+5.42)/2	0.16		
		(19.47-19.40)x(5.44+5.43)/2	0.38		
		(20.24-19.47)x(5.53+5.44)/2	4.22		
		(20.46-20.24)x(5.56+5.53)/2	1.22		
		(21.07-20.46)x(5.56+5.56)/2	3.39		
		(21.53-21.07)x(5.50+5.56)/2	2.54		
		(21.90-21.53)x(5.48+5.50)/2	2.03		
		(22.60-21.90)x(5.35+5.48)/2	3.79		
		(22.73-22.60)x(5.34+5.35)/2	0.69		
		(23.19-22.73)x(5.28+5.34)/2	2.44		
		(23.66-23.19)x(5.25+5.28)/2	2.47		
		(23.85-23.66)x(5.25+5.25)/2	1.00		
		(24.73-23.85)x(5.30+5.25)/2	4.64		
		(25.35-24.73)x(5.28+5.30)/2	3.28		
		(25.80-25.35)x(5.25+5.28)/2	2.37		
		(26.84-25.80)x(5.44+5.25)/2	5.56		
		(26.86-26.84)x(5.44+5.44)/2	0.11		
		(26.92-26.86)x(5.46+5.44)/2	0.33		
		(27.93-26.92)x(5.84+5.46)/2	5.71		
		(28.34-27.93)x(5.67+5.84)/2	2.36		
		(29.00-28.34)x(5.44+5.67)/2	3.67		
		(29.36-29.00)x(5.22+5.44)/2	1.92		
		(30.06-29.36)x(4.76+5.22)/2	3.49		
		(30.64-30.06)x(4.51+4.76)/2	2.69		
		(31.13-30.64)x(4.33+4.51)/2	2.17		
		(14.48-31.13)x(3.72+4.33)/2	-67.02		
				16.77	
181	SP1	(8.82-8.60)x(3.80+3.79)/2	0.83		
2700.00		(9.46-8.82)x(3.88+3.80)/2	2.46		
		(9.88-9.46)x(3.91+3.88)/2	1.64		
		(10.03-9.88)x(3.93+3.91)/2	0.59		
		(10.94-10.03)x(4.10+3.93)/2	3.65		
		(11.46-10.94)x(4.17+4.10)/2	2.15		
		(12.00-11.46)x(4.27+4.17)/2	2.28		
		(12.90-12.00)x(4.44+4.27)/2	3.92		
		(13.06-12.90)x(4.47+4.44)/2	0.71		
		(13.50-13.06)x(4.52+4.47)/2	1.98		
		(14.12-13.50)x(4.61+4.52)/2	2.83		
		(14.33-14.12)x(4.68+4.61)/2	0.98		
		(15.18-14.33)x(4.80+4.68)/2	4.03		
		(15.77-15.18)x(5.10+4.80)/2	2.92		
		(16.23-15.77)x(5.28+5.10)/2	2.39		
		(17.20-16.23)x(5.93+5.28)/2	5.44		
		(17.29-17.20)x(5.98+5.93)/2	0.54		
		(17.55-17.29)x(6.07+5.98)/2	1.57		
		(18.35-17.55)x(6.29+6.07)/2	4.94		
		(18.64-18.35)x(6.27+6.29)/2	1.82		
		(19.41-18.64)x(6.19+6.27)/2	4.80		
		(20.07-19.41)x(6.20+6.19)/2	4.09		
		(20.47-20.07)x(6.22+6.20)/2	2.48		
		(21.51-20.47)x(6.54+6.22)/2	6.64		
		(21.53-21.51)x(6.55+6.54)/2	0.13		
		(21.60-21.53)x(6.57+6.55)/2	0.46		
		(22.59-21.60)x(6.80+6.57)/2	6.62		
		(22.95-22.59)x(6.65+6.80)/2	2.42		
		(23.65-22.95)x(6.36+6.65)/2	4.55		
		(24.38-23.65)x(5.77+6.36)/2	4.43		
		(24.71-24.38)x(5.49+5.77)/2	1.86		
		(24.91-24.71)x(5.37+5.49)/2	1.09		
		A RIPORTARE mq	87.24		

		CALCOLO DELLE AREE		Foglio n. 117
SPIANAMENTO				
N. SEZIONE PROG.	FIG.	ELEMENTI DI CALCOLO	AREA ELEMENTARE mq	AREA FIGURA mq	NOTE
		RIPORTO mq	87.24		
		(25.65-24.91)x(4.79+5.37)/2	3.76		
		(25.75-25.65)x(4.71+4.79)/2	0.48		
		(25.77-25.75)x(4.69+4.71)/2	0.09		
		(25.82-25.77)x(4.67+4.69)/2	0.23		
		(26.83-25.82)x(4.17+4.67)/2	4.46		
		(8.60-26.83)x(3.79+4.17)/2	-72.56		
				23.70	
182 2715.00	SP1	(8.61-8.21)x(4.07+4.00)/2	1.61		
		(9.26-8.61)x(4.12+4.07)/2	2.66		
		(9.98-9.26)x(4.35+4.12)/2	3.05		
		(10.31-9.98)x(4.46+4.35)/2	1.45		
		(11.36-10.31)x(5.05+4.46)/2	4.99		
		(11.37-11.36)x(5.06+5.05)/2	0.05		
		(11.40-11.37)x(5.08+5.06)/2	0.15		
		(12.42-11.40)x(5.61+5.08)/2	5.45		
		(12.73-12.42)x(5.63+5.61)/2	1.74		
		(13.47-12.73)x(5.70+5.63)/2	4.19		
		(14.11-13.47)x(5.58+5.70)/2	3.61		
		(14.53-14.11)x(5.48+5.58)/2	2.32		
		(15.48-14.53)x(5.32+5.48)/2	5.13		
		(15.58-15.48)x(5.30+5.32)/2	0.53		
		(15.90-15.58)x(5.33+5.30)/2	1.70		
		(16.63-15.90)x(5.42+5.33)/2	3.92		
		(16.86-16.63)x(5.45+5.42)/2	1.25		
		(17.69-16.86)x(5.55+5.45)/2	4.57		
		(18.23-17.69)x(5.68+5.55)/2	3.03		
		(18.74-18.23)x(5.77+5.68)/2	2.92		
		(19.61-18.74)x(5.98+5.77)/2	5.11		
		(19.79-19.61)x(6.03+5.98)/2	1.08		
		(20.40-19.79)x(6.14+6.03)/2	3.71		
		(20.84-20.40)x(6.19+6.14)/2	2.71		
		(21.61-20.84)x(6.10+6.19)/2	4.73		
		(21.90-21.61)x(6.12+6.10)/2	1.77		
		(22.36-21.90)x(6.13+6.12)/2	2.82		
		(22.95-22.36)x(6.10+6.13)/2	3.61		
		(23.73-22.95)x(6.40+6.10)/2	4.88		
		(24.00-23.73)x(6.53+6.40)/2	1.75		
		(24.90-24.00)x(6.86+6.53)/2	6.03		
		(25.06-24.90)x(6.92+6.86)/2	1.10		
		(25.10-25.06)x(6.92+6.92)/2	0.28		
		(26.11-25.10)x(7.07+6.92)/2	7.06		
		(26.48-26.11)x(7.09+7.07)/2	2.62		
		(27.16-26.48)x(7.17+7.09)/2	4.85		
		(27.85-27.16)x(7.12+7.17)/2	4.93		
		(28.22-27.85)x(7.11+7.12)/2	2.63		
		(29.23-28.22)x(7.04+7.11)/2	7.15		
		(29.27-29.23)x(7.04+7.04)/2	0.28		
		(29.39-29.27)x(7.05+7.04)/2	0.85		
		(30.32-29.39)x(7.11+7.05)/2	6.58		
		(30.60-30.32)x(7.04+7.11)/2	1.98		
		(31.37-30.60)x(6.86+7.04)/2	5.35		
		(31.98-31.37)x(6.60+6.86)/2	4.11		
		(32.43-31.98)x(6.41+6.60)/2	2.93		
		(33.35-32.43)x(5.88+6.41)/2	5.65		
		(33.48-33.35)x(5.80+5.88)/2	0.76		
		(33.89-33.48)x(5.47+5.80)/2	2.31		
		(34.53-33.89)x(4.96+5.47)/2	3.34		
		(34.73-34.53)x(4.79+4.96)/2	0.97		
		(35.59-34.73)x(4.10+4.79)/2	3.82		
		(36.10-35.59)x(3.82+4.10)/2	2.02		
		(36.64-36.10)x(3.50+3.82)/2	1.98		
		(8.21-36.64)x(4.00+3.50)/2	-106.61		
				59.46	
183 2730.00	SP1	(9.06-9.00)x(4.02+4.02)/2	0.24		
		(9.29-9.06)x(4.04+4.02)/2	0.93		
		(10.11-9.29)x(4.10+4.04)/2	3.34		
		(10.32-10.11)x(4.11+4.10)/2	0.86		
		(11.15-10.32)x(4.17+4.11)/2	3.44		
		(11.64-11.15)x(4.16+4.17)/2	2.04		
		(12.20-11.64)x(4.14+4.16)/2	2.32		
		(12.95-12.20)x(4.20+4.14)/2	3.13		
		(13.25-12.95)x(4.23+4.20)/2	1.26		
		(14.27-13.25)x(4.36+4.23)/2	4.38		
		(14.29-14.27)x(4.36+4.36)/2	0.09		
		(14.38-14.29)x(4.39+4.36)/2	0.39		
		(15.34-14.38)x(4.67+4.39)/2	4.35		
		(15.59-15.34)x(4.74+4.67)/2	1.18		
		(16.39-15.59)x(5.03+4.74)/2	3.91		
		(16.90-16.39)x(5.26+5.03)/2	2.62		
		(17.43-16.90)x(5.42+5.26)/2	2.83		
		(17.78-17.43)x(5.69+5.42)/2	1.94		
		(18.48-17.78)x(6.06+5.69)/2	4.11		
		(19.47-18.48)x(6.21+6.06)/2	6.07		
		(19.53-19.47)x(6.21+6.21)/2	0.37		
		(19.54-19.53)x(6.22+6.21)/2	0.06		
		(20.57-19.54)x(6.41+6.22)/2	6.50		
		(20.86-20.57)x(6.57+6.41)/2	1.88		
		(21.62-20.86)x(6.81+6.57)/2	5.08		
		(22.17-21.62)x(6.99+6.81)/2	3.80		
		(22.67-22.17)x(7.16+6.99)/2	3.54		
		(23.49-22.67)x(7.23+7.16)/2	5.90		
		(23.71-23.49)x(7.27+7.23)/2	1.60		
		(24.57-23.71)x(7.25+7.27)/2	6.24		
		(24.76-24.57)x(7.24+7.25)/2	1.38		
		(24.81-24.76)x(7.24+7.24)/2	0.36		
		(25.81-24.81)x(7.26+7.24)/2	7.25		
		(26.13-25.81)x(7.27+7.26)/2	2.32		
		(26.85-26.13)x(7.28+7.27)/2	5.24		
		(27.44-26.85)x(7.28+7.28)/2	4.30		
		(27.90-27.44)x(7.29+7.28)/2	3.35		
		(28.76-27.90)x(6.96+7.29)/2	6.13		
		(28.95-28.76)x(6.89+6.96)/2	1.32		
		(29.66-28.95)x(6.22+6.89)/2	4.65		
		(29.99-29.66)x(5.92+6.22)/2	2.00		
		A RIPORTARE mq	122.70		

		CALCOLO DELLE AREE		Foglio n. 118
SPIANAMENTO				
N. SEZIONE PROG.	FIG.	ELEMENTI DI CALCOLO	AREA ELEMENTARE mq	AREA FIGURA mq	NOTE
		RIPORTO mq	122.70		
		(30.08-29.99)x(5.85+5.92)/2	0.53		
		(31.04-30.08)x(5.20+5.85)/2	5.30		
		(31.40-31.04)x(4.92+5.20)/2	1.82		
		(32.09-31.40)x(4.32+4.92)/2	3.19		
		(32.71-32.09)x(3.89+4.32)/2	2.55		
		(33.13-32.71)x(3.59+3.89)/2	1.57		
		(34.03-33.13)x(3.40+3.59)/2	3.15		
		(34.11-34.03)x(3.38+3.40)/2	0.27		
		(9.00-34.11)x(4.02+3.38)/2	-92.91		
				48.17	
184	SP1	(16.09-15.52)x(4.60+4.11)/2	2.48		
2745.00		(16.56-16.09)x(4.93+4.60)/2	2.24		
		(17.35-16.56)x(5.61+4.93)/2	4.16		
		(17.60-17.35)x(5.83+5.61)/2	1.43		
		(18.62-17.60)x(6.66+5.83)/2	6.37		
		(18.64-18.62)x(6.68+6.66)/2	0.13		
		(18.76-18.64)x(6.75+6.68)/2	0.81		
		(19.69-18.76)x(7.32+6.75)/2	6.54		
		(19.89-19.69)x(7.33+7.32)/2	1.46		
		(20.73-19.89)x(7.35+7.33)/2	6.17		
		(21.15-20.73)x(7.34+7.35)/2	3.08		
		(21.77-21.15)x(7.34+7.34)/2	4.55		
		(22.42-21.77)x(7.34+7.34)/2	4.77		
		(22.81-22.42)x(7.32+7.34)/2	2.86		
		(23.68-22.81)x(7.20+7.32)/2	6.32		
		(23.85-23.68)x(7.19+7.20)/2	1.22		
		(24.63-23.85)x(7.19+7.19)/2	5.61		
		(24.89-24.63)x(7.20+7.19)/2	1.87		
		(24.95-24.89)x(7.20+7.20)/2	0.43		
		(25.93-24.95)x(7.13+7.20)/2	7.02		
		(26.21-25.93)x(6.93+7.13)/2	1.97		
		(26.97-26.21)x(6.45+6.93)/2	5.08		
		(27.48-26.97)x(6.13+6.45)/2	3.21		
		(28.02-27.48)x(5.82+6.13)/2	3.23		
		(28.74-28.02)x(5.40+5.82)/2	4.04		
		(29.06-28.74)x(5.23+5.40)/2	1.70		
		(30.01-29.06)x(4.36+5.23)/2	4.56		
		(30.10-30.01)x(4.27+4.36)/2	0.39		
		(30.51-30.10)x(3.96+4.27)/2	1.69		
		(31.14-30.51)x(3.47+3.96)/2	2.34		
		(18.24-31.14)x(4.00+3.47)/2	-48.18		
		(15.52-18.24)x(4.11+4.00)/2	-11.03		
				38.52	
185	SP1	(18.18-18.10)x(3.90+3.90)/2	0.31		
2760.00		(18.19-18.18)x(3.90+3.90)/2	0.04		
		(18.28-18.19)x(3.90+3.90)/2	0.35		
		(19.23-18.28)x(3.97+3.90)/2	3.74		
		(19.40-19.23)x(4.00+3.97)/2	0.68		
		(20.27-19.40)x(4.17+4.00)/2	3.55		
		(20.61-20.27)x(4.31+4.17)/2	1.44		
		(21.30-20.61)x(4.50+4.31)/2	3.04		
		(21.83-21.30)x(4.62+4.50)/2	2.42		
		(22.34-21.83)x(4.72+4.62)/2	2.38		
		(23.05-22.34)x(4.83+4.72)/2	3.39		
		(23.38-23.05)x(4.85+4.83)/2	1.60		
		(24.27-23.38)x(4.76+4.85)/2	4.28		
		(24.41-24.27)x(4.77+4.76)/2	0.67		
		(25.23-24.41)x(4.44+4.77)/2	3.78		
		(25.45-25.23)x(4.36+4.44)/2	0.97		
		(25.49-25.45)x(4.34+4.36)/2	0.17		
		(26.49-25.49)x(4.13+4.34)/2	4.23		
		(26.71-26.49)x(4.04+4.13)/2	0.90		
		(27.52-26.71)x(3.71+4.04)/2	3.14		
		(27.93-27.52)x(3.61+3.71)/2	1.50		
		(28.56-27.93)x(3.48+3.61)/2	2.23		
		(18.10-28.56)x(3.90+3.48)/2	-38.60		
				6.21	
186	SP1	(11.12-10.94)x(4.17+4.13)/2	0.75		
2775.00		(11.97-11.12)x(4.32+4.17)/2	3.61		
		(12.30-11.97)x(4.42+4.32)/2	1.44		
		(13.00-12.30)x(4.59+4.42)/2	3.15		
		(13.47-13.00)x(4.79+4.59)/2	2.20		
		(14.03-13.47)x(5.03+4.79)/2	2.75		
		(14.65-14.03)x(5.34+5.03)/2	3.21		
		(15.07-14.65)x(5.55+5.34)/2	2.29		
		(15.82-15.07)x(6.03+5.55)/2	4.34		
		(16.10-15.82)x(6.20+6.03)/2	1.71		
		(17.00-16.10)x(6.83+6.20)/2	5.86		
		(17.13-17.00)x(6.92+6.83)/2	0.89		
		(18.10-17.13)x(7.19+6.92)/2	6.84		
		(18.17-18.10)x(7.21+7.19)/2	0.50		
		(19.20-18.17)x(7.30+7.21)/2	7.47		
		(19.35-19.20)x(7.30+7.30)/2	1.10		
		(20.23-19.35)x(7.32+7.30)/2	6.43		
		(20.52-20.23)x(7.33+7.32)/2	2.12		
		(21.26-20.52)x(7.33+7.33)/2	5.42		
		(21.70-21.26)x(7.31+7.33)/2	3.22		
		(22.30-21.70)x(7.33+7.31)/2	4.39		
		(22.88-22.30)x(7.27+7.33)/2	4.23		
		(23.33-22.88)x(7.24+7.27)/2	3.26		
		(24.05-23.33)x(6.99+7.24)/2	5.12		
		(24.36-24.05)x(6.87+6.99)/2	2.15		
		(25.23-24.36)x(6.25+6.87)/2	5.71		
		(25.39-25.23)x(6.14+6.25)/2	0.99		
		(26.40-25.39)x(5.29+6.14)/2	5.77		
		(26.43-26.40)x(5.27+5.29)/2	0.16		
		(26.61-26.43)x(5.07+5.27)/2	0.93		
		(27.46-26.61)x(4.14+5.07)/2	3.91		
		(28.29-27.46)x(3.53+4.14)/2	3.18		
		(28.49-28.29)x(3.35+3.53)/2	0.69		
		(18.60-28.49)x(3.79+3.35)/2	-35.31		
		(10.94-18.60)x(4.13+3.79)/2	-30.33		
				40.15	
187	SP1	(9.13-8.26)x(4.38+4.25)/2	3.75		
		A RIPORTARE mq	3.75		

		CALCOLO DELLE AREE		Foglio n. 119
SPIANAMENTO				
N. SEZIONE PROG.	FIG.	ELEMENTI DI CALCOLO	AREA ELEMENTARE mq	AREA FIGURA mq	NOTE
		RIPORTO mq	3.75		
2790.00		(9.29-9.13)x(4.41+4.38)/2	0.70		
		(9.49-9.29)x(4.44+4.41)/2	0.89		
		(10.32-9.49)x(4.58+4.44)/2	3.74		
		(10.62-10.32)x(4.61+4.58)/2	1.38		
		(11.35-10.62)x(4.67+4.61)/2	3.39		
		(11.76-11.35)x(4.77+4.67)/2	1.94		
		(12.38-11.76)x(4.97+4.77)/2	3.02		
		(12.90-12.38)x(5.17+4.97)/2	2.64		
		(13.41-12.90)x(5.37+5.17)/2	2.69		
		(14.03-13.41)x(5.58+5.37)/2	3.39		
		(14.44-14.03)x(5.66+5.58)/2	2.30		
		(15.17-14.44)x(6.39+5.66)/2	4.40		
		(15.47-15.17)x(6.78+6.39)/2	1.98		
		(16.31-15.47)x(7.30+6.78)/2	5.91		
		(16.50-16.31)x(7.38+7.30)/2	1.39		
		(17.44-16.50)x(7.47+7.38)/2	6.98		
		(17.53-17.44)x(7.48+7.47)/2	0.67		
		(18.37-17.53)x(7.43+7.48)/2	6.26		
		(18.56-18.37)x(7.42+7.43)/2	1.41		
		(18.58-18.56)x(7.42+7.42)/2	0.15		
		(19.59-18.58)x(7.34+7.42)/2	7.45		
		(19.72-19.59)x(7.34+7.34)/2	0.95		
		(20.62-19.72)x(7.33+7.34)/2	6.60		
		(20.85-20.62)x(7.33+7.33)/2	1.69		
		(21.65-20.85)x(7.31+7.33)/2	5.86		
		(21.99-21.65)x(7.25+7.31)/2	2.48		
		(22.68-21.99)x(7.11+7.25)/2	4.95		
		(23.12-22.68)x(6.73+7.11)/2	3.04		
		(23.71-23.12)x(6.32+6.73)/2	3.85		
		(24.26-23.71)x(5.85+6.32)/2	3.35		
		(24.74-24.26)x(5.37+5.85)/2	2.69		
		(25.40-24.74)x(5.02+5.37)/2	3.43		
		(25.77-25.40)x(4.88+5.02)/2	1.83		
		(26.07-25.77)x(4.58+4.88)/2	1.42		
		(26.80-26.07)x(3.93+4.58)/2	3.11		
		(27.67-26.80)x(3.36+3.93)/2	3.17		
		(27.83-27.67)x(3.24+3.36)/2	0.53		
		(19.18-27.83)x(3.69+3.24)/2	-29.97		
		(8.26-19.18)x(4.25+3.69)/2	-43.35		
				42.06	
188 2805.00	SP1	(7.77-7.21)x(4.51+4.48)/2	2.52		
		(8.05-7.77)x(4.52+4.51)/2	1.26		
		(8.38-8.05)x(4.55+4.52)/2	1.50		
		(9.08-8.38)x(4.64+4.55)/2	3.22		
		(9.48-9.08)x(4.69+4.64)/2	1.87		
		(10.11-9.48)x(4.76+4.69)/2	2.98		
		(10.59-10.11)x(4.97+4.76)/2	2.34		
		(11.14-10.59)x(5.19+4.97)/2	2.79		
		(11.69-11.14)x(5.51+5.19)/2	2.94		
		(12.17-11.69)x(5.77+5.51)/2	2.71		
		(12.80-12.17)x(6.11+5.77)/2	3.74		
		(13.19-12.80)x(6.29+6.11)/2	2.42		
		(13.90-13.19)x(6.61+6.29)/2	4.58		
		(14.22-13.90)x(6.74+6.61)/2	2.14		
		(15.01-14.22)x(7.07+6.74)/2	5.45		
		(15.25-15.01)x(7.15+7.07)/2	1.71		
		(16.11-15.25)x(7.39+7.15)/2	6.25		
		(16.28-16.11)x(7.46+7.39)/2	1.26		
		(17.22-16.28)x(7.53+7.46)/2	7.05		
		(17.30-17.22)x(7.54+7.53)/2	0.60		
		(18.32-17.30)x(7.48+7.54)/2	7.66		
		(18.33-18.32)x(7.48+7.48)/2	0.07		
		(18.48-18.33)x(7.47+7.48)/2	1.12		
		(19.36-18.48)x(7.39+7.47)/2	6.54		
		(19.43-19.36)x(7.39+7.39)/2	0.52		
		(20.39-19.43)x(7.33+7.39)/2	7.07		
		(20.53-20.39)x(7.31+7.33)/2	1.02		
		(21.42-20.53)x(7.26+7.31)/2	6.48		
		(21.64-21.42)x(7.11+7.26)/2	1.58		
		(22.44-21.64)x(6.63+7.11)/2	5.50		
		(22.74-22.44)x(6.51+6.63)/2	1.97		
		(23.47-22.74)x(6.22+6.51)/2	4.65		
		(23.85-23.47)x(5.73+6.22)/2	2.27		
		(24.50-23.85)x(4.91+5.73)/2	3.46		
		(25.07-24.50)x(4.46+4.91)/2	2.67		
		(25.53-25.07)x(4.12+4.46)/2	1.97		
		(26.06-25.53)x(3.74+4.12)/2	2.08		
		(26.55-26.06)x(3.38+3.74)/2	1.74		
		(27.16-26.55)x(3.31+3.38)/2	2.04		
		(27.58-27.16)x(3.21+3.31)/2	1.37		
		(7.21-27.58)x(4.48+3.21)/2	-78.32		
				42.79	
189 2820.00	SP1	(6.11-5.52)x(4.25+4.23)/2	2.50		
		(6.64-6.11)x(4.27+4.25)/2	2.26		
		(7.14-6.64)x(4.29+4.27)/2	2.14		
		(7.69-7.14)x(4.35+4.29)/2	2.38		
		(8.16-7.69)x(4.38+4.35)/2	2.05		
		(8.77-8.16)x(4.51+4.38)/2	2.71		
		(9.19-8.77)x(4.61+4.51)/2	1.92		
		(9.85-9.19)x(4.93+4.61)/2	3.15		
		(10.22-9.85)x(5.14+4.93)/2	1.86		
		(10.94-10.22)x(5.51+5.14)/2	3.83		
		(11.24-10.94)x(5.71+5.51)/2	1.68		
		(12.02-11.24)x(5.91+5.71)/2	4.53		
		(12.27-12.02)x(5.97+5.91)/2	1.48		
		(13.10-12.27)x(6.21+5.97)/2	5.05		
		(13.30-13.10)x(6.25+6.21)/2	1.25		
		(14.19-13.30)x(6.65+6.25)/2	5.74		
		(14.32-14.19)x(6.71+6.65)/2	0.87		
		(15.27-14.32)x(7.11+6.71)/2	6.56		
		(15.35-15.27)x(7.15+7.11)/2	0.57		
		(16.36-15.35)x(7.39+7.15)/2	7.34		
		(16.38-16.36)x(7.39+7.39)/2	0.15		
		(16.76-16.38)x(7.39+7.39)/2	2.81		
		A RIPORTARE mq	62.83		

		CALCOLO DELLE AREE		Foglio n. 120
SPIANAMENTO				
N. SEZIONE PROG.	FIG.	ELEMENTI DI CALCOLO	AREA ELEMENTARE mq	AREA FIGURA mq	NOTE
		RIPORTO mq	62.83		
		(17.40-16.76)x(7.40+7.39)/2	4.73		
		(17.44-17.40)x(7.40+7.40)/2	0.30		
		(18.43-17.44)x(7.42+7.40)/2	7.34		
		(18.52-18.43)x(7.42+7.42)/2	0.67		
		(19.46-18.52)x(7.41+7.42)/2	6.97		
		(19.61-19.46)x(7.39+7.41)/2	1.11		
		(20.48-19.61)x(7.23+7.39)/2	6.36		
		(20.69-20.48)x(7.08+7.23)/2	1.50		
		(21.51-20.69)x(6.67+7.08)/2	5.64		
		(21.77-21.51)x(6.49+6.67)/2	1.71		
		(22.54-21.77)x(6.07+6.49)/2	4.84		
		(22.86-22.54)x(5.86+6.07)/2	1.91		
		(23.56-22.86)x(5.37+5.86)/2	3.93		
		(24.20-23.56)x(4.76+5.37)/2	3.24		
		(24.59-24.20)x(4.48+4.76)/2	1.80		
		(25.03-24.59)x(4.12+4.48)/2	1.89		
		(25.62-25.03)x(3.65+4.12)/2	2.29		
		(26.11-25.62)x(3.54+3.65)/2	1.76		
		(26.64-26.11)x(3.40+3.54)/2	1.84		
		(5.52-26.64)x(4.23+3.40)/2	-80.57		
				42.09	
190	SP1	(10.49-9.51)x(4.41+4.19)/2	4.21		
2835.00		(10.54-10.49)x(4.42+4.41)/2	0.22		
		(11.52-10.54)x(4.87+4.42)/2	4.55		
		(11.56-11.52)x(4.89+4.87)/2	0.20		
		(12.59-11.56)x(5.47+4.89)/2	5.34		
		(12.63-12.59)x(5.51+5.47)/2	0.22		
		(13.61-12.63)x(6.42+5.51)/2	5.85		
		(13.71-13.61)x(6.48+6.42)/2	0.65		
		(14.64-13.71)x(7.16+6.48)/2	6.34		
		(14.78-14.64)x(7.21+7.16)/2	1.01		
		(15.67-14.78)x(7.43+7.21)/2	6.51		
		(15.85-15.67)x(7.47+7.43)/2	1.34		
		(16.69-15.85)x(7.72+7.47)/2	6.38		
		(16.92-16.69)x(7.70+7.72)/2	1.77		
		(17.72-16.92)x(7.71+7.70)/2	6.16		
		(17.99-17.72)x(7.68+7.71)/2	2.08		
		(18.74-17.99)x(7.62+7.68)/2	5.74		
		(19.06-18.74)x(7.65+7.62)/2	2.44		
		(19.77-19.06)x(7.56+7.65)/2	5.40		
		(20.13-19.77)x(7.46+7.56)/2	2.70		
		(20.80-20.13)x(7.37+7.46)/2	4.97		
		(21.21-20.80)x(7.12+7.37)/2	2.97		
		(21.82-21.21)x(6.80+7.12)/2	4.25		
		(22.28-21.82)x(6.44+6.80)/2	3.05		
		(22.85-22.28)x(5.92+6.44)/2	3.52		
		(23.38-22.85)x(5.42+5.92)/2	3.01		
		(23.88-23.38)x(4.99+5.42)/2	2.60		
		(24.42-23.88)x(4.57+4.99)/2	2.58		
		(24.90-24.42)x(4.20+4.57)/2	2.10		
		(25.49-24.90)x(3.95+4.20)/2	2.40		
		(25.93-25.49)x(3.76+3.95)/2	1.70		
		(9.51-25.93)x(4.19+3.76)/2	-65.27		
				36.99	
191	SP1	(9.17-8.91)x(4.37+4.33)/2	1.13		
2850.00		(9.94-9.17)x(4.51+4.37)/2	3.42		
		(10.24-9.94)x(4.63+4.51)/2	1.37		
		(10.96-10.24)x(4.94+4.63)/2	3.45		
		(11.30-10.96)x(5.14+4.94)/2	1.71		
		(11.99-11.30)x(5.52+5.14)/2	3.68		
		(12.37-11.99)x(5.73+5.52)/2	2.14		
		(13.02-12.37)x(6.01+5.73)/2	3.82		
		(13.44-13.02)x(6.32+6.01)/2	2.59		
		(14.04-13.44)x(6.79+6.32)/2	3.93		
		(14.50-14.04)x(7.16+6.79)/2	3.21		
		(15.07-14.50)x(7.62+7.16)/2	4.21		
		(15.57-15.07)x(7.73+7.62)/2	3.84		
		(16.09-15.57)x(7.88+7.73)/2	4.06		
		(16.64-16.09)x(7.78+7.88)/2	4.31		
		(17.12-16.64)x(7.77+7.78)/2	3.73		
		(17.70-17.12)x(7.78+7.77)/2	4.51		
		(18.15-17.70)x(7.74+7.78)/2	3.49		
		(18.77-18.15)x(7.72+7.74)/2	4.79		
		(19.17-18.77)x(7.72+7.72)/2	3.09		
		(19.84-19.17)x(7.71+7.72)/2	5.17		
		(20.20-19.84)x(7.65+7.71)/2	2.76		
		(20.90-20.20)x(7.51+7.65)/2	5.31		
		(21.22-20.90)x(7.42+7.51)/2	2.39		
		(21.97-21.22)x(6.95+7.42)/2	5.39		
		(22.25-21.97)x(6.82+6.95)/2	1.93		
		(22.51-22.25)x(6.56+6.82)/2	1.74		
		(23.28-22.51)x(5.75+6.56)/2	4.74		
		(24.10-23.28)x(5.13+5.75)/2	4.46		
		(24.30-24.10)x(4.98+5.13)/2	1.01		
		(25.17-24.30)x(4.33+4.98)/2	4.05		
		(25.33-25.17)x(4.19+4.33)/2	0.68		
		(26.24-25.33)x(3.72+4.19)/2	3.60		
		(26.35-26.24)x(3.68+3.72)/2	0.41		
		(8.91-26.35)x(4.33+3.68)/2	-69.85		
				40.27	
192	SP1	(-11.16--11.31)x(4.38+4.37)/2	0.66		
2865.00		(-10.24--11.16)x(4.49+4.38)/2	4.08		
		(-10.14--10.24)x(4.52+4.49)/2	0.45		
		(-9.18--10.14)x(5.14+4.52)/2	4.64		
		(-9.11--9.18)x(5.18+5.14)/2	0.36		
		(-8.11--9.11)x(5.74+5.18)/2	5.46		
		(-8.08--8.11)x(5.76+5.74)/2	0.17		
		(-7.50--8.08)x(5.95+5.76)/2	3.40		
		(-7.06--7.50)x(6.10+5.95)/2	2.65		
		(-7.04--7.06)x(6.10+6.10)/2	0.12		
		(-6.03--7.04)x(6.10+6.10)/2	6.16		
		(-5.97--6.03)x(6.10+6.10)/2	0.37		
		(-5.00--5.97)x(6.10+6.10)/2	5.92		
		(-4.90--5.00)x(6.09+6.10)/2	0.61		
		A RIPORTARE mq	35.05		

		CALCOLO DELLE AREE		Foglio n. 121
SPIANAMENTO				
N. SEZIONE PROG.	FIG.	ELEMENTI DI CALCOLO	AREA ELEMENTARE mq	AREA FIGURA mq	NOTE
		RIPORTO mq	35.05		
		(-3.98--4.90)x(6.07+6.09)/2	5.59		
		(-3.83--3.98)x(6.07+6.07)/2	0.91		
		(-2.95--3.83)x(6.08+6.07)/2	5.35		
		(-2.77--2.95)x(6.08+6.08)/2	1.09		
		(-1.93--2.77)x(6.11+6.08)/2	5.12		
		(-1.70--1.93)x(6.12+6.11)/2	1.41		
		(-0.90--1.70)x(6.16+6.12)/2	4.91		
		(-0.63--0.90)x(6.16+6.16)/2	1.66		
		(0.13--0.63)x(6.18+6.16)/2	4.69		
		(0.44-0.13)x(6.14+6.18)/2	1.91		
		(1.15-0.44)x(6.10+6.14)/2	4.35		
		(1.51-1.15)x(5.96+6.10)/2	2.17		
		(2.18-1.51)x(5.82+5.96)/2	3.95		
		(2.58-2.18)x(5.57+5.82)/2	2.28		
		(3.20-2.58)x(5.20+5.57)/2	3.34		
		(3.64-3.20)x(4.96+5.20)/2	2.24		
		(4.23-3.64)x(4.57+4.96)/2	2.81		
		(4.77-4.23)x(4.37+4.57)/2	2.41		
		(5.26-4.77)x(4.28+4.37)/2	2.12		
		(5.78-5.26)x(4.28+4.28)/2	2.23		
		(6.28-5.78)x(4.26+4.28)/2	2.13		
		(6.85-6.28)x(4.26+4.26)/2	2.43		
		(7.31-6.85)x(4.25+4.26)/2	1.96		
		(7.92-7.31)x(4.24+4.25)/2	2.59		
		(8.33-7.92)x(4.23+4.24)/2	1.74		
		(8.99-8.33)x(4.23+4.23)/2	2.79		
		(9.36-8.99)x(4.22+4.23)/2	1.56		
		(10.05-9.36)x(4.33+4.22)/2	2.95		
		(10.39-10.05)x(4.36+4.33)/2	1.48		
		(11.12-10.39)x(4.64+4.36)/2	3.28		
		(11.41-11.12)x(4.72+4.64)/2	1.36		
		(12.19-11.41)x(5.12+4.72)/2	3.84		
		(12.44-12.19)x(5.23+5.12)/2	1.29		
		(13.26-12.44)x(5.75+5.23)/2	4.50		
		(13.46-13.26)x(5.88+5.75)/2	1.16		
		(14.33-13.46)x(6.46+5.88)/2	5.37		
		(14.49-14.33)x(6.57+6.46)/2	1.04		
		(15.40-14.49)x(7.10+6.57)/2	6.22		
		(15.52-15.40)x(7.17+7.10)/2	0.86		
		(16.46-15.52)x(7.53+7.17)/2	6.91		
		(16.54-16.46)x(7.56+7.53)/2	0.60		
		(17.53-16.54)x(7.77+7.56)/2	7.59		
		(17.57-17.53)x(7.78+7.77)/2	0.31		
		(18.47-17.57)x(7.80+7.78)/2	7.01		
		(18.59-18.47)x(7.80+7.80)/2	0.94		
		(18.60-18.59)x(7.80+7.80)/2	0.08		
		(19.62-18.60)x(7.71+7.80)/2	7.91		
		(19.67-19.62)x(7.71+7.71)/2	0.39		
		(20.65-19.67)x(7.65+7.71)/2	7.53		
		(20.74-20.65)x(7.63+7.65)/2	0.69		
		(21.67-20.74)x(7.49+7.63)/2	7.03		
		(22.54-21.67)x(6.67+7.49)/2	6.16		
		(22.70-22.54)x(6.57+6.67)/2	1.06		
		(22.87-22.70)x(6.45+6.57)/2	1.11		
		(23.73-22.87)x(5.87+6.45)/2	5.30		
		(23.94-23.73)x(5.68+5.87)/2	1.21		
		(24.75-23.94)x(5.00+5.68)/2	4.33		
		(25.01-24.75)x(4.73+5.00)/2	1.26		
		(25.78-25.01)x(4.05+4.73)/2	3.38		
		(26.08-25.78)x(3.98+4.05)/2	1.20		
		(26.80-26.08)x(3.74+3.98)/2	2.78		
		(-11.31-26.80)x(4.37+3.74)/2	-154.54		
				64.38	
193 2880.00	SP1	(-11.68--11.81)x(4.30+4.28)/2	0.56		
		(-10.78--11.68)x(4.37+4.30)/2	3.90		
		(-10.61--10.78)x(4.46+4.37)/2	0.75		
		(-9.76--10.61)x(4.83+4.46)/2	3.95		
		(-9.53--9.76)x(4.98+4.83)/2	1.13		
		(-8.73--9.53)x(5.50+4.98)/2	4.19		
		(-8.45--8.73)x(5.64+5.50)/2	1.56		
		(-7.70--8.45)x(6.06+5.64)/2	4.39		
		(-7.37--7.70)x(6.09+6.06)/2	2.00		
		(-6.68--7.37)x(6.19+6.09)/2	4.24		
		(-6.29--6.68)x(6.18+6.19)/2	2.41		
		(-5.65--6.29)x(6.15+6.18)/2	3.95		
		(-5.21--5.65)x(6.16+6.15)/2	2.71		
		(-4.63--5.21)x(6.16+6.16)/2	3.57		
		(-4.13--4.63)x(6.16+6.16)/2	3.08		
		(-3.60--4.13)x(6.15+6.16)/2	3.26		
		(-3.06--3.60)x(6.16+6.15)/2	3.32		
		(-2.57--3.06)x(6.18+6.16)/2	3.02		
		(-1.98--2.57)x(6.19+6.18)/2	3.65		
		(-1.55--1.98)x(6.20+6.19)/2	2.66		
		(-0.90--1.55)x(6.23+6.20)/2	4.04		
		(-0.52--0.90)x(6.25+6.23)/2	2.37		
		(0.18--0.52)x(6.27+6.25)/2	4.38		
		(0.51-0.18)x(6.29+6.27)/2	2.07		
		(1.26-0.51)x(6.31+6.29)/2	4.72		
		(1.53-1.26)x(6.31+6.31)/2	1.70		
		(2.34-1.53)x(6.29+6.31)/2	5.10		
		(2.56-2.34)x(6.28+6.29)/2	1.38		
		(3.42-2.56)x(5.92+6.28)/2	5.25		
		(3.59-3.42)x(5.84+5.92)/2	1.00		
		(3.74-3.59)x(5.72+5.84)/2	0.87		
		(4.61-3.74)x(5.05+5.72)/2	4.68		
		(5.57-4.61)x(4.54+5.05)/2	4.60		
		(5.64-5.57)x(4.51+4.54)/2	0.32		
		(6.65-5.64)x(4.38+4.51)/2	4.49		
		(6.67-6.65)x(4.38+4.38)/2	0.09		
		(6.97-6.67)x(4.37+4.38)/2	1.31		
		(7.69-6.97)x(4.36+4.37)/2	3.14		
		(7.73-7.69)x(4.36+4.36)/2	0.17		
		(8.72-7.73)x(4.35+4.36)/2	4.31		
		(8.81-8.72)x(4.35+4.35)/2	0.39		
		A RIPORTARE mq	114.68		

		CALCOLO DELLE AREE		Foglio n. 122
SPIANAMENTO				
N. SEZIONE PROG.	FIG.	ELEMENTI DI CALCOLO	AREA ELEMENTARE mq	AREA FIGURA mq	NOTE
		RIPORTO mq	114.68		
		(9.75-8.81)x(4.36+4.35)/2	4.09		
		(9.89-9.75)x(4.36+4.36)/2	0.61		
		(10.77-9.89)x(4.34+4.36)/2	3.83		
		(10.96-10.77)x(4.31+4.34)/2	0.82		
		(11.80-10.96)x(4.23+4.31)/2	3.59		
		(12.04-11.80)x(4.20+4.23)/2	1.01		
		(12.82-12.04)x(4.14+4.20)/2	3.25		
		(13.12-12.82)x(4.22+4.14)/2	1.25		
		(13.85-13.12)x(4.45+4.22)/2	3.16		
		(14.20-13.85)x(4.66+4.45)/2	1.59		
		(14.88-14.20)x(5.10+4.66)/2	3.32		
		(15.28-14.88)x(5.36+5.10)/2	2.09		
		(15.90-15.28)x(5.75+5.36)/2	3.44		
		(16.36-15.90)x(5.98+5.75)/2	2.70		
		(16.93-16.36)x(6.28+5.98)/2	3.49		
		(17.44-16.93)x(6.57+6.28)/2	3.28		
		(17.96-17.44)x(6.86+6.57)/2	3.49		
		(18.51-17.96)x(7.02+6.86)/2	3.82		
		(18.98-18.51)x(7.22+7.02)/2	3.35		
		(19.59-18.98)x(7.18+7.22)/2	4.39		
		(20.01-19.59)x(7.22+7.18)/2	3.02		
		(20.67-20.01)x(7.20+7.22)/2	4.76		
		(21.04-20.67)x(7.19+7.20)/2	2.66		
		(21.37-21.04)x(7.08+7.19)/2	2.35		
		(22.06-21.37)x(6.95+7.08)/2	4.84		
		(22.83-22.06)x(6.58+6.95)/2	5.21		
		(23.09-22.83)x(6.47+6.58)/2	1.70		
		(23.91-23.09)x(5.87+6.47)/2	5.06		
		(24.12-23.91)x(5.73+5.87)/2	1.22		
		(24.99-24.12)x(5.24+5.73)/2	4.77		
		(25.14-24.99)x(5.13+5.24)/2	0.78		
		(26.06-25.14)x(4.52+5.13)/2	4.44		
		(26.17-26.06)x(4.43+4.52)/2	0.49		
		(27.14-26.17)x(3.81+4.43)/2	4.00		
		(27.20-27.14)x(3.77+3.81)/2	0.23		
		(-11.81-27.20)x(4.28+3.77)/2	-157.02		
				59.76	
194 2895.00	SP1	(-8.00--8.56)x(4.39+4.35)/2	2.45		
		(-7.54--8.00)x(4.43+4.39)/2	2.03		
		(-6.90--7.54)x(4.75+4.43)/2	2.94		
		(-6.51--6.90)x(4.96+4.75)/2	1.89		
		(-5.80--6.51)x(5.39+4.96)/2	3.67		
		(-5.48--5.80)x(5.58+5.39)/2	1.76		
		(-4.70--5.48)x(5.99+5.58)/2	4.51		
		(-4.45--4.70)x(6.13+5.99)/2	1.52		
		(-3.60--4.45)x(6.20+6.13)/2	5.24		
		(-3.43--3.60)x(6.21+6.20)/2	1.05		
		(-2.50--3.43)x(5.95+6.21)/2	5.65		
		(-2.40--2.50)x(5.92+5.95)/2	0.59		
		(-1.40--2.40)x(5.93+5.92)/2	5.92		
		(-1.37--1.40)x(5.93+5.93)/2	0.18		
		(-1.01--1.37)x(5.93+5.93)/2	2.13		
		(-0.34--1.01)x(5.94+5.93)/2	3.98		
		(-0.30--0.34)x(5.94+5.94)/2	0.24		
		(0.68--0.30)x(5.90+5.94)/2	5.80		
		(0.81-0.68)x(5.90+5.90)/2	0.77		
		(1.71-0.81)x(5.96+5.90)/2	5.34		
		(1.91-1.71)x(5.96+5.96)/2	1.19		
		(2.74-1.91)x(5.93+5.96)/2	4.93		
		(3.47-2.74)x(5.77+5.93)/2	4.27		
		(3.77-3.47)x(5.69+5.77)/2	1.72		
		(4.11-3.77)x(5.52+5.69)/2	1.91		
		(4.79-4.11)x(5.21+5.52)/2	3.65		
		(5.21-4.79)x(4.97+5.21)/2	2.14		
		(5.82-5.21)x(4.56+4.97)/2	2.91		
		(6.31-5.82)x(4.37+4.56)/2	2.19		
		(6.85-6.31)x(4.19+4.37)/2	2.31		
		(7.41-6.85)x(4.17+4.19)/2	2.34		
		(7.88-7.41)x(4.17+4.17)/2	1.96		
		(8.51-7.88)x(4.16+4.17)/2	2.62		
		(8.90-8.51)x(4.15+4.16)/2	1.62		
		(9.61-8.90)x(4.15+4.15)/2	2.95		
		(9.93-9.61)x(4.15+4.15)/2	1.33		
		(10.72-9.93)x(4.15+4.15)/2	3.28		
		(10.96-10.72)x(4.16+4.15)/2	1.00		
		(11.82-10.96)x(4.15+4.16)/2	3.57		
		(11.99-11.82)x(4.15+4.15)/2	0.71		
		(12.92-11.99)x(4.09+4.15)/2	3.83		
		(13.01-12.92)x(4.08+4.09)/2	0.37		
		(14.02-13.01)x(4.13+4.08)/2	4.15		
		(14.04-14.02)x(4.13+4.13)/2	0.08		
		(14.37-14.04)x(4.15+4.13)/2	1.37		
		(15.07-14.37)x(4.19+4.15)/2	2.92		
		(15.12-15.07)x(4.24+4.19)/2	0.21		
		(16.10-15.12)x(5.06+4.24)/2	4.56		
		(16.22-16.10)x(5.18+5.06)/2	0.61		
		(17.13-16.22)x(6.13+5.18)/2	5.15		
		(17.32-17.13)x(6.28+6.13)/2	1.18		
		(18.15-17.32)x(6.79+6.28)/2	5.42		
		(18.42-18.15)x(6.85+6.79)/2	1.84		
		(19.18-18.42)x(7.26+6.85)/2	5.36		
		(19.84-19.18)x(7.27+7.26)/2	4.79		
		(20.21-19.84)x(7.27+7.27)/2	2.69		
		(20.63-20.21)x(7.22+7.27)/2	3.04		
		(21.24-20.63)x(7.16+7.22)/2	4.39		
		(21.77-21.24)x(7.19+7.16)/2	3.80		
		(22.26-21.77)x(7.18+7.19)/2	3.52		
		(22.73-22.26)x(6.98+7.18)/2	3.33		
		(23.29-22.73)x(6.78+6.98)/2	3.85		
		(23.70-23.29)x(6.41+6.78)/2	2.70		
		(24.32-23.70)x(5.83+6.41)/2	3.79		
		(24.66-24.32)x(5.52+5.83)/2	1.93		
		(25.35-24.66)x(4.87+5.52)/2	3.58		
		(25.62-25.35)x(4.71+4.87)/2	1.29		
		A RIPORTARE mq	186.01		

		CALCOLO DELLE AREE		Foglio n. 123

SPIANAMENTO

N. SEZIONE PROG.	FIG.	ELEMENTI DI CALCOLO	AREA ELEMENTARE mq	AREA FIGURA mq	NOTE
		RIPORTO mq	186.01		
		(26.37-25.62)x(4.08+4.71)/2	3.30		
		(26.59-26.37)x(3.99+4.08)/2	0.89		
		(27.40-26.59)x(3.70+3.99)/2	3.11		
		(27.55-27.40)x(3.67+3.70)/2	0.55		
		(27.66-27.55)x(3.65+3.67)/2	0.40		
		(-8.56-27.66)x(4.35+3.65)/2	-144.88		
				49.38	
195	SP1	(13.63-12.87)x(4.14+4.05)/2	3.11		
2910.00		(13.90-13.63)x(4.17+4.14)/2	1.12		
		(14.77-13.90)x(4.27+4.17)/2	3.67		
		(14.93-14.77)x(4.30+4.27)/2	0.69		
		(15.91-14.93)x(4.84+4.30)/2	4.48		
		(15.96-15.91)x(4.86+4.84)/2	0.24		
		(16.46-15.96)x(5.14+4.86)/2	2.50		
		(16.99-16.46)x(5.43+5.14)/2	2.80		
		(17.05-16.99)x(5.48+5.43)/2	0.33		
		(18.02-17.05)x(6.27+5.48)/2	5.70		
		(18.19-18.02)x(6.37+6.27)/2	1.07		
		(19.05-18.19)x(6.98+6.37)/2	5.74		
		(19.77-19.05)x(7.21+6.98)/2	5.11		
		(20.08-19.77)x(7.28+7.21)/2	2.25		
		(20.46-20.08)x(7.29+7.28)/2	2.77		
		(21.11-20.46)x(7.28+7.29)/2	4.74		
		(21.60-21.11)x(7.22+7.28)/2	3.55		
		(22.14-21.60)x(7.20+7.22)/2	3.89		
		(22.74-22.14)x(6.96+7.20)/2	4.25		
		(23.17-22.74)x(6.84+6.96)/2	2.97		
		(23.87-23.17)x(6.18+6.84)/2	4.56		
		(24.20-23.87)x(5.91+6.18)/2	1.99		
		(25.01-24.20)x(4.99+5.91)/2	4.41		
		(25.23-25.01)x(4.69+4.99)/2	1.06		
		(26.15-25.23)x(4.23+4.69)/2	4.10		
		(26.26-26.15)x(4.17+4.23)/2	0.46		
		(27.29-26.26)x(3.72+4.17)/2	4.06		
		(12.87-27.29)x(4.05+3.72)/2	-56.02		
				25.60	
196	SP1	(10.50-10.19)x(4.19+4.05)/2	1.28		
2925.00		(11.23-10.50)x(4.38+4.19)/2	3.13		
		(11.69-11.23)x(4.66+4.38)/2	2.08		
		(12.26-11.69)x(5.02+4.66)/2	2.76		
		(12.88-12.26)x(5.29+5.02)/2	3.20		
		(13.30-12.88)x(5.49+5.29)/2	2.26		
		(14.08-13.30)x(5.63+5.49)/2	4.34		
		(14.33-14.08)x(5.66+5.63)/2	1.41		
		(15.27-14.33)x(5.27+5.66)/2	5.14		
		(15.36-15.27)x(5.24+5.27)/2	0.47		
		(15.98-15.36)x(5.36+5.24)/2	3.29		
		(16.40-15.98)x(5.44+5.36)/2	2.27		
		(16.46-16.40)x(5.50+5.44)/2	0.33		
		(17.43-16.46)x(6.29+5.50)/2	5.72		
		(18.17-17.43)x(6.54+6.29)/2	4.75		
		(18.47-18.17)x(6.71+6.54)/2	1.99		
		(18.85-18.47)x(6.87+6.71)/2	2.58		
		(19.50-18.85)x(7.23+6.87)/2	4.58		
		(20.04-19.50)x(7.29+7.23)/2	3.92		
		(20.54-20.04)x(7.39+7.29)/2	3.67		
		(21.23-20.54)x(7.43+7.39)/2	5.11		
		(21.57-21.23)x(7.42+7.43)/2	2.52		
		(22.43-21.57)x(7.32+7.42)/2	6.34		
		(22.60-22.43)x(7.32+7.32)/2	1.24		
		(23.62-22.60)x(7.09+7.32)/2	7.35		
		(23.64-23.62)x(7.08+7.09)/2	0.14		
		(23.76-23.64)x(7.00+7.08)/2	0.84		
		(24.67-23.76)x(6.30+7.00)/2	6.05		
		(24.81-24.67)x(6.17+6.30)/2	0.87		
		(25.71-24.81)x(5.45+6.17)/2	5.23		
		(26.01-25.71)x(5.16+5.45)/2	1.59		
		(26.74-26.01)x(4.28+5.16)/2	3.45		
		(27.20-26.74)x(4.07+4.28)/2	1.92		
		(27.78-27.20)x(3.75+4.07)/2	2.27		
		(28.39-27.78)x(3.53+3.75)/2	2.22		
		(28.81-28.39)x(3.42+3.53)/2	1.46		
		(10.19-28.81)x(4.05+3.42)/2	-69.55		
				38.22	
197	SP1	(-16.36--17.08)x(4.98+4.72)/2	3.49		
2940.00		(-16.03--16.36)x(5.08+4.98)/2	1.66		
		(-15.09--16.03)x(5.55+5.08)/2	5.00		
		(-14.99--15.09)x(5.61+5.55)/2	0.56		
		(-14.52--14.99)x(5.81+5.61)/2	2.68		
		(-13.95--14.52)x(6.06+5.81)/2	3.38		
		(-13.83--13.95)x(6.12+6.06)/2	0.73		
		(-12.91--13.83)x(6.29+6.12)/2	5.71		
		(-12.56--12.91)x(6.37+6.29)/2	2.22		
		(-11.87--12.56)x(6.37+6.37)/2	4.40		
		(-11.29--11.87)x(6.42+6.37)/2	3.71		
		(-10.83--11.29)x(6.43+6.42)/2	2.96		
		(-10.02--10.83)x(6.73+6.43)/2	5.33		
		(-9.78--10.02)x(6.76+6.73)/2	1.62		
		(-8.75--9.78)x(7.24+6.76)/2	7.21		
		(-8.74--8.75)x(7.24+7.24)/2	0.07		
		(-8.69--8.74)x(7.23+7.24)/2	0.36		
		(-7.70--8.69)x(6.82+7.23)/2	6.95		
		(-7.49--7.70)x(6.69+6.82)/2	1.42		
		(-6.66--7.49)x(6.27+6.69)/2	5.38		
		(-6.22--6.66)x(5.95+6.27)/2	2.69		
		(-5.62--6.22)x(5.57+5.95)/2	3.46		
		(-4.95--5.62)x(5.19+5.57)/2	3.60		
		(-4.58--4.95)x(5.03+5.19)/2	1.89		
		(-3.68--4.58)x(4.85+5.03)/2	4.45		
		(-3.54--3.68)x(4.84+4.85)/2	0.68		
		(-2.86--3.54)x(4.86+4.84)/2	3.30		
		(-2.49--2.86)x(4.87+4.86)/2	1.80		
		(-1.67--2.49)x(4.90+4.87)/2	4.01		
		(-1.45--1.67)x(4.89+4.90)/2	1.08		
		A RIPORTARE mq	91.80		

		CALCOLO DELLE AREE		Foglio n. 124

SPIANAMENTO

N. SEZIONE PROG.	FIG.	ELEMENTI DI CALCOLO	AREA ELEMENTARE mq	AREA FIGURA mq	NOTE
		RIPORTO mq	91.80		
		(-1.15--1.45)x(4.92+4.89)/2	1.47		
		(-0.41--1.15)x(4.96+4.92)/2	3.66		
		(0.12--0.41)x(5.04+4.96)/2	2.65		
		(0.63-0.12)x(5.05+5.04)/2	2.57		
		(1.39-0.63)x(5.15+5.05)/2	3.88		
		(1.67-1.39)x(5.16+5.15)/2	1.44		
		(2.66-1.67)x(5.16+5.16)/2	5.11		
		(2.71-2.66)x(5.16+5.16)/2	0.26		
		(2.97-2.71)x(5.17+5.16)/2	1.34		
		(3.76-2.97)x(5.17+5.17)/2	4.08		
		(3.93-3.76)x(5.17+5.17)/2	0.88		
		(4.80-3.93)x(5.17+5.17)/2	4.50		
		(5.19-4.80)x(5.15+5.17)/2	2.01		
		(5.84-5.19)x(5.13+5.15)/2	3.34		
		(6.46-5.84)x(5.09+5.13)/2	3.17		
		(6.88-6.46)x(5.09+5.09)/2	2.14		
		(7.73-6.88)x(5.05+5.09)/2	4.31		
		(7.92-7.73)x(5.04+5.05)/2	0.96		
		(8.79-7.92)x(5.02+5.04)/2	4.38		
		(8.96-8.79)x(5.01+5.02)/2	0.85		
		(9.00-8.96)x(5.01+5.01)/2	0.20		
		(10.00-9.00)x(4.95+5.01)/2	4.98		
		(10.27-10.00)x(4.94+4.95)/2	1.34		
		(11.05-10.27)x(4.92+4.94)/2	3.85		
		(11.54-11.05)x(4.93+4.92)/2	2.41		
		(12.09-11.54)x(4.97+4.93)/2	2.72		
		(12.80-12.09)x(4.97+4.97)/2	3.53		
		(13.13-12.80)x(4.97+4.97)/2	1.64		
		(14.07-13.13)x(5.30+4.97)/2	4.83		
		(14.17-14.07)x(5.33+5.30)/2	0.53		
		(14.62-14.17)x(5.60+5.33)/2	2.46		
		(15.12-14.62)x(5.90+5.60)/2	2.88		
		(15.21-15.12)x(5.95+5.90)/2	0.53		
		(15.34-15.21)x(6.02+5.95)/2	0.78		
		(16.25-15.34)x(6.51+6.02)/2	5.70		
		(16.61-16.25)x(6.71+6.51)/2	2.38		
		(17.29-16.61)x(6.99+6.71)/2	4.66		
		(17.88-17.29)x(7.15+6.99)/2	4.17		
		(18.34-17.88)x(7.34+7.15)/2	3.33		
		(19.14-18.34)x(7.32+7.34)/2	5.86		
		(19.38-19.14)x(7.33+7.32)/2	1.76		
		(20.41-19.38)x(7.34+7.33)/2	7.56		
		(20.42-20.41)x(7.34+7.34)/2	0.07		
		(20.45-20.42)x(7.34+7.34)/2	0.22		
		(21.46-20.45)x(7.38+7.34)/2	7.43		
		(21.68-21.46)x(7.36+7.38)/2	1.62		
		(22.50-21.68)x(7.31+7.36)/2	6.01		
		(22.95-22.50)x(7.19+7.31)/2	3.26		
		(23.54-22.95)x(7.05+7.19)/2	4.20		
		(24.22-23.54)x(6.63+7.05)/2	4.65		
		(24.59-24.22)x(6.45+6.63)/2	2.42		
		(25.48-24.59)x(5.77+6.45)/2	5.44		
		(25.63-25.48)x(5.65+5.77)/2	0.86		
		(26.28-25.63)x(4.95+5.65)/2	3.45		
		(26.67-26.28)x(4.55+4.95)/2	1.85		
		(26.75-26.67)x(4.50+4.55)/2	0.36		
		(27.71-26.75)x(3.98+4.50)/2	4.07		
		(28.02-27.71)x(3.84+3.98)/2	1.21		
		(28.75-28.02)x(3.48+3.84)/2	2.67		
		(-17.08-28.75)x(4.72+3.48)/2	-187.90		
				74.79	
198 2955.00	SP1	(-1.55--2.41)x(4.56+4.50)/2	3.90		
		(-1.36--1.55)x(4.57+4.56)/2	0.87		
		(-0.71--1.36)x(4.86+4.57)/2	3.06		
		(-0.31--0.71)x(5.04+4.86)/2	1.98		
		(-0.19--0.31)x(5.07+5.04)/2	0.61		
		(0.74--0.19)x(5.37+5.07)/2	4.85		
		(1.17-0.74)x(5.39+5.37)/2	2.31		
		(1.80-1.17)x(5.43+5.39)/2	3.41		
		(2.52-1.80)x(5.43+5.43)/2	3.91		
		(2.85-2.52)x(5.44+5.43)/2	1.79		
		(3.88-2.85)x(5.42+5.44)/2	5.59		
		(3.90-3.88)x(5.42+5.42)/2	0.11		
		(3.95-3.90)x(5.42+5.42)/2	0.27		
		(4.95-3.95)x(5.41+5.42)/2	5.42		
		(5.24-4.95)x(5.41+5.41)/2	1.57		
		(6.00-5.24)x(5.42+5.41)/2	4.12		
		(6.60-6.00)x(5.44+5.42)/2	3.26		
		(7.05-6.60)x(5.44+5.44)/2	2.45		
		(7.95-7.05)x(5.44+5.44)/2	4.90		
		(8.10-7.95)x(5.44+5.44)/2	0.82		
		(8.61-8.10)x(5.41+5.44)/2	2.77		
		(9.15-8.61)x(5.37+5.41)/2	2.91		
		(9.31-9.15)x(5.36+5.37)/2	0.86		
		(10.20-9.31)x(5.34+5.36)/2	4.76		
		(10.67-10.20)x(5.44+5.34)/2	2.53		
		(11.26-10.67)x(5.52+5.44)/2	3.23		
		(12.03-11.26)x(5.91+5.52)/2	4.40		
		(12.31-12.03)x(6.03+5.91)/2	1.67		
		(12.48-12.31)x(6.19+6.03)/2	1.04		
		(13.27-12.48)x(6.83+6.19)/2	5.14		
		(13.34-13.27)x(6.88+6.83)/2	0.48		
		(13.36-13.34)x(6.90+6.88)/2	0.14		
		(13.38-13.36)x(6.91+6.90)/2	0.14		
		(14.41-13.38)x(7.46+6.91)/2	7.40		
		(14.74-14.41)x(7.47+7.46)/2	2.46		
		(15.46-14.74)x(7.48+7.47)/2	5.38		
		(16.10-15.46)x(7.41+7.48)/2	4.76		
		(16.51-16.10)x(7.34+7.41)/2	3.02		
		(17.45-16.51)x(7.27+7.34)/2	6.87		
		(17.56-17.45)x(7.26+7.27)/2	0.80		
		(17.93-17.56)x(7.26+7.26)/2	2.69		
		(18.61-17.93)x(7.28+7.26)/2	4.94		
		(18.81-18.61)x(7.28+7.28)/2	1.46		
		A RIPORTARE mq	125.05		

	CALCOLO DELLE AREE		Foglio n. 125

SPIANAMENTO

N. SEZIONE PROG.	FIG.	ELEMENTI DI CALCOLO	AREA ELEMENTARE mq	AREA FIGURA mq	NOTE
		RIPORTO mq	125.05		
		(19.66-18.81)x(7.32+7.28)/2	6.21		
		(20.17-19.66)x(7.33+7.32)/2	3.74		
		(20.71-20.17)x(7.35+7.33)/2	3.96		
		(21.53-20.71)x(7.30+7.35)/2	6.01		
		(21.77-21.53)x(7.28+7.30)/2	1.75		
		(22.59-21.77)x(7.06+7.28)/2	5.88		
		(22.82-22.59)x(7.00+7.06)/2	1.62		
		(22.88-22.82)x(6.96+7.00)/2	0.42		
		(23.87-22.88)x(6.48+6.96)/2	6.65		
		(24.24-23.87)x(6.20+6.48)/2	2.35		
		(24.92-24.24)x(5.68+6.20)/2	4.04		
		(25.60-24.92)x(5.08+5.68)/2	3.66		
		(25.97-25.60)x(4.74+5.08)/2	1.82		
		(26.95-25.97)x(4.16+4.74)/2	4.36		
		(27.02-26.95)x(4.11+4.16)/2	0.29		
		(27.25-27.02)x(4.00+4.11)/2	0.93		
		(28.07-27.25)x(3.59+4.00)/2	3.11		
		(28.31-28.07)x(3.54+3.59)/2	0.86		
		(29.12-28.31)x(3.39+3.54)/2	2.81		
		(-2.41-29.12)x(4.50+3.39)/2	-124.39		
				61.13	

Il Direttore dei Lavori	L'Impresa	

	CALCOLO DELLE LUNGHEZZE	Foglio n. 126

USURA

N. SEZIONE PROG.	FIG.	ELEMENTI DI CALCOLO	LUNGHEZZA ELEMENTARE ml	LUNGHEZZA FIGURA ml	NOTE
131	a1	(1.25-1.25)	0.00		
1950.00		(1.75-1.25)	0.50		
		(9.25-1.75)	7.50		
		(11.00-9.25)	1.75		
				9.75	
132	a1	(1.25-1.21)	0.04		
1965.00		(1.75-1.25)	0.50		
		(9.25-1.75)	7.50		
		(11.00-9.25)	1.75		
				9.79	
132	a2	(-1.25--1.21)	0.04		
1965.00		(-1.75--1.25)	0.50		
		(-9.25--1.75)	7.50		
		(-11.00--9.25)	1.75		
				9.79	
133	a1	(1.25-1.21)	0.04		
1980.00		(1.75-1.25)	0.50		
		(9.25-1.75)	7.50		
		(11.00-9.25)	1.75		
				9.79	
133	a2	(-1.25--1.21)	0.04		
1980.00		(-1.75--1.25)	0.50		
		(-9.25--1.75)	7.50		
		(-11.00--9.25)	1.75		
				9.79	
134	a1	(1.25-1.21)	0.04		
1995.00		(1.75-1.25)	0.50		
		(9.25-1.75)	7.50		
		(11.00-9.25)	1.75		
				9.79	
134	a2	(-1.25--1.21)	0.04		
1995.00		(-1.75--1.25)	0.50		
		(-9.25--1.75)	7.50		
		(-11.00--9.25)	1.75		
				9.79	
135	a1	(1.25-1.21)	0.04		
2010.00		(1.75-1.25)	0.50		
		(9.25-1.75)	7.50		
		(11.00-9.25)	1.75		
				9.79	
135	a2	(-1.25--1.21)	0.04		
2010.00		(-1.75--1.25)	0.50		
		(-9.25--1.75)	7.50		
		(-11.00--9.25)	1.75		
				9.79	
136	a1	(1.25-1.21)	0.04		
2025.00		(1.75-1.25)	0.50		
		(9.25-1.75)	7.50		
		(11.00-9.25)	1.75		
				9.79	
136	a2	(-1.25--1.21)	0.04		
2025.00		(-1.75--1.25)	0.50		
		(-9.25--1.75)	7.50		
		(-11.00--9.25)	1.75		
				9.79	
137	a1	(1.25-1.21)	0.04		
2040.00		(1.75-1.25)	0.50		
		(9.25-1.75)	7.50		
		(11.00-9.25)	1.75		
				9.79	
137	a2	(-1.25--1.21)	0.04		
2040.00		(-1.75--1.25)	0.50		
		(-9.25--1.75)	7.50		
		(-11.00--9.25)	1.75		
				9.79	
138	a1	(1.25-1.21)	0.04		
2055.00		(1.75-1.25)	0.50		
		(9.25-1.75)	7.50		
		(11.00-9.25)	1.75		
				9.79	
138	a2	(-1.25--1.21)	0.04		
2055.00		(-1.75--1.25)	0.50		
		(-9.25--1.75)	7.50		
		(-11.00--9.25)	1.75		
				9.79	
139	a1	(1.25-1.21)	0.04		
2070.00		(1.75-1.25)	0.50		
		(9.25-1.75)	7.50		
		(11.00-9.25)	1.75		
				9.79	
139	a2	(-1.25--1.21)	0.04		
2070.00		(-1.75--1.25)	0.50		
		(-9.25--1.75)	7.50		
		(-11.00--9.25)	1.75		
				9.79	
140	a1	(1.25-1.21)	0.04		
2085.00		(1.75-1.25)	0.50		
		(9.25-1.75)	7.50		
		(11.00-9.25)	1.75		
				9.79	
140	a2	(-1.25--1.21)	0.04		
2085.00		(-1.75--1.25)	0.50		
		(-9.25--1.75)	7.50		
		(-11.00--9.25)	1.75		
				9.79	
141	a1	(1.25-1.21)	0.04		
2100.00		(1.75-1.25)	0.50		
		(9.25-1.75)	7.50		
		(11.00-9.25)	1.75		
				9.79	
141	a2	(-1.25--1.21)	0.04		
2100.00		(-1.75--1.25)	0.50		
		(-9.25--1.75)	7.50		
		(-11.00--9.25)	1.75		
				9.79	
142	a1	(-1.25--1.21)	0.04		
		A RIPORTARE ml	0.04		

		CALCOLO DELLE LUNGHEZZE		Foglio n. 127
USURA				
N. SEZIONE PROG.	FIG.	ELEMENTI DI CALCOLO	LUNGHEZZA ELEMENTARE ml	LUNGHEZZA FIGURA ml	NOTE
		RIPORTO ml	0.04		
2115.00		(-1.75--1.25)	0.50		
		(-9.25--1.75)	7.50		
		(-12.70--9.25)	3.45		
				11.49	
142	a2	(1.25-1.21)	0.04		
2115.00		(1.75-1.25)	0.50		
		(10.92-1.75)	9.17		
		(12.70-10.92)	1.78		
				11.49	
143	a1	(-1.25--1.21)	0.04		
2130.00		(-1.75--1.25)	0.50		
		(-9.25--1.75)	7.50		
		(-14.50--9.25)	5.25		
				13.29	
143	a2	(1.25-1.21)	0.04		
2130.00		(1.75-1.25)	0.50		
		(12.75-1.75)	11.00		
		(14.50-12.75)	1.75		
				13.29	
144	a1	(-1.25--1.21)	0.04		
2145.00		(-1.75--1.25)	0.50		
		(-9.25--1.75)	7.50		
		(-14.50--9.25)	5.25		
				13.29	
144	a2	(1.25-1.21)	0.04		
2145.00		(1.75-1.25)	0.50		
		(12.75-1.75)	11.00		
		(14.50-12.75)	1.75		
				13.29	
145	a1	(-1.25--1.21)	0.04		
2160.00		(-1.75--1.25)	0.50		
		(-9.25--1.75)	7.50		
		(-12.80--9.25)	3.55		
				11.59	
145	a2	(1.25-1.21)	0.04		
2160.00		(1.75-1.25)	0.50		
		(11.02-1.75)	9.27		
		(12.80-11.02)	1.78		
				11.59	
146	a1	(-1.25--1.21)	0.04		
2175.00		(-1.75--1.25)	0.50		
		(-9.25--1.75)	7.50		
		(-11.00--9.25)	1.75		
				9.79	
146	a2	(1.25-1.21)	0.04		
2175.00		(1.75-1.25)	0.50		
		(9.25-1.75)	7.50		
		(11.00-9.25)	1.75		
				9.79	
147	a1	(-1.25--1.21)	0.04		
2190.00		(-1.75--1.25)	0.50		
		(-9.25--1.75)	7.50		
		(-11.00--9.25)	1.75		
				9.79	
147	a2	(1.25-1.21)	0.04		
2190.00		(1.75-1.25)	0.50		
		(9.25-1.75)	7.50		
		(11.00-9.25)	1.75		
				9.79	
148	a1	(-1.25--1.21)	0.04		
2205.00		(-1.75--1.25)	0.50		
		(-9.25--1.75)	7.50		
		(-11.00--9.25)	1.75		
				9.79	
148	a2	(1.25-1.21)	0.04		
2205.00		(1.75-1.25)	0.50		
		(9.25-1.75)	7.50		
		(11.00-9.25)	1.75		
				9.79	
149	a1	(-1.25--1.21)	0.04		
2220.00		(-1.75--1.25)	0.50		
		(-9.25--1.75)	7.50		
		(-11.00--9.25)	1.75		
				9.79	
149	a2	(1.25-1.21)	0.04		
2220.00		(1.75-1.25)	0.50		
		(9.25-1.75)	7.50		
		(11.00-9.25)	1.75		
				9.79	
150	a1	(-1.25--1.21)	0.04		
2235.00		(-1.75--1.25)	0.50		
		(-9.25--1.75)	7.50		
		(-11.00--9.25)	1.75		
				9.79	
150	a2	(1.25-1.21)	0.04		
2235.00		(1.75-1.25)	0.50		
		(9.25-1.75)	7.50		
		(11.00-9.25)	1.75		
				9.79	
151	a1	(-1.25--1.21)	0.04		
2250.00		(-1.75--1.25)	0.50		
		(-9.25--1.75)	7.50		
		(-11.00--9.25)	1.75		
				9.79	
151	a2	(1.25-1.21)	0.04		
2250.00		(1.75-1.25)	0.50		
		(9.25-1.75)	7.50		
		(11.00-9.25)	1.75		
				9.79	
152	a1	(-1.25--1.21)	0.04		
2265.00		(-1.75--1.25)	0.50		
		(-9.25--1.75)	7.50		
		(-11.00--9.25)	1.75		
				9.79	
		A RIPORTARE ml			

		CALCOLO DELLE LUNGHEZZE		Foglio n. 128
USURA				
N. SEZIONE PROG.	FIG.	ELEMENTI DI CALCOLO	LUNGHEZZA ELEMENTARE ml	LUNGHEZZA FIGURA ml	NOTE
		RIPORTO ml			
152	a2	(1.25-1.21)	0.04		
2265.00		(1.75-1.25)	0.50		
		(9.25-1.75)	7.50		
		(11.00-9.25)	1.75		
				9.79	
153	a1	(-1.25--1.21)	0.04		
2280.00		(-1.75--1.25)	0.50		
		(-9.25--1.75)	7.50		
		(-11.00--9.25)	1.75		
				9.79	
153	a2	(1.25-1.21)	0.04		
2280.00		(1.75-1.25)	0.50		
		(9.25-1.75)	7.50		
		(11.00-9.25)	1.75		
				9.79	
154	a1	(-1.25--1.21)	0.04		
2295.00		(-1.75--1.25)	0.50		
		(-9.25--1.75)	7.50		
		(-11.00--9.25)	1.75		
				9.79	
154	a2	(1.25-1.21)	0.04		
2295.00		(1.75-1.25)	0.50		
		(9.25-1.75)	7.50		
		(11.00-9.25)	1.75		
				9.79	
155	a1	(1.25-1.21)	0.04		
2310.00		(1.75-1.25)	0.50		
		(9.25-1.75)	7.50		
		(11.00-9.25)	1.75		
				9.79	
155	a2	(-1.25--1.21)	0.04		
2310.00		(-1.75--1.25)	0.50		
		(-9.25--1.75)	7.50		
		(-11.00--9.25)	1.75		
				9.79	
156	a1	(1.25-1.21)	0.04		
2325.00		(1.75-1.25)	0.50		
		(9.25-1.75)	7.50		
		(11.00-9.25)	1.75		
				9.79	
156	a2	(-1.25--1.21)	0.04		
2325.00		(-1.75--1.25)	0.50		
		(-9.25--1.75)	7.50		
		(-11.00--9.25)	1.75		
				9.79	
157	a1	(1.25-1.21)	0.04		
2340.00		(1.75-1.25)	0.50		
		(9.25-1.75)	7.50		
		(11.00-9.25)	1.75		
				9.79	
157	a2	(-1.25--1.21)	0.04		
2340.00		(-1.75--1.25)	0.50		
		(-9.25--1.75)	7.50		
		(-11.00--9.25)	1.75		
				9.79	
158	a1	(-1.25--1.21)	0.04		
2355.00		(-1.75--1.25)	0.50		
		(-9.25--1.75)	7.50		
		(-11.00--9.25)	1.75		
				9.79	
158	a2	(1.25-1.21)	0.04		
2355.00		(1.75-1.25)	0.50		
		(9.25-1.75)	7.50		
		(11.00-9.25)	1.75		
				9.79	
159	a1	(-1.25--1.21)	0.04		
2370.00		(-1.75--1.25)	0.50		
		(-9.25--1.75)	7.50		
		(-11.00--9.25)	1.75		
				9.79	
159	a2	(1.25-1.21)	0.04		
2370.00		(1.75-1.25)	0.50		
		(9.25-1.75)	7.50		
		(11.00-9.25)	1.75		
				9.79	
160	a1	(-1.25--1.21)	0.04		
2385.00		(-1.75--1.25)	0.50		
		(-9.25--1.75)	7.50		
		(-11.00--9.25)	1.75		
				9.79	
160	a2	(1.25-1.21)	0.04		
2385.00		(1.75-1.25)	0.50		
		(9.25-1.75)	7.50		
		(11.00-9.25)	1.75		
				9.79	
161	a1	(-1.25--1.21)	0.04		
2400.00		(-1.75--1.25)	0.50		
		(-9.25--1.75)	7.50		
		(-11.00--9.25)	1.75		
				9.79	
161	a2	(1.25-1.21)	0.04		
2400.00		(1.75-1.25)	0.50		
		(9.25-1.75)	7.50		
		(11.00-9.25)	1.75		
				9.79	
162	a1	(-1.25--1.21)	0.04		
2415.00		(-1.75--1.25)	0.50		
		(-9.25--1.75)	7.50		
		(-11.00--9.25)	1.75		
				9.79	
162	a2	(1.25-1.21)	0.04		
2415.00		(1.75-1.25)	0.50		
		(9.25-1.75)	7.50		
		(11.00-9.25)	1.75		
		A RIPORTARE ml	9.79		

		CALCOLO DELLE LUNGHEZZE		Foglio n. 129	
USURA					
N. SEZIONE PROG.	FIG.	ELEMENTI DI CALCOLO	LUNGHEZZA ELEMENTARE ml	LUNGHEZZA FIGURA ml	NOTE
		RIPORTO ml	9.79		
				9.79	
163	a1	(-1.25--1.21)	0.04		
2430.00		(-1.75--1.25)	0.50		
		(-9.25--1.75)	7.50		
		(-11.00--9.25)	1.75		
				9.79	
163	a2	(1.25-1.21)	0.04		
2430.00		(1.75-1.25)	0.50		
		(9.25-1.75)	7.50		
		(11.00-9.25)	1.75		
				9.79	
164	a1	(-1.25--1.21)	0.04		
2445.00		(-1.75--1.25)	0.50		
		(-9.25--1.75)	7.50		
		(-11.00--9.25)	1.75		
				9.79	
164	a2	(1.25-1.21)	0.04		
2445.00		(1.75-1.25)	0.50		
		(9.25-1.75)	7.50		
		(11.00-9.25)	1.75		
				9.79	
165	a1	(-1.25--1.21)	0.04		
2460.00		(-1.75--1.25)	0.50		
		(-9.25--1.75)	7.50		
		(-11.00--9.25)	1.75		
				9.79	
165	a2	(1.25-1.21)	0.04		
2460.00		(1.75-1.25)	0.50		
		(9.25-1.75)	7.50		
		(11.00-9.25)	1.75		
				9.79	
166	a1	(1.25-1.21)	0.04		
2475.00		(1.75-1.25)	0.50		
		(9.25-1.75)	7.50		
		(11.00-9.25)	1.75		
				9.79	
166	a2	(-1.25--1.21)	0.04		
2475.00		(-1.75--1.25)	0.50		
		(-9.25--1.75)	7.50		
		(-11.00--9.25)	1.75		
				9.79	
167	a1	(1.25-1.21)	0.04		
2490.00		(1.75-1.25)	0.50		
		(9.25-1.75)	7.50		
		(11.00-9.25)	1.75		
				9.79	
167	a2	(-1.25--1.21)	0.04		
2490.00		(-1.75--1.25)	0.50		
		(-9.25--1.75)	7.50		
		(-11.00--9.25)	1.75		
				9.79	
168	a1	(1.25-1.21)	0.04		
2505.00		(1.75-1.25)	0.50		
		(9.25-1.75)	7.50		
		(11.00-9.25)	1.75		
				9.79	
168	a2	(-1.25--1.21)	0.04		
2505.00		(-1.75--1.25)	0.50		
		(-9.25--1.75)	7.50		
		(-11.00--9.25)	1.75		
				9.79	
169	a1	(1.25-1.21)	0.04		
2520.00		(1.75-1.25)	0.50		
		(9.25-1.75)	7.50		
		(11.00-9.25)	1.75		
				9.79	
169	a2	(-1.25--1.21)	0.04		
2520.00		(-1.75--1.25)	0.50		
		(-9.25--1.75)	7.50		
		(-11.00--9.25)	1.75		
				9.79	
170	a1	(1.25-1.21)	0.04		
2535.00		(1.75-1.25)	0.50		
		(9.25-1.75)	7.50		
		(11.00-9.25)	1.75		
				9.79	
170	a2	(-1.25--1.21)	0.04		
2535.00		(-1.75--1.25)	0.50		
		(-9.25--1.75)	7.50		
		(-11.00--9.25)	1.75		
				9.79	
171	a1	(1.25-1.21)	0.04		
2550.00		(1.76-1.25)	0.51		
		(9.26-1.76)	7.50		
		(11.01-9.26)	1.75		
				9.80	
171	a2	(-1.25--1.21)	0.04		
2550.00		(-1.75--1.25)	0.50		
		(-9.25--1.75)	7.50		
		(-11.00--9.25)	1.75		
				9.79	
172	a1	(1.25-1.21)	0.04		
2565.00		(1.76-1.25)	0.51		
		(9.26-1.76)	7.50		
		(11.01-9.26)	1.75		
				9.80	
172	a2	(-1.25--1.21)	0.04		
2565.00		(-1.75--1.25)	0.50		
		(-9.25--1.75)	7.50		
		(-11.00--9.25)	1.75		
				9.79	
173	a1	(1.25-1.21)	0.04		
2580.00		(1.76-1.25)	0.51		
		(9.26-1.76)	7.50		
		A RIPORTARE ml	8.05		

		CALCOLO DELLE LUNGHEZZE		Foglio n. 130	
USURA					
N. SEZIONE PROG.	FIG.	ELEMENTI DI CALCOLO	LUNGHEZZA ELEMENTARE ml	LUNGHEZZA FIGURA ml	NOTE
		RIPORTO ml	8.05		
		(11.01-9.26)	1.75		
				9.80	
173	a2	(-1.25--1.21)	0.04		
2580.00		(-1.75--1.25)	0.50		
		(-9.25--1.75)	7.50		
		(-11.00--9.25)	1.75		
				9.79	
174	a1	(1.25-1.21)	0.04		
2595.00		(1.81-1.25)	0.56		
		(9.31-1.81)	7.50		
		(11.06-9.31)	1.75		
				9.85	
174	a2	(-1.25--1.21)	0.04		
2595.00		(-1.75--1.25)	0.50		
		(-9.25--1.75)	7.50		
		(-11.00--9.25)	1.75		
				9.79	
175	a1	(1.25-1.21)	0.04		
2610.00		(1.93-1.25)	0.68		
		(9.43-1.93)	7.50		
		(11.18-9.43)	1.75		
				9.97	
175	a2	(-1.25--1.21)	0.04		
2610.00		(-1.75--1.25)	0.50		
		(-9.25--1.75)	7.50		
		(-11.00--9.25)	1.75		
				9.79	
176	a1	(1.25-1.21)	0.04		
2625.00		(2.05-1.25)	0.80		
		(9.56-2.05)	7.51		
		(11.31-9.56)	1.75		
				10.10	
176	a2	(-1.25--1.21)	0.04		
2625.00		(-1.75--1.25)	0.50		
		(-9.25--1.75)	7.50		
		(-11.00--9.25)	1.75		
				9.79	
177	a1	(1.25-1.21)	0.04		
2640.00		(2.17-1.25)	0.92		
		(9.67-2.17)	7.50		
		(11.42-9.67)	1.75		
				10.21	
177	a2	(-1.25--1.21)	0.04		
2640.00		(-1.75--1.25)	0.50		
		(-9.25--1.75)	7.50		
		(-11.00--9.25)	1.75		
				9.79	
178	a1	(1.25-1.21)	0.04		
2655.00		(2.29-1.25)	1.04		
		(9.80-2.29)	7.51		
		(11.55-9.80)	1.75		
				10.34	
178	a2	(-1.25--1.21)	0.04		
2655.00		(-1.75--1.25)	0.50		
		(-9.25--1.75)	7.50		
		(-11.00--9.25)	1.75		
				9.79	
179	a1	(1.25-1.21)	0.04		
2670.00		(2.41-1.25)	1.16		
		(9.91-2.41)	7.50		
		(11.66-9.91)	1.75		
				10.45	
179	a2	(-1.25--1.21)	0.04		
2670.00		(-1.75--1.25)	0.50		
		(-9.25--1.75)	7.50		
		(-11.00--9.25)	1.75		
				9.79	
180	a1	(1.25-1.21)	0.04		
2685.00		(2.54-1.25)	1.29		
		(10.04-2.54)	7.50		
		(11.79-10.04)	1.75		
				10.58	
180	a2	(-1.25--1.21)	0.04		
2685.00		(-1.75--1.25)	0.50		
		(-9.25--1.75)	7.50		
		(-11.00--9.25)	1.75		
				9.79	
181	a1	(1.25-1.21)	0.04		
2700.00		(2.66-1.25)	1.41		
		(10.16-2.66)	7.50		
		(11.91-10.16)	1.75		
				10.70	
181	a2	(-1.25--1.21)	0.04		
2700.00		(-1.75--1.25)	0.50		
		(-9.25--1.75)	7.50		
		(-11.00--9.25)	1.75		
				9.79	
182	a1	(1.25-1.21)	0.04		
2715.00		(2.75-1.25)	1.50		
		(10.25-2.75)	7.50		
		(12.00-10.25)	1.75		
				10.79	
182	a2	(-1.25--1.21)	0.04		
2715.00		(-1.75--1.25)	0.50		
		(-9.25--1.75)	7.50		
		(-11.00--9.25)	1.75		
				9.79	
183	a1	(1.25-1.21)	0.04		
2730.00		(2.76-1.25)	1.51		
		(10.26-2.76)	7.50		
		(12.01-10.26)	1.75		
				10.80	
183	a2	(-1.25--1.21)	0.04		
2730.00		(-1.75--1.25)	0.50		
		A RIPORTARE ml	0.54		

		CALCOLO DELLE LUNGHEZZE		Foglio n. 131
USURA				
N. SEZIONE PROG.	FIG.	ELEMENTI DI CALCOLO	LUNGHEZZA ELEMENTARE ml	LUNGHEZZA FIGURA ml	NOTE
		RIPORTO ml	0.54		
		(-9.25--1.75)	7.50		
		(-11.00--9.25)	1.75		
				9.79	
184	a1	(1.25-1.21)	0.04		
2745.00		(2.75-1.25)	1.50		
		(10.25-2.75)	7.50		
		(12.00-10.25)	1.75		
				10.79	
184	a2	(-1.25--1.21)	0.04		
2745.00		(-1.75--1.25)	0.50		
		(-9.25--1.75)	7.50		
		(-11.00--9.25)	1.75		
				9.79	
185	a1	(1.25-1.21)	0.04		
2760.00		(2.76-1.25)	1.51		
		(10.26-2.76)	7.50		
		(12.01-10.26)	1.75		
				10.80	
185	a2	(-1.25--1.21)	0.04		
2760.00		(-1.75--1.25)	0.50		
		(-9.25--1.75)	7.50		
		(-11.00--9.25)	1.75		
				9.79	
186	a1	(1.25-1.21)	0.04		
2775.00		(2.76-1.25)	1.51		
		(10.26-2.76)	7.50		
		(12.01-10.26)	1.75		
				10.80	
186	a2	(-1.25--1.21)	0.04		
2775.00		(-1.75--1.25)	0.50		
		(-9.25--1.75)	7.50		
		(-11.00--9.25)	1.75		
				9.79	
187	a1	(1.25-1.21)	0.04		
2790.00		(2.76-1.25)	1.51		
		(10.26-2.76)	7.50		
		(12.01-10.26)	1.75		
				10.80	
187	a2	(-1.25--1.21)	0.04		
2790.00		(-1.75--1.25)	0.50		
		(-9.25--1.75)	7.50		
		(-11.00--9.25)	1.75		
				9.79	
188	a1	(1.25-1.21)	0.04		
2805.00		(2.52-1.25)	1.27		
		(10.02-2.52)	7.50		
		(11.77-10.02)	1.75		
				10.56	
188	a2	(-1.25--1.21)	0.04		
2805.00		(-1.75--1.25)	0.50		
		(-9.25--1.75)	7.50		
		(-11.00--9.25)	1.75		
				9.79	
189	a1	(1.25-1.21)	0.04		
2820.00		(2.27-1.25)	1.02		
		(9.77-2.27)	7.50		
		(11.52-9.77)	1.75		
				10.31	
189	a2	(-1.25--1.21)	0.04		
2820.00		(-1.75--1.25)	0.50		
		(-9.25--1.75)	7.50		
		(-11.00--9.25)	1.75		
				9.79	
190	a1	(1.25-1.21)	0.04		
2835.00		(2.03-1.25)	0.78		
		(9.53-2.03)	7.50		
		(11.28-9.53)	1.75		
				10.07	
190	a2	(-1.25--1.21)	0.04		
2835.00		(-1.75--1.25)	0.50		
		(-9.25--1.75)	7.50		
		(-11.00--9.25)	1.75		
				9.79	
191	a1	(1.25-1.21)	0.04		
2850.00		(1.78-1.25)	0.53		
		(9.28-1.78)	7.50		
		(11.03-9.28)	1.75		
				9.82	
191	a2	(-1.25--1.21)	0.04		
2850.00		(-1.75--1.25)	0.50		
		(-9.25--1.75)	7.50		
		(-11.00--9.25)	1.75		
				9.79	
192	a1	(1.25-1.21)	0.04		
2865.00		(1.78-1.25)	0.53		
		(9.28-1.78)	7.50		
		(11.03-9.28)	1.75		
				9.82	
192	a2	(-1.25--1.21)	0.04		
2865.00		(-1.75--1.25)	0.50		
		(-9.25--1.75)	7.50		
		(-11.00--9.25)	1.75		
				9.79	
193	a1	(1.25-1.21)	0.04		
2880.00		(1.84-1.25)	0.59		
		(9.34-1.84)	7.50		
		(11.09-9.34)	1.75		
				9.88	
193	a2	(-1.25--1.21)	0.04		
2880.00		(-1.75--1.25)	0.50		
		(-9.25--1.75)	7.50		
		(-11.00--9.25)	1.75		
				9.79	
194	a1	(1.25-1.21)	0.04		
		A RIPORTARE ml	0.04		

	CALCOLO DELLE LUNGHEZZE	Foglio n. 132

USURA

N. SEZIONE PROG.	FIG.	ELEMENTI DI CALCOLO	LUNGHEZZA ELEMENTARE ml	LUNGHEZZA FIGURA ml	NOTE
		RIPORTO ml	0.04		
2895.00		(1.92-1.25)	0.67		
		(9.42-1.92)	7.50		
		(11.17-9.42)	1.75		
				9.96	
194	a2	(-1.25--1.21)	0.04		
2895.00		(-1.75--1.25)	0.50		
		(-9.25--1.75)	7.50		
		(-11.00--9.25)	1.75		
				9.79	
195	a1	(1.25-1.21)	0.04		
2910.00		(1.99-1.25)	0.74		
		(9.49-1.99)	7.50		
		(11.24-9.49)	1.75		
				10.03	
195	a2	(-1.25--1.21)	0.04		
2910.00		(-1.75--1.25)	0.50		
		(-9.25--1.75)	7.50		
		(-11.00--9.25)	1.75		
				9.79	
196	a1	(1.25-1.21)	0.04		
2925.00		(2.03-1.25)	0.78		
		(9.53-2.03)	7.50		
		(11.28-9.53)	1.75		
				10.07	
196	a2	(-1.25--1.21)	0.04		
2925.00		(-1.75--1.25)	0.50		
		(-9.25--1.75)	7.50		
		(-11.00--9.25)	1.75		
				9.79	
197	a1	(1.25-1.21)	0.04		
2940.00		(2.03-1.25)	0.78		
		(9.53-2.03)	7.50		
		(11.28-9.53)	1.75		
				10.07	
197	a2	(-1.25--1.21)	0.04		
2940.00		(-1.75--1.25)	0.50		
		(-9.25--1.75)	7.50		
		(-11.00--9.25)	1.75		
				9.79	
198	a1	(1.25-1.21)	0.04		
2955.00		(2.00-1.25)	0.75		
		(9.50-2.00)	7.50		
		(11.25-9.50)	1.75		
				10.04	
198	a2	(-1.25--1.21)	0.04		
2955.00		(-1.75--1.25)	0.50		
		(-9.25--1.75)	7.50		
		(-11.00--9.25)	1.75		
				9.79	
199	a1	(1.25-1.21)	0.04		
2970.00		(1.98-1.25)	0.73		
		(9.48-1.98)	7.50		
		(11.23-9.48)	1.75		
				10.02	
199	a2	(-1.25--1.21)	0.04		
2970.00		(-1.75--1.25)	0.50		
		(-9.25--1.75)	7.50		
		(-11.00--9.25)	1.75		
				9.79	
200	a1	(1.25-1.21)	0.04		
2985.00		(1.96-1.25)	0.71		
		(9.46-1.96)	7.50		
		(11.21-9.46)	1.75		
				10.00	
200	a2	(-1.25--1.21)	0.04		
2985.00		(-1.75--1.25)	0.50		
		(-9.25--1.75)	7.50		
		(-11.00--9.25)	1.75		
				9.79	
201	a1	(1.25-1.21)	0.04		
3000.00		(1.94-1.25)	0.69		
		(9.44-1.94)	7.50		
		(11.19-9.44)	1.75		
				9.98	
201	a2	(-1.25--1.21)	0.04		
3000.00		(-1.75--1.25)	0.50		
		(-9.25--1.75)	7.50		
		(-11.00--9.25)	1.75		
				9.79	
201b	a1	(1.25-1.21)	0.04		
3005.94		(1.94-1.25)	0.69		
		(9.44-1.94)	7.50		
		(11.19-9.44)	1.75		
				9.98	
201b	a2	(-1.25--1.21)	0.04		
3005.94		(-1.75--1.25)	0.50		
		(-9.25--1.75)	7.50		
		(-11.00--9.25)	1.75		
				9.79	

Il Direttore dei Lavori	L'Impresa	

	CALCOLO DELLE LUNGHEZZE		Foglio n. 133

VEGETALE

N. SEZIONE PROG.	FIG.	ELEMENTI DI CALCOLO	LUNGHEZZA ELEMENTARE ml	LUNGHEZZA FIGURA ml	NOTE
131	b1	(12.70-11.15)	1.55		
1950.00		(23.96-12.70)	11.26		
				12.81	
132	b1	(-12.70--11.15)	1.55		
1965.00		(-21.01--12.70)	8.31		
				9.86	
132	b2	(12.70-11.15)	1.55		
1965.00		(23.69-12.70)	10.99		
				12.54	
133	b1	(-12.70--11.15)	1.55		
1980.00		(-20.25--12.70)	7.55		
				9.10	
133	b2	(12.70-11.15)	1.55		
1980.00		(22.41-12.70)	9.71		
				11.26	
134	b1	(-12.70--11.15)	1.55		
1995.00		(-19.61--12.70)	6.91		
				8.46	
134	b2	(12.70-11.15)	1.55		
1995.00		(22.73-12.70)	10.03		
				11.58	
135	b1	(-12.70--11.15)	1.55		
2010.00		(-19.12--12.70)	6.42		
				7.97	
135	b2	(12.70-11.15)	1.55		
2010.00		(21.90-12.70)	9.20		
				10.75	
136	b1	(-12.70--11.15)	1.55		
2025.00		(-17.89--12.70)	5.19		
				6.74	
136	b2	(12.70-11.15)	1.55		
2025.00		(21.17-12.70)	8.47		
				10.02	
137	b1	(-12.70--11.15)	1.55		
2040.00		(-17.13--12.70)	4.43		
				5.98	
137	b2	(12.70-11.15)	1.55		
2040.00		(19.76-12.70)	7.06		
				8.61	
138	b1	(-12.70--11.15)	1.55		
2055.00		(-16.67--12.70)	3.97		
				5.52	
138	b2	(12.70-11.15)	1.55		
2055.00		(17.57-12.70)	4.87		
				6.42	
139	b1	(-12.70--11.15)	1.55		
2070.00		(-15.49--12.70)	2.79		
				4.34	
139	b2	(12.70-11.15)	1.55		
2070.00		(16.86-12.70)	4.16		
				5.71	
140	b1	(-12.70--11.15)	1.55		
2085.00		(-14.25--12.70)	1.55		
				3.10	
140	b2	(12.70-11.15)	1.55		
2085.00		(15.82-12.70)	3.12		
				4.67	
141	b1	(-12.70--11.15)	1.55		
2100.00		(-13.78--12.70)	1.08		
				2.63	
141	b2	(12.70-11.15)	1.55		
2100.00		(15.29-12.70)	2.59		
				4.14	
142	b2	(-14.40--12.85)	1.55		
2115.00		(-15.18--14.40)	0.78		
				2.33	
142	b1	(14.40-12.85)	1.55		
2115.00		(16.29-14.40)	1.89		
				3.44	
143	b1	(-16.20--14.65)	1.55		
2130.00		(-18.74--16.20)	2.54		
				4.09	
143	b2	(16.20-14.65)	1.55		
2130.00		(17.54-16.20)	1.34		
				2.89	
144	b1	(-16.20--14.65)	1.55		
2145.00		(-18.32--16.20)	2.12		
				3.67	
144	b2	(16.20-14.65)	1.55		
2145.00		(16.94-16.20)	0.74		
				2.29	
145	b1	(-14.50--12.95)	1.55		
2160.00		(-16.41--14.50)	1.91		
				3.46	
145	b2	(14.50-12.95)	1.55		
2160.00		(15.09-14.50)	0.59		
				2.14	
146	b1	(-12.70--11.15)	1.55		
2175.00		(-14.62--12.70)	1.92		
				3.47	
146	b2	(12.70-11.15)	1.55		
2175.00		(12.82-12.70)	0.12		
				1.67	
147	b1	(-12.70--11.15)	1.55		
2190.00		(-14.39--12.70)	1.69		
				3.24	
147	b2	(12.70-11.15)	1.55		
2190.00		(12.81-12.70)	0.11		
				1.66	
148	b2	(-12.70--11.15)	1.55		
2205.00		(-14.54--12.70)	1.84		
				3.39	
148	b1	(12.70-11.15)	1.55		
2205.00		(12.80-12.70)	0.10		
				1.65	
149	b2	(-12.70--11.15)	1.55		
		A RIPORTARE ml	1.55		

		CALCOLO DELLE LUNGHEZZE		Foglio n. 134
VEGETALE				
N. SEZIONE PROG.	FIG.	ELEMENTI DI CALCOLO	LUNGHEZZA ELEMENTARE ml	LUNGHEZZA FIGURA ml	NOTE
		RIPORTO ml	1.55		
2220.00		(-14.65--12.70)	1.95		
				3.50	
149	b1	(12.70-11.15)	1.55		
2220.00		(12.86-12.70)	0.16		
				1.71	
150	b1	(-12.70--11.15)	1.55		
2235.00		(-14.91--12.70)	2.21		
				3.76	
150	b2	(12.70-11.15)	1.55		
2235.00		(12.96-12.70)	0.26		
				1.81	
151	b2	(-12.70--11.15)	1.55		
2250.00		(-12.83--12.70)	0.13		
				1.68	
151	b1	(12.70-11.15)	1.55		
2250.00		(13.14-12.70)	0.44		
				1.99	
152	b2	(-12.70--11.15)	1.55		
2265.00		(-13.34--12.70)	0.64		
				2.19	
152	b1	(12.70-11.15)	1.55		
2265.00		(13.33-12.70)	0.63		
				2.18	
153	b2	(-12.70--11.15)	1.55		
2280.00		(-12.97--12.70)	0.27		
				1.82	
153	b1	(12.70-11.15)	1.55		
2280.00		(13.26-12.70)	0.56		
				2.11	
154	b2	(-12.70--11.15)	1.55		
2295.00		(-13.01--12.70)	0.31		
				1.86	
154	b1	(12.70-11.15)	1.55		
2295.00		(14.24-12.70)	1.54		
				3.09	
155	b1	(-12.70--11.15)	1.55		
2310.00		(-13.01--12.70)	0.31		
				1.86	
155	b2	(12.70-11.15)	1.55		
2310.00		(13.83-12.70)	1.13		
				2.68	
156	b1	(-12.70--11.15)	1.55		
2325.00		(-13.39--12.70)	0.69		
				2.24	
156	b2	(12.70-11.15)	1.55		
2325.00		(13.89-12.70)	1.19		
				2.74	
157	b1	(-12.70--11.15)	1.55		
2340.00		(-13.55--12.70)	0.85		
				2.40	
157	b2	(12.70-11.15)	1.55		
2340.00		(14.00-12.70)	1.30		
				2.85	
158	b2	(-12.70--11.15)	1.55		
2355.00		(-13.54--12.70)	0.84		
				2.39	
158	b1	(12.70-11.15)	1.55		
2355.00		(14.26-12.70)	1.56		
				3.11	
159	b2	(-12.70--11.15)	1.55		
2370.00		(-14.14--12.70)	1.44		
				2.99	
159	b1	(12.70-11.15)	1.55		
2370.00		(14.33-12.70)	1.63		
				3.18	
160	b2	(-12.70--11.15)	1.55		
2385.00		(-14.21--12.70)	1.51		
				3.06	
160	b1	(12.70-11.15)	1.55		
2385.00		(14.32-12.70)	1.62		
				3.17	
161	b2	(-12.70--11.15)	1.55		
2400.00		(-14.14--12.70)	1.44		
				2.99	
161	b1	(12.70-11.15)	1.55		
2400.00		(14.30-12.70)	1.60		
				3.15	
162	b2	(-12.70--11.15)	1.55		
2415.00		(-14.24--12.70)	1.54		
				3.09	
162	b1	(12.70-11.15)	1.55		
2415.00		(14.59-12.70)	1.89		
				3.44	
163	b2	(-12.70--11.15)	1.55		
2430.00		(-14.17--12.70)	1.47		
				3.02	
163	b1	(12.70-11.15)	1.55		
2430.00		(14.25-12.70)	1.55		
				3.10	
164	b2	(-12.70--11.15)	1.55		
2445.00		(-14.38--12.70)	1.68		
				3.23	
164	b1	(12.70-11.15)	1.55		
2445.00		(14.30-12.70)	1.60		
				3.15	
165	b2	(-12.70--11.15)	1.55		
2460.00		(-14.23--12.70)	1.53		
				3.08	
165	b1	(12.70-11.15)	1.55		
2460.00		(14.57-12.70)	1.87		
				3.42	
166	b1	(-12.70--11.15)	1.55		
2475.00		(-14.27--12.70)	1.57		
				3.12	
		A RIPORTARE ml			

		CALCOLO DELLE LUNGHEZZE		Foglio n. 135
VEGETALE				
N. SEZIONE PROG.	FIG.	ELEMENTI DI CALCOLO	LUNGHEZZA ELEMENTARE ml	LUNGHEZZA FIGURA ml	NOTE
		RIPORTO ml			
166 2475.00	b2	(12.70-11.16) (14.76-12.70)	1.54 2.06	3.60	
167 2490.00	b1	(-12.70--11.15) (-14.53--12.70)	1.55 1.83	3.38	
167 2490.00	b2	(12.70-11.16) (15.02-12.70)	1.54 2.32	3.86	
168 2505.00	b1	(-12.70--11.15) (-14.67--12.70)	1.55 1.97	3.52	
168 2505.00	b2	(12.70-11.16) (15.19-12.70)	1.54 2.49	4.03	
169 2520.00	b1	(-12.70--11.15) (-14.68--12.70)	1.55 1.98	3.53	
169 2520.00	b2	(12.70-11.16) (15.07-12.70)	1.54 2.37	3.91	
170 2535.00	b1	(-12.70--11.15) (-14.96--12.70)	1.55 2.26	3.81	
170 2535.00	b2	(12.70-11.16) (14.97-12.70)	1.54 2.27	3.81	
171 2550.00	b1	(-12.70--11.15) (-14.86--12.70)	1.55 2.16	3.71	
171 2550.00	b2	(12.70-11.16) (15.00-12.70)	1.54 2.30	3.84	
172 2565.00	b1	(-12.70--11.15) (-15.04--12.70)	1.55 2.34	3.89	
172 2565.00	b2	(12.71-11.16) (15.33-12.71)	1.55 2.62	4.17	
173 2580.00	b1	(-12.70--11.15) (-15.11--12.70)	1.55 2.41	3.96	
173 2580.00	b2	(12.71-11.16) (15.04-12.71)	1.55 2.33	3.88	
174 2595.00	b1	(-12.70--11.15) (-14.98--12.70)	1.55 2.28	3.83	
174 2595.00	b2	(12.76-11.22) (15.45-12.76)	1.54 2.69	4.23	
175 2610.00	b1	(-12.70--11.15) (-15.44--12.70)	1.55 2.74	4.29	
175 2610.00	b2	(12.88-11.34) (15.52-12.88)	1.54 2.64	4.18	
176 2625.00	b1	(-12.70--11.15) (-15.32--12.70)	1.55 2.62	4.17	
176 2625.00	b2	(13.00-11.46) (16.45-13.00)	1.54 3.45	4.99	
177 2640.00	b2	(-12.70--11.15) (-15.58--12.70)	1.55 2.88	4.43	
177 2640.00	b1	(13.12-11.58) (17.02-13.12)	1.54 3.90	5.44	
178 2655.00	b1	(-12.70--11.15) (-14.47--12.70)	1.55 1.77	3.32	
178 2655.00	b2	(13.24-11.70) (18.75-13.24)	1.54 5.51	7.05	
179 2670.00	b1	(-12.70--11.15) (-14.53--12.70)	1.55 1.83	3.38	
179 2670.00	b2	(13.36-11.82) (17.79-13.36)	1.54 4.43	5.97	
180 2685.00	b1	(-12.70--11.15) (-15.53--12.70)	1.55 2.83	4.38	
180 2685.00	b2	(13.49-11.94) (17.79-13.49)	1.55 4.30	5.85	
181 2700.00	b1	(-12.70--11.15) (-14.88--12.70)	1.55 2.18	3.73	
181 2700.00	b2	(13.61-12.06) (17.90-13.61)	1.55 4.29	5.84	
182 2715.00	b1	(-12.70--11.15) (-15.04--12.70)	1.55 2.34	3.89	
182 2715.00	b2	(13.70-12.15) (18.43-13.70)	1.55 4.73	6.28	
183 2730.00	b1	(-12.70--11.15) (-15.01--12.70)	1.55 2.31	3.86	
183 2730.00	b2	(13.71-12.16) (18.57-13.71)	1.55 4.86		
		A RIPORTARE ml	6.41		

	CALCOLO DELLE LUNGHEZZE		Foglio n. 136

VEGETALE

N. SEZIONE PROG.	FIG.	ELEMENTI DI CALCOLO	LUNGHEZZA ELEMENTARE ml	LUNGHEZZA FIGURA ml	NOTE
		RIPORTO ml	6.41		
				6.41	
184	b1	(-12.70--11.15)	1.55		
2745.00		(-15.04--12.70)	2.34		
				3.89	
184	b2	(13.70-12.16)	1.54		
2745.00		(18.41-13.70)	4.71		
				6.25	
185	b1	(-12.70--11.15)	1.55		
2760.00		(-15.20--12.70)	2.50		
				4.05	
185	b2	(13.71-12.16)	1.55		
2760.00		(18.85-13.71)	5.14		
				6.69	
186	b1	(-12.70--11.15)	1.55		
2775.00		(-15.49--12.70)	2.79		
				4.34	
186	b2	(13.71-12.16)	1.55		
2775.00		(19.35-13.71)	5.64		
				7.19	
187	b1	(-12.70--11.15)	1.55		
2790.00		(-15.87--12.70)	3.17		
				4.72	
187	b2	(13.71-12.17)	1.54		
2790.00		(19.93-13.71)	6.22		
				7.76	
188	b1	(-12.70--11.15)	1.55		
2805.00		(-16.46--12.70)	3.76		
				5.31	
188	b2	(13.47-11.92)	1.55		
2805.00		(19.71-13.47)	6.24		
				7.79	
189	b1	(-12.70--11.15)	1.55		
2820.00		(-17.10--12.70)	4.40		
				5.95	
189	b2	(13.22-11.68)	1.54		
2820.00		(19.72-13.22)	6.50		
				8.04	
190	b1	(-12.70--11.15)	1.55		
2835.00		(-17.80--12.70)	5.10		
				6.65	
190	b2	(12.98-11.33)	1.65		
2835.00		(19.29-12.98)	6.31		
				7.96	
191	b1	(-12.70--11.15)	1.55		
2850.00		(-18.54--12.70)	5.84		
				7.39	
191	b2	(12.73-11.19)	1.54		
2850.00		(19.28-12.73)	6.55		
				8.09	
192	b1	(-12.70--11.15)	1.55		
2865.00		(-19.36--12.70)	6.66		
				8.21	
192	b2	(12.73-11.18)	1.55		
2865.00		(19.92-12.73)	7.19		
				8.74	
193	b1	(-12.70--11.15)	1.55		
2880.00		(-20.30--12.70)	7.60		
				9.15	
193	b2	(12.79-11.24)	1.55		
2880.00		(20.37-12.79)	7.58		
				9.13	
194	b1	(-12.70--11.15)	1.55		
2895.00		(-21.06--12.70)	8.36		
				9.91	
194	b2	(12.87-11.32)	1.55		
2895.00		(20.89-12.87)	8.02		
				9.57	
195	b1	(-12.70--11.15)	1.55		
2910.00		(-21.51--12.70)	8.81		
				10.36	
195	b2	(12.94-11.39)	1.55		
2910.00		(21.09-12.94)	8.15		
				9.70	
196	b1	(-12.70--11.15)	1.55		
2925.00		(-21.65--12.70)	8.95		
				10.50	
196	b2	(12.98-11.43)	1.55		
2925.00		(21.60-12.98)	8.62		
				10.17	
197	b1	(-12.70--11.15)	1.55		
2940.00		(-22.01--12.70)	9.31		
				10.86	
197	b2	(12.98-11.43)	1.55		
2940.00		(21.78-12.98)	8.80		
				10.35	
198	b1	(-12.70--11.15)	1.55		
2955.00		(-21.82--12.70)	9.12		
				10.67	
198	b2	(12.95-11.40)	1.55		
2955.00		(21.94-12.95)	8.99		
				10.54	
199	b1	(-12.70--11.15)	1.55		
2970.00		(-22.23--12.70)	9.53		
				11.08	
200	b1	(-12.70--11.15)	1.55		
2985.00		(-22.15--12.70)	9.45		
				11.00	
201	b1	(-12.70--11.15)	1.55		
3000.00		(-22.51--12.70)	9.81		
				11.36	
201b	b1	(-12.70--11.15)	1.55		
3005.94		(-22.51--12.70)	9.81		
				11.36	

Il Direttore dei Lavori	L'Impresa	

	CALCOLO DELLE LUNGHEZZE		Foglio n. 137

BINDER

N. SEZIONE PROG.	FIG.	ELEMENTI DI CALCOLO	LUNGHEZZA ELEMENTARE ml	LUNGHEZZA FIGURA ml	NOTE
131	c1	(1.75-1.25)	0.50		
1950.00		(11.00-1.75)	9.25		
				9.75	
132	c1	(-1.21--1.05)	0.16		
1965.00		(-1.75--1.21)	0.54		
		(-11.00--1.75)	9.25		
				9.95	
132	c2	(1.21-1.05)	0.16		
1965.00		(1.75-1.21)	0.54		
		(11.00-1.75)	9.25		
				9.95	
133	c1	(-1.21--1.05)	0.16		
1980.00		(-1.75--1.21)	0.54		
		(-11.00--1.75)	9.25		
				9.95	
133	c2	(1.21-1.05)	0.16		
1980.00		(1.75-1.21)	0.54		
		(11.00-1.75)	9.25		
				9.95	
134	c1	(-1.21--1.05)	0.16		
1995.00		(-1.75--1.21)	0.54		
		(-11.00--1.75)	9.25		
				9.95	
134	c2	(1.21-1.05)	0.16		
1995.00		(1.75-1.21)	0.54		
		(11.00-1.75)	9.25		
				9.95	
135	c1	(-1.21--1.05)	0.16		
2010.00		(-1.75--1.21)	0.54		
		(-11.00--1.75)	9.25		
				9.95	
135	c2	(1.21-1.05)	0.16		
2010.00		(1.75-1.21)	0.54		
		(11.00-1.75)	9.25		
				9.95	
136	c1	(-1.21--1.05)	0.16		
2025.00		(-1.75--1.21)	0.54		
		(-11.00--1.75)	9.25		
				9.95	
136	c2	(1.21-1.05)	0.16		
2025.00		(1.75-1.21)	0.54		
		(11.00-1.75)	9.25		
				9.95	
137	c1	(-1.21--1.05)	0.16		
2040.00		(-1.75--1.21)	0.54		
		(-11.00--1.75)	9.25		
				9.95	
137	c2	(1.21-1.05)	0.16		
2040.00		(1.75-1.21)	0.54		
		(11.00-1.75)	9.25		
				9.95	
138	c1	(-1.21--1.05)	0.16		
2055.00		(-1.75--1.21)	0.54		
		(-11.00--1.75)	9.25		
				9.95	
138	c2	(1.21-1.05)	0.16		
2055.00		(1.75-1.21)	0.54		
		(11.00-1.75)	9.25		
				9.95	
139	c1	(-1.21--1.05)	0.16		
2070.00		(-1.75--1.21)	0.54		
		(-11.00--1.75)	9.25		
				9.95	
139	c2	(1.21-1.05)	0.16		
2070.00		(1.75-1.21)	0.54		
		(11.00-1.75)	9.25		
				9.95	
140	c1	(-1.21--1.05)	0.16		
2085.00		(-1.75--1.21)	0.54		
		(-11.00--1.75)	9.25		
				9.95	
140	c2	(1.21-1.05)	0.16		
2085.00		(1.75-1.21)	0.54		
		(11.00-1.75)	9.25		
				9.95	
141	c1	(-1.21--1.05)	0.16		
2100.00		(-1.75--1.21)	0.54		
		(-11.00--1.75)	9.25		
				9.95	
141	c2	(1.21-1.05)	0.16		
2100.00		(1.75-1.21)	0.54		
		(11.00-1.75)	9.25		
				9.95	
142	c1	(1.21-1.05)	0.16		
2115.00		(1.75-1.21)	0.54		
		(12.70-1.75)	10.95		
				11.65	
142	c2	(-1.21--1.05)	0.16		
2115.00		(-1.75--1.21)	0.54		
		(-12.70--1.75)	10.95		
				11.65	
143	c1	(1.21-1.05)	0.16		
2130.00		(1.75-1.21)	0.54		
		(14.50-1.75)	12.75		
				13.45	
143	c2	(-1.21--1.05)	0.16		
2130.00		(-1.75--1.21)	0.54		
		(-14.50--1.75)	12.75		
				13.45	
144	c1	(1.21-1.05)	0.16		
2145.00		(1.75-1.21)	0.54		
		(14.50-1.75)	12.75		
				13.45	
144	c2	(-1.21--1.05)	0.16		
2145.00		(-1.75--1.21)	0.54		
		(-14.50--1.75)	12.75		
		A RIPORTARE ml	13.45		

	CALCOLO DELLE LUNGHEZZE	Foglio n. 138

BINDER

N. SEZIONE PROG.	FIG.	ELEMENTI DI CALCOLO	LUNGHEZZA ELEMENTARE ml	LUNGHEZZA FIGURA ml	NOTE
		RIPORTO ml	13.45		
				13.45	
145	c1	(1.21-1.05)	0.16		
2160.00		(1.75-1.21)	0.54		
		(12.80-1.75)	11.05		
				11.75	
145	c2	(-1.21--1.05)	0.16		
2160.00		(-1.75--1.21)	0.54		
		(-12.80--1.75)	11.05		
				11.75	
146	c1	(1.21-1.05)	0.16		
2175.00		(1.75-1.21)	0.54		
		(11.00-1.75)	9.25		
				9.95	
146	c2	(-1.21--1.05)	0.16		
2175.00		(-1.75--1.21)	0.54		
		(-11.00--1.75)	9.25		
				9.95	
147	c1	(1.21-1.05)	0.16		
2190.00		(1.75-1.21)	0.54		
		(11.00-1.75)	9.25		
				9.95	
147	c2	(-1.21--1.05)	0.16		
2190.00		(-1.75--1.21)	0.54		
		(-11.00--1.75)	9.25		
				9.95	
148	c1	(1.21-1.05)	0.16		
2205.00		(1.75-1.21)	0.54		
		(11.00-1.75)	9.25		
				9.95	
148	c2	(-1.21--1.05)	0.16		
2205.00		(-1.75--1.21)	0.54		
		(-11.00--1.75)	9.25		
				9.95	
149	c1	(1.21-1.05)	0.16		
2220.00		(1.75-1.21)	0.54		
		(11.00-1.75)	9.25		
				9.95	
149	c2	(-1.21--1.05)	0.16		
2220.00		(-1.75--1.21)	0.54		
		(-11.00--1.75)	9.25		
				9.95	
150	c1	(1.21-1.05)	0.16		
2235.00		(1.75-1.21)	0.54		
		(11.00-1.75)	9.25		
				9.95	
150	c2	(-1.21--1.05)	0.16		
2235.00		(-1.75--1.21)	0.54		
		(-11.00--1.75)	9.25		
				9.95	
151	c1	(1.21-1.05)	0.16		
2250.00		(1.75-1.21)	0.54		
		(11.00-1.75)	9.25		
				9.95	
151	c2	(-1.21--1.05)	0.16		
2250.00		(-1.75--1.21)	0.54		
		(-11.00--1.75)	9.25		
				9.95	
152	c1	(1.21-1.05)	0.16		
2265.00		(1.75-1.21)	0.54		
		(11.00-1.75)	9.25		
				9.95	
152	c2	(-1.21--1.05)	0.16		
2265.00		(-1.75--1.21)	0.54		
		(-11.00--1.75)	9.25		
				9.95	
153	c1	(1.21-1.05)	0.16		
2280.00		(1.75-1.21)	0.54		
		(11.00-1.75)	9.25		
				9.95	
153	c2	(-1.21--1.05)	0.16		
2280.00		(-1.75--1.21)	0.54		
		(-11.00--1.75)	9.25		
				9.95	
154	c1	(1.21-1.05)	0.16		
2295.00		(1.75-1.21)	0.54		
		(11.00-1.75)	9.25		
				9.95	
154	c2	(-1.21--1.05)	0.16		
2295.00		(-1.75--1.21)	0.54		
		(-11.00--1.75)	9.25		
				9.95	
155	c1	(-1.21--1.05)	0.16		
2310.00		(-1.75--1.21)	0.54		
		(-11.00--1.75)	9.25		
				9.95	
155	c2	(1.21-1.05)	0.16		
2310.00		(1.75-1.21)	0.54		
		(11.00-1.75)	9.25		
				9.95	
156	c1	(-1.21--1.05)	0.16		
2325.00		(-1.75--1.21)	0.54		
		(-11.00--1.75)	9.25		
				9.95	
156	c2	(1.21-1.05)	0.16		
2325.00		(1.75-1.21)	0.54		
		(11.00-1.75)	9.25		
				9.95	
157	c1	(-1.21--1.05)	0.16		
2340.00		(-1.75--1.21)	0.54		
		(-11.00--1.75)	9.25		
				9.95	
157	c2	(1.21-1.05)	0.16		
2340.00		(1.75-1.21)	0.54		
		(11.00-1.75)	9.25		
		A RIPORTARE ml	9.95		

		CALCOLO DELLE LUNGHEZZE		Foglio n. 139
BINDER				
N. SEZIONE PROG.	FIG.	ELEMENTI DI CALCOLO	LUNGHEZZA ELEMENTARE ml	LUNGHEZZA FIGURA ml	NOTE
		RIPORTO ml	9.95		
				9.95	
158	c1	(1.21-1.05)	0.16		
2355.00		(1.75-1.21)	0.54		
		(11.00-1.75)	9.25		
				9.95	
158	c2	(-1.21--1.05)	0.16		
2355.00		(-1.75--1.21)	0.54		
		(-11.00--1.75)	9.25		
				9.95	
159	c1	(1.21-1.05)	0.16		
2370.00		(1.75-1.21)	0.54		
		(11.00-1.75)	9.25		
				9.95	
159	c2	(-1.21--1.05)	0.16		
2370.00		(-1.75--1.21)	0.54		
		(-11.00--1.75)	9.25		
				9.95	
160	c1	(1.21-1.05)	0.16		
2385.00		(1.75-1.21)	0.54		
		(11.00-1.75)	9.25		
				9.95	
160	c2	(-1.21--1.05)	0.16		
2385.00		(-1.75--1.21)	0.54		
		(-11.00--1.75)	9.25		
				9.95	
161	c1	(1.21-1.05)	0.16		
2400.00		(1.75-1.21)	0.54		
		(11.00-1.75)	9.25		
				9.95	
161	c2	(-1.21--1.05)	0.16		
2400.00		(-1.75--1.21)	0.54		
		(-11.00--1.75)	9.25		
				9.95	
162	c1	(1.21-1.05)	0.16		
2415.00		(1.75-1.21)	0.54		
		(11.00-1.75)	9.25		
				9.95	
162	c2	(-1.21--1.05)	0.16		
2415.00		(-1.75--1.21)	0.54		
		(-11.00--1.75)	9.25		
				9.95	
163	c1	(1.21-1.05)	0.16		
2430.00		(1.75-1.21)	0.54		
		(11.00-1.75)	9.25		
				9.95	
163	c2	(-1.21--1.05)	0.16		
2430.00		(-1.75--1.21)	0.54		
		(-11.00--1.75)	9.25		
				9.95	
164	c1	(1.21-1.05)	0.16		
2445.00		(1.75-1.21)	0.54		
		(11.00-1.75)	9.25		
				9.95	
164	c2	(-1.21--1.05)	0.16		
2445.00		(-1.75--1.21)	0.54		
		(-11.00--1.75)	9.25		
				9.95	
165	c1	(1.21-1.05)	0.16		
2460.00		(1.75-1.21)	0.54		
		(11.00-1.75)	9.25		
				9.95	
165	c2	(-1.21--1.05)	0.16		
2460.00		(-1.75--1.21)	0.54		
		(-11.00--1.75)	9.25		
				9.95	
166	c1	(-1.21--1.05)	0.16		
2475.00		(-1.75--1.21)	0.54		
		(-11.00--1.75)	9.25		
				9.95	
166	c2	(1.21-1.05)	0.16		
2475.00		(1.75-1.21)	0.54		
		(11.00-1.75)	9.25		
				9.95	
167	c1	(-1.21--1.05)	0.16		
2490.00		(-1.75--1.21)	0.54		
		(-11.00--1.75)	9.25		
				9.95	
167	c2	(1.21-1.05)	0.16		
2490.00		(1.75-1.21)	0.54		
		(11.00-1.75)	9.25		
				9.95	
168	c1	(-1.21--1.05)	0.16		
2505.00		(-1.75--1.21)	0.54		
		(-11.00--1.75)	9.25		
				9.95	
168	c2	(1.21-1.05)	0.16		
2505.00		(1.75-1.21)	0.54		
		(11.00-1.75)	9.25		
				9.95	
169	c1	(-1.21--1.05)	0.16		
2520.00		(-1.75--1.21)	0.54		
		(-11.00--1.75)	9.25		
				9.95	
169	c2	(1.21-1.05)	0.16		
2520.00		(1.75-1.21)	0.54		
		(11.00-1.75)	9.25		
				9.95	
170	c1	(-1.21--1.05)	0.16		
2535.00		(-1.75--1.21)	0.54		
		(-11.00--1.75)	9.25		
				9.95	
170	c2	(1.21-1.05)	0.16		
2535.00		(1.75-1.21)	0.54		
		(11.00-1.75)	9.25		
		A RIPORTARE ml	9.95		

	CALCOLO DELLE LUNGHEZZE	Foglio n. 140

BINDER

N. SEZIONE PROG.	FIG.	ELEMENTI DI CALCOLO	LUNGHEZZA ELEMENTARE ml	LUNGHEZZA FIGURA ml	NOTE
		RIPORTO ml	9.95		
				9.95	
171	c1	(-1.21--1.05)	0.16		
2550.00		(-1.75--1.21)	0.54		
		(-11.00--1.75)	9.25		
				9.95	
171	c2	(1.21-1.05)	0.16		
2550.00		(1.76-1.21)	0.55		
		(11.01-1.76)	9.25		
				9.96	
172	c1	(-1.21--1.05)	0.16		
2565.00		(-1.75--1.21)	0.54		
		(-11.00--1.75)	9.25		
				9.95	
172	c2	(1.21-1.05)	0.16		
2565.00		(1.76-1.21)	0.55		
		(11.01-1.76)	9.25		
				9.96	
173	c1	(-1.21--1.05)	0.16		
2580.00		(-1.75--1.21)	0.54		
		(-11.00--1.75)	9.25		
				9.95	
173	c2	(1.21-1.05)	0.16		
2580.00		(1.76-1.21)	0.55		
		(11.01-1.76)	9.25		
				9.96	
174	c1	(-1.21--1.06)	0.15		
2595.00		(-1.75--1.21)	0.54		
		(-11.00--1.75)	9.25		
				9.94	
174	c2	(1.21-1.05)	0.16		
2595.00		(1.81-1.21)	0.60		
		(11.06-1.81)	9.25		
				10.01	
175	c1	(-1.21--1.06)	0.15		
2610.00		(-1.75--1.21)	0.54		
		(-11.00--1.75)	9.25		
				9.94	
175	c2	(1.21-1.05)	0.16		
2610.00		(1.93-1.21)	0.72		
		(11.18-1.93)	9.25		
				10.13	
176	c1	(-1.21--1.06)	0.15		
2625.00		(-1.75--1.21)	0.54		
		(-11.00--1.75)	9.25		
				9.94	
176	c2	(1.21-1.05)	0.16		
2625.00		(2.05-1.21)	0.84		
		(11.31-2.05)	9.26		
				10.26	
177	c1	(-1.21--1.06)	0.15		
2640.00		(-1.75--1.21)	0.54		
		(-11.00--1.75)	9.25		
				9.94	
177	c2	(1.21-1.06)	0.15		
2640.00		(2.17-1.21)	0.96		
		(11.42-2.17)	9.25		
				10.36	
178	c1	(-1.21--1.06)	0.15		
2655.00		(-1.75--1.21)	0.54		
		(-11.00--1.75)	9.25		
				9.94	
178	c2	(1.21-1.06)	0.15		
2655.00		(2.29-1.21)	1.08		
		(11.55-2.29)	9.26		
				10.49	
179	c1	(-1.21--1.06)	0.15		
2670.00		(-1.75--1.21)	0.54		
		(-11.00--1.75)	9.25		
				9.94	
179	c2	(1.21-1.07)	0.14		
2670.00		(2.41-1.21)	1.20		
		(11.66-2.41)	9.25		
				10.59	
180	c1	(-1.21--1.06)	0.15		
2685.00		(-1.75--1.21)	0.54		
		(-11.00--1.75)	9.25		
				9.94	
180	c2	(1.21-1.08)	0.13		
2685.00		(2.54-1.21)	1.33		
		(11.79-2.54)	9.25		
				10.71	
181	c1	(-1.21--1.06)	0.15		
2700.00		(-1.75--1.21)	0.54		
		(-11.00--1.75)	9.25		
				9.94	
181	c2	(1.21-1.10)	0.11		
2700.00		(2.66-1.21)	1.45		
		(11.91-2.66)	9.25		
				10.81	
182	c1	(-1.21--1.06)	0.15		
2715.00		(-1.75--1.21)	0.54		
		(-11.00--1.75)	9.25		
				9.94	
182	c2	(1.21-1.11)	0.10		
2715.00		(2.75-1.21)	1.54		
		(12.00-2.75)	9.25		
				10.89	
183	c1	(-1.21--1.06)	0.15		
2730.00		(-1.75--1.21)	0.54		
		(-11.00--1.75)	9.25		
				9.94	
183	c2	(1.21-1.11)	0.10		
2730.00		(2.76-1.21)	1.55		
		(12.01-2.76)	9.25		
		A RIPORTARE ml	10.90		

	CALCOLO DELLE LUNGHEZZE		Foglio n. 141

BINDER

N. SEZIONE PROG.	FIG.	ELEMENTI DI CALCOLO	LUNGHEZZA ELEMENTARE ml	LUNGHEZZA FIGURA ml	NOTE
		RIPORTO ml	10.90		
				10.90	
184	c1	(-1.21--1.06)	0.15		
2745.00		(-1.75--1.21)	0.54		
		(-11.00--1.75)	9.25		
				9.94	
184	c2	(1.21-1.11)	0.10		
2745.00		(2.75-1.21)	1.54		
		(12.00-2.75)	9.25		
				10.89	
185	c1	(-1.21--1.06)	0.15		
2760.00		(-1.75--1.21)	0.54		
		(-11.00--1.75)	9.25		
				9.94	
185	c2	(1.21-1.11)	0.10		
2760.00		(2.76-1.21)	1.55		
		(12.01-2.76)	9.25		
				10.90	
186	c1	(-1.21--1.06)	0.15		
2775.00		(-1.75--1.21)	0.54		
		(-11.00--1.75)	9.25		
				9.94	
186	c2	(1.21-1.11)	0.10		
2775.00		(2.76-1.21)	1.55		
		(12.01-2.76)	9.25		
				10.90	
187	c1	(-1.21--1.06)	0.15		
2790.00		(-1.75--1.21)	0.54		
		(-11.00--1.75)	9.25		
				9.94	
187	c2	(1.21-1.11)	0.10		
2790.00		(2.76-1.21)	1.55		
		(12.01-2.76)	9.25		
				10.90	
188	c1	(-1.21--1.06)	0.15		
2805.00		(-1.75--1.21)	0.54		
		(-11.00--1.75)	9.25		
				9.94	
188	c2	(1.21-1.08)	0.13		
2805.00		(2.52-1.21)	1.31		
		(11.77-2.52)	9.25		
				10.69	
189	c1	(-1.21--1.06)	0.15		
2820.00		(-1.75--1.21)	0.54		
		(-11.00--1.75)	9.25		
				9.94	
189	c2	(1.21-1.06)	0.15		
2820.00		(2.27-1.21)	1.06		
		(11.52-2.27)	9.25		
				10.46	
190	c1	(-1.21--1.06)	0.15		
2835.00		(-1.75--1.21)	0.54		
		(-11.00--1.75)	9.25		
				9.94	
190	c2	(1.21-1.05)	0.16		
2835.00		(2.03-1.21)	0.82		
		(11.28-2.03)	9.25		
				10.23	
191	c1	(-1.21--1.06)	0.15		
2850.00		(-1.75--1.21)	0.54		
		(-11.00--1.75)	9.25		
				9.94	
191	c2	(1.21-1.05)	0.16		
2850.00		(1.78-1.21)	0.57		
		(11.03-1.78)	9.25		
				9.98	
192	c1	(-1.21--1.05)	0.16		
2865.00		(-1.75--1.21)	0.54		
		(-11.00--1.75)	9.25		
				9.95	
192	c2	(1.21-1.05)	0.16		
2865.00		(1.78-1.21)	0.57		
		(11.03-1.78)	9.25		
				9.98	
193	c1	(-1.21--1.05)	0.16		
2880.00		(-1.75--1.21)	0.54		
		(-11.00--1.75)	9.25		
				9.95	
193	c2	(1.21-1.05)	0.16		
2880.00		(1.84-1.21)	0.63		
		(11.09-1.84)	9.25		
				10.04	
194	c1	(-1.21--1.05)	0.16		
2895.00		(-1.75--1.21)	0.54		
		(-11.00--1.75)	9.25		
				9.95	
194	c2	(1.21-1.05)	0.16		
2895.00		(1.92-1.21)	0.71		
		(11.17-1.92)	9.25		
				10.12	
195	c1	(-1.21--1.04)	0.17		
2910.00		(-1.75--1.21)	0.54		
		(-11.00--1.75)	9.25		
				9.96	
195	c2	(1.21-1.05)	0.16		
2910.00		(1.99-1.21)	0.78		
		(11.24-1.99)	9.25		
				10.19	
196	c1	(1.21-1.05)	0.16		
2925.00		(2.03-1.21)	0.82		
		(11.28-2.03)	9.25		
				10.23	
196	c2	(-1.21--1.04)	0.17		
2925.00		(-1.75--1.21)	0.54		
		(-11.00--1.75)	9.25		
		A RIPORTARE ml	9.96		

	CALCOLO DELLE LUNGHEZZE		Foglio n. 142

BINDER

N. SEZIONE PROG.	FIG.	ELEMENTI DI CALCOLO	LUNGHEZZA ELEMENTARE ml	LUNGHEZZA FIGURA ml	NOTE
		RIPORTO ml	9.96		
				9.96	
197	c1	(-1.21--1.03)	0.18		
2940.00		(-1.75--1.21)	0.54		
		(-11.00--1.75)	9.25		
				9.97	
197	c2	(1.21-1.04)	0.17		
2940.00		(2.03-1.21)	0.82		
		(11.28-2.03)	9.25		
				10.24	
198	c1	(1.21-1.05)	0.16		
2955.00		(2.00-1.21)	0.79		
		(11.25-2.00)	9.25		
				10.20	
198	c2	(-1.21--1.03)	0.18		
2955.00		(-1.75--1.21)	0.54		
		(-11.00--1.75)	9.25		
				9.97	
199	c1	(-1.21--1.03)	0.18		
2970.00		(-1.75--1.21)	0.54		
		(-11.00--1.75)	9.25		
				9.97	
199	c2	(1.21-1.05)	0.16		
2970.00		(1.98-1.21)	0.77		
		(11.23-1.98)	9.25		
				10.18	
200	c1	(-1.21--1.03)	0.18		
2985.00		(-1.75--1.21)	0.54		
		(-11.00--1.75)	9.25		
				9.97	
200	c2	(1.21-1.05)	0.16		
2985.00		(1.96-1.21)	0.75		
		(11.21-1.96)	9.25		
				10.16	
201	c1	(1.21-1.05)	0.16		
3000.00		(1.94-1.21)	0.73		
		(11.19-1.94)	9.25		
				10.14	
201	c2	(-1.21--1.03)	0.18		
3000.00		(-1.75--1.21)	0.54		
		(-11.00--1.75)	9.25		
				9.97	
201b	c1	(1.21-1.05)	0.16		
3005.94		(1.94-1.21)	0.73		
		(11.19-1.94)	9.25		
				10.14	
201b	c2	(-1.21--1.03)	0.18		
3005.94		(-1.75--1.21)	0.54		
		(-11.00--1.75)	9.25		
				9.97	

Il Direttore dei Lavori	L'Impresa	

	CALCOLO DELLE LUNGHEZZE		Foglio n. 143

BASE

N. SEZIONE PROG.	FIG.	ELEMENTI DI CALCOLO	LUNGHEZZA ELEMENTARE ml	LUNGHEZZA FIGURA ml	NOTE
131	d1	(1.75-1.25)	0.50		
1950.00		(11.00-1.75)	9.25		
				9.75	
132	d2	(-1.75--1.15)	0.60		
1965.00		(-11.00--1.75)	9.25		
				9.85	
132	d1	(1.75-1.15)	0.60		
1965.00		(11.00-1.75)	9.25		
				9.85	
133	d2	(-1.75--1.15)	0.60		
1980.00		(-11.00--1.75)	9.25		
				9.85	
133	d1	(1.75-1.15)	0.60		
1980.00		(11.00-1.75)	9.25		
				9.85	
134	d2	(-1.75--1.15)	0.60		
1995.00		(-11.00--1.75)	9.25		
				9.85	
134	d1	(1.75-1.15)	0.60		
1995.00		(11.00-1.75)	9.25		
				9.85	
135	d2	(-1.75--1.15)	0.60		
2010.00		(-11.00--1.75)	9.25		
				9.85	
135	d1	(1.75-1.15)	0.60		
2010.00		(11.00-1.75)	9.25		
				9.85	
136	d2	(-1.75--1.15)	0.60		
2025.00		(-11.00--1.75)	9.25		
				9.85	
136	d1	(1.75-1.15)	0.60		
2025.00		(11.00-1.75)	9.25		
				9.85	
137	d2	(-1.75--1.15)	0.60		
2040.00		(-11.00--1.75)	9.25		
				9.85	
137	d1	(1.75-1.15)	0.60		
2040.00		(11.00-1.75)	9.25		
				9.85	
138	d2	(-1.75--1.15)	0.60		
2055.00		(-11.00--1.75)	9.25		
				9.85	
138	d1	(1.75-1.15)	0.60		
2055.00		(11.00-1.75)	9.25		
				9.85	
139	d2	(-1.75--1.15)	0.60		
2070.00		(-11.00--1.75)	9.25		
				9.85	
139	d1	(1.75-1.15)	0.60		
2070.00		(11.00-1.75)	9.25		
				9.85	
140	d2	(-1.75--1.15)	0.60		
2085.00		(-11.00--1.75)	9.25		
				9.85	
140	d1	(1.75-1.15)	0.60		
2085.00		(11.00-1.75)	9.25		
				9.85	
141	d1	(1.75-1.15)	0.60		
2100.00		(11.00-1.75)	9.25		
				9.85	
141	d2	(-1.75--1.15)	0.60		
2100.00		(-11.00--1.75)	9.25		
				9.85	
142	d1	(-1.75--1.15)	0.60		
2115.00		(-12.70--1.75)	10.95		
				11.55	
142	d2	(1.75-1.15)	0.60		
2115.00		(12.70-1.75)	10.95		
				11.55	
143	d1	(-1.75--1.15)	0.60		
2130.00		(-14.50--1.75)	12.75		
				13.35	
143	d2	(1.75-1.15)	0.60		
2130.00		(14.50-1.75)	12.75		
				13.35	
144	d1	(-1.75--1.15)	0.60		
2145.00		(-14.50--1.75)	12.75		
				13.35	
144	d2	(1.75-1.15)	0.60		
2145.00		(14.50-1.75)	12.75		
				13.35	
145	d1	(-1.75--1.15)	0.60		
2160.00		(-12.80--1.75)	11.05		
				11.65	
145	d2	(1.75-1.15)	0.60		
2160.00		(12.80-1.75)	11.05		
				11.65	
146	d1	(-1.75--1.15)	0.60		
2175.00		(-11.00--1.75)	9.25		
				9.85	
146	d2	(1.75-1.15)	0.60		
2175.00		(11.00-1.75)	9.25		
				9.85	
147	d1	(-1.75--1.15)	0.60		
2190.00		(-11.00--1.75)	9.25		
				9.85	
147	d2	(1.75-1.15)	0.60		
2190.00		(11.00-1.75)	9.25		
				9.85	
148	d1	(-1.75--1.15)	0.60		
2205.00		(-11.00--1.75)	9.25		
				9.85	
148	d2	(1.75-1.15)	0.60		
2205.00		(11.00-1.75)	9.25		
				9.85	
149	d1	(-1.75--1.15)	0.60		
		A RIPORTARE ml	0.60		

	CALCOLO DELLE LUNGHEZZE	Foglio n. 144

BASE

N. SEZIONE PROG.	FIG.	ELEMENTI DI CALCOLO	LUNGHEZZA ELEMENTARE ml	LUNGHEZZA FIGURA ml	NOTE
		RIPORTO ml	0.60		
2220.00		(-11.00--1.75)	9.25		
				9.85	
149	d2	(1.75-1.15)	0.60		
2220.00		(11.00-1.75)	9.25		
				9.85	
150	d1	(-1.75--1.15)	0.60		
2235.00		(-11.00--1.75)	9.25		
				9.85	
150	d2	(1.75-1.15)	0.60		
2235.00		(11.00-1.75)	9.25		
				9.85	
151	d1	(-1.75--1.15)	0.60		
2250.00		(-11.00--1.75)	9.25		
				9.85	
151	d2	(1.75-1.15)	0.60		
2250.00		(11.00-1.75)	9.25		
				9.85	
152	d1	(-1.75--1.15)	0.60		
2265.00		(-11.00--1.75)	9.25		
				9.85	
152	d2	(1.75-1.15)	0.60		
2265.00		(11.00-1.75)	9.25		
				9.85	
153	d1	(-1.75--1.15)	0.60		
2280.00		(-11.00--1.75)	9.25		
				9.85	
153	d2	(1.75-1.15)	0.60		
2280.00		(11.00-1.75)	9.25		
				9.85	
154	d1	(-1.75--1.15)	0.60		
2295.00		(-11.00--1.75)	9.25		
				9.85	
154	d2	(1.75-1.15)	0.60		
2295.00		(11.00-1.75)	9.25		
				9.85	
155	d2	(-1.75--1.15)	0.60		
2310.00		(-11.00--1.75)	9.25		
				9.85	
155	d1	(1.75-1.15)	0.60		
2310.00		(11.00-1.75)	9.25		
				9.85	
156	d1	(1.75-1.15)	0.60		
2325.00		(11.00-1.75)	9.25		
				9.85	
156	d2	(-1.75--1.15)	0.60		
2325.00		(-11.00--1.75)	9.25		
				9.85	
157	d1	(1.75-1.15)	0.60		
2340.00		(11.00-1.75)	9.25		
				9.85	
157	d2	(-1.75--1.15)	0.60		
2340.00		(-11.00--1.75)	9.25		
				9.85	
158	d1	(-1.75--1.15)	0.60		
2355.00		(-11.00--1.75)	9.25		
				9.85	
158	d2	(1.75-1.15)	0.60		
2355.00		(11.00-1.75)	9.25		
				9.85	
159	d1	(-1.75--1.15)	0.60		
2370.00		(-11.00--1.75)	9.25		
				9.85	
159	d2	(1.75-1.15)	0.60		
2370.00		(11.00-1.75)	9.25		
				9.85	
160	d1	(-1.75--1.15)	0.60		
2385.00		(-11.00--1.75)	9.25		
				9.85	
160	d2	(1.75-1.15)	0.60		
2385.00		(11.00-1.75)	9.25		
				9.85	
161	d1	(-1.75--1.15)	0.60		
2400.00		(-11.00--1.75)	9.25		
				9.85	
161	d2	(1.75-1.15)	0.60		
2400.00		(11.00-1.75)	9.25		
				9.85	
162	d1	(-1.75--1.15)	0.60		
2415.00		(-11.00--1.75)	9.25		
				9.85	
162	d2	(1.75-1.15)	0.60		
2415.00		(11.00-1.75)	9.25		
				9.85	
163	d1	(-1.75--1.15)	0.60		
2430.00		(-11.00--1.75)	9.25		
				9.85	
163	d2	(1.75-1.15)	0.60		
2430.00		(11.00-1.75)	9.25		
				9.85	
164	d1	(-1.75--1.15)	0.60		
2445.00		(-11.00--1.75)	9.25		
				9.85	
164	d2	(1.75-1.15)	0.60		
2445.00		(11.00-1.75)	9.25		
				9.85	
165	d1	(-1.75--1.15)	0.60		
2460.00		(-11.00--1.75)	9.25		
				9.85	
165	d2	(1.75-1.15)	0.60		
2460.00		(11.00-1.75)	9.25		
				9.85	
166	d2	(-1.75--1.15)	0.60		
2475.00		(-11.00--1.75)	9.25		
				9.85	
		A RIPORTARE ml			

		CALCOLO DELLE LUNGHEZZE		Foglio n. 145
BASE				
N. SEZIONE PROG.	FIG.	ELEMENTI DI CALCOLO	LUNGHEZZA ELEMENTARE ml	LUNGHEZZA FIGURA ml	NOTE
		RIPORTO ml			
166 2475.00	d1	(1.75-1.15) (11.00-1.75)	0.60 9.25	9.85	
167 2490.00	d2	(-1.75--1.15) (-11.00--1.75)	0.60 9.25	9.85	
167 2490.00	d1	(1.75-1.15) (11.00-1.75)	0.60 9.25	9.85	
168 2505.00	d2	(-1.75--1.15) (-11.00--1.75)	0.60 9.25	9.85	
168 2505.00	d1	(1.75-1.15) (11.00-1.75)	0.60 9.25	9.85	
169 2520.00	d2	(-1.75--1.15) (-11.00--1.75)	0.60 9.25	9.85	
169 2520.00	d1	(1.75-1.15) (11.00-1.75)	0.60 9.25	9.85	
170 2535.00	d2	(-1.75--1.15) (-11.00--1.75)	0.60 9.25	9.85	
170 2535.00	d1	(1.75-1.15) (11.00-1.75)	0.60 9.25	9.85	
171 2550.00	d2	(-1.75--1.15) (-11.00--1.75)	0.60 9.25	9.85	
171 2550.00	d1	(1.76-1.15) (11.01-1.76)	0.61 9.25	9.86	
172 2565.00	d2	(-1.75--1.15) (-11.00--1.75)	0.60 9.25	9.85	
172 2565.00	d1	(1.76-1.15) (11.01-1.76)	0.61 9.25	9.86	
173 2580.00	d2	(-1.75--1.15) (-11.00--1.75)	0.60 9.25	9.85	
173 2580.00	d1	(1.76-1.15) (11.01-1.76)	0.61 9.25	9.86	
174 2595.00	d2	(-1.75--1.15) (-11.00--1.75)	0.60 9.25	9.85	
174 2595.00	d1	(1.81-1.15) (11.06-1.81)	0.66 9.25	9.91	
175 2610.00	d2	(-1.75--1.15) (-11.00--1.75)	0.60 9.25	9.85	
175 2610.00	d1	(1.93-1.15) (11.18-1.93)	0.78 9.25	10.03	
176 2625.00	d2	(-1.75--1.15) (-11.00--1.75)	0.60 9.25	9.85	
176 2625.00	d1	(2.05-1.15) (11.31-2.05)	0.90 9.26	10.16	
177 2640.00	d1	(2.17-1.15) (11.42-2.17)	1.02 9.25	10.27	
177 2640.00	d2	(-1.75--1.15) (-11.00--1.75)	0.60 9.25	9.85	
178 2655.00	d2	(-1.75--1.15) (-11.00--1.75)	0.60 9.25	9.85	
178 2655.00	d1	(2.29-1.15) (11.55-2.29)	1.14 9.26	10.40	
179 2670.00	d2	(-1.75--1.16) (-11.00--1.75)	0.59 9.25	9.84	
179 2670.00	d1	(2.41-1.15) (11.66-2.41)	1.26 9.25	10.51	
180 2685.00	d1	(2.54-1.14) (11.79-2.54)	1.40 9.25	10.65	
180 2685.00	d2	(-1.75--1.16) (-11.00--1.75)	0.59 9.25	9.84	
181 2700.00	d2	(-1.75--1.16) (-11.00--1.75)	0.59 9.25	9.84	
181 2700.00	d1	(2.66-1.14) (11.91-2.66)	1.52 9.25	10.77	
182 2715.00	d2	(-1.75--1.16) (-11.00--1.75)	0.59 9.25	9.84	
182 2715.00	d1	(2.75-1.14) (12.00-2.75)	1.61 9.25	10.86	
183 2730.00	d2	(-1.75--1.16) (-11.00--1.75)	0.59 9.25	9.84	
183 2730.00	d1	(2.76-1.14) (12.01-2.76)	1.62 9.25		
		A RIPORTARE ml	10.87		

		CALCOLO DELLE LUNGHEZZE		Foglio n. 146
BASE				
N. SEZIONE PROG.	FIG.	ELEMENTI DI CALCOLO	LUNGHEZZA ELEMENTARE ml	LUNGHEZZA FIGURA ml	NOTE
		RIPORTO ml	10.87		
				10.87	
184 2745.00	d2	(-1.75--1.16) (-11.00--1.75)	0.59 9.25		
				9.84	
184 2745.00	d1	(2.75-1.14) (12.00-2.75)	1.61 9.25		
				10.86	
185 2760.00	d2	(-1.75--1.16) (-11.00--1.75)	0.59 9.25		
				9.84	
185 2760.00	d1	(2.76-1.14) (12.01-2.76)	1.62 9.25		
				10.87	
186 2775.00	d2	(-1.75--1.16) (-11.00--1.75)	0.59 9.25		
				9.84	
186 2775.00	d1	(2.76-1.14) (12.01-2.76)	1.62 9.25		
				10.87	
187 2790.00	d2	(-1.75--1.16) (-11.00--1.75)	0.59 9.25		
				9.84	
187 2790.00	d1	(2.76-1.14) (12.01-2.76)	1.62 9.25		
				10.87	
188 2805.00	d2	(-1.75--1.16) (-11.00--1.75)	0.59 9.25		
				9.84	
188 2805.00	d1	(2.52-1.15) (11.77-2.52)	1.37 9.25		
				10.62	
189 2820.00	d2	(-1.75--1.15) (-11.00--1.75)	0.60 9.25		
				9.85	
189 2820.00	d1	(2.27-1.15) (11.52-2.27)	1.12 9.25		
				10.37	
190 2835.00	d2	(-1.75--1.15) (-11.00--1.75)	0.60 9.25		
				9.85	
190 2835.00	d1	(2.03-1.15) (11.28-2.03)	0.88 9.25		
				10.13	
191 2850.00	d2	(-1.75--1.15) (-11.00--1.75)	0.60 9.25		
				9.85	
191 2850.00	d1	(1.78-1.15) (11.03-1.78)	0.63 9.25		
				9.88	
192 2865.00	d1	(1.78-1.15) (11.03-1.78)	0.63 9.25		
				9.88	
192 2865.00	d2	(-1.75--1.15) (-11.00--1.75)	0.60 9.25		
				9.85	
193 2880.00	d1	(1.84-1.15) (11.09-1.84)	0.69 9.25		
				9.94	
193 2880.00	d2	(-1.75--1.15) (-11.00--1.75)	0.60 9.25		
				9.85	
194 2895.00	d1	(1.92-1.15) (11.17-1.92)	0.77 9.25		
				10.02	
194 2895.00	d2	(-1.75--1.15) (-11.00--1.75)	0.60 9.25		
				9.85	
195 2910.00	d2	(-1.75--1.15) (-11.00--1.75)	0.60 9.25		
				9.85	
195 2910.00	d1	(1.99-1.16) (11.24-1.99)	0.83 9.25		
				10.08	
196 2925.00	d1	(-1.75--1.14) (-11.00--1.75)	0.61 9.25		
				9.86	
196 2925.00	d2	(2.03-1.16) (11.28-2.03)	0.87 9.25		
				10.12	
197 2940.00	d1	(2.03-1.16) (11.28-2.03)	0.87 9.25		
				10.12	
197 2940.00	d2	(-1.75--1.14) (-11.00--1.75)	0.61 9.25		
				9.86	
198 2955.00	d1	(2.00-1.16) (11.25-2.00)	0.84 9.25		
				10.09	
198 2955.00	d2	(-1.75--1.14) (-11.00--1.75)	0.61 9.25		
				9.86	
199 2970.00	d1	(1.98-1.16) (11.23-1.98)	0.82 9.25		
				10.07	
199 2970.00	d2	(-1.75--1.14) (-11.00--1.75)	0.61 9.25		
				9.86	
200 2985.00	d1	(1.96-1.16) (11.21-1.96)	0.80 9.25		
				10.05	
200 2985.00	d2	(-1.75--1.14) (-11.00--1.75)	0.61 9.25		
				9.86	
201	d1	(1.94-1.16)	0.78		
		A RIPORTARE ml	0.78		

	CALCOLO DELLE LUNGHEZZE		Foglio n. 147

BASE

N. SEZIONE PROG.	FIG.	ELEMENTI DI CALCOLO	LUNGHEZZA ELEMENTARE ml	LUNGHEZZA FIGURA ml	NOTE
		RIPORTO ml	0.78		
3000.00		(11.19-1.94)	9.25		
				10.03	
201	d2	(-1.75--1.14)	0.61		
3000.00		(-11.00--1.75)	9.25		
				9.86	
201b	d1	(1.94-1.16)	0.78		
3005.94		(11.19-1.94)	9.25		
				10.03	
201b	d2	(-1.75--1.14)	0.61		
3005.94		(-11.00--1.75)	9.25		
				9.86	

Il Direttore dei Lavori	L'Impresa	

	CALCOLO DELLE LUNGHEZZE		Foglio n. 148

FONDAZIONE

N. SEZIONE PROG.	FIG.	ELEMENTI DI CALCOLO	LUNGHEZZA ELEMENTARE ml	LUNGHEZZA FIGURA ml	NOTE
131	e1	(1.75-1.25)	0.50		
1950.00		(10.85-1.75)	9.10		
				9.60	
132	e2	(-1.05--0.68)	0.37		
1965.00		(-1.75--1.05)	0.70		
		(-11.00--1.75)	9.25		
				10.32	
132	e1	(1.05-0.68)	0.37		
1965.00		(1.75-1.05)	0.70		
		(11.00-1.75)	9.25		
				10.32	
133	e2	(-1.05--0.68)	0.37		
1980.00		(-1.75--1.05)	0.70		
		(-11.00--1.75)	9.25		
				10.32	
133	e1	(1.05-0.68)	0.37		
1980.00		(1.75-1.05)	0.70		
		(11.00-1.75)	9.25		
				10.32	
134	e2	(-1.05--0.68)	0.37		
1995.00		(-1.75--1.05)	0.70		
		(-11.00--1.75)	9.25		
				10.32	
134	e1	(1.05-0.68)	0.37		
1995.00		(1.75-1.05)	0.70		
		(11.00-1.75)	9.25		
				10.32	
135	e2	(-1.05--0.68)	0.37		
2010.00		(-1.75--1.05)	0.70		
		(-11.00--1.75)	9.25		
				10.32	
135	e1	(1.05-0.68)	0.37		
2010.00		(1.75-1.05)	0.70		
		(11.00-1.75)	9.25		
				10.32	
136	e2	(-1.05--0.68)	0.37		
2025.00		(-1.75--1.05)	0.70		
		(-11.00--1.75)	9.25		
				10.32	
136	e1	(1.05-0.68)	0.37		
2025.00		(1.75-1.05)	0.70		
		(11.00-1.75)	9.25		
				10.32	
137	e2	(-1.05--0.68)	0.37		
2040.00		(-1.75--1.05)	0.70		
		(-11.00--1.75)	9.25		
				10.32	
137	e1	(1.05-0.68)	0.37		
2040.00		(1.75-1.05)	0.70		
		(11.00-1.75)	9.25		
				10.32	
138	e2	(-1.05--0.68)	0.37		
2055.00		(-1.75--1.05)	0.70		
		(-11.00--1.75)	9.25		
				10.32	
138	e1	(1.05-0.68)	0.37		
2055.00		(1.75-1.05)	0.70		
		(11.00-1.75)	9.25		
				10.32	
139	e2	(-1.05--0.68)	0.37		
2070.00		(-1.75--1.05)	0.70		
		(-11.00--1.75)	9.25		
				10.32	
139	e1	(1.05-0.68)	0.37		
2070.00		(1.75-1.05)	0.70		
		(11.00-1.75)	9.25		
				10.32	
140	e2	(-1.05--0.68)	0.37		
2085.00		(-1.75--1.05)	0.70		
		(-11.00--1.75)	9.25		
				10.32	
140	e1	(1.05-0.68)	0.37		
2085.00		(1.75-1.05)	0.70		
		(11.00-1.75)	9.25		
				10.32	
141	e1	(1.05-0.68)	0.37		
2100.00		(1.75-1.05)	0.70		
		(11.00-1.75)	9.25		
				10.32	
141	e2	(-1.05--0.68)	0.37		
2100.00		(-1.75--1.05)	0.70		
		(-11.00--1.75)	9.25		
				10.32	
142	e1	(-1.05--0.68)	0.37		
2115.00		(-1.75--1.05)	0.70		
		(-12.70--1.75)	10.95		
				12.02	
142	e2	(1.05-0.68)	0.37		
2115.00		(1.75-1.05)	0.70		
		(12.70-1.75)	10.95		
				12.02	
143	e1	(-1.05--0.68)	0.37		
2130.00		(-1.75--1.05)	0.70		
		(-14.50--1.75)	12.75		
				13.82	
143	e2	(1.05-0.68)	0.37		
2130.00		(1.75-1.05)	0.70		
		(14.50-1.75)	12.75		
				13.82	
144	e1	(-1.05--0.68)	0.37		
2145.00		(-1.75--1.05)	0.70		
		(-14.50--1.75)	12.75		
				13.82	
144	e2	(1.05-0.68)	0.37		
2145.00		(1.75-1.05)	0.70		
		(14.50-1.75)	12.75		
		A RIPORTARE ml	13.82		

		CALCOLO DELLE LUNGHEZZE		Foglio n. 149	
FONDAZIONE					
N. SEZIONE PROG.	FIG.	ELEMENTI DI CALCOLO	LUNGHEZZA ELEMENTARE ml	LUNGHEZZA FIGURA ml	NOTE
		RIPORTO ml	13.82		
				13.82	
145	e1	(-1.05--0.68)	0.37		
2160.00		(-1.75--1.05)	0.70		
		(-12.80--1.75)	11.05		
				12.12	
145	e2	(1.05-0.68)	0.37		
2160.00		(1.75-1.05)	0.70		
		(12.80-1.75)	11.05		
				12.12	
146	e1	(-1.05--0.68)	0.37		
2175.00		(-1.75--1.05)	0.70		
		(-11.00--1.75)	9.25		
				10.32	
146	e2	(1.05-0.68)	0.37		
2175.00		(1.75-1.05)	0.70		
		(11.00-1.75)	9.25		
				10.32	
147	e1	(-1.05--0.68)	0.37		
2190.00		(-1.75--1.05)	0.70		
		(-11.00--1.75)	9.25		
				10.32	
147	e2	(1.05-0.68)	0.37		
2190.00		(1.75-1.05)	0.70		
		(11.00-1.75)	9.25		
				10.32	
148	e1	(-1.05--0.68)	0.37		
2205.00		(-1.75--1.05)	0.70		
		(-11.00--1.75)	9.25		
				10.32	
148	e2	(1.05-0.68)	0.37		
2205.00		(1.75-1.05)	0.70		
		(11.00-1.75)	9.25		
				10.32	
149	e1	(-1.05--0.68)	0.37		
2220.00		(-1.75--1.05)	0.70		
		(-11.00--1.75)	9.25		
				10.32	
149	e2	(1.05-0.68)	0.37		
2220.00		(1.75-1.05)	0.70		
		(11.00-1.75)	9.25		
				10.32	
150	e1	(-1.05--0.68)	0.37		
2235.00		(-1.75--1.05)	0.70		
		(-11.00--1.75)	9.25		
				10.32	
150	e2	(1.05-0.68)	0.37		
2235.00		(1.75-1.05)	0.70		
		(11.00-1.75)	9.25		
				10.32	
151	e1	(-1.05--0.68)	0.37		
2250.00		(-1.75--1.05)	0.70		
		(-11.00--1.75)	9.25		
				10.32	
151	e2	(1.05-0.68)	0.37		
2250.00		(1.75-1.05)	0.70		
		(11.00-1.75)	9.25		
				10.32	
152	e1	(-1.05--0.68)	0.37		
2265.00		(-1.75--1.05)	0.70		
		(-11.00--1.75)	9.25		
				10.32	
152	e2	(1.05-0.68)	0.37		
2265.00		(1.75-1.05)	0.70		
		(11.00-1.75)	9.25		
				10.32	
153	e1	(-1.05--0.68)	0.37		
2280.00		(-1.75--1.05)	0.70		
		(-11.00--1.75)	9.25		
				10.32	
153	e2	(1.05-0.68)	0.37		
2280.00		(1.75-1.05)	0.70		
		(11.00-1.75)	9.25		
				10.32	
154	e1	(-1.05--0.68)	0.37		
2295.00		(-1.75--1.05)	0.70		
		(-11.00--1.75)	9.25		
				10.32	
154	e2	(1.05-0.68)	0.37		
2295.00		(1.75-1.05)	0.70		
		(11.00-1.75)	9.25		
				10.32	
155	e2	(-1.05--0.68)	0.37		
2310.00		(-1.75--1.05)	0.70		
		(-11.00--1.75)	9.25		
				10.32	
155	e1	(1.05-0.68)	0.37		
2310.00		(1.75-1.05)	0.70		
		(11.00-1.75)	9.25		
				10.32	
156	e1	(1.05-0.68)	0.37		
2325.00		(1.75-1.05)	0.70		
		(11.00-1.75)	9.25		
				10.32	
156	e2	(-1.05--0.68)	0.37		
2325.00		(-1.75--1.05)	0.70		
		(-11.00--1.75)	9.25		
				10.32	
157	e1	(1.05-0.68)	0.37		
2340.00		(1.75-1.05)	0.70		
		(11.00-1.75)	9.25		
				10.32	
157	e2	(-1.05--0.68)	0.37		
2340.00		(-1.75--1.05)	0.70		
		(-11.00--1.75)	9.25		
		A RIPORTARE ml	10.32		

		CALCOLO DELLE LUNGHEZZE		Foglio n. 150	
FONDAZIONE					
N. SEZIONE PROG.	FIG.	ELEMENTI DI CALCOLO	LUNGHEZZA ELEMENTARE ml	LUNGHEZZA FIGURA ml	NOTE
		RIPORTO ml	10.32		
				10.32	
158	e1	(-1.05--0.68)	0.37		
2355.00		(-1.75--1.05)	0.70		
		(-11.00--1.75)	9.25		
				10.32	
158	e2	(1.05-0.68)	0.37		
2355.00		(1.75-1.05)	0.70		
		(11.00-1.75)	9.25		
				10.32	
159	e1	(-1.05--0.68)	0.37		
2370.00		(-1.75--1.05)	0.70		
		(-11.00--1.75)	9.25		
				10.32	
159	e2	(1.05-0.68)	0.37		
2370.00		(1.75-1.05)	0.70		
		(11.00-1.75)	9.25		
				10.32	
160	e1	(-1.05--0.68)	0.37		
2385.00		(-1.75--1.05)	0.70		
		(-11.00--1.75)	9.25		
				10.32	
160	e2	(1.05-0.68)	0.37		
2385.00		(1.75-1.05)	0.70		
		(11.00-1.75)	9.25		
				10.32	
161	e1	(-1.05--0.68)	0.37		
2400.00		(-1.75--1.05)	0.70		
		(-11.00--1.75)	9.25		
				10.32	
161	e2	(1.05-0.68)	0.37		
2400.00		(1.75-1.05)	0.70		
		(11.00-1.75)	9.25		
				10.32	
162	e1	(-1.05--0.68)	0.37		
2415.00		(-1.75--1.05)	0.70		
		(-11.00--1.75)	9.25		
				10.32	
162	e2	(1.05-0.68)	0.37		
2415.00		(1.75-1.05)	0.70		
		(11.00-1.75)	9.25		
				10.32	
163	e1	(-1.05--0.68)	0.37		
2430.00		(-1.75--1.05)	0.70		
		(-11.00--1.75)	9.25		
				10.32	
163	e2	(1.05-0.68)	0.37		
2430.00		(1.75-1.05)	0.70		
		(11.00-1.75)	9.25		
				10.32	
164	e1	(-1.05--0.68)	0.37		
2445.00		(-1.75--1.05)	0.70		
		(-11.00--1.75)	9.25		
				10.32	
164	e2	(1.05-0.68)	0.37		
2445.00		(1.75-1.05)	0.70		
		(11.00-1.75)	9.25		
				10.32	
165	e1	(-1.05--0.68)	0.37		
2460.00		(-1.75--1.05)	0.70		
		(-11.00--1.75)	9.25		
				10.32	
165	e2	(1.05-0.68)	0.37		
2460.00		(1.75-1.05)	0.70		
		(11.00-1.75)	9.25		
				10.32	
166	e2	(-1.05--0.68)	0.37		
2475.00		(-1.75--1.05)	0.70		
		(-11.00--1.75)	9.25		
				10.32	
166	e1	(1.05-0.68)	0.37		
2475.00		(1.75-1.05)	0.70		
		(11.00-1.75)	9.25		
				10.32	
167	e2	(-1.05--0.68)	0.37		
2490.00		(-1.75--1.05)	0.70		
		(-11.00--1.75)	9.25		
				10.32	
167	e1	(1.05-0.68)	0.37		
2490.00		(1.75-1.05)	0.70		
		(11.00-1.75)	9.25		
				10.32	
168	e2	(-1.05--0.68)	0.37		
2505.00		(-1.75--1.05)	0.70		
		(-11.00--1.75)	9.25		
				10.32	
168	e1	(1.05-0.68)	0.37		
2505.00		(1.75-1.05)	0.70		
		(11.00-1.75)	9.25		
				10.32	
169	e2	(-1.05--0.68)	0.37		
2520.00		(-1.75--1.05)	0.70		
		(-11.00--1.75)	9.25		
				10.32	
169	e1	(1.05-0.68)	0.37		
2520.00		(1.75-1.05)	0.70		
		(11.00-1.75)	9.25		
				10.32	
170	e2	(-1.05--0.68)	0.37		
2535.00		(-1.75--1.05)	0.70		
		(-11.00--1.75)	9.25		
				10.32	
170	e1	(1.05-0.68)	0.37		
2535.00		(1.75-1.05)	0.70		
		(11.00-1.75)	9.25		
		A RIPORTARE ml	10.32		

		CALCOLO DELLE LUNGHEZZE		Foglio n. 151
FONDAZIONE				
N. SEZIONE PROG.	FIG.	ELEMENTI DI CALCOLO	LUNGHEZZA ELEMENTARE ml	LUNGHEZZA FIGURA ml	NOTE
		RIPORTO ml	10.32		
				10.32	
171	e2	(-1.05--0.68)	0.37		
2550.00		(-1.75--1.05)	0.70		
		(-11.00--1.75)	9.25		
				10.32	
171	e1	(1.05-0.68)	0.37		
2550.00		(1.75-1.05)	0.70		
		(11.01-1.75)	9.26		
				10.33	
172	e2	(-1.05--0.68)	0.37		
2565.00		(-1.75--1.05)	0.70		
		(-11.00--1.75)	9.25		
				10.32	
172	e1	(1.05-0.68)	0.37		
2565.00		(1.75-1.05)	0.70		
		(11.01-1.75)	9.26		
				10.33	
173	e2	(-1.05--0.68)	0.37		
2580.00		(-1.75--1.05)	0.70		
		(-11.00--1.75)	9.25		
				10.32	
173	e1	(1.05-0.68)	0.37		
2580.00		(1.75-1.05)	0.70		
		(11.01-1.75)	9.26		
				10.33	
174	e2	(-1.06--0.69)	0.37		
2595.00		(-1.75--1.06)	0.69		
		(-11.00--1.75)	9.25		
				10.31	
174	e1	(1.05-0.68)	0.37		
2595.00		(1.75-1.05)	0.70		
		(11.06-1.75)	9.31		
				10.38	
175	e2	(-1.06--0.69)	0.37		
2610.00		(-1.75--1.06)	0.69		
		(-11.00--1.75)	9.25		
				10.31	
175	e1	(1.05-0.67)	0.38		
2610.00		(1.75-1.05)	0.70		
		(11.18-1.75)	9.43		
				10.51	
176	e2	(-1.06--0.69)	0.37		
2625.00		(-1.75--1.06)	0.69		
		(-11.00--1.75)	9.25		
				10.31	
176	e1	(1.05-0.66)	0.39		
2625.00		(1.75-1.05)	0.70		
		(11.31-1.75)	9.56		
				10.65	
177	e1	(1.06-0.65)	0.41		
2640.00		(1.75-1.06)	0.69		
		(11.42-1.75)	9.67		
				10.77	
177	e2	(-1.06--0.69)	0.37		
2640.00		(-1.75--1.06)	0.69		
		(-11.00--1.75)	9.25		
				10.31	
178	e2	(-1.06--0.70)	0.36		
2655.00		(-1.75--1.06)	0.69		
		(-11.00--1.75)	9.25		
				10.30	
178	e1	(1.06-0.65)	0.41		
2655.00		(1.75-1.06)	0.69		
		(11.55-1.75)	9.80		
				10.90	
179	e2	(-1.06--0.70)	0.36		
2670.00		(-1.75--1.06)	0.69		
		(-11.00--1.75)	9.25		
				10.30	
179	e1	(1.07-0.64)	0.43		
2670.00		(1.75-1.07)	0.68		
		(11.66-1.75)	9.91		
				11.02	
180	e1	(1.08-0.64)	0.44		
2685.00		(1.75-1.08)	0.67		
		(11.79-1.75)	10.04		
				11.15	
180	e2	(-1.06--0.70)	0.36		
2685.00		(-1.75--1.06)	0.69		
		(-11.00--1.75)	9.25		
				10.30	
181	e2	(-1.06--0.71)	0.35		
2700.00		(-1.75--1.06)	0.69		
		(-11.00--1.75)	9.25		
				10.29	
181	e1	(1.10-0.63)	0.47		
2700.00		(1.75-1.10)	0.65		
		(11.91-1.75)	10.16		
				11.28	
182	e2	(-1.06--0.71)	0.35		
2715.00		(-1.75--1.06)	0.69		
		(-11.00--1.75)	9.25		
				10.29	
182	e1	(1.11-0.63)	0.48		
2715.00		(1.75-1.11)	0.64		
		(12.00-1.75)	10.25		
				11.37	
183	e2	(-1.06--0.71)	0.35		
2730.00		(-1.75--1.06)	0.69		
		(-11.00--1.75)	9.25		
				10.29	
183	e1	(1.11-0.63)	0.48		
2730.00		(1.75-1.11)	0.64		
		(12.01-1.75)	10.26		
		A RIPORTARE ml	11.38		

		CALCOLO DELLE LUNGHEZZE		Foglio n. 152
FONDAZIONE				
N. SEZIONE PROG.	FIG.	ELEMENTI DI CALCOLO	LUNGHEZZA ELEMENTARE ml	LUNGHEZZA FIGURA ml	NOTE
		RIPORTO ml	11.38		
				11.38	
184	e2	(-1.06--0.71)	0.35		
2745.00		(-1.75--1.06)	0.69		
		(-11.00--1.75)	9.25		
				10.29	
184	e1	(1.11-0.63)	0.48		
2745.00		(1.75-1.11)	0.64		
		(12.00-1.75)	10.25		
				11.37	
185	e2	(-1.06--0.71)	0.35		
2760.00		(-1.75--1.06)	0.69		
		(-11.00--1.75)	9.25		
				10.29	
185	e1	(1.11-0.63)	0.48		
2760.00		(1.75-1.11)	0.64		
		(12.01-1.75)	10.26		
				11.38	
186	e2	(-1.06--0.71)	0.35		
2775.00		(-1.75--1.06)	0.69		
		(-11.00--1.75)	9.25		
				10.29	
186	e1	(1.11-0.63)	0.48		
2775.00		(1.75-1.11)	0.64		
		(12.01-1.75)	10.26		
				11.38	
187	e2	(-1.06--0.71)	0.35		
2790.00		(-1.75--1.06)	0.69		
		(-11.00--1.75)	9.25		
				10.29	
187	e1	(1.11-0.63)	0.48		
2790.00		(1.75-1.11)	0.64		
		(12.01-1.75)	10.26		
				11.38	
188	e2	(-1.06--0.70)	0.36		
2805.00		(-1.75--1.06)	0.69		
		(-11.00--1.75)	9.25		
				10.30	
188	e1	(1.08-0.64)	0.44		
2805.00		(1.75-1.08)	0.67		
		(11.77-1.75)	10.02		
				11.13	
189	e2	(-1.06--0.70)	0.36		
2820.00		(-1.75--1.06)	0.69		
		(-11.00--1.75)	9.25		
				10.30	
189	e1	(1.06-0.66)	0.40		
2820.00		(1.75-1.06)	0.69		
		(11.52-1.75)	9.77		
				10.86	
190	e2	(-1.06--0.69)	0.37		
2835.00		(-1.75--1.06)	0.69		
		(-11.00--1.75)	9.25		
				10.31	
190	e1	(1.05-0.67)	0.38		
2835.00		(1.75-1.05)	0.70		
		(11.28-1.75)	9.53		
				10.61	
191	e2	(-1.06--0.68)	0.38		
2850.00		(-1.75--1.06)	0.69		
		(-11.00--1.75)	9.25		
				10.32	
191	e1	(1.05-0.68)	0.37		
2850.00		(1.75-1.05)	0.70		
		(11.03-1.75)	9.28		
				10.35	
192	e1	(1.05-0.69)	0.36		
2865.00		(1.75-1.05)	0.70		
		(11.03-1.75)	9.28		
				10.34	
192	e2	(-1.05--0.68)	0.37		
2865.00		(-1.75--1.05)	0.70		
		(-11.00--1.75)	9.25		
				10.32	
193	e1	(1.05-0.69)	0.36		
2880.00		(1.75-1.05)	0.70		
		(11.09-1.75)	9.34		
				10.40	
193	e2	(-1.05--0.67)	0.38		
2880.00		(-1.75--1.05)	0.70		
		(-11.00--1.75)	9.25		
				10.33	
194	e1	(1.05-0.70)	0.35		
2895.00		(1.75-1.05)	0.70		
		(11.17-1.75)	9.42		
				10.47	
194	e2	(-1.05--0.66)	0.39		
2895.00		(-1.75--1.05)	0.70		
		(-11.00--1.75)	9.25		
				10.34	
195	e2	(-1.04--0.64)	0.40		
2910.00		(-1.75--1.04)	0.71		
		(-11.00--1.75)	9.25		
				10.36	
195	e1	(1.05-0.70)	0.35		
2910.00		(1.75-1.05)	0.70		
		(11.24-1.75)	9.49		
				10.54	
196	e1	(-1.04--0.63)	0.41		
2925.00		(-1.75--1.04)	0.71		
		(-11.00--1.75)	9.25		
				10.37	
196	e2	(1.05-0.71)	0.34		
2925.00		(1.75-1.05)	0.70		
		(11.28-1.75)	9.53		
		A RIPORTARE ml	10.57		

	CALCOLO DELLE LUNGHEZZE		Foglio n. 153

FONDAZIONE

N. SEZIONE PROG.	FIG.	ELEMENTI DI CALCOLO	LUNGHEZZA ELEMENTARE ml	LUNGHEZZA FIGURA ml	NOTE
		RIPORTO ml	10.57		
				10.57	
197	e1	(1.04-0.71)	0.33		
2940.00		(1.75-1.04)	0.71		
		(11.28-1.75)	9.53		
				10.57	
197	e2	(-1.03--0.63)	0.40		
2940.00		(-1.75--1.03)	0.72		
		(-11.00--1.75)	9.25		
				10.37	
198	e1	(-1.03--0.63)	0.40		
2955.00		(-1.75--1.03)	0.72		
		(-11.00--1.75)	9.25		
				10.37	
198	e2	(1.05-0.71)	0.34		
2955.00		(1.75-1.05)	0.70		
		(11.25-1.75)	9.50		
				10.54	
199	e1	(1.05-0.71)	0.34		
2970.00		(1.75-1.05)	0.70		
		(11.23-1.75)	9.48		
				10.52	
199	e2	(-1.03--0.63)	0.40		
2970.00		(-1.75--1.03)	0.72		
		(-11.00--1.75)	9.25		
				10.37	
200	e1	(1.05-0.71)	0.34		
2985.00		(1.75-1.05)	0.70		
		(11.21-1.75)	9.46		
				10.50	
200	e2	(-1.03--0.63)	0.40		
2985.00		(-1.75--1.03)	0.72		
		(-11.00--1.75)	9.25		
				10.37	
201	e1	(1.05-0.71)	0.34		
3000.00		(1.75-1.05)	0.70		
		(11.19-1.75)	9.44		
				10.48	
201	e2	(-1.03--0.63)	0.40		
3000.00		(-1.75--1.03)	0.72		
		(-11.00--1.75)	9.25		
				10.37	
201b	e1	(1.05-0.71)	0.34		
3005.94		(1.75-1.05)	0.70		
		(11.19-1.75)	9.44		
				10.48	
201b	e2	(-1.03--0.63)	0.40		
3005.94		(-1.75--1.03)	0.72		
		(-11.00--1.75)	9.25		
				10.37	

Il Direttore dei Lavori	L'Impresa	

		CALCOLO DELLE LUNGHEZZE		Foglio n. 154
SCOTICO				
N. SEZIONE PROG.	FIG.	ELEMENTI DI CALCOLO	LUNGHEZZA ELEMENTARE ml	LUNGHEZZA FIGURA ml	NOTE
132	sc1	(-20.45--20.45)	0.00		
1965.00		(-20.31--20.45)	0.14		
		(-20.24--20.31)	0.07		
		(-20.11--20.24)	0.13		
		(-19.15--20.11)	0.96		
		(-18.60--19.15)	0.55		
		(-18.05--18.60)	0.55		
		(-17.10--18.05)	0.95		
		(-16.96--17.10)	0.14		
		(-16.89--16.96)	0.07		
		(-15.87--16.89)	1.02		
		(-15.18--15.87)	0.69		
		(-14.78--15.18)	0.40		
		(-14.09--14.78)	0.69		
		(-13.69--14.09)	0.40		
		(-13.47--13.69)	0.22		
		(-12.60--13.47)	0.87		
		(-11.76--12.60)	0.84		
		(-11.51--11.76)	0.25		
		(-11.08--11.51)	0.43		
		(-10.42--11.08)	0.66		
		(-10.05--10.42)	0.37		
		(-9.33--10.05)	0.72		
		(-8.33--9.33)	1.00		
		(-8.24--8.33)	0.09		
		(-8.20--8.24)	0.04		
		(-8.07--8.20)	0.13		
		(-7.39--8.07)	0.68		
		(-7.15--7.39)	0.24		
		(-6.62--7.15)	0.53		
		(-6.06--6.62)	0.56		
		(-5.06--6.06)	1.00		
		(-4.97--5.06)	0.09		
		(-4.91--4.97)	0.06		
		(-3.88--4.91)	1.03		
		(-3.20--3.88)	0.68		
		(-2.79--3.20)	0.41		
		(-2.06--2.79)	0.73		
		(-1.70--2.06)	0.36		
		(-1.49--1.70)	0.21		
		(-0.61--1.49)	0.88		
		(0.22--0.61)	0.83		
		(0.48-0.22)	0.26		
		(0.95-0.48)	0.47		
		(1.58-0.95)	0.63		
		(1.93-1.58)	0.35		
		(2.67-1.93)	0.74		
		(3.01-2.67)	0.34		
		(3.76-3.01)	0.75		
		(3.96-3.76)	0.20		
		(4.85-3.96)	0.89		
		(5.35-4.85)	0.50		
		(5.94-5.35)	0.59		
		(6.97-5.94)	1.03		
		(7.03-6.97)	0.06		
		(7.06-7.03)	0.03		
		(8.12-7.06)	1.06		
		(8.77-8.12)	0.65		
		(9.21-8.77)	0.44		
		(9.98-9.21)	0.77		
		(10.30-9.98)	0.32		
		(10.48-10.30)	0.18		
		(11.39-10.48)	0.91		
		(12.19-11.39)	0.80		
		(12.48-12.19)	0.29		
		(12.62-12.48)	0.14		
		(12.99-12.62)	0.37		
		(13.57-12.99)	0.58		
		(14.22-13.57)	0.65		
		(14.66-14.22)	0.44		
		(15.61-14.66)	0.95		
		(15.75-15.61)	0.14		
		(16.00-15.75)	0.25		
		(16.84-16.00)	0.84		
		(17.33-16.84)	0.49		
		(17.93-17.33)	0.60		
		(19.00-17.93)	1.07		
		(19.02-19.00)	0.02		
		(19.04-19.02)	0.02		
		(20.11-19.04)	1.07		
		(20.75-20.11)	0.64		
		(21.21-20.75)	0.46		
		(22.01-21.21)	0.80		
		(22.30-22.01)	0.29		
		(22.46-22.30)	0.16		
		(23.24-22.46)	0.78		
		(23.24-23.24)	0.00		
				43.69	
133	sc1	(-19.72--19.72)	0.00		
1980.00		(-19.13--19.72)	0.59		
		(-18.15--19.13)	0.98		
		(-18.04--18.15)	0.11		
		(-17.84--18.04)	0.20		
		(-16.95--17.84)	0.89		
		(-16.44--16.95)	0.51		
		(-15.86--16.44)	0.58		
		(-14.83--15.86)	1.03		
		(-14.77--14.83)	0.06		
		(-14.73--14.77)	0.04		
		(-13.68--14.73)	1.05		
		(-13.18--13.68)	0.50		
		(-12.59--13.18)	0.59		
		(-11.82--12.59)	0.77		
		(-11.50--11.82)	0.32		
		(-11.31--11.50)	0.19		
		(-10.41--11.31)	0.90		
		A RIPORTARE ml	9.31		

		CALCOLO DELLE LUNGHEZZE		Foglio n. 155
SCOTICO				
N. SEZIONE PROG.	FIG.	ELEMENTI DI CALCOLO	LUNGHEZZA ELEMENTARE ml	LUNGHEZZA FIGURA ml	NOTE
		RIPORTO ml	9.31		
		(-9.60--10.41)	0.81		
		(-9.32--9.60)	0.28		
		(-8.81--9.32)	0.51		
		(-8.22--8.81)	0.59		
		(-7.89--8.22)	0.33		
		(-7.13--7.89)	0.76		
		(-6.18--7.13)	0.95		
		(-6.04--6.18)	0.14		
		(-5.80--6.04)	0.24		
		(-4.95--5.80)	0.85		
		(-4.47--4.95)	0.48		
		(-3.86--4.47)	0.61		
		(-2.79--3.86)	1.07		
		(-2.77--2.79)	0.02		
		(-1.98--2.77)	0.79		
		(-1.68--1.98)	0.30		
		(-1.05--1.68)	0.63		
		(-0.59--1.05)	0.46		
		(0.21--0.59)	0.80		
		(0.50-0.21)	0.29		
		(0.66-0.50)	0.16		
		(1.59-0.66)	0.93		
		(2.37-1.59)	0.78		
		(2.68-2.37)	0.31		
		(3.22-2.68)	0.54		
		(3.77-3.22)	0.55		
		(4.08-3.77)	0.31		
		(4.86-4.08)	0.78		
		(5.79-4.86)	0.93		
		(5.95-5.79)	0.16		
		(6.23-5.95)	0.28		
		(7.04-6.23)	0.81		
		(7.51-7.04)	0.47		
		(8.13-7.51)	0.62		
		(8.43-8.13)	0.30		
		(9.22-8.43)	0.79		
		(9.24-9.22)	0.02		
		(10.32-9.24)	1.08		
		(10.93-10.32)	0.61		
		(11.41-10.93)	0.48		
		(12.25-11.41)	0.84		
		(12.50-12.25)	0.25		
		(12.64-12.50)	0.14		
		(13.59-12.64)	0.95		
		(14.35-13.59)	0.76		
		(14.68-14.35)	0.33		
		(15.26-14.68)	0.58		
		(15.77-15.26)	0.51		
		(16.06-15.77)	0.29		
		(16.86-16.06)	0.80		
		(17.77-16.86)	0.91		
		(17.95-17.77)	0.18		
		(18.26-17.95)	0.31		
		(19.04-18.26)	0.78		
		(19.63-19.04)	0.59		
		(20.13-19.63)	0.50		
		(21.19-20.13)	1.06		
		(21.22-21.19)	0.03		
		(21.27-21.22)	0.05		
		(22.01-21.27)	0.74		
		(22.01-22.01)	0.00		
				41.73	
134 1995.00	sc1	(-19.05--19.05)	0.00		
		(-18.97--19.05)	0.08		
		(-18.58--18.97)	0.39		
		(-18.17--18.58)	0.41		
		(-18.02--18.17)	0.15		
		(-17.71--18.02)	0.31		
		(-16.93--17.71)	0.78		
		(-16.00--16.93)	0.93		
		(-15.84--16.00)	0.16		
		(-15.57--15.84)	0.27		
		(-14.75--15.57)	0.82		
		(-14.29--14.75)	0.46		
		(-13.66--14.29)	0.63		
		(-12.58--13.66)	1.08		
		(-12.57--12.58)	0.01		
		(-12.56--12.57)	0.01		
		(-11.48--12.56)	1.08		
		(-10.87--11.48)	0.61		
		(-10.39--10.87)	0.48		
		(-9.55--10.39)	0.84		
		(-9.30--9.55)	0.25		
		(-9.16--9.30)	0.14		
		(-8.21--9.16)	0.95		
		(-7.77--8.21)	0.44		
		(-7.12--7.77)	0.65		
		(-6.54--7.12)	0.58		
		(-6.03--6.54)	0.51		
		(-5.74--6.03)	0.29		
		(-4.94--5.74)	0.80		
		(-4.02--4.94)	0.92		
		(-3.85--4.02)	0.17		
		(-3.53--3.85)	0.32		
		(-2.76--3.53)	0.77		
		(-2.31--2.76)	0.45		
		(-1.67--2.31)	0.64		
		(-0.60--1.67)	1.07		
		(-0.58--0.60)	0.02		
		(-0.53--0.58)	0.05		
		(0.52--0.53)	1.05		
		(1.11-0.52)	0.59		
		(1.61-1.11)	0.50		
		(2.48-1.61)	0.87		
		A RIPORTARE ml	21.53		

		CALCOLO DELLE LUNGHEZZE		Foglio n. 156
SCOTICO				
N. SEZIONE PROG.	FIG.	ELEMENTI DI CALCOLO	LUNGHEZZA ELEMENTARE ml	LUNGHEZZA FIGURA ml	NOTE
		RIPORTO ml	21.53		
		(2.70-2.48)	0.22		
		(3.44-2.70)	0.74		
		(3.79-3.44)	0.35		
		(4.53-3.79)	0.74		
		(4.88-4.53)	0.35		
		(5.49-4.88)	0.61		
		(5.97-5.49)	0.48		
		(6.24-5.97)	0.27		
		(7.06-6.24)	0.82		
		(7.95-7.06)	0.89		
		(8.15-7.95)	0.20		
		(8.50-8.15)	0.35		
		(9.24-8.50)	0.74		
		(9.66-9.24)	0.42		
		(10.33-9.66)	0.67		
		(11.37-10.33)	1.04		
		(11.42-11.37)	0.05		
		(11.51-11.42)	0.09		
		(12.51-11.51)	1.00		
		(13.08-12.51)	0.57		
		(13.60-13.08)	0.52		
		(13.85-13.60)	0.25		
		(14.52-13.85)	0.67		
		(14.65-14.52)	0.13		
		(14.69-14.65)	0.04		
		(14.79-14.69)	0.10		
		(15.78-14.79)	0.99		
		(16.50-15.78)	0.72		
		(16.87-16.50)	0.37		
		(17.53-16.87)	0.66		
		(17.96-17.53)	0.43		
		(18.21-17.96)	0.25		
		(19.06-18.21)	0.85		
		(19.92-19.06)	0.86		
		(20.15-19.92)	0.23		
		(20.53-20.15)	0.38		
		(21.24-20.53)	0.71		
		(21.64-21.24)	0.40		
		(22.24-21.64)	0.60		
		(22.24-22.24)	0.00		
				41.29	
135 2010.00	sc1	(-18.58--18.58)	0.00		
		(-18.01--18.58)	0.57		
		(-17.27--18.01)	0.74		
		(-16.92--17.27)	0.35		
		(-16.31--16.92)	0.61		
		(-15.83--16.31)	0.48		
		(-15.56--15.83)	0.27		
		(-14.74--15.56)	0.82		
		(-13.84--14.74)	0.90		
		(-13.65--13.84)	0.19		
		(-13.55--13.65)	0.10		
		(-13.30--13.55)	0.25		
		(-12.75--13.30)	0.55		
		(-12.56--12.75)	0.19		
		(-12.13--12.56)	0.43		
		(-11.47--12.13)	0.66		
		(-10.42--11.47)	1.05		
		(-10.37--10.42)	0.05		
		(-10.29--10.37)	0.08		
		(-9.28--10.29)	1.01		
		(-8.71--9.28)	0.57		
		(-8.19--8.71)	0.52		
		(-7.28--8.19)	0.91		
		(-7.10--7.28)	0.18		
		(-7.00--7.10)	0.10		
		(-6.01--7.00)	0.99		
		(-5.29--6.01)	0.72		
		(-4.92--5.29)	0.37		
		(-4.27--4.92)	0.65		
		(-3.83--4.27)	0.44		
		(-3.58--3.83)	0.25		
		(-2.74--3.58)	0.84		
		(-2.35--2.74)	0.39		
		(-1.65--2.35)	0.70		
		(-1.26--1.65)	0.39		
		(-0.56--1.26)	0.70		
		(-0.16--0.56)	0.40		
		(0.53--0.16)	0.69		
		(1.55-0.53)	1.02		
		(1.62-1.55)	0.07		
		(1.74-1.62)	0.12		
		(2.71-1.74)	0.97		
		(3.26-2.71)	0.55		
		(3.80-3.26)	0.54		
		(4.75-3.80)	0.95		
		(4.89-4.75)	0.14		
		(4.97-4.89)	0.08		
		(5.98-4.97)	1.01		
		(6.68-5.98)	0.70		
		(7.07-6.68)	0.39		
		(7.76-7.07)	0.69		
		(8.06-7.76)	0.30		
		(8.16-8.06)	0.10		
		(8.39-8.16)	0.23		
		(9.26-8.39)	0.87		
		(10.10-9.26)	0.84		
		(10.35-10.10)	0.25		
		(10.77-10.35)	0.42		
		(11.44-10.77)	0.67		
		(11.82-11.44)	0.38		
		(12.53-11.82)	0.71		
		(13.53-12.53)	1.00		
		(13.62-13.53)	0.09		
		A RIPORTARE ml	32.20		

		CALCOLO DELLE LUNGHEZZE		Foglio n. 157
SCOTICO				
N. SEZIONE PROG.	FIG.	ELEMENTI DI CALCOLO	LUNGHEZZA ELEMENTARE ml	LUNGHEZZA FIGURA ml	NOTE
		RIPORTO ml	32.20		
		(13.78-13.62)	0.16		
		(14.71-13.78)	0.93		
		(15.24-14.71)	0.53		
		(15.80-15.24)	0.56		
		(16.79-15.80)	0.99		
		(16.89-16.79)	0.10		
		(16.95-16.89)	0.06		
		(17.98-16.95)	1.03		
		(18.66-17.98)	0.68		
		(19.07-18.66)	0.41		
		(19.80-19.07)	0.73		
		(20.16-19.80)	0.36		
		(20.37-20.16)	0.21		
		(21.25-20.37)	0.88		
		(21.52-21.25)	0.27		
		(21.52-21.52)	0.00		
				40.10	
136	sc1	(-17.34--17.34)	0.00		
2025.00		(-17.05--17.34)	0.29		
		(-16.90--17.05)	0.15		
		(-16.82--16.90)	0.08		
		(-15.81--16.82)	1.01		
		(-15.11--15.81)	0.70		
		(-14.72--15.11)	0.39		
		(-14.04--14.72)	0.68		
		(-13.63--14.04)	0.41		
		(-13.40--13.63)	0.23		
		(-12.54--13.40)	0.86		
		(-11.69--12.54)	0.85		
		(-11.45--11.69)	0.24		
		(-11.03--11.45)	0.42		
		(-10.36--11.03)	0.67		
		(-9.98--10.36)	0.38		
		(-9.27--9.98)	0.71		
		(-8.27--9.27)	1.00		
		(-8.18--8.27)	0.09		
		(-8.14--8.18)	0.04		
		(-8.02--8.14)	0.12		
		(-7.34--8.02)	0.68		
		(-7.09--7.34)	0.25		
		(-6.56--7.09)	0.53		
		(-6.00--6.56)	0.56		
		(-5.01--6.00)	0.99		
		(-4.91--5.01)	0.10		
		(-4.85--4.91)	0.06		
		(-3.82--4.85)	1.03		
		(-3.14--3.82)	0.68		
		(-2.73--3.14)	0.41		
		(-2.00--2.73)	0.73		
		(-1.63--2.00)	0.37		
		(-1.43--1.63)	0.20		
		(-0.54--1.43)	0.89		
		(0.29--0.54)	0.83		
		(0.55-0.29)	0.26		
		(1.01-0.55)	0.46		
		(1.64-1.01)	0.63		
		(2.00-1.64)	0.36		
		(2.73-2.00)	0.73		
		(3.07-2.73)	0.34		
		(3.82-3.07)	0.75		
		(4.01-3.82)	0.19		
		(4.91-4.01)	0.90		
		(5.42-4.91)	0.51		
		(6.00-5.42)	0.58		
		(7.02-6.00)	1.02		
		(7.09-7.02)	0.07		
		(7.13-7.09)	0.04		
		(8.18-7.13)	1.05		
		(8.84-8.18)	0.66		
		(9.27-8.84)	0.43		
		(10.03-9.27)	0.76		
		(10.36-10.03)	0.33		
		(10.55-10.36)	0.19		
		(11.45-10.55)	0.90		
		(12.26-11.45)	0.81		
		(12.54-12.26)	0.28		
		(13.04-12.54)	0.50		
		(13.63-13.04)	0.59		
		(13.97-13.63)	0.34		
		(14.72-13.97)	0.75		
		(15.68-14.72)	0.96		
		(15.81-15.68)	0.13		
		(16.05-15.81)	0.24		
		(16.90-16.05)	0.85		
		(17.39-16.90)	0.49		
		(18.00-17.39)	0.61		
		(19.06-18.00)	1.06		
		(19.09-19.06)	0.03		
		(19.10-19.09)	0.01		
		(20.18-19.10)	1.08		
		(20.65-20.18)	0.47		
		(20.65-20.65)	0.00		
				37.99	
137	sc1	(-16.68--16.68)	0.00		
2040.00		(-16.38--16.68)	0.30		
		(-15.80--16.38)	0.58		
		(-14.78--15.80)	1.02		
		(-14.71--14.78)	0.07		
		(-14.67--14.71)	0.04		
		(-13.62--14.67)	1.05		
		(-13.12--13.62)	0.50		
		(-12.53--13.12)	0.59		
		(-11.77--12.53)	0.76		
		(-11.43--11.77)	0.34		
		A RIPORTARE ml	5.25		

		CALCOLO DELLE LUNGHEZZE		Foglio n. 158
SCOTICO				
N. SEZIONE PROG.	FIG.	ELEMENTI DI CALCOLO	LUNGHEZZA ELEMENTARE ml	LUNGHEZZA FIGURA ml	NOTE
		RIPORTO ml	5.25		
		(-11.25--11.43)	0.18		
		(-10.34--11.25)	0.91		
		(-9.53--10.34)	0.81		
		(-9.25--9.53)	0.28		
		(-8.76--9.25)	0.49		
		(-8.16--8.76)	0.60		
		(-7.82--8.16)	0.34		
		(-7.07--7.82)	0.75		
		(-6.11--7.07)	0.96		
		(-5.98--6.11)	0.13		
		(-5.75--5.98)	0.23		
		(-4.89--5.75)	0.86		
		(-4.40--4.89)	0.49		
		(-3.80--4.40)	0.60		
		(-2.74--3.80)	1.06		
		(-2.71--2.74)	0.03		
		(-1.92--2.71)	0.79		
		(-1.62--1.92)	0.30		
		(-0.98--1.62)	0.64		
		(-0.53--0.98)	0.45		
		(0.27--0.53)	0.80		
		(0.56-0.27)	0.29		
		(0.73-0.56)	0.17		
		(1.65-0.73)	0.92		
		(2.44-1.65)	0.79		
		(2.74-2.44)	0.30		
		(3.27-2.74)	0.53		
		(3.83-3.27)	0.56		
		(4.15-3.83)	0.32		
		(4.92-4.15)	0.77		
		(5.86-4.92)	0.94		
		(6.01-5.86)	0.15		
		(6.28-6.01)	0.27		
		(7.10-6.28)	0.82		
		(7.57-7.10)	0.47		
		(8.20-7.57)	0.63		
		(9.28-8.20)	1.08		
		(9.29-9.28)	0.01		
		(9.29-9.29)	0.00		
		(10.38-9.29)	1.09		
		(10.99-10.38)	0.61		
		(11.47-10.99)	0.48		
		(12.30-11.47)	0.83		
		(12.56-12.30)	0.26		
		(12.70-12.56)	0.14		
		(13.65-12.70)	0.95		
		(14.42-13.65)	0.77		
		(14.74-14.42)	0.32		
		(15.31-14.74)	0.57		
		(15.83-15.31)	0.52		
		(16.13-15.83)	0.30		
		(16.92-16.13)	0.79		
		(17.29-16.92)	0.37		
		(18.01-17.29)	0.72		
		(18.32-18.01)	0.31		
		(19.10-18.32)	0.78		
		(19.25-19.10)	0.15		
		(19.25-19.25)	0.00		
				35.93	
138 2055.00	sc1	(-16.17--16.17)	0.00		
		(-15.93--16.17)	0.24		
		(-15.78--15.93)	0.15		
		(-15.52--15.78)	0.26		
		(-14.69--15.52)	0.83		
		(-14.22--14.69)	0.47		
		(-13.60--14.22)	0.62		
		(-12.51--13.60)	1.09		
		(-12.51--12.51)	0.00		
		(-12.51--12.51)	0.00		
		(-11.42--12.51)	1.09		
		(-10.80--11.42)	0.62		
		(-10.33--10.80)	0.47		
		(-9.50--10.33)	0.83		
		(-9.24--9.50)	0.26		
		(-9.09--9.24)	0.15		
		(-8.15--9.09)	0.94		
		(-7.71--8.15)	0.44		
		(-7.06--7.71)	0.65		
		(-6.49--7.06)	0.57		
		(-5.97--6.49)	0.52		
		(-5.67--5.97)	0.30		
		(-4.88--5.67)	0.79		
		(-3.96--4.88)	0.92		
		(-3.79--3.96)	0.17		
		(-3.48--3.79)	0.31		
		(-2.69--3.48)	0.79		
		(-2.25--2.69)	0.44		
		(-1.60--2.25)	0.65		
		(-0.54--1.60)	1.06		
		(-0.51--0.54)	0.03		
		(-0.47--0.51)	0.04		
		(0.58--0.47)	1.05		
		(1.17-0.58)	0.59		
		(1.67-1.17)	0.50		
		(2.54-1.67)	0.87		
		(2.76-2.54)	0.22		
		(2.88-2.76)	0.12		
		(3.85-2.88)	0.97		
		(4.60-3.85)	0.75		
		(4.94-4.60)	0.34		
		(5.54-4.94)	0.60		
		(6.03-5.54)	0.49		
		(6.31-6.03)	0.28		
		(7.12-6.31)	0.81		
		A RIPORTARE ml	23.29		

		CALCOLO DELLE LUNGHEZZE		Foglio n. 159
SCOTICO				
N. SEZIONE PROG.	FIG.	ELEMENTI DI CALCOLO	LUNGHEZZA ELEMENTARE ml	LUNGHEZZA FIGURA ml	NOTE
		RIPORTO ml	23.29		
		(8.02-7.12)	0.90		
		(8.21-8.02)	0.19		
		(8.55-8.21)	0.34		
		(9.30-8.55)	0.75		
		(9.73-9.30)	0.43		
		(10.39-9.73)	0.66		
		(11.44-10.39)	1.05		
		(11.48-11.44)	0.04		
		(11.50-11.48)	0.02		
		(11.56-11.50)	0.06		
		(12.30-11.56)	0.74		
		(12.57-12.30)	0.27		
		(13.15-12.57)	0.58		
		(13.66-13.15)	0.51		
		(14.57-13.66)	0.91		
		(14.75-14.57)	0.18		
		(14.86-14.75)	0.11		
		(15.84-14.86)	0.98		
		(16.57-15.84)	0.73		
		(16.94-16.57)	0.37		
		(16.97-16.94)	0.03		
		(16.97-16.97)	0.00		
				33.14	
139	sc1	(-14.98--14.98)	0.00		
2070.00		(-14.68--14.98)	0.30		
		(-13.78--14.68)	0.90		
		(-13.58--13.78)	0.20		
		(-13.49--13.58)	0.09		
		(-13.25--13.49)	0.24		
		(-12.69--13.25)	0.56		
		(-12.49--12.69)	0.20		
		(-12.07--12.49)	0.42		
		(-11.40--12.07)	0.67		
		(-10.36--11.40)	1.04		
		(-10.31--10.36)	0.05		
		(-10.24--10.31)	0.07		
		(-9.22--10.24)	1.02		
		(-8.65--9.22)	0.57		
		(-8.13--8.65)	0.52		
		(-7.23--8.13)	0.90		
		(-7.04--7.23)	0.19		
		(-6.94--7.04)	0.10		
		(-5.95--6.94)	0.99		
		(-5.22--5.95)	0.73		
		(-4.86--5.22)	0.36		
		(-4.22--4.86)	0.64		
		(-3.77--4.22)	0.45		
		(-3.51--3.77)	0.26		
		(-2.68--3.51)	0.83		
		(-1.80--2.68)	0.88		
		(-1.59--1.80)	0.21		
		(-1.21--1.59)	0.38		
		(-0.50--1.21)	0.71		
		(-0.09--0.50)	0.41		
		(0.59--0.09)	0.68		
		(1.62-0.59)	1.03		
		(1.68-1.62)	0.06		
		(1.80-1.68)	0.12		
		(2.77-1.80)	0.97		
		(3.33-2.77)	0.56		
		(3.86-3.33)	0.53		
		(4.81-3.86)	0.95		
		(4.95-4.81)	0.14		
		(5.04-4.95)	0.09		
		(6.05-5.04)	1.01		
		(6.52-6.05)	0.47		
		(7.14-6.52)	0.62		
		(7.81-7.14)	0.67		
		(8.23-7.81)	0.42		
		(8.46-8.23)	0.23		
		(9.32-8.46)	0.86		
		(10.17-9.32)	0.85		
		(10.41-10.17)	0.24		
		(10.82-10.41)	0.41		
		(11.50-10.82)	0.68		
		(11.88-11.50)	0.38		
		(12.59-11.88)	0.71		
		(13.59-12.59)	1.00		
		(13.68-13.59)	0.09		
		(13.83-13.68)	0.15		
		(14.77-13.83)	0.94		
		(15.30-14.77)	0.53		
		(15.86-15.30)	0.56		
		(16.20-15.86)	0.34		
		(16.20-16.20)	0.00		
				31.18	
140	sc1	(-13.67--13.67)	0.00		
2085.00		(-13.57--13.67)	0.10		
		(-13.33--13.57)	0.24		
		(-12.48--13.33)	0.85		
		(-11.62--12.48)	0.86		
		(-11.39--11.62)	0.23		
		(-10.98--11.39)	0.41		
		(-10.30--10.98)	0.68		
		(-9.91--10.30)	0.39		
		(-9.21--9.91)	0.70		
		(-8.20--9.21)	1.01		
		(-8.12--8.20)	0.08		
		(-7.97--8.12)	0.15		
		(-7.03--7.97)	0.94		
		(-6.49--7.03)	0.54		
		(-5.94--6.49)	0.55		
		(-4.96--5.94)	0.98		
		(-4.85--4.96)	0.11		
		A RIPORTARE ml	8.82		

		CALCOLO DELLE LUNGHEZZE		Foglio n. 160
SCOTICO				
N. SEZIONE PROG.	FIG.	ELEMENTI DI CALCOLO	LUNGHEZZA ELEMENTARE ml	LUNGHEZZA FIGURA ml	NOTE
		RIPORTO ml	8.82		
		(-4.78--4.85)	0.07		
		(-3.75--4.78)	1.03		
		(-3.07--3.75)	0.68		
		(-2.66--3.07)	0.41		
		(-1.95--2.66)	0.71		
		(-1.57--1.95)	0.38		
		(-1.36--1.57)	0.21		
		(-0.48--1.36)	0.88		
		(0.35--0.48)	0.83		
		(0.61-0.35)	0.26		
		(0.73-0.61)	0.12		
		(1.06-0.73)	0.33		
		(1.53-1.06)	0.47		
		(1.70-1.53)	0.17		
		(2.06-1.70)	0.36		
		(2.79-2.06)	0.73		
		(3.77-2.79)	0.98		
		(3.88-3.77)	0.11		
		(4.07-3.88)	0.19		
		(4.97-4.07)	0.90		
		(5.48-4.97)	0.51		
		(6.06-5.48)	0.58		
		(7.07-6.06)	1.01		
		(7.15-7.07)	0.08		
		(7.19-7.15)	0.04		
		(8.24-7.19)	1.05		
		(8.91-8.24)	0.67		
		(9.33-8.91)	0.42		
		(10.08-9.33)	0.75		
		(10.42-10.08)	0.34		
		(10.62-10.42)	0.20		
		(11.51-10.62)	0.89		
		(12.33-11.51)	0.82		
		(12.60-12.33)	0.27		
		(13.09-12.60)	0.49		
		(13.69-13.09)	0.60		
		(14.04-13.69)	0.35		
		(14.79-14.04)	0.75		
		(15.27-14.79)	0.48		
		(15.27-15.27)	0.00		
				28.94	
141	sc2	(-13.25--13.25)	0.00		
2100.00		(-12.89--13.25)	0.36		
		(-12.46--12.89)	0.43		
		(-11.72--12.46)	0.74		
		(-11.37--11.72)	0.35		
		(-11.18--11.37)	0.19		
		(-10.61--11.18)	0.57		
		(-10.61--10.61)	0.00		
				2.64	
141	sc1	(-6.77--6.77)	0.00		
2100.00		(-6.05--6.77)	0.72		
		(-5.92--6.05)	0.13		
		(-5.70--5.92)	0.22		
		(-4.83--5.70)	0.87		
		(-4.26--4.83)	0.57		
		(-3.74--4.26)	0.52		
		(-2.69--3.74)	1.05		
		(-2.65--2.69)	0.04		
		(-2.63--2.65)	0.02		
		(-1.56--2.63)	1.07		
		(-0.91--1.56)	0.65		
		(-0.47--0.91)	0.44		
		(0.32--0.47)	0.79		
		(0.62-0.32)	0.30		
		(0.80-0.62)	0.18		
		(1.71-0.80)	0.91		
		(2.51-1.71)	0.80		
		(2.80-2.51)	0.29		
		(3.33-2.80)	0.53		
		(3.89-3.33)	0.56		
		(4.22-3.89)	0.33		
		(4.99-4.22)	0.77		
		(5.93-4.99)	0.94		
		(6.08-5.93)	0.15		
		(6.34-6.08)	0.26		
		(7.17-6.34)	0.83		
		(7.64-7.17)	0.47		
		(8.26-7.64)	0.62		
		(9.34-8.26)	1.08		
		(9.35-9.34)	0.01		
		(9.35-9.35)	0.00		
		(10.44-9.35)	1.09		
		(11.06-10.44)	0.62		
		(11.53-11.06)	0.47		
		(12.35-11.53)	0.82		
		(12.62-12.35)	0.27		
		(12.77-12.62)	0.15		
		(13.71-12.77)	0.94		
		(14.15-13.71)	0.44		
		(14.73-14.15)	0.58		
		(14.73-14.73)	0.00		
				21.50	
142	sc2	(-14.66--14.66)	0.00		
2115.00		(-14.63--14.66)	0.03		
		(-14.16--14.63)	0.47		
		(-13.54--14.16)	0.62		
		(-13.24--13.54)	0.30		
		(-13.24--13.24)	0.00		
				1.42	
142	sc1	(-11.02--11.02)	0.00		
2115.00		(-10.73--11.02)	0.29		
		(-10.27--10.73)	0.46		
		(-10.05--10.27)	0.22		
		A RIPORTARE ml	0.97		

		CALCOLO DELLE LUNGHEZZE		Foglio n. 161
SCOTICO				
N. SEZIONE PROG.	FIG.	ELEMENTI DI CALCOLO	LUNGHEZZA ELEMENTARE ml	LUNGHEZZA FIGURA ml	NOTE
		RIPORTO ml	0.97		
		(-9.45--10.05)	0.60		
		(-9.25--9.45)	0.20		
		(-9.18--9.25)	0.07		
		(-9.02--9.18)	0.16		
		(-8.09--9.02)	0.93		
		(-7.31--8.09)	0.78		
		(-7.00--7.31)	0.31		
		(-6.44--7.00)	0.56		
		(-5.90--6.44)	0.54		
		(-5.60--5.90)	0.30		
		(-4.81--5.60)	0.79		
		(-3.89--4.81)	0.92		
		(-3.72--3.89)	0.17		
		(-3.43--3.72)	0.29		
		(-2.63--3.43)	0.80		
		(-2.18--2.63)	0.45		
		(-1.54--2.18)	0.64		
		(-0.47--1.54)	1.07		
		(-0.45--0.47)	0.02		
		(-0.42--0.45)	0.03		
		(0.64--0.42)	1.06		
		(1.24-0.64)	0.60		
		(1.73-1.24)	0.49		
		(2.59-1.73)	0.86		
		(2.82-2.59)	0.23		
		(2.95-2.82)	0.13		
		(3.91-2.95)	0.96		
		(4.66-3.91)	0.75		
		(5.00-4.66)	0.34		
		(5.60-5.00)	0.60		
		(6.09-5.60)	0.49		
		(6.37-6.09)	0.28		
		(7.18-6.37)	0.81		
		(8.08-7.18)	0.90		
		(8.27-8.08)	0.19		
		(8.36-8.27)	0.09		
		(8.60-8.36)	0.24		
		(9.16-8.60)	0.56		
		(9.36-9.16)	0.20		
		(9.79-9.36)	0.43		
		(10.45-9.79)	0.66		
		(11.50-10.45)	1.05		
		(11.54-11.50)	0.04		
		(11.61-11.54)	0.07		
		(12.63-11.61)	1.02		
		(13.22-12.63)	0.59		
		(13.73-13.22)	0.51		
		(14.62-13.73)	0.89		
		(14.82-14.62)	0.20		
		(14.93-14.82)	0.11		
		(15.71-14.93)	0.78		
		(15.71-15.71)	0.00		
				26.73	
143 2130.00	sc1	(-3.05--3.05)	0.00		
		(-2.62--3.05)	0.43		
		(-1.74--2.62)	0.88		
		(-1.53--1.74)	0.21		
		(-1.16--1.53)	0.37		
		(-0.44--1.16)	0.72		
		(-0.03--0.44)	0.41		
		(0.65--0.03)	0.68		
		(1.69-0.65)	1.04		
		(1.74-1.69)	0.05		
		(1.85-1.74)	0.11		
		(2.84-1.85)	0.99		
		(3.37-2.84)	0.53		
		(3.93-3.37)	0.56		
		(4.86-3.93)	0.93		
		(5.02-4.86)	0.16		
		(5.11-5.02)	0.09		
		(6.11-5.11)	1.00		
		(6.82-6.11)	0.71		
		(7.20-6.82)	0.38		
		(7.87-7.20)	0.67		
		(8.29-7.87)	0.42		
		(8.53-8.29)	0.24		
		(9.38-8.53)	0.85		
		(10.24-9.38)	0.86		
		(10.47-10.24)	0.23		
		(10.87-10.47)	0.40		
		(11.56-10.87)	0.69		
		(11.95-11.56)	0.39		
		(12.65-11.95)	0.70		
		(13.66-12.65)	1.01		
		(13.74-13.66)	0.08		
		(13.88-13.74)	0.14		
		(14.83-13.88)	0.95		
		(15.37-14.83)	0.54		
		(15.92-15.37)	0.55		
		(16.89-15.92)	0.97		
		(16.97-16.89)	0.08		
		(16.97-16.97)	0.00		
				20.02	
144 2145.00	sc1	(14.91-14.91)	0.00		
		(15.81-14.91)	0.90		
		(15.94-15.81)	0.13		
		(15.99-15.94)	0.05		
		(16.15-15.99)	0.16		
		(16.35-16.15)	0.20		
		(16.35-16.35)	0.00		
				1.44	
144 2145.00	sc2	(-0.72--0.72)	0.00		
		(-0.42--0.72)	0.30		
		(0.42--0.42)	0.84		
		A RIPORTARE ml	1.14		

		CALCOLO DELLE LUNGHEZZE		Foglio n. 162
SCOTICO				
N. SEZIONE PROG.	FIG.	ELEMENTI DI CALCOLO	LUNGHEZZA ELEMENTARE ml	LUNGHEZZA FIGURA ml	NOTE
		RIPORTO ml	1.14		
		(0.67-0.42)	0.25		
		(1.11-0.67)	0.44		
		(1.76-1.11)	0.65		
		(2.13-1.76)	0.37		
		(2.85-2.13)	0.72		
		(3.35-2.85)	0.50		
		(3.35-3.35)	0.00		
				4.07	
145	sc1	(13.19-13.19)	0.00		
2160.00		(13.77-13.19)	0.58		
		(14.55-13.77)	0.78		
		(14.58-14.55)	0.03		
		(14.58-14.58)	0.00		
				1.39	
152	sc2	(-12.88--12.88)	0.00		
2265.00		(-12.29--12.88)	0.59		
		(-11.55--12.29)	0.74		
		(-11.55--11.55)	0.00		
				1.33	
152	sc1	(11.45-11.45)	0.00		
2265.00		(11.70-11.45)	0.25		
		(12.53-11.70)	0.83		
		(12.79-12.53)	0.26		
		(12.80-12.79)	0.01		
		(12.80-12.80)	0.00		
				1.35	
154	sc1	(-2.54--2.54)	0.00		
2295.00		(-2.45--2.54)	0.09		
		(-1.98--2.45)	0.47		
		(-1.36--1.98)	0.62		
		(-0.27--1.36)	1.09		
		(-0.27--0.27)	0.00		
		(-0.27--0.27)	0.00		
		(-0.26--0.27)	0.01		
		(0.53--0.26)	0.79		
		(0.82-0.53)	0.29		
		(1.44-0.82)	0.62		
		(1.91-1.44)	0.47		
		(2.74-1.91)	0.83		
		(3.00-2.74)	0.26		
		(3.15-3.00)	0.15		
		(4.09-3.15)	0.94		
		(4.86-4.09)	0.77		
		(5.19-4.86)	0.33		
		(5.75-5.19)	0.56		
		(6.28-5.75)	0.53		
		(6.54-6.28)	0.26		
		(6.54-6.54)	0.00		
				9.08	
155	sc1	(-4.28--4.28)	0.00		
2310.00		(-4.01--4.28)	0.27		
		(-3.52--4.01)	0.49		
		(-3.25--3.52)	0.27		
		(-2.43--3.25)	0.82		
		(-1.54--2.43)	0.89		
		(-1.34--1.54)	0.20		
		(-1.00--1.34)	0.34		
		(-0.25--1.00)	0.75		
		(0.17--0.25)	0.42		
		(0.84-0.17)	0.67		
		(1.89-0.84)	1.05		
		(1.93-1.89)	0.04		
		(2.01-1.93)	0.08		
		(3.02-2.01)	1.01		
		(3.60-3.02)	0.58		
		(4.11-3.60)	0.51		
		(5.01-4.11)	0.90		
		(5.20-5.01)	0.19		
		(5.31-5.20)	0.11		
		(6.29-5.31)	0.98		
		(7.02-6.29)	0.73		
		(7.38-7.02)	0.36		
		(8.02-7.38)	0.64		
		(8.47-8.02)	0.45		
		(8.73-8.47)	0.26		
		(9.56-8.73)	0.83		
		(10.44-9.56)	0.88		
		(10.65-10.44)	0.21		
		(11.03-10.65)	0.38		
		(11.74-11.03)	0.71		
		(12.15-11.74)	0.41		
		(12.83-12.15)	0.68		
		(13.16-12.83)	0.33		
		(13.30-13.16)	0.14		
		(13.30-13.30)	0.00		
				17.58	
156	sc1	(-7.43--7.43)	0.00		
2325.00		(-6.78--7.43)	0.65		
		(-6.22--6.78)	0.56		
		(-5.69--6.22)	0.53		
		(-4.75--5.69)	0.94		
		(-4.60--4.75)	0.15		
		(-4.51--4.60)	0.09		
		(-3.51--4.51)	1.00		
		(-2.80--3.51)	0.71		
		(-2.42--2.80)	0.38		
		(-1.74--2.42)	0.68		
		(-1.33--1.74)	0.41		
		(-1.09--1.33)	0.24		
		(-0.24--1.09)	0.85		
		(0.62--0.24)	0.86		
		(0.85-0.62)	0.23		
		(1.27-0.85)	0.42		
		(1.94-1.27)	0.67		
		A RIPORTARE ml	9.37		

		CALCOLO DELLE LUNGHEZZE		Foglio n. 163
SCOTICO				
N. SEZIONE PROG.	FIG.	ELEMENTI DI CALCOLO	LUNGHEZZA ELEMENTARE ml	LUNGHEZZA FIGURA ml	NOTE
		RIPORTO ml	9.37		
		(2.33-1.94)	0.39		
		(3.03-2.33)	0.70		
		(4.04-3.03)	1.01		
		(4.13-4.04)	0.09		
		(4.28-4.13)	0.15		
		(5.22-4.28)	0.94		
		(5.75-5.22)	0.53		
		(6.31-5.75)	0.56		
		(7.28-6.31)	0.97		
		(7.40-7.28)	0.12		
		(8.17-7.40)	0.77		
		(8.49-8.17)	0.32		
		(9.17-8.49)	0.68		
		(9.58-9.17)	0.41		
		(10.29-9.58)	0.71		
		(10.67-10.29)	0.38		
		(10.88-10.67)	0.21		
		(11.76-10.88)	0.88		
		(12.59-11.76)	0.83		
		(12.85-12.59)	0.26		
		(13.30-12.85)	0.45		
		(13.34-13.30)	0.04		
		(13.34-13.34)	0.00		
				20.77	
157	sc1	(-8.10--8.10)	0.00		
2340.00		(-7.86--8.10)	0.24		
		(-7.49--7.86)	0.37		
		(-6.76--7.49)	0.73		
		(-5.78--6.76)	0.98		
		(-5.67--5.78)	0.11		
		(-5.49--5.67)	0.18		
		(-4.58--5.49)	0.91		
		(-4.07--4.58)	0.51		
		(-3.49--4.07)	0.58		
		(-2.48--3.49)	1.01		
		(-2.40--2.48)	0.08		
		(-2.36--2.40)	0.04		
		(-1.31--2.36)	1.05		
		(-0.65--1.31)	0.66		
		(-0.22--0.65)	0.43		
		(0.53--0.22)	0.75		
		(0.87-0.53)	0.34		
		(1.06-0.87)	0.19		
		(1.96-1.06)	0.90		
		(2.38-1.96)	0.42		
		(3.05-2.38)	0.67		
		(3.54-3.05)	0.49		
		(4.14-3.54)	0.60		
		(4.48-4.14)	0.34		
		(5.23-4.48)	0.75		
		(6.20-5.23)	0.97		
		(6.32-6.20)	0.12		
		(6.54-6.32)	0.22		
		(7.41-6.54)	0.87		
		(7.91-7.41)	0.50		
		(8.50-7.91)	0.59		
		(9.55-8.50)	1.05		
		(9.59-9.55)	0.04		
		(9.62-9.59)	0.03		
		(10.68-9.62)	1.06		
		(11.33-10.68)	0.65		
		(11.77-11.33)	0.44		
		(12.56-11.77)	0.79		
		(12.87-12.56)	0.31		
		(13.04-12.87)	0.17		
		(13.49-13.04)	0.45		
		(13.49-13.49)	0.00		
				21.59	
158	sc2	(-12.98--12.98)	0.00		
2355.00		(-12.25--12.98)	0.73		
		(-12.20--12.25)	0.05		
		(-12.18--12.20)	0.02		
		(-11.62--12.18)	0.56		
		(-11.62--11.62)	0.00		
				1.36	
158	sc1	(-11.31--11.31)	0.00		
2355.00		(-11.11--11.31)	0.20		
		(-10.47--11.11)	0.64		
		(-10.02--10.47)	0.45		
		(-9.24--10.02)	0.78		
		(-8.93--9.24)	0.31		
		(-8.76--8.93)	0.17		
		(-7.84--8.76)	0.92		
		(-7.05--7.84)	0.79		
		(-6.75--7.05)	0.30		
		(-6.23--6.75)	0.52		
		(-5.66--6.23)	0.57		
		(-5.33--5.66)	0.33		
		(-4.57--5.33)	0.76		
		(-3.62--4.57)	0.95		
		(-3.48--3.62)	0.14		
		(-3.41--3.48)	0.07		
		(-3.22--3.41)	0.19		
		(-2.61--3.22)	0.61		
		(-2.39--2.61)	0.22		
		(-1.91--2.39)	0.48		
		(-1.30--1.91)	0.61		
		(-0.21--1.30)	1.09		
		(-0.21--0.21)	0.00		
		(-0.20--0.21)	0.01		
		(0.88--0.20)	1.08		
		(1.51-0.88)	0.63		
		(1.98-1.51)	0.47		
		(2.80-1.98)	0.82		
		A RIPORTARE ml	14.11		

		CALCOLO DELLE LUNGHEZZE		Foglio n. 164
SCOTICO				
N. SEZIONE PROG.	FIG.	ELEMENTI DI CALCOLO	LUNGHEZZA ELEMENTARE ml	LUNGHEZZA FIGURA ml	NOTE
		RIPORTO ml	14.11		
		(3.07-2.80)	0.27		
		(3.22-3.07)	0.15		
		(4.16-3.22)	0.94		
		(4.93-4.16)	0.77		
		(5.25-4.93)	0.32		
		(5.81-5.25)	0.56		
		(6.34-5.81)	0.53		
		(6.64-6.34)	0.30		
		(7.43-6.64)	0.79		
		(8.35-7.43)	0.92		
		(8.52-8.35)	0.17		
		(8.81-8.52)	0.29		
		(9.61-8.81)	0.80		
		(10.06-9.61)	0.45		
		(10.70-10.06)	0.64		
		(11.77-10.70)	1.07		
		(11.79-11.77)	0.02		
		(11.82-11.79)	0.03		
		(12.88-11.82)	1.06		
		(13.48-12.88)	0.60		
		(13.69-13.48)	0.21		
		(13.69-13.69)	0.00		
				25.00	
159	sc1	(-13.61--13.61)	0.00		
2370.00		(-13.44--13.61)	0.17		
		(-13.28--13.44)	0.16		
		(-12.98--13.28)	0.30		
		(-12.19--12.98)	0.79		
		(-11.73--12.19)	0.46		
		(-11.10--11.73)	0.63		
		(-10.02--11.10)	1.08		
		(-10.01--10.02)	0.01		
		(-9.98--10.01)	0.03		
		(-8.92--9.98)	1.06		
		(-8.40--8.92)	0.52		
		(-7.82--8.40)	0.58		
		(-6.97--7.82)	0.85		
		(-6.73--6.97)	0.24		
		(-6.60--6.73)	0.13		
		(-5.64--6.60)	0.96		
		(-4.89--5.64)	0.75		
		(-4.55--4.89)	0.34		
		(-3.96--4.55)	0.59		
		(-3.46--3.96)	0.50		
		(-3.18--3.46)	0.28		
		(-2.37--3.18)	0.81		
		(-1.47--2.37)	0.90		
		(-1.28--1.47)	0.19		
		(-0.95--1.28)	0.33		
		(-0.19--0.95)	0.76		
		(0.24--0.19)	0.43		
		(0.90-0.24)	0.66		
		(1.95-0.90)	1.05		
		(1.99-1.95)	0.04		
		(2.06-1.99)	0.07		
		(3.08-2.06)	1.02		
		(3.66-3.08)	0.58		
		(4.17-3.66)	0.51		
		(5.07-4.17)	0.90		
		(5.26-5.07)	0.19		
		(5.37-5.26)	0.11		
		(6.35-5.37)	0.98		
		(7.08-6.35)	0.73		
		(7.44-7.08)	0.36		
		(8.08-7.44)	0.64		
		(8.53-8.08)	0.45		
		(8.79-8.53)	0.26		
		(9.62-8.79)	0.83		
		(10.01-9.62)	0.39		
		(10.72-10.01)	0.71		
		(11.08-10.72)	0.36		
		(11.81-11.08)	0.73		
		(12.22-11.81)	0.41		
		(12.90-12.22)	0.68		
		(13.75-12.90)	0.85		
		(13.75-13.75)	0.00		
				27.36	
160	sc1	(-13.67--13.67)	0.00		
2385.00		(-13.38--13.67)	0.29		
		(-13.26--13.38)	0.12		
		(-13.00--13.26)	0.26		
		(-12.17--13.00)	0.83		
		(-11.29--12.17)	0.88		
		(-11.08--11.29)	0.21		
		(-10.71--11.08)	0.37		
		(-9.99--10.71)	0.72		
		(-9.58--9.99)	0.41		
		(-8.90--9.58)	0.68		
		(-7.87--8.90)	1.03		
		(-7.81--7.87)	0.06		
		(-7.71--7.81)	0.10		
		(-6.72--7.71)	0.99		
		(-6.16--6.72)	0.56		
		(-5.63--6.16)	0.53		
		(-4.70--5.63)	0.93		
		(-4.54--4.70)	0.16		
		(-4.45--4.54)	0.09		
		(-3.45--4.45)	1.00		
		(-2.74--3.45)	0.71		
		(-2.36--2.74)	0.38		
		(-1.69--2.36)	0.67		
		(-1.27--1.69)	0.42		
		(-1.02--1.27)	0.25		
		(-0.18--1.02)	0.84		
		A RIPORTARE ml	13.49		

		CALCOLO DELLE LUNGHEZZE		Foglio n. 165
SCOTICO				
N. SEZIONE PROG.	FIG.	ELEMENTI DI CALCOLO	LUNGHEZZA ELEMENTARE ml	LUNGHEZZA FIGURA ml	NOTE
		RIPORTO ml	13.49		
		(0.69--0.18)	0.87		
		(0.92-0.69)	0.23		
		(1.32-0.92)	0.40		
		(2.01-1.32)	0.69		
		(2.40-2.01)	0.39		
		(3.10-2.40)	0.70		
		(4.11-3.10)	1.01		
		(4.19-4.11)	0.08		
		(4.22-4.19)	0.03		
		(4.33-4.22)	0.11		
		(5.02-4.33)	0.69		
		(5.28-5.02)	0.26		
		(5.82-5.28)	0.54		
		(6.37-5.82)	0.55		
		(7.34-6.37)	0.97		
		(7.46-7.34)	0.12		
		(7.53-7.46)	0.07		
		(8.55-7.53)	1.02		
		(9.24-8.55)	0.69		
		(9.64-9.24)	0.40		
		(10.34-9.64)	0.70		
		(10.73-10.34)	0.39		
		(10.95-10.73)	0.22		
		(11.82-10.95)	0.87		
		(12.66-11.82)	0.84		
		(12.91-12.66)	0.25		
		(13.35-12.91)	0.44		
		(13.78-13.35)	0.43		
		(13.78-13.78)	0.00		
				27.45	
161	sc1	(11.44-11.44)	0.00		
2400.00		(11.84-11.44)	0.40		
		(12.61-11.84)	0.77		
		(12.93-12.61)	0.32		
		(13.10-12.93)	0.17		
		(13.44-13.10)	0.34		
		(13.44-13.44)	0.00		
				2.00	
161	sc2	(-13.61--13.61)	0.00		
2400.00		(-13.25--13.61)	0.36		
		(-12.56--13.25)	0.69		
		(-12.16--12.56)	0.40		
		(-11.45--12.16)	0.71		
		(-11.07--11.45)	0.38		
		(-10.84--11.07)	0.23		
		(-9.97--10.84)	0.87		
		(-9.13--9.97)	0.84		
		(-8.88--9.13)	0.25		
		(-8.45--8.88)	0.43		
		(-7.79--8.45)	0.66		
		(-7.42--7.79)	0.37		
		(-6.70--7.42)	0.72		
		(-5.71--6.70)	0.99		
		(-5.61--5.71)	0.10		
		(-5.44--5.61)	0.17		
		(-4.52--5.44)	0.92		
		(-4.00--4.52)	0.52		
		(-3.43--4.00)	0.57		
		(-2.43--3.43)	1.00		
		(-2.34--2.43)	0.09		
		(-2.29--2.34)	0.05		
		(-1.25--2.29)	1.04		
		(-0.76--1.25)	0.49		
		(-0.16--0.76)	0.60		
		(0.58--0.16)	0.74		
		(0.93-0.58)	0.35		
		(1.13-0.93)	0.20		
		(2.02-1.13)	0.89		
		(2.84-2.02)	0.82		
		(3.11-2.84)	0.27		
		(3.59-3.11)	0.48		
		(4.20-3.59)	0.61		
		(4.55-4.20)	0.35		
		(5.29-4.55)	0.74		
		(6.07-5.29)	0.78		
		(6.07-6.07)	0.00		
				19.68	
162	sc1	(-13.69--13.69)	0.00		
2415.00		(-13.23--13.69)	0.46		
		(-12.19--13.23)	1.04		
		(-12.14--12.19)	0.05		
		(-12.11--12.14)	0.03		
		(-11.05--12.11)	1.06		
		(-10.40--11.05)	0.65		
		(-9.96--10.40)	0.44		
		(-9.18--9.96)	0.78		
		(-8.87--9.18)	0.31		
		(-8.69--8.87)	0.18		
		(-7.78--8.69)	0.91		
		(-6.98--7.78)	0.80		
		(-6.69--6.98)	0.29		
		(-6.55--6.69)	0.14		
		(-6.18--6.55)	0.37		
		(-5.75--6.18)	0.43		
		(-5.60--5.75)	0.15		
		(-5.27--5.60)	0.33		
		(-4.51--5.27)	0.76		
		(-3.56--4.51)	0.95		
		(-3.42--3.56)	0.14		
		(-3.17--3.42)	0.25		
		(-2.33--3.17)	0.84		
		(-1.85--2.33)	0.48		
		(-1.23--1.85)	0.62		
		(-0.16--1.23)	1.07		
		A RIPORTARE ml	13.53		

		CALCOLO DELLE LUNGHEZZE		Foglio n. 166
SCOTICO				
N. SEZIONE PROG.	FIG.	ELEMENTI DI CALCOLO	LUNGHEZZA ELEMENTARE ml	LUNGHEZZA FIGURA ml	NOTE
		RIPORTO ml	13.53		
		(-0.14--0.16)	0.02		
		(-0.14--0.14)	0.00		
		(0.95--0.14)	1.09		
		(1.57-0.95)	0.62		
		(2.04-1.57)	0.47		
		(2.85-2.04)	0.81		
		(3.13-2.85)	0.28		
		(3.29-3.13)	0.16		
		(4.22-3.29)	0.93		
		(5.00-4.22)	0.78		
		(5.31-5.00)	0.31		
		(5.86-5.31)	0.55		
		(6.40-5.86)	0.54		
		(6.71-6.40)	0.31		
		(7.49-6.71)	0.78		
		(8.42-7.49)	0.93		
		(8.58-8.42)	0.16		
		(8.87-8.58)	0.29		
		(9.67-8.87)	0.80		
		(10.13-9.67)	0.46		
		(10.76-10.13)	0.63		
		(11.84-10.76)	1.08		
		(11.85-11.84)	0.01		
		(11.86-11.85)	0.01		
		(11.88-11.86)	0.02		
		(12.66-11.88)	0.78		
		(12.94-12.66)	0.28		
		(13.55-12.94)	0.61		
		(14.03-13.55)	0.48		
		(14.04-14.03)	0.01		
		(14.04-14.04)	0.00		
				27.73	
163 2430.00	sc1	(-13.65--13.65)	0.00		
		(-13.38--13.65)	0.27		
		(-13.22--13.38)	0.16		
		(-12.93--13.22)	0.29		
		(-12.13--12.93)	0.80		
		(-11.54--12.13)	0.59		
		(-11.03--11.54)	0.51		
		(-9.96--11.03)	1.07		
		(-9.94--9.96)	0.02		
		(-9.92--9.94)	0.02		
		(-8.85--9.92)	1.07		
		(-8.25--8.85)	0.60		
		(-7.76--8.25)	0.49		
		(-6.91--7.76)	0.85		
		(-6.67--6.91)	0.24		
		(-6.53--6.67)	0.14		
		(-5.58--6.53)	0.95		
		(-4.82--5.58)	0.76		
		(-4.49--4.82)	0.33		
		(-3.91--4.49)	0.58		
		(-3.40--3.91)	0.51		
		(-3.11--3.40)	0.29		
		(-2.31--3.11)	0.80		
		(-1.40--2.31)	0.91		
		(-1.22--1.40)	0.18		
		(-0.90--1.22)	0.32		
		(-0.13--0.90)	0.77		
		(0.31--0.13)	0.44		
		(0.96-0.31)	0.65		
		(2.02-0.96)	1.06		
		(2.05-2.02)	0.03		
		(2.11-2.05)	0.06		
		(3.14-2.11)	1.03		
		(3.73-3.14)	0.59		
		(4.23-3.73)	0.50		
		(5.12-4.23)	0.89		
		(5.32-5.12)	0.20		
		(5.44-5.32)	0.12		
		(6.41-5.44)	0.97		
		(6.87-6.41)	0.46		
		(7.50-6.87)	0.63		
		(8.13-7.50)	0.63		
		(8.60-8.13)	0.47		
		(8.86-8.60)	0.26		
		(9.69-8.86)	0.83		
		(10.57-9.69)	0.88		
		(10.78-10.57)	0.21		
		(11.14-10.78)	0.36		
		(11.87-11.14)	0.73		
		(12.28-11.87)	0.41		
		(12.96-12.28)	0.68		
		(13.72-12.96)	0.76		
		(13.72-13.72)	0.00		
				27.37	
164 2445.00	sc1	(-13.81--13.81)	0.00		
		(-13.67--13.81)	0.14		
		(-13.20--13.67)	0.47		
		(-12.93--13.20)	0.27		
		(-12.11--12.93)	0.82		
		(-11.22--12.11)	0.89		
		(-11.02--11.22)	0.20		
		(-10.66--11.02)	0.36		
		(-9.93--10.66)	0.73		
		(-9.51--9.93)	0.42		
		(-8.84--9.51)	0.67		
		(-7.80--8.84)	1.04		
		(-7.75--7.80)	0.05		
		(-7.65--7.75)	0.10		
		(-6.66--7.65)	0.99		
		(-6.09--6.66)	0.57		
		(-5.57--6.09)	0.52		
		(-4.65--5.57)	0.92		
		A RIPORTARE ml	9.16		

		CALCOLO DELLE LUNGHEZZE		Foglio n. 167
SCOTICO				
N. SEZIONE PROG.	FIG.	ELEMENTI DI CALCOLO	LUNGHEZZA ELEMENTARE ml	LUNGHEZZA FIGURA ml	NOTE
		RIPORTO ml	9.16		
		(-4.48--4.65)	0.17		
		(-4.38--4.48)	0.10		
		(-3.39--4.38)	0.99		
		(-2.67--3.39)	0.72		
		(-2.29--2.67)	0.38		
		(-1.64--2.29)	0.65		
		(-1.20--1.64)	0.44		
		(-0.96--1.20)	0.24		
		(-0.11--0.96)	0.85		
		(0.75--0.11)	0.86		
		(0.98-0.75)	0.23		
		(1.08-0.98)	0.10		
		(1.37-1.08)	0.29		
		(1.88-1.37)	0.51		
		(2.07-1.88)	0.19		
		(2.46-2.07)	0.39		
		(3.16-2.46)	0.70		
		(4.17-3.16)	1.01		
		(4.25-4.17)	0.08		
		(4.38-4.25)	0.13		
		(5.34-4.38)	0.96		
		(5.88-5.34)	0.54		
		(6.43-5.88)	0.55		
		(7.39-6.43)	0.96		
		(7.52-7.39)	0.13		
		(7.60-7.52)	0.08		
		(8.61-7.60)	1.01		
		(9.31-8.61)	0.70		
		(9.70-9.31)	0.39		
		(10.40-9.70)	0.70		
		(10.79-10.40)	0.39		
		(11.02-10.79)	0.23		
		(11.88-11.02)	0.86		
		(12.73-11.88)	0.85		
		(12.97-12.73)	0.24		
		(13.41-12.97)	0.44		
		(13.75-13.41)	0.34		
		(13.75-13.75)	0.00		
				27.56	
165 2460.00	sc1	(-13.69--13.69)	0.00		
		(-13.19--13.69)	0.50		
		(-12.49--13.19)	0.70		
		(-12.09--12.49)	0.40		
		(-11.40--12.09)	0.69		
		(-11.00--11.40)	0.40		
		(-10.78--11.00)	0.22		
		(-9.91--10.78)	0.87		
		(-9.07--9.91)	0.84		
		(-8.82--9.07)	0.25		
		(-8.39--8.82)	0.43		
		(-7.73--8.39)	0.66		
		(-7.36--7.73)	0.37		
		(-6.64--7.36)	0.72		
		(-5.65--6.64)	0.99		
		(-5.55--5.65)	0.10		
		(-5.38--5.55)	0.17		
		(-4.46--5.38)	0.92		
		(-3.91--4.46)	0.55		
		(-3.37--3.91)	0.54		
		(-2.38--3.37)	0.99		
		(-2.28--2.38)	0.10		
		(-2.22--2.28)	0.06		
		(-1.19--2.22)	1.03		
		(-0.51--1.19)	0.68		
		(-0.10--0.51)	0.41		
		(0.63--0.10)	0.73		
		(0.99-0.63)	0.36		
		(1.20-0.99)	0.21		
		(2.08-1.20)	0.88		
		(2.91-2.08)	0.83		
		(3.17-2.91)	0.26		
		(3.64-3.17)	0.47		
		(4.26-3.64)	0.62		
		(4.62-4.26)	0.36		
		(5.35-4.62)	0.73		
		(6.33-5.35)	0.98		
		(6.45-6.33)	0.12		
		(6.65-6.45)	0.20		
		(7.54-6.65)	0.89		
		(8.04-7.54)	0.50		
		(8.63-8.04)	0.59		
		(9.66-8.63)	1.03		
		(9.72-9.66)	0.06		
		(9.75-9.72)	0.03		
		(10.81-9.75)	1.06		
		(11.46-10.81)	0.65		
		(11.90-11.46)	0.44		
		(12.67-11.90)	0.77		
		(12.99-12.67)	0.32		
		(13.17-12.99)	0.18		
		(14.00-13.17)	0.83		
		(14.00-14.00)	0.00		
				27.69	
166 2475.00	sc1	(-13.72--13.72)	0.00		
		(-13.17--13.72)	0.55		
		(-12.14--13.17)	1.03		
		(-12.08--12.14)	0.06		
		(-12.04--12.08)	0.04		
		(-10.99--12.04)	1.05		
		(-10.33--10.99)	0.66		
		(-9.90--10.33)	0.43		
		(-9.69--9.90)	0.21		
		(-9.13--9.69)	0.56		
		(-8.89--9.13)	0.24		
		A RIPORTARE ml	4.83		

		CALCOLO DELLE LUNGHEZZE		Foglio n. 168
SCOTICO				
N. SEZIONE PROG.	FIG.	ELEMENTI DI CALCOLO	LUNGHEZZA ELEMENTARE ml	LUNGHEZZA FIGURA ml	NOTE
		RIPORTO ml	4.83		
		(-8.81--8.89)	0.08		
		(-8.62--8.81)	0.19		
		(-7.72--8.62)	0.90		
		(-6.91--7.72)	0.81		
		(-6.63--6.91)	0.28		
		(-6.12--6.63)	0.51		
		(-5.54--6.12)	0.58		
		(-5.20--5.54)	0.34		
		(-4.45--5.20)	0.75		
		(-3.49--4.45)	0.96		
		(-3.35--3.49)	0.14		
		(-3.11--3.35)	0.24		
		(-2.26--3.11)	0.85		
		(-1.78--2.26)	0.48		
		(-1.17--1.78)	0.61		
		(-0.11--1.17)	1.06		
		(-0.08--0.11)	0.03		
		(-0.07--0.08)	0.01		
		(1.01--0.07)	1.08		
		(1.64-1.01)	0.63		
		(2.10-1.64)	0.46		
		(2.90-2.10)	0.80		
		(3.19-2.90)	0.29		
		(3.35-3.19)	0.16		
		(4.28-3.35)	0.93		
		(5.06-4.28)	0.78		
		(5.37-5.06)	0.31		
		(5.91-5.37)	0.54		
		(6.46-5.91)	0.55		
		(6.77-6.46)	0.31		
		(7.55-6.77)	0.78		
		(8.48-7.55)	0.93		
		(8.64-8.48)	0.16		
		(8.72-8.64)	0.08		
		(8.92-8.72)	0.20		
		(9.52-8.92)	0.60		
		(9.73-9.52)	0.21		
		(10.19-9.73)	0.46		
		(10.82-10.19)	0.63		
		(11.91-10.82)	1.09		
		(11.91-11.91)	0.00		
		(11.93-11.91)	0.02		
		(13.00-11.93)	1.07		
		(13.62-13.00)	0.62		
		(14.09-13.62)	0.47		
		(14.21-14.09)	0.12		
		(14.21-14.21)	0.00		
				27.93	
167 2490.00	sc1	(-13.97--13.97)	0.00		
		(-13.31--13.97)	0.66		
		(-13.15--13.31)	0.16		
		(-12.88--13.15)	0.27		
		(-12.06--12.88)	0.82		
		(-11.60--12.06)	0.46		
		(-10.97--11.60)	0.63		
		(-9.89--10.97)	1.08		
		(-9.88--9.89)	0.01		
		(-9.87--9.88)	0.01		
		(-8.79--9.87)	1.08		
		(-8.18--8.79)	0.61		
		(-7.70--8.18)	0.48		
		(-6.86--7.70)	0.84		
		(-6.61--6.86)	0.25		
		(-6.47--6.61)	0.14		
		(-5.52--6.47)	0.95		
		(-4.76--5.52)	0.76		
		(-4.43--4.76)	0.33		
		(-3.85--4.43)	0.58		
		(-3.34--3.85)	0.51		
		(-3.05--3.34)	0.29		
		(-2.25--3.05)	0.80		
		(-1.34--2.25)	0.91		
		(-1.16--1.34)	0.18		
		(-0.85--1.16)	0.31		
		(-0.07--0.85)	0.78		
		(0.37--0.07)	0.44		
		(1.02-0.37)	0.65		
		(2.09-1.02)	1.07		
		(2.11-2.09)	0.02		
		(2.16-2.11)	0.05		
		(3.20-2.16)	1.04		
		(3.73-3.20)	0.53		
		(4.29-3.73)	0.56		
		(5.17-4.29)	0.88		
		(5.39-5.17)	0.22		
		(5.51-5.39)	0.12		
		(6.48-5.51)	0.97		
		(7.22-6.48)	0.74		
		(7.57-7.22)	0.35		
		(8.18-7.57)	0.61		
		(8.66-8.18)	0.48		
		(8.93-8.66)	0.27		
		(9.75-8.93)	0.82		
		(10.64-9.75)	0.89		
		(10.84-10.64)	0.20		
		(11.19-10.84)	0.35		
		(11.93-11.19)	0.74		
		(12.35-11.93)	0.42		
		(13.02-12.35)	0.67		
		(14.06-13.02)	1.04		
		(14.11-14.06)	0.05		
		(14.20-14.11)	0.09		
		(14.48-14.20)	0.28		
		(14.48-14.48)	0.00		
		A RIPORTARE ml	28.45		

		CALCOLO DELLE LUNGHEZZE		Foglio n. 169
SCOTICO				
N. SEZIONE PROG.	FIG.	ELEMENTI DI CALCOLO	LUNGHEZZA ELEMENTARE ml	LUNGHEZZA FIGURA ml	NOTE
		RIPORTO ml	28.45		
				28.45	
168	sc1	(-14.11--14.11)	0.00		
2505.00		(-13.62--14.11)	0.49		
		(-13.14--13.62)	0.48		
		(-12.87--13.14)	0.27		
		(-12.05--12.87)	0.82		
		(-11.16--12.05)	0.89		
		(-10.96--11.16)	0.20		
		(-10.61--10.96)	0.35		
		(-9.87--10.61)	0.74		
		(-9.44--9.87)	0.43		
		(-8.78--9.44)	0.66		
		(-7.73--8.78)	1.05		
		(-7.69--7.73)	0.04		
		(-7.60--7.69)	0.09		
		(-6.60--7.60)	1.00		
		(-6.02--6.60)	0.58		
		(-5.50--6.02)	0.52		
		(-4.59--5.50)	0.91		
		(-4.41--4.59)	0.18		
		(-4.31--4.41)	0.10		
		(-3.32--4.31)	0.99		
		(-2.60--3.32)	0.72		
		(-2.23--2.60)	0.37		
		(-2.06--2.23)	0.17		
		(-1.58--2.06)	0.48		
		(-1.26--1.58)	0.32		
		(-1.14--1.26)	0.12		
		(-0.89--1.14)	0.25		
		(-0.05--0.89)	0.84		
		(0.82--0.05)	0.87		
		(1.04-0.82)	0.22		
		(1.42-1.04)	0.38		
		(2.13-1.42)	0.71		
		(2.53-2.13)	0.40		
		(3.22-2.53)	0.69		
		(4.24-3.22)	1.02		
		(4.31-4.24)	0.07		
		(4.43-4.31)	0.12		
		(5.40-4.43)	0.97		
		(5.95-5.40)	0.55		
		(6.49-5.95)	0.54		
		(7.44-6.49)	0.95		
		(7.58-7.44)	0.14		
		(7.66-7.58)	0.08		
		(8.67-7.66)	1.01		
		(9.37-8.67)	0.70		
		(9.76-9.37)	0.39		
		(10.45-9.76)	0.69		
		(10.85-10.45)	0.40		
		(11.08-10.85)	0.23		
		(11.94-11.08)	0.86		
		(12.79-11.94)	0.85		
		(13.03-12.79)	0.24		
		(13.46-13.03)	0.43		
		(14.13-13.46)	0.67		
		(14.50-14.13)	0.37		
		(14.63-14.50)	0.13		
		(14.63-14.63)	0.00		
				28.74	
169	sc1	(-14.14--14.14)	0.00		
2520.00		(-14.13--14.14)	0.01		
		(-13.12--14.13)	1.01		
		(-12.42--13.12)	0.70		
		(-12.03--12.42)	0.39		
		(-11.35--12.03)	0.68		
		(-10.94--11.35)	0.41		
		(-10.71--10.94)	0.23		
		(-9.85--10.71)	0.86		
		(-9.00--9.85)	0.85		
		(-8.76--9.00)	0.24		
		(-8.34--8.76)	0.42		
		(-7.67--8.34)	0.67		
		(-7.05--7.67)	0.62		
		(-6.58--7.05)	0.47		
		(-5.58--6.58)	1.00		
		(-5.49--5.58)	0.09		
		(-5.33--5.49)	0.16		
		(-4.40--5.33)	0.93		
		(-3.87--4.40)	0.53		
		(-3.31--3.87)	0.56		
		(-2.32--3.31)	0.99		
		(-2.22--2.32)	0.10		
		(-2.16--2.22)	0.06		
		(-1.13--2.16)	1.03		
		(-0.45--1.13)	0.68		
		(-0.04--0.45)	0.41		
		(0.68--0.04)	0.72		
		(1.05-0.68)	0.37		
		(1.26-1.05)	0.21		
		(2.14-1.26)	0.88		
		(2.97-2.14)	0.83		
		(3.23-2.97)	0.26		
		(3.69-3.23)	0.46		
		(4.33-3.69)	0.64		
		(4.68-4.33)	0.35		
		(5.42-4.68)	0.74		
		(6.40-5.42)	0.98		
		(6.51-6.40)	0.11		
		(6.70-6.51)	0.19		
		(7.60-6.70)	0.90		
		(8.11-7.60)	0.51		
		(8.69-8.11)	0.58		
		(9.71-8.69)	1.02		
		A RIPORTARE ml	23.85		

		CALCOLO DELLE LUNGHEZZE		Foglio n. 170
SCOTICO				
N. SEZIONE PROG.	FIG.	ELEMENTI DI CALCOLO	LUNGHEZZA ELEMENTARE ml	LUNGHEZZA FIGURA ml	NOTE
		RIPORTO ml	23.85		
		(9.78-9.71)	0.07		
		(9.82-9.78)	0.04		
		(10.87-9.82)	1.05		
		(11.53-10.87)	0.66		
		(11.96-11.53)	0.43		
		(12.16-11.96)	0.20		
		(12.72-12.16)	0.56		
		(12.96-12.72)	0.24		
		(13.05-12.96)	0.09		
		(13.24-13.05)	0.19		
		(14.14-13.24)	0.90		
		(14.50-14.14)	0.36		
		(14.50-14.50)	0.00		
				28.64	
170	sc1	(3.05-3.05)	0.00		
2535.00		(3.25-3.05)	0.20		
		(3.42-3.25)	0.17		
		(4.34-3.42)	0.92		
		(5.13-4.34)	0.79		
		(5.43-5.13)	0.30		
		(5.96-5.43)	0.53		
		(6.52-5.96)	0.56		
		(7.17-6.52)	0.65		
		(7.61-7.17)	0.44		
		(8.55-7.61)	0.94		
		(8.70-8.55)	0.15		
		(8.97-8.70)	0.27		
		(9.79-8.97)	0.82		
		(10.26-9.79)	0.47		
		(10.88-10.26)	0.62		
		(11.97-10.88)	1.09		
		(11.97-11.97)	0.00		
		(11.98-11.97)	0.01		
		(13.07-11.98)	1.09		
		(13.68-13.07)	0.61		
		(14.16-13.68)	0.48		
		(14.40-14.16)	0.24		
		(14.40-14.40)	0.00		
				11.35	
171	sc1	(2.77-2.77)	0.00		
2550.00		(3.27-2.77)	0.50		
		(3.86-3.27)	0.59		
		(4.36-3.86)	0.50		
		(5.22-4.36)	0.86		
		(5.45-5.22)	0.23		
		(5.57-5.45)	0.12		
		(6.54-5.57)	0.97		
		(7.28-6.54)	0.74		
		(7.63-7.28)	0.35		
		(8.23-7.63)	0.60		
		(8.72-8.23)	0.49		
		(9.00-8.72)	0.28		
		(9.81-9.00)	0.81		
		(10.71-9.81)	0.90		
		(10.90-10.71)	0.19		
		(11.24-10.90)	0.34		
		(11.99-11.24)	0.75		
		(12.42-11.99)	0.43		
		(13.08-12.42)	0.66		
		(14.13-13.08)	1.05		
		(14.17-14.13)	0.04		
		(14.25-14.17)	0.08		
		(14.42-14.25)	0.17		
		(14.42-14.42)	0.00		
				11.65	
172	sc1	(2.60-2.39)	0.21		
2565.00		(3.28-2.60)	0.68		
		(4.31-3.28)	1.03		
		(4.37-4.31)	0.06		
		(4.48-4.37)	0.11		
		(5.46-4.48)	0.98		
		(6.02-5.46)	0.56		
		(6.55-6.02)	0.53		
		(7.49-6.55)	0.94		
		(7.64-7.49)	0.15		
		(7.73-7.64)	0.09		
		(8.73-7.73)	1.00		
		(9.44-8.73)	0.71		
		(9.82-9.44)	0.38		
		(10.50-9.82)	0.68		
		(10.92-10.50)	0.42		
		(11.15-10.92)	0.23		
		(12.01-11.15)	0.86		
		(12.86-12.01)	0.85		
		(13.10-12.86)	0.24		
		(13.51-13.10)	0.41		
		(14.19-13.51)	0.68		
		(14.80-14.19)	0.61		
		(14.80-14.80)	0.00		
				12.41	
173	sc1	(-9.39--9.79)	0.40		
2580.00		(-8.70--9.39)	0.69		
		(-8.29--8.70)	0.41		
		(-7.61--8.29)	0.68		
		(-7.22--7.61)	0.39		
		(-6.52--7.22)	0.70		
		(-5.51--6.52)	1.01		
		(-5.43--5.51)	0.08		
		(-5.28--5.43)	0.15		
		(-4.34--5.28)	0.94		
		(-3.80--4.34)	0.54		
		(-3.25--3.80)	0.55		
		(-2.27--3.25)	0.98		
		(-2.16--2.27)	0.11		
		A RIPORTARE ml	7.63		

		CALCOLO DELLE LUNGHEZZE		Foglio n. 171
SCOTICO				
N. SEZIONE PROG.	FIG.	ELEMENTI DI CALCOLO	LUNGHEZZA ELEMENTARE ml	LUNGHEZZA FIGURA ml	NOTE
		RIPORTO ml	7.63		
		(-2.09--2.16)	0.07		
		(-1.07--2.09)	1.02		
		(-0.38--1.07)	0.69		
		(0.02--0.38)	0.40		
		(0.74-0.02)	0.72		
		(1.12-0.74)	0.38		
		(1.33-1.12)	0.21		
		(2.21-1.33)	0.88		
		(3.04-2.21)	0.83		
		(3.30-3.04)	0.26		
		(3.75-3.30)	0.45		
		(4.39-3.75)	0.64		
		(4.75-4.39)	0.36		
		(5.48-4.75)	0.73		
		(6.46-5.48)	0.98		
		(6.57-6.46)	0.11		
		(6.75-6.57)	0.18		
		(7.66-6.75)	0.91		
		(8.17-7.66)	0.51		
		(8.75-8.17)	0.58		
		(9.02-8.75)	0.27		
		(9.76-9.02)	0.74		
		(9.82-9.76)	0.06		
		(9.84-9.82)	0.02		
		(9.88-9.84)	0.04		
		(10.93-9.88)	1.05		
		(11.59-10.93)	0.66		
		(12.02-11.59)	0.43		
		(12.77-12.02)	0.75		
		(13.11-12.77)	0.34		
		(13.31-13.11)	0.20		
		(14.20-13.31)	0.89		
		(14.49-14.20)	0.29		
		(14.49-14.49)	0.00		
				24.28	
174 2595.00	sc1	(-14.43--14.43)	0.00		
		(-14.38--14.43)	0.05		
		(-14.13--14.38)	0.25		
		(-13.60--14.13)	0.53		
		(-13.04--13.60)	0.56		
		(-12.05--13.04)	0.99		
		(-11.95--12.05)	0.10		
		(-11.90--11.95)	0.05		
		(-10.86--11.90)	1.04		
		(-10.19--10.86)	0.67		
		(-9.77--10.19)	0.42		
		(-9.04--9.77)	0.73		
		(-8.68--9.04)	0.36		
		(-8.48--8.68)	0.20		
		(-7.59--8.48)	0.89		
		(-6.77--7.59)	0.82		
		(-6.50--6.77)	0.27		
		(-6.03--6.50)	0.47		
		(-5.41--6.03)	0.62		
		(-5.06--5.41)	0.35		
		(-4.32--5.06)	0.74		
		(-3.35--4.32)	0.97		
		(-3.23--3.35)	0.12		
		(-3.01--3.23)	0.22		
		(-2.14--3.01)	0.87		
		(-1.64--2.14)	0.50		
		(-1.05--1.64)	0.59		
		(-0.00--1.05)	1.05		
		(0.04--0.00)	0.04		
		(0.06-0.04)	0.02		
		(1.13-0.06)	1.07		
		(1.77-1.13)	0.64		
		(2.22-1.77)	0.45		
		(3.01-2.22)	0.79		
		(3.31-3.01)	0.30		
		(4.03-3.31)	0.72		
		(4.40-4.03)	0.37		
		(5.19-4.40)	0.79		
		(5.49-5.19)	0.30		
		(6.03-5.49)	0.54		
		(6.58-6.03)	0.55		
		(6.90-6.58)	0.32		
		(7.67-6.90)	0.77		
		(8.61-7.67)	0.94		
		(8.76-8.61)	0.15		
		(9.04-8.76)	0.28		
		(9.85-9.04)	0.81		
		(10.32-9.85)	0.47		
		(10.94-10.32)	0.62		
		(12.02-10.94)	1.08		
		(12.03-12.02)	0.01		
		(12.05-12.03)	0.02		
		(13.12-12.05)	1.07		
		(13.73-13.12)	0.61		
		(14.21-13.73)	0.48		
		(14.91-14.21)	0.70		
		(14.91-14.91)	0.00		
				29.34	
175 2610.00	sc1	(-14.92--14.92)	0.00		
		(-14.74--14.92)	0.18		
		(-14.08--14.74)	0.66		
		(-13.05--14.08)	1.03		
		(-12.99--13.05)	0.06		
		(-12.88--12.99)	0.11		
		(-11.90--12.88)	0.98		
		(-11.35--11.90)	0.55		
		(-10.81--11.35)	0.54		
		(-9.84--10.81)	0.97		
		(-9.72--9.84)	0.12		
		A RIPORTARE ml	5.20		

		CALCOLO DELLE LUNGHEZZE		Foglio n. 172
SCOTICO				
N. SEZIONE PROG.	FIG.	ELEMENTI DI CALCOLO	LUNGHEZZA ELEMENTARE ml	LUNGHEZZA FIGURA ml	NOTE
		RIPORTO ml	5.20		
		(-9.65--9.72)	0.07		
		(-8.63--9.65)	1.02		
		(-7.96--8.63)	0.67		
		(-7.54--7.96)	0.42		
		(-6.80--7.54)	0.74		
		(-6.45--6.80)	0.35		
		(-6.26--6.45)	0.19		
		(-5.36--6.26)	0.90		
		(-4.56--5.36)	0.80		
		(-4.27--4.56)	0.29		
		(-3.76--4.27)	0.51		
		(-3.18--3.76)	0.58		
		(-2.86--3.18)	0.32		
		(-2.10--2.86)	0.76		
		(-1.73--2.10)	0.37		
		(-1.01--1.73)	0.72		
		(-0.72--1.01)	0.29		
		(0.08--0.72)	0.80		
		(0.53-0.08)	0.45		
		(1.17-0.53)	0.64		
		(2.23-1.17)	1.06		
		(2.26-2.23)	0.03		
		(2.32-2.26)	0.06		
		(3.35-2.32)	1.03		
		(3.93-3.35)	0.58		
		(4.44-3.93)	0.51		
		(5.36-4.44)	0.92		
		(5.53-5.36)	0.17		
		(5.62-5.53)	0.09		
		(6.62-5.62)	1.00		
		(7.32-6.62)	0.70		
		(7.71-7.32)	0.39		
		(8.40-7.71)	0.69		
		(8.80-8.40)	0.40		
		(9.02-8.80)	0.22		
		(9.88-9.02)	0.86		
		(10.72-9.88)	0.84		
		(10.97-10.72)	0.25		
		(11.44-10.97)	0.47		
		(12.06-11.44)	0.62		
		(12.41-12.06)	0.35		
		(13.15-12.41)	0.74		
		(14.11-13.15)	0.96		
		(14.24-14.11)	0.13		
		(14.48-14.24)	0.24		
		(14.97-14.48)	0.49		
		(14.97-14.97)	0.00		
				29.89	
176 2625.00	sc1	(-14.77--14.77)	0.00		
		(-14.01--14.77)	0.76		
		(-13.93--14.01)	0.08		
		(-13.78--13.93)	0.15		
		(-12.84--13.78)	0.94		
		(-12.34--12.84)	0.50		
		(-11.76--12.34)	0.58		
		(-10.68--11.76)	1.08		
		(-10.67--10.68)	0.01		
		(-10.66--10.67)	0.01		
		(-9.58--10.66)	1.08		
		(-8.99--9.58)	0.59		
		(-8.50--8.99)	0.49		
		(-7.58--8.50)	0.92		
		(-7.41--7.58)	0.17		
		(-6.65--7.41)	0.76		
		(-6.32--6.65)	0.33		
		(-5.64--6.32)	0.68		
		(-5.24--5.64)	0.40		
		(-4.49--5.24)	0.75		
		(-4.15--4.49)	0.34		
		(-3.97--4.15)	0.18		
		(-3.06--3.97)	0.91		
		(-2.29--3.06)	0.77		
		(-1.98--2.29)	0.31		
		(-1.39--1.98)	0.59		
		(-0.89--1.39)	0.50		
		(-0.62--0.89)	0.27		
		(0.20--0.62)	0.82		
		(1.06-0.20)	0.86		
		(1.28-1.06)	0.22		
		(1.70-1.28)	0.42		
		(2.37-1.70)	0.67		
		(2.73-2.37)	0.36		
		(3.46-2.73)	0.73		
		(4.41-3.46)	0.95		
		(4.54-4.41)	0.13		
		(4.80-4.54)	0.26		
		(5.63-4.80)	0.83		
		(6.08-5.63)	0.45		
		(6.72-6.08)	0.64		
		(7.75-6.72)	1.03		
		(7.80-7.75)	0.05		
		(7.89-7.80)	0.09		
		(8.89-7.89)	1.00		
		(9.43-8.89)	0.54		
		(9.98-9.43)	0.55		
		(10.99-9.98)	1.01		
		(11.06-10.99)	0.07		
		(11.85-11.06)	0.79		
		(12.15-11.85)	0.30		
		(12.78-12.15)	0.63		
		(13.24-12.78)	0.46		
		(14.09-13.24)	0.85		
		(14.32-14.09)	0.23		
		(14.45-14.32)	0.13		
		A RIPORTARE ml	29.22		

		CALCOLO DELLE LUNGHEZZE		Foglio n. 173
SCOTICO				
N. SEZIONE PROG.	FIG.	ELEMENTI DI CALCOLO	LUNGHEZZA ELEMENTARE ml	LUNGHEZZA FIGURA ml	NOTE
		RIPORTO ml	29.22		
		(15.41-14.45)	0.96		
		(15.92-15.41)	0.51		
		(15.92-15.92)	0.00		
				30.69	
177	sc1	(-15.06--15.06)	0.00		
2640.00		(-14.73--15.06)	0.33		
		(-14.73--14.73)	0.00		
		(-14.72--14.73)	0.01		
		(-13.65--14.72)	1.07		
		(-13.09--13.65)	0.56		
		(-12.56--13.09)	0.53		
		(-12.30--12.56)	0.26		
		(-11.54--12.30)	0.76		
		(-11.49--11.54)	0.05		
		(-11.48--11.49)	0.01		
		(-11.45--11.48)	0.03		
		(-10.40--11.45)	1.05		
		(-9.81--10.40)	0.59		
		(-9.31--9.81)	0.50		
		(-8.35--9.31)	0.96		
		(-8.23--8.35)	0.12		
		(-8.17--8.23)	0.06		
		(-7.15--8.17)	1.02		
		(-6.53--7.15)	0.62		
		(-6.06--6.53)	0.47		
		(-5.17--6.06)	0.89		
		(-4.98--5.17)	0.19		
		(-4.88--4.98)	0.10		
		(-3.90--4.88)	0.98		
		(-3.24--3.90)	0.66		
		(-2.82--3.24)	0.42		
		(-1.99--2.82)	0.83		
		(-1.73--1.99)	0.26		
		(-1.60--1.73)	0.13		
		(-0.65--1.60)	0.95		
		(0.04--0.65)	0.69		
		(0.43-0.04)	0.39		
		(1.20-0.43)	0.77		
		(1.52-1.20)	0.32		
		(1.68-1.52)	0.16		
		(2.14-1.68)	0.46		
				17.20	
178	sc1	(-12.83--12.83)	0.00		
2655.00		(-12.40--12.83)	0.43		
		(-12.10--12.40)	0.30		
		(-11.96--12.10)	0.14		
		(-11.02--11.96)	0.94		
		(-10.36--11.02)	0.66		
		(-9.95--10.36)	0.41		
		(-9.09--9.95)	0.86		
		(-8.87--9.09)	0.22		
		(-8.76--8.87)	0.11		
		(-7.79--8.76)	0.97		
		(-7.16--7.79)	0.63		
		(-6.71--7.16)	0.45		
		(-5.77--6.71)	0.94		
		(-5.63--5.77)	0.14		
		(-5.56--5.63)	0.07		
		(-4.55--5.56)	1.01		
		(-3.97--4.55)	0.58		
		(-3.48--3.97)	0.49		
		(-2.46--3.48)	1.02		
		(-2.40--2.46)	0.06		
		(-2.37--2.40)	0.03		
		(-1.32--2.37)	1.05		
		(-0.77--1.32)	0.55		
		(-0.24--0.77)	0.53		
		(0.83--0.24)	1.07		
		(0.84-0.83)	0.01		
		(0.84-0.84)	0.00		
		(0.85-0.84)	0.01		
		(1.65-0.85)	0.80		
		(1.92-1.65)	0.27		
		(2.43-1.92)	0.51		
		(2.99-2.43)	0.56		
		(4.03-2.99)	1.04		
		(4.07-4.03)	0.04		
		(4.16-4.07)	0.09		
		(5.15-4.16)	0.99		
		(5.63-5.15)	0.48		
		(6.23-5.63)	0.60		
		(7.23-6.23)	1.00		
		(7.31-7.23)	0.08		
		(7.47-7.31)	0.16		
		(8.38-7.47)	0.91		
		(8.82-8.38)	0.44		
		(9.46-8.82)	0.64		
		(10.42-9.46)	0.96		
		(10.54-10.42)	0.12		
		(10.79-10.54)	0.25		
		(11.62-10.79)	0.83		
		(12.02-11.62)	0.40		
		(12.70-12.02)	0.68		
		(13.62-12.70)	0.92		
		(13.78-13.62)	0.16		
		(14.10-13.78)	0.32		
		(14.85-14.10)	0.75		
		(15.22-14.85)	0.37		
		(15.93-15.22)	0.71		
		(16.82-15.93)	0.89		
		(17.01-16.82)	0.19		
		(17.41-17.01)	0.40		
		(18.09-17.41)	0.68		
		(18.21-18.09)	0.12		
		A RIPORTARE ml	31.04		

		CALCOLO DELLE LUNGHEZZE		Foglio n. 174
SCOTICO				
N. SEZIONE PROG.	FIG.	ELEMENTI DI CALCOLO	LUNGHEZZA ELEMENTARE ml	LUNGHEZZA FIGURA ml	NOTE
		RIPORTO ml	31.04		
		(18.21-18.21)	0.00		
				31.04	
179	sc1	(-14.01--14.01)	0.00		
2670.00		(-13.71--14.01)	0.30		
		(-13.56--13.71)	0.15		
		(-13.24--13.56)	0.32		
		(-12.49--13.24)	0.75		
		(-12.16--12.49)	0.33		
		(-11.42--12.16)	0.74		
		(-10.61--11.42)	0.81		
		(-10.34--10.61)	0.27		
		(-9.75--10.34)	0.59		
		(-9.27--9.75)	0.48		
		(-9.06--9.27)	0.21		
		(-8.20--9.06)	0.86		
		(-7.51--8.20)	0.69		
		(-7.13--7.51)	0.38		
		(-6.27--7.13)	0.86		
		(-6.05--6.27)	0.22		
		(-5.96--6.05)	0.09		
		(-4.98--5.96)	0.98		
		(-4.41--4.98)	0.57		
		(-3.91--4.41)	0.50		
		(-3.64--3.91)	0.27		
		(-2.84--3.64)	0.80		
		(-2.78--2.84)	0.06		
		(-1.76--2.78)	1.02		
		(-1.31--1.76)	0.45		
		(-0.69--1.31)	0.62		
		(0.24--0.69)	0.93		
		(0.38-0.24)	0.14		
		(0.71-0.38)	0.33		
		(1.46-0.71)	0.75		
		(1.79-1.46)	0.33		
		(2.53-1.79)	0.74		
		(3.34-2.53)	0.81		
		(3.60-3.34)	0.26		
				17.61	
180	sc1	(-15.00--15.00)	0.00		
2685.00		(-14.73--15.00)	0.27		
		(-14.05--14.73)	0.68		
		(-13.66--14.05)	0.39		
		(-13.51--13.66)	0.15		
		(-12.60--13.51)	0.91		
		(-12.01--12.60)	0.59		
		(-11.53--12.01)	0.48		
		(-10.52--11.53)	1.01		
		(-10.46--10.52)	0.06		
		(-10.33--10.46)	0.13		
		(-9.40--10.33)	0.93		
		(-9.02--9.40)	0.38		
		(-8.33--9.02)	0.69		
		(-7.95--8.33)	0.38		
		(-7.26--7.95)	0.69		
		(-6.60--7.26)	0.66		
		(-6.20--6.60)	0.40		
		(-6.03--6.20)	0.17		
		(-5.26--6.03)	0.77		
				9.74	
180	sc2	(4.43-3.95)	0.48		
2685.00		(4.47-4.43)	0.04		
		(4.57-4.47)	0.10		
		(5.53-4.57)	0.96		
		(5.92-5.53)	0.39		
		(6.60-5.92)	0.68		
		(7.41-6.60)	0.81		
		(7.67-7.41)	0.26		
		(8.29-7.67)	0.62		
		(8.73-8.29)	0.44		
		(8.91-8.73)	0.18		
		(9.80-8.91)	0.89		
		(10.29-9.80)	0.49		
		(10.87-10.29)	0.58		
		(11.90-10.87)	1.03		
		(11.93-11.90)	0.03		
		(12.02-11.93)	0.09		
		(13.00-12.02)	0.98		
		(13.39-13.00)	0.39		
		(14.07-13.39)	0.68		
				10.12	
180	sc3	(4.57-4.52)	0.05		
2685.00		(5.53-4.57)	0.96		
		(5.92-5.53)	0.39		
		(6.60-5.92)	0.68		
		(7.41-6.60)	0.81		
		(7.67-7.41)	0.26		
		(8.29-7.67)	0.62		
		(8.73-8.29)	0.44		
		(8.91-8.73)	0.18		
		(9.80-8.91)	0.89		
		(10.29-9.80)	0.49		
		(10.87-10.29)	0.58		
		(11.90-10.87)	1.03		
		(11.93-11.90)	0.03		
		(12.02-11.93)	0.09		
		(13.00-12.02)	0.98		
		(13.39-13.00)	0.39		
		(14.07-13.39)	0.68		
				9.55	
181	sc1	(-14.35--14.35)	0.00		
2700.00		(-13.44--14.35)	0.91		
		(-12.95--13.44)	0.49		
		(-12.38--12.95)	0.57		
		(-12.05--12.38)	0.33		
		A RIPORTARE ml	2.30		

		CALCOLO DELLE LUNGHEZZE		Foglio n. 175
SCOTICO				
N. SEZIONE PROG.	FIG.	ELEMENTI DI CALCOLO	LUNGHEZZA ELEMENTARE ml	LUNGHEZZA FIGURA ml	NOTE
		RIPORTO ml	2.30		
		(-11.32--12.05)	0.73		
		(-10.79--11.32)	0.53		
		(-10.26--10.79)	0.53		
		(-10.07--10.26)	0.19		
		(-9.20--10.07)	0.87		
		(-8.64--9.20)	0.56		
		(-8.14--8.64)	0.50		
		(-7.20--8.14)	0.94		
		(-7.08--7.20)	0.12		
		(-6.74--7.08)	0.34		
		(-6.02--6.74)	0.72		
		(-5.77--6.02)	0.25		
		(-4.96--5.77)	0.81		
		(-4.33--4.96)	0.63		
		(-3.90--4.33)	0.43		
		(-2.90--3.90)	1.00		
		(-2.84--2.90)	0.06		
		(-2.69--2.84)	0.15		
		(-1.78--2.69)	0.91		
		(-1.46--1.78)	0.32		
		(-0.72--1.46)	0.74		
		(-0.02--0.72)	0.70		
		(0.34--0.02)	0.36		
		(1.36-0.34)	1.02		
		(1.40-1.36)	0.04		
		(1.41-1.40)	0.01		
		(2.46-1.41)	1.05		
		(2.85-2.46)	0.39		
		(3.52-2.85)	0.67		
		(4.28-3.52)	0.76		
		(4.58-4.28)	0.30		
		(5.41-4.58)	0.83		
		(5.64-5.41)	0.23		
		(6.43-5.64)	0.79		
		(6.70-6.43)	0.27		
		(7.15-6.70)	0.45		
		(7.76-7.15)	0.61		
		(8.30-7.76)	0.54		
				22.65	
182 2715.00	sc1	(-14.50--14.50)	0.00		
		(-13.90--14.50)	0.60		
		(-13.39--13.90)	0.51		
		(-12.85--13.39)	0.54		
		(-12.02--12.85)	0.83		
		(-11.80--12.02)	0.22		
		(-11.09--11.80)	0.71		
		(-10.75--11.09)	0.34		
		(-10.64--10.75)	0.11		
		(-9.69--10.64)	0.95		
		(-9.27--9.69)	0.42		
		(-8.64--9.27)	0.63		
		(-7.89--8.64)	0.75		
		(-7.59--7.89)	0.30		
		(-6.59--7.59)	1.00		
		(-6.53--6.59)	0.06		
		(-6.52--6.53)	0.01		
		(-5.48--6.52)	1.04		
		(-5.14--5.48)	0.34		
		(-4.43--5.14)	0.71		
		(-3.77--4.43)	0.66		
		(-3.37--3.77)	0.40		
		(-2.39--3.37)	0.98		
		(-2.32--2.39)	0.07		
		(-2.09--2.32)	0.23		
		(-1.27--2.09)	0.82		
		(-1.02--1.27)	0.25		
		(-0.22--1.02)	0.80		
		(0.36--0.22)	0.58		
		(0.84-0.36)	0.48		
		(1.73-0.84)	0.89		
		(1.89-1.73)	0.16		
		(1.99-1.89)	0.10		
		(2.40-1.99)	0.41		
		(2.84-2.40)	0.44		
		(2.94-2.84)	0.10		
		(3.11-2.94)	0.17		
		(4.00-3.11)	0.89		
		(4.48-4.00)	0.48		
		(5.05-4.48)	0.57		
		(5.86-5.05)	0.81		
		(6.10-5.86)	0.24		
		(6.90-6.10)	0.80		
		(7.16-6.90)	0.26		
		(7.23-7.16)	0.07		
		(8.21-7.23)	0.98		
				22.71	
183 2730.00	sc1	(-14.48--14.48)	0.00		
		(-13.97--14.48)	0.51		
		(-13.40--13.97)	0.57		
		(-12.92--13.40)	0.48		
		(-12.08--12.92)	0.84		
		(-11.87--12.08)	0.21		
		(-11.09--11.87)	0.78		
		(-10.83--11.09)	0.26		
		(-10.76--10.83)	0.07		
		(-9.78--10.76)	0.98		
		(-9.44--9.78)	0.34		
		(-8.73--9.44)	0.71		
		(-8.13--8.73)	0.60		
		(-7.69--8.13)	0.44		
		(-6.81--7.69)	0.88		
		(-6.64--6.81)	0.17		
		(-5.99--6.64)	0.65		
		(-5.59--5.99)	0.40		
		A RIPORTARE ml	8.89		

		CALCOLO DELLE LUNGHEZZE		Foglio n. 176
SCOTICO				
N. SEZIONE PROG.	FIG.	ELEMENTI DI CALCOLO	LUNGHEZZA ELEMENTARE ml	LUNGHEZZA FIGURA ml	NOTE
		RIPORTO ml	8.89		
		(-5.49--5.59)	0.10		
		(-4.55--5.49)	0.94		
		(-4.17--4.55)	0.38		
		(-3.50--4.17)	0.67		
		(-2.86--3.50)	0.64		
		(-2.45--2.86)	0.41		
		(-1.54--2.45)	0.91		
		(-1.41--1.54)	0.13		
		(-1.32--1.41)	0.09		
		(-0.90--1.32)	0.42		
		(-0.45--0.90)	0.45		
		(-0.36--0.45)	0.09		
		(-0.22--0.36)	0.14		
		(0.69--0.22)	0.91		
		(1.10-0.69)	0.41		
		(1.73-1.10)	0.63		
		(2.41-1.73)	0.68		
		(2.78-2.41)	0.37		
		(3.73-2.78)	0.95		
		(3.83-3.73)	0.10		
		(4.19-3.83)	0.36		
		(4.87-4.19)	0.68		
		(5.05-4.87)	0.18		
		(5.92-5.05)	0.87		
		(6.37-5.92)	0.45		
		(6.97-6.37)	0.60		
		(7.68-6.97)	0.71		
		(8.01-7.68)	0.33		
		(9.00-8.01)	0.99		
		(9.06-9.00)	0.06		
		(9.16-9.06)	0.10		
				23.64	
184 2745.00	sc1	(-14.51--14.51)	0.00		
		(-14.28--14.51)	0.23		
		(-13.63--14.28)	0.65		
		(-13.02--13.63)	0.61		
		(-12.59--13.02)	0.43		
		(-11.75--12.59)	0.84		
		(-11.55--11.75)	0.20		
		(-10.62--11.55)	0.93		
		(-10.51--10.62)	0.11		
		(-10.49--10.51)	0.02		
		(-9.47--10.49)	1.02		
		(-9.22--9.47)	0.25		
		(-8.43--9.22)	0.79		
		(-7.96--8.43)	0.47		
		(-7.39--7.96)	0.57		
		(-6.69--7.39)	0.70		
		(-6.35--6.69)	0.34		
		(-5.42--6.35)	0.93		
		(-5.30--5.42)	0.12		
		(-4.74--5.30)	0.56		
		(-4.26--4.74)	0.48		
		(-3.45--4.26)	0.81		
		(-3.22--3.45)	0.23		
		(-2.89--3.22)	0.33		
		(-2.18--2.89)	0.71		
		(-1.63--2.18)	0.55		
		(-1.14--1.63)	0.49		
		(-0.36--1.14)	0.78		
		(-0.10--0.36)	0.26		
		(0.90--0.10)	1.00		
		(0.94-0.90)	0.04		
		(1.13-0.94)	0.19		
		(1.98-1.13)	0.85		
		(2.17-1.98)	0.19		
		(3.03-2.17)	0.86		
		(3.43-3.03)	0.40		
		(4.07-3.43)	0.64		
		(4.70-4.07)	0.63		
		(5.11-4.70)	0.41		
		(5.97-5.11)	0.86		
		(6.15-5.97)	0.18		
		(7.01-6.15)	0.86		
		(7.19-7.01)	0.18		
		(7.23-7.19)	0.04		
		(8.23-7.23)	1.00		
		(8.50-8.23)	0.27		
		(9.27-8.50)	0.77		
		(9.76-9.27)	0.49		
		(10.31-9.76)	0.55		
		(11.03-10.31)	0.72		
		(11.36-11.03)	0.33		
		(12.29-11.36)	0.93		
		(12.40-12.29)	0.11		
		(12.88-12.40)	0.48		
		(13.44-12.88)	0.56		
		(13.56-13.44)	0.12		
		(14.48-13.56)	0.92		
		(15.12-14.48)	0.64		
		(15.52-15.12)	0.40		
				30.03	
185 2760.00	sc1	(-14.66--14.66)	0.00		
		(-13.94--14.66)	0.72		
		(-13.50--13.94)	0.44		
		(-12.91--13.50)	0.59		
		(-12.28--12.91)	0.63		
		(-11.87--12.28)	0.41		
		(-11.07--11.87)	0.80		
		(-10.83--11.07)	0.24		
		(-9.85--10.83)	0.98		
		(-9.80--9.85)	0.05		
		(-9.51--9.80)	0.29		
		(-8.76--9.51)	0.75		
		A RIPORTARE ml	5.90		

		CALCOLO DELLE LUNGHEZZE		Foglio n. 177
SCOTICO				
N. SEZIONE PROG.	FIG.	ELEMENTI DI CALCOLO	LUNGHEZZA ELEMENTARE ml	LUNGHEZZA FIGURA ml	NOTE
		RIPORTO ml	5.90		
		(-8.63--8.76)	0.13		
		(-7.72--8.63)	0.91		
		(-7.41--7.72)	0.31		
		(-6.69--7.41)	0.72		
		(-6.15--6.69)	0.54		
		(-5.65--6.15)	0.50		
		(-4.97--5.65)	0.68		
		(-4.61--4.97)	0.36		
		(-3.75--4.61)	0.86		
		(-3.58--3.75)	0.17		
		(-2.56--3.58)	1.02		
		(-2.54--2.56)	0.02		
		(-2.54--2.54)	0.00		
		(-1.50--2.54)	1.04		
		(-1.32--1.50)	0.18		
		(-0.47--1.32)	0.85		
		(-0.10--0.47)	0.37		
		(0.57--0.10)	0.67		
		(1.12-0.57)	0.55		
		(1.61-1.12)	0.49		
		(2.34-1.61)	0.73		
		(2.64-2.34)	0.30		
		(3.56-2.64)	0.92		
		(3.68-3.56)	0.12		
		(4.38-3.68)	0.70		
		(4.72-4.38)	0.34		
		(4.77-4.72)	0.05		
		(5.75-4.77)	0.98		
		(5.99-5.75)	0.24		
		(6.79-5.99)	0.80		
		(7.21-6.79)	0.42		
		(7.83-7.21)	0.62		
		(8.43-7.83)	0.60		
		(8.86-8.43)	0.43		
		(9.65-8.86)	0.79		
		(9.90-9.65)	0.25		
		(10.87-9.90)	0.97		
		(10.94-10.87)	0.07		
		(11.33-10.94)	0.39		
		(11.97-11.33)	0.64		
		(12.79-11.97)	0.82		
		(13.01-12.79)	0.22		
		(13.30-13.01)	0.29		
		(14.05-13.30)	0.75		
		(14.52-14.05)	0.47		
		(15.08-14.52)	0.56		
		(15.74-15.08)	0.66		
		(16.12-15.74)	0.38		
		(16.96-16.12)	0.84		
		(17.16-16.96)	0.20		
		(18.18-17.16)	1.02		
		(18.19-18.18)	0.01		
		(18.26-18.19)	0.07		
		(18.26-18.26)	0.00		
				32.92	
186 2775.00	sc1	(-14.94--14.94)	0.00		
		(-14.88--14.94)	0.06		
		(-14.74--14.88)	0.14		
		(-13.85--14.74)	0.89		
		(-13.57--13.85)	0.28		
		(-12.82--13.57)	0.75		
		(-12.39--12.82)	0.43		
		(-11.79--12.39)	0.60		
		(-11.22--11.79)	0.57		
		(-10.75--11.22)	0.47		
		(-10.04--10.75)	0.71		
		(-9.72--10.04)	0.32		
		(-8.86--9.72)	0.86		
		(-8.69--8.86)	0.17		
		(-8.55--8.69)	0.14		
		(-7.66--8.55)	0.89		
		(-7.41--7.66)	0.25		
		(-6.62--7.41)	0.79		
		(-6.51--6.62)	0.11		
		(-5.59--6.51)	0.92		
		(-5.34--5.59)	0.25		
		(-4.56--5.34)	0.78		
		(-4.16--4.56)	0.40		
		(-3.52--4.16)	0.64		
		(-2.99--3.52)	0.53		
		(-2.49--2.99)	0.50		
		(-1.81--2.49)	0.68		
		(-1.46--1.81)	0.35		
		(-0.64--1.46)	0.82		
		(-0.43--0.64)	0.21		
		(0.54--0.43)	0.97		
		(0.61-0.54)	0.07		
		(1.09-0.61)	0.48		
		(1.64-1.09)	0.55		
		(1.72-1.64)	0.08		
		(2.67-1.72)	0.95		
		(2.89-2.67)	0.22		
		(3.71-2.89)	0.82		
		(4.07-3.71)	0.36		
		(4.74-4.07)	0.67		
		(5.24-4.74)	0.50		
		(5.77-5.24)	0.53		
		(6.42-5.77)	0.65		
		(6.80-6.42)	0.38		
		(7.59-6.80)	0.79		
		(7.84-7.59)	0.25		
		(8.77-7.84)	0.93		
		(8.87-8.77)	0.10		
		(9.60-8.87)	0.73		
		A RIPORTARE ml	24.54		

		CALCOLO DELLE LUNGHEZZE		Foglio n. 178
SCOTICO				
N. SEZIONE PROG.	FIG.	ELEMENTI DI CALCOLO	LUNGHEZZA ELEMENTARE ml	LUNGHEZZA FIGURA ml	NOTE
		RIPORTO ml	24.54		
		(9.90-9.60)	0.30		
		(10.79-9.90)	0.89		
		(10.94-10.79)	0.15		
				25.88	
187	sc1	(-15.34--15.34)	0.00		
2790.00		(-14.54--15.34)	0.80		
		(-14.39--14.54)	0.15		
		(-14.38--14.39)	0.01		
		(-13.36--14.38)	1.02		
		(-13.24--13.36)	0.12		
		(-12.33--13.24)	0.91		
		(-12.11--12.33)	0.22		
		(-11.30--12.11)	0.81		
		(-10.97--11.30)	0.33		
		(-10.27--10.97)	0.70		
		(-9.70--10.27)	0.57		
		(-9.25--9.70)	0.45		
		(-8.70--9.25)	0.55		
		(-8.22--8.70)	0.48		
		(-7.56--8.22)	0.66		
		(-7.19--7.56)	0.37		
		(-6.42--7.19)	0.77		
		(-6.16--6.42)	0.26		
		(-5.29--6.16)	0.87		
		(-5.13--5.29)	0.16		
		(-4.15--5.13)	0.98		
		(-4.10--4.15)	0.05		
		(-3.57--4.10)	0.53		
		(-3.07--3.57)	0.50		
		(-3.01--3.07)	0.06		
		(-2.04--3.01)	0.97		
		(-1.88--2.04)	0.16		
		(-1.01--1.88)	0.87		
		(-0.74--1.01)	0.27		
		(0.02--0.74)	0.76		
		(0.40-0.02)	0.38		
		(1.05-0.40)	0.65		
		(1.53-1.05)	0.48		
		(2.08-1.53)	0.55		
		(2.67-2.08)	0.59		
		(3.11-2.67)	0.44		
		(3.80-3.11)	0.69		
		(4.14-3.80)	0.34		
		(4.94-4.14)	0.80		
		(5.17-4.94)	0.23		
		(6.08-5.17)	0.91		
		(6.20-6.08)	0.12		
		(7.21-6.20)	1.01		
		(7.23-7.21)	0.02		
		(7.40-7.23)	0.17		
		(8.26-7.40)	0.86		
				23.60	
188	sc1	(-15.90--15.90)	0.00		
2805.00		(-15.58--15.90)	0.32		
		(-14.83--15.58)	0.75		
		(-14.56--14.83)	0.27		
		(-13.72--14.56)	0.84		
		(-13.53--13.72)	0.19		
		(-12.62--13.53)	0.91		
		(-12.50--12.62)	0.12		
		(-11.51--12.50)	0.99		
		(-11.47--11.51)	0.04		
		(-11.44--11.47)	0.03		
		(-10.94--11.44)	0.50		
		(-10.48--10.94)	0.46		
		(-10.45--10.48)	0.03		
		(-10.41--10.45)	0.04		
		(-9.42--10.41)	0.99		
		(-9.30--9.42)	0.12		
		(-8.39--9.30)	0.91		
		(-8.20--8.39)	0.19		
		(-7.36--8.20)	0.84		
		(-7.09--7.36)	0.27		
		(-6.33--7.09)	0.76		
		(-5.99--6.33)	0.34		
		(-5.31--5.99)	0.68		
		(-4.88--5.31)	0.43		
		(-4.28--4.88)	0.60		
		(-3.78--4.28)	0.50		
		(-3.25--3.78)	0.53		
		(-2.67--3.25)	0.58		
		(-2.22--2.67)	0.45		
		(-1.57--2.22)	0.65		
		(-1.20--1.57)	0.37		
		(-0.46--1.20)	0.74		
		(-0.17--0.46)	0.29		
		(0.64--0.17)	0.81		
		(0.86-0.64)	0.22		
		(1.75-0.86)	0.89		
		(1.89-1.75)	0.14		
		(2.85-1.89)	0.96		
		(2.92-2.85)	0.07		
		(3.77-2.92)	0.85		
		(3.94-3.77)	0.17		
		(3.96-3.94)	0.02		
		(4.97-3.96)	1.01		
		(5.06-4.97)	0.09		
		(6.00-5.06)	0.94		
		(6.17-6.00)	0.17		
		(7.03-6.17)	0.86		
		(7.21-7.03)	0.18		
				23.11	
189	sc1	(-16.56--16.56)	0.00		
2820.00		(-16.48--16.56)	0.08		
		A RIPORTARE ml	0.08		

		CALCOLO DELLE LUNGHEZZE		Foglio n. 179
SCOTICO				
N. SEZIONE PROG.	FIG.	ELEMENTI DI CALCOLO	LUNGHEZZA ELEMENTARE ml	LUNGHEZZA FIGURA ml	NOTE
		RIPORTO ml	0.08		
		(-16.16--16.48)	0.32		
		(-15.45--16.16)	0.71		
		(-15.07--15.45)	0.38		
		(-14.42--15.07)	0.65		
		(-13.99--14.42)	0.43		
		(-13.40--13.99)	0.59		
		(-12.91--13.40)	0.49		
		(-12.37--12.91)	0.54		
		(-11.89--12.37)	0.48		
		(-11.34--11.89)	0.55		
		(-10.74--11.34)	0.60		
		(-10.32--10.74)	0.42		
		(-9.65--10.32)	0.67		
		(-9.29--9.65)	0.36		
		(-8.57--9.29)	0.72		
		(-8.26--8.57)	0.31		
		(-7.49--8.26)	0.77		
		(-7.24--7.49)	0.25		
		(-6.40--7.24)	0.84		
		(-6.21--6.40)	0.19		
		(-5.32--6.21)	0.89		
		(-5.18--5.32)	0.14		
		(-4.24--5.18)	0.94		
		(-4.16--4.24)	0.08		
		(-3.15--4.16)	1.01		
		(-3.13--3.15)	0.02		
		(-2.75--3.13)	0.38		
		(-2.10--2.75)	0.65		
		(-2.07--2.10)	0.03		
		(-1.08--2.07)	0.99		
		(-0.98--1.08)	0.10		
		(-0.05--0.98)	0.93		
		(0.10--0.05)	0.15		
		(0.98-0.10)	0.88		
		(1.18-0.98)	0.20		
		(2.00-1.18)	0.82		
		(2.27-2.00)	0.27		
		(3.03-2.27)	0.76		
		(3.35-3.03)	0.32		
		(4.06-3.35)	0.71		
		(4.43-4.06)	0.37		
		(5.08-4.43)	0.65		
		(5.52-5.08)	0.44		
				22.08	
190 2835.00	sc1	(-17.25--17.25)	0.00		
		(-17.17--17.25)	0.08		
		(-16.29--17.17)	0.88		
		(-16.15--16.29)	0.14		
		(-15.22--16.15)	0.93		
		(-15.12--15.22)	0.10		
		(-14.15--15.12)	0.97		
		(-14.09--14.15)	0.06		
		(-13.08--14.09)	1.01		
		(-13.07--13.08)	0.01		
		(-13.06--13.07)	0.01		
		(-12.82--13.06)	0.24		
		(-12.07--12.82)	0.75		
		(-12.04--12.07)	0.03		
		(-12.01--12.04)	0.03		
		(-11.01--12.01)	1.00		
		(-10.94--11.01)	0.07		
		(-9.99--10.94)	0.95		
		(-9.86--9.99)	0.13		
		(-8.96--9.86)	0.90		
		(-8.79--8.96)	0.17		
		(-7.94--8.79)	0.85		
		(-7.72--7.94)	0.22		
		(-6.91--7.72)	0.81		
		(-6.65--6.91)	0.26		
		(-5.88--6.65)	0.77		
		(-5.58--5.88)	0.30		
		(-4.86--5.58)	0.72		
		(-4.51--4.86)	0.35		
		(-3.83--4.51)	0.68		
		(-3.44--3.83)	0.39		
		(-2.81--3.44)	0.63		
		(-2.36--2.81)	0.45		
		(-1.78--2.36)	0.58		
		(-1.29--1.78)	0.49		
		(-0.75--1.29)	0.54		
		(-0.22--0.75)	0.53		
		(0.27--0.22)	0.49		
		(0.85-0.27)	0.58		
		(1.30-0.85)	0.45		
		(1.92-1.30)	0.62		
		(2.33-1.92)	0.41		
		(2.99-2.33)	0.66		
		(3.35-2.99)	0.36		
		(4.06-3.35)	0.71		
		(4.38-4.06)	0.32		
		(5.14-4.38)	0.76		
		(5.40-5.14)	0.26		
		(5.65-5.40)	0.25		
		(6.43-5.65)	0.78		
		(7.28-6.43)	0.85		
		(7.46-7.28)	0.18		
		(8.35-7.46)	0.89		
		(8.48-8.35)	0.13		
		(9.42-8.48)	0.94		
		(9.51-9.42)	0.09		
				26.76	
191 2850.00	sc1	(-18.04--18.04)	0.00		
		(-17.77--18.04)	0.27		
		(-17.50--17.77)	0.27		
		A RIPORTARE ml	0.54		

		CALCOLO DELLE LUNGHEZZE		Foglio n. 180
SCOTICO				
N. SEZIONE PROG.	FIG.	ELEMENTI DI CALCOLO	LUNGHEZZA ELEMENTARE ml	LUNGHEZZA FIGURA ml	NOTE
		RIPORTO ml	0.54		
		(-16.74--17.50)	0.76		
		(-16.44--16.74)	0.30		
		(-15.71--16.44)	0.73		
		(-15.37--15.71)	0.34		
		(-14.69--15.37)	0.68		
		(-14.30--14.69)	0.39		
		(-13.66--14.30)	0.64		
		(-13.07--13.66)	0.59		
		(-12.64--13.07)	0.43		
		(-12.17--12.64)	0.47		
		(-11.61--12.17)	0.56		
		(-11.10--11.61)	0.51		
		(-10.58--11.10)	0.52		
		(-10.04--10.58)	0.54		
		(-9.56--10.04)	0.48		
		(-8.97--9.56)	0.59		
		(-8.53--8.97)	0.44		
		(-7.90--8.53)	0.63		
		(-7.51--7.90)	0.39		
		(-6.83--7.51)	0.68		
		(-6.48--6.83)	0.35		
		(-5.77--6.48)	0.71		
		(-5.45--5.77)	0.32		
		(-4.70--5.45)	0.75		
		(-4.43--4.70)	0.27		
		(-3.63--4.43)	0.80		
		(-3.40--3.63)	0.23		
		(-2.57--3.40)	0.83		
		(-2.37--2.57)	0.20		
		(-1.50--2.37)	0.87		
		(-1.35--1.50)	0.15		
		(-0.43--1.35)	0.92		
		(-0.32--0.43)	0.11		
		(0.63--0.32)	0.95		
		(0.70-0.63)	0.07		
		(1.70-0.70)	1.00		
		(1.73-1.70)	0.03		
		(2.46-1.73)	0.73		
		(2.76-2.46)	0.30		
		(2.77-2.76)	0.01		
		(3.78-2.77)	1.01		
		(3.83-3.78)	0.05		
		(4.81-3.83)	0.98		
		(5.71-4.81)	0.90		
		(5.83-5.71)	0.12		
		(5.97-5.83)	0.14		
		(6.86-5.97)	0.89		
		(7.03-6.86)	0.17		
		(7.89-7.03)	0.86		
		(8.10-7.89)	0.21		
		(8.91-8.10)	0.81		
				26.95	
192 2865.00	sc1	(-18.80--18.80)	0.00		
		(-18.79--18.80)	0.01		
		(-18.34--18.79)	0.45		
		(-17.72--18.34)	0.62		
		(-17.32--17.72)	0.40		
		(-16.65--17.32)	0.67		
		(-16.29--16.65)	0.36		
		(-15.59--16.29)	0.70		
		(-15.27--15.59)	0.32		
		(-14.52--15.27)	0.75		
		(-14.24--14.52)	0.28		
		(-13.98--14.24)	0.26		
		(-13.21--13.98)	0.77		
		(-12.38--13.21)	0.83		
		(-12.19--12.38)	0.19		
		(-11.31--12.19)	0.88		
				7.49	
193 2880.00	sc1	(-19.76--19.76)	0.00		
		(-19.23--19.76)	0.53		
		(-19.00--19.23)	0.23		
		(-18.16--19.00)	0.84		
		(-17.97--18.16)	0.19		
		(-17.08--17.97)	0.89		
		(-16.94--17.08)	0.14		
		(-16.00--16.94)	0.94		
		(-15.92--16.00)	0.08		
		(-14.92--15.92)	1.00		
		(-14.89--14.92)	0.03		
		(-14.86--14.89)	0.03		
		(-14.30--14.86)	0.56		
		(-13.88--14.30)	0.42		
		(-13.86--13.88)	0.02		
		(-13.84--13.86)	0.02		
		(-12.84--13.84)	1.00		
		(-12.76--12.84)	0.08		
		(-11.81--12.76)	0.95		
				7.95	
194 2895.00	sc1	(-20.52--20.52)	0.00		
		(-20.12--20.52)	0.40		
		(-19.87--20.12)	0.25		
		(-19.01--19.87)	0.86		
		(-18.84--19.01)	0.17		
		(-17.91--18.84)	0.93		
		(-17.81--17.91)	0.10		
		(-16.81--17.81)	1.00		
		(-16.78--16.81)	0.03		
		(-16.40--16.78)	0.38		
		(-15.76--16.40)	0.64		
		(-14.83--15.76)	0.93		
		(-14.73--14.83)	0.10		
		(-14.61--14.73)	0.12		
		(-13.70--14.61)	0.91		
		A RIPORTARE ml	6.82		

		CALCOLO DELLE LUNGHEZZE		Foglio n. 181	
SCOTICO					
N. SEZIONE PROG.	FIG.	ELEMENTI DI CALCOLO	LUNGHEZZA ELEMENTARE ml	LUNGHEZZA FIGURA ml	NOTE
		RIPORTO ml	6.82		
		(-13.51--13.70)	0.19		
		(-12.67--13.51)	0.84		
		(-12.41--12.67)	0.26		
		(-11.65--12.41)	0.76		
		(-11.31--11.65)	0.34		
		(-10.62--11.31)	0.69		
		(-10.21--10.62)	0.41		
		(-9.59--10.21)	0.62		
		(-9.10--9.59)	0.49		
		(-8.56--9.10)	0.54		
				11.96	
195	sc1	(-20.97--20.97)	0.00		
2910.00		(-20.50--20.97)	0.47		
		(-20.08--20.50)	0.42		
		(-19.37--20.08)	0.71		
		(-19.05--19.37)	0.32		
		(-18.23--19.05)	0.82		
		(-18.02--18.23)	0.21		
		(-17.09--18.02)	0.93		
		(-16.99--17.09)	0.10		
		(-16.92--16.99)	0.07		
		(-16.09--16.92)	0.83		
		(-15.98--16.09)	0.11		
		(-15.96--15.98)	0.02		
		(-15.95--15.96)	0.01		
		(-14.93--15.95)	1.02		
		(-14.81--14.93)	0.12		
		(-13.91--14.81)	0.90		
		(-13.68--13.91)	0.23		
		(-12.88--13.68)	0.80		
		(-12.54--12.88)	0.34		
		(-11.85--12.54)	0.69		
		(-11.40--11.85)	0.45		
		(-10.82--11.40)	0.58		
		(-10.26--10.82)	0.56		
		(-9.79--10.26)	0.47		
		(-9.12--9.79)	0.67		
		(-8.76--9.12)	0.36		
		(-7.99--8.76)	0.77		
		(-7.73--7.99)	0.26		
		(-6.85--7.73)	0.88		
		(-6.70--6.85)	0.15		
		(-5.71--6.70)	0.99		
		(-5.67--5.71)	0.04		
		(-5.24--5.67)	0.43		
		(-4.64--5.24)	0.60		
		(-4.57--4.64)	0.07		
		(-3.61--4.57)	0.96		
		(-3.44--3.61)	0.17		
		(-2.58--3.44)	0.86		
		(-2.30--2.58)	0.28		
		(-1.55--2.30)	0.75		
		(-1.16--1.55)	0.39		
		(-0.52--1.16)	0.64		
		(-0.02--0.52)	0.50		
		(0.51--0.02)	0.53		
		(1.12-0.51)	0.61		
		(1.54-1.12)	0.42		
		(1.90-1.54)	0.36		
		(2.57-1.90)	0.67		
		(3.39-2.57)	0.82		
		(3.60-3.39)	0.21		
		(4.53-3.60)	0.93		
		(4.63-4.53)	0.10		
		(5.61-4.63)	0.98		
		(5.66-5.61)	0.05		
		(5.67-5.66)	0.01		
		(6.69-5.67)	1.02		
		(6.81-6.69)	0.12		
		(7.72-6.81)	0.91		
		(7.94-7.72)	0.22		
		(8.75-7.94)	0.81		
		(9.08-8.75)	0.33		
		(9.78-9.08)	0.70		
		(10.22-9.78)	0.44		
		(10.81-10.22)	0.59		
		(11.36-10.81)	0.55		
		(11.84-11.36)	0.48		
		(12.50-11.84)	0.66		
		(12.87-12.50)	0.37		
				33.84	
196	sc1	(-21.11--21.11)	0.00		
2925.00		(-20.84--21.11)	0.27		
		(-20.52--20.84)	0.32		
		(-19.80--20.52)	0.72		
		(-19.32--19.80)	0.48		
		(-18.77--19.32)	0.55		
		(-18.34--18.77)	0.43		
		(-17.73--18.34)	0.61		
		(-16.94--17.73)	0.79		
		(-16.70--16.94)	0.24		
		(-15.75--16.70)	0.95		
		(-15.67--15.75)	0.08		
		(-15.14--15.67)	0.53		
		(-14.63--15.14)	0.51		
		(-14.55--14.63)	0.08		
		(-13.60--14.55)	0.95		
		(-13.36--13.60)	0.24		
		(-12.56--13.36)	0.80		
		(-12.17--12.56)	0.39		
		(-11.53--12.17)	0.64		
		(-10.97--11.53)	0.56		
		(-10.49--10.97)	0.48		
		(-9.78--10.49)	0.71		
		A RIPORTARE ml	11.33		

		CALCOLO DELLE LUNGHEZZE		Foglio n. 182
SCOTICO				
N. SEZIONE PROG.	FIG.	ELEMENTI DI CALCOLO	LUNGHEZZA ELEMENTARE ml	LUNGHEZZA FIGURA ml	NOTE
		RIPORTO ml	11.33		
		(-9.46--9.78)	0.32		
		(-8.59--9.46)	0.87		
		(-8.43--8.59)	0.16		
		(-7.40--8.43)	1.03		
		(-7.39--7.40)	0.01		
		(-7.36--7.39)	0.03		
		(-6.36--7.36)	1.00		
		(-6.20--6.36)	0.16		
		(-5.32--6.20)	0.88		
		(-5.01--5.32)	0.31		
		(-4.29--5.01)	0.72		
		(-3.82--4.29)	0.47		
		(-3.25--3.82)	0.57		
		(-2.62--3.25)	0.63		
		(-2.22--2.62)	0.40		
		(-1.43--2.22)	0.79		
		(-1.18--1.43)	0.25		
		(-0.24--1.18)	0.94		
		(-0.15--0.24)	0.09		
		(-0.08--0.15)	0.07		
		(0.42--0.08)	0.50		
		(0.83-0.42)	0.41		
		(0.88-0.83)	0.05		
		(0.95-0.88)	0.07		
		(1.92-0.95)	0.97		
		(2.15-1.92)	0.23		
		(2.95-2.15)	0.80		
		(3.34-2.95)	0.39		
		(3.99-3.34)	0.65		
		(4.53-3.99)	0.54		
		(5.02-4.53)	0.49		
		(5.73-5.02)	0.71		
		(6.06-5.73)	0.33		
		(6.92-6.06)	0.86		
		(7.09-6.92)	0.17		
		(8.11-7.09)	1.02		
		(8.12-8.11)	0.01		
		(8.20-8.12)	0.08		
		(9.16-8.20)	0.96		
		(9.31-9.16)	0.15		
		(10.19-9.31)	0.88		
				31.30	
197 2940.00	sc1	(-21.47--21.47)	0.00		
		(-21.44--21.47)	0.03		
		(-21.24--21.44)	0.20		
		(-21.11--21.24)	0.13		
		(-20.35--21.11)	0.76		
		(-20.22--20.35)	0.13		
		(-20.20--20.22)	0.02		
		(-20.17--20.20)	0.03		
		(-19.16--20.17)	1.01		
		(-18.90--19.16)	0.26		
		(-18.12--18.90)	0.78		
		(-17.63--18.12)	0.49		
		(-17.08--17.63)	0.55		
				4.39	
198 2955.00	sc1	(-21.30--21.30)	0.00		
		(-20.55--21.30)	0.75		
		(-20.28--20.55)	0.27		
		(-19.34--20.28)	0.94		
		(-19.23--19.34)	0.11		
		(-19.19--19.23)	0.04		
		(-18.17--19.19)	1.02		
		(-17.83--18.17)	0.34		
		(-17.12--17.83)	0.71		
		(-16.48--17.12)	0.64		
		(-16.07--16.48)	0.41		
		(-15.12--16.07)	0.95		
		(-15.02--15.12)	0.10		
		(-14.69--15.02)	0.33		
		(-13.97--14.69)	0.72		
		(-13.76--13.97)	0.21		
		(-12.92--13.76)	0.84		
		(-12.40--12.92)	0.52		
		(-11.87--12.40)	0.53		
		(-11.05--11.87)	0.82		
		(-10.82--11.05)	0.23		
		(-10.03--10.82)	0.79		
		(-9.77--10.03)	0.26		
		(-9.69--9.77)	0.08		
		(-8.71--9.69)	0.98		
		(-8.33--8.71)	0.38		
		(-7.66--8.33)	0.67		
		(-6.98--7.66)	0.68		
		(-6.61--6.98)	0.37		
		(-5.62--6.61)	0.99		
		(-5.56--5.62)	0.06		
		(-5.53--5.56)	0.03		
		(-5.37--5.53)	0.16		
		(-4.67--5.37)	0.70		
		(-4.51--4.67)	0.16		
		(-4.26--4.51)	0.25		
		(-3.46--4.26)	0.80		
		(-2.90--3.46)	0.56		
		(-2.41--2.90)	0.49		
				18.89	
199 2970.00	sc1	(-21.70--21.70)	0.00		
		(-21.08--21.70)	0.62		
		(-20.30--21.08)	0.78		
		(-20.02--20.30)	0.28		
		(-19.27--20.02)	0.75		
		(-18.95--19.27)	0.32		
		(-18.83--18.95)	0.12		
		(-17.89--18.83)	0.94		
		A RIPORTARE ml	3.81		

		CALCOLO DELLE LUNGHEZZE		Foglio n. 183
SCOTICO				
N. SEZIONE PROG.	FIG.	ELEMENTI DI CALCOLO	LUNGHEZZA ELEMENTARE ml	LUNGHEZZA FIGURA ml	NOTE
		RIPORTO ml	3.81		
		(-17.37--17.89)	0.52		
		(-16.83--17.37)	0.54		
		(-15.91--16.83)	0.92		
		(-15.76--15.91)	0.15		
		(-15.38--15.76)	0.38		
		(-14.70--15.38)	0.68		
		(-14.44--14.70)	0.26		
		(-13.64--14.44)	0.80		
		(-12.98--13.64)	0.66		
		(-12.58--12.98)	0.40		
		(-11.52--12.58)	1.06		
		(-11.51--11.52)	0.01		
		(-11.50--11.51)	0.01		
		(-10.45--11.50)	1.05		
		(-10.06--10.45)	0.39		
		(-9.39--10.06)	0.67		
		(-9.01--9.39)	0.38		
		(-8.32--9.01)	0.69		
		(-7.61--8.32)	0.71		
		(-7.26--7.61)	0.35		
		(-7.13--7.26)	0.13		
		(-6.20--7.13)	0.93		
		(-5.67--6.20)	0.53		
		(-5.14--5.67)	0.53		
		(-4.20--5.14)	0.94		
		(-4.07--4.20)	0.13		
		(-3.72--4.07)	0.35		
		(-3.01--3.72)	0.71		
		(-2.74--3.01)	0.27		
		(-1.95--2.74)	0.79		
		(-1.28--1.95)	0.67		
		(-0.88--1.28)	0.40		
		(0.16--0.88)	1.04		
		(0.18-0.16)	0.02		
		(0.19-0.18)	0.01		
		(1.24-0.19)	1.05		
		(1.65-1.24)	0.41		
		(2.31-1.65)	0.66		
		(3.11-2.31)	0.80		
		(3.37-3.11)	0.26		
		(4.05-3.37)	0.68		
		(4.20-4.05)	0.15		
				25.90	
200 2985.00	sc1	(-21.64--21.64)	0.00		
		(-21.55--21.64)	0.09		
		(-20.78--21.55)	0.77		
		(-20.48--20.78)	0.30		
		(-19.83--20.48)	0.65		
		(-19.40--19.83)	0.43		
		(-19.19--19.40)	0.21		
		(-18.32--19.19)	0.87		
		(-17.60--18.32)	0.72		
		(-17.24--17.60)	0.36		
		(-16.49--17.24)	0.75		
		(-16.17--16.49)	0.32		
		(-16.01--16.17)	0.16		
		(-15.09--16.01)	0.92		
		(-14.42--15.09)	0.67		
		(-14.01--14.42)	0.41		
		(-13.80--14.01)	0.21		
		(-13.15--13.80)	0.65		
		(-12.99--13.15)	0.16		
		(-12.93--12.99)	0.06		
		(-12.83--12.93)	0.10		
		(-11.86--12.83)	0.97		
		(-11.24--11.86)	0.62		
		(-10.78--11.24)	0.46		
		(-9.81--10.78)	0.97		
		(-9.70--9.81)	0.11		
		(-9.65--9.70)	0.05		
		(-8.63--9.65)	1.02		
		(-8.06--8.63)	0.57		
		(-7.55--8.06)	0.51		
		(-6.47--7.55)	1.08		
		(-6.47--6.47)	0.00		
		(-6.47--6.47)	0.00		
		(-5.39--6.47)	1.08		
		(-4.88--5.39)	0.51		
		(-4.32--4.88)	0.56		
		(-3.29--4.32)	1.03		
		(-3.24--3.29)	0.05		
		(-3.13--3.24)	0.11		
		(-2.16--3.13)	0.97		
		(-1.70--2.16)	0.46		
		(-1.08--1.70)	0.62		
		(-0.11--1.08)	0.97		
		(-0.01--0.11)	0.10		
		(0.21--0.01)	0.22		
		(1.07-0.21)	0.86		
		(1.48-1.07)	0.41		
		(2.15-1.48)	0.67		
		(3.00-2.15)	0.85		
				24.64	
201 3000.00	sc1	(-22.03--22.03)	0.00		
		(-21.68--22.03)	0.35		
		(-20.89--21.68)	0.79		
		(-20.58--20.89)	0.31		
		(-20.40--20.58)	0.18		
		(-19.49--20.40)	0.91		
		(-19.07--19.49)	0.42		
		(-18.39--19.07)	0.68		
		(-17.95--18.39)	0.44		
		(-17.30--17.95)	0.65		
		(-16.91--17.30)	0.39		
		A RIPORTARE ml	5.12		

	CALCOLO DELLE LUNGHEZZE		Foglio n. 184

SCOTICO

N. SEZIONE PROG.	FIG.	ELEMENTI DI CALCOLO	LUNGHEZZA ELEMENTARE ml	LUNGHEZZA FIGURA ml	NOTE
		RIPORTO ml	5.12		
		(-16.20--16.91)	0.71		
		(-15.17--16.20)	1.03		
		(-15.11--15.17)	0.06		
		(-15.02--15.11)	0.09		
		(-14.02--15.02)	1.00		
		(-13.42--14.02)	0.60		
		(-12.92--13.42)	0.50		
		(-12.08--12.92)	0.84		
		(-11.83--12.08)	0.25		
		(-11.67--11.83)	0.16		
		(-10.73--11.67)	0.94		
		(-9.93--10.73)	0.80		
		(-9.64--9.93)	0.29		
		(-9.15--9.64)	0.49		
		(-8.54--9.15)	0.61		
		(-8.18--8.54)	0.36		
		(-7.45--8.18)	0.73		
		(-6.44--7.45)	1.01		
		(-6.36--6.44)	0.08		
		(-6.22--6.36)	0.14		
		(-5.26--6.22)	0.96		
		(-4.69--5.26)	0.57		
		(-4.17--4.69)	0.52		
		(-3.28--4.17)	0.89		
		(-3.07--3.28)	0.21		
		(-2.95--3.07)	0.12		
		(-1.98--2.95)	0.97		
		(-1.20--1.98)	0.78		
		(-0.89--1.20)	0.31		
		(-0.74--0.89)	0.15		
		(-0.35--0.74)	0.39		
		(0.06--0.35)	0.41		
		(0.21-0.06)	0.15		
		(0.54-0.21)	0.33		
		(1.30-0.54)	0.76		
		(2.29-1.30)	0.99		
		(2.40-2.29)	0.11		
		(2.58-2.40)	0.18		
		(3.49-2.58)	0.91		
		(4.03-3.49)	0.54		
		(4.59-4.03)	0.56		
		(4.87-4.59)	0.28		
				26.90	
201b	sc1	(-22.03--22.03)	0.00		
3005.94		(-21.68--22.03)	0.35		
		(-20.89--21.68)	0.79		
		(-20.58--20.89)	0.31		
		(-20.40--20.58)	0.18		
		(-19.49--20.40)	0.91		
		(-19.07--19.49)	0.42		
		(-18.39--19.07)	0.68		
		(-17.95--18.39)	0.44		
		(-17.30--17.95)	0.65		
		(-16.91--17.30)	0.39		
		(-16.20--16.91)	0.71		
		(-15.17--16.20)	1.03		
		(-15.11--15.17)	0.06		
		(-15.02--15.11)	0.09		
		(-14.02--15.02)	1.00		
		(-13.42--14.02)	0.60		
		(-12.92--13.42)	0.50		
		(-12.08--12.92)	0.84		
		(-11.83--12.08)	0.25		
		(-11.67--11.83)	0.16		
		(-10.73--11.67)	0.94		
		(-9.93--10.73)	0.80		
		(-9.64--9.93)	0.29		
		(-9.15--9.64)	0.49		
		(-8.54--9.15)	0.61		
		(-8.18--8.54)	0.36		
		(-7.45--8.18)	0.73		
		(-6.44--7.45)	1.01		
		(-6.36--6.44)	0.08		
		(-6.22--6.36)	0.14		
		(-5.26--6.22)	0.96		
		(-4.69--5.26)	0.57		
		(-4.17--4.69)	0.52		
		(-3.28--4.17)	0.89		
		(-3.07--3.28)	0.21		
		(-2.95--3.07)	0.12		
		(-1.98--2.95)	0.97		
		(-1.20--1.98)	0.78		
		(-0.89--1.20)	0.31		
		(-0.74--0.89)	0.15		
		(-0.35--0.74)	0.39		
		(0.06--0.35)	0.41		
		(0.21-0.06)	0.15		
		(0.54-0.21)	0.33		
		(1.30-0.54)	0.76		
		(2.29-1.30)	0.99		
		(2.40-2.29)	0.11		
		(2.58-2.40)	0.18		
		(3.49-2.58)	0.91		
		(4.03-3.49)	0.54		
		(4.59-4.03)	0.56		
		(4.87-4.59)	0.28		
				26.90	

Il Direttore dei Lavori	L'Impresa	

	CALCOLO DELLE LUNGHEZZE		Foglio n. 185

SPARTITRAFFICO

N. SEZIONE PROG.	FIG.	ELEMENTI DI CALCOLO	LUNGHEZZA ELEMENTARE ml	LUNGHEZZA FIGURA ml	NOTE
132	st1	(-1.20--1.25)	0.05		
1965.00		(1.20--1.20)	2.40		
		(1.25-1.20)	0.05		
				2.50	
133	st1	(-1.20--1.25)	0.05		
1980.00		(1.20--1.20)	2.40		
		(1.25-1.20)	0.05		
				2.50	
134	st1	(-1.20--1.25)	0.05		
1995.00		(1.20--1.20)	2.40		
		(1.25-1.20)	0.05		
				2.50	
135	st1	(-1.20--1.25)	0.05		
2010.00		(1.20--1.20)	2.40		
		(1.25-1.20)	0.05		
				2.50	
136	st1	(-1.20--1.25)	0.05		
2025.00		(1.20--1.20)	2.40		
		(1.25-1.20)	0.05		
				2.50	
137	st1	(-1.20--1.25)	0.05		
2040.00		(1.20--1.20)	2.40		
		(1.25-1.20)	0.05		
				2.50	
138	st1	(-1.20--1.25)	0.05		
2055.00		(1.20--1.20)	2.40		
		(1.25-1.20)	0.05		
				2.50	
139	st1	(-1.20--1.25)	0.05		
2070.00		(1.20--1.20)	2.40		
		(1.25-1.20)	0.05		
				2.50	
140	st1	(-1.20--1.25)	0.05		
2085.00		(1.20--1.20)	2.40		
		(1.25-1.20)	0.05		
				2.50	
141	st1	(-1.20--1.25)	0.05		
2100.00		(1.20--1.20)	2.40		
		(1.25-1.20)	0.05		
				2.50	
142	st1	(-1.20--1.25)	0.05		
2115.00		(1.20--1.20)	2.40		
		(1.25-1.20)	0.05		
				2.50	
143	st1	(-1.20--1.25)	0.05		
2130.00		(1.20--1.20)	2.40		
		(1.25-1.20)	0.05		
				2.50	
144	st1	(-1.20--1.25)	0.05		
2145.00		(1.20--1.20)	2.40		
		(1.25-1.20)	0.05		
				2.50	
145	st1	(-1.20--1.25)	0.05		
2160.00		(1.20--1.20)	2.40		
		(1.25-1.20)	0.05		
				2.50	
146	st1	(-1.20--1.25)	0.05		
2175.00		(1.20--1.20)	2.40		
		(1.25-1.20)	0.05		
				2.50	
147	st1	(-1.20--1.25)	0.05		
2190.00		(1.20--1.20)	2.40		
		(1.25-1.20)	0.05		
				2.50	
148	st1	(-1.20--1.25)	0.05		
2205.00		(1.20--1.20)	2.40		
		(1.25-1.20)	0.05		
				2.50	
149	st1	(-1.20--1.25)	0.05		
2220.00		(1.20--1.20)	2.40		
		(1.25-1.20)	0.05		
				2.50	
150	st1	(-1.20--1.25)	0.05		
2235.00		(1.20--1.20)	2.40		
		(1.25-1.20)	0.05		
				2.50	
151	st1	(-1.20--1.25)	0.05		
2250.00		(1.20--1.20)	2.40		
		(1.25-1.20)	0.05		
				2.50	
152	st1	(-1.20--1.25)	0.05		
2265.00		(1.20--1.20)	2.40		
		(1.25-1.20)	0.05		
				2.50	
153	st1	(-1.20--1.25)	0.05		
2280.00		(1.20--1.20)	2.40		
		(1.25-1.20)	0.05		
				2.50	
154	st1	(-1.20--1.25)	0.05		
2295.00		(1.20--1.20)	2.40		
		(1.25-1.20)	0.05		
				2.50	
155	st1	(-1.20--1.25)	0.05		
2310.00		(1.20--1.20)	2.40		
		(1.25-1.20)	0.05		
				2.50	
156	st1	(-1.20--1.25)	0.05		
2325.00		(1.20--1.20)	2.40		
		(1.25-1.20)	0.05		
				2.50	
157	st1	(-1.20--1.25)	0.05		
2340.00		(1.20--1.20)	2.40		
		(1.25-1.20)	0.05		
				2.50	
158	st1	(-1.20--1.25)	0.05		
2355.00		(1.20--1.20)	2.40		
		A RIPORTARE ml	2.45		

		CALCOLO DELLE LUNGHEZZE		Foglio n. 186
SPARTITRAFFICO				
N. SEZIONE PROG.	FIG.	ELEMENTI DI CALCOLO	LUNGHEZZA ELEMENTARE ml	LUNGHEZZA FIGURA ml	NOTE
		RIPORTO ml	2.45		
		(1.25-1.20)	0.05		
				2.50	
159	st1	(-1.20--1.25)	0.05		
2370.00		(1.20--1.20)	2.40		
		(1.25-1.20)	0.05		
				2.50	
160	st1	(-1.20--1.25)	0.05		
2385.00		(1.20--1.20)	2.40		
		(1.25-1.20)	0.05		
				2.50	
161	st1	(-1.20--1.25)	0.05		
2400.00		(1.20--1.20)	2.40		
		(1.25-1.20)	0.05		
				2.50	
162	st1	(-1.20--1.25)	0.05		
2415.00		(1.20--1.20)	2.40		
		(1.25-1.20)	0.05		
				2.50	
163	st1	(-1.20--1.25)	0.05		
2430.00		(1.20--1.20)	2.40		
		(1.25-1.20)	0.05		
				2.50	
164	st1	(-1.20--1.25)	0.05		
2445.00		(1.20--1.20)	2.40		
		(1.25-1.20)	0.05		
				2.50	
165	st1	(-1.20--1.25)	0.05		
2460.00		(1.20--1.20)	2.40		
		(1.25-1.20)	0.05		
				2.50	
166	st1	(-1.20--1.25)	0.05		
2475.00		(1.20--1.20)	2.40		
		(1.25-1.20)	0.05		
				2.50	
167	st1	(-1.20--1.25)	0.05		
2490.00		(1.20--1.20)	2.40		
		(1.25-1.20)	0.05		
				2.50	
168	st1	(-1.20--1.25)	0.05		
2505.00		(1.20--1.20)	2.40		
		(1.25-1.20)	0.05		
				2.50	
169	st1	(-1.20--1.25)	0.05		
2520.00		(1.20--1.20)	2.40		
		(1.25-1.20)	0.05		
				2.50	
170	st1	(-1.20--1.25)	0.05		
2535.00		(1.20--1.20)	2.40		
		(1.25-1.20)	0.05		
				2.50	
171	st1	(-1.20--1.25)	0.05		
2550.00		(1.20--1.20)	2.40		
		(1.25-1.20)	0.05		
				2.50	
172	st1	(-1.20--1.25)	0.05		
2565.00		(1.20--1.20)	2.40		
		(1.25-1.20)	0.05		
				2.50	
173	st1	(-1.20--1.25)	0.05		
2580.00		(1.20--1.20)	2.40		
		(1.25-1.20)	0.05		
				2.50	
174	st1	(-1.20--1.25)	0.05		
2595.00		(1.20--1.20)	2.40		
		(1.25-1.20)	0.05		
				2.50	
175	st1	(-1.20--1.25)	0.05		
2610.00		(1.20--1.20)	2.40		
		(1.25-1.20)	0.05		
				2.50	
176	st1	(-1.20--1.25)	0.05		
2625.00		(1.20--1.20)	2.40		
		(1.25-1.20)	0.05		
				2.50	
177	st1	(-1.20--1.25)	0.05		
2640.00		(1.20--1.20)	2.40		
		(1.25-1.20)	0.05		
				2.50	
178	st1	(-1.20--1.25)	0.05		
2655.00		(1.20--1.20)	2.40		
		(1.25-1.20)	0.05		
				2.50	
179	st1	(-1.20--1.25)	0.05		
2670.00		(1.20--1.20)	2.40		
		(1.25-1.20)	0.05		
				2.50	
180	st1	(-1.20--1.25)	0.05		
2685.00		(1.20--1.20)	2.40		
		(1.25-1.20)	0.05		
				2.50	
181	st1	(-1.20--1.25)	0.05		
2700.00		(1.20--1.20)	2.40		
		(1.25-1.20)	0.05		
				2.50	
182	st1	(-1.20--1.25)	0.05		
2715.00		(1.20--1.20)	2.40		
		(1.25-1.20)	0.05		
				2.50	
183	st1	(-1.20--1.25)	0.05		
2730.00		(1.20--1.20)	2.40		
		(1.25-1.20)	0.05		
				2.50	
184	st1	(-1.20--1.25)	0.05		
2745.00		(1.20--1.20)	2.40		
		A RIPORTARE ml	2.45		

	CALCOLO DELLE LUNGHEZZE		Foglio n. 187

SPARTITRAFFICO

N. SEZIONE PROG.	FIG.	ELEMENTI DI CALCOLO	LUNGHEZZA ELEMENTARE ml	LUNGHEZZA FIGURA ml	NOTE
		RIPORTO ml	2.45		
		(1.25-1.20)	0.05		
				2.50	
185	st1	(-1.20--1.25)	0.05		
2760.00		(1.20--1.20)	2.40		
		(1.25-1.20)	0.05		
				2.50	
186	st1	(-1.20--1.25)	0.05		
2775.00		(1.20--1.20)	2.40		
		(1.25-1.20)	0.05		
				2.50	
187	st1	(-1.20--1.25)	0.05		
2790.00		(1.20--1.20)	2.40		
		(1.25-1.20)	0.05		
				2.50	
188	st1	(-1.20--1.25)	0.05		
2805.00		(1.20--1.20)	2.40		
		(1.25-1.20)	0.05		
				2.50	
189	st1	(-1.20--1.25)	0.05		
2820.00		(1.20--1.20)	2.40		
		(1.25-1.20)	0.05		
				2.50	
190	st1	(-1.20--1.25)	0.05		
2835.00		(1.20--1.20)	2.40		
		(1.25-1.20)	0.05		
				2.50	
191	st1	(-1.20--1.25)	0.05		
2850.00		(1.20--1.20)	2.40		
		(1.25-1.20)	0.05		
				2.50	
192	st1	(-1.20--1.25)	0.05		
2865.00		(1.20--1.20)	2.40		
		(1.25-1.20)	0.05		
				2.50	
193	st1	(-1.20--1.25)	0.05		
2880.00		(1.20--1.20)	2.40		
		(1.25-1.20)	0.05		
				2.50	
194	st1	(-1.20--1.25)	0.05		
2895.00		(1.20--1.20)	2.40		
		(1.25-1.20)	0.05		
				2.50	
195	st1	(-1.20--1.25)	0.05		
2910.00		(1.20--1.20)	2.40		
		(1.25-1.20)	0.05		
				2.50	
196	st1	(-1.20--1.25)	0.05		
2925.00		(1.20--1.20)	2.40		
		(1.25-1.20)	0.05		
				2.50	
197	st1	(-1.20--1.25)	0.05		
2940.00		(1.20--1.20)	2.40		
		(1.25-1.20)	0.05		
				2.50	
198	st1	(-1.20--1.25)	0.05		
2955.00		(1.20--1.20)	2.40		
		(1.25-1.20)	0.05		
				2.50	
199	st1	(-1.20--1.25)	0.05		
2970.00		(1.20--1.20)	2.40		
		(1.25-1.20)	0.05		
				2.50	
200	st1	(-1.20--1.25)	0.05		
2985.00		(1.20--1.20)	2.40		
		(1.25-1.20)	0.05		
				2.50	
201	st1	(-1.20--1.25)	0.05		
3000.00		(1.20--1.20)	2.40		
		(1.25-1.20)	0.05		
				2.50	
201b	st1	(-1.20--1.25)	0.05		
3005.94		(1.20--1.20)	2.40		
		(1.25-1.20)	0.05		
				2.50	

Il Direttore dei Lavori	L'Impresa	

	COMPUTO DEI VOLUMI		Foglio n. 188

RILEVATO

DALLA SEZ. DA PROG.	ALLA SEZ. A PROG.	SEZIONE	FIGURA	AREA	DISTANZA SEZIONI m	DISTANZA DI CALCOLO m	VOLUME PARZIALE mc	VOLUME TOTALE mc
130	131	130	A1	60.84	15.00	7.50	456.300	
1935.00	1950.00	131	A1	125.32	15.00	7.50	939.900	
		131	A2	0.13	15.00	7.50	0.975	
		131	A3	6.15	15.00	7.50	46.125	
								1443.300
131	132	131	A1	125.32	15.00	7.50	939.900	
1950.00	1965.00	131	A2	0.13	15.00	7.50	0.975	
		131	A3	6.15	15.00	7.50	46.125	
		132	A1	211.50	15.00	7.50	1586.250	
		132	A2	4.62	15.00	7.50	34.650	
								2607.900
132	133	132	A1	211.50	15.00	7.50	1586.250	
1965.00	1980.00	132	A2	4.62	15.00	7.50	34.650	
		133	A1	187.09	15.00	7.50	1403.175	
		133	A2	0.02	15.00	7.50	0.150	
		133	A3	1.07	15.00	7.50	8.025	
		133	A4	5.29	15.00	7.50	39.675	
								3071.925
133	134	133	A1	187.09	15.00	7.50	1403.175	
1980.00	1995.00	133	A2	0.02	15.00	7.50	0.150	
		133	A3	1.07	15.00	7.50	8.025	
		133	A4	5.29	15.00	7.50	39.675	
		134	A1	163.64	15.00	7.50	1227.300	
		134	A2	2.97	15.00	7.50	22.275	
								2700.600
134	135	134	A1	163.64	15.00	7.50	1227.300	
1995.00	2010.00	134	A2	2.97	15.00	7.50	22.275	
		135	A1	142.23	15.00	7.50	1066.725	
		135	A2	3.19	15.00	7.50	23.925	
								2340.225
135	136	135	A1	142.23	15.00	7.50	1066.725	
2010.00	2025.00	135	A2	3.19	15.00	7.50	23.925	
		136	A1	120.86	15.00	7.50	906.450	
		136	A2	4.04	15.00	7.50	30.300	
		136	A3	1.77	15.00	7.50	13.275	
								2040.675
136	137	136	A1	120.86	15.00	7.50	906.450	
2025.00	2040.00	136	A2	4.04	15.00	7.50	30.300	
		136	A3	1.77	15.00	7.50	13.275	
		137	A1	88.12	15.00	7.50	660.900	
		137	A2	9.77	15.00	7.50	73.275	
		137	A3	0.99	15.00	7.50	7.425	
								1691.625
137	138	137	A1	88.12	15.00	7.50	660.900	
2040.00	2055.00	137	A2	9.77	15.00	7.50	73.275	
		137	A3	0.99	15.00	7.50	7.425	
		138	A1	66.94	15.00	7.50	502.050	
		138	A2	23.72	15.00	7.50	177.900	
								1421.550
138	139	138	A1	66.94	15.00	7.50	502.050	
2055.00	2070.00	138	A2	23.72	15.00	7.50	177.900	
		139	A1	49.28	15.00	7.50	369.600	
		139	A2	26.85	15.00	7.50	201.375	
								1250.925
139	140	139	A1	49.28	15.00	7.50	369.600	
2070.00	2085.00	139	A2	26.85	15.00	7.50	201.375	
		140	A1	32.51	15.00	7.50	243.825	
		140	A2	28.75	15.00	7.50	215.625	
								1030.425
140	141	140	A1	32.51	15.00	7.50	243.825	
2085.00	2100.00	140	A2	28.75	15.00	7.50	215.625	
		141	A1	0.71	15.00	7.50	5.325	
		141	A2	18.81	15.00	7.50	141.075	
		141	A3	21.08	15.00	7.50	158.100	
								763.950
141	142	141	A1	0.71	15.00	7.50	5.325	
2100.00	2115.00	141	A2	18.81	15.00	7.50	141.075	
		141	A3	21.08	15.00	7.50	158.100	
		142	A1	0.32	15.00	7.50	2.400	
		142	A2	10.04	15.00	7.50	75.300	
		142	A2	27.84	15.00	7.50	208.800	
								591.000
142	143	142	A1	0.32	15.00	7.50	2.400	
2115.00	2130.00	142	A2	10.04	15.00	7.50	75.300	
		142	A2	27.84	15.00	7.50	208.800	
		143	A1	4.00	15.00	7.50	30.000	
								316.500
143	144	143	A1	4.00	15.00	7.50	30.000	
2130.00	2145.00	144	A1	0.10	15.00	7.50	0.750	
		144	A2	0.15	15.00	7.50	1.125	
								31.875
144	145	144	A1	0.10	15.00	7.50	0.750	
2145.00	2160.00	144	A2	0.15	15.00	7.50	1.125	
		145	A1	0.13	15.00	7.50	0.975	
								2.850
145	146	145	A1	0.13	15.00	7.50	0.975	
								0.975
151	152	152	A1	0.31	15.00	7.50	2.325	
2250.00	2265.00	152	A2	0.18	15.00	7.50	1.350	
								3.675
152	153	152	A1	0.31	15.00	7.50	2.325	
2265.00	2280.00	152	A2	0.18	15.00	7.50	1.350	
		153	A1	0.04	15.00	7.50	0.300	
								3.975
153	154	153	A1	0.04	15.00	7.50	0.300	
2280.00	2295.00	154	A1	0.92	15.00	7.50	6.900	
								7.200
154	155	154	A1	0.92	15.00	7.50	6.900	
2295.00	2310.00	155	A1	2.88	15.00	7.50	21.600	
								28.500
155	156	155	A1	2.88	15.00	7.50	21.600	
2310.00	2325.00	156	A1	0.24	15.00	7.50	1.800	
		156	A2	3.92	15.00	7.50	29.400	
								52.800
156	157	156	A1	0.24	15.00	7.50	1.800	
2325.00	2340.00	156	A2	3.92	15.00	7.50	29.400	
							31.200	21402.450

	COMPUTO DEI VOLUMI		Foglio n. 189

RILEVATO

DALLA SEZ. DA PROG.	ALLA SEZ. A PROG.	SEZIONE	FIGURA	AREA	DISTANZA SEZIONI m	DISTANZA DI CALCOLO m	VOLUME PARZIALE mc	VOLUME TOTALE mc
						A RIPORTARE mc	31.200	21402.450
		157	A1	0.42	15.00	7.50	3.150	
		157	A2	5.54	15.00	7.50	41.550	
								75.900
157	158	157	A1	0.42	15.00	7.50	3.150	
2340.00	2355.00	157	A2	5.54	15.00	7.50	41.550	
		158	A1	0.41	15.00	7.50	3.075	
		158	A2	8.08	15.00	7.50	60.600	
								108.375
158	159	158	A1	0.41	15.00	7.50	3.075	
2355.00	2370.00	158	A2	8.08	15.00	7.50	60.600	
		159	A1	13.18	15.00	7.50	98.850	
								162.525
159	160	159	A1	13.18	15.00	7.50	98.850	
2370.00	2385.00	160	A1	15.63	15.00	7.50	117.225	
								216.075
160	161	160	A1	15.63	15.00	7.50	117.225	
2385.00	2400.00	161	A1	10.18	15.00	7.50	76.350	
		161	A2	0.31	15.00	7.50	2.325	
								195.900
161	162	161	A1	10.18	15.00	7.50	76.350	
2400.00	2415.00	161	A2	0.31	15.00	7.50	2.325	
		162	A1	15.83	15.00	7.50	118.725	
								197.400
162	163	162	A1	15.83	15.00	7.50	118.725	
2415.00	2430.00	163	A1	14.35	15.00	7.50	107.625	
								226.350
163	164	163	A1	14.35	15.00	7.50	107.625	
2430.00	2445.00	164	A1	14.11	15.00	7.50	105.825	
								213.450
164	165	164	A1	14.11	15.00	7.50	105.825	
2445.00	2460.00	165	A1	15.07	15.00	7.50	113.025	
								218.850
165	166	165	A1	15.07	15.00	7.50	113.025	
2460.00	2475.00	166	A1	19.13	15.00	7.50	143.475	
								256.500
166	167	166	A1	19.13	15.00	7.50	143.475	
2475.00	2490.00	167	A1	23.93	15.00	7.50	179.475	
								322.950
167	168	167	A1	23.93	15.00	7.50	179.475	
2490.00	2505.00	168	A1	28.84	15.00	7.50	216.300	
								395.775
168	169	168	A1	28.84	15.00	7.50	216.300	
2505.00	2520.00	169	A1	28.00	15.00	7.50	210.000	
								426.300
169	170	169	A1	28.00	15.00	7.50	210.000	
2520.00	2535.00	170	A1	28.38	15.00	7.50	212.850	
								422.850
170	171	170	A1	28.38	15.00	7.50	212.850	
2535.00	2550.00	171	A1	27.64	15.00	7.50	207.300	
								420.150
171	172	171	A1	27.64	15.00	7.50	207.300	
2550.00	2565.00	172	A1	31.15	15.00	7.50	233.625	
								440.925
172	173	172	A1	31.15	15.00	7.50	233.625	
2565.00	2580.00	173	A1	28.01	15.00	7.50	210.075	
								443.700
173	174	173	A1	28.01	15.00	7.50	210.075	
2580.00	2595.00	174	A1	29.89	15.00	7.50	224.175	
								434.250
174	175	174	A1	29.89	15.00	7.50	224.175	
2595.00	2610.00	175	A1	39.49	15.00	7.50	296.175	
								520.350
175	176	175	A1	39.49	15.00	7.50	296.175	
2610.00	2625.00	176	A1	42.90	15.00	7.50	321.750	
								617.925
176	177	176	A1	42.90	15.00	7.50	321.750	
2625.00	2640.00	177	A1	49.84	15.00	7.50	373.800	
								695.550
177	178	177	A1	49.84	15.00	7.50	373.800	
2640.00	2655.00	178	A1	51.73	15.00	7.50	387.975	
								761.775
178	179	178	A1	51.73	15.00	7.50	387.975	
2655.00	2670.00	179	A1	44.40	15.00	7.50	333.000	
								720.975
179	180	179	A1	44.40	15.00	7.50	333.000	
2670.00	2685.00	180	A1	55.39	15.00	7.50	415.425	
								748.425
180	181	180	A1	55.39	15.00	7.50	415.425	
2685.00	2700.00	181	A1	53.09	15.00	7.50	398.175	
								813.600
181	182	181	A1	53.09	15.00	7.50	398.175	
2700.00	2715.00	182	A1	52.30	15.00	7.50	392.250	
								790.425
182	183	182	A1	52.30	15.00	7.50	392.250	
2715.00	2730.00	183	A1	51.81	15.00	7.50	388.575	
								780.825
183	184	183	A1	51.81	15.00	7.50	388.575	
2730.00	2745.00	184	A1	52.75	15.00	7.50	395.625	
								784.200
184	185	184	A1	52.75	15.00	7.50	395.625	
2745.00	2760.00	185	A1	56.53	15.00	7.50	423.975	
								819.600
185	186	185	A1	56.53	15.00	7.50	423.975	
2760.00	2775.00	186	A1	61.25	15.00	7.50	459.375	
								883.350
186	187	186	A1	61.25	15.00	7.50	459.375	
2775.00	2790.00	187	A1	69.91	15.00	7.50	524.325	
								983.700
187	188	187	A1	69.91	15.00	7.50	524.325	
2790.00	2805.00	188	A1	74.21	15.00	7.50	556.575	
								1080.900
188	189	188	A1	74.21	15.00	7.50	556.575	
2805.00	2820.00	189	A1	90.78	15.00	7.50	680.850	
								1237.425
								38819.700

	COMPUTO DEI VOLUMI		Foglio n. 190

RILEVATO

DALLA SEZ. DA PROG.	ALLA SEZ. A PROG.	SEZIONE	FIGURA	AREA	DISTANZA SEZIONI m	DISTANZA DI CALCOLO m	VOLUME PARZIALE mc	VOLUME TOTALE mc
						A RIPORTARE mc		38819.700
189	190	189	A1	90.78	15.00	7.50	680.850	
2820.00	2835.00	190	A1	96.39	15.00	7.50	722.925	
								1403.775
190	191	190	A1	96.39	15.00	7.50	722.925	
2835.00	2850.00	191	A1	107.50	15.00	7.50	806.250	
								1529.175
191	192	191	A1	107.50	15.00	7.50	806.250	
2850.00	2865.00	192	A1	128.64	15.00	7.50	964.800	
								1771.050
192	193	192	A1	128.64	15.00	7.50	964.800	
2865.00	2880.00	193	A1	146.49	15.00	7.50	1098.675	
								2063.475
193	194	193	A1	146.49	15.00	7.50	1098.675	
2880.00	2895.00	194	A1	159.70	15.00	7.50	1197.750	
								2296.425
194	195	194	A1	159.70	15.00	7.50	1197.750	
2895.00	2910.00	195	A1	164.77	15.00	7.50	1235.775	
								2433.525
195	196	195	A1	164.77	15.00	7.50	1235.775	
2910.00	2925.00	196	A1	177.20	15.00	7.50	1329.000	
								2564.775
196	197	196	A1	177.20	15.00	7.50	1329.000	
2925.00	2940.00	197	A1	185.13	15.00	7.50	1388.475	
								2717.475
197	198	197	A1	185.13	15.00	7.50	1388.475	
2940.00	2955.00	198	A1	184.72	15.00	7.50	1385.400	
								2773.875
198	199	198	A1	184.72	15.00	7.50	1385.400	
2955.00	2970.00	199	A1	133.06	15.00	7.50	997.950	
								2383.350
199	200	199	A1	133.06	15.00	7.50	997.950	
2970.00	2985.00	200	A1	149.32	15.00	7.50	1119.900	
								2117.850
200	201	200	A1	149.32	15.00	7.50	1119.900	
2985.00	3000.00	201	A1	177.92	15.00	7.50	1334.400	
								2454.300
201	201b	201	A1	177.92	5.94	2.97	528.422	
3000.00	3005.94	201b	A1	177.92	5.94	2.97	528.422	
								1056.844

Il Direttore dei Lavori	L'Impresa	TOTALE ARTICOLO	66385.594

	COMPUTO DEI VOLUMI		Foglio n. 191

STERRO

DALLA SEZ. DA PROG.	ALLA SEZ. A PROG.	SEZIONE	FIGURA	AREA	DISTANZA SEZIONI m	DISTANZA DI CALCOLO m	VOLUME PARZIALE mc	VOLUME TOTALE mc
130	131	131	B1	0.13	15.00	7.50	0.975	
								0.975
131	132	131	B1	0.13	15.00	7.50	0.975	
1950.00	1965.00	132	B1	2.17	15.00	7.50	16.275	
								17.250
132	133	132	B1	2.17	15.00	7.50	16.275	
1965.00	1980.00	133	B1	0.05	15.00	7.50	0.375	
								16.650
133	134	133	B1	0.05	15.00	7.50	0.375	
1980.00	1995.00	134	B1	3.00	15.00	7.50	22.500	
								22.875
134	135	134	B1	3.00	15.00	7.50	22.500	
1995.00	2010.00	135	B1	4.24	15.00	7.50	31.800	
								54.300
135	136	135	B1	4.24	15.00	7.50	31.800	
2010.00	2025.00	136	B1	1.40	15.00	7.50	10.500	
		136	B2	0.02	15.00	7.50	0.150	
								42.450
136	137	136	B1	1.40	15.00	7.50	10.500	
2025.00	2040.00	136	B2	0.02	15.00	7.50	0.150	
		137	B1	0.03	15.00	7.50	0.225	
		137	B2	0.20	15.00	7.50	1.500	
								12.375
137	138	137	B1	0.03	15.00	7.50	0.225	
2040.00	2055.00	137	B2	0.20	15.00	7.50	1.500	
								1.725
140	141	141	B1	0.63	15.00	7.50	4.725	
								4.725
141	142	141	B1	0.63	15.00	7.50	4.725	
2100.00	2115.00	142	B1	0.13	15.00	7.50	0.975	
								5.700
142	143	142	B1	0.13	15.00	7.50	0.975	
2115.00	2130.00	143	B1	16.05	15.00	7.50	120.375	
								121.350
143	144	143	B1	16.05	15.00	7.50	120.375	
2130.00	2145.00	144	B1	14.84	15.00	7.50	111.300	
		144	B2	1.53	15.00	7.50	11.475	
								243.150
144	145	144	B1	14.84	15.00	7.50	111.300	
2145.00	2160.00	144	B2	1.53	15.00	7.50	11.475	
		145	B1	26.16	15.00	7.50	196.200	
								318.975
145	146	145	B1	26.16	15.00	7.50	196.200	
2160.00	2175.00	146	B1	28.05	15.00	7.50	210.375	
								406.575
146	147	146	B1	28.05	15.00	7.50	210.375	
2175.00	2190.00	147	B1	24.91	15.00	7.50	186.825	
								397.200
147	148	147	B1	24.91	15.00	7.50	186.825	
2190.00	2205.00	148	B1	28.14	15.00	7.50	211.050	
								397.875
148	149	148	B1	28.14	15.00	7.50	211.050	
2205.00	2220.00	149	B1	21.76	15.00	7.50	163.200	
								374.250
149	150	149	B1	21.76	15.00	7.50	163.200	
2220.00	2235.00	150	B1	17.88	15.00	7.50	134.100	
								297.300
150	151	150	B1	17.88	15.00	7.50	134.100	
2235.00	2250.00	151	B1	8.12	15.00	7.50	60.900	
								195.000
151	152	151	B1	8.12	15.00	7.50	60.900	
2250.00	2265.00	152	B1	4.91	15.00	7.50	36.825	
								97.725
152	153	152	B1	4.91	15.00	7.50	36.825	
2265.00	2280.00	153	B1	3.85	15.00	7.50	28.875	
		153	B2	2.00	15.00	7.50	15.000	
								80.700
153	154	153	B1	3.85	15.00	7.50	28.875	
2280.00	2295.00	153	B2	2.00	15.00	7.50	15.000	
		154	B1	3.25	15.00	7.50	24.375	
		154	B2	18.34	15.00	7.50	137.550	
								205.800
154	155	154	B1	3.25	15.00	7.50	24.375	
2295.00	2310.00	154	B2	18.34	15.00	7.50	137.550	
		155	B1	1.69	15.00	7.50	12.675	
								174.600
155	156	155	B1	1.69	15.00	7.50	12.675	
2310.00	2325.00	156	B1	0.23	15.00	7.50	1.725	
								14.400
156	157	156	B1	0.23	15.00	7.50	1.725	
2325.00	2340.00	157	B1	0.09	15.00	7.50	0.675	
								2.400
157	158	157	B1	0.09	15.00	7.50	0.675	
								0.675
160	161	161	B1	0.12	15.00	7.50	0.900	
2385.00	2400.00	161	B2	0.36	15.00	7.50	2.700	
								3.600
161	162	161	B1	0.12	15.00	7.50	0.900	
2400.00	2415.00	161	B2	0.36	15.00	7.50	2.700	
								3.600
171	172	172	B1	14.25	15.00	7.50	106.875	
								106.875
172	173	172	B1	14.25	15.00	7.50	106.875	
								106.875
198	199	199	B1	37.51	15.00	7.50	281.325	
								281.325
199	200	199	B1	37.51	15.00	7.50	281.325	
2970.00	2985.00	200	B1	12.99	15.00	7.50	97.425	
								378.750
200	201	200	B1	12.99	15.00	7.50	97.425	
2985.00	3000.00	201	B1	20.27	15.00	7.50	152.025	
								249.450
201	201b	201	B1	20.27	5.94	2.97	60.202	
3000.00	3005.94	201b	B1	20.27	5.94	2.97	60.202	
								120.404

Il Direttore dei Lavori	L'Impresa	TOTALE ARTICOLO	4757.879

	COMPUTO DEI VOLUMI		Foglio n. 192

BONIFICA

DALLA SEZ. DA PROG.	ALLA SEZ. A PROG.	SEZIONE	FIGURA	AREA	DISTANZA SEZIONI m	DISTANZA DI CALCOLO m	VOLUME PARZIALE mc	VOLUME TOTALE mc
130	131	131	BO1	22.10	15.00	7.50	165.750	
								165.750
131	132	131	BO1	22.10	15.00	7.50	165.750	
1950.00	1965.00	132	BO1	43.69	15.00	7.50	327.675	
								493.425
132	133	132	BO1	43.69	15.00	7.50	327.675	
1965.00	1980.00	133	BO1	41.72	15.00	7.50	312.900	
								640.575
133	134	133	BO1	41.72	15.00	7.50	312.900	
1980.00	1995.00	134	BO1	41.29	15.00	7.50	309.675	
								622.575
134	135	134	BO1	41.29	15.00	7.50	309.675	
1995.00	2010.00	135	BO1	40.10	15.00	7.50	300.750	
								610.425
135	136	135	BO1	40.10	15.00	7.50	300.750	
2010.00	2025.00	136	BO1	37.99	15.00	7.50	284.925	
								585.675
136	137	136	BO1	37.99	15.00	7.50	284.925	
2025.00	2040.00	137	BO1	35.93	15.00	7.50	269.475	
								554.400
137	138	137	BO1	35.93	15.00	7.50	269.475	
2040.00	2055.00	138	BO1	33.14	15.00	7.50	248.550	
								518.025
138	139	138	BO1	33.14	15.00	7.50	248.550	
2055.00	2070.00	139	BO1	31.18	15.00	7.50	233.850	
								482.400
139	140	139	BO1	31.18	15.00	7.50	233.850	
2070.00	2085.00	140	BO1	28.94	15.00	7.50	217.050	
								450.900
140	141	140	BO1	28.94	15.00	7.50	217.050	
2085.00	2100.00	141	BO1	21.50	15.00	7.50	161.250	
		141	BO2	2.64	15.00	7.50	19.800	
								398.100
141	142	141	BO1	21.50	15.00	7.50	161.250	
2100.00	2115.00	141	BO2	2.64	15.00	7.50	19.800	
		142	BO1	26.73	15.00	7.50	200.475	
		142	BO2	1.42	15.00	7.50	10.650	
								392.175
142	143	142	BO1	26.73	15.00	7.50	200.475	
2115.00	2130.00	142	BO2	1.42	15.00	7.50	10.650	
		143	BO1	20.02	15.00	7.50	150.150	
								361.275
143	144	143	BO1	20.02	15.00	7.50	150.150	
2130.00	2145.00	144	BO1	1.44	15.00	7.50	10.800	
		144	BO2	4.07	15.00	7.50	30.525	
								191.475
144	145	144	BO1	1.44	15.00	7.50	10.800	
2145.00	2160.00	144	BO2	4.07	15.00	7.50	30.525	
		145	BO1	1.39	15.00	7.50	10.425	
								51.750
145	146	145	BO1	1.39	15.00	7.50	10.425	
								10.425
151	152	152	BO1	1.35	15.00	7.50	10.125	
2250.00	2265.00	152	BO2	1.33	15.00	7.50	9.975	
								20.100
152	153	152	BO1	1.35	15.00	7.50	10.125	
2265.00	2280.00	152	BO2	1.33	15.00	7.50	9.975	
								20.100
153	154	154	BO1	9.08	15.00	7.50	68.100	
								68.100
154	155	154	BO1	9.08	15.00	7.50	68.100	
2295.00	2310.00	155	BO1	17.58	15.00	7.50	131.850	
								199.950
155	156	155	BO1	17.58	15.00	7.50	131.850	
2310.00	2325.00	156	BO1	20.77	15.00	7.50	155.775	
								287.625
156	157	156	BO1	20.77	15.00	7.50	155.775	
2325.00	2340.00	157	BO1	21.59	15.00	7.50	161.925	
								317.700
157	158	157	BO1	21.59	15.00	7.50	161.925	
2340.00	2355.00	158	BO1	25.00	15.00	7.50	187.500	
		158	BO2	1.36	15.00	7.50	10.200	
								359.625
158	159	158	BO1	25.00	15.00	7.50	187.500	
2355.00	2370.00	158	BO2	1.36	15.00	7.50	10.200	
		159	BO1	27.36	15.00	7.50	205.200	
								402.900
159	160	159	BO1	27.36	15.00	7.50	205.200	
2370.00	2385.00	160	BO1	27.44	15.00	7.50	205.800	
								411.000
160	161	160	BO1	27.44	15.00	7.50	205.800	
2385.00	2400.00	161	BO1	2.00	15.00	7.50	15.000	
		161	BO2	19.68	15.00	7.50	147.600	
								368.400
161	162	161	BO1	2.00	15.00	7.50	15.000	
2400.00	2415.00	161	BO2	19.68	15.00	7.50	147.600	
		162	BO1	27.73	15.00	7.50	207.975	
								370.575
162	163	162	BO1	27.73	15.00	7.50	207.975	
2415.00	2430.00	163	BO1	27.37	15.00	7.50	205.275	
								413.250
163	164	163	BO1	27.37	15.00	7.50	205.275	
2430.00	2445.00	164	BO1	27.56	15.00	7.50	206.700	
								411.975
164	165	164	BO1	27.56	15.00	7.50	206.700	
2445.00	2460.00	165	BO1	27.69	15.00	7.50	207.675	
								414.375
165	166	165	BO1	27.69	15.00	7.50	207.675	
2460.00	2475.00	166	BO1	27.93	15.00	7.50	209.475	
								417.150
166	167	166	BO1	27.93	15.00	7.50	209.475	
2475.00	2490.00	167	BO1	28.45	15.00	7.50	213.375	
								422.850
167	168	167	BO1	28.45	15.00	7.50	213.375	
2490.00	2505.00	168	BO1	28.75	15.00	7.50	215.625	
								429.000
								11864.025

	COMPUTO DEI VOLUMI		Foglio n. 193

BONIFICA

DALLA SEZ. DA PROG.	ALLA SEZ. A PROG.	SEZIONE	FIGURA	AREA	DISTANZA SEZIONI m	DISTANZA DI CALCOLO m	VOLUME PARZIALE mc	VOLUME TOTALE mc
						A RIPORTARE mc		11864.025
168	169	168	BO1	28.75	15.00	7.50	215.625	
2505.00	2520.00	169	BO1	28.64	15.00	7.50	214.800	
								430.425
169	170	169	BO1	28.64	15.00	7.50	214.800	
2520.00	2535.00	170	BO1	11.35	15.00	7.50	85.125	
								299.925
170	171	170	BO1	11.35	15.00	7.50	85.125	
2535.00	2550.00	171	BO1	11.65	15.00	7.50	87.375	
								172.500
171	172	171	BO1	11.65	15.00	7.50	87.375	
2550.00	2565.00	172	BO1	12.40	15.00	7.50	93.000	
								180.375
172	173	172	BO1	12.40	15.00	7.50	93.000	
2565.00	2580.00	173	BO1	24.28	15.00	7.50	182.100	
								275.100
173	174	173	BO1	24.28	15.00	7.50	182.100	
2580.00	2595.00	174	BO1	29.34	15.00	7.50	220.050	
								402.150
174	175	174	BO1	29.34	15.00	7.50	220.050	
2595.00	2610.00	175	BO1	29.89	15.00	7.50	224.175	
								444.225
175	176	175	BO1	29.89	15.00	7.50	224.175	
2610.00	2625.00	176	BO1	30.69	15.00	7.50	230.175	
								454.350
176	177	176	BO1	30.69	15.00	7.50	230.175	
2625.00	2640.00	177	BO1	17.20	15.00	7.50	129.000	
								359.175
177	178	177	BO1	17.20	15.00	7.50	129.000	
2640.00	2655.00	178	BO1	31.04	15.00	7.50	232.800	
								361.800
178	179	178	BO1	31.04	15.00	7.50	232.800	
2655.00	2670.00	179	BO1	17.61	15.00	7.50	132.075	
								364.875
179	180	179	BO1	17.61	15.00	7.50	132.075	
2670.00	2685.00	180	BO1	39.66	15.00	7.50	297.450	
								429.525
180	181	180	BO1	39.66	15.00	7.50	297.450	
2685.00	2700.00	181	BO1	22.66	15.00	7.50	169.950	
								467.400
181	182	181	BO1	22.66	15.00	7.50	169.950	
2700.00	2715.00	182	BO1	22.71	15.00	7.50	170.325	
								340.275
182	183	182	BO1	22.71	15.00	7.50	170.325	
2715.00	2730.00	183	BO1	23.63	15.00	7.50	177.225	
								347.550
183	184	183	BO1	23.63	15.00	7.50	177.225	
2730.00	2745.00	184	BO1	30.12	15.00	7.50	225.900	
								403.125
184	185	184	BO1	30.12	15.00	7.50	225.900	
2745.00	2760.00	185	BO1	32.92	15.00	7.50	246.900	
								472.800
185	186	185	BO1	32.92	15.00	7.50	246.900	
2760.00	2775.00	186	BO1	12.90	15.00	7.50	96.750	
								343.650
186	187	186	BO1	12.90	15.00	7.50	96.750	
2775.00	2790.00	187	BO1	11.79	15.00	7.50	88.425	
								185.175
187	188	187	BO1	11.79	15.00	7.50	88.425	
2790.00	2805.00	188	BO1	11.52	15.00	7.50	86.400	
								174.825
188	189	188	BO1	11.52	15.00	7.50	86.400	
2805.00	2820.00	189	BO1	11.05	15.00	7.50	82.875	
								169.275
189	190	189	BO1	11.05	15.00	7.50	82.875	
2820.00	2835.00	190	BO1	13.35	15.00	7.50	100.125	
								183.000
190	191	190	BO1	13.35	15.00	7.50	100.125	
2835.00	2850.00	191	BO1	13.52	15.00	7.50	101.400	
								201.525
191	192	191	BO1	13.52	15.00	7.50	101.400	
2850.00	2865.00	192	BO1	3.76	15.00	7.50	28.200	
								129.600
192	193	192	BO1	3.76	15.00	7.50	28.200	
2865.00	2880.00	193	BO1	3.96	15.00	7.50	29.700	
								57.900
193	194	193	BO1	3.96	15.00	7.50	29.700	
2880.00	2895.00	194	BO1	8.39	15.00	7.50	62.925	
								92.625
194	195	194	BO1	8.39	15.00	7.50	62.925	
2895.00	2910.00	195	BO1	23.64	15.00	7.50	177.300	
								240.225
195	196	195	BO1	23.64	15.00	7.50	177.300	
2910.00	2925.00	196	BO1	21.92	15.00	7.50	164.400	
								341.700
196	197	196	BO1	21.92	15.00	7.50	164.400	
2925.00	2940.00	197	BO1	3.07	15.00	7.50	23.025	
								187.425
197	198	197	BO1	3.07	15.00	7.50	23.025	
2940.00	2955.00	198	BO1	13.20	15.00	7.50	99.000	
								122.025
198	199	198	BO1	13.20	15.00	7.50	99.000	
2955.00	2970.00	199	BO1	18.14	15.00	7.50	136.050	
								235.050
199	200	199	BO1	18.14	15.00	7.50	136.050	
2970.00	2985.00	200	BO1	17.23	15.00	7.50	129.225	
								265.275
200	201	200	BO1	17.23	15.00	7.50	129.225	
2985.00	3000.00	201	BO1	18.81	15.00	7.50	141.075	
								270.300
201	201b	201	BO1	18.81	5.94	2.97	55.866	
3000.00	3005.94	201b	BO1	18.81	5.94	2.97	55.866	
								111.732

Il Direttore dei Lavori	L'Impresa	TOTALE ARTICOLO	21380.907

	COMPUTO DEI VOLUMI		Foglio n. 194

RIPORTO

DALLA SEZ. DA PROG.	ALLA SEZ. A PROG.	SEZIONE	FIGURA	AREA	DISTANZA SEZIONI m	DISTANZA DI CALCOLO m	VOLUME PARZIALE mc	VOLUME TOTALE mc
199	200	200	RI1	12.77	15.00	7.50	95.775	
								95.775
200	201	200	RI1	12.77	15.00	7.50	95.775	
2985.00	3000.00	201	RI1	9.24	15.00	7.50	69.300	
								165.075
201	201b	201	RI1	9.24	5.94	2.97	27.443	
3000.00	3005.94	201b	RI1	9.24	5.94	2.97	27.443	
								54.886

Il Direttore dei Lavori	L'Impresa	TOTALE ARTICOLO	315.736

	COMPUTO DEI VOLUMI		Foglio n. 195

SPIANAMENTO

DALLA SEZ. DA PROG.	ALLA SEZ. A PROG.	SEZIONE	FIGURA	AREA	DISTANZA SEZIONI m	DISTANZA DI CALCOLO m	VOLUME PARZIALE mc	VOLUME TOTALE mc
169	170	170	SP1	63.59	15.00	7.50	476.925	
								476.925
170	171	170	SP1	63.59	15.00	7.50	476.925	
2535.00	2550.00	171	SP1	80.52	15.00	7.50	603.900	
								1080.825
171	172	171	SP1	80.52	15.00	7.50	603.900	
2550.00	2565.00	172	SP1	28.98	15.00	7.50	217.350	
								821.250
172	173	172	SP1	28.98	15.00	7.50	217.350	
2565.00	2580.00	173	SP1	5.71	15.00	7.50	42.825	
								260.175
173	174	173	SP1	5.71	15.00	7.50	42.825	
								42.825
176	177	177	SP1	46.98	15.00	7.50	352.350	
								352.350
177	178	177	SP1	46.98	15.00	7.50	352.350	
2640.00	2655.00	178	SP1	84.31	15.00	7.50	632.325	
								984.675
178	179	178	SP1	84.31	15.00	7.50	632.325	
2655.00	2670.00	179	SP1	20.72	15.00	7.50	155.400	
								787.725
179	180	179	SP1	20.72	15.00	7.50	155.400	
2670.00	2685.00	180	SP1	10.59	15.00	7.50	79.425	
		180	SP2	16.77	15.00	7.50	125.775	
								360.600
180	181	180	SP1	10.59	15.00	7.50	79.425	
2685.00	2700.00	180	SP2	16.77	15.00	7.50	125.775	
		181	SP1	23.70	15.00	7.50	177.750	
								382.950
181	182	181	SP1	23.70	15.00	7.50	177.750	
2700.00	2715.00	182	SP1	59.46	15.00	7.50	445.950	
								623.700
182	183	182	SP1	59.46	15.00	7.50	445.950	
2715.00	2730.00	183	SP1	48.17	15.00	7.50	361.275	
								807.225
183	184	183	SP1	48.17	15.00	7.50	361.275	
2730.00	2745.00	184	SP1	38.52	15.00	7.50	288.900	
								650.175
184	185	184	SP1	38.52	15.00	7.50	288.900	
2745.00	2760.00	185	SP1	6.21	15.00	7.50	46.575	
								335.475
185	186	185	SP1	6.21	15.00	7.50	46.575	
2760.00	2775.00	186	SP1	40.15	15.00	7.50	301.125	
								347.700
186	187	186	SP1	40.15	15.00	7.50	301.125	
2775.00	2790.00	187	SP1	42.06	15.00	7.50	315.450	
								616.575
187	188	187	SP1	42.06	15.00	7.50	315.450	
2790.00	2805.00	188	SP1	42.79	15.00	7.50	320.925	
								636.375
188	189	188	SP1	42.79	15.00	7.50	320.925	
2805.00	2820.00	189	SP1	42.09	15.00	7.50	315.675	
								636.600
189	190	189	SP1	42.09	15.00	7.50	315.675	
2820.00	2835.00	190	SP1	36.99	15.00	7.50	277.425	
								593.100
190	191	190	SP1	36.99	15.00	7.50	277.425	
2835.00	2850.00	191	SP1	40.27	15.00	7.50	302.025	
								579.450
191	192	191	SP1	40.27	15.00	7.50	302.025	
2850.00	2865.00	192	SP1	64.38	15.00	7.50	482.850	
								784.875
192	193	192	SP1	64.38	15.00	7.50	482.850	
2865.00	2880.00	193	SP1	59.76	15.00	7.50	448.200	
								931.050
193	194	193	SP1	59.76	15.00	7.50	448.200	
2880.00	2895.00	194	SP1	49.38	15.00	7.50	370.350	
								818.550
194	195	194	SP1	49.38	15.00	7.50	370.350	
2895.00	2910.00	195	SP1	25.60	15.00	7.50	192.000	
								562.350
195	196	195	SP1	25.60	15.00	7.50	192.000	
2910.00	2925.00	196	SP1	38.22	15.00	7.50	286.650	
								478.650
196	197	196	SP1	38.22	15.00	7.50	286.650	
2925.00	2940.00	197	SP1	74.79	15.00	7.50	560.925	
								847.575
197	198	197	SP1	74.79	15.00	7.50	560.925	
2940.00	2955.00	198	SP1	61.13	15.00	7.50	458.475	
								1019.400
198	199	198	SP1	61.13	15.00	7.50	458.475	
								458.475

Il Direttore dei Lavori	L'Impresa	TOTALE ARTICOLO	17277.600

	COMPUTO DI SUPERFICI		Foglio n. 196

USURA

DALLA SEZ. DA PROG.	ALLA SEZ. A PROG.	SEZIONE	FIGURA	LUNGHEZZA	DISTANZA SEZIONI ml	DISTANZA DI CALCOLO ml	AREA PARZIALE mq	AREA TOTALE mq
130	131	131	a1	9.75	15.00	7.50	73.13	
								73.13
131	132	131	a1	9.75	15.00	7.50	73.13	
1950.00	1965.00	132	a1	9.79	15.00	7.50	73.42	
		132	a2	9.79	15.00	7.50	73.42	
								219.97
132	133	132	a1	9.79	15.00	7.50	73.42	
1965.00	1980.00	132	a2	9.79	15.00	7.50	73.42	
		133	a1	9.79	15.00	7.50	73.42	
		133	a2	9.79	15.00	7.50	73.42	
								293.68
133	134	133	a1	9.79	15.00	7.50	73.42	
1980.00	1995.00	133	a2	9.79	15.00	7.50	73.42	
		134	a1	9.79	15.00	7.50	73.42	
		134	a2	9.79	15.00	7.50	73.42	
								293.68
134	135	134	a1	9.79	15.00	7.50	73.42	
1995.00	2010.00	134	a2	9.79	15.00	7.50	73.42	
		135	a1	9.79	15.00	7.50	73.42	
		135	a2	9.79	15.00	7.50	73.42	
								293.68
135	136	135	a1	9.79	15.00	7.50	73.42	
2010.00	2025.00	135	a2	9.79	15.00	7.50	73.42	
		136	a1	9.79	15.00	7.50	73.42	
		136	a2	9.79	15.00	7.50	73.42	
								293.68
136	137	136	a1	9.79	15.00	7.50	73.42	
2025.00	2040.00	136	a2	9.79	15.00	7.50	73.42	
		137	a1	9.79	15.00	7.50	73.42	
		137	a2	9.79	15.00	7.50	73.42	
								293.68
137	138	137	a1	9.79	15.00	7.50	73.42	
2040.00	2055.00	137	a2	9.79	15.00	7.50	73.42	
		138	a1	9.79	15.00	7.50	73.42	
		138	a2	9.79	15.00	7.50	73.42	
								293.68
138	139	138	a1	9.79	15.00	7.50	73.42	
2055.00	2070.00	138	a2	9.79	15.00	7.50	73.42	
		139	a1	9.79	15.00	7.50	73.42	
		139	a2	9.79	15.00	7.50	73.42	
								293.68
139	140	139	a1	9.79	15.00	7.50	73.42	
2070.00	2085.00	139	a2	9.79	15.00	7.50	73.42	
		140	a1	9.79	15.00	7.50	73.42	
		140	a2	9.79	15.00	7.50	73.42	
								293.68
140	141	140	a1	9.79	15.00	7.50	73.42	
2085.00	2100.00	140	a2	9.79	15.00	7.50	73.42	
		141	a1	9.79	15.00	7.50	73.42	
		141	a2	9.79	15.00	7.50	73.42	
								293.68
141	142	141	a1	9.79	15.00	7.50	73.42	
2100.00	2115.00	141	a2	9.79	15.00	7.50	73.42	
		142	a1	11.49	15.00	7.50	86.17	
		142	a2	11.49	15.00	7.50	86.17	
								319.18
142	143	142	a1	11.49	15.00	7.50	86.17	
2115.00	2130.00	142	a2	11.49	15.00	7.50	86.17	
		143	a1	13.29	15.00	7.50	99.67	
		143	a2	13.29	15.00	7.50	99.67	
								371.68
143	144	143	a1	13.29	15.00	7.50	99.67	
2130.00	2145.00	143	a2	13.29	15.00	7.50	99.67	
		144	a1	13.29	15.00	7.50	99.67	
		144	a2	13.29	15.00	7.50	99.67	
								398.68
144	145	144	a1	13.29	15.00	7.50	99.67	
2145.00	2160.00	144	a2	13.29	15.00	7.50	99.67	
		145	a1	11.59	15.00	7.50	86.92	
		145	a2	11.59	15.00	7.50	86.92	
								373.18
145	146	145	a1	11.59	15.00	7.50	86.92	
2160.00	2175.00	145	a2	11.59	15.00	7.50	86.92	
		146	a1	9.79	15.00	7.50	73.42	
		146	a2	9.79	15.00	7.50	73.42	
								320.68
146	147	146	a1	9.79	15.00	7.50	73.42	
2175.00	2190.00	146	a2	9.79	15.00	7.50	73.42	
		147	a1	9.79	15.00	7.50	73.42	
		147	a2	9.79	15.00	7.50	73.42	
								293.68
147	148	147	a1	9.79	15.00	7.50	73.42	
2190.00	2205.00	147	a2	9.79	15.00	7.50	73.42	
		148	a1	9.79	15.00	7.50	73.42	
		148	a2	9.79	15.00	7.50	73.42	
								293.68
148	149	148	a1	9.79	15.00	7.50	73.42	
2205.00	2220.00	148	a2	9.79	15.00	7.50	73.42	
		149	a1	9.79	15.00	7.50	73.42	
		149	a2	9.79	15.00	7.50	73.42	
								293.68
149	150	149	a1	9.79	15.00	7.50	73.42	
2220.00	2235.00	149	a2	9.79	15.00	7.50	73.42	
		150	a1	9.79	15.00	7.50	73.42	
		150	a2	9.79	15.00	7.50	73.42	
								293.68
150	151	150	a1	9.79	15.00	7.50	73.42	
2235.00	2250.00	150	a2	9.79	15.00	7.50	73.42	
		151	a1	9.79	15.00	7.50	73.42	
		151	a2	9.79	15.00	7.50	73.42	
								293.68
151	152	151	a1	9.79	15.00	7.50	73.42	
2250.00	2265.00	151	a2	9.79	15.00	7.50	73.42	
		152	a1	9.79	15.00	7.50	73.42	
		152	a2	9.79	15.00	7.50	73.42	
								293.68
								6481.70

	COMPUTO DI SUPERFICI		Foglio n. 197

USURA

DALLA SEZ. DA PROG.	ALLA SEZ. A PROG.	SEZIONE	FIGURA	LUNGHEZZA	DISTANZA SEZIONI ml	DISTANZA DI CALCOLO ml	AREA PARZIALE mq	AREA TOTALE mq
						A RIPORTARE mq		6481.70
152	153	152	a1	9.79	15.00	7.50	73.42	
2265.00	2280.00	152	a2	9.79	15.00	7.50	73.42	
		153	a1	9.79	15.00	7.50	73.42	
		153	a2	9.79	15.00	7.50	73.42	
								293.68
153	154	153	a1	9.79	15.00	7.50	73.42	
2280.00	2295.00	153	a2	9.79	15.00	7.50	73.42	
		154	a1	9.79	15.00	7.50	73.42	
		154	a2	9.79	15.00	7.50	73.42	
								293.68
154	155	154	a1	9.79	15.00	7.50	73.42	
2295.00	2310.00	154	a2	9.79	15.00	7.50	73.42	
		155	a1	9.79	15.00	7.50	73.42	
		155	a2	9.79	15.00	7.50	73.42	
								293.68
155	156	155	a1	9.79	15.00	7.50	73.42	
2310.00	2325.00	155	a2	9.79	15.00	7.50	73.42	
		156	a1	9.79	15.00	7.50	73.42	
		156	a2	9.79	15.00	7.50	73.42	
								293.68
156	157	156	a1	9.79	15.00	7.50	73.42	
2325.00	2340.00	156	a2	9.79	15.00	7.50	73.42	
		157	a1	9.79	15.00	7.50	73.42	
		157	a2	9.79	15.00	7.50	73.42	
								293.68
157	158	157	a1	9.79	15.00	7.50	73.42	
2340.00	2355.00	157	a2	9.79	15.00	7.50	73.42	
		158	a1	9.79	15.00	7.50	73.42	
		158	a2	9.79	15.00	7.50	73.42	
								293.68
158	159	158	a1	9.79	15.00	7.50	73.42	
2355.00	2370.00	158	a2	9.79	15.00	7.50	73.42	
		159	a1	9.79	15.00	7.50	73.42	
		159	a2	9.79	15.00	7.50	73.42	
								293.68
159	160	159	a1	9.79	15.00	7.50	73.42	
2370.00	2385.00	159	a2	9.79	15.00	7.50	73.42	
		160	a1	9.79	15.00	7.50	73.42	
		160	a2	9.79	15.00	7.50	73.42	
								293.68
160	161	160	a1	9.79	15.00	7.50	73.42	
2385.00	2400.00	160	a2	9.79	15.00	7.50	73.42	
		161	a1	9.79	15.00	7.50	73.42	
		161	a2	9.79	15.00	7.50	73.42	
								293.68
161	162	161	a1	9.79	15.00	7.50	73.42	
2400.00	2415.00	161	a2	9.79	15.00	7.50	73.42	
		162	a1	9.79	15.00	7.50	73.42	
		162	a2	9.79	15.00	7.50	73.42	
								293.68
162	163	162	a1	9.79	15.00	7.50	73.42	
2415.00	2430.00	162	a2	9.79	15.00	7.50	73.42	
		163	a1	9.79	15.00	7.50	73.42	
		163	a2	9.79	15.00	7.50	73.42	
								293.68
163	164	163	a1	9.79	15.00	7.50	73.42	
2430.00	2445.00	163	a2	9.79	15.00	7.50	73.42	
		164	a1	9.79	15.00	7.50	73.42	
		164	a2	9.79	15.00	7.50	73.42	
								293.68
164	165	164	a1	9.79	15.00	7.50	73.42	
2445.00	2460.00	164	a2	9.79	15.00	7.50	73.42	
		165	a1	9.79	15.00	7.50	73.42	
		165	a2	9.79	15.00	7.50	73.42	
								293.68
165	166	165	a1	9.79	15.00	7.50	73.42	
2460.00	2475.00	165	a2	9.79	15.00	7.50	73.42	
		166	a1	9.79	15.00	7.50	73.42	
		166	a2	9.79	15.00	7.50	73.42	
								293.68
166	167	166	a1	9.79	15.00	7.50	73.42	
2475.00	2490.00	166	a2	9.79	15.00	7.50	73.42	
		167	a1	9.79	15.00	7.50	73.42	
		167	a2	9.79	15.00	7.50	73.42	
								293.68
167	168	167	a1	9.79	15.00	7.50	73.42	
2490.00	2505.00	167	a2	9.79	15.00	7.50	73.42	
		168	a1	9.79	15.00	7.50	73.42	
		168	a2	9.79	15.00	7.50	73.42	
								293.68
168	169	168	a1	9.79	15.00	7.50	73.42	
2505.00	2520.00	168	a2	9.79	15.00	7.50	73.42	
		169	a1	9.79	15.00	7.50	73.42	
		169	a2	9.79	15.00	7.50	73.42	
								293.68
169	170	169	a1	9.79	15.00	7.50	73.42	
2520.00	2535.00	169	a2	9.79	15.00	7.50	73.42	
		170	a1	9.79	15.00	7.50	73.42	
		170	a2	9.79	15.00	7.50	73.42	
								293.68
170	171	170	a1	9.79	15.00	7.50	73.42	
2535.00	2550.00	170	a2	9.79	15.00	7.50	73.42	
		171	a1	9.80	15.00	7.50	73.50	
		171	a2	9.79	15.00	7.50	73.42	
								293.76
171	172	171	a1	9.80	15.00	7.50	73.50	
2550.00	2565.00	171	a2	9.79	15.00	7.50	73.42	
		172	a1	9.80	15.00	7.50	73.50	
		172	a2	9.79	15.00	7.50	73.42	
								293.84
172	173	172	a1	9.80	15.00	7.50	73.50	
2565.00	2580.00	172	a2	9.79	15.00	7.50	73.42	
		173	a1	9.80	15.00	7.50	73.50	
		173	a2	9.79	15.00	7.50	73.42	
							293.84	12649.38

	COMPUTO DI SUPERFICI		Foglio n. 198

USURA

DALLA SEZ. DA PROG.	ALLA SEZ. A PROG.	SEZIONE	FIGURA	LUNGHEZZA	DISTANZA SEZIONI ml	DISTANZA DI CALCOLO ml	AREA PARZIALE mq	AREA TOTALE mq
						A RIPORTARE mq	293.84	12649.38
								293.84
173	174	173	a1	9.80	15.00	7.50	73.50	
2580.00	2595.00	173	a2	9.79	15.00	7.50	73.42	
		174	a1	9.85	15.00	7.50	73.88	
		174	a2	9.79	15.00	7.50	73.42	
								294.22
174	175	174	a1	9.85	15.00	7.50	73.88	
2595.00	2610.00	174	a2	9.79	15.00	7.50	73.42	
		175	a1	9.97	15.00	7.50	74.78	
		175	a2	9.79	15.00	7.50	73.42	
								295.50
175	176	175	a1	9.97	15.00	7.50	74.78	
2610.00	2625.00	175	a2	9.79	15.00	7.50	73.42	
		176	a1	10.10	15.00	7.50	75.75	
		176	a2	9.79	15.00	7.50	73.42	
								297.37
176	177	176	a1	10.10	15.00	7.50	75.75	
2625.00	2640.00	176	a2	9.79	15.00	7.50	73.42	
		177	a1	10.21	15.00	7.50	76.58	
		177	a2	9.79	15.00	7.50	73.42	
								299.17
177	178	177	a1	10.21	15.00	7.50	76.58	
2640.00	2655.00	177	a2	9.79	15.00	7.50	73.42	
		178	a1	10.34	15.00	7.50	77.55	
		178	a2	9.79	15.00	7.50	73.42	
								300.97
178	179	178	a1	10.34	15.00	7.50	77.55	
2655.00	2670.00	178	a2	9.79	15.00	7.50	73.42	
		179	a1	10.45	15.00	7.50	78.38	
		179	a2	9.79	15.00	7.50	73.42	
								302.77
179	180	179	a1	10.45	15.00	7.50	78.38	
2670.00	2685.00	179	a2	9.79	15.00	7.50	73.42	
		180	a1	10.58	15.00	7.50	79.35	
		180	a2	9.79	15.00	7.50	73.42	
								304.57
180	181	180	a1	10.58	15.00	7.50	79.35	
2685.00	2700.00	180	a2	9.79	15.00	7.50	73.42	
		181	a1	10.70	15.00	7.50	80.25	
		181	a2	9.79	15.00	7.50	73.42	
								306.44
181	182	181	a1	10.70	15.00	7.50	80.25	
2700.00	2715.00	181	a2	9.79	15.00	7.50	73.42	
		182	a1	10.79	15.00	7.50	80.92	
		182	a2	9.79	15.00	7.50	73.42	
								308.01
182	183	182	a1	10.79	15.00	7.50	80.92	
2715.00	2730.00	182	a2	9.79	15.00	7.50	73.42	
		183	a1	10.80	15.00	7.50	81.00	
		183	a2	9.79	15.00	7.50	73.42	
								308.76
183	184	183	a1	10.80	15.00	7.50	81.00	
2730.00	2745.00	183	a2	9.79	15.00	7.50	73.42	
		184	a1	10.79	15.00	7.50	80.92	
		184	a2	9.79	15.00	7.50	73.42	
								308.76
184	185	184	a1	10.79	15.00	7.50	80.92	
2745.00	2760.00	184	a2	9.79	15.00	7.50	73.42	
		185	a1	10.80	15.00	7.50	81.00	
		185	a2	9.79	15.00	7.50	73.42	
								308.76
185	186	185	a1	10.80	15.00	7.50	81.00	
2760.00	2775.00	185	a2	9.79	15.00	7.50	73.42	
		186	a1	10.80	15.00	7.50	81.00	
		186	a2	9.79	15.00	7.50	73.42	
								308.84
186	187	186	a1	10.80	15.00	7.50	81.00	
2775.00	2790.00	186	a2	9.79	15.00	7.50	73.42	
		187	a1	10.80	15.00	7.50	81.00	
		187	a2	9.79	15.00	7.50	73.42	
								308.84
187	188	187	a1	10.80	15.00	7.50	81.00	
2790.00	2805.00	187	a2	9.79	15.00	7.50	73.42	
		188	a1	10.56	15.00	7.50	79.20	
		188	a2	9.79	15.00	7.50	73.42	
								307.04
188	189	188	a1	10.56	15.00	7.50	79.20	
2805.00	2820.00	188	a2	9.79	15.00	7.50	73.42	
		189	a1	10.31	15.00	7.50	77.33	
		189	a2	9.79	15.00	7.50	73.42	
								303.37
189	190	189	a1	10.31	15.00	7.50	77.33	
2820.00	2835.00	189	a2	9.79	15.00	7.50	73.42	
		190	a1	10.07	15.00	7.50	75.53	
		190	a2	9.79	15.00	7.50	73.42	
								299.70
190	191	190	a1	10.07	15.00	7.50	75.53	
2835.00	2850.00	190	a2	9.79	15.00	7.50	73.42	
		191	a1	9.82	15.00	7.50	73.65	
		191	a2	9.79	15.00	7.50	73.42	
								296.02
191	192	191	a1	9.82	15.00	7.50	73.65	
2850.00	2865.00	191	a2	9.79	15.00	7.50	73.42	
		192	a1	9.82	15.00	7.50	73.65	
		192	a2	9.79	15.00	7.50	73.42	
								294.14
192	193	192	a1	9.82	15.00	7.50	73.65	
2865.00	2880.00	192	a2	9.79	15.00	7.50	73.42	
		193	a1	9.88	15.00	7.50	74.10	
		193	a2	9.79	15.00	7.50	73.42	
								294.59
193	194	193	a1	9.88	15.00	7.50	74.10	
2880.00	2895.00	193	a2	9.79	15.00	7.50	73.42	
		194	a1	9.96	15.00	7.50	74.70	
							222.22	18697.22

	COMPUTO DI SUPERFICI		Foglio n. 199

USURA

DALLA SEZ. DA PROG.	ALLA SEZ. A PROG.	SEZIONE	FIGURA	LUNGHEZZA	DISTANZA SEZIONI ml	DISTANZA DI CALCOLO ml	AREA PARZIALE mq	AREA TOTALE mq
						A RIPORTARE mq	222.22	18697.22
		194	a2	9.79	15.00	7.50	73.42	
								295.64
194	195	194	a1	9.96	15.00	7.50	74.70	
2895.00	2910.00	194	a2	9.79	15.00	7.50	73.42	
		195	a1	10.03	15.00	7.50	75.22	
		195	a2	9.79	15.00	7.50	73.42	
								296.76
195	196	195	a1	10.03	15.00	7.50	75.22	
2910.00	2925.00	195	a2	9.79	15.00	7.50	73.42	
		196	a1	10.07	15.00	7.50	75.53	
		196	a2	9.79	15.00	7.50	73.42	
								297.59
196	197	196	a1	10.07	15.00	7.50	75.53	
2925.00	2940.00	196	a2	9.79	15.00	7.50	73.42	
		197	a1	10.07	15.00	7.50	75.53	
		197	a2	9.79	15.00	7.50	73.42	
								297.90
197	198	197	a1	10.07	15.00	7.50	75.53	
2940.00	2955.00	197	a2	9.79	15.00	7.50	73.42	
		198	a1	10.04	15.00	7.50	75.30	
		198	a2	9.79	15.00	7.50	73.42	
								297.67
198	199	198	a1	10.04	15.00	7.50	75.30	
2955.00	2970.00	198	a2	9.79	15.00	7.50	73.42	
		199	a1	10.02	15.00	7.50	75.15	
		199	a2	9.79	15.00	7.50	73.42	
								297.29
199	200	199	a1	10.02	15.00	7.50	75.15	
2970.00	2985.00	199	a2	9.79	15.00	7.50	73.42	
		200	a1	10.00	15.00	7.50	75.00	
		200	a2	9.79	15.00	7.50	73.42	
								296.99
200	201	200	a1	10.00	15.00	7.50	75.00	
2985.00	3000.00	200	a2	9.79	15.00	7.50	73.42	
		201	a1	9.98	15.00	7.50	74.85	
		201	a2	9.79	15.00	7.50	73.42	
								296.69
201	201b	201	a1	9.98	5.94	2.97	29.64	
3000.00	3005.94	201	a2	9.79	5.94	2.97	29.08	
		201b	a1	9.98	5.94	2.97	29.64	
		201b	a2	9.79	5.94	2.97	29.08	
								117.44

Il Direttore dei Lavori	L'Impresa	TOTALE ARTICOLO	21191.19

	COMPUTO DI SUPERFICI		Foglio n. 200

VEGETALE

DALLA SEZ. DA PROG.	ALLA SEZ. A PROG.	SEZIONE	FIGURA	LUNGHEZZA	DISTANZA SEZIONI ml	DISTANZA DI CALCOLO ml	AREA PARZIALE mq	AREA TOTALE mq
130	131	131	b1	12.81	15.00	7.50	96.08	
								96.08
131	132	131	b1	12.81	15.00	7.50	96.08	
1950.00	1965.00	132	b1	9.86	15.00	7.50	73.95	
		132	b2	12.54	15.00	7.50	94.05	
								264.08
132	133	132	b1	9.86	15.00	7.50	73.95	
1965.00	1980.00	132	b2	12.54	15.00	7.50	94.05	
		133	b1	9.10	15.00	7.50	68.25	
		133	b2	11.26	15.00	7.50	84.45	
								320.70
133	134	133	b1	9.10	15.00	7.50	68.25	
1980.00	1995.00	133	b2	11.26	15.00	7.50	84.45	
		134	b1	8.46	15.00	7.50	63.45	
		134	b2	11.58	15.00	7.50	86.85	
								303.00
134	135	134	b1	8.46	15.00	7.50	63.45	
1995.00	2010.00	134	b2	11.58	15.00	7.50	86.85	
		135	b1	7.97	15.00	7.50	59.77	
		135	b2	10.75	15.00	7.50	80.63	
								290.70
135	136	135	b1	7.97	15.00	7.50	59.77	
2010.00	2025.00	135	b2	10.75	15.00	7.50	80.63	
		136	b1	6.74	15.00	7.50	50.55	
		136	b2	10.02	15.00	7.50	75.15	
								266.10
136	137	136	b1	6.74	15.00	7.50	50.55	
2025.00	2040.00	136	b2	10.02	15.00	7.50	75.15	
		137	b1	5.98	15.00	7.50	44.85	
		137	b2	8.61	15.00	7.50	64.57	
								235.12
137	138	137	b1	5.98	15.00	7.50	44.85	
2040.00	2055.00	137	b2	8.61	15.00	7.50	64.57	
		138	b1	5.52	15.00	7.50	41.40	
		138	b2	6.42	15.00	7.50	48.15	
								198.97
138	139	138	b1	5.52	15.00	7.50	41.40	
2055.00	2070.00	138	b2	6.42	15.00	7.50	48.15	
		139	b1	4.34	15.00	7.50	32.55	
		139	b2	5.71	15.00	7.50	42.83	
								164.93
139	140	139	b1	4.34	15.00	7.50	32.55	
2070.00	2085.00	139	b2	5.71	15.00	7.50	42.83	
		140	b1	3.10	15.00	7.50	23.25	
		140	b2	4.67	15.00	7.50	35.02	
								133.65
140	141	140	b1	3.10	15.00	7.50	23.25	
2085.00	2100.00	140	b2	4.67	15.00	7.50	35.02	
		141	b1	2.63	15.00	7.50	19.72	
		141	b2	4.14	15.00	7.50	31.05	
								109.04
141	142	141	b1	2.63	15.00	7.50	19.72	
2100.00	2115.00	141	b2	4.14	15.00	7.50	31.05	
		142	b2	2.33	15.00	7.50	17.48	
		142	b1	3.44	15.00	7.50	25.80	
								94.05
142	143	142	b2	2.33	15.00	7.50	17.48	
2115.00	2130.00	142	b1	3.44	15.00	7.50	25.80	
		143	b1	4.09	15.00	7.50	30.67	
		143	b2	2.89	15.00	7.50	21.68	
								95.63
143	144	143	b1	4.09	15.00	7.50	30.67	
2130.00	2145.00	143	b2	2.89	15.00	7.50	21.68	
		144	b1	3.67	15.00	7.50	27.52	
		144	b2	2.29	15.00	7.50	17.18	
								97.05
144	145	144	b1	3.67	15.00	7.50	27.52	
2145.00	2160.00	144	b2	2.29	15.00	7.50	17.18	
		145	b1	3.46	15.00	7.50	25.95	
		145	b2	2.14	15.00	7.50	16.05	
								86.70
145	146	145	b1	3.46	15.00	7.50	25.95	
2160.00	2175.00	145	b2	2.14	15.00	7.50	16.05	
		146	b1	3.47	15.00	7.50	26.03	
		146	b2	1.67	15.00	7.50	12.52	
								80.55
146	147	146	b1	3.47	15.00	7.50	26.03	
2175.00	2190.00	146	b2	1.67	15.00	7.50	12.52	
		147	b1	3.24	15.00	7.50	24.30	
		147	b2	1.66	15.00	7.50	12.45	
								75.30
147	148	147	b1	3.24	15.00	7.50	24.30	
2190.00	2205.00	147	b2	1.66	15.00	7.50	12.45	
		148	b2	3.39	15.00	7.50	25.43	
		148	b1	1.65	15.00	7.50	12.38	
								74.56
148	149	148	b2	3.39	15.00	7.50	25.43	
2205.00	2220.00	148	b1	1.65	15.00	7.50	12.38	
		149	b2	3.50	15.00	7.50	26.25	
		149	b1	1.71	15.00	7.50	12.82	
								76.88
149	150	149	b2	3.50	15.00	7.50	26.25	
2220.00	2235.00	149	b1	1.71	15.00	7.50	12.82	
		150	b1	3.76	15.00	7.50	28.20	
		150	b2	1.81	15.00	7.50	13.58	
								80.85
150	151	150	b1	3.76	15.00	7.50	28.20	
2235.00	2250.00	150	b2	1.81	15.00	7.50	13.58	
		151	b2	1.68	15.00	7.50	12.60	
		151	b1	1.99	15.00	7.50	14.93	
								69.31
151	152	151	b2	1.68	15.00	7.50	12.60	
2250.00	2265.00	151	b1	1.99	15.00	7.50	14.93	
		152	b2	2.19	15.00	7.50	16.43	
		152	b1	2.18	15.00	7.50	16.35	
								60.31
								3273.56

	COMPUTO DI SUPERFICI		Foglio n. 201

VEGETALE

DALLA SEZ. DA PROG.	ALLA SEZ. A PROG.	SEZIONE	FIGURA	LUNGHEZZA	DISTANZA SEZIONI ml	DISTANZA DI CALCOLO ml	AREA PARZIALE mq	AREA TOTALE mq
						A RIPORTARE mq		3273.56
152	153	152	b2	2.19	15.00	7.50	16.43	
2265.00	2280.00	152	b1	2.18	15.00	7.50	16.35	
		153	b2	1.82	15.00	7.50	13.65	
		153	b1	2.11	15.00	7.50	15.82	
								62.25
153	154	153	b2	1.82	15.00	7.50	13.65	
2280.00	2295.00	153	b1	2.11	15.00	7.50	15.82	
		154	b2	1.86	15.00	7.50	13.95	
		154	b1	3.09	15.00	7.50	23.17	
								66.59
154	155	154	b2	1.86	15.00	7.50	13.95	
2295.00	2310.00	154	b1	3.09	15.00	7.50	23.17	
		155	b1	1.86	15.00	7.50	13.95	
		155	b2	2.68	15.00	7.50	20.10	
								71.17
155	156	155	b1	1.86	15.00	7.50	13.95	
2310.00	2325.00	155	b2	2.68	15.00	7.50	20.10	
		156	b1	2.24	15.00	7.50	16.80	
		156	b2	2.74	15.00	7.50	20.55	
								71.40
156	157	156	b1	2.24	15.00	7.50	16.80	
2325.00	2340.00	156	b2	2.74	15.00	7.50	20.55	
		157	b1	2.40	15.00	7.50	18.00	
		157	b2	2.85	15.00	7.50	21.38	
								76.73
157	158	157	b1	2.40	15.00	7.50	18.00	
2340.00	2355.00	157	b2	2.85	15.00	7.50	21.38	
		158	b2	2.39	15.00	7.50	17.93	
		158	b1	3.11	15.00	7.50	23.32	
								80.63
158	159	158	b2	2.39	15.00	7.50	17.93	
2355.00	2370.00	158	b1	3.11	15.00	7.50	23.32	
		159	b2	2.99	15.00	7.50	22.43	
		159	b1	3.18	15.00	7.50	23.85	
								87.53
159	160	159	b2	2.99	15.00	7.50	22.43	
2370.00	2385.00	159	b1	3.18	15.00	7.50	23.85	
		160	b2	3.06	15.00	7.50	22.95	
		160	b1	3.17	15.00	7.50	23.77	
								93.00
160	161	160	b2	3.06	15.00	7.50	22.95	
2385.00	2400.00	160	b1	3.17	15.00	7.50	23.77	
		161	b2	2.99	15.00	7.50	22.43	
		161	b1	3.15	15.00	7.50	23.63	
								92.78
161	162	161	b2	2.99	15.00	7.50	22.43	
2400.00	2415.00	161	b1	3.15	15.00	7.50	23.63	
		162	b2	3.09	15.00	7.50	23.17	
		162	b1	3.44	15.00	7.50	25.80	
								95.03
162	163	162	b2	3.09	15.00	7.50	23.17	
2415.00	2430.00	162	b1	3.44	15.00	7.50	25.80	
		163	b2	3.02	15.00	7.50	22.65	
		163	b1	3.10	15.00	7.50	23.25	
								94.87
163	164	163	b2	3.02	15.00	7.50	22.65	
2430.00	2445.00	163	b1	3.10	15.00	7.50	23.25	
		164	b2	3.23	15.00	7.50	24.23	
		164	b1	3.15	15.00	7.50	23.63	
								93.76
164	165	164	b2	3.23	15.00	7.50	24.23	
2445.00	2460.00	164	b1	3.15	15.00	7.50	23.63	
		165	b2	3.08	15.00	7.50	23.10	
		165	b1	3.42	15.00	7.50	25.65	
								96.61
165	166	165	b2	3.08	15.00	7.50	23.10	
2460.00	2475.00	165	b1	3.42	15.00	7.50	25.65	
		166	b1	3.12	15.00	7.50	23.40	
		166	b2	3.60	15.00	7.50	27.00	
								99.15
166	167	166	b1	3.12	15.00	7.50	23.40	
2475.00	2490.00	166	b2	3.60	15.00	7.50	27.00	
		167	b1	3.38	15.00	7.50	25.35	
		167	b2	3.86	15.00	7.50	28.95	
								104.70
167	168	167	b1	3.38	15.00	7.50	25.35	
2490.00	2505.00	167	b2	3.86	15.00	7.50	28.95	
		168	b1	3.52	15.00	7.50	26.40	
		168	b2	4.03	15.00	7.50	30.23	
								110.93
168	169	168	b1	3.52	15.00	7.50	26.40	
2505.00	2520.00	168	b2	4.03	15.00	7.50	30.23	
		169	b1	3.53	15.00	7.50	26.47	
		169	b2	3.91	15.00	7.50	29.33	
								112.43
169	170	169	b1	3.53	15.00	7.50	26.47	
2520.00	2535.00	169	b2	3.91	15.00	7.50	29.33	
		170	b1	3.81	15.00	7.50	28.57	
		170	b2	3.81	15.00	7.50	28.57	
								112.94
170	171	170	b1	3.81	15.00	7.50	28.57	
2535.00	2550.00	170	b2	3.81	15.00	7.50	28.57	
		171	b1	3.71	15.00	7.50	27.82	
		171	b2	3.84	15.00	7.50	28.80	
								113.76
171	172	171	b1	3.71	15.00	7.50	27.82	
2550.00	2565.00	171	b2	3.84	15.00	7.50	28.80	
		172	b1	3.89	15.00	7.50	29.18	
		172	b2	4.17	15.00	7.50	31.27	
								117.07
172	173	172	b1	3.89	15.00	7.50	29.18	
2565.00	2580.00	172	b2	4.17	15.00	7.50	31.27	
		173	b1	3.96	15.00	7.50	29.70	
		173	b2	3.88	15.00	7.50	29.10	
							119.25	5246.14

	COMPUTO DI SUPERFICI		Foglio n. 202

VEGETALE

DALLA SEZ. DA PROG.	ALLA SEZ. A PROG.	SEZIONE	FIGURA	LUNGHEZZA	DISTANZA SEZIONI ml	DISTANZA DI CALCOLO ml	AREA PARZIALE mq	AREA TOTALE mq
						A RIPORTARE mq	119.25	5246.14
								119.25
173	174	173	b1	3.96	15.00	7.50	29.70	
2580.00	2595.00	173	b2	3.88	15.00	7.50	29.10	
		174	b1	3.83	15.00	7.50	28.73	
		174	b2	4.23	15.00	7.50	31.73	
								119.26
174	175	174	b1	3.83	15.00	7.50	28.73	
2595.00	2610.00	174	b2	4.23	15.00	7.50	31.73	
		175	b1	4.29	15.00	7.50	32.17	
		175	b2	4.18	15.00	7.50	31.35	
								123.98
175	176	175	b1	4.29	15.00	7.50	32.17	
2610.00	2625.00	175	b2	4.18	15.00	7.50	31.35	
		176	b1	4.17	15.00	7.50	31.27	
		176	b2	4.99	15.00	7.50	37.43	
								132.22
176	177	176	b1	4.17	15.00	7.50	31.27	
2625.00	2640.00	176	b2	4.99	15.00	7.50	37.43	
		177	b2	4.43	15.00	7.50	33.22	
		177	b1	5.44	15.00	7.50	40.80	
								142.72
177	178	177	b2	4.43	15.00	7.50	33.22	
2640.00	2655.00	177	b1	5.44	15.00	7.50	40.80	
		178	b1	3.32	15.00	7.50	24.90	
		178	b2	7.05	15.00	7.50	52.88	
								151.80
178	179	178	b1	3.32	15.00	7.50	24.90	
2655.00	2670.00	178	b2	7.05	15.00	7.50	52.88	
		179	b1	3.38	15.00	7.50	25.35	
		179	b2	5.97	15.00	7.50	44.77	
								147.90
179	180	179	b1	3.38	15.00	7.50	25.35	
2670.00	2685.00	179	b2	5.97	15.00	7.50	44.77	
		180	b1	4.38	15.00	7.50	32.85	
		180	b2	5.85	15.00	7.50	43.88	
								146.85
180	181	180	b1	4.38	15.00	7.50	32.85	
2685.00	2700.00	180	b2	5.85	15.00	7.50	43.88	
		181	b1	3.73	15.00	7.50	27.98	
		181	b2	5.84	15.00	7.50	43.80	
								148.51
181	182	181	b1	3.73	15.00	7.50	27.98	
2700.00	2715.00	181	b2	5.84	15.00	7.50	43.80	
		182	b1	3.89	15.00	7.50	29.18	
		182	b2	6.28	15.00	7.50	47.10	
								148.06
182	183	182	b1	3.89	15.00	7.50	29.18	
2715.00	2730.00	182	b2	6.28	15.00	7.50	47.10	
		183	b1	3.86	15.00	7.50	28.95	
		183	b2	6.41	15.00	7.50	48.08	
								153.31
183	184	183	b1	3.86	15.00	7.50	28.95	
2730.00	2745.00	183	b2	6.41	15.00	7.50	48.08	
		184	b1	3.89	15.00	7.50	29.18	
		184	b2	6.25	15.00	7.50	46.88	
								153.09
184	185	184	b1	3.89	15.00	7.50	29.18	
2745.00	2760.00	184	b2	6.25	15.00	7.50	46.88	
		185	b1	4.05	15.00	7.50	30.38	
		185	b2	6.69	15.00	7.50	50.18	
								156.62
185	186	185	b1	4.05	15.00	7.50	30.38	
2760.00	2775.00	185	b2	6.69	15.00	7.50	50.18	
		186	b1	4.34	15.00	7.50	32.55	
		186	b2	7.19	15.00	7.50	53.93	
								167.04
186	187	186	b1	4.34	15.00	7.50	32.55	
2775.00	2790.00	186	b2	7.19	15.00	7.50	53.93	
		187	b1	4.72	15.00	7.50	35.40	
		187	b2	7.76	15.00	7.50	58.20	
								180.08
187	188	187	b1	4.72	15.00	7.50	35.40	
2790.00	2805.00	187	b2	7.76	15.00	7.50	58.20	
		188	b1	5.31	15.00	7.50	39.82	
		188	b2	7.79	15.00	7.50	58.42	
								191.84
188	189	188	b1	5.31	15.00	7.50	39.82	
2805.00	2820.00	188	b2	7.79	15.00	7.50	58.42	
		189	b1	5.95	15.00	7.50	44.63	
		189	b2	8.04	15.00	7.50	60.30	
								203.17
189	190	189	b1	5.95	15.00	7.50	44.63	
2820.00	2835.00	189	b2	8.04	15.00	7.50	60.30	
		190	b1	6.65	15.00	7.50	49.88	
		190	b2	7.96	15.00	7.50	59.70	
								214.51
190	191	190	b1	6.65	15.00	7.50	49.88	
2835.00	2850.00	190	b2	7.96	15.00	7.50	59.70	
		191	b1	7.39	15.00	7.50	55.42	
		191	b2	8.09	15.00	7.50	60.67	
								225.67
191	192	191	b1	7.39	15.00	7.50	55.42	
2850.00	2865.00	191	b2	8.09	15.00	7.50	60.67	
		192	b1	8.21	15.00	7.50	61.58	
		192	b2	8.74	15.00	7.50	65.55	
								243.22
192	193	192	b1	8.21	15.00	7.50	61.58	
2865.00	2880.00	192	b2	8.74	15.00	7.50	65.55	
		193	b1	9.15	15.00	7.50	68.63	
		193	b2	9.13	15.00	7.50	68.48	
								264.24
193	194	193	b1	9.15	15.00	7.50	68.63	
2880.00	2895.00	193	b2	9.13	15.00	7.50	68.48	
		194	b1	9.91	15.00	7.50	74.33	
							211.44	8660.23

	COMPUTO DI SUPERFICI		Foglio n. 203

VEGETALE

DALLA SEZ. DA PROG.	ALLA SEZ. A PROG.	SEZIONE	FIGURA	LUNGHEZZA	DISTANZA SEZIONI ml	DISTANZA DI CALCOLO ml	AREA PARZIALE mq	AREA TOTALE mq
						A RIPORTARE mq	211.44	8660.23
		194	b2	9.57	15.00	7.50	71.78	
								283.22
194	195	194	b1	9.91	15.00	7.50	74.33	
2895.00	2910.00	194	b2	9.57	15.00	7.50	71.78	
		195	b1	10.36	15.00	7.50	77.70	
		195	b2	9.70	15.00	7.50	72.75	
								296.56
195	196	195	b1	10.36	15.00	7.50	77.70	
2910.00	2925.00	195	b2	9.70	15.00	7.50	72.75	
		196	b1	10.50	15.00	7.50	78.75	
		196	b2	10.17	15.00	7.50	76.28	
								305.48
196	197	196	b1	10.50	15.00	7.50	78.75	
2925.00	2940.00	196	b2	10.17	15.00	7.50	76.28	
		197	b1	10.86	15.00	7.50	81.45	
		197	b2	10.35	15.00	7.50	77.63	
								314.11
197	198	197	b1	10.86	15.00	7.50	81.45	
2940.00	2955.00	197	b2	10.35	15.00	7.50	77.63	
		198	b1	10.67	15.00	7.50	80.03	
		198	b2	10.54	15.00	7.50	79.05	
								318.16
198	199	198	b1	10.67	15.00	7.50	80.03	
2955.00	2970.00	198	b2	10.54	15.00	7.50	79.05	
		199	b1	11.08	15.00	7.50	83.10	
								242.18
199	200	199	b1	11.08	15.00	7.50	83.10	
2970.00	2985.00	200	b1	11.00	15.00	7.50	82.50	
								165.60
200	201	200	b1	11.00	15.00	7.50	82.50	
2985.00	3000.00	201	b1	11.36	15.00	7.50	85.20	
								167.70
201	201b	201	b1	11.36	5.94	2.97	33.74	
3000.00	3005.94	201b	b1	11.36	5.94	2.97	33.74	
								67.48

Il Direttore dei Lavori	L'Impresa	TOTALE ARTICOLO	10820.72

	COMPUTO DI SUPERFICI		Foglio n. 204

BINDER

DALLA SEZ. DA PROG.	ALLA SEZ. A PROG.	SEZIONE	FIGURA	LUNGHEZZA	DISTANZA SEZIONI ml	DISTANZA DI CALCOLO ml	AREA PARZIALE mq	AREA TOTALE mq
130	131	131	c1	9.75	15.00	7.50	73.13	
								73.13
131	132	131	c1	9.75	15.00	7.50	73.13	
1950.00	1965.00	132	c1	9.95	15.00	7.50	74.63	
		132	c2	9.95	15.00	7.50	74.63	
								222.39
132	133	132	c1	9.95	15.00	7.50	74.63	
1965.00	1980.00	132	c2	9.95	15.00	7.50	74.63	
		133	c1	9.95	15.00	7.50	74.63	
		133	c2	9.95	15.00	7.50	74.63	
								298.52
133	134	133	c1	9.95	15.00	7.50	74.63	
1980.00	1995.00	133	c2	9.95	15.00	7.50	74.63	
		134	c1	9.95	15.00	7.50	74.63	
		134	c2	9.95	15.00	7.50	74.63	
								298.52
134	135	134	c1	9.95	15.00	7.50	74.63	
1995.00	2010.00	134	c2	9.95	15.00	7.50	74.63	
		135	c1	9.95	15.00	7.50	74.63	
		135	c2	9.95	15.00	7.50	74.63	
								298.52
135	136	135	c1	9.95	15.00	7.50	74.63	
2010.00	2025.00	135	c2	9.95	15.00	7.50	74.63	
		136	c1	9.95	15.00	7.50	74.63	
		136	c2	9.95	15.00	7.50	74.63	
								298.52
136	137	136	c1	9.95	15.00	7.50	74.63	
2025.00	2040.00	136	c2	9.95	15.00	7.50	74.63	
		137	c1	9.95	15.00	7.50	74.63	
		137	c2	9.95	15.00	7.50	74.63	
								298.52
137	138	137	c1	9.95	15.00	7.50	74.63	
2040.00	2055.00	137	c2	9.95	15.00	7.50	74.63	
		138	c1	9.95	15.00	7.50	74.63	
		138	c2	9.95	15.00	7.50	74.63	
								298.52
138	139	138	c1	9.95	15.00	7.50	74.63	
2055.00	2070.00	138	c2	9.95	15.00	7.50	74.63	
		139	c1	9.95	15.00	7.50	74.63	
		139	c2	9.95	15.00	7.50	74.63	
								298.52
139	140	139	c1	9.95	15.00	7.50	74.63	
2070.00	2085.00	139	c2	9.95	15.00	7.50	74.63	
		140	c1	9.95	15.00	7.50	74.63	
		140	c2	9.95	15.00	7.50	74.63	
								298.52
140	141	140	c1	9.95	15.00	7.50	74.63	
2085.00	2100.00	140	c2	9.95	15.00	7.50	74.63	
		141	c1	9.95	15.00	7.50	74.63	
		141	c2	9.95	15.00	7.50	74.63	
								298.52
141	142	141	c1	9.95	15.00	7.50	74.63	
2100.00	2115.00	141	c2	9.95	15.00	7.50	74.63	
		142	c1	11.65	15.00	7.50	87.38	
		142	c2	11.65	15.00	7.50	87.38	
								324.02
142	143	142	c1	11.65	15.00	7.50	87.38	
2115.00	2130.00	142	c2	11.65	15.00	7.50	87.38	
		143	c1	13.45	15.00	7.50	100.88	
		143	c2	13.45	15.00	7.50	100.88	
								376.52
143	144	143	c1	13.45	15.00	7.50	100.88	
2130.00	2145.00	143	c2	13.45	15.00	7.50	100.88	
		144	c1	13.45	15.00	7.50	100.88	
		144	c2	13.45	15.00	7.50	100.88	
								403.52
144	145	144	c1	13.45	15.00	7.50	100.88	
2145.00	2160.00	144	c2	13.45	15.00	7.50	100.88	
		145	c1	11.75	15.00	7.50	88.13	
		145	c2	11.75	15.00	7.50	88.13	
								378.02
145	146	145	c1	11.75	15.00	7.50	88.13	
2160.00	2175.00	145	c2	11.75	15.00	7.50	88.13	
		146	c1	9.95	15.00	7.50	74.63	
		146	c2	9.95	15.00	7.50	74.63	
								325.52
146	147	146	c1	9.95	15.00	7.50	74.63	
2175.00	2190.00	146	c2	9.95	15.00	7.50	74.63	
		147	c1	9.95	15.00	7.50	74.63	
		147	c2	9.95	15.00	7.50	74.63	
								298.52
147	148	147	c1	9.95	15.00	7.50	74.63	
2190.00	2205.00	147	c2	9.95	15.00	7.50	74.63	
		148	c1	9.95	15.00	7.50	74.63	
		148	c2	9.95	15.00	7.50	74.63	
								298.52
148	149	148	c1	9.95	15.00	7.50	74.63	
2205.00	2220.00	148	c2	9.95	15.00	7.50	74.63	
		149	c1	9.95	15.00	7.50	74.63	
		149	c2	9.95	15.00	7.50	74.63	
								298.52
149	150	149	c1	9.95	15.00	7.50	74.63	
2220.00	2235.00	149	c2	9.95	15.00	7.50	74.63	
		150	c1	9.95	15.00	7.50	74.63	
		150	c2	9.95	15.00	7.50	74.63	
								298.52
150	151	150	c1	9.95	15.00	7.50	74.63	
2235.00	2250.00	150	c2	9.95	15.00	7.50	74.63	
		151	c1	9.95	15.00	7.50	74.63	
		151	c2	9.95	15.00	7.50	74.63	
								298.52
151	152	151	c1	9.95	15.00	7.50	74.63	
2250.00	2265.00	151	c2	9.95	15.00	7.50	74.63	
		152	c1	9.95	15.00	7.50	74.63	
		152	c2	9.95	15.00	7.50	74.63	
								298.52
								6580.92

	COMPUTO DI SUPERFICI		Foglio n. 205

BINDER

DALLA SEZ. DA PROG.	ALLA SEZ. A PROG.	SEZIONE	FIGURA	LUNGHEZZA	DISTANZA SEZIONI ml	DISTANZA DI CALCOLO ml	AREA PARZIALE mq	AREA TOTALE mq
						A RIPORTARE mq		6580.92
152	153	152	c1	9.95	15.00	7.50	74.63	
2265.00	2280.00	152	c2	9.95	15.00	7.50	74.63	
		153	c1	9.95	15.00	7.50	74.63	
		153	c2	9.95	15.00	7.50	74.63	
								298.52
153	154	153	c1	9.95	15.00	7.50	74.63	
2280.00	2295.00	153	c2	9.95	15.00	7.50	74.63	
		154	c1	9.95	15.00	7.50	74.63	
		154	c2	9.95	15.00	7.50	74.63	
								298.52
154	155	154	c1	9.95	15.00	7.50	74.63	
2295.00	2310.00	154	c2	9.95	15.00	7.50	74.63	
		155	c1	9.95	15.00	7.50	74.63	
		155	c2	9.95	15.00	7.50	74.63	
								298.52
155	156	155	c1	9.95	15.00	7.50	74.63	
2310.00	2325.00	155	c2	9.95	15.00	7.50	74.63	
		156	c1	9.95	15.00	7.50	74.63	
		156	c2	9.95	15.00	7.50	74.63	
								298.52
156	157	156	c1	9.95	15.00	7.50	74.63	
2325.00	2340.00	156	c2	9.95	15.00	7.50	74.63	
		157	c1	9.95	15.00	7.50	74.63	
		157	c2	9.95	15.00	7.50	74.63	
								298.52
157	158	157	c1	9.95	15.00	7.50	74.63	
2340.00	2355.00	157	c2	9.95	15.00	7.50	74.63	
		158	c1	9.95	15.00	7.50	74.63	
		158	c2	9.95	15.00	7.50	74.63	
								298.52
158	159	158	c1	9.95	15.00	7.50	74.63	
2355.00	2370.00	158	c2	9.95	15.00	7.50	74.63	
		159	c1	9.95	15.00	7.50	74.63	
		159	c2	9.95	15.00	7.50	74.63	
								298.52
159	160	159	c1	9.95	15.00	7.50	74.63	
2370.00	2385.00	159	c2	9.95	15.00	7.50	74.63	
		160	c1	9.95	15.00	7.50	74.63	
		160	c2	9.95	15.00	7.50	74.63	
								298.52
160	161	160	c1	9.95	15.00	7.50	74.63	
2385.00	2400.00	160	c2	9.95	15.00	7.50	74.63	
		161	c1	9.95	15.00	7.50	74.63	
		161	c2	9.95	15.00	7.50	74.63	
								298.52
161	162	161	c1	9.95	15.00	7.50	74.63	
2400.00	2415.00	161	c2	9.95	15.00	7.50	74.63	
		162	c1	9.95	15.00	7.50	74.63	
		162	c2	9.95	15.00	7.50	74.63	
								298.52
162	163	162	c1	9.95	15.00	7.50	74.63	
2415.00	2430.00	162	c2	9.95	15.00	7.50	74.63	
		163	c1	9.95	15.00	7.50	74.63	
		163	c2	9.95	15.00	7.50	74.63	
								298.52
163	164	163	c1	9.95	15.00	7.50	74.63	
2430.00	2445.00	163	c2	9.95	15.00	7.50	74.63	
		164	c1	9.95	15.00	7.50	74.63	
		164	c2	9.95	15.00	7.50	74.63	
								298.52
164	165	164	c1	9.95	15.00	7.50	74.63	
2445.00	2460.00	164	c2	9.95	15.00	7.50	74.63	
		165	c1	9.95	15.00	7.50	74.63	
		165	c2	9.95	15.00	7.50	74.63	
								298.52
165	166	165	c1	9.95	15.00	7.50	74.63	
2460.00	2475.00	165	c2	9.95	15.00	7.50	74.63	
		166	c1	9.95	15.00	7.50	74.63	
		166	c2	9.95	15.00	7.50	74.63	
								298.52
166	167	166	c1	9.95	15.00	7.50	74.63	
2475.00	2490.00	166	c2	9.95	15.00	7.50	74.63	
		167	c1	9.95	15.00	7.50	74.63	
		167	c2	9.95	15.00	7.50	74.63	
								298.52
167	168	167	c1	9.95	15.00	7.50	74.63	
2490.00	2505.00	167	c2	9.95	15.00	7.50	74.63	
		168	c1	9.95	15.00	7.50	74.63	
		168	c2	9.95	15.00	7.50	74.63	
								298.52
168	169	168	c1	9.95	15.00	7.50	74.63	
2505.00	2520.00	168	c2	9.95	15.00	7.50	74.63	
		169	c1	9.95	15.00	7.50	74.63	
		169	c2	9.95	15.00	7.50	74.63	
								298.52
169	170	169	c1	9.95	15.00	7.50	74.63	
2520.00	2535.00	169	c2	9.95	15.00	7.50	74.63	
		170	c1	9.95	15.00	7.50	74.63	
		170	c2	9.95	15.00	7.50	74.63	
								298.52
170	171	170	c1	9.95	15.00	7.50	74.63	
2535.00	2550.00	170	c2	9.95	15.00	7.50	74.63	
		171	c1	9.95	15.00	7.50	74.63	
		171	c2	9.96	15.00	7.50	74.70	
								298.59
171	172	171	c1	9.95	15.00	7.50	74.63	
2550.00	2565.00	171	c2	9.96	15.00	7.50	74.70	
		172	c1	9.95	15.00	7.50	74.63	
		172	c2	9.96	15.00	7.50	74.70	
								298.66
172	173	172	c1	9.95	15.00	7.50	74.63	
2565.00	2580.00	172	c2	9.96	15.00	7.50	74.70	
		173	c1	9.95	15.00	7.50	74.63	
		173	c2	9.96	15.00	7.50	74.70	
							298.66	12850.19

	COMPUTO DI SUPERFICI		Foglio n. 206

BINDER

DALLA SEZ. DA PROG.	ALLA SEZ. A PROG.	SEZIONE	FIGURA	LUNGHEZZA	DISTANZA SEZIONI ml	DISTANZA DI CALCOLO ml	AREA PARZIALE mq	AREA TOTALE mq
						A RIPORTARE mq	298.66	12850.19
								298.66
173	174	173	c1	9.95	15.00	7.50	74.63	
2580.00	2595.00	173	c2	9.96	15.00	7.50	74.70	
		174	c1	9.94	15.00	7.50	74.55	
		174	c2	10.01	15.00	7.50	75.08	
								298.96
174	175	174	c1	9.94	15.00	7.50	74.55	
2595.00	2610.00	174	c2	10.01	15.00	7.50	75.08	
		175	c1	9.94	15.00	7.50	74.55	
		175	c2	10.13	15.00	7.50	75.98	
								300.16
175	176	175	c1	9.94	15.00	7.50	74.55	
2610.00	2625.00	175	c2	10.13	15.00	7.50	75.98	
		176	c1	9.94	15.00	7.50	74.55	
		176	c2	10.26	15.00	7.50	76.95	
								302.03
176	177	176	c1	9.94	15.00	7.50	74.55	
2625.00	2640.00	176	c2	10.26	15.00	7.50	76.95	
		177	c1	9.94	15.00	7.50	74.55	
		177	c2	10.36	15.00	7.50	77.70	
								303.75
177	178	177	c1	9.94	15.00	7.50	74.55	
2640.00	2655.00	177	c2	10.36	15.00	7.50	77.70	
		178	c1	9.94	15.00	7.50	74.55	
		178	c2	10.49	15.00	7.50	78.67	
								305.47
178	179	178	c1	9.94	15.00	7.50	74.55	
2655.00	2670.00	178	c2	10.49	15.00	7.50	78.67	
		179	c1	9.94	15.00	7.50	74.55	
		179	c2	10.59	15.00	7.50	79.42	
								307.19
179	180	179	c1	9.94	15.00	7.50	74.55	
2670.00	2685.00	179	c2	10.59	15.00	7.50	79.42	
		180	c1	9.94	15.00	7.50	74.55	
		180	c2	10.71	15.00	7.50	80.33	
								308.85
180	181	180	c1	9.94	15.00	7.50	74.55	
2685.00	2700.00	180	c2	10.71	15.00	7.50	80.33	
		181	c1	9.94	15.00	7.50	74.55	
		181	c2	10.81	15.00	7.50	81.08	
								310.51
181	182	181	c1	9.94	15.00	7.50	74.55	
2700.00	2715.00	181	c2	10.81	15.00	7.50	81.08	
		182	c1	9.94	15.00	7.50	74.55	
		182	c2	10.89	15.00	7.50	81.68	
								311.86
182	183	182	c1	9.94	15.00	7.50	74.55	
2715.00	2730.00	182	c2	10.89	15.00	7.50	81.68	
		183	c1	9.94	15.00	7.50	74.55	
		183	c2	10.90	15.00	7.50	81.75	
								312.53
183	184	183	c1	9.94	15.00	7.50	74.55	
2730.00	2745.00	183	c2	10.90	15.00	7.50	81.75	
		184	c1	9.94	15.00	7.50	74.55	
		184	c2	10.89	15.00	7.50	81.68	
								312.53
184	185	184	c1	9.94	15.00	7.50	74.55	
2745.00	2760.00	184	c2	10.89	15.00	7.50	81.68	
		185	c1	9.94	15.00	7.50	74.55	
		185	c2	10.90	15.00	7.50	81.75	
								312.53
185	186	185	c1	9.94	15.00	7.50	74.55	
2760.00	2775.00	185	c2	10.90	15.00	7.50	81.75	
		186	c1	9.94	15.00	7.50	74.55	
		186	c2	10.90	15.00	7.50	81.75	
								312.60
186	187	186	c1	9.94	15.00	7.50	74.55	
2775.00	2790.00	186	c2	10.90	15.00	7.50	81.75	
		187	c1	9.94	15.00	7.50	74.55	
		187	c2	10.90	15.00	7.50	81.75	
								312.60
187	188	187	c1	9.94	15.00	7.50	74.55	
2790.00	2805.00	187	c2	10.90	15.00	7.50	81.75	
		188	c1	9.94	15.00	7.50	74.55	
		188	c2	10.69	15.00	7.50	80.17	
								311.02
188	189	188	c1	9.94	15.00	7.50	74.55	
2805.00	2820.00	188	c2	10.69	15.00	7.50	80.17	
		189	c1	9.94	15.00	7.50	74.55	
		189	c2	10.46	15.00	7.50	78.45	
								307.72
189	190	189	c1	9.94	15.00	7.50	74.55	
2820.00	2835.00	189	c2	10.46	15.00	7.50	78.45	
		190	c1	9.94	15.00	7.50	74.55	
		190	c2	10.23	15.00	7.50	76.73	
								304.28
190	191	190	c1	9.94	15.00	7.50	74.55	
2835.00	2850.00	190	c2	10.23	15.00	7.50	76.73	
		191	c1	9.94	15.00	7.50	74.55	
		191	c2	9.98	15.00	7.50	74.85	
								300.68
191	192	191	c1	9.94	15.00	7.50	74.55	
2850.00	2865.00	191	c2	9.98	15.00	7.50	74.85	
		192	c1	9.95	15.00	7.50	74.63	
		192	c2	9.98	15.00	7.50	74.85	
								298.88
192	193	192	c1	9.95	15.00	7.50	74.63	
2865.00	2880.00	192	c2	9.98	15.00	7.50	74.85	
		193	c1	9.95	15.00	7.50	74.63	
		193	c2	10.04	15.00	7.50	75.30	
								299.41
193	194	193	c1	9.95	15.00	7.50	74.63	
2880.00	2895.00	193	c2	10.04	15.00	7.50	75.30	
		194	c1	9.95	15.00	7.50	74.63	
							224.56	18983.75

	COMPUTO DI SUPERFICI		Foglio n. 207

BINDER

DALLA SEZ. DA PROG.	ALLA SEZ. A PROG.	SEZIONE	FIGURA	LUNGHEZZA	DISTANZA SEZIONI ml	DISTANZA DI CALCOLO ml	AREA PARZIALE mq	AREA TOTALE mq
						A RIPORTARE mq	224.56	18983.75
		194	c2	10.12	15.00	7.50	75.90	
								300.46
194	195	194	c1	9.95	15.00	7.50	74.63	
2895.00	2910.00	194	c2	10.12	15.00	7.50	75.90	
		195	c1	9.96	15.00	7.50	74.70	
		195	c2	10.19	15.00	7.50	76.42	
								301.65
195	196	195	c1	9.96	15.00	7.50	74.70	
2910.00	2925.00	195	c2	10.19	15.00	7.50	76.42	
		196	c1	10.23	15.00	7.50	76.73	
		196	c2	9.96	15.00	7.50	74.70	
								302.55
196	197	196	c1	10.23	15.00	7.50	76.73	
2925.00	2940.00	196	c2	9.96	15.00	7.50	74.70	
		197	c1	9.97	15.00	7.50	74.78	
		197	c2	10.24	15.00	7.50	76.80	
								303.01
197	198	197	c1	9.97	15.00	7.50	74.78	
2940.00	2955.00	197	c2	10.24	15.00	7.50	76.80	
		198	c1	10.20	15.00	7.50	76.50	
		198	c2	9.97	15.00	7.50	74.78	
								302.86
198	199	198	c1	10.20	15.00	7.50	76.50	
2955.00	2970.00	198	c2	9.97	15.00	7.50	74.78	
		199	c1	9.97	15.00	7.50	74.78	
		199	c2	10.18	15.00	7.50	76.35	
								302.41
199	200	199	c1	9.97	15.00	7.50	74.78	
2970.00	2985.00	199	c2	10.18	15.00	7.50	76.35	
		200	c1	9.97	15.00	7.50	74.78	
		200	c2	10.16	15.00	7.50	76.20	
								302.11
200	201	200	c1	9.97	15.00	7.50	74.78	
2985.00	3000.00	200	c2	10.16	15.00	7.50	76.20	
		201	c1	10.14	15.00	7.50	76.05	
		201	c2	9.97	15.00	7.50	74.78	
								301.81
201	201b	201	c1	10.14	5.94	2.97	30.12	
3000.00	3005.94	201	c2	9.97	5.94	2.97	29.61	
		201b	c1	10.14	5.94	2.97	30.12	
		201b	c2	9.97	5.94	2.97	29.61	
								119.46

Il Direttore dei Lavori	L'Impresa	TOTALE ARTICOLO	21520.07

	COMPUTO DI SUPERFICI		Foglio n. 208

BASE

DALLA SEZ. DA PROG.	ALLA SEZ. A PROG.	SEZIONE	FIGURA	LUNGHEZZA	DISTANZA SEZIONI ml	DISTANZA DI CALCOLO ml	AREA PARZIALE mq	AREA TOTALE mq
130	131	131	d1	9.75	15.00	7.50	73.13	
								73.13
131	132	131	d1	9.75	15.00	7.50	73.13	
1950.00	1965.00	132	d2	9.85	15.00	7.50	73.88	
		132	d1	9.85	15.00	7.50	73.88	
								220.89
132	133	132	d2	9.85	15.00	7.50	73.88	
1965.00	1980.00	132	d1	9.85	15.00	7.50	73.88	
		133	d2	9.85	15.00	7.50	73.88	
		133	d1	9.85	15.00	7.50	73.88	
								295.52
133	134	133	d2	9.85	15.00	7.50	73.88	
1980.00	1995.00	133	d1	9.85	15.00	7.50	73.88	
		134	d2	9.85	15.00	7.50	73.88	
		134	d1	9.85	15.00	7.50	73.88	
								295.52
134	135	134	d2	9.85	15.00	7.50	73.88	
1995.00	2010.00	134	d1	9.85	15.00	7.50	73.88	
		135	d2	9.85	15.00	7.50	73.88	
		135	d1	9.85	15.00	7.50	73.88	
								295.52
135	136	135	d2	9.85	15.00	7.50	73.88	
2010.00	2025.00	135	d1	9.85	15.00	7.50	73.88	
		136	d2	9.85	15.00	7.50	73.88	
		136	d1	9.85	15.00	7.50	73.88	
								295.52
136	137	136	d2	9.85	15.00	7.50	73.88	
2025.00	2040.00	136	d1	9.85	15.00	7.50	73.88	
		137	d2	9.85	15.00	7.50	73.88	
		137	d1	9.85	15.00	7.50	73.88	
								295.52
137	138	137	d2	9.85	15.00	7.50	73.88	
2040.00	2055.00	137	d1	9.85	15.00	7.50	73.88	
		138	d2	9.85	15.00	7.50	73.88	
		138	d1	9.85	15.00	7.50	73.88	
								295.52
138	139	138	d2	9.85	15.00	7.50	73.88	
2055.00	2070.00	138	d1	9.85	15.00	7.50	73.88	
		139	d2	9.85	15.00	7.50	73.88	
		139	d1	9.85	15.00	7.50	73.88	
								295.52
139	140	139	d2	9.85	15.00	7.50	73.88	
2070.00	2085.00	139	d1	9.85	15.00	7.50	73.88	
		140	d2	9.85	15.00	7.50	73.88	
		140	d1	9.85	15.00	7.50	73.88	
								295.52
140	141	140	d2	9.85	15.00	7.50	73.88	
2085.00	2100.00	140	d1	9.85	15.00	7.50	73.88	
		141	d1	9.85	15.00	7.50	73.88	
		141	d2	9.85	15.00	7.50	73.88	
								295.52
141	142	141	d1	9.85	15.00	7.50	73.88	
2100.00	2115.00	141	d2	9.85	15.00	7.50	73.88	
		142	d1	11.55	15.00	7.50	86.63	
		142	d2	11.55	15.00	7.50	86.63	
								321.02
142	143	142	d1	11.55	15.00	7.50	86.63	
2115.00	2130.00	142	d2	11.55	15.00	7.50	86.63	
		143	d1	13.35	15.00	7.50	100.13	
		143	d2	13.35	15.00	7.50	100.13	
								373.52
143	144	143	d1	13.35	15.00	7.50	100.13	
2130.00	2145.00	143	d2	13.35	15.00	7.50	100.13	
		144	d1	13.35	15.00	7.50	100.13	
		144	d2	13.35	15.00	7.50	100.13	
								400.52
144	145	144	d1	13.35	15.00	7.50	100.13	
2145.00	2160.00	144	d2	13.35	15.00	7.50	100.13	
		145	d1	11.65	15.00	7.50	87.38	
		145	d2	11.65	15.00	7.50	87.38	
								375.02
145	146	145	d1	11.65	15.00	7.50	87.38	
2160.00	2175.00	145	d2	11.65	15.00	7.50	87.38	
		146	d1	9.85	15.00	7.50	73.88	
		146	d2	9.85	15.00	7.50	73.88	
								322.52
146	147	146	d1	9.85	15.00	7.50	73.88	
2175.00	2190.00	146	d2	9.85	15.00	7.50	73.88	
		147	d1	9.85	15.00	7.50	73.88	
		147	d2	9.85	15.00	7.50	73.88	
								295.52
147	148	147	d1	9.85	15.00	7.50	73.88	
2190.00	2205.00	147	d2	9.85	15.00	7.50	73.88	
		148	d1	9.85	15.00	7.50	73.88	
		148	d2	9.85	15.00	7.50	73.88	
								295.52
148	149	148	d1	9.85	15.00	7.50	73.88	
2205.00	2220.00	148	d2	9.85	15.00	7.50	73.88	
		149	d1	9.85	15.00	7.50	73.88	
		149	d2	9.85	15.00	7.50	73.88	
								295.52
149	150	149	d1	9.85	15.00	7.50	73.88	
2220.00	2235.00	149	d2	9.85	15.00	7.50	73.88	
		150	d1	9.85	15.00	7.50	73.88	
		150	d2	9.85	15.00	7.50	73.88	
								295.52
150	151	150	d1	9.85	15.00	7.50	73.88	
2235.00	2250.00	150	d2	9.85	15.00	7.50	73.88	
		151	d1	9.85	15.00	7.50	73.88	
		151	d2	9.85	15.00	7.50	73.88	
								295.52
151	152	151	d1	9.85	15.00	7.50	73.88	
2250.00	2265.00	151	d2	9.85	15.00	7.50	73.88	
		152	d1	9.85	15.00	7.50	73.88	
		152	d2	9.85	15.00	7.50	73.88	
								295.52
								6519.42

	COMPUTO DI SUPERFICI		Foglio n. 209

BASE

DALLA SEZ. DA PROG.	ALLA SEZ. A PROG.	SEZIONE	FIGURA	LUNGHEZZA	DISTANZA SEZIONI ml	DISTANZA DI CALCOLO ml	AREA PARZIALE mq	AREA TOTALE mq
						A RIPORTARE mq		6519.42
152	153	152	d1	9.85	15.00	7.50	73.88	
2265.00	2280.00	152	d2	9.85	15.00	7.50	73.88	
		153	d1	9.85	15.00	7.50	73.88	
		153	d2	9.85	15.00	7.50	73.88	
								295.52
153	154	153	d1	9.85	15.00	7.50	73.88	
2280.00	2295.00	153	d2	9.85	15.00	7.50	73.88	
		154	d1	9.85	15.00	7.50	73.88	
		154	d2	9.85	15.00	7.50	73.88	
								295.52
154	155	154	d1	9.85	15.00	7.50	73.88	
2295.00	2310.00	154	d2	9.85	15.00	7.50	73.88	
		155	d2	9.85	15.00	7.50	73.88	
		155	d1	9.85	15.00	7.50	73.88	
								295.52
155	156	155	d2	9.85	15.00	7.50	73.88	
2310.00	2325.00	155	d1	9.85	15.00	7.50	73.88	
		156	d1	9.85	15.00	7.50	73.88	
		156	d2	9.85	15.00	7.50	73.88	
								295.52
156	157	156	d1	9.85	15.00	7.50	73.88	
2325.00	2340.00	156	d2	9.85	15.00	7.50	73.88	
		157	d1	9.85	15.00	7.50	73.88	
		157	d2	9.85	15.00	7.50	73.88	
								295.52
157	158	157	d1	9.85	15.00	7.50	73.88	
2340.00	2355.00	157	d2	9.85	15.00	7.50	73.88	
		158	d1	9.85	15.00	7.50	73.88	
		158	d2	9.85	15.00	7.50	73.88	
								295.52
158	159	158	d1	9.85	15.00	7.50	73.88	
2355.00	2370.00	158	d2	9.85	15.00	7.50	73.88	
		159	d1	9.85	15.00	7.50	73.88	
		159	d2	9.85	15.00	7.50	73.88	
								295.52
159	160	159	d1	9.85	15.00	7.50	73.88	
2370.00	2385.00	159	d2	9.85	15.00	7.50	73.88	
		160	d1	9.85	15.00	7.50	73.88	
		160	d2	9.85	15.00	7.50	73.88	
								295.52
160	161	160	d1	9.85	15.00	7.50	73.88	
2385.00	2400.00	160	d2	9.85	15.00	7.50	73.88	
		161	d1	9.85	15.00	7.50	73.88	
		161	d2	9.85	15.00	7.50	73.88	
								295.52
161	162	161	d1	9.85	15.00	7.50	73.88	
2400.00	2415.00	161	d2	9.85	15.00	7.50	73.88	
		162	d1	9.85	15.00	7.50	73.88	
		162	d2	9.85	15.00	7.50	73.88	
								295.52
162	163	162	d1	9.85	15.00	7.50	73.88	
2415.00	2430.00	162	d2	9.85	15.00	7.50	73.88	
		163	d1	9.85	15.00	7.50	73.88	
		163	d2	9.85	15.00	7.50	73.88	
								295.52
163	164	163	d1	9.85	15.00	7.50	73.88	
2430.00	2445.00	163	d2	9.85	15.00	7.50	73.88	
		164	d1	9.85	15.00	7.50	73.88	
		164	d2	9.85	15.00	7.50	73.88	
								295.52
164	165	164	d1	9.85	15.00	7.50	73.88	
2445.00	2460.00	164	d2	9.85	15.00	7.50	73.88	
		165	d1	9.85	15.00	7.50	73.88	
		165	d2	9.85	15.00	7.50	73.88	
								295.52
165	166	165	d1	9.85	15.00	7.50	73.88	
2460.00	2475.00	165	d2	9.85	15.00	7.50	73.88	
		166	d2	9.85	15.00	7.50	73.88	
		166	d1	9.85	15.00	7.50	73.88	
								295.52
166	167	166	d2	9.85	15.00	7.50	73.88	
2475.00	2490.00	166	d1	9.85	15.00	7.50	73.88	
		167	d2	9.85	15.00	7.50	73.88	
		167	d1	9.85	15.00	7.50	73.88	
								295.52
167	168	167	d2	9.85	15.00	7.50	73.88	
2490.00	2505.00	167	d1	9.85	15.00	7.50	73.88	
		168	d2	9.85	15.00	7.50	73.88	
		168	d1	9.85	15.00	7.50	73.88	
								295.52
168	169	168	d2	9.85	15.00	7.50	73.88	
2505.00	2520.00	168	d1	9.85	15.00	7.50	73.88	
		169	d2	9.85	15.00	7.50	73.88	
		169	d1	9.85	15.00	7.50	73.88	
								295.52
169	170	169	d2	9.85	15.00	7.50	73.88	
2520.00	2535.00	169	d1	9.85	15.00	7.50	73.88	
		170	d2	9.85	15.00	7.50	73.88	
		170	d1	9.85	15.00	7.50	73.88	
								295.52
170	171	170	d2	9.85	15.00	7.50	73.88	
2535.00	2550.00	170	d1	9.85	15.00	7.50	73.88	
		171	d2	9.85	15.00	7.50	73.88	
		171	d1	9.86	15.00	7.50	73.95	
								295.59
171	172	171	d2	9.85	15.00	7.50	73.88	
2550.00	2565.00	171	d1	9.86	15.00	7.50	73.95	
		172	d2	9.85	15.00	7.50	73.88	
		172	d1	9.86	15.00	7.50	73.95	
								295.66
172	173	172	d2	9.85	15.00	7.50	73.88	
2565.00	2580.00	172	d1	9.86	15.00	7.50	73.95	
		173	d2	9.85	15.00	7.50	73.88	
		173	d1	9.86	15.00	7.50	73.95	
							295.66	12725.69

	COMPUTO DI SUPERFICI		Foglio n. 210

BASE

DALLA SEZ. DA PROG.	ALLA SEZ. A PROG.	SEZIONE	FIGURA	LUNGHEZZA	DISTANZA SEZIONI ml	DISTANZA DI CALCOLO ml	AREA PARZIALE mq	AREA TOTALE mq
						A RIPORTARE mq	295.66	12725.69
								295.66
173	174	173	d2	9.85	15.00	7.50	73.88	
2580.00	2595.00	173	d1	9.86	15.00	7.50	73.95	
		174	d2	9.85	15.00	7.50	73.88	
		174	d1	9.91	15.00	7.50	74.33	
								296.04
174	175	174	d2	9.85	15.00	7.50	73.88	
2595.00	2610.00	174	d1	9.91	15.00	7.50	74.33	
		175	d2	9.85	15.00	7.50	73.88	
		175	d1	10.03	15.00	7.50	75.22	
								297.31
175	176	175	d2	9.85	15.00	7.50	73.88	
2610.00	2625.00	175	d1	10.03	15.00	7.50	75.22	
		176	d2	9.85	15.00	7.50	73.88	
		176	d1	10.16	15.00	7.50	76.20	
								299.18
176	177	176	d2	9.85	15.00	7.50	73.88	
2625.00	2640.00	176	d1	10.16	15.00	7.50	76.20	
		177	d1	10.27	15.00	7.50	77.02	
		177	d2	9.85	15.00	7.50	73.88	
								300.98
177	178	177	d1	10.27	15.00	7.50	77.02	
2640.00	2655.00	177	d2	9.85	15.00	7.50	73.88	
		178	d2	9.85	15.00	7.50	73.88	
		178	d1	10.40	15.00	7.50	78.00	
								302.78
178	179	178	d2	9.85	15.00	7.50	73.88	
2655.00	2670.00	178	d1	10.40	15.00	7.50	78.00	
		179	d2	9.84	15.00	7.50	73.80	
		179	d1	10.51	15.00	7.50	78.83	
								304.51
179	180	179	d2	9.84	15.00	7.50	73.80	
2670.00	2685.00	179	d1	10.51	15.00	7.50	78.83	
		180	d1	10.65	15.00	7.50	79.88	
		180	d2	9.84	15.00	7.50	73.80	
								306.31
180	181	180	d1	10.65	15.00	7.50	79.88	
2685.00	2700.00	180	d2	9.84	15.00	7.50	73.80	
		181	d2	9.84	15.00	7.50	73.80	
		181	d1	10.77	15.00	7.50	80.77	
								308.25
181	182	181	d2	9.84	15.00	7.50	73.80	
2700.00	2715.00	181	d1	10.77	15.00	7.50	80.77	
		182	d2	9.84	15.00	7.50	73.80	
		182	d1	10.86	15.00	7.50	81.45	
								309.82
182	183	182	d2	9.84	15.00	7.50	73.80	
2715.00	2730.00	182	d1	10.86	15.00	7.50	81.45	
		183	d2	9.84	15.00	7.50	73.80	
		183	d1	10.87	15.00	7.50	81.52	
								310.57
183	184	183	d2	9.84	15.00	7.50	73.80	
2730.00	2745.00	183	d1	10.87	15.00	7.50	81.52	
		184	d2	9.84	15.00	7.50	73.80	
		184	d1	10.86	15.00	7.50	81.45	
								310.57
184	185	184	d2	9.84	15.00	7.50	73.80	
2745.00	2760.00	184	d1	10.86	15.00	7.50	81.45	
		185	d2	9.84	15.00	7.50	73.80	
		185	d1	10.87	15.00	7.50	81.52	
								310.57
185	186	185	d2	9.84	15.00	7.50	73.80	
2760.00	2775.00	185	d1	10.87	15.00	7.50	81.52	
		186	d2	9.84	15.00	7.50	73.80	
		186	d1	10.87	15.00	7.50	81.52	
								310.64
186	187	186	d2	9.84	15.00	7.50	73.80	
2775.00	2790.00	186	d1	10.87	15.00	7.50	81.52	
		187	d2	9.84	15.00	7.50	73.80	
		187	d1	10.87	15.00	7.50	81.52	
								310.64
187	188	187	d2	9.84	15.00	7.50	73.80	
2790.00	2805.00	187	d1	10.87	15.00	7.50	81.52	
		188	d2	9.84	15.00	7.50	73.80	
		188	d1	10.62	15.00	7.50	79.65	
								308.77
188	189	188	d2	9.84	15.00	7.50	73.80	
2805.00	2820.00	188	d1	10.62	15.00	7.50	79.65	
		189	d2	9.85	15.00	7.50	73.88	
		189	d1	10.37	15.00	7.50	77.77	
								305.10
189	190	189	d2	9.85	15.00	7.50	73.88	
2820.00	2835.00	189	d1	10.37	15.00	7.50	77.77	
		190	d2	9.85	15.00	7.50	73.88	
		190	d1	10.13	15.00	7.50	75.98	
								301.51
190	191	190	d2	9.85	15.00	7.50	73.88	
2835.00	2850.00	190	d1	10.13	15.00	7.50	75.98	
		191	d2	9.85	15.00	7.50	73.88	
		191	d1	9.88	15.00	7.50	74.10	
								297.84
191	192	191	d2	9.85	15.00	7.50	73.88	
2850.00	2865.00	191	d1	9.88	15.00	7.50	74.10	
		192	d1	9.88	15.00	7.50	74.10	
		192	d2	9.85	15.00	7.50	73.88	
								295.96
192	193	192	d1	9.88	15.00	7.50	74.10	
2865.00	2880.00	192	d2	9.85	15.00	7.50	73.88	
		193	d1	9.94	15.00	7.50	74.55	
		193	d2	9.85	15.00	7.50	73.88	
								296.41
193	194	193	d1	9.94	15.00	7.50	74.55	
2880.00	2895.00	193	d2	9.85	15.00	7.50	73.88	
		194	d1	10.02	15.00	7.50	75.15	
							223.58	18809.45

	COMPUTO DI SUPERFICI		Foglio n. 211

BASE

DALLA SEZ. DA PROG.	ALLA SEZ. A PROG.	SEZIONE	FIGURA	LUNGHEZZA	DISTANZA SEZIONI ml	DISTANZA DI CALCOLO ml	AREA PARZIALE mq	AREA TOTALE mq
						A RIPORTARE mq	223.58	18809.45
		194	d2	9.85	15.00	7.50	73.88	
								297.46
194	195	194	d1	10.02	15.00	7.50	75.15	
2895.00	2910.00	194	d2	9.85	15.00	7.50	73.88	
		195	d2	9.85	15.00	7.50	73.88	
		195	d1	10.08	15.00	7.50	75.60	
								298.51
195	196	195	d2	9.85	15.00	7.50	73.88	
2910.00	2925.00	195	d1	10.08	15.00	7.50	75.60	
		196	d1	9.86	15.00	7.50	73.95	
		196	d2	10.12	15.00	7.50	75.90	
								299.33
196	197	196	d1	9.86	15.00	7.50	73.95	
2925.00	2940.00	196	d2	10.12	15.00	7.50	75.90	
		197	d1	10.12	15.00	7.50	75.90	
		197	d2	9.86	15.00	7.50	73.95	
								299.70
197	198	197	d1	10.12	15.00	7.50	75.90	
2940.00	2955.00	197	d2	9.86	15.00	7.50	73.95	
		198	d1	10.09	15.00	7.50	75.67	
		198	d2	9.86	15.00	7.50	73.95	
								299.47
198	199	198	d1	10.09	15.00	7.50	75.67	
2955.00	2970.00	198	d2	9.86	15.00	7.50	73.95	
		199	d1	10.07	15.00	7.50	75.53	
		199	d2	9.86	15.00	7.50	73.95	
								299.10
199	200	199	d1	10.07	15.00	7.50	75.53	
2970.00	2985.00	199	d2	9.86	15.00	7.50	73.95	
		200	d1	10.05	15.00	7.50	75.38	
		200	d2	9.86	15.00	7.50	73.95	
								298.81
200	201	200	d1	10.05	15.00	7.50	75.38	
2985.00	3000.00	200	d2	9.86	15.00	7.50	73.95	
		201	d1	10.03	15.00	7.50	75.22	
		201	d2	9.86	15.00	7.50	73.95	
								298.50
201	201b	201	d1	10.03	5.94	2.97	29.79	
3000.00	3005.94	201	d2	9.86	5.94	2.97	29.28	
		201b	d1	10.03	5.94	2.97	29.79	
		201b	d2	9.86	5.94	2.97	29.28	
								118.14

Il Direttore dei Lavori	L'Impresa	TOTALE ARTICOLO	21318.47

	COMPUTO DI SUPERFICI		Foglio n. 212

FONDAZIONE

DALLA SEZ. DA PROG.	ALLA SEZ. A PROG.	SEZIONE	FIGURA	LUNGHEZZA	DISTANZA SEZIONI ml	DISTANZA DI CALCOLO ml	AREA PARZIALE mq	AREA TOTALE mq
130	131	131	e1	9.60	15.00	7.50	72.00	
								72.00
131	132	131	e1	9.60	15.00	7.50	72.00	
1950.00	1965.00	132	e2	10.32	15.00	7.50	77.40	
		132	e1	10.32	15.00	7.50	77.40	
								226.80
132	133	132	e2	10.32	15.00	7.50	77.40	
1965.00	1980.00	132	e1	10.32	15.00	7.50	77.40	
		133	e2	10.32	15.00	7.50	77.40	
		133	e1	10.32	15.00	7.50	77.40	
								309.60
133	134	133	e2	10.32	15.00	7.50	77.40	
1980.00	1995.00	133	e1	10.32	15.00	7.50	77.40	
		134	e2	10.32	15.00	7.50	77.40	
		134	e1	10.32	15.00	7.50	77.40	
								309.60
134	135	134	e2	10.32	15.00	7.50	77.40	
1995.00	2010.00	134	e1	10.32	15.00	7.50	77.40	
		135	e2	10.32	15.00	7.50	77.40	
		135	e1	10.32	15.00	7.50	77.40	
								309.60
135	136	135	e2	10.32	15.00	7.50	77.40	
2010.00	2025.00	135	e1	10.32	15.00	7.50	77.40	
		136	e2	10.32	15.00	7.50	77.40	
		136	e1	10.32	15.00	7.50	77.40	
								309.60
136	137	136	e2	10.32	15.00	7.50	77.40	
2025.00	2040.00	136	e1	10.32	15.00	7.50	77.40	
		137	e2	10.32	15.00	7.50	77.40	
		137	e1	10.32	15.00	7.50	77.40	
								309.60
137	138	137	e2	10.32	15.00	7.50	77.40	
2040.00	2055.00	137	e1	10.32	15.00	7.50	77.40	
		138	e2	10.32	15.00	7.50	77.40	
		138	e1	10.32	15.00	7.50	77.40	
								309.60
138	139	138	e2	10.32	15.00	7.50	77.40	
2055.00	2070.00	138	e1	10.32	15.00	7.50	77.40	
		139	e2	10.32	15.00	7.50	77.40	
		139	e1	10.32	15.00	7.50	77.40	
								309.60
139	140	139	e2	10.32	15.00	7.50	77.40	
2070.00	2085.00	139	e1	10.32	15.00	7.50	77.40	
		140	e2	10.32	15.00	7.50	77.40	
		140	e1	10.32	15.00	7.50	77.40	
								309.60
140	141	140	e2	10.32	15.00	7.50	77.40	
2085.00	2100.00	140	e1	10.32	15.00	7.50	77.40	
		141	e1	10.32	15.00	7.50	77.40	
		141	e2	10.32	15.00	7.50	77.40	
								309.60
141	142	141	e1	10.32	15.00	7.50	77.40	
2100.00	2115.00	141	e2	10.32	15.00	7.50	77.40	
		142	e1	12.02	15.00	7.50	90.15	
		142	e2	12.02	15.00	7.50	90.15	
								335.10
142	143	142	e1	12.02	15.00	7.50	90.15	
2115.00	2130.00	142	e2	12.02	15.00	7.50	90.15	
		143	e1	13.82	15.00	7.50	103.65	
		143	e2	13.82	15.00	7.50	103.65	
								387.60
143	144	143	e1	13.82	15.00	7.50	103.65	
2130.00	2145.00	143	e2	13.82	15.00	7.50	103.65	
		144	e1	13.82	15.00	7.50	103.65	
		144	e2	13.82	15.00	7.50	103.65	
								414.60
144	145	144	e1	13.82	15.00	7.50	103.65	
2145.00	2160.00	144	e2	13.82	15.00	7.50	103.65	
		145	e1	12.12	15.00	7.50	90.90	
		145	e2	12.12	15.00	7.50	90.90	
								389.10
145	146	145	e1	12.12	15.00	7.50	90.90	
2160.00	2175.00	145	e2	12.12	15.00	7.50	90.90	
		146	e1	10.32	15.00	7.50	77.40	
		146	e2	10.32	15.00	7.50	77.40	
								336.60
146	147	146	e1	10.32	15.00	7.50	77.40	
2175.00	2190.00	146	e2	10.32	15.00	7.50	77.40	
		147	e1	10.32	15.00	7.50	77.40	
		147	e2	10.32	15.00	7.50	77.40	
								309.60
147	148	147	e1	10.32	15.00	7.50	77.40	
2190.00	2205.00	147	e2	10.32	15.00	7.50	77.40	
		148	e1	10.32	15.00	7.50	77.40	
		148	e2	10.32	15.00	7.50	77.40	
								309.60
148	149	148	e1	10.32	15.00	7.50	77.40	
2205.00	2220.00	148	e2	10.32	15.00	7.50	77.40	
		149	e1	10.32	15.00	7.50	77.40	
		149	e2	10.32	15.00	7.50	77.40	
								309.60
149	150	149	e1	10.32	15.00	7.50	77.40	
2220.00	2235.00	149	e2	10.32	15.00	7.50	77.40	
		150	e1	10.32	15.00	7.50	77.40	
		150	e2	10.32	15.00	7.50	77.40	
								309.60
150	151	150	e1	10.32	15.00	7.50	77.40	
2235.00	2250.00	150	e2	10.32	15.00	7.50	77.40	
		151	e1	10.32	15.00	7.50	77.40	
		151	e2	10.32	15.00	7.50	77.40	
								309.60
151	152	151	e1	10.32	15.00	7.50	77.40	
2250.00	2265.00	151	e2	10.32	15.00	7.50	77.40	
		152	e1	10.32	15.00	7.50	77.40	
		152	e2	10.32	15.00	7.50	77.40	
								309.60
								6805.80

	COMPUTO DI SUPERFICI			Foglio n. 213			
FONDAZIONE							
DALLA SEZ. DA PROG. / ALLA SEZ. A PROG.	SEZIONE	FIGURA	LUNGHEZZA	DISTANZA SEZIONI ml	DISTANZA DI CALCOLO ml	AREA PARZIALE mq	AREA TOTALE mq
					A RIPORTARE mq		6805.80
152	152	e1	10.32	15.00	7.50	77.40	
2265.00	152	e2	10.32	15.00	7.50	77.40	
	153	e1	10.32	15.00	7.50	77.40	
	153	e2	10.32	15.00	7.50	77.40	
							309.60
153	153	e1	10.32	15.00	7.50	77.40	
2280.00	153	e2	10.32	15.00	7.50	77.40	
	154	e1	10.32	15.00	7.50	77.40	
	154	e2	10.32	15.00	7.50	77.40	
							309.60
154	154	e1	10.32	15.00	7.50	77.40	
2295.00	154	e2	10.32	15.00	7.50	77.40	
	155	e2	10.32	15.00	7.50	77.40	
	155	e1	10.32	15.00	7.50	77.40	
							309.60
155	155	e2	10.32	15.00	7.50	77.40	
2310.00	155	e1	10.32	15.00	7.50	77.40	
	156	e1	10.32	15.00	7.50	77.40	
	156	e2	10.32	15.00	7.50	77.40	
							309.60
156	156	e1	10.32	15.00	7.50	77.40	
2325.00	156	e2	10.32	15.00	7.50	77.40	
	157	e1	10.32	15.00	7.50	77.40	
	157	e2	10.32	15.00	7.50	77.40	
							309.60
157	157	e1	10.32	15.00	7.50	77.40	
2340.00	157	e2	10.32	15.00	7.50	77.40	
	158	e1	10.32	15.00	7.50	77.40	
	158	e2	10.32	15.00	7.50	77.40	
							309.60
158	158	e1	10.32	15.00	7.50	77.40	
2355.00	158	e2	10.32	15.00	7.50	77.40	
	159	e1	10.32	15.00	7.50	77.40	
	159	e2	10.32	15.00	7.50	77.40	
							309.60
159	159	e1	10.32	15.00	7.50	77.40	
2370.00	159	e2	10.32	15.00	7.50	77.40	
	160	e1	10.32	15.00	7.50	77.40	
	160	e2	10.32	15.00	7.50	77.40	
							309.60
160	160	e1	10.32	15.00	7.50	77.40	
2385.00	160	e2	10.32	15.00	7.50	77.40	
	161	e1	10.32	15.00	7.50	77.40	
	161	e2	10.32	15.00	7.50	77.40	
							309.60
161	161	e1	10.32	15.00	7.50	77.40	
2400.00	161	e2	10.32	15.00	7.50	77.40	
	162	e1	10.32	15.00	7.50	77.40	
	162	e2	10.32	15.00	7.50	77.40	
							309.60
162	162	e1	10.32	15.00	7.50	77.40	
2415.00	162	e2	10.32	15.00	7.50	77.40	
	163	e1	10.32	15.00	7.50	77.40	
	163	e2	10.32	15.00	7.50	77.40	
							309.60
163	163	e1	10.32	15.00	7.50	77.40	
2430.00	163	e2	10.32	15.00	7.50	77.40	
	164	e1	10.32	15.00	7.50	77.40	
	164	e2	10.32	15.00	7.50	77.40	
							309.60
164	164	e1	10.32	15.00	7.50	77.40	
2445.00	164	e2	10.32	15.00	7.50	77.40	
	165	e1	10.32	15.00	7.50	77.40	
	165	e2	10.32	15.00	7.50	77.40	
							309.60
165	165	e1	10.32	15.00	7.50	77.40	
2460.00	165	e2	10.32	15.00	7.50	77.40	
	166	e2	10.32	15.00	7.50	77.40	
	166	e1	10.32	15.00	7.50	77.40	
							309.60
166	166	e2	10.32	15.00	7.50	77.40	
2475.00	166	e1	10.32	15.00	7.50	77.40	
	167	e2	10.32	15.00	7.50	77.40	
	167	e1	10.32	15.00	7.50	77.40	
							309.60
167	167	e2	10.32	15.00	7.50	77.40	
2490.00	167	e1	10.32	15.00	7.50	77.40	
	168	e2	10.32	15.00	7.50	77.40	
	168	e1	10.32	15.00	7.50	77.40	
							309.60
168	168	e2	10.32	15.00	7.50	77.40	
2505.00	168	e1	10.32	15.00	7.50	77.40	
	169	e2	10.32	15.00	7.50	77.40	
	169	e1	10.32	15.00	7.50	77.40	
							309.60
169	169	e2	10.32	15.00	7.50	77.40	
2520.00	169	e1	10.32	15.00	7.50	77.40	
	170	e2	10.32	15.00	7.50	77.40	
	170	e1	10.32	15.00	7.50	77.40	
							309.60
170	170	e2	10.32	15.00	7.50	77.40	
2535.00	170	e1	10.32	15.00	7.50	77.40	
	171	e2	10.32	15.00	7.50	77.40	
	171	e1	10.33	15.00	7.50	77.47	
							309.67
171	171	e2	10.32	15.00	7.50	77.40	
2550.00	171	e1	10.33	15.00	7.50	77.47	
	172	e2	10.32	15.00	7.50	77.40	
	172	e1	10.33	15.00	7.50	77.47	
							309.74
172	172	e2	10.32	15.00	7.50	77.40	
2565.00	172	e1	10.33	15.00	7.50	77.47	
	173	e2	10.32	15.00	7.50	77.40	
	173	e1	10.33	15.00	7.50	77.47	
						309.74	13307.75

	COMPUTO DI SUPERFICI		Foglio n. 214

FONDAZIONE

DALLA SEZ. DA PROG.	ALLA SEZ. A PROG.	SEZIONE	FIGURA	LUNGHEZZA	DISTANZA SEZIONI ml	DISTANZA DI CALCOLO ml	AREA PARZIALE mq	AREA TOTALE mq
						A RIPORTARE mq	309.74	13307.75
								309.74
173	174	173	e2	10.32	15.00	7.50	77.40	
2580.00	2595.00	173	e1	10.33	15.00	7.50	77.47	
		174	e2	10.31	15.00	7.50	77.33	
		174	e1	10.38	15.00	7.50	77.85	
								310.05
174	175	174	e2	10.31	15.00	7.50	77.33	
2595.00	2610.00	174	e1	10.38	15.00	7.50	77.85	
		175	e2	10.31	15.00	7.50	77.33	
		175	e1	10.51	15.00	7.50	78.83	
								311.34
175	176	175	e2	10.31	15.00	7.50	77.33	
2610.00	2625.00	175	e1	10.51	15.00	7.50	78.83	
		176	e2	10.31	15.00	7.50	77.33	
		176	e1	10.65	15.00	7.50	79.88	
								313.37
176	177	176	e2	10.31	15.00	7.50	77.33	
2625.00	2640.00	176	e1	10.65	15.00	7.50	79.88	
		177	e1	10.77	15.00	7.50	80.77	
		177	e2	10.31	15.00	7.50	77.33	
								315.31
177	178	177	e1	10.77	15.00	7.50	80.77	
2640.00	2655.00	177	e2	10.31	15.00	7.50	77.33	
		178	e2	10.30	15.00	7.50	77.25	
		178	e1	10.90	15.00	7.50	81.75	
								317.10
178	179	178	e2	10.30	15.00	7.50	77.25	
2655.00	2670.00	178	e1	10.90	15.00	7.50	81.75	
		179	e2	10.30	15.00	7.50	77.25	
		179	e1	11.02	15.00	7.50	82.65	
								318.90
179	180	179	e2	10.30	15.00	7.50	77.25	
2670.00	2685.00	179	e1	11.02	15.00	7.50	82.65	
		180	e1	11.15	15.00	7.50	83.63	
		180	e2	10.30	15.00	7.50	77.25	
								320.78
180	181	180	e1	11.15	15.00	7.50	83.63	
2685.00	2700.00	180	e2	10.30	15.00	7.50	77.25	
		181	e2	10.29	15.00	7.50	77.17	
		181	e1	11.28	15.00	7.50	84.60	
								322.65
181	182	181	e2	10.29	15.00	7.50	77.17	
2700.00	2715.00	181	e1	11.28	15.00	7.50	84.60	
		182	e2	10.29	15.00	7.50	77.17	
		182	e1	11.37	15.00	7.50	85.27	
								324.21
182	183	182	e2	10.29	15.00	7.50	77.17	
2715.00	2730.00	182	e1	11.37	15.00	7.50	85.27	
		183	e2	10.29	15.00	7.50	77.17	
		183	e1	11.38	15.00	7.50	85.35	
								324.96
183	184	183	e2	10.29	15.00	7.50	77.17	
2730.00	2745.00	183	e1	11.38	15.00	7.50	85.35	
		184	e2	10.29	15.00	7.50	77.17	
		184	e1	11.37	15.00	7.50	85.27	
								324.96
184	185	184	e2	10.29	15.00	7.50	77.17	
2745.00	2760.00	184	e1	11.37	15.00	7.50	85.27	
		185	e2	10.29	15.00	7.50	77.17	
		185	e1	11.38	15.00	7.50	85.35	
								324.96
185	186	185	e2	10.29	15.00	7.50	77.17	
2760.00	2775.00	185	e1	11.38	15.00	7.50	85.35	
		186	e2	10.29	15.00	7.50	77.17	
		186	e1	11.38	15.00	7.50	85.35	
								325.04
186	187	186	e2	10.29	15.00	7.50	77.17	
2775.00	2790.00	186	e1	11.38	15.00	7.50	85.35	
		187	e2	10.29	15.00	7.50	77.17	
		187	e1	11.38	15.00	7.50	85.35	
								325.04
187	188	187	e2	10.29	15.00	7.50	77.17	
2790.00	2805.00	187	e1	11.38	15.00	7.50	85.35	
		188	e2	10.30	15.00	7.50	77.25	
		188	e1	11.13	15.00	7.50	83.48	
								323.25
188	189	188	e2	10.30	15.00	7.50	77.25	
2805.00	2820.00	188	e1	11.13	15.00	7.50	83.48	
		189	e2	10.30	15.00	7.50	77.25	
		189	e1	10.86	15.00	7.50	81.45	
								319.43
189	190	189	e2	10.30	15.00	7.50	77.25	
2820.00	2835.00	189	e1	10.86	15.00	7.50	81.45	
		190	e2	10.31	15.00	7.50	77.33	
		190	e1	10.61	15.00	7.50	79.57	
								315.60
190	191	190	e2	10.31	15.00	7.50	77.33	
2835.00	2850.00	190	e1	10.61	15.00	7.50	79.57	
		191	e2	10.32	15.00	7.50	77.40	
		191	e1	10.35	15.00	7.50	77.63	
								311.93
191	192	191	e2	10.32	15.00	7.50	77.40	
2850.00	2865.00	191	e1	10.35	15.00	7.50	77.63	
		192	e1	10.34	15.00	7.50	77.55	
		192	e2	10.32	15.00	7.50	77.40	
								309.98
192	193	192	e1	10.34	15.00	7.50	77.55	
2865.00	2880.00	192	e2	10.32	15.00	7.50	77.40	
		193	e1	10.40	15.00	7.50	78.00	
		193	e2	10.33	15.00	7.50	77.47	
								310.42
193	194	193	e1	10.40	15.00	7.50	78.00	
2880.00	2895.00	193	e2	10.33	15.00	7.50	77.47	
		194	e1	10.47	15.00	7.50	78.53	
							234.00	19677.03

	COMPUTO DI SUPERFICI		Foglio n. 215

FONDAZIONE

DALLA SEZ. DA PROG.	ALLA SEZ. A PROG.	SEZIONE	FIGURA	LUNGHEZZA	DISTANZA SEZIONI ml	DISTANZA DI CALCOLO ml	AREA PARZIALE mq	AREA TOTALE mq
						A RIPORTARE mq	234.00	19677.03
		194	e2	10.34	15.00	7.50	77.55	
								311.55
194	195	194	e1	10.47	15.00	7.50	78.53	
2895.00	2910.00	194	e2	10.34	15.00	7.50	77.55	
		195	e2	10.36	15.00	7.50	77.70	
		195	e1	10.54	15.00	7.50	79.05	
								312.83
195	196	195	e2	10.36	15.00	7.50	77.70	
2910.00	2925.00	195	e1	10.54	15.00	7.50	79.05	
		196	e1	10.37	15.00	7.50	77.77	
		196	e2	10.57	15.00	7.50	79.28	
								313.80
196	197	196	e1	10.37	15.00	7.50	77.77	
2925.00	2940.00	196	e2	10.57	15.00	7.50	79.28	
		197	e1	10.57	15.00	7.50	79.28	
		197	e2	10.37	15.00	7.50	77.77	
								314.10
197	198	197	e1	10.57	15.00	7.50	79.28	
2940.00	2955.00	197	e2	10.37	15.00	7.50	77.77	
		198	e1	10.37	15.00	7.50	77.77	
		198	e2	10.54	15.00	7.50	79.05	
								313.87
198	199	198	e1	10.37	15.00	7.50	77.77	
2955.00	2970.00	198	e2	10.54	15.00	7.50	79.05	
		199	e1	10.52	15.00	7.50	78.90	
		199	e2	10.37	15.00	7.50	77.77	
								313.49
199	200	199	e1	10.52	15.00	7.50	78.90	
2970.00	2985.00	199	e2	10.37	15.00	7.50	77.77	
		200	e1	10.50	15.00	7.50	78.75	
		200	e2	10.37	15.00	7.50	77.77	
								313.19
200	201	200	e1	10.50	15.00	7.50	78.75	
2985.00	3000.00	200	e2	10.37	15.00	7.50	77.77	
		201	e1	10.48	15.00	7.50	78.60	
		201	e2	10.37	15.00	7.50	77.77	
								312.89
201	201b	201	e1	10.48	5.94	2.97	31.13	
3000.00	3005.94	201	e2	10.37	5.94	2.97	30.80	
		201b	e1	10.48	5.94	2.97	31.13	
		201b	e2	10.37	5.94	2.97	30.80	
								123.86

Il Direttore dei Lavori	L'Impresa	TOTALE ARTICOLO	22306.61

	COMPUTO DI SUPERFICI		Foglio n. 216

SCOTICO

DALLA SEZ. DA PROG.	ALLA SEZ. A PROG.	SEZIONE	FIGURA	LUNGHEZZA	DISTANZA SEZIONI ml	DISTANZA DI CALCOLO ml	AREA PARZIALE mq	AREA TOTALE mq
131	132	132	sc1	43.69	15.00	7.50	327.67	
								327.67
132	133	132	sc1	43.69	15.00	7.50	327.67	
1965.00	1980.00	133	sc1	41.73	15.00	7.50	312.97	
								640.64
133	134	133	sc1	41.73	15.00	7.50	312.97	
1980.00	1995.00	134	sc1	41.29	15.00	7.50	309.68	
								622.65
134	135	134	sc1	41.29	15.00	7.50	309.68	
1995.00	2010.00	135	sc1	40.10	15.00	7.50	300.75	
								610.43
135	136	135	sc1	40.10	15.00	7.50	300.75	
2010.00	2025.00	136	sc1	37.99	15.00	7.50	284.93	
								585.68
136	137	136	sc1	37.99	15.00	7.50	284.93	
2025.00	2040.00	137	sc1	35.93	15.00	7.50	269.48	
								554.41
137	138	137	sc1	35.93	15.00	7.50	269.48	
2040.00	2055.00	138	sc1	33.14	15.00	7.50	248.55	
								518.03
138	139	138	sc1	33.14	15.00	7.50	248.55	
2055.00	2070.00	139	sc1	31.18	15.00	7.50	233.85	
								482.40
139	140	139	sc1	31.18	15.00	7.50	233.85	
2070.00	2085.00	140	sc1	28.94	15.00	7.50	217.05	
								450.90
140	141	140	sc1	28.94	15.00	7.50	217.05	
2085.00	2100.00	141	sc2	2.64	15.00	7.50	19.80	
		141	sc1	21.50	15.00	7.50	161.25	
								398.10
141	142	141	sc2	2.64	15.00	7.50	19.80	
2100.00	2115.00	141	sc1	21.50	15.00	7.50	161.25	
		142	sc2	1.42	15.00	7.50	10.65	
		142	sc1	26.73	15.00	7.50	200.47	
								392.17
142	143	142	sc2	1.42	15.00	7.50	10.65	
2115.00	2130.00	142	sc1	26.73	15.00	7.50	200.47	
		143	sc1	20.02	15.00	7.50	150.15	
								361.27
143	144	143	sc1	20.02	15.00	7.50	150.15	
2130.00	2145.00	144	sc1	1.44	15.00	7.50	10.80	
		144	sc2	4.07	15.00	7.50	30.53	
								191.48
144	145	144	sc1	1.44	15.00	7.50	10.80	
2145.00	2160.00	144	sc2	4.07	15.00	7.50	30.53	
		145	sc1	1.39	15.00	7.50	10.42	
								51.75
145	146	145	sc1	1.39	15.00	7.50	10.42	
								10.42
151	152	152	sc2	1.33	15.00	7.50	9.98	
2250.00	2265.00	152	sc1	1.35	15.00	7.50	10.13	
								20.11
152	153	152	sc2	1.33	15.00	7.50	9.98	
2265.00	2280.00	152	sc1	1.35	15.00	7.50	10.13	
								20.11
153	154	154	sc1	9.08	15.00	7.50	68.10	
								68.10
154	155	154	sc1	9.08	15.00	7.50	68.10	
2295.00	2310.00	155	sc1	17.58	15.00	7.50	131.85	
								199.95
155	156	155	sc1	17.58	15.00	7.50	131.85	
2310.00	2325.00	156	sc1	20.77	15.00	7.50	155.78	
								287.63
156	157	156	sc1	20.77	15.00	7.50	155.78	
2325.00	2340.00	157	sc1	21.59	15.00	7.50	161.93	
								317.71
157	158	157	sc1	21.59	15.00	7.50	161.93	
2340.00	2355.00	158	sc2	1.36	15.00	7.50	10.20	
		158	sc1	25.00	15.00	7.50	187.50	
								359.63
158	159	158	sc2	1.36	15.00	7.50	10.20	
2355.00	2370.00	158	sc1	25.00	15.00	7.50	187.50	
		159	sc1	27.36	15.00	7.50	205.20	
								402.90
159	160	159	sc1	27.36	15.00	7.50	205.20	
2370.00	2385.00	160	sc1	27.45	15.00	7.50	205.88	
								411.08
160	161	160	sc1	27.45	15.00	7.50	205.88	
2385.00	2400.00	161	sc1	2.00	15.00	7.50	15.00	
		161	sc2	19.68	15.00	7.50	147.60	
								368.48
161	162	161	sc1	2.00	15.00	7.50	15.00	
2400.00	2415.00	161	sc2	19.68	15.00	7.50	147.60	
		162	sc1	27.73	15.00	7.50	207.97	
								370.57
162	163	162	sc1	27.73	15.00	7.50	207.97	
2415.00	2430.00	163	sc1	27.37	15.00	7.50	205.28	
								413.25
163	164	163	sc1	27.37	15.00	7.50	205.28	
2430.00	2445.00	164	sc1	27.56	15.00	7.50	206.70	
								411.98
164	165	164	sc1	27.56	15.00	7.50	206.70	
2445.00	2460.00	165	sc1	27.69	15.00	7.50	207.68	
								414.38
165	166	165	sc1	27.69	15.00	7.50	207.68	
2460.00	2475.00	166	sc1	27.93	15.00	7.50	209.47	
								417.15
166	167	166	sc1	27.93	15.00	7.50	209.47	
2475.00	2490.00	167	sc1	28.45	15.00	7.50	213.38	
								422.85
167	168	167	sc1	28.45	15.00	7.50	213.38	
2490.00	2505.00	168	sc1	28.74	15.00	7.50	215.55	
								428.93
168	169	168	sc1	28.74	15.00	7.50	215.55	
2505.00	2520.00	169	sc1	28.64	15.00	7.50	214.80	
								430.35
								11963.16

	COMPUTO DI SUPERFICI		Foglio n. 217

SCOTICO

DALLA SEZ. DA PROG.	ALLA SEZ. A PROG.	SEZIONE	FIGURA	LUNGHEZZA	DISTANZA SEZIONI ml	DISTANZA DI CALCOLO ml	AREA PARZIALE mq	AREA TOTALE mq
						A RIPORTARE mq		11963.16
169	170	169	sc1	28.64	15.00	7.50	214.80	
2520.00	2535.00	170	sc1	11.35	15.00	7.50	85.13	
								299.93
170	171	170	sc1	11.35	15.00	7.50	85.13	
2535.00	2550.00	171	sc1	11.65	15.00	7.50	87.38	
								172.51
171	172	171	sc1	11.65	15.00	7.50	87.38	
2550.00	2565.00	172	sc1	12.41	15.00	7.50	93.08	
								180.46
172	173	172	sc1	12.41	15.00	7.50	93.08	
2565.00	2580.00	173	sc1	24.28	15.00	7.50	182.10	
								275.18
173	174	173	sc1	24.28	15.00	7.50	182.10	
2580.00	2595.00	174	sc1	29.34	15.00	7.50	220.05	
								402.15
174	175	174	sc1	29.34	15.00	7.50	220.05	
2595.00	2610.00	175	sc1	29.89	15.00	7.50	224.18	
								444.23
175	176	175	sc1	29.89	15.00	7.50	224.18	
2610.00	2625.00	176	sc1	30.69	15.00	7.50	230.18	
								454.36
176	177	176	sc1	30.69	15.00	7.50	230.18	
2625.00	2640.00	177	sc1	17.20	15.00	7.50	129.00	
								359.18
177	178	177	sc1	17.20	15.00	7.50	129.00	
2640.00	2655.00	178	sc1	31.04	15.00	7.50	232.80	
								361.80
178	179	178	sc1	31.04	15.00	7.50	232.80	
2655.00	2670.00	179	sc1	17.61	15.00	7.50	132.07	
								364.87
179	180	179	sc1	17.61	15.00	7.50	132.07	
2670.00	2685.00	180	sc1	9.74	15.00	7.50	73.05	
		180	sc2	10.12	15.00	7.50	75.90	
		180	sc3	9.55	15.00	7.50	71.63	
								352.65
180	181	180	sc1	9.74	15.00	7.50	73.05	
2685.00	2700.00	180	sc2	10.12	15.00	7.50	75.90	
		180	sc3	9.55	15.00	7.50	71.63	
		181	sc1	22.65	15.00	7.50	169.88	
								390.46
181	182	181	sc1	22.65	15.00	7.50	169.88	
2700.00	2715.00	182	sc1	22.71	15.00	7.50	170.33	
								340.21
182	183	182	sc1	22.71	15.00	7.50	170.33	
2715.00	2730.00	183	sc1	23.64	15.00	7.50	177.30	
								347.63
183	184	183	sc1	23.64	15.00	7.50	177.30	
2730.00	2745.00	184	sc1	30.03	15.00	7.50	225.23	
								402.53
184	185	184	sc1	30.03	15.00	7.50	225.23	
2745.00	2760.00	185	sc1	32.92	15.00	7.50	246.90	
								472.13
185	186	185	sc1	32.92	15.00	7.50	246.90	
2760.00	2775.00	186	sc1	25.88	15.00	7.50	194.10	
								441.00
186	187	186	sc1	25.88	15.00	7.50	194.10	
2775.00	2790.00	187	sc1	23.60	15.00	7.50	177.00	
								371.10
187	188	187	sc1	23.60	15.00	7.50	177.00	
2790.00	2805.00	188	sc1	23.11	15.00	7.50	173.32	
								350.32
188	189	188	sc1	23.11	15.00	7.50	173.32	
2805.00	2820.00	189	sc1	22.08	15.00	7.50	165.60	
								338.92
189	190	189	sc1	22.08	15.00	7.50	165.60	
2820.00	2835.00	190	sc1	26.76	15.00	7.50	200.70	
								366.30
190	191	190	sc1	26.76	15.00	7.50	200.70	
2835.00	2850.00	191	sc1	26.95	15.00	7.50	202.13	
								402.83
191	192	191	sc1	26.95	15.00	7.50	202.13	
2850.00	2865.00	192	sc1	7.49	15.00	7.50	56.18	
								258.31
192	193	192	sc1	7.49	15.00	7.50	56.18	
2865.00	2880.00	193	sc1	7.95	15.00	7.50	59.63	
								115.81
193	194	193	sc1	7.95	15.00	7.50	59.63	
2880.00	2895.00	194	sc1	11.96	15.00	7.50	89.70	
								149.33
194	195	194	sc1	11.96	15.00	7.50	89.70	
2895.00	2910.00	195	sc1	33.84	15.00	7.50	253.80	
								343.50
195	196	195	sc1	33.84	15.00	7.50	253.80	
2910.00	2925.00	196	sc1	31.30	15.00	7.50	234.75	
								488.55
196	197	196	sc1	31.30	15.00	7.50	234.75	
2925.00	2940.00	197	sc1	4.39	15.00	7.50	32.92	
								267.67
197	198	197	sc1	4.39	15.00	7.50	32.92	
2940.00	2955.00	198	sc1	18.89	15.00	7.50	141.68	
								174.60
198	199	198	sc1	18.89	15.00	7.50	141.68	
2955.00	2970.00	199	sc1	25.90	15.00	7.50	194.25	
								335.93
199	200	199	sc1	25.90	15.00	7.50	194.25	
2970.00	2985.00	200	sc1	24.64	15.00	7.50	184.80	
								379.05
200	201	200	sc1	24.64	15.00	7.50	184.80	
2985.00	3000.00	201	sc1	26.90	15.00	7.50	201.75	
								386.55
201	201b	201	sc1	26.90	5.94	2.97	79.89	
3000.00	3005.94	201b	sc1	26.90	5.94	2.97	79.89	
								159.78

Il Direttore dei Lavori	L'Impresa	TOTALE ARTICOLO	22912.99

	COMPUTO DI SUPERFICI		Foglio n. 218

SPARTITRAFFICO

DALLA SEZ. DA PROG.	ALLA SEZ. A PROG.	SEZIONE	FIGURA	LUNGHEZZA	DISTANZA SEZIONI ml	DISTANZA DI CALCOLO ml	AREA PARZIALE mq	AREA TOTALE mq
131	132	132	st1	2.50	15.00	7.50	18.75	
								18.75
132	133	132	st1	2.50	15.00	7.50	18.75	
1965.00	1980.00	133	st1	2.50	15.00	7.50	18.75	
								37.50
133	134	133	st1	2.50	15.00	7.50	18.75	
1980.00	1995.00	134	st1	2.50	15.00	7.50	18.75	
								37.50
134	135	134	st1	2.50	15.00	7.50	18.75	
1995.00	2010.00	135	st1	2.50	15.00	7.50	18.75	
								37.50
135	136	135	st1	2.50	15.00	7.50	18.75	
2010.00	2025.00	136	st1	2.50	15.00	7.50	18.75	
								37.50
136	137	136	st1	2.50	15.00	7.50	18.75	
2025.00	2040.00	137	st1	2.50	15.00	7.50	18.75	
								37.50
137	138	137	st1	2.50	15.00	7.50	18.75	
2040.00	2055.00	138	st1	2.50	15.00	7.50	18.75	
								37.50
138	139	138	st1	2.50	15.00	7.50	18.75	
2055.00	2070.00	139	st1	2.50	15.00	7.50	18.75	
								37.50
139	140	139	st1	2.50	15.00	7.50	18.75	
2070.00	2085.00	140	st1	2.50	15.00	7.50	18.75	
								37.50
140	141	140	st1	2.50	15.00	7.50	18.75	
2085.00	2100.00	141	st1	2.50	15.00	7.50	18.75	
								37.50
141	142	141	st1	2.50	15.00	7.50	18.75	
2100.00	2115.00	142	st1	2.50	15.00	7.50	18.75	
								37.50
142	143	142	st1	2.50	15.00	7.50	18.75	
2115.00	2130.00	143	st1	2.50	15.00	7.50	18.75	
								37.50
143	144	143	st1	2.50	15.00	7.50	18.75	
2130.00	2145.00	144	st1	2.50	15.00	7.50	18.75	
								37.50
144	145	144	st1	2.50	15.00	7.50	18.75	
2145.00	2160.00	145	st1	2.50	15.00	7.50	18.75	
								37.50
145	146	145	st1	2.50	15.00	7.50	18.75	
2160.00	2175.00	146	st1	2.50	15.00	7.50	18.75	
								37.50
146	147	146	st1	2.50	15.00	7.50	18.75	
2175.00	2190.00	147	st1	2.50	15.00	7.50	18.75	
								37.50
147	148	147	st1	2.50	15.00	7.50	18.75	
2190.00	2205.00	148	st1	2.50	15.00	7.50	18.75	
								37.50
148	149	148	st1	2.50	15.00	7.50	18.75	
2205.00	2220.00	149	st1	2.50	15.00	7.50	18.75	
								37.50
149	150	149	st1	2.50	15.00	7.50	18.75	
2220.00	2235.00	150	st1	2.50	15.00	7.50	18.75	
								37.50
150	151	150	st1	2.50	15.00	7.50	18.75	
2235.00	2250.00	151	st1	2.50	15.00	7.50	18.75	
								37.50
151	152	151	st1	2.50	15.00	7.50	18.75	
2250.00	2265.00	152	st1	2.50	15.00	7.50	18.75	
								37.50
152	153	152	st1	2.50	15.00	7.50	18.75	
2265.00	2280.00	153	st1	2.50	15.00	7.50	18.75	
								37.50
153	154	153	st1	2.50	15.00	7.50	18.75	
2280.00	2295.00	154	st1	2.50	15.00	7.50	18.75	
								37.50
154	155	154	st1	2.50	15.00	7.50	18.75	
2295.00	2310.00	155	st1	2.50	15.00	7.50	18.75	
								37.50
155	156	155	st1	2.50	15.00	7.50	18.75	
2310.00	2325.00	156	st1	2.50	15.00	7.50	18.75	
								37.50
156	157	156	st1	2.50	15.00	7.50	18.75	
2325.00	2340.00	157	st1	2.50	15.00	7.50	18.75	
								37.50
157	158	157	st1	2.50	15.00	7.50	18.75	
2340.00	2355.00	158	st1	2.50	15.00	7.50	18.75	
								37.50
158	159	158	st1	2.50	15.00	7.50	18.75	
2355.00	2370.00	159	st1	2.50	15.00	7.50	18.75	
								37.50
159	160	159	st1	2.50	15.00	7.50	18.75	
2370.00	2385.00	160	st1	2.50	15.00	7.50	18.75	
								37.50
160	161	160	st1	2.50	15.00	7.50	18.75	
2385.00	2400.00	161	st1	2.50	15.00	7.50	18.75	
								37.50
161	162	161	st1	2.50	15.00	7.50	18.75	
2400.00	2415.00	162	st1	2.50	15.00	7.50	18.75	
								37.50
162	163	162	st1	2.50	15.00	7.50	18.75	
2415.00	2430.00	163	st1	2.50	15.00	7.50	18.75	
								37.50
163	164	163	st1	2.50	15.00	7.50	18.75	
2430.00	2445.00	164	st1	2.50	15.00	7.50	18.75	
								37.50
164	165	164	st1	2.50	15.00	7.50	18.75	
2445.00	2460.00	165	st1	2.50	15.00	7.50	18.75	
								37.50
165	166	165	st1	2.50	15.00	7.50	18.75	
2460.00	2475.00	166	st1	2.50	15.00	7.50	18.75	
								37.50
166	167	166	st1	2.50	15.00	7.50	18.75	
2475.00	2490.00	167	st1	2.50	15.00	7.50	18.75	
							37.50	1331.25

	COMPUTO DI SUPERFICI		Foglio n. 219

SPARTITRAFFICO

DALLA SEZ. DA PROG.	ALLA SEZ. A PROG.	SEZIONE	FIGURA	LUNGHEZZA	DISTANZA SEZIONI ml	DISTANZA DI CALCOLO ml	AREA PARZIALE mq	AREA TOTALE mq
						A RIPORTARE mq	37.50	1331.25
								37.50
167	168	167	st1	2.50	15.00	7.50	18.75	
2490.00	2505.00	168	st1	2.50	15.00	7.50	18.75	
								37.50
168	169	168	st1	2.50	15.00	7.50	18.75	
2505.00	2520.00	169	st1	2.50	15.00	7.50	18.75	
								37.50
169	170	169	st1	2.50	15.00	7.50	18.75	
2520.00	2535.00	170	st1	2.50	15.00	7.50	18.75	
								37.50
170	171	170	st1	2.50	15.00	7.50	18.75	
2535.00	2550.00	171	st1	2.50	15.00	7.50	18.75	
								37.50
171	172	171	st1	2.50	15.00	7.50	18.75	
2550.00	2565.00	172	st1	2.50	15.00	7.50	18.75	
								37.50
172	173	172	st1	2.50	15.00	7.50	18.75	
2565.00	2580.00	173	st1	2.50	15.00	7.50	18.75	
								37.50
173	174	173	st1	2.50	15.00	7.50	18.75	
2580.00	2595.00	174	st1	2.50	15.00	7.50	18.75	
								37.50
174	175	174	st1	2.50	15.00	7.50	18.75	
2595.00	2610.00	175	st1	2.50	15.00	7.50	18.75	
								37.50
175	176	175	st1	2.50	15.00	7.50	18.75	
2610.00	2625.00	176	st1	2.50	15.00	7.50	18.75	
								37.50
176	177	176	st1	2.50	15.00	7.50	18.75	
2625.00	2640.00	177	st1	2.50	15.00	7.50	18.75	
								37.50
177	178	177	st1	2.50	15.00	7.50	18.75	
2640.00	2655.00	178	st1	2.50	15.00	7.50	18.75	
								37.50
178	179	178	st1	2.50	15.00	7.50	18.75	
2655.00	2670.00	179	st1	2.50	15.00	7.50	18.75	
								37.50
179	180	179	st1	2.50	15.00	7.50	18.75	
2670.00	2685.00	180	st1	2.50	15.00	7.50	18.75	
								37.50
180	181	180	st1	2.50	15.00	7.50	18.75	
2685.00	2700.00	181	st1	2.50	15.00	7.50	18.75	
								37.50
181	182	181	st1	2.50	15.00	7.50	18.75	
2700.00	2715.00	182	st1	2.50	15.00	7.50	18.75	
								37.50
182	183	182	st1	2.50	15.00	7.50	18.75	
2715.00	2730.00	183	st1	2.50	15.00	7.50	18.75	
								37.50
183	184	183	st1	2.50	15.00	7.50	18.75	
2730.00	2745.00	184	st1	2.50	15.00	7.50	18.75	
								37.50
184	185	184	st1	2.50	15.00	7.50	18.75	
2745.00	2760.00	185	st1	2.50	15.00	7.50	18.75	
								37.50
185	186	185	st1	2.50	15.00	7.50	18.75	
2760.00	2775.00	186	st1	2.50	15.00	7.50	18.75	
								37.50
186	187	186	st1	2.50	15.00	7.50	18.75	
2775.00	2790.00	187	st1	2.50	15.00	7.50	18.75	
								37.50
187	188	187	st1	2.50	15.00	7.50	18.75	
2790.00	2805.00	188	st1	2.50	15.00	7.50	18.75	
								37.50
188	189	188	st1	2.50	15.00	7.50	18.75	
2805.00	2820.00	189	st1	2.50	15.00	7.50	18.75	
								37.50
189	190	189	st1	2.50	15.00	7.50	18.75	
2820.00	2835.00	190	st1	2.50	15.00	7.50	18.75	
								37.50
190	191	190	st1	2.50	15.00	7.50	18.75	
2835.00	2850.00	191	st1	2.50	15.00	7.50	18.75	
								37.50
191	192	191	st1	2.50	15.00	7.50	18.75	
2850.00	2865.00	192	st1	2.50	15.00	7.50	18.75	
								37.50
192	193	192	st1	2.50	15.00	7.50	18.75	
2865.00	2880.00	193	st1	2.50	15.00	7.50	18.75	
								37.50
193	194	193	st1	2.50	15.00	7.50	18.75	
2880.00	2895.00	194	st1	2.50	15.00	7.50	18.75	
								37.50
194	195	194	st1	2.50	15.00	7.50	18.75	
2895.00	2910.00	195	st1	2.50	15.00	7.50	18.75	
								37.50
195	196	195	st1	2.50	15.00	7.50	18.75	
2910.00	2925.00	196	st1	2.50	15.00	7.50	18.75	
								37.50
196	197	196	st1	2.50	15.00	7.50	18.75	
2925.00	2940.00	197	st1	2.50	15.00	7.50	18.75	
								37.50
197	198	197	st1	2.50	15.00	7.50	18.75	
2940.00	2955.00	198	st1	2.50	15.00	7.50	18.75	
								37.50
198	199	198	st1	2.50	15.00	7.50	18.75	
2955.00	2970.00	199	st1	2.50	15.00	7.50	18.75	
								37.50
199	200	199	st1	2.50	15.00	7.50	18.75	
2970.00	2985.00	200	st1	2.50	15.00	7.50	18.75	
								37.50
200	201	200	st1	2.50	15.00	7.50	18.75	
2985.00	3000.00	201	st1	2.50	15.00	7.50	18.75	
								37.50
201	201b	201	st1	2.50	5.94	2.97	7.43	
							7.43	2606.25

	COMPUTO DI SUPERFICI		Foglio n. 220

SPARTITRAFFICO

DALLA SEZ. DA PROG.	ALLA SEZ. A PROG.	SEZIONE	FIGURA	LUNGHEZZA	DISTANZA SEZIONI ml	DISTANZA DI CALCOLO ml	AREA PARZIALE mq	AREA TOTALE mq
						A RIPORTARE mq	7.43	2606.25
3000.00	3005.94	201b	st1	2.50	5.94	2.97	7.43	14.86

Il Direttore dei Lavori	L'Impresa	TOTALE ARTICOLO	2621.11

	COMPUTO DEI VOLUMI		Foglio n. 221

Volume dalla sezione 130 alla sezione 201b

ARTICOLO			VOLUME
A	RILEVATO	mc	66385.594
B	STERRO	mc	4757.879
BO	BONIFICA	mc	21380.907
RI	RIPORTO	mc	315.736
SP	SPIANAMENTO	mc	17277.600
a	USURA	mq	21191.19
b	VEGETALE	mq	10820.72
c	BINDER	mq	21520.07
d	BASE	mq	21318.47
e	FONDAZIONE	mq	22306.61
sc	SCOTICO	mq	22912.99
st	SPARTITRAFFICO	mq	2621.11

SCATOLARE

		CALCOLO DELLE AREE		Foglio n. 1
RILEVATO				
N. SEZIONE PROG.	FIG.	ELEMENTI DI CALCOLO	AREA ELEMENTARE mq	AREA FIGURA mq	NOTE
84	A1	(13.25-12.37)x(3.00+2.41)/2	2.38		
1245.00		(17.70-13.25)x(3.00+3.00)/2	13.35		
		(17.64-17.70)x(2.19+2.17)/2	-0.13		
		(17.63-17.64)x(2.16+2.19)/2	-0.02		
		(17.60-17.63)x(2.18+2.16)/2	-0.07		
		(17.47-17.60)x(2.19+2.18)/2	-0.28		
		(17.09-17.47)x(2.18+2.19)/2	-0.83		
		(16.58-17.09)x(2.18+2.18)/2	-1.11		
		(16.00-16.58)x(2.21+2.18)/2	-1.27		
		(15.63-16.00)x(2.23+2.21)/2	-0.82		
		(14.90-15.63)x(2.26+2.23)/2	-1.64		
		(13.85-14.90)x(2.32+2.26)/2	-2.40		
		(13.80-13.85)x(2.32+2.32)/2	-0.12		
		(13.72-13.80)x(2.33+2.32)/2	-0.19		
		(12.70-13.72)x(2.39+2.33)/2	-2.41		
		(12.37-12.70)x(2.41+2.39)/2	-0.79		
				3.65	
85	A1	(13.25-12.54)x(3.00+2.53)/2	1.96		
1260.00		(20.07-13.25)x(3.00+3.00)/2	20.46		
		(22.28-20.07)x(1.53+3.00)/2	5.01		
		(20.43-22.28)x(1.53+1.53)/2	-2.83		
		(15.34-20.43)x(2.03+2.03)/2	-10.33		
		(12.54-15.34)x(2.53+2.53)/2	-7.08		
				7.19	
85	A2	(23.03-22.35)x(1.03+1.48)/2	0.85		
1260.00		(22.35-23.03)x(1.03+1.03)/2	-0.70		
				0.15	
85	A3	(23.78-23.12)x(0.53+0.96)/2	0.49		
1260.00		(23.12-23.78)x(0.53+0.53)/2	-0.35		
				0.14	
86	A1	(13.25-12.04)x(3.00+2.20)/2	3.15		
1275.00		(19.69-13.25)x(3.00+3.00)/2	19.32		
		(24.31-19.69)x(-0.08+3.00)/2	6.75		
		(23.64-24.31)x(-0.08+-0.08)/2	0.05		
		(22.82-23.64)x(0.20+0.20)/2	-0.16		
		(22.07-22.82)x(0.70+0.70)/2	-0.52		
		(21.01-22.07)x(1.20+1.20)/2	-1.27		
		(12.04-21.01)x(1.70+1.70)/2	-15.25		
				12.07	
87	A1	(13.25-17.98)x(3.00+3.00)/2	-14.19		
1290.00		(12.89-13.25)x(2.76+3.00)/2	-1.04		
		(14.79-12.89)x(2.26+2.26)/2	4.29		
		(18.14-14.79)x(1.76+1.76)/2	5.90		
		(18.99-18.14)x(1.76+1.76)/2	1.50		
		(19.39-18.99)x(1.26+1.26)/2	0.50		
		(20.52-19.39)x(0.76+0.76)/2	0.86		
		(21.54-20.52)x(0.26+0.26)/2	0.27		
		(22.66-21.54)x(-0.12+-0.12)/2	-0.13		
		(17.98-22.66)x(3.00+-0.12)/2	-6.74		
				8.78	
88	A1	(13.25-17.13)x(3.00+3.00)/2	-11.64		
1305.00		(13.16-13.25)x(2.94+3.00)/2	-0.27		
		(14.09-13.16)x(2.44+2.44)/2	2.27		
		(16.10-14.09)x(1.94+1.94)/2	3.90		
		(17.77-16.10)x(1.44+1.44)/2	2.40		
		(19.00-17.77)x(0.94+0.94)/2	1.16		
		(19.33-19.00)x(0.94+0.94)/2	0.31		
		(19.37-19.33)x(0.94+0.94)/2	0.04		
		(20.36-19.37)x(0.44+0.44)/2	0.44		
		(21.31-20.36)x(-0.06+-0.06)/2	-0.06		
		(21.50-21.31)x(-0.06+-0.06)/2	-0.01		
		(17.13-21.50)x(3.00+0.09)/2	-6.75		
				8.21	
89	A1	(17.26-13.87)x(3.00+3.00)/2	10.17		
1320.00		(21.76-17.26)x(0.00+3.00)/2	6.75		
		(21.66-21.68)x(-0.09+-0.22)/2	0.00		
		(21.63-21.66)x(-0.02+-0.09)/2	0.00		
		(21.53-21.63)x(-0.03+-0.02)/2	0.00		
		(21.23-21.53)x(-0.08+-0.03)/2	0.02		
		(20.97-21.23)x(0.00+-0.08)/2	0.01		
		(18.03-19.47)x(0.50+0.50)/2	-0.72		
		(16.77-18.03)x(1.00+1.00)/2	-1.26		
		(15.59-16.77)x(1.50+1.50)/2	-1.77		
		(14.61-15.59)x(2.00+2.00)/2	-1.96		
		(13.87-14.61)x(2.50+2.50)/2	-1.85		
				9.39	
90	A1	(16.86-14.46)x(3.00+3.00)/2	7.20		
1335.00		(21.46-16.86)x(-0.07+3.00)/2	6.74		
		(21.14-21.46)x(-0.07+-0.07)/2	0.02		
		(18.80-20.05)x(0.50+0.50)/2	-0.63		
		(17.49-18.80)x(1.00+1.00)/2	-1.31		
		(16.11-17.49)x(1.50+1.50)/2	-2.07		
		(15.17-16.11)x(2.00+2.00)/2	-1.88		
		(14.46-15.17)x(2.50+2.50)/2	-1.77		
				6.30	
91	A1	(17.67-15.46)x(3.00+3.00)/2	6.63		
1350.00		(21.78-17.67)x(0.26+3.00)/2	6.70		
		(20.93-21.78)x(0.26+0.26)/2	-0.22		
		(19.99-20.93)x(0.52+0.52)/2	-0.49		
		(18.91-19.99)x(1.02+1.02)/2	-1.10		
		(17.58-18.91)x(1.52+1.52)/2	-2.02		
		(16.51-17.58)x(2.02+2.02)/2	-2.16		
		(15.46-16.51)x(2.52+2.52)/2	-2.65		
				4.69	
92	A1	(18.46-14.22)x(3.00+3.00)/2	12.72		
1365.00		(22.65-18.46)x(0.21+3.00)/2	6.72		
		(22.44-22.45)x(-0.20+-0.05)/2	0.00		
		(22.38-22.44)x(-0.01+-0.20)/2	0.01		
		(22.37-22.38)x(-0.00+-0.01)/2	0.00		
		(19.69-21.48)x(0.50+0.50)/2	-0.89		
		(18.20-19.69)x(1.00+1.00)/2	-1.49		
		(15.57-18.20)x(1.50+1.50)/2	-3.94		
		(14.75-15.57)x(2.00+2.00)/2	-1.64		
		(14.22-14.75)x(2.50+2.50)/2	-1.32		
				10.17	
93	A1	(14.09-18.52)x(3.00+3.00)/2	-13.29		
		A RIPORTARE mq	-13.29		

SCATOLARE

CALCOLO DELLE AREE	Foglio n. 2

RILEVATO

N. SEZIONE PROG.	FIG.	ELEMENTI DI CALCOLO	AREA ELEMENTARE mq	AREA FIGURA mq	NOTE
		RIPORTO mq	-13.29		
1380.00		(15.06-14.09)x(2.50+2.50)/2	2.43		
		(16.02-15.06)x(2.00+2.00)/2	1.92		
		(17.81-16.02)x(1.50+1.50)/2	2.68		
		(18.53-17.81)x(1.50+1.50)/2	1.08		
		(19.23-18.53)x(1.50+1.50)/2	1.05		
		(20.73-19.23)x(1.00+1.00)/2	1.50		
		(21.77-20.73)x(0.50+0.50)/2	0.52		
		(18.52-22.67)x(3.00+0.23)/2	-6.70		
				8.81	
94	A1	(18.71-13.48)x(3.00+3.00)/2	15.69		
1395.00		(22.94-18.71)x(0.18+3.00)/2	6.73		
		(22.87-22.88)x(-0.11+-0.01)/2	0.00		
		(22.86-22.87)x(-0.21+-0.11)/2	0.00		
		(22.83-22.86)x(-0.11+-0.21)/2	0.00		
		(22.82-22.83)x(-0.12+-0.11)/2	0.00		
		(22.80-22.82)x(-0.04+-0.12)/2	0.00		
		(22.79-22.80)x(-0.00+-0.04)/2	0.00		
		(21.11-21.98)x(0.50+0.50)/2	-0.44		
		(19.91-21.11)x(1.00+1.00)/2	-1.20		
		(15.90-19.91)x(1.50+1.50)/2	-6.01		
		(14.51-15.90)x(2.00+2.00)/2	-2.78		
		(13.48-14.51)x(2.50+2.50)/2	-2.57		
				9.42	
95	A1	(13.25-19.17)x(3.00+3.00)/2	-17.76		
1410.00		(13.05-13.25)x(2.87+3.00)/2	-0.59		
		(14.45-13.05)x(2.37+2.37)/2	3.32		
		(15.72-14.45)x(1.87+1.87)/2	2.37		
		(17.65-15.72)x(1.37+1.37)/2	2.64		
		(20.07-17.65)x(0.87+0.87)/2	2.11		
		(22.01-20.07)x(0.37+0.37)/2	0.72		
		(23.24-22.01)x(0.29+0.29)/2	0.36		
		(19.17-23.24)x(3.00+0.29)/2	-6.70		
				13.53	
96	A1	(13.25-19.45)x(3.00+3.00)/2	-18.60		
1425.00		(13.11-13.25)x(2.90+3.00)/2	-0.41		
		(14.53-13.11)x(2.40+2.40)/2	3.41		
		(15.58-14.53)x(1.90+1.90)/2	2.00		
		(16.67-15.58)x(1.40+1.40)/2	1.53		
		(20.09-16.67)x(0.90+0.90)/2	3.08		
		(22.03-20.09)x(0.40+0.40)/2	0.78		
		(23.11-22.03)x(0.40+0.40)/2	0.43		
		(23.33-23.11)x(0.40+0.40)/2	0.09		
		(19.45-23.33)x(3.00+0.41)/2	-6.62		
				14.31	
97	A1	(13.25-13.13)x(3.00+2.92)/2	0.36		
1440.00		(19.24-13.25)x(3.00+3.00)/2	17.97		
		(23.36-19.24)x(0.25+3.00)/2	6.70		
		(22.05-23.36)x(0.25+0.25)/2	-0.33		
		(20.30-22.05)x(0.42+0.42)/2	-0.73		
		(16.93-20.30)x(0.92+0.92)/2	-3.10		
		(15.55-16.93)x(1.42+1.42)/2	-1.96		
		(14.29-15.55)x(1.92+1.92)/2	-2.42		
		(13.13-14.29)x(2.42+2.42)/2	-2.81		
				13.68	
98	A1	(19.38-13.62)x(3.00+3.00)/2	17.28		
1455.00		(23.60-19.38)x(0.19+3.00)/2	6.73		
		(21.50-23.60)x(0.19+0.19)/2	-0.40		
		(19.56-21.50)x(0.50+0.50)/2	-0.97		
		(16.97-19.56)x(1.00+1.00)/2	-2.59		
		(15.79-16.97)x(1.50+1.50)/2	-1.77		
		(14.84-15.79)x(2.00+2.00)/2	-1.90		
		(13.62-14.84)x(2.50+2.50)/2	-3.05		
				13.33	
98bis	A1	(13.25-19.64)x(3.00+3.00)/2	-19.17		
1457.30		(14.48-13.25)x(2.49+2.49)/2	3.06		
		(15.64-14.48)x(1.99+1.99)/2	2.31		
		(17.04-15.64)x(1.49+1.49)/2	2.09		
		(19.80-17.04)x(0.99+0.99)/2	2.73		
		(21.82-19.80)x(0.49+0.49)/2	0.99		
		(23.74-21.82)x(0.26+0.26)/2	0.50		
		(19.64-23.74)x(3.00+0.26)/2	-6.68		
				14.17	
99	A1	(17.82-14.03)x(3.00+3.00)/2	11.37		
1470.00		(20.66-17.82)x(1.10+3.00)/2	5.82		
		(22.66-20.66)x(1.10+1.10)/2	2.20		
		(24.09-22.66)x(0.15+1.10)/2	0.89		
		(21.85-24.09)x(0.15+0.15)/2	-0.34		
		(19.50-21.85)x(0.50+0.50)/2	-1.18		
		(16.85-19.50)x(1.00+1.00)/2	-2.65		
		(15.95-16.85)x(1.50+1.50)/2	-1.35		
		(15.02-15.95)x(2.00+2.00)/2	-1.86		
		(14.03-15.02)x(2.50+2.50)/2	-2.48		
				10.42	
99bis	A1	(14.65-18.60)x(2.85+2.85)/2	-11.26		
1475.25		(15.52-14.65)x(2.35+2.35)/2	2.04		
		(16.31-15.52)x(1.85+1.85)/2	1.46		
		(17.25-16.31)x(1.35+1.35)/2	1.27		
		(21.04-17.25)x(0.85+0.85)/2	3.22		
		(22.93-21.04)x(0.35+0.35)/2	0.66		
		(24.60-22.93)x(0.18+0.18)/2	0.30		
		(23.18-24.60)x(1.13+0.18)/2	-0.93		
		(21.18-23.18)x(1.13+1.13)/2	-2.26		
		(18.60-21.18)x(2.85+1.13)/2	-5.13		
				10.63	
99b	A1	(17.82-14.03)x(3.00+3.00)/2	11.37		
1478.97		(20.66-17.82)x(1.10+3.00)/2	5.82		
		(22.66-20.66)x(1.10+1.10)/2	2.20		
		(24.09-22.66)x(0.15+1.10)/2	0.89		
		(21.85-24.09)x(0.15+0.15)/2	-0.34		
		(19.50-21.85)x(0.50+0.50)/2	-1.18		
		(16.85-19.50)x(1.00+1.00)/2	-2.65		
		(15.95-16.85)x(1.50+1.50)/2	-1.35		
		(15.02-15.95)x(2.00+2.00)/2	-1.86		
		(14.03-15.02)x(2.50+2.50)/2	-2.48		
		A RIPORTARE mq	10.42		

SCATOLARE

	CALCOLO DELLE AREE		Foglio n. 3

RILEVATO

N. SEZIONE PROG.	FIG.	ELEMENTI DI CALCOLO	AREA ELEMENTARE mq	AREA FIGURA mq	NOTE
		RIPORTO mq	10.42		
				10.42	

Il Direttore dei Lavori	L'Impresa	

SCATOLARE

		CALCOLO DELLE AREE		Foglio n. 4
STERRO				
N. SEZIONE PROG.	FIG.	ELEMENTI DI CALCOLO	AREA ELEMENTARE mq	AREA FIGURA mq	NOTE
76bis 1131.80	B1	(-14.17--14.47)x(3.82+3.81)/2	1.14		
		(-13.45--14.17)x(3.73+3.82)/2	2.72		
		(-13.07--13.45)x(3.71+3.73)/2	1.41		
		(-12.45--13.07)x(3.67+3.71)/2	2.29		
		(-11.97--12.45)x(3.64+3.67)/2	1.75		
		(-11.31--11.97)x(3.63+3.64)/2	2.40		
		(-11.13--11.31)x(3.63+3.63)/2	0.65		
		(-11.08--11.13)x(3.63+3.63)/2	0.18		
		(-11.07--11.08)x(3.63+3.63)/2	0.04		
		(-11.02--11.07)x(3.64+3.63)/2	0.18		
		(-11.01--11.02)x(3.72+3.64)/2	0.04		
		(-10.98--11.01)x(3.83+3.72)/2	0.11		
		(-10.97--10.98)x(3.63+3.79)/2	0.04		
		(-10.95--10.97)x(3.62+3.63)/2	0.07		
		(-10.89--10.95)x(3.63+3.62)/2	0.22		
		(-10.73--10.89)x(3.63+3.63)/2	0.58		
		(-10.67--10.73)x(3.63+3.63)/2	0.22		
		(-10.51--10.67)x(3.63+3.63)/2	0.58		
		(-9.78--10.51)x(3.64+3.63)/2	2.65		
		(-9.55--9.78)x(3.64+3.64)/2	0.84		
		(-8.69--9.55)x(3.66+3.64)/2	3.14		
		(-8.16--8.69)x(3.66+3.66)/2	1.94		
		(-7.59--8.16)x(3.66+3.66)/2	2.09		
		(-6.65--7.59)x(3.70+3.66)/2	3.46		
		(-6.49--6.65)x(3.70+3.70)/2	0.59		
		(-6.19--6.49)x(3.71+3.70)/2	1.11		
		(-6.15--6.19)x(3.71+3.71)/2	0.15		
		(-6.11--6.15)x(3.71+3.71)/2	0.15		
		(-6.10--6.11)x(3.86+3.79)/2	0.04		
		(-6.09--6.10)x(3.85+3.86)/2	0.04		
		(-6.07--6.09)x(3.75+3.85)/2	0.08		
		(-6.03--6.07)x(3.72+3.75)/2	0.15		
		(-5.94--6.03)x(3.73+3.72)/2	0.34		
		(-5.86--5.94)x(3.73+3.73)/2	0.30		
		(-5.60--5.86)x(3.77+3.73)/2	0.98		
		(-5.40--5.60)x(3.79+3.77)/2	0.76		
		(-4.63--5.40)x(3.86+3.79)/2	2.95		
		(-4.30--4.63)x(3.89+3.86)/2	1.28		
		(-3.76--4.30)x(3.92+3.89)/2	2.11		
		(-3.20--3.76)x(3.95+3.92)/2	2.20		
		(-2.56--3.20)x(3.98+3.95)/2	2.54		
		(-2.37--2.56)x(3.99+3.98)/2	0.76		
		(-2.33--2.37)x(3.98+3.99)/2	0.16		
		(-2.32--2.33)x(3.98+3.98)/2	0.04		
		(-2.31--2.32)x(3.91+3.98)/2	0.04		
		(-2.30--2.31)x(4.15+3.91)/2	0.04		
		(-2.29--2.30)x(4.17+4.15)/2	0.04		
		(-2.28--2.29)x(4.04+4.01)/2	0.04		
		(-2.27--2.28)x(4.00+3.87)/2	0.04		
		(-2.26--2.27)x(3.80+3.98)/2	0.04		
		(-2.24--2.26)x(3.87+3.87)/2	0.08		
		(-2.23--2.24)x(3.85+3.87)/2	0.04		
		(-2.22--2.23)x(4.14+3.85)/2	0.04		
		(-2.16--2.22)x(3.96+4.35)/2	0.25		
		(-2.15--2.16)x(3.84+3.96)/2	0.04		
		(-2.14--2.15)x(4.08+3.84)/2	0.04		
		(-2.13--2.14)x(4.03+4.08)/2	0.04		
		(-1.97--2.13)x(4.05+4.03)/2	0.65		
		(-1.94--1.97)x(4.05+4.05)/2	0.12		
		(-1.93--1.94)x(4.28+3.92)/2	0.04		
		(-1.92--1.93)x(4.30+4.28)/2	0.04		
		(-1.91--1.92)x(3.94+4.13)/2	0.04		
		(-1.81--1.91)x(3.89+3.84)/2	0.39		
		(-1.80--1.81)x(3.84+3.89)/2	0.04		
		(-1.77--1.80)x(4.06+3.84)/2	0.12		
		(-1.75--1.77)x(4.05+4.06)/2	0.08		
		(-1.64--1.75)x(4.07+4.05)/2	0.45		
		(-1.45--1.64)x(4.06+4.07)/2	0.77		
		(-1.01--1.45)x(4.09+4.06)/2	1.79		
		(-0.97--1.01)x(4.09+4.09)/2	0.16		
		(-0.86--0.97)x(4.10+4.09)/2	0.45		
		(-0.18--0.86)x(4.14+4.10)/2	2.80		
		(0.08--0.18)x(4.16+4.14)/2	1.08		
		(0.66-0.08)x(4.14+4.16)/2	2.41		
		(1.18-0.66)x(4.15+4.14)/2	2.16		
		(2.04-1.18)x(3.95+4.15)/2	3.48		
		(2.28-2.04)x(3.89+3.95)/2	0.94		
		(2.42-2.28)x(3.86+3.89)/2	0.54		
		(3.37-2.42)x(3.66+3.86)/2	3.57		
		(4.19-3.37)x(3.49+3.66)/2	2.93		
		(4.47-4.19)x(3.43+3.49)/2	0.97		
		(4.93-4.47)x(3.33+3.43)/2	1.55		
		(5.57-4.93)x(3.20+3.33)/2	2.09		
		(5.95-5.57)x(3.12+3.20)/2	1.20		
		(6.66-5.95)x(2.98+3.12)/2	2.17		
		(7.71-6.66)x(2.74+2.98)/2	3.00		
		(7.76-7.71)x(2.73+2.74)/2	0.14		
		(7.83-7.76)x(2.73+2.73)/2	0.19		
		(8.85-7.83)x(2.61+2.73)/2	2.72		
		(9.48-8.85)x(2.70+2.61)/2	1.67		
		(9.95-9.48)x(2.78+2.70)/2	1.29		
		(10.16-9.95)x(2.80+2.78)/2	0.59		
		(10.73-10.16)x(2.83+2.80)/2	1.60		
		(10.96-10.73)x(2.84+2.83)/2	0.65		
		(11.05-10.96)x(2.84+2.84)/2	0.26		
		(11.24-11.05)x(2.83+2.84)/2	0.54		
		(12.14-11.24)x(2.72+2.83)/2	2.50		
		(13.01-12.14)x(2.57+2.72)/2	2.30		
		(13.24-13.01)x(2.54+2.57)/2	0.59		
		(13.62-13.24)x(2.46+2.54)/2	0.95		
		(14.34-13.62)x(2.35+2.46)/2	1.73		
		(14.77-14.34)x(2.26+2.35)/2	0.99		
		(15.43-14.77)x(2.18+2.26)/2	1.47		
		(16.52-15.43)x(1.98+2.18)/2	2.27		
		(16.53-16.52)x(1.98+1.98)/2	0.02		
		(17.46-16.53)x(1.80+1.97)/2	1.75		
		A RIPORTARE mq	106.49		

SCATOLARE

		CALCOLO DELLE AREE		Foglio n. 5
STERRO				
N. SEZIONE PROG.	FIG.	ELEMENTI DI CALCOLO	AREA ELEMENTARE mq	AREA FIGURA mq	NOTE
		RIPORTO mq	106.49		
		(15.19-17.46)x(1.80+1.80)/2	-4.09		
		(-11.45-15.19)x(1.80+1.80)/2	-47.95		
		(-14.47--11.45)x(3.81+1.80)/2	-8.47		
				45.98	
77	B1	(-14.04--14.22)x(3.64+3.65)/2	0.66		
1140.00		(-13.99--14.04)x(3.63+3.64)/2	0.18		
		(-13.97--13.99)x(3.63+3.63)/2	0.07		
		(-13.92--13.97)x(3.63+3.63)/2	0.18		
		(-13.18--13.92)x(3.64+3.63)/2	2.69		
		(-12.90--13.18)x(3.64+3.64)/2	1.02		
		(-12.27--12.90)x(3.64+3.64)/2	2.29		
		(-11.80--12.27)x(3.65+3.64)/2	1.71		
		(-11.59--11.80)x(3.65+3.65)/2	0.77		
		(-11.21--11.59)x(3.66+3.65)/2	1.39		
		(-11.13--11.21)x(3.65+3.66)/2	0.29		
		(-11.10--11.13)x(3.64+3.65)/2	0.11		
		(-11.07--11.10)x(3.78+3.64)/2	0.11		
		(-11.06--11.07)x(3.83+3.78)/2	0.04		
		(-11.01--11.06)x(3.72+3.74)/2	0.19		
		(-10.94--11.01)x(3.68+3.72)/2	0.26		
		(-10.75--10.94)x(3.64+3.68)/2	0.70		
		(-10.70--10.75)x(3.64+3.64)/2	0.18		
		(-10.50--10.70)x(3.64+3.64)/2	0.73		
		(-9.61--10.50)x(3.65+3.64)/2	3.24		
		(-8.73--9.61)x(3.66+3.65)/2	3.22		
		(-8.51--8.73)x(3.66+3.66)/2	0.81		
		(-8.14--8.51)x(3.67+3.66)/2	1.36		
		(-7.41--8.14)x(3.68+3.67)/2	2.68		
		(-6.97--7.41)x(3.69+3.68)/2	1.62		
		(-6.32--6.97)x(3.71+3.69)/2	2.40		
		(-6.20--6.32)x(3.71+3.71)/2	0.45		
		(-6.18--6.20)x(3.72+3.71)/2	0.07		
		(-6.17--6.18)x(3.86+3.87)/2	0.04		
		(-6.16--6.17)x(3.82+3.86)/2	0.04		
		(-6.12--6.16)x(3.77+3.82)/2	0.15		
		(-5.98--6.12)x(3.73+3.77)/2	0.52		
		(-5.87--5.98)x(3.75+3.73)/2	0.41		
		(-5.68--5.87)x(3.77+3.75)/2	0.71		
		(-5.23--5.68)x(3.79+3.77)/2	1.70		
		(-5.22--5.23)x(3.79+3.79)/2	0.04		
		(-5.20--5.22)x(3.79+3.79)/2	0.08		
		(-4.12--5.20)x(3.93+3.79)/2	4.17		
		(-3.64--4.12)x(3.99+3.93)/2	1.90		
		(-3.03--3.64)x(4.03+3.99)/2	2.45		
		(-2.84--3.03)x(4.05+4.03)/2	0.77		
		(-2.46--2.84)x(4.08+4.05)/2	1.54		
		(-2.30--2.46)x(4.09+4.08)/2	0.65		
		(-2.18--2.30)x(4.04+4.09)/2	0.49		
		(-2.17--2.18)x(4.21+4.04)/2	0.04		
		(-2.16--2.17)x(4.22+4.21)/2	0.04		
		(-2.15--2.16)x(4.04+4.22)/2	0.04		
		(-2.14--2.15)x(4.08+4.04)/2	0.04		
		(-2.13--2.14)x(4.03+3.88)/2	0.04		
		(-2.12--2.13)x(3.79+4.01)/2	0.04		
		(-2.10--2.12)x(3.87+3.87)/2	0.08		
		(-2.09--2.10)x(3.85+3.87)/2	0.04		
		(-2.08--2.09)x(4.11+3.85)/2	0.04		
		(-2.03--2.08)x(4.01+4.35)/2	0.21		
		(-2.02--2.03)x(3.90+4.01)/2	0.04		
		(-2.01--2.02)x(4.11+3.90)/2	0.04		
		(-2.00--2.01)x(4.02+4.11)/2	0.04		
		(-1.99--2.00)x(4.10+4.02)/2	0.04		
		(-1.98--1.99)x(4.09+4.10)/2	0.04		
		(-1.80--1.98)x(4.09+4.09)/2	0.74		
		(-1.79--1.80)x(4.27+4.09)/2	0.04		
		(-1.78--1.79)x(4.29+4.27)/2	0.04		
		(-1.77--1.78)x(4.10+3.97)/2	0.04		
		(-1.70--1.77)x(3.90+3.86)/2	0.27		
		(-1.68--1.70)x(3.86+3.90)/2	0.08		
		(-1.67--1.68)x(4.03+3.86)/2	0.04		
		(-1.64--1.67)x(4.01+4.03)/2	0.12		
		(-1.61--1.64)x(4.02+4.01)/2	0.12		
		(-1.60--1.61)x(4.07+4.02)/2	0.04		
		(-1.54--1.60)x(4.12+4.07)/2	0.25		
		(-1.25--1.54)x(4.17+4.12)/2	1.20		
		(-0.83--1.25)x(4.20+4.17)/2	1.76		
		(0.11--0.83)x(4.30+4.20)/2	3.99		
		(0.27-0.11)x(4.31+4.30)/2	0.69		
		(0.53-0.27)x(4.34+4.31)/2	1.12		
		(1.36-0.53)x(4.44+4.34)/2	3.64		
		(1.87-1.36)x(4.48+4.44)/2	2.27		
		(2.46-1.87)x(4.54+4.48)/2	2.66		
		(3.41-2.46)x(4.53+4.54)/2	4.31		
		(3.56-3.41)x(4.51+4.53)/2	0.68		
		(3.64-3.56)x(4.48+4.51)/2	0.36		
		(4.65-3.64)x(4.32+4.48)/2	4.44		
		(5.41-4.65)x(4.27+4.32)/2	3.26		
		(5.75-5.41)x(4.24+4.27)/2	1.45		
		(6.30-5.75)x(4.20+4.24)/2	2.32		
		(6.85-6.30)x(4.14+4.20)/2	2.29		
		(7.49-6.85)x(3.94+4.14)/2	2.59		
		(7.94-7.49)x(4.02+3.94)/2	1.79		
		(8.95-7.94)x(3.85+4.02)/2	3.97		
		(9.04-8.95)x(3.83+3.85)/2	0.35		
		(9.19-9.04)x(3.81+3.83)/2	0.57		
		(10.14-9.19)x(3.75+3.81)/2	3.59		
		(10.71-10.14)x(3.78+3.75)/2	2.15		
		(11.23-10.71)x(3.78+3.78)/2	1.97		
		(12.08-11.23)x(3.80+3.78)/2	3.22		
		(12.33-12.08)x(3.81+3.80)/2	0.95		
		(12.48-12.33)x(3.82+3.81)/2	0.57		
		(13.43-12.48)x(3.86+3.82)/2	3.65		
		(14.25-13.43)x(3.66+3.86)/2	3.08		
		(14.52-14.25)x(3.63+3.66)/2	0.98		
		A RIPORTARE mq	113.54		

SCATOLARE

		CALCOLO DELLE AREE		Foglio n. 6
STERRO				
N. SEZIONE PROG.	FIG.	ELEMENTI DI CALCOLO	AREA ELEMENTARE mq	AREA FIGURA mq	NOTE
		RIPORTO mq	113.54		
		(14.97-14.52)x(3.46+3.63)/2	1.60		
		(15.62-14.97)x(3.13+3.46)/2	2.14		
		(16.02-15.62)x(2.83+3.13)/2	1.19		
		(16.72-16.02)x(2.23+2.83)/2	1.77		
		(17.65-16.72)x(1.80+2.23)/2	1.87		
		(15.04-17.65)x(1.80+1.80)/2	-4.70		
		(-11.45-15.04)x(1.80+1.80)/2	-47.68		
		(-14.22--11.45)x(3.65+1.80)/2	-7.55		
				62.18	
78	B1	(-14.23--14.31)x(3.70+3.70)/2	0.30		
1155.00		(-13.89--14.23)x(3.70+3.70)/2	1.26		
		(-13.13--13.89)x(3.69+3.70)/2	2.81		
		(-12.11--13.13)x(3.67+3.69)/2	3.75		
		(-12.03--12.11)x(3.66+3.67)/2	0.29		
		(-11.91--12.03)x(3.67+3.66)/2	0.44		
		(-11.21--11.91)x(3.66+3.67)/2	2.57		
		(-11.09--11.21)x(3.66+3.66)/2	0.44		
		(-11.07--11.09)x(3.66+3.66)/2	0.07		
		(-11.06--11.07)x(3.67+3.66)/2	0.04		
		(-10.95--11.06)x(3.76+3.67)/2	0.41		
		(-10.93--10.95)x(3.80+3.76)/2	0.08		
		(-10.92--10.93)x(3.80+3.80)/2	0.04		
		(-10.91--10.92)x(3.68+3.82)/2	0.04		
		(-10.88--10.91)x(3.63+3.68)/2	0.11		
		(-10.72--10.88)x(3.66+3.63)/2	0.58		
		(-10.63--10.72)x(3.67+3.66)/2	0.33		
		(-10.41--10.63)x(3.68+3.67)/2	0.81		
		(-9.84--10.41)x(3.68+3.68)/2	2.10		
		(-9.62--9.84)x(3.68+3.68)/2	0.81		
		(-9.04--9.62)x(3.68+3.68)/2	2.13		
		(-8.82--9.04)x(3.68+3.68)/2	0.81		
		(-8.74--8.82)x(3.68+3.68)/2	0.29		
		(-8.56--8.74)x(3.68+3.68)/2	0.66		
		(-7.64--8.56)x(3.70+3.68)/2	3.39		
		(-6.78--7.64)x(3.72+3.70)/2	3.19		
		(-6.55--6.78)x(3.72+3.72)/2	0.86		
		(-6.49--6.55)x(3.72+3.72)/2	0.22		
		(-6.18--6.49)x(3.74+3.72)/2	1.16		
		(-6.12--6.18)x(3.75+3.74)/2	0.22		
		(-6.10--6.12)x(3.75+3.75)/2	0.08		
		(-6.05--6.10)x(3.75+3.75)/2	0.19		
		(-6.04--6.05)x(3.74+3.75)/2	0.04		
		(-6.03--6.04)x(3.85+3.74)/2	0.04		
		(-6.02--6.03)x(3.83+3.86)/2	0.04		
		(-5.95--6.02)x(3.76+3.83)/2	0.27		
		(-5.93--5.95)x(3.74+3.76)/2	0.08		
		(-5.85--5.93)x(3.75+3.74)/2	0.30		
		(-5.56--5.85)x(3.76+3.75)/2	1.09		
		(-5.45--5.56)x(3.78+3.76)/2	0.41		
		(-5.01--5.45)x(3.82+3.78)/2	1.67		
		(-4.35--5.01)x(3.90+3.82)/2	2.55		
		(-3.29--4.35)x(4.01+3.90)/2	4.19		
		(-3.25--3.29)x(4.02+4.01)/2	0.16		
		(-3.23--3.25)x(4.02+4.02)/2	0.08		
		(-2.16--3.23)x(4.13+4.02)/2	4.36		
		(-1.96--2.16)x(4.10+4.13)/2	0.82		
		(-1.93--1.96)x(4.10+4.10)/2	0.12		
		(-1.92--1.93)x(4.14+4.10)/2	0.04		
		(-1.91--1.92)x(3.89+4.14)/2	0.04		
		(-1.90--1.91)x(4.08+3.89)/2	0.04		
		(-1.89--1.90)x(3.78+4.05)/2	0.04		
		(-1.88--1.89)x(3.88+3.88)/2	0.04		
		(-1.86--1.88)x(3.85+3.88)/2	0.08		
		(-1.85--1.86)x(4.04+3.85)/2	0.04		
		(-1.81--1.85)x(4.10+4.36)/2	0.17		
		(-1.80--1.81)x(4.18+4.02)/2	0.04		
		(-1.79--1.80)x(4.11+4.18)/2	0.04		
		(-1.78--1.79)x(4.17+4.11)/2	0.04		
		(-1.77--1.78)x(4.28+4.17)/2	0.04		
		(-1.75--1.77)x(4.02+4.28)/2	0.08		
		(-1.74--1.75)x(4.14+4.02)/2	0.04		
		(-1.70--1.74)x(4.23+4.14)/2	0.17		
		(-1.64--1.70)x(4.12+4.23)/2	0.25		
		(-1.61--1.64)x(4.18+4.12)/2	0.12		
		(-1.60--1.61)x(4.25+4.18)/2	0.04		
		(-1.55--1.60)x(4.30+4.25)/2	0.21		
		(-1.54--1.55)x(4.19+4.08)/2	0.04		
		(-1.53--1.54)x(3.89+3.76)/2	0.04		
		(-1.51--1.53)x(3.91+3.89)/2	0.08		
		(-1.50--1.51)x(3.89+3.91)/2	0.04		
		(-1.49--1.50)x(3.95+3.96)/2	0.04		
		(-1.47--1.49)x(3.95+3.95)/2	0.08		
		(-1.45--1.47)x(4.11+3.95)/2	0.08		
		(-1.42--1.45)x(4.07+4.11)/2	0.12		
		(-1.36--1.42)x(4.26+4.07)/2	0.25		
		(-1.31--1.36)x(4.22+4.26)/2	0.21		
		(-1.06--1.31)x(4.26+4.22)/2	1.06		
		(-0.42--1.06)x(4.36+4.26)/2	2.76		
		(0.04--0.42)x(4.41+4.36)/2	2.02		
		(0.32-0.04)x(4.45+4.41)/2	1.24		
		(1.14-0.32)x(4.54+4.45)/2	3.69		
		(1.50-1.14)x(4.50+4.54)/2	1.63		
		(2.23-1.50)x(4.45+4.50)/2	3.27		
		(2.45-2.23)x(4.37+4.45)/2	0.97		
		(3.33-2.45)x(4.13+4.37)/2	3.74		
		(3.87-3.33)x(3.96+4.13)/2	2.18		
		(4.43-3.87)x(3.81+3.96)/2	2.18		
		(5.33-4.43)x(3.49+3.81)/2	3.29		
		(5.53-5.33)x(3.41+3.49)/2	0.69		
		(5.65-5.53)x(3.36+3.41)/2	0.41		
		(6.62-5.65)x(3.02+3.36)/2	3.09		
		(7.42-6.62)x(2.93+3.02)/2	2.38		
		(7.72-7.42)x(2.89+2.93)/2	0.87		
		(8.20-7.72)x(2.83+2.89)/2	1.37		
		A RIPORTARE mq	86.08		

SCATOLARE

		CALCOLO DELLE AREE		Foglio n. 7
STERRO				
N. SEZIONE PROG.	FIG.	ELEMENTI DI CALCOLO	AREA ELEMENTARE mq	AREA FIGURA mq	NOTE
		RIPORTO mq	86.08		
		(8.82-8.20)x(2.75+2.83)/2	1.73		
		(9.20-8.82)x(2.70+2.75)/2	1.04		
		(9.92-9.20)x(2.61+2.70)/2	1.91		
		(10.98-9.92)x(2.48+2.61)/2	2.70		
		(11.01-10.98)x(2.47+2.48)/2	0.07		
		(11.07-11.01)x(2.47+2.47)/2	0.15		
		(12.11-11.07)x(2.33+2.47)/2	2.50		
		(12.62-12.11)x(2.26+2.33)/2	1.17		
		(13.21-12.62)x(2.19+2.26)/2	1.31		
		(13.95-13.21)x(2.10+2.19)/2	1.59		
		(14.31-13.95)x(2.06+2.10)/2	0.75		
		(14.53-14.31)x(2.03+2.06)/2	0.45		
		(15.40-14.53)x(1.94+2.03)/2	1.73		
		(16.30-15.40)x(1.85+1.94)/2	1.71		
		(16.50-16.30)x(1.83+1.85)/2	0.37		
		(16.70-16.50)x(1.80+1.83)/2	0.36		
		(14.23-16.70)x(1.80+1.80)/2	-4.45		
		(-11.45-14.23)x(1.80+1.80)/2	-46.22		
		(-14.31--11.45)x(3.70+1.80)/2	-7.87		
				47.08	
79 1170.00	B1	(-14.50--14.54)x(3.86+3.86)/2	0.15		
		(-13.76--14.50)x(3.85+3.86)/2	2.85		
		(-13.40--13.76)x(3.85+3.85)/2	1.39		
		(-12.82--13.40)x(3.85+3.85)/2	2.23		
		(-12.30--12.82)x(3.85+3.85)/2	2.00		
		(-11.98--12.30)x(3.84+3.85)/2	1.23		
		(-11.20--11.98)x(3.82+3.84)/2	2.99		
		(-11.00--11.20)x(3.81+3.82)/2	0.76		
		(-10.74--11.00)x(3.79+3.81)/2	0.99		
		(-10.66--10.74)x(3.79+3.79)/2	0.30		
		(-10.62--10.66)x(3.79+3.79)/2	0.15		
		(-10.56--10.62)x(3.69+3.79)/2	0.22		
		(-10.54--10.56)x(3.73+3.69)/2	0.07		
		(-10.52--10.54)x(3.73+3.73)/2	0.07		
		(-10.51--10.52)x(3.77+3.73)/2	0.04		
		(-10.50--10.51)x(3.79+3.81)/2	0.04		
		(-10.48--10.50)x(3.79+3.65)/2	0.07		
		(-10.47--10.48)x(3.79+3.79)/2	0.04		
		(-10.41--10.47)x(3.79+3.79)/2	0.23		
		(-10.10--10.41)x(3.79+3.79)/2	1.17		
		(-9.96--10.10)x(3.79+3.79)/2	0.53		
		(-9.01--9.96)x(3.77+3.79)/2	3.59		
		(-8.41--9.01)x(3.77+3.77)/2	2.26		
		(-7.91--8.41)x(3.76+3.77)/2	1.88		
		(-7.10--7.91)x(3.76+3.76)/2	3.05		
		(-6.81--7.10)x(3.76+3.76)/2	1.09		
		(-6.10--6.81)x(3.76+3.76)/2	2.67		
		(-5.93--6.10)x(3.77+3.76)/2	0.64		
		(-5.87--5.93)x(3.77+3.77)/2	0.23		
		(-5.71--5.87)x(3.77+3.77)/2	0.60		
		(-5.67--5.71)x(3.78+3.77)/2	0.15		
		(-5.64--5.67)x(3.75+3.78)/2	0.11		
		(-5.62--5.64)x(3.82+3.80)/2	0.08		
		(-5.61--5.62)x(3.89+3.82)/2	0.04		
		(-5.60--5.61)x(3.79+3.84)/2	0.04		
		(-5.59--5.60)x(3.77+3.79)/2	0.04		
		(-5.51--5.59)x(3.79+3.77)/2	0.30		
		(-5.47--5.51)x(3.79+3.79)/2	0.15		
		(-5.30--5.47)x(3.79+3.79)/2	0.64		
		(-4.61--5.30)x(3.78+3.79)/2	2.61		
		(-4.51--4.61)x(3.79+3.78)/2	0.38		
		(-4.24--4.51)x(3.81+3.79)/2	1.03		
		(-3.72--4.24)x(3.85+3.81)/2	1.99		
		(-3.51--3.72)x(3.86+3.85)/2	0.81		
		(-3.06--3.51)x(3.91+3.86)/2	1.75		
		(-2.42--3.06)x(4.00+3.91)/2	2.53		
		(-2.13--2.42)x(4.03+4.00)/2	1.16		
		(-1.79--2.13)x(4.07+4.03)/2	1.38		
		(-1.71--1.79)x(4.09+4.07)/2	0.33		
		(-1.70--1.71)x(4.10+4.13)/2	0.04		
		(-1.69--1.70)x(3.77+4.10)/2	0.04		
		(-1.68--1.69)x(3.88+3.88)/2	0.04		
		(-1.66--1.68)x(3.85+3.88)/2	0.08		
		(-1.65--1.66)x(3.97+3.85)/2	0.04		
		(-1.62--1.65)x(4.19+4.36)/2	0.13		
		(-1.61--1.62)x(4.24+4.14)/2	0.04		
		(-1.60--1.61)x(4.24+4.20)/2	0.04		
		(-1.59--1.60)x(4.31+4.24)/2	0.04		
		(-1.58--1.59)x(4.14+4.31)/2	0.04		
		(-1.57--1.58)x(4.26+4.14)/2	0.04		
		(-1.55--1.57)x(4.05+4.26)/2	0.08		
		(-1.53--1.55)x(4.02+4.05)/2	0.08		
		(-1.52--1.53)x(4.07+4.02)/2	0.04		
		(-1.49--1.52)x(4.19+4.07)/2	0.12		
		(-1.35--1.49)x(4.32+4.19)/2	0.60		
		(-1.34--1.35)x(4.26+4.16)/2	0.04		
		(-1.33--1.34)x(3.89+3.76)/2	0.04		
		(-1.32--1.33)x(4.13+4.13)/2	0.04		
		(-1.28--1.32)x(4.13+4.13)/2	0.17		
		(-0.22--1.28)x(4.27+4.13)/2	4.45		
		(0.51--0.22)x(4.35+4.27)/2	3.15		
		(0.88-0.51)x(4.40+4.35)/2	1.62		
		(1.47-0.88)x(4.37+4.40)/2	2.59		
		(1.98-1.47)x(4.32+4.37)/2	2.22		
		(2.29-1.98)x(4.27+4.32)/2	1.33		
		(3.08-2.29)x(4.14+4.27)/2	3.32		
		(4.08-3.08)x(3.97+4.14)/2	4.05		
		(4.17-4.08)x(3.95+3.97)/2	0.36		
		(4.33-4.17)x(3.92+3.95)/2	0.63		
		(5.27-4.33)x(3.76+3.92)/2	3.61		
		(5.86-5.27)x(3.66+3.76)/2	2.19		
		(6.37-5.86)x(3.57+3.66)/2	1.84		
		(6.60-6.37)x(3.50+3.57)/2	0.81		
		(7.19-6.60)x(3.34+3.50)/2	2.02		
		A RIPORTARE mq	85.02		

SCATOLARE

		CALCOLO DELLE AREE		Foglio n. 8
STERRO				
N. SEZIONE PROG.	FIG.	ELEMENTI DI CALCOLO	AREA ELEMENTARE mq	AREA FIGURA mq	NOTE
		RIPORTO mq	85.02		
		(7.39-7.19)x(3.28+3.34)/2	0.66		
		(7.47-7.39)x(3.26+3.28)/2	0.26		
		(7.64-7.47)x(3.18+3.26)/2	0.55		
		(8.57-7.64)x(2.73+3.18)/2	2.75		
		(9.43-8.57)x(2.50+2.73)/2	2.25		
		(9.67-9.43)x(2.43+2.50)/2	0.59		
		(10.05-9.67)x(2.39+2.43)/2	0.92		
		(10.76-10.05)x(2.31+2.39)/2	1.67		
		(11.21-10.76)x(2.26+2.31)/2	1.03		
		(11.86-11.21)x(2.18+2.26)/2	1.44		
		(12.91-11.86)x(2.08+2.18)/2	2.24		
		(12.96-12.91)x(2.08+2.08)/2	0.10		
		(12.99-12.96)x(2.07+2.08)/2	0.06		
		(14.06-12.99)x(1.94+2.07)/2	2.15		
		(14.78-14.06)x(1.86+1.94)/2	1.37		
		(15.16-14.78)x(1.82+1.86)/2	0.70		
		(15.36-15.16)x(1.80+1.82)/2	0.36		
		(13.10-15.36)x(1.80+1.80)/2	-4.07		
		(-11.45-13.10)x(1.80+1.80)/2	-44.19		
		(-14.54--11.45)x(3.86+1.80)/2	-8.74		
				47.12	
80 1185.00	B1	(-13.80--14.14)x(3.57+3.59)/2	1.22		
		(-13.67--13.80)x(3.56+3.57)/2	0.46		
		(-13.59--13.67)x(3.56+3.56)/2	0.28		
		(-12.57--13.59)x(3.54+3.56)/2	3.62		
		(-11.81--12.57)x(3.56+3.54)/2	2.70		
		(-11.47--11.81)x(3.56+3.56)/2	1.21		
		(-10.94--11.47)x(3.60+3.56)/2	1.90		
		(-10.53--10.94)x(3.64+3.60)/2	1.48		
		(-10.47--10.53)x(3.64+3.64)/2	0.22		
		(-10.44--10.47)x(3.64+3.64)/2	0.11		
		(-10.26--10.44)x(3.65+3.64)/2	0.66		
		(-10.19--10.26)x(3.66+3.65)/2	0.26		
		(-10.14--10.19)x(3.65+3.66)/2	0.18		
		(-10.13--10.14)x(3.65+3.65)/2	0.04		
		(-10.11--10.13)x(3.73+3.65)/2	0.07		
		(-10.10--10.11)x(3.76+3.80)/2	0.04		
		(-10.08--10.10)x(3.77+3.67)/2	0.07		
		(-10.06--10.08)x(3.67+3.77)/2	0.07		
		(-10.05--10.06)x(3.67+3.67)/2	0.04		
		(-10.01--10.05)x(3.66+3.67)/2	0.15		
		(-9.74--10.01)x(3.66+3.66)/2	0.99		
		(-9.28--9.74)x(3.67+3.66)/2	1.69		
		(-8.24--9.28)x(3.69+3.67)/2	3.83		
		(-8.18--8.24)x(3.70+3.69)/2	0.22		
		(-8.08--8.18)x(3.70+3.70)/2	0.37		
		(-7.08--8.08)x(3.71+3.70)/2	3.71		
		(-6.46--7.08)x(3.72+3.71)/2	2.30		
		(-5.98--6.46)x(3.73+3.72)/2	1.79		
		(-5.77--5.98)x(3.73+3.73)/2	0.78		
		(-5.40--5.77)x(3.74+3.73)/2	1.38		
		(-5.31--5.40)x(3.73+3.74)/2	0.34		
		(-5.25--5.31)x(3.77+3.73)/2	0.22		
		(-5.23--5.25)x(3.79+3.77)/2	0.08		
		(-5.22--5.23)x(3.90+3.79)/2	0.04		
		(-5.21--5.22)x(3.79+3.82)/2	0.04		
		(-5.19--5.21)x(3.77+3.79)/2	0.08		
		(-5.17--5.19)x(3.73+3.77)/2	0.08		
		(-5.12--5.17)x(3.76+3.73)/2	0.19		
		(-4.94--5.12)x(3.76+3.76)/2	0.68		
		(-4.88--4.94)x(3.76+3.76)/2	0.23		
		(-4.67--4.88)x(3.77+3.76)/2	0.79		
		(-3.79--4.67)x(3.84+3.77)/2	3.35		
		(-2.89--3.79)x(3.79+3.84)/2	3.43		
		(-2.69--2.89)x(3.79+3.79)/2	0.76		
		(-2.37--2.69)x(3.76+3.79)/2	1.21		
		(-1.80--2.37)x(3.73+3.76)/2	2.13		
		(-1.71--1.80)x(3.73+3.73)/2	0.34		
		(-1.68--1.71)x(3.73+3.73)/2	0.11		
		(-1.50--1.68)x(3.83+3.73)/2	0.68		
		(-1.47--1.50)x(3.85+3.89)/2	0.12		
		(-1.46--1.47)x(4.36+3.91)/2	0.04		
		(-1.45--1.46)x(4.29+4.36)/2	0.04		
		(-1.44--1.45)x(4.29+4.31)/2	0.04		
		(-1.43--1.44)x(4.26+4.34)/2	0.04		
		(-1.42--1.43)x(4.22+4.32)/2	0.04		
		(-1.41--1.42)x(4.21+4.22)/2	0.04		
		(-1.39--1.41)x(4.27+4.21)/2	0.08		
		(-1.37--1.39)x(4.17+4.27)/2	0.08		
		(-1.32--1.37)x(3.72+4.17)/2	0.20		
		(-1.31--1.32)x(3.72+3.72)/2	0.04		
		(-1.30--1.31)x(3.72+3.72)/2	0.04		
		(-1.26--1.30)x(4.17+3.72)/2	0.16		
		(-1.24--1.26)x(4.27+4.17)/2	0.08		
		(-1.16--1.24)x(4.34+4.27)/2	0.34		
		(-1.15--1.16)x(3.91+4.32)/2	0.04		
		(-1.14--1.15)x(3.98+3.92)/2	0.04		
		(-1.13--1.14)x(3.78+3.98)/2	0.04		
		(-1.12--1.13)x(3.76+3.78)/2	0.04		
		(-1.03--1.12)x(3.72+3.76)/2	0.34		
		(-0.79--1.03)x(3.67+3.72)/2	0.89		
		(-0.49--0.79)x(3.63+3.67)/2	1.10		
		(0.49--0.49)x(3.54+3.63)/2	3.51		
		(0.61-0.49)x(3.53+3.54)/2	0.42		
		(1.37-0.61)x(3.49+3.53)/2	2.67		
		(1.71-1.37)x(3.46+3.49)/2	1.18		
		(2.46-1.71)x(3.40+3.46)/2	2.57		
		(2.80-2.46)x(3.37+3.40)/2	1.15		
		(3.35-2.80)x(3.32+3.37)/2	1.84		
		(3.90-3.35)x(3.29+3.32)/2	1.82		
		(4.25-3.90)x(3.26+3.29)/2	1.15		
		(5.00-4.25)x(3.24+3.26)/2	2.44		
		(6.03-5.00)x(3.07+3.24)/2	3.25		
		(6.10-6.03)x(3.06+3.07)/2	0.21		
		A RIPORTARE mq	72.70		

SCATOLARE

		CALCOLO DELLE AREE		Foglio n. 9
STERRO				
N. SEZIONE PROG.	FIG.	ELEMENTI DI CALCOLO	AREA ELEMENTARE mq	AREA FIGURA mq	NOTE
		RIPORTO mq	72.70		
		(6.21-6.10)x(3.05+3.06)/2	0.34		
		(6.92-6.21)x(2.93+3.05)/2	2.12		
		(7.20-6.92)x(2.89+2.93)/2	0.81		
		(7.72-7.20)x(2.75+2.89)/2	1.47		
		(8.30-7.72)x(2.54+2.75)/2	1.53		
		(8.51-8.30)x(2.49+2.54)/2	0.53		
		(9.07-8.51)x(2.44+2.49)/2	1.38		
		(9.39-9.07)x(2.42+2.44)/2	0.78		
		(9.60-9.39)x(2.43+2.42)/2	0.51		
		(10.49-9.60)x(2.46+2.43)/2	2.18		
		(11.38-10.49)x(2.49+2.46)/2	2.20		
		(11.59-11.38)x(2.51+2.49)/2	0.52		
		(11.68-11.59)x(2.51+2.51)/2	0.23		
		(11.93-11.68)x(2.50+2.51)/2	0.63		
		(12.48-11.93)x(2.49+2.50)/2	1.37		
		(12.69-12.48)x(2.48+2.49)/2	0.52		
		(13.17-12.69)x(2.45+2.48)/2	1.18		
		(13.79-13.17)x(2.42+2.45)/2	1.51		
		(14.79-13.79)x(2.36+2.42)/2	2.39		
		(14.89-14.79)x(2.36+2.36)/2	0.24		
		(14.95-14.89)x(2.36+2.36)/2	0.14		
		(15.98-14.95)x(2.30+2.36)/2	2.40		
		(16.73-15.98)x(2.25+2.30)/2	1.71		
		(17.08-16.73)x(2.23+2.25)/2	0.78		
		(17.64-17.08)x(2.05+2.23)/2	1.20		
		(18.18-17.64)x(1.89+2.05)/2	1.06		
		(18.52-18.18)x(1.83+1.89)/2	0.63		
		(18.63-18.52)x(1.80+1.83)/2	0.20		
		(12.01-18.63)x(1.80+1.80)/2	-11.92		
		(-11.45-12.01)x(1.80+1.80)/2	-42.23		
		(-14.14--11.45)x(3.59+1.80)/2	-7.25		
				41.86	
81 1200.00	B1	(-13.94--14.31)x(3.70+3.70)/2	1.37		
		(-13.42--13.94)x(3.72+3.70)/2	1.93		
		(-12.84--13.42)x(3.73+3.72)/2	2.16		
		(-11.92--12.84)x(3.73+3.73)/2	3.43		
		(-11.75--11.92)x(3.72+3.73)/2	0.63		
		(-11.64--11.75)x(3.72+3.72)/2	0.41		
		(-10.65--11.64)x(3.68+3.72)/2	3.66		
		(-10.21--10.65)x(3.67+3.68)/2	1.62		
		(-9.93--10.21)x(3.68+3.67)/2	1.03		
		(-9.87--9.93)x(3.68+3.68)/2	0.22		
		(-9.75--9.87)x(3.67+3.68)/2	0.44		
		(-9.72--9.75)x(3.67+3.67)/2	0.11		
		(-9.71--9.72)x(3.69+3.67)/2	0.04		
		(-9.70--9.71)x(3.74+3.79)/2	0.04		
		(-9.69--9.70)x(3.74+3.68)/2	0.04		
		(-9.68--9.69)x(3.69+3.74)/2	0.04		
		(-9.65--9.68)x(3.69+3.69)/2	0.11		
		(-9.64--9.65)x(3.68+3.69)/2	0.04		
		(-9.62--9.64)x(3.68+3.68)/2	0.07		
		(-9.48--9.62)x(3.69+3.68)/2	0.52		
		(-9.47--9.48)x(3.69+3.69)/2	0.04		
		(-9.41--9.47)x(3.70+3.69)/2	0.22		
		(-9.06--9.41)x(3.71+3.70)/2	1.30		
		(-8.45--9.06)x(3.72+3.71)/2	2.27		
		(-8.07--8.45)x(3.73+3.72)/2	1.42		
		(-7.35--8.07)x(3.75+3.73)/2	2.69		
		(-6.29--7.35)x(3.78+3.75)/2	3.99		
		(-6.25--6.29)x(3.78+3.78)/2	0.15		
		(-6.21--6.25)x(3.78+3.78)/2	0.15		
		(-5.16--6.21)x(3.79+3.78)/2	3.97		
		(-4.95--5.16)x(3.79+3.79)/2	0.80		
		(-4.92--4.95)x(3.78+3.79)/2	0.11		
		(-4.91--4.92)x(3.78+3.78)/2	0.04		
		(-4.85--4.91)x(3.77+3.78)/2	0.23		
		(-4.84--4.85)x(3.78+3.77)/2	0.04		
		(-4.82--4.84)x(3.91+3.78)/2	0.08		
		(-4.81--4.82)x(3.79+3.79)/2	0.04		
		(-4.80--4.81)x(3.77+3.79)/2	0.04		
		(-4.75--4.80)x(3.79+3.77)/2	0.19		
		(-4.72--4.75)x(3.79+3.79)/2	0.11		
		(-4.63--4.72)x(3.80+3.79)/2	0.34		
		(-4.40--4.63)x(3.81+3.80)/2	0.88		
		(-4.06--4.40)x(3.81+3.81)/2	1.30		
		(-3.35--4.06)x(3.86+3.81)/2	2.72		
		(-2.96--3.35)x(3.88+3.86)/2	1.51		
		(-2.72--2.96)x(3.89+3.88)/2	0.93		
		(-1.86--2.72)x(3.95+3.89)/2	3.37		
		(-1.64--1.86)x(3.96+3.95)/2	0.87		
		(-1.38--1.64)x(3.99+3.96)/2	1.03		
		(-1.30--1.38)x(3.96+3.99)/2	0.32		
		(-1.29--1.30)x(3.93+3.96)/2	0.04		
		(-1.28--1.29)x(3.86+3.93)/2	0.04		
		(-1.27--1.28)x(4.36+4.29)/2	0.04		
		(-1.22--1.27)x(4.25+4.29)/2	0.21		
		(-1.14--1.22)x(4.14+4.25)/2	0.34		
		(-1.08--1.14)x(4.14+4.14)/2	0.25		
		(-1.01--1.08)x(4.25+4.14)/2	0.29		
		(-1.00--1.01)x(4.25+4.25)/2	0.04		
		(-0.99--1.00)x(4.29+4.25)/2	0.04		
		(-0.98--0.99)x(4.28+4.28)/2	0.04		
		(-0.97--0.98)x(4.36+4.34)/2	0.04		
		(-0.96--0.97)x(3.76+3.79)/2	0.04		
		(-0.95--0.96)x(3.79+3.77)/2	0.04		
		(-0.94--0.95)x(3.91+3.80)/2	0.04		
		(-0.92--0.94)x(4.05+3.91)/2	0.08		
		(-0.73--0.92)x(4.01+4.05)/2	0.77		
		(-0.72--0.73)x(4.02+4.01)/2	0.04		
		(-0.69--0.72)x(4.03+4.02)/2	0.12		
		(-0.49--0.69)x(4.05+4.03)/2	0.81		
		(0.34--0.49)x(4.13+4.05)/2	3.39		
		(0.85-0.34)x(4.19+4.13)/2	2.12		
		(1.43-0.85)x(4.25+4.19)/2	2.45		
		A RIPORTARE mq	60.33		

SCATOLARE

		CALCOLO DELLE AREE		Foglio n. 10
STERRO				
N. SEZIONE PROG.	FIG.	ELEMENTI DI CALCOLO	AREA ELEMENTARE mq	AREA FIGURA mq	NOTE
		RIPORTO mq	60.33		
		(2.37-1.43)x(4.15+4.25)/2	3.95		
		(2.53-2.37)x(4.15+4.15)/2	0.66		
		(2.63-2.53)x(4.13+4.15)/2	0.41		
		(3.63-2.63)x(3.92+4.13)/2	4.03		
		(4.42-3.63)x(3.64+3.92)/2	2.99		
		(4.73-4.42)x(3.55+3.64)/2	1.11		
		(5.23-4.73)x(3.37+3.55)/2	1.73		
		(5.83-5.23)x(3.14+3.37)/2	1.95		
		(6.45-5.83)x(2.91+3.14)/2	1.88		
		(6.93-6.45)x(2.75+2.91)/2	1.36		
		(7.99-6.93)x(2.61+2.75)/2	2.84		
		(8.02-7.99)x(2.60+2.61)/2	0.08		
		(8.09-8.02)x(2.60+2.60)/2	0.18		
		(9.12-8.09)x(2.53+2.60)/2	2.64		
		(9.77-9.12)x(2.49+2.53)/2	1.63		
		(10.22-9.77)x(2.46+2.49)/2	1.11		
		(10.95-10.22)x(2.41+2.46)/2	1.78		
		(11.32-10.95)x(2.38+2.41)/2	0.89		
		(11.55-11.32)x(2.37+2.38)/2	0.55		
		(12.42-11.55)x(2.31+2.37)/2	2.04		
		(13.34-12.42)x(2.24+2.31)/2	2.09		
		(13.52-13.34)x(2.23+2.24)/2	0.40		
		(13.80-13.52)x(2.21+2.23)/2	0.62		
		(14.61-13.80)x(2.15+2.21)/2	1.77		
		(15.12-14.61)x(2.10+2.15)/2	1.08		
		(15.71-15.12)x(2.05+2.10)/2	1.22		
		(15.98-15.71)x(2.02+2.05)/2	0.55		
		(16.66-15.98)x(1.95+2.02)/2	1.35		
		(16.77-16.66)x(1.94+1.95)/2	0.21		
		(16.81-16.77)x(1.94+1.94)/2	0.08		
		(16.90-16.81)x(1.93+1.94)/2	0.17		
		(17.91-16.90)x(1.84+1.93)/2	1.90		
		(18.01-17.91)x(1.80+1.84)/2	0.18		
		(11.48-18.01)x(1.80+1.80)/2	-11.75		
		(-11.45-11.48)x(1.80+1.80)/2	-41.27		
		(-14.31--11.45)x(3.70+1.80)/2	-7.87		
				44.87	
82 1215.00	B1	(-14.22--14.50)x(3.82+3.84)/2	1.07		
		(-13.25--14.22)x(3.76+3.82)/2	3.68		
		(-13.12--13.25)x(3.75+3.76)/2	0.49		
		(-12.90--13.12)x(3.74+3.75)/2	0.82		
		(-12.02--12.90)x(3.73+3.74)/2	3.29		
		(-11.47--12.02)x(3.72+3.73)/2	2.05		
		(-10.92--11.47)x(3.70+3.72)/2	2.04		
		(-10.68--10.92)x(3.69+3.70)/2	0.89		
		(-10.05--10.68)x(3.68+3.69)/2	2.32		
		(-9.88--10.05)x(3.67+3.68)/2	0.62		
		(-9.82--9.88)x(3.67+3.67)/2	0.22		
		(-9.52--9.82)x(3.68+3.67)/2	1.10		
		(-9.47--9.52)x(3.67+3.68)/2	0.18		
		(-9.45--9.47)x(3.67+3.67)/2	0.07		
		(-9.38--9.45)x(3.68+3.67)/2	0.26		
		(-9.35--9.38)x(3.68+3.68)/2	0.11		
		(-9.33--9.35)x(3.72+3.68)/2	0.07		
		(-9.32--9.33)x(3.71+3.72)/2	0.04		
		(-9.31--9.32)x(3.88+3.73)/2	0.04		
		(-9.30--9.31)x(3.71+3.77)/2	0.04		
		(-9.29--9.30)x(3.70+3.70)/2	0.04		
		(-9.28--9.29)x(3.70+3.70)/2	0.04		
		(-9.20--9.28)x(3.69+3.70)/2	0.30		
		(-8.94--9.20)x(3.68+3.69)/2	0.96		
		(-8.72--8.94)x(3.69+3.68)/2	0.81		
		(-7.90--8.72)x(3.71+3.69)/2	3.03		
		(-7.63--7.90)x(3.72+3.71)/2	1.00		
		(-7.19--7.63)x(3.73+3.72)/2	1.64		
		(-6.53--7.19)x(3.75+3.73)/2	2.47		
		(-6.11--6.53)x(3.75+3.75)/2	1.57		
		(-5.43--6.11)x(3.76+3.75)/2	2.55		
		(-5.12--5.43)x(3.77+3.76)/2	1.17		
		(-4.79--5.12)x(3.77+3.77)/2	1.24		
		(-4.65--4.79)x(3.78+3.77)/2	0.53		
		(-4.52--4.65)x(3.78+3.78)/2	0.49		
		(-4.49--4.52)x(3.78+3.78)/2	0.11		
		(-4.46--4.49)x(3.80+3.78)/2	0.11		
		(-4.45--4.46)x(3.79+3.80)/2	0.04		
		(-4.44--4.45)x(3.76+3.79)/2	0.04		
		(-4.43--4.44)x(3.82+3.76)/2	0.04		
		(-4.42--4.43)x(3.92+3.82)/2	0.04		
		(-4.41--4.42)x(3.78+3.79)/2	0.04		
		(-4.33--4.41)x(3.79+3.78)/2	0.30		
		(-3.23--4.33)x(3.83+3.79)/2	4.19		
		(-2.55--3.23)x(3.89+3.83)/2	2.62		
		(-2.13--2.55)x(3.92+3.89)/2	1.64		
		(-1.95--2.13)x(3.92+3.92)/2	0.71		
		(-1.57--1.95)x(3.89+3.92)/2	1.48		
		(-1.41--1.57)x(3.88+3.89)/2	0.62		
		(-1.28--1.41)x(3.85+3.88)/2	0.50		
		(-1.21--1.28)x(3.86+3.85)/2	0.27		
		(-1.16--1.21)x(3.76+3.86)/2	0.19		
		(-1.14--1.16)x(3.78+3.76)/2	0.08		
		(-1.13--1.14)x(3.81+3.78)/2	0.04		
		(-1.12--1.13)x(3.87+3.82)/2	0.04		
		(-1.10--1.12)x(3.87+3.87)/2	0.08		
		(-1.09--1.10)x(3.96+3.85)/2	0.04		
		(-1.02--1.09)x(3.90+3.95)/2	0.27		
		(-0.97--1.02)x(3.83+3.90)/2	0.19		
		(-0.90--0.97)x(3.84+3.83)/2	0.27		
		(-0.89--0.90)x(3.91+3.84)/2	0.04		
		(-0.86--0.89)x(3.85+3.91)/2	0.12		
		(-0.84--0.86)x(3.88+3.85)/2	0.08		
		(-0.83--0.84)x(3.95+3.88)/2	0.04		
		(-0.82--0.83)x(4.03+3.95)/2	0.04		
		(-0.81--0.82)x(4.21+4.13)/2	0.04		
		(-0.79--0.81)x(4.36+4.22)/2	0.09		
		A RIPORTARE mq	51.64		

SCATOLARE

		CALCOLO DELLE AREE		Foglio n. 11
STERRO				
N. SEZIONE PROG.	FIG.	ELEMENTI DI CALCOLO	AREA ELEMENTARE mq	AREA FIGURA mq	NOTE
		RIPORTO mq	51.64		
		(-0.78--0.79)x(3.91+4.36)/2	0.04		
		(-0.73--0.78)x(3.59+3.76)/2	0.18		
		(-0.72--0.73)x(3.82+3.59)/2	0.04		
		(-0.71--0.72)x(3.91+3.82)/2	0.04		
		(-0.64--0.71)x(3.91+3.91)/2	0.27		
		(-0.36--0.64)x(3.97+3.91)/2	1.10		
		(0.06--0.36)x(3.98+3.97)/2	1.67		
		(0.43-0.06)x(3.98+3.98)/2	1.47		
		(1.16-0.43)x(4.01+3.98)/2	2.92		
		(1.39-1.16)x(4.02+4.01)/2	0.92		
		(2.26-1.39)x(4.04+4.02)/2	3.51		
		(2.80-2.26)x(3.96+4.04)/2	2.16		
		(3.36-2.80)x(3.93+3.96)/2	2.21		
		(4.25-3.36)x(3.60+3.93)/2	3.35		
		(4.46-4.25)x(3.52+3.60)/2	0.75		
		(4.59-4.46)x(3.48+3.52)/2	0.45		
		(5.56-4.59)x(3.12+3.48)/2	3.20		
		(6.37-5.56)x(2.83+3.12)/2	2.41		
		(6.65-6.37)x(2.71+2.83)/2	0.78		
		(7.11-6.65)x(2.61+2.71)/2	1.22		
		(7.75-7.11)x(2.50+2.61)/2	1.64		
		(8.16-7.75)x(2.49+2.50)/2	1.02		
		(8.85-8.16)x(2.47+2.49)/2	1.71		
		(9.94-8.85)x(2.47+2.47)/2	2.69		
		(9.95-9.94)x(2.47+2.47)/2	0.02		
		(9.96-9.95)x(2.47+2.47)/2	0.02		
		(10.75-9.96)x(2.47+2.47)/2	1.95		
		(11.05-10.75)x(2.46+2.47)/2	0.74		
		(11.72-11.05)x(2.40+2.46)/2	1.63		
		(12.15-11.72)x(2.37+2.40)/2	1.03		
		(12.82-12.15)x(2.31+2.37)/2	1.57		
		(13.24-12.82)x(2.27+2.31)/2	0.96		
		(13.51-13.24)x(2.25+2.27)/2	0.61		
		(14.34-13.51)x(2.17+2.25)/2	1.83		
		(15.29-14.34)x(2.09+2.17)/2	2.02		
		(15.44-15.29)x(2.07+2.09)/2	0.31		
		(15.68-15.44)x(2.05+2.07)/2	0.49		
		(16.54-15.68)x(1.96+2.05)/2	1.72		
		(17.07-16.54)x(1.90+1.96)/2	1.02		
		(17.64-17.07)x(1.84+1.90)/2	1.07		
		(17.78-17.64)x(1.83+1.84)/2	0.26		
		(18.06-17.78)x(1.85+1.83)/2	0.52		
		(18.11-18.06)x(1.85+1.85)/2	0.09		
		(18.15-18.11)x(1.89+1.85)/2	0.07		
		(18.16-18.15)x(1.87+1.89)/2	0.02		
		(18.19-18.16)x(1.80+1.88)/2	0.06		
		(11.45-18.19)x(1.80+1.80)/2	-12.13		
		(-11.45-11.45)x(1.80+1.80)/2	-41.22		
		(-14.50--11.45)x(3.84+1.80)/2	-8.60		
				43.45	
83 1230.00	B1	(-14.49--14.57)x(3.88+3.88)/2	0.31		
		(-13.89--14.49)x(3.86+3.88)/2	2.32		
		(-13.39--13.89)x(3.84+3.86)/2	1.92		
		(-13.08--13.39)x(3.83+3.84)/2	1.19		
		(-12.29--13.08)x(3.81+3.83)/2	3.02		
		(-11.30--12.29)x(3.78+3.81)/2	3.76		
		(-11.19--11.30)x(3.78+3.78)/2	0.42		
		(-11.03--11.19)x(3.78+3.78)/2	0.60		
		(-10.09--11.03)x(3.80+3.78)/2	3.56		
		(-9.56--10.09)x(3.78+3.80)/2	2.01		
		(-9.32--9.56)x(3.78+3.78)/2	0.91		
		(-9.23--9.32)x(3.79+3.78)/2	0.34		
		(-9.08--9.23)x(3.76+3.79)/2	0.57		
		(-9.01--9.08)x(3.76+3.76)/2	0.26		
		(-8.96--9.01)x(3.74+3.76)/2	0.19		
		(-8.95--8.96)x(3.76+3.74)/2	0.04		
		(-8.93--8.95)x(3.75+3.76)/2	0.08		
		(-8.92--8.93)x(3.78+3.75)/2	0.04		
		(-8.91--8.92)x(3.76+3.89)/2	0.04		
		(-8.90--8.91)x(3.71+3.76)/2	0.04		
		(-8.88--8.90)x(3.75+3.71)/2	0.07		
		(-8.86--8.88)x(3.75+3.75)/2	0.08		
		(-8.77--8.86)x(3.75+3.75)/2	0.34		
		(-8.17--8.77)x(3.75+3.75)/2	2.25		
		(-7.90--8.17)x(3.76+3.75)/2	1.01		
		(-7.73--7.90)x(3.76+3.76)/2	0.64		
		(-6.80--7.73)x(3.79+3.76)/2	3.51		
		(-5.94--6.80)x(3.80+3.79)/2	3.26		
		(-5.70--5.94)x(3.80+3.80)/2	0.91		
		(-5.59--5.70)x(3.80+3.80)/2	0.42		
		(-5.31--5.59)x(3.80+3.80)/2	1.06		
		(-4.80--5.31)x(3.81+3.80)/2	1.94		
		(-4.60--4.80)x(3.81+3.81)/2	0.76		
		(-4.26--4.60)x(3.80+3.81)/2	1.29		
		(-4.13--4.26)x(3.81+3.80)/2	0.49		
		(-4.07--4.13)x(3.81+3.81)/2	0.23		
		(-4.05--4.07)x(3.81+3.81)/2	0.08		
		(-4.04--4.05)x(3.75+3.81)/2	0.04		
		(-4.03--4.04)x(3.85+3.75)/2	0.04		
		(-4.02--4.03)x(3.93+3.85)/2	0.04		
		(-4.01--4.02)x(3.77+3.78)/2	0.04		
		(-3.99--4.01)x(3.80+3.77)/2	0.08		
		(-3.93--3.99)x(3.82+3.80)/2	0.23		
		(-3.79--3.93)x(3.82+3.82)/2	0.53		
		(-3.50--3.79)x(3.82+3.82)/2	1.11		
		(-2.45--3.50)x(3.72+3.82)/2	3.96		
		(-2.41--2.45)x(3.71+3.72)/2	0.15		
		(-2.38--2.41)x(3.71+3.71)/2	0.11		
		(-1.31--2.38)x(3.58+3.71)/2	3.90		
		(-1.11--1.31)x(3.57+3.58)/2	0.71		
		(-1.08--1.11)x(3.56+3.57)/2	0.11		
		(-1.04--1.08)x(3.64+3.56)/2	0.14		
		(-1.01--1.04)x(3.69+3.64)/2	0.11		
		(-0.99--1.01)x(3.89+3.69)/2	0.08		
		A RIPORTARE mq	51.34		

SCATOLARE

		CALCOLO DELLE AREE		Foglio n. 12
STERRO				
N. SEZIONE PROG.	FIG.	ELEMENTI DI CALCOLO	AREA ELEMENTARE mq	AREA FIGURA mq	NOTE
		RIPORTO mq	51.34		
		(-0.91--0.99)x(3.86+3.89)/2	0.31		
		(-0.90--0.91)x(4.07+3.93)/2	0.04		
		(-0.89--0.90)x(3.67+3.92)/2	0.04		
		(-0.79--0.89)x(3.56+3.60)/2	0.36		
		(-0.70--0.79)x(3.52+3.56)/2	0.32		
		(-0.68--0.70)x(3.61+3.52)/2	0.07		
		(-0.67--0.68)x(3.75+3.61)/2	0.04		
		(-0.65--0.67)x(3.94+3.75)/2	0.08		
		(-0.64--0.65)x(4.08+3.94)/2	0.04		
		(-0.60--0.64)x(4.37+4.10)/2	0.17		
		(-0.59--0.60)x(3.77+4.03)/2	0.04		
		(-0.52--0.59)x(3.51+3.77)/2	0.25		
		(-0.51--0.52)x(3.49+3.51)/2	0.04		
		(-0.46--0.51)x(3.50+3.49)/2	0.17		
		(-0.21--0.46)x(3.46+3.50)/2	0.87		
		(0.41--0.21)x(3.38+3.46)/2	2.12		
		(0.89-0.41)x(3.33+3.38)/2	1.61		
		(1.19-0.89)x(3.29+3.33)/2	0.99		
		(1.99-1.19)x(3.20+3.29)/2	2.60		
		(2.98-1.99)x(3.08+3.20)/2	3.11		
		(3.09-2.98)x(3.07+3.08)/2	0.34		
		(3.27-3.09)x(3.05+3.07)/2	0.55		
		(4.19-3.27)x(2.94+3.05)/2	2.76		
		(4.72-4.19)x(2.88+2.94)/2	1.54		
		(5.28-4.72)x(2.82+2.88)/2	1.60		
		(5.52-5.28)x(2.79+2.82)/2	0.67		
		(6.12-5.52)x(2.72+2.79)/2	1.65		
		(6.38-6.12)x(2.70+2.72)/2	0.70		
		(6.54-6.38)x(2.68+2.70)/2	0.43		
		(7.48-6.54)x(2.57+2.68)/2	2.47		
		(8.33-7.48)x(2.48+2.57)/2	2.15		
		(8.58-8.33)x(2.45+2.48)/2	0.62		
		(8.98-8.58)x(2.43+2.45)/2	0.98		
		(9.68-8.98)x(2.40+2.43)/2	1.69		
		(10.11-9.68)x(2.39+2.40)/2	1.03		
		(10.78-10.11)x(2.37+2.39)/2	1.59		
		(11.84-10.78)x(2.33+2.37)/2	2.49		
		(11.87-11.84)x(2.33+2.33)/2	0.07		
		(11.89-11.87)x(2.33+2.33)/2	0.05		
		(12.97-11.89)x(2.30+2.33)/2	2.50		
		(13.68-12.97)x(2.27+2.30)/2	1.62		
		(14.07-13.68)x(2.26+2.27)/2	0.88		
		(14.70-14.07)x(2.24+2.26)/2	1.42		
		(15.17-14.70)x(2.22+2.24)/2	1.05		
		(15.83-15.17)x(2.18+2.22)/2	1.45		
		(16.27-15.83)x(2.16+2.18)/2	0.95		
		(17.25-16.27)x(2.11+2.16)/2	2.09		
		(17.37-17.25)x(2.10+2.11)/2	0.25		
		(17.40-17.37)x(2.10+2.10)/2	0.06		
		(17.71-17.40)x(2.07+2.10)/2	0.65		
		(17.77-17.71)x(2.06+2.07)/2	0.12		
		(17.87-17.77)x(2.07+2.06)/2	0.21		
		(17.91-17.87)x(2.04+2.07)/2	0.08		
		(17.94-17.91)x(1.99+2.04)/2	0.06		
		(17.95-17.94)x(2.00+1.99)/2	0.02		
		(17.97-17.95)x(1.97+2.02)/2	0.04		
		(18.00-17.97)x(2.05+1.97)/2	0.06		
		(18.04-18.00)x(2.05+2.06)/2	0.08		
		(18.32-18.04)x(2.06+2.05)/2	0.58		
		(18.46-18.32)x(2.06+2.06)/2	0.29		
		(19.03-18.46)x(2.03+2.06)/2	1.17		
		(19.56-19.03)x(2.01+2.03)/2	1.07		
		(20.42-19.56)x(1.98+2.01)/2	1.72		
		(20.66-20.42)x(1.97+1.98)/2	0.47		
		(21.39-20.66)x(1.86+1.97)/2	1.40		
		(21.54-21.39)x(1.84+1.86)/2	0.28		
		(21.58-21.54)x(1.83+1.84)/2	0.07		
		(21.59-21.58)x(1.83+1.83)/2	0.02		
		(21.61-21.59)x(1.80+1.83)/2	0.04		
		(11.45-21.61)x(1.80+1.80)/2	-18.29		
		(-11.45-11.45)x(1.80+1.80)/2	-41.22		
		(-14.57--11.45)x(3.88+1.80)/2	-8.86		
				40.32	
84 1245.00	B1	(-13.66--14.42)x(3.75+3.78)/2	2.86		
		(-12.91--13.66)x(3.75+3.75)/2	2.81		
		(-12.56--12.91)x(3.74+3.75)/2	1.31		
		(-12.01--12.56)x(3.75+3.74)/2	2.06		
		(-11.46--12.01)x(3.75+3.75)/2	2.06		
		(-10.82--11.46)x(3.74+3.75)/2	2.40		
		(-10.37--10.82)x(3.74+3.74)/2	1.68		
		(-9.34--10.37)x(3.77+3.74)/2	3.87		
		(-9.27--9.34)x(3.77+3.77)/2	0.26		
		(-9.23--9.27)x(3.77+3.77)/2	0.15		
		(-8.79--9.23)x(3.78+3.77)/2	1.66		
		(-8.68--8.79)x(3.79+3.78)/2	0.42		
		(-8.58--8.68)x(3.79+3.79)/2	0.38		
		(-8.54--8.58)x(3.78+3.79)/2	0.15		
		(-8.53--8.54)x(3.78+3.78)/2	0.04		
		(-8.52--8.53)x(3.83+3.78)/2	0.04		
		(-8.51--8.52)x(3.72+3.75)/2	0.04		
		(-8.50--8.51)x(3.74+3.72)/2	0.04		
		(-8.47--8.50)x(3.79+3.74)/2	0.11		
		(-8.46--8.47)x(3.79+3.79)/2	0.04		
		(-8.44--8.46)x(3.79+3.79)/2	0.08		
		(-8.33--8.44)x(3.80+3.79)/2	0.42		
		(-8.17--8.33)x(3.81+3.80)/2	0.61		
		(-7.56--8.17)x(3.82+3.81)/2	2.33		
		(-7.07--7.56)x(3.83+3.82)/2	1.87		
		(-6.29--7.07)x(3.83+3.83)/2	2.99		
		(-5.97--6.29)x(3.84+3.83)/2	1.23		
		(-5.77--5.97)x(3.83+3.84)/2	0.77		
		(-4.87--5.77)x(3.81+3.83)/2	3.44		
		(-3.99--4.87)x(3.79+3.81)/2	3.34		
		(-3.78--3.99)x(3.79+3.79)/2	0.80		
		A RIPORTARE mq	40.26		

SCATOLARE

		CALCOLO DELLE AREE		Foglio n. 13
STERRO				
N. SEZIONE PROG.	FIG.	ELEMENTI DI CALCOLO	AREA ELEMENTARE mq	AREA FIGURA mq	NOTE
		RIPORTO mq	40.26		
		(-3.74--3.78)x(3.79+3.79)/2	0.15		
		(-3.73--3.74)x(3.78+3.79)/2	0.04		
		(-3.65--3.73)x(3.78+3.78)/2	0.30		
		(-3.64--3.65)x(3.74+3.78)/2	0.04		
		(-3.63--3.64)x(3.89+3.74)/2	0.04		
		(-3.62--3.63)x(3.76+3.89)/2	0.04		
		(-3.61--3.62)x(3.76+3.76)/2	0.04		
		(-3.60--3.61)x(3.79+3.76)/2	0.04		
		(-3.57--3.60)x(3.78+3.79)/2	0.11		
		(-3.54--3.57)x(3.79+3.78)/2	0.11		
		(-3.41--3.54)x(3.79+3.79)/2	0.49		
		(-3.26--3.41)x(3.79+3.79)/2	0.57		
		(-2.89--3.26)x(3.83+3.79)/2	1.41		
		(-2.68--2.89)x(3.83+3.83)/2	0.80		
		(-2.21--2.68)x(3.81+3.83)/2	1.80		
		(-1.58--2.21)x(3.82+3.81)/2	2.40		
		(-1.30--1.58)x(3.81+3.82)/2	1.07		
		(-0.96--1.30)x(3.75+3.81)/2	1.29		
		(-0.87--0.96)x(3.85+3.75)/2	0.34		
		(-0.73--0.87)x(3.86+3.90)/2	0.54		
		(-0.72--0.73)x(3.86+3.86)/2	0.04		
		(-0.71--0.72)x(4.37+4.17)/2	0.04		
		(-0.70--0.71)x(3.84+3.91)/2	0.04		
		(-0.69--0.70)x(3.54+3.76)/2	0.04		
		(-0.68--0.69)x(3.64+3.54)/2	0.04		
		(-0.50--0.68)x(3.74+3.64)/2	0.66		
		(-0.49--0.50)x(3.75+3.74)/2	0.04		
		(-0.48--0.49)x(3.95+3.75)/2	0.04		
		(-0.47--0.48)x(3.98+3.95)/2	0.04		
		(-0.41--0.47)x(4.37+3.98)/2	0.25		
		(-0.40--0.41)x(3.77+4.15)/2	0.04		
		(-0.36--0.40)x(3.60+3.77)/2	0.15		
		(-0.35--0.36)x(3.59+3.60)/2	0.04		
		(-0.33--0.35)x(3.60+3.59)/2	0.07		
		(-0.32--0.33)x(3.48+3.60)/2	0.04		
		(-0.30--0.32)x(3.72+3.48)/2	0.07		
		(-0.17--0.30)x(3.57+3.72)/2	0.47		
		(-0.03--0.17)x(3.62+3.57)/2	0.50		
		(0.29--0.03)x(3.58+3.62)/2	1.15		
		(0.62-0.29)x(3.51+3.58)/2	1.17		
		(1.36-0.62)x(3.36+3.51)/2	2.54		
		(1.72-1.36)x(3.29+3.36)/2	1.20		
		(2.28-1.72)x(3.19+3.29)/2	1.81		
		(2.81-2.28)x(3.11+3.19)/2	1.67		
		(3.15-2.81)x(3.06+3.11)/2	1.05		
		(3.91-3.15)x(2.99+3.06)/2	2.30		
		(4.93-3.91)x(2.89+2.99)/2	3.00		
		(5.01-4.93)x(2.88+2.89)/2	0.23		
		(5.14-5.01)x(2.86+2.88)/2	0.37		
		(6.11-5.14)x(2.80+2.86)/2	2.75		
		(6.71-6.11)x(2.77+2.80)/2	1.67		
		(7.21-6.71)x(2.72+2.77)/2	1.37		
		(8.00-7.21)x(2.68+2.72)/2	2.13		
		(8.31-8.00)x(2.66+2.68)/2	0.83		
		(8.50-8.31)x(2.65+2.66)/2	0.50		
		(9.40-8.50)x(2.59+2.65)/2	2.36		
		(9.81-9.40)x(2.55+2.59)/2	1.05		
		(10.50-9.81)x(2.52+2.55)/2	1.75		
		(10.86-10.50)x(2.51+2.52)/2	0.91		
		(11.60-10.86)x(2.46+2.51)/2	1.84		
		(12.06-11.60)x(2.43+2.46)/2	1.12		
		(12.37-12.06)x(2.41+2.43)/2	0.75		
		(11.45-12.37)x(1.80+2.41)/2	-1.94		
		(-11.45-11.45)x(1.80+1.80)/2	-41.22		
		(-14.42--11.45)x(3.78+1.80)/2	-8.29		
				38.56	
85 1260.00	B1	(-14.52--14.55)x(3.87+3.87)/2	0.12		
		(-13.93--14.52)x(3.85+3.87)/2	2.28		
		(-12.99--13.93)x(3.86+3.85)/2	3.62		
		(-12.83--12.99)x(3.86+3.86)/2	0.62		
		(-12.74--12.83)x(3.86+3.86)/2	0.35		
		(-11.74--12.74)x(3.82+3.86)/2	3.84		
		(-10.95--11.74)x(3.77+3.82)/2	3.00		
		(-10.64--10.95)x(3.76+3.77)/2	1.17		
		(-10.13--10.64)x(3.74+3.76)/2	1.91		
		(-9.54--10.13)x(3.72+3.74)/2	2.20		
		(-9.17--9.54)x(3.71+3.72)/2	1.37		
		(-8.44--9.17)x(3.70+3.71)/2	2.70		
		(-8.31--8.44)x(3.69+3.70)/2	0.48		
		(-8.29--8.31)x(3.69+3.69)/2	0.07		
		(-8.28--8.29)x(3.69+3.69)/2	0.04		
		(-8.20--8.28)x(3.71+3.69)/2	0.30		
		(-8.17--8.20)x(3.71+3.71)/2	0.11		
		(-8.13--8.17)x(3.85+3.71)/2	0.15		
		(-8.12--8.13)x(3.88+3.85)/2	0.04		
		(-8.11--8.12)x(3.74+3.73)/2	0.04		
		(-8.10--8.11)x(3.73+3.74)/2	0.04		
		(-7.98--8.10)x(3.72+3.73)/2	0.45		
		(-7.79--7.98)x(3.72+3.72)/2	0.71		
		(-7.34--7.79)x(3.71+3.72)/2	1.67		
		(-7.32--7.34)x(3.71+3.71)/2	0.07		
		(-7.27--7.32)x(3.71+3.71)/2	0.19		
		(-6.53--7.27)x(3.72+3.71)/2	2.75		
		(-6.24--6.53)x(3.72+3.72)/2	1.08		
		(-5.60--6.24)x(3.70+3.72)/2	2.37		
		(-5.15--5.60)x(3.68+3.70)/2	1.66		
		(-4.41--5.15)x(3.70+3.68)/2	2.73		
		(-4.05--4.41)x(3.71+3.70)/2	1.33		
		(-3.65--4.05)x(3.73+3.71)/2	1.49		
		(-3.44--3.65)x(3.74+3.73)/2	0.78		
		(-3.33--3.44)x(3.75+3.74)/2	0.41		
		(-3.31--3.33)x(3.75+3.75)/2	0.08		
		(-3.30--3.31)x(3.78+3.75)/2	0.04		
		(-3.24--3.30)x(3.82+3.78)/2	0.23		
		A RIPORTARE mq	42.49		

SCATOLARE

		CALCOLO DELLE AREE		Foglio n. 14
STERRO				
N. SEZIONE PROG.	FIG.	ELEMENTI DI CALCOLO	AREA ELEMENTARE mq	AREA FIGURA mq	NOTE
		RIPORTO mq	42.49		
		(-3.23--3.24)x(3.93+3.82)/2	0.04		
		(-3.22--3.23)x(3.75+3.93)/2	0.04		
		(-3.21--3.22)x(3.75+3.76)/2	0.04		
		(-3.15--3.21)x(3.75+3.75)/2	0.23		
		(-3.14--3.15)x(3.75+3.75)/2	0.04		
		(-3.12--3.14)x(3.75+3.75)/2	0.08		
		(-2.95--3.12)x(3.77+3.75)/2	0.64		
		(-2.03--2.95)x(3.83+3.77)/2	3.50		
		(-1.85--2.03)x(3.85+3.83)/2	0.69		
		(-1.56--1.85)x(3.79+3.85)/2	1.11		
		(-0.98--1.56)x(3.66+3.79)/2	2.16		
		(-0.88--0.98)x(3.64+3.66)/2	0.36		
		(-0.84--0.88)x(3.63+3.64)/2	0.15		
		(-0.67--0.84)x(3.66+3.63)/2	0.62		
		(-0.65--0.67)x(3.88+3.66)/2	0.08		
		(-0.62--0.65)x(3.84+3.88)/2	0.12		
		(-0.61--0.62)x(3.88+3.84)/2	0.04		
		(-0.54--0.61)x(3.86+3.88)/2	0.27		
		(-0.53--0.54)x(4.28+3.88)/2	0.04		
		(-0.52--0.53)x(4.12+4.15)/2	0.04		
		(-0.51--0.52)x(4.12+3.98)/2	0.04		
		(-0.50--0.51)x(4.03+4.12)/2	0.04		
		(-0.48--0.50)x(3.66+4.03)/2	0.08		
		(-0.42--0.48)x(3.58+3.59)/2	0.22		
		(-0.29--0.42)x(3.59+3.58)/2	0.47		
		(-0.28--0.29)x(4.00+3.59)/2	0.04		
		(-0.23--0.28)x(4.37+4.00)/2	0.21		
		(-0.22--0.23)x(3.77+4.27)/2	0.04		
		(-0.20--0.22)x(3.69+3.77)/2	0.07		
		(-0.19--0.20)x(3.69+3.69)/2	0.04		
		(-0.18--0.19)x(3.69+3.69)/2	0.04		
		(-0.16--0.18)x(3.84+3.64)/2	0.07		
		(-0.15--0.16)x(3.84+3.84)/2	0.04		
		(-0.11--0.15)x(3.67+3.84)/2	0.15		
		(-0.10--0.11)x(3.56+3.67)/2	0.04		
		(0.04--0.10)x(3.48+3.56)/2	0.49		
		(0.35-0.04)x(3.37+3.48)/2	1.06		
		(1.30-0.35)x(3.19+3.37)/2	3.12		
		(1.44-1.30)x(3.16+3.19)/2	0.44		
		(1.53-1.44)x(3.15+3.16)/2	0.28		
		(2.54-1.53)x(2.95+3.15)/2	3.08		
		(3.32-2.54)x(2.79+2.95)/2	2.24		
		(3.64-3.32)x(2.72+2.79)/2	0.88		
		(3.79-3.64)x(2.70+2.72)/2	0.41		
		(4.16-3.79)x(2.67+2.70)/2	0.99		
		(4.58-4.16)x(2.64+2.67)/2	1.12		
		(4.74-4.58)x(2.63+2.64)/2	0.42		
		(5.10-4.74)x(2.62+2.63)/2	0.94		
		(5.84-5.10)x(2.61+2.62)/2	1.94		
		(6.88-5.84)x(2.61+2.61)/2	2.71		
		(6.94-6.88)x(2.61+2.61)/2	0.16		
		(7.02-6.94)x(2.61+2.61)/2	0.21		
		(8.03-7.02)x(2.61+2.61)/2	2.64		
		(8.67-8.03)x(2.61+2.61)/2	1.67		
		(9.13-8.67)x(2.62+2.61)/2	1.20		
		(9.88-9.13)x(2.61+2.62)/2	1.96		
		(10.23-9.88)x(2.62+2.61)/2	0.92		
		(10.45-10.23)x(2.61+2.62)/2	0.58		
		(11.33-10.45)x(2.57+2.61)/2	2.28		
		(12.24-11.33)x(2.53+2.57)/2	2.32		
		(12.43-12.24)x(2.52+2.53)/2	0.48		
		(12.54-12.43)x(2.53+2.52)/2	0.28		
		(11.45-12.54)x(1.80+2.53)/2	-2.36		
		(-11.45-11.45)x(1.80+1.80)/2	-41.22		
		(-14.55--11.45)x(3.87+1.80)/2	-8.79		
				36.82	
85 1260.00	B2	(22.04-21.96)x(1.70+1.74)/2	0.14		
		(22.31-22.04)x(1.55+1.70)/2	0.44		
		(22.61-22.31)x(1.36+1.55)/2	0.44		
		(22.85-22.61)x(1.23+1.36)/2	0.31		
		(22.94-22.85)x(1.18+1.23)/2	0.11		
		(22.95-22.94)x(1.18+1.18)/2	0.01		
		(22.98-22.95)x(1.08+1.18)/2	0.03		
		(23.11-22.98)x(1.04+1.08)/2	0.14		
		(23.17-23.11)x(0.99+1.04)/2	0.06		
		(23.41-23.17)x(0.82+0.99)/2	0.22		
		(24.17-23.41)x(0.28+0.82)/2	0.42		
		(24.38-24.17)x(0.13+0.28)/2	0.04		
		(21.96-24.38)x(1.74+0.13)/2	-2.26		
				0.10	
86 1275.00	B1	(-14.35--14.72)x(3.97+3.98)/2	1.47		
		(-14.20--14.35)x(3.97+3.97)/2	0.60		
		(-13.97--14.20)x(3.97+3.97)/2	0.91		
		(-13.11--13.97)x(3.97+3.97)/2	3.41		
		(-12.55--13.11)x(3.97+3.97)/2	2.22		
		(-12.01--12.55)x(3.95+3.97)/2	2.14		
		(-11.11--12.01)x(3.94+3.95)/2	3.55		
		(-10.91--11.11)x(3.94+3.94)/2	0.79		
		(-10.78--10.91)x(3.93+3.94)/2	0.51		
		(-9.81--10.78)x(3.91+3.93)/2	3.80		
		(-9.00--9.81)x(3.87+3.91)/2	3.15		
		(-8.71--9.00)x(3.86+3.87)/2	1.12		
		(-8.59--8.71)x(3.85+3.86)/2	0.46		
		(-7.92--8.59)x(3.86+3.85)/2	2.58		
		(-7.91--7.92)x(3.86+3.86)/2	0.04		
		(-7.78--7.91)x(3.87+3.86)/2	0.50		
		(-7.76--7.78)x(3.90+3.87)/2	0.08		
		(-7.75--7.76)x(3.91+3.90)/2	0.04		
		(-7.74--7.75)x(3.90+3.92)/2	0.04		
		(-7.73--7.74)x(3.88+3.90)/2	0.04		
		(-7.71--7.73)x(3.81+3.88)/2	0.08		
		(-7.61--7.71)x(3.79+3.81)/2	0.38		
		(-7.22--7.61)x(3.78+3.79)/2	1.48		
		(-6.52--7.22)x(3.76+3.78)/2	2.64		
		A RIPORTARE mq	32.03		

SCATOLARE

		CALCOLO DELLE AREE		Foglio n. 15
STERRO				
N. SEZIONE PROG.	FIG.	ELEMENTI DI CALCOLO	AREA ELEMENTARE mq	AREA FIGURA mq	NOTE
		RIPORTO mq	32.03		
		(-5.43--6.52)x(3.75+3.76)/2	4.09		
		(-5.42--5.43)x(3.75+3.75)/2	0.04		
		(-5.40--5.42)x(3.75+3.75)/2	0.07		
		(-4.32--5.40)x(3.75+3.75)/2	4.05		
		(-3.65--4.32)x(3.77+3.75)/2	2.52		
		(-3.22--3.65)x(3.79+3.77)/2	1.63		
		(-3.11--3.22)x(3.79+3.79)/2	0.42		
		(-2.89--3.11)x(3.89+3.79)/2	0.84		
		(-2.86--2.89)x(3.94+3.89)/2	0.12		
		(-2.84--2.86)x(3.94+3.95)/2	0.08		
		(-2.83--2.84)x(3.92+3.94)/2	0.04		
		(-2.69--2.83)x(3.88+3.92)/2	0.55		
		(-2.24--2.69)x(3.83+3.88)/2	1.73		
		(-2.12--2.24)x(3.82+3.82)/2	0.46		
		(-1.44--2.12)x(3.84+3.82)/2	2.60		
		(-1.02--1.44)x(3.86+3.84)/2	1.62		
		(-0.81--1.02)x(3.86+3.86)/2	0.81		
		(-0.55--0.81)x(3.94+3.86)/2	1.01		
		(-0.51--0.55)x(3.88+3.94)/2	0.16		
		(-0.41--0.51)x(3.86+3.88)/2	0.39		
		(-0.40--0.41)x(3.86+3.86)/2	0.04		
		(-0.39--0.40)x(3.86+3.86)/2	0.04		
		(-0.36--0.39)x(3.86+3.86)/2	0.12		
		(-0.35--0.36)x(3.90+3.86)/2	0.04		
		(-0.34--0.35)x(4.41+3.91)/2	0.04		
		(-0.33--0.34)x(4.34+4.37)/2	0.04		
		(-0.30--0.33)x(4.11+4.26)/2	0.13		
		(-0.28--0.30)x(4.11+4.11)/2	0.08		
		(-0.19--0.28)x(4.11+4.11)/2	0.37		
		(-0.05--0.19)x(4.21+4.11)/2	0.58		
		(-0.04--0.05)x(4.32+4.29)/2	0.04		
		(-0.03--0.04)x(3.78+4.37)/2	0.04		
		(-0.02--0.03)x(3.83+3.77)/2	0.04		
		(-0.01--0.02)x(3.78+3.79)/2	0.04		
		(0.00--0.01)x(3.79+3.78)/2	0.04		
		(0.11-0.00)x(4.03+3.79)/2	0.43		
		(0.14-0.11)x(4.03+4.02)/2	0.12		
		(0.32-0.14)x(4.07+4.03)/2	0.73		
		(1.17-0.32)x(4.25+4.07)/2	3.54		
		(1.70-1.17)x(4.26+4.25)/2	2.26		
		(2.27-1.70)x(4.28+4.26)/2	2.43		
		(3.18-2.27)x(4.26+4.28)/2	3.89		
		(3.37-3.18)x(4.26+4.26)/2	0.81		
		(3.49-3.37)x(4.25+4.26)/2	0.51		
		(4.47-3.49)x(4.19+4.25)/2	4.14		
		(5.27-4.47)x(4.11+4.19)/2	3.32		
		(5.57-5.27)x(4.08+4.11)/2	1.23		
		(6.04-5.57)x(3.95+4.08)/2	1.89		
		(6.66-6.04)x(3.75+3.95)/2	2.39		
		(7.05-6.66)x(3.64+3.75)/2	1.44		
		(7.76-7.05)x(3.45+3.64)/2	2.52		
		(8.84-7.76)x(3.15+3.45)/2	3.56		
		(8.86-8.84)x(3.14+3.15)/2	0.06		
		(8.87-8.86)x(3.14+3.14)/2	0.03		
		(8.90-8.87)x(3.13+3.14)/2	0.09		
		(9.66-8.90)x(2.88+3.13)/2	2.28		
		(9.96-9.66)x(2.78+2.88)/2	0.85		
		(10.62-9.96)x(2.57+2.78)/2	1.77		
		(11.06-10.62)x(2.43+2.57)/2	1.10		
		(11.75-11.06)x(2.25+2.43)/2	1.61		
		(12.04-11.75)x(2.20+2.25)/2	0.65		
		(11.45-12.04)x(1.80+2.20)/2	-1.18		
		(-11.45-11.45)x(1.80+1.80)/2	-41.22		
		(-14.72--11.45)x(3.98+1.80)/2	-9.45		
				48.74	
87 1290.00	B1	(-14.48--14.57)x(3.88+3.88)/2	0.35		
		(-14.18--14.48)x(3.88+3.88)/2	1.16		
		(-13.38--14.18)x(3.88+3.88)/2	3.10		
		(-12.40--13.38)x(3.87+3.88)/2	3.80		
		(-12.28--12.40)x(3.87+3.87)/2	0.46		
		(-12.09--12.28)x(3.87+3.87)/2	0.74		
		(-11.18--12.09)x(3.87+3.87)/2	3.52		
		(-10.61--11.18)x(3.87+3.87)/2	2.21		
		(-10.08--10.61)x(3.87+3.87)/2	2.05		
		(-9.24--10.08)x(3.85+3.87)/2	3.24		
		(-8.99--9.24)x(3.85+3.85)/2	0.96		
		(-8.83--8.99)x(3.84+3.85)/2	0.62		
		(-7.89--8.83)x(3.80+3.84)/2	3.59		
		(-7.72--7.89)x(3.79+3.80)/2	0.65		
		(-7.69--7.72)x(3.79+3.79)/2	0.11		
		(-7.65--7.69)x(3.85+3.79)/2	0.15		
		(-7.63--7.65)x(3.87+3.85)/2	0.08		
		(-7.62--7.63)x(3.88+3.87)/2	0.04		
		(-7.61--7.62)x(3.86+3.88)/2	0.04		
		(-7.53--7.61)x(3.73+3.84)/2	0.30		
		(-7.50--7.53)x(3.79+3.73)/2	0.11		
		(-7.39--7.50)x(3.79+3.79)/2	0.42		
		(-7.18--7.39)x(3.80+3.79)/2	0.80		
		(-6.79--7.18)x(3.79+3.80)/2	1.48		
		(-6.38--6.79)x(3.78+3.79)/2	1.55		
		(-5.69--6.38)x(3.78+3.78)/2	2.61		
		(-5.26--5.69)x(3.77+3.78)/2	1.62		
		(-4.59--5.26)x(3.75+3.77)/2	2.52		
		(-3.52--4.59)x(3.76+3.75)/2	4.02		
		(-3.49--3.52)x(3.76+3.76)/2	0.11		
		(-3.04--3.49)x(3.78+3.76)/2	1.70		
		(-2.85--3.04)x(3.77+3.78)/2	0.72		
		(-2.78--2.85)x(3.78+3.77)/2	0.26		
		(-2.76--2.78)x(3.78+3.78)/2	0.08		
		(-2.75--2.76)x(3.78+3.78)/2	0.04		
		(-2.74--2.75)x(3.78+3.78)/2	0.04		
		(-2.73--2.74)x(3.91+3.78)/2	0.04		
		(-2.72--2.73)x(3.90+3.91)/2	0.04		
		(-2.66--2.72)x(3.78+3.80)/2	0.23		
		A RIPORTARE mq	45.56		

SCATOLARE

		CALCOLO DELLE AREE		Foglio n. 16
STERRO				
N. SEZIONE PROG.	FIG.	ELEMENTI DI CALCOLO	AREA ELEMENTARE mq	AREA FIGURA mq	NOTE
		RIPORTO mq	45.56		
		(-2.54--2.66)x(3.78+3.78)/2	0.45		
		(-2.52--2.54)x(3.78+3.78)/2	0.08		
		(-2.39--2.52)x(3.79+3.78)/2	0.49		
		(-1.69--2.39)x(3.83+3.79)/2	2.67		
		(-1.30--1.69)x(3.85+3.83)/2	1.50		
		(-0.66--1.30)x(3.88+3.85)/2	2.47		
		(-0.33--0.66)x(3.89+3.88)/2	1.28		
		(-0.27--0.33)x(3.89+3.89)/2	0.23		
		(-0.26--0.27)x(3.89+3.89)/2	0.04		
		(-0.24--0.26)x(3.92+3.89)/2	0.08		
		(-0.23--0.24)x(3.93+3.92)/2	0.04		
		(-0.21--0.23)x(3.93+3.93)/2	0.08		
		(-0.13--0.21)x(4.26+3.93)/2	0.33		
		(-0.12--0.13)x(3.80+4.26)/2	0.04		
		(-0.11--0.12)x(4.98+4.41)/2	0.05		
		(-0.10--0.11)x(4.86+4.87)/2	0.05		
		(-0.09--0.10)x(4.10+4.36)/2	0.04		
		(-0.08--0.09)x(3.98+4.10)/2	0.04		
		(-0.07--0.08)x(3.89+3.98)/2	0.04		
		(0.07--0.07)x(3.89+3.89)/2	0.54		
		(0.12-0.07)x(3.89+3.89)/2	0.19		
		(0.19-0.12)x(4.31+3.88)/2	0.29		
		(0.20-0.19)x(3.71+3.84)/2	0.04		
		(0.22-0.20)x(4.36+3.71)/2	0.08		
		(0.23-0.22)x(4.43+4.36)/2	0.04		
		(0.24-0.23)x(4.32+4.36)/2	0.04		
		(0.25-0.24)x(3.98+4.32)/2	0.04		
		(0.27-0.25)x(3.91+3.98)/2	0.08		
		(0.30-0.27)x(3.93+3.91)/2	0.12		
		(0.31-0.30)x(3.92+3.93)/2	0.04		
		(0.40-0.31)x(3.91+3.92)/2	0.35		
		(0.65-0.40)x(3.90+3.91)/2	0.98		
		(0.90-0.65)x(3.87+3.90)/2	0.97		
		(1.87-0.90)x(3.85+3.87)/2	3.74		
		(2.00-1.87)x(3.84+3.85)/2	0.50		
		(2.20-2.00)x(3.84+3.84)/2	0.77		
		(3.10-2.20)x(3.83+3.84)/2	3.45		
		(3.64-3.10)x(3.84+3.83)/2	2.07		
		(4.20-3.64)x(3.82+3.84)/2	2.14		
		(5.06-4.20)x(3.81+3.82)/2	3.28		
		(5.29-5.06)x(3.81+3.81)/2	0.88		
		(5.44-5.29)x(3.82+3.81)/2	0.57		
		(6.39-5.44)x(3.85+3.82)/2	3.64		
		(7.23-6.39)x(3.78+3.85)/2	3.20		
		(7.49-7.23)x(3.76+3.78)/2	0.98		
		(7.91-7.49)x(3.71+3.76)/2	1.57		
		(8.59-7.91)x(3.62+3.71)/2	2.49		
		(9.01-8.59)x(3.55+3.62)/2	1.51		
		(9.69-9.01)x(3.45+3.55)/2	2.38		
		(10.77-9.69)x(3.27+3.45)/2	3.63		
		(10.79-10.77)x(3.27+3.27)/2	0.07		
		(11.88-10.79)x(3.05+3.27)/2	3.44		
		(12.58-11.88)x(2.86+3.05)/2	2.07		
		(12.89-12.58)x(2.76+2.86)/2	0.87		
		(11.45-12.89)x(1.80+2.76)/2	-3.28		
		(-11.45-11.45)x(1.80+1.80)/2	-41.22		
		(-14.57--11.45)x(3.88+1.80)/2	-8.86		
				49.25	
88 1305.00	B1	(-14.01--14.64)x(3.92+3.92)/2	2.47		
		(-13.65--14.01)x(3.93+3.92)/2	1.41		
		(-13.49--13.65)x(3.92+3.93)/2	0.63		
		(-13.08--13.49)x(3.92+3.92)/2	1.61		
		(-12.70--13.08)x(3.92+3.92)/2	1.49		
		(-12.55--12.70)x(3.92+3.92)/2	0.59		
		(-12.23--12.55)x(3.91+3.92)/2	1.25		
		(-11.45--12.23)x(3.90+3.91)/2	3.05		
		(-10.44--11.45)x(3.84+3.90)/2	3.91		
		(-10.36--10.44)x(3.84+3.84)/2	0.31		
		(-10.22--10.36)x(3.83+3.84)/2	0.54		
		(-9.26--10.22)x(3.82+3.83)/2	3.67		
		(-8.66--9.26)x(3.80+3.82)/2	2.29		
		(-8.16--8.66)x(3.78+3.80)/2	1.90		
		(-8.03--8.16)x(3.78+3.78)/2	0.49		
		(-7.74--8.03)x(3.78+3.78)/2	1.10		
		(-7.67--7.74)x(3.79+3.78)/2	0.26		
		(-7.58--7.67)x(3.84+3.79)/2	0.34		
		(-7.54--7.58)x(3.84+3.84)/2	0.15		
		(-7.52--7.54)x(3.85+3.84)/2	0.08		
		(-7.51--7.52)x(3.84+3.85)/2	0.04		
		(-7.50--7.51)x(3.83+3.83)/2	0.04		
		(-7.49--7.50)x(3.83+3.83)/2	0.04		
		(-7.48--7.49)x(3.81+3.83)/2	0.04		
		(-7.47--7.48)x(3.76+3.77)/2	0.04		
		(-7.46--7.47)x(3.78+3.77)/2	0.04		
		(-7.42--7.46)x(3.77+3.78)/2	0.15		
		(-7.11--7.42)x(3.75+3.77)/2	1.17		
		(-7.06--7.11)x(3.74+3.75)/2	0.19		
		(-6.87--7.06)x(3.74+3.74)/2	0.71		
		(-5.96--6.87)x(3.72+3.74)/2	3.39		
		(-5.09--5.96)x(3.72+3.72)/2	3.24		
		(-4.86--5.09)x(3.73+3.72)/2	0.86		
		(-4.50--4.86)x(3.74+3.73)/2	1.34		
		(-3.77--4.50)x(3.77+3.74)/2	2.74		
		(-3.18--3.77)x(3.84+3.77)/2	2.24		
		(-2.96--3.18)x(3.87+3.84)/2	0.85		
		(-2.88--2.96)x(3.88+3.87)/2	0.31		
		(-2.72--2.88)x(3.83+3.88)/2	0.62		
		(-2.69--2.72)x(3.84+3.83)/2	0.12		
		(-2.66--2.69)x(3.83+3.84)/2	0.12		
		(-2.63--2.66)x(3.83+3.83)/2	0.11		
		(-2.62--2.63)x(3.83+3.83)/2	0.04		
		(-2.61--2.62)x(3.79+3.83)/2	0.04		
		(-2.60--2.61)x(3.87+3.79)/2	0.04		
		(-2.59--2.60)x(3.84+3.87)/2	0.04		
		A RIPORTARE mq	46.10		

SCATOLARE

		CALCOLO DELLE AREE		Foglio n. 17
STERRO				
N. SEZIONE PROG.	FIG.	ELEMENTI DI CALCOLO	AREA ELEMENTARE mq	AREA FIGURA mq	NOTE
		RIPORTO mq	46.10		
		(-2.58--2.59)x(3.77+3.75)/2	0.04		
		(-2.56--2.58)x(3.81+3.77)/2	0.08		
		(-2.53--2.56)x(4.03+3.81)/2	0.12		
		(-2.50--2.53)x(4.01+4.02)/2	0.12		
		(-2.38--2.50)x(4.07+4.01)/2	0.48		
		(-1.64--2.38)x(4.41+4.07)/2	3.14		
		(-1.59--1.64)x(4.43+4.41)/2	0.22		
		(-1.57--1.59)x(4.44+4.43)/2	0.09		
		(-1.52--1.57)x(4.44+4.44)/2	0.22		
		(-0.47--1.52)x(4.64+4.44)/2	4.77		
		(-0.20--0.47)x(4.62+4.64)/2	1.25		
		(-0.06--0.20)x(4.54+4.62)/2	0.64		
		(-0.03--0.06)x(4.13+4.54)/2	0.13		
		(0.10--0.03)x(4.62+4.13)/2	0.57		
		(0.11-0.10)x(4.91+4.43)/2	0.05		
		(0.12-0.11)x(4.91+5.02)/2	0.05		
		(0.13-0.12)x(4.87+4.91)/2	0.05		
		(0.14-0.13)x(4.51+4.87)/2	0.05		
		(0.26-0.14)x(4.68+4.51)/2	0.55		
		(0.33-0.26)x(4.73+4.68)/2	0.33		
		(0.34-0.33)x(4.01+4.73)/2	0.04		
		(0.35-0.34)x(3.99+4.01)/2	0.04		
		(0.36-0.35)x(3.93+3.99)/2	0.04		
		(0.41-0.36)x(4.26+3.93)/2	0.20		
		(0.42-0.41)x(3.90+4.26)/2	0.04		
		(0.46-0.42)x(4.88+3.66)/2	0.17		
		(0.47-0.46)x(5.03+4.88)/2	0.05		
		(0.49-0.47)x(4.89+5.03)/2	0.10		
		(0.50-0.49)x(4.82+4.89)/2	0.05		
		(0.52-0.50)x(4.48+4.82)/2	0.09		
		(0.69-0.52)x(4.70+4.48)/2	0.78		
		(0.72-0.69)x(4.71+4.70)/2	0.14		
		(0.79-0.72)x(4.73+4.71)/2	0.33		
		(1.22-0.79)x(4.75+4.73)/2	2.04		
		(1.73-1.22)x(4.77+4.75)/2	2.43		
		(2.04-1.73)x(4.78+4.77)/2	1.48		
		(2.82-2.04)x(4.80+4.78)/2	3.74		
		(3.83-2.82)x(4.83+4.80)/2	4.86		
		(3.92-3.83)x(4.83+4.83)/2	0.43		
		(4.07-3.92)x(4.84+4.83)/2	0.73		
		(5.02-4.07)x(4.87+4.84)/2	4.61		
		(5.61-5.02)x(4.88+4.87)/2	2.88		
		(6.12-5.61)x(4.90+4.88)/2	2.49		
		(6.93-6.12)x(4.94+4.90)/2	3.99		
		(7.22-6.93)x(4.95+4.94)/2	1.43		
		(7.40-7.22)x(4.96+4.95)/2	0.89		
		(8.32-7.40)x(5.01+4.96)/2	4.59		
		(8.73-8.32)x(4.94+5.01)/2	2.04		
		(9.42-8.73)x(4.82+4.94)/2	3.37		
		(9.79-9.42)x(4.68+4.82)/2	1.76		
		(10.51-9.79)x(4.42+4.68)/2	3.28		
		(10.96-10.51)x(4.16+4.42)/2	1.93		
		(11.61-10.96)x(3.79+4.16)/2	2.58		
		(12.65-11.61)x(3.23+3.79)/2	3.65		
		(12.71-12.65)x(3.19+3.23)/2	0.19		
		(12.75-12.71)x(3.18+3.19)/2	0.13		
		(13.16-12.75)x(2.94+3.18)/2	1.25		
		(11.45-13.16)x(1.80+2.94)/2	-4.05		
		(-11.45-11.45)x(1.80+1.80)/2	-41.22		
		(-14.64--11.45)x(3.92+1.80)/2	-9.12		
				63.50	
89 1320.00	B1	(-14.06--14.59)x(3.93+3.90)/2	2.07		
		(-13.92--14.06)x(3.93+3.93)/2	0.55		
		(-13.84--13.92)x(3.94+3.93)/2	0.31		
		(-12.82--13.84)x(3.98+3.94)/2	4.04		
		(-12.05--12.82)x(4.04+3.98)/2	3.09		
		(-11.73--12.05)x(4.06+4.04)/2	1.30		
		(-11.20--11.73)x(4.08+4.06)/2	2.16		
		(-10.63--11.20)x(4.10+4.08)/2	2.33		
		(-10.27--10.63)x(4.09+4.10)/2	1.47		
		(-9.53--10.27)x(4.05+4.09)/2	3.01		
		(-8.49--9.53)x(3.93+4.05)/2	4.15		
		(-8.43--8.49)x(3.92+3.93)/2	0.24		
		(-8.41--8.43)x(3.92+3.92)/2	0.08		
		(-8.34--8.41)x(3.92+3.92)/2	0.27		
		(-7.61--8.34)x(3.88+3.92)/2	2.85		
		(-7.49--7.61)x(3.87+3.88)/2	0.47		
		(-7.47--7.49)x(3.86+3.87)/2	0.08		
		(-7.46--7.47)x(3.86+3.86)/2	0.04		
		(-7.42--7.46)x(3.81+3.86)/2	0.15		
		(-7.40--7.42)x(3.80+3.81)/2	0.08		
		(-7.38--7.40)x(3.78+3.80)/2	0.08		
		(-7.36--7.38)x(3.79+3.78)/2	0.08		
		(-7.35--7.36)x(3.75+3.79)/2	0.04		
		(-7.32--7.35)x(3.78+3.73)/2	0.11		
		(-7.29--7.32)x(3.85+3.80)/2	0.11		
		(-7.28--7.29)x(3.85+3.85)/2	0.04		
		(-7.12--7.28)x(3.86+3.85)/2	0.62		
		(-7.03--7.12)x(3.86+3.86)/2	0.35		
		(-6.82--7.03)x(3.86+3.86)/2	0.81		
		(-6.23--6.82)x(3.85+3.86)/2	2.27		
		(-5.48--6.23)x(3.85+3.85)/2	2.89		
		(-5.14--5.48)x(3.85+3.85)/2	1.31		
		(-4.92--5.14)x(3.85+3.85)/2	0.85		
		(-4.04--4.92)x(3.86+3.85)/2	3.39		
		(-3.14--4.04)x(3.87+3.86)/2	3.48		
		(-2.94--3.14)x(3.87+3.87)/2	0.77		
		(-2.89--2.94)x(3.87+3.87)/2	0.19		
		(-2.58--2.89)x(3.88+3.87)/2	1.20		
		(-2.52--2.58)x(3.87+3.88)/2	0.23		
		(-2.49--2.52)x(3.88+3.87)/2	0.12		
		(-2.47--2.49)x(3.80+3.88)/2	0.08		
		(-2.46--2.47)x(3.79+3.83)/2	0.04		
		(-2.45--2.46)x(3.78+3.73)/2	0.04		
		A RIPORTARE mq	47.84		

SCATOLARE

		CALCOLO DELLE AREE		Foglio n. 18
STERRO				
N. SEZIONE PROG.	FIG.	ELEMENTI DI CALCOLO	AREA ELEMENTARE mq	AREA FIGURA mq	NOTE
		RIPORTO mq	47.84		
		(-2.43--2.45)x(3.80+3.78)/2	0.08		
		(-2.42--2.43)x(3.91+3.80)/2	0.04		
		(-2.40--2.42)x(3.84+3.91)/2	0.08		
		(-2.37--2.40)x(3.84+3.84)/2	0.12		
		(-2.33--2.37)x(3.88+3.84)/2	0.15		
		(-2.25--2.33)x(3.89+3.88)/2	0.31		
		(-1.97--2.25)x(3.94+3.89)/2	1.10		
		(-1.84--1.97)x(3.97+3.94)/2	0.51		
		(-1.26--1.84)x(4.22+3.97)/2	2.38		
		(-0.74--1.26)x(4.50+4.22)/2	2.27		
		(-0.47--0.74)x(4.69+4.50)/2	1.24		
		(-0.12--0.47)x(5.02+4.69)/2	1.70		
		(0.02--0.12)x(5.16+5.02)/2	0.71		
		(0.15-0.02)x(5.45+5.16)/2	0.69		
		(0.17-0.15)x(5.49+5.45)/2	0.11		
		(0.21-0.17)x(4.77+5.49)/2	0.21		
		(0.23-0.21)x(5.06+4.77)/2	0.10		
		(0.25-0.23)x(4.73+5.06)/2	0.10		
		(0.32-0.25)x(4.99+4.73)/2	0.34		
		(0.33-0.32)x(4.70+3.70)/2	0.04		
		(0.34-0.33)x(5.41+4.21)/2	0.05		
		(0.53-0.34)x(5.70+5.42)/2	1.06		
		(0.54-0.53)x(5.52+5.70)/2	0.06		
		(0.56-0.54)x(4.54+5.52)/2	0.10		
		(0.58-0.56)x(4.61+4.54)/2	0.09		
		(0.59-0.58)x(4.04+4.61)/2	0.04		
		(0.60-0.59)x(3.98+4.02)/2	0.04		
		(0.63-0.60)x(4.21+3.98)/2	0.12		
		(0.64-0.63)x(3.96+4.21)/2	0.04		
		(0.71-0.64)x(5.50+3.61)/2	0.32		
		(0.72-0.71)x(5.67+5.50)/2	0.06		
		(0.80-0.72)x(5.75+5.67)/2	0.46		
		(1.12-0.80)x(5.91+5.75)/2	1.87		
		(1.45-1.12)x(6.09+5.91)/2	1.98		
		(2.22-1.45)x(6.29+6.09)/2	4.77		
		(2.55-2.22)x(6.40+6.29)/2	2.09		
		(2.70-2.55)x(6.42+6.40)/2	0.96		
		(3.09-2.70)x(6.46+6.42)/2	2.51		
		(3.50-3.09)x(6.51+6.46)/2	2.66		
		(3.65-3.50)x(6.52+6.51)/2	0.98		
		(4.00-3.65)x(6.46+6.52)/2	2.27		
		(4.75-4.00)x(6.37+6.46)/2	4.81		
		(5.78-4.75)x(6.07+6.37)/2	6.41		
		(5.85-5.78)x(6.05+6.07)/2	0.42		
		(5.95-5.85)x(6.03+6.05)/2	0.60		
		(6.95-5.95)x(5.78+6.03)/2	5.91		
		(7.57-6.95)x(5.61+5.78)/2	3.53		
		(8.04-7.57)x(5.47+5.61)/2	2.60		
		(8.81-8.04)x(5.07+5.47)/2	4.06		
		(9.14-8.81)x(4.96+5.07)/2	1.65		
		(9.35-9.14)x(4.89+4.96)/2	1.03		
		(10.24-9.35)x(4.65+4.89)/2	4.25		
		(11.13-10.24)x(4.46+4.65)/2	4.05		
		(11.34-11.13)x(4.42+4.46)/2	0.93		
		(11.67-11.34)x(4.28+4.42)/2	1.44		
		(12.44-11.67)x(3.90+4.28)/2	3.15		
		(12.92-12.44)x(3.61+3.90)/2	1.80		
		(13.54-12.92)x(3.25+3.61)/2	2.13		
		(13.81-13.54)x(3.04+3.25)/2	0.85		
		(13.87-13.81)x(3.00+3.04)/2	0.18		
		(13.25-13.87)x(3.00+3.00)/2	-1.86		
		(11.45-13.25)x(1.80+3.00)/2	-4.32		
		(-11.45-11.45)x(1.80+1.80)/2	-41.22		
		(-14.59--11.45)x(3.90+1.80)/2	-8.95		
				76.10	
90 1335.00	B1	(-14.19--14.74)x(4.05+3.99)/2	2.21		
		(-13.64--14.19)x(4.07+4.05)/2	2.23		
		(-13.10--13.64)x(4.09+4.07)/2	2.20		
		(-12.18--13.10)x(4.11+4.09)/2	3.77		
		(-12.00--12.18)x(4.12+4.11)/2	0.74		
		(-11.88--12.00)x(4.12+4.12)/2	0.49		
		(-10.90--11.88)x(4.11+4.12)/2	4.03		
		(-10.10--10.90)x(4.03+4.11)/2	3.26		
		(-9.80--10.10)x(4.01+4.03)/2	1.21		
		(-9.32--9.80)x(3.94+4.01)/2	1.91		
		(-8.70--9.32)x(3.84+3.94)/2	2.41		
		(-8.32--8.70)x(3.81+3.84)/2	1.45		
		(-7.60--8.32)x(3.75+3.81)/2	2.72		
		(-7.42--7.60)x(3.75+3.75)/2	0.67		
		(-7.26--7.42)x(3.74+3.75)/2	0.60		
		(-7.25--7.26)x(3.73+3.74)/2	0.04		
		(-7.23--7.25)x(3.75+3.73)/2	0.07		
		(-7.22--7.23)x(3.70+3.75)/2	0.04		
		(-7.21--7.22)x(3.71+3.68)/2	0.04		
		(-7.19--7.21)x(3.76+3.71)/2	0.07		
		(-7.18--7.19)x(3.79+3.76)/2	0.04		
		(-7.16--7.18)x(3.78+3.79)/2	0.08		
		(-7.14--7.16)x(3.76+3.78)/2	0.08		
		(-7.09--7.14)x(3.75+3.76)/2	0.19		
		(-7.07--7.09)x(3.74+3.75)/2	0.07		
		(-6.96--7.07)x(3.74+3.74)/2	0.41		
		(-6.51--6.96)x(3.75+3.74)/2	1.69		
		(-6.46--6.51)x(3.75+3.75)/2	0.19		
		(-5.41--6.46)x(3.74+3.75)/2	3.93		
		(-4.75--5.41)x(3.75+3.74)/2	2.47		
		(-4.31--4.75)x(3.75+3.75)/2	1.65		
		(-3.61--4.31)x(3.76+3.75)/2	2.63		
		(-3.21--3.61)x(3.76+3.76)/2	1.50		
		(-2.81--3.21)x(3.76+3.76)/2	1.50		
		(-2.61--2.81)x(3.75+3.76)/2	0.75		
		(-2.50--2.61)x(3.74+3.75)/2	0.41		
		(-2.42--2.50)x(3.75+3.74)/2	0.30		
		(-2.38--2.42)x(3.75+3.75)/2	0.15		
		(-2.33--2.38)x(3.77+3.75)/2	0.19		
		A RIPORTARE mq	48.39		

SCATOLARE

		CALCOLO DELLE AREE		Foglio n. 19
STERRO				
N. SEZIONE PROG.	FIG.	ELEMENTI DI CALCOLO	AREA ELEMENTARE mq	AREA FIGURA mq	NOTE
		RIPORTO mq	48.39		
		(-2.31--2.33)x(3.78+3.70)/2	0.07		
		(-2.30--2.31)x(3.79+3.79)/2	0.04		
		(-2.28--2.30)x(3.78+3.79)/2	0.08		
		(-2.11--2.28)x(3.78+3.78)/2	0.64		
		(-1.18--2.11)x(4.03+3.78)/2	3.63		
		(-1.01--1.18)x(4.08+4.03)/2	0.69		
		(-0.75--1.01)x(4.25+4.08)/2	1.08		
		(0.08--0.75)x(4.76+4.25)/2	3.74		
		(0.41-0.08)x(4.88+4.76)/2	1.59		
		(0.51-0.41)x(5.40+4.88)/2	0.51		
		(0.52-0.51)x(5.38+5.40)/2	0.05		
		(0.53-0.52)x(5.39+5.38)/2	0.05		
		(0.54-0.53)x(5.32+5.35)/2	0.05		
		(0.55-0.54)x(3.65+5.35)/2	0.05		
		(0.56-0.55)x(5.05+4.74)/2	0.05		
		(0.70-0.56)x(5.60+4.74)/2	0.72		
		(0.74-0.70)x(5.15+5.60)/2	0.22		
		(0.75-0.74)x(4.85+5.15)/2	0.05		
		(0.78-0.75)x(5.36+4.85)/2	0.15		
		(0.80-0.78)x(4.97+5.36)/2	0.10		
		(0.81-0.80)x(4.80+4.97)/2	0.05		
		(0.82-0.81)x(4.33+4.80)/2	0.05		
		(0.83-0.82)x(4.37+4.33)/2	0.04		
		(0.84-0.83)x(4.06+4.06)/2	0.04		
		(0.86-0.84)x(4.15+4.03)/2	0.08		
		(0.87-0.86)x(3.55+4.02)/2	0.04		
		(0.91-0.87)x(4.77+3.55)/2	0.17		
		(0.92-0.91)x(5.09+4.77)/2	0.05		
		(0.93-0.92)x(5.31+5.09)/2	0.05		
		(0.96-0.93)x(5.26+5.31)/2	0.16		
		(1.18-0.96)x(5.22+5.26)/2	1.15		
		(2.11-1.18)x(5.60+5.22)/2	5.03		
		(2.28-2.11)x(5.68+5.60)/2	0.96		
		(2.39-2.28)x(5.73+5.68)/2	0.63		
		(3.38-2.39)x(6.16+5.73)/2	5.89		
		(4.17-3.38)x(6.50+6.16)/2	5.00		
		(4.48-4.17)x(6.61+6.50)/2	2.03		
		(4.97-4.48)x(6.75+6.61)/2	3.27		
		(5.58-4.97)x(6.90+6.75)/2	4.16		
		(5.95-5.58)x(6.94+6.90)/2	2.56		
		(6.67-5.95)x(7.07+6.94)/2	5.04		
		(7.74-6.67)x(7.03+7.07)/2	7.54		
		(7.77-7.74)x(7.03+7.03)/2	0.21		
		(7.79-7.77)x(7.02+7.03)/2	0.14		
		(7.83-7.79)x(7.02+7.02)/2	0.28		
		(8.58-7.83)x(6.81+7.02)/2	5.19		
		(8.87-8.58)x(6.70+6.81)/2	1.96		
		(9.52-8.87)x(6.37+6.70)/2	4.25		
		(9.97-9.52)x(6.15+6.37)/2	2.82		
		(10.69-9.97)x(5.66+6.15)/2	4.25		
		(11.07-10.69)x(5.40+5.66)/2	2.10		
		(11.31-11.07)x(5.20+5.40)/2	1.27		
		(12.17-11.31)x(4.50+5.20)/2	4.17		
		(13.09-12.17)x(3.86+4.50)/2	3.85		
		(13.26-13.09)x(3.74+3.86)/2	0.65		
		(13.55-13.26)x(3.57+3.74)/2	1.06		
		(14.36-13.55)x(3.06+3.57)/2	2.69		
		(14.46-14.36)x(3.00+3.06)/2	0.30		
		(13.25-14.46)x(3.00+3.00)/2	-3.63		
		(11.45-13.25)x(1.80+3.00)/2	-4.32		
		(-11.45-11.45)x(1.80+1.80)/2	-41.22		
		(-14.74--11.45)x(3.99+1.80)/2	-9.52		
				82.44	
91 1350.00	B1	(-14.47--14.66)x(3.97+3.94)/2	0.75		
		(-13.50--14.47)x(4.02+3.97)/2	3.88		
		(-13.37--13.50)x(4.03+4.02)/2	0.52		
		(-13.16--13.37)x(4.03+4.03)/2	0.85		
		(-12.27--13.16)x(4.05+4.03)/2	3.60		
		(-11.71--12.27)x(4.05+4.05)/2	2.27		
		(-11.17--11.71)x(4.05+4.05)/2	2.19		
		(-10.30--11.17)x(4.02+4.05)/2	3.51		
		(-10.07--10.30)x(4.01+4.02)/2	0.92		
		(-9.93--10.07)x(4.00+4.01)/2	0.56		
		(-8.97--9.93)x(3.92+4.00)/2	3.80		
		(-8.55--8.97)x(3.86+3.92)/2	1.63		
		(-7.88--8.55)x(3.77+3.86)/2	2.56		
		(-7.76--7.88)x(3.76+3.77)/2	0.45		
		(-7.73--7.76)x(3.75+3.76)/2	0.11		
		(-7.27--7.73)x(3.71+3.75)/2	1.72		
		(-7.12--7.27)x(3.66+3.71)/2	0.55		
		(-7.09--7.12)x(3.65+3.66)/2	0.11		
		(-7.08--7.09)x(3.67+3.64)/2	0.04		
		(-6.89--7.08)x(3.71+3.67)/2	0.70		
		(-6.78--6.89)x(3.70+3.71)/2	0.41		
		(-6.36--6.78)x(3.69+3.70)/2	1.55		
		(-5.68--6.36)x(3.66+3.69)/2	2.50		
		(-4.59--5.68)x(3.64+3.66)/2	3.98		
		(-4.58--4.59)x(3.64+3.64)/2	0.04		
		(-3.48--4.58)x(3.60+3.64)/2	3.98		
		(-2.79--3.48)x(3.60+3.60)/2	2.48		
		(-2.38--2.79)x(3.59+3.60)/2	1.47		
		(-2.28--2.38)x(3.61+3.59)/2	0.36		
		(-2.21--2.28)x(3.67+3.61)/2	0.25		
		(-2.20--2.21)x(3.68+3.67)/2	0.04		
		(-2.19--2.20)x(3.68+3.68)/2	0.04		
		(-2.18--2.19)x(3.68+3.68)/2	0.04		
		(-2.08--2.18)x(3.65+3.68)/2	0.37		
		(-1.41--2.08)x(3.73+3.65)/2	2.47		
		(-1.29--1.41)x(3.76+3.73)/2	0.45		
		(-1.01--1.29)x(3.87+3.76)/2	1.07		
		(-0.19--1.01)x(4.14+3.87)/2	3.28		
		(0.18--0.19)x(4.24+4.14)/2	1.55		
		(0.49-0.18)x(4.36+4.24)/2	1.33		
		(0.61-0.49)x(4.40+4.36)/2	0.53		
		A RIPORTARE mq	58.91		

SCATOLARE

		CALCOLO DELLE AREE		Foglio n. 20
STERRO				
N. SEZIONE PROG.	FIG.	ELEMENTI DI CALCOLO	AREA ELEMENTARE mq	AREA FIGURA mq	NOTE
		RIPORTO mq	58.91		
		(0.76-0.61)x(4.11+4.40)/2	0.64		
		(0.77-0.76)x(3.90+4.11)/2	0.04		
		(0.78-0.77)x(4.16+3.70)/2	0.04		
		(0.80-0.78)x(4.29+4.16)/2	0.08		
		(0.83-0.80)x(3.84+4.29)/2	0.12		
		(0.84-0.83)x(3.89+3.84)/2	0.04		
		(0.93-0.84)x(4.42+3.89)/2	0.37		
		(0.95-0.93)x(4.45+4.42)/2	0.09		
		(1.05-0.95)x(4.30+4.45)/2	0.44		
		(1.07-1.05)x(4.29+4.30)/2	0.09		
		(1.08-1.07)x(4.18+4.22)/2	0.04		
		(1.09-1.08)x(3.50+4.09)/2	0.04		
		(1.10-1.09)x(3.62+3.50)/2	0.04		
		(1.11-1.10)x(3.99+3.83)/2	0.04		
		(1.23-1.11)x(4.25+3.99)/2	0.49		
		(1.76-1.23)x(4.56+4.25)/2	2.33		
		(2.01-1.76)x(4.60+4.56)/2	1.14		
		(2.56-2.01)x(4.69+4.60)/2	2.55		
		(3.11-2.56)x(4.72+4.69)/2	2.59		
		(3.99-3.11)x(4.79+4.72)/2	4.18		
		(4.21-3.99)x(4.81+4.79)/2	1.06		
		(4.34-4.21)x(4.82+4.81)/2	0.63		
		(5.30-4.34)x(4.87+4.82)/2	4.65		
		(6.12-5.30)x(4.90+4.87)/2	4.01		
		(6.40-6.12)x(4.92+4.90)/2	1.37		
		(6.85-6.40)x(4.91+4.92)/2	2.21		
		(7.50-6.85)x(4.88+4.91)/2	3.18		
		(7.91-7.50)x(4.84+4.88)/2	1.99		
		(8.60-7.91)x(4.77+4.84)/2	3.32		
		(9.69-8.60)x(4.58+4.77)/2	5.10		
		(9.70-9.69)x(4.58+4.58)/2	0.05		
		(9.71-9.70)x(4.57+4.58)/2	0.05		
		(10.80-9.71)x(4.21+4.57)/2	4.79		
		(11.48-10.80)x(4.02+4.21)/2	2.80		
		(11.89-11.48)x(3.92+4.02)/2	1.63		
		(12.08-11.89)x(3.89+3.92)/2	0.74		
		(12.56-12.08)x(3.79+3.89)/2	1.84		
		(12.87-12.56)x(3.74+3.79)/2	1.17		
		(12.99-12.87)x(3.71+3.74)/2	0.45		
		(13.26-12.99)x(3.65+3.71)/2	0.99		
		(14.09-13.26)x(3.46+3.65)/2	2.95		
		(15.04-14.09)x(3.17+3.46)/2	3.15		
		(15.19-15.04)x(3.12+3.17)/2	0.47		
		(15.42-15.19)x(3.02+3.12)/2	0.71		
		(15.46-15.42)x(3.00+3.02)/2	0.12		
		(13.25-15.46)x(3.00+3.00)/2	-6.63		
		(11.45-13.25)x(1.80+3.00)/2	-4.32		
		(-11.45-11.45)x(1.80+1.80)/2	-41.22		
		(-14.66--11.45)x(3.94+1.80)/2	-9.21		
				62.35	
92 1365.00	B1	(-14.14--14.45)x(3.82+3.80)/2	1.18		
		(-13.78--14.14)x(3.85+3.82)/2	1.38		
		(-13.64--13.78)x(3.86+3.85)/2	0.54		
		(-13.33--13.64)x(3.86+3.86)/2	1.20		
		(-12.54--13.33)x(3.86+3.86)/2	3.05		
		(-11.54--12.54)x(3.85+3.86)/2	3.85		
		(-11.44--11.54)x(3.85+3.85)/2	0.38		
		(-11.29--11.44)x(3.85+3.85)/2	0.58		
		(-10.35--11.29)x(3.83+3.85)/2	3.61		
		(-9.76--10.35)x(3.82+3.83)/2	2.26		
		(-9.25--9.76)x(3.82+3.82)/2	1.95		
		(-8.43--9.25)x(3.65+3.82)/2	3.06		
		(-8.15--8.43)x(3.60+3.65)/2	1.01		
		(-7.97--8.15)x(3.59+3.60)/2	0.65		
		(-7.05--7.97)x(3.53+3.59)/2	3.28		
		(-6.88--7.05)x(3.53+3.53)/2	0.60		
		(-6.85--6.88)x(3.53+3.53)/2	0.11		
		(-6.84--6.85)x(3.54+3.59)/2	0.04		
		(-6.83--6.84)x(3.56+3.54)/2	0.04		
		(-6.82--6.83)x(3.55+3.56)/2	0.04		
		(-6.81--6.82)x(3.56+3.56)/2	0.04		
		(-6.79--6.81)x(3.58+3.57)/2	0.07		
		(-6.77--6.79)x(3.56+3.58)/2	0.07		
		(-6.71--6.77)x(3.53+3.56)/2	0.21		
		(-6.66--6.71)x(3.53+3.53)/2	0.18		
		(-6.56--6.66)x(3.51+3.53)/2	0.35		
		(-6.35--6.56)x(3.49+3.51)/2	0.73		
		(-5.95--6.35)x(3.49+3.49)/2	1.40		
		(-5.57--5.95)x(3.49+3.49)/2	1.33		
		(-5.05--5.57)x(3.48+3.49)/2	1.81		
		(-4.85--5.05)x(3.48+3.48)/2	0.70		
		(-4.26--4.85)x(3.48+3.48)/2	2.05		
		(-3.76--4.26)x(3.48+3.48)/2	1.74		
		(-2.71--3.76)x(3.44+3.48)/2	3.63		
		(-2.67--2.71)x(3.44+3.44)/2	0.14		
		(-2.66--2.67)x(3.44+3.44)/2	0.03		
		(-2.20--2.66)x(3.44+3.44)/2	1.58		
		(-2.09--2.20)x(3.44+3.44)/2	0.38		
		(-1.99--2.09)x(3.49+3.44)/2	0.35		
		(-1.92--1.99)x(3.53+3.49)/2	0.25		
		(-1.90--1.92)x(3.56+3.53)/2	0.07		
		(-1.89--1.90)x(3.45+3.56)/2	0.04		
		(-1.88--1.89)x(3.47+3.46)/2	0.03		
		(-1.86--1.88)x(3.47+3.46)/2	0.07		
		(-1.74--1.86)x(3.50+3.47)/2	0.42		
		(-1.56--1.74)x(3.51+3.50)/2	0.63		
		(-0.84--1.56)x(3.71+3.51)/2	2.60		
		(-0.46--0.84)x(3.78+3.71)/2	1.42		
		(0.15--0.46)x(3.98+3.78)/2	2.37		
		(0.64-0.15)x(4.12+3.98)/2	1.98		
		(0.91-0.64)x(4.15+4.12)/2	1.12		
		(0.94-0.91)x(4.15+4.15)/2	0.12		
		(0.95-0.94)x(4.16+4.15)/2	0.04		
		(0.96-0.95)x(3.57+4.16)/2	0.04		
		A RIPORTARE mq	56.80		

SCATOLARE

		CALCOLO DELLE AREE		Foglio n. 21
STERRO				
N. SEZIONE PROG.	FIG.	ELEMENTI DI CALCOLO	AREA ELEMENTARE mq	AREA FIGURA mq	NOTE
		RIPORTO mq	56.80		
		(0.97-0.96)x(4.05+4.05)/2	0.04		
		(1.13-0.97)x(4.22+4.08)/2	0.66		
		(1.14-1.13)x(4.21+4.22)/2	0.04		
		(1.16-1.14)x(4.22+4.21)/2	0.08		
		(1.19-1.16)x(4.09+4.22)/2	0.12		
		(1.21-1.19)x(4.05+4.09)/2	0.08		
		(1.23-1.21)x(4.11+4.05)/2	0.08		
		(1.24-1.23)x(4.06+4.11)/2	0.04		
		(1.25-1.24)x(3.94+3.94)/2	0.04		
		(1.26-1.25)x(3.90+3.87)/2	0.04		
		(1.27-1.26)x(3.95+3.99)/2	0.04		
		(1.28-1.27)x(3.48+4.00)/2	0.04		
		(1.31-1.28)x(3.73+3.47)/2	0.11		
		(1.32-1.31)x(3.78+3.73)/2	0.04		
		(1.33-1.32)x(4.00+3.87)/2	0.04		
		(1.48-1.33)x(4.34+4.19)/2	0.64		
		(1.74-1.48)x(4.40+4.34)/2	1.14		
		(2.73-1.74)x(4.61+4.40)/2	4.46		
		(2.84-2.73)x(4.63+4.61)/2	0.51		
		(3.01-2.84)x(4.67+4.63)/2	0.79		
		(3.93-3.01)x(4.92+4.67)/2	4.41		
		(4.51-3.93)x(5.22+4.92)/2	2.94		
		(5.03-4.51)x(5.47+5.22)/2	2.78		
		(5.87-5.03)x(5.76+5.47)/2	4.72		
		(6.13-5.87)x(5.83+5.76)/2	1.51		
		(6.85-6.13)x(5.80+5.83)/2	4.19		
		(7.23-6.85)x(5.77+5.80)/2	2.20		
		(8.08-7.23)x(5.59+5.77)/2	4.83		
		(8.33-8.08)x(5.55+5.59)/2	1.39		
		(8.72-8.33)x(5.35+5.55)/2	2.13		
		(9.43-8.72)x(5.02+5.35)/2	3.68		
		(9.86-9.43)x(5.01+5.02)/2	2.16		
		(10.52-9.86)x(4.85+5.01)/2	3.25		
		(11.58-10.52)x(4.77+4.85)/2	5.10		
		(11.62-11.58)x(4.76+4.77)/2	0.19		
		(11.65-11.62)x(4.75+4.76)/2	0.14		
		(12.72-11.65)x(4.27+4.75)/2	4.83		
		(13.43-12.72)x(3.65+4.27)/2	2.81		
		(13.82-13.43)x(3.36+3.65)/2	1.37		
		(14.22-13.82)x(3.00+3.36)/2	1.27		
		(13.25-14.22)x(3.00+3.00)/2	-2.91		
		(11.45-13.25)x(1.80+3.00)/2	-4.32		
		(-11.45-11.45)x(1.80+1.80)/2	-41.22		
		(-14.45--11.45)x(3.80+1.80)/2	-8.40		
				64.88	
93 1380.00	B1	(-13.91--14.44)x(3.80+3.79)/2	2.01		
		(-13.15--13.91)x(3.82+3.80)/2	2.90		
		(-12.81--13.15)x(3.82+3.82)/2	1.30		
		(-12.27--12.81)x(3.83+3.82)/2	2.07		
		(-11.72--12.27)x(3.83+3.83)/2	2.11		
		(-11.37--11.72)x(3.84+3.83)/2	1.34		
		(-10.62--11.37)x(3.86+3.84)/2	2.89		
		(-9.59--10.62)x(3.88+3.86)/2	3.99		
		(-9.52--9.59)x(3.88+3.88)/2	0.27		
		(-9.49--9.52)x(3.88+3.88)/2	0.12		
		(-9.41--9.49)x(3.87+3.88)/2	0.31		
		(-8.70--9.41)x(3.82+3.87)/2	2.73		
		(-8.42--8.70)x(3.78+3.82)/2	1.06		
		(-7.80--8.42)x(3.70+3.78)/2	2.32		
		(-7.32--7.80)x(3.62+3.70)/2	1.76		
		(-7.11--7.32)x(3.61+3.62)/2	0.76		
		(-6.74--7.11)x(3.59+3.61)/2	1.33		
		(-6.65--6.74)x(3.58+3.59)/2	0.32		
		(-6.63--6.65)x(3.58+3.58)/2	0.07		
		(-6.61--6.63)x(3.55+3.58)/2	0.07		
		(-6.60--6.61)x(3.54+3.55)/2	0.04		
		(-6.59--6.60)x(3.63+3.55)/2	0.04		
		(-6.58--6.59)x(3.54+3.53)/2	0.04		
		(-6.57--6.58)x(3.56+3.55)/2	0.04		
		(-6.56--6.57)x(3.53+3.56)/2	0.04		
		(-6.55--6.56)x(3.52+3.53)/2	0.04		
		(-6.53--6.55)x(3.54+3.52)/2	0.07		
		(-6.51--6.53)x(3.55+3.54)/2	0.07		
		(-6.48--6.51)x(3.58+3.55)/2	0.11		
		(-6.46--6.48)x(3.59+3.58)/2	0.07		
		(-6.28--6.46)x(3.59+3.59)/2	0.65		
		(-6.22--6.28)x(3.59+3.59)/2	0.22		
		(-6.02--6.22)x(3.59+3.59)/2	0.72		
		(-5.13--6.02)x(3.59+3.59)/2	3.20		
		(-4.24--5.13)x(3.59+3.59)/2	3.20		
		(-4.03--4.24)x(3.59+3.59)/2	0.75		
		(-3.69--4.03)x(3.59+3.59)/2	1.22		
		(-2.93--3.69)x(3.58+3.59)/2	2.72		
		(-2.45--2.93)x(3.58+3.58)/2	1.72		
		(-1.83--2.45)x(3.57+3.58)/2	2.22		
		(-1.72--1.83)x(3.57+3.57)/2	0.39		
		(-1.70--1.72)x(3.57+3.57)/2	0.07		
		(-1.69--1.70)x(3.57+3.57)/2	0.04		
		(-1.64--1.69)x(3.51+3.57)/2	0.18		
		(-1.61--1.64)x(3.52+3.51)/2	0.11		
		(-1.60--1.61)x(3.55+3.52)/2	0.04		
		(-1.59--1.60)x(3.61+3.55)/2	0.04		
		(-1.58--1.59)x(3.53+3.57)/2	0.04		
		(-1.57--1.58)x(3.53+3.46)/2	0.03		
		(-1.53--1.57)x(3.63+3.53)/2	0.14		
		(-1.51--1.53)x(3.60+3.63)/2	0.07		
		(-1.39--1.51)x(3.62+3.60)/2	0.43		
		(-1.21--1.39)x(3.66+3.62)/2	0.66		
		(-0.76--1.21)x(3.75+3.66)/2	1.67		
		(-0.73--0.76)x(3.75+3.75)/2	0.11		
		(-0.67--0.73)x(3.77+3.75)/2	0.23		
		(0.37--0.67)x(3.97+3.77)/2	4.02		
		(0.63-0.37)x(4.02+3.97)/2	1.04		
		(0.88-0.63)x(4.07+4.02)/2	1.01		
		A RIPORTARE mq	57.23		

SCATOLARE

		CALCOLO DELLE AREE		Foglio n. 22
STERRO				
N. SEZIONE PROG.	FIG.	ELEMENTI DI CALCOLO	AREA ELEMENTARE mq	AREA FIGURA mq	NOTE
		RIPORTO mq	57.23		
		(0.97-0.88)x(4.06+4.07)/2	0.37		
		(1.01-0.97)x(4.15+4.06)/2	0.16		
		(1.04-1.01)x(4.04+4.15)/2	0.12		
		(1.06-1.04)x(3.95+4.04)/2	0.08		
		(1.08-1.06)x(3.98+3.95)/2	0.08		
		(1.09-1.08)x(3.90+3.98)/2	0.04		
		(1.10-1.09)x(3.96+3.90)/2	0.04		
		(1.11-1.10)x(4.03+4.04)/2	0.04		
		(1.12-1.11)x(4.08+4.10)/2	0.04		
		(1.13-1.12)x(4.12+4.07)/2	0.04		
		(1.14-1.13)x(4.16+4.13)/2	0.04		
		(1.15-1.14)x(4.10+4.07)/2	0.04		
		(1.16-1.15)x(4.17+4.12)/2	0.04		
		(1.17-1.16)x(4.18+4.17)/2	0.04		
		(1.18-1.17)x(4.18+4.18)/2	0.04		
		(1.20-1.18)x(4.16+4.18)/2	0.08		
		(1.35-1.20)x(4.16+4.16)/2	0.62		
		(1.36-1.35)x(4.23+4.16)/2	0.04		
		(1.38-1.36)x(4.12+4.23)/2	0.08		
		(1.40-1.38)x(3.88+4.12)/2	0.08		
		(1.41-1.40)x(3.86+3.88)/2	0.04		
		(1.42-1.41)x(3.71+3.86)/2	0.04		
		(1.43-1.42)x(3.91+3.78)/2	0.04		
		(1.44-1.43)x(4.01+3.93)/2	0.04		
		(1.45-1.44)x(3.89+3.97)/2	0.04		
		(1.46-1.45)x(3.56+4.00)/2	0.04		
		(1.53-1.46)x(4.09+3.55)/2	0.27		
		(1.54-1.53)x(4.20+4.09)/2	0.04		
		(1.56-1.54)x(4.21+4.20)/2	0.08		
		(1.62-1.56)x(4.23+4.21)/2	0.25		
		(2.03-1.62)x(4.31+4.23)/2	1.75		
		(2.56-2.03)x(4.41+4.31)/2	2.31		
		(2.90-2.56)x(4.45+4.41)/2	1.51		
		(3.66-2.90)x(4.53+4.45)/2	3.41		
		(4.68-3.66)x(4.56+4.53)/2	4.64		
		(4.76-4.68)x(4.57+4.56)/2	0.37		
		(4.89-4.76)x(4.57+4.57)/2	0.59		
		(5.86-4.89)x(4.59+4.57)/2	4.44		
		(6.46-5.86)x(4.63+4.59)/2	2.77		
		(6.96-6.46)x(4.65+4.63)/2	2.32		
		(7.74-6.96)x(4.67+4.65)/2	3.63		
		(8.05-7.74)x(4.69+4.67)/2	1.45		
		(8.25-8.05)x(4.68+4.69)/2	0.94		
		(9.15-8.25)x(4.66+4.68)/2	4.20		
		(10.03-9.15)x(4.51+4.66)/2	4.03		
		(10.25-10.03)x(4.49+4.51)/2	0.99		
		(10.60-10.25)x(4.37+4.49)/2	1.55		
		(11.35-10.60)x(4.09+4.37)/2	3.17		
		(11.94-11.35)x(3.91+4.09)/2	2.36		
		(12.45-11.94)x(3.72+3.91)/2	1.95		
		(13.46-12.45)x(3.29+3.72)/2	3.54		
		(13.55-13.46)x(3.26+3.29)/2	0.29		
		(13.60-13.55)x(3.23+3.26)/2	0.16		
		(14.09-13.60)x(3.00+3.23)/2	1.53		
		(13.25-14.09)x(3.00+3.00)/2	-2.52		
		(11.45-13.25)x(1.80+3.00)/2	-4.32		
		(-11.45-11.45)x(1.80+1.80)/2	-41.22		
		(-14.44--11.45)x(3.79+1.80)/2	-8.36		
				57.70	
94 1395.00	B1	(-13.30--14.06)x(3.52+3.54)/2	2.68		
		(-13.06--13.30)x(3.52+3.52)/2	0.84		
		(-12.91--13.06)x(3.52+3.52)/2	0.53		
		(-11.96--12.91)x(3.55+3.52)/2	3.36		
		(-11.13--11.96)x(3.55+3.55)/2	2.95		
		(-10.86--11.13)x(3.56+3.55)/2	0.96		
		(-10.43--10.86)x(3.56+3.56)/2	1.53		
		(-9.77--10.43)x(3.55+3.56)/2	2.35		
		(-9.36--9.77)x(3.52+3.55)/2	1.45		
		(-8.67--9.36)x(3.49+3.52)/2	2.42		
		(-7.58--8.67)x(3.38+3.49)/2	3.74		
		(-7.57--7.58)x(3.38+3.38)/2	0.03		
		(-7.56--7.57)x(3.38+3.38)/2	0.03		
		(-6.77--7.56)x(3.34+3.38)/2	2.65		
		(-6.65--6.77)x(3.34+3.34)/2	0.40		
		(-6.60--6.65)x(3.34+3.34)/2	0.17		
		(-6.43--6.60)x(3.33+3.34)/2	0.57		
		(-6.41--6.43)x(3.35+3.33)/2	0.07		
		(-6.39--6.41)x(3.38+3.35)/2	0.07		
		(-6.37--6.39)x(3.37+3.38)/2	0.07		
		(-6.36--6.37)x(3.37+3.37)/2	0.03		
		(-6.34--6.36)x(3.35+3.37)/2	0.07		
		(-6.33--6.34)x(3.34+3.35)/2	0.03		
		(-6.32--6.33)x(3.32+3.47)/2	0.03		
		(-6.31--6.32)x(3.34+3.33)/2	0.03		
		(-6.30--6.31)x(3.35+3.34)/2	0.03		
		(-6.28--6.30)x(3.29+3.35)/2	0.07		
		(-6.26--6.28)x(3.29+3.29)/2	0.07		
		(-6.24--6.26)x(3.32+3.29)/2	0.07		
		(-6.19--6.24)x(3.32+3.32)/2	0.17		
		(-5.98--6.19)x(3.33+3.32)/2	0.70		
		(-5.38--5.98)x(3.32+3.33)/2	2.00		
		(-5.18--5.38)x(3.32+3.32)/2	0.66		
		(-4.68--5.18)x(3.32+3.32)/2	1.66		
		(-4.39--4.68)x(3.32+3.32)/2	0.96		
		(-4.28--4.39)x(3.31+3.32)/2	0.36		
		(-4.03--4.28)x(3.32+3.31)/2	0.83		
		(-3.18--4.03)x(3.32+3.32)/2	2.82		
		(-2.25--3.18)x(3.33+3.32)/2	3.09		
		(-2.08--2.25)x(3.32+3.33)/2	0.57		
		(-2.01--2.08)x(3.32+3.32)/2	0.23		
		(-1.58--2.01)x(3.31+3.32)/2	1.43		
		(-1.40--1.58)x(3.31+3.31)/2	0.60		
		(-1.29--1.40)x(3.33+3.31)/2	0.37		
		(-1.27--1.29)x(3.33+3.33)/2	0.07		
		A RIPORTARE mq	43.82		

SCATOLARE

		CALCOLO DELLE AREE		Foglio n. 23
STERRO				
N. SEZIONE PROG.	FIG.	ELEMENTI DI CALCOLO	AREA ELEMENTARE mq	AREA FIGURA mq	NOTE
		RIPORTO mq	43.82		
		(-1.26--1.27)x(3.31+3.36)/2	0.03		
		(-1.25--1.26)x(3.26+3.31)/2	0.03		
		(-1.24--1.25)x(3.34+3.26)/2	0.03		
		(-1.23--1.24)x(3.33+3.34)/2	0.03		
		(-1.21--1.23)x(3.32+3.33)/2	0.07		
		(-1.18--1.21)x(3.35+3.32)/2	0.10		
		(-1.10--1.18)x(3.34+3.35)/2	0.27		
		(-1.08--1.10)x(3.34+3.34)/2	0.07		
		(-0.99--1.08)x(3.35+3.34)/2	0.30		
		(-0.48--0.99)x(3.39+3.35)/2	1.72		
		(0.11--0.48)x(3.44+3.39)/2	2.01		
		(1.07-0.11)x(3.54+3.44)/2	3.35		
		(1.17-1.07)x(3.55+3.54)/2	0.35		
		(1.19-1.17)x(3.56+3.55)/2	0.07		
		(1.22-1.19)x(3.62+3.56)/2	0.11		
		(1.24-1.22)x(3.46+3.62)/2	0.07		
		(1.26-1.24)x(3.57+3.46)/2	0.07		
		(1.27-1.26)x(3.73+3.57)/2	0.04		
		(1.28-1.27)x(3.71+3.73)/2	0.04		
		(1.29-1.28)x(3.85+3.71)/2	0.04		
		(1.30-1.29)x(3.80+3.85)/2	0.04		
		(1.31-1.30)x(3.79+3.75)/2	0.04		
		(1.32-1.31)x(3.88+3.79)/2	0.04		
		(1.33-1.32)x(3.98+3.91)/2	0.04		
		(1.34-1.33)x(3.97+3.97)/2	0.04		
		(1.35-1.34)x(3.90+3.87)/2	0.04		
		(1.36-1.35)x(4.03+3.98)/2	0.04		
		(1.37-1.36)x(3.97+4.03)/2	0.04		
		(1.38-1.37)x(3.58+3.65)/2	0.04		
		(1.52-1.38)x(3.60+3.58)/2	0.50		
		(1.57-1.52)x(3.61+3.60)/2	0.18		
		(1.58-1.57)x(3.58+3.61)/2	0.04		
		(1.60-1.58)x(3.36+3.58)/2	0.07		
		(1.61-1.60)x(3.46+3.36)/2	0.03		
		(1.62-1.61)x(3.67+3.46)/2	0.04		
		(1.63-1.62)x(3.69+3.67)/2	0.04		
		(1.64-1.63)x(3.75+3.81)/2	0.04		
		(1.65-1.64)x(3.73+3.63)/2	0.04		
		(1.66-1.65)x(3.45+3.80)/2	0.04		
		(1.74-1.66)x(3.98+3.43)/2	0.30		
		(1.75-1.74)x(3.73+3.98)/2	0.04		
		(1.76-1.75)x(3.64+3.73)/2	0.04		
		(1.84-1.76)x(3.63+3.64)/2	0.29		
		(2.11-1.84)x(3.66+3.63)/2	0.98		
		(2.31-2.11)x(3.68+3.66)/2	0.73		
		(3.07-2.31)x(3.77+3.68)/2	2.83		
		(3.40-3.07)x(3.81+3.77)/2	1.25		
		(3.94-3.40)x(3.87+3.81)/2	2.07		
		(4.50-3.94)x(3.93+3.87)/2	2.18		
		(4.85-4.50)x(3.96+3.93)/2	1.38		
		(5.60-4.85)x(4.05+3.96)/2	3.00		
		(5.93-5.60)x(4.09+4.05)/2	1.34		
		(6.70-5.93)x(4.17+4.09)/2	3.18		
		(6.81-6.70)x(4.18+4.17)/2	0.46		
		(7.79-6.81)x(4.25+4.18)/2	4.13		
		(8.40-7.79)x(4.26+4.25)/2	2.60		
		(8.89-8.40)x(4.27+4.26)/2	2.09		
		(9.69-8.89)x(4.27+4.27)/2	3.42		
		(9.99-9.69)x(4.26+4.27)/2	1.28		
		(10.17-9.99)x(4.20+4.26)/2	0.76		
		(11.09-10.17)x(3.85+4.20)/2	3.70		
		(11.95-11.09)x(3.60+3.85)/2	3.20		
		(12.18-11.95)x(3.52+3.60)/2	0.82		
		(12.56-12.18)x(3.39+3.52)/2	1.31		
		(13.28-12.56)x(3.09+3.39)/2	2.33		
		(13.48-13.28)x(3.00+3.09)/2	0.61		
		(13.25-13.48)x(3.00+3.00)/2	-0.69		
		(11.45-13.25)x(1.80+3.00)/2	-4.32		
		(-11.45-11.45)x(1.80+1.80)/2	-41.22		
		(-14.06--11.45)x(3.54+1.80)/2	-6.97		
				47.12	
95 1410.00	B1	(-13.27--13.91)x(3.37+3.44)/2	2.18		
		(-12.63--13.27)x(3.40+3.37)/2	2.17		
		(-12.18--12.63)x(3.42+3.40)/2	1.53		
		(-11.43--12.18)x(3.47+3.42)/2	2.58		
		(-11.08--11.43)x(3.48+3.47)/2	1.22		
		(-10.38--11.08)x(3.50+3.48)/2	2.44		
		(-9.98--10.38)x(3.51+3.50)/2	1.40		
		(-9.10--9.98)x(3.53+3.51)/2	3.10		
		(-8.89--9.10)x(3.53+3.53)/2	0.74		
		(-8.54--8.89)x(3.52+3.53)/2	1.23		
		(-7.79--8.54)x(3.48+3.52)/2	2.62		
		(-7.33--7.79)x(3.42+3.48)/2	1.59		
		(-6.69--7.33)x(3.33+3.42)/2	2.16		
		(-6.53--6.69)x(3.30+3.33)/2	0.53		
		(-6.25--6.53)x(3.25+3.30)/2	0.92		
		(-6.18--6.25)x(3.24+3.25)/2	0.23		
		(-6.16--6.18)x(3.24+3.24)/2	0.06		
		(-6.12--6.16)x(3.22+3.24)/2	0.13		
		(-6.10--6.12)x(3.23+3.22)/2	0.06		
		(-6.08--6.10)x(3.25+3.23)/2	0.06		
		(-6.07--6.08)x(3.27+3.25)/2	0.03		
		(-6.06--6.07)x(3.27+3.27)/2	0.03		
		(-6.05--6.06)x(3.27+3.27)/2	0.03		
		(-6.04--6.05)x(3.26+3.27)/2	0.03		
		(-6.03--6.04)x(3.41+3.26)/2	0.03		
		(-6.02--6.03)x(3.21+3.41)/2	0.03		
		(-6.01--6.02)x(3.22+3.21)/2	0.03		
		(-5.99--6.01)x(3.24+3.22)/2	0.06		
		(-5.93--5.99)x(3.23+3.23)/2	0.19		
		(-5.61--5.93)x(3.20+3.23)/2	1.03		
		(-5.60--5.61)x(3.20+3.20)/2	0.03		
		(-5.56--5.60)x(3.20+3.20)/2	0.13		
		(-4.50--5.56)x(3.15+3.20)/2	3.37		
		A RIPORTARE mq	31.97		

SCATOLARE

		CALCOLO DELLE AREE		Foglio n. 24
STERRO				
N. SEZIONE PROG.	FIG.	ELEMENTI DI CALCOLO	AREA ELEMENTARE mq	AREA FIGURA mq	NOTE
		RIPORTO mq	31.97		
		(-3.80--4.50)x(3.16+3.15)/2	2.21		
		(-3.40--3.80)x(3.16+3.16)/2	1.26		
		(-2.76--3.40)x(3.15+3.16)/2	2.02		
		(-2.31--2.76)x(3.15+3.15)/2	1.42		
		(-2.03--2.31)x(3.15+3.15)/2	0.88		
		(-1.21--2.03)x(3.15+3.15)/2	2.58		
		(-1.06--1.21)x(3.14+3.15)/2	0.47		
		(-1.03--1.06)x(3.14+3.14)/2	0.09		
		(-0.97--1.03)x(3.17+3.14)/2	0.19		
		(-0.95--0.97)x(3.19+3.17)/2	0.06		
		(-0.93--0.95)x(3.19+3.19)/2	0.06		
		(-0.92--0.93)x(3.27+3.19)/2	0.03		
		(-0.91--0.92)x(3.26+3.44)/2	0.03		
		(-0.90--0.91)x(3.19+3.26)/2	0.03		
		(-0.89--0.90)x(3.20+3.17)/2	0.03		
		(-0.86--0.89)x(3.16+3.20)/2	0.10		
		(-0.84--0.86)x(3.15+3.16)/2	0.06		
		(-0.74--0.84)x(3.14+3.15)/2	0.31		
		(-0.54--0.74)x(3.16+3.14)/2	0.63		
		(-0.11--0.54)x(3.17+3.16)/2	1.36		
		(-0.05--0.11)x(3.17+3.17)/2	0.19		
		(0.13--0.05)x(3.17+3.17)/2	0.57		
		(0.75-0.13)x(3.19+3.17)/2	1.97		
		(0.98-0.75)x(3.17+3.19)/2	0.73		
		(1.31-0.98)x(3.15+3.17)/2	1.04		
		(1.44-1.31)x(3.24+3.15)/2	0.42		
		(1.45-1.44)x(3.28+3.24)/2	0.03		
		(1.47-1.45)x(3.51+3.28)/2	0.07		
		(1.48-1.47)x(3.50+3.51)/2	0.04		
		(1.49-1.48)x(3.70+3.50)/2	0.04		
		(1.51-1.49)x(3.63+3.70)/2	0.07		
		(1.52-1.51)x(3.61+3.55)/2	0.04		
		(1.53-1.52)x(3.60+3.61)/2	0.04		
		(1.54-1.53)x(3.75+3.60)/2	0.04		
		(1.55-1.54)x(3.78+3.76)/2	0.04		
		(1.56-1.55)x(3.85+3.87)/2	0.04		
		(1.57-1.56)x(3.87+3.88)/2	0.04		
		(1.58-1.57)x(3.80+3.78)/2	0.04		
		(1.59-1.58)x(3.98+3.94)/2	0.04		
		(1.60-1.59)x(3.65+3.93)/2	0.04		
		(1.61-1.60)x(3.55+3.65)/2	0.04		
		(1.62-1.61)x(3.33+3.55)/2	0.03		
		(1.63-1.62)x(3.12+3.33)/2	0.03		
		(1.77-1.63)x(3.20+3.16)/2	0.45		
		(1.82-1.77)x(3.22+3.20)/2	0.16		
		(1.84-1.82)x(3.52+3.24)/2	0.07		
		(1.85-1.84)x(3.55+3.52)/2	0.04		
		(1.86-1.85)x(3.64+3.71)/2	0.04		
		(1.87-1.86)x(3.48+3.64)/2	0.04		
		(1.88-1.87)x(3.48+3.61)/2	0.04		
		(1.89-1.88)x(3.43+3.69)/2	0.04		
		(1.95-1.89)x(3.84+3.41)/2	0.22		
		(1.96-1.95)x(3.64+3.84)/2	0.04		
		(1.97-1.96)x(3.54+3.64)/2	0.04		
		(1.99-1.97)x(3.41+3.54)/2	0.07		
		(2.00-1.99)x(3.15+3.41)/2	0.03		
		(2.01-2.00)x(3.21+3.15)/2	0.03		
		(2.18-2.01)x(3.12+3.21)/2	0.54		
		(2.23-2.18)x(3.12+3.12)/2	0.16		
		(2.34-2.23)x(3.14+3.12)/2	0.34		
		(3.02-2.34)x(3.12+3.14)/2	2.13		
		(3.18-3.02)x(3.11+3.12)/2	0.50		
		(3.27-3.18)x(3.13+3.11)/2	0.28		
		(4.27-3.27)x(3.16+3.13)/2	3.14		
		(5.04-4.27)x(3.46+3.16)/2	2.55		
		(5.37-5.04)x(3.55+3.46)/2	1.16		
		(5.91-5.37)x(3.62+3.55)/2	1.94		
		(6.47-5.91)x(3.71+3.62)/2	2.05		
		(6.81-6.47)x(3.75+3.71)/2	1.27		
		(7.56-6.81)x(3.92+3.75)/2	2.88		
		(8.58-7.56)x(3.98+3.92)/2	4.03		
		(8.66-8.58)x(3.99+3.98)/2	0.32		
		(8.79-8.66)x(3.97+3.99)/2	0.52		
		(9.76-8.79)x(3.85+3.97)/2	3.79		
		(10.34-9.76)x(3.76+3.85)/2	2.21		
		(10.85-10.34)x(3.64+3.76)/2	1.89		
		(11.08-10.85)x(3.58+3.64)/2	0.83		
		(11.68-11.08)x(3.42+3.58)/2	2.10		
		(11.88-11.68)x(3.37+3.42)/2	0.68		
		(11.95-11.88)x(3.34+3.37)/2	0.23		
		(12.11-11.95)x(3.27+3.34)/2	0.53		
		(13.05-12.11)x(2.87+3.27)/2	2.89		
		(11.45-13.05)x(1.80+2.87)/2	-3.74		
		(-11.45-11.45)x(1.80+1.80)/2	-41.22		
		(-13.91--11.45)x(3.44+1.80)/2	-6.45		
				40.28	
96 1425.00	B1	(-13.46--13.84)x(3.37+3.39)/2	1.28		
		(-12.41--13.46)x(3.39+3.37)/2	3.55		
		(-12.36--12.41)x(3.39+3.39)/2	0.17		
		(-12.33--12.36)x(3.39+3.39)/2	0.10		
		(-11.27--12.33)x(3.41+3.39)/2	3.60		
		(-10.57--11.27)x(3.47+3.41)/2	2.41		
		(-10.17--10.57)x(3.49+3.47)/2	1.39		
		(-9.51--10.17)x(3.50+3.49)/2	2.31		
		(-9.08--9.51)x(3.50+3.50)/2	1.50		
		(-8.82--9.08)x(3.48+3.50)/2	0.91		
		(-7.98--8.82)x(3.43+3.48)/2	2.90		
		(-7.06--7.98)x(3.25+3.43)/2	3.07		
		(-6.88--7.06)x(3.23+3.25)/2	0.58		
		(-6.60--6.88)x(3.19+3.23)/2	0.90		
		(-6.01--6.60)x(3.14+3.19)/2	1.87		
		(-5.92--6.01)x(3.14+3.14)/2	0.28		
		(-5.90--5.92)x(3.13+3.14)/2	0.06		
		(-5.77--5.90)x(3.15+3.13)/2	0.41		
		A RIPORTARE mq	27.29		

SCATOLARE

		CALCOLO DELLE AREE		Foglio n. 25
STERRO				
N. SEZIONE PROG.	FIG.	ELEMENTI DI CALCOLO	AREA ELEMENTARE mq	AREA FIGURA mq	NOTE
		RIPORTO mq	27.29		
		(-5.74--5.77)x(3.16+3.15)/2	0.09		
		(-5.73--5.74)x(3.16+3.16)/2	0.03		
		(-5.72--5.73)x(3.15+3.16)/2	0.03		
		(-5.71--5.72)x(3.16+3.16)/2	0.03		
		(-5.70--5.71)x(3.35+3.16)/2	0.03		
		(-5.69--5.70)x(3.11+3.11)/2	0.03		
		(-5.68--5.69)x(3.11+3.11)/2	0.03		
		(-5.67--5.68)x(3.11+3.11)/2	0.03		
		(-5.66--5.67)x(3.10+3.11)/2	0.03		
		(-5.63--5.66)x(3.11+3.10)/2	0.09		
		(-5.51--5.63)x(3.11+3.11)/2	0.37		
		(-5.46--5.51)x(3.11+3.11)/2	0.16		
		(-5.22--5.46)x(3.09+3.11)/2	0.74		
		(-4.69--5.22)x(3.09+3.09)/2	1.64		
		(-3.70--4.69)x(3.10+3.09)/2	3.06		
		(-3.60--3.70)x(3.10+3.10)/2	0.31		
		(-3.54--3.60)x(3.10+3.10)/2	0.19		
		(-2.50--3.54)x(3.09+3.10)/2	3.22		
		(-1.78--2.50)x(3.08+3.09)/2	2.22		
		(-1.41--1.78)x(3.07+3.08)/2	1.14		
		(-1.24--1.41)x(3.08+3.07)/2	0.52		
		(-0.85--1.24)x(3.08+3.08)/2	1.20		
		(-0.69--0.85)x(3.07+3.08)/2	0.49		
		(-0.56--0.69)x(3.07+3.07)/2	0.40		
		(-0.55--0.56)x(3.07+3.07)/2	0.03		
		(-0.54--0.55)x(3.20+3.08)/2	0.03		
		(-0.53--0.54)x(3.15+3.38)/2	0.03		
		(-0.51--0.53)x(3.09+3.15)/2	0.06		
		(-0.50--0.51)x(3.09+3.09)/2	0.03		
		(-0.49--0.50)x(3.09+3.09)/2	0.03		
		(-0.45--0.49)x(3.10+3.09)/2	0.12		
		(-0.38--0.45)x(3.08+3.10)/2	0.22		
		(-0.37--0.38)x(3.08+3.08)/2	0.03		
		(-0.36--0.37)x(3.08+3.08)/2	0.03		
		(-0.31--0.36)x(3.09+3.08)/2	0.15		
		(-0.02--0.31)x(3.14+3.09)/2	0.90		
		(0.79--0.02)x(3.27+3.14)/2	2.60		
		(1.15-0.79)x(3.36+3.27)/2	1.19		
		(1.46-1.15)x(3.40+3.36)/2	1.05		
		(1.58-1.46)x(3.41+3.40)/2	0.41		
		(1.72-1.58)x(3.40+3.41)/2	0.48		
		(1.73-1.72)x(3.55+3.40)/2	0.03		
		(1.75-1.73)x(3.45+3.55)/2	0.07		
		(1.76-1.75)x(3.36+3.45)/2	0.03		
		(1.77-1.76)x(3.43+3.36)/2	0.03		
		(1.78-1.77)x(3.42+3.43)/2	0.03		
		(1.79-1.78)x(3.61+3.42)/2	0.04		
		(1.80-1.79)x(3.66+3.62)/2	0.04		
		(1.81-1.80)x(3.80+3.66)/2	0.04		
		(1.82-1.81)x(3.75+3.78)/2	0.04		
		(1.83-1.82)x(3.78+3.78)/2	0.04		
		(1.84-1.83)x(3.70+3.69)/2	0.04		
		(1.85-1.84)x(3.93+3.90)/2	0.04		
		(1.86-1.85)x(3.66+3.89)/2	0.04		
		(1.87-1.86)x(3.38+3.57)/2	0.03		
		(1.88-1.87)x(3.21+3.38)/2	0.03		
		(1.89-1.88)x(3.33+3.21)/2	0.03		
		(1.90-1.89)x(3.51+3.33)/2	0.03		
		(1.91-1.90)x(3.57+3.51)/2	0.04		
		(1.92-1.91)x(3.58+3.57)/2	0.04		
		(2.10-1.92)x(3.53+3.58)/2	0.64		
		(2.11-2.10)x(3.61+3.53)/2	0.04		
		(2.12-2.11)x(3.52+3.61)/2	0.04		
		(2.13-2.12)x(3.48+3.32)/2	0.03		
		(2.14-2.13)x(3.32+3.48)/2	0.03		
		(2.15-2.14)x(3.42+3.59)/2	0.04		
		(2.19-2.15)x(3.69+3.39)/2	0.14		
		(2.20-2.19)x(3.55+3.69)/2	0.04		
		(2.21-2.20)x(3.48+3.55)/2	0.04		
		(2.22-2.21)x(3.39+3.48)/2	0.03		
		(2.23-2.22)x(3.21+3.39)/2	0.03		
		(2.24-2.23)x(3.30+3.21)/2	0.03		
		(2.26-2.24)x(3.54+3.30)/2	0.07		
		(2.29-2.26)x(3.55+3.54)/2	0.11		
		(2.38-2.29)x(3.61+3.56)/2	0.32		
		(2.74-2.38)x(3.75+3.61)/2	1.32		
		(2.98-2.74)x(3.81+3.75)/2	0.91		
		(3.50-2.98)x(3.91+3.81)/2	2.01		
		(4.07-3.50)x(4.04+3.91)/2	2.27		
		(5.02-4.07)x(4.13+4.04)/2	3.88		
		(5.17-5.02)x(4.15+4.13)/2	0.62		
		(5.92-5.17)x(4.09+4.15)/2	3.09		
		(6.27-5.92)x(4.11+4.09)/2	1.43		
		(7.02-6.27)x(4.14+4.11)/2	3.09		
		(7.36-7.02)x(4.17+4.14)/2	1.41		
		(7.92-7.36)x(4.19+4.17)/2	2.34		
		(8.46-7.92)x(4.22+4.19)/2	2.27		
		(8.78-8.46)x(4.17+4.22)/2	1.34		
		(9.55-8.78)x(4.07+4.17)/2	3.17		
		(10.54-9.55)x(3.83+4.07)/2	3.91		
		(10.65-10.54)x(3.81+3.83)/2	0.42		
		(10.83-10.65)x(3.74+3.81)/2	0.68		
		(11.74-10.83)x(3.38+3.74)/2	3.24		
		(12.30-11.74)x(3.19+3.38)/2	1.84		
		(12.84-12.30)x(2.99+3.19)/2	1.67		
		(13.11-12.84)x(2.90+2.99)/2	0.80		
		(11.45-13.11)x(1.80+2.90)/2	-3.90		
		(-11.45-11.45)x(1.80+1.80)/2	-41.22		
		(-13.84--11.45)x(3.39+1.80)/2	-6.20		
				43.49	
97 1440.00	B1	(-13.76--13.89)x(3.42+3.43)/2	0.45		
		(-13.61--13.76)x(3.42+3.42)/2	0.51		
		(-13.37--13.61)x(3.38+3.42)/2	0.82		
		(-12.52--13.37)x(3.25+3.38)/2	2.82		
		A RIPORTARE mq	4.60		

SCATOLARE

		CALCOLO DELLE AREE		Foglio n. 26
STERRO				
N. SEZIONE PROG.	FIG.	ELEMENTI DI CALCOLO	AREA ELEMENTARE mq	AREA FIGURA mq	NOTE
		RIPORTO mq	4.60		
		(-12.01--12.52)x(3.26+3.25)/2	1.66		
		(-11.42--12.01)x(3.27+3.26)/2	1.93		
		(-11.16--11.42)x(3.28+3.27)/2	0.85		
		(-10.45--11.16)x(3.31+3.28)/2	2.34		
		(-10.36--10.45)x(3.32+3.31)/2	0.30		
		(-10.33--10.36)x(3.32+3.32)/2	0.10		
		(-10.26--10.33)x(3.32+3.32)/2	0.23		
		(-9.23--10.26)x(3.34+3.32)/2	3.43		
		(-8.50--9.23)x(3.35+3.34)/2	2.44		
		(-8.14--8.50)x(3.35+3.35)/2	1.21		
		(-7.53--8.14)x(3.25+3.35)/2	2.01		
		(-7.04--7.53)x(3.15+3.25)/2	1.57		
		(-6.75--7.04)x(3.12+3.15)/2	0.91		
		(-5.95--6.75)x(3.00+3.12)/2	2.45		
		(-5.74--5.95)x(3.00+3.00)/2	0.63		
		(-5.48--5.74)x(3.01+3.00)/2	0.78		
		(-5.39--5.48)x(3.02+3.01)/2	0.27		
		(-5.37--5.39)x(3.04+3.00)/2	0.06		
		(-5.36--5.37)x(3.10+3.04)/2	0.03		
		(-5.35--5.36)x(3.13+3.10)/2	0.03		
		(-5.34--5.35)x(3.10+3.30)/2	0.03		
		(-5.33--5.34)x(3.06+3.08)/2	0.03		
		(-5.32--5.33)x(3.05+3.04)/2	0.03		
		(-5.31--5.32)x(3.06+3.05)/2	0.03		
		(-5.30--5.31)x(3.04+3.06)/2	0.03		
		(-5.28--5.30)x(3.09+3.04)/2	0.06		
		(-5.25--5.28)x(3.08+3.09)/2	0.09		
		(-5.21--5.25)x(3.05+3.08)/2	0.12		
		(-5.20--5.21)x(3.05+3.05)/2	0.03		
		(-5.15--5.20)x(3.03+3.05)/2	0.15		
		(-4.85--5.15)x(3.02+3.03)/2	0.91		
		(-4.61--4.85)x(3.01+3.02)/2	0.72		
		(-3.76--4.61)x(2.99+3.01)/2	2.55		
		(-3.25--3.76)x(2.99+2.99)/2	1.52		
		(-2.66--3.25)x(2.99+2.99)/2	1.76		
		(-1.69--2.66)x(2.99+2.99)/2	2.90		
		(-1.57--1.69)x(2.99+2.99)/2	0.36		
		(-1.50--1.57)x(2.99+2.99)/2	0.21		
		(-0.47--1.50)x(3.01+2.99)/2	3.09		
		(-0.28--0.47)x(3.01+3.01)/2	0.57		
		(-0.25--0.28)x(3.01+3.01)/2	0.09		
		(-0.24--0.25)x(3.01+3.01)/2	0.03		
		(-0.19--0.24)x(3.03+3.01)/2	0.15		
		(-0.16--0.19)x(3.03+3.03)/2	0.09		
		(-0.14--0.16)x(3.03+3.03)/2	0.06		
		(-0.13--0.14)x(3.04+3.03)/2	0.03		
		(-0.12--0.13)x(3.13+3.04)/2	0.03		
		(-0.11--0.12)x(3.05+3.32)/2	0.03		
		(-0.08--0.11)x(3.01+3.03)/2	0.09		
		(-0.06--0.08)x(3.02+3.01)/2	0.06		
		(0.04--0.06)x(3.02+3.02)/2	0.30		
		(0.26-0.04)x(3.03+3.02)/2	0.67		
		(0.62-0.26)x(3.04+3.03)/2	1.09		
		(1.23-0.62)x(3.10+3.04)/2	1.87		
		(1.72-1.23)x(3.15+3.10)/2	1.53		
		(1.99-1.72)x(3.18+3.15)/2	0.85		
		(2.03-1.99)x(3.17+3.18)/2	0.13		
		(2.04-2.03)x(3.24+3.17)/2	0.03		
		(2.06-2.04)x(3.24+3.24)/2	0.06		
		(2.07-2.06)x(3.48+3.24)/2	0.03		
		(2.08-2.07)x(3.53+3.49)/2	0.04		
		(2.09-2.08)x(3.71+3.53)/2	0.04		
		(2.10-2.09)x(3.69+3.71)/2	0.04		
		(2.11-2.10)x(3.52+3.64)/2	0.04		
		(2.12-2.11)x(3.68+3.69)/2	0.04		
		(2.13-2.12)x(3.61+3.59)/2	0.04		
		(2.14-2.13)x(3.89+3.85)/2	0.04		
		(2.15-2.14)x(3.59+3.66)/2	0.04		
		(2.16-2.15)x(3.44+3.59)/2	0.04		
		(2.17-2.16)x(3.39+3.29)/2	0.03		
		(2.18-2.17)x(3.54+3.39)/2	0.03		
		(2.19-2.18)x(3.59+3.54)/2	0.04		
		(2.20-2.19)x(3.54+3.59)/2	0.04		
		(2.21-2.20)x(3.22+3.54)/2	0.03		
		(2.22-2.21)x(3.28+3.22)/2	0.03		
		(2.31-2.22)x(3.25+3.28)/2	0.29		
		(2.41-2.31)x(3.22+3.25)/2	0.32		
		(2.42-2.41)x(3.35+3.22)/2	0.03		
		(2.43-2.42)x(3.17+3.35)/2	0.03		
		(2.44-2.43)x(3.40+3.49)/2	0.03		
		(2.47-2.44)x(3.54+3.37)/2	0.10		
		(2.48-2.47)x(3.37+3.42)/2	0.03		
		(2.49-2.48)x(3.27+3.37)/2	0.03		
		(2.50-2.49)x(3.32+3.27)/2	0.03		
		(2.51-2.50)x(3.45+3.32)/2	0.03		
		(2.52-2.51)x(3.46+3.45)/2	0.03		
		(2.54-2.52)x(3.52+3.46)/2	0.07		
		(2.57-2.54)x(3.37+3.52)/2	0.10		
		(2.60-2.57)x(3.32+3.37)/2	0.10		
		(2.64-2.60)x(3.29+3.32)/2	0.13		
		(2.81-2.64)x(3.30+3.29)/2	0.56		
		(3.76-2.81)x(3.46+3.30)/2	3.21		
		(3.91-3.76)x(3.48+3.46)/2	0.52		
		(4.15-3.91)x(3.54+3.48)/2	0.84		
		(5.00-4.15)x(3.71+3.54)/2	3.08		
		(5.51-5.00)x(3.83+3.71)/2	1.92		
		(6.10-5.51)x(3.94+3.83)/2	2.29		
		(7.07-6.10)x(4.15+3.94)/2	3.92		
		(7.19-7.07)x(4.18+4.15)/2	0.50		
		(7.26-7.19)x(4.17+4.18)/2	0.29		
		(8.29-7.26)x(4.18+4.17)/2	4.30		
		(9.02-8.29)x(4.04+4.18)/2	3.00		
		(9.38-9.02)x(3.96+4.04)/2	1.44		
		(9.99-9.38)x(3.83+3.96)/2	2.38		
		A RIPORTARE mq	80.40		

SCATOLARE

		CALCOLO DELLE AREE		Foglio n. 27
STERRO				
N. SEZIONE PROG.	FIG.	ELEMENTI DI CALCOLO	AREA ELEMENTARE mq	AREA FIGURA mq	NOTE
		RIPORTO mq	80.40		
		(10.48-9.99)x(3.71+3.83)/2	1.85		
		(11.14-10.48)x(3.52+3.71)/2	2.39		
		(11.57-11.14)x(3.41+3.52)/2	1.49		
		(12.52-11.57)x(3.16+3.41)/2	3.12		
		(12.67-12.52)x(3.13+3.16)/2	0.47		
		(12.91-12.67)x(3.01+3.13)/2	0.74		
		(13.13-12.91)x(2.92+3.01)/2	0.65		
		(11.45-13.13)x(1.80+2.92)/2	-3.96		
		(-11.45-11.45)x(1.80+1.80)/2	-41.22		
		(-13.89--11.45)x(3.43+1.80)/2	-6.38		
				39.55	
98	B1	(-13.74--13.92)x(3.45+3.45)/2	0.62		
1455.00		(-13.40--13.74)x(3.42+3.45)/2	1.17		
		(-12.64--13.40)x(3.36+3.42)/2	2.58		
		(-11.65--12.64)x(3.33+3.36)/2	3.31		
		(-11.55--11.65)x(3.32+3.33)/2	0.33		
		(-11.38--11.55)x(3.32+3.32)/2	0.56		
		(-10.71--11.38)x(3.32+3.32)/2	2.22		
		(-10.46--10.71)x(3.32+3.32)/2	0.83		
		(-9.91--10.46)x(3.34+3.32)/2	1.83		
		(-9.36--9.91)x(3.35+3.34)/2	1.84		
		(-9.11--9.36)x(3.35+3.35)/2	0.84		
		(-8.44--9.11)x(3.37+3.35)/2	2.25		
		(-8.27--8.44)x(3.37+3.37)/2	0.57		
		(-8.16--8.27)x(3.37+3.37)/2	0.37		
		(-7.17--8.16)x(3.40+3.37)/2	3.35		
		(-6.42--7.17)x(3.24+3.40)/2	2.49		
		(-6.08--6.42)x(3.18+3.24)/2	1.09		
		(-5.92--6.08)x(3.15+3.18)/2	0.51		
		(-5.51--5.92)x(3.11+3.15)/2	1.28		
		(-5.13--5.51)x(3.06+3.11)/2	1.17		
		(-5.07--5.13)x(3.05+3.06)/2	0.18		
		(-5.05--5.07)x(3.05+3.05)/2	0.06		
		(-5.03--5.05)x(3.06+3.05)/2	0.06		
		(-5.01--5.03)x(3.03+3.06)/2	0.06		
		(-4.99--5.01)x(2.98+3.03)/2	0.06		
		(-4.98--4.99)x(3.01+2.98)/2	0.03		
		(-4.97--4.98)x(3.05+3.01)/2	0.03		
		(-4.96--4.97)x(3.24+3.11)/2	0.03		
		(-4.95--4.96)x(3.05+3.09)/2	0.03		
		(-4.94--4.95)x(3.01+3.05)/2	0.03		
		(-4.93--4.94)x(2.97+3.01)/2	0.03		
		(-4.92--4.93)x(2.99+2.97)/2	0.03		
		(-4.90--4.92)x(3.01+2.99)/2	0.06		
		(-4.88--4.90)x(2.98+3.01)/2	0.06		
		(-4.86--4.88)x(3.01+2.98)/2	0.06		
		(-4.72--4.86)x(3.02+3.01)/2	0.42		
		(-4.61--4.72)x(3.02+3.02)/2	0.33		
		(-4.33--4.61)x(3.01+3.02)/2	0.84		
		(-3.89--4.33)x(3.00+3.01)/2	1.32		
		(-2.93--3.89)x(2.98+3.00)/2	2.87		
		(-2.80--2.93)x(2.98+2.98)/2	0.39		
		(-2.57--2.80)x(2.97+2.98)/2	0.68		
		(-1.70--2.57)x(2.96+2.97)/2	2.58		
		(-1.19--1.70)x(2.96+2.96)/2	1.51		
		(-0.61--1.19)x(2.96+2.96)/2	1.72		
		(-0.34--0.61)x(2.96+2.96)/2	0.80		
		(0.01--0.34)x(2.96+2.96)/2	1.04		
		(0.15-0.01)x(2.96+2.96)/2	0.41		
		(0.28-0.15)x(2.99+2.96)/2	0.39		
		(0.30-0.28)x(2.99+2.99)/2	0.06		
		(0.31-0.30)x(3.01+2.99)/2	0.03		
		(0.32-0.31)x(3.06+3.01)/2	0.03		
		(0.33-0.32)x(3.00+3.26)/2	0.03		
		(0.34-0.33)x(2.99+3.00)/2	0.03		
		(0.36-0.34)x(3.00+2.99)/2	0.06		
		(0.39-0.36)x(3.01+3.00)/2	0.09		
		(0.47-0.39)x(2.99+3.01)/2	0.24		
		(0.49-0.47)x(2.99+2.99)/2	0.06		
		(0.56-0.49)x(3.01+2.99)/2	0.21		
		(1.58-0.56)x(3.15+3.01)/2	3.14		
		(2.05-1.58)x(3.25+3.15)/2	1.50		
		(2.31-2.05)x(3.32+3.25)/2	0.85		
		(2.37-2.31)x(3.31+3.32)/2	0.20		
		(2.38-2.37)x(3.34+3.31)/2	0.03		
		(2.39-2.38)x(3.36+3.34)/2	0.03		
		(2.40-2.39)x(3.41+3.36)/2	0.03		
		(2.41-2.40)x(3.59+3.62)/2	0.04		
		(2.42-2.41)x(3.54+3.59)/2	0.04		
		(2.43-2.42)x(3.39+3.54)/2	0.03		
		(2.44-2.43)x(3.59+3.59)/2	0.04		
		(2.45-2.44)x(3.57+3.51)/2	0.04		
		(2.46-2.45)x(3.81+3.84)/2	0.04		
		(2.47-2.46)x(3.61+3.66)/2	0.04		
		(2.48-2.47)x(3.38+3.49)/2	0.03		
		(2.49-2.48)x(3.57+3.46)/2	0.04		
		(2.50-2.49)x(3.61+3.57)/2	0.04		
		(2.51-2.50)x(3.33+3.57)/2	0.03		
		(2.53-2.51)x(3.39+3.33)/2	0.07		
		(2.54-2.53)x(3.20+3.39)/2	0.03		
		(2.56-2.54)x(3.38+3.20)/2	0.07		
		(2.63-2.56)x(3.33+3.41)/2	0.24		
		(2.68-2.63)x(3.07+3.33)/2	0.16		
		(2.70-2.68)x(3.16+3.07)/2	0.06		
		(2.71-2.70)x(3.20+3.16)/2	0.03		
		(2.72-2.71)x(3.12+3.20)/2	0.03		
		(2.75-2.72)x(3.13+3.12)/2	0.09		
		(2.76-2.75)x(3.39+3.81)/2	0.04		
		(2.77-2.76)x(3.39+3.35)/2	0.03		
		(2.78-2.77)x(3.34+3.32)/2	0.03		
		(2.79-2.78)x(3.39+3.37)/2	0.03		
		(2.80-2.79)x(3.35+3.39)/2	0.03		
		(2.81-2.80)x(3.33+3.35)/2	0.03		
		(2.83-2.81)x(3.30+3.33)/2	0.07		
		A RIPORTARE mq	53.39		

SCATOLARE

		CALCOLO DELLE AREE		Foglio n. 28
STERRO				
N. SEZIONE PROG.	FIG.	ELEMENTI DI CALCOLO	AREA ELEMENTARE mq	AREA FIGURA mq	NOTE
		RIPORTO mq	53.39		
		(2.87-2.83)x(3.37+3.30)/2	0.13		
		(2.95-2.87)x(3.46+3.37)/2	0.27		
		(3.07-2.95)x(3.49+3.46)/2	0.42		
		(3.23-3.07)x(3.50+3.49)/2	0.56		
		(3.64-3.23)x(3.57+3.50)/2	1.45		
		(3.77-3.64)x(3.60+3.57)/2	0.47		
		(4.05-3.77)x(3.66+3.60)/2	1.02		
		(4.86-4.05)x(3.83+3.66)/2	3.03		
		(5.24-4.86)x(3.91+3.83)/2	1.47		
		(5.96-5.24)x(4.07+3.91)/2	2.87		
		(6.24-5.96)x(4.13+4.07)/2	1.15		
		(7.05-6.24)x(4.31+4.13)/2	3.42		
		(7.53-7.05)x(4.37+4.31)/2	2.08		
		(8.14-7.53)x(4.48+4.37)/2	2.70		
		(9.17-8.14)x(4.43+4.48)/2	4.59		
		(9.24-9.17)x(4.42+4.43)/2	0.31		
		(9.28-9.24)x(4.41+4.42)/2	0.18		
		(10.33-9.28)x(4.18+4.41)/2	4.51		
		(11.02-10.33)x(3.95+4.18)/2	2.80		
		(11.43-11.02)x(3.82+3.95)/2	1.59		
		(12.11-11.43)x(3.59+3.82)/2	2.52		
		(12.52-12.11)x(3.44+3.59)/2	1.44		
		(12.77-12.52)x(3.36+3.44)/2	0.85		
		(13.61-12.77)x(3.00+3.36)/2	2.67		
		(13.25-13.61)x(3.00+3.00)/2	-1.08		
		(11.45-13.25)x(1.80+3.00)/2	-4.32		
		(-11.45-11.45)x(1.80+1.80)/2	-41.22		
		(-13.92--11.45)x(3.45+1.80)/2	-6.48		
				42.79	
98bis 1457.30	B1	(-13.50--13.92)x(3.45+3.44)/2	1.45		
		(-13.18--13.50)x(3.42+3.45)/2	1.10		
		(-12.40--13.18)x(3.35+3.42)/2	2.64		
		(-11.44--12.40)x(3.34+3.35)/2	3.21		
		(-11.31--11.44)x(3.33+3.34)/2	0.43		
		(-11.09--11.31)x(3.33+3.33)/2	0.73		
		(-10.22--11.09)x(3.33+3.33)/2	2.90		
		(-9.70--10.22)x(3.35+3.33)/2	1.74		
		(-9.12--9.70)x(3.37+3.35)/2	1.95		
		(-8.16--9.12)x(3.38+3.37)/2	3.24		
		(-8.03--8.16)x(3.38+3.38)/2	0.44		
		(-7.95--8.03)x(3.37+3.38)/2	0.27		
		(-6.93--7.95)x(3.29+3.37)/2	3.40		
		(-6.47--6.93)x(3.23+3.29)/2	1.50		
		(-5.84--6.47)x(3.09+3.23)/2	1.99		
		(-5.67--5.84)x(3.07+3.09)/2	0.52		
		(-5.28--5.67)x(3.04+3.07)/2	1.19		
		(-5.12--5.28)x(3.05+3.04)/2	0.49		
		(-5.00--5.12)x(3.06+3.05)/2	0.37		
		(-4.99--5.00)x(3.04+3.06)/2	0.03		
		(-4.96--4.99)x(3.06+3.04)/2	0.09		
		(-4.94--4.96)x(3.02+3.06)/2	0.06		
		(-4.93--4.94)x(2.98+3.02)/2	0.03		
		(-4.92--4.93)x(3.01+2.98)/2	0.03		
		(-4.91--4.92)x(3.05+3.01)/2	0.03		
		(-4.90--4.91)x(3.11+3.05)/2	0.03		
		(-4.89--4.90)x(3.09+3.23)/2	0.03		
		(-4.88--4.89)x(3.00+3.04)/2	0.03		
		(-4.87--4.88)x(2.96+3.00)/2	0.03		
		(-4.85--4.87)x(2.98+2.96)/2	0.06		
		(-4.83--4.85)x(3.00+2.98)/2	0.06		
		(-4.81--4.83)x(2.97+3.00)/2	0.06		
		(-4.80--4.81)x(2.97+2.97)/2	0.03		
		(-4.75--4.80)x(2.97+2.97)/2	0.15		
		(-4.47--4.75)x(2.97+2.97)/2	0.83		
		(-3.65--4.47)x(2.96+2.97)/2	2.43		
		(-2.72--3.65)x(2.95+2.96)/2	2.75		
		(-2.56--2.72)x(2.95+2.95)/2	0.47		
		(-2.48--2.56)x(2.95+2.95)/2	0.24		
		(-2.28--2.48)x(2.95+2.95)/2	0.59		
		(-1.46--2.28)x(2.93+2.95)/2	2.41		
		(-0.98--1.46)x(2.93+2.93)/2	1.41		
		(-0.37--0.98)x(2.93+2.93)/2	1.79		
		(-0.09--0.37)x(2.95+2.93)/2	0.82		
		(0.25--0.09)x(2.96+2.95)/2	1.00		
		(0.33-0.25)x(2.98+2.96)/2	0.24		
		(0.37-0.33)x(2.99+2.98)/2	0.12		
		(0.39-0.37)x(3.00+2.99)/2	0.06		
		(0.40-0.39)x(3.01+3.26)/2	0.03		
		(0.41-0.40)x(2.99+3.01)/2	0.03		
		(0.44-0.41)x(3.01+2.99)/2	0.09		
		(0.48-0.44)x(3.01+3.01)/2	0.12		
		(0.52-0.48)x(3.00+3.01)/2	0.12		
		(0.71-0.52)x(3.03+3.00)/2	0.57		
		(0.72-0.71)x(3.03+3.03)/2	0.03		
		(0.76-0.72)x(3.04+3.03)/2	0.12		
		(1.82-0.76)x(3.25+3.04)/2	3.33		
		(2.10-1.82)x(3.29+3.25)/2	0.92		
		(2.34-2.10)x(3.33+3.29)/2	0.79		
		(2.43-2.34)x(3.33+3.33)/2	0.30		
		(2.44-2.43)x(3.34+3.33)/2	0.03		
		(2.45-2.44)x(3.39+3.34)/2	0.03		
		(2.46-2.45)x(3.60+3.39)/2	0.03		
		(2.47-2.46)x(3.53+3.58)/2	0.04		
		(2.48-2.47)x(3.37+3.53)/2	0.03		
		(2.49-2.48)x(3.57+3.58)/2	0.04		
		(2.50-2.49)x(3.49+3.48)/2	0.03		
		(2.51-2.50)x(3.83+3.81)/2	0.04		
		(2.52-2.51)x(3.61+3.66)/2	0.04		
		(2.53-2.52)x(3.39+3.50)/2	0.03		
		(2.54-2.53)x(3.58+3.47)/2	0.04		
		(2.55-2.54)x(3.62+3.58)/2	0.04		
		(2.56-2.55)x(3.34+3.58)/2	0.03		
		(2.57-2.56)x(3.40+3.34)/2	0.03		
		(2.59-2.57)x(3.22+3.40)/2	0.07		
		A RIPORTARE mq	52.47		

SCATOLARE

		CALCOLO DELLE AREE		Foglio n. 29
STERRO				
N. SEZIONE PROG.	FIG.	ELEMENTI DI CALCOLO	AREA ELEMENTARE mq	AREA FIGURA mq	NOTE
		RIPORTO mq	52.47		
		(2.60-2.59)x(3.40+3.22)/2	0.03		
		(2.62-2.60)x(3.45+3.40)/2	0.07		
		(2.64-2.62)x(3.43+3.45)/2	0.07		
		(2.70-2.64)x(3.07+3.43)/2	0.20		
		(2.73-2.70)x(3.19+3.07)/2	0.09		
		(2.75-2.73)x(3.26+3.19)/2	0.06		
		(2.76-2.75)x(3.13+3.26)/2	0.03		
		(2.80-2.76)x(3.15+3.13)/2	0.13		
		(2.81-2.80)x(3.40+3.81)/2	0.04		
		(2.82-2.81)x(3.37+3.35)/2	0.03		
		(2.83-2.82)x(3.36+3.36)/2	0.03		
		(2.84-2.83)x(3.34+3.35)/2	0.03		
		(2.85-2.84)x(3.32+3.34)/2	0.03		
		(2.88-2.85)x(3.36+3.32)/2	0.10		
		(2.99-2.88)x(3.49+3.36)/2	0.38		
		(3.02-2.99)x(3.50+3.49)/2	0.10		
		(3.10-3.02)x(3.54+3.50)/2	0.28		
		(3.60-3.10)x(3.64+3.54)/2	1.79		
		(4.01-3.60)x(3.73+3.64)/2	1.51		
		(4.69-4.01)x(3.87+3.73)/2	2.58		
		(5.10-4.69)x(3.95+3.87)/2	1.60		
		(5.99-5.10)x(4.14+3.95)/2	3.60		
		(6.19-5.99)x(4.18+4.14)/2	0.83		
		(6.53-6.19)x(4.22+4.18)/2	1.43		
		(7.29-6.53)x(4.33+4.22)/2	3.25		
		(7.74-7.29)x(4.36+4.33)/2	1.96		
		(8.38-7.74)x(4.38+4.36)/2	2.80		
		(9.47-8.38)x(4.30+4.38)/2	4.73		
		(9.48-9.47)x(4.30+4.30)/2	0.04		
		(10.57-9.48)x(4.10+4.30)/2	4.58		
		(11.22-10.57)x(3.84+4.10)/2	2.58		
		(11.66-11.22)x(3.68+3.84)/2	1.65		
		(12.41-11.66)x(3.36+3.68)/2	2.64		
		(12.76-12.41)x(3.22+3.36)/2	1.15		
		(12.96-12.76)x(3.12+3.22)/2	0.63		
		(13.24-12.96)x(3.00+3.12)/2	0.86		
		(11.45-13.24)x(1.80+3.00)/2	-4.30		
		(-11.45-11.45)x(1.80+1.80)/2	-41.22		
		(-13.92--11.45)x(3.44+1.80)/2	-6.47		
				42.39	
99 1470.00	B1	(-13.01--13.72)x(3.35+3.31)/2	2.36		
		(-12.74--13.01)x(3.35+3.35)/2	0.90		
		(-12.28--12.74)x(3.37+3.35)/2	1.55		
		(-11.65--12.28)x(3.39+3.37)/2	2.13		
		(-11.02--11.65)x(3.39+3.39)/2	2.14		
		(-10.55--11.02)x(3.41+3.39)/2	1.60		
		(-9.53--10.55)x(3.40+3.41)/2	3.47		
		(-9.46--9.53)x(3.40+3.40)/2	0.24		
		(-9.33--9.46)x(3.42+3.40)/2	0.44		
		(-8.37--9.33)x(3.56+3.42)/2	3.35		
		(-7.80--8.37)x(3.59+3.56)/2	2.04		
		(-7.27--7.80)x(3.64+3.59)/2	1.92		
		(-6.38--7.27)x(3.63+3.64)/2	3.24		
		(-6.18--6.38)x(3.62+3.63)/2	0.73		
		(-6.06--6.18)x(3.57+3.62)/2	0.43		
		(-5.09--6.06)x(3.16+3.57)/2	3.26		
		(-4.83--5.09)x(3.08+3.16)/2	0.81		
		(-4.68--4.83)x(2.96+3.08)/2	0.45		
		(-4.65--4.68)x(2.96+2.96)/2	0.09		
		(-4.62--4.65)x(3.03+2.96)/2	0.09		
		(-4.60--4.62)x(3.00+3.03)/2	0.06		
		(-4.59--4.60)x(3.01+3.00)/2	0.03		
		(-4.58--4.59)x(2.99+3.01)/2	0.03		
		(-4.57--4.58)x(2.96+2.99)/2	0.03		
		(-4.56--4.57)x(2.98+2.96)/2	0.03		
		(-4.55--4.56)x(3.01+2.98)/2	0.03		
		(-4.54--4.55)x(3.18+3.09)/2	0.03		
		(-4.52--4.54)x(2.95+3.02)/2	0.06		
		(-4.51--4.52)x(2.91+2.95)/2	0.03		
		(-4.49--4.51)x(2.92+2.91)/2	0.06		
		(-4.37--4.49)x(2.91+2.92)/2	0.35		
		(-3.99--4.37)x(2.90+2.91)/2	1.10		
		(-3.43--3.99)x(2.90+2.90)/2	1.62		
		(-2.90--3.43)x(2.91+2.90)/2	1.54		
		(-2.59--2.90)x(2.91+2.91)/2	0.90		
		(-1.81--2.59)x(2.93+2.91)/2	2.28		
		(-0.85--1.81)x(2.92+2.93)/2	2.81		
		(-0.71--0.85)x(2.92+2.92)/2	0.41		
		(-0.65--0.71)x(2.92+2.92)/2	0.18		
		(-0.48--0.65)x(2.93+2.92)/2	0.50		
		(0.15--0.48)x(2.95+2.93)/2	1.85		
		(0.38-0.15)x(2.95+2.95)/2	0.68		
		(0.61-0.38)x(2.96+2.95)/2	0.68		
		(0.65-0.61)x(2.96+2.96)/2	0.12		
		(0.67-0.65)x(2.96+2.96)/2	0.06		
		(0.74-0.67)x(2.99+2.96)/2	0.21		
		(0.77-0.74)x(2.97+2.99)/2	0.09		
		(0.79-0.77)x(2.97+2.97)/2	0.06		
		(0.80-0.79)x(3.02+3.20)/2	0.03		
		(0.83-0.80)x(2.99+3.02)/2	0.09		
		(0.84-0.83)x(3.00+2.99)/2	0.03		
		(0.94-0.84)x(3.02+3.00)/2	0.30		
		(1.17-0.94)x(3.05+3.02)/2	0.70		
		(1.47-1.17)x(3.09+3.05)/2	0.92		
		(2.47-1.47)x(3.11+3.09)/2	3.10		
		(2.54-2.47)x(3.12+3.11)/2	0.22		
		(2.55-2.54)x(3.12+3.12)/2	0.03		
		(2.56-2.55)x(3.12+3.12)/2	0.03		
		(2.75-2.56)x(3.43+3.12)/2	0.62		
		(2.76-2.75)x(3.50+3.53)/2	0.04		
		(2.77-2.76)x(3.44+3.50)/2	0.03		
		(2.78-2.77)x(3.50+3.26)/2	0.03		
		(2.79-2.78)x(3.49+3.50)/2	0.03		
		(2.80-2.79)x(3.49+3.41)/2	0.03		
		A RIPORTARE mq	53.30		

SCATOLARE

		CALCOLO DELLE AREE		Foglio n. 30
STERRO				
N. SEZIONE PROG.	FIG.	ELEMENTI DI CALCOLO	AREA ELEMENTARE mq	AREA FIGURA mq	NOTE
		RIPORTO mq	53.30		
		(2.81-2.80)x(3.77+3.79)/2	0.04		
		(2.82-2.81)x(3.47+3.55)/2	0.04		
		(2.83-2.82)x(3.60+3.52)/2	0.04		
		(2.84-2.83)x(3.60+3.63)/2	0.04		
		(2.85-2.84)x(3.43+3.60)/2	0.04		
		(2.86-2.85)x(3.34+3.47)/2	0.03		
		(2.88-2.86)x(3.47+3.34)/2	0.07		
		(2.89-2.88)x(3.52+3.47)/2	0.03		
		(2.91-2.89)x(3.17+3.52)/2	0.07		
		(2.93-2.91)x(3.38+3.17)/2	0.07		
		(2.94-2.93)x(3.43+3.38)/2	0.03		
		(2.97-2.94)x(3.56+3.43)/2	0.10		
		(3.00-2.97)x(3.24+3.56)/2	0.10		
		(3.10-3.00)x(3.29+3.24)/2	0.33		
		(3.11-3.10)x(3.30+3.47)/2	0.03		
		(3.12-3.11)x(3.19+3.29)/2	0.03		
		(3.13-3.12)x(3.38+3.19)/2	0.03		
		(3.21-3.13)x(3.47+3.38)/2	0.27		
		(3.48-3.21)x(3.30+3.47)/2	0.91		
		(3.66-3.48)x(3.28+3.30)/2	0.59		
		(4.36-3.66)x(3.28+3.28)/2	2.30		
		(4.75-4.36)x(3.34+3.28)/2	1.29		
		(5.43-4.75)x(3.49+3.34)/2	2.32		
		(5.85-5.43)x(3.62+3.49)/2	1.49		
		(6.10-5.85)x(3.73+3.62)/2	0.92		
		(6.94-6.10)x(4.13+3.73)/2	3.30		
		(7.83-6.94)x(4.37+4.13)/2	3.78		
		(8.03-7.83)x(4.42+4.37)/2	0.88		
		(8.38-8.03)x(4.42+4.42)/2	1.55		
		(9.13-8.38)x(4.40+4.42)/2	3.31		
		(9.72-9.13)x(4.32+4.40)/2	2.57		
		(10.22-9.72)x(4.26+4.32)/2	2.15		
		(11.31-10.22)x(4.07+4.26)/2	4.54		
		(11.33-11.31)x(4.07+4.07)/2	0.08		
		(12.41-11.33)x(3.77+4.07)/2	4.23		
		(13.04-12.41)x(3.46+3.77)/2	2.28		
		(13.50-13.04)x(3.26+3.46)/2	1.55		
		(14.03-13.50)x(3.00+3.26)/2	1.66		
		(2.50-14.03)x(3.00+3.00)/2	-34.59		
		(0.70-2.50)x(1.80+3.00)/2	-4.32		
		(-11.45-0.70)x(1.80+1.80)/2	-21.87		
		(-13.72--11.45)x(3.31+1.80)/2	-5.80		
				29.81	
99bis 1475.25	B1	(-0.11--0.47)x(2.88+2.85)/2	1.03		
		(0.63--0.11)x(2.90+2.88)/2	2.14		
		(0.82-0.63)x(2.94+2.90)/2	0.55		
		(0.93-0.82)x(2.96+2.94)/2	0.32		
		(0.95-0.93)x(2.97+2.96)/2	0.06		
		(0.96-0.95)x(2.96+2.97)/2	0.03		
		(0.97-0.96)x(2.96+2.96)/2	0.03		
		(1.00-0.97)x(3.00+3.03)/2	0.09		
		(1.01-1.00)x(2.98+2.99)/2	0.03		
		(1.02-1.01)x(2.98+2.98)/2	0.03		
		(1.03-1.02)x(2.97+2.98)/2	0.03		
		(1.07-1.03)x(2.99+2.97)/2	0.12		
		(1.17-1.07)x(3.07+2.99)/2	0.30		
		(1.28-1.17)x(3.08+3.07)/2	0.34		
		(1.72-1.28)x(3.25+3.08)/2	1.39		
		(1.89-1.72)x(3.30+3.25)/2	0.56		
		(2.56-1.89)x(3.51+3.30)/2	2.28		
		(2.67-2.56)x(3.54+3.51)/2	0.39		
		(2.71-2.67)x(3.54+3.54)/2	0.14		
		(2.88-2.71)x(3.48+3.54)/2	0.60		
		(2.89-2.88)x(3.47+3.48)/2	0.03		
		(2.90-2.89)x(3.40+3.47)/2	0.03		
		(2.91-2.90)x(3.47+3.22)/2	0.03		
		(2.92-2.91)x(3.46+3.47)/2	0.03		
		(2.93-2.92)x(3.46+3.38)/2	0.03		
		(2.94-2.93)x(3.67+3.76)/2	0.04		
		(2.95-2.94)x(3.50+3.57)/2	0.04		
		(2.96-2.95)x(3.64+3.61)/2	0.04		
		(2.97-2.96)x(3.47+3.61)/2	0.04		
		(2.98-2.97)x(3.50+3.47)/2	0.03		
		(2.99-2.98)x(3.50+3.39)/2	0.03		
		(3.01-2.99)x(3.54+3.50)/2	0.07		
		(3.02-3.01)x(3.24+3.54)/2	0.03		
		(3.04-3.02)x(3.43+3.24)/2	0.07		
		(3.07-3.04)x(3.67+3.43)/2	0.11		
		(3.10-3.07)x(3.29+3.63)/2	0.10		
		(3.23-3.10)x(3.35+3.29)/2	0.43		
		(3.24-3.23)x(3.26+3.50)/2	0.03		
		(3.25-3.24)x(3.17+3.26)/2	0.03		
		(3.26-3.25)x(3.40+3.17)/2	0.03		
		(3.36-3.26)x(3.74+3.61)/2	0.37		
		(3.59-3.36)x(3.83+3.74)/2	0.87		
		(3.90-3.59)x(3.92+3.83)/2	1.20		
		(4.84-3.90)x(4.21+3.92)/2	3.82		
		(5.00-4.84)x(4.26+4.21)/2	0.68		
		(5.09-5.00)x(4.26+4.26)/2	0.38		
		(6.09-5.09)x(4.38+4.26)/2	4.32		
		(6.82-6.09)x(4.28+4.38)/2	3.16		
		(7.18-6.82)x(4.25+4.28)/2	1.54		
		(7.35-7.18)x(4.24+4.25)/2	0.72		
		(7.80-7.35)x(4.18+4.24)/2	1.89		
		(8.15-7.80)x(4.15+4.18)/2	1.46		
		(8.28-8.15)x(4.14+4.15)/2	0.54		
		(8.56-8.28)x(4.14+4.14)/2	1.16		
		(9.37-8.56)x(4.19+4.14)/2	3.37		
		(10.29-9.37)x(4.25+4.19)/2	3.88		
		(10.46-10.29)x(4.26+4.25)/2	0.72		
		(10.76-10.46)x(4.20+4.26)/2	1.27		
		(11.56-10.76)x(4.02+4.20)/2	3.29		
		(12.03-11.56)x(3.82+4.02)/2	1.84		
		(12.65-12.03)x(3.59+3.82)/2	2.30		
		A RIPORTARE mq	50.51		

SCATOLARE

		CALCOLO DELLE AREE		Foglio n. 31
STERRO				
N. SEZIONE PROG.	FIG.	ELEMENTI DI CALCOLO	AREA ELEMENTARE mq	AREA FIGURA mq	NOTE
		RIPORTO mq	50.51		
		(13.71-12.65)x(3.18+3.59)/2	3.59		
		(13.74-13.71)x(3.17+3.18)/2	0.10		
		(13.76-13.74)x(3.16+3.17)/2	0.06		
		(14.65-13.76)x(2.85+3.16)/2	2.67		
		(-0.47-14.65)x(2.85+2.85)/2	-43.09		
				13.84	
99b 1478.97	B1	(-13.01--13.72)x(3.35+3.31)/2	2.36		
		(-12.74--13.01)x(3.35+3.35)/2	0.90		
		(-12.28--12.74)x(3.37+3.35)/2	1.55		
		(-11.65--12.28)x(3.39+3.37)/2	2.13		
		(-11.02--11.65)x(3.39+3.39)/2	2.14		
		(-10.55--11.02)x(3.41+3.39)/2	1.60		
		(-9.53--10.55)x(3.40+3.41)/2	3.47		
		(-9.46--9.53)x(3.40+3.40)/2	0.24		
		(-9.33--9.46)x(3.42+3.40)/2	0.44		
		(-8.37--9.33)x(3.56+3.42)/2	3.35		
		(-7.80--8.37)x(3.59+3.56)/2	2.04		
		(-7.27--7.80)x(3.64+3.59)/2	1.92		
		(-6.38--7.27)x(3.63+3.64)/2	3.24		
		(-6.18--6.38)x(3.62+3.63)/2	0.73		
		(-6.06--6.18)x(3.57+3.62)/2	0.43		
		(-5.09--6.06)x(3.16+3.57)/2	3.26		
		(-4.83--5.09)x(3.08+3.16)/2	0.81		
		(-4.68--4.83)x(2.96+3.08)/2	0.45		
		(-4.65--4.68)x(2.96+2.96)/2	0.09		
		(-4.62--4.65)x(3.03+2.96)/2	0.09		
		(-4.60--4.62)x(3.00+3.03)/2	0.06		
		(-4.59--4.60)x(3.01+3.00)/2	0.03		
		(-4.58--4.59)x(2.99+3.01)/2	0.03		
		(-4.57--4.58)x(2.96+2.99)/2	0.03		
		(-4.56--4.57)x(2.98+2.96)/2	0.03		
		(-4.55--4.56)x(3.01+2.98)/2	0.03		
		(-4.54--4.55)x(3.18+3.09)/2	0.03		
		(-4.52--4.54)x(2.95+3.02)/2	0.06		
		(-4.51--4.52)x(2.91+2.95)/2	0.03		
		(-4.49--4.51)x(2.92+2.91)/2	0.06		
		(-4.37--4.49)x(2.91+2.92)/2	0.35		
		(-3.99--4.37)x(2.90+2.91)/2	1.10		
		(-3.43--3.99)x(2.90+2.90)/2	1.62		
		(-2.90--3.43)x(2.91+2.90)/2	1.54		
		(-2.59--2.90)x(2.91+2.91)/2	0.90		
		(-1.81--2.59)x(2.93+2.91)/2	2.28		
		(-0.85--1.81)x(2.92+2.93)/2	2.81		
		(-0.71--0.85)x(2.92+2.92)/2	0.41		
		(-0.65--0.71)x(2.92+2.92)/2	0.18		
		(-0.48--0.65)x(2.93+2.92)/2	0.50		
		(0.15--0.48)x(2.95+2.93)/2	1.85		
		(0.38-0.15)x(2.95+2.95)/2	0.68		
		(0.61-0.38)x(2.96+2.95)/2	0.68		
		(0.65-0.61)x(2.96+2.96)/2	0.12		
		(0.67-0.65)x(2.96+2.96)/2	0.06		
		(0.74-0.67)x(2.99+2.96)/2	0.21		
		(0.77-0.74)x(2.97+2.99)/2	0.09		
		(0.79-0.77)x(2.97+2.97)/2	0.06		
		(0.80-0.79)x(3.02+3.20)/2	0.03		
		(0.83-0.80)x(2.99+3.02)/2	0.09		
		(0.84-0.83)x(3.00+2.99)/2	0.03		
		(0.94-0.84)x(3.02+3.00)/2	0.30		
		(1.17-0.94)x(3.05+3.02)/2	0.70		
		(1.47-1.17)x(3.09+3.05)/2	0.92		
		(2.47-1.47)x(3.11+3.09)/2	3.10		
		(2.54-2.47)x(3.12+3.11)/2	0.22		
		(2.55-2.54)x(3.12+3.12)/2	0.03		
		(2.56-2.55)x(3.12+3.12)/2	0.03		
		(2.75-2.56)x(3.43+3.12)/2	0.62		
		(2.76-2.75)x(3.50+3.53)/2	0.04		
		(2.77-2.76)x(3.44+3.50)/2	0.03		
		(2.78-2.77)x(3.50+3.26)/2	0.03		
		(2.79-2.78)x(3.49+3.50)/2	0.03		
		(2.80-2.79)x(3.49+3.41)/2	0.03		
		(2.81-2.80)x(3.77+3.79)/2	0.04		
		(2.82-2.81)x(3.47+3.55)/2	0.04		
		(2.83-2.82)x(3.60+3.52)/2	0.04		
		(2.84-2.83)x(3.60+3.63)/2	0.04		
		(2.85-2.84)x(3.43+3.60)/2	0.04		
		(2.86-2.85)x(3.34+3.47)/2	0.03		
		(2.88-2.86)x(3.47+3.34)/2	0.07		
		(2.89-2.88)x(3.52+3.47)/2	0.03		
		(2.91-2.89)x(3.17+3.52)/2	0.07		
		(2.93-2.91)x(3.38+3.17)/2	0.07		
		(2.94-2.93)x(3.43+3.38)/2	0.03		
		(2.97-2.94)x(3.56+3.43)/2	0.10		
		(3.00-2.97)x(3.24+3.56)/2	0.10		
		(3.10-3.00)x(3.29+3.24)/2	0.33		
		(3.11-3.10)x(3.30+3.47)/2	0.03		
		(3.12-3.11)x(3.19+3.29)/2	0.03		
		(3.13-3.12)x(3.38+3.19)/2	0.03		
		(3.21-3.13)x(3.47+3.38)/2	0.27		
		(3.48-3.21)x(3.30+3.47)/2	0.91		
		(3.66-3.48)x(3.28+3.30)/2	0.59		
		(4.36-3.66)x(3.28+3.28)/2	2.30		
		(4.75-4.36)x(3.34+3.28)/2	1.29		
		(5.43-4.75)x(3.49+3.34)/2	2.32		
		(5.85-5.43)x(3.62+3.49)/2	1.49		
		(6.10-5.85)x(3.73+3.62)/2	0.92		
		(6.94-6.10)x(4.13+3.73)/2	3.30		
		(7.83-6.94)x(4.37+4.13)/2	3.78		
		(8.03-7.83)x(4.42+4.37)/2	0.88		
		(8.38-8.03)x(4.42+4.42)/2	1.55		
		(9.13-8.38)x(4.40+4.42)/2	3.31		
		(9.72-9.13)x(4.32+4.40)/2	2.57		
		(10.22-9.72)x(4.26+4.32)/2	2.15		
		(11.31-10.22)x(4.07+4.26)/2	4.54		
		(11.33-11.31)x(4.07+4.07)/2	0.08		
		A RIPORTARE mq	86.67		

SCATOLARE

	CALCOLO DELLE AREE		Foglio n. 32

STERRO

N. SEZIONE PROG.	FIG.	ELEMENTI DI CALCOLO	AREA ELEMENTARE mq	AREA FIGURA mq	NOTE
		RIPORTO mq	86.67		
		(12.41-11.33)x(3.77+4.07)/2	4.23		
		(13.04-12.41)x(3.46+3.77)/2	2.28		
		(13.50-13.04)x(3.26+3.46)/2	1.55		
		(14.03-13.50)x(3.00+3.26)/2	1.66		
		(2.50-14.03)x(3.00+3.00)/2	-34.59		
		(0.70-2.50)x(1.80+3.00)/2	-4.32		
		(-11.45-0.70)x(1.80+1.80)/2	-21.87		
		(-13.72--11.45)x(3.31+1.80)/2	-5.80		
				29.81	

Il Direttore dei Lavori	L'Impresa	

SCATOLARE

CALCOLO DELLE AREE	Foglio n. 33

RIPORTO

N. SEZIONE PROG.	FIG.	ELEMENTI DI CALCOLO	AREA ELEMENTARE mq	AREA FIGURA mq	NOTE
76bis	RI1	(-10.25--14.47)x(3.81+3.81)/2	16.08		
1131.80		(-11.25--10.25)x(3.00+3.00)/2	-3.00		
		(-11.45--11.25)x(2.00+2.00)/2	-0.40		
		(-14.47--11.45)x(3.81+1.80)/2	-8.47		
				4.21	
76bis	RI2	(14.99-15.19)x(2.00+2.00)/2	-0.40		
1131.80		(31.06-14.99)x(3.00+3.00)/2	48.21		
		(31.00-31.06)x(1.32+1.33)/2	-0.08		
		(30.78-31.00)x(1.24+1.32)/2	-0.28		
		(30.64-30.78)x(1.18+1.24)/2	-0.17		
		(29.68-30.64)x(0.76+1.18)/2	-0.93		
		(28.88-29.68)x(0.40+0.76)/2	-0.46		
		(28.59-28.88)x(0.26+0.40)/2	-0.10		
		(28.11-28.59)x(0.12+0.26)/2	-0.09		
		(27.49-28.11)x(-0.02+0.12)/2	-0.03		
		(27.11-27.49)x(-0.06+-0.02)/2	0.02		
		(26.39-27.11)x(-0.13+-0.06)/2	0.07		
		(25.35-26.39)x(-0.12+-0.13)/2	0.13		
		(25.30-25.35)x(-0.12+-0.12)/2	0.01		
		(25.21-25.30)x(-0.11+-0.12)/2	0.01		
		(24.20-25.21)x(0.02+-0.11)/2	0.05		
		(23.59-24.20)x(0.14+0.02)/2	-0.05		
		(23.11-23.59)x(0.23+0.14)/2	-0.09		
		(22.31-23.11)x(0.56+0.23)/2	-0.32		
		(22.01-22.31)x(0.70+0.56)/2	-0.19		
		(21.30-22.01)x(1.07+0.70)/2	-0.63		
		(20.91-21.30)x(1.22+1.07)/2	-0.45		
		(20.06-20.91)x(1.50+1.22)/2	-1.16		
		(19.82-20.06)x(1.59+1.50)/2	-0.37		
		(19.42-19.82)x(1.63+1.59)/2	-0.64		
		(18.72-19.42)x(1.70+1.63)/2	-1.17		
		(18.30-18.72)x(1.73+1.70)/2	-0.72		
		(17.62-18.30)x(1.77+1.73)/2	-1.19		
		(17.46-17.62)x(1.80+1.77)/2	-0.29		
		(15.19-17.46)x(1.80+1.80)/2	-4.09		
				34.60	
77	RI1	(-10.25--14.22)x(3.64+3.65)/2	14.47		
1140.00		(-11.25--10.25)x(3.00+3.00)/2	-3.00		
		(-11.45--11.25)x(2.00+2.00)/2	-0.40		
		(-14.22--11.45)x(3.65+1.80)/2	-7.55		
				3.52	
77	RI2	(14.84-15.04)x(2.00+2.00)/2	-0.40		
1140.00		(31.06-14.84)x(3.00+3.00)/2	48.66		
		(30.97-31.06)x(1.38+1.41)/2	-0.13		
		(30.16-30.97)x(1.00+1.38)/2	-0.96		
		(29.88-30.16)x(0.88+1.00)/2	-0.26		
		(29.75-29.88)x(0.80+0.88)/2	-0.11		
		(29.41-29.75)x(0.63+0.80)/2	-0.24		
		(28.95-29.41)x(0.39+0.63)/2	-0.23		
		(28.78-28.95)x(0.33+0.39)/2	-0.06		
		(28.39-28.78)x(0.24+0.33)/2	-0.11		
		(27.68-28.39)x(0.08+0.24)/2	-0.11		
		(26.59-26.63)x(-0.08+-0.08)/2	0.00		
		(26.52-26.59)x(-0.09+-0.08)/2	0.01		
		(25.49-26.52)x(-0.09+-0.09)/2	0.09		
		(24.86-25.49)x(-0.01+-0.09)/2	0.03		
		(24.39-24.86)x(0.02+-0.01)/2	-0.00		
		(23.63-24.39)x(0.12+0.02)/2	-0.05		
		(23.30-23.63)x(0.17+0.12)/2	-0.05		
		(23.09-23.30)x(0.28+0.17)/2	-0.05		
		(22.20-23.09)x(0.70+0.28)/2	-0.44		
		(21.32-22.20)x(1.20+0.70)/2	-0.84		
		(21.10-21.32)x(1.35+1.20)/2	-0.28		
		(20.74-21.10)x(1.41+1.35)/2	-0.50		
		(20.01-20.74)x(1.54+1.41)/2	-1.08		
		(19.55-20.01)x(1.55+1.54)/2	-0.71		
		(18.91-19.55)x(1.58+1.55)/2	-1.00		
		(18.62-18.91)x(1.60+1.58)/2	-0.46		
		(17.86-18.62)x(1.72+1.60)/2	-1.26		
		(17.82-17.86)x(1.72+1.72)/2	-0.07		
		(17.81-17.82)x(1.72+1.72)/2	-0.02		
		(17.79-17.81)x(1.74+1.72)/2	-0.03		
		(17.65-17.79)x(1.80+1.74)/2	-0.25		
		(15.04-17.65)x(1.80+1.80)/2	-4.70		
				34.39	
78	RI1	(-10.25--14.31)x(3.70+3.70)/2	15.02		
1155.00		(-11.25--10.25)x(3.00+3.00)/2	-3.00		
		(-11.45--11.25)x(2.00+2.00)/2	-0.40		
		(-14.31--11.45)x(3.70+1.80)/2	-7.87		
				3.75	
78	RI2	(14.03-14.23)x(2.00+2.00)/2	-0.40		
1155.00		(31.04-14.03)x(3.00+3.00)/2	51.03		
		(30.77-31.04)x(1.25+1.32)/2	-0.35		
		(30.51-30.77)x(1.10+1.25)/2	-0.31		
		(29.67-30.51)x(0.62+1.10)/2	-0.72		
		(28.73-29.67)x(0.15+0.62)/2	-0.36		
		(28.57-28.73)x(0.06+0.15)/2	-0.02		
		(28.31-28.57)x(0.03+0.06)/2	-0.01		
		(27.48-28.31)x(-0.02+0.03)/2	-0.00		
		(26.96-27.48)x(-0.02+-0.02)/2	0.01		
		(26.38-26.96)x(-0.01+-0.02)/2	0.01		
		(25.44-26.38)x(-0.05+-0.01)/2	0.03		
		(25.28-25.44)x(-0.05+-0.05)/2	0.01		
		(25.18-25.28)x(-0.05+-0.05)/2	0.01		
		(24.18-25.18)x(-0.08+-0.05)/2	0.07		
		(23.74-24.18)x(-0.00+-0.08)/2	0.02		
		(23.09-23.74)x(0.26+-0.00)/2	-0.08		
		(22.57-23.09)x(0.61+0.26)/2	-0.23		
		(21.99-22.57)x(0.99+0.61)/2	-0.46		
		(21.63-21.99)x(1.08+0.99)/2	-0.37		
		(20.89-21.63)x(1.33+1.08)/2	-0.89		
		(19.86-20.89)x(1.46+1.33)/2	-1.44		
		(19.79-19.86)x(1.47+1.46)/2	-0.10		
		(19.69-19.79)x(1.48+1.47)/2	-0.15		
		(18.70-19.69)x(1.52+1.48)/2	-1.49		
		(18.08-18.70)x(1.60+1.52)/2	-0.97		
		A RIPORTARE mq	42.84		

SCATOLARE

		CALCOLO DELLE AREE		Foglio n. 34	
RIPORTO					
N. SEZIONE PROG.	FIG.	ELEMENTI DI CALCOLO	AREA ELEMENTARE mq	AREA FIGURA mq	NOTE
		RIPORTO mq	42.84		
		(17.60-18.08)x(1.68+1.60)/2	-0.79		
		(16.82-17.60)x(1.78+1.68)/2	-1.35		
		(16.70-16.82)x(1.80+1.78)/2	-0.21		
		(14.23-16.70)x(1.80+1.80)/2	-4.45		
				36.04	
79	RI1	(-10.25--14.54)x(3.86+3.86)/2	16.56		
1170.00		(-11.25--10.25)x(3.00+3.00)/2	-3.00		
		(-11.45--11.25)x(2.00+2.00)/2	-0.40		
		(-14.54--11.45)x(3.86+1.80)/2	-8.74		
				4.42	
79	RI2	(12.90-13.10)x(2.00+2.00)/2	-0.40		
1170.00		(30.77-12.90)x(3.00+3.00)/2	53.61		
		(30.54-30.77)x(0.92+0.99)/2	-0.22		
		(30.06-30.54)x(0.62+0.92)/2	-0.37		
		(29.44-30.06)x(0.23+0.62)/2	-0.26		
		(29.05-29.44)x(0.13+0.23)/2	-0.07		
		(28.34-29.05)x(-0.11+0.13)/2	-0.01		
		(28.02-28.34)x(-0.13+-0.11)/2	0.04		
		(27.24-28.02)x(-0.08+-0.13)/2	0.08		
		(27.20-27.24)x(-0.08+-0.08)/2	0.00		
		(26.14-27.20)x(-0.08+-0.08)/2	0.08		
		(25.48-26.14)x(-0.07+-0.08)/2	0.05		
		(25.04-25.48)x(-0.07+-0.07)/2	0.03		
		(24.34-25.04)x(-0.11+-0.07)/2	0.06		
		(23.95-24.34)x(-0.10+-0.11)/2	0.04		
		(23.70-23.95)x(0.04+-0.10)/2	0.01		
		(22.85-23.70)x(0.45+0.04)/2	-0.21		
		(21.91-22.85)x(1.01+0.45)/2	-0.69		
		(21.75-21.91)x(1.12+1.01)/2	-0.17		
		(21.48-21.75)x(1.19+1.12)/2	-0.31		
		(20.65-21.48)x(1.41+1.19)/2	-1.08		
		(20.13-20.65)x(1.43+1.41)/2	-0.74		
		(19.55-20.13)x(1.48+1.43)/2	-0.84		
		(18.63-19.55)x(1.46+1.48)/2	-1.35		
		(18.45-18.63)x(1.46+1.46)/2	-0.26		
		(17.71-18.45)x(1.53+1.46)/2	-1.11		
		(17.36-17.71)x(1.57+1.53)/2	-0.54		
		(16.56-17.36)x(1.67+1.57)/2	-1.30		
		(16.26-16.56)x(1.70+1.67)/2	-0.51		
		(15.77-16.26)x(1.76+1.70)/2	-0.85		
		(15.36-15.77)x(1.80+1.76)/2	-0.73		
		(13.10-15.36)x(1.80+1.80)/2	-4.07		
				37.91	
80	RI1	(-10.25--14.14)x(3.59+3.59)/2	13.97		
1185.00		(-11.25--10.25)x(3.00+3.00)/2	-3.00		
		(-11.45--11.25)x(2.00+2.00)/2	-0.40		
		(-14.14--11.45)x(3.59+1.80)/2	-7.25		
				3.32	
80	RI2	(11.81-12.01)x(2.00+2.00)/2	-0.40		
1185.00		(28.11-11.81)x(3.00+3.00)/2	48.90		
		(28.07-28.11)x(-0.09+-0.08)/2	0.00		
		(27.44-28.07)x(-0.05+-0.09)/2	0.04		
		(26.97-27.44)x(-0.03+-0.05)/2	0.02		
		(26.22-26.97)x(0.01+-0.03)/2	0.01		
		(25.87-26.22)x(0.02+0.01)/2	-0.01		
		(25.65-25.87)x(0.02+0.02)/2	-0.00		
		(24.77-25.65)x(0.03+0.02)/2	-0.02		
		(23.87-24.77)x(0.16+0.03)/2	-0.09		
		(23.67-23.87)x(0.17+0.16)/2	-0.03		
		(23.36-23.67)x(0.39+0.17)/2	-0.09		
		(22.57-23.36)x(1.01+0.39)/2	-0.55		
		(22.00-22.57)x(1.40+1.01)/2	-0.69		
		(21.48-22.00)x(1.58+1.40)/2	-0.77		
		(20.50-21.48)x(1.65+1.58)/2	-1.58		
		(20.38-20.50)x(1.65+1.65)/2	-0.20		
		(20.30-20.38)x(1.65+1.65)/2	-0.13		
		(19.28-20.30)x(1.65+1.65)/2	-1.68		
		(18.63-19.28)x(1.80+1.65)/2	-1.12		
		(12.01-18.63)x(1.80+1.80)/2	-11.92		
				29.69	
81	RI1	(-10.25--14.31)x(3.70+3.70)/2	15.02		
1200.00		(-11.25--10.25)x(3.00+3.00)/2	-3.00		
		(-11.45--11.25)x(2.00+2.00)/2	-0.40		
		(-14.31--11.45)x(3.70+1.80)/2	-7.87		
				3.75	
82	RI1	(-10.25--14.50)x(3.84+3.84)/2	16.32		
1215.00		(-11.25--10.25)x(3.00+3.00)/2	-3.00		
		(-11.45--11.25)x(2.00+2.00)/2	-0.40		
		(-14.50--11.45)x(3.84+1.80)/2	-8.60		
				4.32	
82	RI2	(11.25-11.45)x(2.00+2.00)/2	-0.40		
1215.00		(22.75-11.25)x(3.00+3.00)/2	34.50		
		(22.43-22.75)x(1.11+0.95)/2	-0.33		
		(22.03-22.43)x(1.35+1.11)/2	-0.49		
		(21.93-22.03)x(1.40+1.35)/2	-0.14		
		(21.76-21.93)x(1.52+1.40)/2	-0.25		
		(21.73-21.76)x(1.51+1.52)/2	-0.05		
		(21.72-21.73)x(1.49+1.51)/2	-0.02		
		(21.71-21.72)x(1.53+1.49)/2	-0.02		
		(21.69-21.71)x(1.66+1.53)/2	-0.03		
		(21.65-21.69)x(1.62+1.66)/2	-0.07		
		(21.59-21.65)x(1.57+1.62)/2	-0.10		
		(21.57-21.59)x(1.56+1.57)/2	-0.03		
		(21.47-21.57)x(1.59+1.56)/2	-0.16		
		(21.06-21.47)x(1.59+1.59)/2	-0.65		
		(20.93-21.06)x(1.61+1.59)/2	-0.21		
		(20.64-20.93)x(1.63+1.61)/2	-0.47		
		(19.83-20.64)x(1.68+1.63)/2	-1.34		
		(18.86-19.83)x(1.71+1.68)/2	-1.64		
		(18.74-18.86)x(1.72+1.71)/2	-0.21		
		(18.70-18.74)x(1.72+1.72)/2	-0.07		
		(18.39-18.70)x(1.79+1.72)/2	-0.54		
		(18.33-18.39)x(1.77+1.79)/2	-0.11		
		(18.23-18.33)x(1.85+1.77)/2	-0.18		
		A RIPORTARE mq	26.99		

SCATOLARE

		CALCOLO DELLE AREE		Foglio n. 35	
RIPORTO					
N. SEZIONE PROG.	FIG.	ELEMENTI DI CALCOLO	AREA ELEMENTARE mq	AREA FIGURA mq	NOTE
		RIPORTO mq	26.99		
		(18.21-18.23)x(1.79+1.85)/2	-0.04		
		(18.20-18.21)x(1.77+1.79)/2	-0.02		
		(18.19-18.20)x(1.80+1.77)/2	-0.02		
		(11.45-18.19)x(1.80+1.80)/2	-12.13		
				14.78	
83	RI1	(-10.25--14.57)x(3.88+3.88)/2	16.76		
1230.00		(-11.25--10.25)x(3.00+3.00)/2	-3.00		
		(-11.45--11.25)x(2.00+2.00)/2	-0.40		
		(-14.57--11.45)x(3.88+1.80)/2	-8.86		
				4.50	
84	RI1	(-10.25--14.42)x(3.78+3.78)/2	15.76		
1245.00		(-11.25--10.25)x(3.00+3.00)/2	-3.00		
		(-11.45--11.25)x(2.00+2.00)/2	-0.40		
		(-14.42--11.45)x(3.78+1.80)/2	-8.29		
				4.07	
85	RI1	(-10.25--14.55)x(3.87+3.87)/2	16.64		
1260.00		(-11.25--10.25)x(3.00+3.00)/2	-3.00		
		(-11.45--11.25)x(2.00+2.00)/2	-0.40		
		(-14.55--11.45)x(3.87+1.80)/2	-8.79		
				4.45	
86	RI1	(-10.25--14.72)x(3.98+3.98)/2	17.79		
1275.00		(-11.25--10.25)x(3.00+3.00)/2	-3.00		
		(-11.45--11.25)x(2.00+2.00)/2	-0.40		
		(-14.72--11.45)x(3.98+1.80)/2	-9.45		
				4.94	
87	RI1	(-10.25--14.57)x(3.88+3.88)/2	16.76		
1290.00		(-11.25--10.25)x(3.00+3.00)/2	-3.00		
		(-11.45--11.25)x(2.00+2.00)/2	-0.40		
		(-14.57--11.45)x(3.88+1.80)/2	-8.86		
				4.50	
88	RI1	(-10.25--14.64)x(3.92+3.92)/2	17.21		
1305.00		(-11.25--10.25)x(3.00+3.00)/2	-3.00		
		(-11.45--11.25)x(2.00+2.00)/2	-0.40		
		(-14.64--11.45)x(3.92+1.80)/2	-9.12		
				4.69	
89	RI1	(-10.25--14.59)x(3.90+3.90)/2	16.93		
1320.00		(-11.25--10.25)x(3.00+3.00)/2	-3.00		
		(-11.45--11.25)x(2.00+2.00)/2	-0.40		
		(-14.59--11.45)x(3.90+1.80)/2	-8.95		
				4.58	
89	RI2	(11.25-11.45)x(2.00+2.00)/2	-0.40		
1320.00		(13.25-11.25)x(3.00+3.00)/2	6.00		
		(11.45-13.25)x(1.80+3.00)/2	-4.32		
				1.28	
90	RI1	(-10.25--14.74)x(3.99+3.99)/2	17.92		
1335.00		(-11.25--10.25)x(3.00+3.00)/2	-3.00		
		(-11.45--11.25)x(2.00+2.00)/2	-0.40		
		(-14.74--11.45)x(3.99+1.80)/2	-9.52		
				5.00	
90	RI2	(11.25-11.45)x(2.00+2.00)/2	-0.40		
1335.00		(13.25-11.25)x(3.00+3.00)/2	6.00		
		(11.45-13.25)x(1.80+3.00)/2	-4.32		
				1.28	
91	RI1	(-10.25--14.66)x(3.94+3.94)/2	17.38		
1350.00		(-11.25--10.25)x(3.00+3.00)/2	-3.00		
		(-11.45--11.25)x(2.00+2.00)/2	-0.40		
		(-14.66--11.45)x(3.94+1.80)/2	-9.21		
				4.77	
91	RI2	(11.25-11.45)x(2.00+2.00)/2	-0.40		
1350.00		(13.25-11.25)x(3.00+3.00)/2	6.00		
		(11.45-13.25)x(1.80+3.00)/2	-4.32		
				1.28	
92	RI1	(-10.25--14.45)x(3.80+3.80)/2	15.96		
1365.00		(-11.25--10.25)x(3.00+3.00)/2	-3.00		
		(-11.45--11.25)x(2.00+2.00)/2	-0.40		
		(-14.45--11.45)x(3.80+1.80)/2	-8.40		
				4.16	
92	RI2	(11.25-11.45)x(2.00+2.00)/2	-0.40		
1365.00		(13.25-11.25)x(3.00+3.00)/2	6.00		
		(11.45-13.25)x(1.80+3.00)/2	-4.32		
				1.28	
93	RI1	(-10.25--14.44)x(3.79+3.79)/2	15.88		
1380.00		(-11.25--10.25)x(3.00+3.00)/2	-3.00		
		(-11.45--11.25)x(2.00+2.00)/2	-0.40		
		(-14.44--11.45)x(3.79+1.80)/2	-8.36		
				4.12	
93	RI2	(11.25-11.45)x(2.00+2.00)/2	-0.40		
1380.00		(13.25-11.25)x(3.00+3.00)/2	6.00		
		(11.45-13.25)x(1.80+3.00)/2	-4.32		
				1.28	
94	RI1	(-10.25--14.06)x(3.54+3.54)/2	13.49		
1395.00		(-11.25--10.25)x(3.00+3.00)/2	-3.00		
		(-11.45--11.25)x(2.00+2.00)/2	-0.40		
		(-14.06--11.45)x(3.54+1.80)/2	-6.97		
				3.12	
94	RI2	(11.25-11.45)x(2.00+2.00)/2	-0.40		
1395.00		(13.25-11.25)x(3.00+3.00)/2	6.00		
		(11.45-13.25)x(1.80+3.00)/2	-4.32		
				1.28	
95	RI1	(-10.25--13.91)x(3.44+3.44)/2	12.59		
1410.00		(-11.25--10.25)x(3.00+3.00)/2	-3.00		
		(-11.45--11.25)x(2.00+2.00)/2	-0.40		
		(-13.91--11.45)x(3.44+1.80)/2	-6.45		
				2.74	
96	RI1	(-10.25--13.84)x(3.39+3.39)/2	12.17		
1425.00		(-11.25--10.25)x(3.00+3.00)/2	-3.00		
		(-11.45--11.25)x(2.00+2.00)/2	-0.40		
		(-13.84--11.45)x(3.39+1.80)/2	-6.20		
				2.57	
97	RI1	(-10.25--13.89)x(3.43+3.43)/2	12.49		
1440.00		(-11.25--10.25)x(3.00+3.00)/2	-3.00		
		(-11.45--11.25)x(2.00+2.00)/2	-0.40		
		(-13.89--11.45)x(3.43+1.80)/2	-6.38		
				2.71	
		A RIPORTARE mq			

SCATOLARE

	CALCOLO DELLE AREE		Foglio n. 36

RIPORTO

N. SEZIONE PROG.	FIG.	ELEMENTI DI CALCOLO	AREA ELEMENTARE mq	AREA FIGURA mq	NOTE
		RIPORTO mq			
98	RI1	(-10.25--13.92)x(3.45+3.45)/2	12.66		
1455.00		(-11.25--10.25)x(3.00+3.00)/2	-3.00		
		(-11.45--11.25)x(2.00+2.00)/2	-0.40		
		(-13.92--11.45)x(3.45+1.80)/2	-6.48		
				2.78	
98	RI2	(11.25-11.45)x(2.00+2.00)/2	-0.40		
1455.00		(13.25-11.25)x(3.00+3.00)/2	6.00		
		(11.45-13.25)x(1.80+3.00)/2	-4.32		
				1.28	
98bis	RI1	(-10.25--13.92)x(3.44+3.44)/2	12.62		
1457.30		(-11.25--10.25)x(3.00+3.00)/2	-3.00		
		(-11.45--11.25)x(2.00+2.00)/2	-0.40		
		(-13.92--11.45)x(3.44+1.80)/2	-6.47		
				2.75	
98bis	RI2	(11.25-11.45)x(2.00+2.00)/2	-0.40		
1457.30		(13.24-11.25)x(3.00+3.00)/2	5.97		
		(11.45-13.24)x(1.80+3.00)/2	-4.30		
				1.27	
99	RI1	(-10.25--13.72)x(3.31+3.31)/2	11.49		
1470.00		(-11.25--10.25)x(3.00+3.00)/2	-3.00		
		(-11.45--11.25)x(2.00+2.00)/2	-0.40		
		(-13.72--11.45)x(3.31+1.80)/2	-5.80		
				2.29	
99	RI2	(0.50-0.70)x(2.00+2.00)/2	-0.40		
1470.00		(2.50-0.50)x(3.00+3.00)/2	6.00		
		(0.70-2.50)x(1.80+3.00)/2	-4.32		
				1.28	
99b	RI1	(-10.25--13.72)x(3.31+3.31)/2	11.49		
1478.97		(-11.25--10.25)x(3.00+3.00)/2	-3.00		
		(-11.45--11.25)x(2.00+2.00)/2	-0.40		
		(-13.72--11.45)x(3.31+1.80)/2	-5.80		
				2.29	
99b	RI2	(0.50-0.70)x(2.00+2.00)/2	-0.40		
1478.97		(2.50-0.50)x(3.00+3.00)/2	6.00		
		(0.70-2.50)x(1.80+3.00)/2	-4.32		
				1.28	

Il Direttore dei Lavori	L'Impresa	

	CALCOLO DELLE LUNGHEZZE		Foglio n. 37

USURA

N. SEZIONE PROG.	FIG.	ELEMENTI DI CALCOLO	LUNGHEZZA ELEMENTARE ml	LUNGHEZZA FIGURA ml	NOTE
76bis	a2	(-1.25--11.00)	9.75	9.75	
76bis	a1	(14.74-1.25)	13.49	13.49	
77	a2	(-1.25--11.00)	9.75	9.75	
77	a1	(14.59-1.25)	13.34	13.34	
78	a2	(-1.25--11.00)	9.75	9.75	
78	a1	(13.78-1.25)	12.53	12.53	
79	a2	(-1.25--11.00)	9.75	9.75	
79	a1	(12.65-1.25)	11.40	11.40	
80	a2	(-11.00--1.25)	9.75	9.75	
80	a1	(11.56-1.25)	10.31	10.31	
81	a2	(-1.25--11.00)	9.75	9.75	
81	a1	(11.03-1.25)	9.78	9.78	
82	a2	(-1.25--11.00)	9.75	9.75	
82	a1	(11.00-1.25)	9.75	9.75	
83	a2	(-1.25--11.00)	9.75	9.75	
83	a1	(11.00-1.25)	9.75	9.75	
84	a2	(-1.25--11.00)	9.75	9.75	
84	a1	(11.00-1.25)	9.75	9.75	
85	a2	(-1.25--11.00)	9.75	9.75	
85	a1	(11.00-1.25)	9.75	9.75	
86	a2	(-1.25--11.00)	9.75	9.75	
86	a1	(11.00-1.25)	9.75	9.75	
87	a2	(-1.25--11.00)	9.75	9.75	
87	a1	(11.00-1.25)	9.75	9.75	
88	a2	(-1.25--11.00)	9.75	9.75	
88	a1	(11.00-1.25)	9.75	9.75	
89	a2	(-1.25--11.00)	9.75	9.75	
89	a1	(11.00-1.25)	9.75	9.75	
90	a2	(-1.25--11.00)	9.75	9.75	
90	a1	(11.00-1.25)	9.75	9.75	
91	a2	(-1.25--11.00)	9.75	9.75	
91	a1	(11.00-1.25)	9.75	9.75	
92	a2	(-1.25--11.00)	9.75	9.75	
92	a1	(11.00-1.25)	9.75	9.75	
93	a2	(-1.25--11.00)	9.75	9.75	
93	a1	(11.00-1.25)	9.75	9.75	
94	a2	(-1.25--11.00)	9.75	9.75	
94	a1	(11.00-1.25)	9.75	9.75	
95	a2	(-1.25--11.00)	9.75	9.75	
95	a1	(11.00-1.25)	9.75	9.75	
96	a2	(-1.25--11.00)	9.75	9.75	
96	a1	(11.00-1.25)	9.75	9.75	
97	a2	(-1.25--11.00)	9.75	9.75	
97	a1	(11.00-1.25)	9.75	9.75	
98	a2	(-1.25--11.00)	9.75	9.75	
98	a1	(11.00-1.25)	9.75	9.75	
98bis	a2	(-1.25--11.00)	9.75	9.75	
98bis	a1	(11.00-1.25)	9.75	9.75	
99	a1	(-1.25--11.00)	9.75	9.75	
99b	a1	(-1.25--11.00)	9.75	9.75	

Il Direttore dei Lavori	L'Impresa	

	COMPUTO DEI VOLUMI		Foglio n. 38

RILEVATO

DALLA SEZ. DA PROG.	ALLA SEZ. A PROG.	SEZIONE	FIGURA	AREA	DISTANZA SEZIONI m	DISTANZA DI CALCOLO m	VOLUME PARZIALE mc	VOLUME TOTALE mc
83	84	84	A1	3.65	15.00	7.50	27.375	
								27.375
84	85	84	A1	3.65	15.00	7.50	27.375	
1245.00	1260.00	85	A1	7.19	15.00	7.50	53.925	
		85	A2	0.15	15.00	7.50	1.125	
		85	A3	0.14	15.00	7.50	1.050	
								83.475
85	86	85	A1	7.19	15.00	7.50	53.925	
1260.00	1275.00	85	A2	0.15	15.00	7.50	1.125	
		85	A3	0.14	15.00	7.50	1.050	
		86	A1	12.07	15.00	7.50	90.525	
								146.625
86	87	86	A1	12.07	15.00	7.50	90.525	
1275.00	1290.00	87	A1	8.78	15.00	7.50	65.850	
								156.375
87	88	87	A1	8.78	15.00	7.50	65.850	
1290.00	1305.00	88	A1	8.21	15.00	7.50	61.575	
								127.425
88	89	88	A1	8.21	15.00	7.50	61.575	
1305.00	1320.00	89	A1	9.39	15.00	7.50	70.425	
								132.000
89	90	89	A1	9.39	15.00	7.50	70.425	
1320.00	1335.00	90	A1	6.30	15.00	7.50	47.250	
								117.675
90	91	90	A1	6.30	15.00	7.50	47.250	
1335.00	1350.00	91	A1	4.69	15.00	7.50	35.175	
								82.425
91	92	91	A1	4.69	15.00	7.50	35.175	
1350.00	1365.00	92	A1	10.17	15.00	7.50	76.275	
								111.450
92	93	92	A1	10.17	15.00	7.50	76.275	
1365.00	1380.00	93	A1	8.81	15.00	7.50	66.075	
								142.350
93	94	93	A1	8.81	15.00	7.50	66.075	
1380.00	1395.00	94	A1	9.42	15.00	7.50	70.650	
								136.725
94	95	94	A1	9.42	15.00	7.50	70.650	
1395.00	1410.00	95	A1	13.53	15.00	7.50	101.475	
								172.125
95	96	95	A1	13.53	15.00	7.50	101.475	
1410.00	1425.00	96	A1	14.31	15.00	7.50	107.325	
								208.800
96	97	96	A1	14.31	15.00	7.50	107.325	
1425.00	1440.00	97	A1	13.68	15.00	7.50	102.600	
								209.925
97	98	97	A1	13.68	15.00	7.50	102.600	
1440.00	1455.00	98	A1	13.33	15.00	7.50	99.975	
								202.575
98	98bis	98	A1	13.33	2.30	1.15	15.329	
1455.00	1457.30	98bis	A1	14.17	2.30	1.15	16.295	
								31.624
98bis	99	98bis	A1	14.17	12.70	6.35	89.980	
1457.30	1470.00	99	A1	10.42	12.70	6.35	66.167	
								156.147
99	99bis	99	A1	10.42	5.25	2.63	27.405	
1470.00	1475.25	99bis	A1	10.63	5.25	2.63	27.957	
								55.362
99bis	99b	99bis	A1	10.63	3.72	1.86	19.772	
1475.25	1478.97	99b	A1	10.42	3.72	1.86	19.381	
								39.153

Il Direttore dei Lavori	L'Impresa	TOTALE ARTICOLO	2339.611

	COMPUTO DEI VOLUMI		Foglio n. 39

STERRO

DALLA SEZ. DA PROG.	ALLA SEZ. A PROG.	SEZIONE	FIGURA	AREA	DISTANZA SEZIONI m	DISTANZA DI CALCOLO m	VOLUME PARZIALE mc	VOLUME TOTALE mc
76bis	77	76bis	B1	45.98	8.20	4.10	188.518	
1131.80	1140.00	77	B1	62.18	8.20	4.10	254.938	
								443.456
77	78	77	B1	62.18	15.00	7.50	466.350	
1140.00	1155.00	78	B1	47.08	15.00	7.50	353.100	
								819.450
78	79	78	B1	47.08	15.00	7.50	353.100	
1155.00	1170.00	79	B1	47.12	15.00	7.50	353.400	
								706.500
79	80	79	B1	47.12	15.00	7.50	353.400	
1170.00	1185.00	80	B1	41.86	15.00	7.50	313.950	
								667.350
80	81	80	B1	41.86	15.00	7.50	313.950	
1185.00	1200.00	81	B1	44.87	15.00	7.50	336.525	
								650.475
81	82	81	B1	44.87	15.00	7.50	336.525	
1200.00	1215.00	82	B1	43.45	15.00	7.50	325.875	
								662.400
82	83	82	B1	43.45	15.00	7.50	325.875	
1215.00	1230.00	83	B1	40.32	15.00	7.50	302.400	
								628.275
83	84	83	B1	40.32	15.00	7.50	302.400	
1230.00	1245.00	84	B1	38.56	15.00	7.50	289.200	
								591.600
84	85	84	B1	38.56	15.00	7.50	289.200	
1245.00	1260.00	85	B1	36.82	15.00	7.50	276.150	
		85	B2	0.10	15.00	7.50	0.750	
								566.100
85	86	85	B1	36.82	15.00	7.50	276.150	
1260.00	1275.00	85	B2	0.10	15.00	7.50	0.750	
		86	B1	48.74	15.00	7.50	365.550	
								642.450
86	87	86	B1	48.74	15.00	7.50	365.550	
1275.00	1290.00	87	B1	49.25	15.00	7.50	369.375	
								734.925
87	88	87	B1	49.25	15.00	7.50	369.375	
1290.00	1305.00	88	B1	63.50	15.00	7.50	476.250	
								845.625
88	89	88	B1	63.50	15.00	7.50	476.250	
1305.00	1320.00	89	B1	76.10	15.00	7.50	570.750	
								1047.000
89	90	89	B1	76.10	15.00	7.50	570.750	
1320.00	1335.00	90	B1	82.44	15.00	7.50	618.300	
								1189.050
90	91	90	B1	82.44	15.00	7.50	618.300	
1335.00	1350.00	91	B1	62.35	15.00	7.50	467.625	
								1085.925
91	92	91	B1	62.35	15.00	7.50	467.625	
1350.00	1365.00	92	B1	64.88	15.00	7.50	486.600	
								954.225
92	93	92	B1	64.88	15.00	7.50	486.600	
1365.00	1380.00	93	B1	57.70	15.00	7.50	432.750	
								919.350
93	94	93	B1	57.70	15.00	7.50	432.750	
1380.00	1395.00	94	B1	47.12	15.00	7.50	353.400	
								786.150
94	95	94	B1	47.12	15.00	7.50	353.400	
1395.00	1410.00	95	B1	40.28	15.00	7.50	302.100	
								655.500
95	96	95	B1	40.28	15.00	7.50	302.100	
1410.00	1425.00	96	B1	43.49	15.00	7.50	326.175	
								628.275
96	97	96	B1	43.49	15.00	7.50	326.175	
1425.00	1440.00	97	B1	39.55	15.00	7.50	296.625	
								622.800
97	98	97	B1	39.55	15.00	7.50	296.625	
1440.00	1455.00	98	B1	42.79	15.00	7.50	320.925	
								617.550
98	98bis	98	B1	42.79	2.30	1.15	49.208	
1455.00	1457.30	98bis	B1	42.39	2.30	1.15	48.748	
								97.956
98bis	99	98bis	B1	42.39	12.70	6.35	269.176	
1457.30	1470.00	99	B1	29.81	12.70	6.35	189.293	
								458.469
99	99bis	99	B1	29.81	5.25	2.63	78.400	
1470.00	1475.25	99bis	B1	13.84	5.25	2.63	36.399	
								114.799
99bis	99b	99bis	B1	13.84	3.72	1.86	25.742	
1475.25	1478.97	99b	B1	29.81	3.72	1.86	55.447	
								81.189

Il Direttore dei Lavori	L'Impresa	TOTALE ARTICOLO	17216.844

	COMPUTO DEI VOLUMI		Foglio n. 40

RIPORTO

DALLA SEZ. DA PROG.	ALLA SEZ. A PROG.	SEZIONE	FIGURA	AREA	DISTANZA SEZIONI m	DISTANZA DI CALCOLO m	VOLUME PARZIALE mc	VOLUME TOTALE mc
76bis	77	76bis	RI1	4.21	8.20	4.10	17.261	
1131.80	1140.00	76bis	RI2	34.60	8.20	4.10	141.860	
		77	RI1	3.52	8.20	4.10	14.432	
		77	RI2	34.39	8.20	4.10	140.999	
								314.552
77	78	77	RI1	3.52	15.00	7.50	26.400	
1140.00	1155.00	77	RI2	34.39	15.00	7.50	257.925	
		78	RI1	3.75	15.00	7.50	28.125	
		78	RI2	36.04	15.00	7.50	270.300	
								582.750
78	79	78	RI1	3.75	15.00	7.50	28.125	
1155.00	1170.00	78	RI2	36.04	15.00	7.50	270.300	
		79	RI1	4.42	15.00	7.50	33.150	
		79	RI2	37.91	15.00	7.50	284.325	
								615.900
79	80	79	RI1	4.42	15.00	7.50	33.150	
1170.00	1185.00	79	RI2	37.91	15.00	7.50	284.325	
		80	RI1	3.32	15.00	7.50	24.900	
		80	RI2	29.69	15.00	7.50	222.675	
								565.050
80	81	80	RI1	3.32	15.00	7.50	24.900	
1185.00	1200.00	80	RI2	29.69	15.00	7.50	222.675	
		81	RI1	3.75	15.00	7.50	28.125	
								275.700
81	82	81	RI1	3.75	15.00	7.50	28.125	
1200.00	1215.00	82	RI1	4.32	15.00	7.50	32.400	
		82	RI2	14.78	15.00	7.50	110.850	
								171.375
82	83	82	RI1	4.32	15.00	7.50	32.400	
1215.00	1230.00	82	RI2	14.78	15.00	7.50	110.850	
		83	RI1	4.50	15.00	7.50	33.750	
								177.000
83	84	83	RI1	4.50	15.00	7.50	33.750	
1230.00	1245.00	84	RI1	4.07	15.00	7.50	30.525	
								64.275
84	85	84	RI1	4.07	15.00	7.50	30.525	
1245.00	1260.00	85	RI1	4.45	15.00	7.50	33.375	
								63.900
85	86	85	RI1	4.45	15.00	7.50	33.375	
1260.00	1275.00	86	RI1	4.94	15.00	7.50	37.050	
								70.425
86	87	86	RI1	4.94	15.00	7.50	37.050	
1275.00	1290.00	87	RI1	4.50	15.00	7.50	33.750	
								70.800
87	88	87	RI1	4.50	15.00	7.50	33.750	
1290.00	1305.00	88	RI1	4.69	15.00	7.50	35.175	
								68.925
88	89	88	RI1	4.69	15.00	7.50	35.175	
1305.00	1320.00	89	RI1	4.58	15.00	7.50	34.350	
		89	RI2	1.28	15.00	7.50	9.600	
								79.125
89	90	89	RI1	4.58	15.00	7.50	34.350	
1320.00	1335.00	89	RI2	1.28	15.00	7.50	9.600	
		90	RI1	5.00	15.00	7.50	37.500	
		90	RI2	1.28	15.00	7.50	9.600	
								91.050
90	91	90	RI1	5.00	15.00	7.50	37.500	
1335.00	1350.00	90	RI2	1.28	15.00	7.50	9.600	
		91	RI1	4.77	15.00	7.50	35.775	
		91	RI2	1.28	15.00	7.50	9.600	
								92.475
91	92	91	RI1	4.77	15.00	7.50	35.775	
1350.00	1365.00	91	RI2	1.28	15.00	7.50	9.600	
		92	RI1	4.16	15.00	7.50	31.200	
		92	RI2	1.28	15.00	7.50	9.600	
								86.175
92	93	92	RI1	4.16	15.00	7.50	31.200	
1365.00	1380.00	92	RI2	1.28	15.00	7.50	9.600	
		93	RI1	4.12	15.00	7.50	30.900	
		93	RI2	1.28	15.00	7.50	9.600	
								81.300
93	94	93	RI1	4.12	15.00	7.50	30.900	
1380.00	1395.00	93	RI2	1.28	15.00	7.50	9.600	
		94	RI1	3.12	15.00	7.50	23.400	
		94	RI2	1.28	15.00	7.50	9.600	
								73.500
94	95	94	RI1	3.12	15.00	7.50	23.400	
1395.00	1410.00	94	RI2	1.28	15.00	7.50	9.600	
		95	RI1	2.74	15.00	7.50	20.550	
								53.550
95	96	95	RI1	2.74	15.00	7.50	20.550	
1410.00	1425.00	96	RI1	2.57	15.00	7.50	19.275	
								39.825
96	97	96	RI1	2.57	15.00	7.50	19.275	
1425.00	1440.00	97	RI1	2.71	15.00	7.50	20.325	
								39.600
97	98	97	RI1	2.71	15.00	7.50	20.325	
1440.00	1455.00	98	RI1	2.78	15.00	7.50	20.850	
		98	RI2	1.28	15.00	7.50	9.600	
								50.775
98	98bis	98	RI1	2.78	2.30	1.15	3.197	
1455.00	1457.30	98	RI2	1.28	2.30	1.15	1.472	
		98bis	RI1	2.75	2.30	1.15	3.162	
		98bis	RI2	1.27	2.30	1.15	1.460	
								9.291
98bis	99	98bis	RI1	2.75	12.70	6.35	17.462	
1457.30	1470.00	98bis	RI2	1.27	12.70	6.35	8.064	
		99	RI1	2.29	12.70	6.35	14.541	
		99	RI2	1.28	12.70	6.35	8.128	
								48.195
99	99bis	99	RI1	2.29	5.25	2.63	6.023	
1470.00	1475.25	99	RI2	1.28	5.25	2.63	3.366	
								9.389
99bis	99b	99b	RI1	2.29	3.72	1.86	4.259	
1475.25	1478.97	99b	RI2	1.28	3.72	1.86	2.381	
								6.640

Il Direttore dei Lavori	L'Impresa	TOTALE ARTICOLO	3801.542

	COMPUTO DI SUPERFICI		Foglio n. 41

USURA

DALLA SEZ. DA PROG.	ALLA SEZ. A PROG.	SEZIONE	FIGURA	LUNGHEZZA	DISTANZA SEZIONI ml	DISTANZA DI CALCOLO ml	AREA PARZIALE mq	AREA TOTALE mq
76bis	77	76bis	a2	9.75	8.20	4.10	39.97	
1131.80	1140.00	76bis	a1	13.49	8.20	4.10	55.31	
		77	a2	9.75	8.20	4.10	39.97	
		77	a1	13.34	8.20	4.10	54.69	
								189.94
77	78	77	a2	9.75	15.00	7.50	73.13	
1140.00	1155.00	77	a1	13.34	15.00	7.50	100.05	
		78	a2	9.75	15.00	7.50	73.13	
		78	a1	12.53	15.00	7.50	93.97	
								340.28
78	79	78	a2	9.75	15.00	7.50	73.13	
1155.00	1170.00	78	a1	12.53	15.00	7.50	93.97	
		79	a2	9.75	15.00	7.50	73.13	
		79	a1	11.40	15.00	7.50	85.50	
								325.73
79	80	79	a2	9.75	15.00	7.50	73.13	
1170.00	1185.00	79	a1	11.40	15.00	7.50	85.50	
		80	a2	9.75	15.00	7.50	73.13	
		80	a1	10.31	15.00	7.50	77.33	
								309.09
80	81	80	a2	9.75	15.00	7.50	73.13	
1185.00	1200.00	80	a1	10.31	15.00	7.50	77.33	
		81	a2	9.75	15.00	7.50	73.13	
		81	a1	9.78	15.00	7.50	73.35	
								296.94
81	82	81	a2	9.75	15.00	7.50	73.13	
1200.00	1215.00	81	a1	9.78	15.00	7.50	73.35	
		82	a2	9.75	15.00	7.50	73.13	
		82	a1	9.75	15.00	7.50	73.13	
								292.74
82	83	82	a2	9.75	15.00	7.50	73.13	
1215.00	1230.00	82	a1	9.75	15.00	7.50	73.13	
		83	a2	9.75	15.00	7.50	73.13	
		83	a1	9.75	15.00	7.50	73.13	
								292.52
83	84	83	a2	9.75	15.00	7.50	73.13	
1230.00	1245.00	83	a1	9.75	15.00	7.50	73.13	
		84	a2	9.75	15.00	7.50	73.13	
		84	a1	9.75	15.00	7.50	73.13	
								292.52
84	85	84	a2	9.75	15.00	7.50	73.13	
1245.00	1260.00	84	a1	9.75	15.00	7.50	73.13	
		85	a2	9.75	15.00	7.50	73.13	
		85	a1	9.75	15.00	7.50	73.13	
								292.52
85	86	85	a2	9.75	15.00	7.50	73.13	
1260.00	1275.00	85	a1	9.75	15.00	7.50	73.13	
		86	a2	9.75	15.00	7.50	73.13	
		86	a1	9.75	15.00	7.50	73.13	
								292.52
86	87	86	a2	9.75	15.00	7.50	73.13	
1275.00	1290.00	86	a1	9.75	15.00	7.50	73.13	
		87	a2	9.75	15.00	7.50	73.13	
		87	a1	9.75	15.00	7.50	73.13	
								292.52
87	88	87	a2	9.75	15.00	7.50	73.13	
1290.00	1305.00	87	a1	9.75	15.00	7.50	73.13	
		88	a2	9.75	15.00	7.50	73.13	
		88	a1	9.75	15.00	7.50	73.13	
								292.52
88	89	88	a2	9.75	15.00	7.50	73.13	
1305.00	1320.00	88	a1	9.75	15.00	7.50	73.13	
		89	a2	9.75	15.00	7.50	73.13	
		89	a1	9.75	15.00	7.50	73.13	
								292.52
89	90	89	a2	9.75	15.00	7.50	73.13	
1320.00	1335.00	89	a1	9.75	15.00	7.50	73.13	
		90	a2	9.75	15.00	7.50	73.13	
		90	a1	9.75	15.00	7.50	73.13	
								292.52
90	91	90	a2	9.75	15.00	7.50	73.13	
1335.00	1350.00	90	a1	9.75	15.00	7.50	73.13	
		91	a2	9.75	15.00	7.50	73.13	
		91	a1	9.75	15.00	7.50	73.13	
								292.52
91	92	91	a2	9.75	15.00	7.50	73.13	
1350.00	1365.00	91	a1	9.75	15.00	7.50	73.13	
		92	a2	9.75	15.00	7.50	73.13	
		92	a1	9.75	15.00	7.50	73.13	
								292.52
92	93	92	a2	9.75	15.00	7.50	73.13	
1365.00	1380.00	92	a1	9.75	15.00	7.50	73.13	
		93	a2	9.75	15.00	7.50	73.13	
		93	a1	9.75	15.00	7.50	73.13	
								292.52
93	94	93	a2	9.75	15.00	7.50	73.13	
1380.00	1395.00	93	a1	9.75	15.00	7.50	73.13	
		94	a2	9.75	15.00	7.50	73.13	
		94	a1	9.75	15.00	7.50	73.13	
								292.52
94	95	94	a2	9.75	15.00	7.50	73.13	
1395.00	1410.00	94	a1	9.75	15.00	7.50	73.13	
		95	a2	9.75	15.00	7.50	73.13	
		95	a1	9.75	15.00	7.50	73.13	
								292.52
95	96	95	a2	9.75	15.00	7.50	73.13	
1410.00	1425.00	95	a1	9.75	15.00	7.50	73.13	
		96	a2	9.75	15.00	7.50	73.13	
		96	a1	9.75	15.00	7.50	73.13	
								292.52
96	97	96	a2	9.75	15.00	7.50	73.13	
1425.00	1440.00	96	a1	9.75	15.00	7.50	73.13	
		97	a2	9.75	15.00	7.50	73.13	
		97	a1	9.75	15.00	7.50	73.13	
								292.52
97	98	97	a2	9.75	15.00	7.50	73.13	
							73.13	6142.52

	COMPUTO DI SUPERFICI		Foglio n. 42

USURA

DALLA SEZ. DA PROG.	ALLA SEZ. A PROG.	SEZIONE	FIGURA	LUNGHEZZA	DISTANZA SEZIONI ml	DISTANZA DI CALCOLO ml	AREA PARZIALE mq	AREA TOTALE mq
						A RIPORTARE mq	73.13	6142.52
1440.00	1455.00	97	a1	9.75	15.00	7.50	73.13	
		98	a2	9.75	15.00	7.50	73.13	
		98	a1	9.75	15.00	7.50	73.13	
								292.52
98	98bis	98	a2	9.75	2.30	1.15	11.21	
1455.00	1457.30	98	a1	9.75	2.30	1.15	11.21	
		98bis	a2	9.75	2.30	1.15	11.21	
		98bis	a1	9.75	2.30	1.15	11.21	
								44.84
98bis	99	98bis	a2	9.75	12.70	6.35	61.91	
1457.30	1470.00	98bis	a1	9.75	12.70	6.35	61.91	
		99	a1	9.75	12.70	6.35	61.91	
								185.73
99	99bis	99	a1	9.75	5.25	2.63	25.64	
								25.64
99bis	99b	99b	a1	9.75	3.72	1.86	18.14	
								18.14

Il Direttore dei Lavori	L'Impresa	TOTALE ARTICOLO	6709.39

SCATOLARE

	COMPUTO DEI VOLUMI		Foglio n. 43

Volume dalla sezione 76bis alla sezione 99b

ARTICOLO			VOLUME
A	RILEVATO	mc	2339.611
B	STERRO	mc	17216.844
RI	RIPORTO	mc	3801.542
a	USURA	mq	6709.39

ZONA VI01

CALCOLO DELLE AREE	Foglio n. 1

RILEVATO

N. SEZIONE PROG.	FIG.	ELEMENTI DI CALCOLO	AREA ELEMENTARE mq	AREA FIGURA mq	NOTE
99b	A1	(17.82-14.03)x(3.00+3.00)/2	11.37		
1478.97		(20.66-17.82)x(1.10+3.00)/2	5.82		
		(22.66-20.66)x(1.10+1.10)/2	2.20		
		(24.09-22.66)x(0.15+1.10)/2	0.89		
		(21.85-24.09)x(0.15+0.15)/2	-0.34		
		(19.50-21.85)x(0.50+0.50)/2	-1.18		
		(16.85-19.50)x(1.00+1.00)/2	-2.65		
		(15.95-16.85)x(1.50+1.50)/2	-1.35		
		(15.02-15.95)x(2.00+2.00)/2	-1.86		
		(14.03-15.02)x(2.50+2.50)/2	-2.48		
				10.42	
100	A1	(15.09-18.31)x(2.89+2.89)/2	-9.31		
1485.00		(15.84-15.09)x(2.39+2.39)/2	1.79		
		(16.49-15.84)x(1.89+1.89)/2	1.23		
		(17.47-16.49)x(1.39+1.39)/2	1.36		
		(21.73-17.47)x(0.89+0.89)/2	3.79		
		(22.98-21.73)x(0.39+0.39)/2	0.49		
		(24.62-22.98)x(0.02+0.02)/2	0.03		
		(23.15-24.62)x(1.00+0.02)/2	-0.75		
		(21.15-23.15)x(1.00+1.00)/2	-2.00		
		(18.31-21.15)x(2.89+1.00)/2	-5.52		
				8.89	
101	A1	(14.85-17.90)x(2.89+2.89)/2	-8.81		
1500.00		(15.86-14.85)x(2.39+2.39)/2	2.41		
		(16.77-15.86)x(1.89+1.89)/2	1.72		
		(17.73-16.77)x(1.39+1.39)/2	1.33		
		(21.30-17.73)x(0.89+0.89)/2	3.18		
		(23.17-21.30)x(0.39+0.39)/2	0.73		
		(24.97-23.17)x(0.18+0.18)/2	0.32		
		(23.43-24.97)x(1.21+0.18)/2	-1.07		
		(20.43-23.43)x(1.21+1.21)/2	-3.63		
		(17.90-20.43)x(2.89+1.21)/2	-5.19		
				9.01	
102	A1	(19.42-8.07)x(2.86+2.86)/2	32.46		
1515.00		(22.03-19.42)x(1.12+2.86)/2	5.19		
		(24.03-22.03)x(1.12+1.12)/2	2.24		
		(25.53-24.03)x(0.12+1.12)/2	0.93		
		(23.09-25.53)x(0.12+0.12)/2	-0.29		
		(21.54-23.09)x(0.36+0.36)/2	-0.56		
		(15.69-21.54)x(0.86+0.86)/2	-5.03		
		(10.43-15.69)x(1.36+1.36)/2	-7.15		
		(9.12-10.43)x(1.86+1.86)/2	-2.44		
		(8.07-9.12)x(2.36+2.36)/2	-2.48		
				22.87	
103	A1	(20.05-14.53)x(2.89+2.89)/2	15.95		
1530.00		(22.48-20.05)x(1.27+2.89)/2	5.05		
		(24.48-22.48)x(1.27+1.27)/2	2.54		
		(25.98-24.48)x(0.27+1.27)/2	1.16		
		(24.29-25.98)x(0.27+0.27)/2	-0.46		
		(21.46-24.29)x(0.39+0.39)/2	-1.10		
		(17.86-21.46)x(0.89+0.89)/2	-3.20		
		(16.48-17.86)x(1.39+1.39)/2	-1.92		
		(15.56-16.48)x(1.89+1.89)/2	-1.74		
		(14.53-15.56)x(2.39+2.39)/2	-2.46		
				13.82	
104	A1	(15.35-20.62)x(2.83+2.83)/2	-14.91		
1545.00		(16.36-15.35)x(2.33+2.33)/2	2.35		
		(17.44-16.36)x(1.83+1.83)/2	1.98		
		(19.10-17.44)x(1.33+1.33)/2	2.21		
		(22.67-19.10)x(0.83+0.83)/2	2.96		
		(25.99-22.67)x(0.33+0.33)/2	1.10		
		(26.40-25.99)x(0.31+0.31)/2	0.13		
		(24.88-26.40)x(1.32+0.31)/2	-1.24		
		(22.88-24.88)x(1.32+1.32)/2	-2.64		
		(20.62-22.88)x(2.83+1.32)/2	-4.69		
				12.75	
105	A1	(17.26-21.24)x(2.75+2.75)/2	-10.94		
1560.00		(18.32-17.26)x(2.25+2.25)/2	2.38		
		(19.33-18.32)x(1.75+1.75)/2	1.77		
		(20.55-19.33)x(1.25+1.25)/2	1.53		
		(25.46-20.55)x(0.75+0.75)/2	3.68		
		(26.96-25.46)x(0.25+0.25)/2	0.38		
		(25.46-26.96)x(1.27+0.27)/2	-1.16		
		(23.46-25.46)x(1.27+1.27)/2	-2.54		
		(21.24-23.46)x(2.75+1.27)/2	-4.46		
				9.36	
106	A1	(21.56-17.21)x(2.74+2.74)/2	11.92		
1575.00		(23.76-21.56)x(1.28+2.74)/2	4.42		
		(25.76-23.76)x(1.28+1.28)/2	2.56		
		(27.26-25.76)x(0.28+1.28)/2	1.17		
		(26.47-27.26)x(0.28+0.28)/2	-0.22		
		(25.09-26.47)x(0.74+0.74)/2	-1.02		
		(19.47-25.09)x(1.24+1.24)/2	-6.97		
		(18.22-19.47)x(1.74+1.74)/2	-2.17		
		(17.21-18.22)x(2.24+2.24)/2	-2.26		
				7.43	
107	A1	(21.58-17.56)x(2.65+2.65)/2	10.65		
1590.00		(23.83-21.58)x(1.15+2.65)/2	4.27		
		(19.70-23.83)x(1.15+1.15)/2	-4.75		
		(18.69-19.70)x(1.65+1.65)/2	-1.67		
		(17.56-18.69)x(2.15+2.15)/2	-2.43		
				6.07	
107	A2	(24.23-23.92)x(0.88+1.09)/2	0.31		
1590.00		(26.23-24.23)x(0.88+0.88)/2	1.76		
		(27.73-26.23)x(-0.12+0.88)/2	0.57		
		(27.72-27.73)x(-0.12+-0.12)/2	0.00		
		(26.85-27.72)x(-0.12+-0.12)/2	0.10		
		(25.41-26.85)x(0.15+0.15)/2	-0.22		
		(23.92-25.41)x(0.65+0.65)/2	-0.97		
				1.55	
108	A1	(22.05-17.96)x(2.73+2.73)/2	11.17		
1605.00		(23.84-22.05)x(1.54+2.73)/2	3.82		
		(23.56-23.84)x(1.52+1.54)/2	-0.43		
		(23.55-23.56)x(1.52+1.52)/2	-0.02		
		(23.54-23.55)x(1.52+1.52)/2	-0.02		
		(22.47-23.54)x(1.40+1.52)/2	-1.56		
		A RIPORTARE mq	12.96		

ZONA VI01

		CALCOLO DELLE AREE		Foglio n. 2
RILEVATO				
N. SEZIONE PROG.	FIG.	ELEMENTI DI CALCOLO	AREA ELEMENTARE mq	AREA FIGURA mq	NOTE
		RIPORTO mq	12.96		
		(21.87-22.47)x(1.40+1.40)/2	-0.84		
		(21.38-21.87)x(1.38+1.40)/2	-0.68		
		(20.05-21.38)x(1.38+1.38)/2	-1.84		
		(19.00-20.05)x(1.73+1.73)/2	-1.82		
		(17.96-19.00)x(2.23+2.23)/2	-2.32		
				5.46	
108	A2	(26.67-26.05)x(0.99+0.99)/2	0.61		
1605.00		(28.17-26.67)x(-0.01+0.99)/2	0.73		
		(27.00-28.17)x(-0.01+-0.01)/2	0.01		
		(26.07-27.00)x(0.48+0.48)/2	-0.45		
		(26.05-26.07)x(0.99+0.98)/2	-0.02		
				0.88	
109	A1	(22.82-17.96)x(2.71+2.71)/2	13.17		
1620.00		(25.21-22.82)x(1.12+2.71)/2	4.58		
		(27.21-25.21)x(1.12+1.12)/2	2.24		
		(28.71-27.21)x(0.12+1.12)/2	0.93		
		(28.31-28.71)x(0.12+0.12)/2	-0.05		
		(26.31-28.31)x(0.21+0.21)/2	-0.42		
		(24.68-26.31)x(0.71+0.71)/2	-1.16		
		(21.88-24.68)x(1.21+1.21)/2	-3.39		
		(19.16-21.88)x(1.71+1.71)/2	-4.65		
		(17.96-19.16)x(2.21+2.21)/2	-2.65		
				8.60	
110	A1	(23.35-17.79)x(2.82+2.82)/2	15.68		
1635.00		(26.25-23.35)x(0.88+2.82)/2	5.36		
		(28.25-26.25)x(0.88+0.88)/2	1.76		
		(29.63-28.25)x(-0.04+0.88)/2	0.58		
		(27.78-29.63)x(-0.04+-0.04)/2	0.07		
		(25.86-27.78)x(0.32+0.32)/2	-0.61		
		(24.21-25.86)x(0.82+0.82)/2	-1.35		
		(20.99-24.21)x(1.32+1.32)/2	-4.25		
		(19.17-20.99)x(1.82+1.82)/2	-3.31		
		(17.79-19.17)x(2.32+2.32)/2	-3.20		
				10.73	
111	A1	(8.09-5.39)x(3.28+3.28)/2	8.86		
1650.00		(7.56-8.09)x(3.06+3.28)/2	-1.68		
		(6.59-7.56)x(3.07+3.06)/2	-2.97		
		(6.47-6.59)x(3.06+3.07)/2	-0.37		
		(6.26-6.47)x(3.08+3.06)/2	-0.64		
		(5.39-6.26)x(3.28+3.08)/2	-2.77		
				0.43	
111	A2	(22.30-17.73)x(3.28+3.28)/2	14.99		
1650.00		(25.30-22.30)x(1.28+3.28)/2	6.84		
		(21.36-25.30)x(1.28+1.28)/2	-5.04		
		(20.26-21.36)x(1.78+1.78)/2	-1.96		
		(19.22-20.26)x(2.28+2.28)/2	-2.37		
		(17.73-19.22)x(2.78+2.78)/2	-4.14		
				8.32	
111	A3	(27.82-26.18)x(0.93+0.93)/2	1.53		
1650.00		(29.32-27.82)x(-0.07+0.93)/2	0.65		
		(28.11-29.32)x(-0.07+-0.07)/2	0.08		
		(27.12-28.11)x(0.28+0.28)/2	-0.28		
		(26.18-27.12)x(0.78+0.78)/2	-0.73		
				1.25	
112	A1	(4.41-22.83)x(3.39+3.39)/2	-62.44		
1665.00		(15.76-4.41)x(2.89+2.89)/2	32.80		
		(19.19-15.76)x(2.39+2.39)/2	8.20		
		(21.06-19.19)x(1.89+1.89)/2	3.53		
		(24.81-21.06)x(1.39+1.39)/2	5.21		
		(26.09-24.81)x(0.89+0.89)/2	1.14		
		(27.33-26.09)x(0.39+0.39)/2	0.48		
		(29.89-27.33)x(-0.11+-0.11)/2	-0.28		
		(30.10-29.89)x(-0.12+-0.12)/2	-0.03		
		(28.60-30.10)x(0.88+-0.12)/2	-0.57		
		(26.60-28.60)x(0.88+0.88)/2	-1.76		
		(22.83-26.60)x(3.39+0.88)/2	-8.05		
				21.77	
113	A1	(24.89-5.76)x(3.47+3.47)/2	66.38		
1680.00		(27.40-24.89)x(1.80+3.47)/2	6.61		
		(29.40-27.40)x(1.80+1.80)/2	3.60		
		(30.88-29.40)x(0.81+1.80)/2	1.93		
		(30.23-30.88)x(0.81+0.81)/2	-0.53		
		(26.54-30.23)x(0.97+0.97)/2	-3.58		
		(19.99-26.54)x(1.47+1.47)/2	-9.63		
		(12.64-19.99)x(1.97+1.97)/2	-14.48		
		(10.30-12.64)x(2.47+2.47)/2	-5.78		
		(5.76-10.30)x(2.97+2.97)/2	-13.48		
				31.04	
114	A1	(11.15-10.07)x(3.30+3.30)/2	3.56		
1695.00		(10.96-11.15)x(2.05+3.30)/2	-0.51		
		(10.79-10.96)x(0.00+2.05)/2	-0.17		
		(10.40-10.41)x(0.18+0.00)/2	-0.00		
		(10.07-10.40)x(3.30+0.18)/2	-0.57		
				2.31	
114	A2	(24.54-22.48)x(3.30+3.30)/2	6.80		
1695.00		(26.67-24.54)x(1.89+3.30)/2	5.53		
		(24.04-26.67)x(1.89+1.89)/2	-4.97		
		(23.20-24.04)x(2.30+2.30)/2	-1.93		
		(22.48-23.20)x(2.80+2.80)/2	-2.02		
				3.41	
114	A3	(29.74-28.68)x(1.17+1.17)/2	1.24		
1695.00		(31.12-29.74)x(0.25+1.17)/2	0.98		
		(29.43-31.12)x(0.25+0.25)/2	-0.42		
		(28.68-29.43)x(0.68+0.68)/2	-0.51		
				1.29	
115	A1	(24.07-21.23)x(2.95+2.95)/2	8.38		
1710.00		(25.87-24.07)x(1.75+2.95)/2	4.23		
		(23.64-25.87)x(1.75+1.75)/2	-3.90		
		(22.43-23.64)x(1.95+1.95)/2	-2.36		
		(21.23-22.43)x(2.45+2.45)/2	-2.94		
				3.41	
115	A2	(28.07-28.26)x(1.49+1.49)/2	-0.28		
1710.00		(28.99-28.07)x(0.99+0.99)/2	0.91		
		(29.76-28.99)x(0.49+0.49)/2	0.38		
		A RIPORTARE mq	1.01		

ZONA VI01

CALCOLO DELLE AREE	Foglio n. 3

RILEVATO

N. SEZIONE PROG.	FIG.	ELEMENTI DI CALCOLO	AREA ELEMENTARE mq	AREA FIGURA mq	NOTE
		RIPORTO mq	1.01		
		(28.26-29.76)x(1.49+0.49)/2	-1.48		
				0.47	
Rot1	A1	(23.77-10.69)x(3.58+3.58)/2	46.83		
1717.75		(26.77-23.77)x(1.58+3.58)/2	7.74		
		(28.77-26.77)x(1.58+1.58)/2	3.16		
		(30.27-28.77)x(0.58+1.58)/2	1.62		
		(28.79-30.27)x(0.58+0.58)/2	-0.86		
		(26.40-28.79)x(1.05+1.05)/2	-2.51		
		(18.80-26.40)x(1.55+1.55)/2	-11.78		
		(15.92-18.80)x(2.05+2.05)/2	-5.90		
		(14.75-15.92)x(2.55+2.55)/2	-2.98		
		(12.86-14.75)x(3.05+3.05)/2	-5.76		
		(12.71-12.86)x(2.86+3.55)/2	-0.48		
		(12.32-12.71)x(1.53+2.86)/2	-0.86		
		(11.89-12.32)x(0.56+1.53)/2	-0.45		
		(11.58-11.89)x(0.65+0.56)/2	-0.19		
		(11.45-11.58)x(0.40+0.65)/2	-0.07		
		(10.69-11.45)x(3.58+0.40)/2	-1.51		
				26.00	
Asse bin	A1	(11.27-11.04)x(3.59+3.59)/2	0.83		
1719.16		(11.04-11.27)x(3.59+3.33)/2	-0.80		
				0.03	
Asse bin	A2	(24.17-11.28)x(3.59+3.59)/2	46.28		
1719.16		(27.36-24.17)x(1.46+3.59)/2	8.05		
		(29.36-27.36)x(1.46+1.46)/2	2.92		
		(30.86-29.36)x(0.46+1.46)/2	1.44		
		(30.38-30.86)x(0.46+0.46)/2	-0.22		
		(28.66-30.38)x(0.58+0.58)/2	-1.00		
		(24.77-28.66)x(1.08+1.08)/2	-4.20		
		(17.59-24.77)x(1.58+1.58)/2	-11.34		
		(15.96-17.59)x(2.08+2.08)/2	-3.39		
		(14.86-15.96)x(2.58+2.58)/2	-2.84		
		(12.36-14.86)x(3.08+3.08)/2	-7.70		
		(12.13-12.36)x(1.07+3.58)/2	-0.53		
		(11.94-12.13)x(-0.00+1.07)/2	-0.10		
		(11.87-11.94)x(0.76+-0.00)/2	-0.03		
		(11.58-11.87)x(0.80+0.76)/2	-0.23		
		(11.28-11.58)x(3.59+0.80)/2	-0.66		
				26.45	
Rot2	A1	(28.89-27.72)x(1.49+1.49)/2	1.74		
1720.57		(30.39-28.89)x(0.49+1.49)/2	1.48		
		(29.09-30.39)x(0.49+0.49)/2	-0.64		
		(27.72-29.09)x(0.99+0.99)/2	-1.36		
				1.22	
Rot2	A1	(11.94-23.76)x(3.57+3.57)/2	-42.20		
1720.57		(15.13-11.94)x(3.05+3.05)/2	9.73		
		(16.05-15.13)x(2.55+2.55)/2	2.35		
		(17.68-16.05)x(2.05+2.05)/2	3.34		
		(26.71-17.68)x(1.61+1.61)/2	14.54		
		(23.76-26.71)x(3.57+1.61)/2	-7.64		
				19.88	
116	A1	(12.12-11.38)x(3.73+3.73)/2	2.76		
1725.00		(11.57-12.12)x(2.71+3.73)/2	-1.77		
		(11.38-11.57)x(3.73+2.71)/2	-0.61		
				0.38	
116	A2	(12.45-12.19)x(3.73+3.73)/2	0.97		
1725.00		(12.39-12.45)x(3.26+3.73)/2	-0.21		
		(12.33-12.39)x(3.25+3.26)/2	-0.20		
		(12.19-12.33)x(3.73+3.25)/2	-0.49		
				0.07	
116	A3	(23.63-14.43)x(3.73+3.73)/2	34.32		
1725.00		(27.05-23.63)x(1.45+3.73)/2	8.86		
		(24.42-27.05)x(1.45+1.45)/2	-3.81		
		(17.84-24.42)x(1.73+1.73)/2	-11.38		
		(16.53-17.84)x(2.23+2.23)/2	-2.92		
		(15.58-16.53)x(2.73+2.73)/2	-2.59		
		(14.43-15.58)x(3.23+3.23)/2	-3.71		
				18.77	
116	A4	(29.62-28.87)x(1.07+1.07)/2	0.80		
1725.00		(31.12-29.62)x(0.07+1.07)/2	0.86		
		(29.92-31.12)x(0.07+0.07)/2	-0.08		
		(28.87-29.92)x(0.57+0.57)/2	-0.60		
				0.98	
117	A1	(24.76-14.66)x(3.49+3.49)/2	35.25		
1740.00		(27.56-24.76)x(1.63+3.49)/2	7.17		
		(21.80-27.56)x(1.63+1.63)/2	-9.39		
		(17.91-21.80)x(1.99+1.99)/2	-7.74		
		(16.54-17.91)x(2.49+2.49)/2	-3.41		
		(14.66-16.54)x(2.99+2.99)/2	-5.62		
				16.26	
117	A2	(30.17-28.60)x(1.22+1.22)/2	1.92		
1740.00		(31.67-30.17)x(0.22+1.22)/2	1.08		
		(29.63-31.67)x(0.22+0.22)/2	-0.45		
		(28.62-29.63)x(0.71+0.71)/2	-0.72		
		(28.60-28.62)x(1.22+1.21)/2	-0.02		
				1.81	
118	A1	(25.02-6.16)x(3.64+3.64)/2	68.65		
1755.00		(28.67-25.02)x(1.21+3.64)/2	8.85		
		(25.57-28.67)x(1.21+1.21)/2	-3.75		
		(22.79-25.57)x(1.64+1.64)/2	-4.56		
		(17.89-22.79)x(2.14+2.14)/2	-10.49		
		(12.44-17.89)x(2.64+2.64)/2	-14.39		
		(6.16-12.44)x(3.14+3.14)/2	-19.72		
				24.59	
118	A2	(30.81-29.22)x(1.12+1.12)/2	1.78		
1755.00		(32.31-30.81)x(0.12+1.12)/2	0.93		
		(32.28-32.31)x(0.12+0.12)/2	-0.00		
		(30.93-32.28)x(0.12+0.12)/2	-0.16		
		(29.22-30.93)x(0.61+0.61)/2	-1.04		
				1.51	
119	A1	(24.54-9.53)x(4.16+4.16)/2	62.44		
1770.00		(28.68-24.54)x(1.40+4.16)/2	11.51		
		(25.30-28.68)x(1.40+1.40)/2	-4.73		
		(20.15-25.30)x(1.66+1.66)/2	-8.55		
		A RIPORTARE mq	60.67		

ZONA VI01

		CALCOLO DELLE AREE		Foglio n. 4
RILEVATO				
N. SEZIONE PROG.	FIG.	ELEMENTI DI CALCOLO	AREA ELEMENTARE mq	AREA FIGURA mq	NOTE
		RIPORTO mq	60.67		
		(17.44-20.15)x(2.16+2.16)/2	-5.85		
		(14.97-17.44)x(2.66+2.66)/2	-6.57		
		(11.68-14.97)x(3.16+3.16)/2	-10.40		
		(9.53-11.68)x(3.66+3.66)/2	-7.87		
				29.98	
119	A2	(30.88-29.47)x(1.27+1.27)/2	1.79		
1770.00		(32.38-30.88)x(0.27+1.27)/2	1.16		
		(30.89-32.38)x(0.27+0.27)/2	-0.40		
		(29.47-30.89)x(0.77+0.77)/2	-1.09		
				1.46	
120	A1	(8.31-5.80)x(4.01+4.01)/2	10.07		
1785.00		(8.01-8.31)x(4.01+4.01)/2	-1.20		
		(7.46-8.01)x(3.99+4.01)/2	-2.20		
		(6.48-7.46)x(4.00+3.99)/2	-3.92		
		(6.38-6.48)x(4.00+4.00)/2	-0.40		
		(6.32-6.38)x(4.00+4.00)/2	-0.24		
		(5.80-6.32)x(4.01+4.00)/2	-2.08		
				0.03	
120	A2	(25.25-12.89)x(4.01+4.01)/2	49.56		
1785.00		(28.92-25.25)x(1.57+4.01)/2	10.24		
		(21.22-28.92)x(1.57+1.57)/2	-12.09		
		(17.49-21.22)x(2.06+2.06)/2	-7.68		
		(15.30-17.49)x(2.56+2.56)/2	-5.61		
		(14.10-15.30)x(3.06+3.06)/2	-3.67		
		(12.89-14.10)x(3.56+3.56)/2	-4.31		
				26.44	
120	A3	(31.48-30.50)x(1.19+1.19)/2	1.17		
1785.00		(32.98-31.48)x(0.19+1.19)/2	1.03		
		(31.72-32.98)x(0.19+0.19)/2	-0.24		
		(30.50-31.72)x(0.69+0.69)/2	-0.84		
				1.12	
121	A1	(25.53-10.23)x(3.90+3.90)/2	59.67		
1800.00		(28.85-25.53)x(1.68+3.90)/2	9.26		
		(27.14-28.85)x(1.68+1.68)/2	-2.87		
		(24.79-27.14)x(1.90+1.90)/2	-4.47		
		(15.57-24.79)x(2.40+2.40)/2	-22.13		
		(14.28-15.57)x(2.90+2.90)/2	-3.74		
		(10.23-14.28)x(3.40+3.40)/2	-13.77		
				21.95	
121	A2	(31.82-31.07)x(1.03+1.03)/2	0.77		
1800.00		(33.32-31.82)x(0.03+1.03)/2	0.80		
		(32.04-33.32)x(0.03+0.03)/2	-0.04		
		(31.07-32.04)x(0.53+0.53)/2	-0.51		
				1.02	
122	A1	(25.36-9.24)x(3.87+3.87)/2	62.38		
1815.00		(28.78-25.36)x(1.59+3.87)/2	9.34		
		(27.85-28.78)x(1.59+1.59)/2	-1.48		
		(26.31-27.85)x(1.87+1.87)/2	-2.88		
		(16.98-26.31)x(2.37+2.37)/2	-22.11		
		(16.39-16.98)x(2.31+2.37)/2	-1.38		
		(15.84-16.39)x(2.27+2.31)/2	-1.26		
		(15.30-15.84)x(2.23+2.27)/2	-1.21		
		(15.05-15.30)x(2.23+2.23)/2	-0.56		
		(14.33-15.05)x(2.20+2.23)/2	-1.59		
		(14.24-14.33)x(2.20+2.20)/2	-0.20		
		(14.21-14.24)x(2.20+2.20)/2	-0.07		
		(14.15-14.21)x(2.20+2.20)/2	-0.13		
		(13.12-14.15)x(2.20+2.20)/2	-2.27		
		(12.46-13.12)x(2.28+2.20)/2	-1.48		
		(12.04-12.46)x(2.31+2.28)/2	-0.96		
		(11.93-12.04)x(2.37+2.31)/2	-0.26		
		(11.15-11.93)x(2.37+2.37)/2	-1.85		
		(10.39-11.15)x(2.87+2.87)/2	-2.18		
		(9.24-10.39)x(3.37+3.37)/2	-3.88		
				25.97	
123	A1	(26.06-2.34)x(3.87+3.87)/2	91.80		
1830.00		(29.61-26.06)x(1.51+3.87)/2	9.55		
		(27.81-29.61)x(1.51+1.51)/2	-2.72		
		(24.66-27.81)x(1.87+1.87)/2	-5.89		
		(16.71-24.66)x(2.37+2.37)/2	-18.84		
		(16.67-16.71)x(2.37+2.37)/2	-0.09		
		(16.54-16.67)x(2.36+2.37)/2	-0.31		
		(16.49-16.54)x(2.35+2.36)/2	-0.12		
		(15.74-16.49)x(2.28+2.35)/2	-1.74		
		(15.40-15.74)x(2.25+2.28)/2	-0.77		
		(14.94-15.40)x(2.20+2.25)/2	-1.02		
		(14.31-14.94)x(2.15+2.20)/2	-1.37		
		(14.13-14.31)x(2.15+2.15)/2	-0.39		
		(13.62-14.13)x(2.24+2.15)/2	-1.12		
		(13.23-13.62)x(2.31+2.24)/2	-0.89		
		(13.09-13.23)x(2.37+2.31)/2	-0.33		
		(11.72-13.09)x(2.37+2.37)/2	-3.25		
		(6.50-11.72)x(2.87+2.87)/2	-14.98		
		(2.34-6.50)x(3.37+3.37)/2	-14.02		
				33.50	
123	A2	(32.41-31.16)x(0.97+0.97)/2	1.21		
1830.00		(33.91-32.41)x(-0.03+0.97)/2	0.70		
		(32.39-33.91)x(-0.03+-0.03)/2	0.05		
		(31.16-32.39)x(0.47+0.47)/2	-0.58		
				1.38	
124	A1	(26.26-0.00)x(4.17+4.17)/2	109.50		
1845.00		(29.91-26.26)x(1.74+4.17)/2	10.79		
		(27.20-29.91)x(1.74+1.74)/2	-4.72		
		(25.85-27.20)x(2.17+2.17)/2	-2.93		
		(18.89-25.85)x(2.67+2.67)/2	-18.58		
		(16.73-18.89)x(2.17+2.17)/2	-4.69		
		(16.58-16.73)x(2.13+2.17)/2	-0.32		
		(15.95-16.58)x(2.05+2.13)/2	-1.32		
		(15.49-15.95)x(2.00+2.05)/2	-0.93		
		(14.81-15.49)x(1.96+2.00)/2	-1.35		
		(14.40-14.81)x(1.97+1.96)/2	-0.81		
		(13.54-14.40)x(1.98+1.97)/2	-1.70		
		(13.31-13.54)x(1.98+1.98)/2	-0.46		
		(12.91-13.31)x(2.08+1.98)/2	-0.81		
		A RIPORTARE mq	81.67		

ZONA VI01

		CALCOLO DELLE AREE		Foglio n. 5	
RILEVATO					
N. SEZIONE PROG.	FIG.	ELEMENTI DI CALCOLO	AREA ELEMENTARE mq	AREA FIGURA mq	NOTE
		RIPORTO mq	81.67		
		(12.53-12.91)x(2.17+2.08)/2	-0.81		
		(9.76-12.53)x(2.17+2.17)/2	-6.01		
		(5.96-9.76)x(2.67+2.67)/2	-10.15		
		(3.28-5.96)x(3.17+3.17)/2	-8.50		
		(0.00-3.28)x(3.67+3.67)/2	-12.04		
				44.16	
124	A2	(32.50-31.57)x(1.34+1.34)/2	1.25		
1845.00		(34.00-32.50)x(0.34+1.34)/2	1.26		
		(32.59-34.00)x(0.34+0.34)/2	-0.48		
		(31.57-32.59)x(0.84+0.84)/2	-0.86		
				1.17	
125	A1	(26.65-0.31)x(4.25+4.25)/2	111.94		
1860.00		(30.75-26.65)x(1.52+4.25)/2	11.83		
		(30.04-30.75)x(1.52+1.52)/2	-1.08		
		(28.90-30.04)x(1.75+1.75)/2	-2.00		
		(27.59-28.90)x(2.25+2.25)/2	-2.95		
		(21.13-27.59)x(2.75+2.75)/2	-17.77		
		(18.70-21.13)x(2.25+2.25)/2	-5.47		
		(18.24-18.70)x(2.15+2.25)/2	-1.01		
		(17.74-18.24)x(2.05+2.15)/2	-1.05		
		(17.46-17.74)x(2.01+2.05)/2	-0.57		
		(16.65-17.46)x(1.90+2.01)/2	-1.58		
		(15.76-16.65)x(1.81+1.90)/2	-1.65		
		(15.56-15.76)x(1.78+1.81)/2	-0.36		
		(15.21-15.56)x(1.78+1.78)/2	-0.62		
		(14.47-15.21)x(1.78+1.78)/2	-1.32		
		(14.06-14.47)x(1.81+1.78)/2	-0.74		
		(13.38-14.06)x(1.85+1.81)/2	-1.24		
		(12.36-13.38)x(1.88+1.85)/2	-1.90		
		(12.29-12.36)x(1.88+1.88)/2	-0.13		
		(12.18-12.29)x(1.90+1.88)/2	-0.21		
		(11.21-12.18)x(2.00+1.90)/2	-1.89		
		(10.66-11.21)x(2.04+2.00)/2	-1.11		
		(10.12-10.66)x(2.10+2.04)/2	-1.12		
		(9.86-10.12)x(2.12+2.10)/2	-0.55		
		(9.14-9.86)x(2.16+2.12)/2	-1.54		
		(9.06-9.14)x(2.16+2.16)/2	-0.17		
		(9.03-9.06)x(2.16+2.16)/2	-0.06		
		(8.96-9.03)x(2.17+2.16)/2	-0.15		
		(7.94-8.96)x(2.23+2.17)/2	-2.24		
		(7.30-7.94)x(2.25+2.23)/2	-1.43		
		(3.49-7.30)x(2.25+2.25)/2	-8.57		
		(2.60-3.49)x(2.75+2.75)/2	-2.45		
		(1.77-2.60)x(3.25+3.25)/2	-2.70		
		(0.31-1.77)x(3.75+3.75)/2	-5.47		
				52.67	
125	A2	(33.50-32.58)x(1.02+1.02)/2	0.94		
1860.00		(35.00-33.50)x(0.02+1.02)/2	0.78		
		(33.79-35.00)x(0.02+0.02)/2	-0.02		
		(32.58-33.79)x(0.52+0.52)/2	-0.63		
				1.07	
126	A1	(26.97--0.73)x(4.18+4.18)/2	115.79		
1875.00		(31.37-26.97)x(1.25+4.18)/2	11.95		
		(29.70-31.37)x(1.25+1.25)/2	-2.09		
		(28.98-29.70)x(1.68+1.68)/2	-1.21		
		(28.22-28.98)x(2.18+2.18)/2	-1.66		
		(27.08-28.22)x(2.68+2.68)/2	-3.06		
		(26.08-27.08)x(3.18+3.18)/2	-3.18		
		(22.39-26.08)x(2.68+2.68)/2	-9.89		
		(19.70-22.39)x(2.18+2.18)/2	-5.86		
		(19.68-19.70)x(2.17+2.18)/2	-0.04		
		(18.89-19.68)x(2.09+2.17)/2	-1.68		
		(17.98-18.89)x(1.96+2.09)/2	-1.84		
		(17.80-17.98)x(1.94+1.96)/2	-0.35		
		(17.49-17.80)x(1.89+1.94)/2	-0.59		
		(16.71-17.49)x(1.79+1.89)/2	-1.44		
		(16.27-16.71)x(1.78+1.79)/2	-0.79		
		(15.62-16.27)x(1.78+1.78)/2	-1.16		
		(14.57-15.62)x(1.83+1.78)/2	-1.90		
		(14.53-14.57)x(1.83+1.83)/2	-0.07		
		(14.51-14.53)x(1.83+1.83)/2	-0.04		
		(14.46-14.51)x(1.83+1.83)/2	-0.09		
		(13.71-14.46)x(1.85+1.83)/2	-1.38		
		(13.44-13.71)x(1.87+1.85)/2	-0.50		
		(12.87-13.44)x(1.98+1.87)/2	-1.10		
		(12.35-12.87)x(2.05+1.98)/2	-1.05		
		(11.44-12.35)x(2.16+2.05)/2	-1.92		
		(11.28-11.44)x(2.18+2.16)/2	-0.35		
		(4.38-11.28)x(2.18+2.18)/2	-15.04		
		(2.76-4.38)x(2.68+2.68)/2	-4.34		
		(1.22-2.76)x(3.18+3.18)/2	-4.90		
		(-0.73-1.22)x(3.68+3.68)/2	-7.18		
				53.04	
126	A2	(33.50-32.39)x(1.16+1.16)/2	1.29		
1875.00		(35.00-33.50)x(0.16+1.16)/2	0.99		
		(33.92-35.00)x(0.16+0.16)/2	-0.17		
		(32.39-33.92)x(0.66+0.66)/2	-1.01		
				1.10	
127	A1	(33.50-32.05)x(1.12+1.12)/2	1.62		
1890.00		(35.00-33.50)x(0.12+1.12)/2	0.93		
		(33.48-35.00)x(0.12+0.12)/2	-0.18		
		(32.05-33.48)x(0.62+0.62)/2	-0.89		
				1.48	
127	A2	(1.45-27.06)x(4.09+4.09)/2	-104.74		
1890.00		(5.46-1.45)x(3.59+3.59)/2	14.40		
		(7.22-5.46)x(3.09+3.09)/2	5.44		
		(8.73-7.22)x(2.59+2.59)/2	3.91		
		(11.11-8.73)x(2.09+2.09)/2	4.97		
		(19.04-11.11)x(1.59+1.59)/2	12.61		
		(20.39-19.04)x(1.79+1.79)/2	2.42		
		(21.40-20.39)x(2.29+2.29)/2	2.31		
		(22.64-21.40)x(2.79+2.79)/2	3.46		
		(24.93-22.64)x(3.29+3.29)/2	7.53		
		(26.79-24.93)x(2.79+2.79)/2	5.19		
		A RIPORTARE mq	-42.50		

ZONA VI01

		CALCOLO DELLE AREE		Foglio n. 6
RILEVATO				

N. SEZIONE PROG.	FIG.	ELEMENTI DI CALCOLO	AREA ELEMENTARE mq	AREA FIGURA mq	NOTE
		RIPORTO mq	-42.50		
		(28.52-26.79)x(2.29+2.29)/2	3.96		
		(30.02-28.52)x(1.79+1.79)/2	2.69		
		(31.25-30.02)x(1.29+1.29)/2	1.59		
		(27.06-31.25)x(4.09+1.29)/2	-11.27		
				45.53	
128	A1	(28.53-3.69)x(4.02+4.02)/2	99.86		
1905.00		(32.99-28.53)x(1.04+4.02)/2	11.28		
		(34.99-32.99)x(1.04+1.04)/2	2.08		
		(36.53-34.99)x(0.02+1.04)/2	0.82		
		(36.41-36.53)x(0.03+0.02)/2	-0.00		
		(35.07-36.41)x(0.03+0.03)/2	-0.04		
		(33.24-35.07)x(0.52+0.52)/2	-0.95		
		(31.41-33.24)x(1.02+1.02)/2	-1.87		
		(29.67-31.41)x(1.52+1.52)/2	-2.64		
		(18.93-29.67)x(2.02+2.02)/2	-21.69		
		(17.87-18.93)x(1.90+2.02)/2	-2.08		
		(17.26-17.87)x(1.83+1.90)/2	-1.14		
		(16.78-17.26)x(1.79+1.83)/2	-0.87		
		(15.94-16.78)x(1.76+1.79)/2	-1.49		
		(15.69-15.94)x(1.75+1.76)/2	-0.44		
		(15.55-15.69)x(1.74+1.75)/2	-0.24		
		(14.60-15.55)x(1.76+1.74)/2	-1.66		
		(14.16-14.60)x(1.75+1.76)/2	-0.77		
		(13.51-14.16)x(1.76+1.75)/2	-1.14		
		(12.93-13.51)x(1.77+1.76)/2	-1.02		
		(12.42-12.93)x(1.79+1.77)/2	-0.91		
		(12.13-12.42)x(1.83+1.79)/2	-0.52		
		(11.33-12.13)x(1.93+1.83)/2	-1.50		
		(10.60-11.33)x(2.02+1.93)/2	-1.44		
		(8.01-10.60)x(2.02+2.02)/2	-5.23		
		(6.99-8.01)x(2.52+2.52)/2	-2.57		
		(5.78-6.99)x(3.02+3.02)/2	-3.65		
		(3.69-5.78)x(3.52+3.52)/2	-7.36		
				52.82	
129	A1	(3.71-29.65)x(4.22+4.22)/2	-109.47		
1920.00		(5.08-3.71)x(3.72+3.72)/2	5.10		
		(5.68-5.08)x(3.22+3.22)/2	1.93		
		(6.43-5.68)x(2.72+2.72)/2	2.04		
		(7.73-6.43)x(2.22+2.22)/2	2.89		
		(8.73-7.73)x(1.72+1.72)/2	1.72		
		(17.13-8.73)x(1.22+1.22)/2	10.25		
		(21.58-17.13)x(1.72+1.72)/2	7.65		
		(30.29-21.58)x(2.22+2.22)/2	19.34		
		(31.25-30.29)x(1.72+1.72)/2	1.65		
		(32.60-31.25)x(1.22+1.22)/2	1.65		
		(35.32-32.60)x(0.72+0.72)/2	1.96		
		(37.58-35.32)x(0.26+0.26)/2	0.59		
		(36.20-37.58)x(1.18+0.26)/2	-0.99		
		(34.20-36.20)x(1.18+1.18)/2	-2.36		
		(29.65-34.20)x(4.22+1.18)/2	-12.29		
				68.34	
130	A1	(30.46-3.55)x(4.13+4.13)/2	111.14		
1935.00		(35.12-30.46)x(1.02+4.13)/2	12.00		
		(37.12-35.12)x(1.02+1.02)/2	2.04		
		(38.62-37.12)x(0.02+1.02)/2	0.78		
		(38.15-38.62)x(0.02+0.02)/2	-0.01		
		(36.29-38.15)x(0.13+0.13)/2	-0.24		
		(33.52-36.29)x(0.63+0.63)/2	-1.75		
		(31.45-33.52)x(1.13+1.13)/2	-2.34		
		(29.95-31.45)x(1.63+1.63)/2	-2.44		
		(21.39-29.95)x(2.13+2.13)/2	-18.23		
		(16.06-21.39)x(2.13+2.13)/2	-11.35		
		(15.72-16.06)x(2.08+2.13)/2	-0.72		
		(14.73-15.72)x(1.83+2.08)/2	-1.94		
		(14.63-14.73)x(1.80+1.83)/2	-0.18		
		(14.59-14.63)x(1.79+1.80)/2	-0.07		
		(14.46-14.59)x(1.79+1.79)/2	-0.23		
		(13.79-14.46)x(1.75+1.79)/2	-1.19		
		(13.54-13.79)x(1.79+1.75)/2	-0.44		
		(13.02-13.54)x(1.89+1.79)/2	-0.96		
		(12.45-13.02)x(1.99+1.89)/2	-1.11		
		(11.46-12.45)x(2.13+1.99)/2	-2.04		
		(11.44-11.46)x(2.13+2.13)/2	-0.04		
		(6.32-11.44)x(2.13+2.13)/2	-10.91		
		(5.49-6.32)x(2.63+2.63)/2	-2.18		
		(4.92-5.49)x(3.13+3.13)/2	-1.78		
		(3.55-4.92)x(3.63+3.63)/2	-4.97		
				60.84	

Il Direttore dei Lavori	L'Impresa	

ZONA VI01

	CALCOLO DELLE AREE		Foglio n. 7

STERRO

N. SEZIONE PROG.	FIG.	ELEMENTI DI CALCOLO	AREA ELEMENTARE mq	AREA FIGURA mq	NOTE
99b 1478.97	B1	(-13.01--13.72)x(3.35+3.31)/2	2.36		
		(-12.74--13.01)x(3.35+3.35)/2	0.90		
		(-12.28--12.74)x(3.37+3.35)/2	1.55		
		(-11.65--12.28)x(3.39+3.37)/2	2.13		
		(-11.02--11.65)x(3.39+3.39)/2	2.14		
		(-10.55--11.02)x(3.41+3.39)/2	1.60		
		(-9.53--10.55)x(3.40+3.41)/2	3.47		
		(-9.46--9.53)x(3.40+3.40)/2	0.24		
		(-9.33--9.46)x(3.42+3.40)/2	0.44		
		(-8.37--9.33)x(3.56+3.42)/2	3.35		
		(-7.80--8.37)x(3.59+3.56)/2	2.04		
		(-7.27--7.80)x(3.64+3.59)/2	1.92		
		(-6.38--7.27)x(3.63+3.64)/2	3.24		
		(-6.18--6.38)x(3.62+3.63)/2	0.73		
		(-6.06--6.18)x(3.57+3.62)/2	0.43		
		(-5.09--6.06)x(3.16+3.57)/2	3.26		
		(-4.83--5.09)x(3.08+3.16)/2	0.81		
		(-4.68--4.83)x(2.96+3.08)/2	0.45		
		(-4.65--4.68)x(2.96+2.96)/2	0.09		
		(-4.62--4.65)x(3.03+2.96)/2	0.09		
		(-4.60--4.62)x(3.00+3.03)/2	0.06		
		(-4.59--4.60)x(3.01+3.00)/2	0.03		
		(-4.58--4.59)x(2.99+3.01)/2	0.03		
		(-4.57--4.58)x(2.96+2.99)/2	0.03		
		(-4.56--4.57)x(2.98+2.96)/2	0.03		
		(-4.55--4.56)x(3.01+2.98)/2	0.03		
		(-4.54--4.55)x(3.18+3.09)/2	0.03		
		(-4.52--4.54)x(2.95+3.02)/2	0.06		
		(-4.51--4.52)x(2.91+2.95)/2	0.03		
		(-4.49--4.51)x(2.92+2.91)/2	0.06		
		(-4.37--4.49)x(2.91+2.92)/2	0.35		
		(-3.99--4.37)x(2.90+2.91)/2	1.10		
		(-3.43--3.99)x(2.90+2.90)/2	1.62		
		(-2.90--3.43)x(2.91+2.90)/2	1.54		
		(-2.59--2.90)x(2.91+2.91)/2	0.90		
		(-1.81--2.59)x(2.93+2.91)/2	2.28		
		(-0.85--1.81)x(2.92+2.93)/2	2.81		
		(-0.71--0.85)x(2.92+2.92)/2	0.41		
		(-0.65--0.71)x(2.92+2.92)/2	0.18		
		(-0.48--0.65)x(2.93+2.92)/2	0.50		
		(0.15--0.48)x(2.95+2.93)/2	1.85		
		(0.38-0.15)x(2.95+2.95)/2	0.68		
		(0.61-0.38)x(2.96+2.95)/2	0.68		
		(0.65-0.61)x(2.96+2.96)/2	0.12		
		(0.67-0.65)x(2.96+2.96)/2	0.06		
		(0.74-0.67)x(2.99+2.96)/2	0.21		
		(0.77-0.74)x(2.97+2.99)/2	0.09		
		(0.79-0.77)x(2.97+2.97)/2	0.06		
		(0.80-0.79)x(3.02+3.20)/2	0.03		
		(0.83-0.80)x(2.99+3.02)/2	0.09		
		(0.84-0.83)x(3.00+2.99)/2	0.03		
		(0.94-0.84)x(3.02+3.00)/2	0.30		
		(1.17-0.94)x(3.05+3.02)/2	0.70		
		(1.47-1.17)x(3.09+3.05)/2	0.92		
		(2.47-1.47)x(3.11+3.09)/2	3.10		
		(2.54-2.47)x(3.12+3.11)/2	0.22		
		(2.55-2.54)x(3.12+3.12)/2	0.03		
		(2.56-2.55)x(3.12+3.12)/2	0.03		
		(2.75-2.56)x(3.43+3.12)/2	0.62		
		(2.76-2.75)x(3.50+3.53)/2	0.04		
		(2.77-2.76)x(3.44+3.50)/2	0.03		
		(2.78-2.77)x(3.50+3.26)/2	0.03		
		(2.79-2.78)x(3.49+3.50)/2	0.03		
		(2.80-2.79)x(3.49+3.41)/2	0.03		
		(2.81-2.80)x(3.77+3.79)/2	0.04		
		(2.82-2.81)x(3.47+3.55)/2	0.04		
		(2.83-2.82)x(3.60+3.52)/2	0.04		
		(2.84-2.83)x(3.60+3.63)/2	0.04		
		(2.85-2.84)x(3.43+3.60)/2	0.04		
		(2.86-2.85)x(3.34+3.47)/2	0.03		
		(2.88-2.86)x(3.47+3.34)/2	0.07		
		(2.89-2.88)x(3.52+3.47)/2	0.03		
		(2.91-2.89)x(3.17+3.52)/2	0.07		
		(2.93-2.91)x(3.38+3.17)/2	0.07		
		(2.94-2.93)x(3.43+3.38)/2	0.03		
		(2.97-2.94)x(3.56+3.43)/2	0.10		
		(3.00-2.97)x(3.24+3.56)/2	0.10		
		(3.10-3.00)x(3.29+3.24)/2	0.33		
		(3.11-3.10)x(3.30+3.47)/2	0.03		
		(3.12-3.11)x(3.19+3.29)/2	0.03		
		(3.13-3.12)x(3.38+3.19)/2	0.03		
		(3.21-3.13)x(3.47+3.38)/2	0.27		
		(3.48-3.21)x(3.30+3.47)/2	0.91		
		(3.66-3.48)x(3.28+3.30)/2	0.59		
		(4.36-3.66)x(3.28+3.28)/2	2.30		
		(4.75-4.36)x(3.34+3.28)/2	1.29		
		(5.43-4.75)x(3.49+3.34)/2	2.32		
		(5.85-5.43)x(3.62+3.49)/2	1.49		
		(6.10-5.85)x(3.73+3.62)/2	0.92		
		(6.94-6.10)x(4.13+3.73)/2	3.30		
		(7.83-6.94)x(4.37+4.13)/2	3.78		
		(8.03-7.83)x(4.42+4.37)/2	0.88		
		(8.38-8.03)x(4.42+4.42)/2	1.55		
		(9.13-8.38)x(4.40+4.42)/2	3.31		
		(9.72-9.13)x(4.32+4.40)/2	2.57		
		(10.22-9.72)x(4.26+4.32)/2	2.15		
		(11.31-10.22)x(4.07+4.26)/2	4.54		
		(11.33-11.31)x(4.07+4.07)/2	0.08		
		(12.41-11.33)x(3.77+4.07)/2	4.23		
		(13.04-12.41)x(3.46+3.77)/2	2.28		
		(13.50-13.04)x(3.26+3.46)/2	1.55		
		(14.03-13.50)x(3.00+3.26)/2	1.66		
		(2.50-14.03)x(3.00+3.00)/2	-34.59		
		(0.70-2.50)x(1.80+3.00)/2	-4.32		
		(-11.45-0.70)x(1.80+1.80)/2	-21.87		
		(-13.72--11.45)x(3.31+1.80)/2	-5.80		
		A RIPORTARE mq	29.81		

ZONA VI01

		CALCOLO DELLE AREE		Foglio n. 8

STERRO

N. SEZIONE PROG.	FIG.	ELEMENTI DI CALCOLO	AREA ELEMENTARE mq	AREA FIGURA mq	NOTE
		RIPORTO mq	29.81		
				29.81	
100	B1	(0.67-0.31)x(2.90+2.89)/2	1.04		
1485.00		(0.98-0.67)x(2.91+2.90)/2	0.90		
		(1.10-0.98)x(2.93+2.91)/2	0.35		
		(1.24-1.10)x(2.96+2.93)/2	0.41		
		(1.26-1.24)x(2.98+2.96)/2	0.06		
		(1.30-1.26)x(2.99+2.98)/2	0.12		
		(1.32-1.30)x(3.02+3.04)/2	0.06		
		(1.33-1.32)x(2.98+3.02)/2	0.03		
		(1.35-1.33)x(2.95+2.98)/2	0.06		
		(1.38-1.35)x(2.94+2.95)/2	0.09		
		(1.43-1.38)x(2.94+2.94)/2	0.15		
		(1.44-1.43)x(2.94+2.94)/2	0.03		
		(1.47-1.44)x(2.96+2.94)/2	0.09		
		(1.67-1.47)x(3.01+2.96)/2	0.60		
		(2.49-1.67)x(3.24+3.01)/2	2.56		
		(2.82-2.49)x(3.26+3.24)/2	1.07		
		(3.05-2.82)x(3.33+3.26)/2	0.76		
		(3.15-3.05)x(3.27+3.33)/2	0.33		
		(3.16-3.15)x(3.41+3.14)/2	0.03		
		(3.17-3.16)x(3.40+3.41)/2	0.03		
		(3.18-3.17)x(3.40+3.31)/2	0.03		
		(3.19-3.18)x(3.67+3.73)/2	0.04		
		(3.20-3.19)x(3.63+3.59)/2	0.04		
		(3.21-3.20)x(3.53+3.63)/2	0.04		
		(3.22-3.21)x(3.48+3.56)/2	0.04		
		(3.23-3.22)x(3.58+3.56)/2	0.04		
		(3.24-3.23)x(3.38+3.58)/2	0.03		
		(3.26-3.24)x(3.51+3.38)/2	0.07		
		(3.28-3.26)x(3.67+3.51)/2	0.07		
		(3.30-3.28)x(3.39+3.67)/2	0.07		
		(3.34-3.30)x(3.40+3.39)/2	0.14		
		(3.36-3.34)x(3.39+3.40)/2	0.07		
		(3.48-3.36)x(3.45+3.39)/2	0.41		
		(3.49-3.48)x(3.20+3.56)/2	0.03		
		(3.50-3.49)x(3.14+3.20)/2	0.03		
		(3.51-3.50)x(3.52+3.30)/2	0.03		
		(3.52-3.51)x(3.39+3.52)/2	0.03		
		(3.53-3.52)x(3.32+3.39)/2	0.03		
		(3.70-3.53)x(3.40+3.32)/2	0.57		
		(3.75-3.70)x(3.41+3.40)/2	0.17		
		(3.87-3.75)x(3.44+3.41)/2	0.41		
		(4.64-3.87)x(3.56+3.44)/2	2.69		
		(4.67-4.64)x(3.57+3.56)/2	0.11		
		(4.68-4.67)x(3.57+3.57)/2	0.04		
		(4.70-4.68)x(3.57+3.57)/2	0.07		
		(5.77-4.70)x(3.68+3.57)/2	3.88		
		(6.43-5.77)x(3.77+3.68)/2	2.46		
		(6.86-6.43)x(3.84+3.77)/2	1.64		
		(7.60-6.86)x(4.04+3.84)/2	2.92		
		(7.95-7.60)x(4.12+4.04)/2	1.43		
		(8.16-7.95)x(4.16+4.12)/2	0.87		
		(9.05-8.16)x(4.39+4.16)/2	3.80		
		(9.89-9.05)x(4.42+4.39)/2	3.70		
		(10.14-9.89)x(4.44+4.42)/2	1.11		
		(10.57-10.14)x(4.33+4.44)/2	1.89		
		(11.23-10.57)x(4.18+4.33)/2	2.81		
		(11.62-11.23)x(4.08+4.18)/2	1.61		
		(12.32-11.62)x(3.88+4.08)/2	2.79		
		(13.34-12.32)x(3.61+3.88)/2	3.82		
		(13.42-13.34)x(3.59+3.61)/2	0.29		
		(13.54-13.42)x(3.55+3.59)/2	0.43		
		(14.51-13.54)x(3.23+3.55)/2	3.29		
		(15.05-14.51)x(2.92+3.23)/2	1.66		
		(15.09-15.05)x(2.89+2.92)/2	0.12		
		(0.31-15.09)x(2.89+2.89)/2	-42.71		
				11.88	
100	B2	(21.06-20.97)x(1.12+1.12)/2	0.10		
1485.00		(21.42-21.06)x(1.00+1.12)/2	0.38		
		(21.15-21.42)x(1.00+1.00)/2	-0.27		
		(20.97-21.15)x(1.12+1.00)/2	-0.19		
				0.02	
101	B1	(1.70-1.67)x(2.90+2.89)/2	0.09		
1500.00		(1.78-1.70)x(2.97+2.90)/2	0.23		
		(1.80-1.78)x(3.02+2.97)/2	0.06		
		(1.82-1.80)x(3.04+3.02)/2	0.06		
		(1.83-1.82)x(3.04+3.04)/2	0.03		
		(1.84-1.83)x(3.05+3.06)/2	0.03		
		(1.86-1.84)x(2.98+3.05)/2	0.06		
		(1.95-1.86)x(2.94+2.96)/2	0.27		
		(2.20-1.95)x(2.97+2.94)/2	0.74		
		(2.44-2.20)x(3.05+2.97)/2	0.72		
		(3.34-2.44)x(3.25+3.05)/2	2.83		
		(3.54-3.34)x(3.29+3.25)/2	0.65		
		(3.57-3.54)x(3.30+3.29)/2	0.10		
		(3.58-3.57)x(3.30+3.30)/2	0.03		
		(3.59-3.58)x(3.32+3.22)/2	0.03		
		(3.60-3.59)x(3.66+3.65)/2	0.04		
		(3.61-3.60)x(3.65+3.64)/2	0.04		
		(3.62-3.61)x(3.68+3.63)/2	0.04		
		(3.63-3.62)x(3.60+3.68)/2	0.04		
		(3.64-3.63)x(3.60+3.60)/2	0.04		
		(3.66-3.64)x(3.37+3.60)/2	0.07		
		(3.70-3.66)x(3.50+3.37)/2	0.14		
		(3.77-3.70)x(3.39+3.50)/2	0.24		
		(3.81-3.77)x(3.50+3.39)/2	0.14		
		(3.84-3.81)x(3.37+3.50)/2	0.10		
		(3.85-3.84)x(3.60+3.37)/2	0.03		
		(3.86-3.85)x(3.60+3.60)/2	0.04		
		(3.89-3.86)x(3.61+3.60)/2	0.11		
		(3.90-3.89)x(3.11+3.64)/2	0.03		
		(3.91-3.90)x(3.20+3.14)/2	0.03		
		(3.92-3.91)x(3.17+3.12)/2	0.03		
		(3.95-3.92)x(3.31+3.17)/2	0.10		
		A RIPORTARE mq	7.19		

		CALCOLO DELLE AREE		Foglio n. 9
STERRO				
N. SEZIONE PROG.	FIG.	ELEMENTI DI CALCOLO	AREA ELEMENTARE mq	AREA FIGURA mq	NOTE
		RIPORTO mq	7.19		
		(3.96-3.95)x(3.38+3.31)/2	0.03		
		(4.05-3.96)x(3.38+3.38)/2	0.30		
		(4.42-4.05)x(3.47+3.38)/2	1.27		
		(4.63-4.42)x(3.52+3.47)/2	0.73		
		(5.07-4.63)x(3.63+3.52)/2	1.57		
		(5.72-5.07)x(3.80+3.63)/2	2.41		
		(6.79-5.72)x(4.15+3.80)/2	4.25		
		(6.81-6.79)x(4.16+4.15)/2	0.08		
		(6.85-6.81)x(4.17+4.16)/2	0.17		
		(7.90-6.85)x(4.37+4.17)/2	4.48		
		(8.51-7.90)x(4.45+4.37)/2	2.69		
		(8.99-8.51)x(4.51+4.45)/2	2.15		
		(9.22-8.99)x(4.54+4.51)/2	1.04		
		(9.84-9.22)x(4.52+4.54)/2	2.81		
		(10.02-9.84)x(4.52+4.52)/2	0.81		
		(10.09-10.02)x(4.50+4.52)/2	0.32		
		(10.23-10.09)x(4.48+4.50)/2	0.63		
		(11.18-10.23)x(4.29+4.48)/2	4.17		
		(11.95-11.18)x(4.12+4.29)/2	3.24		
		(12.27-11.95)x(4.06+4.12)/2	1.31		
		(12.82-12.27)x(3.83+4.06)/2	2.17		
		(13.36-12.82)x(3.58+3.83)/2	2.00		
		(13.67-13.36)x(3.44+3.58)/2	1.09		
		(14.45-13.67)x(3.08+3.44)/2	2.54		
		(14.85-14.45)x(2.89+3.08)/2	1.19		
		(1.67-14.85)x(2.89+2.89)/2	-38.09		
				12.55	
102 1515.00	B1	(1.34-0.32)x(2.89+2.86)/2	2.93		
		(1.81-1.34)x(2.94+2.89)/2	1.37		
		(2.07-1.81)x(2.96+2.94)/2	0.77		
		(2.18-2.07)x(2.97+2.96)/2	0.33		
		(2.33-2.18)x(2.99+2.97)/2	0.45		
		(2.39-2.33)x(2.99+2.99)/2	0.18		
		(2.44-2.39)x(2.98+2.99)/2	0.15		
		(2.45-2.44)x(3.03+2.98)/2	0.03		
		(2.46-2.45)x(3.04+3.06)/2	0.03		
		(2.49-2.46)x(3.05+3.04)/2	0.09		
		(2.52-2.49)x(3.00+3.05)/2	0.09		
		(2.54-2.52)x(3.01+3.00)/2	0.06		
		(2.61-2.54)x(3.02+3.01)/2	0.21		
		(3.12-2.61)x(3.05+3.02)/2	1.55		
		(3.52-3.12)x(3.06+3.05)/2	1.22		
		(3.80-3.52)x(3.01+3.06)/2	0.85		
		(3.85-3.80)x(3.00+3.01)/2	0.15		
		(3.91-3.85)x(3.16+3.00)/2	0.18		
		(3.95-3.91)x(3.22+3.16)/2	0.13		
		(3.97-3.95)x(3.16+3.22)/2	0.06		
		(3.98-3.97)x(3.11+3.16)/2	0.03		
		(3.99-3.98)x(3.17+3.11)/2	0.03		
		(4.00-3.99)x(3.18+3.18)/2	0.03		
		(4.01-4.00)x(3.17+3.16)/2	0.03		
		(4.03-4.01)x(3.17+3.17)/2	0.06		
		(4.04-4.03)x(3.15+3.17)/2	0.03		
		(4.12-4.04)x(3.06+3.15)/2	0.25		
		(4.23-4.12)x(2.96+3.06)/2	0.33		
		(4.26-4.23)x(3.30+2.96)/2	0.09		
		(4.29-4.26)x(3.50+3.30)/2	0.10		
		(4.30-4.29)x(3.48+3.50)/2	0.03		
		(4.31-4.30)x(3.46+3.48)/2	0.03		
		(4.32-4.31)x(3.60+3.55)/2	0.04		
		(4.33-4.32)x(3.61+3.59)/2	0.04		
		(4.34-4.33)x(3.67+3.66)/2	0.04		
		(4.35-4.34)x(3.06+3.62)/2	0.03		
		(4.37-4.35)x(3.16+3.06)/2	0.06		
		(4.38-4.37)x(3.12+3.03)/2	0.03		
		(4.39-4.38)x(3.18+3.22)/2	0.03		
		(4.42-4.39)x(3.15+3.18)/2	0.09		
		(4.45-4.42)x(3.12+3.14)/2	0.09		
		(4.61-4.45)x(3.08+3.12)/2	0.50		
		(5.46-4.61)x(3.11+3.08)/2	2.63		
		(5.70-5.46)x(3.12+3.11)/2	0.75		
		(6.12-5.70)x(3.17+3.12)/2	1.32		
		(6.79-6.12)x(3.20+3.17)/2	2.13		
		(7.17-6.79)x(3.11+3.20)/2	1.20		
		(7.88-7.17)x(2.95+3.11)/2	2.15		
		(8.07-7.88)x(2.86+2.95)/2	0.55		
		(0.32-8.07)x(2.86+2.86)/2	-22.16		
				1.39	
103 1530.00	B1	(2.40-1.44)x(2.91+2.89)/2	2.78		
		(2.44-2.40)x(2.91+2.91)/2	0.12		
		(2.90-2.44)x(2.99+2.91)/2	1.36		
		(3.01-2.90)x(2.99+2.99)/2	0.33		
		(3.11-3.01)x(3.01+2.99)/2	0.30		
		(3.15-3.11)x(3.00+3.01)/2	0.12		
		(3.16-3.15)x(3.01+3.05)/2	0.03		
		(3.22-3.16)x(3.04+3.01)/2	0.18		
		(3.23-3.22)x(3.04+3.04)/2	0.03		
		(3.25-3.23)x(3.02+3.04)/2	0.06		
		(3.36-3.25)x(3.03+3.02)/2	0.33		
		(3.53-3.36)x(3.05+3.03)/2	0.52		
		(4.03-3.53)x(3.11+3.05)/2	1.54		
		(4.28-4.03)x(3.15+3.11)/2	0.78		
		(4.34-4.28)x(3.16+3.15)/2	0.19		
		(4.35-4.34)x(3.14+3.16)/2	0.03		
		(4.38-4.35)x(2.99+3.14)/2	0.09		
		(4.40-4.38)x(3.17+2.99)/2	0.06		
		(4.42-4.40)x(3.19+3.17)/2	0.06		
		(4.43-4.42)x(3.18+3.19)/2	0.03		
		(4.44-4.43)x(3.14+3.18)/2	0.03		
		(4.45-4.44)x(3.15+3.14)/2	0.03		
		(4.46-4.45)x(3.13+3.15)/2	0.03		
		(4.51-4.46)x(3.14+3.17)/2	0.16		
		(4.53-4.51)x(3.10+3.14)/2	0.06		
		(4.71-4.53)x(3.16+3.17)/2	0.57		
		A RIPORTARE mq	9.82		

		CALCOLO DELLE AREE		Foglio n. 10
STERRO				
N. SEZIONE PROG.	FIG.	ELEMENTI DI CALCOLO	AREA ELEMENTARE mq	AREA FIGURA mq	NOTE
		RIPORTO mq	9.82		
		(4.72-4.71)x(3.16+3.16)/2	0.03		
		(4.74-4.72)x(3.10+3.16)/2	0.06		
		(4.76-4.74)x(3.35+3.10)/2	0.06		
		(4.77-4.76)x(3.48+3.35)/2	0.03		
		(4.78-4.77)x(3.48+3.48)/2	0.03		
		(4.79-4.78)x(3.49+3.46)/2	0.03		
		(4.80-4.79)x(3.62+3.47)/2	0.04		
		(4.81-4.80)x(3.67+3.67)/2	0.04		
		(4.82-4.81)x(3.66+3.64)/2	0.04		
		(4.83-4.82)x(3.04+3.52)/2	0.03		
		(4.88-4.83)x(3.30+3.04)/2	0.16		
		(4.89-4.88)x(3.19+3.23)/2	0.03		
		(4.90-4.89)x(2.95+3.19)/2	0.03		
		(4.91-4.90)x(3.20+2.95)/2	0.03		
		(5.03-4.91)x(3.25+3.28)/2	0.39		
		(5.21-5.03)x(3.26+3.25)/2	0.59		
		(5.63-5.21)x(3.25+3.26)/2	1.37		
		(5.71-5.63)x(3.26+3.25)/2	0.26		
		(5.88-5.71)x(3.28+3.26)/2	0.56		
		(6.80-5.88)x(3.40+3.28)/2	3.07		
		(7.59-6.80)x(3.52+3.40)/2	2.73		
		(7.89-7.59)x(3.56+3.52)/2	1.06		
		(8.43-7.89)x(3.63+3.56)/2	1.94		
		(8.98-8.43)x(3.71+3.63)/2	2.02		
		(9.64-8.98)x(3.86+3.71)/2	2.50		
		(10.07-9.64)x(3.89+3.86)/2	1.67		
		(11.00-10.07)x(3.94+3.89)/2	3.64		
		(11.16-11.00)x(3.95+3.94)/2	0.63		
		(11.45-11.16)x(3.92+3.95)/2	1.14		
		(12.25-11.45)x(3.81+3.92)/2	3.09		
		(12.71-12.25)x(3.67+3.81)/2	1.72		
		(13.34-12.71)x(3.48+3.67)/2	2.25		
		(14.41-13.34)x(2.94+3.48)/2	3.43		
		(14.43-14.41)x(2.94+2.94)/2	0.06		
		(14.47-14.43)x(2.92+2.94)/2	0.12		
		(14.53-14.47)x(2.89+2.92)/2	0.17		
		(1.44-14.53)x(2.89+2.89)/2	-37.83		
				7.04	
104	B1	(2.93-2.49)x(2.87+2.83)/2	1.25		
1545.00		(3.57-2.93)x(2.90+2.87)/2	1.85		
		(3.70-3.57)x(2.93+2.90)/2	0.38		
		(3.72-3.70)x(2.93+2.93)/2	0.06		
		(3.73-3.72)x(2.93+2.93)/2	0.03		
		(3.80-3.73)x(2.90+2.93)/2	0.20		
		(3.84-3.80)x(2.94+2.90)/2	0.12		
		(3.86-3.84)x(2.99+2.94)/2	0.06		
		(3.87-3.86)x(3.08+3.00)/2	0.03		
		(3.88-3.87)x(3.00+3.08)/2	0.03		
		(3.89-3.88)x(2.98+2.98)/2	0.03		
		(3.91-3.89)x(2.99+2.98)/2	0.06		
		(4.02-3.91)x(2.99+2.99)/2	0.33		
		(4.21-4.02)x(3.04+2.99)/2	0.57		
		(4.66-4.21)x(3.18+3.04)/2	1.40		
		(4.67-4.66)x(3.19+3.18)/2	0.03		
		(4.86-4.67)x(3.19+3.19)/2	0.61		
		(4.87-4.86)x(3.21+3.19)/2	0.03		
		(4.89-4.87)x(3.18+3.21)/2	0.06		
		(4.91-4.89)x(3.11+3.18)/2	0.06		
		(4.92-4.91)x(3.13+3.11)/2	0.03		
		(4.93-4.92)x(3.10+3.13)/2	0.03		
		(4.94-4.93)x(3.16+3.10)/2	0.03		
		(5.02-4.94)x(3.12+3.16)/2	0.25		
		(5.04-5.02)x(3.09+3.12)/2	0.06		
		(5.05-5.04)x(2.92+3.09)/2	0.03		
		(5.14-5.05)x(3.28+3.25)/2	0.29		
		(5.24-5.14)x(3.31+3.28)/2	0.33		
		(5.25-5.24)x(3.35+3.31)/2	0.03		
		(5.26-5.25)x(3.35+3.35)/2	0.03		
		(5.27-5.26)x(3.32+3.35)/2	0.03		
		(5.28-5.27)x(3.37+3.32)/2	0.03		
		(5.29-5.28)x(3.35+3.37)/2	0.03		
		(5.30-5.29)x(3.59+3.58)/2	0.04		
		(5.31-5.30)x(3.66+3.66)/2	0.04		
		(5.32-5.31)x(3.61+3.66)/2	0.04		
		(5.33-5.32)x(3.65+3.61)/2	0.04		
		(5.34-5.33)x(3.02+3.43)/2	0.03		
		(5.42-5.34)x(3.45+3.02)/2	0.26		
		(5.43-5.42)x(3.32+3.45)/2	0.03		
		(5.60-5.43)x(3.42+3.28)/2	0.57		
		(5.75-5.60)x(3.47+3.42)/2	0.52		
		(6.33-5.75)x(3.63+3.47)/2	2.06		
		(6.84-6.33)x(3.76+3.63)/2	1.88		
		(7.77-6.84)x(4.02+3.76)/2	3.62		
		(7.93-7.77)x(4.07+4.02)/2	0.65		
		(8.03-7.93)x(4.09+4.07)/2	0.41		
		(9.02-8.03)x(4.18+4.09)/2	4.09		
		(9.73-9.02)x(4.38+4.18)/2	3.04		
		(10.11-9.73)x(4.48+4.38)/2	1.68		
		(10.80-10.11)x(4.61+4.48)/2	3.14		
		(11.20-10.80)x(4.65+4.61)/2	1.85		
		(11.42-11.20)x(4.60+4.65)/2	1.02		
		(12.29-11.42)x(4.42+4.60)/2	3.92		
		(13.12-12.29)x(4.06+4.42)/2	3.52		
		(13.38-13.12)x(3.97+4.06)/2	1.04		
		(13.83-13.38)x(3.72+3.97)/2	1.73		
		(14.47-13.83)x(3.36+3.72)/2	2.27		
		(15.10-14.47)x(2.95+3.36)/2	1.99		
		(15.35-15.10)x(2.83+2.95)/2	0.72		
		(2.49-15.35)x(2.83+2.83)/2	-36.39		
				12.20	
105	B1	(-0.71--0.85)x(2.75+2.75)/2	0.39		
1560.00		(0.03--0.71)x(2.77+2.75)/2	2.04		
		(0.38-0.03)x(2.78+2.77)/2	0.97		
		(1.02-0.38)x(2.80+2.78)/2	1.79		
		A RIPORTARE mq	5.19		

		CALCOLO DELLE AREE		Foglio n. 11
STERRO				
N. SEZIONE PROG.	FIG.	ELEMENTI DI CALCOLO	AREA ELEMENTARE mq	AREA FIGURA mq	NOTE
		RIPORTO mq	5.19		
		(1.47-1.02)x(2.81+2.80)/2	1.26		
		(1.72-1.47)x(2.81+2.81)/2	0.70		
		(2.56-1.72)x(2.81+2.81)/2	2.36		
		(3.41-2.56)x(2.82+2.81)/2	2.39		
		(3.65-3.41)x(2.83+2.82)/2	0.68		
		(3.76-3.65)x(2.83+2.83)/2	0.31		
		(4.17-3.76)x(2.87+2.83)/2	1.17		
		(4.34-4.17)x(2.88+2.87)/2	0.49		
		(4.46-4.34)x(2.89+2.88)/2	0.35		
		(4.51-4.46)x(2.91+2.89)/2	0.14		
		(4.57-4.51)x(2.95+2.91)/2	0.18		
		(4.58-4.57)x(2.99+2.95)/2	0.03		
		(4.60-4.58)x(3.00+2.99)/2	0.06		
		(4.61-4.60)x(3.18+3.00)/2	0.03		
		(4.63-4.61)x(3.00+3.18)/2	0.06		
		(4.64-4.63)x(2.98+3.04)/2	0.03		
		(4.65-4.64)x(2.91+2.98)/2	0.03		
		(4.67-4.65)x(2.92+2.92)/2	0.06		
		(4.74-4.67)x(2.93+2.92)/2	0.20		
		(5.10-4.74)x(3.00+2.93)/2	1.07		
		(5.31-5.10)x(3.07+3.00)/2	0.64		
		(5.41-5.31)x(3.10+3.07)/2	0.31		
		(5.43-5.41)x(3.12+3.10)/2	0.06		
		(5.44-5.43)x(3.06+3.12)/2	0.03		
		(5.45-5.44)x(3.16+3.06)/2	0.03		
		(5.56-5.45)x(3.10+3.16)/2	0.34		
		(5.58-5.56)x(3.07+3.10)/2	0.06		
		(5.59-5.58)x(3.20+2.94)/2	0.03		
		(5.60-5.59)x(3.33+3.24)/2	0.03		
		(5.61-5.60)x(3.16+3.33)/2	0.03		
		(5.64-5.61)x(3.15+3.16)/2	0.09		
		(5.80-5.64)x(3.22+3.15)/2	0.51		
		(5.81-5.80)x(3.22+3.26)/2	0.03		
		(5.82-5.81)x(3.55+3.22)/2	0.03		
		(5.83-5.82)x(3.56+3.55)/2	0.04		
		(5.84-5.83)x(3.66+3.42)/2	0.04		
		(5.85-5.84)x(3.49+3.66)/2	0.04		
		(5.87-5.85)x(3.64+3.59)/2	0.07		
		(5.88-5.87)x(3.00+3.33)/2	0.03		
		(5.97-5.88)x(3.48+3.00)/2	0.29		
		(5.99-5.97)x(3.24+3.48)/2	0.07		
		(6.02-5.99)x(3.26+3.25)/2	0.10		
		(6.17-6.02)x(3.29+3.26)/2	0.49		
		(6.91-6.17)x(3.50+3.29)/2	2.51		
		(7.12-6.91)x(3.56+3.50)/2	0.74		
		(8.00-7.12)x(3.81+3.56)/2	3.24		
		(8.49-8.00)x(3.95+3.81)/2	1.90		
		(9.09-8.49)x(4.14+3.95)/2	2.43		
		(9.37-9.09)x(4.21+4.14)/2	1.17		
		(10.17-9.37)x(4.36+4.21)/2	3.43		
		(10.18-10.17)x(4.37+4.36)/2	0.04		
		(11.27-10.18)x(4.53+4.37)/2	4.85		
		(11.88-11.27)x(4.55+4.53)/2	2.77		
		(12.36-11.88)x(4.56+4.55)/2	2.19		
		(13.22-12.36)x(4.44+4.56)/2	3.87		
		(13.44-13.22)x(4.41+4.44)/2	0.97		
		(13.57-13.44)x(4.37+4.41)/2	0.57		
		(14.53-13.57)x(4.03+4.37)/2	4.03		
		(15.26-14.53)x(3.64+4.03)/2	2.80		
		(15.62-15.26)x(3.45+3.64)/2	1.28		
		(16.27-15.62)x(3.19+3.45)/2	2.16		
		(16.71-16.27)x(3.01+3.19)/2	1.36		
		(16.95-16.71)x(2.89+3.01)/2	0.71		
		(17.26-16.95)x(2.75+2.89)/2	0.87		
		(-0.85-17.26)x(2.75+2.75)/2	-49.80		
				14.27	
106 1575.00	B1	(1.57-0.55)x(2.76+2.74)/2	2.81		
		(2.24-1.57)x(2.76+2.76)/2	1.85		
		(2.66-2.24)x(2.76+2.76)/2	1.16		
		(3.42-2.66)x(2.77+2.76)/2	2.10		
		(3.75-3.42)x(2.78+2.77)/2	0.92		
		(4.47-3.75)x(2.81+2.78)/2	2.01		
		(4.84-4.47)x(2.84+2.81)/2	1.05		
		(5.09-4.84)x(2.88+2.84)/2	0.71		
		(5.23-5.09)x(2.92+2.88)/2	0.41		
		(5.32-5.23)x(2.94+2.92)/2	0.26		
		(5.37-5.32)x(2.99+2.94)/2	0.15		
		(5.39-5.37)x(3.28+3.00)/2	0.06		
		(5.42-5.39)x(3.01+3.28)/2	0.09		
		(5.43-5.42)x(2.94+2.99)/2	0.03		
		(5.44-5.43)x(2.97+2.94)/2	0.03		
		(5.46-5.44)x(2.98+2.97)/2	0.06		
		(5.55-5.46)x(3.01+2.98)/2	0.27		
		(5.93-5.55)x(3.13+3.01)/2	1.17		
		(5.98-5.93)x(3.15+3.13)/2	0.16		
		(5.99-5.98)x(3.16+3.15)/2	0.03		
		(6.00-5.99)x(3.15+3.16)/2	0.03		
		(6.13-6.00)x(3.08+3.15)/2	0.40		
		(6.14-6.13)x(3.06+3.08)/2	0.03		
		(6.15-6.14)x(2.96+3.06)/2	0.03		
		(6.16-6.15)x(3.26+3.19)/2	0.03		
		(6.17-6.16)x(3.27+3.11)/2	0.03		
		(6.18-6.17)x(3.23+3.27)/2	0.03		
		(6.19-6.18)x(3.29+3.23)/2	0.03		
		(6.31-6.19)x(3.44+3.29)/2	0.40		
		(6.38-6.31)x(3.51+3.44)/2	0.24		
		(6.39-6.38)x(3.34+3.53)/2	0.03		
		(6.40-6.39)x(3.66+3.34)/2	0.04		
		(6.41-6.40)x(3.43+3.65)/2	0.04		
		(6.42-6.41)x(3.56+3.64)/2	0.04		
		(6.44-6.42)x(3.62+3.56)/2	0.07		
		(6.45-6.44)x(3.23+3.62)/2	0.03		
		(6.52-6.45)x(3.35+2.98)/2	0.22		
		(6.53-6.52)x(3.16+3.35)/2	0.03		
		A RIPORTARE mq	17.08		

ZONA VI01

		CALCOLO DELLE AREE		Foglio n. 12
STERRO				
N. SEZIONE PROG.	FIG.	ELEMENTI DI CALCOLO	AREA ELEMENTARE mq	AREA FIGURA mq	NOTE
		RIPORTO mq	17.08		
		(6.54-6.53)x(3.33+3.16)/2	0.03		
		(6.55-6.54)x(3.42+3.33)/2	0.03		
		(6.57-6.55)x(3.51+3.42)/2	0.07		
		(6.63-6.57)x(3.62+3.51)/2	0.21		
		(6.93-6.63)x(3.74+3.62)/2	1.10		
		(7.01-6.93)x(3.79+3.74)/2	0.30		
		(7.31-7.01)x(3.98+3.79)/2	1.17		
		(8.10-7.31)x(4.47+3.98)/2	3.34		
		(8.99-8.10)x(4.67+4.47)/2	4.07		
		(9.19-8.99)x(4.75+4.67)/2	0.94		
		(9.55-9.19)x(4.74+4.75)/2	1.71		
		(10.28-9.55)x(4.70+4.74)/2	3.45		
		(10.68-10.28)x(4.74+4.70)/2	1.89		
		(11.37-10.68)x(4.81+4.74)/2	3.29		
		(12.37-11.37)x(4.68+4.81)/2	4.74		
		(12.45-12.37)x(4.67+4.68)/2	0.37		
		(12.61-12.45)x(4.61+4.67)/2	0.74		
		(13.54-12.61)x(4.26+4.61)/2	4.12		
		(14.06-13.54)x(4.06+4.26)/2	2.16		
		(14.63-14.06)x(3.80+4.06)/2	2.24		
		(14.90-14.63)x(3.72+3.80)/2	1.02		
		(15.67-14.90)x(3.45+3.72)/2	2.76		
		(15.71-15.67)x(3.44+3.45)/2	0.14		
		(15.72-15.71)x(3.44+3.44)/2	0.03		
		(15.75-15.72)x(3.42+3.44)/2	0.10		
		(16.81-15.75)x(2.98+3.42)/2	3.39		
		(17.21-16.81)x(2.74+2.98)/2	1.14		
		(0.55-17.21)x(2.74+2.74)/2	-45.65		
				15.98	
106 1575.00	B2	(24.19-23.72)x(1.31+1.30)/2	0.61		
		(24.42-24.19)x(1.34+1.31)/2	0.30		
		(24.54-24.42)x(1.31+1.34)/2	0.16		
		(24.85-24.54)x(1.28+1.31)/2	0.40		
		(24.89-24.85)x(1.28+1.28)/2	0.05		
		(23.76-24.89)x(1.28+1.28)/2	-1.45		
		(23.72-23.76)x(1.30+1.28)/2	-0.05		
				0.02	
107 1590.00	B1	(2.76-1.68)x(2.68+2.65)/2	2.88		
		(2.77-2.76)x(2.68+2.68)/2	0.03		
		(3.86-2.77)x(2.70+2.68)/2	2.93		
		(4.46-3.86)x(2.75+2.70)/2	1.64		
		(4.95-4.46)x(2.78+2.75)/2	1.35		
		(5.83-4.95)x(3.01+2.78)/2	2.55		
		(5.98-5.83)x(3.05+3.01)/2	0.45		
		(6.00-5.98)x(3.06+3.05)/2	0.06		
		(6.01-6.00)x(3.06+3.06)/2	0.03		
		(6.14-6.01)x(3.26+3.06)/2	0.41		
		(6.17-6.14)x(3.33+3.26)/2	0.10		
		(6.21-6.17)x(3.01+3.39)/2	0.13		
		(6.22-6.21)x(2.96+3.00)/2	0.03		
		(6.24-6.22)x(3.02+2.98)/2	0.06		
		(6.25-6.24)x(3.05+3.02)/2	0.03		
		(6.28-6.25)x(3.14+3.05)/2	0.09		
		(6.39-6.28)x(3.26+3.14)/2	0.35		
		(6.47-6.39)x(3.36+3.26)/2	0.26		
		(6.58-6.47)x(3.45+3.36)/2	0.37		
		(6.59-6.58)x(3.17+3.45)/2	0.03		
		(6.60-6.59)x(3.23+3.17)/2	0.03		
		(6.61-6.60)x(3.11+3.23)/2	0.03		
		(6.70-6.61)x(3.06+3.11)/2	0.28		
		(6.71-6.70)x(3.05+3.06)/2	0.03		
		(6.72-6.71)x(2.97+3.05)/2	0.03		
		(6.73-6.72)x(3.08+3.19)/2	0.03		
		(6.74-6.73)x(3.17+3.19)/2	0.03		
		(6.75-6.74)x(3.23+3.17)/2	0.03		
		(6.77-6.75)x(3.38+3.17)/2	0.07		
		(6.93-6.77)x(3.60+3.44)/2	0.56		
		(6.96-6.93)x(3.62+3.60)/2	0.11		
		(6.97-6.96)x(3.64+3.65)/2	0.04		
		(6.98-6.97)x(3.38+3.64)/2	0.04		
		(6.99-6.98)x(3.54+3.63)/2	0.04		
		(7.01-6.99)x(3.61+3.54)/2	0.07		
		(7.02-7.01)x(3.14+3.61)/2	0.03		
		(7.07-7.02)x(3.22+2.96)/2	0.15		
		(7.08-7.07)x(3.09+3.22)/2	0.03		
		(7.09-7.08)x(3.21+3.09)/2	0.03		
		(7.10-7.09)x(3.26+3.21)/2	0.03		
		(7.11-7.10)x(3.35+3.26)/2	0.03		
		(7.12-7.11)x(3.37+3.35)/2	0.03		
		(7.14-7.12)x(3.56+3.37)/2	0.07		
		(7.15-7.14)x(3.72+3.56)/2	0.04		
		(7.31-7.15)x(3.80+3.72)/2	0.60		
		(7.39-7.31)x(3.86+3.80)/2	0.31		
		(7.59-7.39)x(3.98+3.86)/2	0.78		
		(8.21-7.59)x(4.34+3.98)/2	2.58		
		(8.89-8.21)x(4.62+4.34)/2	3.05		
		(9.30-8.89)x(4.78+4.62)/2	1.93		
		(9.99-9.30)x(4.87+4.78)/2	3.33		
		(10.39-9.99)x(4.90+4.87)/2	1.95		
		(11.21-10.39)x(4.91+4.90)/2	4.02		
		(11.48-11.21)x(4.92+4.91)/2	1.33		
		(11.95-11.48)x(4.80+4.92)/2	2.28		
		(12.56-11.95)x(4.63+4.80)/2	2.88		
		(12.90-12.56)x(4.52+4.63)/2	1.56		
		(13.65-12.90)x(4.26+4.52)/2	3.29		
		(14.59-13.65)x(3.89+4.26)/2	3.83		
		(14.74-14.59)x(3.83+3.89)/2	0.58		
		(15.01-14.74)x(3.69+3.83)/2	1.02		
		(15.83-15.01)x(3.29+3.69)/2	2.86		
		(16.28-15.83)x(3.10+3.29)/2	1.44		
		(16.92-16.28)x(2.83+3.10)/2	1.90		
		(17.56-16.92)x(2.65+2.83)/2	1.75		
		(1.68-17.56)x(2.65+2.65)/2	-42.08		
				16.83	
		A RIPORTARE mq			

		CALCOLO DELLE AREE		Foglio n. 13
STERRO				
N. SEZIONE PROG.	FIG.	ELEMENTI DI CALCOLO	AREA ELEMENTARE mq	AREA FIGURA mq	NOTE
		RIPORTO mq			
107	B2	(24.20-23.76)x(1.08+1.20)/2	0.50		
1590.00		(24.53-24.20)x(0.99+1.08)/2	0.34		
		(24.72-24.53)x(0.91+0.99)/2	0.18		
		(24.79-24.72)x(0.88+0.91)/2	0.06		
		(24.23-24.79)x(0.88+0.88)/2	-0.49		
		(23.76-24.23)x(1.20+0.88)/2	-0.49		
				0.10	
108	B1	(5.06-4.67)x(2.74+2.73)/2	1.07		
1605.00		(5.17-5.06)x(2.75+2.74)/2	0.30		
		(6.14-5.17)x(2.94+2.75)/2	2.76		
		(6.69-6.14)x(3.18+2.94)/2	1.68		
		(6.92-6.69)x(3.28+3.18)/2	0.74		
		(6.96-6.92)x(3.25+3.28)/2	0.13		
		(6.97-6.96)x(3.26+3.25)/2	0.03		
		(7.00-6.97)x(3.01+3.25)/2	0.09		
		(7.01-7.00)x(3.00+2.98)/2	0.03		
		(7.02-7.01)x(3.02+3.00)/2	0.03		
		(7.03-7.02)x(3.12+3.02)/2	0.03		
		(7.05-7.03)x(3.18+3.12)/2	0.06		
		(7.10-7.05)x(3.38+3.18)/2	0.16		
		(7.17-7.10)x(3.46+3.38)/2	0.24		
		(7.18-7.17)x(3.36+3.46)/2	0.03		
		(7.20-7.18)x(3.45+3.36)/2	0.07		
		(7.21-7.20)x(3.32+3.45)/2	0.03		
		(7.22-7.21)x(3.14+3.10)/2	0.03		
		(7.23-7.22)x(3.07+3.14)/2	0.03		
		(7.28-7.23)x(3.04+3.07)/2	0.15		
		(7.29-7.28)x(2.99+3.03)/2	0.03		
		(7.30-7.29)x(3.12+3.05)/2	0.03		
		(7.31-7.30)x(3.11+3.14)/2	0.03		
		(7.32-7.31)x(3.34+3.22)/2	0.03		
		(7.34-7.32)x(3.20+3.34)/2	0.07		
		(7.36-7.34)x(3.53+3.20)/2	0.07		
		(7.38-7.36)x(3.55+3.55)/2	0.07		
		(7.55-7.38)x(3.52+3.55)/2	0.60		
		(7.56-7.55)x(3.52+3.62)/2	0.04		
		(7.59-7.56)x(3.60+3.52)/2	0.11		
		(7.60-7.59)x(3.04+3.60)/2	0.03		
		(7.63-7.60)x(3.09+2.94)/2	0.09		
		(7.64-7.63)x(3.08+3.01)/2	0.03		
		(7.65-7.64)x(3.16+3.11)/2	0.03		
		(7.66-7.65)x(3.18+3.16)/2	0.03		
		(7.67-7.66)x(3.28+3.18)/2	0.03		
		(7.68-7.67)x(3.47+3.28)/2	0.03		
		(7.70-7.68)x(3.59+3.47)/2	0.07		
		(7.73-7.70)x(3.89+3.59)/2	0.11		
		(7.74-7.73)x(3.97+3.89)/2	0.04		
		(7.85-7.74)x(3.82+3.97)/2	0.43		
		(8.30-7.85)x(3.85+3.82)/2	1.73		
		(8.32-8.30)x(3.86+3.85)/2	0.08		
		(8.37-8.32)x(3.88+3.86)/2	0.19		
		(9.41-8.37)x(4.38+3.88)/2	4.30		
		(10.06-9.41)x(4.46+4.38)/2	2.87		
		(10.50-10.06)x(4.59+4.46)/2	1.99		
		(11.29-10.50)x(4.63+4.59)/2	3.64		
		(11.59-11.29)x(4.64+4.63)/2	1.39		
		(11.75-11.59)x(4.63+4.64)/2	0.74		
		(12.67-11.75)x(4.60+4.63)/2	4.25		
		(13.43-12.67)x(4.46+4.60)/2	3.44		
		(13.76-13.43)x(4.41+4.46)/2	1.46		
		(13.92-13.76)x(4.36+4.41)/2	0.70		
		(14.36-13.92)x(4.15+4.36)/2	1.87		
		(14.72-14.36)x(3.98+4.15)/2	1.46		
		(14.85-14.72)x(3.92+3.98)/2	0.51		
		(15.12-14.85)x(3.79+3.92)/2	1.04		
		(15.94-15.12)x(3.41+3.79)/2	2.95		
		(16.81-15.94)x(3.13+3.41)/2	2.84		
		(17.03-16.81)x(3.05+3.13)/2	0.68		
		(17.42-17.03)x(2.93+3.05)/2	1.17		
		(17.96-17.42)x(2.73+2.93)/2	1.53		
		(4.67-17.96)x(2.73+2.73)/2	-36.28		
				14.24	
108	B2	(24.64-23.84)x(1.59+1.54)/2	1.25		
1605.00		(25.16-24.64)x(1.40+1.59)/2	0.78		
		(25.73-25.16)x(1.17+1.40)/2	0.73		
		(26.05-25.73)x(0.99+1.17)/2	0.35		
		(24.67-26.05)x(0.99+0.99)/2	-1.37		
		(23.84-24.67)x(1.54+0.99)/2	-1.05		
				0.69	
109	B1	(4.08-3.96)x(2.71+2.71)/2	0.33		
1620.00		(4.51-4.08)x(2.73+2.71)/2	1.17		
		(5.17-4.51)x(2.75+2.73)/2	1.81		
		(5.53-5.17)x(2.77+2.75)/2	0.99		
		(6.25-5.53)x(2.80+2.77)/2	2.01		
		(7.21-6.25)x(2.98+2.80)/2	2.77		
		(7.34-7.21)x(3.00+2.98)/2	0.39		
		(7.38-7.34)x(3.01+3.00)/2	0.12		
		(7.69-7.38)x(3.08+3.01)/2	0.94		
		(7.77-7.69)x(3.08+3.08)/2	0.25		
		(7.78-7.77)x(3.07+3.08)/2	0.03		
		(7.79-7.78)x(3.02+3.07)/2	0.03		
		(7.80-7.79)x(3.04+3.02)/2	0.03		
		(7.81-7.80)x(3.12+3.04)/2	0.03		
		(7.82-7.81)x(3.16+3.12)/2	0.03		
		(7.83-7.82)x(3.10+3.16)/2	0.03		
		(7.84-7.83)x(3.09+3.12)/2	0.03		
		(7.85-7.84)x(3.02+3.03)/2	0.03		
		(7.86-7.85)x(3.03+3.01)/2	0.03		
		(7.87-7.86)x(3.06+3.09)/2	0.03		
		(7.88-7.87)x(3.23+3.14)/2	0.03		
		(7.90-7.88)x(3.16+3.23)/2	0.06		
		(7.94-7.90)x(3.22+3.16)/2	0.13		
		(8.02-7.94)x(3.25+3.22)/2	0.26		
		(8.13-8.02)x(3.27+3.25)/2	0.36		
		A RIPORTARE mq	11.92		

ZONA VI01

		CALCOLO DELLE AREE		Foglio n. 14
STERRO				
N. SEZIONE PROG.	FIG.	ELEMENTI DI CALCOLO	AREA ELEMENTARE mq	AREA FIGURA mq	NOTE
		RIPORTO mq	11.92		
		(8.14-8.13)x(3.41+3.27)/2	0.03		
		(8.15-8.14)x(3.55+3.41)/2	0.03		
		(8.17-8.15)x(3.59+3.55)/2	0.07		
		(8.18-8.17)x(2.95+3.59)/2	0.03		
		(8.19-8.18)x(2.96+2.96)/2	0.03		
		(8.20-8.19)x(3.07+3.05)/2	0.03		
		(8.21-8.20)x(3.15+3.07)/2	0.03		
		(8.22-8.21)x(3.25+3.15)/2	0.03		
		(8.24-8.22)x(3.21+3.25)/2	0.06		
		(8.32-8.24)x(3.29+3.21)/2	0.26		
		(8.34-8.32)x(3.31+3.29)/2	0.07		
		(8.43-8.34)x(3.31+3.31)/2	0.30		
		(9.01-8.43)x(3.48+3.31)/2	1.97		
		(9.52-9.01)x(3.62+3.48)/2	1.81		
		(10.59-9.52)x(3.90+3.62)/2	4.02		
		(10.61-10.59)x(3.91+3.90)/2	0.08		
		(10.64-10.61)x(3.91+3.91)/2	0.12		
		(11.70-10.64)x(4.16+3.91)/2	4.28		
		(12.28-11.70)x(4.21+4.16)/2	2.43		
		(12.78-12.28)x(4.25+4.21)/2	2.12		
		(13.70-12.78)x(4.17+4.25)/2	3.87		
		(13.87-13.70)x(4.14+4.17)/2	0.71		
		(13.97-13.87)x(4.11+4.14)/2	0.41		
		(14.96-13.97)x(3.77+4.11)/2	3.90		
		(15.65-14.96)x(3.52+3.77)/2	2.52		
		(16.05-15.65)x(3.36+3.52)/2	1.38		
		(16.76-16.05)x(3.12+3.36)/2	2.30		
		(17.14-16.76)x(3.00+3.12)/2	1.16		
		(17.34-17.14)x(2.93+3.00)/2	0.59		
		(17.96-17.34)x(2.71+2.93)/2	1.75		
		(3.96-17.96)x(2.71+2.71)/2	-37.94		
				10.37	
110	B1	(6.06-5.39)x(2.85+2.82)/2	1.90		
1635.00		(6.36-6.06)x(2.86+2.85)/2	0.86		
		(6.92-6.36)x(2.95+2.86)/2	1.63		
		(7.45-6.92)x(3.01+2.95)/2	1.58		
		(7.75-7.45)x(3.05+3.01)/2	0.91		
		(8.54-7.75)x(3.17+3.05)/2	2.46		
		(9.44-8.54)x(3.32+3.17)/2	2.92		
		(9.63-9.44)x(3.35+3.32)/2	0.63		
		(9.98-9.63)x(3.44+3.35)/2	1.19		
		(10.72-9.98)x(3.57+3.44)/2	2.59		
		(11.12-10.72)x(3.70+3.57)/2	1.45		
		(11.81-11.12)x(3.85+3.70)/2	2.60		
		(12.81-11.81)x(4.17+3.85)/2	4.01		
		(12.89-12.81)x(4.20+4.17)/2	0.33		
		(13.04-12.89)x(4.19+4.20)/2	0.63		
		(13.98-13.04)x(4.15+4.19)/2	3.92		
		(14.54-13.98)x(4.05+4.15)/2	2.30		
		(15.07-14.54)x(3.89+4.05)/2	2.10		
		(16.10-15.07)x(3.52+3.89)/2	3.82		
		(16.16-16.10)x(3.50+3.52)/2	0.21		
		(16.19-16.16)x(3.49+3.50)/2	0.10		
		(17.25-16.19)x(3.03+3.49)/2	3.46		
		(17.79-17.25)x(2.82+3.03)/2	1.58		
		(5.39-17.79)x(2.82+2.82)/2	-34.97		
				8.21	
111	B1	(8.28-8.09)x(3.36+3.28)/2	0.63		
1650.00		(8.65-8.28)x(3.53+3.36)/2	1.27		
		(8.83-8.65)x(3.64+3.53)/2	0.65		
		(9.32-8.83)x(3.93+3.64)/2	1.85		
		(9.63-9.32)x(4.13+3.93)/2	1.25		
		(9.74-9.63)x(4.20+4.13)/2	0.46		
		(9.97-9.74)x(4.25+4.20)/2	0.97		
		(10.83-9.97)x(4.68+4.25)/2	3.84		
		(11.66-10.83)x(4.51+4.68)/2	3.81		
		(11.91-11.66)x(4.49+4.51)/2	1.13		
		(12.39-11.91)x(4.35+4.49)/2	2.12		
		(13.00-12.39)x(4.19+4.35)/2	2.60		
		(13.34-13.00)x(4.14+4.19)/2	1.42		
		(14.09-13.34)x(4.05+4.14)/2	3.07		
		(15.03-14.09)x(4.11+4.05)/2	3.84		
		(15.18-15.03)x(4.12+4.11)/2	0.62		
		(15.45-15.18)x(4.04+4.12)/2	1.10		
		(16.27-15.45)x(3.81+4.04)/2	3.22		
		(16.72-16.27)x(3.62+3.81)/2	1.67		
		(17.36-16.72)x(3.39+3.62)/2	2.24		
		(17.73-17.36)x(3.28+3.39)/2	1.23		
		(8.09-17.73)x(3.28+3.28)/2	-31.62		
				7.37	
111	B2	(24.97-24.92)x(1.53+1.53)/2	0.08		
1650.00		(25.16-24.97)x(1.51+1.53)/2	0.29		
		(26.06-25.16)x(1.35+1.51)/2	1.29		
		(26.83-26.06)x(0.93+1.35)/2	0.88		
		(25.82-26.83)x(0.93+0.93)/2	-0.94		
		(24.92-25.82)x(1.53+0.93)/2	-1.11		
				0.49	
114	B1	(11.16-11.15)x(3.38+3.30)/2	0.03		
1695.00		(11.57-11.16)x(3.43+3.38)/2	1.40		
		(12.24-11.57)x(3.54+3.43)/2	2.33		
		(13.25-12.24)x(3.58+3.54)/2	3.60		
		(13.33-13.25)x(3.58+3.58)/2	0.29		
		(13.48-13.33)x(3.58+3.58)/2	0.54		
		(14.42-13.48)x(3.58+3.58)/2	3.37		
		(14.98-14.42)x(3.56+3.58)/2	2.00		
		(15.51-14.98)x(3.56+3.56)/2	1.89		
		(16.54-15.51)x(3.54+3.56)/2	3.66		
		(16.60-16.54)x(3.53+3.54)/2	0.21		
		(16.61-16.60)x(3.53+3.53)/2	0.04		
		(17.02-16.61)x(3.53+3.53)/2	1.45		
		(17.12-17.02)x(3.61+3.53)/2	0.36		
		(17.21-17.12)x(3.85+3.61)/2	0.34		
		(17.36-17.21)x(3.60+3.85)/2	0.56		
		(17.43-17.36)x(3.55+3.60)/2	0.25		
		A RIPORTARE mq	22.32		

		CALCOLO DELLE AREE		Foglio n. 15
STERRO				
N. SEZIONE PROG.	FIG.	ELEMENTI DI CALCOLO	AREA ELEMENTARE mq	AREA FIGURA mq	NOTE
		RIPORTO mq	22.32		
		(17.68-17.43)x(3.54+3.55)/2	0.89		
		(18.32-17.68)x(3.53+3.54)/2	2.26		
		(18.77-18.32)x(3.54+3.53)/2	1.59		
		(19.07-18.77)x(3.53+3.54)/2	1.06		
		(19.13-19.07)x(3.62+3.53)/2	0.21		
		(19.15-19.13)x(3.87+3.62)/2	0.07		
		(19.22-19.15)x(3.75+3.87)/2	0.27		
		(19.40-19.22)x(3.56+3.75)/2	0.66		
		(19.48-19.40)x(3.56+3.56)/2	0.28		
		(19.86-19.48)x(3.54+3.56)/2	1.35		
		(20.00-19.86)x(3.55+3.54)/2	0.50		
		(20.95-20.00)x(3.59+3.55)/2	3.39		
		(21.69-20.95)x(3.60+3.59)/2	2.66		
		(22.04-21.69)x(3.60+3.60)/2	1.26		
		(22.48-22.04)x(3.30+3.60)/2	1.52		
		(11.15-22.48)x(3.30+3.30)/2	-37.39		
				2.90	
114	B2	(26.76-26.67)x(1.87+1.89)/2	0.17		
1695.00		(27.48-26.76)x(1.77+1.87)/2	1.31		
		(28.44-27.48)x(1.30+1.77)/2	1.47		
		(28.57-28.44)x(1.25+1.30)/2	0.17		
		(28.68-28.57)x(1.17+1.25)/2	0.13		
		(27.74-28.68)x(1.17+1.17)/2	-1.10		
		(26.67-27.74)x(1.89+1.17)/2	-1.64		
				0.51	
115	B1	(18.85-18.04)x(3.00+2.95)/2	2.41		
1710.00		(18.88-18.85)x(3.00+3.00)/2	0.09		
		(18.90-18.88)x(3.01+3.00)/2	0.06		
		(18.94-18.90)x(3.01+3.01)/2	0.12		
		(19.70-18.94)x(3.10+3.01)/2	2.32		
		(19.97-19.70)x(3.10+3.10)/2	0.84		
		(20.54-19.97)x(3.06+3.10)/2	1.76		
		(21.06-20.54)x(3.02+3.06)/2	1.58		
		(21.23-21.06)x(2.95+3.02)/2	0.51		
		(18.04-21.23)x(2.95+2.95)/2	-9.41		
				0.28	
115	B2	(26.50-25.87)x(1.73+1.75)/2	1.10		
1710.00		(27.29-26.50)x(1.72+1.73)/2	1.36		
		(27.59-27.29)x(1.72+1.72)/2	0.52		
		(28.07-27.59)x(1.49+1.72)/2	0.77		
		(26.26-28.07)x(1.49+1.49)/2	-2.70		
		(25.87-26.26)x(1.75+1.49)/2	-0.63		
				0.42	
Rot2	B1	(27.10-26.71)x(1.61+1.61)/2	0.63		
1720.57		(27.25-27.10)x(1.58+1.61)/2	0.24		
		(27.70-27.25)x(1.49+1.58)/2	0.69		
		(26.89-27.70)x(1.49+1.49)/2	-1.21		
		(26.71-26.89)x(1.61+1.49)/2	-0.28		
				0.07	
116	B1	(12.46-12.45)x(3.83+3.73)/2	0.04		
1725.00		(12.63-12.46)x(3.84+3.83)/2	0.65		
		(13.55-12.63)x(3.90+3.84)/2	3.56		
		(13.99-13.55)x(3.86+3.90)/2	1.71		
		(14.43-13.99)x(3.73+3.86)/2	1.67		
		(12.45-14.43)x(3.73+3.73)/2	-7.39		
				0.24	
116	B2	(27.47-27.05)x(1.42+1.45)/2	0.60		
1725.00		(27.70-27.47)x(1.40+1.42)/2	0.32		
		(27.82-27.70)x(1.36+1.40)/2	0.17		
		(28.79-27.82)x(1.11+1.36)/2	1.20		
		(28.87-28.79)x(1.07+1.11)/2	0.09		
		(27.62-28.87)x(1.07+1.07)/2	-1.34		
		(27.05-27.62)x(1.45+1.07)/2	-0.72		
				0.32	
117	B1	(27.81-27.56)x(1.59+1.63)/2	0.40		
1740.00		(28.35-27.81)x(1.34+1.59)/2	0.79		
		(28.60-28.35)x(1.22+1.34)/2	0.32		
		(28.17-28.60)x(1.22+1.22)/2	-0.52		
		(27.56-28.17)x(1.63+1.22)/2	-0.87		
				0.12	
118	B1	(28.89-28.58)x(1.19+1.27)/2	0.38		
1755.00		(29.01-28.89)x(1.17+1.19)/2	0.14		
		(29.21-29.01)x(1.12+1.17)/2	0.23		
		(28.81-29.21)x(1.12+1.12)/2	-0.45		
		(28.58-28.81)x(1.27+1.12)/2	-0.27		
				0.03	
119	B1	(29.12-28.68)x(1.38+1.40)/2	0.61		
1770.00		(29.42-29.12)x(1.28+1.38)/2	0.40		
		(29.47-29.42)x(1.27+1.28)/2	0.06		
		(28.88-29.47)x(1.27+1.27)/2	-0.75		
		(28.68-28.88)x(1.40+1.27)/2	-0.27		
				0.05	
120	B1	(8.55-8.31)x(4.02+4.01)/2	0.96		
1785.00		(9.54-8.55)x(4.06+4.02)/2	4.00		
		(9.64-9.54)x(4.06+4.06)/2	0.41		
		(9.70-9.64)x(4.06+4.06)/2	0.24		
		(10.73-9.70)x(4.13+4.06)/2	4.22		
		(11.38-10.73)x(4.15+4.13)/2	2.69		
		(11.82-11.38)x(4.19+4.15)/2	1.83		
		(12.60-11.82)x(4.11+4.19)/2	3.24		
		(12.90-12.60)x(4.06+4.11)/2	1.23		
		(13.01-12.90)x(4.01+4.06)/2	0.44		
		(8.31-13.01)x(4.01+4.01)/2	-18.85		
				0.41	
120	B2	(29.23-28.92)x(1.53+1.57)/2	0.48		
1785.00		(29.95-29.23)x(1.34+1.53)/2	1.03		
		(30.31-29.95)x(1.26+1.34)/2	0.47		
		(30.50-30.31)x(1.19+1.26)/2	0.23		
		(29.48-30.50)x(1.19+1.19)/2	-1.21		
		(28.92-29.48)x(1.57+1.19)/2	-0.77		
				0.23	
121	B1	(29.33-28.85)x(1.63+1.68)/2	0.79		
1800.00		(30.31-29.33)x(1.31+1.63)/2	1.44		
		(30.42-30.31)x(1.28+1.31)/2	0.14		
		A RIPORTARE mq	2.37		

	CALCOLO DELLE AREE		Foglio n. 16

STERRO

N. SEZIONE PROG.	FIG.	ELEMENTI DI CALCOLO	AREA ELEMENTARE mq	AREA FIGURA mq	NOTE
		RIPORTO mq	2.37		
		(31.07-30.42)x(1.03+1.28)/2	0.75		
		(29.82-31.07)x(1.03+1.03)/2	-1.29		
		(28.85-29.82)x(1.68+1.03)/2	-1.31		
				0.52	
122	B1	(4.42-3.81)x(3.90+3.87)/2	2.37		
1815.00		(5.16-4.42)x(3.95+3.90)/2	2.90		
		(5.51-5.16)x(3.96+3.95)/2	1.38		
		(5.70-5.51)x(3.97+3.96)/2	0.75		
		(6.59-5.70)x(4.01+3.97)/2	3.55		
		(7.39-6.59)x(4.03+4.01)/2	3.22		
		(7.68-7.39)x(4.03+4.03)/2	1.17		
		(8.21-7.68)x(4.03+4.03)/2	2.14		
		(8.77-8.21)x(4.00+4.03)/2	2.25		
		(9.08-8.77)x(3.91+4.00)/2	1.23		
		(9.24-9.08)x(3.87+3.91)/2	0.62		
		(3.81-9.24)x(3.87+3.87)/2	-21.01		
				0.57	
122	B2	(29.35-28.78)x(1.45+1.59)/2	0.87		
1815.00		(29.45-29.35)x(1.43+1.45)/2	0.14		
		(29.63-29.45)x(1.37+1.43)/2	0.25		
		(29.77-29.63)x(1.32+1.37)/2	0.19		
		(29.18-29.77)x(1.32+1.32)/2	-0.78		
		(28.78-29.18)x(1.59+1.32)/2	-0.58		
				0.09	
123	B1	(30.18-29.61)x(1.34+1.51)/2	0.81		
1830.00		(30.64-30.18)x(1.18+1.34)/2	0.58		
		(31.16-30.64)x(0.97+1.18)/2	0.56		
		(30.41-31.16)x(0.97+0.97)/2	-0.73		
		(29.61-30.41)x(1.51+0.97)/2	-0.99		
				0.23	
124	B1	(30.50-29.91)x(1.67+1.74)/2	1.01		
1845.00		(30.74-30.50)x(1.64+1.67)/2	0.40		
		(31.16-30.74)x(1.50+1.64)/2	0.66		
		(31.57-31.16)x(1.34+1.50)/2	0.58		
		(30.50-31.57)x(1.34+1.34)/2	-1.43		
		(29.91-30.50)x(1.74+1.34)/2	-0.91		
				0.31	
125	B1	(30.81-30.75)x(1.51+1.52)/2	0.09		
1860.00		(31.06-30.81)x(1.43+1.51)/2	0.37		
		(31.90-31.06)x(1.20+1.43)/2	1.10		
		(32.58-31.90)x(1.02+1.20)/2	0.75		
		(31.50-32.58)x(1.02+1.02)/2	-1.10		
		(30.75-31.50)x(1.52+1.02)/2	-0.95		
				0.26	
126	B1	(31.61-31.37)x(1.24+1.25)/2	0.30		
1875.00		(31.97-31.61)x(1.23+1.24)/2	0.44		
		(32.39-31.97)x(1.16+1.23)/2	0.50		
		(31.50-32.39)x(1.16+1.16)/2	-1.03		
		(31.37-31.50)x(1.25+1.16)/2	-0.16		
				0.05	
127	B1	(31.80-31.25)x(1.17+1.29)/2	0.68		
1890.00		(32.02-31.80)x(1.14+1.17)/2	0.25		
		(32.05-32.02)x(1.12+1.14)/2	0.03		
		(31.50-32.05)x(1.12+1.12)/2	-0.62		
		(31.25-31.50)x(1.29+1.12)/2	-0.30		
				0.04	

Il Direttore dei Lavori	L'Impresa	

ZONA VI01

	CALCOLO DELLE AREE		Foglio n. 17

RIPORTO

N. SEZIONE PROG.	FIG.	ELEMENTI DI CALCOLO	AREA ELEMENTARE mq	AREA FIGURA mq	NOTE
99b	RI1	(-10.25--13.72)x(3.31+3.31)/2	11.49		
1478.97		(-11.25--10.25)x(3.00+3.00)/2	-3.00		
		(-11.45--11.25)x(2.00+2.00)/2	-0.40		
		(-13.72--11.45)x(3.31+1.80)/2	-5.80		
				2.29	
99b	RI2	(0.50-0.70)x(2.00+2.00)/2	-0.40		
1478.97		(2.50-0.50)x(3.00+3.00)/2	6.00		
		(0.70-2.50)x(1.80+3.00)/2	-4.32		
				1.28	

Il Direttore dei Lavori	L'Impresa	

ZONA VI01

	CALCOLO DELLE LUNGHEZZE		Foglio n. 18

USURA

N. SEZIONE PROG.	FIG.	ELEMENTI DI CALCOLO	LUNGHEZZA ELEMENTARE ml	LUNGHEZZA FIGURA ml	NOTE
99b	a1	(-1.25--11.00)	9.75	9.75	

Il Direttore dei Lavori	L'Impresa	

ZONA VI01

	COMPUTO DEI VOLUMI	Foglio n. 19

RILEVATO

DALLA SEZ. DA PROG.	ALLA SEZ. A PROG.	SEZIONE	FIGURA	AREA	DISTANZA SEZIONI m	DISTANZA DI CALCOLO m	VOLUME PARZIALE mc	VOLUME TOTALE mc
99b	100	99b	A1	10.42	6.03	3.01	31.364	
1478.97	1485.00	100	A1	8.89	6.03	3.01	26.759	
								58.123
100	101	100	A1	8.89	15.00	7.50	66.675	
1485.00	1500.00	101	A1	9.01	15.00	7.50	67.575	
								134.250
101	102	101	A1	9.01	15.00	7.50	67.575	
1500.00	1515.00	102	A1	22.87	15.00	7.50	171.525	
								239.100
102	103	102	A1	22.87	15.00	7.50	171.525	
1515.00	1530.00	103	A1	13.82	15.00	7.50	103.650	
								275.175
103	104	103	A1	13.82	15.00	7.50	103.650	
1530.00	1545.00	104	A1	12.75	15.00	7.50	95.625	
								199.275
104	105	104	A1	12.75	15.00	7.50	95.625	
1545.00	1560.00	105	A1	9.36	15.00	7.50	70.200	
								165.825
105	106	105	A1	9.36	15.00	7.50	70.200	
1560.00	1575.00	106	A1	7.43	15.00	7.50	55.725	
								125.925
106	107	106	A1	7.43	15.00	7.50	55.725	
1575.00	1590.00	107	A1	6.07	15.00	7.50	45.525	
		107	A2	1.55	15.00	7.50	11.625	
								112.875
107	108	107	A1	6.07	15.00	7.50	45.525	
1590.00	1605.00	107	A2	1.55	15.00	7.50	11.625	
		108	A1	5.46	15.00	7.50	40.950	
		108	A2	0.88	15.00	7.50	6.600	
								104.700
108	109	108	A1	5.46	15.00	7.50	40.950	
1605.00	1620.00	108	A2	0.88	15.00	7.50	6.600	
		109	A1	8.60	15.00	7.50	64.500	
								112.050
109	110	109	A1	8.60	15.00	7.50	64.500	
1620.00	1635.00	110	A1	10.73	15.00	7.50	80.475	
								144.975
110	111	110	A1	10.73	15.00	7.50	80.475	
1635.00	1650.00	111	A1	0.43	15.00	7.50	3.225	
		111	A2	8.32	15.00	7.50	62.400	
		111	A3	1.25	15.00	7.50	9.375	
								155.475
111	112	111	A1	0.43	15.00	7.50	3.225	
1650.00	1665.00	111	A2	8.32	15.00	7.50	62.400	
		111	A3	1.25	15.00	7.50	9.375	
		112	A1	21.77	15.00	7.50	163.275	
								238.275
112	113	112	A1	21.77	15.00	7.50	163.275	
1665.00	1680.00	113	A1	31.04	15.00	7.50	232.800	
								396.075
113	114	113	A1	31.04	15.00	7.50	232.800	
1680.00	1695.00	114	A1	2.31	15.00	7.50	17.325	
		114	A2	3.41	15.00	7.50	25.575	
		114	A3	1.29	15.00	7.50	9.675	
								285.375
114	115	114	A1	2.31	15.00	7.50	17.325	
1695.00	1710.00	114	A2	3.41	15.00	7.50	25.575	
		114	A3	1.29	15.00	7.50	9.675	
		115	A1	3.41	15.00	7.50	25.575	
		115	A2	0.47	15.00	7.50	3.525	
								81.675
115	Rot1	115	A1	3.41	7.75	3.88	13.231	
1710.00	1717.75	115	A2	0.47	7.75	3.88	1.824	
		Rot1	A1	26.00	7.75	3.88	100.880	
								115.935
Rot1	Asse bin	Rot1	A1	26.00	1.41	0.71	18.460	
1717.75	1719.16	Asse bin	A1	0.03	1.41	0.71	0.021	
		Asse bin	A2	26.45	1.41	0.71	18.779	
								37.260
Asse bin	Rot2	Asse bin	A1	0.03	1.41	0.70	0.021	
1719.16	1720.57	Asse bin	A2	26.45	1.41	0.70	18.515	
		Rot2	A1	1.22	1.41	0.70	0.854	
		Rot2	A1	19.88	1.41	0.70	13.916	
								33.306
Rot2	116	Rot2	A1	1.22	4.43	2.22	2.708	
1720.57	1725.00	Rot2	A1	19.88	4.43	2.22	44.134	
		116	A1	0.38	4.43	2.22	0.844	
		116	A2	0.07	4.43	2.22	0.155	
		116	A3	18.77	4.43	2.22	41.669	
		116	A4	0.98	4.43	2.22	2.176	
								91.686
116	117	116	A1	0.38	15.00	7.50	2.850	
1725.00	1740.00	116	A2	0.07	15.00	7.50	0.525	
		116	A3	18.77	15.00	7.50	140.775	
		116	A4	0.98	15.00	7.50	7.350	
		117	A1	16.26	15.00	7.50	121.950	
		117	A2	1.81	15.00	7.50	13.575	
								287.025
117	118	117	A1	16.26	15.00	7.50	121.950	
1740.00	1755.00	117	A2	1.81	15.00	7.50	13.575	
		118	A1	24.59	15.00	7.50	184.425	
		118	A2	1.51	15.00	7.50	11.325	
								331.275
118	119	118	A1	24.59	15.00	7.50	184.425	
1755.00	1770.00	118	A2	1.51	15.00	7.50	11.325	
		119	A1	29.98	15.00	7.50	224.850	
		119	A2	1.46	15.00	7.50	10.950	
								431.550
119	120	119	A1	29.98	15.00	7.50	224.850	
1770.00	1785.00	119	A2	1.46	15.00	7.50	10.950	
		120	A1	0.03	15.00	7.50	0.225	
		120	A2	26.44	15.00	7.50	198.300	
		120	A3	1.12	15.00	7.50	8.400	
								442.725
120	121	120	A1	0.03	15.00	7.50	0.225	
1785.00	1800.00	120	A2	26.44	15.00	7.50	198.300	
							198.525	4599.910

	COMPUTO DEI VOLUMI		Foglio n. 20

RILEVATO

DALLA SEZ. DA PROG.	ALLA SEZ. A PROG.	SEZIONE	FIGURA	AREA	DISTANZA SEZIONI m	DISTANZA DI CALCOLO m	VOLUME PARZIALE mc	VOLUME TOTALE mc
						A RIPORTARE mc	198.525	4599.910
		120	A3	1.12	15.00	7.50	8.400	
		121	A1	21.95	15.00	7.50	164.625	
		121	A2	1.02	15.00	7.50	7.650	
								379.200
121	122	121	A1	21.95	15.00	7.50	164.625	
1800.00	1815.00	121	A2	1.02	15.00	7.50	7.650	
		122	A1	25.97	15.00	7.50	194.775	
								367.050
122	123	122	A1	25.97	15.00	7.50	194.775	
1815.00	1830.00	123	A1	33.50	15.00	7.50	251.250	
		123	A2	1.38	15.00	7.50	10.350	
								456.375
123	124	123	A1	33.50	15.00	7.50	251.250	
1830.00	1845.00	123	A2	1.38	15.00	7.50	10.350	
		124	A1	44.16	15.00	7.50	331.200	
		124	A2	1.17	15.00	7.50	8.775	
								601.575
124	125	124	A1	44.16	15.00	7.50	331.200	
1845.00	1860.00	124	A2	1.17	15.00	7.50	8.775	
		125	A1	52.67	15.00	7.50	395.025	
		125	A2	1.07	15.00	7.50	8.025	
								743.025
125	126	125	A1	52.67	15.00	7.50	395.025	
1860.00	1875.00	125	A2	1.07	15.00	7.50	8.025	
		126	A1	53.04	15.00	7.50	397.800	
		126	A2	1.10	15.00	7.50	8.250	
								809.100
126	127	126	A1	53.04	15.00	7.50	397.800	
1875.00	1890.00	126	A2	1.10	15.00	7.50	8.250	
		127	A1	1.48	15.00	7.50	11.100	
		127	A2	45.53	15.00	7.50	341.475	
								758.625
127	128	127	A1	1.48	15.00	7.50	11.100	
1890.00	1905.00	127	A2	45.53	15.00	7.50	341.475	
		128	A1	52.82	15.00	7.50	396.150	
								748.725
128	129	128	A1	52.82	15.00	7.50	396.150	
1905.00	1920.00	129	A1	68.34	15.00	7.50	512.550	
								908.700
129	130	129	A1	68.34	15.00	7.50	512.550	
1920.00	1935.00	130	A1	60.84	15.00	7.50	456.300	
								968.850

Il Direttore dei Lavori	L'Impresa	TOTALE ARTICOLO	11341.135

	COMPUTO DEI VOLUMI		Foglio n. 21

STERRO

DALLA SEZ. DA PROG.	ALLA SEZ. A PROG.	SEZIONE	FIGURA	AREA	DISTANZA SEZIONI m	DISTANZA DI CALCOLO m	VOLUME PARZIALE mc	VOLUME TOTALE mc
99b	100	99b	B1	29.81	6.03	3.01	89.728	
1478.97	1485.00	100	B1	11.88	6.03	3.01	35.759	
		100	B2	0.02	6.03	3.01	0.060	
								125.547
100	101	100	B1	11.88	15.00	7.50	89.100	
1485.00	1500.00	100	B2	0.02	15.00	7.50	0.150	
		101	B1	12.55	15.00	7.50	94.125	
								183.375
101	102	101	B1	12.55	15.00	7.50	94.125	
1500.00	1515.00	102	B1	1.39	15.00	7.50	10.425	
								104.550
102	103	102	B1	1.39	15.00	7.50	10.425	
1515.00	1530.00	103	B1	7.04	15.00	7.50	52.800	
								63.225
103	104	103	B1	7.04	15.00	7.50	52.800	
1530.00	1545.00	104	B1	12.20	15.00	7.50	91.500	
								144.300
104	105	104	B1	12.20	15.00	7.50	91.500	
1545.00	1560.00	105	B1	14.27	15.00	7.50	107.025	
								198.525
105	106	105	B1	14.27	15.00	7.50	107.025	
1560.00	1575.00	106	B1	15.98	15.00	7.50	119.850	
		106	B2	0.02	15.00	7.50	0.150	
								227.025
106	107	106	B1	15.98	15.00	7.50	119.850	
1575.00	1590.00	106	B2	0.02	15.00	7.50	0.150	
		107	B1	16.83	15.00	7.50	126.225	
		107	B2	0.10	15.00	7.50	0.750	
								246.975
107	108	107	B1	16.83	15.00	7.50	126.225	
1590.00	1605.00	107	B2	0.10	15.00	7.50	0.750	
		108	B1	14.24	15.00	7.50	106.800	
		108	B2	0.69	15.00	7.50	5.175	
								238.950
108	109	108	B1	14.24	15.00	7.50	106.800	
1605.00	1620.00	108	B2	0.69	15.00	7.50	5.175	
		109	B1	10.37	15.00	7.50	77.775	
								189.750
109	110	109	B1	10.37	15.00	7.50	77.775	
1620.00	1635.00	110	B1	8.21	15.00	7.50	61.575	
								139.350
110	111	110	B1	8.21	15.00	7.50	61.575	
1635.00	1650.00	111	B1	7.37	15.00	7.50	55.275	
		111	B2	0.49	15.00	7.50	3.675	
								120.525
111	112	111	B1	7.37	15.00	7.50	55.275	
1650.00	1665.00	111	B2	0.49	15.00	7.50	3.675	
								58.950
113	114	114	B1	2.90	15.00	7.50	21.750	
1680.00	1695.00	114	B2	0.51	15.00	7.50	3.825	
								25.575
114	115	114	B1	2.90	15.00	7.50	21.750	
1695.00	1710.00	114	B2	0.51	15.00	7.50	3.825	
		115	B1	0.28	15.00	7.50	2.100	
		115	B2	0.42	15.00	7.50	3.150	
								30.825
115	Rot1	115	B1	0.28	7.75	3.88	1.086	
1710.00	1717.75	115	B2	0.42	7.75	3.88	1.630	
								2.716
Asse bin	Rot2	Rot2	B1	0.07	1.41	0.70	0.049	
								0.049
Rot2	116	Rot2	B1	0.07	4.43	2.22	0.155	
1720.57	1725.00	116	B1	0.24	4.43	2.22	0.533	
		116	B2	0.32	4.43	2.22	0.710	
								1.398
116	117	116	B1	0.24	15.00	7.50	1.800	
1725.00	1740.00	116	B2	0.32	15.00	7.50	2.400	
		117	B1	0.12	15.00	7.50	0.900	
								5.100
117	118	117	B1	0.12	15.00	7.50	0.900	
1740.00	1755.00	118	B1	0.03	15.00	7.50	0.225	
								1.125
118	119	118	B1	0.03	15.00	7.50	0.225	
1755.00	1770.00	119	B1	0.05	15.00	7.50	0.375	
								0.600
119	120	119	B1	0.05	15.00	7.50	0.375	
1770.00	1785.00	120	B1	0.41	15.00	7.50	3.075	
		120	B2	0.23	15.00	7.50	1.725	
								5.175
120	121	120	B1	0.41	15.00	7.50	3.075	
1785.00	1800.00	120	B2	0.23	15.00	7.50	1.725	
		121	B1	0.52	15.00	7.50	3.900	
								8.700
121	122	121	B1	0.52	15.00	7.50	3.900	
1800.00	1815.00	122	B1	0.57	15.00	7.50	4.275	
		122	B2	0.09	15.00	7.50	0.675	
								8.850
122	123	122	B1	0.57	15.00	7.50	4.275	
1815.00	1830.00	122	B2	0.09	15.00	7.50	0.675	
		123	B1	0.23	15.00	7.50	1.725	
								6.675
123	124	123	B1	0.23	15.00	7.50	1.725	
1830.00	1845.00	124	B1	0.31	15.00	7.50	2.325	
								4.050
124	125	124	B1	0.31	15.00	7.50	2.325	
1845.00	1860.00	125	B1	0.26	15.00	7.50	1.950	
								4.275
125	126	125	B1	0.26	15.00	7.50	1.950	
1860.00	1875.00	126	B1	0.05	15.00	7.50	0.375	
								2.325
126	127	126	B1	0.05	15.00	7.50	0.375	
1875.00	1890.00	127	B1	0.04	15.00	7.50	0.300	
								0.675
127	128	127	B1	0.04	15.00	7.50	0.300	
								0.300

Il Direttore dei Lavori	L'Impresa	TOTALE ARTICOLO	2149.460

ZONA VI01

	COMPUTO DEI VOLUMI		Foglio n. 22

RIPORTO

DALLA SEZ. DA PROG.	ALLA SEZ. A PROG.	SEZIONE	FIGURA	AREA	DISTANZA SEZIONI m	DISTANZA DI CALCOLO m	VOLUME PARZIALE mc	VOLUME TOTALE mc
99b	100	99b	RI1	2.29	6.03	3.01	6.893	
1478.97	1485.00	99b	RI2	1.28	6.03	3.01	3.853	
								10.746

Il Direttore dei Lavori	L'Impresa	TOTALE ARTICOLO	10.746

ZONA VI01

	COMPUTO DI SUPERFICI		Foglio n. 23

USURA

DALLA SEZ. DA PROG.	ALLA SEZ. A PROG.	SEZIONE	FIGURA	LUNGHEZZA	DISTANZA SEZIONI ml	DISTANZA DI CALCOLO ml	AREA PARZIALE mq	AREA TOTALE mq
99b	100	99b	a1	9.75	6.03	3.01	29.35	29.35

Il Direttore dei Lavori	L'Impresa	TOTALE ARTICOLO	29.35

ZONA VI01

	COMPUTO DEI VOLUMI		Foglio n. 24

Volume dalla sezione 99b alla sezione 130

ARTICOLO			VOLUME
A	RILEVATO	mc	11341.135
B	STERRO	mc	2149.460
RI	RIPORTO	mc	10.746
a	USURA	mq	29.35

	CALCOLO DELLE AREE		Foglio n. 1

ARGILLA ESPANSA

N. SEZIONE PROG.	FIG.	ELEMENTI DI CALCOLO	AREA ELEMENTARE mq	AREA FIGURA mq	NOTE
184	AR1	(12.35-13.61)x(6.82+6.83)/2	-8.60		
2745.00		(12.60-12.35)x(6.52+6.82)/2	1.67		
		(5.97-12.60)x(6.05+6.52)/2	-41.67		
		(7.00-5.97)x(6.05+6.05)/2	6.23		
		(7.19-7.00)x(6.05+6.05)/2	1.15		
		(7.24-7.19)x(6.05+6.05)/2	0.30		
		(8.25-7.24)x(6.05+6.05)/2	6.11		
		(8.52-8.25)x(6.05+6.05)/2	1.63		
		(9.30-8.52)x(6.03+6.05)/2	4.71		
		(9.78-9.30)x(6.03+6.03)/2	2.89		
		(10.33-9.78)x(6.03+6.03)/2	3.32		
		(11.03-10.33)x(6.02+6.03)/2	4.22		
		(11.34-11.03)x(6.02+6.02)/2	1.87		
		(11.41-11.34)x(6.02+6.02)/2	0.42		
		(12.34-11.41)x(5.99+6.02)/2	5.58		
		(12.43-12.34)x(5.99+5.99)/2	0.54		
		(12.91-12.43)x(5.99+5.99)/2	2.88		
		(13.45-12.91)x(5.98+5.99)/2	3.23		
		(13.56-13.45)x(5.98+5.98)/2	0.66		
		(13.63-13.56)x(5.98+5.98)/2	0.42		
		(14.37-13.63)x(5.95+5.98)/2	4.41		
		(14.92-14.37)x(5.96+5.95)/2	3.28		
		(13.61-14.92)x(6.83+5.96)/2	-8.38		
				3.13	
185	AR1	(12.61-6.22)x(6.68+6.24)/2	41.28		
2760.00		(12.36-12.61)x(6.99+6.68)/2	-1.71		
		(13.62-12.36)x(7.00+6.99)/2	8.81		
		(15.31-13.62)x(5.87+7.00)/2	10.88		
		(15.10-15.31)x(5.87+5.87)/2	-1.23		
		(14.57-15.10)x(5.88+5.87)/2	-3.11		
		(14.09-14.57)x(5.89+5.88)/2	-2.82		
		(13.35-14.09)x(5.91+5.89)/2	-4.37		
		(13.34-13.35)x(5.91+5.91)/2	-0.06		
		(13.05-13.34)x(5.91+5.91)/2	-1.71		
		(12.84-13.05)x(5.92+5.91)/2	-1.24		
		(12.02-12.84)x(5.94+5.92)/2	-4.86		
		(11.39-12.02)x(5.95+5.94)/2	-3.75		
		(11.00-11.39)x(5.97+5.95)/2	-2.32		
		(10.94-11.00)x(5.97+5.97)/2	-0.36		
		(9.98-10.94)x(6.00+5.97)/2	-5.75		
		(9.76-9.98)x(6.01+6.00)/2	-1.32		
		(9.01-9.76)x(6.06+6.01)/2	-4.53		
		(8.61-9.01)x(6.09+6.06)/2	-2.43		
		(8.01-8.61)x(6.15+6.09)/2	-3.67		
		(7.94-8.01)x(6.15+6.15)/2	-0.43		
		(7.33-7.94)x(6.19+6.15)/2	-3.76		
		(6.91-7.33)x(6.21+6.19)/2	-2.60		
		(6.86-6.91)x(6.22+6.21)/2	-0.31		
		(6.22-6.86)x(6.24+6.22)/2	-3.99		
				4.64	
186	AR1	(12.35-13.62)x(7.21+7.22)/2	-9.16		
2775.00		(12.61-12.35)x(6.91+7.21)/2	1.84		
		(3.56-12.61)x(6.27+6.91)/2	-59.64		
		(4.70-3.56)x(6.29+6.27)/2	7.16		
		(4.74-4.70)x(6.29+6.29)/2	0.25		
		(5.23-4.74)x(6.29+6.29)/2	3.08		
		(5.76-5.23)x(6.30+6.29)/2	3.34		
		(5.78-5.76)x(6.30+6.30)/2	0.13		
		(6.42-5.78)x(6.29+6.30)/2	4.03		
		(6.46-6.42)x(6.29+6.29)/2	0.25		
		(6.84-6.46)x(6.29+6.29)/2	2.39		
		(6.86-6.84)x(6.29+6.29)/2	0.13		
		(7.66-6.86)x(6.26+6.29)/2	5.02		
		(7.91-7.66)x(6.25+6.26)/2	1.56		
		(7.93-7.91)x(6.25+6.25)/2	0.12		
		(8.83-7.93)x(6.21+6.25)/2	5.61		
		(8.91-8.83)x(6.21+6.21)/2	0.50		
		(8.93-8.91)x(6.21+6.21)/2	0.12		
		(9.66-8.93)x(6.18+6.21)/2	4.52		
		(9.68-9.66)x(6.18+6.18)/2	0.12		
		(9.98-9.68)x(6.17+6.18)/2	1.85		
		(10.80-9.98)x(6.14+6.17)/2	5.05		
		(15.55-10.80)x(5.93+6.14)/2	28.67		
		(13.62-15.55)x(7.22+5.93)/2	-12.69		
				5.75	
187	AR1	(12.61-0.77)x(7.18+6.35)/2	80.10		
2790.00		(12.36-12.61)x(7.49+7.18)/2	-1.83		
		(13.62-12.36)x(7.49+7.49)/2	9.44		
		(16.09-13.62)x(5.85+7.49)/2	16.47		
		(8.09-16.09)x(6.25+5.85)/2	-48.40		
		(7.36-8.09)x(6.24+6.25)/2	-4.56		
		(7.21-7.36)x(6.23+6.24)/2	-0.94		
		(7.20-7.21)x(6.23+6.23)/2	-0.06		
		(6.19-7.20)x(6.23+6.23)/2	-6.29		
		(6.07-6.19)x(6.23+6.23)/2	-0.75		
		(5.19-6.07)x(6.22+6.23)/2	-5.48		
		(4.99-5.19)x(6.23+6.22)/2	-1.25		
		(4.98-4.99)x(6.23+6.23)/2	-0.06		
		(4.19-4.98)x(6.24+6.23)/2	-4.93		
		(3.87-4.19)x(6.25+6.24)/2	-2.00		
		(3.19-3.87)x(6.28+6.25)/2	-4.26		
		(3.18-3.19)x(6.28+6.28)/2	-0.06		
		(2.74-3.18)x(6.30+6.28)/2	-2.77		
		(2.15-2.74)x(6.32+6.30)/2	-3.72		
		(1.60-2.15)x(6.34+6.32)/2	-3.48		
		(1.58-1.60)x(6.34+6.34)/2	-0.13		
		(1.10-1.58)x(6.35+6.34)/2	-3.05		
		(1.09-1.10)x(6.35+6.35)/2	-0.06		
		(0.77-1.09)x(6.35+6.35)/2	-2.03		
				9.90	
189	AR1	(-12.61--13.55)x(6.99+6.37)/2	6.28		
2820.00		(-11.34--12.61)x(6.99+6.99)/2	8.88		
		(-11.66--11.34)x(6.61+6.99)/2	-2.18		
		(-1.75--11.66)x(7.08+6.61)/2	67.83		
		(-0.70--1.75)x(7.13+7.08)/2	7.46		
		(0.66--0.70)x(7.09+7.13)/2	9.67		
		(2.27-0.66)x(7.13+7.09)/2	11.45		
		A RIPORTARE mq	109.39		

ARGILLA ESPANSA

N. SEZIONE PROG.	FIG.	ELEMENTI DI CALCOLO	AREA ELEMENTARE mq	AREA FIGURA mq	NOTE
		RIPORTO mq	109.39		
		(12.15-2.27)x(7.36+7.13)/2	71.58		
		(11.87-12.15)x(7.69+7.36)/2	-2.11		
		(13.13-11.87)x(7.70+7.69)/2	9.70		
		(15.95-13.13)x(5.82+7.70)/2	19.06		
		(5.53-15.95)x(6.23+5.82)/2	-62.78		
		(5.03-5.53)x(6.21+6.23)/2	-3.11		
		(5.01-5.03)x(6.21+6.21)/2	-0.12		
		(4.38-5.01)x(6.19+6.21)/2	-3.91		
		(4.01-4.38)x(6.18+6.19)/2	-2.29		
		(3.96-4.01)x(6.18+6.18)/2	-0.31		
		(3.27-3.96)x(6.15+6.18)/2	-4.25		
		(2.97-3.27)x(6.14+6.15)/2	-1.84		
		(2.22-2.97)x(6.12+6.14)/2	-4.60		
		(2.20-2.22)x(6.12+6.12)/2	-0.12		
		(1.96-2.20)x(6.11+6.12)/2	-1.47		
		(1.17-1.96)x(6.10+6.11)/2	-4.82		
		(1.16-1.17)x(6.10+6.10)/2	-0.06		
		(0.96-1.16)x(6.10+6.10)/2	-1.22		
		(0.10-0.96)x(6.10+6.10)/2	-5.25		
		(-0.04-0.10)x(6.10+6.10)/2	-0.85		
		(-0.94--0.04)x(6.12+6.10)/2	-5.50		
		(-1.02--0.94)x(6.12+6.12)/2	-0.49		
		(-1.04--1.02)x(6.12+6.12)/2	-0.12		
		(-2.01--1.04)x(6.14+6.12)/2	-5.95		
		(-2.02--2.01)x(6.14+6.14)/2	-0.06		
		(-2.03--2.02)x(6.14+6.14)/2	-0.06		
		(-2.67--2.03)x(6.16+6.14)/2	-3.94		
		(-3.05--2.67)x(6.18+6.16)/2	-2.34		
		(-3.09--3.05)x(6.18+6.18)/2	-0.25		
		(-3.10--3.09)x(6.18+6.18)/2	-0.06		
		(-4.10--3.10)x(6.21+6.18)/2	-6.19		
		(-4.17--4.10)x(6.21+6.21)/2	-0.43		
		(-5.10--4.17)x(6.25+6.21)/2	-5.79		
		(-5.22--5.10)x(6.25+6.25)/2	-0.75		
		(-6.11--5.22)x(6.30+6.25)/2	-5.58		
		(-6.30--6.11)x(6.31+6.30)/2	-1.20		
		(-6.34--6.30)x(6.31+6.31)/2	-0.25		
		(-7.16--6.34)x(6.33+6.31)/2	-5.18		
		(-7.39--7.16)x(6.35+6.33)/2	-1.46		
		(-7.40--7.39)x(6.35+6.35)/2	-0.06		
		(-8.16--7.40)x(6.38+6.35)/2	-4.84		
		(-8.44--8.16)x(6.40+6.38)/2	-1.79		
		(-9.16--8.44)x(6.44+6.40)/2	-4.62		
		(-9.35--9.16)x(6.45+6.44)/2	-1.22		
		(-9.69--9.35)x(6.44+6.45)/2	-2.19		
		(-10.32--9.69)x(6.43+6.44)/2	-4.05		
		(-10.36--10.32)x(6.43+6.43)/2	-0.26		
		(-10.78--10.36)x(6.42+6.43)/2	-2.70		
		(-10.82--10.78)x(6.42+6.42)/2	-0.26		
		(-11.41--10.82)x(6.40+6.42)/2	-3.78		
		(-11.94--11.41)x(6.38+6.40)/2	-3.39		
		(-12.40--11.94)x(6.37+6.38)/2	-2.93		
		(-12.92--12.40)x(6.37+6.37)/2	-3.31		
		(-13.40--12.92)x(6.37+6.37)/2	-3.06		
		(-13.55--13.40)x(6.37+6.37)/2	-0.96		
				25.60	
190 2835.00	AR1	(-12.61--14.21)x(7.49+6.42)/2	11.13		
		(-11.34--12.61)x(7.49+7.49)/2	9.51		
		(-11.65--11.34)x(7.11+7.49)/2	-2.26		
		(-1.75--11.65)x(7.48+7.11)/2	72.22		
		(-0.69--1.75)x(7.52+7.48)/2	7.95		
		(0.67--0.69)x(7.50+7.52)/2	10.21		
		(2.03-0.67)x(7.50+7.50)/2	10.20		
		(11.91-2.03)x(7.49+7.50)/2	74.05		
		(11.62-11.91)x(7.84+7.49)/2	-2.22		
		(12.89-11.62)x(7.85+7.84)/2	9.96		
		(15.61-12.89)x(6.03+7.85)/2	18.88		
		(9.51-15.61)x(6.19+6.03)/2	-37.27		
		(8.59-9.51)x(6.24+6.19)/2	-5.72		
		(8.55-8.59)x(6.24+6.24)/2	-0.25		
		(8.42-8.55)x(6.25+6.24)/2	-0.81		
		(8.37-8.42)x(6.25+6.25)/2	-0.31		
		(7.48-8.37)x(6.26+6.25)/2	-5.57		
		(7.30-7.48)x(6.26+6.26)/2	-1.13		
		(7.28-7.30)x(6.26+6.26)/2	-0.13		
		(6.44-7.28)x(6.27+6.26)/2	-5.26		
		(5.68-6.44)x(6.27+6.27)/2	-4.77		
		(5.45-5.68)x(6.28+6.27)/2	-1.44		
		(5.44-5.45)x(6.28+6.28)/2	-0.06		
		(5.17-5.44)x(6.28+6.28)/2	-1.70		
		(4.42-5.17)x(6.30+6.28)/2	-4.72		
		(4.10-4.42)x(6.30+6.30)/2	-2.02		
		(3.39-4.10)x(6.32+6.30)/2	-4.48		
		(3.36-3.39)x(6.32+6.32)/2	-0.19		
		(3.02-3.36)x(6.32+6.32)/2	-2.15		
		(2.38-3.02)x(6.34+6.32)/2	-4.05		
		(1.98-2.38)x(6.35+6.34)/2	-2.54		
		(1.36-1.98)x(6.37+6.35)/2	-3.94		
		(1.34-1.36)x(6.37+6.37)/2	-0.13		
		(0.89-1.34)x(6.37+6.37)/2	-2.87		
		(0.33-0.89)x(6.39+6.37)/2	-3.57		
		(-0.14-0.33)x(6.40+6.39)/2	-3.01		
		(-0.67--0.14)x(6.42+6.40)/2	-3.40		
		(-0.68--0.67)x(6.42+6.42)/2	-0.06		
		(-1.22--0.68)x(6.44+6.42)/2	-3.47		
		(-1.24--1.22)x(6.44+6.44)/2	-0.13		
		(-1.71--1.24)x(6.46+6.44)/2	-3.03		
		(-2.27--1.71)x(6.48+6.46)/2	-3.62		
		(-2.28--2.27)x(6.48+6.48)/2	-0.06		
		(-2.72--2.28)x(6.50+6.48)/2	-2.86		
		(-2.77--2.72)x(6.50+6.50)/2	-0.32		
		(-3.38--2.77)x(6.52+6.50)/2	-3.97		
		(-3.76--3.38)x(6.53+6.52)/2	-2.48		
		(-3.82--3.76)x(6.53+6.53)/2	-0.39		
		(-4.49--3.82)x(6.53+6.53)/2	-4.38		
		A RIPORTARE mq	93.37		

ARGILLA ESPANSA

N. SEZIONE PROG.	FIG.	ELEMENTI DI CALCOLO	AREA ELEMENTARE mq	AREA FIGURA mq	NOTE
		RIPORTO mq	93.37		
		(-4.51--4.49)x(6.53+6.53)/2	-0.13		
		(-4.86--4.51)x(6.53+6.53)/2	-2.29		
		(-4.91--4.86)x(6.53+6.53)/2	-0.33		
		(-5.63--4.91)x(6.51+6.53)/2	-4.69		
		(-5.94--5.63)x(6.51+6.51)/2	-2.02		
		(-6.70--5.94)x(6.48+6.51)/2	-4.94		
		(-6.96--6.70)x(6.48+6.48)/2	-1.68		
		(-6.97--6.96)x(6.48+6.48)/2	-0.06		
		(-7.78--6.97)x(6.45+6.48)/2	-5.24		
		(-7.81--7.78)x(6.45+6.45)/2	-0.19		
		(-8.00--7.81)x(6.44+6.45)/2	-1.22		
		(-8.83--8.00)x(6.42+6.44)/2	-5.34		
		(-8.97--8.83)x(6.42+6.42)/2	-0.90		
		(-9.83--8.97)x(6.43+6.42)/2	-5.53		
		(-9.84--9.83)x(6.43+6.43)/2	-0.06		
		(-9.96--9.84)x(6.44+6.43)/2	-0.77		
		(-10.89--9.96)x(6.46+6.44)/2	-6.00		
		(-10.92--10.89)x(6.46+6.46)/2	-0.19		
		(-10.99--10.92)x(6.46+6.46)/2	-0.45		
		(-11.00--10.99)x(6.46+6.46)/2	-0.06		
		(-11.99--11.00)x(6.46+6.46)/2	-6.40		
		(-12.02--11.99)x(6.46+6.46)/2	-0.19		
		(-12.06--12.02)x(6.46+6.46)/2	-0.26		
		(-12.10--12.06)x(6.46+6.46)/2	-0.26		
		(-12.85--12.10)x(6.45+6.46)/2	-4.84		
		(-13.08--12.85)x(6.45+6.45)/2	-1.48		
		(-13.10--13.08)x(6.45+6.45)/2	-0.13		
		(-13.11--13.10)x(6.45+6.45)/2	-0.06		
		(-13.13--13.11)x(6.45+6.45)/2	-0.13		
		(-14.21--13.13)x(6.42+6.45)/2	-6.95		
				30.58	
191 2850.00	AR1	(-12.61--14.98)x(7.99+6.41)/2	17.06		
		(-11.34--12.61)x(7.98+7.99)/2	10.14		
		(-11.65--11.34)x(7.62+7.98)/2	-2.42		
		(-1.75--11.65)x(7.87+7.62)/2	76.68		
		(-0.68--1.75)x(7.90+7.87)/2	8.44		
		(0.68--0.68)x(7.90+7.90)/2	10.74		
		(1.78-0.68)x(7.87+7.90)/2	8.67		
		(11.68-1.78)x(7.64+7.87)/2	76.77		
		(11.38-11.68)x(8.00+7.64)/2	-2.35		
		(12.64-11.38)x(8.01+8.00)/2	10.09		
		(15.53-12.64)x(6.08+8.01)/2	20.36		
		(8.92-15.53)x(6.33+6.08)/2	-41.02		
		(8.13-8.92)x(6.31+6.33)/2	-4.99		
		(8.00-8.13)x(6.32+6.31)/2	-0.82		
		(7.91-8.00)x(6.32+6.32)/2	-0.57		
		(7.06-7.91)x(6.34+6.32)/2	-5.38		
		(6.89-7.06)x(6.34+6.34)/2	-1.08		
		(6.00-6.89)x(6.35+6.34)/2	-5.65		
		(5.96-6.00)x(6.35+6.35)/2	-0.25		
		(5.83-5.96)x(6.35+6.35)/2	-0.83		
		(5.72-5.83)x(6.35+6.35)/2	-0.70		
		(4.83-5.72)x(6.36+6.35)/2	-5.66		
		(4.78-4.83)x(6.36+6.36)/2	-0.32		
		(3.81-4.78)x(6.35+6.36)/2	-6.16		
		(3.80-3.81)x(6.35+6.35)/2	-0.06		
		(2.82-3.80)x(6.38+6.35)/2	-6.24		
		(2.76-2.82)x(6.38+6.38)/2	-0.38		
		(2.49-2.76)x(6.38+6.38)/2	-1.72		
		(1.76-2.49)x(6.39+6.38)/2	-4.66		
		(1.75-1.76)x(6.39+6.39)/2	-0.06		
		(1.72-1.75)x(6.39+6.39)/2	-0.19		
		(1.71-1.72)x(6.39+6.39)/2	-0.06		
		(0.72-1.71)x(6.40+6.39)/2	-6.33		
		(0.67-0.72)x(6.40+6.40)/2	-0.32		
		(0.64-0.67)x(6.40+6.40)/2	-0.19		
		(-0.32-0.64)x(6.40+6.40)/2	-6.14		
		(-0.43--0.32)x(6.40+6.40)/2	-0.70		
		(-0.45--0.43)x(6.40+6.40)/2	-0.13		
		(-1.36--0.45)x(6.39+6.40)/2	-5.82		
		(-1.37--1.36)x(6.39+6.39)/2	-0.06		
		(-1.51--1.37)x(6.39+6.39)/2	-0.89		
		(-2.37--1.51)x(6.39+6.39)/2	-5.50		
		(-2.56--2.37)x(6.39+6.39)/2	-1.21		
		(-2.57--2.56)x(6.39+6.39)/2	-0.06		
		(-3.40--2.57)x(6.38+6.39)/2	-5.30		
		(-3.62--3.40)x(6.39+6.38)/2	-1.40		
		(-4.41--3.62)x(6.39+6.39)/2	-5.05		
		(-4.43--4.41)x(6.39+6.39)/2	-0.13		
		(-4.70--4.43)x(6.39+6.39)/2	-1.73		
		(-5.44--4.70)x(6.40+6.39)/2	-4.73		
		(-5.74--5.44)x(6.40+6.40)/2	-1.92		
		(-6.45--5.74)x(6.41+6.40)/2	-4.55		
		(-6.46--6.45)x(6.41+6.41)/2	-0.06		
		(-6.80--6.46)x(6.41+6.41)/2	-2.18		
		(-7.46--6.80)x(6.43+6.41)/2	-4.24		
		(-7.85--7.46)x(6.43+6.43)/2	-2.51		
		(-8.48--7.85)x(6.45+6.43)/2	-4.06		
		(-8.53--8.48)x(6.45+6.45)/2	-0.32		
		(-8.94--8.53)x(6.45+6.45)/2	-2.64		
		(-9.49--8.94)x(6.47+6.45)/2	-3.55		
		(-9.56--9.49)x(6.47+6.47)/2	-0.45		
		(-10.04--9.56)x(6.47+6.47)/2	-3.11		
		(-10.58--10.04)x(6.47+6.47)/2	-3.49		
		(-10.59--10.58)x(6.47+6.47)/2	-0.06		
		(-11.11--10.59)x(6.47+6.47)/2	-3.36		
		(-11.61--11.11)x(6.47+6.47)/2	-3.23		
		(-12.17--11.61)x(6.46+6.47)/2	-3.62		
		(-12.18--12.17)x(6.46+6.46)/2	-0.06		
		(-12.65--12.18)x(6.46+6.46)/2	-3.04		
		(-12.70--12.65)x(6.46+6.46)/2	-0.32		
		(-13.12--12.70)x(6.45+6.46)/2	-2.71		
		(-13.70--13.12)x(6.44+6.45)/2	-3.74		
		(-14.34--13.70)x(6.42+6.44)/2	-4.12		
		(-14.98--14.34)x(6.41+6.42)/2	-4.11		
		A RIPORTARE mq	40.24		

ARGILLA ESPANSA

N. SEZIONE PROG.	FIG.	ELEMENTI DI CALCOLO	AREA ELEMENTARE mq	AREA FIGURA mq	NOTE
		RIPORTO mq	40.24		
				40.24	
192	AR1	(-12.61--15.76)x(8.47+6.37)/2	23.37		
2865.00		(-11.34--12.61)x(8.47+8.47)/2	10.76		
		(-11.64--11.34)x(8.11+8.47)/2	-2.49		
		(-1.75--11.64)x(8.27+8.11)/2	81.00		
		(-0.68--1.75)x(8.28+8.27)/2	8.85		
		(0.69--0.68)x(8.29+8.28)/2	11.35		
		(1.78-0.69)x(8.26+8.29)/2	9.02		
		(11.68-1.78)x(7.97+8.26)/2	80.34		
		(11.37-11.68)x(8.34+7.97)/2	-2.53		
		(12.64-11.37)x(8.34+8.34)/2	10.59		
		(16.29-12.64)x(5.91+8.34)/2	26.01		
		(-11.31-16.29)x(6.37+5.91)/2	-169.46		
		(-12.21--11.31)x(6.36+6.37)/2	-5.73		
		(-12.22--12.21)x(6.36+6.36)/2	-0.06		
		(-12.39--12.22)x(6.36+6.36)/2	-1.08		
		(-13.20--12.39)x(6.36+6.36)/2	-5.15		
		(-13.23--13.20)x(6.36+6.36)/2	-0.19		
		(-13.99--13.23)x(6.36+6.36)/2	-4.83		
		(-14.24--13.99)x(6.36+6.36)/2	-1.59		
		(-14.51--14.24)x(6.36+6.36)/2	-1.72		
		(-15.76--14.51)x(6.37+6.36)/2	-7.96		
				58.50	
193	AR1	(-12.61--16.74)x(9.04+6.28)/2	31.64		
2880.00		(-11.34--12.61)x(9.03+9.04)/2	11.47		
		(-11.63--11.34)x(8.68+9.03)/2	-2.57		
		(-1.75--11.63)x(8.65+8.68)/2	85.61		
		(-0.67--1.75)x(8.64+8.65)/2	9.34		
		(0.69--0.67)x(8.67+8.64)/2	11.77		
		(1.84-0.69)x(8.62+8.67)/2	9.94		
		(11.74-1.84)x(8.24+8.62)/2	83.46		
		(11.43-11.74)x(8.61+8.24)/2	-2.61		
		(12.70-11.43)x(8.62+8.61)/2	10.94		
		(16.76-12.70)x(5.91+8.62)/2	29.50		
		(-11.80-16.76)x(6.28+5.91)/2	-174.07		
		(-12.77--11.80)x(6.27+6.28)/2	-6.09		
		(-12.81--12.77)x(6.27+6.27)/2	-0.25		
		(-12.86--12.81)x(6.27+6.27)/2	-0.31		
		(-13.84--12.86)x(6.27+6.27)/2	-6.14		
		(-14.25--13.84)x(6.28+6.27)/2	-2.57		
		(-14.81--14.25)x(6.30+6.28)/2	-3.52		
		(-14.82--14.81)x(6.30+6.30)/2	-0.06		
		(-14.85--14.82)x(6.30+6.30)/2	-0.19		
		(-14.91--14.85)x(6.30+6.30)/2	-0.38		
		(-14.94--14.91)x(6.30+6.30)/2	-0.19		
		(-14.95--14.94)x(6.30+6.30)/2	-0.06		
		(-15.93--14.95)x(6.28+6.30)/2	-6.16		
		(-16.00--15.93)x(6.28+6.28)/2	-0.44		
		(-16.74--16.00)x(6.28+6.28)/2	-4.65		
				73.41	
195	AR1	(-12.61--17.97)x(10.01+6.43)/2	44.06		
2910.00		(-11.34--12.61)x(10.00+10.01)/2	12.71		
		(-11.61--11.34)x(9.68+10.00)/2	-2.66		
		(-1.75--11.61)x(9.24+9.68)/2	93.28		
		(-0.64--1.75)x(9.19+9.24)/2	10.23		
		(0.70--0.64)x(9.25+9.19)/2	12.35		
		(1.99-0.70)x(9.18+9.25)/2	11.89		
		(11.90-1.99)x(8.61+9.18)/2	88.15		
		(11.58-11.90)x(8.99+8.61)/2	-2.82		
		(12.85-11.58)x(9.00+8.99)/2	11.42		
		(17.43-12.85)x(5.95+9.00)/2	34.24		
		(13.13-17.43)x(6.07+5.95)/2	-25.84		
		(12.08-13.13)x(6.19+6.07)/2	-6.44		
		(11.85-12.08)x(6.21+6.19)/2	-1.43		
		(11.42-11.85)x(6.21+6.21)/2	-2.67		
		(10.92-11.42)x(6.24+6.21)/2	-3.11		
		(10.87-10.92)x(6.24+6.24)/2	-0.31		
		(10.28-10.87)x(6.25+6.24)/2	-3.68		
		(10.27-10.28)x(6.25+6.25)/2	-0.06		
		(9.84-10.27)x(6.27+6.25)/2	-2.69		
		(9.78-9.84)x(6.27+6.27)/2	-0.38		
		(9.09-9.78)x(6.26+6.27)/2	-4.32		
		(8.77-9.09)x(6.27+6.26)/2	-2.00		
		(7.96-8.77)x(6.28+6.27)/2	-5.08		
		(7.95-7.96)x(6.28+6.28)/2	-0.06		
		(7.74-7.95)x(6.28+6.28)/2	-1.32		
		(6.83-7.74)x(6.29+6.28)/2	-5.72		
		(6.72-6.83)x(6.29+6.29)/2	-0.69		
		(6.71-6.72)x(6.29+6.29)/2	-0.06		
		(5.68-6.71)x(6.30+6.29)/2	-6.48		
		(5.65-5.68)x(6.30+6.30)/2	-0.19		
		(5.61-5.65)x(6.30+6.30)/2	-0.25		
		(4.64-5.61)x(6.30+6.30)/2	-6.11		
		(4.55-4.64)x(6.30+6.30)/2	-0.57		
		(4.54-4.55)x(6.30+6.30)/2	-0.06		
		(3.62-4.54)x(6.30+6.30)/2	-5.80		
		(3.41-3.62)x(6.31+6.30)/2	-1.32		
		(3.40-3.41)x(6.31+6.31)/2	-0.06		
		(2.58-3.40)x(6.31+6.31)/2	-5.17		
		(1.91-2.58)x(6.31+6.31)/2	-4.23		
		(1.56-1.91)x(6.31+6.31)/2	-2.21		
		(1.54-1.56)x(6.31+6.31)/2	-0.13		
		(1.13-1.54)x(6.31+6.31)/2	-2.59		
		(0.55-1.13)x(6.32+6.31)/2	-3.66		
		(0.53-0.55)x(6.32+6.32)/2	-0.13		
		(0.00-0.53)x(6.33+6.32)/2	-3.35		
		(-0.48-0.00)x(6.33+6.33)/2	-3.04		
		(-1.12--0.48)x(6.35+6.33)/2	-4.06		
		(-1.51--1.12)x(6.35+6.35)/2	-2.48		
		(-2.25--1.51)x(6.37+6.35)/2	-4.71		
		(-2.29--2.25)x(6.37+6.37)/2	-0.25		
		(-2.52--2.29)x(6.37+6.37)/2	-1.47		
		(-3.32--2.52)x(6.42+6.37)/2	-5.12		
		(-3.38--3.32)x(6.42+6.42)/2	-0.39		
		(-3.43--3.38)x(6.42+6.42)/2	-0.32		
		A RIPORTARE mq	182.84		

ARGILLA ESPANSA

N. SEZIONE PROG.	FIG.	ELEMENTI DI CALCOLO	AREA ELEMENTARE mq	AREA FIGURA mq	NOTE
		RIPORTO mq	182.84		
		(-4.28--3.43)x(6.55+6.42)/2	-5.51		
		(-4.46--4.28)x(6.57+6.55)/2	-1.18		
		(-4.48--4.46)x(6.57+6.57)/2	-0.13		
		(-5.01--4.48)x(6.62+6.57)/2	-3.50		
		(-5.41--5.01)x(6.67+6.62)/2	-2.66		
		(-5.91--5.41)x(6.67+6.67)/2	-3.33		
		(-6.76--5.91)x(6.64+6.67)/2	-5.66		
		(-7.18--6.76)x(6.59+6.64)/2	-2.78		
		(-7.87--7.18)x(6.54+6.59)/2	-4.53		
		(-7.90--7.87)x(6.53+6.54)/2	-0.20		
		(-8.10--7.90)x(6.52+6.53)/2	-1.30		
		(-8.73--8.10)x(6.50+6.52)/2	-4.10		
		(-9.01--8.73)x(6.52+6.50)/2	-1.82		
		(-9.66--9.01)x(6.56+6.52)/2	-4.25		
		(-9.70--9.66)x(6.56+6.56)/2	-0.26		
		(-10.18--9.70)x(6.58+6.56)/2	-3.15		
		(-10.20--10.18)x(6.58+6.58)/2	-0.13		
		(-10.75--10.20)x(6.60+6.58)/2	-3.62		
		(-10.87--10.75)x(6.60+6.60)/2	-0.79		
		(-11.45--10.87)x(6.58+6.60)/2	-3.82		
		(-11.48--11.45)x(6.58+6.58)/2	-0.20		
		(-11.90--11.48)x(6.57+6.58)/2	-2.76		
		(-12.57--11.90)x(6.55+6.57)/2	-4.40		
		(-12.58--12.57)x(6.55+6.55)/2	-0.07		
		(-12.91--12.58)x(6.55+6.55)/2	-2.16		
		(-13.70--12.91)x(6.54+6.55)/2	-5.17		
		(-13.92--13.70)x(6.54+6.54)/2	-1.44		
		(-13.98--13.92)x(6.53+6.54)/2	-0.39		
		(-14.87--13.98)x(6.50+6.53)/2	-5.80		
		(-14.97--14.87)x(6.50+6.50)/2	-0.65		
		(-15.00--14.97)x(6.50+6.50)/2	-0.19		
		(-16.02--15.00)x(6.47+6.50)/2	-6.61		
		(-16.03--16.02)x(6.47+6.47)/2	-0.06		
		(-16.13--16.03)x(6.46+6.47)/2	-0.65		
		(-16.96--16.13)x(6.45+6.46)/2	-5.36		
		(-16.97--16.96)x(6.45+6.45)/2	-0.06		
		(-17.01--16.97)x(6.45+6.45)/2	-0.26		
		(-17.07--17.01)x(6.45+6.45)/2	-0.39		
		(-17.12--17.07)x(6.45+6.45)/2	-0.32		
		(-17.97--17.12)x(6.43+6.45)/2	-5.47		
				87.71	
196 2925.00	AR1	(-12.61--18.10)x(10.41+6.75)/2	47.10		
		(-11.34--12.61)x(10.40+10.41)/2	13.21		
		(-11.60--11.34)x(10.09+10.40)/2	-2.66		
		(-1.75--11.60)x(9.46+10.09)/2	96.28		
		(-0.63--1.75)x(9.39+9.46)/2	10.56		
		(0.71--0.63)x(9.47+9.39)/2	12.64		
		(2.03-0.71)x(9.38+9.47)/2	12.44		
		(11.95-2.03)x(8.71+9.38)/2	89.73		
		(11.62-11.95)x(9.10+8.71)/2	-2.94		
		(12.89-11.62)x(9.11+9.10)/2	11.56		
		(17.87-12.89)x(5.79+9.11)/2	37.10		
		(9.80-17.87)x(6.07+5.79)/2	-47.86		
		(9.36-9.80)x(6.08+6.07)/2	-2.67		
		(9.34-9.36)x(6.08+6.08)/2	-0.12		
		(9.22-9.34)x(6.08+6.08)/2	-0.73		
		(8.28-9.22)x(6.12+6.08)/2	-5.73		
		(8.20-8.28)x(6.12+6.12)/2	-0.49		
		(8.16-8.20)x(6.12+6.12)/2	-0.24		
		(7.16-8.16)x(6.16+6.12)/2	-6.14		
		(7.14-7.16)x(6.16+6.16)/2	-0.12		
		(6.97-7.14)x(6.16+6.16)/2	-1.05		
		(6.96-6.97)x(6.16+6.16)/2	-0.06		
		(6.10-6.96)x(6.18+6.16)/2	-5.31		
		(6.09-6.10)x(6.18+6.18)/2	-0.06		
		(5.76-6.09)x(6.19+6.18)/2	-2.04		
		(5.75-5.76)x(6.19+6.19)/2	-0.06		
		(5.04-5.75)x(6.19+6.19)/2	-4.39		
		(5.01-5.04)x(6.19+6.19)/2	-0.19		
		(4.53-5.01)x(6.19+6.19)/2	-2.97		
		(3.99-4.53)x(6.19+6.19)/2	-3.34		
		(3.36-3.99)x(6.20+6.19)/2	-3.90		
		(2.98-3.36)x(6.20+6.20)/2	-2.36		
		(2.18-2.98)x(6.21+6.20)/2	-4.96		
		(1.95-2.18)x(6.22+6.21)/2	-1.43		
		(1.94-1.95)x(6.22+6.22)/2	-0.06		
		(0.98-1.94)x(6.23+6.22)/2	-5.98		
		(0.92-0.98)x(6.23+6.23)/2	-0.37		
		(0.91-0.92)x(6.23+6.23)/2	-0.06		
		(0.86-0.91)x(6.23+6.23)/2	-0.31		
		(0.45-0.86)x(6.23+6.23)/2	-2.55		
		(-0.04-0.45)x(6.24+6.23)/2	-3.06		
		(-0.08--0.04)x(6.24+6.24)/2	-0.25		
		(-0.10--0.08)x(6.24+6.24)/2	-0.12		
		(-0.18--0.10)x(6.25+6.24)/2	-0.50		
		(-0.20--0.18)x(6.25+6.25)/2	-0.13		
		(-1.13--0.20)x(6.26+6.25)/2	-5.82		
		(-1.35--1.13)x(6.27+6.26)/2	-1.38		
		(-2.11--1.35)x(6.30+6.27)/2	-4.78		
		(-2.49--2.11)x(6.33+6.30)/2	-2.40		
		(-3.12--2.49)x(6.37+6.33)/2	-4.00		
		(-3.13--3.12)x(6.37+6.37)/2	-0.06		
		(-3.69--3.13)x(6.41+6.37)/2	-3.58		
		(-3.73--3.69)x(6.41+6.41)/2	-0.26		
		(-4.20--3.73)x(6.43+6.41)/2	-3.02		
		(-4.22--4.20)x(6.43+6.43)/2	-0.13		
		(-4.93--4.22)x(6.45+6.43)/2	-4.57		
		(-5.22--4.93)x(6.47+6.45)/2	-1.87		
		(-5.28--5.22)x(6.47+6.47)/2	-0.39		
		(-6.16--5.28)x(6.49+6.47)/2	-5.70		
		(-6.17--6.16)x(6.49+6.49)/2	-0.06		
		(-6.32--6.17)x(6.49+6.49)/2	-0.97		
		(-6.33--6.32)x(6.49+6.49)/2	-0.06		
		(-7.33--6.33)x(6.51+6.49)/2	-6.50		
		(-7.36--7.33)x(6.51+6.51)/2	-0.20		
		A RIPORTARE mq	169.66		

ARGILLA ESPANSA

N. SEZIONE PROG.	FIG.	ELEMENTI DI CALCOLO	AREA ELEMENTARE mq	AREA FIGURA mq	NOTE
		RIPORTO mq	169.66		
		(-7.43--7.36)x(6.51+6.51)/2	-0.46		
		(-8.45--7.43)x(6.49+6.51)/2	-6.63		
		(-8.60--8.45)x(6.49+6.49)/2	-0.97		
		(-9.45--8.60)x(6.49+6.49)/2	-5.52		
		(-9.76--9.45)x(6.49+6.49)/2	-2.01		
		(-10.46--9.76)x(6.50+6.49)/2	-4.55		
		(-10.47--10.46)x(6.50+6.50)/2	-0.06		
		(-10.95--10.47)x(6.51+6.50)/2	-3.12		
		(-11.49--10.95)x(6.52+6.51)/2	-3.52		
		(-12.09--11.49)x(6.54+6.52)/2	-3.92		
		(-12.48--12.09)x(6.55+6.54)/2	-2.55		
		(-12.52--12.48)x(6.55+6.55)/2	-0.26		
		(-13.30--12.52)x(6.57+6.55)/2	-5.12		
		(-13.52--13.30)x(6.58+6.57)/2	-1.45		
		(-13.55--13.52)x(6.58+6.58)/2	-0.20		
		(-14.51--13.55)x(6.60+6.58)/2	-6.33		
		(-14.59--14.51)x(6.60+6.60)/2	-0.53		
		(-15.09--14.59)x(6.62+6.60)/2	-3.30		
		(-15.58--15.09)x(6.63+6.62)/2	-3.25		
		(-15.64--15.58)x(6.63+6.63)/2	-0.40		
		(-15.65--15.64)x(6.63+6.63)/2	-0.07		
		(-16.61--15.65)x(6.68+6.63)/2	-6.39		
		(-16.62--16.61)x(6.68+6.68)/2	-0.07		
		(-16.83--16.62)x(6.69+6.68)/2	-1.40		
		(-17.60--16.83)x(6.74+6.69)/2	-5.17		
		(-17.72--17.60)x(6.74+6.74)/2	-0.81		
		(-18.10--17.72)x(6.75+6.74)/2	-2.56		
				99.04	
198 2955.00	AR1	(-12.61--18.47)x(10.72+6.82)/2	51.39		
		(-11.34--12.61)x(10.72+10.72)/2	13.61		
		(-11.60--11.34)x(10.41+10.72)/2	-2.75		
		(-1.75--11.60)x(9.72+10.41)/2	99.14		
		(-0.63--1.75)x(9.64+9.72)/2	10.84		
		(0.71--0.63)x(9.72+9.64)/2	12.97		
		(2.00-0.71)x(9.63+9.72)/2	12.48		
		(11.92-2.00)x(8.94+9.63)/2	92.11		
		(11.59-11.92)x(9.34+8.94)/2	-3.02		
		(12.86-11.59)x(9.34+9.34)/2	11.86		
		(18.20-12.86)x(5.77+9.34)/2	40.34		
		(-2.69-18.20)x(6.51+5.77)/2	-128.26		
		(-3.41--2.69)x(6.52+6.51)/2	-4.69		
		(-4.19--3.41)x(6.55+6.52)/2	-5.10		
		(-4.44--4.19)x(6.56+6.55)/2	-1.64		
		(-4.58--4.44)x(6.57+6.56)/2	-0.92		
		(-5.26--4.58)x(6.60+6.57)/2	-4.48		
		(-5.27--5.26)x(6.60+6.60)/2	-0.07		
		(-5.43--5.27)x(6.61+6.60)/2	-1.06		
		(-5.49--5.43)x(6.61+6.61)/2	-0.40		
		(-5.53--5.49)x(6.61+6.61)/2	-0.26		
		(-5.55--5.53)x(6.61+6.61)/2	-0.13		
		(-5.60--5.55)x(6.61+6.61)/2	-0.33		
		(-5.62--5.60)x(6.61+6.61)/2	-0.13		
		(-6.59--5.62)x(6.62+6.61)/2	-6.42		
		(-6.93--6.59)x(6.62+6.62)/2	-2.25		
		(-6.98--6.93)x(6.62+6.62)/2	-0.33		
		(-7.64--6.98)x(6.62+6.62)/2	-4.37		
		(-8.29--7.64)x(6.64+6.62)/2	-4.31		
		(-8.67--8.29)x(6.65+6.64)/2	-2.53		
		(-9.64--8.67)x(6.67+6.65)/2	-6.46		
		(-9.65--9.64)x(6.67+6.67)/2	-0.07		
		(-9.73--9.65)x(6.67+6.67)/2	-0.53		
		(-9.99--9.73)x(6.68+6.67)/2	-1.74		
		(-10.78--9.99)x(6.69+6.68)/2	-5.28		
		(-10.79--10.78)x(6.69+6.69)/2	-0.07		
		(-11.02--10.79)x(6.69+6.69)/2	-1.54		
		(-11.83--11.02)x(6.71+6.69)/2	-5.43		
		(-12.37--11.83)x(6.72+6.71)/2	-3.63		
		(-12.89--12.37)x(6.72+6.72)/2	-3.49		
		(-13.73--12.89)x(6.73+6.72)/2	-5.65		
		(-13.93--13.73)x(6.74+6.73)/2	-1.35		
		(-13.97--13.93)x(6.74+6.74)/2	-0.27		
		(-14.68--13.97)x(6.74+6.74)/2	-4.79		
		(-15.01--14.68)x(6.74+6.74)/2	-2.22		
		(-15.09--15.01)x(6.74+6.74)/2	-0.54		
		(-16.04--15.09)x(6.76+6.74)/2	-6.41		
		(-16.05--16.04)x(6.76+6.76)/2	-0.07		
		(-16.44--16.05)x(6.76+6.76)/2	-2.64		
		(-17.08--16.44)x(6.78+6.76)/2	-4.33		
		(-17.78--17.08)x(6.79+6.78)/2	-4.75		
		(-18.47--17.78)x(6.81+6.79)/2	-4.69		
				105.34	
199 2970.00	AR1	(-12.61--18.77)x(10.77+6.66)/2	53.68		
		(-11.34--12.61)x(10.77+10.77)/2	13.68		
		(-11.60--11.34)x(10.46+10.77)/2	-2.76		
		(-1.75--11.60)x(9.77+10.46)/2	99.63		
		(-0.63--1.75)x(9.69+9.77)/2	10.90		
		(0.71--0.63)x(9.77+9.69)/2	13.04		
		(1.98-0.71)x(9.68+9.77)/2	12.35		
		(11.21-1.98)x(9.04+9.68)/2	86.39		
		(11.01-11.21)x(7.39+9.04)/2	-1.64		
		(4.16-11.01)x(7.39+7.39)/2	-50.62		
		(3.39-4.16)x(7.40+7.39)/2	-5.69		
		(3.33-3.39)x(7.40+7.40)/2	-0.44		
		(3.08-3.33)x(7.40+7.40)/2	-1.85		
		(2.29-3.08)x(7.39+7.40)/2	-5.84		
		(2.26-2.29)x(7.39+7.39)/2	-0.22		
		(1.61-2.26)x(7.38+7.39)/2	-4.80		
		(1.59-1.61)x(7.37+7.38)/2	-0.15		
		(1.22-1.59)x(7.36+7.37)/2	-2.73		
		(0.19-1.22)x(7.37+7.36)/2	-7.59		
		(0.18-0.19)x(7.37+7.37)/2	-0.07		
		(0.12-0.18)x(7.37+7.37)/2	-0.44		
		(0.10-0.12)x(7.37+7.37)/2	-0.15		
		(-0.95-0.10)x(7.33+7.37)/2	-7.72		
		(-0.96--0.95)x(7.33+7.33)/2	-0.07		
		A RIPORTARE mq	196.89		

ARGILLA ESPANSA

N. SEZIONE PROG.	FIG.	ELEMENTI DI CALCOLO	AREA ELEMENTARE mq	AREA FIGURA mq	NOTE
		RIPORTO mq	196.89		
		(-1.34--0.96)x(7.31+7.33)/2	-2.78		
		(-1.99--1.34)x(7.30+7.31)/2	-4.75		
		(-2.06--1.99)x(7.30+7.30)/2	-0.51		
		(-2.86--2.06)x(7.25+7.30)/2	-5.82		
		(-3.13--2.86)x(7.23+7.25)/2	-1.95		
		(-3.43--3.13)x(7.19+7.23)/2	-2.16		
		(-4.13--3.43)x(7.04+7.19)/2	-4.98		
		(-4.46--4.13)x(6.98+7.04)/2	-2.31		
		(-4.80--4.46)x(6.88+6.98)/2	-2.36		
		(-4.93--4.80)x(6.83+6.88)/2	-0.89		
		(-4.95--4.93)x(6.82+6.83)/2	-0.14		
		(-5.68--4.95)x(6.53+6.82)/2	-4.87		
		(-5.98--5.68)x(6.47+6.53)/2	-1.95		
		(-6.32--5.98)x(6.42+6.47)/2	-2.19		
		(-7.04--6.32)x(6.45+6.42)/2	-4.63		
		(-7.15--7.04)x(6.45+6.45)/2	-0.71		
		(-7.24--7.15)x(6.45+6.45)/2	-0.58		
		(-7.55--7.24)x(6.46+6.45)/2	-2.00		
		(-8.21--7.55)x(6.49+6.46)/2	-4.27		
		(-8.87--8.21)x(6.53+6.49)/2	-4.30		
		(-9.04--8.87)x(6.54+6.53)/2	-1.11		
		(-9.42--9.04)x(6.53+6.54)/2	-2.48		
		(-10.05--9.42)x(6.52+6.53)/2	-4.11		
		(-10.42--10.05)x(6.53+6.52)/2	-2.41		
		(-10.43--10.42)x(6.53+6.53)/2	-0.07		
		(-11.46--10.43)x(6.54+6.53)/2	-6.73		
		(-11.47--11.46)x(6.54+6.54)/2	-0.07		
		(-11.48--11.47)x(6.54+6.54)/2	-0.07		
		(-12.53--11.48)x(6.56+6.54)/2	-6.88		
		(-12.57--12.53)x(6.57+6.56)/2	-0.26		
		(-12.97--12.57)x(6.57+6.57)/2	-2.63		
		(-13.61--12.97)x(6.57+6.57)/2	-4.20		
		(-13.62--13.61)x(6.57+6.57)/2	-0.07		
		(-14.43--13.62)x(6.58+6.57)/2	-5.33		
		(-14.68--14.43)x(6.58+6.58)/2	-1.65		
		(-15.36--14.68)x(6.59+6.58)/2	-4.48		
		(-15.73--15.36)x(6.60+6.59)/2	-2.44		
		(-15.86--15.73)x(6.60+6.60)/2	-0.86		
		(-16.76--15.86)x(6.63+6.60)/2	-5.95		
		(-16.80--16.76)x(6.63+6.63)/2	-0.27		
		(-17.34--16.80)x(6.64+6.63)/2	-3.58		
		(-17.35--17.34)x(6.64+6.64)/2	-0.07		
		(-17.86--17.35)x(6.64+6.64)/2	-3.39		
		(-18.77--17.86)x(6.66+6.64)/2	-6.05		
				77.58	
200 2985.00	AR1	(-12.61--18.73)x(10.76+6.68)/2	53.37		
		(-11.34--12.61)x(10.76+10.76)/2	13.67		
		(-11.60--11.34)x(10.45+10.76)/2	-2.76		
		(-1.75--11.60)x(9.76+10.45)/2	99.53		
		(-0.63--1.75)x(9.68+9.76)/2	10.89		
		(0.71--0.63)x(9.77+9.68)/2	13.03		
		(1.96-0.71)x(9.68+9.77)/2	12.16		
		(11.20-1.96)x(9.03+9.68)/2	86.44		
		(10.83-11.20)x(5.45+9.03)/2	-2.68		
		(10.65-10.83)x(5.48+5.45)/2	-0.98		
		(10.64-10.65)x(5.49+5.48)/2	-0.05		
		(10.10-10.64)x(5.60+5.49)/2	-2.99		
		(9.71-10.10)x(5.64+5.60)/2	-2.19		
		(9.48-9.71)x(5.64+5.64)/2	-1.30		
		(9.04-9.48)x(5.66+5.64)/2	-2.49		
		(8.70-9.04)x(5.80+5.66)/2	-1.95		
		(8.51-8.70)x(5.91+5.80)/2	-1.11		
		(8.48-8.51)x(5.92+5.91)/2	-0.18		
		(7.93-8.48)x(6.22+5.92)/2	-3.34		
		(7.58-7.93)x(6.46+6.22)/2	-2.22		
		(6.80-7.58)x(6.77+6.46)/2	-5.16		
		(6.59-6.80)x(6.81+6.77)/2	-1.43		
		(6.53-6.59)x(6.82+6.81)/2	-0.41		
		(5.66-6.53)x(6.94+6.82)/2	-5.99		
		(5.55-5.66)x(6.95+6.94)/2	-0.76		
		(5.11-5.55)x(6.99+6.95)/2	-3.07		
		(5.05-5.11)x(6.99+6.99)/2	-0.42		
		(4.45-5.05)x(7.03+6.99)/2	-4.21		
		(3.75-4.45)x(7.09+7.03)/2	-4.94		
		(3.54-3.75)x(7.12+7.09)/2	-1.49		
		(3.48-3.54)x(7.13+7.12)/2	-0.43		
		(3.29-3.48)x(7.16+7.13)/2	-1.36		
		(2.41-3.29)x(7.26+7.16)/2	-6.34		
		(1.78-2.41)x(7.35+7.26)/2	-4.60		
		(1.71-1.78)x(7.36+7.35)/2	-0.51		
		(1.30-1.71)x(7.41+7.36)/2	-3.03		
		(0.68-1.30)x(7.38+7.41)/2	-4.58		
		(-0.19-0.68)x(7.21+7.38)/2	-6.35		
		(-0.25--0.19)x(7.20+7.21)/2	-0.43		
		(-0.38--0.25)x(7.16+7.20)/2	-0.93		
		(-0.40--0.38)x(7.16+7.16)/2	-0.14		
		(-0.43--0.40)x(7.16+7.16)/2	-0.21		
		(-1.31--0.43)x(7.02+7.16)/2	-6.24		
		(-1.82--1.31)x(6.98+7.02)/2	-3.57		
		(-1.90--1.82)x(6.98+6.98)/2	-0.56		
		(-2.36--1.90)x(6.93+6.98)/2	-3.20		
		(-2.38--2.36)x(6.93+6.93)/2	-0.14		
		(-3.35--2.38)x(6.82+6.93)/2	-6.67		
		(-3.41--3.35)x(6.82+6.82)/2	-0.41		
		(-3.52--3.41)x(6.80+6.82)/2	-0.75		
		(-3.55--3.52)x(6.80+6.80)/2	-0.20		
		(-3.60--3.55)x(6.79+6.80)/2	-0.34		
		(-4.52--3.60)x(6.65+6.79)/2	-6.18		
		(-4.99--4.52)x(6.62+6.65)/2	-3.12		
		(-5.01--4.99)x(6.62+6.62)/2	-0.13		
		(-5.51--5.01)x(6.59+6.62)/2	-3.30		
		(-6.57--5.51)x(6.53+6.59)/2	-6.95		
		(-7.64--6.57)x(6.48+6.53)/2	-6.96		
		(-7.68--7.64)x(6.47+6.48)/2	-0.26		
		(-8.19--7.68)x(6.44+6.47)/2	-3.29		
		A RIPORTARE mq	155.79		

		CALCOLO DELLE AREE		Foglio n. 8	
ARGILLA ESPANSA					
N. SEZIONE PROG.	FIG.	ELEMENTI DI CALCOLO	AREA ELEMENTARE mq	AREA FIGURA mq	NOTE
		RIPORTO mq	155.79		
		(-8.69--8.19)x(6.41+6.44)/2	-3.21		
		(-9.65--8.69)x(6.41+6.41)/2	-6.15		
		(-9.68--9.65)x(6.41+6.41)/2	-0.19		
		(-10.64--9.68)x(6.47+6.41)/2	-6.18		
		(-10.68--10.64)x(6.48+6.47)/2	-0.26		
		(-11.13--10.68)x(6.50+6.48)/2	-2.92		
		(-11.74--11.13)x(6.54+6.50)/2	-3.98		
		(-11.82--11.74)x(6.54+6.54)/2	-0.52		
		(-12.79--11.82)x(6.56+6.54)/2	-6.35		
		(-12.88--12.79)x(6.56+6.56)/2	-0.59		
		(-12.92--12.88)x(6.56+6.56)/2	-0.26		
		(-12.94--12.92)x(6.56+6.56)/2	-0.13		
		(-13.09--12.94)x(6.57+6.56)/2	-0.98		
		(-13.72--13.09)x(6.59+6.57)/2	-4.15		
		(-13.91--13.72)x(6.60+6.59)/2	-1.25		
		(-14.00--13.91)x(6.60+6.60)/2	-0.59		
		(-14.40--14.00)x(6.61+6.60)/2	-2.64		
		(-15.07--14.40)x(6.61+6.61)/2	-4.43		
		(-15.97--15.07)x(6.62+6.61)/2	-5.95		
		(-16.10--15.97)x(6.63+6.62)/2	-0.86		
		(-16.11--16.10)x(6.63+6.63)/2	-0.07		
		(-16.43--16.11)x(6.64+6.63)/2	-2.12		
		(-17.18--16.43)x(6.66+6.64)/2	-4.99		
		(-17.21--17.18)x(6.66+6.66)/2	-0.20		
		(-17.56--17.21)x(6.67+6.66)/2	-2.33		
		(-18.27--17.56)x(6.68+6.67)/2	-4.74		
		(-18.31--18.27)x(6.68+6.68)/2	-0.27		
		(-18.73--18.31)x(6.68+6.68)/2	-2.81		
				86.67	
201 3000.00	AR1	(-12.61--19.15)x(10.70+6.35)/2	55.75		
		(-11.34--12.61)x(10.70+10.70)/2	13.59		
		(-11.60--11.34)x(10.39+10.70)/2	-2.74		
		(-1.75--11.60)x(9.70+10.39)/2	98.94		
		(-0.63--1.75)x(9.62+9.70)/2	10.82		
		(0.71--0.63)x(9.71+9.62)/2	12.95		
		(1.94-0.71)x(9.62+9.71)/2	11.89		
		(11.17-1.94)x(8.97+9.62)/2	85.79		
		(10.87-11.17)x(5.60+8.97)/2	-2.19		
		(10.60-10.87)x(5.54+5.60)/2	-1.50		
		(10.43-10.60)x(5.50+5.54)/2	-0.94		
		(9.68-10.43)x(5.27+5.50)/2	-4.04		
		(9.21-9.68)x(5.23+5.27)/2	-2.47		
		(9.01-9.21)x(5.23+5.23)/2	-1.05		
		(8.94-9.01)x(5.24+5.23)/2	-0.37		
		(8.44-8.94)x(5.23+5.24)/2	-2.62		
		(7.86-8.44)x(5.23+5.23)/2	-3.03		
		(7.60-7.86)x(5.21+5.23)/2	-1.36		
		(7.32-7.60)x(5.17+5.21)/2	-1.45		
		(6.65-7.32)x(5.12+5.17)/2	-3.45		
		(5.68-6.65)x(5.07+5.12)/2	-4.94		
		(5.65-5.68)x(5.07+5.07)/2	-0.15		
		(5.55-5.65)x(5.07+5.07)/2	-0.51		
		(4.62-5.55)x(5.09+5.07)/2	-4.72		
		(4.55-4.62)x(5.09+5.09)/2	-0.36		
		(4.02-4.55)x(5.08+5.09)/2	-2.70		
		(3.50-4.02)x(5.08+5.08)/2	-2.64		
		(3.45-3.50)x(5.08+5.08)/2	-0.25		
		(2.57-3.45)x(5.06+5.08)/2	-4.46		
		(2.43-2.57)x(5.06+5.06)/2	-0.71		
		(2.33-2.43)x(5.06+5.06)/2	-0.51		
		(2.30-2.33)x(5.06+5.06)/2	-0.15		
		(1.41-2.30)x(5.07+5.06)/2	-4.51		
		(0.79-1.41)x(5.13+5.07)/2	-3.16		
		(0.57-0.79)x(5.16+5.13)/2	-1.13		
		(0.47-0.57)x(5.19+5.16)/2	-0.52		
		(0.21-0.47)x(5.22+5.19)/2	-1.35		
		(-0.16-0.21)x(5.25+5.22)/2	-1.94		
		(-0.51--0.16)x(5.29+5.25)/2	-1.84		
		(-0.68--0.51)x(5.30+5.29)/2	-0.90		
		(-0.83--0.68)x(5.31+5.30)/2	-0.80		
		(-1.13--0.83)x(5.32+5.31)/2	-1.59		
		(-1.88--1.13)x(5.35+5.32)/2	-4.00		
		(-2.83--1.88)x(5.41+5.35)/2	-5.11		
		(-2.86--2.83)x(5.41+5.41)/2	-0.16		
		(-2.97--2.86)x(5.41+5.41)/2	-0.60		
		(-3.13--2.97)x(5.42+5.41)/2	-0.87		
		(-3.95--3.13)x(5.50+5.42)/2	-4.48		
		(-4.44--3.95)x(5.56+5.50)/2	-2.71		
		(-4.49--4.44)x(5.57+5.56)/2	-0.28		
		(-5.02--4.49)x(5.62+5.57)/2	-2.97		
		(-5.94--5.02)x(5.75+5.62)/2	-5.23		
		(-5.98--5.94)x(5.75+5.75)/2	-0.23		
		(-6.12--5.98)x(5.77+5.75)/2	-0.81		
		(-6.21--6.12)x(5.78+5.77)/2	-0.52		
		(-6.25--6.21)x(5.78+5.78)/2	-0.23		
		(-7.22--6.25)x(5.89+5.78)/2	-5.66		
		(-7.33--7.22)x(5.90+5.89)/2	-0.65		
		(-8.06--7.33)x(5.95+5.90)/2	-4.33		
		(-8.10--8.06)x(5.95+5.95)/2	-0.24		
		(-8.45--8.10)x(5.96+5.95)/2	-2.08		
		(-9.03--8.45)x(5.99+5.96)/2	-3.47		
		(-9.50--9.03)x(6.03+5.99)/2	-2.82		
		(-9.51--9.50)x(6.03+6.03)/2	-0.06		
		(-9.80--9.51)x(6.05+6.03)/2	-1.75		
		(-10.59--9.80)x(6.10+6.05)/2	-4.80		
		(-11.51--10.59)x(6.17+6.10)/2	-5.64		
		(-11.54--11.51)x(6.17+6.17)/2	-0.19		
		(-11.66--11.54)x(6.18+6.17)/2	-0.74		
		(-11.87--11.66)x(6.20+6.18)/2	-1.30		
		(-12.69--11.87)x(6.30+6.20)/2	-5.13		
		(-12.72--12.69)x(6.30+6.30)/2	-0.19		
		(-13.22--12.72)x(6.35+6.30)/2	-3.16		
		(-13.32--13.22)x(6.36+6.35)/2	-0.64		
		(-13.92--13.32)x(6.39+6.36)/2	-3.82		
		(-14.23--13.92)x(6.38+6.39)/2	-1.98		
		A RIPORTARE mq	145.83		

ARGILLA ESPANSA

N. SEZIONE PROG.	FIG.	ELEMENTI DI CALCOLO	AREA ELEMENTARE mq	AREA FIGURA mq	NOTE
		RIPORTO mq	145.83		
		(-15.23--14.23)x(6.27+6.38)/2	-6.32		
		(-15.24--15.23)x(6.27+6.27)/2	-0.06		
		(-16.20--15.24)x(6.27+6.27)/2	-6.02		
		(-16.27--16.20)x(6.27+6.27)/2	-0.44		
		(-16.96--16.27)x(6.25+6.27)/2	-4.32		
		(-17.25--16.96)x(6.24+6.25)/2	-1.81		
		(-17.82--17.25)x(6.28+6.24)/2	-3.57		
		(-18.26--17.82)x(6.31+6.28)/2	-2.77		
		(-18.31--18.26)x(6.31+6.31)/2	-0.32		
		(-19.15--18.31)x(6.35+6.31)/2	-5.32		
				114.88	
201bsi 3005.94	AR1	(-12.61--19.15)x(10.70+6.35)/2	55.75		
		(-11.34--12.61)x(10.70+10.70)/2	13.59		
		(-11.60--11.34)x(10.39+10.70)/2	-2.74		
		(-1.75--11.60)x(9.70+10.39)/2	98.94		
		(-0.63--1.75)x(9.62+9.70)/2	10.82		
		(0.71--0.63)x(9.71+9.62)/2	12.95		
		(1.94-0.71)x(9.62+9.71)/2	11.89		
		(11.17-1.94)x(8.97+9.62)/2	85.79		
		(10.87-11.17)x(5.60+8.97)/2	-2.19		
		(10.60-10.87)x(5.54+5.60)/2	-1.50		
		(10.43-10.60)x(5.50+5.54)/2	-0.94		
		(9.68-10.43)x(5.27+5.50)/2	-4.04		
		(9.21-9.68)x(5.23+5.27)/2	-2.47		
		(9.01-9.21)x(5.23+5.23)/2	-1.05		
		(8.94-9.01)x(5.24+5.23)/2	-0.37		
		(8.44-8.94)x(5.23+5.24)/2	-2.62		
		(7.86-8.44)x(5.23+5.23)/2	-3.03		
		(7.60-7.86)x(5.21+5.23)/2	-1.36		
		(7.32-7.60)x(5.17+5.21)/2	-1.45		
		(6.65-7.32)x(5.12+5.17)/2	-3.45		
		(5.68-6.65)x(5.07+5.12)/2	-4.94		
		(5.65-5.68)x(5.07+5.07)/2	-0.15		
		(5.55-5.65)x(5.07+5.07)/2	-0.51		
		(4.62-5.55)x(5.09+5.07)/2	-4.72		
		(4.55-4.62)x(5.09+5.09)/2	-0.36		
		(4.02-4.55)x(5.08+5.09)/2	-2.70		
		(3.50-4.02)x(5.08+5.08)/2	-2.64		
		(3.45-3.50)x(5.08+5.08)/2	-0.25		
		(2.57-3.45)x(5.06+5.08)/2	-4.46		
		(2.43-2.57)x(5.06+5.06)/2	-0.71		
		(2.33-2.43)x(5.06+5.06)/2	-0.51		
		(2.30-2.33)x(5.06+5.06)/2	-0.15		
		(1.41-2.30)x(5.07+5.06)/2	-4.51		
		(0.79-1.41)x(5.13+5.07)/2	-3.16		
		(0.57-0.79)x(5.16+5.13)/2	-1.13		
		(0.47-0.57)x(5.19+5.16)/2	-0.52		
		(0.21-0.47)x(5.22+5.19)/2	-1.35		
		(-0.16-0.21)x(5.25+5.22)/2	-1.94		
		(-0.51--0.16)x(5.29+5.25)/2	-1.84		
		(-0.68--0.51)x(5.30+5.29)/2	-0.90		
		(-0.83--0.68)x(5.31+5.30)/2	-0.80		
		(-1.13--0.83)x(5.32+5.31)/2	-1.59		
		(-1.88--1.13)x(5.35+5.32)/2	-4.00		
		(-2.83--1.88)x(5.41+5.35)/2	-5.11		
		(-2.86--2.83)x(5.41+5.41)/2	-0.16		
		(-2.97--2.86)x(5.41+5.41)/2	-0.60		
		(-3.13--2.97)x(5.42+5.41)/2	-0.87		
		(-3.95--3.13)x(5.50+5.42)/2	-4.48		
		(-4.44--3.95)x(5.56+5.50)/2	-2.71		
		(-4.49--4.44)x(5.57+5.56)/2	-0.28		
		(-5.02--4.49)x(5.62+5.57)/2	-2.97		
		(-5.94--5.02)x(5.75+5.62)/2	-5.23		
		(-5.98--5.94)x(5.75+5.75)/2	-0.23		
		(-6.12--5.98)x(5.77+5.75)/2	-0.81		
		(-6.21--6.12)x(5.78+5.77)/2	-0.52		
		(-6.25--6.21)x(5.78+5.78)/2	-0.23		
		(-7.22--6.25)x(5.89+5.78)/2	-5.66		
		(-7.33--7.22)x(5.90+5.89)/2	-0.65		
		(-8.06--7.33)x(5.95+5.90)/2	-4.33		
		(-8.10--8.06)x(5.95+5.95)/2	-0.24		
		(-8.45--8.10)x(5.96+5.95)/2	-2.08		
		(-9.03--8.45)x(5.99+5.96)/2	-3.47		
		(-9.50--9.03)x(6.03+5.99)/2	-2.82		
		(-9.51--9.50)x(6.03+6.03)/2	-0.06		
		(-9.80--9.51)x(6.05+6.03)/2	-1.75		
		(-10.59--9.80)x(6.10+6.05)/2	-4.80		
		(-11.51--10.59)x(6.17+6.10)/2	-5.64		
		(-11.54--11.51)x(6.17+6.17)/2	-0.19		
		(-11.66--11.54)x(6.18+6.17)/2	-0.74		
		(-11.87--11.66)x(6.20+6.18)/2	-1.30		
		(-12.69--11.87)x(6.30+6.20)/2	-5.13		
		(-12.72--12.69)x(6.30+6.30)/2	-0.19		
		(-13.22--12.72)x(6.35+6.30)/2	-3.16		
		(-13.32--13.22)x(6.36+6.35)/2	-0.64		
		(-13.92--13.32)x(6.39+6.36)/2	-3.82		
		(-14.23--13.92)x(6.38+6.39)/2	-1.98		
		(-15.23--14.23)x(6.27+6.38)/2	-6.32		
		(-15.24--15.23)x(6.27+6.27)/2	-0.06		
		(-16.20--15.24)x(6.27+6.27)/2	-6.02		
		(-16.27--16.20)x(6.27+6.27)/2	-0.44		
		(-16.96--16.27)x(6.25+6.27)/2	-4.32		
		(-17.25--16.96)x(6.24+6.25)/2	-1.81		
		(-17.82--17.25)x(6.28+6.24)/2	-3.57		
		(-18.26--17.82)x(6.31+6.28)/2	-2.77		
		(-18.31--18.26)x(6.31+6.31)/2	-0.32		
		(-19.15--18.31)x(6.35+6.31)/2	-5.32		
				114.88	

Il Direttore dei Lavori | L'Impresa

ARGILLA ESPANSA

DALLA SEZ. DA PROG.	ALLA SEZ. A PROG.	SEZIONE	FIGURA	AREA	DISTANZA SEZIONI m	DISTANZA DI CALCOLO m	VOLUME PARZIALE mc	VOLUME TOTALE mc
184	185	184	AR1	3.13	15.00	7.50	23.475	
2745.00	2760.00	185	AR1	4.64	15.00	7.50	34.800	
								58.275
185	186	185	AR1	4.64	15.00	7.50	34.800	
2760.00	2775.00	186	AR1	5.75	15.00	7.50	43.125	
								77.925
186	187	186	AR1	5.75	15.00	7.50	43.125	
2775.00	2790.00	187	AR1	9.90	15.00	7.50	74.250	
								117.375
187	188	187	AR1	9.90	15.00	7.50	74.250	
								74.250
188	189	189	AR1	25.60	15.00	7.50	192.000	
								192.000
189	190	189	AR1	25.60	15.00	7.50	192.000	
2820.00	2835.00	190	AR1	30.58	15.00	7.50	229.350	
								421.350
190	191	190	AR1	30.58	15.00	7.50	229.350	
2835.00	2850.00	191	AR1	40.24	15.00	7.50	301.800	
								531.150
191	192	191	AR1	40.24	15.00	7.50	301.800	
2850.00	2865.00	192	AR1	58.50	15.00	7.50	438.750	
								740.550
192	193	192	AR1	58.50	15.00	7.50	438.750	
2865.00	2880.00	193	AR1	73.41	15.00	7.50	550.575	
								989.325
193	194	193	AR1	73.41	15.00	7.50	550.575	
								550.575
194	195	195	AR1	87.71	15.00	7.50	657.825	
								657.825
195	196	195	AR1	87.71	15.00	7.50	657.825	
2910.00	2925.00	196	AR1	99.04	15.00	7.50	742.800	
								1400.625
196	197	196	AR1	99.04	15.00	7.50	742.800	
								742.800
197	198	198	AR1	105.34	15.00	7.50	790.050	
								790.050
198	199	198	AR1	105.34	15.00	7.50	790.050	
2955.00	2970.00	199	AR1	77.58	15.00	7.50	581.850	
								1371.900
199	200	199	AR1	77.58	15.00	7.50	581.850	
2970.00	2985.00	200	AR1	86.67	15.00	7.50	650.025	
								1231.875
200	201	200	AR1	86.67	15.00	7.50	650.025	
2985.00	3000.00	201	AR1	114.88	15.00	7.50	861.600	
								1511.625
201	201bsi	201	AR1	114.88	5.94	2.97	341.194	
3000.00	3005.94	201bsi	AR1	114.88	5.94	2.97	341.194	
								682.388

Il Direttore dei Lavori	L'Impresa	TOTALE ARTICOLO	12141.863

Volume dalla sezione 184 alla sezione 201bsi

ARTICOLO		VOLUME
AR ARGILLA ESPANSA	mc	12141.863

		CALCOLO DELLE AREE		Foglio n. 1	
ARGILLA ESPANSA					
N. SEZIONE PROG.	FIG.	ELEMENTI DI CALCOLO	AREA ELEMENTARE mq	AREA FIGURA mq	NOTE
208	AR1	(-12.61--15.84)x(8.39+6.24)/2	23.63		
3105.00		(-11.34--12.61)x(8.39+8.39)/2	10.66		
		(-11.62--11.34)x(8.06+8.39)/2	-2.30		
		(-1.75--11.62)x(7.77+8.06)/2	78.12		
		(-0.65--1.75)x(7.74+7.77)/2	8.53		
		(0.70--0.65)x(7.78+7.74)/2	10.48		
		(1.77-0.70)x(7.73+7.78)/2	8.30		
		(11.68-1.77)x(7.23+7.73)/2	74.13		
		(11.36-11.68)x(7.61+7.23)/2	-2.37		
		(12.63-11.36)x(7.61+7.61)/2	9.66		
		(15.11-12.63)x(5.95+7.61)/2	16.81		
		(14.90-15.11)x(5.96+5.95)/2	-1.25		
		(14.48-14.90)x(5.98+5.96)/2	-2.51		
		(14.45-14.48)x(5.98+5.98)/2	-0.18		
		(13.19-14.45)x(6.03+5.98)/2	-7.57		
		(13.16-13.19)x(6.03+6.03)/2	-0.18		
		(13.12-13.16)x(6.03+6.03)/2	-0.24		
		(13.02-13.12)x(6.03+6.03)/2	-0.60		
		(11.84-13.02)x(6.06+6.03)/2	-7.13		
		(11.81-11.84)x(6.06+6.06)/2	-0.18		
		(11.45-11.81)x(6.06+6.06)/2	-2.18		
		(11.39-11.45)x(6.06+6.06)/2	-0.36		
		(10.46-11.39)x(6.04+6.06)/2	-5.63		
		(9.77-10.46)x(6.02+6.04)/2	-4.16		
		(9.34-9.77)x(6.04+6.02)/2	-2.59		
		(8.20-9.34)x(6.12+6.04)/2	-6.93		
		(8.17-8.20)x(6.12+6.12)/2	-0.18		
		(8.04-8.17)x(6.13+6.12)/2	-0.80		
		(7.95-8.04)x(6.13+6.13)/2	-0.55		
		(7.53-7.95)x(6.13+6.13)/2	-2.57		
		(6.66-7.53)x(6.14+6.13)/2	-5.34		
		(6.59-6.66)x(6.14+6.14)/2	-0.43		
		(6.35-6.59)x(6.14+6.14)/2	-1.47		
		(5.45-6.35)x(6.14+6.14)/2	-5.53		
		(4.88-5.45)x(6.20+6.14)/2	-3.52		
		(4.74-4.88)x(6.20+6.20)/2	-0.87		
		(4.12-4.74)x(6.22+6.20)/2	-3.85		
		(4.07-4.12)x(6.22+6.22)/2	-0.31		
		(3.00-4.07)x(6.23+6.22)/2	-6.66		
		(2.77-3.00)x(6.23+6.23)/2	-1.43		
		(2.76-2.77)x(6.23+6.23)/2	-0.06		
		(2.03-2.76)x(6.23+6.23)/2	-4.55		
		(1.48-2.03)x(6.23+6.23)/2	-3.43		
		(1.40-1.48)x(6.22+6.23)/2	-0.50		
		(1.33-1.40)x(6.22+6.22)/2	-0.44		
		(1.26-1.33)x(6.22+6.22)/2	-0.44		
		(1.17-1.26)x(6.21+6.22)/2	-0.56		
		(0.59-1.17)x(6.17+6.21)/2	-3.59		
		(0.21-0.59)x(6.17+6.17)/2	-2.34		
		(-0.31-0.21)x(6.18+6.17)/2	-3.21		
		(-0.37--0.31)x(6.18+6.18)/2	-0.37		
		(-1.09--0.37)x(6.19+6.18)/2	-4.45		
		(-1.21--1.09)x(6.18+6.19)/2	-0.74		
		(-2.11--1.21)x(6.14+6.18)/2	-5.54		
		(-2.37--2.11)x(6.14+6.14)/2	-1.60		
		(-3.42--2.37)x(6.16+6.14)/2	-6.46		
		(-3.46--3.42)x(6.16+6.16)/2	-0.25		
		(-3.65--3.46)x(6.15+6.16)/2	-1.17		
		(-3.68--3.65)x(6.15+6.15)/2	-0.18		
		(-3.72--3.68)x(6.16+6.15)/2	-0.25		
		(-4.94--3.72)x(6.18+6.16)/2	-7.53		
		(-4.99--4.94)x(6.18+6.18)/2	-0.31		
		(-5.46--4.99)x(6.18+6.18)/2	-2.90		
		(-6.25--5.46)x(6.17+6.18)/2	-4.88		
		(-7.10--6.25)x(6.19+6.17)/2	-5.25		
		(-7.11--7.10)x(6.19+6.19)/2	-0.06		
		(-7.53--7.11)x(6.19+6.19)/2	-2.60		
		(-8.80--7.53)x(6.21+6.19)/2	-7.87		
		(-8.89--8.80)x(6.20+6.21)/2	-0.56		
		(-8.91--8.89)x(6.20+6.20)/2	-0.12		
		(-8.98--8.91)x(6.20+6.20)/2	-0.43		
		(-9.03--8.98)x(6.20+6.20)/2	-0.31		
		(-10.22--9.03)x(6.15+6.20)/2	-7.35		
		(-10.23--10.22)x(6.15+6.15)/2	-0.06		
		(-10.53--10.23)x(6.13+6.15)/2	-1.84		
		(-11.37--10.53)x(6.15+6.13)/2	-5.16		
		(-12.14--11.37)x(6.18+6.15)/2	-4.75		
		(-12.17--12.14)x(6.18+6.18)/2	-0.19		
		(-12.69--12.17)x(6.18+6.18)/2	-3.21		
		(-12.78--12.69)x(6.18+6.18)/2	-0.56		
		(-13.89--12.78)x(6.15+6.18)/2	-6.84		
		(-13.92--13.89)x(6.15+6.15)/2	-0.18		
		(-14.29--13.92)x(6.17+6.15)/2	-2.28		
		(-15.18--14.29)x(6.22+6.17)/2	-5.51		
		(-15.27--15.18)x(6.22+6.22)/2	-0.56		
		(-15.53--15.27)x(6.23+6.22)/2	-1.62		
		(-15.84--15.53)x(6.24+6.23)/2	-1.93		
				45.46	
209	AR1	(-12.61--14.91)x(7.75+6.21)/2	16.05		
3120.00		(-11.34--12.61)x(7.74+7.75)/2	9.84		
		(-11.63--11.34)x(7.40+7.74)/2	-2.20		
		(-1.75--11.63)x(7.31+7.40)/2	72.67		
		(-0.66--1.75)x(7.30+7.31)/2	7.96		
		(0.69--0.66)x(7.33+7.30)/2	9.88		
		(1.76-0.69)x(7.29+7.33)/2	7.82		
		(11.66-1.76)x(6.88+7.29)/2	70.14		
		(11.35-11.66)x(7.26+6.88)/2	-2.19		
		(12.62-11.35)x(7.26+7.26)/2	9.22		
		(14.71-12.62)x(5.86+7.26)/2	13.71		
		(13.71-14.71)x(5.90+5.86)/2	-5.88		
		(13.69-13.71)x(5.90+5.90)/2	-0.12		
		(13.35-13.69)x(5.91+5.90)/2	-2.01		
		(13.28-13.35)x(5.91+5.91)/2	-0.41		
		(12.71-13.28)x(5.91+5.91)/2	-3.37		
		(12.04-12.71)x(5.91+5.91)/2	-3.96		
		(12.03-12.04)x(5.91+5.91)/2	-0.06		
		(12.02-12.03)x(5.91+5.91)/2	-0.06		
		A RIPORTARE mq	197.03		

		CALCOLO DELLE AREE		Foglio n. 2	
ARGILLA ESPANSA					
N. SEZIONE PROG.	FIG.	ELEMENTI DI CALCOLO	AREA ELEMENTARE mq	AREA FIGURA mq	NOTE
		RIPORTO mq	197.03		
		(10.77-12.02)x(5.98+5.91)/2	-7.43		
		(10.74-10.77)x(5.98+5.98)/2	-0.18		
		(10.43-10.74)x(5.99+5.98)/2	-1.86		
		(10.39-10.43)x(5.99+5.99)/2	-0.24		
		(9.44-10.39)x(6.01+5.99)/2	-5.70		
		(8.84-9.44)x(6.05+6.01)/2	-3.62		
		(8.80-8.84)x(6.05+6.05)/2	-0.24		
		(8.13-8.80)x(6.08+6.05)/2	-4.06		
		(8.05-8.13)x(6.09+6.08)/2	-0.49		
		(7.07-8.05)x(6.09+6.09)/2	-5.97		
		(6.98-7.07)x(6.09+6.09)/2	-0.55		
		(6.72-6.98)x(6.08+6.09)/2	-1.58		
		(5.48-6.72)x(6.12+6.08)/2	-7.56		
		(5.46-5.48)x(6.12+6.12)/2	-0.12		
		(5.44-5.46)x(6.12+6.12)/2	-0.12		
		(4.13-5.44)x(6.13+6.12)/2	-8.02		
		(3.80-4.13)x(6.14+6.13)/2	-2.02		
		(3.70-3.80)x(6.13+6.14)/2	-0.61		
		(2.78-3.70)x(6.10+6.13)/2	-5.63		
		(2.23-2.78)x(6.11+6.10)/2	-3.36		
		(1.64-2.23)x(6.16+6.11)/2	-3.62		
		(1.51-1.64)x(6.16+6.16)/2	-0.80		
		(0.52-1.51)x(6.18+6.16)/2	-6.11		
		(0.51-0.52)x(6.18+6.18)/2	-0.06		
		(0.19-0.51)x(6.18+6.18)/2	-1.98		
		(0.16-0.19)x(6.18+6.18)/2	-0.19		
		(-1.09-0.16)x(6.17+6.18)/2	-7.72		
		(-1.10--1.09)x(6.17+6.17)/2	-0.06		
		(-1.15--1.10)x(6.17+6.17)/2	-0.31		
		(-1.16--1.15)x(6.17+6.17)/2	-0.06		
		(-1.19--1.16)x(6.17+6.17)/2	-0.19		
		(-2.46--1.19)x(6.15+6.17)/2	-7.82		
		(-2.78--2.46)x(6.15+6.15)/2	-1.97		
		(-2.81--2.78)x(6.15+6.15)/2	-0.18		
		(-3.76--2.81)x(6.15+6.15)/2	-5.84		
		(-4.40--3.76)x(6.15+6.15)/2	-3.94		
		(-5.00--4.40)x(6.18+6.15)/2	-3.70		
		(-5.08--5.00)x(6.18+6.18)/2	-0.49		
		(-6.09--5.08)x(6.17+6.18)/2	-6.24		
		(-6.10--6.09)x(6.17+6.17)/2	-0.06		
		(-6.39--6.10)x(6.17+6.17)/2	-1.79		
		(-7.56--6.39)x(6.18+6.17)/2	-7.22		
		(-7.57--7.56)x(6.18+6.18)/2	-0.06		
		(-7.68--7.57)x(6.18+6.18)/2	-0.68		
		(-7.69--7.68)x(6.18+6.18)/2	-0.06		
		(-7.72--7.69)x(6.18+6.18)/2	-0.19		
		(-8.98--7.72)x(6.19+6.18)/2	-7.79		
		(-9.33--8.98)x(6.20+6.19)/2	-2.17		
		(-9.38--9.33)x(6.20+6.20)/2	-0.31		
		(-10.33--9.38)x(6.20+6.20)/2	-5.89		
		(-11.00--10.33)x(6.19+6.20)/2	-4.15		
		(-11.31--11.00)x(6.20+6.19)/2	-1.92		
		(-11.38--11.31)x(6.20+6.20)/2	-0.43		
		(-11.65--11.38)x(6.20+6.20)/2	-1.67		
		(-12.67--11.65)x(6.20+6.20)/2	-6.32		
		(-12.69--12.67)x(6.20+6.20)/2	-0.12		
		(-12.95--12.69)x(6.19+6.20)/2	-1.61		
		(-14.04--12.95)x(6.21+6.19)/2	-6.76		
		(-14.05--14.04)x(6.21+6.21)/2	-0.06		
		(-14.24--14.05)x(6.21+6.21)/2	-1.18		
		(-14.25--14.24)x(6.21+6.21)/2	-0.06		
		(-14.29--14.25)x(6.21+6.21)/2	-0.25		
		(-14.91--14.29)x(6.21+6.21)/2	-3.85		
				31.79	
210 3135.00	AR1	(-12.61--14.39)x(7.28+6.09)/2	11.90		
		(-11.34--12.61)x(7.27+7.28)/2	9.24		
		(-11.64--11.34)x(6.92+7.27)/2	-2.13		
		(-1.75--11.64)x(7.03+6.92)/2	68.98		
		(-0.68--1.75)x(7.04+7.03)/2	7.53		
		(0.69--0.68)x(7.05+7.04)/2	9.65		
		(1.75-0.69)x(7.02+7.05)/2	7.46		
		(11.65-1.75)x(6.70+7.02)/2	67.91		
		(11.34-11.65)x(7.07+6.70)/2	-2.13		
		(12.61-11.34)x(7.08+7.07)/2	8.99		
		(14.27-12.61)x(5.97+7.08)/2	10.83		
		(13.92-14.27)x(5.95+5.97)/2	-2.09		
		(13.91-13.92)x(5.95+5.95)/2	-0.06		
		(13.04-13.91)x(5.89+5.95)/2	-5.15		
		(12.39-13.04)x(5.86+5.89)/2	-3.82		
		(11.84-12.39)x(5.86+5.86)/2	-3.22		
		(10.84-11.84)x(5.88+5.86)/2	-5.87		
		(10.81-10.84)x(5.88+5.88)/2	-0.18		
		(10.52-10.81)x(5.88+5.88)/2	-1.71		
		(9.22-10.52)x(5.90+5.88)/2	-7.66		
		(9.19-9.22)x(5.90+5.90)/2	-0.18		
		(9.18-9.19)x(5.90+5.90)/2	-0.06		
		(9.13-9.18)x(5.90+5.90)/2	-0.29		
		(7.87-9.13)x(5.91+5.90)/2	-7.44		
		(7.59-7.87)x(5.91+5.91)/2	-1.65		
		(7.56-7.59)x(5.91+5.91)/2	-0.18		
		(6.52-7.56)x(5.91+5.91)/2	-6.15		
		(6.49-6.52)x(5.91+5.91)/2	-0.18		
		(5.98-6.49)x(5.90+5.91)/2	-3.01		
		(5.30-5.98)x(5.93+5.90)/2	-4.02		
		(5.24-5.30)x(5.94+5.93)/2	-0.36		
		(4.39-5.24)x(5.95+5.94)/2	-5.05		
		(3.97-4.39)x(5.97+5.95)/2	-2.50		
		(2.83-3.97)x(6.03+5.97)/2	-6.84		
		(2.69-2.83)x(6.04+6.03)/2	-0.84		
		(2.66-2.69)x(6.04+6.04)/2	-0.18		
		(1.99-2.66)x(6.07+6.04)/2	-4.06		
		(1.36-1.99)x(6.11+6.07)/2	-3.84		
		(1.30-1.36)x(6.12+6.11)/2	-0.37		
		(1.26-1.30)x(6.12+6.12)/2	-0.24		
		(1.21-1.26)x(6.12+6.12)/2	-0.31		
		A RIPORTARE mq	120.72		

	CALCOLO DELLE AREE		Foglio n. 3

ARGILLA ESPANSA

N. SEZIONE PROG.	FIG.	ELEMENTI DI CALCOLO	AREA ELEMENTARE mq	AREA FIGURA mq	NOTE
		RIPORTO mq	120.72		
		(1.05-1.21)x(6.12+6.12)/2	-0.98		
		(0.40-1.05)x(6.11+6.12)/2	-3.97		
		(0.27-0.40)x(6.10+6.11)/2	-0.79		
		(-0.22-0.27)x(6.06+6.10)/2	-2.98		
		(-0.57--0.22)x(6.05+6.06)/2	-2.12		
		(-1.40--0.57)x(6.05+6.05)/2	-5.02		
		(-1.46--1.40)x(6.05+6.05)/2	-0.36		
		(-2.18--1.46)x(6.04+6.05)/2	-4.35		
		(-2.76--2.18)x(6.04+6.04)/2	-3.50		
		(-2.77--2.76)x(6.04+6.04)/2	-0.06		
		(-3.81--2.77)x(6.02+6.04)/2	-6.27		
		(-3.87--3.81)x(6.02+6.02)/2	-0.36		
		(-4.14--3.87)x(6.00+6.02)/2	-1.62		
		(-5.36--4.14)x(5.96+6.00)/2	-7.30		
		(-6.59--5.36)x(6.04+5.96)/2	-7.38		
		(-6.63--6.59)x(6.04+6.04)/2	-0.24		
		(-6.93--6.63)x(6.06+6.04)/2	-1.81		
		(-6.96--6.93)x(6.06+6.06)/2	-0.18		
		(-7.99--6.96)x(6.08+6.06)/2	-6.25		
		(-8.20--7.99)x(6.08+6.08)/2	-1.28		
		(-8.76--8.20)x(6.03+6.08)/2	-3.39		
		(-9.39--8.76)x(6.01+6.03)/2	-3.79		
		(-10.23--9.39)x(6.01+6.01)/2	-5.05		
		(-10.29--10.23)x(6.01+6.01)/2	-0.36		
		(-10.68--10.29)x(6.01+6.01)/2	-2.34		
		(-11.81--10.68)x(6.03+6.01)/2	-6.80		
		(-11.91--11.81)x(6.04+6.03)/2	-0.60		
		(-12.49--11.91)x(6.07+6.04)/2	-3.51		
		(-12.50--12.49)x(6.07+6.07)/2	-0.06		
		(-13.22--12.50)x(6.11+6.07)/2	-4.38		
		(-13.31--13.22)x(6.12+6.11)/2	-0.55		
		(-13.47--13.31)x(6.12+6.12)/2	-0.98		
		(-13.55--13.47)x(6.12+6.12)/2	-0.49		
		(-14.39--13.55)x(6.09+6.12)/2	-5.13		
				26.47	

Il Direttore dei Lavori	L'Impresa	

ARGILLA ESPANSA

DALLA SEZ. DA PROG.	ALLA SEZ. A PROG.	SEZIONE	FIGURA	AREA	DISTANZA SEZIONI m	DISTANZA DI CALCOLO m	VOLUME PARZIALE mc	VOLUME TOTALE mc
207	208	208	AR1	45.46	15.00	7.50	340.950	
								340.950
208	209	208	AR1	45.46	15.00	7.50	340.950	
3105.00	3120.00	209	AR1	31.79	15.00	7.50	238.425	
								579.375
209	210	209	AR1	31.79	15.00	7.50	238.425	
3120.00	3135.00	210	AR1	26.47	15.00	7.50	198.525	
								436.950

Il Direttore dei Lavori	L'Impresa	TOTALE ARTICOLO	1357.275

	COMPUTO DEI VOLUMI		Foglio n. 5

Volume dalla sezione 207 alla sezione 210

ARTICOLO		VOLUME
AR ARGILLA ESPANSA	mc	1357.275

	CALCOLO DELLE AREE		Foglio n. 1

RILEVATO

N. SEZIONE PROG.	FIG.	ELEMENTI DI CALCOLO	AREA ELEMENTARE mq	AREA FIGURA mq	NOTE
208	A1	(-12.61--18.70)x(8.39+4.33)/2	38.73		
3105.00		(-11.34--12.61)x(8.39+8.39)/2	10.66		
		(-11.62--11.34)x(8.06+8.39)/2	-2.30		
		(-1.75--11.62)x(7.77+8.06)/2	78.12		
		(-0.65--1.75)x(7.74+7.77)/2	8.53		
		(0.70--0.65)x(7.78+7.74)/2	10.48		
		(1.77-0.70)x(7.73+7.78)/2	8.30		
		(11.68-1.77)x(7.23+7.73)/2	74.13		
		(11.36-11.68)x(7.61+7.23)/2	-2.37		
		(12.63-11.36)x(7.61+7.61)/2	9.66		
		(18.23-12.63)x(3.88+7.61)/2	32.17		
		(18.19-18.23)x(3.88+3.88)/2	-0.16		
		(16.96-18.19)x(3.89+3.88)/2	-4.78		
		(16.50-16.96)x(3.89+3.89)/2	-1.79		
		(15.67-16.50)x(3.93+3.89)/2	-3.25		
		(14.81-15.67)x(3.96+3.93)/2	-3.39		
		(14.38-14.81)x(3.99+3.96)/2	-1.71		
		(13.12-14.38)x(4.03+3.99)/2	-5.05		
		(13.09-13.12)x(4.03+4.03)/2	-0.12		
		(12.99-13.09)x(4.03+4.03)/2	-0.40		
		(11.80-12.99)x(4.06+4.03)/2	-4.81		
		(11.44-11.80)x(4.06+4.06)/2	-1.46		
		(10.51-11.44)x(4.04+4.06)/2	-3.77		
		(9.75-10.51)x(4.02+4.04)/2	-3.06		
		(9.22-9.75)x(4.04+4.02)/2	-2.14		
		(8.06-9.22)x(4.12+4.04)/2	-4.73		
		(7.93-8.06)x(4.13+4.12)/2	-0.54		
		(7.51-7.93)x(4.13+4.13)/2	-1.73		
		(6.64-7.51)x(4.14+4.13)/2	-3.60		
		(6.37-6.64)x(4.14+4.14)/2	-1.12		
		(5.35-6.37)x(4.14+4.14)/2	-4.22		
		(4.68-5.35)x(4.21+4.14)/2	-2.80		
		(4.06-4.68)x(4.22+4.21)/2	-2.61		
		(2.99-4.06)x(4.23+4.22)/2	-4.52		
		(2.77-2.99)x(4.23+4.23)/2	-0.93		
		(2.03-2.77)x(4.23+4.23)/2	-3.13		
		(1.48-2.03)x(4.23+4.23)/2	-2.33		
		(1.40-1.48)x(4.22+4.23)/2	-0.34		
		(1.31-1.40)x(4.22+4.22)/2	-0.38		
		(0.67-1.31)x(4.17+4.22)/2	-2.68		
		(0.19-0.67)x(4.16+4.17)/2	-2.00		
		(-0.38-0.19)x(4.18+4.16)/2	-2.38		
		(-1.10--0.38)x(4.19+4.18)/2	-3.01		
		(-2.07--1.10)x(4.14+4.19)/2	-4.04		
		(-2.39--2.07)x(4.14+4.14)/2	-1.32		
		(-3.44--2.39)x(4.16+4.14)/2	-4.36		
		(-3.68--3.44)x(4.15+4.16)/2	-1.00		
		(-3.76--3.68)x(4.16+4.15)/2	-0.33		
		(-4.97--3.76)x(4.18+4.16)/2	-5.05		
		(-5.45--4.97)x(4.18+4.18)/2	-2.01		
		(-6.27--5.45)x(4.17+4.18)/2	-3.42		
		(-7.13--6.27)x(4.19+4.17)/2	-3.59		
		(-7.56--7.13)x(4.19+4.19)/2	-1.80		
		(-8.82--7.56)x(4.21+4.19)/2	-5.29		
		(-8.85--8.82)x(4.21+4.21)/2	-0.13		
		(-8.92--8.85)x(4.20+4.21)/2	-0.29		
		(-10.14--8.92)x(4.15+4.20)/2	-5.09		
		(-10.51--10.14)x(4.13+4.15)/2	-1.53		
		(-11.43--10.51)x(4.15+4.13)/2	-3.81		
		(-12.20--11.43)x(4.18+4.15)/2	-3.21		
		(-12.72--12.20)x(4.18+4.18)/2	-2.17		
		(-13.89--12.72)x(4.15+4.18)/2	-4.87		
		(-14.01--13.89)x(4.15+4.15)/2	-0.50		
		(-14.40--14.01)x(4.17+4.15)/2	-1.62		
		(-15.30--14.40)x(4.22+4.17)/2	-3.78		
		(-15.58--15.30)x(4.23+4.22)/2	-1.18		
		(-16.59--15.58)x(4.26+4.23)/2	-4.29		
		(-17.26--16.59)x(4.30+4.26)/2	-2.87		
		(-17.88--17.26)x(4.30+4.30)/2	-2.67		
		(-18.70--17.88)x(4.33+4.30)/2	-3.54		
				113.41	
209	A1	(-12.61--17.92)x(7.75+4.21)/2	31.75		
3120.00		(-11.34--12.61)x(7.74+7.75)/2	9.84		
		(-11.63--11.34)x(7.40+7.74)/2	-2.20		
		(-1.75--11.63)x(7.31+7.40)/2	72.67		
		(-0.66--1.75)x(7.30+7.31)/2	7.96		
		(0.69--0.66)x(7.33+7.30)/2	9.88		
		(1.76-0.69)x(7.29+7.33)/2	7.82		
		(11.66-1.76)x(6.88+7.29)/2	70.14		
		(11.35-11.66)x(7.26+6.88)/2	-2.19		
		(12.62-11.35)x(7.26+7.26)/2	9.22		
		(17.71-12.62)x(3.87+7.26)/2	28.33		
		(17.22-17.71)x(3.87+3.87)/2	-1.90		
		(16.92-17.22)x(3.87+3.87)/2	-1.16		
		(15.91-16.92)x(3.87+3.87)/2	-3.91		
		(15.28-15.91)x(3.86+3.87)/2	-2.43		
		(14.60-15.28)x(3.87+3.86)/2	-2.63		
		(13.64-14.60)x(3.90+3.87)/2	-3.73		
		(13.29-13.64)x(3.91+3.90)/2	-1.37		
		(12.71-13.29)x(3.91+3.91)/2	-2.27		
		(11.99-12.71)x(3.91+3.91)/2	-2.82		
		(11.98-11.99)x(3.91+3.91)/2	-0.04		
		(11.91-11.98)x(3.91+3.91)/2	-0.27		
		(10.67-11.91)x(3.98+3.91)/2	-4.89		
		(10.35-10.67)x(3.99+3.98)/2	-1.28		
		(9.35-10.35)x(4.01+3.99)/2	-4.00		
		(8.71-9.35)x(4.05+4.01)/2	-2.58		
		(8.04-8.71)x(4.09+4.05)/2	-2.73		
		(7.06-8.04)x(4.09+4.09)/2	-4.01		
		(6.73-7.06)x(4.07+4.09)/2	-1.35		
		(5.42-6.73)x(4.12+4.07)/2	-5.36		
		(4.11-5.42)x(4.13+4.12)/2	-5.40		
		(3.77-4.11)x(4.14+4.13)/2	-1.41		
		(2.79-3.77)x(4.10+4.14)/2	-4.04		
		(2.13-2.79)x(4.11+4.10)/2	-2.71		
		(1.48-2.13)x(4.16+4.11)/2	-2.69		
		A RIPORTARE mq	178.24		

	CALCOLO DELLE AREE		Foglio n. 2

RILEVATO

N. SEZIONE PROG.	FIG.	ELEMENTI DI CALCOLO	AREA ELEMENTARE mq	AREA FIGURA mq	NOTE
		RIPORTO mq	178.24		
		(0.49-1.48)x(4.18+4.16)/2	-4.13		
		(0.17-0.49)x(4.18+4.18)/2	-1.34		
		(-1.08-0.17)x(4.17+4.18)/2	-5.22		
		(-1.14--1.08)x(4.17+4.17)/2	-0.25		
		(-1.16--1.14)x(4.17+4.17)/2	-0.08		
		(-2.45--1.16)x(4.15+4.17)/2	-5.37		
		(-2.80--2.45)x(4.15+4.15)/2	-1.45		
		(-3.76--2.80)x(4.15+4.15)/2	-3.98		
		(-4.44--3.76)x(4.15+4.15)/2	-2.82		
		(-5.08--4.44)x(4.18+4.15)/2	-2.67		
		(-6.09--5.08)x(4.17+4.18)/2	-4.22		
		(-6.39--6.09)x(4.17+4.17)/2	-1.25		
		(-7.57--6.39)x(4.18+4.17)/2	-4.93		
		(-7.70--7.57)x(4.18+4.18)/2	-0.54		
		(-7.73--7.70)x(4.18+4.18)/2	-0.13		
		(-9.01--7.73)x(4.19+4.18)/2	-5.36		
		(-9.37--9.01)x(4.20+4.19)/2	-1.51		
		(-10.32--9.37)x(4.20+4.20)/2	-3.99		
		(-11.02--10.32)x(4.19+4.20)/2	-2.94		
		(-11.36--11.02)x(4.20+4.19)/2	-1.43		
		(-11.63--11.36)x(4.20+4.20)/2	-1.13		
		(-12.66--11.63)x(4.20+4.20)/2	-4.33		
		(-12.95--12.66)x(4.19+4.20)/2	-1.22		
		(-14.07--12.95)x(4.21+4.19)/2	-4.70		
		(-14.26--14.07)x(4.21+4.21)/2	-0.80		
		(-14.31--14.26)x(4.21+4.21)/2	-0.21		
		(-15.57--14.31)x(4.22+4.21)/2	-5.31		
		(-15.95--15.57)x(4.22+4.22)/2	-1.60		
		(-16.88--15.95)x(4.20+4.22)/2	-3.92		
		(-17.59--16.88)x(4.21+4.20)/2	-2.99		
		(-17.92--17.59)x(4.21+4.21)/2	-1.39		
				97.03	
210	A1	(-12.61--17.25)x(7.28+4.19)/2	26.61		
3135.00		(-11.34--12.61)x(7.27+7.28)/2	9.24		
		(-11.64--11.34)x(6.92+7.27)/2	-2.13		
		(-1.75--11.64)x(7.03+6.92)/2	68.98		
		(-0.68--1.75)x(7.04+7.03)/2	7.53		
		(0.69--0.68)x(7.05+7.04)/2	9.65		
		(1.75-0.69)x(7.02+7.05)/2	7.46		
		(11.65-1.75)x(6.70+7.02)/2	67.91		
		(11.34-11.65)x(7.07+6.70)/2	-2.13		
		(12.61-11.34)x(7.08+7.07)/2	8.99		
		(17.22-12.61)x(4.00+7.08)/2	25.54		
		(17.12-17.22)x(4.00+4.00)/2	-0.40		
		(16.37-17.12)x(4.02+4.00)/2	-3.01		
		(15.80-16.37)x(4.03+4.02)/2	-2.29		
		(15.67-15.80)x(4.02+4.03)/2	-0.52		
		(14.47-15.67)x(3.98+4.02)/2	-4.80		
		(14.05-14.47)x(3.95+3.98)/2	-1.67		
		(13.15-14.05)x(3.89+3.95)/2	-3.53		
		(12.43-13.15)x(3.86+3.89)/2	-2.79		
		(11.83-12.43)x(3.86+3.86)/2	-2.32		
		(10.81-11.83)x(3.88+3.86)/2	-3.95		
		(10.50-10.81)x(3.88+3.88)/2	-1.20		
		(9.19-10.50)x(3.90+3.88)/2	-5.10		
		(9.18-9.19)x(3.90+3.90)/2	-0.04		
		(9.12-9.18)x(3.90+3.90)/2	-0.23		
		(7.85-9.12)x(3.91+3.90)/2	-4.96		
		(7.57-7.85)x(3.91+3.91)/2	-1.09		
		(6.53-7.57)x(3.91+3.91)/2	-4.07		
		(5.95-6.53)x(3.90+3.91)/2	-2.26		
		(5.20-5.95)x(3.94+3.90)/2	-2.94		
		(4.33-5.20)x(3.95+3.94)/2	-3.43		
		(3.88-4.33)x(3.97+3.95)/2	-1.78		
		(2.71-3.88)x(4.03+3.97)/2	-4.68		
		(2.56-2.71)x(4.04+4.03)/2	-0.61		
		(1.87-2.56)x(4.08+4.04)/2	-2.80		
		(1.23-1.87)x(4.12+4.08)/2	-2.62		
		(1.17-1.23)x(4.12+4.12)/2	-0.25		
		(1.09-1.17)x(4.13+4.12)/2	-0.33		
		(0.44-1.09)x(4.11+4.13)/2	-2.68		
		(-0.09-0.44)x(4.07+4.11)/2	-2.17		
		(-0.53--0.09)x(4.05+4.07)/2	-1.79		
		(-1.42--0.53)x(4.05+4.05)/2	-3.60		
		(-2.15--1.42)x(4.04+4.05)/2	-2.95		
		(-2.74--2.15)x(4.04+4.04)/2	-2.38		
		(-3.77--2.74)x(4.02+4.04)/2	-4.15		
		(-4.06--3.77)x(4.00+4.02)/2	-1.16		
		(-5.37--4.06)x(3.96+4.00)/2	-5.21		
		(-5.39--5.37)x(3.96+3.96)/2	-0.08		
		(-6.71--5.39)x(4.05+3.96)/2	-5.29		
		(-7.01--6.71)x(4.06+4.05)/2	-1.22		
		(-8.04--7.01)x(4.08+4.06)/2	-4.19		
		(-8.63--8.04)x(4.04+4.08)/2	-2.40		
		(-9.36--8.63)x(4.00+4.04)/2	-2.93		
		(-10.25--9.36)x(4.01+4.00)/2	-3.56		
		(-10.69--10.25)x(4.01+4.01)/2	-1.76		
		(-11.87--10.69)x(4.03+4.01)/2	-4.74		
		(-12.01--11.87)x(4.04+4.03)/2	-0.56		
		(-12.62--12.01)x(4.08+4.04)/2	-2.48		
		(-13.33--12.62)x(4.12+4.08)/2	-2.91		
		(-13.49--13.33)x(4.12+4.12)/2	-0.66		
		(-14.66--13.49)x(4.09+4.12)/2	-4.80		
		(-15.11--14.66)x(4.10+4.09)/2	-1.84		
		(-15.98--15.11)x(4.17+4.10)/2	-3.60		
		(-16.73--15.98)x(4.20+4.17)/2	-3.14		
		(-17.25--16.73)x(4.19+4.20)/2	-2.18		
				89.55	

Il Direttore dei Lavori	L'Impresa	

	CALCOLO DELLE AREE		Foglio n. 3

STERRO

N. SEZIONE PROG.	FIG.	ELEMENTI DI CALCOLO	AREA ELEMENTARE mq	AREA FIGURA mq	NOTE
207	B1	(-14.11--14.89)x(4.18+4.18)/2	3.26		
3090.00		(-14.05--14.11)x(4.18+4.18)/2	0.25		
		(-14.03--14.05)x(4.18+4.18)/2	0.08		
		(-12.79--14.03)x(4.17+4.18)/2	5.18		
		(-12.27--12.79)x(4.20+4.17)/2	2.18		
		(-11.53--12.27)x(4.23+4.20)/2	3.12		
		(-10.51--11.53)x(4.21+4.23)/2	4.30		
		(-10.27--10.51)x(4.21+4.21)/2	1.01		
		(-9.64--10.27)x(4.20+4.21)/2	2.65		
		(-9.01--9.64)x(4.14+4.20)/2	2.63		
		(-8.75--9.01)x(4.14+4.14)/2	1.08		
		(-7.75--8.75)x(4.18+4.14)/2	4.16		
		(-6.99--7.75)x(4.14+4.18)/2	3.16		
		(-6.48--6.99)x(4.10+4.14)/2	2.10		
		(-5.24--6.48)x(4.08+4.10)/2	5.07		
		(-5.22--5.24)x(4.08+4.08)/2	0.08		
		(-5.19--5.22)x(4.08+4.08)/2	0.12		
		(-3.96--5.19)x(4.12+4.08)/2	5.04		
		(-3.48--3.96)x(4.12+4.12)/2	1.98		
		(-2.70--3.48)x(4.11+4.12)/2	3.21		
		(-1.72--2.70)x(4.10+4.11)/2	4.02		
		(-1.44--1.72)x(4.10+4.10)/2	1.15		
		(-0.73--1.44)x(4.13+4.10)/2	2.92		
		(-0.18--0.73)x(4.15+4.13)/2	2.28		
		(0.04--0.18)x(4.16+4.15)/2	0.91		
		(1.09-0.04)x(4.18+4.16)/2	4.38		
		(1.80-1.09)x(4.15+4.18)/2	2.96		
		(2.35-1.80)x(4.12+4.15)/2	2.27		
		(3.56-2.35)x(4.13+4.12)/2	4.99		
		(3.61-3.56)x(4.13+4.13)/2	0.21		
		(3.73-3.61)x(4.13+4.13)/2	0.50		
		(4.87-3.73)x(4.08+4.13)/2	4.68		
		(5.32-4.87)x(4.08+4.08)/2	1.84		
		(6.13-5.32)x(4.05+4.08)/2	3.29		
		(7.08-6.13)x(4.04+4.05)/2	3.84		
		(7.39-7.08)x(4.04+4.04)/2	1.25		
		(8.20-7.39)x(4.05+4.04)/2	3.28		
		(8.66-8.20)x(4.05+4.05)/2	1.86		
		(8.84-8.66)x(4.05+4.05)/2	0.73		
		(9.92-8.84)x(4.05+4.05)/2	4.37		
		(10.60-9.92)x(4.05+4.05)/2	2.75		
		(11.18-10.60)x(4.07+4.05)/2	2.35		
		(11.67-11.18)x(4.10+4.07)/2	2.00		
		(12.36-11.67)x(4.07+4.10)/2	2.82		
		(12.41-12.36)x(4.07+4.07)/2	0.20		
		(12.44-12.41)x(4.07+4.07)/2	0.12		
		(12.66-12.44)x(4.07+4.07)/2	0.90		
		(13.70-12.66)x(4.10+4.07)/2	4.25		
		(14.12-13.70)x(4.09+4.10)/2	1.72		
		(14.81-14.12)x(4.13+4.09)/2	2.84		
		(11.99-14.81)x(2.24+4.13)/2	-8.98		
		(-11.96-11.99)x(2.22+2.24)/2	-53.41		
		(-14.89--11.96)x(4.18+2.22)/2	-9.38		
				50.57	

Il Direttore dei Lavori	L'Impresa	

	CALCOLO DELLE AREE		Foglio n. 4

BONIFICA

N. SEZIONE PROG.	FIG.	ELEMENTI DI CALCOLO	AREA ELEMENTARE mq	AREA FIGURA mq	NOTE
208 3105.00	BO1	(-17.88--18.70)x(4.30+4.33)/2	3.54		
		(-17.26--17.88)x(4.30+4.30)/2	2.67		
		(-16.59--17.26)x(4.26+4.30)/2	2.87		
		(-15.58--16.59)x(4.23+4.26)/2	4.29		
		(-15.30--15.58)x(4.22+4.23)/2	1.18		
		(-14.40--15.30)x(4.17+4.22)/2	3.78		
		(-14.01--14.40)x(4.15+4.17)/2	1.62		
		(-13.89--14.01)x(4.15+4.15)/2	0.50		
		(-12.72--13.89)x(4.18+4.15)/2	4.87		
		(-12.20--12.72)x(4.18+4.18)/2	2.17		
		(-11.43--12.20)x(4.15+4.18)/2	3.21		
		(-10.51--11.43)x(4.13+4.15)/2	3.81		
		(-10.14--10.51)x(4.15+4.13)/2	1.53		
		(-8.92--10.14)x(4.20+4.15)/2	5.09		
		(-8.85--8.92)x(4.21+4.20)/2	0.29		
		(-8.82--8.85)x(4.21+4.21)/2	0.13		
		(-7.56--8.82)x(4.19+4.21)/2	5.29		
		(-7.13--7.56)x(4.19+4.19)/2	1.80		
		(-6.27--7.13)x(4.17+4.19)/2	3.59		
		(-5.45--6.27)x(4.18+4.17)/2	3.42		
		(-4.97--5.45)x(4.18+4.18)/2	2.01		
		(-3.76--4.97)x(4.16+4.18)/2	5.05		
		(-3.68--3.76)x(4.15+4.16)/2	0.33		
		(-3.44--3.68)x(4.16+4.15)/2	1.00		
		(-2.39--3.44)x(4.14+4.16)/2	4.36		
		(-2.07--2.39)x(4.14+4.14)/2	1.32		
		(-1.10--2.07)x(4.19+4.14)/2	4.04		
		(-0.38--1.10)x(4.18+4.19)/2	3.01		
		(0.19--0.38)x(4.16+4.18)/2	2.38		
		(0.67-0.19)x(4.17+4.16)/2	2.00		
		(1.31-0.67)x(4.22+4.17)/2	2.68		
		(1.40-1.31)x(4.22+4.22)/2	0.38		
		(1.48-1.40)x(4.23+4.22)/2	0.34		
		(2.03-1.48)x(4.23+4.23)/2	2.33		
		(2.77-2.03)x(4.23+4.23)/2	3.13		
		(2.99-2.77)x(4.23+4.23)/2	0.93		
		(4.06-2.99)x(4.22+4.23)/2	4.52		
		(4.68-4.06)x(4.21+4.22)/2	2.61		
		(5.35-4.68)x(4.14+4.21)/2	2.80		
		(6.37-5.35)x(4.14+4.14)/2	4.22		
		(6.64-6.37)x(4.14+4.14)/2	1.12		
		(7.51-6.64)x(4.13+4.14)/2	3.60		
		(7.93-7.51)x(4.13+4.13)/2	1.73		
		(8.06-7.93)x(4.12+4.13)/2	0.54		
		(9.22-8.06)x(4.04+4.12)/2	4.73		
		(9.75-9.22)x(4.02+4.04)/2	2.14		
		(10.51-9.75)x(4.04+4.02)/2	3.06		
		(11.44-10.51)x(4.06+4.04)/2	3.77		
		(11.80-11.44)x(4.06+4.06)/2	1.46		
		(12.99-11.80)x(4.03+4.06)/2	4.81		
		(13.09-12.99)x(4.03+4.03)/2	0.40		
		(13.12-13.09)x(4.03+4.03)/2	0.12		
		(14.38-13.12)x(3.99+4.03)/2	5.05		
		(14.81-14.38)x(3.96+3.99)/2	1.71		
		(15.67-14.81)x(3.93+3.96)/2	3.39		
		(16.50-15.67)x(3.89+3.93)/2	3.25		
		(16.96-16.50)x(3.89+3.89)/2	1.79		
		(18.19-16.96)x(3.88+3.89)/2	4.78		
		(18.23-18.19)x(3.88+3.88)/2	0.16		
		(18.19-18.23)x(3.38+3.38)/2	-0.14		
		(16.96-18.19)x(3.39+3.38)/2	-4.16		
		(16.50-16.96)x(3.39+3.39)/2	-1.56		
		(15.67-16.50)x(3.43+3.39)/2	-2.83		
		(14.81-15.67)x(3.46+3.43)/2	-2.96		
		(14.38-14.81)x(3.49+3.46)/2	-1.49		
		(13.12-14.38)x(3.53+3.49)/2	-4.42		
		(13.09-13.12)x(3.53+3.53)/2	-0.11		
		(12.99-13.09)x(3.53+3.53)/2	-0.35		
		(11.80-12.99)x(3.56+3.53)/2	-4.22		
		(11.44-11.80)x(3.56+3.56)/2	-1.28		
		(10.51-11.44)x(3.54+3.56)/2	-3.30		
		(9.75-10.51)x(3.52+3.54)/2	-2.68		
		(9.22-9.75)x(3.54+3.52)/2	-1.87		
		(8.06-9.22)x(3.62+3.54)/2	-4.15		
		(7.93-8.06)x(3.63+3.62)/2	-0.47		
		(7.51-7.93)x(3.63+3.63)/2	-1.52		
		(6.64-7.51)x(3.64+3.63)/2	-3.16		
		(6.37-6.64)x(3.64+3.64)/2	-0.98		
		(5.35-6.37)x(3.64+3.64)/2	-3.71		
		(4.68-5.35)x(3.71+3.64)/2	-2.46		
		(4.06-4.68)x(3.72+3.71)/2	-2.30		
		(2.99-4.06)x(3.73+3.72)/2	-3.99		
		(2.77-2.99)x(3.73+3.73)/2	-0.82		
		(2.03-2.77)x(3.73+3.73)/2	-2.76		
		(1.48-2.03)x(3.73+3.73)/2	-2.05		
		(1.40-1.48)x(3.72+3.73)/2	-0.30		
		(1.31-1.40)x(3.72+3.72)/2	-0.33		
		(0.67-1.31)x(3.67+3.72)/2	-2.36		
		(0.19-0.67)x(3.66+3.67)/2	-1.76		
		(-0.38-0.19)x(3.68+3.66)/2	-2.09		
		(-1.10--0.38)x(3.69+3.68)/2	-2.65		
		(-2.07--1.10)x(3.64+3.69)/2	-3.56		
		(-2.39--2.07)x(3.64+3.64)/2	-1.16		
		(-3.44--2.39)x(3.66+3.64)/2	-3.83		
		(-3.68--3.44)x(3.65+3.66)/2	-0.88		
		(-3.76--3.68)x(3.66+3.65)/2	-0.29		
		(-4.97--3.76)x(3.68+3.66)/2	-4.44		
		(-5.45--4.97)x(3.68+3.68)/2	-1.77		
		(-6.27--5.45)x(3.67+3.68)/2	-3.01		
		(-7.13--6.27)x(3.69+3.67)/2	-3.16		
		(-7.56--7.13)x(3.69+3.69)/2	-1.59		
		(-8.82--7.56)x(3.71+3.69)/2	-4.66		
		(-8.85--8.82)x(3.71+3.71)/2	-0.11		
		(-8.92--8.85)x(3.70+3.71)/2	-0.26		
		(-10.14--8.92)x(3.65+3.70)/2	-4.48		
		(-10.51--10.14)x(3.63+3.65)/2	-1.35		
		A RIPORTARE mq	48.92		

		CALCOLO DELLE AREE		Foglio n. 5
BONIFICA				
N. SEZIONE PROG.	FIG.	ELEMENTI DI CALCOLO	AREA ELEMENTARE mq	AREA FIGURA mq	NOTE
		RIPORTO mq	48.92		
		(-11.43--10.51)x(3.65+3.63)/2	-3.35		
		(-12.20--11.43)x(3.68+3.65)/2	-2.82		
		(-12.72--12.20)x(3.68+3.68)/2	-1.91		
		(-13.89--12.72)x(3.65+3.68)/2	-4.29		
		(-14.01--13.89)x(3.65+3.65)/2	-0.44		
		(-14.40--14.01)x(3.67+3.65)/2	-1.43		
		(-15.30--14.40)x(3.72+3.67)/2	-3.33		
		(-15.58--15.30)x(3.73+3.72)/2	-1.04		
		(-16.59--15.58)x(3.76+3.73)/2	-3.78		
		(-17.26--16.59)x(3.80+3.76)/2	-2.53		
		(-17.88--17.26)x(3.80+3.80)/2	-2.36		
		(-18.70--17.88)x(3.83+3.80)/2	-3.13		
				18.51	
209 3120.00	B01	(-17.59--17.92)x(4.21+4.21)/2	1.39		
		(-16.88--17.59)x(4.20+4.21)/2	2.99		
		(-15.95--16.88)x(4.22+4.20)/2	3.92		
		(-15.57--15.95)x(4.22+4.22)/2	1.60		
		(-14.31--15.57)x(4.21+4.22)/2	5.31		
		(-14.26--14.31)x(4.21+4.21)/2	0.21		
		(-14.07--14.26)x(4.21+4.21)/2	0.80		
		(-12.95--14.07)x(4.19+4.21)/2	4.70		
		(-12.66--12.95)x(4.20+4.19)/2	1.22		
		(-11.63--12.66)x(4.20+4.20)/2	4.33		
		(-11.36--11.63)x(4.20+4.20)/2	1.13		
		(-11.02--11.36)x(4.19+4.20)/2	1.43		
		(-10.32--11.02)x(4.20+4.19)/2	2.94		
		(-9.37--10.32)x(4.20+4.20)/2	3.99		
		(-9.01--9.37)x(4.19+4.20)/2	1.51		
		(-7.73--9.01)x(4.18+4.19)/2	5.36		
		(-7.70--7.73)x(4.18+4.18)/2	0.13		
		(-7.57--7.70)x(4.18+4.18)/2	0.54		
		(-6.39--7.57)x(4.17+4.18)/2	4.93		
		(-6.09--6.39)x(4.17+4.17)/2	1.25		
		(-5.08--6.09)x(4.18+4.17)/2	4.22		
		(-4.44--5.08)x(4.15+4.18)/2	2.67		
		(-3.76--4.44)x(4.15+4.15)/2	2.82		
		(-2.80--3.76)x(4.15+4.15)/2	3.98		
		(-2.45--2.80)x(4.15+4.15)/2	1.45		
		(-1.16--2.45)x(4.17+4.15)/2	5.37		
		(-1.14--1.16)x(4.17+4.17)/2	0.08		
		(-1.08--1.14)x(4.17+4.17)/2	0.25		
		(0.17--1.08)x(4.18+4.17)/2	5.22		
		(0.49-0.17)x(4.18+4.18)/2	1.34		
		(1.48-0.49)x(4.16+4.18)/2	4.13		
		(2.13-1.48)x(4.11+4.16)/2	2.69		
		(2.79-2.13)x(4.10+4.11)/2	2.71		
		(3.77-2.79)x(4.14+4.10)/2	4.04		
		(4.11-3.77)x(4.13+4.14)/2	1.41		
		(5.42-4.11)x(4.12+4.13)/2	5.40		
		(6.73-5.42)x(4.07+4.12)/2	5.36		
		(7.06-6.73)x(4.09+4.07)/2	1.35		
		(8.04-7.06)x(4.09+4.09)/2	4.01		
		(8.71-8.04)x(4.05+4.09)/2	2.73		
		(9.35-8.71)x(4.01+4.05)/2	2.58		
		(10.35-9.35)x(3.99+4.01)/2	4.00		
		(10.67-10.35)x(3.98+3.99)/2	1.28		
		(11.91-10.67)x(3.91+3.98)/2	4.89		
		(11.98-11.91)x(3.91+3.91)/2	0.27		
		(11.99-11.98)x(3.91+3.91)/2	0.04		
		(12.71-11.99)x(3.91+3.91)/2	2.82		
		(13.29-12.71)x(3.91+3.91)/2	2.27		
		(13.64-13.29)x(3.90+3.91)/2	1.37		
		(14.60-13.64)x(3.87+3.90)/2	3.73		
		(15.28-14.60)x(3.86+3.87)/2	2.63		
		(15.91-15.28)x(3.87+3.86)/2	2.43		
		(16.92-15.91)x(3.87+3.87)/2	3.91		
		(17.22-16.92)x(3.87+3.87)/2	1.16		
		(17.71-17.22)x(3.87+3.87)/2	1.90		
		(17.22-17.71)x(3.37+3.37)/2	-1.65		
		(16.92-17.22)x(3.37+3.37)/2	-1.01		
		(15.91-16.92)x(3.37+3.37)/2	-3.40		
		(15.28-15.91)x(3.36+3.37)/2	-2.12		
		(14.60-15.28)x(3.37+3.36)/2	-2.29		
		(13.64-14.60)x(3.40+3.37)/2	-3.25		
		(13.29-13.64)x(3.41+3.40)/2	-1.19		
		(12.71-13.29)x(3.41+3.41)/2	-1.98		
		(11.99-12.71)x(3.41+3.41)/2	-2.46		
		(11.98-11.99)x(3.41+3.41)/2	-0.03		
		(11.91-11.98)x(3.41+3.41)/2	-0.24		
		(10.67-11.91)x(3.48+3.41)/2	-4.27		
		(10.35-10.67)x(3.49+3.48)/2	-1.12		
		(9.35-10.35)x(3.51+3.49)/2	-3.50		
		(8.71-9.35)x(3.55+3.51)/2	-2.26		
		(8.04-8.71)x(3.59+3.55)/2	-2.39		
		(7.06-8.04)x(3.59+3.59)/2	-3.52		
		(6.73-7.06)x(3.57+3.59)/2	-1.18		
		(5.42-6.73)x(3.62+3.57)/2	-4.71		
		(4.11-5.42)x(3.63+3.62)/2	-4.75		
		(3.77-4.11)x(3.64+3.63)/2	-1.24		
		(2.79-3.77)x(3.60+3.64)/2	-3.55		
		(2.13-2.79)x(3.61+3.60)/2	-2.38		
		(1.48-2.13)x(3.66+3.61)/2	-2.36		
		(0.49-1.48)x(3.68+3.66)/2	-3.63		
		(0.17-0.49)x(3.68+3.68)/2	-1.18		
		(-1.08-0.17)x(3.67+3.68)/2	-4.59		
		(-1.14--1.08)x(3.67+3.67)/2	-0.22		
		(-1.16--1.14)x(3.67+3.67)/2	-0.07		
		(-2.45--1.16)x(3.65+3.67)/2	-4.72		
		(-2.80--2.45)x(3.65+3.65)/2	-1.28		
		(-3.76--2.80)x(3.65+3.65)/2	-3.50		
		(-4.44--3.76)x(3.65+3.65)/2	-2.48		
		(-5.08--4.44)x(3.68+3.65)/2	-2.35		
		(-6.09--5.08)x(3.67+3.68)/2	-3.71		
		(-6.39--6.09)x(3.67+3.67)/2	-1.10		
		A RIPORTARE mq	60.51		

		CALCOLO DELLE AREE		Foglio n. 6
BONIFICA				
N. SEZIONE PROG.	FIG.	ELEMENTI DI CALCOLO	AREA ELEMENTARE mq	AREA FIGURA mq	NOTE
		RIPORTO mq	60.51		
		(-7.57--6.39)x(3.68+3.67)/2	-4.34		
		(-7.70--7.57)x(3.68+3.68)/2	-0.48		
		(-7.73--7.70)x(3.68+3.68)/2	-0.11		
		(-9.01--7.73)x(3.69+3.68)/2	-4.72		
		(-9.37--9.01)x(3.70+3.69)/2	-1.33		
		(-10.32--9.37)x(3.70+3.70)/2	-3.52		
		(-11.02--10.32)x(3.69+3.70)/2	-2.59		
		(-11.36--11.02)x(3.70+3.69)/2	-1.26		
		(-11.63--11.36)x(3.70+3.70)/2	-1.00		
		(-12.66--11.63)x(3.70+3.70)/2	-3.81		
		(-12.95--12.66)x(3.69+3.70)/2	-1.07		
		(-14.07--12.95)x(3.71+3.69)/2	-4.14		
		(-14.26--14.07)x(3.71+3.71)/2	-0.70		
		(-14.31--14.26)x(3.71+3.71)/2	-0.19		
		(-15.57--14.31)x(3.72+3.71)/2	-4.68		
		(-15.95--15.57)x(3.72+3.72)/2	-1.41		
		(-16.88--15.95)x(3.70+3.72)/2	-3.45		
		(-17.59--16.88)x(3.71+3.70)/2	-2.63		
		(-17.92--17.59)x(3.71+3.71)/2	-1.22		
				17.86	
210 3135.00	BO1	(-16.73--17.25)x(4.20+4.19)/2	2.18		
		(-15.98--16.73)x(4.17+4.20)/2	3.14		
		(-15.11--15.98)x(4.10+4.17)/2	3.60		
		(-14.66--15.11)x(4.09+4.10)/2	1.84		
		(-13.49--14.66)x(4.12+4.09)/2	4.80		
		(-13.33--13.49)x(4.12+4.12)/2	0.66		
		(-12.62--13.33)x(4.08+4.12)/2	2.91		
		(-12.01--12.62)x(4.04+4.08)/2	2.48		
		(-11.87--12.01)x(4.03+4.04)/2	0.56		
		(-10.69--11.87)x(4.01+4.03)/2	4.74		
		(-10.25--10.69)x(4.01+4.01)/2	1.76		
		(-9.36--10.25)x(4.00+4.01)/2	3.56		
		(-8.63--9.36)x(4.04+4.00)/2	2.93		
		(-8.04--8.63)x(4.08+4.04)/2	2.40		
		(-7.01--8.04)x(4.06+4.08)/2	4.19		
		(-6.71--7.01)x(4.05+4.06)/2	1.22		
		(-5.39--6.71)x(3.96+4.05)/2	5.29		
		(-5.37--5.39)x(3.96+3.96)/2	0.08		
		(-4.06--5.37)x(4.00+3.96)/2	5.21		
		(-3.77--4.06)x(4.02+4.00)/2	1.16		
		(-2.74--3.77)x(4.04+4.02)/2	4.15		
		(-2.15--2.74)x(4.04+4.04)/2	2.38		
		(-1.42--2.15)x(4.05+4.04)/2	2.95		
		(-0.53--1.42)x(4.05+4.05)/2	3.60		
		(-0.09--0.53)x(4.07+4.05)/2	1.79		
		(0.44--0.09)x(4.11+4.07)/2	2.17		
		(1.09-0.44)x(4.13+4.11)/2	2.68		
		(1.17-1.09)x(4.12+4.13)/2	0.33		
		(1.23-1.17)x(4.12+4.12)/2	0.25		
		(1.87-1.23)x(4.08+4.12)/2	2.62		
		(2.56-1.87)x(4.04+4.08)/2	2.80		
		(2.71-2.56)x(4.03+4.04)/2	0.61		
		(3.88-2.71)x(3.97+4.03)/2	4.68		
		(4.33-3.88)x(3.95+3.97)/2	1.78		
		(5.20-4.33)x(3.94+3.95)/2	3.43		
		(5.95-5.20)x(3.90+3.94)/2	2.94		
		(6.53-5.95)x(3.91+3.90)/2	2.26		
		(7.57-6.53)x(3.91+3.91)/2	4.07		
		(7.85-7.57)x(3.91+3.91)/2	1.09		
		(9.12-7.85)x(3.90+3.91)/2	4.96		
		(9.18-9.12)x(3.90+3.90)/2	0.23		
		(9.19-9.18)x(3.90+3.90)/2	0.04		
		(10.50-9.19)x(3.88+3.90)/2	5.10		
		(10.81-10.50)x(3.88+3.88)/2	1.20		
		(11.83-10.81)x(3.86+3.88)/2	3.95		
		(12.43-11.83)x(3.86+3.86)/2	2.32		
		(13.15-12.43)x(3.89+3.86)/2	2.79		
		(14.05-13.15)x(3.95+3.89)/2	3.53		
		(14.47-14.05)x(3.98+3.95)/2	1.67		
		(15.67-14.47)x(4.02+3.98)/2	4.80		
		(15.80-15.67)x(4.03+4.02)/2	0.52		
		(16.37-15.80)x(4.02+4.03)/2	2.29		
		(17.12-16.37)x(4.00+4.02)/2	3.01		
		(17.22-17.12)x(4.00+4.00)/2	0.40		
		(17.12-17.22)x(3.50+3.50)/2	-0.35		
		(16.37-17.12)x(3.52+3.50)/2	-2.63		
		(15.80-16.37)x(3.53+3.52)/2	-2.01		
		(15.67-15.80)x(3.52+3.53)/2	-0.46		
		(14.47-15.67)x(3.48+3.52)/2	-4.20		
		(14.05-14.47)x(3.45+3.48)/2	-1.46		
		(13.15-14.05)x(3.39+3.45)/2	-3.08		
		(12.43-13.15)x(3.36+3.39)/2	-2.43		
		(11.83-12.43)x(3.36+3.36)/2	-2.02		
		(10.81-11.83)x(3.38+3.36)/2	-3.44		
		(10.50-10.81)x(3.38+3.38)/2	-1.05		
		(9.19-10.50)x(3.40+3.38)/2	-4.44		
		(9.18-9.19)x(3.40+3.40)/2	-0.03		
		(9.12-9.18)x(3.40+3.40)/2	-0.20		
		(7.85-9.12)x(3.41+3.40)/2	-4.32		
		(7.57-7.85)x(3.41+3.41)/2	-0.95		
		(6.53-7.57)x(3.41+3.41)/2	-3.55		
		(5.95-6.53)x(3.40+3.41)/2	-1.97		
		(5.20-5.95)x(3.44+3.40)/2	-2.56		
		(4.33-5.20)x(3.45+3.44)/2	-3.00		
		(3.88-4.33)x(3.47+3.45)/2	-1.56		
		(2.71-3.88)x(3.53+3.47)/2	-4.09		
		(2.56-2.71)x(3.54+3.53)/2	-0.53		
		(1.87-2.56)x(3.58+3.54)/2	-2.46		
		(1.23-1.87)x(3.62+3.58)/2	-2.30		
		(1.17-1.23)x(3.62+3.62)/2	-0.22		
		(1.09-1.17)x(3.63+3.62)/2	-0.29		
		(0.44-1.09)x(3.61+3.63)/2	-2.35		
		(-0.09-0.44)x(3.57+3.61)/2	-1.90		
		(-0.53--0.09)x(3.55+3.57)/2	-1.57		
		A RIPORTARE mq	76.68		

	CALCOLO DELLE AREE		Foglio n. 7

BONIFICA

N. SEZIONE PROG.	FIG.	ELEMENTI DI CALCOLO	AREA ELEMENTARE mq	AREA FIGURA mq	NOTE
		RIPORTO mq	76.68		
		(-1.42--0.53)x(3.55+3.55)/2	-3.16		
		(-2.15--1.42)x(3.54+3.55)/2	-2.59		
		(-2.74--2.15)x(3.54+3.54)/2	-2.09		
		(-3.77--2.74)x(3.52+3.54)/2	-3.64		
		(-4.06--3.77)x(3.50+3.52)/2	-1.02		
		(-5.37--4.06)x(3.46+3.50)/2	-4.56		
		(-5.39--5.37)x(3.46+3.46)/2	-0.07		
		(-6.71--5.39)x(3.55+3.46)/2	-4.63		
		(-7.01--6.71)x(3.56+3.55)/2	-1.07		
		(-8.04--7.01)x(3.58+3.56)/2	-3.68		
		(-8.63--8.04)x(3.54+3.58)/2	-2.10		
		(-9.36--8.63)x(3.50+3.54)/2	-2.57		
		(-10.25--9.36)x(3.51+3.50)/2	-3.12		
		(-10.69--10.25)x(3.51+3.51)/2	-1.54		
		(-11.87--10.69)x(3.53+3.51)/2	-4.15		
		(-12.01--11.87)x(3.54+3.53)/2	-0.49		
		(-12.62--12.01)x(3.58+3.54)/2	-2.17		
		(-13.33--12.62)x(3.62+3.58)/2	-2.56		
		(-13.49--13.33)x(3.62+3.62)/2	-0.58		
		(-14.66--13.49)x(3.59+3.62)/2	-4.22		
		(-15.11--14.66)x(3.60+3.59)/2	-1.62		
		(-15.98--15.11)x(3.67+3.60)/2	-3.16		
		(-16.73--15.98)x(3.70+3.67)/2	-2.76		
		(-17.25--16.73)x(3.69+3.70)/2	-1.92		
				17.21	

Il Direttore dei Lavori	L'Impresa	

	CALCOLO DELLE AREE		Foglio n. 8

RIPORTO

N. SEZIONE PROG.	FIG.	ELEMENTI DI CALCOLO	AREA ELEMENTARE mq	AREA FIGURA mq	NOTE
207	RI1	(-11.76--14.89)x(4.18+4.18)/2	13.08		
3090.00		(-11.75--11.76)x(2.42+4.18)/2	0.03		
		(-11.96--11.75)x(2.42+2.42)/2	-0.51		
		(-14.89--11.96)x(4.18+2.22)/2	-9.38		
				3.22	
207	RI2	(11.98-11.99)x(2.44+2.24)/2	-0.02		
3090.00		(11.78-11.98)x(2.44+2.44)/2	-0.49		
		(14.81-11.78)x(4.13+4.12)/2	12.50		
		(11.99-14.81)x(2.24+4.13)/2	-8.98		
				3.01	

Il Direttore dei Lavori	L'Impresa	

	CALCOLO DELLE LUNGHEZZE		Foglio n. 9

USURA

N. SEZIONE PROG.	FIG.	ELEMENTI DI CALCOLO	LUNGHEZZA ELEMENTARE ml	LUNGHEZZA FIGURA ml	NOTE
208	a1	(1.25-1.21)	0.04		
3105.00		(1.77-1.25)	0.52		
		(9.27-1.77)	7.50		
		(11.02-9.27)	1.75		
				9.81	
208	a2	(-1.25--1.21)	0.04		
3105.00		(-1.75--1.25)	0.50		
		(-9.25--1.75)	7.50		
		(-11.00--9.25)	1.75		
				9.79	
209	a1	(1.25-1.21)	0.04		
3120.00		(1.76-1.25)	0.51		
		(9.26-1.76)	7.50		
		(11.01-9.26)	1.75		
				9.80	
209	a2	(-1.25--1.21)	0.04		
3120.00		(-1.75--1.25)	0.50		
		(-9.25--1.75)	7.50		
		(-11.00--9.25)	1.75		
				9.79	
210	a1	(1.25-1.21)	0.04		
3135.00		(1.75-1.25)	0.50		
		(9.25-1.75)	7.50		
		(11.00-9.25)	1.75		
				9.79	
210	a2	(-1.25--1.21)	0.04		
3135.00		(-1.75--1.25)	0.50		
		(-9.25--1.75)	7.50		
		(-11.00--9.25)	1.75		
				9.79	

Il Direttore dei Lavori	L'Impresa	

	CALCOLO DELLE LUNGHEZZE		Foglio n. 10

VEGETALE

N. SEZIONE PROG.	FIG.	ELEMENTI DI CALCOLO	LUNGHEZZA ELEMENTARE ml	LUNGHEZZA FIGURA ml	NOTE
208	b1	(-12.70--11.15)	1.55		
3105.00		(-19.21--12.70)	6.51		
				8.06	
208	b2	(12.72-11.17)	1.55		
3105.00		(18.79-12.72)	6.07		
				7.62	
209	b1	(-12.70--11.15)	1.55		
3120.00		(-18.45--12.70)	5.75		
				7.30	
209	b2	(12.71-11.16)	1.55		
3120.00		(18.25-12.71)	5.54		
				7.09	
210	b1	(-12.70--11.15)	1.55		
3135.00		(-17.80--12.70)	5.10		
				6.65	
210	b2	(12.70-11.15)	1.55		
3135.00		(17.79-12.70)	5.09		
				6.64	

Il Direttore dei Lavori	L'Impresa	

	CALCOLO DELLE LUNGHEZZE		Foglio n. 11

BINDER

N. SEZIONE PROG.	FIG.	ELEMENTI DI CALCOLO	LUNGHEZZA ELEMENTARE ml	LUNGHEZZA FIGURA ml	NOTE
208	c1	(-1.21--1.04)	0.17		
3105.00		(-1.75--1.21)	0.54		
		(-11.00--1.75)	9.25		
				9.96	
208	c2	(1.21-1.06)	0.15		
3105.00		(1.77-1.21)	0.56		
		(11.02-1.77)	9.25		
				9.96	
209	c1	(1.21-1.06)	0.15		
3120.00		(1.76-1.21)	0.55		
		(11.01-1.76)	9.25		
				9.95	
209	c2	(-1.21--1.05)	0.16		
3120.00		(-1.75--1.21)	0.54		
		(-11.00--1.75)	9.25		
				9.95	
210	c1	(-1.21--1.05)	0.16		
3135.00		(-1.75--1.21)	0.54		
		(-11.00--1.75)	9.25		
				9.95	
210	c2	(1.21-1.06)	0.15		
3135.00		(1.75-1.21)	0.54		
		(11.00-1.75)	9.25		
				9.94	

Il Direttore dei Lavori	L'Impresa	

	CALCOLO DELLE LUNGHEZZE		Foglio n. 12

BASE

N. SEZIONE PROG.	FIG.	ELEMENTI DI CALCOLO	LUNGHEZZA ELEMENTARE ml	LUNGHEZZA FIGURA ml	NOTE
208	d1	(-1.75--1.15)	0.60		
3105.00		(-11.00--1.75)	9.25		
				9.85	
208	d2	(1.77-1.15)	0.62		
3105.00		(11.02-1.77)	9.25		
				9.87	
209	d2	(-1.75--1.15)	0.60		
3120.00		(-11.00--1.75)	9.25		
				9.85	
209	d1	(1.76-1.15)	0.61		
3120.00		(11.01-1.76)	9.25		
				9.86	
210	d1	(-1.75--1.15)	0.60		
3135.00		(-11.00--1.75)	9.25		
				9.85	
210	d2	(1.75-1.15)	0.60		
3135.00		(11.00-1.75)	9.25		
				9.85	

Il Direttore dei Lavori	L'Impresa	

	CALCOLO DELLE LUNGHEZZE		Foglio n. 13

FONDAZIONE

N. SEZIONE PROG.	FIG.	ELEMENTI DI CALCOLO	LUNGHEZZA ELEMENTARE ml	LUNGHEZZA FIGURA ml	NOTE
208	e2	(-1.04--0.65)	0.39		
3105.00		(-1.75--1.04)	0.71		
		(-11.00--1.75)	9.25		
				10.35	
208	e1	(1.06-0.70)	0.36		
3105.00		(1.75-1.06)	0.69		
		(11.02-1.75)	9.27		
				10.32	
209	e2	(-1.05--0.66)	0.39		
3120.00		(-1.75--1.05)	0.70		
		(-11.00--1.75)	9.25		
				10.34	
209	e1	(1.06-0.69)	0.37		
3120.00		(1.75-1.06)	0.69		
		(11.01-1.75)	9.26		
				10.32	
210	e2	(-1.05--0.68)	0.37		
3135.00		(-1.75--1.05)	0.70		
		(-11.00--1.75)	9.25		
				10.32	
210	e1	(1.06-0.69)	0.37		
3135.00		(1.75-1.06)	0.69		
		(11.00-1.75)	9.25		
				10.31	

Il Direttore dei Lavori	L'Impresa	

	CALCOLO DELLE LUNGHEZZE		Foglio n. 14

SCOTICO

N. SEZIONE PROG.	FIG.	ELEMENTI DI CALCOLO	LUNGHEZZA ELEMENTARE ml	LUNGHEZZA FIGURA ml	NOTE
208	sc1	(-18.70--18.70)	0.00		
3105.00		(-17.88--18.70)	0.82		
		(-17.26--17.88)	0.62		
		(-16.59--17.26)	0.67		
		(-15.58--16.59)	1.01		
		(-15.30--15.58)	0.28		
		(-14.40--15.30)	0.90		
		(-14.01--14.40)	0.39		
		(-13.89--14.01)	0.12		
		(-12.72--13.89)	1.17		
		(-12.20--12.72)	0.52		
		(-11.43--12.20)	0.77		
		(-10.51--11.43)	0.92		
		(-10.14--10.51)	0.37		
		(-8.92--10.14)	1.22		
		(-8.85--8.92)	0.07		
		(-8.82--8.85)	0.03		
		(-7.56--8.82)	1.26		
		(-7.13--7.56)	0.43		
		(-6.27--7.13)	0.86		
		(-5.45--6.27)	0.82		
		(-4.97--5.45)	0.48		
		(-3.76--4.97)	1.21		
		(-3.68--3.76)	0.08		
		(-3.44--3.68)	0.24		
		(-2.39--3.44)	1.05		
		(-2.07--2.39)	0.32		
		(-1.10--2.07)	0.97		
		(-0.38--1.10)	0.72		
		(0.19--0.38)	0.57		
		(0.67-0.19)	0.48		
		(1.31-0.67)	0.64		
		(1.40-1.31)	0.09		
		(1.48-1.40)	0.08		
		(2.03-1.48)	0.55		
		(2.77-2.03)	0.74		
		(2.99-2.77)	0.22		
		(4.06-2.99)	1.07		
		(4.68-4.06)	0.62		
		(5.35-4.68)	0.67		
		(6.37-5.35)	1.02		
		(6.64-6.37)	0.27		
		(7.51-6.64)	0.87		
		(7.93-7.51)	0.42		
		(8.06-7.93)	0.13		
		(9.22-8.06)	1.16		
		(9.75-9.22)	0.53		
		(10.51-9.75)	0.76		
		(11.44-10.51)	0.93		
		(11.80-11.44)	0.36		
		(12.99-11.80)	1.19		
		(13.09-12.99)	0.10		
		(13.12-13.09)	0.03		
		(14.38-13.12)	1.26		
		(14.81-14.38)	0.43		
		(15.67-14.81)	0.86		
		(16.50-15.67)	0.83		
		(16.96-16.50)	0.46		
		(18.19-16.96)	1.23		
		(18.23-18.19)	0.04		
		(18.23-18.23)	0.00		
				36.93	
209	sc1	(-17.92--17.92)	0.00		
3120.00		(-17.59--17.92)	0.33		
		(-16.88--17.59)	0.71		
		(-15.95--16.88)	0.93		
		(-15.57--15.95)	0.38		
		(-14.31--15.57)	1.26		
		(-14.26--14.31)	0.05		
		(-14.07--14.26)	0.19		
		(-12.95--14.07)	1.12		
		(-12.66--12.95)	0.29		
		(-11.63--12.66)	1.03		
		(-11.36--11.63)	0.27		
		(-11.02--11.36)	0.34		
		(-10.32--11.02)	0.70		
		(-9.37--10.32)	0.95		
		(-9.01--9.37)	0.36		
		(-7.73--9.01)	1.28		
		(-7.70--7.73)	0.03		
		(-7.57--7.70)	0.13		
		(-6.39--7.57)	1.18		
		(-6.09--6.39)	0.30		
		(-5.08--6.09)	1.01		
		(-4.44--5.08)	0.64		
		(-3.76--4.44)	0.68		
		(-2.80--3.76)	0.96		
		(-2.45--2.80)	0.35		
		(-1.16--2.45)	1.29		
		(-1.14--1.16)	0.02		
		(-1.08--1.14)	0.06		
		(0.17--1.08)	1.25		
		(0.49-0.17)	0.32		
		(1.48-0.49)	0.99		
		(2.13-1.48)	0.65		
		(2.79-2.13)	0.66		
		(3.77-2.79)	0.98		
		(4.11-3.77)	0.34		
		(5.42-4.11)	1.31		
		(5.42-5.42)	0.00		
		(5.42-5.42)	0.00		
		(6.73-5.42)	1.31		
		(7.06-6.73)	0.33		
		(8.04-7.06)	0.98		
		(8.71-8.04)	0.67		
		(9.35-8.71)	0.64		
		A RIPORTARE ml	27.27		

	CALCOLO DELLE LUNGHEZZE		Foglio n. 15

SCOTICO

N. SEZIONE PROG.	FIG.	ELEMENTI DI CALCOLO	LUNGHEZZA ELEMENTARE ml	LUNGHEZZA FIGURA ml	NOTE
		RIPORTO ml	27.27		
		(10.35-9.35)	1.00		
		(10.67-10.35)	0.32		
		(11.91-10.67)	1.24		
		(11.98-11.91)	0.07		
		(11.98-11.98)	0.00		
		(11.99-11.98)	0.01		
		(12.71-11.99)	0.72		
		(13.29-12.71)	0.58		
		(13.64-13.29)	0.35		
		(14.60-13.64)	0.96		
		(15.28-14.60)	0.68		
		(15.91-15.28)	0.63		
		(16.92-15.91)	1.01		
		(17.22-16.92)	0.30		
		(17.71-17.22)	0.49		
		(17.71-17.71)	0.00		
				35.63	
210	sc1	(-17.25--17.25)	0.00		
3135.00		(-16.73--17.25)	0.52		
		(-15.98--16.73)	0.75		
		(-15.11--15.98)	0.87		
		(-14.66--15.11)	0.45		
		(-13.49--14.66)	1.17		
		(-13.33--13.49)	0.16		
		(-12.62--13.33)	0.71		
		(-12.01--12.62)	0.61		
		(-11.87--12.01)	0.14		
		(-10.69--11.87)	1.18		
		(-10.25--10.69)	0.44		
		(-9.36--10.25)	0.89		
		(-8.63--9.36)	0.73		
		(-8.04--8.63)	0.59		
		(-7.01--8.04)	1.03		
		(-6.71--7.01)	0.30		
		(-5.39--6.71)	1.32		
		(-5.39--5.39)	0.00		
		(-5.37--5.39)	0.02		
		(-4.06--5.37)	1.31		
		(-3.77--4.06)	0.29		
		(-2.74--3.77)	1.03		
		(-2.15--2.74)	0.59		
		(-1.42--2.15)	0.73		
		(-0.53--1.42)	0.89		
		(-0.09--0.53)	0.44		
		(0.44--0.09)	0.53		
		(1.09-0.44)	0.65		
		(1.17-1.09)	0.08		
		(1.23-1.17)	0.06		
		(1.87-1.23)	0.64		
		(2.56-1.87)	0.69		
		(2.71-2.56)	0.15		
		(3.88-2.71)	1.17		
		(4.33-3.88)	0.45		
		(5.20-4.33)	0.87		
		(5.95-5.20)	0.75		
		(6.53-5.95)	0.58		
		(7.57-6.53)	1.04		
		(7.85-7.57)	0.28		
		(9.12-7.85)	1.27		
		(9.18-9.12)	0.06		
		(9.19-9.18)	0.01		
		(10.50-9.19)	1.31		
		(10.81-10.50)	0.31		
		(11.83-10.81)	1.02		
		(12.43-11.83)	0.60		
		(13.15-12.43)	0.72		
		(14.05-13.15)	0.90		
		(14.47-14.05)	0.42		
		(15.67-14.47)	1.20		
		(15.80-15.67)	0.13		
		(16.37-15.80)	0.57		
		(17.12-16.37)	0.75		
		(17.22-17.12)	0.10		
		(17.22-17.22)	0.00		
				34.47	

Il Direttore dei Lavori	L'Impresa	

	CALCOLO DELLE LUNGHEZZE		Foglio n. 16

SPARTITRAFFICO

N. SEZIONE PROG.	FIG.	ELEMENTI DI CALCOLO	LUNGHEZZA ELEMENTARE ml	LUNGHEZZA FIGURA ml	NOTE
207	st1	(-1.20--1.25)	0.05		
3090.00		(1.20--1.20)	2.40		
		(1.25-1.20)	0.05		
				2.50	
208	st1	(-1.20--1.25)	0.05		
3105.00		(1.20--1.20)	2.40		
		(1.25-1.20)	0.05		
				2.50	
209	st1	(-1.20--1.25)	0.05		
3120.00		(1.20--1.20)	2.40		
		(1.25-1.20)	0.05		
				2.50	
210	st1	(-1.20--1.25)	0.05		
3135.00		(1.20--1.20)	2.40		
		(1.25-1.20)	0.05		
				2.50	

Il Direttore dei Lavori	L'Impresa	

	COMPUTO DEI VOLUMI		Foglio n. 17

RILEVATO

DALLA SEZ. DA PROG.	ALLA SEZ. A PROG.	SEZIONE	FIGURA	AREA	DISTANZA SEZIONI m	DISTANZA DI CALCOLO m	VOLUME PARZIALE mc	VOLUME TOTALE mc
207	208	208	A1	113.41	15.00	7.50	850.575	
								850.575
208	209	208	A1	113.41	15.00	7.50	850.575	
3105.00	3120.00	209	A1	97.03	15.00	7.50	727.725	
								1578.300
209	210	209	A1	97.03	15.00	7.50	727.725	
3120.00	3135.00	210	A1	89.55	15.00	7.50	671.625	
								1399.350

Il Direttore dei Lavori	L'Impresa	TOTALE ARTICOLO	3828.225

	COMPUTO DEI VOLUMI		Foglio n. 18

STERRO

DALLA SEZ. DA PROG.	ALLA SEZ. A PROG.	SEZIONE	FIGURA	AREA	DISTANZA SEZIONI m	DISTANZA DI CALCOLO m	VOLUME PARZIALE mc	VOLUME TOTALE mc
207	208	207	B1	50.57	15.00	7.50	379.275	379.275

Il Direttore dei Lavori	L'Impresa	TOTALE ARTICOLO	379.275

	COMPUTO DEI VOLUMI		Foglio n. 19

BONIFICA

DALLA SEZ. DA PROG.	ALLA SEZ. A PROG.	SEZIONE	FIGURA	AREA	DISTANZA SEZIONI m	DISTANZA DI CALCOLO m	VOLUME PARZIALE mc	VOLUME TOTALE mc
207	208	208	BO1	18.51	15.00	7.50	138.825	
								138.825
208	209	208	BO1	18.51	15.00	7.50	138.825	
3105.00	3120.00	209	BO1	17.86	15.00	7.50	133.950	
								272.775
209	210	209	BO1	17.86	15.00	7.50	133.950	
3120.00	3135.00	210	BO1	17.21	15.00	7.50	129.075	
								263.025

Il Direttore dei Lavori	L'Impresa	TOTALE ARTICOLO	674.625

	COMPUTO DEI VOLUMI		Foglio n. 20

RIPORTO

DALLA SEZ. DA PROG.	ALLA SEZ. A PROG.	SEZIONE	FIGURA	AREA	DISTANZA SEZIONI m	DISTANZA DI CALCOLO m	VOLUME PARZIALE mc	VOLUME TOTALE mc
207	208	207	RI1	3.22	15.00	7.50	24.150	
3090.00	3105.00	207	RI2	3.01	15.00	7.50	22.575	
								46.725

Il Direttore dei Lavori	L'Impresa	TOTALE ARTICOLO	46.725

	COMPUTO DI SUPERFICI		Foglio n. 21

USURA

DALLA SEZ. DA PROG.	ALLA SEZ. A PROG.	SEZIONE	FIGURA	LUNGHEZZA	DISTANZA SEZIONI ml	DISTANZA DI CALCOLO ml	AREA PARZIALE mq	AREA TOTALE mq
207	208	208	a1	9.81	15.00	7.50	73.58	
3090.00	3105.00	208	a2	9.79	15.00	7.50	73.42	
								147.00
208	209	208	a1	9.81	15.00	7.50	73.58	
3105.00	3120.00	208	a2	9.79	15.00	7.50	73.42	
		209	a1	9.80	15.00	7.50	73.50	
		209	a2	9.79	15.00	7.50	73.42	
								293.92
209	210	209	a1	9.80	15.00	7.50	73.50	
3120.00	3135.00	209	a2	9.79	15.00	7.50	73.42	
		210	a1	9.79	15.00	7.50	73.42	
		210	a2	9.79	15.00	7.50	73.42	
								293.76

Il Direttore dei Lavori	L'Impresa	TOTALE ARTICOLO	734.68

	COMPUTO DI SUPERFICI		Foglio n. 22

VEGETALE

DALLA SEZ. DA PROG.	ALLA SEZ. A PROG.	SEZIONE	FIGURA	LUNGHEZZA	DISTANZA SEZIONI ml	DISTANZA DI CALCOLO ml	AREA PARZIALE mq	AREA TOTALE mq
207	208	208	b1	8.06	15.00	7.50	60.45	
3090.00	3105.00	208	b2	7.62	15.00	7.50	57.15	
								117.60
208	209	208	b1	8.06	15.00	7.50	60.45	
3105.00	3120.00	208	b2	7.62	15.00	7.50	57.15	
		209	b1	7.30	15.00	7.50	54.75	
		209	b2	7.09	15.00	7.50	53.17	
								225.52
209	210	209	b1	7.30	15.00	7.50	54.75	
3120.00	3135.00	209	b2	7.09	15.00	7.50	53.17	
		210	b1	6.65	15.00	7.50	49.88	
		210	b2	6.64	15.00	7.50	49.80	
								207.60

Il Direttore dei Lavori	L'Impresa	TOTALE ARTICOLO	550.72

	COMPUTO DI SUPERFICI		Foglio n. 23

BINDER

DALLA SEZ. DA PROG.	ALLA SEZ. A PROG.	SEZIONE	FIGURA	LUNGHEZZA	DISTANZA SEZIONI ml	DISTANZA DI CALCOLO ml	AREA PARZIALE mq	AREA TOTALE mq
207	208	208	c1	9.96	15.00	7.50	74.70	
3090.00	3105.00	208	c2	9.96	15.00	7.50	74.70	
								149.40
208	209	208	c1	9.96	15.00	7.50	74.70	
3105.00	3120.00	208	c2	9.96	15.00	7.50	74.70	
		209	c1	9.95	15.00	7.50	74.63	
		209	c2	9.95	15.00	7.50	74.63	
								298.66
209	210	209	c1	9.95	15.00	7.50	74.63	
3120.00	3135.00	209	c2	9.95	15.00	7.50	74.63	
		210	c1	9.95	15.00	7.50	74.63	
		210	c2	9.94	15.00	7.50	74.55	
								298.44

Il Direttore dei Lavori	L'Impresa	TOTALE ARTICOLO	746.50

	COMPUTO DI SUPERFICI		Foglio n. 24

BASE

DALLA SEZ. DA PROG.	ALLA SEZ. A PROG.	SEZIONE	FIGURA	LUNGHEZZA	DISTANZA SEZIONI ml	DISTANZA DI CALCOLO ml	AREA PARZIALE mq	AREA TOTALE mq
207	208	208	d1	9.85	15.00	7.50	73.88	
3090.00	3105.00	208	d2	9.87	15.00	7.50	74.02	
								147.90
208	209	208	d1	9.85	15.00	7.50	73.88	
3105.00	3120.00	208	d2	9.87	15.00	7.50	74.02	
		209	d2	9.85	15.00	7.50	73.88	
		209	d1	9.86	15.00	7.50	73.95	
								295.73
209	210	209	d2	9.85	15.00	7.50	73.88	
3120.00	3135.00	209	d1	9.86	15.00	7.50	73.95	
		210	d1	9.85	15.00	7.50	73.88	
		210	d2	9.85	15.00	7.50	73.88	
								295.59

Il Direttore dei Lavori	L'Impresa	TOTALE ARTICOLO	739.22

	COMPUTO DI SUPERFICI		Foglio n. 25

FONDAZIONE

DALLA SEZ. DA PROG.	ALLA SEZ. A PROG.	SEZIONE	FIGURA	LUNGHEZZA	DISTANZA SEZIONI ml	DISTANZA DI CALCOLO ml	AREA PARZIALE mq	AREA TOTALE mq
207	208	208	e2	10.35	15.00	7.50	77.63	
3090.00	3105.00	208	e1	10.32	15.00	7.50	77.40	
								155.03
208	209	208	e2	10.35	15.00	7.50	77.63	
3105.00	3120.00	208	e1	10.32	15.00	7.50	77.40	
		209	e2	10.34	15.00	7.50	77.55	
		209	e1	10.32	15.00	7.50	77.40	
								309.98
209	210	209	e2	10.34	15.00	7.50	77.55	
3120.00	3135.00	209	e1	10.32	15.00	7.50	77.40	
		210	e2	10.32	15.00	7.50	77.40	
		210	e1	10.31	15.00	7.50	77.33	
								309.68

Il Direttore dei Lavori	L'Impresa	TOTALE ARTICOLO	774.69

	COMPUTO DI SUPERFICI		Foglio n. 26

SCOTICO

DALLA SEZ. DA PROG.	ALLA SEZ. A PROG.	SEZIONE	FIGURA	LUNGHEZZA	DISTANZA SEZIONI ml	DISTANZA DI CALCOLO ml	AREA PARZIALE mq	AREA TOTALE mq
207	208	208	sc1	36.93	15.00	7.50	276.98	
								276.98
208	209	208	sc1	36.93	15.00	7.50	276.98	
3105.00	3120.00	209	sc1	35.63	15.00	7.50	267.23	
								544.21
209	210	209	sc1	35.63	15.00	7.50	267.23	
3120.00	3135.00	210	sc1	34.47	15.00	7.50	258.52	
								525.75

Il Direttore dei Lavori	L'Impresa	TOTALE ARTICOLO	1346.94

	COMPUTO DI SUPERFICI		Foglio n. 27

SPARTITRAFFICO

DALLA SEZ. DA PROG.	ALLA SEZ. A PROG.	SEZIONE	FIGURA	LUNGHEZZA	DISTANZA SEZIONI ml	DISTANZA DI CALCOLO ml	AREA PARZIALE mq	AREA TOTALE mq
207	208	207	st1	2.50	15.00	7.50	18.75	
3090.00	3105.00	208	st1	2.50	15.00	7.50	18.75	
								37.50
208	209	208	st1	2.50	15.00	7.50	18.75	
3105.00	3120.00	209	st1	2.50	15.00	7.50	18.75	
								37.50
209	210	209	st1	2.50	15.00	7.50	18.75	
3120.00	3135.00	210	st1	2.50	15.00	7.50	18.75	
								37.50

Il Direttore dei Lavori	L'Impresa	TOTALE ARTICOLO	112.50

	COMPUTO DEI VOLUMI		Foglio n. 28

Volume dalla sezione 207 alla sezione 210

ARTICOLO			VOLUME
A	RILEVATO	mc	3828.225
B	STERRO	mc	379.275
BO	BONIFICA	mc	674.625
RI	RIPORTO	mc	46.725
a	USURA	mq	734.68
b	VEGETALE	mq	550.72
c	BINDER	mq	746.50
d	BASE	mq	739.22
e	FONDAZIONE	mq	774.69
sc	SCOTICO	mq	1346.94
st	SPARTITRAFFICO	mq	112.50

SVINCOLO

		CALCOLO DELLE AREE		Foglio n. 1	
RILEVATO					
N. SEZIONE PROG.	FIG.	ELEMENTI DI CALCOLO	AREA ELEMENTARE mq	AREA FIGURA mq	NOTE
2	A1	(-0.00--0.68)x(2.14+2.13)/2	1.45		
25.00		(2.75--0.00)x(2.06+2.14)/2	5.78		
		(3.14-2.75)x(2.22+2.16)/2	0.85		
		(3.58-3.14)x(1.93+2.22)/2	0.91		
		(3.50-3.58)x(1.93+1.93)/2	-0.15		
		(3.25-3.50)x(1.93+1.93)/2	-0.48		
		(2.53-3.25)x(1.95+1.93)/2	-1.40		
		(2.44-2.53)x(1.96+1.95)/2	-0.18		
		(2.41-2.44)x(1.96+1.96)/2	-0.06		
		(1.64-2.41)x(1.90+1.96)/2	-1.49		
		(1.33-1.64)x(1.88+1.90)/2	-0.59		
		(0.83-1.33)x(1.77+1.88)/2	-0.91		
		(0.24-0.83)x(1.74+1.77)/2	-1.04		
		(0.02-0.24)x(1.87+1.74)/2	-0.40		
		(-0.61-0.02)x(2.10+1.87)/2	-1.25		
		(-0.68--0.61)x(2.13+2.10)/2	-0.15		
				0.89	
3	A1	(-3.14--3.68)x(2.41+2.05)/2	1.20		
50.00		(-2.75--3.14)x(2.35+2.41)/2	0.93		
		(-0.01--2.75)x(2.16+2.25)/2	6.04		
		(2.75--0.01)x(2.07+2.16)/2	5.84		
		(3.14-2.75)x(2.23+2.17)/2	0.86		
		(3.40-3.14)x(2.05+2.23)/2	0.56		
		(3.32-3.40)x(2.05+2.05)/2	-0.16		
		(2.68-3.32)x(2.01+2.05)/2	-1.30		
		(2.51-2.68)x(2.00+2.01)/2	-0.34		
		(2.45-2.51)x(2.00+2.00)/2	-0.12		
		(1.71-2.45)x(2.01+2.00)/2	-1.48		
		(1.37-1.71)x(2.03+2.01)/2	-0.69		
		(0.90-1.37)x(2.06+2.03)/2	-0.96		
		(0.28-0.90)x(2.07+2.06)/2	-1.28		
		(0.09-0.28)x(2.06+2.07)/2	-0.39		
		(-0.46-0.09)x(2.06+2.06)/2	-1.13		
		(-0.71--0.46)x(2.06+2.06)/2	-0.51		
		(-0.80--0.71)x(2.06+2.06)/2	-0.19		
		(-1.52--0.80)x(2.03+2.06)/2	-1.47		
		(-1.89--1.52)x(2.03+2.03)/2	-0.75		
		(-2.33--1.89)x(2.03+2.03)/2	-0.89		
		(-2.97--2.33)x(2.03+2.03)/2	-1.30		
		(-3.13--2.97)x(2.03+2.03)/2	-0.32		
		(-3.60--3.13)x(2.05+2.03)/2	-0.96		
		(-3.68--3.60)x(2.05+2.05)/2	-0.16		
				1.03	
4	A1	(-3.14--3.49)x(2.32+2.09)/2	0.77		
75.00		(-2.75--3.14)x(2.26+2.32)/2	0.89		
		(-0.00--2.75)x(2.18+2.16)/2	5.97		
		(2.21--0.00)x(2.12+2.18)/2	4.75		
		(1.99-2.21)x(2.12+2.12)/2	-0.47		
		(1.51-1.99)x(2.13+2.12)/2	-1.02		
		(1.26-1.51)x(2.14+2.13)/2	-0.53		
		(1.06-1.26)x(2.14+2.14)/2	-0.43		
		(0.53-1.06)x(2.14+2.14)/2	-1.13		
		(-0.14-0.53)x(2.16+2.14)/2	-1.44		
		(-0.20--0.14)x(2.16+2.16)/2	-0.13		
		(-0.25--0.20)x(2.16+2.16)/2	-0.11		
		(-0.69--0.25)x(2.15+2.16)/2	-0.95		
		(-1.56--0.69)x(2.15+2.15)/2	-1.87		
		(-1.66--1.56)x(2.15+2.15)/2	-0.21		
		(-1.78--1.66)x(2.15+2.15)/2	-0.26		
		(-2.39--1.78)x(2.14+2.15)/2	-1.31		
		(-2.87--2.39)x(2.11+2.14)/2	-1.02		
		(-3.12--2.87)x(2.10+2.11)/2	-0.53		
		(-3.43--3.12)x(2.09+2.10)/2	-0.65		
		(-3.49--3.43)x(2.09+2.09)/2	-0.13		
				0.19	
4	A2	(3.14-2.75)x(2.27+2.21)/2	0.87		
75.00		(3.31-3.14)x(2.15+2.27)/2	0.38		
		(3.16-3.31)x(2.15+2.15)/2	-0.32		
		(2.75-3.16)x(2.14+2.15)/2	-0.88		
				0.05	
6	A1	(-3.14--3.90)x(2.41+1.91)/2	1.64		
125.00		(-2.75--3.14)x(2.35+2.41)/2	0.93		
		(-0.01--2.75)x(2.23+2.25)/2	6.14		
		(2.75--0.01)x(2.15+2.23)/2	6.04		
		(3.14-2.75)x(2.31+2.25)/2	0.89		
		(3.63-3.14)x(1.99+2.31)/2	1.05		
		(3.01-3.63)x(1.98+1.99)/2	-1.23		
		(2.58-3.01)x(1.96+1.98)/2	-0.85		
		(2.24-2.58)x(1.94+1.96)/2	-0.66		
		(1.57-2.24)x(1.92+1.94)/2	-1.29		
		(1.48-1.57)x(1.91+1.92)/2	-0.17		
		(1.43-1.48)x(1.90+1.91)/2	-0.10		
		(0.71-1.43)x(1.86+1.90)/2	-1.35		
		(0.29-0.71)x(1.84+1.86)/2	-0.78		
		(-0.05-0.29)x(1.82+1.84)/2	-0.62		
		(-0.74--0.05)x(1.79+1.82)/2	-1.25		
		(-0.82--0.74)x(1.79+1.79)/2	-0.14		
		(-0.86--0.82)x(1.79+1.79)/2	-0.07		
		(-1.58--0.86)x(1.75+1.79)/2	-1.27		
		(-2.00--1.58)x(1.75+1.75)/2	-0.73		
		(-2.35--2.00)x(1.73+1.75)/2	-0.61		
		(-3.04--2.35)x(1.81+1.73)/2	-1.22		
		(-3.11--3.04)x(1.82+1.81)/2	-0.13		
		(-3.15--3.11)x(1.83+1.82)/2	-0.07		
		(-3.88--3.15)x(1.91+1.83)/2	-1.37		
		(-3.90--3.88)x(1.91+1.91)/2	-0.04		
				2.74	
7	A1	(-3.14--3.63)x(2.49+2.16)/2	1.14		
150.00		(-2.75--3.14)x(2.43+2.49)/2	0.96		
		(-0.01--2.75)x(2.25+2.33)/2	6.27		
		(2.75--0.01)x(2.16+2.25)/2	6.09		
		(3.14-2.75)x(2.32+2.26)/2	0.89		
		(3.58-3.14)x(2.03+2.32)/2	0.96		
		(3.55-3.58)x(2.03+2.03)/2	-0.06		
		(3.02-3.55)x(2.06+2.03)/2	-1.08		
		(2.41-3.02)x(2.11+2.06)/2	-1.27		
		(2.25-2.41)x(2.11+2.11)/2	-0.34		
		A RIPORTARE mq	13.56		

	CALCOLO DELLE AREE		Foglio n. 2

RILEVATO

N. SEZIONE PROG.	FIG.	ELEMENTI DI CALCOLO	AREA ELEMENTARE mq	AREA FIGURA mq	NOTE
		RIPORTO mq	13.56		
		(1.94-2.25)x(2.11+2.11)/2	-0.65		
		(1.49-1.94)x(2.11+2.11)/2	-0.95		
		(1.26-1.49)x(2.11+2.11)/2	-0.49		
		(0.72-1.26)x(2.10+2.11)/2	-1.14		
		(0.12-0.72)x(2.08+2.10)/2	-1.25		
		(-0.36-0.12)x(2.12+2.08)/2	-1.01		
		(-1.03--0.36)x(2.16+2.12)/2	-1.43		
		(-1.57--1.03)x(2.15+2.16)/2	-1.16		
		(-2.17--1.57)x(2.17+2.15)/2	-1.30		
		(-2.34--2.17)x(2.17+2.17)/2	-0.37		
		(-2.66--2.34)x(2.17+2.17)/2	-0.69		
		(-3.10--2.66)x(2.17+2.17)/2	-0.95		
		(-3.32--3.10)x(2.17+2.17)/2	-0.48		
		(-3.63--3.32)x(2.16+2.17)/2	-0.67		
				1.02	

Il Direttore dei Lavori	L'Impresa	

BONIFICA

N. SEZIONE PROG.	FIG.	ELEMENTI DI CALCOLO	AREA ELEMENTARE mq	AREA FIGURA mq	NOTE
2	BO1	(-0.61--0.68)x(2.10+2.13)/2	0.15		
25.00		(0.02--0.61)x(1.87+2.10)/2	1.25		
		(0.24-0.02)x(1.74+1.87)/2	0.40		
		(0.83-0.24)x(1.77+1.74)/2	1.04		
		(1.33-0.83)x(1.88+1.77)/2	0.91		
		(1.64-1.33)x(1.90+1.88)/2	0.59		
		(2.41-1.64)x(1.96+1.90)/2	1.49		
		(2.44-2.41)x(1.96+1.96)/2	0.06		
		(2.53-2.44)x(1.95+1.96)/2	0.18		
		(3.25-2.53)x(1.93+1.95)/2	1.40		
		(3.50-3.25)x(1.93+1.93)/2	0.48		
		(3.58-3.50)x(1.93+1.93)/2	0.15		
		(3.50-3.58)x(1.43+1.43)/2	-0.11		
		(3.25-3.50)x(1.43+1.43)/2	-0.36		
		(2.53-3.25)x(1.45+1.43)/2	-1.04		
		(2.44-2.53)x(1.46+1.45)/2	-0.13		
		(2.41-2.44)x(1.46+1.46)/2	-0.04		
		(1.64-2.41)x(1.40+1.46)/2	-1.10		
		(1.33-1.64)x(1.38+1.40)/2	-0.43		
		(0.83-1.33)x(1.27+1.38)/2	-0.66		
		(0.24-0.83)x(1.24+1.27)/2	-0.74		
		(0.02-0.24)x(1.37+1.24)/2	-0.29		
		(-0.61-0.02)x(1.60+1.37)/2	-0.94		
		(-0.68--0.61)x(1.63+1.60)/2	-0.11		
				2.15	
3	BO1	(-3.60--3.68)x(2.05+2.05)/2	0.16		
50.00		(-3.13--3.60)x(2.03+2.05)/2	0.96		
		(-2.97--3.13)x(2.03+2.03)/2	0.32		
		(-2.33--2.97)x(2.03+2.03)/2	1.30		
		(-1.89--2.33)x(2.03+2.03)/2	0.89		
		(-1.52--1.89)x(2.03+2.03)/2	0.75		
		(-0.80--1.52)x(2.06+2.03)/2	1.47		
		(-0.71--0.80)x(2.06+2.06)/2	0.19		
		(-0.46--0.71)x(2.06+2.06)/2	0.51		
		(0.09--0.46)x(2.06+2.06)/2	1.13		
		(0.28-0.09)x(2.07+2.06)/2	0.39		
		(0.90-0.28)x(2.06+2.07)/2	1.28		
		(1.37-0.90)x(2.03+2.06)/2	0.96		
		(1.71-1.37)x(2.01+2.03)/2	0.69		
		(2.45-1.71)x(2.00+2.01)/2	1.48		
		(2.51-2.45)x(2.00+2.00)/2	0.12		
		(2.68-2.51)x(2.01+2.00)/2	0.34		
		(3.32-2.68)x(2.05+2.01)/2	1.30		
		(3.40-3.32)x(2.05+2.05)/2	0.16		
		(3.32-3.40)x(1.55+1.55)/2	-0.12		
		(2.68-3.32)x(1.51+1.55)/2	-0.98		
		(2.51-2.68)x(1.50+1.51)/2	-0.26		
		(2.45-2.51)x(1.50+1.50)/2	-0.09		
		(1.71-2.45)x(1.51+1.50)/2	-1.11		
		(1.37-1.71)x(1.53+1.51)/2	-0.52		
		(0.90-1.37)x(1.56+1.53)/2	-0.73		
		(0.28-0.90)x(1.57+1.56)/2	-0.97		
		(0.09-0.28)x(1.56+1.57)/2	-0.30		
		(-0.46-0.09)x(1.56+1.56)/2	-0.86		
		(-0.71--0.46)x(1.56+1.56)/2	-0.39		
		(-0.80--0.71)x(1.56+1.56)/2	-0.14		
		(-1.52--0.80)x(1.53+1.56)/2	-1.11		
		(-1.89--1.52)x(1.53+1.53)/2	-0.57		
		(-2.33--1.89)x(1.53+1.53)/2	-0.67		
		(-2.97--2.33)x(1.53+1.53)/2	-0.98		
		(-3.13--2.97)x(1.53+1.53)/2	-0.24		
		(-3.60--3.13)x(1.55+1.53)/2	-0.72		
		(-3.68--3.60)x(1.55+1.55)/2	-0.12		
				3.52	
4	BO1	(3.16-2.75)x(2.15+2.14)/2	0.88		
75.00		(3.31-3.16)x(2.15+2.15)/2	0.32		
		(3.16-3.31)x(1.65+1.65)/2	-0.25		
		(2.75-3.16)x(1.64+1.65)/2	-0.67		
				0.28	
4	BO2	(-3.43--3.49)x(2.09+2.09)/2	0.13		
75.00		(-3.12--3.43)x(2.10+2.09)/2	0.65		
		(-2.87--3.12)x(2.11+2.10)/2	0.53		
		(-2.39--2.87)x(2.14+2.11)/2	1.02		
		(-1.78--2.39)x(2.15+2.14)/2	1.31		
		(-1.66--1.78)x(2.15+2.15)/2	0.26		
		(-1.56--1.66)x(2.15+2.15)/2	0.21		
		(-0.69--1.56)x(2.15+2.15)/2	1.87		
		(-0.25--0.69)x(2.16+2.15)/2	0.95		
		(-0.20--0.25)x(2.16+2.16)/2	0.11		
		(-0.14--0.20)x(2.16+2.16)/2	0.13		
		(0.53--0.14)x(2.14+2.16)/2	1.44		
		(1.06-0.53)x(2.14+2.14)/2	1.13		
		(1.26-1.06)x(2.14+2.14)/2	0.43		
		(1.51-1.26)x(2.13+2.14)/2	0.53		
		(1.99-1.51)x(2.12+2.13)/2	1.02		
		(2.21-1.99)x(2.12+2.12)/2	0.47		
		(1.99-2.21)x(1.62+1.62)/2	-0.36		
		(1.51-1.99)x(1.63+1.62)/2	-0.78		
		(1.26-1.51)x(1.64+1.63)/2	-0.41		
		(1.06-1.26)x(1.64+1.64)/2	-0.33		
		(0.53-1.06)x(1.64+1.64)/2	-0.87		
		(-0.14-0.53)x(1.66+1.64)/2	-1.11		
		(-0.20--0.14)x(1.66+1.66)/2	-0.10		
		(-0.25--0.20)x(1.66+1.66)/2	-0.08		
		(-0.69--0.25)x(1.65+1.66)/2	-0.73		
		(-1.56--0.69)x(1.65+1.65)/2	-1.44		
		(-1.66--1.56)x(1.65+1.65)/2	-0.16		
		(-1.78--1.66)x(1.65+1.65)/2	-0.20		
		(-2.39--1.78)x(1.64+1.65)/2	-1.00		
		(-2.87--2.39)x(1.61+1.64)/2	-0.78		
		(-3.12--2.87)x(1.60+1.61)/2	-0.40		
		(-3.43--3.12)x(1.59+1.60)/2	-0.49		
		(-3.49--3.43)x(1.59+1.59)/2	-0.10		
				2.85	
6	BO1	(-3.88--3.90)x(1.91+1.91)/2	0.04		
125.00		(-3.15--3.88)x(1.83+1.91)/2	1.37		
		(-3.11--3.15)x(1.82+1.83)/2	0.07		
		A RIPORTARE mq	1.48		

BONIFICA

N. SEZIONE PROG.	FIG.	ELEMENTI DI CALCOLO	AREA ELEMENTARE mq	AREA FIGURA mq	NOTE
		RIPORTO mq	1.48		
		(-3.04--3.11)x(1.81+1.82)/2	0.13		
		(-2.35--3.04)x(1.73+1.81)/2	1.22		
		(-2.00--2.35)x(1.75+1.73)/2	0.61		
		(-1.58--2.00)x(1.75+1.75)/2	0.73		
		(-0.86--1.58)x(1.79+1.75)/2	1.27		
		(-0.82--0.86)x(1.79+1.79)/2	0.07		
		(-0.74--0.82)x(1.79+1.79)/2	0.14		
		(-0.05--0.74)x(1.82+1.79)/2	1.25		
		(0.29--0.05)x(1.84+1.82)/2	0.62		
		(0.71-0.29)x(1.86+1.84)/2	0.78		
		(1.43-0.71)x(1.90+1.86)/2	1.35		
		(1.48-1.43)x(1.91+1.90)/2	0.10		
		(1.57-1.48)x(1.92+1.91)/2	0.17		
		(2.24-1.57)x(1.94+1.92)/2	1.29		
		(2.58-2.24)x(1.96+1.94)/2	0.66		
		(3.01-2.58)x(1.98+1.96)/2	0.85		
		(3.63-3.01)x(1.99+1.98)/2	1.23		
		(3.01-3.63)x(1.48+1.49)/2	-0.92		
		(2.58-3.01)x(1.46+1.48)/2	-0.63		
		(2.24-2.58)x(1.44+1.46)/2	-0.49		
		(1.57-2.24)x(1.42+1.44)/2	-0.96		
		(1.48-1.57)x(1.41+1.42)/2	-0.13		
		(1.43-1.48)x(1.40+1.41)/2	-0.07		
		(0.71-1.43)x(1.36+1.40)/2	-0.99		
		(0.29-0.71)x(1.34+1.36)/2	-0.57		
		(-0.05-0.29)x(1.32+1.34)/2	-0.45		
		(-0.74--0.05)x(1.29+1.32)/2	-0.90		
		(-0.82--0.74)x(1.29+1.29)/2	-0.10		
		(-0.86--0.82)x(1.29+1.29)/2	-0.05		
		(-1.58--0.86)x(1.25+1.29)/2	-0.91		
		(-2.00--1.58)x(1.25+1.25)/2	-0.52		
		(-2.35--2.00)x(1.23+1.25)/2	-0.43		
		(-3.04--2.35)x(1.31+1.23)/2	-0.88		
		(-3.11--3.04)x(1.32+1.31)/2	-0.09		
		(-3.15--3.11)x(1.33+1.32)/2	-0.05		
		(-3.88--3.15)x(1.41+1.33)/2	-1.00		
		(-3.90--3.88)x(1.41+1.41)/2	-0.03		
				3.78	
7 150.00	BO1	(-3.32--3.63)x(2.17+2.16)/2	0.67		
		(-3.10--3.32)x(2.17+2.17)/2	0.48		
		(-2.66--3.10)x(2.17+2.17)/2	0.95		
		(-2.34--2.66)x(2.17+2.17)/2	0.69		
		(-2.17--2.34)x(2.17+2.17)/2	0.37		
		(-1.57--2.17)x(2.15+2.17)/2	1.30		
		(-1.03--1.57)x(2.16+2.15)/2	1.16		
		(-0.36--1.03)x(2.12+2.16)/2	1.43		
		(0.12--0.36)x(2.08+2.12)/2	1.01		
		(0.72-0.12)x(2.10+2.08)/2	1.25		
		(1.26-0.72)x(2.11+2.10)/2	1.14		
		(1.49-1.26)x(2.11+2.11)/2	0.49		
		(1.94-1.49)x(2.11+2.11)/2	0.95		
		(2.25-1.94)x(2.11+2.11)/2	0.65		
		(2.41-2.25)x(2.11+2.11)/2	0.34		
		(3.02-2.41)x(2.06+2.11)/2	1.27		
		(3.55-3.02)x(2.03+2.06)/2	1.08		
		(3.58-3.55)x(2.03+2.03)/2	0.06		
		(3.55-3.58)x(1.53+1.53)/2	-0.05		
		(3.02-3.55)x(1.56+1.53)/2	-0.82		
		(2.41-3.02)x(1.61+1.56)/2	-0.97		
		(2.25-2.41)x(1.61+1.61)/2	-0.26		
		(1.94-2.25)x(1.61+1.61)/2	-0.50		
		(1.49-1.94)x(1.61+1.61)/2	-0.72		
		(1.26-1.49)x(1.61+1.61)/2	-0.37		
		(0.72-1.26)x(1.60+1.61)/2	-0.87		
		(0.12-0.72)x(1.58+1.60)/2	-0.95		
		(-0.36-0.12)x(1.62+1.58)/2	-0.77		
		(-1.03--0.36)x(1.66+1.62)/2	-1.10		
		(-1.57--1.03)x(1.65+1.66)/2	-0.89		
		(-2.17--1.57)x(1.67+1.65)/2	-1.00		
		(-2.34--2.17)x(1.67+1.67)/2	-0.28		
		(-2.66--2.34)x(1.67+1.67)/2	-0.53		
		(-3.10--2.66)x(1.67+1.67)/2	-0.73		
		(-3.32--3.10)x(1.67+1.67)/2	-0.37		
		(-3.63--3.32)x(1.66+1.67)/2	-0.52		
				3.59	

Il Direttore dei Lavori | L'Impresa

	CALCOLO DELLE LUNGHEZZE		Foglio n. 5

USURA

N. SEZIONE PROG.	FIG.	ELEMENTI DI CALCOLO	LUNGHEZZA ELEMENTARE ml	LUNGHEZZA FIGURA ml	NOTE
2	a1	(0.00--2.75)	2.75		
25.00		(2.75-0.00)	2.75		
				5.50	
3	a1	(0.00--2.75)	2.75		
50.00		(2.75-0.00)	2.75		
				5.50	
4	a1	(0.00--2.75)	2.75		
75.00		(2.75-0.00)	2.75		
				5.50	
5	a1	(0.00--2.75)	2.75		
100.00		(2.75-0.00)	2.75		
				5.50	
6	a1	(0.00--2.75)	2.75		
125.00		(2.75-0.00)	2.75		
				5.50	
7	a1	(0.00--2.75)	2.75		
150.00		(2.75-0.00)	2.75		
				5.50	
8	a1	(0.00--2.75)	2.75		
175.00		(2.38-0.00)	2.38		
				5.13	
9	a1	(0.00--2.40)	2.40		
194.32		(0.93-0.00)	0.93		
				3.33	

Il Direttore dei Lavori	L'Impresa	

	CALCOLO DELLE LUNGHEZZE		Foglio n. 6

VEGETALE

N. SEZIONE PROG.	FIG.	ELEMENTI DI CALCOLO	LUNGHEZZA ELEMENTARE ml	LUNGHEZZA FIGURA ml	NOTE
2	b2	(-2.78--2.75)	0.03		
25.00		(-3.25--2.78)	0.47		
		(-3.52--3.25)	0.27		
				0.77	
2	b1	(2.78-2.75)	0.03		
25.00		(3.25-2.78)	0.47		
		(4.16-3.25)	0.91		
				1.41	
3	b2	(-2.78--2.75)	0.03		
50.00		(-3.25--2.78)	0.47		
		(-4.23--3.25)	0.98		
				1.48	
3	b1	(2.78-2.75)	0.03		
50.00		(3.25-2.78)	0.47		
		(3.99-3.25)	0.74		
				1.24	
4	b2	(-2.78--2.75)	0.03		
75.00		(-3.25--2.78)	0.47		
		(-4.03--3.25)	0.78		
				1.28	
4	b1	(2.78-2.75)	0.03		
75.00		(3.25-2.78)	0.47		
		(3.90-3.25)	0.65		
				1.15	
5	b2	(-2.78--2.75)	0.03		
100.00		(-3.25--2.78)	0.47		
		(-4.10--3.25)	0.85		
				1.35	
5	b1	(2.78-2.75)	0.03		
100.00		(3.25-2.78)	0.47		
		(4.11-3.25)	0.86		
				1.36	
6	b2	(-2.78--2.75)	0.03		
125.00		(-3.25--2.78)	0.47		
		(-4.37--3.25)	1.12		
				1.62	
6	b1	(2.78-2.75)	0.03		
125.00		(3.25-2.78)	0.47		
		(4.19-3.25)	0.94		
				1.44	
7	b2	(-2.78--2.75)	0.03		
150.00		(-3.25--2.78)	0.47		
		(-4.21--3.25)	0.96		
				1.46	
7	b1	(2.78-2.75)	0.03		
150.00		(3.25-2.78)	0.47		
		(4.13-3.25)	0.88		
				1.38	
8	b2	(-2.78--2.75)	0.03		
175.00		(-3.25--2.78)	0.47		
		(-3.42--3.25)	0.17		
				0.67	
8	b1	(2.41-2.38)	0.03		
175.00		(2.88-2.41)	0.47		
		(3.58-2.88)	0.70		
				1.20	

Il Direttore dei Lavori	L'Impresa	

SCOTICO

N. SEZIONE PROG.	FIG.	ELEMENTI DI CALCOLO	LUNGHEZZA ELEMENTARE ml	LUNGHEZZA FIGURA ml	NOTE
2	sc1	(-0.68--0.68)	0.00		
25.00		(-0.61--0.68)	0.07		
		(0.02--0.61)	0.63		
		(0.24-0.02)	0.22		
		(0.83-0.24)	0.59		
		(1.33-0.83)	0.50		
		(1.64-1.33)	0.31		
		(2.41-1.64)	0.77		
		(2.44-2.41)	0.03		
		(2.53-2.44)	0.09		
		(3.25-2.53)	0.72		
		(3.50-3.25)	0.25		
		(3.58-3.50)	0.08		
		(3.58-3.58)	0.00		
				4.26	
3	sc1	(-3.68--3.68)	0.00		
50.00		(-3.60--3.68)	0.08		
		(-3.13--3.60)	0.47		
		(-2.97--3.13)	0.16		
		(-2.33--2.97)	0.64		
		(-1.89--2.33)	0.44		
		(-1.52--1.89)	0.37		
		(-0.80--1.52)	0.72		
		(-0.71--0.80)	0.09		
		(-0.46--0.71)	0.25		
		(0.09--0.46)	0.55		
		(0.28-0.09)	0.19		
		(0.90-0.28)	0.62		
		(1.37-0.90)	0.47		
		(1.71-1.37)	0.34		
		(2.45-1.71)	0.74		
		(2.51-2.45)	0.06		
		(2.68-2.51)	0.17		
		(3.32-2.68)	0.64		
		(3.40-3.32)	0.08		
		(3.40-3.40)	0.00		
				7.08	
4	sc2	(-3.49--3.49)	0.00		
75.00		(-3.43--3.49)	0.06		
		(-3.12--3.43)	0.31		
		(-2.87--3.12)	0.25		
		(-2.39--2.87)	0.48		
		(-1.78--2.39)	0.61		
		(-1.66--1.78)	0.12		
		(-1.56--1.66)	0.10		
		(-0.69--1.56)	0.87		
		(-0.25--0.69)	0.44		
		(-0.20--0.25)	0.05		
		(-0.14--0.20)	0.06		
		(0.53--0.14)	0.67		
		(1.06-0.53)	0.53		
		(1.26-1.06)	0.20		
		(1.51-1.26)	0.25		
		(1.99-1.51)	0.48		
		(2.21-1.99)	0.22		
		(2.21-2.21)	0.00		
				5.70	
4	sc1	(2.75-2.75)	0.00		
75.00		(3.16-2.75)	0.41		
		(3.31-3.16)	0.15		
		(3.31-3.31)	0.00		
				0.56	
6	sc1	(-3.90--3.90)	0.00		
125.00		(-3.88--3.90)	0.02		
		(-3.15--3.88)	0.73		
		(-3.11--3.15)	0.04		
		(-3.04--3.11)	0.07		
		(-2.35--3.04)	0.69		
		(-2.00--2.35)	0.35		
		(-1.58--2.00)	0.42		
		(-0.86--1.58)	0.72		
		(-0.82--0.86)	0.04		
		(-0.74--0.82)	0.08		
		(-0.05--0.74)	0.69		
		(0.29--0.05)	0.34		
		(0.71-0.29)	0.42		
		(1.43-0.71)	0.72		
		(1.48-1.43)	0.05		
		(1.57-1.48)	0.09		
		(2.24-1.57)	0.67		
		(2.58-2.24)	0.34		
		(3.01-2.58)	0.43		
		(3.63-3.01)	0.62		
		(3.63-3.63)	0.00		
				7.53	
7	sc1	(-3.63--3.63)	0.00		
150.00		(-3.32--3.63)	0.31		
		(-3.10--3.32)	0.22		
		(-2.66--3.10)	0.44		
		(-2.34--2.66)	0.32		
		(-2.17--2.34)	0.17		
		(-1.57--2.17)	0.60		
		(-1.03--1.57)	0.54		
		(-0.36--1.03)	0.67		
		(0.12--0.36)	0.48		
		(0.72-0.12)	0.60		
		(1.26-0.72)	0.54		
		(1.49-1.26)	0.23		
		(1.94-1.49)	0.45		
		(2.25-1.94)	0.31		
		(2.41-2.25)	0.16		
		(3.02-2.41)	0.61		
		(3.55-3.02)	0.53		
		(3.58-3.55)	0.03		
		(3.58-3.58)	0.00		
				7.21	

Il Direttore dei Lavori | L'Impresa

RILEVATO

DALLA SEZ. DA PROG.	ALLA SEZ. A PROG.	SEZIONE	FIGURA	AREA	DISTANZA SEZIONI m	DISTANZA DI CALCOLO m	VOLUME PARZIALE mc	VOLUME TOTALE mc
1	2	2	A1	0.89	25.00	12.50	11.125	
								11.125
2	3	2	A1	0.89	25.00	12.50	11.125	
25.00	50.00	3	A1	1.03	25.00	12.50	12.875	
								24.000
3	4	3	A1	1.03	25.00	12.50	12.875	
50.00	75.00	4	A1	0.19	25.00	12.50	2.375	
		4	A2	0.05	25.00	12.50	0.625	
								15.875
4	5	4	A1	0.19	25.00	12.50	2.375	
75.00	100.00	4	A2	0.05	25.00	12.50	0.625	
								3.000
5	6	6	A1	2.74	25.00	12.50	34.250	
								34.250
6	7	6	A1	2.74	25.00	12.50	34.250	
125.00	150.00	7	A1	1.02	25.00	12.50	12.750	
								47.000
7	8	7	A1	1.02	25.00	12.50	12.750	
								12.750

Il Direttore dei Lavori	L'Impresa	TOTALE ARTICOLO	148.000

BONIFICA

DALLA SEZ. DA PROG.	ALLA SEZ. A PROG.	SEZIONE	FIGURA	AREA	DISTANZA SEZIONI m	DISTANZA DI CALCOLO m	VOLUME PARZIALE mc	VOLUME TOTALE mc
1	2	2	BO1	2.15	25.00	12.50	26.875	
								26.875
2	3	2	BO1	2.15	25.00	12.50	26.875	
25.00	50.00	3	BO1	3.52	25.00	12.50	44.000	
								70.875
3	4	3	BO1	3.52	25.00	12.50	44.000	
50.00	75.00	4	BO1	0.28	25.00	12.50	3.500	
		4	BO2	2.85	25.00	12.50	35.625	
								83.125
4	5	4	BO1	0.28	25.00	12.50	3.500	
75.00	100.00	4	BO2	2.85	25.00	12.50	35.625	
								39.125
5	6	6	BO1	3.78	25.00	12.50	47.250	
								47.250
6	7	6	BO1	3.78	25.00	12.50	47.250	
125.00	150.00	7	BO1	3.59	25.00	12.50	44.875	
								92.125
7	8	7	BO1	3.59	25.00	12.50	44.875	
								44.875

Il Direttore dei Lavori	L'Impresa	TOTALE ARTICOLO	404.250

USURA

DALLA SEZ. DA PROG.	ALLA SEZ. A PROG.	SEZIONE	FIGURA	LUNGHEZZA	DISTANZA SEZIONI ml	DISTANZA DI CALCOLO ml	AREA PARZIALE mq	AREA TOTALE mq
1	2	2	a1	5.50	25.00	12.50	68.75	
								68.75
2	3	2	a1	5.50	25.00	12.50	68.75	
25.00	50.00	3	a1	5.50	25.00	12.50	68.75	
								137.50
3	4	3	a1	5.50	25.00	12.50	68.75	
50.00	75.00	4	a1	5.50	25.00	12.50	68.75	
								137.50
4	5	4	a1	5.50	25.00	12.50	68.75	
75.00	100.00	5	a1	5.50	25.00	12.50	68.75	
								137.50
5	6	5	a1	5.50	25.00	12.50	68.75	
100.00	125.00	6	a1	5.50	25.00	12.50	68.75	
								137.50
6	7	6	a1	5.50	25.00	12.50	68.75	
125.00	150.00	7	a1	5.50	25.00	12.50	68.75	
								137.50
7	8	7	a1	5.50	25.00	12.50	68.75	
150.00	175.00	8	a1	5.13	25.00	12.50	64.13	
								132.88
8	9	8	a1	5.13	19.32	9.66	49.56	
175.00	194.32	9	a1	3.33	19.32	9.66	32.17	
								81.73

VEGETALE

DALLA SEZ. DA PROG.	ALLA SEZ. A PROG.	SEZIONE	FIGURA	LUNGHEZZA	DISTANZA SEZIONI ml	DISTANZA DI CALCOLO ml	AREA PARZIALE mq	AREA TOTALE mq
1	2	2	b2	0.77	25.00	12.50	9.63	
0.00	25.00	2	b1	1.41	25.00	12.50	17.63	
								27.26
2	3	2	b2	0.77	25.00	12.50	9.63	
25.00	50.00	2	b1	1.41	25.00	12.50	17.63	
		3	b2	1.48	25.00	12.50	18.50	
		3	b1	1.24	25.00	12.50	15.50	
								61.26
3	4	3	b2	1.48	25.00	12.50	18.50	
50.00	75.00	3	b1	1.24	25.00	12.50	15.50	
		4	b2	1.28	25.00	12.50	16.00	
		4	b1	1.15	25.00	12.50	14.37	
								64.37
4	5	4	b2	1.28	25.00	12.50	16.00	
75.00	100.00	4	b1	1.15	25.00	12.50	14.37	
		5	b2	1.35	25.00	12.50	16.88	
		5	b1	1.36	25.00	12.50	17.00	
								64.25
5	6	5	b2	1.35	25.00	12.50	16.88	
100.00	125.00	5	b1	1.36	25.00	12.50	17.00	
		6	b2	1.62	25.00	12.50	20.25	
		6	b1	1.44	25.00	12.50	18.00	
								72.13
6	7	6	b2	1.62	25.00	12.50	20.25	
125.00	150.00	6	b1	1.44	25.00	12.50	18.00	
		7	b2	1.46	25.00	12.50	18.25	
		7	b1	1.38	25.00	12.50	17.25	
								73.75
7	8	7	b2	1.46	25.00	12.50	18.25	
150.00	175.00	7	b1	1.38	25.00	12.50	17.25	
		8	b2	0.67	25.00	12.50	8.38	
		8	b1	1.20	25.00	12.50	15.00	
								58.88
8	9	8	b2	0.67	19.32	9.66	6.47	
175.00	194.32	8	b1	1.20	19.32	9.66	11.59	
								18.06

SCOTICO

DALLA SEZ. DA PROG.	ALLA SEZ. A PROG.	SEZIONE	FIGURA	LUNGHEZZA	DISTANZA SEZIONI ml	DISTANZA DI CALCOLO ml	AREA PARZIALE mq	AREA TOTALE mq
1	2	2	sc1	4.26	25.00	12.50	53.25	
								53.25
2	3	2	sc1	4.26	25.00	12.50	53.25	
25.00	50.00	3	sc1	7.08	25.00	12.50	88.50	
								141.75
3	4	3	sc1	7.08	25.00	12.50	88.50	
50.00	75.00	4	sc2	5.70	25.00	12.50	71.25	
		4	sc1	0.56	25.00	12.50	7.00	
								166.75
4	5	4	sc2	5.70	25.00	12.50	71.25	
75.00	100.00	4	sc1	0.56	25.00	12.50	7.00	
								78.25
5	6	6	sc1	7.53	25.00	12.50	94.13	
								94.13
6	7	6	sc1	7.53	25.00	12.50	94.13	
125.00	150.00	7	sc1	7.21	25.00	12.50	90.13	
								184.26
7	8	7	sc1	7.21	25.00	12.50	90.13	
								90.13

Il Direttore dei Lavori	L'Impresa	TOTALE ARTICOLO	808.52

Volume dalla sezione 1 alla sezione 9

ARTICOLO		VOLUME
A RILEVATO	mc	148.000
BO BONIFICA	mc	404.250
a USURA	mq	970.86
b VEGETALE	mq	439.96
sc SCOTICO	mq	808.52

		CALCOLO DELLE AREE		Foglio n. 1	
STERRI E RIPORTI					
N. SEZIONE PROG.	FIG.	ELEMENTI DI CALCOLO	AREA ELEMENTARE mq	AREA FIGURA mq	NOTE
1	S1	(-10.23--10.40)x(1.41+1.37)/2	0.24		
16.00		(-10.13--10.23)x(1.44+1.41)/2	0.14		
		(-10.07--10.13)x(1.46+1.44)/2	0.09		
		(-9.98--10.07)x(1.39+1.46)/2	0.13		
		(-9.97--9.98)x(1.37+1.39)/2	0.01		
		(-10.40--9.97)x(1.37+1.37)/2	-0.59		
				0.02	
1	R1	(-9.89--9.97)x(1.25+1.37)/2	0.10		
16.00		(-9.87--9.89)x(1.42+0.86)/2	0.02		
		(-9.94--9.87)x(1.37+1.42)/2	-0.10		
		(-9.97--9.94)x(1.37+1.37)/2	-0.04		
				0.02	
1	S2	(-6.55--5.48)x(1.88+1.91)/2	-2.03		
16.00		(-8.04--6.55)x(1.84+1.88)/2	-2.77		
		(-7.89--8.04)x(2.03+1.84)/2	0.29		
		(-8.96--7.89)x(2.02+2.03)/2	-2.17		
		(-9.87--8.96)x(1.42+2.02)/2	-1.57		
		(-9.86--9.87)x(1.52+1.51)/2	0.02		
		(-9.80--9.86)x(1.53+1.52)/2	0.09		
		(-9.19--9.80)x(1.90+1.53)/2	1.05		
		(-8.76--9.19)x(2.19+1.90)/2	0.88		
		(-8.59--8.76)x(2.24+2.19)/2	0.38		
		(-8.42--8.59)x(2.28+2.24)/2	0.38		
		(-8.38--8.42)x(2.29+2.28)/2	0.09		
		(-8.26--8.38)x(2.32+2.29)/2	0.28		
		(-8.17--8.26)x(2.33+2.32)/2	0.21		
		(-8.13--8.17)x(2.34+2.33)/2	0.09		
		(-8.08--8.13)x(2.35+2.34)/2	0.12		
		(-8.05--8.08)x(2.35+2.35)/2	0.07		
		(-8.00--8.05)x(2.36+2.35)/2	0.12		
		(-7.85--8.00)x(2.38+2.36)/2	0.36		
		(-7.72--7.85)x(2.37+2.38)/2	0.31		
		(-6.87--7.72)x(2.34+2.37)/2	2.00		
		(-6.68--6.87)x(2.33+2.34)/2	0.44		
		(-6.65--6.68)x(2.33+2.33)/2	0.07		
		(-6.57--6.65)x(2.36+2.33)/2	0.19		
		(-6.54--6.57)x(2.39+2.36)/2	0.07		
		(-6.52--6.54)x(2.36+2.39)/2	0.05		
		(-6.48--6.52)x(2.33+2.36)/2	0.09		
		(-6.45--6.48)x(2.33+2.33)/2	0.07		
		(-6.39--6.45)x(2.33+2.33)/2	0.14		
		(-6.30--6.39)x(2.33+2.33)/2	0.21		
		(-6.14--6.30)x(2.33+2.33)/2	0.37		
		(-6.04--6.14)x(2.33+2.33)/2	0.23		
		(-5.98--6.04)x(2.33+2.33)/2	0.14		
		(-5.94--5.98)x(2.37+2.33)/2	0.09		
		(-5.83--5.94)x(2.33+2.41)/2	0.26		
		(-5.81--5.83)x(2.33+2.33)/2	0.05		
		(-5.64--5.81)x(2.32+2.33)/2	0.40		
		(-5.63--5.64)x(2.32+2.32)/2	0.02		
		(-5.59--5.63)x(2.32+2.32)/2	0.09		
		(-5.48--5.59)x(2.32+2.32)/2	0.26		
				1.44	
1	S3	(-4.59--5.48)x(2.33+2.32)/2	2.07		
16.00		(-4.32--4.59)x(2.33+2.33)/2	0.63		
		(-3.55--4.32)x(2.34+2.33)/2	1.80		
		(-3.05--3.55)x(2.35+2.34)/2	1.17		
		(-2.51--3.05)x(2.35+2.35)/2	1.27		
		(-1.78--2.51)x(2.35+2.35)/2	1.72		
		(-1.47--1.78)x(2.34+2.35)/2	0.73		
		(-0.50--1.47)x(2.32+2.34)/2	2.26		
		(-0.42--0.50)x(2.32+2.32)/2	0.19		
		(-0.07--0.42)x(2.32+2.32)/2	0.81		
		(0.62--0.07)x(2.32+2.32)/2	1.60		
		(0.77-0.62)x(2.32+2.32)/2	0.35		
		(1.66-0.77)x(2.32+2.32)/2	2.06		
		(2.04-1.66)x(2.31+2.32)/2	0.88		
		(2.70-2.04)x(2.29+2.31)/2	1.52		
		(3.26-2.70)x(2.34+2.29)/2	1.30		
		(3.35-3.26)x(2.34+2.34)/2	0.21		
		(3.43-3.35)x(2.34+2.34)/2	0.19		
		(3.47-3.43)x(2.34+2.34)/2	0.09		
		(3.74-3.47)x(2.29+2.34)/2	0.63		
		(4.59-3.74)x(2.28+2.29)/2	1.94		
		(4.79-4.59)x(2.28+2.28)/2	0.46		
		(5.68-4.79)x(2.26+2.28)/2	2.02		
		(5.83-5.68)x(2.26+2.26)/2	0.34		
		(5.86-5.83)x(2.26+2.26)/2	0.07		
		(6.87-5.86)x(2.23+2.26)/2	2.27		
		(7.13-6.87)x(2.23+2.23)/2	0.58		
		(7.91-7.13)x(2.21+2.23)/2	1.73		
		(8.45-7.91)x(2.20+2.21)/2	1.19		
		(8.68-8.45)x(2.20+2.20)/2	0.51		
		(8.70-8.68)x(2.20+2.20)/2	0.04		
		(8.48-8.70)x(1.98+2.20)/2	-0.46		
		(7.91-8.48)x(1.99+1.98)/2	-1.13		
		(8.06-7.91)x(1.80+1.99)/2	0.28		
		(3.25-8.06)x(1.96+1.80)/2	-9.04		
		(0.00-3.25)x(2.05+1.96)/2	-6.52		
		(-5.48-0.00)x(1.91+2.05)/2	-10.85		
				4.91	
2	S1	(-5.36--5.48)x(2.39+2.41)/2	0.29		
20.00		(-5.14--5.36)x(2.36+2.39)/2	0.52		
		(-4.53--5.14)x(2.36+2.36)/2	1.44		
		(-4.09--4.53)x(2.35+2.36)/2	1.04		
		(-3.47--4.09)x(2.35+2.35)/2	1.46		
		(-3.05--3.47)x(2.34+2.35)/2	0.98		
		(-2.76--3.05)x(2.34+2.34)/2	0.68		
		(-2.01--2.76)x(2.33+2.34)/2	1.75		
		(-1.88--2.01)x(2.33+2.33)/2	0.30		
		(-1.18--1.88)x(2.32+2.33)/2	1.63		
		(-0.97--1.18)x(2.31+2.32)/2	0.49		
		(-0.92--0.97)x(2.31+2.31)/2	0.12		
		(0.07--0.92)x(2.30+2.31)/2	2.28		
		(0.35-0.07)x(2.29+2.30)/2	0.64		
		(1.12-0.35)x(2.26+2.29)/2	1.75		
		A RIPORTARE mq	15.37		

		CALCOLO DELLE AREE		Foglio n. 2
STERRI E RIPORTI				
N. SEZIONE PROG.	FIG.	ELEMENTI DI CALCOLO	AREA ELEMENTARE mq	AREA FIGURA mq	NOTE
		RIPORTO mq	15.37		
		(1.63-1.12)x(2.24+2.26)/2	1.15		
		(2.16-1.63)x(2.22+2.24)/2	1.18		
		(2.90-2.16)x(2.19+2.22)/2	1.63		
		(3.20-2.90)x(2.18+2.19)/2	0.66		
		(3.26-3.20)x(2.17+2.18)/2	0.13		
		(3.45-3.26)x(2.17+2.17)/2	0.41		
		(3.58-3.45)x(2.16+2.17)/2	0.28		
		(3.60-3.58)x(2.23+2.16)/2	0.04		
		(3.67-3.60)x(2.29+2.23)/2	0.16		
		(3.70-3.67)x(2.27+2.29)/2	0.07		
		(3.72-3.70)x(2.22+2.27)/2	0.04		
		(3.75-3.72)x(2.16+2.22)/2	0.07		
		(3.85-3.75)x(2.16+2.16)/2	0.22		
		(4.01-3.85)x(2.13+2.16)/2	0.34		
		(4.24-4.01)x(2.09+2.13)/2	0.49		
		(4.29-4.24)x(2.09+2.09)/2	0.10		
		(4.75-4.29)x(2.06+2.09)/2	0.95		
		(4.81-4.75)x(2.12+2.06)/2	0.13		
		(4.86-4.81)x(2.17+2.12)/2	0.11		
		(5.19-4.86)x(2.01+2.17)/2	0.69		
		(5.20-5.19)x(2.01+2.01)/2	0.02		
		(5.28-5.20)x(2.00+2.01)/2	0.16		
		(6.06-5.28)x(2.01+2.00)/2	1.56		
		(6.18-6.06)x(2.01+2.01)/2	0.24		
		(6.23-6.18)x(2.00+2.01)/2	0.10		
		(6.25-6.23)x(1.99+2.00)/2	0.04		
		(6.38-6.25)x(1.93+1.99)/2	0.25		
		(6.43-6.38)x(1.90+1.93)/2	0.10		
		(6.46-6.43)x(1.90+1.90)/2	0.06		
		(6.48-6.46)x(1.90+1.90)/2	0.04		
		(6.49-6.48)x(2.19+2.24)/2	0.02		
		(6.54-6.49)x(1.97+2.19)/2	0.10		
		(6.55-6.54)x(1.98+1.97)/2	0.02		
		(6.62-6.55)x(1.98+1.98)/2	0.14		
		(6.76-6.62)x(1.81+1.98)/2	0.27		
		(3.25-6.76)x(1.90+1.81)/2	-6.51		
		(0.00-3.25)x(1.98+1.90)/2	-6.30		
		(-3.25-0.00)x(1.90+1.98)/2	-6.30		
		(-5.48--3.25)x(1.84+1.90)/2	-4.17		
				4.06	
3 40.00	S1	(-5.16--5.26)x(2.32+2.32)/2	0.23		
		(-4.64--5.16)x(2.32+2.32)/2	1.21		
		(-4.28--4.64)x(2.32+2.32)/2	0.84		
		(-3.59--4.28)x(2.33+2.32)/2	1.60		
		(-3.40--3.59)x(2.33+2.33)/2	0.44		
		(-2.55--3.40)x(2.32+2.33)/2	1.98		
		(-2.51--2.55)x(2.32+2.32)/2	0.09		
		(-2.30--2.51)x(2.31+2.32)/2	0.49		
		(-1.51--2.30)x(2.29+2.31)/2	1.82		
		(-1.34--1.51)x(2.29+2.29)/2	0.39		
		(-0.47--1.34)x(2.28+2.29)/2	1.99		
		(0.13--0.47)x(2.27+2.28)/2	1.36		
		(0.57-0.13)x(2.26+2.27)/2	1.00		
		(1.21-0.57)x(2.24+2.26)/2	1.44		
		(1.62-1.21)x(2.23+2.24)/2	0.92		
		(2.48-1.62)x(2.23+2.23)/2	1.92		
		(2.66-2.48)x(2.23+2.23)/2	0.40		
		(3.45-2.66)x(2.21+2.23)/2	1.75		
		(3.70-3.45)x(2.21+2.21)/2	0.55		
		(3.87-3.70)x(2.23+2.21)/2	0.38		
		(3.97-3.87)x(2.23+2.23)/2	0.22		
		(4.01-3.97)x(2.23+2.23)/2	0.09		
		(4.07-4.01)x(2.29+2.23)/2	0.14		
		(4.08-4.07)x(2.23+2.29)/2	0.02		
		(4.19-4.08)x(2.29+2.23)/2	0.25		
		(4.27-4.19)x(2.29+2.29)/2	0.18		
		(4.28-4.27)x(2.29+2.29)/2	0.02		
		(4.29-4.28)x(2.30+2.29)/2	0.02		
		(4.30-4.29)x(2.29+2.29)/2	0.02		
		(4.36-4.30)x(2.28+2.29)/2	0.14		
		(4.40-4.36)x(2.27+2.28)/2	0.09		
		(4.74-4.40)x(2.17+2.27)/2	0.75		
		(5.03-4.74)x(2.14+2.17)/2	0.62		
		(5.56-5.03)x(2.10+2.14)/2	1.12		
		(5.16-5.56)x(2.01+2.10)/2	-0.82		
		(4.59-5.16)x(2.01+2.01)/2	-1.15		
		(4.74-4.59)x(1.83+2.01)/2	0.29		
		(3.25-4.74)x(1.87+1.83)/2	-2.76		
		(0.00-3.25)x(1.95+1.87)/2	-6.21		
		(-3.25-0.00)x(1.87+1.95)/2	-6.21		
		(-4.76--3.25)x(1.83+1.87)/2	-2.79		
		(-4.59--4.76)x(2.03+1.83)/2	0.33		
		(-4.88--4.59)x(2.03+2.03)/2	-0.59		
		(-5.26--4.88)x(2.32+2.03)/2	-0.83		
				3.74	
4 60.00	S1	(-3.25--0.58)x(2.01+1.96)/2	-5.30		
		(-4.73--3.25)x(2.04+2.01)/2	-3.00		
		(-4.59--4.73)x(2.20+2.04)/2	0.30		
		(-5.16--4.59)x(2.20+2.20)/2	-1.25		
		(-5.32--5.16)x(2.30+2.20)/2	-0.36		
		(-5.27--5.32)x(2.30+2.30)/2	0.12		
		(-5.20--5.27)x(2.34+2.30)/2	0.16		
		(-4.81--5.20)x(2.39+2.34)/2	0.92		
		(-4.79--4.81)x(2.42+2.39)/2	0.05		
		(-4.78--4.79)x(2.39+2.42)/2	0.02		
		(-4.71--4.78)x(2.39+2.39)/2	0.17		
		(-4.67--4.71)x(2.38+2.39)/2	0.10		
		(-4.63--4.67)x(2.37+2.38)/2	0.10		
		(-4.55--4.63)x(2.36+2.37)/2	0.19		
		(-4.44--4.55)x(2.34+2.36)/2	0.26		
		(-4.23--4.44)x(2.31+2.34)/2	0.49		
		(-4.18--4.23)x(2.31+2.31)/2	0.12		
		(-3.32--4.18)x(2.30+2.31)/2	1.98		
		(-3.19--3.32)x(2.30+2.30)/2	0.30		
		A RIPORTARE mq	-4.63		

		CALCOLO DELLE AREE		Foglio n. 3	
STERRI E RIPORTI					
N. SEZIONE PROG.	FIG.	ELEMENTI DI CALCOLO	AREA ELEMENTARE mq	AREA FIGURA mq	NOTE
		RIPORTO mq	-4.63		
		(-2.42--3.19)x(2.30+2.30)/2	1.77		
		(-2.16--2.42)x(2.30+2.30)/2	0.60		
		(-1.52--2.16)x(2.29+2.30)/2	1.47		
		(-1.12--1.52)x(2.28+2.29)/2	0.91		
		(-0.62--1.12)x(2.28+2.28)/2	1.14		
		(-0.58--0.62)x(2.28+2.28)/2	0.09		
				1.35	
4	S2	(-0.08--0.58)x(2.27+2.28)/2	1.14		
60.00		(0.28--0.08)x(2.26+2.27)/2	0.82		
		(0.95-0.28)x(2.26+2.26)/2	1.51		
		(1.18-0.95)x(2.25+2.26)/2	0.52		
		(1.99-1.18)x(2.25+2.25)/2	1.82		
		(2.08-1.99)x(2.25+2.25)/2	0.20		
		(2.64-2.08)x(2.24+2.25)/2	1.26		
		(3.03-2.64)x(2.24+2.24)/2	0.87		
		(3.88-3.03)x(2.22+2.24)/2	1.90		
		(4.07-3.88)x(2.23+2.22)/2	0.42		
		(4.32-4.07)x(2.22+2.23)/2	0.56		
		(5.10-4.32)x(2.23+2.22)/2	1.74		
		(5.24-5.10)x(2.28+2.23)/2	0.32		
		(5.33-5.24)x(2.29+2.28)/2	0.21		
		(5.40-5.33)x(2.31+2.29)/2	0.16		
		(5.41-5.40)x(2.32+2.31)/2	0.02		
		(5.42-5.41)x(2.32+2.32)/2	0.02		
		(5.45-5.42)x(2.32+2.32)/2	0.07		
		(5.46-5.45)x(2.32+2.32)/2	0.02		
		(5.55-5.46)x(2.32+2.32)/2	0.21		
		(5.56-5.55)x(2.32+2.32)/2	0.02		
		(5.57-5.56)x(2.32+2.32)/2	0.02		
		(5.92-5.57)x(2.30+2.32)/2	0.81		
		(5.93-5.92)x(2.34+2.30)/2	0.02		
		(5.95-5.93)x(2.29+2.34)/2	0.05		
		(6.00-5.95)x(2.28+2.29)/2	0.11		
		(6.01-6.00)x(2.27+2.28)/2	0.02		
		(5.59-6.01)x(2.00+2.27)/2	-0.90		
		(5.02-5.59)x(2.00+2.00)/2	-1.14		
		(5.17-5.02)x(1.82+2.00)/2	0.29		
		(3.68-5.17)x(1.86+1.82)/2	-2.74		
		(0.00-3.68)x(1.95+1.86)/2	-7.01		
		(-0.58-0.00)x(1.96+1.95)/2	-1.13		
				2.21	
5	R1	(-5.71--5.78)x(2.33+2.33)/2	0.16		
80.00		(-5.59--5.71)x(2.33+2.33)/2	0.28		
		(-4.69--5.59)x(2.34+2.33)/2	2.10		
		(-4.58--4.69)x(2.34+2.34)/2	0.26		
		(-3.66--4.58)x(2.33+2.34)/2	2.15		
		(-3.57--3.66)x(2.33+2.33)/2	0.21		
		(-2.63--3.57)x(2.32+2.33)/2	2.19		
		(-2.56--2.63)x(2.32+2.32)/2	0.16		
		(-1.61--2.56)x(2.33+2.32)/2	2.21		
		(-1.55--1.61)x(2.33+2.33)/2	0.14		
		(-0.58--1.55)x(2.32+2.33)/2	2.26		
		(-3.25--0.58)x(2.51+2.32)/2	-6.45		
		(-4.71--3.25)x(2.61+2.51)/2	-3.74		
		(-4.59--4.71)x(2.75+2.61)/2	0.32		
		(-5.16--4.59)x(2.75+2.75)/2	-1.57		
		(-5.78--5.16)x(2.33+2.75)/2	-1.57		
				0.89	
5	S1	(-0.54--0.58)x(2.32+2.32)/2	0.09		
80.00		(0.44--0.54)x(2.34+2.32)/2	2.28		
		(0.47-0.44)x(2.34+2.34)/2	0.07		
		(1.47-0.47)x(2.33+2.34)/2	2.33		
		(1.48-1.47)x(2.33+2.33)/2	0.02		
		(2.49-1.48)x(2.33+2.33)/2	2.35		
		(2.55-2.49)x(2.33+2.33)/2	0.14		
		(3.52-2.55)x(2.31+2.33)/2	2.25		
		(3.53-3.52)x(2.31+2.31)/2	0.02		
		(4.54-3.53)x(2.29+2.31)/2	2.32		
		(5.52-4.54)x(2.29+2.29)/2	2.24		
		(5.57-5.52)x(2.29+2.29)/2	0.11		
		(5.76-5.57)x(2.29+2.29)/2	0.44		
		(5.89-5.76)x(2.29+2.29)/2	0.30		
		(5.98-5.89)x(2.30+2.29)/2	0.21		
		(6.43-5.98)x(2.33+2.30)/2	1.04		
		(6.06-6.43)x(2.09+2.33)/2	-0.82		
		(5.49-6.06)x(2.09+2.09)/2	-1.19		
		(5.66-5.49)x(1.89+2.09)/2	0.34		
		(4.15-5.66)x(1.99+1.89)/2	-2.93		
		(0.00-4.15)x(2.28+1.99)/2	-8.86		
		(-0.58-0.00)x(2.32+2.28)/2	-1.33		
				1.42	
6	R1	(-3.25--0.58)x(2.97+2.79)/2	-7.69		
100.00		(-4.71--3.25)x(3.08+2.97)/2	-4.42		
		(-4.59--4.71)x(3.21+3.08)/2	0.38		
		(-5.16--4.59)x(3.21+3.21)/2	-1.83		
		(-6.35--5.16)x(2.42+3.21)/2	-3.35		
		(-6.09--6.35)x(2.42+2.42)/2	0.63		
		(-5.53--6.09)x(2.41+2.42)/2	1.35		
		(-5.04--5.53)x(2.42+2.41)/2	1.18		
		(-4.67--5.04)x(2.40+2.42)/2	0.89		
		(-3.99--4.67)x(2.41+2.40)/2	1.64		
		(-3.81--3.99)x(2.41+2.41)/2	0.43		
		(-2.96--3.81)x(2.41+2.41)/2	2.05		
		(-2.94--2.96)x(2.41+2.41)/2	0.05		
		(-1.89--2.94)x(2.40+2.41)/2	2.53		
		(-1.59--1.89)x(2.40+2.40)/2	0.72		
		(-0.84--1.59)x(2.39+2.40)/2	1.80		
		(-0.58--0.84)x(2.39+2.39)/2	0.62		
				3.02	
6	R2	(-0.25--0.58)x(2.39+2.39)/2	0.79		
100.00		(0.21--0.25)x(2.39+2.39)/2	1.10		
		(1.09-0.21)x(2.38+2.39)/2	2.10		
		(1.25-1.09)x(2.38+2.38)/2	0.38		
		(1.84-1.25)x(2.37+2.38)/2	1.40		
		A RIPORTARE mq	5.77		

		CALCOLO DELLE AREE		Foglio n. 4
STERRI E RIPORTI				
N. SEZIONE PROG.	FIG.	ELEMENTI DI CALCOLO	AREA ELEMENTARE mq	AREA FIGURA mq	NOTE
		RIPORTO mq	5.77		
		(2.22-1.84)x(2.35+2.37)/2	0.90		
		(2.30-2.22)x(2.35+2.35)/2	0.19		
		(3.08-2.30)x(2.35+2.35)/2	1.83		
		(3.35-3.08)x(2.35+2.35)/2	0.63		
		(3.94-3.35)x(2.33+2.35)/2	1.38		
		(4.40-3.94)x(2.33+2.33)/2	1.07		
		(4.46-4.40)x(2.35+2.33)/2	0.14		
		(4.52-4.46)x(2.37+2.35)/2	0.14		
		(4.55-4.52)x(2.38+2.37)/2	0.07		
		(4.70-4.55)x(2.41+2.38)/2	0.36		
		(4.82-4.70)x(2.38+2.41)/2	0.29		
		(4.85-4.82)x(2.37+2.38)/2	0.07		
		(4.88-4.85)x(2.37+2.37)/2	0.07		
		(4.94-4.88)x(2.36+2.37)/2	0.14		
		(5.03-4.94)x(2.34+2.36)/2	0.21		
		(5.20-5.03)x(2.30+2.34)/2	0.39		
		(5.45-5.20)x(2.25+2.30)/2	0.57		
		(5.67-5.45)x(2.24+2.25)/2	0.49		
		(6.50-5.67)x(2.22+2.24)/2	1.85		
		(6.53-6.50)x(2.22+2.22)/2	0.07		
		(6.56-6.53)x(2.22+2.22)/2	0.07		
		(6.06-6.56)x(2.55+2.22)/2	-1.19		
		(5.49-6.06)x(2.55+2.55)/2	-1.45		
		(5.66-5.49)x(2.35+2.55)/2	0.42		
		(4.15-5.66)x(2.46+2.35)/2	-3.63		
		(0.00-4.15)x(2.75+2.46)/2	-10.81		
		(-0.58-0.00)x(2.79+2.75)/2	-1.61		
				1.57	
7 120.00	R1	(-6.51--6.78)x(2.51+2.51)/2	0.68		
		(-6.18--6.51)x(2.51+2.51)/2	0.83		
		(-5.40--6.18)x(2.50+2.51)/2	1.95		
		(-4.62--5.40)x(2.48+2.50)/2	1.94		
		(-4.28--4.62)x(2.48+2.48)/2	0.84		
		(-3.42--4.28)x(2.46+2.48)/2	2.12		
		(-3.16--3.42)x(2.46+2.46)/2	0.64		
		(-3.06--3.16)x(2.46+2.46)/2	0.25		
		(-2.83--3.06)x(2.46+2.46)/2	0.57		
		(-2.04--2.83)x(2.46+2.46)/2	1.94		
		(-1.44--2.04)x(2.46+2.46)/2	1.48		
		(-0.93--1.44)x(2.46+2.46)/2	1.25		
		(-0.91--0.93)x(2.47+2.46)/2	0.05		
		(-0.88--0.91)x(2.55+2.47)/2	0.08		
		(0.06--0.88)x(2.47+2.51)/2	2.34		
		(0.19-0.06)x(2.47+2.47)/2	0.32		
		(0.84-0.19)x(2.45+2.47)/2	1.60		
		(1.31-0.84)x(2.40+2.45)/2	1.14		
		(1.47-1.31)x(2.47+2.40)/2	0.39		
		(1.64-1.47)x(2.50+2.47)/2	0.42		
		(1.74-1.64)x(2.50+2.50)/2	0.25		
		(1.81-1.74)x(2.50+2.50)/2	0.18		
		(1.86-1.81)x(2.51+2.50)/2	0.13		
		(1.89-1.86)x(2.52+2.51)/2	0.08		
		(1.92-1.89)x(2.53+2.52)/2	0.08		
		(1.95-1.92)x(2.53+2.53)/2	0.08		
		(1.97-1.95)x(2.52+2.53)/2	0.05		
		(1.98-1.97)x(2.54+2.52)/2	0.03		
		(1.99-1.98)x(2.48+2.54)/2	0.03		
		(2.01-1.99)x(2.39+2.48)/2	0.05		
		(2.04-2.01)x(2.39+2.39)/2	0.07		
		(2.05-2.04)x(2.37+2.39)/2	0.02		
		(2.06-2.05)x(2.52+2.37)/2	0.02		
		(2.38-2.06)x(2.39+2.52)/2	0.79		
		(2.42-2.38)x(2.12+2.39)/2	0.09		
		(2.43-2.42)x(2.11+2.12)/2	0.02		
		(2.67-2.43)x(2.16+2.11)/2	0.51		
		(2.83-2.67)x(2.24+2.16)/2	0.35		
		(3.32-2.83)x(2.40+2.24)/2	1.14		
		(3.33-3.32)x(2.40+2.40)/2	0.02		
		(3.35-3.33)x(2.43+2.40)/2	0.05		
		(3.37-3.35)x(2.35+2.43)/2	0.05		
		(3.42-3.37)x(2.15+2.35)/2	0.11		
		(3.50-3.42)x(1.85+2.15)/2	0.16		
		(3.54-3.50)x(1.79+1.85)/2	0.07		
		(3.96-3.54)x(1.68+1.79)/2	0.73		
		(4.66-3.96)x(1.51+1.68)/2	1.12		
		(4.73-4.66)x(1.51+1.51)/2	0.11		
		(4.90-4.73)x(1.53+1.51)/2	0.26		
		(5.51-4.90)x(1.65+1.53)/2	0.97		
		(5.78-5.51)x(1.65+1.65)/2	0.45		
		(5.88-5.78)x(1.60+1.65)/2	0.16		
		(5.98-5.88)x(1.42+1.60)/2	0.15		
		(6.05-5.98)x(1.29+1.42)/2	0.09		
		(6.11-6.05)x(1.24+1.29)/2	0.08		
		(6.12-6.11)x(1.05+1.24)/2	0.01		
		(6.15-6.12)x(1.19+1.05)/2	0.03		
		(6.59-6.15)x(1.65+1.19)/2	0.62		
		(6.74-6.59)x(1.73+1.65)/2	0.25		
		(6.90-6.74)x(1.78+1.73)/2	0.28		
		(6.93-6.90)x(1.77+1.78)/2	0.05		
		(7.01-6.93)x(1.73+1.77)/2	0.14		
		(7.03-7.01)x(1.75+1.73)/2	0.03		
		(7.05-7.03)x(1.74+1.75)/2	0.03		
		(7.88-7.05)x(1.80+1.74)/2	1.47		
		(5.86-7.88)x(3.13+1.80)/2	-4.98		
		(5.29-5.86)x(3.13+3.13)/2	-1.78		
		(5.45-5.29)x(2.94+3.13)/2	0.49		
		(3.95-5.45)x(3.01+2.94)/2	-4.46		
		(0.00-3.95)x(3.21+3.01)/2	-12.28		
		(-3.25-0.00)x(3.37+3.21)/2	-10.69		
		(-4.71--3.25)x(3.44+3.37)/2	-4.97		
		(-4.59--4.71)x(3.59+3.44)/2	0.42		
		(-5.16--4.59)x(3.58+3.59)/2	-2.04		
		(-6.78--5.16)x(2.51+3.58)/2	-4.93		
				12.93	
		A RIPORTARE mq			

		CALCOLO DELLE AREE		Foglio n. 5	
STERRI E RIPORTI					
N. SEZIONE PROG.	FIG.	ELEMENTI DI CALCOLO	AREA ELEMENTARE mq	AREA FIGURA mq	NOTE
		RIPORTO mq			
8	R1	(-7.06--7.11)x(2.44+2.45)/2	0.12		
140.00		(-6.38--7.06)x(2.37+2.44)/2	1.64		
		(-5.77--6.38)x(2.30+2.37)/2	1.42		
		(-5.41--5.77)x(2.24+2.30)/2	0.82		
		(-5.22--5.41)x(2.17+2.24)/2	0.42		
		(-4.65--5.22)x(2.00+2.17)/2	1.19		
		(-4.06--4.65)x(1.74+2.00)/2	1.10		
		(-3.89--4.06)x(1.69+1.74)/2	0.29		
		(-3.58--3.89)x(1.62+1.69)/2	0.51		
		(-3.14--3.58)x(1.57+1.62)/2	0.70		
		(-2.90--3.14)x(1.49+1.57)/2	0.37		
		(-2.38--2.90)x(1.50+1.49)/2	0.78		
		(-1.74--2.38)x(1.62+1.50)/2	1.00		
		(-1.62--1.74)x(1.63+1.62)/2	0.19		
		(-1.38--1.62)x(1.64+1.63)/2	0.39		
		(-0.86--1.38)x(1.64+1.64)/2	0.85		
		(-0.58--0.86)x(1.67+1.64)/2	0.46		
		(-0.10--0.58)x(1.63+1.67)/2	0.79		
		(0.58--0.10)x(1.59+1.63)/2	1.09		
		(0.66-0.58)x(1.59+1.59)/2	0.13		
		(0.81-0.66)x(1.58+1.59)/2	0.24		
		(1.42-0.81)x(1.52+1.58)/2	0.95		
		(1.74-1.42)x(1.51+1.52)/2	0.48		
		(2.18-1.74)x(1.52+1.51)/2	0.67		
		(2.90-2.18)x(1.51+1.52)/2	1.09		
		(2.93-2.90)x(1.51+1.51)/2	0.05		
		(3.01-2.93)x(1.51+1.51)/2	0.12		
		(3.69-3.01)x(1.52+1.51)/2	1.03		
		(4.06-3.69)x(1.52+1.52)/2	0.56		
		(4.45-4.06)x(1.53+1.52)/2	0.59		
		(5.20-4.45)x(1.54+1.53)/2	1.15		
		(5.21-5.20)x(1.54+1.54)/2	0.02		
		(5.22-5.21)x(1.54+1.54)/2	0.02		
		(5.97-5.22)x(1.51+1.54)/2	1.14		
		(6.37-5.97)x(1.50+1.51)/2	0.60		
		(6.73-6.37)x(1.50+1.50)/2	0.54		
		(7.40-6.73)x(1.52+1.50)/2	1.01		
		(7.49-7.40)x(1.52+1.52)/2	0.14		
		(7.53-7.49)x(1.52+1.52)/2	0.06		
		(8.25-7.53)x(1.56+1.52)/2	1.11		
		(8.49-8.25)x(1.57+1.56)/2	0.38		
		(5.22-8.49)x(3.73+1.57)/2	-8.67		
		(4.65-5.22)x(3.73+3.73)/2	-2.13		
		(4.80-4.65)x(3.55+3.73)/2	0.55		
		(3.31-4.80)x(3.59+3.55)/2	-5.32		
		(0.00-3.31)x(3.67+3.59)/2	-12.02		
		(-3.25-0.00)x(3.59+3.67)/2	-11.80		
		(-4.74--3.25)x(3.55+3.59)/2	-5.32		
		(-4.59--4.74)x(3.74+3.55)/2	0.55		
		(-5.16--4.59)x(3.73+3.74)/2	-2.13		
		(-7.11--5.16)x(2.45+3.73)/2	-6.03		
				26.11	
9	R1	(-8.78--9.02)x(1.64+1.65)/2	0.39		
160.00		(-8.34--8.78)x(1.63+1.64)/2	0.72		
		(-7.63--8.34)x(1.61+1.63)/2	1.15		
		(-7.58--7.63)x(1.61+1.61)/2	0.08		
		(-7.48--7.58)x(1.62+1.61)/2	0.16		
		(-6.82--7.48)x(1.64+1.62)/2	1.08		
		(-6.47--6.82)x(1.63+1.64)/2	0.57		
		(-6.06--6.47)x(1.64+1.63)/2	0.67		
		(-5.31--6.06)x(1.69+1.64)/2	1.25		
		(-5.30--5.31)x(1.69+1.69)/2	0.02		
		(-5.26--5.30)x(1.69+1.69)/2	0.07		
		(-4.54--5.26)x(1.70+1.69)/2	1.22		
		(-4.16--4.54)x(1.72+1.70)/2	0.65		
		(-3.78--4.16)x(1.72+1.72)/2	0.65		
		(-3.04--3.78)x(1.72+1.72)/2	1.27		
		(-3.02--3.04)x(1.72+1.72)/2	0.03		
		(-3.00--3.02)x(1.72+1.72)/2	0.03		
		(-2.26--3.00)x(1.73+1.72)/2	1.28		
		(-1.85--2.26)x(1.72+1.73)/2	0.71		
		(-1.50--1.85)x(1.71+1.72)/2	0.60		
		(-0.83--1.50)x(1.71+1.71)/2	1.15		
		(-0.74--0.83)x(1.70+1.71)/2	0.15		
		(-0.69--0.74)x(1.70+1.70)/2	0.09		
		(0.02--0.69)x(1.71+1.70)/2	1.21		
		(0.47-0.02)x(1.69+1.71)/2	0.76		
		(0.78-0.47)x(1.68+1.69)/2	0.52		
		(1.39-0.78)x(1.66+1.68)/2	1.02		
		(1.54-1.39)x(1.66+1.66)/2	0.25		
		(1.62-1.54)x(1.66+1.66)/2	0.13		
		(2.30-1.62)x(1.66+1.66)/2	1.13		
		(2.78-2.30)x(1.64+1.66)/2	0.79		
		(3.06-2.78)x(1.64+1.64)/2	0.46		
		(3.61-3.06)x(1.63+1.64)/2	0.90		
		(3.82-3.61)x(1.63+1.63)/2	0.34		
		(3.94-3.82)x(1.63+1.63)/2	0.20		
		(4.58-3.94)x(1.64+1.63)/2	1.05		
		(5.09-4.58)x(1.61+1.64)/2	0.83		
		(5.34-5.09)x(1.60+1.61)/2	0.40		
		(5.83-5.34)x(1.60+1.60)/2	0.78		
		(6.10-5.83)x(1.60+1.60)/2	0.43		
		(6.25-6.10)x(1.60+1.60)/2	0.24		
		(6.86-6.25)x(1.61+1.60)/2	0.98		
		(7.40-6.86)x(1.60+1.61)/2	0.87		
		(7.62-7.40)x(1.60+1.60)/2	0.35		
		(8.05-7.62)x(1.59+1.60)/2	0.69		
		(8.56-8.05)x(1.59+1.59)/2	0.81		
		(9.12-8.56)x(1.57+1.59)/2	0.88		
		(9.27-9.12)x(1.57+1.57)/2	0.24		
		(5.16-9.27)x(4.28+1.57)/2	-12.02		
		(4.59-5.16)x(4.28+4.28)/2	-2.44		
		(4.74-4.59)x(4.11+4.28)/2	0.63		
		(3.25-4.74)x(4.12+4.11)/2	-6.13		
		A RIPORTARE mq	10.29		

		CALCOLO DELLE AREE		Foglio n. 6	
STERRI E RIPORTI					
N. SEZIONE PROG.	FIG.	ELEMENTI DI CALCOLO	AREA ELEMENTARE mq	AREA FIGURA mq	NOTE
		RIPORTO mq	10.29		
		(0.00-3.25)x(4.14+4.12)/2	-13.42		
		(-3.25-0.00)x(4.05+4.14)/2	-13.31		
		(-4.74--3.25)x(4.02+4.05)/2	-6.01		
		(-4.59--4.74)x(4.20+4.02)/2	0.62		
		(-5.16--4.59)x(4.19+4.20)/2	-2.39		
		(-9.02--5.16)x(1.65+4.19)/2	-11.27		
				35.49	
10	R1	(-9.46--9.83)x(1.53+1.54)/2	0.57		
180.00		(-9.43--9.46)x(1.53+1.53)/2	0.05		
		(-9.41--9.43)x(1.53+1.53)/2	0.03		
		(-8.66--9.41)x(1.54+1.53)/2	1.15		
		(-8.28--8.66)x(1.54+1.54)/2	0.59		
		(-7.89--8.28)x(1.54+1.54)/2	0.60		
		(-7.15--7.89)x(1.54+1.54)/2	1.14		
		(-7.11--7.15)x(1.54+1.54)/2	0.06		
		(-7.04--7.11)x(1.54+1.54)/2	0.11		
		(-6.34--7.04)x(1.54+1.54)/2	1.08		
		(-6.01--6.34)x(1.53+1.54)/2	0.51		
		(-5.57--6.01)x(1.54+1.53)/2	0.68		
		(-4.88--5.57)x(1.52+1.54)/2	1.06		
		(-4.80--4.88)x(1.52+1.52)/2	0.12		
		(-4.63--4.80)x(1.51+1.52)/2	0.26		
		(-4.03--4.63)x(1.51+1.51)/2	0.91		
		(-3.75--4.03)x(1.51+1.51)/2	0.42		
		(-3.26--3.75)x(1.53+1.51)/2	0.74		
		(-2.62--3.26)x(1.54+1.53)/2	0.98		
		(-2.49--2.62)x(1.54+1.54)/2	0.20		
		(-2.22--2.49)x(1.54+1.54)/2	0.42		
		(-1.72--2.22)x(1.53+1.54)/2	0.77		
		(-1.48--1.72)x(1.54+1.53)/2	0.37		
		(-0.95--1.48)x(1.54+1.54)/2	0.82		
		(-0.35--0.95)x(1.53+1.54)/2	0.92		
		(-0.18--0.35)x(1.53+1.53)/2	0.26		
		(0.19--0.18)x(1.52+1.53)/2	0.56		
		(0.59-0.19)x(1.49+1.52)/2	0.60		
		(0.78-0.59)x(1.50+1.49)/2	0.28		
		(1.36-0.78)x(1.51+1.50)/2	0.87		
		(1.91-1.36)x(1.51+1.51)/2	0.83		
		(2.13-1.91)x(1.51+1.51)/2	0.33		
		(2.60-2.13)x(1.51+1.51)/2	0.71		
		(2.90-2.60)x(1.51+1.51)/2	0.45		
		(3.05-2.90)x(1.52+1.51)/2	0.23		
		(3.68-3.05)x(1.51+1.52)/2	0.95		
		(4.18-3.68)x(1.51+1.51)/2	0.75		
		(4.45-4.18)x(1.50+1.51)/2	0.41		
		(5.01-4.45)x(1.51+1.50)/2	0.84		
		(5.22-5.01)x(1.50+1.51)/2	0.32		
		(5.31-5.22)x(1.50+1.50)/2	0.13		
		(5.99-5.31)x(1.45+1.50)/2	1.00		
		(6.45-5.99)x(1.47+1.45)/2	0.67		
		(6.76-6.45)x(1.46+1.47)/2	0.45		
		(7.42-6.76)x(1.47+1.46)/2	0.97		
		(7.53-7.42)x(1.46+1.47)/2	0.16		
		(7.58-7.53)x(1.47+1.46)/2	0.07		
		(8.30-7.58)x(1.43+1.47)/2	1.04		
		(8.71-8.30)x(1.44+1.43)/2	0.59		
		(9.07-8.71)x(1.44+1.44)/2	0.52		
		(9.83-9.07)x(1.47+1.44)/2	1.11		
		(9.84-9.83)x(1.47+1.47)/2	0.01		
		(10.40-9.84)x(1.44+1.47)/2	0.81		
		(5.16-10.40)x(4.91+1.44)/2	-16.64		
		(4.59-5.16)x(4.91+4.91)/2	-2.80		
		(4.72-4.59)x(4.76+4.91)/2	0.63		
		(3.25-4.72)x(4.71+4.76)/2	-6.96		
		(0.00-3.25)x(4.60+4.71)/2	-15.13		
		(-3.25-0.00)x(4.49+4.60)/2	-14.77		
		(-4.75--3.25)x(4.44+4.49)/2	-6.70		
		(-4.59--4.75)x(4.63+4.44)/2	0.73		
		(-5.16--4.59)x(4.62+4.63)/2	-2.64		
		(-9.83--5.16)x(1.54+4.62)/2	-14.38		
				48.18	
11	R1	(-9.93--10.56)x(1.50+1.49)/2	0.94		
200.00		(-9.51--9.93)x(1.50+1.50)/2	0.63		
		(-8.83--9.51)x(1.47+1.50)/2	1.01		
		(-8.46--8.83)x(1.47+1.47)/2	0.54		
		(-7.93--8.46)x(1.49+1.47)/2	0.78		
		(-7.72--7.93)x(1.49+1.49)/2	0.31		
		(-7.14--7.72)x(1.49+1.49)/2	0.86		
		(-6.62--7.14)x(1.48+1.49)/2	0.77		
		(-6.35--6.62)x(1.48+1.48)/2	0.40		
		(-5.64--6.35)x(1.49+1.48)/2	1.05		
		(-5.56--5.64)x(1.49+1.49)/2	0.12		
		(-5.52--5.56)x(1.49+1.49)/2	0.06		
		(-4.77--5.52)x(1.46+1.49)/2	1.11		
		(-4.42--4.77)x(1.45+1.46)/2	0.51		
		(-3.97--4.42)x(1.47+1.45)/2	0.66		
		(-3.32--3.97)x(1.47+1.47)/2	0.96		
		(-3.18--3.32)x(1.47+1.47)/2	0.21		
		(-2.83--3.18)x(1.48+1.47)/2	0.52		
		(-2.39--2.83)x(1.49+1.48)/2	0.65		
		(-2.22--2.39)x(1.49+1.49)/2	0.25		
		(-1.60--2.22)x(1.50+1.49)/2	0.93		
		(-1.12--1.60)x(1.49+1.50)/2	0.72		
		(-0.81--1.12)x(1.49+1.49)/2	0.46		
		(-0.02--0.81)x(1.47+1.49)/2	1.17		
		(0.77--0.02)x(1.52+1.47)/2	1.18		
		(1.08-0.77)x(1.52+1.52)/2	0.47		
		(1.57-1.08)x(1.51+1.52)/2	0.74		
		(2.18-1.57)x(1.51+1.51)/2	0.92		
		(2.36-2.18)x(1.52+1.51)/2	0.27		
		(2.80-2.36)x(1.51+1.52)/2	0.67		
		(3.15-2.80)x(1.50+1.51)/2	0.53		
		(3.29-3.15)x(1.50+1.50)/2	0.21		
		(3.94-3.29)x(1.52+1.50)/2	0.98		
		A RIPORTARE mq	21.59		

		CALCOLO DELLE AREE		Foglio n. 7
STERRI E RIPORTI				
N. SEZIONE PROG.	FIG.	ELEMENTI DI CALCOLO	AREA ELEMENTARE mq	AREA FIGURA mq	NOTE
		RIPORTO mq	21.59		
		(4.39-3.94)x(1.52+1.52)/2	0.68		
		(4.73-4.39)x(1.51+1.52)/2	0.52		
		(5.49-4.73)x(1.51+1.51)/2	1.15		
		(5.52-5.49)x(1.51+1.51)/2	0.05		
		(5.61-5.52)x(1.51+1.51)/2	0.14		
		(6.31-5.61)x(1.53+1.51)/2	1.06		
		(6.59-6.31)x(1.54+1.53)/2	0.43		
		(7.11-6.59)x(1.54+1.54)/2	0.80		
		(7.69-7.11)x(1.53+1.54)/2	0.89		
		(7.90-7.69)x(1.53+1.53)/2	0.32		
		(8.43-7.90)x(1.52+1.53)/2	0.81		
		(8.69-8.43)x(1.51+1.52)/2	0.39		
		(8.79-8.69)x(1.52+1.51)/2	0.15		
		(9.48-8.79)x(1.51+1.52)/2	1.05		
		(9.89-9.48)x(1.53+1.51)/2	0.62		
		(10.27-9.89)x(1.53+1.53)/2	0.58		
		(10.99-10.27)x(1.53+1.53)/2	1.10		
		(5.16-10.99)x(5.38+1.53)/2	-20.14		
		(4.59-5.16)x(5.39+5.38)/2	-3.07		
		(4.72-4.59)x(5.24+5.39)/2	0.69		
		(3.25-4.72)x(5.18+5.24)/2	-7.66		
		(0.00-3.25)x(5.05+5.18)/2	-16.62		
		(-3.25-0.00)x(4.93+5.05)/2	-16.22		
		(-4.75--3.25)x(4.87+4.93)/2	-7.35		
		(-4.59--4.75)x(5.06+4.87)/2	0.79		
		(-5.16--4.59)x(5.06+5.06)/2	-2.88		
		(-10.56--5.16)x(1.49+5.06)/2	-17.69		
				57.82	
12 220.00	R1	(-10.23--10.68)x(1.74+1.74)/2	0.78		
		(-9.91--10.23)x(1.74+1.74)/2	0.56		
		(-9.15--9.91)x(1.74+1.74)/2	1.32		
		(-9.09--9.15)x(1.74+1.74)/2	0.10		
		(-8.90--9.09)x(1.74+1.74)/2	0.33		
		(-8.08--8.90)x(1.74+1.74)/2	1.43		
		(-7.70--8.08)x(1.74+1.74)/2	0.66		
		(-7.00--7.70)x(1.74+1.74)/2	1.22		
		(-6.13--7.00)x(1.75+1.74)/2	1.52		
		(-5.93--6.13)x(1.74+1.75)/2	0.35		
		(-5.50--5.93)x(1.74+1.74)/2	0.75		
		(-5.01--5.50)x(1.74+1.74)/2	0.85		
		(-4.85--5.01)x(1.74+1.74)/2	0.28		
		(-4.19--4.85)x(1.73+1.74)/2	1.15		
		(-3.78--4.19)x(1.73+1.73)/2	0.71		
		(-3.37--3.78)x(1.72+1.73)/2	0.71		
		(-2.70--3.37)x(1.72+1.72)/2	1.15		
		(-2.56--2.70)x(1.72+1.72)/2	0.24		
		(-2.09--2.56)x(1.72+1.72)/2	0.81		
		(-1.74--2.09)x(1.73+1.72)/2	0.60		
		(-1.63--1.74)x(1.73+1.73)/2	0.19		
		(-0.92--1.63)x(1.73+1.73)/2	1.23		
		(-0.55--0.92)x(1.73+1.73)/2	0.64		
		(-0.10--0.55)x(1.72+1.73)/2	0.78		
		(0.52--0.10)x(1.72+1.72)/2	1.07		
		(0.71-0.52)x(1.72+1.72)/2	0.33		
		(1.31-0.71)x(1.73+1.72)/2	1.04		
		(1.53-1.31)x(1.73+1.73)/2	0.38		
		(1.60-1.53)x(1.73+1.73)/2	0.12		
		(2.35-1.60)x(1.74+1.73)/2	1.30		
		(2.68-2.35)x(1.74+1.74)/2	0.57		
		(3.16-2.68)x(1.73+1.74)/2	0.83		
		(3.75-3.16)x(1.72+1.73)/2	1.02		
		(3.98-3.75)x(1.72+1.72)/2	0.40		
		(4.71-3.98)x(1.72+1.72)/2	1.26		
		(4.80-4.71)x(1.72+1.72)/2	0.15		
		(4.83-4.80)x(1.72+1.72)/2	0.05		
		(5.61-4.83)x(1.75+1.72)/2	1.35		
		(5.90-5.61)x(1.74+1.75)/2	0.51		
		(6.43-5.90)x(1.74+1.74)/2	0.92		
		(6.98-6.43)x(1.74+1.74)/2	0.96		
		(7.25-6.98)x(1.74+1.74)/2	0.47		
		(8.05-7.25)x(1.74+1.74)/2	1.39		
		(8.07-8.05)x(1.74+1.74)/2	0.03		
		(8.11-8.07)x(1.74+1.74)/2	0.07		
		(8.88-8.11)x(1.76+1.74)/2	1.35		
		(9.13-8.88)x(1.77+1.76)/2	0.44		
		(9.70-9.13)x(1.76+1.77)/2	1.01		
		(10.20-9.70)x(1.76+1.76)/2	0.88		
		(10.52-10.20)x(1.77+1.76)/2	0.56		
		(11.11-10.52)x(1.79+1.77)/2	1.05		
		(5.16-11.11)x(5.71+1.79)/2	-22.31		
		(4.59-5.16)x(5.72+5.71)/2	-3.26		
		(4.72-4.59)x(5.57+5.72)/2	0.73		
		(3.25-4.72)x(5.51+5.57)/2	-8.14		
		(0.00-3.25)x(5.38+5.51)/2	-17.70		
		(-3.25-0.00)x(5.26+5.38)/2	-17.29		
		(-4.75--3.25)x(5.20+5.26)/2	-7.85		
		(-4.59--4.75)x(5.39+5.20)/2	0.85		
		(-5.16--4.59)x(5.39+5.39)/2	-3.07		
		(-10.68--5.16)x(1.74+5.39)/2	-19.68		
				59.85	
13 240.00	R1	(-10.69--11.19)x(1.59+1.58)/2	0.79		
		(-10.31--10.69)x(1.59+1.59)/2	0.60		
		(-9.84--10.31)x(1.62+1.59)/2	0.75		
		(-9.25--9.84)x(1.65+1.62)/2	0.96		
		(-8.99--9.25)x(1.65+1.65)/2	0.43		
		(-8.20--8.99)x(1.67+1.65)/2	1.31		
		(-8.15--8.20)x(1.67+1.67)/2	0.08		
		(-7.93--8.15)x(1.67+1.67)/2	0.37		
		(-7.30--7.93)x(1.66+1.67)/2	1.05		
		(-7.14--7.30)x(1.66+1.66)/2	0.27		
		(-6.45--7.14)x(1.62+1.66)/2	1.13		
		(-6.09--6.45)x(1.60+1.62)/2	0.58		
		(-5.60--6.09)x(1.59+1.60)/2	0.78		
		(-5.03--5.60)x(1.60+1.59)/2	0.91		
		A RIPORTARE mq	10.01		

		CALCOLO DELLE AREE		Foglio n. 8
STERRI E RIPORTI				
N. SEZIONE PROG.	FIG.	ELEMENTI DI CALCOLO	AREA ELEMENTARE mq	AREA FIGURA mq	NOTE
		RIPORTO mq	10.01		
		(-4.75--5.03)x(1.60+1.60)/2	0.45		
		(-3.98--4.75)x(1.60+1.60)/2	1.23		
		(-3.90--3.98)x(1.60+1.60)/2	0.13		
		(-3.61--3.90)x(1.60+1.60)/2	0.46		
		(-2.92--3.61)x(1.60+1.60)/2	1.10		
		(-2.70--2.92)x(1.60+1.60)/2	0.35		
		(-1.87--2.70)x(1.64+1.60)/2	1.34		
		(-1.31--1.87)x(1.64+1.64)/2	0.92		
		(-0.81--1.31)x(1.65+1.64)/2	0.82		
		(0.09--0.81)x(1.66+1.65)/2	1.49		
		(0.24-0.09)x(1.66+1.66)/2	0.25		
		(0.72-0.24)x(1.68+1.66)/2	0.80		
		(1.18-0.72)x(1.69+1.68)/2	0.78		
		(1.30-1.18)x(1.69+1.69)/2	0.20		
		(2.03-1.30)x(1.66+1.69)/2	1.22		
		(2.35-2.03)x(1.67+1.66)/2	0.53		
		(2.88-2.35)x(1.67+1.67)/2	0.89		
		(3.41-2.88)x(1.67+1.67)/2	0.89		
		(3.73-3.41)x(1.69+1.67)/2	0.54		
		(4.47-3.73)x(1.72+1.69)/2	1.26		
		(4.58-4.47)x(1.72+1.72)/2	0.19		
		(5.04-4.58)x(1.75+1.72)/2	0.80		
		(5.43-5.04)x(1.77+1.75)/2	0.69		
		(5.52-5.43)x(1.77+1.77)/2	0.16		
		(6.27-5.52)x(1.77+1.77)/2	1.33		
		(6.58-6.27)x(1.80+1.77)/2	0.55		
		(7.12-6.58)x(1.75+1.80)/2	0.96		
		(7.63-7.12)x(1.72+1.75)/2	0.88		
		(7.97-7.63)x(1.71+1.72)/2	0.58		
		(8.69-7.97)x(1.65+1.71)/2	1.21		
		(8.82-8.69)x(1.65+1.65)/2	0.21		
		(9.36-8.82)x(1.68+1.65)/2	0.90		
		(9.67-9.36)x(1.70+1.68)/2	0.52		
		(9.74-9.67)x(1.69+1.70)/2	0.12		
		(10.52-9.74)x(1.73+1.69)/2	1.33		
		(10.80-10.52)x(1.72+1.73)/2	0.48		
		(11.36-10.80)x(1.71+1.72)/2	0.96		
		(11.48-11.36)x(1.71+1.71)/2	0.21		
		(5.16-11.48)x(5.88+1.71)/2	-23.98		
		(4.59-5.16)x(5.89+5.88)/2	-3.35		
		(4.72-4.59)x(5.74+5.89)/2	0.76		
		(3.25-4.72)x(5.68+5.74)/2	-8.39		
		(0.00-3.25)x(5.55+5.68)/2	-18.25		
		(-3.25-0.00)x(5.43+5.55)/2	-17.84		
		(-4.75--3.25)x(5.37+5.43)/2	-8.10		
		(-4.59--4.75)x(5.56+5.37)/2	0.87		
		(-5.16--4.59)x(5.56+5.56)/2	-3.17		
		(-11.19--5.16)x(1.58+5.56)/2	-21.53		
				65.24	
14 260.00	R1	(-10.40--10.87)x(1.85+1.80)/2	0.86		
		(-10.20--10.40)x(1.88+1.85)/2	0.37		
		(-10.16--10.20)x(1.88+1.88)/2	0.08		
		(-9.31--10.16)x(2.00+1.88)/2	1.65		
		(-9.12--9.31)x(2.03+2.00)/2	0.38		
		(-8.42--9.12)x(2.14+2.03)/2	1.46		
		(-8.08--8.42)x(2.19+2.14)/2	0.74		
		(-7.54--8.08)x(2.23+2.19)/2	1.19		
		(-7.04--7.54)x(2.24+2.23)/2	1.12		
		(-6.65--7.04)x(2.21+2.24)/2	0.87		
		(-6.00--6.65)x(2.16+2.21)/2	1.42		
		(-5.77--6.00)x(2.12+2.16)/2	0.49		
		(-4.96--5.77)x(1.91+2.12)/2	1.63		
		(-4.88--4.96)x(1.91+1.91)/2	0.15		
		(-4.44--4.88)x(1.76+1.91)/2	0.81		
		(-3.99--4.44)x(1.63+1.76)/2	0.76		
		(-3.92--3.99)x(1.60+1.63)/2	0.11		
		(-3.11--3.92)x(1.62+1.60)/2	1.30		
		(-2.88--3.11)x(1.56+1.62)/2	0.37		
		(-2.22--2.88)x(1.67+1.56)/2	1.07		
		(-1.83--2.22)x(1.76+1.67)/2	0.67		
		(-1.34--1.83)x(1.78+1.76)/2	0.87		
		(-0.79--1.34)x(1.92+1.78)/2	1.02		
		(-0.02--0.79)x(1.92+1.92)/2	1.48		
		(0.25--0.02)x(1.93+1.92)/2	0.52		
		(0.44-0.25)x(1.93+1.93)/2	0.37		
		(1.29-0.44)x(1.93+1.93)/2	1.64		
		(1.32-1.29)x(1.93+1.93)/2	0.06		
		(1.52-1.32)x(1.94+1.93)/2	0.39		
		(2.33-1.52)x(1.97+1.94)/2	1.58		
		(2.50-2.33)x(1.99+1.97)/2	0.34		
		(3.37-2.50)x(2.02+1.99)/2	1.74		
		(3.76-3.37)x(2.06+2.02)/2	0.80		
		(4.41-3.76)x(2.07+2.06)/2	1.34		
		(5.02-4.41)x(2.08+2.07)/2	1.27		
		(5.45-5.02)x(2.10+2.08)/2	0.90		
		(6.28-5.45)x(2.12+2.10)/2	1.75		
		(6.49-6.28)x(2.11+2.12)/2	0.44		
		(7.48-6.49)x(2.11+2.11)/2	2.09		
		(7.53-7.48)x(2.11+2.11)/2	0.11		
		(8.41-7.53)x(2.07+2.11)/2	1.84		
		(8.57-8.41)x(2.08+2.07)/2	0.33		
		(9.30-8.57)x(2.06+2.08)/2	1.51		
		(9.61-9.30)x(2.05+2.06)/2	0.64		
		(10.18-9.61)x(2.04+2.05)/2	1.17		
		(10.66-10.18)x(2.04+2.04)/2	0.98		
		(11.01-10.66)x(2.03+2.04)/2	0.71		
		(5.16-11.01)x(5.89+2.03)/2	-23.17		
		(4.59-5.16)x(5.90+5.89)/2	-3.36		
		(4.72-4.59)x(5.75+5.90)/2	0.76		
		(3.25-4.72)x(5.69+5.75)/2	-8.41		
		(0.00-3.25)x(5.56+5.69)/2	-18.28		
		(-3.25-0.00)x(5.44+5.56)/2	-17.88		
		(-4.75--3.25)x(5.38+5.44)/2	-8.12		
		(-4.59--4.75)x(5.57+5.38)/2	0.88		
		A RIPORTARE mq	-34.19		

		CALCOLO DELLE AREE		Foglio n. 9
STERRI E RIPORTI				
N. SEZIONE PROG.	FIG.	ELEMENTI DI CALCOLO	AREA ELEMENTARE mq	AREA FIGURA mq	NOTE
		RIPORTO mq	-34.19		
		(-5.16--4.59)x(5.57+5.57)/2	-3.17		
		(-10.87--5.16)x(1.80+5.57)/2	-21.04		
				58.40	
15	R1	(-3.25--0.61)x(5.29+5.39)/2	-14.10		
280.00		(-4.75--3.25)x(5.23+5.29)/2	-7.89		
		(-4.59--4.75)x(5.42+5.23)/2	0.85		
		(-5.16--4.59)x(5.42+5.42)/2	-3.09		
		(-8.44--5.16)x(3.25+5.42)/2	-14.22		
		(-8.30--8.44)x(3.26+3.25)/2	0.46		
		(-7.71--8.30)x(3.29+3.26)/2	1.93		
		(-7.37--7.71)x(3.28+3.29)/2	1.12		
		(-6.68--7.37)x(3.31+3.28)/2	2.27		
		(-6.44--6.68)x(3.28+3.31)/2	0.79		
		(-5.65--6.44)x(3.24+3.28)/2	2.58		
		(-5.50--5.65)x(3.24+3.24)/2	0.49		
		(-4.61--5.50)x(3.21+3.24)/2	2.87		
		(-4.57--4.61)x(3.21+3.21)/2	0.13		
		(-4.17--4.57)x(3.23+3.21)/2	1.29		
		(-3.64--4.17)x(3.25+3.23)/2	1.72		
		(-3.58--3.64)x(3.26+3.25)/2	0.20		
		(-2.71--3.58)x(3.33+3.26)/2	2.87		
		(-2.55--2.71)x(3.35+3.33)/2	0.53		
		(-1.78--2.55)x(3.32+3.35)/2	2.57		
		(-1.52--1.78)x(3.33+3.32)/2	0.86		
		(-0.84--1.52)x(3.31+3.33)/2	2.26		
		(-0.61--0.84)x(3.31+3.31)/2	0.76		
				12.75	
15	R2	(-0.49--0.61)x(3.31+3.31)/2	0.40		
280.00		(0.09--0.49)x(3.31+3.31)/2	1.92		
		(0.54-0.09)x(3.29+3.31)/2	1.49		
		(1.02-0.54)x(3.34+3.29)/2	1.59		
		(1.57-1.02)x(3.35+3.34)/2	1.84		
		(1.95-1.57)x(3.30+3.35)/2	1.26		
		(2.60-1.95)x(3.27+3.30)/2	2.14		
		(2.88-2.60)x(3.27+3.27)/2	0.92		
		(3.63-2.88)x(3.25+3.27)/2	2.44		
		(3.81-3.63)x(3.28+3.25)/2	0.59		
		(4.66-3.81)x(3.28+3.28)/2	2.79		
		(4.75-4.66)x(3.29+3.28)/2	0.30		
		(5.50-4.75)x(3.40+3.29)/2	2.51		
		(5.68-5.50)x(3.43+3.40)/2	0.61		
		(5.70-5.68)x(3.43+3.43)/2	0.07		
		(6.61-5.70)x(3.55+3.43)/2	3.18		
		(6.73-6.61)x(3.56+3.55)/2	0.43		
		(7.54-6.73)x(3.60+3.56)/2	2.90		
		(7.76-7.54)x(3.62+3.60)/2	0.79		
		(8.40-7.76)x(3.61+3.62)/2	2.31		
		(5.16-8.40)x(5.74+3.61)/2	-15.15		
		(4.59-5.16)x(5.75+5.74)/2	-3.27		
		(4.72-4.59)x(5.60+5.75)/2	0.74		
		(3.25-4.72)x(5.54+5.60)/2	-8.19		
		(0.00-3.25)x(5.42+5.54)/2	-17.81		
		(-0.61-0.00)x(5.39+5.42)/2	-3.30		
				16.50	
16	R1	(-12.70--9.55)x(0.13+2.21)/2	-3.69		
300.00		(-12.21--12.70)x(0.13+0.13)/2	0.06		
		(-11.72--12.21)x(0.13+0.13)/2	0.06		
		(-11.18--11.72)x(0.13+0.13)/2	0.07		
		(-10.73--11.18)x(0.12+0.13)/2	0.06		
		(-10.15--10.73)x(0.12+0.12)/2	0.07		
		(-9.75--10.15)x(0.11+0.12)/2	0.05		
		(-9.55--9.75)x(0.12+0.11)/2	0.02		
				3.30	
16	R2	(-9.13--9.55)x(0.13+0.12)/2	0.05		
300.00		(-8.76--9.13)x(0.13+0.13)/2	0.05		
		(-8.10--8.76)x(0.13+0.13)/2	0.09		
		(-7.77--8.10)x(0.14+0.13)/2	0.04		
		(-7.08--7.77)x(0.14+0.14)/2	0.10		
		(-6.79--7.08)x(0.16+0.14)/2	0.04		
		(-6.05--6.79)x(0.17+0.16)/2	0.12		
		(-5.80--6.05)x(0.22+0.17)/2	0.05		
		(-5.02--5.80)x(0.22+0.22)/2	0.17		
		(-4.81--5.02)x(0.26+0.22)/2	0.05		
		(-4.00--4.81)x(0.28+0.26)/2	0.22		
		(-3.83--4.00)x(0.31+0.28)/2	0.05		
		(-2.97--3.83)x(0.35+0.31)/2	0.28		
		(-2.84--2.97)x(0.38+0.35)/2	0.05		
		(-1.95--2.84)x(0.42+0.38)/2	0.36		
		(-1.85--1.95)x(0.46+0.42)/2	0.04		
		(-0.92--1.85)x(0.59+0.46)/2	0.49		
		(-0.86--0.92)x(0.60+0.59)/2	0.04		
		(-0.61--0.86)x(0.70+0.60)/2	0.16		
		(2.68--0.61)x(3.99+0.70)/2	7.72		
		(7.35-2.68)x(3.99+3.99)/2	18.63		
		(5.16-7.35)x(5.44+3.99)/2	-10.33		
		(4.59-5.16)x(5.44+5.44)/2	-3.10		
		(4.72-4.59)x(5.29+5.44)/2	0.70		
		(3.25-4.72)x(5.23+5.29)/2	-7.73		
		(0.00-3.25)x(5.11+5.23)/2	-16.80		
		(-3.25-0.00)x(4.98+5.11)/2	-16.40		
		(-4.75--3.25)x(4.92+4.98)/2	-7.43		
		(-4.59--4.75)x(5.11+4.92)/2	0.80		
		(-5.16--4.59)x(5.11+5.11)/2	-2.91		
		(-9.55--5.16)x(2.21+5.11)/2	-16.07		
				50.47	
16	R3	(15.50-15.39)x(2.42+2.42)/2	0.27		
300.00		(15.91-15.50)x(2.45+2.42)/2	1.00		
		(16.52-15.91)x(2.48+2.45)/2	1.50		
		(16.90-16.52)x(2.51+2.48)/2	0.95		
		(17.55-16.90)x(2.59+2.51)/2	1.66		
		(17.89-17.55)x(2.64+2.59)/2	0.89		
		(18.33-17.89)x(2.64+2.64)/2	1.16		
		(16.30-18.33)x(3.99+2.64)/2	-6.73		
		(15.39-16.30)x(3.99+3.99)/2	-3.63		
		A RIPORTARE mq	2.93		

		CALCOLO DELLE AREE		Foglio n. 10	
STERRI E RIPORTI					
N. SEZIONE PROG.	FIG.	ELEMENTI DI CALCOLO	AREA ELEMENTARE mq	AREA FIGURA mq	NOTE
		RIPORTO mq	2.93		
				2.93	
17	R1	(-11.06--11.20)x(3.47+3.49)/2	0.49		
320.00		(-10.28--11.06)x(3.31+3.47)/2	2.64		
		(-10.01--10.28)x(3.26+3.31)/2	0.89		
		(-9.55--10.01)x(3.19+3.26)/2	1.48		
		(-10.46--9.55)x(3.99+3.99)/2	-3.63		
		(-11.20--10.46)x(3.49+3.99)/2	-2.77		
				0.90	
17	R2	(3.70-3.11)x(3.59+3.54)/2	2.10		
320.00		(4.08-3.70)x(3.67+3.59)/2	1.38		
		(4.75-4.08)x(3.56+3.67)/2	2.42		
		(5.11-4.75)x(3.54+3.56)/2	1.28		
		(5.80-5.11)x(3.27+3.54)/2	2.35		
		(6.14-5.80)x(3.15+3.27)/2	1.09		
		(6.86-6.14)x(3.01+3.15)/2	2.22		
		(7.16-6.86)x(2.89+3.01)/2	0.88		
		(7.91-7.16)x(2.87+2.89)/2	2.16		
		(8.19-7.91)x(2.78+2.87)/2	0.79		
		(8.48-8.19)x(2.77+2.78)/2	0.80		
		(5.16-8.48)x(4.97+2.77)/2	-12.85		
		(4.59-5.16)x(4.97+4.97)/2	-2.83		
		(4.72-4.59)x(4.82+4.97)/2	0.64		
		(3.25-4.72)x(4.76+4.82)/2	-7.04		
		(0.00-3.25)x(4.64+4.76)/2	-15.27		
		(-3.25-0.00)x(4.51+4.64)/2	-14.87		
		(-4.75--3.25)x(4.45+4.51)/2	-6.72		
		(-4.59--4.75)x(4.64+4.45)/2	0.73		
		(-5.16--4.59)x(4.64+4.64)/2	-2.64		
		(-6.14--5.16)x(3.99+4.64)/2	-4.23		
		(2.66--6.14)x(3.99+3.99)/2	35.11		
		(3.11-2.66)x(3.54+3.99)/2	1.69		
				10.81	
18	R1	(0.00-3.11)x(4.01+4.10)/2	-12.61		
340.00		(-3.25-0.00)x(3.91+4.01)/2	-12.87		
		(-4.75--3.25)x(3.86+3.91)/2	-5.83		
		(-4.59--4.75)x(4.04+3.86)/2	0.63		
		(-5.16--4.59)x(4.04+4.04)/2	-2.30		
		(-8.76--5.16)x(1.66+4.04)/2	-10.26		
		(-8.07--8.76)x(1.51+1.66)/2	1.09		
		(-7.78--8.07)x(1.49+1.51)/2	0.44		
		(-7.04--7.78)x(1.42+1.49)/2	1.08		
		(-6.64--7.04)x(1.44+1.42)/2	0.57		
		(-6.01--6.64)x(1.43+1.44)/2	0.90		
		(-5.51--6.01)x(1.45+1.43)/2	0.72		
		(-4.98--5.51)x(1.48+1.45)/2	0.78		
		(-4.37--4.98)x(1.55+1.48)/2	0.92		
		(-3.96--4.37)x(1.62+1.55)/2	0.65		
		(-3.61--3.96)x(1.63+1.62)/2	0.57		
		(-2.93--3.61)x(1.73+1.63)/2	1.14		
		(-2.10--2.93)x(1.74+1.73)/2	1.44		
		(-1.90--2.10)x(1.74+1.74)/2	0.35		
		(-0.96--1.90)x(1.73+1.74)/2	1.63		
		(-0.87--0.96)x(1.73+1.73)/2	0.16		
		(0.10--0.87)x(1.74+1.73)/2	1.68		
		(0.16-0.10)x(1.74+1.74)/2	0.10		
		(0.17-0.16)x(1.74+1.74)/2	0.02		
		(1.19-0.17)x(1.75+1.74)/2	1.78		
		(1.31-1.19)x(1.74+1.75)/2	0.21		
		(2.22-1.31)x(1.73+1.74)/2	1.58		
		(2.44-2.22)x(1.73+1.73)/2	0.38		
		(3.11-2.44)x(1.75+1.73)/2	1.17		
				23.88	
18	R2	(3.25-3.11)x(1.76+1.75)/2	0.25		
340.00		(3.58-3.25)x(1.77+1.76)/2	0.58		
		(4.28-3.58)x(1.75+1.77)/2	1.23		
		(4.71-4.28)x(1.75+1.75)/2	0.75		
		(5.31-4.71)x(1.73+1.75)/2	1.04		
		(5.85-5.31)x(1.76+1.73)/2	0.94		
		(6.34-5.85)x(1.78+1.76)/2	0.87		
		(6.99-6.34)x(1.80+1.78)/2	1.16		
		(7.37-6.99)x(1.80+1.80)/2	0.68		
		(8.12-7.37)x(1.84+1.80)/2	1.36		
		(8.40-8.12)x(1.85+1.84)/2	0.52		
		(8.78-8.40)x(1.92+1.85)/2	0.72		
		(5.16-8.78)x(4.31+1.92)/2	-11.28		
		(4.59-5.16)x(4.31+4.31)/2	-2.46		
		(4.72-4.59)x(4.16+4.31)/2	0.55		
		(3.25-4.72)x(4.11+4.16)/2	-6.08		
		(3.11-3.25)x(4.10+4.11)/2	-0.57		
				9.74	
19	R1	(0.00-2.32)x(3.22+3.20)/2	-7.45		
360.00		(-3.25-0.00)x(3.14+3.22)/2	-10.34		
		(-4.74--3.25)x(3.10+3.14)/2	-4.65		
		(-4.59--4.74)x(3.28+3.10)/2	0.48		
		(-5.16--4.59)x(3.28+3.28)/2	-1.87		
		(-7.26--5.16)x(1.89+3.28)/2	-5.43		
		(-6.81--7.26)x(1.89+1.89)/2	0.85		
		(-6.23--6.81)x(1.89+1.89)/2	1.10		
		(-5.78--6.23)x(1.88+1.89)/2	0.85		
		(-5.03--5.78)x(1.88+1.88)/2	1.41		
		(-4.74--5.03)x(1.88+1.88)/2	0.55		
		(-3.84--4.74)x(1.85+1.88)/2	1.68		
		(-3.71--3.84)x(1.85+1.85)/2	0.24		
		(-2.85--3.71)x(1.86+1.85)/2	1.60		
		(-2.67--2.85)x(1.86+1.86)/2	0.33		
		(-2.65--2.67)x(1.86+1.86)/2	0.04		
		(-1.64--2.65)x(1.84+1.86)/2	1.87		
		(-1.45--1.64)x(1.83+1.84)/2	0.35		
		(-0.60--1.45)x(1.79+1.83)/2	1.54		
		(-0.26--0.60)x(1.79+1.79)/2	0.61		
		(0.43--0.26)x(1.80+1.79)/2	1.24		
		(0.93-0.43)x(1.80+1.80)/2	0.90		
		(1.46-0.93)x(1.83+1.80)/2	0.96		
		(2.13-1.46)x(1.83+1.83)/2	1.23		
		A RIPORTARE mq	-11.91		

		CALCOLO DELLE AREE		Foglio n. 11
STERRI E RIPORTI				
N. SEZIONE PROG.	FIG.	ELEMENTI DI CALCOLO	AREA ELEMENTARE mq	AREA FIGURA mq	NOTE
		RIPORTO mq	-11.91		
		(2.32-2.13)x(1.82+1.83)/2	0.35		
				11.56	
19	R2	(4.59-4.67)x(3.36+3.36)/2	-0.27		
360.00		(4.67-4.59)x(3.27+3.36)/2	0.27		
19	R2	(3.25-4.67)x(3.20+3.19)/2	-4.54		
360.00		(2.32-3.25)x(3.20+3.20)/2	-2.98		
		(2.50-2.32)x(1.82+1.82)/2	0.33		
		(3.32-2.50)x(1.78+1.82)/2	1.48		
		(3.53-3.32)x(1.78+1.78)/2	0.37		
		(4.51-3.53)x(1.74+1.78)/2	1.72		
		(4.57-4.51)x(1.73+1.74)/2	0.10		
		(4.67-4.57)x(1.73+1.73)/2	0.17		
				3.35	
19	R3	(4.93-4.67)x(1.71+1.73)/2	0.45		
360.00		(5.60-4.93)x(1.66+1.71)/2	1.13		
		(5.70-5.60)x(1.65+1.66)/2	0.17		
		(6.64-5.70)x(1.58+1.65)/2	1.52		
		(6.90-6.64)x(1.60+1.58)/2	0.41		
		(7.67-6.90)x(1.61+1.60)/2	1.24		
		(7.80-7.67)x(1.61+1.61)/2	0.21		
		(5.16-7.80)x(3.35+1.61)/2	-6.55		
		(4.67-5.16)x(3.36+3.35)/2	-1.64		
		(4.74-4.67)x(3.19+3.27)/2	0.23		
		(4.67-4.74)x(3.19+3.19)/2	-0.22		
				3.05	
20	R1	(-5.21--6.02)x(1.82+1.77)/2	1.45		
380.00		(-5.11--5.21)x(1.83+1.82)/2	0.18		
		(-5.10--5.11)x(1.83+1.83)/2	0.02		
		(-4.08--5.10)x(1.87+1.83)/2	1.89		
		(-3.90--4.08)x(1.89+1.87)/2	0.34		
		(-3.04--3.90)x(1.95+1.89)/2	1.65		
		(-2.70--3.04)x(1.96+1.95)/2	0.66		
		(-2.01--2.70)x(1.97+1.96)/2	1.36		
		(-1.50--2.01)x(1.99+1.97)/2	1.01		
		(-0.97--1.50)x(2.00+1.99)/2	1.06		
		(-0.30--0.97)x(2.02+2.00)/2	1.35		
		(0.06--0.30)x(2.02+2.02)/2	0.73		
		(0.90-0.06)x(2.08+2.02)/2	1.72		
		(1.10-0.90)x(2.09+2.08)/2	0.42		
		(2.10-1.10)x(2.20+2.09)/2	2.15		
		(2.13-2.10)x(2.20+2.20)/2	0.07		
		(2.31-2.13)x(2.22+2.20)/2	0.40		
		(2.32-2.31)x(2.22+2.22)/2	0.02		
		(0.00-2.32)x(2.28+2.22)/2	-5.22		
		(-3.25-0.00)x(2.20+2.28)/2	-7.28		
		(-4.74--3.25)x(2.16+2.20)/2	-3.25		
		(-4.59--4.74)x(2.35+2.16)/2	0.34		
		(-5.16--4.59)x(2.34+2.35)/2	-1.34		
		(-6.02--5.16)x(1.77+2.34)/2	-1.77		
				2.04	
20	S1	(3.06-2.32)x(2.29+2.22)/2	1.67		
380.00		(3.17-3.06)x(2.30+2.29)/2	0.25		
		(3.97-3.17)x(2.29+2.30)/2	1.84		
		(4.20-3.97)x(2.28+2.29)/2	0.53		
		(4.67-4.20)x(2.26+2.28)/2	1.07		
		(4.74-4.67)x(2.16+2.26)/2	0.15		
		(3.25-4.74)x(2.20+2.16)/2	-3.25		
		(2.32-3.25)x(2.22+2.20)/2	-2.06		
				0.20	
20	R2	(4.88-4.67)x(2.24+2.26)/2	0.47		
380.00		(5.24-4.88)x(2.21+2.24)/2	0.80		
		(5.39-5.24)x(2.19+2.21)/2	0.33		
		(5.16-5.39)x(2.34+2.19)/2	-0.52		
		(4.59-5.16)x(2.35+2.34)/2	-1.34		
		(4.67-4.59)x(2.26+2.35)/2	0.18		
				0.08	
21	S1	(0.00-2.32)x(1.53+1.47)/2	-3.48		
400.00		(-3.25-0.00)x(1.45+1.53)/2	-4.84		
		(-4.74--3.25)x(1.41+1.45)/2	-2.13		
		(-4.59--4.74)x(1.59+1.41)/2	0.23		
		(-5.16--4.59)x(1.59+1.59)/2	-0.91		
		(-5.39--5.16)x(1.74+1.59)/2	-0.38		
		(-4.82--5.39)x(1.70+1.74)/2	0.98		
		(-4.43--4.82)x(1.69+1.70)/2	0.66		
		(-3.91--4.43)x(1.65+1.69)/2	0.87		
		(-3.39--3.91)x(1.64+1.65)/2	0.86		
		(-3.00--3.39)x(1.62+1.64)/2	0.64		
		(-2.36--3.00)x(1.63+1.62)/2	1.04		
		(-2.09--2.36)x(1.66+1.63)/2	0.44		
		(-1.32--2.09)x(1.65+1.66)/2	1.27		
		(-1.18--1.32)x(1.64+1.65)/2	0.23		
		(-0.29--1.18)x(1.77+1.64)/2	1.52		
		(-0.27--0.29)x(1.77+1.77)/2	0.04		
		(-0.13--0.27)x(1.77+1.77)/2	0.25		
		(0.75--0.13)x(1.76+1.77)/2	1.55		
		(0.89-0.75)x(1.76+1.76)/2	0.25		
		(1.78-0.89)x(1.72+1.76)/2	1.55		
		(2.09-1.78)x(1.73+1.72)/2	0.53		
		(2.32-2.09)x(1.73+1.73)/2	0.40		
				1.57	
21	S2	(4.59-4.67)x(1.59+1.59)/2	-0.13		
400.00		(4.67-4.59)x(1.50+1.59)/2	0.12		
		(3.25-4.67)x(1.45+1.41)/2	-2.03		
		(2.32-3.25)x(1.47+1.45)/2	-1.36		
		(2.82-2.32)x(1.72+1.73)/2	0.86		
		(3.29-2.82)x(1.73+1.72)/2	0.81		
		(3.85-3.29)x(1.75+1.73)/2	0.97		
		(4.28-3.85)x(1.77+1.75)/2	0.76		
		(4.67-4.28)x(1.78+1.77)/2	0.69		
				0.69	
21	S3	(4.89-4.67)x(1.78+1.78)/2	0.39		
400.00		(5.45-4.89)x(1.78+1.78)/2	1.00		
		(5.16-5.45)x(1.59+1.78)/2	-0.49		
		A RIPORTARE mq	0.90		

		CALCOLO DELLE AREE		Foglio n. 12	
STERRI E RIPORTI					
N. SEZIONE PROG.	FIG.	ELEMENTI DI CALCOLO	AREA ELEMENTARE mq	AREA FIGURA mq	NOTE
		RIPORTO mq	0.90		
		(4.67-5.16)x(1.59+1.59)/2	-0.78		
				0.12	
21	S3	(4.74-4.67)x(1.41+1.50)/2	0.10		
400.00		(4.67-4.74)x(1.41+1.41)/2	-0.10		
22	S1	(-6.33--6.80)x(2.76+2.85)/2	1.32		
420.00		(-5.82--6.33)x(2.68+2.76)/2	1.39		
		(-5.13--5.82)x(2.54+2.68)/2	1.80		
		(-4.78--5.13)x(2.49+2.54)/2	0.88		
		(-3.93--4.78)x(2.29+2.49)/2	2.03		
		(-3.75--3.93)x(2.26+2.29)/2	0.41		
		(-2.73--3.75)x(2.04+2.26)/2	2.19		
		(-2.71--2.73)x(2.03+2.04)/2	0.04		
		(-2.57--2.71)x(2.01+2.03)/2	0.28		
		(-1.68--2.57)x(1.91+2.01)/2	1.74		
		(-1.53--1.68)x(1.90+1.91)/2	0.29		
		(-0.64--1.53)x(1.82+1.90)/2	1.66		
		(-0.33--0.64)x(1.84+1.82)/2	0.57		
		(0.39--0.33)x(1.87+1.84)/2	1.34		
		(0.87-0.39)x(1.90+1.87)/2	0.90		
		(1.43-0.87)x(1.92+1.90)/2	1.07		
		(2.07-1.43)x(1.91+1.92)/2	1.23		
		(2.46-2.07)x(1.92+1.91)/2	0.75		
		(3.27-2.46)x(1.84+1.92)/2	1.52		
		(3.50-3.27)x(1.82+1.84)/2	0.42		
		(4.47-3.50)x(1.80+1.82)/2	1.76		
		(4.53-4.47)x(1.80+1.80)/2	0.11		
		(4.95-4.53)x(1.79+1.80)/2	0.75		
		(5.18-4.95)x(1.78+1.79)/2	0.41		
		(4.75-5.18)x(1.50+1.78)/2	-0.71		
		(4.25-4.75)x(1.28+1.28)/2	-0.64		
		(3.25-4.25)x(1.01+0.99)/2	-1.00		
		(0.00-3.25)x(1.09+1.01)/2	-3.41		
		(-3.25-0.00)x(1.01+1.09)/2	-3.41		
		(-4.25--3.25)x(0.99+1.01)/2	-1.00		
		(-4.75--4.25)x(1.28+1.28)/2	-0.64		
		(-6.80--4.75)x(2.85+1.50)/2	-4.46		
				9.59	
23	S1	(-6.35--6.93)x(3.10+2.82)/2	1.72		
440.00		(-6.17--6.35)x(3.15+3.10)/2	0.56		
		(-5.15--6.17)x(3.32+3.15)/2	3.30		
		(-5.13--5.15)x(3.33+3.32)/2	0.07		
		(-5.01--5.13)x(3.33+3.33)/2	0.40		
		(-4.10--5.01)x(3.26+3.33)/2	3.00		
		(-3.95--4.10)x(3.27+3.26)/2	0.49		
		(-3.06--3.95)x(3.10+3.27)/2	2.83		
		(-2.75--3.06)x(3.08+3.10)/2	0.96		
		(-2.03--2.75)x(2.90+3.08)/2	2.15		
		(-1.55--2.03)x(2.77+2.90)/2	1.36		
		(-0.99--1.55)x(2.61+2.77)/2	1.51		
		(-0.35--0.99)x(2.43+2.61)/2	1.61		
		(0.04--0.35)x(2.30+2.43)/2	0.92		
		(0.85-0.04)x(2.20+2.30)/2	1.82		
		(1.08-0.85)x(2.19+2.20)/2	0.50		
		(2.05-1.08)x(2.05+2.19)/2	2.06		
		(2.11-2.05)x(2.05+2.05)/2	0.12		
		(2.51-2.11)x(2.00+2.05)/2	0.81		
		(3.15-2.51)x(1.94+2.00)/2	1.26		
		(3.25-3.15)x(1.95+1.94)/2	0.19		
		(4.18-3.25)x(1.97+1.95)/2	1.82		
		(4.45-4.18)x(1.96+1.97)/2	0.53		
		(5.22-4.45)x(1.95+1.96)/2	1.51		
		(5.61-5.22)x(1.95+1.95)/2	0.76		
		(4.75-5.61)x(1.38+1.95)/2	-1.43		
		(4.25-4.75)x(1.16+1.16)/2	-0.58		
		(3.25-4.25)x(0.90+0.87)/2	-0.89		
		(0.00-3.25)x(0.98+0.90)/2	-3.05		
		(-3.25-0.00)x(0.90+0.98)/2	-3.05		
		(-4.25--3.25)x(0.87+0.90)/2	-0.89		
		(-4.75--4.25)x(1.16+1.16)/2	-0.58		
		(-6.93--4.75)x(2.82+1.38)/2	-4.58		
				17.21	
24	S1	(-5.49--5.82)x(2.33+2.29)/2	0.76		
460.00		(-5.17--5.49)x(2.34+2.33)/2	0.75		
		(-4.45--5.17)x(2.39+2.34)/2	1.70		
		(-3.97--4.45)x(2.44+2.39)/2	1.16		
		(-3.42--3.97)x(2.42+2.44)/2	1.34		
		(-2.77--3.42)x(2.48+2.42)/2	1.59		
		(-2.38--2.77)x(2.49+2.48)/2	0.97		
		(-1.57--2.38)x(2.47+2.49)/2	2.01		
		(-1.35--1.57)x(2.48+2.47)/2	0.54		
		(-0.37--1.35)x(2.55+2.48)/2	2.46		
		(-0.31--0.37)x(2.56+2.55)/2	0.15		
		(0.06--0.31)x(2.54+2.56)/2	0.94		
		(0.72-0.06)x(2.52+2.54)/2	1.67		
		(0.83-0.72)x(2.51+2.52)/2	0.28		
		(1.76-0.83)x(2.40+2.51)/2	2.28		
		(2.03-1.76)x(2.41+2.40)/2	0.65		
		(2.79-2.03)x(2.40+2.41)/2	1.83		
		(3.23-2.79)x(2.36+2.40)/2	1.05		
		(3.83-3.23)x(2.31+2.36)/2	1.40		
		(4.43-3.83)x(2.27+2.31)/2	1.37		
		(4.86-4.43)x(2.21+2.27)/2	0.96		
		(5.63-4.86)x(2.18+2.21)/2	1.69		
		(5.65-5.63)x(2.18+2.18)/2	0.04		
		(4.75-5.65)x(1.59+2.18)/2	-1.70		
		(4.25-4.75)x(1.37+1.37)/2	-0.69		
		(3.25-4.25)x(1.10+1.08)/2	-1.09		
		(0.00-3.25)x(1.18+1.10)/2	-3.71		
		(-3.25-0.00)x(1.10+1.18)/2	-3.71		
		(-4.25--3.25)x(1.08+1.10)/2	-1.09		
		(-4.75--4.25)x(1.37+1.37)/2	-0.69		
		(-5.82--4.75)x(2.29+1.59)/2	-2.08		
				12.83	
		A RIPORTARE mq			

		CALCOLO DELLE AREE		Foglio n. 13	
STERRI E RIPORTI					
N. SEZIONE PROG.	FIG.	ELEMENTI DI CALCOLO	AREA ELEMENTARE mq	AREA FIGURA mq	NOTE
		RIPORTO mq			
25	S1	(-5.19--5.84)x(2.99+2.82)/2	1.89		
480.00		(-4.80--5.19)x(3.10+2.99)/2	1.19		
		(-3.99--4.80)x(3.29+3.10)/2	2.59		
		(-3.77--3.99)x(3.31+3.29)/2	0.73		
		(-2.79--3.77)x(3.19+3.31)/2	3.19		
		(-2.73--2.79)x(3.18+3.19)/2	0.19		
		(-2.38--2.73)x(3.13+3.18)/2	1.10		
		(-1.70--2.38)x(3.02+3.13)/2	2.09		
		(-1.59--1.70)x(3.00+3.02)/2	0.33		
		(-0.66--1.59)x(2.87+3.00)/2	2.73		
		(-0.39--0.66)x(2.83+2.87)/2	0.77		
		(0.37--0.39)x(2.72+2.83)/2	2.11		
		(0.81-0.37)x(2.67+2.72)/2	1.19		
		(1.41-0.81)x(2.58+2.67)/2	1.57		
		(2.01-1.41)x(2.47+2.58)/2	1.51		
		(2.44-2.01)x(2.41+2.47)/2	1.05		
		(3.21-2.44)x(2.33+2.41)/2	1.82		
		(3.48-3.21)x(2.29+2.33)/2	0.62		
		(4.41-3.48)x(2.38+2.29)/2	2.17		
		(4.51-4.41)x(2.37+2.38)/2	0.24		
		(5.14-4.51)x(2.49+2.37)/2	1.53		
		(5.45-5.14)x(2.55+2.49)/2	0.78		
		(4.75-5.45)x(2.09+2.55)/2	-1.62		
		(4.25-4.75)x(1.88+1.88)/2	-0.94		
		(3.25-4.25)x(1.61+1.58)/2	-1.60		
		(0.00-3.25)x(1.69+1.61)/2	-5.36		
		(-3.25-0.00)x(1.61+1.69)/2	-5.36		
		(-4.25--3.25)x(1.58+1.61)/2	-1.60		
		(-4.75--4.25)x(1.88+1.88)/2	-0.94		
		(-5.84--4.75)x(2.82+2.09)/2	-2.68		
				11.29	
26	S1	(-5.21--5.54)x(3.21+3.19)/2	1.06		
500.00		(-5.16--5.21)x(3.21+3.21)/2	0.16		
		(-5.09--5.16)x(3.20+3.21)/2	0.22		
		(-5.08--5.09)x(3.20+3.20)/2	0.03		
		(-5.03--5.08)x(3.20+3.20)/2	0.16		
		(-4.57--5.03)x(3.19+3.20)/2	1.47		
		(-4.12--4.57)x(3.18+3.19)/2	1.43		
		(-4.01--4.12)x(3.18+3.18)/2	0.35		
		(-3.09--4.01)x(3.13+3.18)/2	2.90		
		(-2.81--3.09)x(3.12+3.13)/2	0.87		
		(-2.05--2.81)x(3.16+3.12)/2	2.39		
		(-1.61--2.05)x(3.17+3.16)/2	1.39		
		(-1.02--1.61)x(3.18+3.17)/2	1.87		
		(-0.41--1.02)x(3.19+3.18)/2	1.94		
		(0.02--0.41)x(3.18+3.19)/2	1.37		
		(0.79-0.02)x(3.16+3.18)/2	2.44		
		(1.05-0.79)x(3.17+3.16)/2	0.82		
		(1.99-1.05)x(3.18+3.17)/2	2.98		
		(2.09-1.99)x(3.18+3.18)/2	0.32		
		(2.70-2.09)x(3.20+3.18)/2	1.95		
		(3.12-2.70)x(3.21+3.20)/2	1.35		
		(3.19-3.12)x(3.21+3.21)/2	0.22		
		(4.16-3.19)x(3.22+3.21)/2	3.12		
		(4.39-4.16)x(3.23+3.22)/2	0.74		
		(5.19-4.39)x(3.23+3.23)/2	2.58		
		(5.58-5.19)x(3.22+3.23)/2	1.26		
		(4.75-5.58)x(2.67+3.22)/2	-2.44		
		(4.25-4.75)x(2.45+2.45)/2	-1.23		
		(3.25-4.25)x(2.19+2.16)/2	-2.17		
		(0.00-3.25)x(2.27+2.19)/2	-7.25		
		(-3.25-0.00)x(2.19+2.27)/2	-7.25		
		(-4.25--3.25)x(2.16+2.19)/2	-2.17		
		(-4.75--4.25)x(2.45+2.45)/2	-1.23		
		(-5.54--4.75)x(3.19+2.67)/2	-2.31		
				9.34	
27	S1	(-4.47--4.75)x(3.20+3.20)/2	0.90		
520.00		(-4.16--4.47)x(3.23+3.20)/2	1.00		
		(-3.70--4.16)x(3.25+3.23)/2	1.49		
		(-3.44--3.70)x(3.25+3.25)/2	0.85		
		(-2.83--3.44)x(3.22+3.25)/2	1.97		
		(-2.40--2.83)x(3.19+3.22)/2	1.38		
		(-1.63--2.40)x(3.24+3.19)/2	2.48		
		(-1.37--1.63)x(3.25+3.24)/2	0.84		
		(-0.43--1.37)x(3.32+3.25)/2	3.09		
		(-0.33--0.43)x(3.32+3.32)/2	0.33		
		(0.26--0.33)x(3.28+3.32)/2	1.95		
		(0.70-0.26)x(3.24+3.28)/2	1.43		
		(0.77-0.70)x(3.25+3.24)/2	0.23		
		(1.74-0.77)x(3.29+3.25)/2	3.17		
		(1.97-1.74)x(3.29+3.29)/2	0.76		
		(2.77-1.97)x(3.31+3.29)/2	2.64		
		(3.17-2.77)x(3.31+3.31)/2	1.32		
		(3.81-3.17)x(3.34+3.31)/2	2.13		
		(4.37-3.81)x(3.37+3.34)/2	1.88		
		(4.84-4.37)x(3.35+3.37)/2	1.58		
		(4.90-4.84)x(3.35+3.35)/2	0.20		
		(4.75-4.90)x(3.25+3.35)/2	-0.50		
		(4.25-4.75)x(3.03+3.03)/2	-1.51		
		(3.25-4.25)x(2.76+2.74)/2	-2.75		
		(0.00-3.25)x(2.84+2.76)/2	-9.10		
		(-3.25-0.00)x(2.76+2.84)/2	-9.10		
		(-4.25--3.25)x(2.74+2.76)/2	-2.75		
		(-4.75--4.25)x(3.03+3.03)/2	-1.51		
				4.40	
28	R1	(-4.05--4.75)x(3.09+3.09)/2	2.16		
540.00		(-3.79--4.05)x(3.11+3.09)/2	0.81		
		(-2.85--3.79)x(3.07+3.11)/2	2.90		
		(-2.76--2.85)x(3.07+3.07)/2	0.28		
		(-2.18--2.76)x(3.04+3.07)/2	1.77		
		(-1.78--2.18)x(3.02+3.04)/2	1.21		
		(-1.72--1.78)x(3.02+3.02)/2	0.18		
		(-1.66--1.72)x(3.03+3.02)/2	0.18		
		(-1.61--1.66)x(3.04+3.03)/2	0.15		
		A RIPORTARE mq	9.64		

	CALCOLO DELLE AREE		Foglio n. 14

STERRI E RIPORTI

N. SEZIONE PROG.	FIG.	ELEMENTI DI CALCOLO	AREA ELEMENTARE mq	AREA FIGURA mq	NOTE
		RIPORTO mq	9.64		
		(-0.92--1.61)x(3.07+3.04)/2	2.11		
		(-0.85--0.92)x(3.07+3.07)/2	0.21		
		(-0.69--0.85)x(3.06+3.07)/2	0.49		
		(0.04--0.69)x(3.10+3.06)/2	2.25		
		(0.35-0.04)x(3.09+3.10)/2	0.96		
		(0.95-0.35)x(3.10+3.09)/2	1.86		
		(1.38-0.95)x(3.09+3.10)/2	1.33		
		(1.86-1.38)x(3.11+3.09)/2	1.49		
		(2.42-1.86)x(3.13+3.11)/2	1.75		
		(2.77-2.42)x(3.14+3.13)/2	1.10		
		(3.45-2.77)x(3.15+3.14)/2	2.14		
		(3.68-3.45)x(3.15+3.15)/2	0.72		
		(4.49-3.68)x(3.22+3.15)/2	2.58		
		(4.59-4.49)x(3.22+3.22)/2	0.32		
		(5.34-4.59)x(3.23+3.22)/2	2.42		
		(5.52-5.34)x(3.23+3.23)/2	0.58		
		(5.55-5.52)x(3.23+3.23)/2	0.10		
		(6.02-5.55)x(3.23+3.23)/2	1.52		
		(5.66-6.02)x(3.47+3.23)/2	-1.21		
		(5.09-5.66)x(3.47+3.47)/2	-1.98		
		(5.24-5.09)x(3.29+3.47)/2	0.51		
		(3.25-5.24)x(3.34+3.29)/2	-6.60		
		(0.00-3.25)x(3.42+3.34)/2	-10.98		
		(-4.75-0.00)x(3.39+3.42)/2	-16.17		
				2.86	
29 545.48	R1	(-7.50--7.69)x(3.48+3.47)/2	0.66		
		(-7.49--7.50)x(3.50+3.48)/2	0.03		
		(-7.47--7.49)x(3.48+3.50)/2	0.07		
		(-7.44--7.47)x(3.47+3.48)/2	0.10		
		(-7.41--7.44)x(3.46+3.47)/2	0.10		
		(-7.35--7.41)x(3.45+3.46)/2	0.21		
		(-7.28--7.35)x(3.46+3.45)/2	0.24		
		(-7.25--7.28)x(3.46+3.46)/2	0.10		
		(-7.20--7.25)x(3.46+3.46)/2	0.17		
		(-7.06--7.20)x(3.49+3.46)/2	0.49		
		(-7.05--7.06)x(3.49+3.49)/2	0.03		
		(-6.98--7.05)x(3.50+3.49)/2	0.24		
		(-6.91--6.98)x(3.50+3.50)/2	0.25		
		(-6.88--6.91)x(3.50+3.50)/2	0.11		
		(-6.86--6.88)x(3.50+3.50)/2	0.07		
		(-6.74--6.86)x(3.43+3.50)/2	0.42		
		(-6.27--6.74)x(3.33+3.43)/2	1.59		
		(-6.21--6.27)x(3.32+3.33)/2	0.20		
		(-5.27--6.21)x(3.30+3.32)/2	3.11		
		(-5.18--5.27)x(3.29+3.30)/2	0.30		
		(-4.63--5.18)x(3.26+3.29)/2	1.80		
		(-4.14--4.63)x(3.23+3.26)/2	1.59		
		(-4.07--4.14)x(3.22+3.23)/2	0.23		
		(-3.11--4.07)x(3.21+3.22)/2	3.09		
		(-2.87--3.11)x(3.18+3.21)/2	0.77		
		(-2.07--2.87)x(3.07+3.18)/2	2.50		
		(-1.67--2.07)x(3.04+3.07)/2	1.22		
		(-1.04--1.67)x(2.99+3.04)/2	1.90		
		(-0.47--1.04)x(3.03+2.99)/2	1.72		
		(-0.00--0.47)x(3.04+3.03)/2	1.43		
		(0.73--0.00)x(3.09+3.04)/2	2.24		
		(1.03-0.73)x(3.11+3.09)/2	0.93		
		(1.26-1.03)x(3.12+3.11)/2	0.72		
		(2.07-1.26)x(3.15+3.12)/2	2.54		
		(2.89-2.07)x(3.14+3.15)/2	2.58		
		(3.10-2.89)x(3.14+3.14)/2	0.66		
		(3.13-3.10)x(3.14+3.14)/2	0.09		
		(4.14-3.13)x(3.07+3.14)/2	3.14		
		(4.33-4.14)x(3.07+3.07)/2	0.58		
		(5.17-4.33)x(3.06+3.07)/2	2.57		
		(5.53-5.17)x(3.07+3.06)/2	1.10		
		(6.21-5.53)x(3.06+3.07)/2	2.08		
		(6.73-6.21)x(3.09+3.06)/2	1.60		
		(7.24-6.73)x(3.10+3.09)/2	1.58		
		(7.93-7.24)x(3.12+3.10)/2	2.15		
		(8.27-7.93)x(3.12+3.12)/2	1.06		
		(9.13-8.27)x(3.14+3.12)/2	2.69		
		(9.22-9.13)x(3.14+3.14)/2	0.28		
		(8.60-9.22)x(3.55+3.14)/2	-2.07		
		(8.03-8.60)x(3.55+3.55)/2	-2.02		
		(8.18-8.03)x(3.37+3.55)/2	0.52		
		(6.69-8.18)x(3.41+3.37)/2	-5.05		
		(0.00-6.69)x(3.58+3.41)/2	-23.38		
		(-7.69-0.00)x(3.62+3.58)/2	-27.68		
				6.35	

Il Direttore dei Lavori	L'Impresa	

COMPUTO STERRI E RIPORTI

N. SEZ.	FIG.	SUPERFICIE STERRO mq	SUPERFICIE RIPORTO mq	PUNTI DI PASSAGGIO (PROGRESSIVA m)	DISTANZA m	VOLUMI PARZIALI STERRO mc	VOLUMI PARZIALI RIPORTO mc	VOLUMI TOTALI STERRO mc	VOLUMI TOTALI RIPORTO mc
1	S1	0.02		(16.00)					
					4.00	0.040			
2	S0	0.00		(20.00)					
1	R1		0.02	(16.00)					
					4.00		0.040		
2	R0		0.00	(20.00)					
1	S2	1.44		(16.00)					
					4.00	2.880			
2	S0	0.00		(20.00)					
1	S3	4.91		(16.00)					
					4.00	17.940			
2	S1	4.06		(20.00)					
								20.860	0.040
2	S1	4.06		(20.00)					
					20.00	78.000			
3	S1	3.74		(40.00)					
								78.000	
3	S1	3.74		(40.00)					
					20.00	73.000			
4	S1 S2	1.35 2.21		(60.00)					
								73.000	
4	S1	1.35		(60.00)	12.05	8.134			
				1.35*20.00 / 1.35+0.89	12.05				
5	R1		0.89	(80.00)	7.95		3.538		
4	S2	2.21		(60.00)					
					20.00	36.300			
5	S1	1.42		(80.00)					
								44.434	3.538
5	R1		0.89	(80.00)					
					20.00		39.100		
6	R1		3.02	(100.00)					
5	S1	1.42		(80.00)	9.50	6.745			
				1.42*20.00 / 1.42+1.57	9.50				
6	R2		1.57	(100.00)	10.50		8.242		
								6.745	47.342
6	R1 R2		3.02 1.57	(100.00)					
					20.00		175.200		
7	R1		12.93	(120.00)					
									175.200
7	R1		12.93	(120.00)					
					20.00		390.400		
8	R1		26.11	(140.00)					
									390.400
8	R1		26.11	(140.00)					
					20.00		616.000		
9	R1		35.49	(160.00)					
									616.000
9	R1		35.49	(160.00)					
					20.00		836.700		
10	R1		48.18	(180.00)					
									836.700
10	R1		48.18	(180.00)					
					20.00		1060.000		
11	R1		57.82	(200.00)					
									1060.000
11	R1		57.82	(200.00)					
					20.00		1176.700		
12	R1		59.85	(220.00)					
									1176.700
12	R1		59.85	(220.00)					
					20.00		1250.900		
13	R1		65.24	(240.00)					
									1250.900
13	R1		65.24	(240.00)					
					20.00		1236.400		
14	R1		58.40	(260.00)					
				A RIPORTARE :			1236.400	223.039	5556.820

COMPUTO STERRI E RIPORTI								Foglio n. 16	
N. SEZ.	FIG.	SUPERFICIE STERRO mq	SUPERFICIE RIPORTO mq	PUNTI DI PASSAGGIO (PROGRESSIVA m)	DISTANZA m	VOLUMI PARZIALI STERRO mc	VOLUMI PARZIALI RIPORTO mc	VOLUMI TOTALI STERRO mc	VOLUMI TOTALI RIPORTO mc
					RIPORTO :	0.000	1236.400	223.039	5556.820
									1236.400
14	R1		58.40	(260.00)	20.00		876.500		
15	R1		12.75	(280.00)					
	R2		16.50						
									876.500
15	R1		12.75	(280.00)	20.00		665.200		
16	R1		3.30	(300.00)					
	R2		50.47						
15	R2		16.50	(280.00)	20.00		165.000		
16	R0		0.00	(300.00)					
15	R0		0.00	(280.00)	20.00		29.300		
16	R3		2.93	(300.00)					
									859.500
16	R1		3.30	(300.00)	20.00		42.000		
17	R1		0.90	(320.00)					
16	R2		50.47	(300.00)	20.00		504.700		
17	R0		0.00	(320.00)					
16	R3		2.93	(300.00)	20.00		29.300		
17	R0		0.00	(320.00)					
16	R0		0.00	(300.00)	20.00		108.100		
17	R2		10.81	(320.00)					
									684.100
17	R1		0.90	(320.00)	20.00		9.000		
18	R0		0.00	(340.00)					
17	R2		10.81	(320.00)	20.00		205.500		
18	R2		9.74	(340.00)					
17	R0		0.00	(320.00)	20.00		238.800		
18	R1		23.88	(340.00)					
									453.300
18	R1		23.88	(340.00)	20.00		515.800		
	R2		9.74						
19	R1		11.56	(360.00)					
	R2		3.35						
	R2		0.00						
	R3		3.05						
									515.800
19	R1		11.56	(360.00)	20.00		136.000		
20	R1		2.04	(380.00)					
19	R2		3.35	(360.00)					
	R2		0.00		18.87		31.607		
				3.35*20.00	18.87				
				3.35+0.20					
20	S1	0.20		(380.00)	1.13	0.113			
19	R3		3.05	(360.00)	20.00		31.300		
20	R2		0.08	(380.00)					
								0.113	198.907
20	R1		2.04	(380.00)	11.30		11.526		
				2.04*20.00	11.30				
				2.04+1.57					
21	S1	1.57		(400.00)	8.70	6.829			
20	S1	0.20		(380.00)	20.00	8.900			
21	S2	0.69		(400.00)					
20	R2		0.08	(380.00)	8.00		0.320		
				0.08*20.00	8.00				
				0.08+0.12					
21	S3	0.00		(400.00)					
	S3	0.12			12.00	0.720			
								16.449	11.846
21	S1	1.57		(400.00)					
	S2	0.69							
	S3	0.00							
	S3	0.12			20.00	119.700			
					A RIPORTARE :	119.700		239.601	10393.173

COMPUTO STERRI E RIPORTI — Foglio n. 17

N. SEZ.	FIG.	SUPERFICIE STERRO mq	SUPERFICIE RIPORTO mq	PUNTI DI PASSAGGIO (PROGRESSIVA m)	DISTANZA m	VOLUMI PARZIALI STERRO mc	VOLUMI PARZIALI RIPORTO mc	VOLUMI TOTALI STERRO mc	VOLUMI TOTALI RIPORTO mc
					RIPORTO :	119.700		239.601	10393.173
22	S1	9.59		(420.00)					
								119.700	
22	S1	9.59		(420.00)					
					20.00	268.000			
23	S1	17.21		(440.00)					
								268.000	
23	S1	17.21		(440.00)					
					20.00	300.400			
24	S1	12.83		(460.00)					
								300.400	
24	S1	12.83		(460.00)					
					20.00	241.200			
25	S1	11.29		(480.00)					
								241.200	
25	S1	11.29		(480.00)					
					20.00	206.300			
26	S1	9.34		(500.00)					
								206.300	
26	S1	9.34		(500.00)					
					20.00	137.400			
27	S1	4.40		(520.00)					
								137.400	
27	S1	4.40		(520.00)	12.12	26.664			
				4.40*20.00 / 4.40+2.86	12.12				
28	R1		2.86	(540.00)	7.88		11.268		
								26.664	11.268
28	R1		2.86	(540.00)					
					5.48		25.235		
29	R1		6.35	(545.48)					
									25.235

Il Direttore dei Lavori	L'Impresa	Totale Articoli .....:	1539.265	10429.676
		A dedurre quantita' precedenti:		
		Quantita' da contabilizzare ..:		

	CALCOLO DELLE AREE		Foglio n. 18

BONIFICA

N. SEZIONE PROG.	FIG.	ELEMENTI DI CALCOLO	AREA ELEMENTARE mq	AREA FIGURA mq	NOTE
7 120.00	BO1	(-6.51--6.78)x(2.51+2.51)/2	0.68		
		(-6.18--6.51)x(2.51+2.51)/2	0.83		
		(-5.40--6.18)x(2.50+2.51)/2	1.95		
		(-4.62--5.40)x(2.48+2.50)/2	1.94		
		(-4.28--4.62)x(2.48+2.48)/2	0.84		
		(-3.42--4.28)x(2.46+2.48)/2	2.12		
		(-3.16--3.42)x(2.46+2.46)/2	0.64		
		(-3.06--3.16)x(2.46+2.46)/2	0.25		
		(-2.83--3.06)x(2.46+2.46)/2	0.57		
		(-2.04--2.83)x(2.46+2.46)/2	1.94		
		(-1.44--2.04)x(2.46+2.46)/2	1.48		
		(-0.93--1.44)x(2.46+2.46)/2	1.25		
		(-0.91--0.93)x(2.47+2.46)/2	0.05		
		(-0.88--0.91)x(2.55+2.47)/2	0.08		
		(0.06--0.88)x(2.47+2.51)/2	2.34		
		(0.19-0.06)x(2.47+2.47)/2	0.32		
		(0.84-0.19)x(2.45+2.47)/2	1.60		
		(1.31-0.84)x(2.40+2.45)/2	1.14		
		(1.47-1.31)x(2.47+2.40)/2	0.39		
		(1.64-1.47)x(2.50+2.47)/2	0.42		
		(1.74-1.64)x(2.50+2.50)/2	0.25		
		(1.81-1.74)x(2.50+2.50)/2	0.18		
		(1.86-1.81)x(2.51+2.50)/2	0.13		
		(1.89-1.86)x(2.52+2.51)/2	0.08		
		(1.92-1.89)x(2.53+2.52)/2	0.08		
		(1.95-1.92)x(2.53+2.53)/2	0.08		
		(1.97-1.95)x(2.52+2.53)/2	0.05		
		(1.98-1.97)x(2.54+2.52)/2	0.03		
		(1.99-1.98)x(2.48+2.54)/2	0.03		
		(2.01-1.99)x(2.39+2.48)/2	0.05		
		(2.04-2.01)x(2.39+2.39)/2	0.07		
		(2.05-2.04)x(2.37+2.39)/2	0.02		
		(2.06-2.05)x(2.52+2.37)/2	0.02		
		(2.38-2.06)x(2.39+2.52)/2	0.79		
		(2.42-2.38)x(2.12+2.39)/2	0.09		
		(2.43-2.42)x(2.11+2.12)/2	0.02		
		(2.67-2.43)x(2.16+2.11)/2	0.51		
		(2.83-2.67)x(2.24+2.16)/2	0.35		
		(3.32-2.83)x(2.40+2.24)/2	1.14		
		(3.33-3.32)x(2.40+2.40)/2	0.02		
		(3.35-3.33)x(2.43+2.40)/2	0.05		
		(3.37-3.35)x(2.35+2.43)/2	0.05		
		(3.42-3.37)x(2.15+2.35)/2	0.11		
		(3.50-3.42)x(1.85+2.15)/2	0.16		
		(3.54-3.50)x(1.79+1.85)/2	0.07		
		(3.96-3.54)x(1.68+1.79)/2	0.73		
		(4.66-3.96)x(1.51+1.68)/2	1.12		
		(4.73-4.66)x(1.51+1.51)/2	0.11		
		(4.90-4.73)x(1.53+1.51)/2	0.26		
		(5.51-4.90)x(1.65+1.53)/2	0.97		
		(5.78-5.51)x(1.65+1.65)/2	0.45		
		(5.88-5.78)x(1.60+1.65)/2	0.16		
		(5.98-5.88)x(1.42+1.60)/2	0.15		
		(6.05-5.98)x(1.29+1.42)/2	0.09		
		(6.11-6.05)x(1.24+1.29)/2	0.08		
		(6.12-6.11)x(1.05+1.24)/2	0.01		
		(6.15-6.12)x(1.19+1.05)/2	0.03		
		(6.59-6.15)x(1.65+1.19)/2	0.62		
		(6.74-6.59)x(1.73+1.65)/2	0.25		
		(6.90-6.74)x(1.78+1.73)/2	0.28		
		(6.93-6.90)x(1.77+1.78)/2	0.05		
		(7.01-6.93)x(1.73+1.77)/2	0.14		
		(7.03-7.01)x(1.75+1.73)/2	0.03		
		(7.05-7.03)x(1.74+1.75)/2	0.03		
		(7.88-7.05)x(1.80+1.74)/2	1.47		
		(7.05-7.88)x(1.24+1.30)/2	-1.05		
		(7.03-7.05)x(1.25+1.24)/2	-0.02		
		(7.01-7.03)x(1.23+1.25)/2	-0.02		
		(6.93-7.01)x(1.27+1.23)/2	-0.10		
		(6.90-6.93)x(1.28+1.27)/2	-0.04		
		(6.74-6.90)x(1.23+1.28)/2	-0.20		
		(6.59-6.74)x(1.15+1.23)/2	-0.18		
		(6.15-6.59)x(0.69+1.15)/2	-0.40		
		(6.12-6.15)x(0.55+0.69)/2	-0.02		
		(6.11-6.12)x(0.74+0.55)/2	-0.01		
		(6.05-6.11)x(0.79+0.74)/2	-0.05		
		(5.98-6.05)x(0.92+0.79)/2	-0.06		
		(5.88-5.98)x(1.10+0.92)/2	-0.10		
		(5.78-5.88)x(1.15+1.10)/2	-0.11		
		(5.51-5.78)x(1.15+1.15)/2	-0.31		
		(4.90-5.51)x(1.03+1.15)/2	-0.66		
		(4.73-4.90)x(1.01+1.03)/2	-0.17		
		(4.66-4.73)x(1.01+1.01)/2	-0.07		
		(3.96-4.66)x(1.18+1.01)/2	-0.77		
		(3.54-3.96)x(1.29+1.18)/2	-0.52		
		(3.50-3.54)x(1.35+1.29)/2	-0.05		
		(3.42-3.50)x(1.65+1.35)/2	-0.12		
		(3.37-3.42)x(1.85+1.65)/2	-0.09		
		(3.35-3.37)x(1.93+1.85)/2	-0.04		
		(3.33-3.35)x(1.90+1.93)/2	-0.04		
		(3.32-3.33)x(1.90+1.90)/2	-0.02		
		(2.83-3.32)x(1.74+1.90)/2	-0.89		
		(2.67-2.83)x(1.66+1.74)/2	-0.27		
		(2.43-2.67)x(1.61+1.66)/2	-0.39		
		(2.42-2.43)x(1.62+1.61)/2	-0.02		
		(2.38-2.42)x(1.89+1.62)/2	-0.07		
		(2.06-2.38)x(2.02+1.89)/2	-0.63		
		(2.05-2.06)x(1.87+2.02)/2	-0.02		
		(2.04-2.05)x(1.89+1.87)/2	-0.02		
		(2.01-2.04)x(1.89+1.89)/2	-0.06		
		(1.99-2.01)x(1.98+1.89)/2	-0.04		
		(1.98-1.99)x(2.04+1.98)/2	-0.02		
		(1.97-1.98)x(2.02+2.04)/2	-0.02		
		(1.95-1.97)x(2.03+2.02)/2	-0.04		
		(1.92-1.95)x(2.03+2.03)/2	-0.06		
		(1.89-1.92)x(2.02+2.03)/2	-0.06		
		A RIPORTARE mq	24.46		

		CALCOLO DELLE AREE		Foglio n. 19
BONIFICA				
N. SEZIONE PROG.	FIG.	ELEMENTI DI CALCOLO	AREA ELEMENTARE mq	AREA FIGURA mq	NOTE
		RIPORTO mq	24.46		
		(1.86-1.89)x(2.01+2.02)/2	-0.06		
		(1.81-1.86)x(2.00+2.01)/2	-0.10		
		(1.74-1.81)x(2.00+2.00)/2	-0.14		
		(1.64-1.74)x(2.00+2.00)/2	-0.20		
		(1.47-1.64)x(1.97+2.00)/2	-0.34		
		(1.31-1.47)x(1.90+1.97)/2	-0.31		
		(0.84-1.31)x(1.95+1.90)/2	-0.90		
		(0.19-0.84)x(1.97+1.95)/2	-1.27		
		(0.06-0.19)x(1.97+1.97)/2	-0.26		
		(-0.88-0.06)x(2.01+1.97)/2	-1.87		
		(-0.91--0.88)x(1.97+2.05)/2	-0.06		
		(-0.93--0.91)x(1.96+1.97)/2	-0.04		
		(-1.44--0.93)x(1.96+1.96)/2	-1.00		
		(-2.04--1.44)x(1.96+1.96)/2	-1.18		
		(-2.83--2.04)x(1.96+1.96)/2	-1.55		
		(-3.06--2.83)x(1.96+1.96)/2	-0.45		
		(-3.16--3.06)x(1.96+1.96)/2	-0.20		
		(-3.42--3.16)x(1.96+1.96)/2	-0.51		
		(-4.28--3.42)x(1.98+1.96)/2	-1.69		
		(-4.62--4.28)x(1.98+1.98)/2	-0.67		
		(-5.40--4.62)x(2.00+1.98)/2	-1.55		
		(-6.18--5.40)x(2.01+2.00)/2	-1.56		
		(-6.51--6.18)x(2.01+2.01)/2	-0.66		
		(-6.78--6.51)x(2.01+2.01)/2	-0.54		
				7.35	
8 140.00	BO1	(-7.06--7.11)x(2.44+2.45)/2	0.12		
		(-6.38--7.06)x(2.37+2.44)/2	1.64		
		(-5.77--6.38)x(2.30+2.37)/2	1.42		
		(-5.41--5.77)x(2.24+2.30)/2	0.82		
		(-5.22--5.41)x(2.17+2.24)/2	0.42		
		(-4.65--5.22)x(2.00+2.17)/2	1.19		
		(-4.06--4.65)x(1.74+2.00)/2	1.10		
		(-3.89--4.06)x(1.69+1.74)/2	0.29		
		(-3.58--3.89)x(1.62+1.69)/2	0.51		
		(-3.14--3.58)x(1.57+1.62)/2	0.70		
		(-2.90--3.14)x(1.49+1.57)/2	0.37		
		(-2.38--2.90)x(1.50+1.49)/2	0.78		
		(-1.74--2.38)x(1.62+1.50)/2	1.00		
		(-1.62--1.74)x(1.63+1.62)/2	0.19		
		(-1.38--1.62)x(1.64+1.63)/2	0.39		
		(-0.86--1.38)x(1.64+1.64)/2	0.85		
		(-0.58--0.86)x(1.67+1.64)/2	0.46		
		(-0.10--0.58)x(1.63+1.67)/2	0.79		
		(0.58--0.10)x(1.59+1.63)/2	1.09		
		(0.66-0.58)x(1.59+1.59)/2	0.13		
		(0.81-0.66)x(1.58+1.59)/2	0.24		
		(1.42-0.81)x(1.52+1.58)/2	0.95		
		(1.74-1.42)x(1.51+1.52)/2	0.48		
		(2.18-1.74)x(1.52+1.51)/2	0.67		
		(2.90-2.18)x(1.51+1.52)/2	1.09		
		(2.93-2.90)x(1.51+1.51)/2	0.05		
		(3.01-2.93)x(1.51+1.51)/2	0.12		
		(3.69-3.01)x(1.52+1.51)/2	1.03		
		(4.06-3.69)x(1.52+1.52)/2	0.56		
		(4.45-4.06)x(1.53+1.52)/2	0.59		
		(5.20-4.45)x(1.54+1.53)/2	1.15		
		(5.21-5.20)x(1.54+1.54)/2	0.02		
		(5.22-5.21)x(1.54+1.54)/2	0.02		
		(5.97-5.22)x(1.51+1.54)/2	1.14		
		(6.37-5.97)x(1.50+1.51)/2	0.60		
		(6.73-6.37)x(1.50+1.50)/2	0.54		
		(7.40-6.73)x(1.52+1.50)/2	1.01		
		(7.49-7.40)x(1.52+1.52)/2	0.14		
		(7.53-7.49)x(1.52+1.52)/2	0.06		
		(8.25-7.53)x(1.56+1.52)/2	1.11		
		(8.49-8.25)x(1.57+1.56)/2	0.38		
		(8.25-8.49)x(1.06+1.07)/2	-0.26		
		(7.53-8.25)x(1.02+1.06)/2	-0.75		
		(7.49-7.53)x(1.02+1.02)/2	-0.04		
		(7.40-7.49)x(1.02+1.02)/2	-0.09		
		(6.73-7.40)x(1.00+1.02)/2	-0.68		
		(6.37-6.73)x(1.00+1.00)/2	-0.36		
		(5.97-6.37)x(1.01+1.00)/2	-0.40		
		(5.22-5.97)x(1.04+1.01)/2	-0.77		
		(5.21-5.22)x(1.04+1.04)/2	-0.01		
		(5.20-5.21)x(1.04+1.04)/2	-0.01		
		(4.45-5.20)x(1.03+1.04)/2	-0.78		
		(4.06-4.45)x(1.02+1.03)/2	-0.40		
		(3.69-4.06)x(1.02+1.02)/2	-0.38		
		(3.01-3.69)x(1.01+1.02)/2	-0.69		
		(2.93-3.01)x(1.01+1.01)/2	-0.08		
		(2.90-2.93)x(1.01+1.01)/2	-0.03		
		(2.18-2.90)x(1.02+1.01)/2	-0.73		
		(1.74-2.18)x(1.01+1.02)/2	-0.45		
		(1.42-1.74)x(1.02+1.01)/2	-0.32		
		(0.81-1.42)x(1.08+1.02)/2	-0.64		
		(0.66-0.81)x(1.09+1.08)/2	-0.16		
		(0.58-0.66)x(1.09+1.09)/2	-0.09		
		(-0.10-0.58)x(1.13+1.09)/2	-0.75		
		(-0.58--0.10)x(1.17+1.13)/2	-0.55		
		(-0.86--0.58)x(1.14+1.17)/2	-0.32		
		(-1.38--0.86)x(1.14+1.14)/2	-0.59		
		(-1.62--1.38)x(1.13+1.14)/2	-0.27		
		(-1.74--1.62)x(1.12+1.13)/2	-0.13		
		(-2.38--1.74)x(1.00+1.12)/2	-0.68		
		(-2.90--2.38)x(0.99+1.00)/2	-0.52		
		(-3.14--2.90)x(1.07+0.99)/2	-0.25		
		(-3.58--3.14)x(1.12+1.07)/2	-0.48		
		(-3.89--3.58)x(1.19+1.12)/2	-0.36		
		(-4.06--3.89)x(1.24+1.19)/2	-0.21		
		(-4.65--4.06)x(1.50+1.24)/2	-0.81		
		(-5.22--4.65)x(1.67+1.50)/2	-0.90		
		(-5.41--5.22)x(1.74+1.67)/2	-0.32		
		(-5.77--5.41)x(1.80+1.74)/2	-0.64		
		A RIPORTARE mq	10.31		

		CALCOLO DELLE AREE		Foglio n. 20	
BONIFICA					
N. SEZIONE PROG.	FIG.	ELEMENTI DI CALCOLO	AREA ELEMENTARE mq	AREA FIGURA mq	NOTE
		RIPORTO mq	10.31		
		(-6.38--5.77)x(1.87+1.80)/2	-1.12		
		(-7.06--6.38)x(1.94+1.87)/2	-1.30		
		(-7.11--7.06)x(1.95+1.94)/2	-0.10		
				7.79	
9	BO1	(-8.78--9.02)x(1.64+1.65)/2	0.39		
160.00		(-8.34--8.78)x(1.63+1.64)/2	0.72		
		(-7.63--8.34)x(1.61+1.63)/2	1.15		
		(-7.58--7.63)x(1.61+1.61)/2	0.08		
		(-7.48--7.58)x(1.62+1.61)/2	0.16		
		(-6.82--7.48)x(1.64+1.62)/2	1.08		
		(-6.47--6.82)x(1.63+1.64)/2	0.57		
		(-6.06--6.47)x(1.64+1.63)/2	0.67		
		(-5.31--6.06)x(1.69+1.64)/2	1.25		
		(-5.30--5.31)x(1.69+1.69)/2	0.02		
		(-5.26--5.30)x(1.69+1.69)/2	0.07		
		(-4.54--5.26)x(1.70+1.69)/2	1.22		
		(-4.16--4.54)x(1.72+1.70)/2	0.65		
		(-3.78--4.16)x(1.72+1.72)/2	0.65		
		(-3.04--3.78)x(1.72+1.72)/2	1.27		
		(-3.02--3.04)x(1.72+1.72)/2	0.03		
		(-3.00--3.02)x(1.72+1.72)/2	0.03		
		(-2.26--3.00)x(1.73+1.72)/2	1.28		
		(-1.85--2.26)x(1.72+1.73)/2	0.71		
		(-1.50--1.85)x(1.71+1.72)/2	0.60		
		(-0.83--1.50)x(1.71+1.71)/2	1.15		
		(-0.74--0.83)x(1.70+1.71)/2	0.15		
		(-0.69--0.74)x(1.70+1.70)/2	0.09		
		(0.02--0.69)x(1.71+1.70)/2	1.21		
		(0.47-0.02)x(1.69+1.71)/2	0.76		
		(0.78-0.47)x(1.68+1.69)/2	0.52		
		(1.39-0.78)x(1.66+1.68)/2	1.02		
		(1.54-1.39)x(1.66+1.66)/2	0.25		
		(1.62-1.54)x(1.66+1.66)/2	0.13		
		(2.30-1.62)x(1.66+1.66)/2	1.13		
		(2.78-2.30)x(1.64+1.66)/2	0.79		
		(3.06-2.78)x(1.64+1.64)/2	0.46		
		(3.61-3.06)x(1.63+1.64)/2	0.90		
		(3.82-3.61)x(1.63+1.63)/2	0.34		
		(3.94-3.82)x(1.63+1.63)/2	0.20		
		(4.58-3.94)x(1.64+1.63)/2	1.05		
		(5.09-4.58)x(1.61+1.64)/2	0.83		
		(5.34-5.09)x(1.60+1.61)/2	0.40		
		(5.83-5.34)x(1.60+1.60)/2	0.78		
		(6.10-5.83)x(1.60+1.60)/2	0.43		
		(6.25-6.10)x(1.60+1.60)/2	0.24		
		(6.86-6.25)x(1.61+1.60)/2	0.98		
		(7.40-6.86)x(1.60+1.61)/2	0.87		
		(7.62-7.40)x(1.60+1.60)/2	0.35		
		(8.05-7.62)x(1.59+1.60)/2	0.69		
		(8.56-8.05)x(1.59+1.59)/2	0.81		
		(9.12-8.56)x(1.57+1.59)/2	0.88		
		(9.27-9.12)x(1.57+1.57)/2	0.24		
		(9.12-9.27)x(1.07+1.07)/2	-0.16		
		(8.56-9.12)x(1.09+1.07)/2	-0.60		
		(8.05-8.56)x(1.09+1.09)/2	-0.56		
		(7.62-8.05)x(1.10+1.09)/2	-0.47		
		(7.40-7.62)x(1.10+1.10)/2	-0.24		
		(6.86-7.40)x(1.11+1.10)/2	-0.60		
		(6.25-6.86)x(1.10+1.11)/2	-0.67		
		(6.10-6.25)x(1.10+1.10)/2	-0.17		
		(5.83-6.10)x(1.10+1.10)/2	-0.30		
		(5.34-5.83)x(1.10+1.10)/2	-0.54		
		(5.09-5.34)x(1.11+1.10)/2	-0.28		
		(4.58-5.09)x(1.14+1.11)/2	-0.57		
		(3.94-4.58)x(1.13+1.14)/2	-0.73		
		(3.82-3.94)x(1.13+1.13)/2	-0.14		
		(3.61-3.82)x(1.13+1.13)/2	-0.24		
		(3.06-3.61)x(1.14+1.13)/2	-0.62		
		(2.78-3.06)x(1.14+1.14)/2	-0.32		
		(2.30-2.78)x(1.16+1.14)/2	-0.55		
		(1.62-2.30)x(1.16+1.16)/2	-0.79		
		(1.54-1.62)x(1.16+1.16)/2	-0.09		
		(1.39-1.54)x(1.16+1.16)/2	-0.17		
		(0.78-1.39)x(1.18+1.16)/2	-0.71		
		(0.47-0.78)x(1.19+1.18)/2	-0.37		
		(0.02-0.47)x(1.21+1.19)/2	-0.54		
		(-0.69-0.02)x(1.20+1.21)/2	-0.86		
		(-0.74--0.69)x(1.20+1.20)/2	-0.06		
		(-0.83--0.74)x(1.21+1.20)/2	-0.11		
		(-1.50--0.83)x(1.21+1.21)/2	-0.81		
		(-1.85--1.50)x(1.22+1.21)/2	-0.43		
		(-2.26--1.85)x(1.23+1.22)/2	-0.50		
		(-3.00--2.26)x(1.22+1.23)/2	-0.91		
		(-3.02--3.00)x(1.22+1.22)/2	-0.02		
		(-3.04--3.02)x(1.22+1.22)/2	-0.02		
		(-3.78--3.04)x(1.22+1.22)/2	-0.90		
		(-4.16--3.78)x(1.22+1.22)/2	-0.46		
		(-4.54--4.16)x(1.20+1.22)/2	-0.46		
		(-5.26--4.54)x(1.19+1.20)/2	-0.86		
		(-5.30--5.26)x(1.19+1.19)/2	-0.05		
		(-5.31--5.30)x(1.19+1.19)/2	-0.01		
		(-6.06--5.31)x(1.14+1.19)/2	-0.87		
		(-6.47--6.06)x(1.13+1.14)/2	-0.47		
		(-6.82--6.47)x(1.14+1.13)/2	-0.40		
		(-7.48--6.82)x(1.12+1.14)/2	-0.75		
		(-7.58--7.48)x(1.11+1.12)/2	-0.11		
		(-7.63--7.58)x(1.11+1.11)/2	-0.06		
		(-8.34--7.63)x(1.13+1.11)/2	-0.80		
		(-8.78--8.34)x(1.14+1.13)/2	-0.50		
		(-9.02--8.78)x(1.15+1.14)/2	-0.27		
				9.13	
10	BO1	(-9.46--9.83)x(1.53+1.54)/2	0.57		
180.00		(-9.43--9.46)x(1.53+1.53)/2	0.05		
		(-9.41--9.43)x(1.53+1.53)/2	0.03		
		A RIPORTARE mq	0.65		

		CALCOLO DELLE AREE		Foglio n. 21
BONIFICA				
N. SEZIONE PROG.	FIG.	ELEMENTI DI CALCOLO	AREA ELEMENTARE mq	AREA FIGURA mq	NOTE
		RIPORTO mq	0.65		
		(-8.66--9.41)x(1.54+1.53)/2	1.15		
		(-8.28--8.66)x(1.54+1.54)/2	0.59		
		(-7.89--8.28)x(1.54+1.54)/2	0.60		
		(-7.15--7.89)x(1.54+1.54)/2	1.14		
		(-7.11--7.15)x(1.54+1.54)/2	0.06		
		(-7.04--7.11)x(1.54+1.54)/2	0.11		
		(-6.34--7.04)x(1.54+1.54)/2	1.08		
		(-6.01--6.34)x(1.53+1.54)/2	0.51		
		(-5.57--6.01)x(1.54+1.53)/2	0.68		
		(-4.88--5.57)x(1.52+1.54)/2	1.06		
		(-4.80--4.88)x(1.52+1.52)/2	0.12		
		(-4.63--4.80)x(1.51+1.52)/2	0.26		
		(-4.03--4.63)x(1.51+1.51)/2	0.91		
		(-3.75--4.03)x(1.51+1.51)/2	0.42		
		(-3.26--3.75)x(1.53+1.51)/2	0.74		
		(-2.62--3.26)x(1.54+1.53)/2	0.98		
		(-2.49--2.62)x(1.54+1.54)/2	0.20		
		(-2.22--2.49)x(1.54+1.54)/2	0.42		
		(-1.72--2.22)x(1.53+1.54)/2	0.77		
		(-1.48--1.72)x(1.54+1.53)/2	0.37		
		(-0.95--1.48)x(1.54+1.54)/2	0.82		
		(-0.35--0.95)x(1.53+1.54)/2	0.92		
		(-0.18--0.35)x(1.53+1.53)/2	0.26		
		(0.19--0.18)x(1.52+1.53)/2	0.56		
		(0.59-0.19)x(1.49+1.52)/2	0.60		
		(0.78-0.59)x(1.50+1.49)/2	0.28		
		(1.36-0.78)x(1.51+1.50)/2	0.87		
		(1.91-1.36)x(1.51+1.51)/2	0.83		
		(2.13-1.91)x(1.51+1.51)/2	0.33		
		(2.60-2.13)x(1.51+1.51)/2	0.71		
		(2.90-2.60)x(1.51+1.51)/2	0.45		
		(3.05-2.90)x(1.52+1.51)/2	0.23		
		(3.68-3.05)x(1.51+1.52)/2	0.95		
		(4.18-3.68)x(1.51+1.51)/2	0.75		
		(4.45-4.18)x(1.50+1.51)/2	0.41		
		(5.01-4.45)x(1.51+1.50)/2	0.84		
		(5.22-5.01)x(1.50+1.51)/2	0.32		
		(5.31-5.22)x(1.50+1.50)/2	0.13		
		(5.99-5.31)x(1.45+1.50)/2	1.00		
		(6.45-5.99)x(1.47+1.45)/2	0.67		
		(6.76-6.45)x(1.46+1.47)/2	0.45		
		(7.42-6.76)x(1.47+1.46)/2	0.97		
		(7.53-7.42)x(1.46+1.47)/2	0.16		
		(7.58-7.53)x(1.47+1.46)/2	0.07		
		(8.30-7.58)x(1.43+1.47)/2	1.04		
		(8.71-8.30)x(1.44+1.43)/2	0.59		
		(9.07-8.71)x(1.44+1.44)/2	0.52		
		(9.83-9.07)x(1.47+1.44)/2	1.11		
		(9.84-9.83)x(1.47+1.47)/2	0.01		
		(10.40-9.84)x(1.44+1.47)/2	0.81		
		(9.84-10.40)x(0.97+0.94)/2	-0.53		
		(9.83-9.84)x(0.97+0.97)/2	-0.01		
		(9.07-9.83)x(0.94+0.97)/2	-0.73		
		(8.71-9.07)x(0.94+0.94)/2	-0.34		
		(8.30-8.71)x(0.93+0.94)/2	-0.38		
		(7.58-8.30)x(0.97+0.93)/2	-0.68		
		(7.53-7.58)x(0.96+0.97)/2	-0.05		
		(7.42-7.53)x(0.97+0.96)/2	-0.11		
		(6.76-7.42)x(0.96+0.97)/2	-0.64		
		(6.45-6.76)x(0.97+0.96)/2	-0.30		
		(5.99-6.45)x(0.95+0.97)/2	-0.44		
		(5.31-5.99)x(1.00+0.95)/2	-0.66		
		(5.22-5.31)x(1.00+1.00)/2	-0.09		
		(5.01-5.22)x(1.01+1.00)/2	-0.21		
		(4.45-5.01)x(1.00+1.01)/2	-0.56		
		(4.18-4.45)x(1.01+1.00)/2	-0.27		
		(3.68-4.18)x(1.01+1.01)/2	-0.50		
		(3.05-3.68)x(1.02+1.01)/2	-0.64		
		(2.90-3.05)x(1.01+1.02)/2	-0.15		
		(2.60-2.90)x(1.01+1.01)/2	-0.30		
		(2.13-2.60)x(1.01+1.01)/2	-0.47		
		(1.91-2.13)x(1.01+1.01)/2	-0.22		
		(1.36-1.91)x(1.01+1.01)/2	-0.56		
		(0.78-1.36)x(1.00+1.01)/2	-0.58		
		(0.59-0.78)x(0.99+1.00)/2	-0.19		
		(0.19-0.59)x(1.02+0.99)/2	-0.40		
		(-0.18-0.19)x(1.03+1.02)/2	-0.38		
		(-0.35--0.18)x(1.03+1.03)/2	-0.18		
		(-0.95--0.35)x(1.04+1.03)/2	-0.62		
		(-1.48--0.95)x(1.04+1.04)/2	-0.55		
		(-1.72--1.48)x(1.03+1.04)/2	-0.25		
		(-2.22--1.72)x(1.04+1.03)/2	-0.52		
		(-2.49--2.22)x(1.04+1.04)/2	-0.28		
		(-2.62--2.49)x(1.04+1.04)/2	-0.14		
		(-3.26--2.62)x(1.03+1.04)/2	-0.66		
		(-3.75--3.26)x(1.01+1.03)/2	-0.50		
		(-4.03--3.75)x(1.01+1.01)/2	-0.28		
		(-4.63--4.03)x(1.01+1.01)/2	-0.61		
		(-4.80--4.63)x(1.02+1.01)/2	-0.17		
		(-4.88--4.80)x(1.02+1.02)/2	-0.08		
		(-5.57--4.88)x(1.04+1.02)/2	-0.71		
		(-6.01--5.57)x(1.03+1.04)/2	-0.46		
		(-6.34--6.01)x(1.04+1.03)/2	-0.34		
		(-7.04--6.34)x(1.04+1.04)/2	-0.73		
		(-7.11--7.04)x(1.04+1.04)/2	-0.07		
		(-7.15--7.11)x(1.04+1.04)/2	-0.04		
		(-7.89--7.15)x(1.04+1.04)/2	-0.77		
		(-8.28--7.89)x(1.04+1.04)/2	-0.41		
		(-8.66--8.28)x(1.04+1.04)/2	-0.40		
		(-9.41--8.66)x(1.03+1.04)/2	-0.78		
		(-9.43--9.41)x(1.03+1.03)/2	-0.02		
		(-9.46--9.43)x(1.03+1.03)/2	-0.03		
		(-9.83--9.46)x(1.04+1.03)/2	-0.38		
				10.11	
		A RIPORTARE mq			

		CALCOLO DELLE AREE		Foglio n. 22
BONIFICA				
N. SEZIONE PROG.	FIG.	ELEMENTI DI CALCOLO	AREA ELEMENTARE mq	AREA FIGURA mq	NOTE
		RIPORTO mq			
11 200.00	BO1	(-9.93--10.56)x(1.50+1.49)/2	0.94		
		(-9.51--9.93)x(1.50+1.50)/2	0.63		
		(-8.83--9.51)x(1.47+1.50)/2	1.01		
		(-8.46--8.83)x(1.47+1.47)/2	0.54		
		(-7.93--8.46)x(1.49+1.47)/2	0.78		
		(-7.72--7.93)x(1.49+1.49)/2	0.31		
		(-7.14--7.72)x(1.49+1.49)/2	0.86		
		(-6.62--7.14)x(1.48+1.49)/2	0.77		
		(-6.35--6.62)x(1.48+1.48)/2	0.40		
		(-5.64--6.35)x(1.49+1.48)/2	1.05		
		(-5.56--5.64)x(1.49+1.49)/2	0.12		
		(-5.52--5.56)x(1.49+1.49)/2	0.06		
		(-4.77--5.52)x(1.46+1.49)/2	1.11		
		(-4.42--4.77)x(1.45+1.46)/2	0.51		
		(-3.97--4.42)x(1.47+1.45)/2	0.66		
		(-3.32--3.97)x(1.47+1.47)/2	0.96		
		(-3.18--3.32)x(1.47+1.47)/2	0.21		
		(-2.83--3.18)x(1.48+1.47)/2	0.52		
		(-2.39--2.83)x(1.49+1.48)/2	0.65		
		(-2.22--2.39)x(1.49+1.49)/2	0.25		
		(-1.60--2.22)x(1.50+1.49)/2	0.93		
		(-1.12--1.60)x(1.49+1.50)/2	0.72		
		(-0.81--1.12)x(1.49+1.49)/2	0.46		
		(-0.02--0.81)x(1.47+1.49)/2	1.17		
		(0.77--0.02)x(1.52+1.47)/2	1.18		
		(1.08-0.77)x(1.52+1.52)/2	0.47		
		(1.57-1.08)x(1.51+1.52)/2	0.74		
		(2.18-1.57)x(1.51+1.51)/2	0.92		
		(2.36-2.18)x(1.52+1.51)/2	0.27		
		(2.80-2.36)x(1.51+1.52)/2	0.67		
		(3.15-2.80)x(1.50+1.51)/2	0.53		
		(3.29-3.15)x(1.50+1.50)/2	0.21		
		(3.94-3.29)x(1.52+1.50)/2	0.98		
		(4.39-3.94)x(1.52+1.52)/2	0.68		
		(4.73-4.39)x(1.51+1.52)/2	0.52		
		(5.49-4.73)x(1.51+1.51)/2	1.15		
		(5.52-5.49)x(1.51+1.51)/2	0.05		
		(5.61-5.52)x(1.51+1.51)/2	0.14		
		(6.31-5.61)x(1.53+1.51)/2	1.06		
		(6.59-6.31)x(1.54+1.53)/2	0.43		
		(7.11-6.59)x(1.54+1.54)/2	0.80		
		(7.69-7.11)x(1.53+1.54)/2	0.89		
		(7.90-7.69)x(1.53+1.53)/2	0.32		
		(8.43-7.90)x(1.52+1.53)/2	0.81		
		(8.69-8.43)x(1.51+1.52)/2	0.39		
		(8.79-8.69)x(1.52+1.51)/2	0.15		
		(9.48-8.79)x(1.51+1.52)/2	1.05		
		(9.89-9.48)x(1.53+1.51)/2	0.62		
		(10.27-9.89)x(1.53+1.53)/2	0.58		
		(10.99-10.27)x(1.53+1.53)/2	1.10		
		(10.27-10.99)x(1.03+1.03)/2	-0.74		
		(9.89-10.27)x(1.03+1.03)/2	-0.39		
		(9.48-9.89)x(1.01+1.03)/2	-0.42		
		(8.79-9.48)x(1.02+1.01)/2	-0.70		
		(8.69-8.79)x(1.01+1.02)/2	-0.10		
		(8.43-8.69)x(1.02+1.01)/2	-0.26		
		(7.90-8.43)x(1.03+1.02)/2	-0.54		
		(7.69-7.90)x(1.03+1.03)/2	-0.22		
		(7.11-7.69)x(1.04+1.03)/2	-0.60		
		(6.59-7.11)x(1.04+1.04)/2	-0.54		
		(6.31-6.59)x(1.03+1.04)/2	-0.29		
		(5.61-6.31)x(1.01+1.03)/2	-0.71		
		(5.52-5.61)x(1.01+1.01)/2	-0.09		
		(5.49-5.52)x(1.01+1.01)/2	-0.03		
		(4.73-5.49)x(1.01+1.01)/2	-0.77		
		(4.39-4.73)x(1.02+1.01)/2	-0.35		
		(3.94-4.39)x(1.02+1.02)/2	-0.46		
		(3.29-3.94)x(1.00+1.02)/2	-0.66		
		(3.15-3.29)x(1.00+1.00)/2	-0.14		
		(2.80-3.15)x(1.01+1.00)/2	-0.35		
		(2.36-2.80)x(1.02+1.01)/2	-0.45		
		(2.18-2.36)x(1.01+1.02)/2	-0.18		
		(1.57-2.18)x(1.01+1.01)/2	-0.62		
		(1.08-1.57)x(1.02+1.01)/2	-0.50		
		(0.77-1.08)x(1.02+1.02)/2	-0.32		
		(-0.02-0.77)x(0.97+1.02)/2	-0.79		
		(-0.81--0.02)x(0.99+0.97)/2	-0.77		
		(-1.12--0.81)x(0.99+0.99)/2	-0.31		
		(-1.60--1.12)x(1.00+0.99)/2	-0.48		
		(-2.22--1.60)x(0.99+1.00)/2	-0.62		
		(-2.39--2.22)x(0.99+0.99)/2	-0.17		
		(-2.83--2.39)x(0.98+0.99)/2	-0.43		
		(-3.18--2.83)x(0.97+0.98)/2	-0.34		
		(-3.32--3.18)x(0.97+0.97)/2	-0.14		
		(-3.97--3.32)x(0.97+0.97)/2	-0.63		
		(-4.42--3.97)x(0.95+0.97)/2	-0.43		
		(-4.77--4.42)x(0.96+0.95)/2	-0.33		
		(-5.52--4.77)x(0.99+0.96)/2	-0.73		
		(-5.56--5.52)x(0.99+0.99)/2	-0.04		
		(-5.64--5.56)x(0.99+0.99)/2	-0.08		
		(-6.35--5.64)x(0.98+0.99)/2	-0.70		
		(-6.62--6.35)x(0.98+0.98)/2	-0.26		
		(-7.14--6.62)x(0.99+0.98)/2	-0.51		
		(-7.72--7.14)x(0.99+0.99)/2	-0.57		
		(-7.93--7.72)x(0.99+0.99)/2	-0.21		
		(-8.46--7.93)x(0.97+0.99)/2	-0.52		
		(-8.83--8.46)x(0.97+0.97)/2	-0.36		
		(-9.51--8.83)x(1.00+0.97)/2	-0.67		
		(-9.93--9.51)x(1.00+1.00)/2	-0.42		
		(-10.56--9.93)x(0.99+1.00)/2	-0.63		
				10.76	
12 220.00	BO1	(-10.23--10.68)x(1.74+1.74)/2	0.78		
		(-9.91--10.23)x(1.74+1.74)/2	0.56		
		(-9.15--9.91)x(1.74+1.74)/2	1.32		
		A RIPORTARE mq	2.66		

		CALCOLO DELLE AREE		Foglio n. 23
BONIFICA				
N. SEZIONE PROG.	FIG.	ELEMENTI DI CALCOLO	AREA ELEMENTARE mq	AREA FIGURA mq	NOTE
		RIPORTO mq	2.66		
		(-9.09--9.15)x(1.74+1.74)/2	0.10		
		(-8.90--9.09)x(1.74+1.74)/2	0.33		
		(-8.08--8.90)x(1.74+1.74)/2	1.43		
		(-7.70--8.08)x(1.74+1.74)/2	0.66		
		(-7.00--7.70)x(1.74+1.74)/2	1.22		
		(-6.13--7.00)x(1.75+1.74)/2	1.52		
		(-5.93--6.13)x(1.74+1.75)/2	0.35		
		(-5.50--5.93)x(1.74+1.74)/2	0.75		
		(-5.01--5.50)x(1.74+1.74)/2	0.85		
		(-4.85--5.01)x(1.74+1.74)/2	0.28		
		(-4.19--4.85)x(1.73+1.74)/2	1.15		
		(-3.78--4.19)x(1.73+1.73)/2	0.71		
		(-3.37--3.78)x(1.72+1.73)/2	0.71		
		(-2.70--3.37)x(1.72+1.72)/2	1.15		
		(-2.56--2.70)x(1.72+1.72)/2	0.24		
		(-2.09--2.56)x(1.72+1.72)/2	0.81		
		(-1.74--2.09)x(1.73+1.72)/2	0.60		
		(-1.63--1.74)x(1.73+1.73)/2	0.19		
		(-0.92--1.63)x(1.73+1.73)/2	1.23		
		(-0.55--0.92)x(1.73+1.73)/2	0.64		
		(-0.10--0.55)x(1.72+1.73)/2	0.78		
		(0.52--0.10)x(1.72+1.72)/2	1.07		
		(0.71-0.52)x(1.72+1.72)/2	0.33		
		(1.31-0.71)x(1.73+1.72)/2	1.04		
		(1.53-1.31)x(1.73+1.73)/2	0.38		
		(1.60-1.53)x(1.73+1.73)/2	0.12		
		(2.35-1.60)x(1.74+1.73)/2	1.30		
		(2.68-2.35)x(1.74+1.74)/2	0.57		
		(3.16-2.68)x(1.73+1.74)/2	0.83		
		(3.75-3.16)x(1.72+1.73)/2	1.02		
		(3.98-3.75)x(1.72+1.72)/2	0.40		
		(4.71-3.98)x(1.72+1.72)/2	1.26		
		(4.80-4.71)x(1.72+1.72)/2	0.15		
		(4.83-4.80)x(1.72+1.72)/2	0.05		
		(5.61-4.83)x(1.75+1.72)/2	1.35		
		(5.90-5.61)x(1.74+1.75)/2	0.51		
		(6.43-5.90)x(1.74+1.74)/2	0.92		
		(6.98-6.43)x(1.74+1.74)/2	0.96		
		(7.25-6.98)x(1.74+1.74)/2	0.47		
		(8.05-7.25)x(1.74+1.74)/2	1.39		
		(8.07-8.05)x(1.74+1.74)/2	0.03		
		(8.11-8.07)x(1.74+1.74)/2	0.07		
		(8.88-8.11)x(1.76+1.74)/2	1.35		
		(9.13-8.88)x(1.77+1.76)/2	0.44		
		(9.70-9.13)x(1.76+1.77)/2	1.01		
		(10.20-9.70)x(1.76+1.76)/2	0.88		
		(10.52-10.20)x(1.77+1.76)/2	0.56		
		(11.11-10.52)x(1.79+1.77)/2	1.05		
		(10.52-11.11)x(1.27+1.29)/2	-0.76		
		(10.20-10.52)x(1.26+1.27)/2	-0.40		
		(9.70-10.20)x(1.26+1.26)/2	-0.63		
		(9.13-9.70)x(1.27+1.26)/2	-0.72		
		(8.88-9.13)x(1.26+1.27)/2	-0.32		
		(8.11-8.88)x(1.24+1.26)/2	-0.96		
		(8.07-8.11)x(1.24+1.24)/2	-0.05		
		(8.05-8.07)x(1.24+1.24)/2	-0.02		
		(7.25-8.05)x(1.24+1.24)/2	-0.99		
		(6.98-7.25)x(1.24+1.24)/2	-0.33		
		(6.43-6.98)x(1.24+1.24)/2	-0.68		
		(5.90-6.43)x(1.24+1.24)/2	-0.66		
		(5.61-5.90)x(1.25+1.24)/2	-0.36		
		(4.83-5.61)x(1.22+1.25)/2	-0.96		
		(4.80-4.83)x(1.22+1.22)/2	-0.04		
		(4.71-4.80)x(1.22+1.22)/2	-0.11		
		(3.98-4.71)x(1.22+1.22)/2	-0.89		
		(3.75-3.98)x(1.22+1.22)/2	-0.28		
		(3.16-3.75)x(1.23+1.22)/2	-0.72		
		(2.68-3.16)x(1.24+1.23)/2	-0.59		
		(2.35-2.68)x(1.24+1.24)/2	-0.41		
		(1.60-2.35)x(1.23+1.24)/2	-0.93		
		(1.53-1.60)x(1.23+1.23)/2	-0.09		
		(1.31-1.53)x(1.23+1.23)/2	-0.27		
		(0.71-1.31)x(1.22+1.23)/2	-0.74		
		(0.52-0.71)x(1.22+1.22)/2	-0.23		
		(-0.10-0.52)x(1.22+1.22)/2	-0.76		
		(-0.55--0.10)x(1.23+1.22)/2	-0.55		
		(-0.92--0.55)x(1.23+1.23)/2	-0.46		
		(-1.63--0.92)x(1.23+1.23)/2	-0.87		
		(-1.74--1.63)x(1.23+1.23)/2	-0.14		
		(-2.09--1.74)x(1.22+1.23)/2	-0.43		
		(-2.56--2.09)x(1.22+1.22)/2	-0.57		
		(-2.70--2.56)x(1.22+1.22)/2	-0.17		
		(-3.37--2.70)x(1.22+1.22)/2	-0.82		
		(-3.78--3.37)x(1.23+1.22)/2	-0.50		
		(-4.19--3.78)x(1.23+1.23)/2	-0.50		
		(-4.85--4.19)x(1.24+1.23)/2	-0.82		
		(-5.01--4.85)x(1.24+1.24)/2	-0.20		
		(-5.50--5.01)x(1.24+1.24)/2	-0.61		
		(-5.93--5.50)x(1.24+1.24)/2	-0.53		
		(-6.13--5.93)x(1.25+1.24)/2	-0.25		
		(-7.00--6.13)x(1.24+1.25)/2	-1.08		
		(-7.70--7.00)x(1.24+1.24)/2	-0.87		
		(-8.08--7.70)x(1.24+1.24)/2	-0.47		
		(-8.90--8.08)x(1.24+1.24)/2	-1.02		
		(-9.09--8.90)x(1.24+1.24)/2	-0.24		
		(-9.15--9.09)x(1.24+1.24)/2	-0.07		
		(-9.91--9.15)x(1.24+1.24)/2	-0.94		
		(-10.23--9.91)x(1.24+1.24)/2	-0.40		
		(-10.68--10.23)x(1.24+1.24)/2	-0.56		
				10.90	
13 240.00	BO1	(-10.69--11.19)x(1.59+1.58)/2	0.79		
		(-10.31--10.69)x(1.59+1.59)/2	0.60		
		(-9.84--10.31)x(1.62+1.59)/2	0.75		
		(-9.25--9.84)x(1.65+1.62)/2	0.96		
		A RIPORTARE mq	3.10		

		CALCOLO DELLE AREE		Foglio n. 24
BONIFICA				
N. SEZIONE PROG.	FIG.	ELEMENTI DI CALCOLO	AREA ELEMENTARE mq	AREA FIGURA mq	NOTE
		RIPORTO mq	3.10		
		(-8.99--9.25)x(1.65+1.65)/2	0.43		
		(-8.20--8.99)x(1.67+1.65)/2	1.31		
		(-8.15--8.20)x(1.67+1.67)/2	0.08		
		(-7.93--8.15)x(1.67+1.67)/2	0.37		
		(-7.30--7.93)x(1.66+1.67)/2	1.05		
		(-7.14--7.30)x(1.66+1.66)/2	0.27		
		(-6.45--7.14)x(1.62+1.66)/2	1.13		
		(-6.09--6.45)x(1.60+1.62)/2	0.58		
		(-5.60--6.09)x(1.59+1.60)/2	0.78		
		(-5.03--5.60)x(1.60+1.59)/2	0.91		
		(-4.75--5.03)x(1.60+1.60)/2	0.45		
		(-3.98--4.75)x(1.60+1.60)/2	1.23		
		(-3.90--3.98)x(1.60+1.60)/2	0.13		
		(-3.61--3.90)x(1.60+1.60)/2	0.46		
		(-2.92--3.61)x(1.60+1.60)/2	1.10		
		(-2.70--2.92)x(1.60+1.60)/2	0.35		
		(-1.87--2.70)x(1.64+1.60)/2	1.34		
		(-1.31--1.87)x(1.64+1.64)/2	0.92		
		(-0.81--1.31)x(1.65+1.64)/2	0.82		
		(0.09--0.81)x(1.66+1.65)/2	1.49		
		(0.24-0.09)x(1.66+1.66)/2	0.25		
		(0.72-0.24)x(1.68+1.66)/2	0.80		
		(1.18-0.72)x(1.69+1.68)/2	0.78		
		(1.30-1.18)x(1.69+1.69)/2	0.20		
		(2.03-1.30)x(1.66+1.69)/2	1.22		
		(2.35-2.03)x(1.67+1.66)/2	0.53		
		(2.88-2.35)x(1.67+1.67)/2	0.89		
		(3.41-2.88)x(1.67+1.67)/2	0.89		
		(3.73-3.41)x(1.69+1.67)/2	0.54		
		(4.47-3.73)x(1.72+1.69)/2	1.26		
		(4.58-4.47)x(1.72+1.72)/2	0.19		
		(5.04-4.58)x(1.75+1.72)/2	0.80		
		(5.43-5.04)x(1.77+1.75)/2	0.69		
		(5.52-5.43)x(1.77+1.77)/2	0.16		
		(6.27-5.52)x(1.77+1.77)/2	1.33		
		(6.58-6.27)x(1.80+1.77)/2	0.55		
		(7.12-6.58)x(1.75+1.80)/2	0.96		
		(7.63-7.12)x(1.72+1.75)/2	0.88		
		(7.97-7.63)x(1.71+1.72)/2	0.58		
		(8.69-7.97)x(1.65+1.71)/2	1.21		
		(8.82-8.69)x(1.65+1.65)/2	0.21		
		(9.36-8.82)x(1.68+1.65)/2	0.90		
		(9.67-9.36)x(1.70+1.68)/2	0.52		
		(9.74-9.67)x(1.69+1.70)/2	0.12		
		(10.52-9.74)x(1.73+1.69)/2	1.33		
		(10.80-10.52)x(1.72+1.73)/2	0.48		
		(11.36-10.80)x(1.71+1.72)/2	0.96		
		(11.48-11.36)x(1.71+1.71)/2	0.21		
		(11.36-11.48)x(1.21+1.21)/2	-0.15		
		(10.80-11.36)x(1.22+1.21)/2	-0.68		
		(10.52-10.80)x(1.23+1.22)/2	-0.34		
		(9.74-10.52)x(1.19+1.23)/2	-0.94		
		(9.67-9.74)x(1.20+1.19)/2	-0.08		
		(9.36-9.67)x(1.18+1.20)/2	-0.37		
		(8.82-9.36)x(1.15+1.18)/2	-0.63		
		(8.69-8.82)x(1.15+1.15)/2	-0.15		
		(7.97-8.69)x(1.21+1.15)/2	-0.85		
		(7.63-7.97)x(1.22+1.21)/2	-0.41		
		(7.12-7.63)x(1.25+1.22)/2	-0.63		
		(6.58-7.12)x(1.30+1.25)/2	-0.69		
		(6.27-6.58)x(1.27+1.30)/2	-0.40		
		(5.52-6.27)x(1.27+1.27)/2	-0.95		
		(5.43-5.52)x(1.27+1.27)/2	-0.11		
		(5.04-5.43)x(1.25+1.27)/2	-0.49		
		(4.58-5.04)x(1.22+1.25)/2	-0.57		
		(4.47-4.58)x(1.22+1.22)/2	-0.13		
		(3.73-4.47)x(1.19+1.22)/2	-0.89		
		(3.41-3.73)x(1.17+1.19)/2	-0.38		
		(2.88-3.41)x(1.17+1.17)/2	-0.62		
		(2.35-2.88)x(1.17+1.17)/2	-0.62		
		(2.03-2.35)x(1.16+1.17)/2	-0.37		
		(1.30-2.03)x(1.19+1.16)/2	-0.86		
		(1.18-1.30)x(1.19+1.19)/2	-0.14		
		(0.72-1.18)x(1.18+1.19)/2	-0.55		
		(0.24-0.72)x(1.16+1.18)/2	-0.56		
		(0.09-0.24)x(1.16+1.16)/2	-0.17		
		(-0.81-0.09)x(1.15+1.16)/2	-1.04		
		(-1.31--0.81)x(1.14+1.15)/2	-0.57		
		(-1.87--1.31)x(1.14+1.14)/2	-0.64		
		(-2.70--1.87)x(1.10+1.14)/2	-0.93		
		(-2.92--2.70)x(1.10+1.10)/2	-0.24		
		(-3.61--2.92)x(1.10+1.10)/2	-0.76		
		(-3.90--3.61)x(1.10+1.10)/2	-0.32		
		(-3.98--3.90)x(1.10+1.10)/2	-0.09		
		(-4.75--3.98)x(1.10+1.10)/2	-0.85		
		(-5.03--4.75)x(1.10+1.10)/2	-0.31		
		(-5.60--5.03)x(1.09+1.10)/2	-0.62		
		(-6.09--5.60)x(1.10+1.09)/2	-0.54		
		(-6.45--6.09)x(1.12+1.10)/2	-0.40		
		(-7.14--6.45)x(1.16+1.12)/2	-0.79		
		(-7.30--7.14)x(1.16+1.16)/2	-0.19		
		(-7.93--7.30)x(1.17+1.16)/2	-0.73		
		(-8.15--7.93)x(1.17+1.17)/2	-0.26		
		(-8.20--8.15)x(1.17+1.17)/2	-0.06		
		(-8.99--8.20)x(1.15+1.17)/2	-0.92		
		(-9.25--8.99)x(1.15+1.15)/2	-0.30		
		(-9.84--9.25)x(1.12+1.15)/2	-0.67		
		(-10.31--9.84)x(1.09+1.12)/2	-0.52		
		(-10.69--10.31)x(1.09+1.09)/2	-0.41		
		(-11.19--10.69)x(1.08+1.09)/2	-0.54		
				11.31	
14 260.00	BO1	(-10.40--10.87)x(1.85+1.80)/2	0.86		
		(-10.20--10.40)x(1.88+1.85)/2	0.37		
		(-10.16--10.20)x(1.88+1.88)/2	0.08		
		A RIPORTARE mq	1.31		

		CALCOLO DELLE AREE		Foglio n. 25
BONIFICA				
N. SEZIONE PROG.	FIG.	ELEMENTI DI CALCOLO	AREA ELEMENTARE mq	AREA FIGURA mq	NOTE
		RIPORTO mq	1.31		
		(-9.31--10.16)x(2.00+1.88)/2	1.65		
		(-9.12--9.31)x(2.03+2.00)/2	0.38		
		(-8.42--9.12)x(2.14+2.03)/2	1.46		
		(-8.08--8.42)x(2.19+2.14)/2	0.74		
		(-7.54--8.08)x(2.23+2.19)/2	1.19		
		(-7.04--7.54)x(2.24+2.23)/2	1.12		
		(-6.65--7.04)x(2.21+2.24)/2	0.87		
		(-6.00--6.65)x(2.16+2.21)/2	1.42		
		(-5.77--6.00)x(2.12+2.16)/2	0.49		
		(-4.96--5.77)x(1.91+2.12)/2	1.63		
		(-4.88--4.96)x(1.91+1.91)/2	0.15		
		(-4.44--4.88)x(1.76+1.91)/2	0.81		
		(-3.99--4.44)x(1.63+1.76)/2	0.76		
		(-3.92--3.99)x(1.60+1.63)/2	0.11		
		(-3.11--3.92)x(1.62+1.60)/2	1.30		
		(-2.88--3.11)x(1.56+1.62)/2	0.37		
		(-2.22--2.88)x(1.67+1.56)/2	1.07		
		(-1.83--2.22)x(1.76+1.67)/2	0.67		
		(-1.34--1.83)x(1.78+1.76)/2	0.87		
		(-0.79--1.34)x(1.92+1.78)/2	1.02		
		(-0.02--0.79)x(1.92+1.92)/2	1.48		
		(0.25--0.02)x(1.93+1.92)/2	0.52		
		(0.44-0.25)x(1.93+1.93)/2	0.37		
		(1.29-0.44)x(1.93+1.93)/2	1.64		
		(1.32-1.29)x(1.93+1.93)/2	0.06		
		(1.52-1.32)x(1.94+1.93)/2	0.39		
		(2.33-1.52)x(1.97+1.94)/2	1.58		
		(2.50-2.33)x(1.99+1.97)/2	0.34		
		(3.37-2.50)x(2.02+1.99)/2	1.74		
		(3.76-3.37)x(2.06+2.02)/2	0.80		
		(4.41-3.76)x(2.07+2.06)/2	1.34		
		(5.02-4.41)x(2.08+2.07)/2	1.27		
		(5.45-5.02)x(2.10+2.08)/2	0.90		
		(6.28-5.45)x(2.12+2.10)/2	1.75		
		(6.49-6.28)x(2.11+2.12)/2	0.44		
		(7.48-6.49)x(2.11+2.11)/2	2.09		
		(7.53-7.48)x(2.11+2.11)/2	0.11		
		(8.41-7.53)x(2.07+2.11)/2	1.84		
		(8.57-8.41)x(2.08+2.07)/2	0.33		
		(9.30-8.57)x(2.06+2.08)/2	1.51		
		(9.61-9.30)x(2.05+2.06)/2	0.64		
		(10.18-9.61)x(2.04+2.05)/2	1.17		
		(10.66-10.18)x(2.04+2.04)/2	0.98		
		(11.01-10.66)x(2.03+2.04)/2	0.71		
		(10.66-11.01)x(1.54+1.53)/2	-0.54		
		(10.18-10.66)x(1.54+1.54)/2	-0.74		
		(9.61-10.18)x(1.55+1.54)/2	-0.88		
		(9.30-9.61)x(1.56+1.55)/2	-0.48		
		(8.57-9.30)x(1.58+1.56)/2	-1.15		
		(8.41-8.57)x(1.57+1.58)/2	-0.25		
		(7.53-8.41)x(1.61+1.57)/2	-1.40		
		(7.48-7.53)x(1.61+1.61)/2	-0.08		
		(6.49-7.48)x(1.61+1.61)/2	-1.59		
		(6.28-6.49)x(1.62+1.61)/2	-0.34		
		(5.45-6.28)x(1.60+1.62)/2	-1.34		
		(5.02-5.45)x(1.58+1.60)/2	-0.68		
		(4.41-5.02)x(1.57+1.58)/2	-0.96		
		(3.76-4.41)x(1.56+1.57)/2	-1.02		
		(3.37-3.76)x(1.52+1.56)/2	-0.60		
		(2.50-3.37)x(1.49+1.52)/2	-1.31		
		(2.33-2.50)x(1.47+1.49)/2	-0.25		
		(1.52-2.33)x(1.44+1.47)/2	-1.18		
		(1.32-1.52)x(1.43+1.44)/2	-0.29		
		(1.29-1.32)x(1.43+1.43)/2	-0.04		
		(0.44-1.29)x(1.43+1.43)/2	-1.22		
		(0.25-0.44)x(1.43+1.43)/2	-0.27		
		(-0.02-0.25)x(1.42+1.43)/2	-0.38		
		(-0.79--0.02)x(1.42+1.42)/2	-1.09		
		(-1.34--0.79)x(1.28+1.42)/2	-0.74		
		(-1.83--1.34)x(1.26+1.28)/2	-0.62		
		(-2.22--1.83)x(1.17+1.26)/2	-0.47		
		(-2.88--2.22)x(1.06+1.17)/2	-0.74		
		(-3.11--2.88)x(1.12+1.06)/2	-0.25		
		(-3.92--3.11)x(1.10+1.12)/2	-0.90		
		(-3.99--3.92)x(1.13+1.10)/2	-0.08		
		(-4.44--3.99)x(1.26+1.13)/2	-0.54		
		(-4.88--4.44)x(1.41+1.26)/2	-0.59		
		(-4.96--4.88)x(1.41+1.41)/2	-0.11		
		(-5.77--4.96)x(1.62+1.41)/2	-1.23		
		(-6.00--5.77)x(1.66+1.62)/2	-0.38		
		(-6.65--6.00)x(1.71+1.66)/2	-1.10		
		(-7.04--6.65)x(1.74+1.71)/2	-0.67		
		(-7.54--7.04)x(1.73+1.74)/2	-0.87		
		(-8.08--7.54)x(1.69+1.73)/2	-0.92		
		(-8.42--8.08)x(1.64+1.69)/2	-0.57		
		(-9.12--8.42)x(1.53+1.64)/2	-1.11		
		(-9.31--9.12)x(1.50+1.53)/2	-0.29		
		(-10.16--9.31)x(1.38+1.50)/2	-1.22		
		(-10.20--10.16)x(1.38+1.38)/2	-0.06		
		(-10.40--10.20)x(1.35+1.38)/2	-0.27		
		(-10.87--10.40)x(1.30+1.35)/2	-0.62		
				10.96	
15 280.00	BO1	(-8.30--8.44)x(3.26+3.25)/2	0.46		
		(-7.71--8.30)x(3.29+3.26)/2	1.93		
		(-7.37--7.71)x(3.28+3.29)/2	1.12		
		(-6.68--7.37)x(3.31+3.28)/2	2.27		
		(-6.44--6.68)x(3.28+3.31)/2	0.79		
		(-5.65--6.44)x(3.24+3.28)/2	2.58		
		(-5.50--5.65)x(3.24+3.24)/2	0.49		
		(-4.61--5.50)x(3.21+3.24)/2	2.87		
		(-4.57--4.61)x(3.21+3.21)/2	0.13		
		(-4.17--4.57)x(3.23+3.21)/2	1.29		
		(-3.64--4.17)x(3.25+3.23)/2	1.72		
		(-3.58--3.64)x(3.26+3.25)/2	0.20		
		A RIPORTARE mq	15.85		

		CALCOLO DELLE AREE		Foglio n. 26	
BONIFICA					
N. SEZIONE PROG.	FIG.	ELEMENTI DI CALCOLO	AREA ELEMENTARE mq	AREA FIGURA mq	NOTE
		RIPORTO mq	15.85		
		(-2.71--3.58)x(3.33+3.26)/2	2.87		
		(-2.55--2.71)x(3.35+3.33)/2	0.53		
		(-1.78--2.55)x(3.32+3.35)/2	2.57		
		(-1.52--1.78)x(3.33+3.32)/2	0.86		
		(-0.84--1.52)x(3.31+3.33)/2	2.26		
		(-0.49--0.84)x(3.31+3.31)/2	1.16		
		(0.09--0.49)x(3.31+3.31)/2	1.92		
		(0.54-0.09)x(3.29+3.31)/2	1.49		
		(1.02-0.54)x(3.34+3.29)/2	1.59		
		(1.57-1.02)x(3.35+3.34)/2	1.84		
		(1.95-1.57)x(3.30+3.35)/2	1.26		
		(2.60-1.95)x(3.27+3.30)/2	2.14		
		(2.88-2.60)x(3.27+3.27)/2	0.92		
		(3.63-2.88)x(3.25+3.27)/2	2.44		
		(3.81-3.63)x(3.28+3.25)/2	0.59		
		(4.66-3.81)x(3.28+3.28)/2	2.79		
		(4.75-4.66)x(3.29+3.28)/2	0.30		
		(5.50-4.75)x(3.40+3.29)/2	2.51		
		(5.68-5.50)x(3.43+3.40)/2	0.61		
		(5.70-5.68)x(3.43+3.43)/2	0.07		
		(6.61-5.70)x(3.55+3.43)/2	3.18		
		(6.73-6.61)x(3.56+3.55)/2	0.43		
		(7.54-6.73)x(3.60+3.56)/2	2.90		
		(7.76-7.54)x(3.62+3.60)/2	0.79		
		(8.40-7.76)x(3.61+3.62)/2	2.31		
		(7.76-8.40)x(3.12+3.11)/2	-1.99		
		(7.54-7.76)x(3.10+3.12)/2	-0.68		
		(6.73-7.54)x(3.06+3.10)/2	-2.49		
		(6.61-6.73)x(3.05+3.06)/2	-0.37		
		(5.70-6.61)x(2.93+3.05)/2	-2.72		
		(5.68-5.70)x(2.93+2.93)/2	-0.06		
		(5.50-5.68)x(2.90+2.93)/2	-0.52		
		(4.75-5.50)x(2.79+2.90)/2	-2.13		
		(4.66-4.75)x(2.78+2.79)/2	-0.25		
		(3.81-4.66)x(2.78+2.78)/2	-2.36		
		(3.63-3.81)x(2.75+2.78)/2	-0.50		
		(2.88-3.63)x(2.77+2.75)/2	-2.07		
		(2.60-2.88)x(2.77+2.77)/2	-0.78		
		(1.95-2.60)x(2.80+2.77)/2	-1.81		
		(1.57-1.95)x(2.85+2.80)/2	-1.07		
		(1.02-1.57)x(2.84+2.85)/2	-1.56		
		(0.54-1.02)x(2.79+2.84)/2	-1.35		
		(0.09-0.54)x(2.81+2.79)/2	-1.26		
		(-0.49-0.09)x(2.81+2.81)/2	-1.63		
		(-0.84--0.49)x(2.81+2.81)/2	-0.98		
		(-1.52--0.84)x(2.83+2.81)/2	-1.92		
		(-1.78--1.52)x(2.82+2.83)/2	-0.73		
		(-2.55--1.78)x(2.85+2.82)/2	-2.18		
		(-2.71--2.55)x(2.83+2.85)/2	-0.45		
		(-3.58--2.71)x(2.76+2.83)/2	-2.43		
		(-3.64--3.58)x(2.75+2.76)/2	-0.17		
		(-4.17--3.64)x(2.73+2.75)/2	-1.45		
		(-4.57--4.17)x(2.71+2.73)/2	-1.09		
		(-4.61--4.57)x(2.71+2.71)/2	-0.11		
		(-5.50--4.61)x(2.74+2.71)/2	-2.43		
		(-5.65--5.50)x(2.74+2.74)/2	-0.41		
		(-6.44--5.65)x(2.78+2.74)/2	-2.18		
		(-6.68--6.44)x(2.81+2.78)/2	-0.67		
		(-7.37--6.68)x(2.78+2.81)/2	-1.93		
		(-7.71--7.37)x(2.79+2.78)/2	-0.95		
		(-8.30--7.71)x(2.76+2.79)/2	-1.64		
		(-8.44--8.30)x(2.75+2.76)/2	-0.39		
				8.47	
16 300.00	B01	(-12.21--12.70)x(0.13+0.13)/2	0.06		
		(-11.72--12.21)x(0.13+0.13)/2	0.06		
		(-11.18--11.72)x(0.13+0.13)/2	0.07		
		(-10.73--11.18)x(0.12+0.13)/2	0.06		
		(-10.15--10.73)x(0.12+0.12)/2	0.07		
		(-9.75--10.15)x(0.11+0.12)/2	0.05		
		(-9.13--9.75)x(0.13+0.11)/2	0.07		
		(-8.76--9.13)x(0.13+0.13)/2	0.05		
		(-8.10--8.76)x(0.13+0.13)/2	0.09		
		(-7.77--8.10)x(0.14+0.13)/2	0.04		
		(-7.08--7.77)x(0.14+0.14)/2	0.10		
		(-6.79--7.08)x(0.16+0.14)/2	0.04		
		(-6.05--6.79)x(0.17+0.16)/2	0.12		
		(-5.80--6.05)x(0.22+0.17)/2	0.05		
		(-5.02--5.80)x(0.22+0.22)/2	0.17		
		(-4.81--5.02)x(0.26+0.22)/2	0.05		
		(-4.00--4.81)x(0.28+0.26)/2	0.22		
		(-3.83--4.00)x(0.31+0.28)/2	0.05		
		(-2.97--3.83)x(0.35+0.31)/2	0.28		
		(-2.84--2.97)x(0.38+0.35)/2	0.05		
		(-1.95--2.84)x(0.42+0.38)/2	0.36		
		(-1.85--1.95)x(0.46+0.42)/2	0.04		
		(-0.92--1.85)x(0.59+0.46)/2	0.49		
		(-0.86--0.92)x(0.60+0.59)/2	0.04		
		(-0.61--0.86)x(0.70+0.60)/2	0.16		
		(-0.86--0.61)x(0.10+0.20)/2	-0.04		
		(-0.92--0.86)x(0.09+0.10)/2	-0.01		
		(-1.85--0.92)x(-0.04+0.09)/2	-0.02		
		(-1.95--1.85)x(-0.08+-0.04)/2	0.01		
		(-2.84--1.95)x(-0.12+-0.08)/2	0.09		
		(-2.97--2.84)x(-0.15+-0.12)/2	0.02		
		(-3.83--2.97)x(-0.19+-0.15)/2	0.15		
		(-4.00--3.83)x(-0.22+-0.19)/2	0.03		
		(-4.81--4.00)x(-0.24+-0.22)/2	0.19		
		(-5.02--4.81)x(-0.28+-0.24)/2	0.05		
		(-5.80--5.02)x(-0.28+-0.28)/2	0.22		
		(-6.05--5.80)x(-0.33+-0.28)/2	0.08		
		(-6.79--6.05)x(-0.34+-0.33)/2	0.25		
		(-7.08--6.79)x(-0.36+-0.34)/2	0.10		
		(-7.77--7.08)x(-0.36+-0.36)/2	0.25		
		(-8.10--7.77)x(-0.37+-0.36)/2	0.12		
		A RIPORTARE mq	4.33		

		CALCOLO DELLE AREE		Foglio n. 27	
BONIFICA					
N. SEZIONE PROG.	FIG.	ELEMENTI DI CALCOLO	AREA ELEMENTARE mq	AREA FIGURA mq	NOTE
		RIPORTO mq	4.33		
		(-8.76--8.10)x(-0.37+-0.37)/2	0.24		
		(-9.13--8.76)x(-0.37+-0.37)/2	0.14		
		(-9.75--9.13)x(-0.39+-0.37)/2	0.24		
		(-10.15--9.75)x(-0.38+-0.39)/2	0.15		
		(-10.73--10.15)x(-0.38+-0.38)/2	0.22		
		(-11.18--10.73)x(-0.37+-0.38)/2	0.17		
		(-11.72--11.18)x(-0.37+-0.37)/2	0.20		
		(-12.21--11.72)x(-0.37+-0.37)/2	0.18		
		(-12.70--12.21)x(-0.37+-0.37)/2	0.18		
				6.05	
16	BO2	(15.50-15.39)x(2.42+2.42)/2	0.27		
300.00		(15.91-15.50)x(2.45+2.42)/2	1.00		
		(16.52-15.91)x(2.48+2.45)/2	1.50		
		(16.90-16.52)x(2.51+2.48)/2	0.95		
		(17.55-16.90)x(2.59+2.51)/2	1.66		
		(17.89-17.55)x(2.64+2.59)/2	0.89		
		(18.33-17.89)x(2.64+2.64)/2	1.16		
		(17.89-18.33)x(2.14+2.14)/2	-0.94		
		(17.55-17.89)x(2.09+2.14)/2	-0.72		
		(16.90-17.55)x(2.01+2.09)/2	-1.33		
		(16.52-16.90)x(1.98+2.01)/2	-0.76		
		(15.91-16.52)x(1.95+1.98)/2	-1.20		
		(15.50-15.91)x(1.92+1.95)/2	-0.79		
		(15.39-15.50)x(1.92+1.92)/2	-0.21		
				1.48	
17	BO1	(3.70-3.11)x(3.59+3.54)/2	2.10		
320.00		(4.08-3.70)x(3.67+3.59)/2	1.38		
		(4.75-4.08)x(3.56+3.67)/2	2.42		
		(5.11-4.75)x(3.54+3.56)/2	1.28		
		(5.80-5.11)x(3.27+3.54)/2	2.35		
		(6.14-5.80)x(3.15+3.27)/2	1.09		
		(6.86-6.14)x(3.01+3.15)/2	2.22		
		(7.16-6.86)x(2.89+3.01)/2	0.88		
		(7.91-7.16)x(2.87+2.89)/2	2.16		
		(8.19-7.91)x(2.78+2.87)/2	0.79		
		(8.48-8.19)x(2.77+2.78)/2	0.80		
		(8.19-8.48)x(2.28+2.27)/2	-0.66		
		(7.91-8.19)x(2.37+2.28)/2	-0.65		
		(7.16-7.91)x(2.39+2.37)/2	-1.78		
		(6.86-7.16)x(2.51+2.39)/2	-0.73		
		(6.14-6.86)x(2.65+2.51)/2	-1.86		
		(5.80-6.14)x(2.77+2.65)/2	-0.92		
		(5.11-5.80)x(3.04+2.77)/2	-2.00		
		(4.75-5.11)x(3.06+3.04)/2	-1.10		
		(4.08-4.75)x(3.17+3.06)/2	-2.09		
		(3.70-4.08)x(3.09+3.17)/2	-1.19		
		(3.11-3.70)x(3.04+3.09)/2	-1.81		
				2.68	
17	BO2	(-11.06--11.20)x(3.47+3.49)/2	0.49		
320.00		(-10.28--11.06)x(3.31+3.47)/2	2.64		
		(-10.01--10.28)x(3.26+3.31)/2	0.89		
		(-9.55--10.01)x(3.19+3.26)/2	1.48		
		(-10.01--9.55)x(2.76+2.69)/2	-1.25		
		(-10.28--10.01)x(2.81+2.76)/2	-0.75		
		(-11.06--10.28)x(2.97+2.81)/2	-2.25		
		(-11.20--11.06)x(2.99+2.97)/2	-0.42		
				0.83	
18	BO1	(-8.07--8.76)x(1.51+1.66)/2	1.09		
340.00		(-7.78--8.07)x(1.49+1.51)/2	0.44		
		(-7.04--7.78)x(1.42+1.49)/2	1.08		
		(-6.64--7.04)x(1.44+1.42)/2	0.57		
		(-6.01--6.64)x(1.43+1.44)/2	0.90		
		(-5.51--6.01)x(1.45+1.43)/2	0.72		
		(-4.98--5.51)x(1.48+1.45)/2	0.78		
		(-4.37--4.98)x(1.55+1.48)/2	0.92		
		(-3.96--4.37)x(1.62+1.55)/2	0.65		
		(-3.61--3.96)x(1.63+1.62)/2	0.57		
		(-2.93--3.61)x(1.73+1.63)/2	1.14		
		(-2.10--2.93)x(1.74+1.73)/2	1.44		
		(-1.90--2.10)x(1.74+1.74)/2	0.35		
		(-0.96--1.90)x(1.73+1.74)/2	1.63		
		(-0.87--0.96)x(1.73+1.73)/2	0.16		
		(0.10--0.87)x(1.74+1.73)/2	1.68		
		(0.16-0.10)x(1.74+1.74)/2	0.10		
		(0.17-0.16)x(1.74+1.74)/2	0.02		
		(1.19-0.17)x(1.75+1.74)/2	1.78		
		(1.31-1.19)x(1.74+1.75)/2	0.21		
		(2.22-1.31)x(1.73+1.74)/2	1.58		
		(2.44-2.22)x(1.73+1.73)/2	0.38		
		(3.25-2.44)x(1.76+1.73)/2	1.41		
		(3.58-3.25)x(1.77+1.76)/2	0.58		
		(4.28-3.58)x(1.75+1.77)/2	1.23		
		(4.71-4.28)x(1.75+1.75)/2	0.75		
		(5.31-4.71)x(1.73+1.75)/2	1.04		
		(5.85-5.31)x(1.76+1.73)/2	0.94		
		(6.34-5.85)x(1.78+1.76)/2	0.87		
		(6.99-6.34)x(1.80+1.78)/2	1.16		
		(7.37-6.99)x(1.80+1.80)/2	0.68		
		(8.12-7.37)x(1.84+1.80)/2	1.36		
		(8.40-8.12)x(1.85+1.84)/2	0.52		
		(8.78-8.40)x(1.92+1.85)/2	0.72		
		(8.40-8.78)x(1.35+1.42)/2	-0.53		
		(8.12-8.40)x(1.34+1.35)/2	-0.38		
		(7.37-8.12)x(1.30+1.34)/2	-0.99		
		(6.99-7.37)x(1.30+1.30)/2	-0.49		
		(6.34-6.99)x(1.28+1.30)/2	-0.84		
		(5.85-6.34)x(1.26+1.28)/2	-0.62		
		(5.31-5.85)x(1.23+1.26)/2	-0.67		
		(4.71-5.31)x(1.25+1.23)/2	-0.74		
		(4.28-4.71)x(1.25+1.25)/2	-0.54		
		(3.58-4.28)x(1.27+1.25)/2	-0.88		
		(3.25-3.58)x(1.26+1.27)/2	-0.42		
		(2.44-3.25)x(1.23+1.26)/2	-1.01		
		(2.22-2.44)x(1.23+1.23)/2	-0.27		
		A RIPORTARE mq	21.07		

		CALCOLO DELLE AREE		Foglio n. 28	
BONIFICA					
N. SEZIONE PROG.	FIG.	ELEMENTI DI CALCOLO	AREA ELEMENTARE mq	AREA FIGURA mq	NOTE
		RIPORTO mq	21.07		
		(1.31-2.22)x(1.24+1.23)/2	-1.12		
		(1.19-1.31)x(1.25+1.24)/2	-0.15		
		(0.17-1.19)x(1.24+1.25)/2	-1.27		
		(0.16-0.17)x(1.24+1.24)/2	-0.01		
		(0.10-0.16)x(1.24+1.24)/2	-0.07		
		(-0.87-0.10)x(1.23+1.24)/2	-1.20		
		(-0.96--0.87)x(1.23+1.23)/2	-0.11		
		(-1.90--0.96)x(1.24+1.23)/2	-1.16		
		(-2.10--1.90)x(1.24+1.24)/2	-0.25		
		(-2.93--2.10)x(1.23+1.24)/2	-1.03		
		(-3.61--2.93)x(1.13+1.23)/2	-0.80		
		(-3.96--3.61)x(1.12+1.13)/2	-0.39		
		(-4.37--3.96)x(1.05+1.12)/2	-0.44		
		(-4.98--4.37)x(0.98+1.05)/2	-0.62		
		(-5.51--4.98)x(0.95+0.98)/2	-0.51		
		(-6.01--5.51)x(0.93+0.95)/2	-0.47		
		(-6.64--6.01)x(0.94+0.93)/2	-0.59		
		(-7.04--6.64)x(0.92+0.94)/2	-0.37		
		(-7.78--7.04)x(0.99+0.92)/2	-0.71		
		(-8.07--7.78)x(1.01+0.99)/2	-0.29		
		(-8.76--8.07)x(1.16+1.01)/2	-0.75		
				8.76	
19 360.00	BO1	(-6.81--7.26)x(1.89+1.89)/2	0.85		
		(-6.23--6.81)x(1.89+1.89)/2	1.10		
		(-5.78--6.23)x(1.88+1.89)/2	0.85		
		(-5.03--5.78)x(1.88+1.88)/2	1.41		
		(-4.74--5.03)x(1.88+1.88)/2	0.55		
		(-3.84--4.74)x(1.85+1.88)/2	1.68		
		(-3.71--3.84)x(1.85+1.85)/2	0.24		
		(-2.85--3.71)x(1.86+1.85)/2	1.60		
		(-2.67--2.85)x(1.86+1.86)/2	0.33		
		(-2.65--2.67)x(1.86+1.86)/2	0.04		
		(-1.64--2.65)x(1.84+1.86)/2	1.87		
		(-1.45--1.64)x(1.83+1.84)/2	0.35		
		(-0.60--1.45)x(1.79+1.83)/2	1.54		
		(-0.26--0.60)x(1.79+1.79)/2	0.61		
		(0.43--0.26)x(1.80+1.79)/2	1.24		
		(0.93-0.43)x(1.80+1.80)/2	0.90		
		(1.46-0.93)x(1.83+1.80)/2	0.96		
		(2.13-1.46)x(1.83+1.83)/2	1.23		
		(2.50-2.13)x(1.82+1.83)/2	0.68		
		(3.32-2.50)x(1.78+1.82)/2	1.48		
		(3.53-3.32)x(1.78+1.78)/2	0.37		
		(4.51-3.53)x(1.74+1.78)/2	1.72		
		(4.57-4.51)x(1.73+1.74)/2	0.10		
		(4.93-4.57)x(1.71+1.73)/2	0.62		
		(5.60-4.93)x(1.66+1.71)/2	1.13		
		(5.70-5.60)x(1.65+1.66)/2	0.17		
		(6.64-5.70)x(1.59+1.65)/2	1.52		
		(6.90-6.64)x(1.60+1.59)/2	0.41		
		(7.67-6.90)x(1.61+1.60)/2	1.24		
		(7.80-7.67)x(1.61+1.61)/2	0.21		
		(7.67-7.80)x(1.11+1.11)/2	-0.14		
		(6.90-7.67)x(1.10+1.11)/2	-0.85		
		(6.64-6.90)x(1.09+1.10)/2	-0.28		
		(5.70-6.64)x(1.15+1.09)/2	-1.05		
		(5.60-5.70)x(1.16+1.15)/2	-0.12		
		(4.93-5.60)x(1.21+1.16)/2	-0.79		
		(4.57-4.93)x(1.23+1.21)/2	-0.44		
		(4.51-4.57)x(1.24+1.23)/2	-0.07		
		(3.53-4.51)x(1.28+1.24)/2	-1.23		
		(3.32-3.53)x(1.28+1.28)/2	-0.27		
		(2.50-3.32)x(1.32+1.28)/2	-1.07		
		(2.13-2.50)x(1.33+1.32)/2	-0.49		
		(1.46-2.13)x(1.33+1.33)/2	-0.89		
		(0.93-1.46)x(1.30+1.33)/2	-0.70		
		(0.43-0.93)x(1.30+1.30)/2	-0.65		
		(-0.26-0.43)x(1.29+1.30)/2	-0.89		
		(-0.60--0.26)x(1.29+1.29)/2	-0.44		
		(-1.45--0.60)x(1.33+1.29)/2	-1.11		
		(-1.64--1.45)x(1.34+1.33)/2	-0.25		
		(-2.65--1.64)x(1.36+1.34)/2	-1.36		
		(-2.67--2.65)x(1.36+1.36)/2	-0.03		
		(-2.85--2.67)x(1.36+1.36)/2	-0.24		
		(-3.71--2.85)x(1.35+1.36)/2	-1.17		
		(-3.84--3.71)x(1.35+1.35)/2	-0.18		
		(-4.74--3.84)x(1.38+1.35)/2	-1.23		
		(-5.03--4.74)x(1.38+1.38)/2	-0.40		
		(-5.78--5.03)x(1.38+1.38)/2	-1.03		
		(-6.23--5.78)x(1.39+1.38)/2	-0.62		
		(-6.81--6.23)x(1.39+1.39)/2	-0.81		
		(-7.26--6.81)x(1.39+1.39)/2	-0.63		
				7.57	
20 380.00	BO1	(4.88-4.67)x(2.24+2.26)/2	0.47		
		(5.24-4.88)x(2.21+2.24)/2	0.80		
		(5.39-5.24)x(2.19+2.21)/2	0.33		
		(5.24-5.39)x(1.71+1.69)/2	-0.25		
		(4.88-5.24)x(1.74+1.71)/2	-0.62		
		(4.67-4.88)x(1.76+1.74)/2	-0.37		
				0.36	
20 380.00	BO2	(-5.21--6.02)x(1.82+1.77)/2	1.45		
		(-5.11--5.21)x(1.83+1.82)/2	0.18		
		(-5.10--5.11)x(1.83+1.83)/2	0.02		
		(-4.08--5.10)x(1.87+1.83)/2	1.89		
		(-3.90--4.08)x(1.89+1.87)/2	0.34		
		(-3.04--3.90)x(1.95+1.89)/2	1.65		
		(-2.70--3.04)x(1.96+1.95)/2	0.66		
		(-2.01--2.70)x(1.97+1.96)/2	1.36		
		(-1.50--2.01)x(1.99+1.97)/2	1.01		
		(-0.97--1.50)x(2.00+1.99)/2	1.06		
		(-0.30--0.97)x(2.02+2.00)/2	1.35		
		(0.06--0.30)x(2.02+2.02)/2	0.73		
		(0.90-0.06)x(2.08+2.02)/2	1.72		
		(1.10-0.90)x(2.09+2.08)/2	0.42		
		A RIPORTARE mq	13.84		

		CALCOLO DELLE AREE		Foglio n. 29	
BONIFICA					
N. SEZIONE PROG.	FIG.	ELEMENTI DI CALCOLO	AREA ELEMENTARE mq	AREA FIGURA mq	NOTE
		RIPORTO mq	13.84		
		(2.10-1.10)x(2.20+2.09)/2	2.15		
		(2.13-2.10)x(2.20+2.20)/2	0.07		
		(2.31-2.13)x(2.22+2.20)/2	0.40		
		(2.32-2.31)x(2.22+2.22)/2	0.02		
		(2.31-2.32)x(1.72+1.72)/2	-0.02		
		(2.13-2.31)x(1.70+1.72)/2	-0.31		
		(2.10-2.13)x(1.70+1.70)/2	-0.05		
		(1.10-2.10)x(1.59+1.70)/2	-1.65		
		(0.90-1.10)x(1.58+1.59)/2	-0.32		
		(0.06-0.90)x(1.52+1.58)/2	-1.30		
		(-0.30-0.06)x(1.52+1.52)/2	-0.55		
		(-0.97--0.30)x(1.50+1.52)/2	-1.01		
		(-1.50--0.97)x(1.49+1.50)/2	-0.79		
		(-2.01--1.50)x(1.47+1.49)/2	-0.75		
		(-2.70--2.01)x(1.46+1.47)/2	-1.01		
		(-3.04--2.70)x(1.45+1.46)/2	-0.49		
		(-3.90--3.04)x(1.39+1.45)/2	-1.22		
		(-4.08--3.90)x(1.37+1.39)/2	-0.25		
		(-5.10--4.08)x(1.33+1.37)/2	-1.38		
		(-5.11--5.10)x(1.33+1.33)/2	-0.01		
		(-5.21--5.11)x(1.32+1.33)/2	-0.13		
		(-6.02--5.21)x(1.27+1.32)/2	-1.05		
				4.19	
27	BO1	(-4.75--4.82)x(3.20+3.20)/2	0.22		
520.00		(-4.82--4.75)x(2.70+2.70)/2	-0.19		
				0.03	
28	BO1	(-4.05--4.75)x(3.09+3.09)/2	2.16		
540.00		(-3.79--4.05)x(3.11+3.09)/2	0.81		
		(-2.85--3.79)x(3.07+3.11)/2	2.90		
		(-2.76--2.85)x(3.07+3.07)/2	0.28		
		(-2.18--2.76)x(3.04+3.07)/2	1.77		
		(-1.78--2.18)x(3.02+3.04)/2	1.21		
		(-1.72--1.78)x(3.02+3.02)/2	0.18		
		(-1.66--1.72)x(3.03+3.02)/2	0.18		
		(-1.61--1.66)x(3.04+3.03)/2	0.15		
		(-0.92--1.61)x(3.07+3.04)/2	2.11		
		(-0.85--0.92)x(3.07+3.07)/2	0.21		
		(-0.69--0.85)x(3.06+3.07)/2	0.49		
		(0.04--0.69)x(3.10+3.06)/2	2.25		
		(0.35-0.04)x(3.09+3.10)/2	0.96		
		(0.95-0.35)x(3.10+3.09)/2	1.86		
		(1.38-0.95)x(3.09+3.10)/2	1.33		
		(1.86-1.38)x(3.11+3.09)/2	1.49		
		(2.42-1.86)x(3.13+3.11)/2	1.75		
		(2.77-2.42)x(3.14+3.13)/2	1.10		
		(3.45-2.77)x(3.15+3.14)/2	2.14		
		(3.68-3.45)x(3.15+3.15)/2	0.72		
		(4.49-3.68)x(3.22+3.15)/2	2.58		
		(4.59-4.49)x(3.22+3.22)/2	0.32		
		(5.34-4.59)x(3.23+3.22)/2	2.42		
		(5.52-5.34)x(3.23+3.23)/2	0.58		
		(5.55-5.52)x(3.23+3.23)/2	0.10		
		(6.02-5.55)x(3.23+3.23)/2	1.52		
		(5.55-6.02)x(2.73+2.73)/2	-1.28		
		(5.52-5.55)x(2.73+2.73)/2	-0.08		
		(5.34-5.52)x(2.73+2.73)/2	-0.49		
		(4.59-5.34)x(2.72+2.73)/2	-2.04		
		(4.49-4.59)x(2.72+2.72)/2	-0.27		
		(3.68-4.49)x(2.65+2.72)/2	-2.17		
		(3.45-3.68)x(2.65+2.65)/2	-0.61		
		(2.77-3.45)x(2.64+2.65)/2	-1.80		
		(2.42-2.77)x(2.63+2.64)/2	-0.92		
		(1.86-2.42)x(2.61+2.63)/2	-1.47		
		(1.38-1.86)x(2.59+2.61)/2	-1.25		
		(0.95-1.38)x(2.60+2.59)/2	-1.12		
		(0.35-0.95)x(2.59+2.60)/2	-1.56		
		(0.04-0.35)x(2.60+2.59)/2	-0.80		
		(-0.69-0.04)x(2.56+2.60)/2	-1.88		
		(-0.85--0.69)x(2.57+2.56)/2	-0.41		
		(-0.92--0.85)x(2.57+2.57)/2	-0.18		
		(-1.61--0.92)x(2.54+2.57)/2	-1.76		
		(-1.66--1.61)x(2.53+2.54)/2	-0.13		
		(-1.72--1.66)x(2.52+2.53)/2	-0.15		
		(-1.78--1.72)x(2.52+2.52)/2	-0.15		
		(-2.18--1.78)x(2.54+2.52)/2	-1.01		
		(-2.76--2.18)x(2.57+2.54)/2	-1.48		
		(-2.85--2.76)x(2.57+2.57)/2	-0.23		
		(-3.79--2.85)x(2.61+2.57)/2	-2.43		
		(-4.05--3.79)x(2.59+2.61)/2	-0.68		
		(-4.75--4.05)x(2.59+2.59)/2	-1.81		
				5.41	
29	BO1	(-7.50--7.69)x(3.48+3.47)/2	0.66		
545.48		(-7.49--7.50)x(3.50+3.48)/2	0.03		
		(-7.47--7.49)x(3.48+3.50)/2	0.07		
		(-7.44--7.47)x(3.47+3.48)/2	0.10		
		(-7.41--7.44)x(3.46+3.47)/2	0.10		
		(-7.35--7.41)x(3.45+3.46)/2	0.21		
		(-7.28--7.35)x(3.46+3.45)/2	0.24		
		(-7.25--7.28)x(3.46+3.46)/2	0.10		
		(-7.20--7.25)x(3.46+3.46)/2	0.17		
		(-7.06--7.20)x(3.49+3.46)/2	0.49		
		(-7.05--7.06)x(3.49+3.49)/2	0.03		
		(-6.98--7.05)x(3.50+3.49)/2	0.24		
		(-6.91--6.98)x(3.50+3.50)/2	0.25		
		(-6.88--6.91)x(3.50+3.50)/2	0.11		
		(-6.86--6.88)x(3.50+3.50)/2	0.07		
		(-6.74--6.86)x(3.43+3.50)/2	0.42		
		(-6.27--6.74)x(3.33+3.43)/2	1.59		
		(-6.21--6.27)x(3.32+3.33)/2	0.20		
		(-5.27--6.21)x(3.30+3.32)/2	3.11		
		(-5.18--5.27)x(3.29+3.30)/2	0.30		
		(-4.63--5.18)x(3.26+3.29)/2	1.80		
		(-4.14--4.63)x(3.23+3.26)/2	1.59		
		(-4.07--4.14)x(3.22+3.23)/2	0.23		
		A RIPORTARE mq	12.11		

	CALCOLO DELLE AREE		Foglio n. 30

BONIFICA

N. SEZIONE PROG.	FIG.	ELEMENTI DI CALCOLO	AREA ELEMENTARE mq	AREA FIGURA mq	NOTE
		RIPORTO mq	12.11		
		(-3.11--4.07)x(3.21+3.22)/2	3.09		
		(-2.87--3.11)x(3.18+3.21)/2	0.77		
		(-2.07--2.87)x(3.07+3.18)/2	2.50		
		(-1.67--2.07)x(3.04+3.07)/2	1.22		
		(-1.04--1.67)x(2.99+3.04)/2	1.90		
		(-0.47--1.04)x(3.03+2.99)/2	1.72		
		(-0.00--0.47)x(3.04+3.03)/2	1.43		
		(0.73--0.00)x(3.09+3.04)/2	2.24		
		(1.03-0.73)x(3.11+3.09)/2	0.93		
		(1.26-1.03)x(3.12+3.11)/2	0.72		
		(2.07-1.26)x(3.15+3.12)/2	2.54		
		(2.89-2.07)x(3.14+3.15)/2	2.58		
		(3.10-2.89)x(3.14+3.14)/2	0.66		
		(3.13-3.10)x(3.14+3.14)/2	0.09		
		(4.14-3.13)x(3.07+3.14)/2	3.14		
		(4.33-4.14)x(3.07+3.07)/2	0.58		
		(5.17-4.33)x(3.06+3.07)/2	2.57		
		(5.53-5.17)x(3.07+3.06)/2	1.10		
		(6.21-5.53)x(3.06+3.07)/2	2.08		
		(6.73-6.21)x(3.09+3.06)/2	1.60		
		(7.24-6.73)x(3.10+3.09)/2	1.58		
		(7.93-7.24)x(3.12+3.10)/2	2.15		
		(8.27-7.93)x(3.12+3.12)/2	1.06		
		(9.13-8.27)x(3.14+3.12)/2	2.69		
		(9.22-9.13)x(3.14+3.14)/2	0.28		
		(9.13-9.22)x(2.64+2.64)/2	-0.24		
		(8.27-9.13)x(2.62+2.64)/2	-2.26		
		(7.93-8.27)x(2.62+2.62)/2	-0.89		
		(7.24-7.93)x(2.60+2.62)/2	-1.80		
		(6.73-7.24)x(2.59+2.60)/2	-1.32		
		(6.21-6.73)x(2.56+2.59)/2	-1.34		
		(5.53-6.21)x(2.57+2.56)/2	-1.74		
		(5.17-5.53)x(2.56+2.57)/2	-0.92		
		(4.33-5.17)x(2.57+2.56)/2	-2.15		
		(4.14-4.33)x(2.57+2.57)/2	-0.49		
		(3.13-4.14)x(2.64+2.57)/2	-2.63		
		(3.10-3.13)x(2.64+2.64)/2	-0.08		
		(2.89-3.10)x(2.64+2.64)/2	-0.55		
		(2.07-2.89)x(2.65+2.64)/2	-2.17		
		(1.26-2.07)x(2.62+2.65)/2	-2.13		
		(1.03-1.26)x(2.61+2.62)/2	-0.60		
		(0.73-1.03)x(2.59+2.61)/2	-0.78		
		(-0.00-0.73)x(2.54+2.59)/2	-1.87		
		(-0.47--0.00)x(2.53+2.54)/2	-1.19		
		(-1.04--0.47)x(2.49+2.53)/2	-1.43		
		(-1.67--1.04)x(2.54+2.49)/2	-1.58		
		(-2.07--1.67)x(2.57+2.54)/2	-1.02		
		(-2.87--2.07)x(2.68+2.57)/2	-2.10		
		(-3.11--2.87)x(2.71+2.68)/2	-0.65		
		(-4.07--3.11)x(2.72+2.71)/2	-2.61		
		(-4.14--4.07)x(2.73+2.72)/2	-0.19		
		(-4.63--4.14)x(2.76+2.73)/2	-1.35		
		(-5.18--4.63)x(2.79+2.76)/2	-1.53		
		(-5.27--5.18)x(2.80+2.79)/2	-0.25		
		(-6.21--5.27)x(2.82+2.80)/2	-2.64		
		(-6.27--6.21)x(2.83+2.82)/2	-0.17		
		(-6.74--6.27)x(2.93+2.83)/2	-1.35		
		(-6.86--6.74)x(3.00+2.93)/2	-0.36		
		(-6.88--6.86)x(3.00+3.00)/2	-0.06		
		(-6.91--6.88)x(3.00+3.00)/2	-0.09		
		(-6.98--6.91)x(3.00+3.00)/2	-0.21		
		(-7.05--6.98)x(2.99+3.00)/2	-0.21		
		(-7.06--7.05)x(2.99+2.99)/2	-0.03		
		(-7.20--7.06)x(2.96+2.99)/2	-0.42		
		(-7.25--7.20)x(2.96+2.96)/2	-0.15		
		(-7.28--7.25)x(2.96+2.96)/2	-0.09		
		(-7.35--7.28)x(2.95+2.96)/2	-0.21		
		(-7.41--7.35)x(2.96+2.95)/2	-0.18		
		(-7.44--7.41)x(2.97+2.96)/2	-0.09		
		(-7.47--7.44)x(2.98+2.97)/2	-0.09		
		(-7.49--7.47)x(3.00+2.98)/2	-0.06		
		(-7.50--7.49)x(2.98+3.00)/2	-0.03		
		(-7.69--7.50)x(2.97+2.98)/2	-0.57		
				8.46	

Il Direttore dei Lavori	L'Impresa	

		CALCOLO DELLE LUNGHEZZE		Foglio n. 31	
USURA					
N. SEZIONE PROG.	FIG.	ELEMENTI DI CALCOLO	LUNGHEZZA ELEMENTARE ml	LUNGHEZZA FIGURA ml	NOTE
1	a1	(-6.55--7.55)	1.00		
16.00		(0.00--6.55)	6.55		
		(3.25-0.00)	3.25		
		(7.57-3.25)	4.32		
				15.12	
2	a1	(-3.25--5.48)	2.23		
20.00		(0.00--3.25)	3.25		
		(3.25-0.00)	3.25		
		(6.27-3.25)	3.02		
				11.75	
3	a1	(-3.25--4.25)	1.00		
40.00		(0.00--3.25)	3.25		
		(3.25-0.00)	3.25		
		(4.25-3.25)	1.00		
				8.50	
4	a1	(-3.25--4.25)	1.00		
60.00		(0.00--3.25)	3.25		
		(3.68-0.00)	3.68		
		(4.68-3.68)	1.00		
				8.93	
5	a1	(-3.25--4.25)	1.00		
80.00		(0.00--3.25)	3.25		
		(4.15-0.00)	4.15		
		(5.15-4.15)	1.00		
				9.40	
6	a1	(-3.25--4.25)	1.00		
100.00		(0.00--3.25)	3.25		
		(4.15-0.00)	4.15		
		(5.15-4.15)	1.00		
				9.40	
7	a1	(-3.25--4.25)	1.00		
120.00		(0.00--3.25)	3.25		
		(3.95-0.00)	3.95		
		(4.95-3.95)	1.00		
				9.20	
8	a1	(-3.25--4.25)	1.00		
140.00		(0.00--3.25)	3.25		
		(3.31-0.00)	3.31		
		(4.31-3.31)	1.00		
				8.56	
9	a1	(-3.25--4.25)	1.00		
160.00		(0.00--3.25)	3.25		
		(3.25-0.00)	3.25		
		(4.25-3.25)	1.00		
				8.50	
10	a1	(-3.25--4.25)	1.00		
180.00		(0.00--3.25)	3.25		
		(3.25-0.00)	3.25		
		(4.25-3.25)	1.00		
				8.50	
11	a1	(-3.25--4.25)	1.00		
200.00		(0.00--3.25)	3.25		
		(3.25-0.00)	3.25		
		(4.25-3.25)	1.00		
				8.50	
12	a1	(-3.25--4.25)	1.00		
220.00		(0.00--3.25)	3.25		
		(3.25-0.00)	3.25		
		(4.25-3.25)	1.00		
				8.50	
13	a1	(-3.25--4.25)	1.00		
240.00		(0.00--3.25)	3.25		
		(3.25-0.00)	3.25		
		(4.25-3.25)	1.00		
				8.50	
14	a1	(-3.25--4.25)	1.00		
260.00		(0.00--3.25)	3.25		
		(3.25-0.00)	3.25		
		(4.25-3.25)	1.00		
				8.50	
15	a1	(-3.25--4.25)	1.00		
280.00		(0.00--3.25)	3.25		
		(3.25-0.00)	3.25		
		(4.25-3.25)	1.00		
				8.50	
16	a1	(-3.25--4.25)	1.00		
300.00		(0.00--3.25)	3.25		
		(3.25-0.00)	3.25		
		(4.25-3.25)	1.00		
				8.50	
17	a1	(-3.25--4.25)	1.00		
320.00		(0.00--3.25)	3.25		
		(3.25-0.00)	3.25		
		(4.25-3.25)	1.00		
				8.50	
18	a1	(-3.25--4.25)	1.00		
340.00		(0.00--3.25)	3.25		
		(3.25-0.00)	3.25		
		(4.25-3.25)	1.00		
				8.50	
19	a1	(-3.25--4.25)	1.00		
360.00		(0.00--3.25)	3.25		
		(3.25-0.00)	3.25		
		(4.25-3.25)	1.00		
				8.50	
20	a1	(-3.25--4.25)	1.00		
380.00		(0.00--3.25)	3.25		
		(3.25-0.00)	3.25		
		(4.25-3.25)	1.00		
				8.50	
21	a1	(-3.25--4.25)	1.00		
400.00		(0.00--3.25)	3.25		
		(3.25-0.00)	3.25		
		(4.25-3.25)	1.00		
				8.50	
22	a1	(-3.25--4.25)	1.00		
		A RIPORTARE ml	1.00		

	CALCOLO DELLE LUNGHEZZE		Foglio n. 32

USURA

N. SEZIONE PROG.	FIG.	ELEMENTI DI CALCOLO	LUNGHEZZA ELEMENTARE ml	LUNGHEZZA FIGURA ml	NOTE
		RIPORTO ml	1.00		
420.00		(0.00--3.25)	3.25		
		(3.25-0.00)	3.25		
		(4.25-3.25)	1.00		
				8.50	
23	a1	(-3.25--4.25)	1.00		
440.00		(0.00--3.25)	3.25		
		(3.25-0.00)	3.25		
		(4.25-3.25)	1.00		
				8.50	
24	a1	(-3.25--4.25)	1.00		
460.00		(0.00--3.25)	3.25		
		(3.25-0.00)	3.25		
		(4.25-3.25)	1.00		
				8.50	
25	a1	(-3.25--4.25)	1.00		
480.00		(0.00--3.25)	3.25		
		(3.25-0.00)	3.25		
		(4.25-3.25)	1.00		
				8.50	
26	a1	(-3.25--4.25)	1.00		
500.00		(0.00--3.25)	3.25		
		(3.25-0.00)	3.25		
		(4.25-3.25)	1.00		
				8.50	
27	a1	(-3.25--4.25)	1.00		
520.00		(0.00--3.25)	3.25		
		(3.25-0.00)	3.25		
		(4.25-3.25)	1.00		
				8.50	
28	a1	(0.00--4.75)	4.75		
540.00		(4.75-0.00)	4.75		
				9.50	
29	a1	(0.00--7.69)	7.69		
545.48		(7.69-0.00)	7.69		
				15.38	

Il Direttore dei Lavori	L'Impresa	

	CALCOLO DELLE LUNGHEZZE		Foglio n. 33

VEGETALE

N. SEZIONE PROG.	FIG.	ELEMENTI DI CALCOLO	LUNGHEZZA ELEMENTARE ml	LUNGHEZZA FIGURA ml	NOTE
1	b1	(-9.05--7.70)	1.35		
16.00		(-10.49--9.05)	1.44		
				2.79	
1	b2	(8.57-7.72)	0.85		
16.00		(8.70-8.57)	0.13		
				0.98	
2	b1	(7.27-6.42)	0.85		
20.00		(7.76-7.27)	0.49		
				1.34	
3	b1	(5.25-4.40)	0.85		
40.00		(5.56-5.25)	0.31		
				1.16	
4	b1	(-5.25--4.40)	0.85		
60.00		(-5.54--5.25)	0.29		
				1.14	
4	b2	(5.68-4.83)	0.85		
60.00		(5.71-5.68)	0.03		
				0.88	
5	b1	(-5.25--4.40)	0.85		
80.00		(-6.34--5.25)	1.09		
				1.94	
5	b2	(6.15-5.30)	0.85		
80.00		(6.25-6.15)	0.10		
				0.95	
6	b1	(-5.25--4.40)	0.85		
100.00		(-6.88--5.25)	1.63		
				2.48	
6	b2	(6.15-5.30)	0.85		
100.00		(7.21-6.15)	1.06		
				1.91	
7	b1	(-5.25--4.40)	0.85		
120.00		(-7.32--5.25)	2.07		
				2.92	
7	b2	(5.95-5.10)	0.85		
120.00		(8.44-5.95)	2.49		
				3.34	
8	b1	(-5.25--4.40)	0.85		
140.00		(-7.59--5.25)	2.34		
				3.19	
8	b2	(5.31-4.46)	0.85		
140.00		(9.01-5.31)	3.70		
				4.55	
9	b1	(-5.25--4.40)	0.85		
160.00		(-9.51--5.25)	4.26		
				5.11	
9	b2	(5.25-4.40)	0.85		
160.00		(9.83-5.25)	4.58		
				5.43	
10	b1	(-5.25--4.40)	0.85		
180.00		(-10.35--5.25)	5.10		
				5.95	
10	b2	(5.25-4.40)	0.85		
180.00		(10.94-5.25)	5.69		
				6.54	
11	b1	(-5.25--4.40)	0.85		
200.00		(-11.11--5.25)	5.86		
				6.71	
11	b2	(5.25-4.40)	0.85		
200.00		(11.55-5.25)	6.30		
				7.15	
12	b1	(-5.25--4.40)	0.85		
220.00		(-11.22--5.25)	5.97		
				6.82	
12	b2	(5.25-4.40)	0.85		
220.00		(11.65-5.25)	6.40		
				7.25	
13	b1	(-5.25--4.40)	0.85		
240.00		(-11.76--5.25)	6.51		
				7.36	
13	b2	(5.25-4.40)	0.85		
240.00		(12.02-5.25)	6.77		
				7.62	
14	b1	(-5.25--4.40)	0.85		
260.00		(-11.52--5.25)	6.27		
				7.12	
14	b2	(5.25-4.40)	0.85		
260.00		(11.60-5.25)	6.35		
				7.20	
15	b1	(-5.25--4.40)	0.85		
280.00		(-9.04--5.25)	3.79		
				4.64	
15	b2	(5.25-4.40)	0.85		
280.00		(8.96-5.25)	3.71		
				4.56	
16	b2	(-5.25--4.40)	0.85		
300.00		(-13.23--5.25)	7.98		
				8.83	
16	b1	(5.25-4.40)	0.85		
300.00		(7.44-5.25)	2.19		
		(15.39-7.44)	7.95		
				10.99	
17	b1	(-5.25--4.40)	0.85		
320.00		(-6.23--5.25)	0.98		
		(-9.55--6.23)	3.32		
		(-10.55--9.55)	1.00		
		(-11.64--10.55)	1.09		
				7.24	
17	b2	(5.25-4.40)	0.85		
320.00		(9.07-5.25)	3.82		
				4.67	
18	b1	(-5.25--4.40)	0.85		
340.00		(-9.19--5.25)	3.94		
				4.79	
18	b2	(5.25-4.40)	0.85		
340.00		(9.21-5.25)	3.96		
				4.81	
		A RIPORTARE ml			

	CALCOLO DELLE LUNGHEZZE		Foglio n. 34

VEGETALE

N. SEZIONE PROG.	FIG.	ELEMENTI DI CALCOLO	LUNGHEZZA ELEMENTARE ml	LUNGHEZZA FIGURA ml	NOTE
		RIPORTO ml			
19	b1	(-5.25--4.40)	0.85		
360.00		(-7.79--5.25)	2.54		
				3.39	
19	b2	(5.25-4.40)	0.85		
360.00		(8.37-5.25)	3.12		
				3.97	
20	b1	(-5.25--4.40)	0.85		
380.00		(-6.58--5.25)	1.33		
				2.18	
20	b2	(5.25-4.40)	0.85		
380.00		(6.04-5.25)	0.79		
				1.64	
21	b1	(-5.25--4.40)	0.85		
400.00		(-5.46--5.25)	0.21		
				1.06	
21	b2	(5.25-4.40)	0.85		
400.00		(5.41-5.25)	0.16		
				1.01	
28	b1	(5.75-4.90)	0.85		
540.00		(6.57-5.75)	0.82		
				1.67	
29	b1	(8.69-7.84)	0.85		
545.48		(9.79-8.69)	1.10		
				1.95	

Il Direttore dei Lavori	L'Impresa	

	CALCOLO DELLE LUNGHEZZE		Foglio n. 35

BINDER

N. SEZIONE PROG.	FIG.	ELEMENTI DI CALCOLO	LUNGHEZZA ELEMENTARE ml	LUNGHEZZA FIGURA ml	NOTE
1	c1	(-6.55--7.55)	1.00		
16.00		(0.00--6.55)	6.55		
		(3.25-0.00)	3.25		
		(7.57-3.25)	4.32		
				15.12	
2	c1	(-3.25--5.48)	2.23		
20.00		(0.00--3.25)	3.25		
		(3.25-0.00)	3.25		
		(6.27-3.25)	3.02		
				11.75	
3	c1	(-3.25--4.25)	1.00		
40.00		(0.00--3.25)	3.25		
		(3.25-0.00)	3.25		
		(4.25-3.25)	1.00		
				8.50	
4	c1	(-3.25--4.25)	1.00		
60.00		(0.00--3.25)	3.25		
		(3.68-0.00)	3.68		
		(4.68-3.68)	1.00		
				8.93	
5	c1	(-3.25--4.25)	1.00		
80.00		(0.00--3.25)	3.25		
		(4.15-0.00)	4.15		
		(5.15-4.15)	1.00		
				9.40	
6	c1	(-3.25--4.25)	1.00		
100.00		(0.00--3.25)	3.25		
		(4.15-0.00)	4.15		
		(5.15-4.15)	1.00		
				9.40	
7	c1	(-3.25--4.25)	1.00		
120.00		(0.00--3.25)	3.25		
		(3.95-0.00)	3.95		
		(4.95-3.95)	1.00		
				9.20	
8	c1	(-3.25--4.25)	1.00		
140.00		(0.00--3.25)	3.25		
		(3.31-0.00)	3.31		
		(4.31-3.31)	1.00		
				8.56	
9	c1	(-3.25--4.25)	1.00		
160.00		(0.00--3.25)	3.25		
		(3.25-0.00)	3.25		
		(4.25-3.25)	1.00		
				8.50	
10	c1	(-3.25--4.25)	1.00		
180.00		(0.00--3.25)	3.25		
		(3.25-0.00)	3.25		
		(4.25-3.25)	1.00		
				8.50	
11	c1	(-3.25--4.25)	1.00		
200.00		(0.00--3.25)	3.25		
		(3.25-0.00)	3.25		
		(4.25-3.25)	1.00		
				8.50	
12	c1	(-3.25--4.25)	1.00		
220.00		(0.00--3.25)	3.25		
		(3.25-0.00)	3.25		
		(4.25-3.25)	1.00		
				8.50	
13	c1	(-3.25--4.25)	1.00		
240.00		(0.00--3.25)	3.25		
		(3.25-0.00)	3.25		
		(4.25-3.25)	1.00		
				8.50	
14	c1	(-3.25--4.25)	1.00		
260.00		(0.00--3.25)	3.25		
		(3.25-0.00)	3.25		
		(4.25-3.25)	1.00		
				8.50	
15	c1	(-3.25--4.25)	1.00		
280.00		(0.00--3.25)	3.25		
		(3.25-0.00)	3.25		
		(4.25-3.25)	1.00		
				8.50	
16	c1	(-3.25--4.25)	1.00		
300.00		(0.00--3.25)	3.25		
		(3.25-0.00)	3.25		
		(4.25-3.25)	1.00		
				8.50	
17	c1	(-3.25--4.25)	1.00		
320.00		(0.00--3.25)	3.25		
		(3.25-0.00)	3.25		
		(4.25-3.25)	1.00		
				8.50	
18	c1	(-3.25--4.25)	1.00		
340.00		(0.00--3.25)	3.25		
		(3.25-0.00)	3.25		
		(4.25-3.25)	1.00		
				8.50	
19	c1	(-3.25--4.25)	1.00		
360.00		(0.00--3.25)	3.25		
		(3.25-0.00)	3.25		
		(4.25-3.25)	1.00		
				8.50	
20	c1	(-3.25--4.25)	1.00		
380.00		(0.00--3.25)	3.25		
		(3.25-0.00)	3.25		
		(4.25-3.25)	1.00		
				8.50	
21	c1	(-3.25--4.25)	1.00		
400.00		(0.00--3.25)	3.25		
		(3.25-0.00)	3.25		
		(4.25-3.25)	1.00		
				8.50	
22	c1	(-3.25--4.25)	1.00		
		A RIPORTARE ml	1.00		

	CALCOLO DELLE LUNGHEZZE		Foglio n. 36

BINDER

N. SEZIONE PROG.	FIG.	ELEMENTI DI CALCOLO	LUNGHEZZA ELEMENTARE ml	LUNGHEZZA FIGURA ml	NOTE
		RIPORTO ml	1.00		
420.00		(0.00--3.25)	3.25		
		(3.25-0.00)	3.25		
		(4.25-3.25)	1.00		
				8.50	
23	c1	(-3.25--4.25)	1.00		
440.00		(0.00--3.25)	3.25		
		(3.25-0.00)	3.25		
		(4.25-3.25)	1.00		
				8.50	
24	c1	(-3.25--4.25)	1.00		
460.00		(0.00--3.25)	3.25		
		(3.25-0.00)	3.25		
		(4.25-3.25)	1.00		
				8.50	
25	c1	(-3.25--4.25)	1.00		
480.00		(0.00--3.25)	3.25		
		(3.25-0.00)	3.25		
		(4.25-3.25)	1.00		
				8.50	
26	c1	(-3.25--4.25)	1.00		
500.00		(0.00--3.25)	3.25		
		(3.25-0.00)	3.25		
		(4.25-3.25)	1.00		
				8.50	
27	c1	(-3.25--4.25)	1.00		
520.00		(0.00--3.25)	3.25		
		(3.25-0.00)	3.25		
		(4.25-3.25)	1.00		
				8.50	
28	c1	(0.00--4.75)	4.75		
540.00		(3.25-0.00)	3.25		
		(4.75-3.25)	1.50		
				9.50	
29	c1	(-6.69--7.69)	1.00		
545.48		(0.00--6.69)	6.69		
		(6.69-0.00)	6.69		
		(7.69-6.69)	1.00		
				15.38	

Il Direttore dei Lavori	L'Impresa	

		CALCOLO DELLE LUNGHEZZE		Foglio n. 37

BASE

N. SEZIONE PROG.	FIG.	ELEMENTI DI CALCOLO	LUNGHEZZA ELEMENTARE ml	LUNGHEZZA FIGURA ml	NOTE
1	d1	(-6.55--7.55)	1.00		
16.00		(0.00--6.55)	6.55		
		(3.25-0.00)	3.25		
		(7.57-3.25)	4.32		
				15.12	
2	d1	(-3.25--5.48)	2.23		
20.00		(0.00--3.25)	3.25		
		(3.25-0.00)	3.25		
		(6.27-3.25)	3.02		
				11.75	
3	d1	(-3.25--4.25)	1.00		
40.00		(0.00--3.25)	3.25		
		(3.25-0.00)	3.25		
		(4.25-3.25)	1.00		
				8.50	
4	d1	(-3.25--4.25)	1.00		
60.00		(0.00--3.25)	3.25		
		(3.68-0.00)	3.68		
		(4.68-3.68)	1.00		
				8.93	
5	d1	(-3.25--4.25)	1.00		
80.00		(0.00--3.25)	3.25		
		(4.15-0.00)	4.15		
		(5.15-4.15)	1.00		
				9.40	
6	d1	(-3.25--4.25)	1.00		
100.00		(0.00--3.25)	3.25		
		(4.15-0.00)	4.15		
		(5.15-4.15)	1.00		
				9.40	
7	d1	(-3.25--4.25)	1.00		
120.00		(0.00--3.25)	3.25		
		(3.95-0.00)	3.95		
		(4.95-3.95)	1.00		
				9.20	
8	d1	(-3.25--4.25)	1.00		
140.00		(0.00--3.25)	3.25		
		(3.31-0.00)	3.31		
		(4.31-3.31)	1.00		
				8.56	
9	d1	(-3.25--4.25)	1.00		
160.00		(0.00--3.25)	3.25		
		(3.25-0.00)	3.25		
		(4.25-3.25)	1.00		
				8.50	
10	d1	(-3.25--4.25)	1.00		
180.00		(0.00--3.25)	3.25		
		(3.25-0.00)	3.25		
		(4.25-3.25)	1.00		
				8.50	
11	d1	(-3.25--4.25)	1.00		
200.00		(0.00--3.25)	3.25		
		(3.25-0.00)	3.25		
		(4.25-3.25)	1.00		
				8.50	
12	d1	(-3.25--4.25)	1.00		
220.00		(0.00--3.25)	3.25		
		(3.25-0.00)	3.25		
		(4.25-3.25)	1.00		
				8.50	
13	d1	(-3.25--4.25)	1.00		
240.00		(0.00--3.25)	3.25		
		(3.25-0.00)	3.25		
		(4.25-3.25)	1.00		
				8.50	
14	d1	(-3.25--4.25)	1.00		
260.00		(0.00--3.25)	3.25		
		(3.25-0.00)	3.25		
		(4.25-3.25)	1.00		
				8.50	
15	d1	(-3.25--4.25)	1.00		
280.00		(0.00--3.25)	3.25		
		(3.25-0.00)	3.25		
		(4.25-3.25)	1.00		
				8.50	
16	d1	(-3.25--4.25)	1.00		
300.00		(0.00--3.25)	3.25		
		(3.25-0.00)	3.25		
		(4.25-3.25)	1.00		
				8.50	
17	d1	(-3.25--4.25)	1.00		
320.00		(0.00--3.25)	3.25		
		(3.25-0.00)	3.25		
		(4.25-3.25)	1.00		
				8.50	
18	d1	(-3.25--4.25)	1.00		
340.00		(0.00--3.25)	3.25		
		(3.25-0.00)	3.25		
		(4.25-3.25)	1.00		
				8.50	
19	d1	(-3.25--4.25)	1.00		
360.00		(0.00--3.25)	3.25		
		(3.25-0.00)	3.25		
		(4.25-3.25)	1.00		
				8.50	
20	d1	(-3.25--4.25)	1.00		
380.00		(0.00--3.25)	3.25		
		(3.25-0.00)	3.25		
		(4.25-3.25)	1.00		
				8.50	
21	d1	(-3.25--4.25)	1.00		
400.00		(0.00--3.25)	3.25		
		(3.25-0.00)	3.25		
		(4.25-3.25)	1.00		
				8.50	
22	d1	(-3.25--4.25)	1.00		
		A RIPORTARE ml	1.00		

	CALCOLO DELLE LUNGHEZZE		Foglio n. 38

BASE

N. SEZIONE PROG.	FIG.	ELEMENTI DI CALCOLO	LUNGHEZZA ELEMENTARE ml	LUNGHEZZA FIGURA ml	NOTE
		RIPORTO ml	1.00		
420.00		(0.00--3.25)	3.25		
		(3.25-0.00)	3.25		
		(4.25-3.25)	1.00		
				8.50	
23	d1	(-3.25--4.25)	1.00		
440.00		(0.00--3.25)	3.25		
		(3.25-0.00)	3.25		
		(4.25-3.25)	1.00		
				8.50	
24	d1	(-3.25--4.25)	1.00		
460.00		(0.00--3.25)	3.25		
		(3.25-0.00)	3.25		
		(4.25-3.25)	1.00		
				8.50	
25	d1	(-3.25--4.25)	1.00		
480.00		(0.00--3.25)	3.25		
		(3.25-0.00)	3.25		
		(4.25-3.25)	1.00		
				8.50	
26	d1	(-3.25--4.25)	1.00		
500.00		(0.00--3.25)	3.25		
		(3.25-0.00)	3.25		
		(4.25-3.25)	1.00		
				8.50	
27	d1	(-3.25--4.25)	1.00		
520.00		(0.00--3.25)	3.25		
		(3.25-0.00)	3.25		
		(4.25-3.25)	1.00		
				8.50	
28	d1	(0.00--4.75)	4.75		
540.00		(3.25-0.00)	3.25		
		(4.75-3.25)	1.50		
				9.50	
29	d1	(-6.69--7.69)	1.00		
545.48		(-0.00--6.69)	6.69		
		(6.69--0.00)	6.69		
		(7.69-6.69)	1.00		
				15.38	
29	d2	(-6.69--7.69)	1.00		
545.48		(-0.00--6.69)	6.69		
		(6.69--0.00)	6.69		
		(7.69-6.69)	1.00		
				15.38	

Il Direttore dei Lavori	L'Impresa	

	CALCOLO DELLE LUNGHEZZE		Foglio n. 39

FONDAZIONE

N. SEZIONE PROG.	FIG.	ELEMENTI DI CALCOLO	LUNGHEZZA ELEMENTARE ml	LUNGHEZZA FIGURA ml	NOTE
1	e1	(-6.55--7.55)	1.00		
16.00		(0.00--6.55)	6.55		
		(3.25-0.00)	3.25		
		(7.57-3.25)	4.32		
				15.12	
2	e1	(-3.25--5.48)	2.23		
20.00		(0.00--3.25)	3.25		
		(3.25-0.00)	3.25		
		(6.27-3.25)	3.02		
				11.75	
3	e1	(-3.25--4.25)	1.00		
40.00		(0.00--3.25)	3.25		
		(3.25-0.00)	3.25		
		(4.25-3.25)	1.00		
				8.50	
4	e1	(-3.25--4.25)	1.00		
60.00		(0.00--3.25)	3.25		
		(3.68-0.00)	3.68		
		(4.68-3.68)	1.00		
				8.93	
5	e1	(-3.25--4.25)	1.00		
80.00		(0.00--3.25)	3.25		
		(4.15-0.00)	4.15		
		(5.15-4.15)	1.00		
				9.40	
6	e1	(-3.25--4.25)	1.00		
100.00		(0.00--3.25)	3.25		
		(4.15-0.00)	4.15		
		(5.15-4.15)	1.00		
				9.40	
7	e1	(-3.25--4.25)	1.00		
120.00		(0.00--3.25)	3.25		
		(3.95-0.00)	3.95		
		(4.95-3.95)	1.00		
				9.20	
8	e1	(-3.25--4.25)	1.00		
140.00		(0.00--3.25)	3.25		
		(3.31-0.00)	3.31		
		(4.31-3.31)	1.00		
				8.56	
9	e1	(-3.25--4.25)	1.00		
160.00		(0.00--3.25)	3.25		
		(3.25-0.00)	3.25		
		(4.25-3.25)	1.00		
				8.50	
10	e1	(-3.25--4.25)	1.00		
180.00		(0.00--3.25)	3.25		
		(3.25-0.00)	3.25		
		(4.25-3.25)	1.00		
				8.50	
11	e1	(-3.25--4.25)	1.00		
200.00		(0.00--3.25)	3.25		
		(3.25-0.00)	3.25		
		(4.25-3.25)	1.00		
				8.50	
12	e1	(-3.25--4.25)	1.00		
220.00		(0.00--3.25)	3.25		
		(3.25-0.00)	3.25		
		(4.25-3.25)	1.00		
				8.50	
13	e1	(-3.25--4.25)	1.00		
240.00		(0.00--3.25)	3.25		
		(3.25-0.00)	3.25		
		(4.25-3.25)	1.00		
				8.50	
14	e1	(-3.25--4.25)	1.00		
260.00		(0.00--3.25)	3.25		
		(3.25-0.00)	3.25		
		(4.25-3.25)	1.00		
				8.50	
15	e1	(-3.25--4.25)	1.00		
280.00		(0.00--3.25)	3.25		
		(3.25-0.00)	3.25		
		(4.25-3.25)	1.00		
				8.50	
16	e1	(-3.25--4.25)	1.00		
300.00		(0.00--3.25)	3.25		
		(3.25-0.00)	3.25		
		(4.25-3.25)	1.00		
				8.50	
17	e1	(-3.25--4.25)	1.00		
320.00		(0.00--3.25)	3.25		
		(3.25-0.00)	3.25		
		(4.25-3.25)	1.00		
				8.50	
18	e1	(-3.25--4.25)	1.00		
340.00		(0.00--3.25)	3.25		
		(3.25-0.00)	3.25		
		(4.25-3.25)	1.00		
				8.50	
19	e1	(-3.25--4.25)	1.00		
360.00		(0.00--3.25)	3.25		
		(3.25-0.00)	3.25		
		(4.25-3.25)	1.00		
				8.50	
20	e1	(-3.25--4.25)	1.00		
380.00		(0.00--3.25)	3.25		
		(3.25-0.00)	3.25		
		(4.25-3.25)	1.00		
				8.50	
21	e1	(-3.25--4.25)	1.00		
400.00		(0.00--3.25)	3.25		
		(3.25-0.00)	3.25		
		(4.25-3.25)	1.00		
				8.50	
22	e1	(-3.25--4.25)	1.00		
		A RIPORTARE ml	1.00		

	CALCOLO DELLE LUNGHEZZE		Foglio n. 40

FONDAZIONE

N. SEZIONE PROG.	FIG.	ELEMENTI DI CALCOLO	LUNGHEZZA ELEMENTARE ml	LUNGHEZZA FIGURA ml	NOTE
		RIPORTO ml	1.00		
420.00		(0.00--3.25)	3.25		
		(3.25-0.00)	3.25		
		(4.25-3.25)	1.00		
				8.50	
23	e1	(-3.25--4.25)	1.00		
440.00		(0.00--3.25)	3.25		
		(3.25-0.00)	3.25		
		(4.25-3.25)	1.00		
				8.50	
24	e1	(-3.25--4.25)	1.00		
460.00		(0.00--3.25)	3.25		
		(3.25-0.00)	3.25		
		(4.25-3.25)	1.00		
				8.50	
25	e1	(-3.25--4.25)	1.00		
480.00		(0.00--3.25)	3.25		
		(3.25-0.00)	3.25		
		(4.25-3.25)	1.00		
				8.50	
26	e1	(-3.25--4.25)	1.00		
500.00		(0.00--3.25)	3.25		
		(3.25-0.00)	3.25		
		(4.25-3.25)	1.00		
				8.50	
27	e1	(-3.25--4.25)	1.00		
520.00		(0.00--3.25)	3.25		
		(3.25-0.00)	3.25		
		(4.25-3.25)	1.00		
				8.50	
28	e1	(0.00--4.75)	4.75		
540.00		(3.25-0.00)	3.25		
		(4.75-3.25)	1.50		
				9.50	

Il Direttore dei Lavori	L'Impresa	

	CALCOLO DELLE LUNGHEZZE		Foglio n. 41

SCOTICO

N. SEZIONE PROG.	FIG.	ELEMENTI DI CALCOLO	LUNGHEZZA ELEMENTARE ml	LUNGHEZZA FIGURA ml	NOTE
7	sc1	(-6.78--6.78)	0.00		
120.00		(-6.51--6.78)	0.27		
		(-6.18--6.51)	0.33		
		(-5.40--6.18)	0.78		
		(-5.40--5.40)	0.00		
		(-5.40--5.40)	0.00		
		(-4.62--5.40)	0.78		
		(-4.28--4.62)	0.34		
		(-3.42--4.28)	0.86		
		(-3.16--3.42)	0.26		
		(-3.06--3.16)	0.10		
		(-2.83--3.06)	0.23		
		(-2.04--2.83)	0.79		
		(-1.44--2.04)	0.60		
		(-0.93--1.44)	0.51		
		(-0.91--0.93)	0.02		
		(-0.88--0.91)	0.03		
		(-0.88--0.88)	0.00		
		(-0.88--0.88)	0.00		
		(0.06--0.88)	0.94		
		(0.19-0.06)	0.13		
		(0.84-0.19)	0.65		
		(1.31-0.84)	0.47		
		(1.47-1.31)	0.16		
		(1.64-1.47)	0.17		
		(1.74-1.64)	0.10		
		(1.81-1.74)	0.07		
		(1.86-1.81)	0.05		
		(1.89-1.86)	0.03		
		(1.92-1.89)	0.03		
		(1.95-1.92)	0.03		
		(1.97-1.95)	0.02		
		(1.98-1.97)	0.01		
		(1.99-1.98)	0.01		
		(2.01-1.99)	0.02		
		(2.04-2.01)	0.03		
		(2.05-2.04)	0.01		
		(2.06-2.05)	0.01		
		(2.38-2.06)	0.32		
		(2.42-2.38)	0.04		
		(2.43-2.42)	0.01		
		(2.67-2.43)	0.24		
		(2.83-2.67)	0.16		
		(3.32-2.83)	0.49		
		(3.33-3.32)	0.01		
		(3.35-3.33)	0.02		
		(3.37-3.35)	0.02		
		(3.42-3.37)	0.05		
		(3.50-3.42)	0.08		
		(3.54-3.50)	0.04		
		(3.96-3.54)	0.42		
		(4.66-3.96)	0.70		
		(4.73-4.66)	0.07		
		(4.90-4.73)	0.17		
		(5.51-4.90)	0.61		
		(5.78-5.51)	0.27		
		(5.88-5.78)	0.10		
		(5.98-5.88)	0.10		
		(6.05-5.98)	0.07		
		(6.11-6.05)	0.06		
		(6.12-6.11)	0.01		
		(6.15-6.12)	0.03		
		(6.15-6.15)	0.00		
		(6.15-6.15)	0.00		
		(6.15-6.15)	0.00		
		(6.59-6.15)	0.44		
		(6.74-6.59)	0.15		
		(6.90-6.74)	0.16		
		(6.93-6.90)	0.03		
		(7.01-6.93)	0.08		
		(7.03-7.01)	0.02		
		(7.05-7.03)	0.02		
		(7.05-7.05)	0.00		
		(7.88-7.05)	0.83		
		(7.88-7.88)	0.00		
				14.66	
8	sc1	(-7.11--7.11)	0.00		
140.00		(-7.06--7.11)	0.05		
		(-6.38--7.06)	0.68		
		(-5.77--6.38)	0.61		
		(-5.41--5.77)	0.36		
		(-5.22--5.41)	0.19		
		(-4.65--5.22)	0.57		
		(-4.06--4.65)	0.59		
		(-3.89--4.06)	0.17		
		(-3.58--3.89)	0.31		
		(-3.14--3.58)	0.44		
		(-2.90--3.14)	0.24		
		(-2.38--2.90)	0.52		
		(-1.74--2.38)	0.64		
		(-1.62--1.74)	0.12		
		(-1.38--1.62)	0.24		
		(-0.86--1.38)	0.52		
		(-0.58--0.86)	0.28		
		(-0.10--0.58)	0.48		
		(0.58--0.10)	0.68		
		(0.66-0.58)	0.08		
		(0.81-0.66)	0.15		
		(1.42-0.81)	0.61		
		(1.74-1.42)	0.32		
		(2.18-1.74)	0.44		
		(2.90-2.18)	0.72		
		(2.93-2.90)	0.03		
		(3.01-2.93)	0.08		
		(3.69-3.01)	0.68		
		(4.06-3.69)	0.37		
		A RIPORTARE ml	11.17		

		CALCOLO DELLE LUNGHEZZE		Foglio n. 42
SCOTICO				
N. SEZIONE PROG.	FIG.	ELEMENTI DI CALCOLO	LUNGHEZZA ELEMENTARE ml	LUNGHEZZA FIGURA ml	NOTE
		RIPORTO ml	11.17		
		(4.45-4.06)	0.39		
		(5.20-4.45)	0.75		
		(5.21-5.20)	0.01		
		(5.22-5.21)	0.01		
		(5.97-5.22)	0.75		
		(6.37-5.97)	0.40		
		(6.73-6.37)	0.36		
		(7.40-6.73)	0.67		
		(7.49-7.40)	0.09		
		(7.53-7.49)	0.04		
		(8.25-7.53)	0.72		
		(8.49-8.25)	0.24		
		(8.49-8.49)	0.00		
				15.60	
9	sc1	(-9.02--9.02)	0.00		
160.00		(-8.78--9.02)	0.24		
		(-8.34--8.78)	0.44		
		(-7.63--8.34)	0.71		
		(-7.58--7.63)	0.05		
		(-7.48--7.58)	0.10		
		(-6.82--7.48)	0.66		
		(-6.47--6.82)	0.35		
		(-6.06--6.47)	0.41		
		(-5.31--6.06)	0.75		
		(-5.30--5.31)	0.01		
		(-5.26--5.30)	0.04		
		(-4.54--5.26)	0.72		
		(-4.16--4.54)	0.38		
		(-3.78--4.16)	0.38		
		(-3.04--3.78)	0.74		
		(-3.02--3.04)	0.02		
		(-3.00--3.02)	0.02		
		(-2.26--3.00)	0.74		
		(-1.85--2.26)	0.41		
		(-1.50--1.85)	0.35		
		(-0.83--1.50)	0.67		
		(-0.74--0.83)	0.09		
		(-0.69--0.74)	0.05		
		(0.02--0.69)	0.71		
		(0.47-0.02)	0.45		
		(0.78-0.47)	0.31		
		(1.39-0.78)	0.61		
		(1.54-1.39)	0.15		
		(1.62-1.54)	0.08		
		(2.30-1.62)	0.68		
		(2.78-2.30)	0.48		
		(3.06-2.78)	0.28		
		(3.61-3.06)	0.55		
		(3.82-3.61)	0.21		
		(3.94-3.82)	0.12		
		(4.58-3.94)	0.64		
		(5.09-4.58)	0.51		
		(5.34-5.09)	0.25		
		(5.83-5.34)	0.49		
		(6.10-5.83)	0.27		
		(6.25-6.10)	0.15		
		(6.86-6.25)	0.61		
		(7.40-6.86)	0.54		
		(7.62-7.40)	0.22		
		(8.05-7.62)	0.43		
		(8.56-8.05)	0.51		
		(9.12-8.56)	0.56		
		(9.27-9.12)	0.15		
		(9.27-9.27)	0.00		
				18.29	
10	sc1	(-9.83--9.83)	0.00		
180.00		(-9.46--9.83)	0.37		
		(-9.43--9.46)	0.03		
		(-9.41--9.43)	0.02		
		(-8.66--9.41)	0.75		
		(-8.28--8.66)	0.38		
		(-7.89--8.28)	0.39		
		(-7.15--7.89)	0.74		
		(-7.11--7.15)	0.04		
		(-7.04--7.11)	0.07		
		(-6.34--7.04)	0.70		
		(-6.01--6.34)	0.33		
		(-5.57--6.01)	0.44		
		(-4.88--5.57)	0.69		
		(-4.80--4.88)	0.08		
		(-4.63--4.80)	0.17		
		(-4.03--4.63)	0.60		
		(-3.75--4.03)	0.28		
		(-3.26--3.75)	0.49		
		(-2.62--3.26)	0.64		
		(-2.49--2.62)	0.13		
		(-2.22--2.49)	0.27		
		(-1.72--2.22)	0.50		
		(-1.48--1.72)	0.24		
		(-0.95--1.48)	0.53		
		(-0.35--0.95)	0.60		
		(-0.18--0.35)	0.17		
		(0.19--0.18)	0.37		
		(0.59-0.19)	0.40		
		(0.78-0.59)	0.19		
		(1.36-0.78)	0.58		
		(1.91-1.36)	0.55		
		(2.13-1.91)	0.22		
		(2.60-2.13)	0.47		
		(2.90-2.60)	0.30		
		(3.05-2.90)	0.15		
		(3.68-3.05)	0.63		
		(4.18-3.68)	0.50		
		(4.45-4.18)	0.27		
		A RIPORTARE ml	14.28		

		CALCOLO DELLE LUNGHEZZE		Foglio n. 43	
SCOTICO					
N. SEZIONE PROG.	FIG.	ELEMENTI DI CALCOLO	LUNGHEZZA ELEMENTARE ml	LUNGHEZZA FIGURA ml	NOTE
		RIPORTO ml	14.28		
		(5.01-4.45)	0.56		
		(5.22-5.01)	0.21		
		(5.31-5.22)	0.09		
		(5.99-5.31)	0.68		
		(6.45-5.99)	0.46		
		(6.76-6.45)	0.31		
		(7.42-6.76)	0.66		
		(7.53-7.42)	0.11		
		(7.58-7.53)	0.05		
		(8.30-7.58)	0.72		
		(8.71-8.30)	0.41		
		(9.07-8.71)	0.36		
		(9.83-9.07)	0.76		
		(9.84-9.83)	0.01		
		(9.84-9.84)	0.00		
		(10.40-9.84)	0.56		
		(10.40-10.40)	0.00		
				20.23	
11	sc1	(-10.56--10.56)	0.00		
200.00		(-9.93--10.56)	0.63		
		(-9.51--9.93)	0.42		
		(-8.83--9.51)	0.68		
		(-8.46--8.83)	0.37		
		(-7.93--8.46)	0.53		
		(-7.72--7.93)	0.21		
		(-7.14--7.72)	0.58		
		(-6.62--7.14)	0.52		
		(-6.35--6.62)	0.27		
		(-5.64--6.35)	0.71		
		(-5.56--5.64)	0.08		
		(-5.52--5.56)	0.04		
		(-4.77--5.52)	0.75		
		(-4.42--4.77)	0.35		
		(-3.97--4.42)	0.45		
		(-3.32--3.97)	0.65		
		(-3.18--3.32)	0.14		
		(-2.83--3.18)	0.35		
		(-2.39--2.83)	0.44		
		(-2.22--2.39)	0.17		
		(-1.60--2.22)	0.62		
		(-1.12--1.60)	0.48		
		(-0.81--1.12)	0.31		
		(-0.02--0.81)	0.79		
		(-0.02--0.02)	0.00		
		(-0.02--0.02)	0.00		
		(0.77--0.02)	0.79		
		(1.08-0.77)	0.31		
		(1.57-1.08)	0.49		
		(2.18-1.57)	0.61		
		(2.36-2.18)	0.18		
		(2.80-2.36)	0.44		
		(3.15-2.80)	0.35		
		(3.29-3.15)	0.14		
		(3.94-3.29)	0.65		
		(4.39-3.94)	0.45		
		(4.73-4.39)	0.34		
		(5.49-4.73)	0.76		
		(5.52-5.49)	0.03		
		(5.61-5.52)	0.09		
		(6.31-5.61)	0.70		
		(6.59-6.31)	0.28		
		(7.11-6.59)	0.52		
		(7.69-7.11)	0.58		
		(7.90-7.69)	0.21		
		(8.43-7.90)	0.53		
		(8.69-8.43)	0.26		
		(8.79-8.69)	0.10		
		(9.48-8.79)	0.69		
		(9.89-9.48)	0.41		
		(10.27-9.89)	0.38		
		(10.99-10.27)	0.72		
		(10.99-10.99)	0.00		
				21.55	
12	sc1	(-10.68--10.68)	0.00		
220.00		(-10.23--10.68)	0.45		
		(-9.91--10.23)	0.32		
		(-9.15--9.91)	0.76		
		(-9.09--9.15)	0.06		
		(-8.90--9.09)	0.19		
		(-8.08--8.90)	0.82		
		(-7.70--8.08)	0.38		
		(-7.00--7.70)	0.70		
		(-6.13--7.00)	0.87		
		(-5.93--6.13)	0.20		
		(-5.50--5.93)	0.43		
		(-5.01--5.50)	0.49		
		(-4.85--5.01)	0.16		
		(-4.19--4.85)	0.66		
		(-3.78--4.19)	0.41		
		(-3.37--3.78)	0.41		
		(-2.70--3.37)	0.67		
		(-2.56--2.70)	0.14		
		(-2.09--2.56)	0.47		
		(-1.74--2.09)	0.35		
		(-1.63--1.74)	0.11		
		(-0.92--1.63)	0.71		
		(-0.55--0.92)	0.37		
		(-0.10--0.55)	0.45		
		(0.52--0.10)	0.62		
		(0.71-0.52)	0.19		
		(1.31-0.71)	0.60		
		(1.53-1.31)	0.22		
		(1.60-1.53)	0.07		
		(2.35-1.60)	0.75		
		A RIPORTARE ml	13.03		

		CALCOLO DELLE LUNGHEZZE		Foglio n. 44	
SCOTICO					
N. SEZIONE PROG.	FIG.	ELEMENTI DI CALCOLO	LUNGHEZZA ELEMENTARE ml	LUNGHEZZA FIGURA ml	NOTE
		RIPORTO ml	13.03		
		(2.68-2.35)	0.33		
		(3.16-2.68)	0.48		
		(3.75-3.16)	0.59		
		(3.98-3.75)	0.23		
		(4.71-3.98)	0.73		
		(4.80-4.71)	0.09		
		(4.83-4.80)	0.03		
		(5.61-4.83)	0.78		
		(5.90-5.61)	0.29		
		(6.43-5.90)	0.53		
		(6.98-6.43)	0.55		
		(7.25-6.98)	0.27		
		(8.05-7.25)	0.80		
		(8.07-8.05)	0.02		
		(8.11-8.07)	0.04		
		(8.88-8.11)	0.77		
		(9.13-8.88)	0.25		
		(9.70-9.13)	0.57		
		(10.20-9.70)	0.50		
		(10.52-10.20)	0.32		
		(11.11-10.52)	0.59		
		(11.11-11.11)	0.00		
				21.79	
13 240.00	sc1	(-11.19--11.19)	0.00		
		(-10.69--11.19)	0.50		
		(-10.31--10.69)	0.38		
		(-9.84--10.31)	0.47		
		(-9.25--9.84)	0.59		
		(-8.99--9.25)	0.26		
		(-8.20--8.99)	0.79		
		(-8.15--8.20)	0.05		
		(-7.93--8.15)	0.22		
		(-7.30--7.93)	0.63		
		(-7.14--7.30)	0.16		
		(-6.45--7.14)	0.69		
		(-6.09--6.45)	0.36		
		(-5.60--6.09)	0.49		
		(-5.03--5.60)	0.57		
		(-4.75--5.03)	0.28		
		(-3.98--4.75)	0.77		
		(-3.90--3.98)	0.08		
		(-3.61--3.90)	0.29		
		(-2.92--3.61)	0.69		
		(-2.70--2.92)	0.22		
		(-1.87--2.70)	0.83		
		(-1.31--1.87)	0.56		
		(-0.81--1.31)	0.50		
		(0.09--0.81)	0.90		
		(0.24-0.09)	0.15		
		(0.72-0.24)	0.48		
		(1.18-0.72)	0.46		
		(1.30-1.18)	0.12		
		(2.03-1.30)	0.73		
		(2.35-2.03)	0.32		
		(2.88-2.35)	0.53		
		(3.41-2.88)	0.53		
		(3.73-3.41)	0.32		
		(4.47-3.73)	0.74		
		(4.58-4.47)	0.11		
		(5.04-4.58)	0.46		
		(5.43-5.04)	0.39		
		(5.52-5.43)	0.09		
		(6.27-5.52)	0.75		
		(6.58-6.27)	0.31		
		(7.12-6.58)	0.54		
		(7.63-7.12)	0.51		
		(7.97-7.63)	0.34		
		(8.69-7.97)	0.72		
		(8.82-8.69)	0.13		
		(9.36-8.82)	0.54		
		(9.67-9.36)	0.31		
		(9.74-9.67)	0.07		
		(10.52-9.74)	0.78		
		(10.80-10.52)	0.28		
		(11.36-10.80)	0.56		
		(11.48-11.36)	0.12		
		(11.48-11.48)	0.00		
				22.67	
14 260.00	sc1	(-10.87--10.87)	0.00		
		(-10.40--10.87)	0.47		
		(-10.20--10.40)	0.20		
		(-10.16--10.20)	0.04		
		(-9.31--10.16)	0.85		
		(-9.12--9.31)	0.19		
		(-8.42--9.12)	0.70		
		(-8.08--8.42)	0.34		
		(-7.54--8.08)	0.54		
		(-7.04--7.54)	0.50		
		(-6.65--7.04)	0.39		
		(-6.00--6.65)	0.65		
		(-5.77--6.00)	0.23		
		(-4.96--5.77)	0.81		
		(-4.88--4.96)	0.08		
		(-4.44--4.88)	0.44		
		(-3.99--4.44)	0.45		
		(-3.92--3.99)	0.07		
		(-3.11--3.92)	0.81		
		(-2.88--3.11)	0.23		
		(-2.22--2.88)	0.66		
		(-1.83--2.22)	0.39		
		(-1.34--1.83)	0.49		
		(-0.79--1.34)	0.55		
		(-0.02--0.79)	0.77		
		(0.25--0.02)	0.27		
		A RIPORTARE ml	11.12		

		CALCOLO DELLE LUNGHEZZE		Foglio n. 45	
SCOTICO					
N. SEZIONE PROG.	FIG.	ELEMENTI DI CALCOLO	LUNGHEZZA ELEMENTARE ml	LUNGHEZZA FIGURA ml	NOTE
		RIPORTO ml	11.12		
		(0.44-0.25)	0.19		
		(1.29-0.44)	0.85		
		(1.32-1.29)	0.03		
		(1.52-1.32)	0.20		
		(2.33-1.52)	0.81		
		(2.50-2.33)	0.17		
		(3.37-2.50)	0.87		
		(3.76-3.37)	0.39		
		(4.41-3.76)	0.65		
		(5.02-4.41)	0.61		
		(5.45-5.02)	0.43		
		(6.28-5.45)	0.83		
		(6.49-6.28)	0.21		
		(7.48-6.49)	0.99		
		(7.53-7.48)	0.05		
		(7.53-7.53)	0.00		
		(8.41-7.53)	0.88		
		(8.57-8.41)	0.16		
		(9.30-8.57)	0.73		
		(9.61-9.30)	0.31		
		(10.18-9.61)	0.57		
		(10.66-10.18)	0.48		
		(11.01-10.66)	0.35		
		(11.01-11.01)	0.00		
				21.88	
15	sc1	(-8.44--8.44)	0.00		
280.00		(-8.30--8.44)	0.14		
		(-7.71--8.30)	0.59		
		(-7.37--7.71)	0.34		
		(-6.68--7.37)	0.69		
		(-6.44--6.68)	0.24		
		(-5.65--6.44)	0.79		
		(-5.50--5.65)	0.15		
		(-4.61--5.50)	0.89		
		(-4.57--4.61)	0.04		
		(-4.17--4.57)	0.40		
		(-3.64--4.17)	0.53		
		(-3.58--3.64)	0.06		
		(-2.71--3.58)	0.87		
		(-2.55--2.71)	0.16		
		(-1.78--2.55)	0.77		
		(-1.52--1.78)	0.26		
		(-0.84--1.52)	0.68		
		(-0.49--0.84)	0.35		
		(0.09--0.49)	0.58		
		(0.54-0.09)	0.45		
		(1.02-0.54)	0.48		
		(1.57-1.02)	0.55		
		(1.95-1.57)	0.38		
		(2.60-1.95)	0.65		
		(2.88-2.60)	0.28		
		(3.63-2.88)	0.75		
		(3.81-3.63)	0.18		
		(4.66-3.81)	0.85		
		(4.75-4.66)	0.09		
		(5.50-4.75)	0.75		
		(5.68-5.50)	0.18		
		(5.70-5.68)	0.02		
		(6.61-5.70)	0.91		
		(6.73-6.61)	0.12		
		(7.54-6.73)	0.81		
		(7.76-7.54)	0.22		
		(8.40-7.76)	0.64		
		(8.40-8.40)	0.00		
				16.84	
16	sc1	(-12.70--12.70)	0.00		
300.00		(-12.21--12.70)	0.49		
		(-11.72--12.21)	0.49		
		(-11.18--11.72)	0.54		
		(-10.73--11.18)	0.45		
		(-10.15--10.73)	0.58		
		(-9.75--10.15)	0.40		
		(-9.13--9.75)	0.62		
		(-8.76--9.13)	0.37		
		(-8.10--8.76)	0.66		
		(-7.77--8.10)	0.33		
		(-7.08--7.77)	0.69		
		(-6.79--7.08)	0.29		
		(-6.05--6.79)	0.74		
		(-5.80--6.05)	0.25		
		(-5.02--5.80)	0.78		
		(-4.81--5.02)	0.21		
		(-4.00--4.81)	0.81		
		(-3.83--4.00)	0.17		
		(-2.97--3.83)	0.86		
		(-2.84--2.97)	0.13		
		(-1.95--2.84)	0.89		
		(-1.85--1.95)	0.10		
		(-0.92--1.85)	0.93		
		(-0.86--0.92)	0.06		
		(-0.61--0.86)	0.25		
		(-0.61--0.61)	0.00		
				12.09	
16	sc2	(15.39-15.39)	0.00		
300.00		(15.50-15.39)	0.11		
		(15.91-15.50)	0.41		
		(16.52-15.91)	0.61		
		(16.90-16.52)	0.38		
		(17.55-16.90)	0.65		
		(17.89-17.55)	0.34		
		(18.33-17.89)	0.44		
		(18.33-18.33)	0.00		
				2.94	
17	sc2	(-11.20--11.20)	0.00		
		A RIPORTARE ml	0.00		

		CALCOLO DELLE LUNGHEZZE		Foglio n. 46	
SCOTICO					
N. SEZIONE PROG.	FIG.	ELEMENTI DI CALCOLO	LUNGHEZZA ELEMENTARE ml	LUNGHEZZA FIGURA ml	NOTE
		RIPORTO ml	0.00		
320.00		(-11.06--11.20)	0.14		
		(-10.28--11.06)	0.78		
		(-10.01--10.28)	0.27		
		(-9.55--10.01)	0.46		
		(-9.55--9.55)	0.00		
				1.65	
17	sc1	(3.11-3.11)	0.00		
320.00		(3.70-3.11)	0.59		
		(4.08-3.70)	0.38		
		(4.75-4.08)	0.67		
		(5.11-4.75)	0.36		
		(5.80-5.11)	0.69		
		(6.14-5.80)	0.34		
		(6.86-6.14)	0.72		
		(7.16-6.86)	0.30		
		(7.91-7.16)	0.75		
		(8.19-7.91)	0.28		
		(8.48-8.19)	0.29		
		(8.48-8.48)	0.00		
				5.37	
18	sc1	(-8.76--8.76)	0.00		
340.00		(-8.07--8.76)	0.69		
		(-7.78--8.07)	0.29		
		(-7.04--7.78)	0.74		
		(-6.64--7.04)	0.40		
		(-6.01--6.64)	0.63		
		(-5.51--6.01)	0.50		
		(-4.98--5.51)	0.53		
		(-4.37--4.98)	0.61		
		(-3.96--4.37)	0.41		
		(-3.61--3.96)	0.35		
		(-2.93--3.61)	0.68		
		(-2.10--2.93)	0.83		
		(-1.90--2.10)	0.20		
		(-0.96--1.90)	0.94		
		(-0.87--0.96)	0.09		
		(0.10--0.87)	0.97		
		(0.16-0.10)	0.06		
		(0.17-0.16)	0.01		
		(1.19-0.17)	1.02		
		(1.31-1.19)	0.12		
		(2.22-1.31)	0.91		
		(2.44-2.22)	0.22		
		(3.25-2.44)	0.81		
		(3.58-3.25)	0.33		
		(4.28-3.58)	0.70		
		(4.71-4.28)	0.43		
		(5.31-4.71)	0.60		
		(5.85-5.31)	0.54		
		(6.34-5.85)	0.49		
		(6.99-6.34)	0.65		
		(7.37-6.99)	0.38		
		(8.12-7.37)	0.75		
		(8.40-8.12)	0.28		
		(8.78-8.40)	0.38		
		(8.78-8.78)	0.00		
				17.54	
19	sc1	(-7.26--7.26)	0.00		
360.00		(-6.81--7.26)	0.45		
		(-6.23--6.81)	0.58		
		(-5.78--6.23)	0.45		
		(-5.03--5.78)	0.75		
		(-4.74--5.03)	0.29		
		(-3.84--4.74)	0.90		
		(-3.71--3.84)	0.13		
		(-2.85--3.71)	0.86		
		(-2.67--2.85)	0.18		
		(-2.65--2.67)	0.02		
		(-1.64--2.65)	1.01		
		(-1.45--1.64)	0.19		
		(-0.60--1.45)	0.85		
		(-0.26--0.60)	0.34		
		(0.43--0.26)	0.69		
		(0.93-0.43)	0.50		
		(1.46-0.93)	0.53		
		(2.13-1.46)	0.67		
		(2.50-2.13)	0.37		
		(3.32-2.50)	0.82		
		(3.53-3.32)	0.21		
		(4.51-3.53)	0.98		
		(4.57-4.51)	0.06		
		(4.93-4.57)	0.36		
		(5.60-4.93)	0.67		
		(5.70-5.60)	0.10		
		(6.64-5.70)	0.94		
		(6.90-6.64)	0.26		
		(7.67-6.90)	0.77		
		(7.80-7.67)	0.13		
		(7.80-7.80)	0.00		
				15.06	
20	sc2	(-6.02--6.02)	0.00		
380.00		(-5.21--6.02)	0.81		
		(-5.11--5.21)	0.10		
		(-5.10--5.11)	0.01		
		(-4.08--5.10)	1.02		
		(-3.90--4.08)	0.18		
		(-3.04--3.90)	0.86		
		(-2.70--3.04)	0.34		
		(-2.01--2.70)	0.69		
		(-1.50--2.01)	0.51		
		(-0.97--1.50)	0.53		
		(-0.30--0.97)	0.67		
		(0.06--0.30)	0.36		
		(0.90-0.06)	0.84		
		A RIPORTARE ml	6.92		

		CALCOLO DELLE LUNGHEZZE		Foglio n. 47
SCOTICO				

N. SEZIONE PROG.	FIG.	ELEMENTI DI CALCOLO	LUNGHEZZA ELEMENTARE ml	LUNGHEZZA FIGURA ml	NOTE
		RIPORTO ml	6.92		
		(1.10-0.90)	0.20		
		(2.10-1.10)	1.00		
		(2.13-2.10)	0.03		
		(2.31-2.13)	0.18		
		(2.32-2.31)	0.01		
		(2.32-2.32)	0.00		
				8.34	
20	sc1	(4.67-4.67)	0.00		
380.00		(4.88-4.67)	0.21		
		(5.24-4.88)	0.36		
		(5.39-5.24)	0.15		
		(5.39-5.39)	0.00		
				0.72	
27	sc1	(-4.82--4.82)	0.00		
520.00		(-4.75--4.82)	0.07		
		(-4.75--4.75)	0.00		
				0.07	
28	sc1	(-4.75--4.75)	0.00		
540.00		(-4.05--4.75)	0.70		
		(-3.79--4.05)	0.26		
		(-2.85--3.79)	0.94		
		(-2.76--2.85)	0.09		
		(-2.18--2.76)	0.58		
		(-1.78--2.18)	0.40		
		(-1.72--1.78)	0.06		
		(-1.66--1.72)	0.06		
		(-1.61--1.66)	0.05		
		(-0.92--1.61)	0.69		
		(-0.85--0.92)	0.07		
		(-0.69--0.85)	0.16		
		(0.04--0.69)	0.73		
		(0.35-0.04)	0.31		
		(0.95-0.35)	0.60		
		(1.38-0.95)	0.43		
		(1.86-1.38)	0.48		
		(2.42-1.86)	0.56		
		(2.77-2.42)	0.35		
		(3.45-2.77)	0.68		
		(3.68-3.45)	0.23		
		(4.49-3.68)	0.81		
		(4.59-4.49)	0.10		
		(5.34-4.59)	0.75		
		(5.52-5.34)	0.18		
		(5.55-5.52)	0.03		
		(6.02-5.55)	0.47		
		(6.02-6.02)	0.00		
				10.77	
29	sc1	(-7.69--7.69)	0.00		
545.48		(-7.50--7.69)	0.19		
		(-7.50--7.50)	0.00		
		(-7.49--7.50)	0.01		
		(-7.47--7.49)	0.02		
		(-7.44--7.47)	0.03		
		(-7.41--7.44)	0.03		
		(-7.35--7.41)	0.06		
		(-7.28--7.35)	0.07		
		(-7.25--7.28)	0.03		
		(-7.20--7.25)	0.05		
		(-7.06--7.20)	0.14		
		(-7.05--7.06)	0.01		
		(-7.05--7.05)	0.00		
		(-6.98--7.05)	0.07		
		(-6.91--6.98)	0.07		
		(-6.88--6.91)	0.03		
		(-6.88--6.88)	0.00		
		(-6.86--6.88)	0.02		
		(-6.86--6.86)	0.00		
		(-6.74--6.86)	0.12		
		(-6.74--6.74)	0.00		
		(-6.27--6.74)	0.47		
		(-6.21--6.27)	0.06		
		(-5.27--6.21)	0.94		
		(-5.18--5.27)	0.09		
		(-4.63--5.18)	0.55		
		(-4.14--4.63)	0.49		
		(-4.07--4.14)	0.07		
		(-3.11--4.07)	0.96		
		(-2.87--3.11)	0.24		
		(-2.07--2.87)	0.80		
		(-1.67--2.07)	0.40		
		(-1.04--1.67)	0.63		
		(-0.47--1.04)	0.57		
		(-0.00--0.47)	0.47		
		(0.73--0.00)	0.73		
		(1.03-0.73)	0.30		
		(1.26-1.03)	0.23		
		(2.07-1.26)	0.81		
		(2.89-2.07)	0.82		
		(3.10-2.89)	0.21		
		(3.13-3.10)	0.03		
		(4.14-3.13)	1.01		
		(4.33-4.14)	0.19		
		(5.17-4.33)	0.84		
		(5.53-5.17)	0.36		
		(6.21-5.53)	0.68		
		(6.73-6.21)	0.52		
		(7.24-6.73)	0.51		
		(7.93-7.24)	0.69		
		(8.27-7.93)	0.34		
		(9.13-8.27)	0.86		
		(9.22-9.13)	0.09		
		(9.22-9.22)	0.00		
				16.91	

Il Direttore dei Lavori	L'Impresa	

	COMPUTO DEI VOLUMI		Foglio n. 48

BONIFICA

DALLA SEZ. DA PROG.	ALLA SEZ. A PROG.	SEZIONE	FIGURA	AREA	DISTANZA SEZIONI m	DISTANZA DI CALCOLO m	VOLUME PARZIALE mc	VOLUME TOTALE mc
6	7	7	BO1	7.35	20.00	10.00	73.500	
								73.500
7	8	7	BO1	7.35	20.00	10.00	73.500	
120.00	140.00	8	BO1	7.79	20.00	10.00	77.900	
								151.400
8	9	8	BO1	7.79	20.00	10.00	77.900	
140.00	160.00	9	BO1	9.13	20.00	10.00	91.300	
								169.200
9	10	9	BO1	9.13	20.00	10.00	91.300	
160.00	180.00	10	BO1	10.11	20.00	10.00	101.100	
								192.400
10	11	10	BO1	10.11	20.00	10.00	101.100	
180.00	200.00	11	BO1	10.76	20.00	10.00	107.600	
								208.700
11	12	11	BO1	10.76	20.00	10.00	107.600	
200.00	220.00	12	BO1	10.90	20.00	10.00	109.000	
								216.600
12	13	12	BO1	10.90	20.00	10.00	109.000	
220.00	240.00	13	BO1	11.31	20.00	10.00	113.100	
								222.100
13	14	13	BO1	11.31	20.00	10.00	113.100	
240.00	260.00	14	BO1	10.96	20.00	10.00	109.600	
								222.700
14	15	14	BO1	10.96	20.00	10.00	109.600	
260.00	280.00	15	BO1	8.47	20.00	10.00	84.700	
								194.300
15	16	15	BO1	8.47	20.00	10.00	84.700	
280.00	300.00	16	BO1	6.05	20.00	10.00	60.500	
		16	BO2	1.48	20.00	10.00	14.800	
								160.000
16	17	16	BO1	6.05	20.00	10.00	60.500	
300.00	320.00	16	BO2	1.48	20.00	10.00	14.800	
		17	BO1	2.68	20.00	10.00	26.800	
		17	BO2	0.83	20.00	10.00	8.300	
								110.400
17	18	17	BO1	2.68	20.00	10.00	26.800	
320.00	340.00	17	BO2	0.83	20.00	10.00	8.300	
		18	BO1	8.76	20.00	10.00	87.600	
								122.700
18	19	18	BO1	8.76	20.00	10.00	87.600	
340.00	360.00	19	BO1	7.57	20.00	10.00	75.700	
								163.300
19	20	19	BO1	7.57	20.00	10.00	75.700	
360.00	380.00	20	BO1	0.36	20.00	10.00	3.600	
		20	BO2	4.19	20.00	10.00	41.900	
								121.200
20	21	20	BO1	0.36	20.00	10.00	3.600	
380.00	400.00	20	BO2	4.19	20.00	10.00	41.900	
								45.500
26	27	27	BO1	0.03	20.00	10.00	0.300	
								0.300
27	28	27	BO1	0.03	20.00	10.00	0.300	
520.00	540.00	28	BO1	5.41	20.00	10.00	54.100	
								54.400
28	29	28	BO1	5.41	5.48	2.74	14.823	
540.00	545.48	29	BO1	8.46	5.48	2.74	23.180	
								38.003

Il Direttore dei Lavori	L'Impresa	TOTALE ARTICOLO	2466.703

	COMPUTO DI SUPERFICI		Foglio n. 49

USURA

DALLA SEZ. DA PROG.	ALLA SEZ. A PROG.	SEZIONE	FIGURA	LUNGHEZZA	DISTANZA SEZIONI ml	DISTANZA DI CALCOLO ml	AREA PARZIALE mq	AREA TOTALE mq
1	2	1	a1	15.12	4.00	2.00	30.24	
16.00	20.00	2	a1	11.75	4.00	2.00	23.50	
								53.74
2	3	2	a1	11.75	20.00	10.00	117.50	
20.00	40.00	3	a1	8.50	20.00	10.00	85.00	
								202.50
3	4	3	a1	8.50	20.00	10.00	85.00	
40.00	60.00	4	a1	8.93	20.00	10.00	89.30	
								174.30
4	5	4	a1	8.93	20.00	10.00	89.30	
60.00	80.00	5	a1	9.40	20.00	10.00	94.00	
								183.30
5	6	5	a1	9.40	20.00	10.00	94.00	
80.00	100.00	6	a1	9.40	20.00	10.00	94.00	
								188.00
6	7	6	a1	9.40	20.00	10.00	94.00	
100.00	120.00	7	a1	9.20	20.00	10.00	92.00	
								186.00
7	8	7	a1	9.20	20.00	10.00	92.00	
120.00	140.00	8	a1	8.56	20.00	10.00	85.60	
								177.60
8	9	8	a1	8.56	20.00	10.00	85.60	
140.00	160.00	9	a1	8.50	20.00	10.00	85.00	
								170.60
9	10	9	a1	8.50	20.00	10.00	85.00	
160.00	180.00	10	a1	8.50	20.00	10.00	85.00	
								170.00
10	11	10	a1	8.50	20.00	10.00	85.00	
180.00	200.00	11	a1	8.50	20.00	10.00	85.00	
								170.00
11	12	11	a1	8.50	20.00	10.00	85.00	
200.00	220.00	12	a1	8.50	20.00	10.00	85.00	
								170.00
12	13	12	a1	8.50	20.00	10.00	85.00	
220.00	240.00	13	a1	8.50	20.00	10.00	85.00	
								170.00
13	14	13	a1	8.50	20.00	10.00	85.00	
240.00	260.00	14	a1	8.50	20.00	10.00	85.00	
								170.00
14	15	14	a1	8.50	20.00	10.00	85.00	
260.00	280.00	15	a1	8.50	20.00	10.00	85.00	
								170.00
15	16	15	a1	8.50	20.00	10.00	85.00	
280.00	300.00	16	a1	8.50	20.00	10.00	85.00	
								170.00
16	17	16	a1	8.50	20.00	10.00	85.00	
300.00	320.00	17	a1	8.50	20.00	10.00	85.00	
								170.00
17	18	17	a1	8.50	20.00	10.00	85.00	
320.00	340.00	18	a1	8.50	20.00	10.00	85.00	
								170.00
18	19	18	a1	8.50	20.00	10.00	85.00	
340.00	360.00	19	a1	8.50	20.00	10.00	85.00	
								170.00
19	20	19	a1	8.50	20.00	10.00	85.00	
360.00	380.00	20	a1	8.50	20.00	10.00	85.00	
								170.00
20	21	20	a1	8.50	20.00	10.00	85.00	
380.00	400.00	21	a1	8.50	20.00	10.00	85.00	
								170.00
21	22	21	a1	8.50	20.00	10.00	85.00	
400.00	420.00	22	a1	8.50	20.00	10.00	85.00	
								170.00
22	23	22	a1	8.50	20.00	10.00	85.00	
420.00	440.00	23	a1	8.50	20.00	10.00	85.00	
								170.00
23	24	23	a1	8.50	20.00	10.00	85.00	
440.00	460.00	24	a1	8.50	20.00	10.00	85.00	
								170.00
24	25	24	a1	8.50	20.00	10.00	85.00	
460.00	480.00	25	a1	8.50	20.00	10.00	85.00	
								170.00
25	26	25	a1	8.50	20.00	10.00	85.00	
480.00	500.00	26	a1	8.50	20.00	10.00	85.00	
								170.00
26	27	26	a1	8.50	20.00	10.00	85.00	
500.00	520.00	27	a1	8.50	20.00	10.00	85.00	
								170.00
27	28	27	a1	8.50	20.00	10.00	85.00	
520.00	540.00	28	a1	9.50	20.00	10.00	95.00	
								180.00
28	29	28	a1	9.50	5.48	2.74	26.03	
540.00	545.48	29	a1	15.38	5.48	2.74	42.14	
								68.17

Il Direttore dei Lavori	L'Impresa	TOTALE ARTICOLO	4644.21

	COMPUTO DI SUPERFICI		Foglio n. 50

VEGETALE

DALLA SEZ. DA PROG.	ALLA SEZ. A PROG.	SEZIONE	FIGURA	LUNGHEZZA	DISTANZA SEZIONI ml	DISTANZA DI CALCOLO ml	AREA PARZIALE mq	AREA TOTALE mq
1	2	1	b1	2.79	4.00	2.00	5.58	
16.00	20.00	1	b2	0.98	4.00	2.00	1.96	
		2	b1	1.34	4.00	2.00	2.68	
								10.22
2	3	2	b1	1.34	20.00	10.00	13.40	
20.00	40.00	3	b1	1.16	20.00	10.00	11.60	
								25.00
3	4	3	b1	1.16	20.00	10.00	11.60	
40.00	60.00	4	b1	1.14	20.00	10.00	11.40	
		4	b2	0.88	20.00	10.00	8.80	
								31.80
4	5	4	b1	1.14	20.00	10.00	11.40	
60.00	80.00	4	b2	0.88	20.00	10.00	8.80	
		5	b1	1.94	20.00	10.00	19.40	
		5	b2	0.95	20.00	10.00	9.50	
								49.10
5	6	5	b1	1.94	20.00	10.00	19.40	
80.00	100.00	5	b2	0.95	20.00	10.00	9.50	
		6	b1	2.48	20.00	10.00	24.80	
		6	b2	1.91	20.00	10.00	19.10	
								72.80
6	7	6	b1	2.48	20.00	10.00	24.80	
100.00	120.00	6	b2	1.91	20.00	10.00	19.10	
		7	b1	2.92	20.00	10.00	29.20	
		7	b2	3.34	20.00	10.00	33.40	
								106.50
7	8	7	b1	2.92	20.00	10.00	29.20	
120.00	140.00	7	b2	3.34	20.00	10.00	33.40	
		8	b1	3.19	20.00	10.00	31.90	
		8	b2	4.55	20.00	10.00	45.50	
								140.00
8	9	8	b1	3.19	20.00	10.00	31.90	
140.00	160.00	8	b2	4.55	20.00	10.00	45.50	
		9	b1	5.11	20.00	10.00	51.10	
		9	b2	5.43	20.00	10.00	54.30	
								182.80
9	10	9	b1	5.11	20.00	10.00	51.10	
160.00	180.00	9	b2	5.43	20.00	10.00	54.30	
		10	b1	5.95	20.00	10.00	59.50	
		10	b2	6.54	20.00	10.00	65.40	
								230.30
10	11	10	b1	5.95	20.00	10.00	59.50	
180.00	200.00	10	b2	6.54	20.00	10.00	65.40	
		11	b1	6.71	20.00	10.00	67.10	
		11	b2	7.15	20.00	10.00	71.50	
								263.50
11	12	11	b1	6.71	20.00	10.00	67.10	
200.00	220.00	11	b2	7.15	20.00	10.00	71.50	
		12	b1	6.82	20.00	10.00	68.20	
		12	b2	7.25	20.00	10.00	72.50	
								279.30
12	13	12	b1	6.82	20.00	10.00	68.20	
220.00	240.00	12	b2	7.25	20.00	10.00	72.50	
		13	b1	7.36	20.00	10.00	73.60	
		13	b2	7.62	20.00	10.00	76.20	
								290.50
13	14	13	b1	7.36	20.00	10.00	73.60	
240.00	260.00	13	b2	7.62	20.00	10.00	76.20	
		14	b1	7.12	20.00	10.00	71.20	
		14	b2	7.20	20.00	10.00	72.00	
								293.00
14	15	14	b1	7.12	20.00	10.00	71.20	
260.00	280.00	14	b2	7.20	20.00	10.00	72.00	
		15	b1	4.64	20.00	10.00	46.40	
		15	b2	4.56	20.00	10.00	45.60	
								235.20
15	16	15	b1	4.64	20.00	10.00	46.40	
280.00	300.00	15	b2	4.56	20.00	10.00	45.60	
		16	b2	8.83	20.00	10.00	88.30	
		16	b1	10.99	20.00	10.00	109.90	
								290.20
16	17	16	b2	8.83	20.00	10.00	88.30	
300.00	320.00	16	b1	10.99	20.00	10.00	109.90	
		17	b1	7.24	20.00	10.00	72.40	
		17	b2	4.67	20.00	10.00	46.70	
								317.30
17	18	17	b1	7.24	20.00	10.00	72.40	
320.00	340.00	17	b2	4.67	20.00	10.00	46.70	
		18	b1	4.79	20.00	10.00	47.90	
		18	b2	4.81	20.00	10.00	48.10	
								215.10
18	19	18	b1	4.79	20.00	10.00	47.90	
340.00	360.00	18	b2	4.81	20.00	10.00	48.10	
		19	b1	3.39	20.00	10.00	33.90	
		19	b2	3.97	20.00	10.00	39.70	
								169.60
19	20	19	b1	3.39	20.00	10.00	33.90	
360.00	380.00	19	b2	3.97	20.00	10.00	39.70	
		20	b1	2.18	20.00	10.00	21.80	
		20	b2	1.64	20.00	10.00	16.40	
								111.80
20	21	20	b1	2.18	20.00	10.00	21.80	
380.00	400.00	20	b2	1.64	20.00	10.00	16.40	
		21	b1	1.06	20.00	10.00	10.60	
		21	b2	1.01	20.00	10.00	10.10	
								58.90
21	22	21	b1	1.06	20.00	10.00	10.60	
400.00	420.00	21	b2	1.01	20.00	10.00	10.10	
								20.70
27	28	28	b1	1.67	20.00	10.00	16.70	
								16.70
28	29	28	b1	1.67	5.48	2.74	4.58	
540.00	545.48	29	b1	1.95	5.48	2.74	5.34	
								9.92

Il Direttore dei Lavori	L'Impresa	TOTALE ARTICOLO	3420.24

	COMPUTO DI SUPERFICI		Foglio n. 51

BINDER

DALLA SEZ. DA PROG.	ALLA SEZ. A PROG.	SEZIONE	FIGURA	LUNGHEZZA	DISTANZA SEZIONI ml	DISTANZA DI CALCOLO ml	AREA PARZIALE mq	AREA TOTALE mq
1	2	1	c1	15.12	4.00	2.00	30.24	
16.00	20.00	2	c1	11.75	4.00	2.00	23.50	
								53.74
2	3	2	c1	11.75	20.00	10.00	117.50	
20.00	40.00	3	c1	8.50	20.00	10.00	85.00	
								202.50
3	4	3	c1	8.50	20.00	10.00	85.00	
40.00	60.00	4	c1	8.93	20.00	10.00	89.30	
								174.30
4	5	4	c1	8.93	20.00	10.00	89.30	
60.00	80.00	5	c1	9.40	20.00	10.00	94.00	
								183.30
5	6	5	c1	9.40	20.00	10.00	94.00	
80.00	100.00	6	c1	9.40	20.00	10.00	94.00	
								188.00
6	7	6	c1	9.40	20.00	10.00	94.00	
100.00	120.00	7	c1	9.20	20.00	10.00	92.00	
								186.00
7	8	7	c1	9.20	20.00	10.00	92.00	
120.00	140.00	8	c1	8.56	20.00	10.00	85.60	
								177.60
8	9	8	c1	8.56	20.00	10.00	85.60	
140.00	160.00	9	c1	8.50	20.00	10.00	85.00	
								170.60
9	10	9	c1	8.50	20.00	10.00	85.00	
160.00	180.00	10	c1	8.50	20.00	10.00	85.00	
								170.00
10	11	10	c1	8.50	20.00	10.00	85.00	
180.00	200.00	11	c1	8.50	20.00	10.00	85.00	
								170.00
11	12	11	c1	8.50	20.00	10.00	85.00	
200.00	220.00	12	c1	8.50	20.00	10.00	85.00	
								170.00
12	13	12	c1	8.50	20.00	10.00	85.00	
220.00	240.00	13	c1	8.50	20.00	10.00	85.00	
								170.00
13	14	13	c1	8.50	20.00	10.00	85.00	
240.00	260.00	14	c1	8.50	20.00	10.00	85.00	
								170.00
14	15	14	c1	8.50	20.00	10.00	85.00	
260.00	280.00	15	c1	8.50	20.00	10.00	85.00	
								170.00
15	16	15	c1	8.50	20.00	10.00	85.00	
280.00	300.00	16	c1	8.50	20.00	10.00	85.00	
								170.00
16	17	16	c1	8.50	20.00	10.00	85.00	
300.00	320.00	17	c1	8.50	20.00	10.00	85.00	
								170.00
17	18	17	c1	8.50	20.00	10.00	85.00	
320.00	340.00	18	c1	8.50	20.00	10.00	85.00	
								170.00
18	19	18	c1	8.50	20.00	10.00	85.00	
340.00	360.00	19	c1	8.50	20.00	10.00	85.00	
								170.00
19	20	19	c1	8.50	20.00	10.00	85.00	
360.00	380.00	20	c1	8.50	20.00	10.00	85.00	
								170.00
20	21	20	c1	8.50	20.00	10.00	85.00	
380.00	400.00	21	c1	8.50	20.00	10.00	85.00	
								170.00
21	22	21	c1	8.50	20.00	10.00	85.00	
400.00	420.00	22	c1	8.50	20.00	10.00	85.00	
								170.00
22	23	22	c1	8.50	20.00	10.00	85.00	
420.00	440.00	23	c1	8.50	20.00	10.00	85.00	
								170.00
23	24	23	c1	8.50	20.00	10.00	85.00	
440.00	460.00	24	c1	8.50	20.00	10.00	85.00	
								170.00
24	25	24	c1	8.50	20.00	10.00	85.00	
460.00	480.00	25	c1	8.50	20.00	10.00	85.00	
								170.00
25	26	25	c1	8.50	20.00	10.00	85.00	
480.00	500.00	26	c1	8.50	20.00	10.00	85.00	
								170.00
26	27	26	c1	8.50	20.00	10.00	85.00	
500.00	520.00	27	c1	8.50	20.00	10.00	85.00	
								170.00
27	28	27	c1	8.50	20.00	10.00	85.00	
520.00	540.00	28	c1	9.50	20.00	10.00	95.00	
								180.00
28	29	28	c1	9.50	5.48	2.74	26.03	
540.00	545.48	29	c1	15.38	5.48	2.74	42.14	
								68.17

Il Direttore dei Lavori	L'Impresa	TOTALE ARTICOLO	4644.21

	COMPUTO DI SUPERFICI		Foglio n. 52

BASE

DALLA SEZ. DA PROG.	ALLA SEZ. A PROG.	SEZIONE	FIGURA	LUNGHEZZA	DISTANZA SEZIONI ml	DISTANZA DI CALCOLO ml	AREA PARZIALE mq	AREA TOTALE mq
1	2	1	d1	15.12	4.00	2.00	30.24	
16.00	20.00	2	d1	11.75	4.00	2.00	23.50	
								53.74
2	3	2	d1	11.75	20.00	10.00	117.50	
20.00	40.00	3	d1	8.50	20.00	10.00	85.00	
								202.50
3	4	3	d1	8.50	20.00	10.00	85.00	
40.00	60.00	4	d1	8.93	20.00	10.00	89.30	
								174.30
4	5	4	d1	8.93	20.00	10.00	89.30	
60.00	80.00	5	d1	9.40	20.00	10.00	94.00	
								183.30
5	6	5	d1	9.40	20.00	10.00	94.00	
80.00	100.00	6	d1	9.40	20.00	10.00	94.00	
								188.00
6	7	6	d1	9.40	20.00	10.00	94.00	
100.00	120.00	7	d1	9.20	20.00	10.00	92.00	
								186.00
7	8	7	d1	9.20	20.00	10.00	92.00	
120.00	140.00	8	d1	8.56	20.00	10.00	85.60	
								177.60
8	9	8	d1	8.56	20.00	10.00	85.60	
140.00	160.00	9	d1	8.50	20.00	10.00	85.00	
								170.60
9	10	9	d1	8.50	20.00	10.00	85.00	
160.00	180.00	10	d1	8.50	20.00	10.00	85.00	
								170.00
10	11	10	d1	8.50	20.00	10.00	85.00	
180.00	200.00	11	d1	8.50	20.00	10.00	85.00	
								170.00
11	12	11	d1	8.50	20.00	10.00	85.00	
200.00	220.00	12	d1	8.50	20.00	10.00	85.00	
								170.00
12	13	12	d1	8.50	20.00	10.00	85.00	
220.00	240.00	13	d1	8.50	20.00	10.00	85.00	
								170.00
13	14	13	d1	8.50	20.00	10.00	85.00	
240.00	260.00	14	d1	8.50	20.00	10.00	85.00	
								170.00
14	15	14	d1	8.50	20.00	10.00	85.00	
260.00	280.00	15	d1	8.50	20.00	10.00	85.00	
								170.00
15	16	15	d1	8.50	20.00	10.00	85.00	
280.00	300.00	16	d1	8.50	20.00	10.00	85.00	
								170.00
16	17	16	d1	8.50	20.00	10.00	85.00	
300.00	320.00	17	d1	8.50	20.00	10.00	85.00	
								170.00
17	18	17	d1	8.50	20.00	10.00	85.00	
320.00	340.00	18	d1	8.50	20.00	10.00	85.00	
								170.00
18	19	18	d1	8.50	20.00	10.00	85.00	
340.00	360.00	19	d1	8.50	20.00	10.00	85.00	
								170.00
19	20	19	d1	8.50	20.00	10.00	85.00	
360.00	380.00	20	d1	8.50	20.00	10.00	85.00	
								170.00
20	21	20	d1	8.50	20.00	10.00	85.00	
380.00	400.00	21	d1	8.50	20.00	10.00	85.00	
								170.00
21	22	21	d1	8.50	20.00	10.00	85.00	
400.00	420.00	22	d1	8.50	20.00	10.00	85.00	
								170.00
22	23	22	d1	8.50	20.00	10.00	85.00	
420.00	440.00	23	d1	8.50	20.00	10.00	85.00	
								170.00
23	24	23	d1	8.50	20.00	10.00	85.00	
440.00	460.00	24	d1	8.50	20.00	10.00	85.00	
								170.00
24	25	24	d1	8.50	20.00	10.00	85.00	
460.00	480.00	25	d1	8.50	20.00	10.00	85.00	
								170.00
25	26	25	d1	8.50	20.00	10.00	85.00	
480.00	500.00	26	d1	8.50	20.00	10.00	85.00	
								170.00
26	27	26	d1	8.50	20.00	10.00	85.00	
500.00	520.00	27	d1	8.50	20.00	10.00	85.00	
								170.00
27	28	27	d1	8.50	20.00	10.00	85.00	
520.00	540.00	28	d1	9.50	20.00	10.00	95.00	
								180.00
28	29	28	d1	9.50	5.48	2.74	26.03	
540.00	545.48	29	d1	15.38	5.48	2.74	42.14	
		29	d2	15.38	5.48	2.74	42.14	
								110.31

Il Direttore dei Lavori	L'Impresa	TOTALE ARTICOLO	4686.35

	COMPUTO DI SUPERFICI		Foglio n. 53

FONDAZIONE

DALLA SEZ. DA PROG.	ALLA SEZ. A PROG.	SEZIONE	FIGURA	LUNGHEZZA	DISTANZA SEZIONI ml	DISTANZA DI CALCOLO ml	AREA PARZIALE mq	AREA TOTALE mq
1	2	1	e1	15.12	4.00	2.00	30.24	
16.00	20.00	2	e1	11.75	4.00	2.00	23.50	
								53.74
2	3	2	e1	11.75	20.00	10.00	117.50	
20.00	40.00	3	e1	8.50	20.00	10.00	85.00	
								202.50
3	4	3	e1	8.50	20.00	10.00	85.00	
40.00	60.00	4	e1	8.93	20.00	10.00	89.30	
								174.30
4	5	4	e1	8.93	20.00	10.00	89.30	
60.00	80.00	5	e1	9.40	20.00	10.00	94.00	
								183.30
5	6	5	e1	9.40	20.00	10.00	94.00	
80.00	100.00	6	e1	9.40	20.00	10.00	94.00	
								188.00
6	7	6	e1	9.40	20.00	10.00	94.00	
100.00	120.00	7	e1	9.20	20.00	10.00	92.00	
								186.00
7	8	7	e1	9.20	20.00	10.00	92.00	
120.00	140.00	8	e1	8.56	20.00	10.00	85.60	
								177.60
8	9	8	e1	8.56	20.00	10.00	85.60	
140.00	160.00	9	e1	8.50	20.00	10.00	85.00	
								170.60
9	10	9	e1	8.50	20.00	10.00	85.00	
160.00	180.00	10	e1	8.50	20.00	10.00	85.00	
								170.00
10	11	10	e1	8.50	20.00	10.00	85.00	
180.00	200.00	11	e1	8.50	20.00	10.00	85.00	
								170.00
11	12	11	e1	8.50	20.00	10.00	85.00	
200.00	220.00	12	e1	8.50	20.00	10.00	85.00	
								170.00
12	13	12	e1	8.50	20.00	10.00	85.00	
220.00	240.00	13	e1	8.50	20.00	10.00	85.00	
								170.00
13	14	13	e1	8.50	20.00	10.00	85.00	
240.00	260.00	14	e1	8.50	20.00	10.00	85.00	
								170.00
14	15	14	e1	8.50	20.00	10.00	85.00	
260.00	280.00	15	e1	8.50	20.00	10.00	85.00	
								170.00
15	16	15	e1	8.50	20.00	10.00	85.00	
280.00	300.00	16	e1	8.50	20.00	10.00	85.00	
								170.00
16	17	16	e1	8.50	20.00	10.00	85.00	
300.00	320.00	17	e1	8.50	20.00	10.00	85.00	
								170.00
17	18	17	e1	8.50	20.00	10.00	85.00	
320.00	340.00	18	e1	8.50	20.00	10.00	85.00	
								170.00
18	19	18	e1	8.50	20.00	10.00	85.00	
340.00	360.00	19	e1	8.50	20.00	10.00	85.00	
								170.00
19	20	19	e1	8.50	20.00	10.00	85.00	
360.00	380.00	20	e1	8.50	20.00	10.00	85.00	
								170.00
20	21	20	e1	8.50	20.00	10.00	85.00	
380.00	400.00	21	e1	8.50	20.00	10.00	85.00	
								170.00
21	22	21	e1	8.50	20.00	10.00	85.00	
400.00	420.00	22	e1	8.50	20.00	10.00	85.00	
								170.00
22	23	22	e1	8.50	20.00	10.00	85.00	
420.00	440.00	23	e1	8.50	20.00	10.00	85.00	
								170.00
23	24	23	e1	8.50	20.00	10.00	85.00	
440.00	460.00	24	e1	8.50	20.00	10.00	85.00	
								170.00
24	25	24	e1	8.50	20.00	10.00	85.00	
460.00	480.00	25	e1	8.50	20.00	10.00	85.00	
								170.00
25	26	25	e1	8.50	20.00	10.00	85.00	
480.00	500.00	26	e1	8.50	20.00	10.00	85.00	
								170.00
26	27	26	e1	8.50	20.00	10.00	85.00	
500.00	520.00	27	e1	8.50	20.00	10.00	85.00	
								170.00
27	28	27	e1	8.50	20.00	10.00	85.00	
520.00	540.00	28	e1	9.50	20.00	10.00	95.00	
								180.00
28	29	28	e1	9.50	5.48	2.74	26.03	
								26.03

Il Direttore dei Lavori	L'Impresa	TOTALE ARTICOLO	4602.07

	COMPUTO DI SUPERFICI		Foglio n. 54

SCOTICO

DALLA SEZ. DA PROG.	ALLA SEZ. A PROG.	SEZIONE	FIGURA	LUNGHEZZA	DISTANZA SEZIONI ml	DISTANZA DI CALCOLO ml	AREA PARZIALE mq	AREA TOTALE mq
6	7	7	sc1	14.66	20.00	10.00	146.60	
								146.60
7	8	7	sc1	14.66	20.00	10.00	146.60	
120.00	140.00	8	sc1	15.60	20.00	10.00	156.00	
								302.60
8	9	8	sc1	15.60	20.00	10.00	156.00	
140.00	160.00	9	sc1	18.29	20.00	10.00	182.90	
								338.90
9	10	9	sc1	18.29	20.00	10.00	182.90	
160.00	180.00	10	sc1	20.23	20.00	10.00	202.30	
								385.20
10	11	10	sc1	20.23	20.00	10.00	202.30	
180.00	200.00	11	sc1	21.55	20.00	10.00	215.50	
								417.80
11	12	11	sc1	21.55	20.00	10.00	215.50	
200.00	220.00	12	sc1	21.79	20.00	10.00	217.90	
								433.40
12	13	12	sc1	21.79	20.00	10.00	217.90	
220.00	240.00	13	sc1	22.67	20.00	10.00	226.70	
								444.60
13	14	13	sc1	22.67	20.00	10.00	226.70	
240.00	260.00	14	sc1	21.88	20.00	10.00	218.80	
								445.50
14	15	14	sc1	21.88	20.00	10.00	218.80	
260.00	280.00	15	sc1	16.84	20.00	10.00	168.40	
								387.20
15	16	15	sc1	16.84	20.00	10.00	168.40	
280.00	300.00	16	sc1	12.09	20.00	10.00	120.90	
		16	sc2	2.94	20.00	10.00	29.40	
								318.70
16	17	16	sc1	12.09	20.00	10.00	120.90	
300.00	320.00	16	sc2	2.94	20.00	10.00	29.40	
		17	sc2	1.65	20.00	10.00	16.50	
		17	sc1	5.37	20.00	10.00	53.70	
								220.50
17	18	17	sc2	1.65	20.00	10.00	16.50	
320.00	340.00	17	sc1	5.37	20.00	10.00	53.70	
		18	sc1	17.54	20.00	10.00	175.40	
								245.60
18	19	18	sc1	17.54	20.00	10.00	175.40	
340.00	360.00	19	sc1	15.06	20.00	10.00	150.60	
								326.00
19	20	19	sc1	15.06	20.00	10.00	150.60	
360.00	380.00	20	sc2	8.34	20.00	10.00	83.40	
		20	sc1	0.72	20.00	10.00	7.20	
								241.20
20	21	20	sc2	8.34	20.00	10.00	83.40	
380.00	400.00	20	sc1	0.72	20.00	10.00	7.20	
								90.60
26	27	27	sc1	0.07	20.00	10.00	0.70	
								0.70
27	28	27	sc1	0.07	20.00	10.00	0.70	
520.00	540.00	28	sc1	10.77	20.00	10.00	107.70	
								108.40
28	29	28	sc1	10.77	5.48	2.74	29.51	
540.00	545.48	29	sc1	16.91	5.48	2.74	46.33	
								75.84

Il Direttore dei Lavori	L'Impresa	TOTALE ARTICOLO	4929.34

	COMPUTO DEI VOLUMI		Foglio n. 55

Volume dalla sezione 1 alla sezione 29

ARTICOLO		VOLUME
STERRO	mc	1539.265
RIPORTO	mc	10429.676
BO BONIFICA	mc	2466.703
a USURA	mq	4644.21
b VEGETALE	mq	3420.24
c BINDER	mq	4644.21
d BASE	mq	4686.35
e FONDAZIONE	mq	4602.07
sc SCOTICO	mq	4929.34

	CALCOLO DELLE AREE		Foglio n. 1

STERRI E RIPORTI

N. SEZIONE PROG.	FIG.	ELEMENTI DI CALCOLO	AREA ELEMENTARE mq	AREA FIGURA mq	NOTE
29 bis	R1	(-17.34--18.13)x(0.33+0.83)/2	0.46		
417.82		(-16.36--17.34)x(0.26+0.33)/2	0.29		
		(-16.32--16.36)x(0.25+0.26)/2	0.01		
		(-15.38--16.32)x(0.28+0.25)/2	0.25		
		(-15.29--15.38)x(0.28+0.28)/2	0.03		
		(-14.40--15.29)x(0.37+0.28)/2	0.29		
		(-14.26--14.40)x(0.38+0.37)/2	0.05		
		(-13.42--14.26)x(0.68+0.38)/2	0.45		
		(-13.24--13.42)x(0.75+0.68)/2	0.13		
		(-12.44--13.24)x(1.07+0.75)/2	0.73		
		(-12.21--12.44)x(1.22+1.07)/2	0.26		
		(-11.46--12.21)x(1.55+1.22)/2	1.04		
		(-11.18--11.46)x(1.66+1.55)/2	0.45		
		(-10.48--11.18)x(1.93+1.66)/2	1.26		
		(-10.16--10.48)x(1.99+1.93)/2	0.63		
		(-9.50--10.16)x(2.23+1.99)/2	1.39		
		(-9.13--9.50)x(2.37+2.23)/2	0.85		
		(-8.52--9.13)x(2.60+2.37)/2	1.52		
		(-8.11--8.52)x(2.75+2.60)/2	1.10		
		(-7.54--8.11)x(2.95+2.75)/2	1.62		
		(-7.08--7.54)x(3.13+2.95)/2	1.40		
		(-6.56--7.08)x(3.22+3.13)/2	1.65		
		(-6.05--6.56)x(3.26+3.22)/2	1.65		
		(-5.58--6.05)x(3.26+3.26)/2	1.53		
		(-5.03--5.58)x(3.25+3.26)/2	1.79		
		(-4.60--5.03)x(3.24+3.25)/2	1.40		
		(-4.00--4.60)x(3.24+3.24)/2	1.94		
		(-3.62--4.00)x(3.25+3.24)/2	1.23		
		(-2.97--3.62)x(3.25+3.25)/2	2.11		
		(-2.64--2.97)x(3.26+3.25)/2	1.07		
		(-1.95--2.64)x(3.29+3.26)/2	2.26		
		(-1.65--1.95)x(3.29+3.29)/2	0.99		
		(-0.92--1.65)x(3.29+3.29)/2	2.40		
		(-0.67--0.92)x(3.29+3.29)/2	0.82		
		(0.11--0.67)x(3.29+3.29)/2	2.57		
		(0.31-0.11)x(3.30+3.29)/2	0.66		
		(1.13-0.31)x(3.28+3.30)/2	2.70		
		(1.29-1.13)x(3.27+3.28)/2	0.52		
		(2.16-1.29)x(3.29+3.27)/2	2.85		
		(2.27-2.16)x(3.29+3.29)/2	0.36		
		(3.19-2.27)x(3.27+3.29)/2	3.02		
		(3.25-3.19)x(3.27+3.27)/2	0.20		
		(4.21-3.25)x(3.24+3.27)/2	3.12		
		(4.23-4.21)x(3.24+3.24)/2	0.06		
		(4.60-4.23)x(3.24+3.24)/2	1.20		
		(5.21-4.60)x(3.24+3.24)/2	1.98		
		(5.24-5.21)x(3.24+3.24)/2	0.10		
		(6.19-5.24)x(3.24+3.24)/2	3.08		
		(6.26-6.19)x(3.23+3.24)/2	0.23		
		(7.17-6.26)x(3.14+3.23)/2	2.90		
		(7.29-7.17)x(3.13+3.14)/2	0.38		
		(8.15-7.29)x(2.95+3.13)/2	2.61		
		(8.32-8.15)x(2.92+2.95)/2	0.50		
		(9.13-8.32)x(2.76+2.92)/2	2.30		
		(9.34-9.13)x(2.72+2.76)/2	0.58		
		(10.11-9.34)x(2.58+2.72)/2	2.04		
		(10.37-10.11)x(2.52+2.58)/2	0.66		
		(11.09-10.37)x(2.39+2.52)/2	1.77		
		(11.27-11.09)x(2.35+2.39)/2	0.43		
		(6.16-11.27)x(8.81+5.41)/2	-36.33		
		(5.09-6.16)x(8.82+8.81)/2	-9.43		
		(5.24-5.09)x(8.64+8.82)/2	1.31		
		(3.50-5.24)x(8.68+8.64)/2	-15.07		
		(0.00-3.50)x(8.77+8.68)/2	-30.54		
		(-3.50-0.00)x(8.68+8.77)/2	-30.54		
		(-5.24--3.50)x(8.64+8.68)/2	-15.07		
		(-5.09--5.24)x(8.82+8.64)/2	1.31		
		(-6.16--5.09)x(8.81+8.82)/2	-9.43		
		(-18.13--6.16)x(0.83+8.81)/2	-57.70		
				129.62	
29	R1	(-17.34--18.13)x(0.33+0.83)/2	0.46		
420.00		(-16.36--17.34)x(0.26+0.33)/2	0.29		
		(-16.32--16.36)x(0.25+0.26)/2	0.01		
		(-15.38--16.32)x(0.28+0.25)/2	0.25		
		(-15.29--15.38)x(0.28+0.28)/2	0.03		
		(-14.40--15.29)x(0.37+0.28)/2	0.29		
		(-14.26--14.40)x(0.38+0.37)/2	0.05		
		(-13.42--14.26)x(0.68+0.38)/2	0.45		
		(-13.24--13.42)x(0.75+0.68)/2	0.13		
		(-12.44--13.24)x(1.07+0.75)/2	0.73		
		(-12.21--12.44)x(1.22+1.07)/2	0.26		
		(-11.46--12.21)x(1.55+1.22)/2	1.04		
		(-11.18--11.46)x(1.66+1.55)/2	0.45		
		(-10.48--11.18)x(1.93+1.66)/2	1.26		
		(-10.16--10.48)x(1.99+1.93)/2	0.63		
		(-9.50--10.16)x(2.23+1.99)/2	1.39		
		(-9.13--9.50)x(2.37+2.23)/2	0.85		
		(-8.52--9.13)x(2.60+2.37)/2	1.52		
		(-8.11--8.52)x(2.75+2.60)/2	1.10		
		(-7.54--8.11)x(2.95+2.75)/2	1.62		
		(-7.08--7.54)x(3.13+2.95)/2	1.40		
		(-6.56--7.08)x(3.22+3.13)/2	1.65		
		(-6.05--6.56)x(3.26+3.22)/2	1.65		
		(-5.58--6.05)x(3.26+3.26)/2	1.53		
		(-5.03--5.58)x(3.25+3.26)/2	1.79		
		(-4.60--5.03)x(3.24+3.25)/2	1.40		
		(-4.00--4.60)x(3.24+3.24)/2	1.94		
		(-3.62--4.00)x(3.25+3.24)/2	1.23		
		(-2.97--3.62)x(3.25+3.25)/2	2.11		
		(-2.64--2.97)x(3.26+3.25)/2	1.07		
		(-1.95--2.64)x(3.29+3.26)/2	2.26		
		(-1.65--1.95)x(3.29+3.29)/2	0.99		
		(-0.92--1.65)x(3.29+3.29)/2	2.40		
		(-0.67--0.92)x(3.29+3.29)/2	0.82		
		(0.11--0.67)x(3.29+3.29)/2	2.57		
		(0.31-0.11)x(3.30+3.29)/2	0.66		
		(1.13-0.31)x(3.28+3.30)/2	2.70		
		A RIPORTARE mq	40.98		

		CALCOLO DELLE AREE		Foglio n. 2	
STERRI E RIPORTI					
N. SEZIONE PROG.	FIG.	ELEMENTI DI CALCOLO	AREA ELEMENTARE mq	AREA FIGURA mq	NOTE
		RIPORTO mq	40.98		
		(1.29-1.13)x(3.27+3.28)/2	0.52		
		(2.16-1.29)x(3.29+3.27)/2	2.85		
		(2.27-2.16)x(3.29+3.29)/2	0.36		
		(3.19-2.27)x(3.27+3.29)/2	3.02		
		(3.25-3.19)x(3.27+3.27)/2	0.20		
		(4.21-3.25)x(3.24+3.27)/2	3.12		
		(4.23-4.21)x(3.24+3.24)/2	0.06		
		(4.60-4.23)x(3.24+3.24)/2	1.20		
		(5.21-4.60)x(3.24+3.24)/2	1.98		
		(5.24-5.21)x(3.24+3.24)/2	0.10		
		(6.19-5.24)x(3.24+3.24)/2	3.08		
		(6.26-6.19)x(3.23+3.24)/2	0.23		
		(7.17-6.26)x(3.14+3.23)/2	2.90		
		(7.29-7.17)x(3.13+3.14)/2	0.38		
		(8.15-7.29)x(2.95+3.13)/2	2.61		
		(8.32-8.15)x(2.92+2.95)/2	0.50		
		(9.13-8.32)x(2.76+2.92)/2	2.30		
		(9.34-9.13)x(2.72+2.76)/2	0.58		
		(10.11-9.34)x(2.58+2.72)/2	2.04		
		(10.37-10.11)x(2.52+2.58)/2	0.66		
		(11.09-10.37)x(2.39+2.52)/2	1.77		
		(11.27-11.09)x(2.35+2.39)/2	0.43		
		(6.16-11.27)x(8.81+5.41)/2	-36.33		
		(5.09-6.16)x(8.82+8.81)/2	-9.43		
		(5.24-5.09)x(8.64+8.82)/2	1.31		
		(3.50-5.24)x(8.68+8.64)/2	-15.07		
		(0.00-3.50)x(8.77+8.68)/2	-30.54		
		(-3.50-0.00)x(8.68+8.77)/2	-30.54		
		(-5.24--3.50)x(8.64+8.68)/2	-15.07		
		(-5.09--5.24)x(8.82+8.64)/2	1.31		
		(-6.16--5.09)x(8.81+8.82)/2	-9.43		
		(-18.13--6.16)x(0.83+8.81)/2	-57.70		
				129.62	
30 435.00	R1	(-16.43--16.54)x(0.33+0.33)/2	0.04		
		(-15.99--16.43)x(0.28+0.33)/2	0.13		
		(-15.45--15.99)x(0.18+0.28)/2	0.12		
		(-14.97--15.45)x(0.16+0.18)/2	0.08		
		(-14.47--14.97)x(0.22+0.16)/2	0.10		
		(-13.94--14.47)x(0.31+0.22)/2	0.14		
		(-13.49--13.94)x(0.42+0.31)/2	0.16		
		(-12.91--13.49)x(0.56+0.42)/2	0.28		
		(-12.51--12.91)x(0.77+0.56)/2	0.27		
		(-11.89--12.51)x(1.00+0.77)/2	0.55		
		(-11.53--11.89)x(1.19+1.00)/2	0.39		
		(-10.86--11.53)x(1.50+1.19)/2	0.90		
		(-10.55--10.86)x(1.63+1.50)/2	0.49		
		(-9.83--10.55)x(1.92+1.63)/2	1.28		
		(-9.57--9.83)x(2.02+1.92)/2	0.51		
		(-8.81--9.57)x(2.33+2.02)/2	1.65		
		(-8.59--8.81)x(2.42+2.33)/2	0.52		
		(-7.78--8.59)x(2.74+2.42)/2	2.09		
		(-7.61--7.78)x(2.80+2.74)/2	0.47		
		(-6.75--7.61)x(3.17+2.80)/2	2.57		
		(-6.63--6.75)x(3.19+3.17)/2	0.38		
		(-5.73--6.63)x(3.38+3.19)/2	2.96		
		(-5.61--5.73)x(3.38+3.38)/2	0.41		
		(-4.70--5.61)x(3.32+3.38)/2	3.05		
		(-4.69--4.70)x(3.32+3.32)/2	0.03		
		(-3.87--4.69)x(3.29+3.32)/2	2.71		
		(-3.68--3.87)x(3.28+3.29)/2	0.62		
		(-2.70--3.68)x(3.31+3.28)/2	3.23		
		(-2.65--2.70)x(3.31+3.31)/2	0.17		
		(-1.72--2.65)x(3.30+3.31)/2	3.07		
		(-1.62--1.72)x(3.30+3.30)/2	0.33		
		(-0.74--1.62)x(3.31+3.30)/2	2.91		
		(-0.60--0.74)x(3.31+3.31)/2	0.46		
		(0.24--0.60)x(3.31+3.31)/2	2.78		
		(0.43-0.24)x(3.31+3.31)/2	0.63		
		(1.22-0.43)x(3.33+3.31)/2	2.62		
		(1.46-1.22)x(3.33+3.33)/2	0.80		
		(2.20-1.46)x(3.30+3.33)/2	2.45		
		(2.48-2.20)x(3.30+3.30)/2	0.92		
		(3.18-2.48)x(3.27+3.30)/2	2.30		
		(3.51-3.18)x(3.27+3.27)/2	1.08		
		(4.16-3.51)x(3.28+3.27)/2	2.13		
		(4.54-4.16)x(3.28+3.28)/2	1.25		
		(4.58-4.54)x(3.29+3.28)/2	0.13		
		(4.63-4.58)x(3.29+3.29)/2	0.16		
		(4.67-4.63)x(3.32+3.29)/2	0.13		
		(4.70-4.67)x(3.34+3.32)/2	0.10		
		(4.71-4.70)x(3.38+3.34)/2	0.03		
		(4.73-4.71)x(3.33+3.38)/2	0.07		
		(5.01-4.73)x(3.30+3.33)/2	0.93		
		(5.34-5.01)x(3.34+3.30)/2	1.10		
		(5.35-5.34)x(3.37+3.34)/2	0.03		
		(5.37-5.35)x(3.35+3.37)/2	0.07		
		(5.40-5.37)x(3.37+3.35)/2	0.10		
		(5.43-5.40)x(3.39+3.37)/2	0.10		
		(5.48-5.43)x(3.36+3.39)/2	0.17		
		(5.50-5.48)x(3.35+3.36)/2	0.07		
		(5.51-5.50)x(3.30+3.35)/2	0.03		
		(5.54-5.51)x(3.31+3.30)/2	0.10		
		(5.56-5.54)x(3.32+3.31)/2	0.07		
		(6.12-5.56)x(3.35+3.32)/2	1.87		
		(6.59-6.12)x(3.33+3.35)/2	1.57		
		(7.10-6.59)x(3.30+3.33)/2	1.69		
		(7.62-7.10)x(3.27+3.30)/2	1.71		
		(8.08-7.62)x(3.24+3.27)/2	1.50		
		(8.25-8.08)x(3.21+3.24)/2	0.55		
		(6.16-8.25)x(7.77+6.37)/2	-14.78		
		(5.09-6.16)x(7.77+7.77)/2	-8.31		
		(5.24-5.09)x(7.59+7.77)/2	1.15		
		(3.50-5.24)x(7.63+7.59)/2	-13.24		
		(0.00-3.50)x(7.72+7.63)/2	-26.86		
		(-3.50-0.00)x(7.63+7.72)/2	-26.86		
		A RIPORTARE mq	-26.59		

		CALCOLO DELLE AREE		Foglio n. 3	
STERRI E RIPORTI					
N. SEZIONE PROG.	FIG.	ELEMENTI DI CALCOLO	AREA ELEMENTARE mq	AREA FIGURA mq	NOTE
		RIPORTO mq	-26.59		
		(-5.24--3.50)x(7.59+7.63)/2	-13.24		
		(-5.09--5.24)x(7.77+7.59)/2	1.15		
		(-6.16--5.09)x(7.77+7.77)/2	-8.31		
		(-16.54--6.16)x(0.85+7.77)/2	-44.74		
				91.73	
31	R1	(-10.54--10.61)x(1.66+1.64)/2	0.12		
450.00		(-9.64--10.54)x(2.03+1.66)/2	1.66		
		(-9.51--9.64)x(2.09+2.03)/2	0.27		
		(-8.65--9.51)x(2.42+2.09)/2	1.94		
		(-8.48--8.65)x(2.49+2.42)/2	0.42		
		(-7.67--8.48)x(2.88+2.49)/2	2.17		
		(-7.46--7.67)x(2.97+2.88)/2	0.61		
		(-7.34--7.46)x(2.89+2.97)/2	0.35		
		(-7.22--7.34)x(2.95+2.89)/2	0.35		
		(-7.13--7.22)x(2.96+2.95)/2	0.27		
		(-6.52--7.13)x(3.13+2.96)/2	1.86		
		(-6.43--6.52)x(3.38+3.13)/2	0.29		
		(-5.71--6.43)x(3.41+3.35)/2	2.43		
		(-5.40--5.71)x(3.47+3.41)/2	1.07		
		(-4.98--5.40)x(3.42+3.47)/2	1.45		
		(-4.93--4.98)x(3.42+3.42)/2	0.17		
		(-4.70--4.93)x(3.42+3.42)/2	0.79		
		(-4.62--4.70)x(3.42+3.42)/2	0.27		
		(-4.61--4.62)x(3.41+3.42)/2	0.03		
		(-4.60--4.61)x(3.41+3.41)/2	0.03		
		(-4.59--4.60)x(3.41+3.41)/2	0.03		
		(-4.58--4.59)x(3.41+3.41)/2	0.03		
		(-4.55--4.58)x(3.41+3.41)/2	0.10		
		(-4.51--4.55)x(3.40+3.41)/2	0.14		
		(-4.50--4.51)x(3.40+3.40)/2	0.03		
		(-4.49--4.50)x(3.39+3.40)/2	0.03		
		(-4.46--4.49)x(3.39+3.39)/2	0.10		
		(-4.38--4.46)x(3.38+3.39)/2	0.27		
		(-4.32--4.38)x(3.36+3.38)/2	0.20		
		(-4.24--4.32)x(3.31+3.36)/2	0.27		
		(-4.17--4.24)x(3.34+3.31)/2	0.23		
		(-4.12--4.17)x(3.37+3.34)/2	0.17		
		(-3.92--4.12)x(3.41+3.37)/2	0.68		
		(-3.70--3.92)x(3.37+3.41)/2	0.75		
		(-3.64--3.70)x(3.35+3.37)/2	0.20		
		(-3.58--3.64)x(3.32+3.35)/2	0.20		
		(-3.50--3.58)x(3.38+3.32)/2	0.27		
		(-3.40--3.50)x(3.30+3.38)/2	0.33		
		(-3.35--3.40)x(3.29+3.30)/2	0.16		
		(-2.77--3.35)x(3.31+3.29)/2	1.91		
		(-2.32--2.77)x(3.33+3.31)/2	1.49		
		(-1.79--2.32)x(3.36+3.33)/2	1.77		
		(-1.30--1.79)x(3.37+3.36)/2	1.65		
		(-0.81--1.30)x(3.38+3.37)/2	1.65		
		(-0.27--0.81)x(3.38+3.38)/2	1.83		
		(0.17--0.27)x(3.37+3.38)/2	1.49		
		(0.76-0.17)x(3.35+3.37)/2	1.98		
		(1.15-0.76)x(3.35+3.35)/2	1.31		
		(1.78-1.15)x(3.36+3.35)/2	2.11		
		(2.13-1.78)x(3.36+3.36)/2	1.18		
		(2.81-2.13)x(3.37+3.36)/2	2.29		
		(3.11-2.81)x(3.38+3.37)/2	1.01		
		(3.83-3.11)x(3.36+3.38)/2	2.43		
		(3.88-3.83)x(3.37+3.36)/2	0.17		
		(4.03-3.88)x(3.35+3.37)/2	0.50		
		(4.14-4.03)x(3.39+3.35)/2	0.37		
		(4.64-4.14)x(3.43+3.39)/2	1.71		
		(4.65-4.64)x(3.43+3.43)/2	0.03		
		(4.68-4.65)x(3.37+3.38)/2	0.10		
		(4.72-4.68)x(3.37+3.37)/2	0.13		
		(4.76-4.72)x(3.38+3.37)/2	0.14		
		(4.81-4.76)x(3.39+3.38)/2	0.17		
		(4.86-4.81)x(3.35+3.39)/2	0.17		
		(4.89-4.86)x(3.34+3.35)/2	0.10		
		(4.98-4.89)x(3.34+3.34)/2	0.30		
		(5.05-4.98)x(3.37+3.34)/2	0.23		
		(5.10-5.05)x(3.40+3.37)/2	0.17		
		(5.14-5.10)x(3.37+3.40)/2	0.14		
		(5.17-5.14)x(3.39+3.37)/2	0.10		
		(5.20-5.17)x(3.39+3.39)/2	0.10		
		(5.26-5.20)x(3.41+3.39)/2	0.20		
		(5.29-5.26)x(3.38+3.41)/2	0.10		
		(5.33-5.29)x(3.38+3.38)/2	0.14		
		(5.38-5.33)x(3.38+3.38)/2	0.17		
		(5.41-5.38)x(3.30+3.38)/2	0.10		
		(5.66-5.41)x(3.31+3.30)/2	0.83		
		(5.72-5.66)x(3.31+3.31)/2	0.20		
		(5.80-5.72)x(3.30+3.31)/2	0.26		
		(5.89-5.80)x(3.31+3.30)/2	0.30		
		(6.05-5.89)x(3.31+3.31)/2	0.53		
		(6.91-6.05)x(3.31+3.31)/2	2.85		
		(7.03-6.91)x(3.32+3.31)/2	0.40		
		(7.94-7.03)x(3.35+3.32)/2	3.03		
		(8.01-7.94)x(3.36+3.35)/2	0.23		
		(8.97-8.01)x(3.38+3.36)/2	3.24		
		(8.99-8.97)x(3.37+3.38)/2	0.07		
		(9.61-8.99)x(3.27+3.37)/2	2.06		
		(9.98-9.61)x(3.21+3.27)/2	1.20		
		(9.99-9.98)x(3.21+3.21)/2	0.03		
		(10.96-9.99)x(2.98+3.21)/2	3.00		
		(11.02-10.96)x(2.96+2.98)/2	0.18		
		(11.94-11.02)x(2.72+2.96)/2	2.61		
		(12.05-11.94)x(2.69+2.72)/2	0.30		
		(12.29-12.05)x(2.63+2.69)/2	0.64		
		(6.16-12.29)x(6.72+2.63)/2	-28.66		
		(5.09-6.16)x(6.72+6.72)/2	-7.19		
		(5.24-5.09)x(6.54+6.72)/2	0.99		
		(3.50-5.24)x(6.58+6.54)/2	-11.41		
		(0.00-3.50)x(6.67+6.58)/2	-23.19		
		(-3.50-0.00)x(6.58+6.67)/2	-23.19		
		A RIPORTARE mq	-20.51		

STERRI E RIPORTI

N. SEZIONE PROG.	FIG.	ELEMENTI DI CALCOLO	AREA ELEMENTARE mq	AREA FIGURA mq	NOTE
		RIPORTO mq	-20.51		
		(-5.24--3.50)x(6.54+6.58)/2	-11.41		
		(-5.09--5.24)x(6.72+6.54)/2	0.99		
		(-6.16--5.09)x(6.72+6.72)/2	-7.19		
		(-10.61--6.16)x(3.75+6.72)/2	-23.30		
				61.42	
32 465.00	R1	(-7.24--7.25)x(3.41+3.35)/2	0.03		
		(-7.22--7.24)x(3.27+3.41)/2	0.07		
		(-7.20--7.22)x(3.33+3.27)/2	0.07		
		(-7.18--7.20)x(3.27+3.33)/2	0.07		
		(-7.15--7.18)x(3.38+3.27)/2	0.10		
		(-7.13--7.15)x(3.42+3.38)/2	0.07		
		(-6.76--7.13)x(3.46+3.42)/2	1.27		
		(-6.11--6.76)x(3.58+3.46)/2	2.29		
		(-5.78--6.11)x(3.54+3.58)/2	1.17		
		(-5.08--5.78)x(3.48+3.54)/2	2.46		
		(-4.97--5.08)x(3.47+3.48)/2	0.38		
		(-4.82--4.97)x(3.40+3.47)/2	0.52		
		(-4.76--4.82)x(3.42+3.40)/2	0.20		
		(-4.74--4.76)x(3.41+3.42)/2	0.07		
		(-4.72--4.74)x(3.40+3.41)/2	0.07		
		(-4.71--4.72)x(3.40+3.40)/2	0.03		
		(-4.70--4.71)x(3.40+3.40)/2	0.03		
		(-4.69--4.70)x(3.40+3.40)/2	0.03		
		(-4.68--4.69)x(3.40+3.40)/2	0.03		
		(-4.67--4.68)x(3.40+3.40)/2	0.03		
		(-4.49--4.67)x(3.40+3.40)/2	0.61		
		(-4.41--4.49)x(3.38+3.40)/2	0.27		
		(-4.19--4.41)x(3.36+3.38)/2	0.74		
		(-4.05--4.19)x(3.35+3.36)/2	0.47		
		(-4.04--4.05)x(3.35+3.35)/2	0.03		
		(-3.99--4.04)x(3.34+3.35)/2	0.17		
		(-3.94--3.99)x(3.38+3.34)/2	0.17		
		(-3.93--3.94)x(3.44+3.38)/2	0.03		
		(-3.91--3.93)x(3.38+3.44)/2	0.07		
		(-3.64--3.91)x(3.34+3.38)/2	0.91		
		(-3.58--3.64)x(3.36+3.34)/2	0.20		
		(-3.50--3.58)x(3.35+3.36)/2	0.27		
		(-3.39--3.50)x(3.32+3.35)/2	0.37		
		(-3.23--3.39)x(3.33+3.32)/2	0.53		
		(-3.03--3.23)x(3.34+3.33)/2	0.67		
		(-2.84--3.03)x(3.34+3.34)/2	0.63		
		(-2.00--2.84)x(3.33+3.34)/2	2.80		
		(-1.86--2.00)x(3.33+3.33)/2	0.47		
		(-0.97--1.86)x(3.36+3.33)/2	2.98		
		(-0.88--0.97)x(3.36+3.36)/2	0.30		
		(0.05--0.88)x(3.36+3.36)/2	3.12		
		(0.10-0.05)x(3.36+3.36)/2	0.17		
		(1.08-0.10)x(3.34+3.36)/2	3.28		
		(1.14-1.08)x(3.34+3.34)/2	0.20		
		(2.06-1.14)x(3.34+3.34)/2	3.07		
		(2.11-2.06)x(3.34+3.34)/2	0.17		
		(3.04-2.11)x(3.36+3.34)/2	3.12		
		(3.13-3.04)x(3.37+3.36)/2	0.30		
		(4.02-3.13)x(3.40+3.37)/2	3.01		
		(4.16-4.02)x(3.40+3.40)/2	0.48		
		(4.26-4.16)x(3.42+3.40)/2	0.34		
		(4.34-4.26)x(3.41+3.42)/2	0.27		
		(4.39-4.34)x(3.45+3.41)/2	0.17		
		(4.44-4.39)x(3.41+3.45)/2	0.17		
		(4.47-4.44)x(3.45+3.41)/2	0.10		
		(4.50-4.47)x(3.45+3.45)/2	0.10		
		(4.53-4.50)x(3.45+3.45)/2	0.10		
		(4.57-4.53)x(3.46+3.45)/2	0.14		
		(4.58-4.57)x(3.46+3.46)/2	0.03		
		(5.07-4.58)x(3.37+3.46)/2	1.67		
		(5.08-5.07)x(3.37+3.37)/2	0.03		
		(5.14-5.08)x(3.37+3.37)/2	0.20		
		(5.15-5.14)x(3.46+3.37)/2	0.03		
		(5.18-5.15)x(3.43+3.46)/2	0.10		
		(5.19-5.18)x(3.42+3.42)/2	0.03		
		(5.22-5.19)x(3.43+3.42)/2	0.10		
		(5.25-5.22)x(3.41+3.43)/2	0.10		
		(5.28-5.25)x(3.42+3.41)/2	0.10		
		(5.30-5.28)x(3.36+3.42)/2	0.07		
		(5.32-5.30)x(3.36+3.31)/2	0.07		
		(5.74-5.32)x(3.35+3.36)/2	1.41		
		(5.83-5.74)x(3.34+3.35)/2	0.30		
		(5.96-5.83)x(3.37+3.34)/2	0.44		
		(6.15-5.96)x(3.38+3.37)/2	0.64		
		(6.21-6.15)x(3.38+3.38)/2	0.20		
		(6.97-6.21)x(3.37+3.38)/2	2.56		
		(7.24-6.97)x(3.35+3.37)/2	0.91		
		(7.95-7.24)x(3.36+3.35)/2	2.38		
		(8.26-7.95)x(3.35+3.36)/2	1.04		
		(8.93-8.26)x(3.35+3.35)/2	2.24		
		(9.29-8.93)x(3.34+3.35)/2	1.20		
		(9.91-9.29)x(3.26+3.34)/2	2.05		
		(10.32-9.91)x(3.24+3.26)/2	1.33		
		(10.89-10.32)x(3.17+3.24)/2	1.83		
		(11.34-10.89)x(3.15+3.17)/2	1.42		
		(11.87-11.34)x(3.03+3.15)/2	1.64		
		(12.37-11.87)x(2.91+3.03)/2	1.48		
		(12.85-12.37)x(2.66+2.91)/2	1.34		
		(13.40-12.85)x(2.39+2.66)/2	1.39		
		(13.83-13.40)x(2.18+2.39)/2	0.98		
		(14.42-13.83)x(2.06+2.18)/2	1.25		
		(14.81-14.42)x(2.09+2.06)/2	0.81		
		(15.45-14.81)x(2.11+2.09)/2	1.34		
		(15.79-15.45)x(2.18+2.11)/2	0.73		
		(16.48-15.79)x(2.19+2.18)/2	1.51		
		(16.56-16.48)x(2.19+2.19)/2	0.18		
		(11.55-16.56)x(5.53+2.19)/2	-19.34		
		(10.48-11.55)x(5.54+5.53)/2	-5.92		
		(10.63-10.48)x(5.36+5.54)/2	0.82		
		(3.50-10.63)x(5.53+5.36)/2	-38.82		
		A RIPORTARE mq	11.86		

STERRI E RIPORTI

N. SEZIONE PROG.	FIG.	ELEMENTI DI CALCOLO	AREA ELEMENTARE mq	AREA FIGURA mq	NOTE
		RIPORTO mq	11.86		
		(0.00-3.50)x(5.62+5.53)/2	-19.51		
		(-3.50-0.00)x(5.53+5.62)/2	-19.51		
		(-5.24--3.50)x(5.49+5.53)/2	-9.59		
		(-5.09--5.24)x(5.67+5.49)/2	0.84		
		(-6.16--5.09)x(5.67+5.67)/2	-6.07		
		(-7.25--6.16)x(4.94+5.67)/2	-5.78		
				47.76	
33 480.00	R1	(3.55-4.65)x(4.48+4.46)/2	-4.92		
		(0.00-3.55)x(4.57+4.48)/2	-16.06		
		(-3.50-0.00)x(4.48+4.57)/2	-15.84		
		(-4.75--3.50)x(4.45+4.48)/2	-5.58		
		(-4.71--4.75)x(3.39+3.43)/2	0.14		
		(-4.69--4.71)x(3.38+3.42)/2	0.07		
		(-4.64--4.69)x(3.38+3.38)/2	0.17		
		(-4.49--4.64)x(3.42+3.38)/2	0.51		
		(-4.02--4.49)x(3.42+3.42)/2	1.61		
		(-4.00--4.02)x(3.41+3.45)/2	0.07		
		(-3.98--4.00)x(3.38+3.41)/2	0.07		
		(-3.96--3.98)x(3.39+3.38)/2	0.07		
		(-3.93--3.96)x(3.39+3.39)/2	0.10		
		(-3.90--3.93)x(3.37+3.39)/2	0.10		
		(-3.86--3.90)x(3.36+3.37)/2	0.13		
		(-3.81--3.86)x(3.37+3.36)/2	0.17		
		(-3.74--3.81)x(3.32+3.37)/2	0.23		
		(-3.73--3.74)x(3.32+3.32)/2	0.03		
		(-2.91--3.73)x(3.33+3.32)/2	2.73		
		(-2.70--2.91)x(3.34+3.33)/2	0.70		
		(-1.93--2.70)x(3.36+3.34)/2	2.58		
		(-1.67--1.93)x(3.36+3.36)/2	0.87		
		(-0.95--1.67)x(3.39+3.36)/2	2.43		
		(-0.65--0.95)x(3.40+3.39)/2	1.02		
		(0.03--0.65)x(3.37+3.40)/2	2.30		
		(0.38-0.03)x(3.37+3.37)/2	1.18		
		(1.01-0.38)x(3.39+3.37)/2	2.13		
		(1.40-1.01)x(3.40+3.39)/2	1.32		
		(1.99-1.40)x(3.41+3.40)/2	2.01		
		(2.43-1.99)x(3.42+3.41)/2	1.50		
		(2.98-2.43)x(3.42+3.42)/2	1.88		
		(3.46-2.98)x(3.42+3.42)/2	1.64		
		(3.96-3.46)x(3.43+3.42)/2	1.71		
		(4.21-3.96)x(3.43+3.43)/2	0.86		
		(4.30-4.21)x(3.44+3.43)/2	0.31		
		(4.35-4.30)x(3.44+3.44)/2	0.17		
		(4.37-4.35)x(3.44+3.44)/2	0.07		
		(4.39-4.37)x(3.44+3.44)/2	0.07		
		(4.41-4.39)x(3.44+3.44)/2	0.07		
		(4.46-4.41)x(3.45+3.44)/2	0.17		
		(4.48-4.46)x(3.45+3.45)/2	0.07		
		(4.50-4.48)x(3.41+3.45)/2	0.07		
		(4.53-4.50)x(3.41+3.41)/2	0.10		
		(4.54-4.53)x(3.41+3.41)/2	0.03		
		(4.63-4.54)x(3.39+3.41)/2	0.31		
		(4.65-4.63)x(3.40+3.39)/2	0.07		
				10.56	
33 480.00	R2	(4.65-4.70)x(4.46+4.45)/2	-0.22		
		(4.70-4.65)x(3.40+3.40)/2	0.17		
				0.05	
33 480.00	R3	(4.70-5.01)x(4.45+4.45)/2	-1.38		
		(4.71-4.70)x(3.40+3.40)/2	0.03		
		(4.77-4.71)x(3.41+3.40)/2	0.20		
		(4.81-4.77)x(3.43+3.41)/2	0.14		
		(4.85-4.81)x(3.43+3.43)/2	0.14		
		(4.89-4.85)x(3.45+3.43)/2	0.14		
		(5.01-4.89)x(3.46+3.45)/2	0.41		
				0.32	
33 480.00	R4	(9.02-9.13)x(4.52+4.52)/2	-0.50		
		(9.13-9.02)x(4.39+4.52)/2	0.49		
				0.01	
33 480.00	R4	(5.01-9.13)x(4.45+4.34)/2	-18.11		
		(5.03-5.01)x(3.46+3.46)/2	0.07		
		(5.05-5.03)x(3.40+3.46)/2	0.07		
		(5.06-5.05)x(3.40+3.40)/2	0.03		
		(5.10-5.06)x(3.40+3.40)/2	0.14		
		(5.15-5.10)x(3.40+3.40)/2	0.17		
		(5.19-5.15)x(3.44+3.40)/2	0.14		
		(5.20-5.19)x(3.34+3.44)/2	0.03		
		(5.22-5.20)x(3.42+3.34)/2	0.07		
		(5.25-5.22)x(3.38+3.42)/2	0.10		
		(5.28-5.25)x(3.41+3.38)/2	0.10		
		(5.31-5.28)x(3.42+3.41)/2	0.10		
		(5.36-5.31)x(3.39+3.42)/2	0.17		
		(5.41-5.36)x(3.35+3.39)/2	0.17		
		(5.47-5.41)x(3.38+3.35)/2	0.20		
		(5.51-5.47)x(3.40+3.38)/2	0.14		
		(5.92-5.51)x(3.37+3.40)/2	1.39		
		(6.54-5.92)x(3.30+3.37)/2	2.07		
		(6.90-6.54)x(3.28+3.30)/2	1.18		
		(7.56-6.90)x(3.22+3.28)/2	2.14		
		(7.88-7.56)x(3.20+3.22)/2	1.03		
		(8.59-7.88)x(3.24+3.20)/2	2.29		
		(8.86-8.59)x(3.24+3.24)/2	0.87		
		(9.13-8.86)x(3.26+3.24)/2	0.88		
				4.56	
33 480.00	R5	(9.62-9.13)x(3.28+3.26)/2	1.60		
		(9.84-9.62)x(3.29+3.28)/2	0.72		
		(10.64-9.84)x(3.37+3.29)/2	2.66		
		(10.82-10.64)x(3.36+3.37)/2	0.61		
		(11.67-10.82)x(3.41+3.36)/2	2.88		
		(11.77-11.67)x(3.40+3.41)/2	0.34		
		(10.08-11.77)x(4.52+3.40)/2	-6.69		
		(9.13-10.08)x(4.52+4.52)/2	-4.29		
		(9.17-9.13)x(4.34+4.39)/2	0.17		
		(9.13-9.17)x(4.34+4.34)/2	-0.17		
				2.17	
34	R1	(-3.50--0.87)x(3.92+3.79)/2	-10.14		
		A RIPORTARE mq	-10.14		

STERRI E RIPORTI

N. SEZIONE PROG.	FIG.	ELEMENTI DI CALCOLO	AREA ELEMENTARE mq	AREA FIGURA mq	NOTE
		RIPORTO mq	-10.14		
495.00		(-8.66--3.50)x(4.17+3.92)/2	-20.87		
		(-8.54--8.66)x(4.32+4.17)/2	0.51		
		(-9.60--8.54)x(4.31+4.32)/2	-4.57		
		(-15.75--9.60)x(0.21+4.31)/2	-13.90		
		(-15.35--15.75)x(0.24+0.21)/2	0.09		
		(-14.88--15.35)x(0.25+0.24)/2	0.12		
		(-14.33--14.88)x(0.22+0.25)/2	0.13		
		(-14.30--14.33)x(0.22+0.22)/2	0.01		
		(-14.17--14.30)x(0.21+0.22)/2	0.03		
		(-14.14--14.17)x(0.21+0.21)/2	0.01		
		(-14.08--14.14)x(0.21+0.21)/2	0.01		
		(-14.07--14.08)x(0.21+0.21)/2	0.00		
		(-14.06--14.07)x(0.22+0.22)/2	0.00		
		(-14.03--14.06)x(0.24+0.22)/2	0.01		
		(-14.00--14.03)x(0.24+0.24)/2	0.01		
		(-13.85--14.00)x(0.36+0.24)/2	0.05		
		(-13.45--13.85)x(0.41+0.36)/2	0.15		
		(-12.82--13.45)x(0.52+0.41)/2	0.29		
		(-12.49--12.82)x(0.44+0.52)/2	0.16		
		(-12.37--12.49)x(0.42+0.44)/2	0.05		
		(-12.33--12.37)x(0.41+0.42)/2	0.02		
		(-12.31--12.33)x(0.41+0.41)/2	0.01		
		(-12.23--12.31)x(0.40+0.41)/2	0.03		
		(-12.21--12.23)x(0.44+0.40)/2	0.01		
		(-12.20--12.21)x(0.43+0.44)/2	0.00		
		(-12.19--12.20)x(0.44+0.43)/2	0.00		
		(-12.17--12.19)x(0.46+0.44)/2	0.01		
		(-12.13--12.17)x(0.49+0.46)/2	0.02		
		(-12.05--12.13)x(0.59+0.49)/2	0.04		
		(-11.79--12.05)x(0.85+0.59)/2	0.19		
		(-11.56--11.79)x(0.97+0.85)/2	0.21		
		(-10.77--11.56)x(1.38+0.97)/2	0.93		
		(-10.61--10.77)x(1.47+1.38)/2	0.23		
		(-9.74--10.61)x(1.93+1.47)/2	1.48		
		(-9.66--9.74)x(1.97+1.93)/2	0.16		
		(-8.79--9.66)x(2.47+1.97)/2	1.93		
		(-8.71--8.79)x(2.52+2.47)/2	0.20		
		(-7.77--8.71)x(3.06+2.52)/2	2.62		
		(-7.68--7.77)x(3.11+3.06)/2	0.28		
		(-7.66--7.68)x(3.12+3.11)/2	0.06		
		(-7.64--7.66)x(3.04+3.12)/2	0.06		
		(-7.20--7.64)x(3.42+3.22)/2	1.46		
		(-7.04--7.20)x(3.49+3.42)/2	0.55		
		(-6.74--7.04)x(3.57+3.49)/2	1.06		
		(-6.65--6.74)x(3.58+3.57)/2	0.32		
		(-5.87--6.65)x(3.51+3.58)/2	2.77		
		(-5.62--5.87)x(3.51+3.51)/2	0.88		
		(-5.35--5.62)x(3.45+3.51)/2	0.94		
		(-5.20--5.35)x(3.42+3.45)/2	0.52		
		(-5.13--5.20)x(3.42+3.42)/2	0.24		
		(-5.09--5.13)x(3.42+3.42)/2	0.14		
		(-5.06--5.09)x(3.41+3.42)/2	0.10		
		(-5.04--5.06)x(3.41+3.41)/2	0.07		
		(-5.03--5.04)x(3.41+3.41)/2	0.03		
		(-5.02--5.03)x(3.41+3.41)/2	0.03		
		(-5.01--5.02)x(3.41+3.41)/2	0.03		
		(-5.00--5.01)x(3.41+3.41)/2	0.03		
		(-4.97--5.00)x(3.41+3.41)/2	0.10		
		(-4.89--4.97)x(3.41+3.41)/2	0.27		
		(-4.85--4.89)x(3.40+3.41)/2	0.14		
		(-4.83--4.85)x(3.39+3.40)/2	0.07		
		(-4.80--4.83)x(3.37+3.39)/2	0.10		
		(-4.72--4.80)x(3.38+3.37)/2	0.27		
		(-4.59--4.72)x(3.38+3.38)/2	0.44		
		(-4.54--4.59)x(3.37+3.38)/2	0.17		
		(-4.49--4.54)x(3.34+3.37)/2	0.17		
		(-4.44--4.49)x(3.36+3.34)/2	0.17		
		(-4.41--4.44)x(3.38+3.36)/2	0.10		
		(-4.38--4.41)x(3.37+3.38)/2	0.10		
		(-4.33--4.38)x(3.44+3.37)/2	0.17		
		(-4.32--4.33)x(3.44+3.44)/2	0.03		
		(-3.75--4.32)x(3.36+3.44)/2	1.94		
		(-3.63--3.75)x(3.36+3.36)/2	0.40		
		(-3.56--3.63)x(3.35+3.36)/2	0.23		
		(-3.02--3.56)x(3.34+3.35)/2	1.81		
		(-2.53--3.02)x(3.36+3.34)/2	1.64		
		(-2.08--2.53)x(3.38+3.36)/2	1.52		
		(-1.50--2.08)x(3.39+3.38)/2	1.96		
		(-1.13--1.50)x(3.39+3.39)/2	1.25		
		(-0.87--1.13)x(3.41+3.39)/2	0.88		
				16.26	
34 495.00	R2	(-0.48--0.87)x(3.43+3.41)/2	1.33		
		(-0.18--0.48)x(3.44+3.43)/2	1.03		
		(0.55--0.18)x(3.46+3.44)/2	2.52		
		(0.77-0.55)x(3.46+3.46)/2	0.76		
		(1.58-0.77)x(3.41+3.46)/2	2.78		
		(1.72-1.58)x(3.41+3.41)/2	0.48		
		(2.61-1.72)x(3.39+3.41)/2	3.03		
		(2.66-2.61)x(3.39+3.39)/2	0.17		
		(3.28-2.66)x(3.38+3.39)/2	2.10		
		(3.61-3.28)x(3.38+3.38)/2	1.12		
		(3.64-3.61)x(3.38+3.38)/2	0.10		
		(3.79-3.64)x(3.38+3.38)/2	0.51		
		(3.90-3.79)x(3.43+3.38)/2	0.37		
		(3.98-3.90)x(3.41+3.43)/2	0.27		
		(4.26-3.98)x(3.45+3.41)/2	0.96		
		(4.62-4.26)x(3.44+3.45)/2	1.24		
		(4.65-4.62)x(3.52+3.44)/2	0.10		
		(4.06-4.65)x(3.55+3.52)/2	-2.09		
		(0.00-4.06)x(3.75+3.55)/2	-14.82		
		(-0.87-0.00)x(3.79+3.75)/2	-3.28		
				1.32	
34 495.00	R3	(4.72-4.70)x(3.47+3.51)/2	0.07		
		(4.77-4.72)x(3.44+3.47)/2	0.17		
		(4.78-4.77)x(3.44+3.44)/2	0.03		
		A RIPORTARE mq	0.27		

STERRI E RIPORTI

N. SEZIONE PROG.	FIG.	ELEMENTI DI CALCOLO	AREA ELEMENTARE mq	AREA FIGURA mq	NOTE
		RIPORTO mq	0.27		
		(5.01-4.78)x(3.50+3.44)/2	0.80		
		(4.70-5.01)x(3.51+3.50)/2	-1.09		
				0.02	
34	S1	(5.10-5.01)x(3.52+3.50)/2	0.32		
495.00		(5.49-5.10)x(3.57+3.52)/2	1.38		
		(5.51-5.49)x(3.56+3.57)/2	0.07		
		(5.70-5.51)x(3.62+3.56)/2	0.68		
		(6.46-5.70)x(3.70+3.62)/2	2.78		
		(6.73-6.46)x(3.70+3.70)/2	1.00		
		(7.41-6.73)x(3.64+3.70)/2	2.50		
		(7.76-7.41)x(3.63+3.64)/2	1.27		
		(8.35-7.76)x(3.57+3.63)/2	2.12		
		(8.79-8.35)x(3.54+3.57)/2	1.56		
		(9.13-8.79)x(3.49+3.54)/2	1.20		
		(8.95-9.13)x(3.49+3.49)/2	-0.63		
		(9.11-8.95)x(3.30+3.49)/2	0.54		
		(5.01-9.11)x(3.50+3.30)/2	-13.94		
				0.85	
34	R4	(9.30-9.13)x(3.47+3.49)/2	0.59		
495.00		(9.81-9.30)x(3.33+3.47)/2	1.73		
		(10.25-9.81)x(3.27+3.33)/2	1.45		
		(10.38-10.25)x(3.25+3.27)/2	0.42		
		(10.02-10.38)x(3.49+3.25)/2	-1.21		
		(9.13-10.02)x(3.49+3.49)/2	-3.11		
				0.13	
35	R1	(-3.50--0.99)x(3.61+3.44)/2	-8.85		
510.00		(-6.12--3.50)x(3.80+3.61)/2	-9.71		
		(-6.00--6.12)x(3.94+3.80)/2	0.46		
		(-7.07--6.00)x(3.93+3.94)/2	-4.21		
		(-7.68--7.07)x(3.52+3.93)/2	-2.27		
		(-7.65--7.68)x(3.52+3.52)/2	0.11		
		(-6.88--7.65)x(3.41+3.52)/2	2.67		
		(-6.84--6.88)x(3.42+3.41)/2	0.14		
		(-6.82--6.84)x(3.42+3.42)/2	0.07		
		(-6.65--6.82)x(3.46+3.42)/2	0.58		
		(-6.60--6.65)x(3.47+3.46)/2	0.17		
		(-6.58--6.60)x(3.48+3.47)/2	0.07		
		(-6.56--6.58)x(3.48+3.48)/2	0.07		
		(-6.55--6.56)x(3.48+3.48)/2	0.03		
		(-6.54--6.55)x(3.47+3.47)/2	0.03		
		(-6.45--6.54)x(3.47+3.47)/2	0.31		
		(-6.41--6.45)x(3.48+3.47)/2	0.14		
		(-5.97--6.41)x(3.38+3.48)/2	1.51		
		(-5.94--5.97)x(3.44+3.38)/2	0.10		
		(-5.89--5.94)x(3.35+3.38)/2	0.17		
		(-5.84--5.89)x(3.34+3.35)/2	0.17		
		(-5.05--5.84)x(3.36+3.34)/2	2.65		
		(-4.79--5.05)x(3.38+3.36)/2	0.88		
		(-4.18--4.79)x(3.41+3.38)/2	2.07		
		(-3.74--4.18)x(3.42+3.41)/2	1.50		
		(-3.32--3.74)x(3.43+3.42)/2	1.44		
		(-2.69--3.32)x(3.41+3.43)/2	2.15		
		(-2.45--2.69)x(3.41+3.41)/2	0.82		
		(-1.65--2.45)x(3.43+3.41)/2	2.74		
		(-1.59--1.65)x(3.43+3.43)/2	0.21		
		(-1.30--1.59)x(3.43+3.43)/2	0.99		
		(-0.99--1.30)x(3.43+3.43)/2	1.06		
				1.73	
35	R2	(-0.87--0.99)x(3.43+3.43)/2	0.41		
510.00		(-0.99--0.87)x(3.44+3.43)/2	-0.41		
35	S1	(-0.87--0.48)x(3.43+3.40)/2	-1.33		
510.00		(-0.72--0.87)x(3.43+3.43)/2	0.51		
		(-0.60--0.72)x(3.43+3.43)/2	0.41		
		(-0.48--0.60)x(3.43+3.43)/2	0.41		
35	S2	(0.00-0.03)x(3.37+3.37)/2	-0.10		
510.00		(-0.48-0.00)x(3.40+3.37)/2	-1.62		
		(0.03--0.48)x(3.43+3.43)/2	1.75		
				0.03	
35	S3	(0.15-0.03)x(3.42+3.43)/2	0.41		
510.00		(0.45-0.15)x(3.41+3.42)/2	1.02		
		(1.01-0.45)x(3.39+3.41)/2	1.90		
		(1.50-1.01)x(3.40+3.39)/2	1.66		
		(1.88-1.50)x(3.42+3.40)/2	1.30		
		(2.54-1.88)x(3.43+3.42)/2	2.26		
		(2.57-2.54)x(3.43+3.43)/2	0.10		
		(2.66-2.57)x(3.43+3.43)/2	0.31		
		(2.71-2.66)x(3.44+3.43)/2	0.17		
		(2.75-2.71)x(3.45+3.44)/2	0.14		
		(2.78-2.75)x(3.46+3.45)/2	0.10		
		(2.80-2.78)x(3.45+3.46)/2	0.07		
		(2.81-2.80)x(3.43+3.47)/2	0.03		
		(2.82-2.81)x(3.43+3.43)/2	0.03		
		(2.97-2.82)x(3.44+3.43)/2	0.52		
		(3.03-2.97)x(3.44+3.44)/2	0.21		
		(3.07-3.03)x(3.44+3.44)/2	0.14		
		(3.20-3.07)x(3.43+3.44)/2	0.45		
		(3.34-3.20)x(3.49+3.43)/2	0.48		
		(3.39-3.34)x(3.52+3.49)/2	0.18		
		(3.47-3.39)x(3.51+3.52)/2	0.28		
		(3.59-3.47)x(3.41+3.51)/2	0.42		
		(3.61-3.59)x(3.41+3.41)/2	0.07		
		(3.69-3.61)x(3.41+3.41)/2	0.27		
		(4.64-3.69)x(3.42+3.41)/2	3.24		
		(4.65-4.64)x(3.43+3.42)/2	0.03		
		(4.21-4.65)x(3.07+3.04)/2	-1.34		
		(0.03-4.21)x(3.37+3.07)/2	-13.46		
				0.99	
35	S4	(4.65-4.70)x(3.04+3.04)/2	-0.15		
510.00		(4.70-4.65)x(3.43+3.43)/2	0.17		
				0.02	
35	S5	(4.70-5.01)x(3.04+3.02)/2	-0.94		
510.00		(4.89-4.70)x(3.43+3.43)/2	0.65		
		(5.01-4.89)x(3.43+3.43)/2	0.41		
		A RIPORTARE mq	0.12		

STERRI E RIPORTI

N. SEZIONE PROG.	FIG.	ELEMENTI DI CALCOLO	AREA ELEMENTARE mq	AREA FIGURA mq	NOTE
		RIPORTO mq	0.12		
				0.12	
35	S6	(8.70-9.13)x(2.79+2.79)/2	-1.20		
510.00		(5.01-8.70)x(3.02+2.76)/2	-10.66		
		(5.69-5.01)x(3.45+3.43)/2	2.34		
		(6.22-5.69)x(3.43+3.45)/2	1.82		
		(6.74-6.22)x(3.38+3.43)/2	1.77		
		(7.55-6.74)x(3.33+3.38)/2	2.72		
		(7.78-7.55)x(3.30+3.33)/2	0.76		
		(8.68-7.78)x(3.18+3.30)/2	2.92		
		(8.80-8.68)x(3.16+3.18)/2	0.38		
		(8.83-8.80)x(3.16+3.16)/2	0.09		
		(9.13-8.83)x(3.19+3.16)/2	0.95		
				1.89	
35	S7	(9.67-9.13)x(3.26+3.19)/2	1.74		
510.00		(9.88-9.67)x(3.27+3.26)/2	0.69		
		(10.46-9.88)x(3.27+3.27)/2	1.90		
		(10.40-10.46)x(3.21+3.27)/2	-0.19		
		(9.70-10.40)x(3.21+3.21)/2	-2.25		
		(9.13-9.70)x(2.79+2.79)/2	-1.59		
				0.30	
36	R1	(-6.14--6.71)x(3.41+3.42)/2	1.95		
525.00		(-5.74--6.14)x(3.42+3.41)/2	1.37		
		(-5.32--5.74)x(3.43+3.42)/2	1.44		
		(-4.67--5.32)x(3.43+3.43)/2	2.23		
		(-4.50--4.67)x(3.42+3.43)/2	0.58		
		(-3.95--4.50)x(3.43+3.42)/2	1.88		
		(-3.68--3.95)x(3.43+3.43)/2	0.93		
		(-3.59--3.68)x(3.43+3.43)/2	0.31		
		(-2.86--3.59)x(3.42+3.43)/2	2.50		
		(-2.52--2.86)x(3.42+3.42)/2	1.16		
		(-2.04--2.52)x(3.43+3.42)/2	1.64		
		(-1.45--2.04)x(3.43+3.43)/2	2.02		
		(-1.35--1.45)x(3.44+3.43)/2	0.34		
		(-1.11--1.35)x(3.43+3.44)/2	0.82		
		(-0.99--1.11)x(3.44+3.43)/2	0.41		
		(-3.50--0.99)x(3.45+3.44)/2	-8.65		
		(-5.49--3.50)x(3.45+3.45)/2	-6.87		
		(-5.35--5.49)x(3.62+3.45)/2	0.49		
		(-6.42--5.35)x(3.61+3.62)/2	-3.87		
		(-6.71--6.42)x(3.42+3.61)/2	-1.02		
				0.34	
36	S1	(-0.99--0.87)x(3.44+3.44)/2	-0.41		
525.00		(-0.96--0.99)x(3.45+3.44)/2	0.10		
		(-0.87--0.96)x(3.46+3.45)/2	0.31		
36	S2	(-0.86--0.87)x(3.46+3.46)/2	0.03		
525.00		(-0.79--0.86)x(3.46+3.46)/2	0.24		
		(-0.74--0.79)x(3.46+3.46)/2	0.17		
		(-0.70--0.74)x(3.48+3.46)/2	0.14		
		(-0.50--0.70)x(3.49+3.48)/2	0.70		
		(-0.48--0.50)x(3.44+3.49)/2	0.07		
		(-0.87--0.48)x(3.44+3.44)/2	-1.34		
				0.01	
36	R2	(0.10-0.03)x(3.42+3.44)/2	0.24		
525.00		(0.30-0.10)x(3.37+3.42)/2	0.68		
		(0.38-0.30)x(3.35+3.37)/2	0.27		
		(0.40-0.38)x(3.37+3.35)/2	0.07		
		(0.46-0.40)x(3.36+3.37)/2	0.20		
		(0.48-0.46)x(3.38+3.36)/2	0.07		
		(0.52-0.48)x(3.40+3.38)/2	0.14		
		(0.63-0.52)x(3.42+3.40)/2	0.38		
		(0.70-0.63)x(3.42+3.42)/2	0.24		
		(1.24-0.70)x(3.37+3.42)/2	1.83		
		(1.77-1.24)x(3.36+3.37)/2	1.78		
		(2.06-1.77)x(3.31+3.36)/2	0.97		
		(2.84-2.06)x(3.29+3.31)/2	2.57		
		(2.88-2.84)x(3.29+3.29)/2	0.13		
		(3.02-2.88)x(3.27+3.29)/2	0.46		
		(3.71-3.02)x(3.17+3.27)/2	2.22		
		(3.92-3.71)x(3.14+3.17)/2	0.66		
		(4.53-3.92)x(3.11+3.14)/2	1.91		
		(4.99-4.53)x(3.05+3.11)/2	1.42		
		(5.35-4.99)x(3.04+3.05)/2	1.10		
		(6.06-5.35)x(3.08+3.04)/2	2.17		
		(6.17-6.06)x(3.08+3.08)/2	0.34		
		(6.51-6.17)x(3.10+3.08)/2	1.05		
		(6.99-6.51)x(3.12+3.10)/2	1.49		
		(7.13-6.99)x(3.14+3.12)/2	0.44		
		(7.81-7.13)x(3.13+3.14)/2	2.13		
		(8.21-7.81)x(3.12+3.13)/2	1.25		
		(8.63-8.21)x(3.11+3.12)/2	1.31		
		(9.28-8.63)x(3.06+3.11)/2	2.01		
		(9.45-9.28)x(3.07+3.06)/2	0.52		
		(9.99-9.45)x(3.09+3.07)/2	1.66		
		(10.27-9.99)x(3.11+3.09)/2	0.87		
		(10.34-10.27)x(3.10+3.11)/2	0.22		
		(9.91-10.34)x(3.40+3.10)/2	-1.40		
		(8.84-9.91)x(3.40+3.40)/2	-3.64		
		(8.99-8.84)x(3.22+3.40)/2	0.50		
		(3.72-8.99)x(3.35+3.22)/2	-17.31		
		(0.03-3.72)x(3.44+3.35)/2	-12.53		
				1.58	
37	R1	(-8.90--9.03)x(3.47+3.46)/2	0.45		
532.90		(-8.29--8.90)x(3.47+3.47)/2	2.12		
		(-8.09--8.29)x(3.46+3.47)/2	0.69		
		(-7.86--8.09)x(3.46+3.46)/2	0.80		
		(-7.73--7.86)x(3.62+3.46)/2	0.46		
		(-8.80--7.73)x(3.62+3.62)/2	-3.87		
		(-9.03--8.80)x(3.46+3.62)/2	-0.81		
				0.16	
37	S1	(-7.44--7.86)x(3.47+3.46)/2	1.46		
532.90		(-7.27--7.44)x(3.47+3.47)/2	0.59		
		(-7.21--7.27)x(3.47+3.47)/2	0.21		
		(-6.79--7.21)x(3.46+3.47)/2	1.46		
		(-7.88--6.79)x(3.44+3.46)/2	-3.76		
		A RIPORTARE mq	-0.04		

STERRI E RIPORTI

N. SEZIONE PROG.	FIG.	ELEMENTI DI CALCOLO	AREA ELEMENTARE mq	AREA FIGURA mq	NOTE
		RIPORTO mq	-0.04		
		(-7.86--7.88)x(3.46+3.44)/2	0.07		
				0.03	
37	R2	(-6.79--6.71)x(3.46+3.47)/2	-0.28		
532.90		(-6.71--6.79)x(3.46+3.46)/2	0.28		
37	R3	(-3.50--0.99)x(3.55+3.61)/2	-8.99		
532.90		(-6.71--3.50)x(3.47+3.55)/2	-11.27		
		(-6.45--6.71)x(3.46+3.46)/2	0.90		
		(-6.14--6.45)x(3.45+3.46)/2	1.07		
		(-5.63--6.14)x(3.44+3.45)/2	1.76		
		(-5.06--5.63)x(3.45+3.44)/2	1.96		
		(-4.93--5.06)x(3.46+3.45)/2	0.45		
		(-4.90--4.93)x(3.46+3.46)/2	0.10		
		(-4.70--4.90)x(3.47+3.46)/2	0.69		
		(-4.63--4.70)x(3.47+3.47)/2	0.24		
		(-4.59--4.63)x(3.48+3.47)/2	0.14		
		(-4.57--4.59)x(3.48+3.48)/2	0.07		
		(-4.55--4.57)x(3.48+3.48)/2	0.07		
		(-4.54--4.55)x(3.49+3.48)/2	0.03		
		(-4.53--4.54)x(3.48+3.49)/2	0.03		
		(-4.52--4.53)x(3.48+3.48)/2	0.03		
		(-4.51--4.52)x(3.48+3.48)/2	0.03		
		(-4.47--4.51)x(3.49+3.49)/2	0.14		
		(-4.38--4.47)x(3.49+3.49)/2	0.31		
		(-4.09--4.38)x(3.47+3.49)/2	1.01		
		(-4.07--4.09)x(3.47+3.47)/2	0.07		
		(-4.06--4.07)x(3.48+3.47)/2	0.03		
		(-4.03--4.06)x(3.45+3.48)/2	0.10		
		(-3.99--4.03)x(3.43+3.45)/2	0.14		
		(-3.92--3.99)x(3.44+3.43)/2	0.24		
		(-3.88--3.92)x(3.44+3.44)/2	0.14		
		(-3.86--3.88)x(3.49+3.44)/2	0.07		
		(-3.85--3.86)x(3.49+3.49)/2	0.03		
		(-3.24--3.85)x(3.36+3.49)/2	2.09		
		(-3.02--3.24)x(3.31+3.36)/2	0.73		
		(-2.92--3.02)x(3.28+3.31)/2	0.33		
		(-2.36--2.92)x(3.25+3.28)/2	1.83		
		(-1.84--2.36)x(3.22+3.25)/2	1.68		
		(-1.71--1.84)x(3.19+3.22)/2	0.42		
		(-0.99--1.71)x(3.12+3.19)/2	2.27		
				1.06	
37	R4	(-0.99--0.48)x(3.61+3.62)/2	-1.84		
532.90		(-0.80--0.99)x(3.10+3.12)/2	0.59		
		(-0.77--0.80)x(3.10+3.10)/2	0.09		
		(-0.72--0.77)x(3.10+3.10)/2	0.16		
		(-0.58--0.72)x(3.08+3.10)/2	0.43		
		(-0.48--0.58)x(3.07+3.08)/2	0.31		
				0.26	
37	R5	(0.00-0.03)x(3.63+3.63)/2	-0.11		
532.90		(-0.48-0.00)x(3.62+3.63)/2	-1.74		
		(0.03--0.48)x(3.02+3.07)/2	1.55		
				0.30	
37	R6	(0.10-0.03)x(3.01+3.02)/2	0.21		
532.90		(0.31-0.10)x(3.01+3.01)/2	0.63		
		(0.91-0.31)x(3.04+3.01)/2	1.82		
		(1.38-0.91)x(3.03+3.04)/2	1.43		
		(1.73-1.38)x(3.04+3.03)/2	1.06		
		(2.46-1.73)x(3.07+3.04)/2	2.23		
		(2.55-2.46)x(3.07+3.07)/2	0.28		
		(2.86-2.55)x(3.07+3.07)/2	0.95		
		(3.37-2.86)x(3.07+3.07)/2	1.57		
		(3.53-3.37)x(3.08+3.07)/2	0.49		
		(4.19-3.53)x(3.06+3.08)/2	2.03		
		(4.60-4.19)x(3.07+3.06)/2	1.26		
		(5.01-4.60)x(3.07+3.07)/2	1.26		
		(5.68-5.01)x(3.06+3.07)/2	2.05		
		(5.82-5.68)x(3.06+3.06)/2	0.43		
		(6.29-5.82)x(3.05+3.06)/2	1.44		
		(6.64-6.29)x(3.06+3.05)/2	1.07		
		(6.75-6.64)x(3.06+3.06)/2	0.34		
		(7.46-6.75)x(3.08+3.06)/2	2.18		
		(7.83-7.46)x(3.07+3.08)/2	1.14		
		(8.28-7.83)x(3.08+3.07)/2	1.38		
		(8.90-8.28)x(3.08+3.08)/2	1.91		
		(9.10-8.90)x(3.08+3.08)/2	0.62		
		(9.72-9.10)x(3.09+3.08)/2	1.91		
		(9.92-9.72)x(3.09+3.09)/2	0.62		
		(9.98-9.92)x(3.09+3.09)/2	0.19		
		(10.73-9.98)x(3.13+3.09)/2	2.33		
		(11.05-10.73)x(3.14+3.13)/2	1.00		
		(11.38-11.05)x(3.15+3.14)/2	1.04		
		(10.76-11.38)x(3.57+3.15)/2	-2.08		
		(9.69-10.76)x(3.57+3.57)/2	-3.82		
		(9.84-9.69)x(3.39+3.57)/2	0.52		
		(3.52-9.84)x(3.55+3.39)/2	-21.93		
		(0.03-3.52)x(3.63+3.55)/2	-12.53		
				4.97	

Il Direttore dei Lavori | L'Impresa

N. SEZ.	FIG.	SUPERFICIE STERRO mq	SUPERFICIE RIPORTO mq	PUNTI DI PASSAGGIO (PROGRESSIVA m)	DISTANZA m	VOLUMI PARZIALI STERRO mc	VOLUMI PARZIALI RIPORTO mc	VOLUMI TOTALI STERRO mc	VOLUMI TOTALI RIPORTO mc
29 bis	R1		129.62	(417.82)					
					2.18		282.572		
29	R1		129.62	(420.00)					
									282.572
29	R1		129.62	(420.00)					
					15.00		1660.125		
30	R1		91.73	(435.00)					
									1660.125
30	R1		91.73	(435.00)					
					15.00		1148.625		
31	R1		61.42	(450.00)					
									1148.625
31	R1		61.42	(450.00)					
					15.00		818.850		
32	R1		47.76	(465.00)					
									818.850
32	R1		47.76	(465.00)					
					15.00		490.725		
33	R1		10.56	(480.00)					
	R2		0.05						
	R3		0.32						
	R4		4.56						
	R4		0.01						
	R5		2.17						
									490.725
33	R1		10.56	(480.00)					
					15.00		211.050		
34	R1		16.26	(495.00)					
	R2		1.32						
33	R2		0.05	(480.00)					
					15.00		0.375		
34	R0		0.00	(495.00)					
33	R3		0.32	(480.00)					
					15.00		2.550		
34	R3		0.02	(495.00)					
33	R4		4.56	(480.00)					
	R4		0.01		12.65		28.905		
				4.57*15.00					
					12.65				
				4.57+0.85					
34	S1	0.85		(495.00)	2.35	0.999			
33	R5		2.17	(480.00)					
					15.00		17.250		
34	R4		0.13	(495.00)					
								0.999	260.130
34	R1		16.26	(495.00)					
					15.00		134.925		
35	R1		1.73	(510.00)					
	R2		0.00						
34	R2		1.32	(495.00)	8.46		5.584		
				1.32*15.00					
					8.46				
				1.32+1.02					
35	S1	0.00		(510.00)					
	S2	0.03							
	S3	0.99			6.54	3.335			
34	R3		0.02	(495.00)	2.14		0.021		
				0.02*15.00					
					2.14				
				0.02+0.12					
35	S5	0.12		(510.00)	12.86	0.772			
34	S1	0.85		(495.00)					
					15.00	20.550			
35	S6	1.89		(510.00)					
34	R4		0.13	(495.00)	4.53		0.294		
				0.13*15.00					
					4.53				
				0.13+0.30					
35	S7	0.30		(510.00)	10.47	1.571			
34	S0	0.00		(495.00)					
					15.00	0.150			
35	S4	0.02		(510.00)					
								26.378	140.824
35	R1		1.73	(510.00)					
					15.00		15.525		
36	R1		0.34	(525.00)					
35	S1	0.00		(510.00)					
				A RIPORTARE :			15.525	27.377	4801.851

N. SEZ.	FIG.	SUPERFICIE STERRO mq	SUPERFICIE RIPORTO mq	PUNTI DI PASSAGGIO (PROGRESSIVA m)	DISTANZA m	VOLUMI PARZIALI STERRO mc	VOLUMI PARZIALI RIPORTO mc	VOLUMI TOTALI STERRO mc	VOLUMI TOTALI RIPORTO mc
				RIPORTO :		0.000	15.525	27.377	4801.851
					15.00	0.075			
36	S2	0.01		(525.00)					
35	S2	0.03		(510.00)					
					15.00	0.225			
36	S0	0.00		(525.00)					
35	S3	0.99		(510.00)					
	S4	0.02							
	S5	0.12							
	S6	1.89							
	S7	0.30			10.16	16.866			
				3.32*15.00					
					10.16				
				3.32+1.58					
36	R2		1.58	(525.00)	4.84		3.824		
								17.166	19.349
36	R1		0.34	(525.00)					
					7.90		5.530		
37	R3		1.06	(532.90)					
36	S1	0.00		(525.00)					
	S2	0.01			0.29	0.001			
				0.01*7.90					
					0.29				
				0.01+0.26					
37	R4		0.26	(532.90)	7.61		0.989		
36	R2		1.58	(525.00)					
					7.90		25.872		
37	R6		4.97	(532.90)					
36	R0		0.00	(525.00)					
					7.90		0.632		
37	R1		0.16	(532.90)					
36	S0	0.00		(525.00)					
					7.90	0.118			
37	S1	0.03		(532.90)					
36	R0		0.00	(525.00)					
					7.90		0.000		
37	R2		0.00	(532.90)					
36	R0		0.00	(525.00)					
					7.90		1.185		
37	R5		0.30	(532.90)					
								0.119	34.208

Il Direttore dei Lavori	L'Impresa	Totale Articoli .....:	44.662	4855.408
		A dedurre quantita' precedenti:		
		Quantita' da contabilizzare ..:		

		CALCOLO DELLE AREE		Foglio n. 12
BONIFICA				
N. SEZIONE PROG.	FIG.	ELEMENTI DI CALCOLO	AREA ELEMENTARE mq	AREA FIGURA mq	NOTE
29 bis 417.82	B01	(-17.34--18.13)x(0.33+0.83)/2	0.46		
		(-16.36--17.34)x(0.26+0.33)/2	0.29		
		(-16.32--16.36)x(0.25+0.26)/2	0.01		
		(-15.38--16.32)x(0.28+0.25)/2	0.25		
		(-15.29--15.38)x(0.28+0.28)/2	0.03		
		(-14.40--15.29)x(0.37+0.28)/2	0.29		
		(-14.26--14.40)x(0.38+0.37)/2	0.05		
		(-13.42--14.26)x(0.68+0.38)/2	0.45		
		(-13.24--13.42)x(0.75+0.68)/2	0.13		
		(-12.44--13.24)x(1.07+0.75)/2	0.73		
		(-12.21--12.44)x(1.22+1.07)/2	0.26		
		(-11.46--12.21)x(1.55+1.22)/2	1.04		
		(-11.18--11.46)x(1.66+1.55)/2	0.45		
		(-10.48--11.18)x(1.93+1.66)/2	1.26		
		(-10.16--10.48)x(1.99+1.93)/2	0.63		
		(-9.50--10.16)x(2.23+1.99)/2	1.39		
		(-9.13--9.50)x(2.37+2.23)/2	0.85		
		(-8.52--9.13)x(2.60+2.37)/2	1.52		
		(-8.11--8.52)x(2.75+2.60)/2	1.10		
		(-7.54--8.11)x(2.95+2.75)/2	1.62		
		(-7.08--7.54)x(3.13+2.95)/2	1.40		
		(-6.56--7.08)x(3.22+3.13)/2	1.65		
		(-6.05--6.56)x(3.26+3.22)/2	1.65		
		(-5.58--6.05)x(3.26+3.26)/2	1.53		
		(-5.03--5.58)x(3.25+3.26)/2	1.79		
		(-4.60--5.03)x(3.24+3.25)/2	1.40		
		(-4.00--4.60)x(3.24+3.24)/2	1.94		
		(-3.62--4.00)x(3.25+3.24)/2	1.23		
		(-2.97--3.62)x(3.25+3.25)/2	2.11		
		(-2.64--2.97)x(3.26+3.25)/2	1.07		
		(-1.95--2.64)x(3.29+3.26)/2	2.26		
		(-1.65--1.95)x(3.29+3.29)/2	0.99		
		(-0.92--1.65)x(3.29+3.29)/2	2.40		
		(-0.67--0.92)x(3.29+3.29)/2	0.82		
		(0.11--0.67)x(3.29+3.29)/2	2.57		
		(0.31-0.11)x(3.30+3.29)/2	0.66		
		(1.13-0.31)x(3.28+3.30)/2	2.70		
		(1.29-1.13)x(3.27+3.28)/2	0.52		
		(2.16-1.29)x(3.29+3.27)/2	2.85		
		(2.27-2.16)x(3.29+3.29)/2	0.36		
		(3.19-2.27)x(3.27+3.29)/2	3.02		
		(3.25-3.19)x(3.27+3.27)/2	0.20		
		(4.21-3.25)x(3.24+3.27)/2	3.12		
		(4.23-4.21)x(3.24+3.24)/2	0.06		
		(4.60-4.23)x(3.24+3.24)/2	1.20		
		(5.21-4.60)x(3.24+3.24)/2	1.98		
		(5.24-5.21)x(3.24+3.24)/2	0.10		
		(6.19-5.24)x(3.24+3.24)/2	3.08		
		(6.26-6.19)x(3.23+3.24)/2	0.23		
		(7.17-6.26)x(3.14+3.23)/2	2.90		
		(7.29-7.17)x(3.13+3.14)/2	0.38		
		(8.15-7.29)x(2.95+3.13)/2	2.61		
		(8.32-8.15)x(2.92+2.95)/2	0.50		
		(9.13-8.32)x(2.76+2.92)/2	2.30		
		(9.34-9.13)x(2.72+2.76)/2	0.58		
		(10.11-9.34)x(2.58+2.72)/2	2.04		
		(10.37-10.11)x(2.52+2.58)/2	0.66		
		(11.09-10.37)x(2.39+2.52)/2	1.77		
		(11.27-11.09)x(2.35+2.39)/2	0.43		
		(11.09-11.27)x(1.89+1.85)/2	-0.34		
		(10.37-11.09)x(2.02+1.89)/2	-1.41		
		(10.11-10.37)x(2.08+2.02)/2	-0.53		
		(9.34-10.11)x(2.22+2.08)/2	-1.66		
		(9.13-9.34)x(2.26+2.22)/2	-0.47		
		(8.32-9.13)x(2.42+2.26)/2	-1.90		
		(8.15-8.32)x(2.45+2.42)/2	-0.41		
		(7.29-8.15)x(2.63+2.45)/2	-2.18		
		(7.17-7.29)x(2.64+2.63)/2	-0.32		
		(6.26-7.17)x(2.73+2.64)/2	-2.44		
		(6.19-6.26)x(2.74+2.73)/2	-0.19		
		(5.24-6.19)x(2.74+2.74)/2	-2.60		
		(5.21-5.24)x(2.74+2.74)/2	-0.08		
		(4.60-5.21)x(2.74+2.74)/2	-1.67		
		(4.23-4.60)x(2.74+2.74)/2	-1.01		
		(4.21-4.23)x(2.74+2.74)/2	-0.05		
		(3.25-4.21)x(2.77+2.74)/2	-2.64		
		(3.19-3.25)x(2.77+2.77)/2	-0.17		
		(2.27-3.19)x(2.79+2.77)/2	-2.56		
		(2.16-2.27)x(2.79+2.79)/2	-0.31		
		(1.29-2.16)x(2.77+2.79)/2	-2.42		
		(1.13-1.29)x(2.78+2.77)/2	-0.44		
		(0.31-1.13)x(2.80+2.78)/2	-2.29		
		(0.11-0.31)x(2.79+2.80)/2	-0.56		
		(-0.67-0.11)x(2.79+2.79)/2	-2.18		
		(-0.92--0.67)x(2.79+2.79)/2	-0.70		
		(-1.65--0.92)x(2.79+2.79)/2	-2.04		
		(-1.95--1.65)x(2.79+2.79)/2	-0.84		
		(-2.64--1.95)x(2.76+2.79)/2	-1.91		
		(-2.97--2.64)x(2.75+2.76)/2	-0.91		
		(-3.62--2.97)x(2.75+2.75)/2	-1.79		
		(-4.00--3.62)x(2.74+2.75)/2	-1.04		
		(-4.60--4.00)x(2.74+2.74)/2	-1.64		
		(-5.03--4.60)x(2.75+2.74)/2	-1.18		
		(-5.58--5.03)x(2.76+2.75)/2	-1.52		
		(-6.05--5.58)x(2.76+2.76)/2	-1.30		
		(-6.56--6.05)x(2.72+2.76)/2	-1.40		
		(-7.08--6.56)x(2.63+2.72)/2	-1.39		
		(-7.54--7.08)x(2.45+2.63)/2	-1.17		
		(-8.11--7.54)x(2.25+2.45)/2	-1.34		
		(-8.52--8.11)x(2.10+2.25)/2	-0.89		
		(-9.13--8.52)x(1.87+2.10)/2	-1.21		
		(-9.50--9.13)x(1.73+1.87)/2	-0.67		
		(-10.16--9.50)x(1.49+1.73)/2	-1.06		
		(-10.48--10.16)x(1.43+1.49)/2	-0.47		
		(-11.18--10.48)x(1.16+1.43)/2	-0.91		
		(-11.46--11.18)x(1.05+1.16)/2	-0.31		
		(-12.21--11.46)x(0.72+1.05)/2	-0.66		
		A RIPORTARE mq	14.69		

BONIFICA

N. SEZIONE PROG.	FIG.	ELEMENTI DI CALCOLO	AREA ELEMENTARE mq	AREA FIGURA mq	NOTE
		RIPORTO mq	14.69		
		(-12.44--12.21)x(0.57+0.72)/2	-0.15		
		(-13.24--12.44)x(0.25+0.57)/2	-0.33		
		(-13.42--13.24)x(0.18+0.25)/2	-0.04		
		(-14.26--13.42)x(-0.12+0.18)/2	-0.03		
		(-14.40--14.26)x(-0.13+-0.12)/2	0.02		
		(-15.29--14.40)x(-0.22+-0.13)/2	0.16		
		(-15.38--15.29)x(-0.22+-0.22)/2	0.02		
		(-16.32--15.38)x(-0.25+-0.22)/2	0.22		
		(-16.36--16.32)x(-0.24+-0.25)/2	0.01		
		(-17.34--16.36)x(-0.17+-0.24)/2	0.20		
		(-18.13--17.34)x(0.33+-0.17)/2	-0.06		
				14.71	
29 420.00	BO1	(-17.34--18.13)x(0.33+0.83)/2	0.46		
		(-16.36--17.34)x(0.26+0.33)/2	0.29		
		(-16.32--16.36)x(0.25+0.26)/2	0.01		
		(-15.38--16.32)x(0.28+0.25)/2	0.25		
		(-15.29--15.38)x(0.28+0.28)/2	0.03		
		(-14.40--15.29)x(0.37+0.28)/2	0.29		
		(-14.26--14.40)x(0.38+0.37)/2	0.05		
		(-13.42--14.26)x(0.68+0.38)/2	0.45		
		(-13.24--13.42)x(0.75+0.68)/2	0.13		
		(-12.44--13.24)x(1.07+0.75)/2	0.73		
		(-12.21--12.44)x(1.22+1.07)/2	0.26		
		(-11.46--12.21)x(1.55+1.22)/2	1.04		
		(-11.18--11.46)x(1.66+1.55)/2	0.45		
		(-10.48--11.18)x(1.93+1.66)/2	1.26		
		(-10.16--10.48)x(1.99+1.93)/2	0.63		
		(-9.50--10.16)x(2.23+1.99)/2	1.39		
		(-9.13--9.50)x(2.37+2.23)/2	0.85		
		(-8.52--9.13)x(2.60+2.37)/2	1.52		
		(-8.11--8.52)x(2.75+2.60)/2	1.10		
		(-7.54--8.11)x(2.95+2.75)/2	1.62		
		(-7.08--7.54)x(3.13+2.95)/2	1.40		
		(-6.56--7.08)x(3.22+3.13)/2	1.65		
		(-6.05--6.56)x(3.26+3.22)/2	1.65		
		(-5.58--6.05)x(3.26+3.26)/2	1.53		
		(-5.03--5.58)x(3.25+3.26)/2	1.79		
		(-4.60--5.03)x(3.24+3.25)/2	1.40		
		(-4.00--4.60)x(3.24+3.24)/2	1.94		
		(-3.62--4.00)x(3.25+3.24)/2	1.23		
		(-2.97--3.62)x(3.25+3.25)/2	2.11		
		(-2.64--2.97)x(3.26+3.25)/2	1.07		
		(-1.95--2.64)x(3.29+3.26)/2	2.26		
		(-1.65--1.95)x(3.29+3.29)/2	0.99		
		(-0.92--1.65)x(3.29+3.29)/2	2.40		
		(-0.67--0.92)x(3.29+3.29)/2	0.82		
		(0.11--0.67)x(3.29+3.29)/2	2.57		
		(0.31-0.11)x(3.30+3.29)/2	0.66		
		(1.13-0.31)x(3.28+3.30)/2	2.70		
		(1.29-1.13)x(3.27+3.28)/2	0.52		
		(2.16-1.29)x(3.29+3.27)/2	2.85		
		(2.27-2.16)x(3.29+3.29)/2	0.36		
		(3.19-2.27)x(3.27+3.29)/2	3.02		
		(3.25-3.19)x(3.27+3.27)/2	0.20		
		(4.21-3.25)x(3.24+3.27)/2	3.12		
		(4.23-4.21)x(3.24+3.24)/2	0.06		
		(4.60-4.23)x(3.24+3.24)/2	1.20		
		(5.21-4.60)x(3.24+3.24)/2	1.98		
		(5.24-5.21)x(3.24+3.24)/2	0.10		
		(6.19-5.24)x(3.24+3.24)/2	3.08		
		(6.26-6.19)x(3.23+3.24)/2	0.23		
		(7.17-6.26)x(3.14+3.23)/2	2.90		
		(7.29-7.17)x(3.13+3.14)/2	0.38		
		(8.15-7.29)x(2.95+3.13)/2	2.61		
		(8.32-8.15)x(2.92+2.95)/2	0.50		
		(9.13-8.32)x(2.76+2.92)/2	2.30		
		(9.34-9.13)x(2.72+2.76)/2	0.58		
		(10.11-9.34)x(2.58+2.72)/2	2.04		
		(10.37-10.11)x(2.52+2.58)/2	0.66		
		(11.09-10.37)x(2.39+2.52)/2	1.77		
		(11.27-11.09)x(2.35+2.39)/2	0.43		
		(11.09-11.27)x(1.89+1.85)/2	-0.34		
		(10.37-11.09)x(2.02+1.89)/2	-1.41		
		(10.11-10.37)x(2.08+2.02)/2	-0.53		
		(9.34-10.11)x(2.22+2.08)/2	-1.66		
		(9.13-9.34)x(2.26+2.22)/2	-0.47		
		(8.32-9.13)x(2.42+2.26)/2	-1.90		
		(8.15-8.32)x(2.45+2.42)/2	-0.41		
		(7.29-8.15)x(2.63+2.45)/2	-2.18		
		(7.17-7.29)x(2.64+2.63)/2	-0.32		
		(6.26-7.17)x(2.73+2.64)/2	-2.44		
		(6.19-6.26)x(2.74+2.73)/2	-0.19		
		(5.24-6.19)x(2.74+2.74)/2	-2.60		
		(5.21-5.24)x(2.74+2.74)/2	-0.08		
		(4.60-5.21)x(2.74+2.74)/2	-1.67		
		(4.23-4.60)x(2.74+2.74)/2	-1.01		
		(4.21-4.23)x(2.74+2.74)/2	-0.05		
		(3.25-4.21)x(2.77+2.74)/2	-2.64		
		(3.19-3.25)x(2.77+2.77)/2	-0.17		
		(2.27-3.19)x(2.79+2.77)/2	-2.56		
		(2.16-2.27)x(2.79+2.79)/2	-0.31		
		(1.29-2.16)x(2.77+2.79)/2	-2.42		
		(1.13-1.29)x(2.78+2.77)/2	-0.44		
		(0.31-1.13)x(2.80+2.78)/2	-2.29		
		(0.11-0.31)x(2.79+2.80)/2	-0.56		
		(-0.67-0.11)x(2.79+2.79)/2	-2.18		
		(-0.92--0.67)x(2.79+2.79)/2	-0.70		
		(-1.65--0.92)x(2.79+2.79)/2	-2.04		
		(-1.95--1.65)x(2.79+2.79)/2	-0.84		
		(-2.64--1.95)x(2.76+2.79)/2	-1.91		
		(-2.97--2.64)x(2.75+2.76)/2	-0.91		
		(-3.62--2.97)x(2.75+2.75)/2	-1.79		
		(-4.00--3.62)x(2.74+2.75)/2	-1.04		
		(-4.60--4.00)x(2.74+2.74)/2	-1.64		
		(-5.03--4.60)x(2.75+2.74)/2	-1.18		
		A RIPORTARE mq	28.99		

BONIFICA

N. SEZIONE PROG.	FIG.	ELEMENTI DI CALCOLO	AREA ELEMENTARE mq	AREA FIGURA mq	NOTE
		RIPORTO mq	28.99		
		(-5.58--5.03)x(2.76+2.75)/2	-1.52		
		(-6.05--5.58)x(2.76+2.76)/2	-1.30		
		(-6.56--6.05)x(2.72+2.76)/2	-1.40		
		(-7.08--6.56)x(2.63+2.72)/2	-1.39		
		(-7.54--7.08)x(2.45+2.63)/2	-1.17		
		(-8.11--7.54)x(2.25+2.45)/2	-1.34		
		(-8.52--8.11)x(2.10+2.25)/2	-0.89		
		(-9.13--8.52)x(1.87+2.10)/2	-1.21		
		(-9.50--9.13)x(1.73+1.87)/2	-0.67		
		(-10.16--9.50)x(1.49+1.73)/2	-1.06		
		(-10.48--10.16)x(1.43+1.49)/2	-0.47		
		(-11.18--10.48)x(1.16+1.43)/2	-0.91		
		(-11.46--11.18)x(1.05+1.16)/2	-0.31		
		(-12.21--11.46)x(0.72+1.05)/2	-0.66		
		(-12.44--12.21)x(0.57+0.72)/2	-0.15		
		(-13.24--12.44)x(0.25+0.57)/2	-0.33		
		(-13.42--13.24)x(0.18+0.25)/2	-0.04		
		(-14.26--13.42)x(-0.12+0.18)/2	-0.03		
		(-14.40--14.26)x(-0.13+-0.12)/2	0.02		
		(-15.29--14.40)x(-0.22+-0.13)/2	0.16		
		(-15.38--15.29)x(-0.22+-0.22)/2	0.02		
		(-16.32--15.38)x(-0.25+-0.22)/2	0.22		
		(-16.36--16.32)x(-0.24+-0.25)/2	0.01		
		(-17.34--16.36)x(-0.17+-0.24)/2	0.20		
		(-18.13--17.34)x(0.33+-0.17)/2	-0.06		
				14.71	
30 435.00	BO1	(-16.43--16.54)x(0.33+0.33)/2	0.04		
		(-15.99--16.43)x(0.28+0.33)/2	0.13		
		(-15.45--15.99)x(0.18+0.28)/2	0.12		
		(-14.97--15.45)x(0.16+0.18)/2	0.08		
		(-14.47--14.97)x(0.22+0.16)/2	0.10		
		(-13.94--14.47)x(0.31+0.22)/2	0.14		
		(-13.49--13.94)x(0.42+0.31)/2	0.16		
		(-12.91--13.49)x(0.56+0.42)/2	0.28		
		(-12.51--12.91)x(0.77+0.56)/2	0.27		
		(-11.89--12.51)x(1.00+0.77)/2	0.55		
		(-11.53--11.89)x(1.19+1.00)/2	0.39		
		(-10.86--11.53)x(1.50+1.19)/2	0.90		
		(-10.55--10.86)x(1.63+1.50)/2	0.49		
		(-9.83--10.55)x(1.92+1.63)/2	1.28		
		(-9.57--9.83)x(2.02+1.92)/2	0.51		
		(-8.81--9.57)x(2.33+2.02)/2	1.65		
		(-8.59--8.81)x(2.42+2.33)/2	0.52		
		(-7.78--8.59)x(2.74+2.42)/2	2.09		
		(-7.61--7.78)x(2.80+2.74)/2	0.47		
		(-6.75--7.61)x(3.17+2.80)/2	2.57		
		(-6.63--6.75)x(3.19+3.17)/2	0.38		
		(-5.73--6.63)x(3.38+3.19)/2	2.96		
		(-5.61--5.73)x(3.38+3.38)/2	0.41		
		(-4.70--5.61)x(3.32+3.38)/2	3.05		
		(-4.69--4.70)x(3.32+3.32)/2	0.03		
		(-3.87--4.69)x(3.29+3.32)/2	2.71		
		(-3.68--3.87)x(3.28+3.29)/2	0.62		
		(-2.70--3.68)x(3.31+3.28)/2	3.23		
		(-2.65--2.70)x(3.31+3.31)/2	0.17		
		(-1.72--2.65)x(3.30+3.31)/2	3.07		
		(-1.62--1.72)x(3.30+3.30)/2	0.33		
		(-0.74--1.62)x(3.31+3.30)/2	2.91		
		(-0.60--0.74)x(3.31+3.31)/2	0.46		
		(0.24--0.60)x(3.31+3.31)/2	2.78		
		(0.43-0.24)x(3.31+3.31)/2	0.63		
		(1.22-0.43)x(3.33+3.31)/2	2.62		
		(1.46-1.22)x(3.33+3.33)/2	0.80		
		(2.20-1.46)x(3.30+3.33)/2	2.45		
		(2.48-2.20)x(3.30+3.30)/2	0.92		
		(3.18-2.48)x(3.27+3.30)/2	2.30		
		(3.51-3.18)x(3.27+3.27)/2	1.08		
		(4.16-3.51)x(3.28+3.27)/2	2.13		
		(4.54-4.16)x(3.28+3.28)/2	1.25		
		(4.58-4.54)x(3.29+3.28)/2	0.13		
		(4.63-4.58)x(3.29+3.29)/2	0.16		
		(4.67-4.63)x(3.32+3.29)/2	0.13		
		(4.70-4.67)x(3.34+3.32)/2	0.10		
		(4.71-4.70)x(3.38+3.34)/2	0.03		
		(4.73-4.71)x(3.33+3.38)/2	0.07		
		(5.01-4.73)x(3.30+3.33)/2	0.93		
		(5.34-5.01)x(3.34+3.30)/2	1.10		
		(5.35-5.34)x(3.37+3.34)/2	0.03		
		(5.37-5.35)x(3.35+3.37)/2	0.07		
		(5.40-5.37)x(3.37+3.35)/2	0.10		
		(5.43-5.40)x(3.39+3.37)/2	0.10		
		(5.48-5.43)x(3.36+3.39)/2	0.17		
		(5.50-5.48)x(3.35+3.36)/2	0.07		
		(5.51-5.50)x(3.30+3.35)/2	0.03		
		(5.54-5.51)x(3.31+3.30)/2	0.10		
		(5.56-5.54)x(3.32+3.31)/2	0.07		
		(6.12-5.56)x(3.35+3.32)/2	1.87		
		(6.59-6.12)x(3.33+3.35)/2	1.57		
		(7.10-6.59)x(3.30+3.33)/2	1.69		
		(7.62-7.10)x(3.27+3.30)/2	1.71		
		(8.08-7.62)x(3.24+3.27)/2	1.50		
		(8.25-8.08)x(3.21+3.24)/2	0.55		
		(8.08-8.25)x(2.74+2.71)/2	-0.46		
		(7.62-8.08)x(2.77+2.74)/2	-1.27		
		(7.10-7.62)x(2.80+2.77)/2	-1.45		
		(6.59-7.10)x(2.83+2.80)/2	-1.44		
		(6.12-6.59)x(2.85+2.83)/2	-1.33		
		(5.56-6.12)x(2.82+2.85)/2	-1.59		
		(5.54-5.56)x(2.81+2.82)/2	-0.06		
		(5.51-5.54)x(2.80+2.81)/2	-0.08		
		(5.50-5.51)x(2.85+2.80)/2	-0.03		
		(5.48-5.50)x(2.86+2.85)/2	-0.06		
		(5.43-5.48)x(2.89+2.86)/2	-0.14		
		(5.40-5.43)x(2.87+2.89)/2	-0.09		
		(5.37-5.40)x(2.85+2.87)/2	-0.09		
		A RIPORTARE mq	54.22		

BONIFICA

N. SEZIONE PROG.	FIG.	ELEMENTI DI CALCOLO	AREA ELEMENTARE mq	AREA FIGURA mq	NOTE
		RIPORTO mq	54.22		
		(5.35-5.37)x(2.87+2.85)/2	-0.06		
		(5.34-5.35)x(2.84+2.87)/2	-0.03		
		(5.01-5.34)x(2.80+2.84)/2	-0.93		
		(4.73-5.01)x(2.83+2.80)/2	-0.79		
		(4.71-4.73)x(2.88+2.83)/2	-0.06		
		(4.70-4.71)x(2.84+2.88)/2	-0.03		
		(4.67-4.70)x(2.82+2.84)/2	-0.08		
		(4.63-4.67)x(2.79+2.82)/2	-0.11		
		(4.58-4.63)x(2.79+2.79)/2	-0.14		
		(4.54-4.58)x(2.78+2.79)/2	-0.11		
		(4.16-4.54)x(2.78+2.78)/2	-1.06		
		(3.51-4.16)x(2.77+2.78)/2	-1.80		
		(3.18-3.51)x(2.77+2.77)/2	-0.91		
		(2.48-3.18)x(2.80+2.77)/2	-1.95		
		(2.20-2.48)x(2.80+2.80)/2	-0.78		
		(1.46-2.20)x(2.83+2.80)/2	-2.08		
		(1.22-1.46)x(2.83+2.83)/2	-0.68		
		(0.43-1.22)x(2.81+2.83)/2	-2.23		
		(0.24-0.43)x(2.81+2.81)/2	-0.53		
		(-0.60-0.24)x(2.81+2.81)/2	-2.36		
		(-0.74--0.60)x(2.81+2.81)/2	-0.39		
		(-1.62--0.74)x(2.80+2.81)/2	-2.47		
		(-1.72--1.62)x(2.80+2.80)/2	-0.28		
		(-2.65--1.72)x(2.81+2.80)/2	-2.61		
		(-2.70--2.65)x(2.81+2.81)/2	-0.14		
		(-3.68--2.70)x(2.78+2.81)/2	-2.74		
		(-3.87--3.68)x(2.79+2.78)/2	-0.53		
		(-4.69--3.87)x(2.82+2.79)/2	-2.30		
		(-4.70--4.69)x(2.82+2.82)/2	-0.03		
		(-5.61--4.70)x(2.88+2.82)/2	-2.59		
		(-5.73--5.61)x(2.88+2.88)/2	-0.35		
		(-6.63--5.73)x(2.69+2.88)/2	-2.51		
		(-6.75--6.63)x(2.67+2.69)/2	-0.32		
		(-7.61--6.75)x(2.30+2.67)/2	-2.14		
		(-7.78--7.61)x(2.24+2.30)/2	-0.39		
		(-8.59--7.78)x(1.92+2.24)/2	-1.68		
		(-8.81--8.59)x(1.83+1.92)/2	-0.41		
		(-9.57--8.81)x(1.52+1.83)/2	-1.27		
		(-9.83--9.57)x(1.42+1.52)/2	-0.38		
		(-10.55--9.83)x(1.13+1.42)/2	-0.92		
		(-10.86--10.55)x(1.00+1.13)/2	-0.33		
		(-11.53--10.86)x(0.69+1.00)/2	-0.57		
		(-11.89--11.53)x(0.50+0.69)/2	-0.21		
		(-12.51--11.89)x(0.27+0.50)/2	-0.24		
		(-12.91--12.51)x(0.06+0.27)/2	-0.07		
		(-13.49--12.91)x(-0.08+0.06)/2	0.01		
		(-13.94--13.49)x(-0.19+-0.08)/2	0.06		
		(-14.47--13.94)x(-0.28+-0.19)/2	0.12		
		(-14.97--14.47)x(-0.34+-0.28)/2	0.16		
		(-15.45--14.97)x(-0.32+-0.34)/2	0.16		
		(-15.99--15.45)x(-0.22+-0.32)/2	0.15		
		(-16.43--15.99)x(-0.17+-0.22)/2	0.09		
		(-16.54--16.43)x(-0.17+-0.17)/2	0.02		
				12.40	
31 450.00	BO1	(-10.54--10.61)x(1.66+1.64)/2	0.12		
		(-9.64--10.54)x(2.03+1.66)/2	1.66		
		(-9.51--9.64)x(2.09+2.03)/2	0.27		
		(-8.65--9.51)x(2.42+2.09)/2	1.94		
		(-8.48--8.65)x(2.49+2.42)/2	0.42		
		(-7.67--8.48)x(2.88+2.49)/2	2.17		
		(-7.46--7.67)x(2.97+2.88)/2	0.61		
		(-7.34--7.46)x(2.89+2.97)/2	0.35		
		(-7.22--7.34)x(2.95+2.89)/2	0.35		
		(-7.13--7.22)x(2.96+2.95)/2	0.27		
		(-6.52--7.13)x(3.13+2.96)/2	1.86		
		(-6.43--6.52)x(3.38+3.13)/2	0.29		
		(-5.71--6.43)x(3.41+3.35)/2	2.43		
		(-5.40--5.71)x(3.47+3.41)/2	1.07		
		(-4.98--5.40)x(3.42+3.47)/2	1.45		
		(-4.93--4.98)x(3.42+3.42)/2	0.17		
		(-4.70--4.93)x(3.42+3.42)/2	0.79		
		(-4.62--4.70)x(3.42+3.42)/2	0.27		
		(-4.61--4.62)x(3.41+3.42)/2	0.03		
		(-4.60--4.61)x(3.41+3.41)/2	0.03		
		(-4.59--4.60)x(3.41+3.41)/2	0.03		
		(-4.58--4.59)x(3.41+3.41)/2	0.03		
		(-4.55--4.58)x(3.41+3.41)/2	0.10		
		(-4.51--4.55)x(3.40+3.41)/2	0.14		
		(-4.50--4.51)x(3.40+3.40)/2	0.03		
		(-4.49--4.50)x(3.39+3.40)/2	0.03		
		(-4.46--4.49)x(3.39+3.39)/2	0.10		
		(-4.38--4.46)x(3.38+3.39)/2	0.27		
		(-4.32--4.38)x(3.36+3.38)/2	0.20		
		(-4.24--4.32)x(3.31+3.36)/2	0.27		
		(-4.17--4.24)x(3.34+3.31)/2	0.23		
		(-4.12--4.17)x(3.37+3.34)/2	0.17		
		(-3.92--4.12)x(3.41+3.37)/2	0.68		
		(-3.70--3.92)x(3.37+3.41)/2	0.75		
		(-3.64--3.70)x(3.35+3.37)/2	0.20		
		(-3.58--3.64)x(3.32+3.35)/2	0.20		
		(-3.50--3.58)x(3.38+3.32)/2	0.27		
		(-3.40--3.50)x(3.30+3.38)/2	0.33		
		(-3.35--3.40)x(3.29+3.30)/2	0.16		
		(-2.77--3.35)x(3.31+3.29)/2	1.91		
		(-2.32--2.77)x(3.33+3.31)/2	1.49		
		(-1.79--2.32)x(3.36+3.33)/2	1.77		
		(-1.30--1.79)x(3.37+3.36)/2	1.65		
		(-0.81--1.30)x(3.38+3.37)/2	1.65		
		(-0.27--0.81)x(3.38+3.38)/2	1.83		
		(0.17--0.27)x(3.37+3.38)/2	1.49		
		(0.76-0.17)x(3.35+3.37)/2	1.98		
		(1.15-0.76)x(3.35+3.35)/2	1.31		
		(1.78-1.15)x(3.36+3.35)/2	2.11		
		(2.13-1.78)x(3.36+3.36)/2	1.18		
		(2.81-2.13)x(3.37+3.36)/2	2.29		
		A RIPORTARE mq	41.40		

BONIFICA

N. SEZIONE PROG.	FIG.	ELEMENTI DI CALCOLO	AREA ELEMENTARE mq	AREA FIGURA mq	NOTE
		RIPORTO mq	41.40		
		(3.11-2.81)x(3.38+3.37)/2	1.01		
		(3.83-3.11)x(3.36+3.38)/2	2.43		
		(3.88-3.83)x(3.37+3.36)/2	0.17		
		(4.03-3.88)x(3.35+3.37)/2	0.50		
		(4.14-4.03)x(3.39+3.35)/2	0.37		
		(4.64-4.14)x(3.43+3.39)/2	1.71		
		(4.65-4.64)x(3.43+3.43)/2	0.03		
		(4.68-4.65)x(3.37+3.38)/2	0.10		
		(4.72-4.68)x(3.37+3.37)/2	0.13		
		(4.76-4.72)x(3.38+3.37)/2	0.14		
		(4.81-4.76)x(3.39+3.38)/2	0.17		
		(4.86-4.81)x(3.35+3.39)/2	0.17		
		(4.89-4.86)x(3.34+3.35)/2	0.10		
		(4.98-4.89)x(3.34+3.34)/2	0.30		
		(5.05-4.98)x(3.37+3.34)/2	0.23		
		(5.10-5.05)x(3.40+3.37)/2	0.17		
		(5.14-5.10)x(3.37+3.40)/2	0.14		
		(5.17-5.14)x(3.39+3.37)/2	0.10		
		(5.20-5.17)x(3.39+3.39)/2	0.10		
		(5.26-5.20)x(3.41+3.39)/2	0.20		
		(5.29-5.26)x(3.38+3.41)/2	0.10		
		(5.33-5.29)x(3.38+3.38)/2	0.14		
		(5.38-5.33)x(3.38+3.38)/2	0.17		
		(5.41-5.38)x(3.30+3.38)/2	0.10		
		(5.66-5.41)x(3.31+3.30)/2	0.83		
		(5.72-5.66)x(3.31+3.31)/2	0.20		
		(5.80-5.72)x(3.30+3.31)/2	0.26		
		(5.89-5.80)x(3.31+3.30)/2	0.30		
		(6.05-5.89)x(3.31+3.31)/2	0.53		
		(6.91-6.05)x(3.31+3.31)/2	2.85		
		(7.03-6.91)x(3.32+3.31)/2	0.40		
		(7.94-7.03)x(3.35+3.32)/2	3.03		
		(8.01-7.94)x(3.36+3.35)/2	0.23		
		(8.97-8.01)x(3.38+3.36)/2	3.24		
		(8.99-8.97)x(3.37+3.38)/2	0.07		
		(9.61-8.99)x(3.27+3.37)/2	2.06		
		(9.98-9.61)x(3.21+3.27)/2	1.20		
		(9.99-9.98)x(3.21+3.21)/2	0.03		
		(10.96-9.99)x(2.98+3.21)/2	3.00		
		(11.02-10.96)x(2.96+2.98)/2	0.18		
		(11.94-11.02)x(2.72+2.96)/2	2.61		
		(12.05-11.94)x(2.69+2.72)/2	0.30		
		(12.29-12.05)x(2.63+2.69)/2	0.64		
		(12.05-12.29)x(2.19+2.13)/2	-0.52		
		(11.94-12.05)x(2.22+2.19)/2	-0.24		
		(11.02-11.94)x(2.46+2.22)/2	-2.15		
		(10.96-11.02)x(2.48+2.46)/2	-0.15		
		(9.99-10.96)x(2.71+2.48)/2	-2.52		
		(9.98-9.99)x(2.71+2.71)/2	-0.03		
		(9.61-9.98)x(2.77+2.71)/2	-1.01		
		(8.99-9.61)x(2.87+2.77)/2	-1.75		
		(8.97-8.99)x(2.88+2.87)/2	-0.06		
		(8.01-8.97)x(2.86+2.88)/2	-2.76		
		(7.94-8.01)x(2.85+2.86)/2	-0.20		
		(7.03-7.94)x(2.82+2.85)/2	-2.58		
		(6.91-7.03)x(2.81+2.82)/2	-0.34		
		(6.05-6.91)x(2.81+2.81)/2	-2.42		
		(5.89-6.05)x(2.81+2.81)/2	-0.45		
		(5.80-5.89)x(2.80+2.81)/2	-0.25		
		(5.72-5.80)x(2.81+2.80)/2	-0.22		
		(5.66-5.72)x(2.81+2.81)/2	-0.17		
		(5.41-5.66)x(2.80+2.81)/2	-0.70		
		(5.38-5.41)x(2.88+2.80)/2	-0.09		
		(5.33-5.38)x(2.88+2.88)/2	-0.14		
		(5.29-5.33)x(2.88+2.88)/2	-0.12		
		(5.26-5.29)x(2.91+2.88)/2	-0.09		
		(5.20-5.26)x(2.89+2.91)/2	-0.17		
		(5.17-5.20)x(2.89+2.89)/2	-0.09		
		(5.14-5.17)x(2.87+2.89)/2	-0.09		
		(5.10-5.14)x(2.90+2.87)/2	-0.12		
		(5.05-5.10)x(2.87+2.90)/2	-0.14		
		(4.98-5.05)x(2.84+2.87)/2	-0.20		
		(4.89-4.98)x(2.84+2.84)/2	-0.26		
		(4.86-4.89)x(2.85+2.84)/2	-0.09		
		(4.81-4.86)x(2.89+2.85)/2	-0.14		
		(4.76-4.81)x(2.88+2.89)/2	-0.14		
		(4.72-4.76)x(2.87+2.88)/2	-0.12		
		(4.68-4.72)x(2.87+2.87)/2	-0.11		
		(4.65-4.68)x(2.88+2.87)/2	-0.09		
		(4.64-4.65)x(2.93+2.93)/2	-0.03		
		(4.14-4.64)x(2.89+2.93)/2	-1.46		
		(4.03-4.14)x(2.85+2.89)/2	-0.32		
		(3.88-4.03)x(2.87+2.85)/2	-0.43		
		(3.83-3.88)x(2.86+2.87)/2	-0.14		
		(3.11-3.83)x(2.88+2.86)/2	-2.07		
		(2.81-3.11)x(2.87+2.88)/2	-0.86		
		(2.13-2.81)x(2.86+2.87)/2	-1.95		
		(1.78-2.13)x(2.86+2.86)/2	-1.00		
		(1.15-1.78)x(2.85+2.86)/2	-1.80		
		(0.76-1.15)x(2.85+2.85)/2	-1.11		
		(0.17-0.76)x(2.87+2.85)/2	-1.69		
		(-0.27-0.17)x(2.88+2.87)/2	-1.27		
		(-0.81--0.27)x(2.88+2.88)/2	-1.56		
		(-1.30--0.81)x(2.87+2.88)/2	-1.41		
		(-1.79--1.30)x(2.86+2.87)/2	-1.40		
		(-2.32--1.79)x(2.83+2.86)/2	-1.51		
		(-2.77--2.32)x(2.81+2.83)/2	-1.27		
		(-3.35--2.77)x(2.79+2.81)/2	-1.62		
		(-3.40--3.35)x(2.80+2.79)/2	-0.14		
		(-3.50--3.40)x(2.88+2.80)/2	-0.28		
		(-3.58--3.50)x(2.82+2.88)/2	-0.23		
		(-3.64--3.58)x(2.85+2.82)/2	-0.17		
		(-3.70--3.64)x(2.87+2.85)/2	-0.17		
		(-3.92--3.70)x(2.91+2.87)/2	-0.64		
		(-4.12--3.92)x(2.87+2.91)/2	-0.58		
		A RIPORTARE mq	26.31		

BONIFICA

N. SEZIONE PROG.	FIG.	ELEMENTI DI CALCOLO	AREA ELEMENTARE mq	AREA FIGURA mq	NOTE
		RIPORTO mq	26.31		
		(-4.17--4.12)x(2.84+2.87)/2	-0.14		
		(-4.24--4.17)x(2.81+2.84)/2	-0.20		
		(-4.32--4.24)x(2.86+2.81)/2	-0.23		
		(-4.38--4.32)x(2.88+2.86)/2	-0.17		
		(-4.46--4.38)x(2.89+2.88)/2	-0.23		
		(-4.49--4.46)x(2.89+2.89)/2	-0.09		
		(-4.50--4.49)x(2.90+2.89)/2	-0.03		
		(-4.51--4.50)x(2.90+2.90)/2	-0.03		
		(-4.55--4.51)x(2.91+2.90)/2	-0.12		
		(-4.58--4.55)x(2.91+2.91)/2	-0.09		
		(-4.59--4.58)x(2.91+2.91)/2	-0.03		
		(-4.60--4.59)x(2.91+2.91)/2	-0.03		
		(-4.61--4.60)x(2.91+2.91)/2	-0.03		
		(-4.62--4.61)x(2.92+2.91)/2	-0.03		
		(-4.70--4.62)x(2.92+2.92)/2	-0.23		
		(-4.93--4.70)x(2.92+2.92)/2	-0.67		
		(-4.98--4.93)x(2.92+2.92)/2	-0.15		
		(-5.40--4.98)x(2.97+2.92)/2	-1.24		
		(-5.71--5.40)x(2.91+2.97)/2	-0.91		
		(-6.43--5.71)x(2.85+2.91)/2	-2.07		
		(-6.52--6.43)x(2.63+2.88)/2	-0.25		
		(-7.13--6.52)x(2.46+2.63)/2	-1.55		
		(-7.22--7.13)x(2.45+2.46)/2	-0.22		
		(-7.34--7.22)x(2.39+2.45)/2	-0.29		
		(-7.46--7.34)x(2.47+2.39)/2	-0.29		
		(-7.67--7.46)x(2.38+2.47)/2	-0.51		
		(-8.48--7.67)x(1.99+2.38)/2	-1.77		
		(-8.65--8.48)x(1.92+1.99)/2	-0.33		
		(-9.51--8.65)x(1.59+1.92)/2	-1.51		
		(-9.64--9.51)x(1.53+1.59)/2	-0.20		
		(-10.54--9.64)x(1.16+1.53)/2	-1.21		
		(-10.61--10.54)x(1.14+1.16)/2	-0.08		
				11.38	
32 465.00	BO1	(-7.24--7.25)x(3.41+3.35)/2	0.03		
		(-7.22--7.24)x(3.27+3.41)/2	0.07		
		(-7.20--7.22)x(3.33+3.27)/2	0.07		
		(-7.18--7.20)x(3.27+3.33)/2	0.07		
		(-7.15--7.18)x(3.38+3.27)/2	0.10		
		(-7.13--7.15)x(3.42+3.38)/2	0.07		
		(-6.76--7.13)x(3.46+3.42)/2	1.27		
		(-6.11--6.76)x(3.58+3.46)/2	2.29		
		(-5.78--6.11)x(3.54+3.58)/2	1.17		
		(-5.08--5.78)x(3.48+3.54)/2	2.46		
		(-4.97--5.08)x(3.47+3.48)/2	0.38		
		(-4.82--4.97)x(3.40+3.47)/2	0.52		
		(-4.76--4.82)x(3.42+3.40)/2	0.20		
		(-4.74--4.76)x(3.41+3.42)/2	0.07		
		(-4.72--4.74)x(3.40+3.41)/2	0.07		
		(-4.71--4.72)x(3.40+3.40)/2	0.03		
		(-4.70--4.71)x(3.40+3.40)/2	0.03		
		(-4.69--4.70)x(3.40+3.40)/2	0.03		
		(-4.68--4.69)x(3.40+3.40)/2	0.03		
		(-4.67--4.68)x(3.40+3.40)/2	0.03		
		(-4.49--4.67)x(3.40+3.40)/2	0.61		
		(-4.41--4.49)x(3.38+3.40)/2	0.27		
		(-4.19--4.41)x(3.36+3.38)/2	0.74		
		(-4.05--4.19)x(3.35+3.36)/2	0.47		
		(-4.04--4.05)x(3.35+3.35)/2	0.03		
		(-3.99--4.04)x(3.34+3.35)/2	0.17		
		(-3.94--3.99)x(3.38+3.34)/2	0.17		
		(-3.93--3.94)x(3.44+3.38)/2	0.03		
		(-3.91--3.93)x(3.38+3.44)/2	0.07		
		(-3.64--3.91)x(3.34+3.38)/2	0.91		
		(-3.58--3.64)x(3.36+3.34)/2	0.20		
		(-3.50--3.58)x(3.35+3.36)/2	0.27		
		(-3.39--3.50)x(3.32+3.35)/2	0.37		
		(-3.23--3.39)x(3.33+3.32)/2	0.53		
		(-3.03--3.23)x(3.34+3.33)/2	0.67		
		(-2.84--3.03)x(3.34+3.34)/2	0.63		
		(-2.00--2.84)x(3.33+3.34)/2	2.80		
		(-1.86--2.00)x(3.33+3.33)/2	0.47		
		(-0.97--1.86)x(3.36+3.33)/2	2.98		
		(-0.88--0.97)x(3.36+3.36)/2	0.30		
		(0.05--0.88)x(3.36+3.36)/2	3.12		
		(0.10-0.05)x(3.36+3.36)/2	0.17		
		(1.08-0.10)x(3.34+3.36)/2	3.28		
		(1.14-1.08)x(3.34+3.34)/2	0.20		
		(2.06-1.14)x(3.34+3.34)/2	3.07		
		(2.11-2.06)x(3.34+3.34)/2	0.17		
		(3.04-2.11)x(3.36+3.34)/2	3.12		
		(3.13-3.04)x(3.37+3.36)/2	0.30		
		(4.02-3.13)x(3.40+3.37)/2	3.01		
		(4.16-4.02)x(3.40+3.40)/2	0.48		
		(4.26-4.16)x(3.42+3.40)/2	0.34		
		(4.34-4.26)x(3.41+3.42)/2	0.27		
		(4.39-4.34)x(3.45+3.41)/2	0.17		
		(4.44-4.39)x(3.41+3.45)/2	0.17		
		(4.47-4.44)x(3.45+3.41)/2	0.10		
		(4.50-4.47)x(3.45+3.45)/2	0.10		
		(4.53-4.50)x(3.45+3.45)/2	0.10		
		(4.57-4.53)x(3.46+3.45)/2	0.14		
		(4.58-4.57)x(3.46+3.46)/2	0.03		
		(5.07-4.58)x(3.37+3.46)/2	1.67		
		(5.08-5.07)x(3.37+3.37)/2	0.03		
		(5.14-5.08)x(3.37+3.37)/2	0.20		
		(5.15-5.14)x(3.46+3.37)/2	0.03		
		(5.18-5.15)x(3.43+3.46)/2	0.10		
		(5.19-5.18)x(3.42+3.42)/2	0.03		
		(5.22-5.19)x(3.43+3.42)/2	0.10		
		(5.25-5.22)x(3.41+3.43)/2	0.10		
		(5.28-5.25)x(3.42+3.41)/2	0.10		
		(5.30-5.28)x(3.36+3.42)/2	0.07		
		(5.32-5.30)x(3.36+3.31)/2	0.07		
		(5.74-5.32)x(3.35+3.36)/2	1.41		
		(5.83-5.74)x(3.34+3.35)/2	0.30		
		A RIPORTARE mq	44.23		

BONIFICA

N. SEZIONE PROG.	FIG.	ELEMENTI DI CALCOLO	AREA ELEMENTARE mq	AREA FIGURA mq	NOTE
		RIPORTO mq	44.23		
		(5.96-5.83)x(3.37+3.34)/2	0.44		
		(6.15-5.96)x(3.38+3.37)/2	0.64		
		(6.21-6.15)x(3.38+3.38)/2	0.20		
		(6.97-6.21)x(3.37+3.38)/2	2.56		
		(7.24-6.97)x(3.35+3.37)/2	0.91		
		(7.95-7.24)x(3.36+3.35)/2	2.38		
		(8.26-7.95)x(3.35+3.36)/2	1.04		
		(8.93-8.26)x(3.35+3.35)/2	2.24		
		(9.29-8.93)x(3.34+3.35)/2	1.20		
		(9.91-9.29)x(3.26+3.34)/2	2.05		
		(10.32-9.91)x(3.24+3.26)/2	1.33		
		(10.89-10.32)x(3.17+3.24)/2	1.83		
		(11.34-10.89)x(3.15+3.17)/2	1.42		
		(11.87-11.34)x(3.03+3.15)/2	1.64		
		(12.37-11.87)x(2.91+3.03)/2	1.48		
		(12.85-12.37)x(2.66+2.91)/2	1.34		
		(13.40-12.85)x(2.39+2.66)/2	1.39		
		(13.83-13.40)x(2.18+2.39)/2	0.98		
		(14.42-13.83)x(2.06+2.18)/2	1.25		
		(14.81-14.42)x(2.09+2.06)/2	0.81		
		(15.45-14.81)x(2.11+2.09)/2	1.34		
		(15.79-15.45)x(2.18+2.11)/2	0.73		
		(16.48-15.79)x(2.19+2.18)/2	1.51		
		(16.56-16.48)x(2.19+2.19)/2	0.18		
		(16.48-16.56)x(1.69+1.69)/2	-0.14		
		(15.79-16.48)x(1.68+1.69)/2	-1.16		
		(15.45-15.79)x(1.61+1.68)/2	-0.56		
		(14.81-15.45)x(1.59+1.61)/2	-1.02		
		(14.42-14.81)x(1.56+1.59)/2	-0.61		
		(13.83-14.42)x(1.68+1.56)/2	-0.96		
		(13.40-13.83)x(1.89+1.68)/2	-0.77		
		(12.85-13.40)x(2.16+1.89)/2	-1.11		
		(12.37-12.85)x(2.41+2.16)/2	-1.10		
		(11.87-12.37)x(2.53+2.41)/2	-1.23		
		(11.34-11.87)x(2.65+2.53)/2	-1.37		
		(10.89-11.34)x(2.67+2.65)/2	-1.20		
		(10.32-10.89)x(2.74+2.67)/2	-1.54		
		(9.91-10.32)x(2.76+2.74)/2	-1.13		
		(9.29-9.91)x(2.84+2.76)/2	-1.74		
		(8.93-9.29)x(2.85+2.84)/2	-1.02		
		(8.26-8.93)x(2.85+2.85)/2	-1.91		
		(7.95-8.26)x(2.86+2.85)/2	-0.89		
		(7.24-7.95)x(2.85+2.86)/2	-2.03		
		(6.97-7.24)x(2.87+2.85)/2	-0.77		
		(6.21-6.97)x(2.88+2.87)/2	-2.18		
		(6.15-6.21)x(2.88+2.88)/2	-0.17		
		(5.96-6.15)x(2.87+2.88)/2	-0.55		
		(5.83-5.96)x(2.84+2.87)/2	-0.37		
		(5.74-5.83)x(2.85+2.84)/2	-0.26		
		(5.32-5.74)x(2.86+2.85)/2	-1.20		
		(5.30-5.32)x(2.81+2.86)/2	-0.06		
		(5.28-5.30)x(2.92+2.86)/2	-0.06		
		(5.25-5.28)x(2.91+2.92)/2	-0.09		
		(5.22-5.25)x(2.93+2.91)/2	-0.09		
		(5.19-5.22)x(2.92+2.93)/2	-0.09		
		(5.18-5.19)x(2.92+2.92)/2	-0.03		
		(5.15-5.18)x(2.96+2.93)/2	-0.09		
		(5.14-5.15)x(2.87+2.96)/2	-0.03		
		(5.08-5.14)x(2.87+2.87)/2	-0.17		
		(5.07-5.08)x(2.87+2.87)/2	-0.03		
		(4.58-5.07)x(2.96+2.87)/2	-1.43		
		(4.57-4.58)x(2.96+2.96)/2	-0.03		
		(4.53-4.57)x(2.95+2.96)/2	-0.12		
		(4.50-4.53)x(2.95+2.95)/2	-0.09		
		(4.47-4.50)x(2.95+2.95)/2	-0.09		
		(4.44-4.47)x(2.91+2.95)/2	-0.09		
		(4.39-4.44)x(2.95+2.91)/2	-0.15		
		(4.34-4.39)x(2.91+2.95)/2	-0.15		
		(4.26-4.34)x(2.92+2.91)/2	-0.23		
		(4.16-4.26)x(2.90+2.92)/2	-0.29		
		(4.02-4.16)x(2.90+2.90)/2	-0.41		
		(3.13-4.02)x(2.87+2.90)/2	-2.57		
		(3.04-3.13)x(2.86+2.87)/2	-0.26		
		(2.11-3.04)x(2.84+2.86)/2	-2.65		
		(2.06-2.11)x(2.84+2.84)/2	-0.14		
		(1.14-2.06)x(2.84+2.84)/2	-2.61		
		(1.08-1.14)x(2.84+2.84)/2	-0.17		
		(0.10-1.08)x(2.86+2.84)/2	-2.79		
		(0.05-0.10)x(2.86+2.86)/2	-0.14		
		(-0.88-0.05)x(2.86+2.86)/2	-2.66		
		(-0.97--0.88)x(2.86+2.86)/2	-0.26		
		(-1.86--0.97)x(2.83+2.86)/2	-2.53		
		(-2.00--1.86)x(2.83+2.83)/2	-0.40		
		(-2.84--2.00)x(2.84+2.83)/2	-2.38		
		(-3.03--2.84)x(2.84+2.84)/2	-0.54		
		(-3.23--3.03)x(2.83+2.84)/2	-0.57		
		(-3.39--3.23)x(2.82+2.83)/2	-0.45		
		(-3.50--3.39)x(2.85+2.82)/2	-0.31		
		(-3.58--3.50)x(2.86+2.85)/2	-0.23		
		(-3.64--3.58)x(2.84+2.86)/2	-0.17		
		(-3.91--3.64)x(2.88+2.84)/2	-0.77		
		(-3.93--3.91)x(2.94+2.88)/2	-0.06		
		(-3.94--3.93)x(2.88+2.94)/2	-0.03		
		(-3.99--3.94)x(2.84+2.88)/2	-0.14		
		(-4.04--3.99)x(2.85+2.84)/2	-0.14		
		(-4.05--4.04)x(2.85+2.85)/2	-0.03		
		(-4.19--4.05)x(2.86+2.85)/2	-0.40		
		(-4.41--4.19)x(2.88+2.86)/2	-0.63		
		(-4.49--4.41)x(2.90+2.88)/2	-0.23		
		(-4.67--4.49)x(2.90+2.90)/2	-0.52		
		(-4.68--4.67)x(2.90+2.90)/2	-0.03		
		(-4.69--4.68)x(2.90+2.90)/2	-0.03		
		(-4.70--4.69)x(2.90+2.90)/2	-0.03		
		(-4.71--4.70)x(2.90+2.90)/2	-0.03		
		(-4.72--4.71)x(2.90+2.90)/2	-0.03		
		A RIPORTARE mq	19.38		

BONIFICA

N. SEZIONE PROG.	FIG.	ELEMENTI DI CALCOLO	AREA ELEMENTARE mq	AREA FIGURA mq	NOTE
		RIPORTO mq	19.38		
		(-4.74--4.72)x(2.91+2.90)/2	-0.06		
		(-4.76--4.74)x(2.92+2.91)/2	-0.06		
		(-4.82--4.76)x(2.90+2.92)/2	-0.17		
		(-4.97--4.82)x(2.97+2.90)/2	-0.44		
		(-5.08--4.97)x(2.98+2.97)/2	-0.33		
		(-5.78--5.08)x(3.04+2.98)/2	-2.11		
		(-6.11--5.78)x(3.08+3.04)/2	-1.01		
		(-6.76--6.11)x(2.96+3.08)/2	-1.96		
		(-7.13--6.76)x(2.92+2.96)/2	-1.09		
		(-7.15--7.13)x(2.88+2.92)/2	-0.06		
		(-7.18--7.15)x(2.77+2.88)/2	-0.08		
		(-7.20--7.18)x(2.83+2.77)/2	-0.06		
		(-7.22--7.20)x(2.77+2.83)/2	-0.06		
		(-7.24--7.22)x(2.91+2.77)/2	-0.06		
		(-7.25--7.24)x(2.85+2.91)/2	-0.03		
				11.80	
33 480.00	B01	(-4.71--4.75)x(3.39+3.43)/2	0.14		
		(-4.69--4.71)x(3.38+3.42)/2	0.07		
		(-4.64--4.69)x(3.38+3.38)/2	0.17		
		(-4.49--4.64)x(3.42+3.38)/2	0.51		
		(-4.02--4.49)x(3.42+3.42)/2	1.61		
		(-4.00--4.02)x(3.41+3.45)/2	0.07		
		(-3.98--4.00)x(3.38+3.41)/2	0.07		
		(-3.96--3.98)x(3.39+3.38)/2	0.07		
		(-3.93--3.96)x(3.39+3.39)/2	0.10		
		(-3.90--3.93)x(3.37+3.39)/2	0.10		
		(-3.86--3.90)x(3.36+3.37)/2	0.13		
		(-3.81--3.86)x(3.37+3.36)/2	0.17		
		(-3.74--3.81)x(3.32+3.37)/2	0.23		
		(-3.73--3.74)x(3.32+3.32)/2	0.03		
		(-2.91--3.73)x(3.33+3.32)/2	2.73		
		(-2.70--2.91)x(3.34+3.33)/2	0.70		
		(-1.93--2.70)x(3.36+3.34)/2	2.58		
		(-1.67--1.93)x(3.36+3.36)/2	0.87		
		(-0.95--1.67)x(3.39+3.36)/2	2.43		
		(-0.65--0.95)x(3.40+3.39)/2	1.02		
		(0.03--0.65)x(3.37+3.40)/2	2.30		
		(0.38-0.03)x(3.37+3.37)/2	1.18		
		(1.01-0.38)x(3.39+3.37)/2	2.13		
		(1.40-1.01)x(3.40+3.39)/2	1.32		
		(1.99-1.40)x(3.41+3.40)/2	2.01		
		(2.43-1.99)x(3.42+3.41)/2	1.50		
		(2.98-2.43)x(3.42+3.42)/2	1.88		
		(3.46-2.98)x(3.42+3.42)/2	1.64		
		(3.96-3.46)x(3.43+3.42)/2	1.71		
		(4.21-3.96)x(3.43+3.43)/2	0.86		
		(4.30-4.21)x(3.44+3.43)/2	0.31		
		(4.35-4.30)x(3.44+3.44)/2	0.17		
		(4.37-4.35)x(3.44+3.44)/2	0.07		
		(4.39-4.37)x(3.44+3.44)/2	0.07		
		(4.41-4.39)x(3.44+3.44)/2	0.07		
		(4.46-4.41)x(3.45+3.44)/2	0.17		
		(4.48-4.46)x(3.45+3.45)/2	0.07		
		(4.50-4.48)x(3.41+3.45)/2	0.07		
		(4.53-4.50)x(3.41+3.41)/2	0.10		
		(4.54-4.53)x(3.41+3.41)/2	0.03		
		(4.63-4.54)x(3.39+3.41)/2	0.31		
		(4.71-4.63)x(3.40+3.39)/2	0.27		
		(4.77-4.71)x(3.41+3.40)/2	0.20		
		(4.81-4.77)x(3.43+3.41)/2	0.14		
		(4.85-4.81)x(3.43+3.43)/2	0.14		
		(4.89-4.85)x(3.45+3.43)/2	0.14		
		(5.03-4.89)x(3.46+3.45)/2	0.48		
		(5.05-5.03)x(3.40+3.46)/2	0.07		
		(5.06-5.05)x(3.40+3.40)/2	0.03		
		(5.10-5.06)x(3.40+3.40)/2	0.14		
		(5.15-5.10)x(3.40+3.40)/2	0.17		
		(5.19-5.15)x(3.44+3.40)/2	0.14		
		(5.20-5.19)x(3.34+3.44)/2	0.03		
		(5.22-5.20)x(3.42+3.34)/2	0.07		
		(5.25-5.22)x(3.38+3.42)/2	0.10		
		(5.28-5.25)x(3.41+3.38)/2	0.10		
		(5.31-5.28)x(3.42+3.41)/2	0.10		
		(5.36-5.31)x(3.39+3.42)/2	0.17		
		(5.41-5.36)x(3.35+3.39)/2	0.17		
		(5.47-5.41)x(3.38+3.35)/2	0.20		
		(5.51-5.47)x(3.40+3.38)/2	0.14		
		(5.92-5.51)x(3.37+3.40)/2	1.39		
		(6.54-5.92)x(3.30+3.37)/2	2.07		
		(6.90-6.54)x(3.28+3.30)/2	1.18		
		(7.56-6.90)x(3.22+3.28)/2	2.14		
		(7.88-7.56)x(3.20+3.22)/2	1.03		
		(8.59-7.88)x(3.24+3.20)/2	2.29		
		(8.86-8.59)x(3.24+3.24)/2	0.87		
		(9.62-8.86)x(3.28+3.24)/2	2.48		
		(9.84-9.62)x(3.29+3.28)/2	0.72		
		(10.64-9.84)x(3.37+3.29)/2	2.66		
		(10.82-10.64)x(3.36+3.37)/2	0.61		
		(11.67-10.82)x(3.41+3.36)/2	2.88		
		(11.77-11.67)x(3.40+3.41)/2	0.34		
		(11.67-11.77)x(2.91+2.90)/2	-0.29		
		(10.82-11.67)x(2.86+2.91)/2	-2.45		
		(10.64-10.82)x(2.87+2.86)/2	-0.52		
		(9.84-10.64)x(2.79+2.87)/2	-2.26		
		(9.62-9.84)x(2.78+2.79)/2	-0.61		
		(8.86-9.62)x(2.74+2.78)/2	-2.10		
		(8.59-8.86)x(2.74+2.74)/2	-0.74		
		(7.88-8.59)x(2.70+2.74)/2	-1.93		
		(7.56-7.88)x(2.72+2.70)/2	-0.87		
		(6.90-7.56)x(2.78+2.72)/2	-1.81		
		(6.54-6.90)x(2.80+2.78)/2	-1.00		
		(5.92-6.54)x(2.87+2.80)/2	-1.76		
		(5.51-5.92)x(2.90+2.87)/2	-1.18		
		(5.47-5.51)x(2.88+2.90)/2	-0.12		
		(5.41-5.47)x(2.85+2.88)/2	-0.17		
		A RIPORTARE mq	37.62		

BONIFICA

N. SEZIONE PROG.	FIG.	ELEMENTI DI CALCOLO	AREA ELEMENTARE mq	AREA FIGURA mq	NOTE
		RIPORTO mq	37.62		
		(5.36-5.41)x(2.89+2.85)/2	-0.14		
		(5.31-5.36)x(2.92+2.89)/2	-0.15		
		(5.28-5.31)x(2.91+2.92)/2	-0.09		
		(5.25-5.28)x(2.88+2.91)/2	-0.09		
		(5.22-5.25)x(2.92+2.88)/2	-0.09		
		(5.20-5.22)x(2.84+2.92)/2	-0.06		
		(5.19-5.20)x(2.94+2.84)/2	-0.03		
		(5.15-5.19)x(2.90+2.94)/2	-0.12		
		(5.10-5.15)x(2.90+2.90)/2	-0.15		
		(5.06-5.10)x(2.90+2.90)/2	-0.12		
		(5.05-5.06)x(2.90+2.90)/2	-0.03		
		(5.03-5.05)x(2.96+2.90)/2	-0.06		
		(4.89-5.03)x(2.95+2.96)/2	-0.41		
		(4.85-4.89)x(2.93+2.95)/2	-0.12		
		(4.81-4.85)x(2.93+2.93)/2	-0.12		
		(4.77-4.81)x(2.91+2.93)/2	-0.12		
		(4.71-4.77)x(2.90+2.91)/2	-0.17		
		(4.63-4.71)x(2.89+2.90)/2	-0.23		
		(4.54-4.63)x(2.91+2.89)/2	-0.26		
		(4.53-4.54)x(2.91+2.91)/2	-0.03		
		(4.50-4.53)x(2.91+2.91)/2	-0.09		
		(4.48-4.50)x(2.95+2.91)/2	-0.06		
		(4.46-4.48)x(2.95+2.95)/2	-0.06		
		(4.41-4.46)x(2.94+2.95)/2	-0.15		
		(4.39-4.41)x(2.94+2.94)/2	-0.06		
		(4.37-4.39)x(2.94+2.94)/2	-0.06		
		(4.35-4.37)x(2.94+2.94)/2	-0.06		
		(4.30-4.35)x(2.94+2.94)/2	-0.15		
		(4.21-4.30)x(2.93+2.94)/2	-0.26		
		(3.96-4.21)x(2.93+2.93)/2	-0.73		
		(3.46-3.96)x(2.92+2.93)/2	-1.46		
		(2.98-3.46)x(2.92+2.92)/2	-1.40		
		(2.43-2.98)x(2.92+2.92)/2	-1.61		
		(1.99-2.43)x(2.91+2.92)/2	-1.28		
		(1.40-1.99)x(2.90+2.91)/2	-1.71		
		(1.01-1.40)x(2.89+2.90)/2	-1.13		
		(0.38-1.01)x(2.87+2.89)/2	-1.81		
		(0.03-0.38)x(2.87+2.87)/2	-1.00		
		(-0.65-0.03)x(2.90+2.87)/2	-1.96		
		(-0.95--0.65)x(2.89+2.90)/2	-0.87		
		(-1.67--0.95)x(2.86+2.89)/2	-2.07		
		(-1.93--1.67)x(2.86+2.86)/2	-0.74		
		(-2.70--1.93)x(2.84+2.86)/2	-2.19		
		(-2.91--2.70)x(2.83+2.84)/2	-0.60		
		(-3.73--2.91)x(2.82+2.83)/2	-2.32		
		(-3.74--3.73)x(2.82+2.82)/2	-0.03		
		(-3.81--3.74)x(2.87+2.82)/2	-0.20		
		(-3.86--3.81)x(2.86+2.87)/2	-0.14		
		(-3.90--3.86)x(2.87+2.86)/2	-0.11		
		(-3.93--3.90)x(2.89+2.87)/2	-0.09		
		(-3.96--3.93)x(2.89+2.89)/2	-0.09		
		(-3.98--3.96)x(2.88+2.89)/2	-0.06		
		(-4.00--3.98)x(2.91+2.88)/2	-0.06		
		(-4.02--4.00)x(2.95+2.91)/2	-0.06		
		(-4.49--4.02)x(2.92+2.92)/2	-1.37		
		(-4.64--4.49)x(2.88+2.92)/2	-0.43		
		(-4.69--4.64)x(2.88+2.88)/2	-0.14		
		(-4.71--4.69)x(2.92+2.88)/2	-0.06		
		(-4.75--4.71)x(2.93+2.89)/2	-0.12		
				8.24	
34 495.00	BO1	(9.30-9.13)x(3.47+3.49)/2	0.59		
		(9.81-9.30)x(3.33+3.47)/2	1.73		
		(10.25-9.81)x(3.27+3.33)/2	1.45		
		(10.38-10.25)x(3.25+3.27)/2	0.42		
		(10.25-10.38)x(2.77+2.75)/2	-0.36		
		(9.81-10.25)x(2.83+2.77)/2	-1.23		
		(9.30-9.81)x(2.97+2.83)/2	-1.48		
		(9.13-9.30)x(2.99+2.97)/2	-0.51		
				0.61	
34 495.00	BO2	(4.72-4.70)x(3.47+3.51)/2	0.07		
		(4.77-4.72)x(3.44+3.47)/2	0.17		
		(4.78-4.77)x(3.44+3.44)/2	0.03		
		(5.01-4.78)x(3.50+3.44)/2	0.80		
		(4.78-5.01)x(2.94+3.00)/2	-0.68		
		(4.77-4.78)x(2.94+2.94)/2	-0.03		
		(4.72-4.77)x(2.97+2.94)/2	-0.15		
		(4.70-4.72)x(3.01+2.97)/2	-0.06		
				0.15	
34 495.00	BO3	(-15.35--15.75)x(0.24+0.21)/2	0.09		
		(-14.88--15.35)x(0.25+0.24)/2	0.12		
		(-14.33--14.88)x(0.22+0.25)/2	0.13		
		(-14.30--14.33)x(0.22+0.22)/2	0.01		
		(-14.17--14.30)x(0.21+0.22)/2	0.03		
		(-14.14--14.17)x(0.21+0.21)/2	0.01		
		(-14.08--14.14)x(0.21+0.21)/2	0.01		
		(-14.07--14.08)x(0.21+0.21)/2	0.00		
		(-14.06--14.07)x(0.22+0.22)/2	0.00		
		(-14.03--14.06)x(0.24+0.22)/2	0.01		
		(-14.00--14.03)x(0.24+0.24)/2	0.01		
		(-13.85--14.00)x(0.36+0.24)/2	0.05		
		(-13.45--13.85)x(0.41+0.36)/2	0.15		
		(-12.82--13.45)x(0.52+0.41)/2	0.29		
		(-12.49--12.82)x(0.44+0.52)/2	0.16		
		(-12.37--12.49)x(0.42+0.44)/2	0.05		
		(-12.33--12.37)x(0.41+0.42)/2	0.02		
		(-12.31--12.33)x(0.41+0.41)/2	0.01		
		(-12.23--12.31)x(0.40+0.41)/2	0.03		
		(-12.21--12.23)x(0.44+0.40)/2	0.01		
		(-12.20--12.21)x(0.43+0.44)/2	0.00		
		(-12.19--12.20)x(0.44+0.43)/2	0.00		
		(-12.17--12.19)x(0.46+0.44)/2	0.01		
		(-12.13--12.17)x(0.49+0.46)/2	0.02		
		(-12.05--12.13)x(0.59+0.49)/2	0.04		
		(-11.79--12.05)x(0.85+0.59)/2	0.19		
		(-11.56--11.79)x(0.97+0.85)/2	0.21		
		A RIPORTARE mq	1.66		

BONIFICA

N. SEZIONE PROG.	FIG.	ELEMENTI DI CALCOLO	AREA ELEMENTARE mq	AREA FIGURA mq	NOTE
		RIPORTO mq	1.66		
		(-10.77--11.56)x(1.38+0.97)/2	0.93		
		(-10.61--10.77)x(1.47+1.38)/2	0.23		
		(-9.74--10.61)x(1.93+1.47)/2	1.48		
		(-9.66--9.74)x(1.97+1.93)/2	0.16		
		(-8.79--9.66)x(2.47+1.97)/2	1.93		
		(-8.71--8.79)x(2.52+2.47)/2	0.20		
		(-7.77--8.71)x(3.06+2.52)/2	2.62		
		(-7.68--7.77)x(3.11+3.06)/2	0.28		
		(-7.66--7.68)x(3.12+3.11)/2	0.06		
		(-7.64--7.66)x(3.04+3.12)/2	0.06		
		(-7.20--7.64)x(3.42+3.22)/2	1.46		
		(-7.04--7.20)x(3.49+3.42)/2	0.55		
		(-6.74--7.04)x(3.57+3.49)/2	1.06		
		(-6.65--6.74)x(3.58+3.57)/2	0.32		
		(-5.87--6.65)x(3.51+3.58)/2	2.77		
		(-5.62--5.87)x(3.51+3.51)/2	0.88		
		(-5.35--5.62)x(3.45+3.51)/2	0.94		
		(-5.20--5.35)x(3.42+3.45)/2	0.52		
		(-5.13--5.20)x(3.42+3.42)/2	0.24		
		(-5.09--5.13)x(3.42+3.42)/2	0.14		
		(-5.06--5.09)x(3.41+3.42)/2	0.10		
		(-5.04--5.06)x(3.41+3.41)/2	0.07		
		(-5.03--5.04)x(3.41+3.41)/2	0.03		
		(-5.02--5.03)x(3.41+3.41)/2	0.03		
		(-5.01--5.02)x(3.41+3.41)/2	0.03		
		(-5.00--5.01)x(3.41+3.41)/2	0.03		
		(-4.97--5.00)x(3.41+3.41)/2	0.10		
		(-4.89--4.97)x(3.41+3.41)/2	0.27		
		(-4.85--4.89)x(3.40+3.41)/2	0.14		
		(-4.83--4.85)x(3.39+3.40)/2	0.07		
		(-4.80--4.83)x(3.37+3.39)/2	0.10		
		(-4.72--4.80)x(3.38+3.37)/2	0.27		
		(-4.59--4.72)x(3.38+3.38)/2	0.44		
		(-4.54--4.59)x(3.37+3.38)/2	0.17		
		(-4.49--4.54)x(3.34+3.37)/2	0.17		
		(-4.44--4.49)x(3.36+3.34)/2	0.17		
		(-4.41--4.44)x(3.38+3.36)/2	0.10		
		(-4.38--4.41)x(3.37+3.38)/2	0.10		
		(-4.33--4.38)x(3.44+3.37)/2	0.17		
		(-4.32--4.33)x(3.44+3.44)/2	0.03		
		(-3.75--4.32)x(3.36+3.44)/2	1.94		
		(-3.63--3.75)x(3.36+3.36)/2	0.40		
		(-3.56--3.63)x(3.35+3.36)/2	0.23		
		(-3.02--3.56)x(3.34+3.35)/2	1.81		
		(-2.53--3.02)x(3.36+3.34)/2	1.64		
		(-2.08--2.53)x(3.38+3.36)/2	1.52		
		(-1.50--2.08)x(3.39+3.38)/2	1.96		
		(-1.13--1.50)x(3.39+3.39)/2	1.25		
		(-0.48--1.13)x(3.43+3.39)/2	2.22		
		(-0.18--0.48)x(3.44+3.43)/2	1.03		
		(0.55--0.18)x(3.46+3.44)/2	2.52		
		(0.77-0.55)x(3.46+3.46)/2	0.76		
		(1.58-0.77)x(3.41+3.46)/2	2.78		
		(1.72-1.58)x(3.41+3.41)/2	0.48		
		(2.61-1.72)x(3.39+3.41)/2	3.03		
		(2.66-2.61)x(3.39+3.39)/2	0.17		
		(3.28-2.66)x(3.38+3.39)/2	2.10		
		(3.61-3.28)x(3.38+3.38)/2	1.12		
		(3.64-3.61)x(3.38+3.38)/2	0.10		
		(3.79-3.64)x(3.38+3.38)/2	0.51		
		(3.90-3.79)x(3.43+3.38)/2	0.37		
		(3.98-3.90)x(3.41+3.43)/2	0.27		
		(4.26-3.98)x(3.45+3.41)/2	0.96		
		(4.62-4.26)x(3.44+3.45)/2	1.24		
		(4.65-4.62)x(3.52+3.44)/2	0.10		
		(4.62-4.65)x(2.94+3.02)/2	-0.09		
		(4.26-4.62)x(2.95+2.94)/2	-1.06		
		(3.98-4.26)x(2.91+2.95)/2	-0.82		
		(3.90-3.98)x(2.93+2.91)/2	-0.23		
		(3.79-3.90)x(2.88+2.93)/2	-0.32		
		(3.64-3.79)x(2.88+2.88)/2	-0.43		
		(3.61-3.64)x(2.88+2.88)/2	-0.09		
		(3.28-3.61)x(2.88+2.88)/2	-0.95		
		(2.66-3.28)x(2.89+2.88)/2	-1.79		
		(2.61-2.66)x(2.89+2.89)/2	-0.14		
		(1.72-2.61)x(2.91+2.89)/2	-2.58		
		(1.58-1.72)x(2.91+2.91)/2	-0.41		
		(0.77-1.58)x(2.96+2.91)/2	-2.38		
		(0.55-0.77)x(2.96+2.96)/2	-0.65		
		(-0.18-0.55)x(2.94+2.96)/2	-2.15		
		(-0.48--0.18)x(2.93+2.94)/2	-0.88		
		(-1.13--0.48)x(2.89+2.93)/2	-1.89		
		(-1.50--1.13)x(2.89+2.89)/2	-1.07		
		(-2.08--1.50)x(2.88+2.89)/2	-1.67		
		(-2.53--2.08)x(2.86+2.88)/2	-1.29		
		(-3.02--2.53)x(2.84+2.86)/2	-1.40		
		(-3.56--3.02)x(2.85+2.84)/2	-1.54		
		(-3.63--3.56)x(2.86+2.85)/2	-0.20		
		(-3.75--3.63)x(2.86+2.86)/2	-0.34		
		(-4.32--3.75)x(2.94+2.86)/2	-1.65		
		(-4.33--4.32)x(2.94+2.94)/2	-0.03		
		(-4.38--4.33)x(2.87+2.94)/2	-0.15		
		(-4.41--4.38)x(2.88+2.87)/2	-0.09		
		(-4.44--4.41)x(2.86+2.88)/2	-0.09		
		(-4.49--4.44)x(2.84+2.86)/2	-0.14		
		(-4.54--4.49)x(2.87+2.84)/2	-0.14		
		(-4.59--4.54)x(2.88+2.87)/2	-0.14		
		(-4.72--4.59)x(2.88+2.88)/2	-0.37		
		(-4.80--4.72)x(2.87+2.88)/2	-0.23		
		(-4.83--4.80)x(2.89+2.87)/2	-0.09		
		(-4.85--4.83)x(2.90+2.89)/2	-0.06		
		(-4.89--4.85)x(2.91+2.90)/2	-0.12		
		(-4.97--4.89)x(2.91+2.91)/2	-0.23		
		(-5.00--4.97)x(2.91+2.91)/2	-0.09		
		(-5.01--5.00)x(2.91+2.91)/2	-0.03		
		A RIPORTARE mq	23.57		

BONIFICA

N. SEZIONE PROG.	FIG.	ELEMENTI DI CALCOLO	AREA ELEMENTARE mq	AREA FIGURA mq	NOTE
		RIPORTO mq	23.57		
		(-5.02--5.01)x(2.91+2.91)/2	-0.03		
		(-5.03--5.02)x(2.91+2.91)/2	-0.03		
		(-5.04--5.03)x(2.91+2.91)/2	-0.03		
		(-5.06--5.04)x(2.91+2.91)/2	-0.06		
		(-5.09--5.06)x(2.92+2.91)/2	-0.09		
		(-5.13--5.09)x(2.92+2.92)/2	-0.12		
		(-5.20--5.13)x(2.92+2.92)/2	-0.20		
		(-5.35--5.20)x(2.95+2.92)/2	-0.44		
		(-5.62--5.35)x(3.01+2.95)/2	-0.80		
		(-5.87--5.62)x(3.01+3.01)/2	-0.75		
		(-6.65--5.87)x(3.08+3.01)/2	-2.38		
		(-6.74--6.65)x(3.07+3.08)/2	-0.28		
		(-7.04--6.74)x(2.99+3.07)/2	-0.91		
		(-7.20--7.04)x(2.92+2.99)/2	-0.47		
		(-7.64--7.20)x(2.72+2.92)/2	-1.24		
		(-7.66--7.64)x(2.62+2.54)/2	-0.05		
		(-7.68--7.66)x(2.61+2.62)/2	-0.05		
		(-7.77--7.68)x(2.56+2.61)/2	-0.23		
		(-8.71--7.77)x(2.02+2.56)/2	-2.15		
		(-8.79--8.71)x(1.97+2.02)/2	-0.16		
		(-9.66--8.79)x(1.47+1.97)/2	-1.50		
		(-9.74--9.66)x(1.43+1.47)/2	-0.12		
		(-10.61--9.74)x(0.97+1.43)/2	-1.04		
		(-10.77--10.61)x(0.88+0.97)/2	-0.15		
		(-11.56--10.77)x(0.47+0.88)/2	-0.53		
		(-11.79--11.56)x(0.35+0.47)/2	-0.09		
		(-12.05--11.79)x(0.09+0.35)/2	-0.06		
		(-12.13--12.05)x(-0.01+0.09)/2	-0.00		
		(-12.17--12.13)x(-0.04+-0.01)/2	0.00		
		(-12.19--12.17)x(-0.06+-0.04)/2	0.00		
		(-12.20--12.19)x(-0.07+-0.06)/2	0.00		
		(-12.21--12.20)x(-0.06+-0.07)/2	0.00		
		(-12.23--12.21)x(-0.10+-0.06)/2	0.00		
		(-12.31--12.23)x(-0.09+-0.10)/2	0.01		
		(-12.33--12.31)x(-0.09+-0.09)/2	0.00		
		(-12.37--12.33)x(-0.08+-0.09)/2	0.00		
		(-12.49--12.37)x(-0.06+-0.08)/2	0.01		
		(-12.82--12.49)x(0.02+-0.06)/2	0.01		
		(-13.45--12.82)x(-0.09+0.02)/2	0.02		
		(-13.85--13.45)x(-0.14+-0.09)/2	0.05		
		(-14.00--13.85)x(-0.26+-0.14)/2	0.03		
		(-14.03--14.00)x(-0.26+-0.26)/2	0.01		
		(-14.06--14.03)x(-0.28+-0.26)/2	0.01		
		(-14.07--14.06)x(-0.28+-0.28)/2	0.00		
		(-14.08--14.07)x(-0.29+-0.29)/2	0.00		
		(-14.14--14.08)x(-0.29+-0.29)/2	0.02		
		(-14.17--14.14)x(-0.29+-0.29)/2	0.01		
		(-14.30--14.17)x(-0.28+-0.29)/2	0.04		
		(-14.33--14.30)x(-0.28+-0.28)/2	0.01		
		(-14.88--14.33)x(-0.25+-0.28)/2	0.15		
		(-15.35--14.88)x(-0.26+-0.25)/2	0.12		
		(-15.75--15.35)x(-0.29+-0.26)/2	0.11		
				10.22	
35 510.00	BO1	(-7.65--7.68)x(3.52+3.52)/2	0.11		
		(-6.88--7.65)x(3.41+3.52)/2	2.67		
		(-6.84--6.88)x(3.42+3.41)/2	0.14		
		(-6.82--6.84)x(3.42+3.42)/2	0.07		
		(-6.65--6.82)x(3.46+3.42)/2	0.58		
		(-6.60--6.65)x(3.47+3.46)/2	0.17		
		(-6.58--6.60)x(3.48+3.47)/2	0.07		
		(-6.56--6.58)x(3.48+3.48)/2	0.07		
		(-6.55--6.56)x(3.48+3.48)/2	0.03		
		(-6.54--6.55)x(3.47+3.47)/2	0.03		
		(-6.45--6.54)x(3.47+3.47)/2	0.31		
		(-6.41--6.45)x(3.48+3.47)/2	0.14		
		(-5.97--6.41)x(3.38+3.48)/2	1.51		
		(-5.94--5.97)x(3.44+3.38)/2	0.10		
		(-5.89--5.94)x(3.35+3.38)/2	0.17		
		(-5.84--5.89)x(3.34+3.35)/2	0.17		
		(-5.05--5.84)x(3.36+3.34)/2	2.65		
		(-4.79--5.05)x(3.38+3.36)/2	0.88		
		(-4.18--4.79)x(3.41+3.38)/2	2.07		
		(-3.74--4.18)x(3.42+3.41)/2	1.50		
		(-3.32--3.74)x(3.43+3.42)/2	1.44		
		(-2.69--3.32)x(3.41+3.43)/2	2.15		
		(-2.45--2.69)x(3.41+3.41)/2	0.82		
		(-1.65--2.45)x(3.43+3.41)/2	2.74		
		(-1.59--1.65)x(3.43+3.43)/2	0.21		
		(-1.30--1.59)x(3.43+3.43)/2	0.99		
		(-0.87--1.30)x(3.43+3.43)/2	1.47		
		(-1.30--0.87)x(2.93+2.93)/2	-1.26		
		(-1.59--1.30)x(2.93+2.93)/2	-0.85		
		(-1.65--1.59)x(2.93+2.93)/2	-0.18		
		(-2.45--1.65)x(2.91+2.93)/2	-2.34		
		(-2.69--2.45)x(2.91+2.91)/2	-0.70		
		(-3.32--2.69)x(2.93+2.91)/2	-1.84		
		(-3.74--3.32)x(2.92+2.93)/2	-1.23		
		(-4.18--3.74)x(2.91+2.92)/2	-1.28		
		(-4.79--4.18)x(2.88+2.91)/2	-1.77		
		(-5.05--4.79)x(2.86+2.88)/2	-0.75		
		(-5.84--5.05)x(2.84+2.86)/2	-2.25		
		(-5.89--5.84)x(2.85+2.84)/2	-0.14		
		(-5.94--5.89)x(2.88+2.85)/2	-0.14		
		(-5.97--5.94)x(2.88+2.94)/2	-0.09		
		(-6.41--5.97)x(2.98+2.88)/2	-1.29		
		(-6.45--6.41)x(2.97+2.98)/2	-0.12		
		(-6.54--6.45)x(2.97+2.97)/2	-0.27		
		(-6.55--6.54)x(2.97+2.97)/2	-0.03		
		(-6.56--6.55)x(2.98+2.98)/2	-0.03		
		(-6.58--6.56)x(2.98+2.98)/2	-0.06		
		(-6.60--6.58)x(2.97+2.98)/2	-0.06		
		(-6.65--6.60)x(2.96+2.97)/2	-0.15		
		(-6.82--6.65)x(2.92+2.96)/2	-0.50		
		(-6.84--6.82)x(2.92+2.92)/2	-0.06		
		(-6.88--6.84)x(2.91+2.92)/2	-0.12		
		A RIPORTARE mq	5.75		

BONIFICA

N. SEZIONE PROG.	FIG.	ELEMENTI DI CALCOLO	AREA ELEMENTARE mq	AREA FIGURA mq	NOTE
		RIPORTO mq	5.75		
		(-7.65--6.88)x(3.02+2.91)/2	-2.28		
		(-7.68--7.65)x(3.02+3.02)/2	-0.09		
				3.38	
36	BO1	(0.10-0.03)x(3.42+3.44)/2	0.24		
525.00		(0.30-0.10)x(3.37+3.42)/2	0.68		
		(0.38-0.30)x(3.35+3.37)/2	0.27		
		(0.40-0.38)x(3.37+3.35)/2	0.07		
		(0.46-0.40)x(3.36+3.37)/2	0.20		
		(0.48-0.46)x(3.38+3.36)/2	0.07		
		(0.52-0.48)x(3.40+3.38)/2	0.14		
		(0.63-0.52)x(3.42+3.40)/2	0.38		
		(0.70-0.63)x(3.42+3.42)/2	0.24		
		(1.24-0.70)x(3.37+3.42)/2	1.83		
		(1.77-1.24)x(3.36+3.37)/2	1.78		
		(2.06-1.77)x(3.31+3.36)/2	0.97		
		(2.84-2.06)x(3.29+3.31)/2	2.57		
		(2.88-2.84)x(3.29+3.29)/2	0.13		
		(3.02-2.88)x(3.27+3.29)/2	0.46		
		(3.71-3.02)x(3.17+3.27)/2	2.22		
		(3.92-3.71)x(3.14+3.17)/2	0.66		
		(4.53-3.92)x(3.11+3.14)/2	1.91		
		(4.99-4.53)x(3.05+3.11)/2	1.42		
		(5.35-4.99)x(3.04+3.05)/2	1.10		
		(6.06-5.35)x(3.08+3.04)/2	2.17		
		(6.17-6.06)x(3.08+3.08)/2	0.34		
		(6.51-6.17)x(3.10+3.08)/2	1.05		
		(6.99-6.51)x(3.12+3.10)/2	1.49		
		(7.13-6.99)x(3.14+3.12)/2	0.44		
		(7.81-7.13)x(3.13+3.14)/2	2.13		
		(8.21-7.81)x(3.12+3.13)/2	1.25		
		(8.63-8.21)x(3.11+3.12)/2	1.31		
		(9.28-8.63)x(3.06+3.11)/2	2.01		
		(9.45-9.28)x(3.07+3.06)/2	0.52		
		(9.99-9.45)x(3.09+3.07)/2	1.66		
		(10.27-9.99)x(3.11+3.09)/2	0.87		
		(10.34-10.27)x(3.10+3.11)/2	0.22		
		(10.27-10.34)x(2.61+2.60)/2	-0.18		
		(9.99-10.27)x(2.59+2.61)/2	-0.73		
		(9.45-9.99)x(2.57+2.59)/2	-1.39		
		(9.28-9.45)x(2.56+2.57)/2	-0.44		
		(8.63-9.28)x(2.61+2.56)/2	-1.68		
		(8.21-8.63)x(2.62+2.61)/2	-1.10		
		(7.81-8.21)x(2.63+2.62)/2	-1.05		
		(7.13-7.81)x(2.64+2.63)/2	-1.79		
		(6.99-7.13)x(2.62+2.64)/2	-0.37		
		(6.51-6.99)x(2.60+2.62)/2	-1.25		
		(6.17-6.51)x(2.58+2.60)/2	-0.88		
		(6.06-6.17)x(2.58+2.58)/2	-0.28		
		(5.35-6.06)x(2.54+2.58)/2	-1.82		
		(4.99-5.35)x(2.55+2.54)/2	-0.92		
		(4.53-4.99)x(2.61+2.55)/2	-1.19		
		(3.92-4.53)x(2.64+2.61)/2	-1.60		
		(3.71-3.92)x(2.67+2.64)/2	-0.56		
		(3.02-3.71)x(2.77+2.67)/2	-1.88		
		(2.88-3.02)x(2.79+2.77)/2	-0.39		
		(2.84-2.88)x(2.79+2.79)/2	-0.11		
		(2.06-2.84)x(2.81+2.79)/2	-2.18		
		(1.77-2.06)x(2.86+2.81)/2	-0.82		
		(1.24-1.77)x(2.87+2.86)/2	-1.52		
		(0.70-1.24)x(2.92+2.87)/2	-1.56		
		(0.63-0.70)x(2.92+2.92)/2	-0.20		
		(0.52-0.63)x(2.90+2.92)/2	-0.32		
		(0.48-0.52)x(2.88+2.90)/2	-0.12		
		(0.46-0.48)x(2.86+2.88)/2	-0.06		
		(0.40-0.46)x(2.87+2.86)/2	-0.17		
		(0.38-0.40)x(2.85+2.87)/2	-0.06		
		(0.30-0.38)x(2.87+2.85)/2	-0.23		
		(0.10-0.30)x(2.92+2.87)/2	-0.58		
		(0.03-0.10)x(2.94+2.92)/2	-0.21		
				5.16	
36	BO2	(-0.37--0.38)x(3.44+3.44)/2	0.03		
525.00		(-0.36--0.37)x(3.44+3.44)/2	0.03		
		(-0.37--0.36)x(2.94+2.94)/2	-0.03		
		(-0.38--0.37)x(2.94+2.94)/2	-0.03		
36	BO3	(-6.14--6.71)x(3.41+3.42)/2	1.95		
525.00		(-5.74--6.14)x(3.42+3.41)/2	1.37		
		(-5.32--5.74)x(3.43+3.42)/2	1.44		
		(-4.67--5.32)x(3.43+3.43)/2	2.23		
		(-4.50--4.67)x(3.42+3.43)/2	0.58		
		(-3.95--4.50)x(3.43+3.42)/2	1.88		
		(-3.68--3.95)x(3.43+3.43)/2	0.93		
		(-3.59--3.68)x(3.43+3.43)/2	0.31		
		(-2.86--3.59)x(3.42+3.43)/2	2.50		
		(-2.52--2.86)x(3.42+3.42)/2	1.16		
		(-2.04--2.52)x(3.43+3.42)/2	1.64		
		(-1.45--2.04)x(3.43+3.43)/2	2.02		
		(-1.35--1.45)x(3.44+3.43)/2	0.34		
		(-1.11--1.35)x(3.43+3.44)/2	0.82		
		(-0.99--1.11)x(3.44+3.43)/2	0.41		
		(-1.11--0.99)x(2.93+2.94)/2	-0.35		
		(-1.35--1.11)x(2.94+2.93)/2	-0.70		
		(-1.45--1.35)x(2.93+2.94)/2	-0.29		
		(-2.04--1.45)x(2.93+2.93)/2	-1.73		
		(-2.52--2.04)x(2.92+2.93)/2	-1.40		
		(-2.86--2.52)x(2.92+2.92)/2	-0.99		
		(-3.59--2.86)x(2.93+2.92)/2	-2.14		
		(-3.68--3.59)x(2.93+2.93)/2	-0.26		
		(-3.95--3.68)x(2.93+2.93)/2	-0.79		
		(-4.50--3.95)x(2.92+2.93)/2	-1.61		
		(-4.67--4.50)x(2.93+2.92)/2	-0.50		
		(-5.32--4.67)x(2.93+2.93)/2	-1.90		
		(-5.74--5.32)x(2.92+2.93)/2	-1.23		
		(-6.14--5.74)x(2.91+2.92)/2	-1.17		
		(-6.71--6.14)x(2.92+2.91)/2	-1.66		
		A RIPORTARE mq	2.86		

BONIFICA

N. SEZIONE PROG.	FIG.	ELEMENTI DI CALCOLO	AREA ELEMENTARE mq	AREA FIGURA mq	NOTE
		RIPORTO mq	2.86		
				2.86	
37 532.90	BO1	(-6.45--6.79)x(3.46+3.46)/2	1.18		
		(-6.14--6.45)x(3.45+3.46)/2	1.07		
		(-5.63--6.14)x(3.44+3.45)/2	1.76		
		(-5.06--5.63)x(3.45+3.44)/2	1.96		
		(-4.93--5.06)x(3.46+3.45)/2	0.45		
		(-4.90--4.93)x(3.46+3.46)/2	0.10		
		(-4.70--4.90)x(3.47+3.46)/2	0.69		
		(-4.63--4.70)x(3.47+3.47)/2	0.24		
		(-4.59--4.63)x(3.48+3.47)/2	0.14		
		(-4.57--4.59)x(3.48+3.48)/2	0.07		
		(-4.55--4.57)x(3.48+3.48)/2	0.07		
		(-4.54--4.55)x(3.49+3.48)/2	0.03		
		(-4.53--4.54)x(3.48+3.49)/2	0.03		
		(-4.52--4.53)x(3.48+3.48)/2	0.03		
		(-4.51--4.52)x(3.48+3.48)/2	0.03		
		(-4.47--4.51)x(3.49+3.49)/2	0.14		
		(-4.38--4.47)x(3.49+3.49)/2	0.31		
		(-4.09--4.38)x(3.47+3.49)/2	1.01		
		(-4.07--4.09)x(3.47+3.47)/2	0.07		
		(-4.06--4.07)x(3.48+3.47)/2	0.03		
		(-4.03--4.06)x(3.45+3.48)/2	0.10		
		(-3.99--4.03)x(3.43+3.45)/2	0.14		
		(-3.92--3.99)x(3.44+3.43)/2	0.24		
		(-3.88--3.92)x(3.44+3.44)/2	0.14		
		(-3.86--3.88)x(3.48+3.44)/2	0.07		
		(-3.85--3.86)x(3.49+3.48)/2	0.03		
		(-3.24--3.85)x(3.36+3.49)/2	2.09		
		(-3.02--3.24)x(3.31+3.36)/2	0.73		
		(-2.92--3.02)x(3.28+3.31)/2	0.33		
		(-2.36--2.92)x(3.25+3.28)/2	1.83		
		(-1.84--2.36)x(3.22+3.25)/2	1.68		
		(-1.71--1.84)x(3.19+3.22)/2	0.42		
		(-0.80--1.71)x(3.10+3.19)/2	2.86		
		(-0.77--0.80)x(3.10+3.10)/2	0.09		
		(-0.72--0.77)x(3.10+3.10)/2	0.16		
		(-0.58--0.72)x(3.08+3.10)/2	0.43		
		(0.10--0.58)x(3.01+3.08)/2	2.07		
		(0.31-0.10)x(3.01+3.01)/2	0.63		
		(0.91-0.31)x(3.04+3.01)/2	1.82		
		(1.38-0.91)x(3.03+3.04)/2	1.43		
		(1.73-1.38)x(3.04+3.03)/2	1.06		
		(2.46-1.73)x(3.07+3.04)/2	2.23		
		(2.55-2.46)x(3.07+3.07)/2	0.28		
		(2.86-2.55)x(3.07+3.07)/2	0.95		
		(3.37-2.86)x(3.07+3.07)/2	1.57		
		(3.53-3.37)x(3.08+3.07)/2	0.49		
		(4.19-3.53)x(3.06+3.08)/2	2.03		
		(4.60-4.19)x(3.07+3.06)/2	1.26		
		(5.01-4.60)x(3.07+3.07)/2	1.26		
		(5.68-5.01)x(3.06+3.07)/2	2.05		
		(5.82-5.68)x(3.06+3.06)/2	0.43		
		(6.29-5.82)x(3.05+3.06)/2	1.44		
		(6.64-6.29)x(3.06+3.05)/2	1.07		
		(6.75-6.64)x(3.06+3.06)/2	0.34		
		(7.46-6.75)x(3.08+3.06)/2	2.18		
		(7.83-7.46)x(3.07+3.08)/2	1.14		
		(8.28-7.83)x(3.08+3.07)/2	1.38		
		(8.90-8.28)x(3.08+3.08)/2	1.91		
		(9.10-8.90)x(3.08+3.08)/2	0.62		
		(9.72-9.10)x(3.09+3.08)/2	1.91		
		(9.92-9.72)x(3.09+3.09)/2	0.62		
		(9.98-9.92)x(3.09+3.09)/2	0.19		
		(10.73-9.98)x(3.13+3.09)/2	2.33		
		(11.05-10.73)x(3.14+3.13)/2	1.00		
		(11.38-11.05)x(3.15+3.14)/2	1.04		
		(11.05-11.38)x(2.64+2.65)/2	-0.87		
		(10.73-11.05)x(2.63+2.64)/2	-0.84		
		(9.98-10.73)x(2.59+2.63)/2	-1.96		
		(9.92-9.98)x(2.59+2.59)/2	-0.16		
		(9.72-9.92)x(2.59+2.59)/2	-0.52		
		(9.10-9.72)x(2.58+2.59)/2	-1.60		
		(8.90-9.10)x(2.58+2.58)/2	-0.52		
		(8.28-8.90)x(2.58+2.58)/2	-1.60		
		(7.83-8.28)x(2.57+2.58)/2	-1.16		
		(7.46-7.83)x(2.58+2.57)/2	-0.95		
		(6.75-7.46)x(2.56+2.58)/2	-1.82		
		(6.64-6.75)x(2.56+2.56)/2	-0.28		
		(6.29-6.64)x(2.55+2.56)/2	-0.89		
		(5.82-6.29)x(2.56+2.55)/2	-1.20		
		(5.68-5.82)x(2.56+2.56)/2	-0.36		
		(5.01-5.68)x(2.57+2.56)/2	-1.72		
		(4.60-5.01)x(2.57+2.57)/2	-1.05		
		(4.19-4.60)x(2.56+2.57)/2	-1.05		
		(3.53-4.19)x(2.58+2.56)/2	-1.70		
		(3.37-3.53)x(2.57+2.58)/2	-0.41		
		(2.86-3.37)x(2.57+2.57)/2	-1.31		
		(2.55-2.86)x(2.57+2.57)/2	-0.80		
		(2.46-2.55)x(2.57+2.57)/2	-0.23		
		(1.73-2.46)x(2.54+2.57)/2	-1.87		
		(1.38-1.73)x(2.53+2.54)/2	-0.89		
		(0.91-1.38)x(2.54+2.53)/2	-1.19		
		(0.31-0.91)x(2.51+2.54)/2	-1.52		
		(0.10-0.31)x(2.51+2.51)/2	-0.53		
		(-0.58-0.10)x(2.58+2.51)/2	-1.73		
		(-0.72--0.58)x(2.60+2.58)/2	-0.36		
		(-0.77--0.72)x(2.60+2.60)/2	-0.13		
		(-0.80--0.77)x(2.60+2.60)/2	-0.08		
		(-1.71--0.80)x(2.69+2.60)/2	-2.41		
		(-1.84--1.71)x(2.72+2.69)/2	-0.35		
		(-2.36--1.84)x(2.75+2.72)/2	-1.42		
		(-2.92--2.36)x(2.78+2.75)/2	-1.55		
		(-3.02--2.92)x(2.81+2.78)/2	-0.28		
		(-3.24--3.02)x(2.86+2.81)/2	-0.62		
		(-3.85--3.24)x(2.99+2.86)/2	-1.78		
		A RIPORTARE mq	17.77		

BONIFICA

N. SEZIONE PROG.	FIG.	ELEMENTI DI CALCOLO	AREA ELEMENTARE mq	AREA FIGURA mq	NOTE
		RIPORTO mq	17.77		
		(-3.86--3.85)x(2.98+2.99)/2	-0.03		
		(-3.88--3.86)x(2.94+2.98)/2	-0.06		
		(-3.92--3.88)x(2.94+2.94)/2	-0.12		
		(-3.99--3.92)x(2.93+2.94)/2	-0.21		
		(-4.03--3.99)x(2.95+2.93)/2	-0.12		
		(-4.06--4.03)x(2.98+2.95)/2	-0.09		
		(-4.07--4.06)x(2.97+2.98)/2	-0.03		
		(-4.09--4.07)x(2.97+2.97)/2	-0.06		
		(-4.38--4.09)x(2.99+2.97)/2	-0.86		
		(-4.47--4.38)x(2.99+2.99)/2	-0.27		
		(-4.51--4.47)x(2.99+2.99)/2	-0.12		
		(-4.52--4.51)x(2.98+2.98)/2	-0.03		
		(-4.53--4.52)x(2.98+2.98)/2	-0.03		
		(-4.54--4.53)x(2.99+2.98)/2	-0.03		
		(-4.55--4.54)x(2.98+2.99)/2	-0.03		
		(-4.57--4.55)x(2.98+2.98)/2	-0.06		
		(-4.59--4.57)x(2.98+2.98)/2	-0.06		
		(-4.63--4.59)x(2.97+2.98)/2	-0.12		
		(-4.70--4.63)x(2.97+2.97)/2	-0.21		
		(-4.90--4.70)x(2.96+2.97)/2	-0.59		
		(-4.93--4.90)x(2.96+2.96)/2	-0.09		
		(-5.06--4.93)x(2.95+2.96)/2	-0.38		
		(-5.63--5.06)x(2.94+2.95)/2	-1.68		
		(-6.14--5.63)x(2.95+2.94)/2	-1.50		
		(-6.45--6.14)x(2.96+2.95)/2	-0.92		
		(-6.79--6.45)x(2.96+2.96)/2	-1.01		
				9.06	
37 532.90	BO2	(-8.90--9.03)x(3.47+3.46)/2	0.45		
		(-8.29--8.90)x(3.47+3.47)/2	2.12		
		(-8.09--8.29)x(3.46+3.47)/2	0.69		
		(-7.86--8.09)x(3.46+3.46)/2	0.80		
		(-8.09--7.86)x(2.96+2.96)/2	-0.68		
		(-8.29--8.09)x(2.97+2.96)/2	-0.59		
		(-8.90--8.29)x(2.97+2.97)/2	-1.81		
		(-9.03--8.90)x(2.96+2.97)/2	-0.39		
				0.59	

Il Direttore dei Lavori | L'Impresa

USURA

N. SEZIONE PROG.	FIG.	ELEMENTI DI CALCOLO	LUNGHEZZA ELEMENTARE ml	LUNGHEZZA FIGURA ml	NOTE
29 bis	a1	(-3.50--4.75)	1.25		
417.82		(0.00--3.50)	3.50		
		(3.50-0.00)	3.50		
		(4.75-3.50)	1.25		
				9.50	
29	a1	(-3.50--4.75)	1.25		
420.00		(0.00--3.50)	3.50		
		(3.50-0.00)	3.50		
		(4.75-3.50)	1.25		
				9.50	
30	a1	(-3.50--4.75)	1.25		
435.00		(0.00--3.50)	3.50		
		(3.50-0.00)	3.50		
		(4.75-3.50)	1.25		
				9.50	
31	a1	(-3.50--4.75)	1.25		
450.00		(0.00--3.50)	3.50		
		(3.50-0.00)	3.50		
		(4.75-3.50)	1.25		
				9.50	
32	a1	(-3.50--4.75)	1.25		
465.00		(0.00--3.50)	3.50		
		(3.50-0.00)	3.50		
		(10.14-3.50)	6.64		
				14.89	
33	a1	(-3.50--4.75)	1.25		
480.00		(0.00--3.50)	3.50		
		(3.55-0.00)	3.55		
		(8.68-3.55)	5.13		
				13.43	
34	a1	(-3.50--8.19)	4.69		
495.00		(0.00--3.50)	3.50		
		(4.06-0.00)	4.06		
		(8.61-4.06)	4.55		
				16.80	
35	a1	(-3.50--5.66)	2.16		
510.00		(0.00--3.50)	3.50		
		(4.21-0.00)	4.21		
		(8.70-4.21)	4.49		
				14.36	
36	a1	(-3.50--5.01)	1.51		
525.00		(0.00--3.50)	3.50		
		(3.72-0.00)	3.72		
		(8.50-3.72)	4.78		
				13.51	
37	a1	(-3.50--7.39)	3.89		
532.90		(0.00--3.50)	3.50		
		(3.52-0.00)	3.52		
		(9.35-3.52)	5.83		
				16.74	

VEGETALE

N. SEZIONE PROG.	FIG.	ELEMENTI DI CALCOLO	LUNGHEZZA ELEMENTARE ml	LUNGHEZZA FIGURA ml	NOTE
29 bis	b2	(-6.25--4.90)	1.35		
417.82		(-18.41--6.25)	12.16		
				13.51	
29 bis	b1	(6.25-4.90)	1.35		
417.82		(11.27-6.25)	5.02		
				6.37	
29	b2	(-6.25--4.90)	1.35		
420.00		(-18.41--6.25)	12.16		
				13.51	
29	b1	(6.25-4.90)	1.35		
420.00		(11.27-6.25)	5.02		
				6.37	
30	b2	(-6.25--4.90)	1.35		
435.00		(-16.54--6.25)	10.29		
				11.64	
30	b1	(6.25-4.90)	1.35		
435.00		(8.25-6.25)	2.00		
				3.35	
31	b1	(-6.25--4.90)	1.35		
450.00		(-10.61--6.25)	4.36		
				5.71	
31	b2	(6.25-4.90)	1.35		
450.00		(13.16-6.25)	6.91		
				8.26	
32	b1	(-6.25--4.90)	1.35		
465.00		(-7.25--6.25)	1.00		
				2.35	
32	b2	(11.64-10.29)	1.35		
465.00		(17.05-11.64)	5.41		
				6.76	
33	b1	(10.18-8.83)	1.35		
480.00		(12.37-10.18)	2.19		
				3.54	
34	b1	(-9.69--8.34)	1.35		
495.00		(-16.28--9.69)	6.59		
				7.94	
34	b2	(10.11-8.76)	1.35		
495.00		(11.07-10.11)	0.96		
				2.31	
35	b1	(-7.16--5.81)	1.35		
510.00		(-8.13--7.16)	0.97		
				2.32	
36	b1	(-6.51--5.16)	1.35		
525.00		(-7.26--6.51)	0.75		
				2.10	
36	b2	(10.00-8.65)	1.35		
525.00		(10.79-10.00)	0.79		
				2.14	
37	b2	(-8.89--7.54)	1.35		
532.90		(-9.59--8.89)	0.70		
				2.05	
37	b1	(10.85-9.50)	1.35		
532.90		(11.90-10.85)	1.05		
				2.40	

Il Direttore dei Lavori | L'Impresa

BINDER

N. SEZIONE PROG.	FIG.	ELEMENTI DI CALCOLO	LUNGHEZZA ELEMENTARE ml	LUNGHEZZA FIGURA ml	NOTE
29 bis	c1	(-3.50--4.75)	1.25		
417.82		(0.00--3.50)	3.50		
		(3.50-0.00)	3.50		
		(4.75-3.50)	1.25		
				9.50	
29	c1	(-3.50--4.75)	1.25		
420.00		(0.00--3.50)	3.50		
		(3.50-0.00)	3.50		
		(4.75-3.50)	1.25		
				9.50	
30	c1	(-3.50--4.75)	1.25		
435.00		(0.00--3.50)	3.50		
		(3.50-0.00)	3.50		
		(4.75-3.50)	1.25		
				9.50	
31	c1	(-3.50--4.75)	1.25		
450.00		(0.00--3.50)	3.50		
		(3.50-0.00)	3.50		
		(4.75-3.50)	1.25		
				9.50	
32	c1	(-3.50--4.75)	1.25		
465.00		(0.00--3.50)	3.50		
		(3.50-0.00)	3.50		
		(10.14-3.50)	6.64		
				14.89	
33	c1	(-3.50--4.75)	1.25		
480.00		(0.00--3.50)	3.50		
		(3.55-0.00)	3.55		
		(8.68-3.55)	5.13		
				13.43	
34	c1	(-3.50--8.19)	4.69		
495.00		(0.00--3.50)	3.50		
		(4.06-0.00)	4.06		
		(8.61-4.06)	4.55		
				16.80	
35	c1	(-3.50--5.66)	2.16		
510.00		(0.00--3.50)	3.50		
		(4.21-0.00)	4.21		
		(8.70-4.21)	4.49		
				14.36	
36	c1	(-3.50--5.01)	1.51		
525.00		(0.00--3.50)	3.50		
		(3.72-0.00)	3.72		
		(8.50-3.72)	4.78		
				13.51	
37	c1	(-3.50--7.39)	3.89		
532.90		(0.00--3.50)	3.50		
		(3.52-0.00)	3.52		
		(9.35-3.52)	5.83		
				16.74	

BASE

N. SEZIONE PROG.	FIG.	ELEMENTI DI CALCOLO	LUNGHEZZA ELEMENTARE ml	LUNGHEZZA FIGURA ml	NOTE
29 bis	d1	(-3.50--4.75)	1.25		
417.82		(0.00--3.50)	3.50		
		(3.50-0.00)	3.50		
		(4.75-3.50)	1.25		
				9.50	
29	d1	(-3.50--4.75)	1.25		
420.00		(0.00--3.50)	3.50		
		(3.50-0.00)	3.50		
		(4.75-3.50)	1.25		
				9.50	
30	d1	(-3.50--4.75)	1.25		
435.00		(0.00--3.50)	3.50		
		(3.50-0.00)	3.50		
		(4.75-3.50)	1.25		
				9.50	
31	d1	(-3.50--4.75)	1.25		
450.00		(0.00--3.50)	3.50		
		(3.50-0.00)	3.50		
		(4.75-3.50)	1.25		
				9.50	
32	d1	(-3.50--4.75)	1.25		
465.00		(0.00--3.50)	3.50		
		(3.50-0.00)	3.50		
		(10.14-3.50)	6.64		
				14.89	
33	d1	(-3.50--4.75)	1.25		
480.00		(0.00--3.50)	3.50		
		(3.55-0.00)	3.55		
		(8.68-3.55)	5.13		
				13.43	
34	d1	(-3.50--8.19)	4.69		
495.00		(0.00--3.50)	3.50		
		(4.06-0.00)	4.06		
		(8.61-4.06)	4.55		
				16.80	
35	d1	(-3.50--5.66)	2.16		
510.00		(0.00--3.50)	3.50		
		(4.21-0.00)	4.21		
		(8.70-4.21)	4.49		
				14.36	
36	d1	(-3.50--5.01)	1.51		
525.00		(0.00--3.50)	3.50		
		(3.72-0.00)	3.72		
		(8.50-3.72)	4.78		
				13.51	
37	d1	(-3.50--7.39)	3.89		
532.90		(0.00--3.50)	3.50		
		(3.52-0.00)	3.52		
		(9.35-3.52)	5.83		
				16.74	

Il Direttore dei Lavori | L'Impresa

FONDAZIONE

N. SEZIONE PROG.	FIG.	ELEMENTI DI CALCOLO	LUNGHEZZA ELEMENTARE ml	LUNGHEZZA FIGURA ml	NOTE
29 bis	e1	(-3.50--4.75)	1.25		
417.82		(0.00--3.50)	3.50		
		(3.50-0.00)	3.50		
		(4.75-3.50)	1.25		
				9.50	
29	e1	(-3.50--4.75)	1.25		
420.00		(0.00--3.50)	3.50		
		(3.50-0.00)	3.50		
		(4.75-3.50)	1.25		
				9.50	
30	e1	(-3.50--4.75)	1.25		
435.00		(0.00--3.50)	3.50		
		(3.50-0.00)	3.50		
		(4.75-3.50)	1.25		
				9.50	
31	e1	(-3.50--4.75)	1.25		
450.00		(0.00--3.50)	3.50		
		(3.50-0.00)	3.50		
		(4.75-3.50)	1.25		
				9.50	
32	e1	(-3.50--4.75)	1.25		
465.00		(0.00--3.50)	3.50		
		(3.50-0.00)	3.50		
		(10.14-3.50)	6.64		
				14.89	
33	e1	(-3.50--4.75)	1.25		
480.00		(0.00--3.50)	3.50		
		(3.55-0.00)	3.55		
		(8.68-3.55)	5.13		
				13.43	
34	e1	(-3.50--8.19)	4.69		
495.00		(0.00--3.50)	3.50		
		(4.06-0.00)	4.06		
		(8.61-4.06)	4.55		
				16.80	
35	e1	(-3.50--5.66)	2.16		
510.00		(0.00--3.50)	3.50		
		(4.21-0.00)	4.21		
		(8.70-4.21)	4.49		
				14.36	
36	e1	(-3.50--5.01)	1.51		
525.00		(0.00--3.50)	3.50		
		(3.72-0.00)	3.72		
		(8.50-3.72)	4.78		
				13.51	
37	e1	(-3.50--7.39)	3.89		
532.90		(0.00--3.50)	3.50		
		(3.52-0.00)	3.52		
		(9.35-3.52)	5.83		
				16.74	

Il Direttore dei Lavori | L'Impresa

SCOTICO

N. SEZIONE PROG.	FIG.	ELEMENTI DI CALCOLO	LUNGHEZZA ELEMENTARE ml	LUNGHEZZA FIGURA ml	NOTE
29 bis 417.82	sc1	(-18.13--18.13)	0.00		
		(-17.34--18.13)	0.79		
		(-17.34--17.34)	0.00		
		(-16.36--17.34)	0.98		
		(-16.32--16.36)	0.04		
		(-15.38--16.32)	0.94		
		(-15.29--15.38)	0.09		
		(-14.40--15.29)	0.89		
		(-14.26--14.40)	0.14		
		(-13.42--14.26)	0.84		
		(-13.24--13.42)	0.18		
		(-12.44--13.24)	0.80		
		(-12.21--12.44)	0.23		
		(-11.46--12.21)	0.75		
		(-11.18--11.46)	0.28		
		(-10.48--11.18)	0.70		
		(-10.16--10.48)	0.32		
		(-9.50--10.16)	0.66		
		(-9.13--9.50)	0.37		
		(-8.52--9.13)	0.61		
		(-8.11--8.52)	0.41		
		(-7.54--8.11)	0.57		
		(-7.08--7.54)	0.46		
		(-6.56--7.08)	0.52		
		(-6.05--6.56)	0.51		
		(-5.58--6.05)	0.47		
		(-5.03--5.58)	0.55		
		(-4.60--5.03)	0.43		
		(-4.00--4.60)	0.60		
		(-3.62--4.00)	0.38		
		(-2.97--3.62)	0.65		
		(-2.64--2.97)	0.33		
		(-1.95--2.64)	0.69		
		(-1.65--1.95)	0.30		
		(-0.92--1.65)	0.73		
		(-0.67--0.92)	0.25		
		(0.11--0.67)	0.78		
		(0.31-0.11)	0.20		
		(1.13-0.31)	0.82		
		(1.29-1.13)	0.16		
		(2.16-1.29)	0.87		
		(2.27-2.16)	0.11		
		(3.19-2.27)	0.92		
		(3.25-3.19)	0.06		
		(4.21-3.25)	0.96		
		(4.23-4.21)	0.02		
		(4.60-4.23)	0.37		
		(5.21-4.60)	0.61		
		(5.24-5.21)	0.03		
		(6.19-5.24)	0.95		
		(6.26-6.19)	0.07		
		(7.17-6.26)	0.91		
		(7.29-7.17)	0.12		
		(8.15-7.29)	0.86		
		(8.32-8.15)	0.17		
		(9.13-8.32)	0.81		
		(9.34-9.13)	0.21		
		(10.11-9.34)	0.77		
		(10.37-10.11)	0.26		
		(11.09-10.37)	0.72		
		(11.27-11.09)	0.18		
		(11.27-11.27)	0.00		
				29.40	
29 420.00	sc1	(-18.13--18.13)	0.00		
		(-17.34--18.13)	0.79		
		(-17.34--17.34)	0.00		
		(-16.36--17.34)	0.98		
		(-16.32--16.36)	0.04		
		(-15.38--16.32)	0.94		
		(-15.29--15.38)	0.09		
		(-14.40--15.29)	0.89		
		(-14.26--14.40)	0.14		
		(-13.42--14.26)	0.84		
		(-13.24--13.42)	0.18		
		(-12.44--13.24)	0.80		
		(-12.21--12.44)	0.23		
		(-11.46--12.21)	0.75		
		(-11.18--11.46)	0.28		
		(-10.48--11.18)	0.70		
		(-10.16--10.48)	0.32		
		(-9.50--10.16)	0.66		
		(-9.13--9.50)	0.37		
		(-8.52--9.13)	0.61		
		(-8.11--8.52)	0.41		
		(-7.54--8.11)	0.57		
		(-7.08--7.54)	0.46		
		(-6.56--7.08)	0.52		
		(-6.05--6.56)	0.51		
		(-5.58--6.05)	0.47		
		(-5.03--5.58)	0.55		
		(-4.60--5.03)	0.43		
		(-4.00--4.60)	0.60		
		(-3.62--4.00)	0.38		
		(-2.97--3.62)	0.65		
		(-2.64--2.97)	0.33		
		(-1.95--2.64)	0.69		
		(-1.65--1.95)	0.30		
		(-0.92--1.65)	0.73		
		(-0.67--0.92)	0.25		
		(0.11--0.67)	0.78		
		(0.31-0.11)	0.20		
		(1.13-0.31)	0.82		
		(1.29-1.13)	0.16		
		(2.16-1.29)	0.87		
		(2.27-2.16)	0.11		
		(3.19-2.27)	0.92		
		(3.25-3.19)	0.06		
		A RIPORTARE ml	21.38		

SCOTICO

N. SEZIONE PROG.	FIG.	ELEMENTI DI CALCOLO	LUNGHEZZA ELEMENTARE ml	LUNGHEZZA FIGURA ml	NOTE
		RIPORTO ml	21.38		
		(4.21-3.25)	0.96		
		(4.23-4.21)	0.02		
		(4.60-4.23)	0.37		
		(5.21-4.60)	0.61		
		(5.24-5.21)	0.03		
		(6.19-5.24)	0.95		
		(6.26-6.19)	0.07		
		(7.17-6.26)	0.91		
		(7.29-7.17)	0.12		
		(8.15-7.29)	0.86		
		(8.32-8.15)	0.17		
		(9.13-8.32)	0.81		
		(9.34-9.13)	0.21		
		(10.11-9.34)	0.77		
		(10.37-10.11)	0.26		
		(11.09-10.37)	0.72		
		(11.27-11.09)	0.18		
		(11.27-11.27)	0.00		
				29.40	
30 435.00	sc1	(-16.54--16.54)	0.00		
		(-16.43--16.54)	0.11		
		(-15.99--16.43)	0.44		
		(-15.45--15.99)	0.54		
		(-14.97--15.45)	0.48		
		(-14.47--14.97)	0.50		
		(-13.94--14.47)	0.53		
		(-13.49--13.94)	0.45		
		(-12.91--13.49)	0.58		
		(-12.51--12.91)	0.40		
		(-11.89--12.51)	0.62		
		(-11.53--11.89)	0.36		
		(-10.86--11.53)	0.67		
		(-10.55--10.86)	0.31		
		(-9.83--10.55)	0.72		
		(-9.57--9.83)	0.26		
		(-8.81--9.57)	0.76		
		(-8.59--8.81)	0.22		
		(-7.78--8.59)	0.81		
		(-7.61--7.78)	0.17		
		(-6.75--7.61)	0.86		
		(-6.63--6.75)	0.12		
		(-5.73--6.63)	0.90		
		(-5.61--5.73)	0.12		
		(-4.70--5.61)	0.91		
		(-4.69--4.70)	0.01		
		(-3.87--4.69)	0.82		
		(-3.68--3.87)	0.19		
		(-3.68--3.68)	0.00		
		(-2.70--3.68)	0.98		
		(-2.65--2.70)	0.05		
		(-1.72--2.65)	0.93		
		(-1.62--1.72)	0.10		
		(-0.74--1.62)	0.88		
		(-0.60--0.74)	0.14		
		(0.24--0.60)	0.84		
		(0.43-0.24)	0.19		
		(1.22-0.43)	0.79		
		(1.46-1.22)	0.24		
		(2.20-1.46)	0.74		
		(2.48-2.20)	0.28		
		(3.18-2.48)	0.70		
		(3.51-3.18)	0.33		
		(4.16-3.51)	0.65		
		(4.54-4.16)	0.38		
		(4.58-4.54)	0.04		
		(4.63-4.58)	0.05		
		(4.67-4.63)	0.04		
		(4.70-4.67)	0.03		
		(4.71-4.70)	0.01		
		(4.73-4.71)	0.02		
		(4.73-4.73)	0.00		
		(5.01-4.73)	0.28		
		(5.34-5.01)	0.33		
		(5.34-5.34)	0.00		
		(5.35-5.34)	0.01		
		(5.37-5.35)	0.02		
		(5.40-5.37)	0.03		
		(5.43-5.40)	0.03		
		(5.48-5.43)	0.05		
		(5.50-5.48)	0.02		
		(5.51-5.50)	0.01		
		(5.54-5.51)	0.03		
		(5.56-5.54)	0.02		
		(6.12-5.56)	0.56		
		(6.59-6.12)	0.47		
		(7.10-6.59)	0.51		
		(7.62-7.10)	0.52		
		(8.08-7.62)	0.46		
		(8.25-8.08)	0.17		
		(8.25-8.25)	0.00		
				24.79	
31 450.00	sc1	(-10.61--10.61)	0.00		
		(-10.54--10.61)	0.07		
		(-9.64--10.54)	0.90		
		(-9.51--9.64)	0.13		
		(-8.65--9.51)	0.86		
		(-8.48--8.65)	0.17		
		(-7.67--8.48)	0.81		
		(-7.46--7.67)	0.21		
		(-7.34--7.46)	0.12		
		(-7.22--7.34)	0.12		
		(-7.13--7.22)	0.09		
		(-6.52--7.13)	0.61		
		(-6.52--6.52)	0.00		
		(-6.52--6.52)	0.00		
		A RIPORTARE ml	4.09		

SCOTICO

N. SEZIONE PROG.	FIG.	ELEMENTI DI CALCOLO	LUNGHEZZA ELEMENTARE ml	LUNGHEZZA FIGURA ml	NOTE
		RIPORTO ml	4.09		
		(-6.43--6.52)	0.09		
		(-6.43--6.43)	0.00		
		(-5.71--6.43)	0.72		
		(-5.40--5.71)	0.31		
		(-4.98--5.40)	0.42		
		(-4.93--4.98)	0.05		
		(-4.70--4.93)	0.23		
		(-4.62--4.70)	0.08		
		(-4.61--4.62)	0.01		
		(-4.60--4.61)	0.01		
		(-4.59--4.60)	0.01		
		(-4.58--4.59)	0.01		
		(-4.58--4.58)	0.00		
		(-4.55--4.58)	0.03		
		(-4.55--4.55)	0.00		
		(-4.55--4.55)	0.00		
		(-4.51--4.55)	0.04		
		(-4.50--4.51)	0.01		
		(-4.49--4.50)	0.01		
		(-4.46--4.49)	0.03		
		(-4.38--4.46)	0.08		
		(-4.32--4.38)	0.06		
		(-4.24--4.32)	0.08		
		(-4.17--4.24)	0.07		
		(-4.12--4.17)	0.05		
		(-3.92--4.12)	0.20		
		(-3.92--3.92)	0.00		
		(-3.92--3.92)	0.00		
		(-3.70--3.92)	0.22		
		(-3.64--3.70)	0.06		
		(-3.58--3.64)	0.06		
		(-3.50--3.58)	0.08		
		(-3.40--3.50)	0.10		
		(-3.35--3.40)	0.05		
		(-2.77--3.35)	0.58		
		(-2.32--2.77)	0.45		
		(-1.79--2.32)	0.53		
		(-1.30--1.79)	0.49		
		(-0.81--1.30)	0.49		
		(-0.27--0.81)	0.54		
		(0.17--0.27)	0.44		
		(0.76-0.17)	0.59		
		(1.15-0.76)	0.39		
		(1.78-1.15)	0.63		
		(2.13-1.78)	0.35		
		(2.81-2.13)	0.68		
		(3.11-2.81)	0.30		
		(3.83-3.11)	0.72		
		(3.88-3.83)	0.05		
		(4.03-3.88)	0.15		
		(4.14-4.03)	0.11		
		(4.64-4.14)	0.50		
		(4.65-4.64)	0.01		
		(4.65-4.65)	0.00		
		(4.68-4.65)	0.03		
		(4.72-4.68)	0.04		
		(4.76-4.72)	0.04		
		(4.81-4.76)	0.05		
		(4.86-4.81)	0.05		
		(4.89-4.86)	0.03		
		(4.98-4.89)	0.09		
		(5.05-4.98)	0.07		
		(5.10-5.05)	0.05		
		(5.14-5.10)	0.04		
		(5.17-5.14)	0.03		
		(5.20-5.17)	0.03		
		(5.26-5.20)	0.06		
		(5.26-5.26)	0.00		
		(5.29-5.26)	0.03		
		(5.29-5.29)	0.00		
		(5.33-5.29)	0.04		
		(5.38-5.33)	0.05		
		(5.38-5.38)	0.00		
		(5.41-5.38)	0.03		
		(5.41-5.41)	0.00		
		(5.66-5.41)	0.25		
		(5.72-5.66)	0.06		
		(5.80-5.72)	0.08		
		(5.89-5.80)	0.09		
		(6.05-5.89)	0.16		
		(6.91-6.05)	0.86		
		(7.03-6.91)	0.12		
		(7.94-7.03)	0.91		
		(8.01-7.94)	0.07		
		(8.97-8.01)	0.96		
		(8.99-8.97)	0.02		
		(9.61-8.99)	0.62		
		(9.98-9.61)	0.37		
		(9.99-9.98)	0.01		
		(10.96-9.99)	0.97		
		(11.02-10.96)	0.06		
		(11.94-11.02)	0.92		
		(12.05-11.94)	0.11		
		(12.29-12.05)	0.24		
		(12.29-12.29)	0.00		
				22.90	
32 465.00	sc1	(-7.25--7.25)	0.00		
		(-7.24--7.25)	0.01		
		(-7.22--7.24)	0.02		
		(-7.20--7.22)	0.02		
		(-7.18--7.20)	0.02		
		(-7.15--7.18)	0.03		
		(-7.13--7.15)	0.02		
		(-6.76--7.13)	0.37		
		(-6.11--6.76)	0.65		
		A RIPORTARE ml	1.14		

SCOTICO

N. SEZIONE PROG.	FIG.	ELEMENTI DI CALCOLO	LUNGHEZZA ELEMENTARE ml	LUNGHEZZA FIGURA ml	NOTE
		RIPORTO ml	1.14		
		(-5.78--6.11)	0.33		
		(-5.08--5.78)	0.70		
		(-4.97--5.08)	0.11		
		(-4.82--4.97)	0.15		
		(-4.76--4.82)	0.06		
		(-4.74--4.76)	0.02		
		(-4.72--4.74)	0.02		
		(-4.71--4.72)	0.01		
		(-4.70--4.71)	0.01		
		(-4.69--4.70)	0.01		
		(-4.68--4.69)	0.01		
		(-4.68--4.68)	0.00		
		(-4.68--4.68)	0.00		
		(-4.68--4.68)	0.00		
		(-4.67--4.68)	0.01		
		(-4.49--4.67)	0.18		
		(-4.41--4.49)	0.08		
		(-4.19--4.41)	0.22		
		(-4.05--4.19)	0.14		
		(-4.04--4.05)	0.01		
		(-3.99--4.04)	0.05		
		(-3.94--3.99)	0.05		
		(-3.93--3.94)	0.01		
		(-3.91--3.93)	0.02		
		(-3.91--3.91)	0.00		
		(-3.64--3.91)	0.27		
		(-3.58--3.64)	0.06		
		(-3.50--3.58)	0.08		
		(-3.39--3.50)	0.11		
		(-3.23--3.39)	0.16		
		(-3.03--3.23)	0.20		
		(-2.84--3.03)	0.19		
		(-2.00--2.84)	0.84		
		(-1.86--2.00)	0.14		
		(-0.97--1.86)	0.89		
		(-0.88--0.97)	0.09		
		(0.05--0.88)	0.93		
		(0.10-0.05)	0.05		
		(1.08-0.10)	0.98		
		(1.08-1.08)	0.00		
		(1.14-1.08)	0.06		
		(2.06-1.14)	0.92		
		(2.11-2.06)	0.05		
		(3.04-2.11)	0.93		
		(3.13-3.04)	0.09		
		(4.02-3.13)	0.89		
		(4.16-4.02)	0.14		
		(4.26-4.16)	0.10		
		(4.34-4.26)	0.08		
		(4.39-4.34)	0.05		
		(4.44-4.39)	0.05		
		(4.47-4.44)	0.03		
		(4.50-4.47)	0.03		
		(4.53-4.50)	0.03		
		(4.57-4.53)	0.04		
		(4.58-4.57)	0.01		
		(4.58-4.58)	0.00		
		(5.07-4.58)	0.49		
		(5.08-5.07)	0.01		
		(5.14-5.08)	0.06		
		(5.14-5.14)	0.00		
		(5.15-5.14)	0.01		
		(5.18-5.15)	0.03		
		(5.18-5.18)	0.00		
		(5.19-5.18)	0.01		
		(5.22-5.19)	0.03		
		(5.25-5.22)	0.03		
		(5.28-5.25)	0.03		
		(5.30-5.28)	0.02		
		(5.30-5.30)	0.00		
		(5.32-5.30)	0.02		
		(5.32-5.32)	0.00		
		(5.74-5.32)	0.42		
		(5.83-5.74)	0.09		
		(5.96-5.83)	0.13		
		(6.15-5.96)	0.19		
		(6.21-6.15)	0.06		
		(6.97-6.21)	0.76		
		(7.24-6.97)	0.27		
		(7.95-7.24)	0.71		
		(8.26-7.95)	0.31		
		(8.93-8.26)	0.67		
		(9.29-8.93)	0.36		
		(9.91-9.29)	0.62		
		(10.32-9.91)	0.41		
		(10.89-10.32)	0.57		
		(11.34-10.89)	0.45		
		(11.87-11.34)	0.53		
		(12.37-11.87)	0.50		
		(12.85-12.37)	0.48		
		(13.40-12.85)	0.55		
		(13.83-13.40)	0.43		
		(14.42-13.83)	0.59		
		(14.81-14.42)	0.39		
		(15.45-14.81)	0.64		
		(15.79-15.45)	0.34		
		(16.48-15.79)	0.69		
		(16.56-16.48)	0.08		
		(16.56-16.56)	0.00		
				23.81	
33	sc2	(-4.75--4.75)	0.00		
480.00		(-4.75--4.75)	0.00		
		(-4.75--4.75)	0.00		
				0.00	
33	sc1	(-4.75--4.75)	0.00		
		A RIPORTARE ml	0.00		

SCOTICO

N. SEZIONE PROG.	FIG.	ELEMENTI DI CALCOLO	LUNGHEZZA ELEMENTARE ml	LUNGHEZZA FIGURA ml	NOTE
		RIPORTO ml	0.00		
480.00		(-4.71--4.75)	0.04		
		(-4.71--4.71)	0.00		
		(-4.69--4.71)	0.02		
		(-4.69--4.69)	0.00		
		(-4.64--4.69)	0.05		
		(-4.49--4.64)	0.15		
		(-4.02--4.49)	0.47		
		(-4.02--4.02)	0.00		
		(-4.02--4.02)	0.00		
		(-4.00--4.02)	0.02		
		(-3.98--4.00)	0.02		
		(-3.96--3.98)	0.02		
		(-3.93--3.96)	0.03		
		(-3.90--3.93)	0.03		
		(-3.86--3.90)	0.04		
		(-3.81--3.86)	0.05		
		(-3.74--3.81)	0.07		
		(-3.73--3.74)	0.01		
		(-2.91--3.73)	0.82		
		(-2.70--2.91)	0.21		
		(-1.93--2.70)	0.77		
		(-1.67--1.93)	0.26		
		(-0.95--1.67)	0.72		
		(-0.65--0.95)	0.30		
		(0.03--0.65)	0.68		
		(0.38-0.03)	0.35		
		(1.01-0.38)	0.63		
		(1.40-1.01)	0.39		
		(1.99-1.40)	0.59		
		(2.43-1.99)	0.44		
		(2.98-2.43)	0.55		
		(3.46-2.98)	0.48		
		(3.96-3.46)	0.50		
		(4.21-3.96)	0.25		
		(4.30-4.21)	0.09		
		(4.35-4.30)	0.05		
		(4.37-4.35)	0.02		
		(4.39-4.37)	0.02		
		(4.41-4.39)	0.02		
		(4.41-4.41)	0.00		
		(4.46-4.41)	0.05		
		(4.46-4.46)	0.00		
		(4.48-4.46)	0.02		
		(4.50-4.48)	0.02		
		(4.50-4.50)	0.00		
		(4.53-4.50)	0.03		
		(4.54-4.53)	0.01		
		(4.63-4.54)	0.09		
		(4.71-4.63)	0.08		
		(4.77-4.71)	0.06		
		(4.81-4.77)	0.04		
		(4.85-4.81)	0.04		
		(4.89-4.85)	0.04		
		(5.03-4.89)	0.14		
		(5.03-5.03)	0.00		
		(5.05-5.03)	0.02		
		(5.06-5.05)	0.01		
		(5.10-5.06)	0.04		
		(5.15-5.10)	0.05		
		(5.19-5.15)	0.04		
		(5.19-5.19)	0.00		
		(5.20-5.19)	0.01		
		(5.22-5.20)	0.02		
		(5.25-5.22)	0.03		
		(5.28-5.25)	0.03		
		(5.31-5.28)	0.03		
		(5.36-5.31)	0.05		
		(5.41-5.36)	0.05		
		(5.47-5.41)	0.06		
		(5.51-5.47)	0.04		
		(5.92-5.51)	0.41		
		(6.54-5.92)	0.62		
		(6.90-6.54)	0.36		
		(7.56-6.90)	0.66		
		(7.88-7.56)	0.32		
		(8.59-7.88)	0.71		
		(8.86-8.59)	0.27		
		(9.62-8.86)	0.76		
		(9.84-9.62)	0.22		
		(10.64-9.84)	0.80		
		(10.82-10.64)	0.18		
		(11.67-10.82)	0.85		
		(11.77-11.67)	0.10		
		(11.77-11.77)	0.00		
				16.52	
34 495.00	sc3	(-15.75--15.75)	0.00		
		(-15.35--15.75)	0.40		
		(-14.88--15.35)	0.47		
		(-14.33--14.88)	0.55		
		(-14.30--14.33)	0.03		
		(-14.17--14.30)	0.13		
		(-14.14--14.17)	0.03		
		(-14.08--14.14)	0.06		
		(-14.08--14.08)	0.00		
		(-14.07--14.08)	0.01		
		(-14.07--14.07)	0.00		
		(-14.06--14.07)	0.01		
		(-14.03--14.06)	0.03		
		(-14.00--14.03)	0.03		
		(-13.85--14.00)	0.15		
		(-13.45--13.85)	0.40		
		(-12.82--13.45)	0.63		
		(-12.49--12.82)	0.33		
		(-12.37--12.49)	0.12		
		(-12.33--12.37)	0.04		
		A RIPORTARE ml	3.42		

SCOTICO

N. SEZIONE PROG.	FIG.	ELEMENTI DI CALCOLO	LUNGHEZZA ELEMENTARE ml	LUNGHEZZA FIGURA ml	NOTE
		RIPORTO ml	3.42		
		(-12.31--12.33)	0.02		
		(-12.23--12.31)	0.08		
		(-12.23--12.23)	0.00		
		(-12.23--12.23)	0.00		
		(-12.21--12.23)	0.02		
		(-12.21--12.21)	0.00		
		(-12.20--12.21)	0.01		
		(-12.20--12.20)	0.00		
		(-12.19--12.20)	0.01		
		(-12.17--12.19)	0.02		
		(-12.13--12.17)	0.04		
		(-12.05--12.13)	0.08		
		(-11.79--12.05)	0.26		
		(-11.56--11.79)	0.23		
		(-10.77--11.56)	0.79		
		(-10.61--10.77)	0.16		
		(-9.74--10.61)	0.87		
		(-9.66--9.74)	0.08		
		(-8.79--9.66)	0.87		
		(-8.71--8.79)	0.08		
		(-8.71--8.71)	0.00		
		(-7.77--8.71)	0.94		
		(-7.68--7.77)	0.09		
		(-7.66--7.68)	0.02		
		(-7.64--7.66)	0.02		
		(-7.64--7.64)	0.00		
		(-7.64--7.64)	0.00		
		(-7.20--7.64)	0.44		
		(-7.04--7.20)	0.16		
		(-6.74--7.04)	0.30		
		(-6.65--6.74)	0.09		
		(-5.87--6.65)	0.78		
		(-5.62--5.87)	0.25		
		(-5.35--5.62)	0.27		
		(-5.20--5.35)	0.15		
		(-5.13--5.20)	0.07		
		(-5.09--5.13)	0.04		
		(-5.06--5.09)	0.03		
		(-5.04--5.06)	0.02		
		(-5.03--5.04)	0.01		
		(-5.02--5.03)	0.01		
		(-5.01--5.02)	0.01		
		(-5.00--5.01)	0.01		
		(-4.97--5.00)	0.03		
		(-4.97--4.97)	0.00		
		(-4.97--4.97)	0.00		
		(-4.89--4.97)	0.08		
		(-4.85--4.89)	0.04		
		(-4.83--4.85)	0.02		
		(-4.80--4.83)	0.03		
		(-4.72--4.80)	0.08		
		(-4.59--4.72)	0.13		
		(-4.54--4.59)	0.05		
		(-4.49--4.54)	0.05		
		(-4.44--4.49)	0.05		
		(-4.41--4.44)	0.03		
		(-4.38--4.41)	0.03		
		(-4.33--4.38)	0.05		
		(-4.33--4.33)	0.00		
		(-4.32--4.33)	0.01		
		(-3.75--4.32)	0.57		
		(-3.63--3.75)	0.12		
		(-3.56--3.63)	0.07		
		(-3.02--3.56)	0.54		
		(-2.53--3.02)	0.49		
		(-2.08--2.53)	0.45		
		(-1.50--2.08)	0.58		
		(-1.13--1.50)	0.37		
		(-0.48--1.13)	0.65		
		(-0.18--0.48)	0.30		
		(0.55--0.18)	0.73		
		(0.77-0.55)	0.22		
		(1.58-0.77)	0.81		
		(1.72-1.58)	0.14		
		(2.61-1.72)	0.89		
		(2.66-2.61)	0.05		
		(3.28-2.66)	0.62		
		(3.61-3.28)	0.33		
		(3.64-3.61)	0.03		
		(3.79-3.64)	0.15		
		(3.90-3.79)	0.11		
		(3.98-3.90)	0.08		
		(4.26-3.98)	0.28		
		(4.26-4.26)	0.00		
		(4.26-4.26)	0.00		
		(4.62-4.26)	0.36		
		(4.65-4.62)	0.03		
		(4.65-4.65)	0.00		
				20.40	
34 495.00	sc1	(9.13-9.13)	0.00		
		(9.30-9.13)	0.17		
		(9.81-9.30)	0.51		
		(10.25-9.81)	0.44		
		(10.38-10.25)	0.13		
		(10.38-10.38)	0.00		
				1.25	
34 495.00	sc2	(4.70-4.70)	0.00		
		(4.72-4.70)	0.02		
		(4.77-4.72)	0.05		
		(4.78-4.77)	0.01		
		(4.78-4.78)	0.00		
		(5.01-4.78)	0.23		
		(5.01-5.01)	0.00		
				0.31	
35	sc1	(-7.68--7.68)	0.00		
		A RIPORTARE ml	0.00		

SCOTICO

N. SEZIONE PROG.	FIG.	ELEMENTI DI CALCOLO	LUNGHEZZA ELEMENTARE ml	LUNGHEZZA FIGURA ml	NOTE
		RIPORTO ml	0.00		
510.00		(-7.65--7.68)	0.03		
		(-6.88--7.65)	0.77		
		(-6.84--6.88)	0.04		
		(-6.82--6.84)	0.02		
		(-6.65--6.82)	0.17		
		(-6.60--6.65)	0.05		
		(-6.58--6.60)	0.02		
		(-6.56--6.58)	0.02		
		(-6.55--6.56)	0.01		
		(-6.55--6.55)	0.00		
		(-6.54--6.55)	0.01		
		(-6.54--6.54)	0.00		
		(-6.54--6.54)	0.00		
		(-6.54--6.54)	0.00		
		(-6.45--6.54)	0.09		
		(-6.41--6.45)	0.04		
		(-5.97--6.41)	0.44		
		(-5.97--5.97)	0.00		
		(-5.94--5.97)	0.03		
		(-5.94--5.94)	0.00		
		(-5.89--5.94)	0.05		
		(-5.84--5.89)	0.05		
		(-5.84--5.84)	0.00		
		(-5.05--5.84)	0.79		
		(-4.79--5.05)	0.26		
		(-4.18--4.79)	0.61		
		(-3.74--4.18)	0.44		
		(-3.32--3.74)	0.42		
		(-2.69--3.32)	0.63		
		(-2.45--2.69)	0.24		
		(-1.65--2.45)	0.80		
		(-1.59--1.65)	0.06		
		(-1.30--1.59)	0.29		
		(-0.87--1.30)	0.43		
		(-0.87--0.87)	0.00		
				6.81	
36 525.00	sc4	(-6.71--6.71)	0.00		
		(-6.14--6.71)	0.57		
		(-5.74--6.14)	0.40		
		(-5.32--5.74)	0.42		
		(-4.67--5.32)	0.65		
		(-4.50--4.67)	0.17		
		(-3.95--4.50)	0.55		
		(-3.68--3.95)	0.27		
		(-3.59--3.68)	0.09		
		(-2.86--3.59)	0.73		
		(-2.52--2.86)	0.34		
		(-2.04--2.52)	0.48		
		(-1.45--2.04)	0.59		
		(-1.35--1.45)	0.10		
		(-1.11--1.35)	0.24		
		(-0.99--1.11)	0.12		
		(-0.99--0.99)	0.00		
				5.72	
36 525.00	sc1	(0.03-0.03)	0.00		
		(0.10-0.03)	0.07		
		(0.10-0.10)	0.00		
		(0.30-0.10)	0.20		
		(0.30-0.30)	0.00		
		(0.38-0.30)	0.08		
		(0.38-0.38)	0.00		
		(0.40-0.38)	0.02		
		(0.46-0.40)	0.06		
		(0.48-0.46)	0.02		
		(0.52-0.48)	0.04		
		(0.63-0.52)	0.11		
		(0.70-0.63)	0.07		
		(1.24-0.70)	0.54		
		(1.77-1.24)	0.53		
		(2.06-1.77)	0.29		
		(2.84-2.06)	0.78		
		(2.88-2.84)	0.04		
		(3.02-2.88)	0.14		
		(3.71-3.02)	0.69		
		(3.92-3.71)	0.21		
		(4.53-3.92)	0.61		
		(4.99-4.53)	0.46		
		(5.35-4.99)	0.36		
		(6.06-5.35)	0.71		
		(6.17-6.06)	0.11		
		(6.51-6.17)	0.34		
		(6.99-6.51)	0.48		
		(7.13-6.99)	0.14		
		(7.81-7.13)	0.68		
		(8.21-7.81)	0.40		
		(8.63-8.21)	0.42		
		(9.28-8.63)	0.65		
		(9.45-9.28)	0.17		
		(9.99-9.45)	0.54		
		(10.27-9.99)	0.28		
		(10.34-10.27)	0.07		
		(10.34-10.34)	0.00		
				10.31	
36 525.00	sc2	(-0.38--0.38)	0.00		
		(-0.38--0.38)	0.00		
		(-0.38--0.38)	0.00		
		(-0.37--0.38)	0.01		
		(-0.36--0.37)	0.01		
		(-0.36--0.36)	0.00		
				0.02	
36 525.00	sc3	(-0.48--0.48)	0.00		
		(-0.47--0.48)	0.01		
		(-0.46--0.47)	0.01		
		(-0.46--0.46)	0.00		
				0.02	
		A RIPORTARE ml			

SCOTICO

N. SEZIONE PROG.	FIG.	ELEMENTI DI CALCOLO	LUNGHEZZA ELEMENTARE ml	LUNGHEZZA FIGURA ml	NOTE
		RIPORTO ml			
37	sc2	(-9.03--9.03)	0.00		
532.90		(-8.90--9.03)	0.13		
		(-8.29--8.90)	0.61		
		(-8.09--8.29)	0.20		
		(-7.86--8.09)	0.23		
		(-7.86--7.86)	0.00		
				1.17	
37	sc1	(-6.79--6.79)	0.00		
532.90		(-6.45--6.79)	0.34		
		(-6.14--6.45)	0.31		
		(-5.63--6.14)	0.51		
		(-5.06--5.63)	0.57		
		(-4.93--5.06)	0.13		
		(-4.90--4.93)	0.03		
		(-4.70--4.90)	0.20		
		(-4.63--4.70)	0.07		
		(-4.59--4.63)	0.04		
		(-4.57--4.59)	0.02		
		(-4.55--4.57)	0.02		
		(-4.54--4.55)	0.01		
		(-4.53--4.54)	0.01		
		(-4.53--4.53)	0.00		
		(-4.52--4.53)	0.01		
		(-4.52--4.52)	0.00		
		(-4.51--4.52)	0.01		
		(-4.51--4.51)	0.00		
		(-4.51--4.51)	0.00		
		(-4.51--4.51)	0.00		
		(-4.47--4.51)	0.04		
		(-4.38--4.47)	0.09		
		(-4.09--4.38)	0.29		
		(-4.07--4.09)	0.02		
		(-4.07--4.07)	0.00		
		(-4.06--4.07)	0.01		
		(-4.03--4.06)	0.03		
		(-3.99--4.03)	0.04		
		(-3.99--3.99)	0.00		
		(-3.92--3.99)	0.07		
		(-3.88--3.92)	0.04		
		(-3.86--3.88)	0.02		
		(-3.85--3.86)	0.01		
		(-3.85--3.85)	0.00		
		(-3.24--3.85)	0.61		
		(-3.02--3.24)	0.22		
		(-2.92--3.02)	0.10		
		(-2.36--2.92)	0.56		
		(-1.84--2.36)	0.52		
		(-1.71--1.84)	0.13		
		(-0.80--1.71)	0.91		
		(-0.77--0.80)	0.03		
		(-0.72--0.77)	0.05		
		(-0.58--0.72)	0.14		
		(0.10--0.58)	0.68		
		(0.31-0.10)	0.21		
		(0.91-0.31)	0.60		
		(1.38-0.91)	0.47		
		(1.73-1.38)	0.35		
		(2.46-1.73)	0.73		
		(2.55-2.46)	0.09		
		(2.86-2.55)	0.31		
		(3.37-2.86)	0.51		
		(3.53-3.37)	0.16		
		(4.19-3.53)	0.66		
		(4.60-4.19)	0.41		
		(5.01-4.60)	0.41		
		(5.68-5.01)	0.67		
		(5.82-5.68)	0.14		
		(6.29-5.82)	0.47		
		(6.64-6.29)	0.35		
		(6.75-6.64)	0.11		
		(7.46-6.75)	0.71		
		(7.83-7.46)	0.37		
		(8.28-7.83)	0.45		
		(8.90-8.28)	0.62		
		(9.10-8.90)	0.20		
		(9.72-9.10)	0.62		
		(9.92-9.72)	0.20		
		(9.98-9.92)	0.06		
		(10.73-9.98)	0.75		
		(11.05-10.73)	0.32		
		(11.38-11.05)	0.33		
		(11.38-11.38)	0.00		
				18.17	

Il Direttore dei Lavori | L'Impresa

BONIFICA

DALLA SEZ. DA PROG.	ALLA SEZ. A PROG.	SEZIONE	FIGURA	AREA	DISTANZA SEZIONI m	DISTANZA DI CALCOLO m	VOLUME PARZIALE mc	VOLUME TOTALE mc
29 bis	29	29 bis	BO1	14.71	2.18	1.09	16.034	
417.82	420.00	29	BO1	14.71	2.18	1.09	16.034	
								32.068
29	30	29	BO1	14.71	15.00	7.50	110.325	
420.00	435.00	30	BO1	12.40	15.00	7.50	93.000	
								203.325
30	31	30	BO1	12.40	15.00	7.50	93.000	
435.00	450.00	31	BO1	11.38	15.00	7.50	85.350	
								178.350
31	32	31	BO1	11.38	15.00	7.50	85.350	
450.00	465.00	32	BO1	11.80	15.00	7.50	88.500	
								173.850
32	33	32	BO1	11.80	15.00	7.50	88.500	
465.00	480.00	33	BO1	8.24	15.00	7.50	61.800	
								150.300
33	34	33	BO1	8.24	15.00	7.50	61.800	
480.00	495.00	34	BO1	0.61	15.00	7.50	4.575	
		34	BO2	0.15	15.00	7.50	1.125	
		34	BO3	10.22	15.00	7.50	76.650	
								144.150
34	35	34	BO1	0.61	15.00	7.50	4.575	
495.00	510.00	34	BO2	0.15	15.00	7.50	1.125	
		34	BO3	10.22	15.00	7.50	76.650	
		35	BO1	3.38	15.00	7.50	25.350	
								107.700
35	36	35	BO1	3.38	15.00	7.50	25.350	
510.00	525.00	36	BO1	5.16	15.00	7.50	38.700	
		36	BO2	0.00	15.00	7.50	0.000	
		36	BO3	2.86	15.00	7.50	21.450	
								85.500
36	37	36	BO1	5.16	7.90	3.95	20.382	
525.00	532.90	36	BO2	0.00	7.90	3.95	0.000	
		36	BO3	2.86	7.90	3.95	11.297	
		37	BO1	9.06	7.90	3.95	35.787	
		37	BO2	0.59	7.90	3.95	2.330	
								69.796

Il Direttore dei Lavori	L'Impresa	TOTALE ARTICOLO	1145.039

USURA

DALLA SEZ. DA PROG.	ALLA SEZ. A PROG.	SEZIONE	FIGURA	LUNGHEZZA	DISTANZA SEZIONI ml	DISTANZA DI CALCOLO ml	AREA PARZIALE mq	AREA TOTALE mq
29 bis	29	29 bis	a1	9.50	2.18	1.09	10.36	
417.82	420.00	29	a1	9.50	2.18	1.09	10.36	
								20.72
29	30	29	a1	9.50	15.00	7.50	71.25	
420.00	435.00	30	a1	9.50	15.00	7.50	71.25	
								142.50
30	31	30	a1	9.50	15.00	7.50	71.25	
435.00	450.00	31	a1	9.50	15.00	7.50	71.25	
								142.50
31	32	31	a1	9.50	15.00	7.50	71.25	
450.00	465.00	32	a1	14.89	15.00	7.50	111.68	
								182.93
32	33	32	a1	14.89	15.00	7.50	111.68	
465.00	480.00	33	a1	13.43	15.00	7.50	100.72	
								212.40
33	34	33	a1	13.43	15.00	7.50	100.72	
480.00	495.00	34	a1	16.80	15.00	7.50	126.00	
								226.72
34	35	34	a1	16.80	15.00	7.50	126.00	
495.00	510.00	35	a1	14.36	15.00	7.50	107.70	
								233.70
35	36	35	a1	14.36	15.00	7.50	107.70	
510.00	525.00	36	a1	13.51	15.00	7.50	101.33	
								209.03
36	37	36	a1	13.51	7.90	3.95	53.36	
525.00	532.90	37	a1	16.74	7.90	3.95	66.12	
								119.48

Il Direttore dei Lavori	L'Impresa	TOTALE ARTICOLO	1489.98

VEGETALE

DALLA SEZ. DA PROG.	ALLA SEZ. A PROG.	SEZIONE	FIGURA	LUNGHEZZA	DISTANZA SEZIONI ml	DISTANZA DI CALCOLO ml	AREA PARZIALE mq	AREA TOTALE mq
29 bis	29	29 bis	b2	13.51	2.18	1.09	14.73	
417.82	420.00	29 bis	b1	6.37	2.18	1.09	6.94	
		29	b2	13.51	2.18	1.09	14.73	
		29	b1	6.37	2.18	1.09	6.94	
								43.34
29	30	29	b2	13.51	15.00	7.50	101.33	
420.00	435.00	29	b1	6.37	15.00	7.50	47.77	
		30	b2	11.64	15.00	7.50	87.30	
		30	b1	3.35	15.00	7.50	25.13	
								261.53
30	31	30	b2	11.64	15.00	7.50	87.30	
435.00	450.00	30	b1	3.35	15.00	7.50	25.13	
		31	b1	5.71	15.00	7.50	42.83	
		31	b2	8.26	15.00	7.50	61.95	
								217.21
31	32	31	b1	5.71	15.00	7.50	42.83	
450.00	465.00	31	b2	8.26	15.00	7.50	61.95	
		32	b1	2.35	15.00	7.50	17.63	
		32	b2	6.76	15.00	7.50	50.70	
								173.11
32	33	32	b1	2.35	15.00	7.50	17.63	
465.00	480.00	32	b2	6.76	15.00	7.50	50.70	
		33	b1	3.54	15.00	7.50	26.55	
								94.88
33	34	33	b1	3.54	15.00	7.50	26.55	
480.00	495.00	34	b1	7.94	15.00	7.50	59.55	
		34	b2	2.31	15.00	7.50	17.32	
								103.42
34	35	34	b1	7.94	15.00	7.50	59.55	
495.00	510.00	34	b2	2.31	15.00	7.50	17.32	
		35	b1	2.32	15.00	7.50	17.40	
								94.27
35	36	35	b1	2.32	15.00	7.50	17.40	
510.00	525.00	36	b1	2.10	15.00	7.50	15.75	
		36	b2	2.14	15.00	7.50	16.05	
								49.20
36	37	36	b1	2.10	7.90	3.95	8.29	
525.00	532.90	36	b2	2.14	7.90	3.95	8.45	
		37	b2	2.05	7.90	3.95	8.10	
		37	b1	2.40	7.90	3.95	9.48	
								34.32

Il Direttore dei Lavori	L'Impresa	TOTALE ARTICOLO	1071.28

BINDER

DALLA SEZ. DA PROG.	ALLA SEZ. A PROG.	SEZIONE	FIGURA	LUNGHEZZA	DISTANZA SEZIONI ml	DISTANZA DI CALCOLO ml	AREA PARZIALE mq	AREA TOTALE mq
29 bis	29	29 bis	c1	9.50	2.18	1.09	10.36	
417.82	420.00	29	c1	9.50	2.18	1.09	10.36	
								20.72
29	30	29	c1	9.50	15.00	7.50	71.25	
420.00	435.00	30	c1	9.50	15.00	7.50	71.25	
								142.50
30	31	30	c1	9.50	15.00	7.50	71.25	
435.00	450.00	31	c1	9.50	15.00	7.50	71.25	
								142.50
31	32	31	c1	9.50	15.00	7.50	71.25	
450.00	465.00	32	c1	14.89	15.00	7.50	111.68	
								182.93
32	33	32	c1	14.89	15.00	7.50	111.68	
465.00	480.00	33	c1	13.43	15.00	7.50	100.72	
								212.40
33	34	33	c1	13.43	15.00	7.50	100.72	
480.00	495.00	34	c1	16.80	15.00	7.50	126.00	
								226.72
34	35	34	c1	16.80	15.00	7.50	126.00	
495.00	510.00	35	c1	14.36	15.00	7.50	107.70	
								233.70
35	36	35	c1	14.36	15.00	7.50	107.70	
510.00	525.00	36	c1	13.51	15.00	7.50	101.33	
								209.03
36	37	36	c1	13.51	7.90	3.95	53.36	
525.00	532.90	37	c1	16.74	7.90	3.95	66.12	
								119.48

Il Direttore dei Lavori	L'Impresa	TOTALE ARTICOLO	1489.98

BASE

DALLA SEZ. DA PROG.	ALLA SEZ. A PROG.	SEZIONE	FIGURA	LUNGHEZZA	DISTANZA SEZIONI ml	DISTANZA DI CALCOLO ml	AREA PARZIALE mq	AREA TOTALE mq
29 bis	29	29 bis	d1	9.50	2.18	1.09	10.36	
417.82	420.00	29	d1	9.50	2.18	1.09	10.36	
								20.72
29	30	29	d1	9.50	15.00	7.50	71.25	
420.00	435.00	30	d1	9.50	15.00	7.50	71.25	
								142.50
30	31	30	d1	9.50	15.00	7.50	71.25	
435.00	450.00	31	d1	9.50	15.00	7.50	71.25	
								142.50
31	32	31	d1	9.50	15.00	7.50	71.25	
450.00	465.00	32	d1	14.89	15.00	7.50	111.68	
								182.93
32	33	32	d1	14.89	15.00	7.50	111.68	
465.00	480.00	33	d1	13.43	15.00	7.50	100.72	
								212.40
33	34	33	d1	13.43	15.00	7.50	100.72	
480.00	495.00	34	d1	16.80	15.00	7.50	126.00	
								226.72
34	35	34	d1	16.80	15.00	7.50	126.00	
495.00	510.00	35	d1	14.36	15.00	7.50	107.70	
								233.70
35	36	35	d1	14.36	15.00	7.50	107.70	
510.00	525.00	36	d1	13.51	15.00	7.50	101.33	
								209.03
36	37	36	d1	13.51	7.90	3.95	53.36	
525.00	532.90	37	d1	16.74	7.90	3.95	66.12	
								119.48

Il Direttore dei Lavori	L'Impresa	TOTALE ARTICOLO	1489.98

FONDAZIONE

DALLA SEZ. DA PROG.	ALLA SEZ. A PROG.	SEZIONE	FIGURA	LUNGHEZZA	DISTANZA SEZIONI ml	DISTANZA DI CALCOLO ml	AREA PARZIALE mq	AREA TOTALE mq
29 bis	29	29 bis	e1	9.50	2.18	1.09	10.36	
417.82	420.00	29	e1	9.50	2.18	1.09	10.36	
								20.72
29	30	29	e1	9.50	15.00	7.50	71.25	
420.00	435.00	30	e1	9.50	15.00	7.50	71.25	
								142.50
30	31	30	e1	9.50	15.00	7.50	71.25	
435.00	450.00	31	e1	9.50	15.00	7.50	71.25	
								142.50
31	32	31	e1	9.50	15.00	7.50	71.25	
450.00	465.00	32	e1	14.89	15.00	7.50	111.68	
								182.93
32	33	32	e1	14.89	15.00	7.50	111.68	
465.00	480.00	33	e1	13.43	15.00	7.50	100.72	
								212.40
33	34	33	e1	13.43	15.00	7.50	100.72	
480.00	495.00	34	e1	16.80	15.00	7.50	126.00	
								226.72
34	35	34	e1	16.80	15.00	7.50	126.00	
495.00	510.00	35	e1	14.36	15.00	7.50	107.70	
								233.70
35	36	35	e1	14.36	15.00	7.50	107.70	
510.00	525.00	36	e1	13.51	15.00	7.50	101.33	
								209.03
36	37	36	e1	13.51	7.90	3.95	53.36	
525.00	532.90	37	e1	16.74	7.90	3.95	66.12	
								119.48

Il Direttore dei Lavori	L'Impresa	TOTALE ARTICOLO	1489.98

SCOTICO

DALLA SEZ. DA PROG.	ALLA SEZ. A PROG.	SEZIONE	FIGURA	LUNGHEZZA	DISTANZA SEZIONI ml	DISTANZA DI CALCOLO ml	AREA PARZIALE mq	AREA TOTALE mq
29 bis	29	29 bis	sc1	29.40	2.18	1.09	32.05	
417.82	420.00	29	sc1	29.40	2.18	1.09	32.05	
								64.10
29	30	29	sc1	29.40	15.00	7.50	220.50	
420.00	435.00	30	sc1	24.79	15.00	7.50	185.92	
								406.42
30	31	30	sc1	24.79	15.00	7.50	185.92	
435.00	450.00	31	sc1	22.90	15.00	7.50	171.75	
								357.67
31	32	31	sc1	22.90	15.00	7.50	171.75	
450.00	465.00	32	sc1	23.81	15.00	7.50	178.57	
								350.32
32	33	32	sc1	23.81	15.00	7.50	178.57	
465.00	480.00	33	sc2	0.00	15.00	7.50	0.00	
		33	sc1	16.52	15.00	7.50	123.90	
								302.47
33	34	33	sc2	0.00	15.00	7.50	0.00	
33	34	33	sc1	16.52	15.00	7.50	123.90	
480.00	495.00	34	sc3	20.40	15.00	7.50	153.00	
		34	sc1	1.25	15.00	7.50	9.38	
		34	sc2	0.31	15.00	7.50	2.33	
								288.61
34	35	34	sc3	20.40	15.00	7.50	153.00	
495.00	510.00	34	sc1	1.25	15.00	7.50	9.38	
		34	sc2	0.31	15.00	7.50	2.33	
		35	sc1	6.81	15.00	7.50	51.07	
								215.78
35	36	35	sc1	6.81	15.00	7.50	51.07	
510.00	525.00	36	sc4	5.72	15.00	7.50	42.90	
		36	sc1	10.31	15.00	7.50	77.33	
		36	sc2	0.02	15.00	7.50	0.15	
		36	sc3	0.02	15.00	7.50	0.15	
								171.60
36	37	36	sc4	5.72	7.90	3.95	22.59	
525.00	532.90	36	sc1	10.31	7.90	3.95	40.72	
		36	sc2	0.02	7.90	3.95	0.08	
		36	sc3	0.02	7.90	3.95	0.08	
		37	sc2	1.17	7.90	3.95	4.62	
		37	sc1	18.17	7.90	3.95	71.77	
								139.86

Il Direttore dei Lavori	L'Impresa	TOTALE ARTICOLO	2296.83

Volume dalla sezione 29 bis alla sezione 37

ARTICOLO		VOLUME
STERRO	mc	44.662
RIPORTO	mc	4855.408
BO BONIFICA	mc	1145.039
a USURA	mq	1489.98
b VEGETALE	mq	1071.28
c BINDER	mq	1489.98
d BASE	mq	1489.98
e FONDAZIONE	mq	1489.98
sc SCOTICO	mq	2296.83

	CALCOLO DELLE AREE		Foglio n. 1

STERRI E RIPORTI

N. SEZIONE PROG.	FIG.	ELEMENTI DI CALCOLO	AREA ELEMENTARE mq	AREA FIGURA mq	NOTE
2	R1	(-9.60--9.70)x(1.13+1.18)/2	0.12		
17.00		(-9.48--9.60)x(1.16+1.13)/2	0.14		
		(-9.40--9.48)x(1.14+1.16)/2	0.09		
		(-9.39--9.40)x(1.14+1.14)/2	0.01		
		(-9.38--9.39)x(1.14+1.14)/2	0.01		
		(-9.37--9.38)x(1.14+1.14)/2	0.01		
		(-9.35--9.37)x(0.92+1.14)/2	0.02		
		(-9.30--9.35)x(1.12+0.92)/2	0.05		
		(-8.97--9.30)x(1.38+1.12)/2	0.41		
		(-8.79--8.97)x(1.43+1.38)/2	0.25		
		(-8.67--8.79)x(1.53+1.43)/2	0.18		
		(-8.03--8.67)x(1.94+1.53)/2	1.11		
		(-7.93--8.03)x(2.01+1.94)/2	0.20		
		(-8.46--7.93)x(2.01+2.01)/2	-1.07		
		(-9.70--8.46)x(1.18+2.01)/2	-1.98		
				0.45	
2	S1	(-7.54--6.29)x(1.83+1.86)/2	-2.31		
17.00		(-7.39--7.54)x(2.01+1.83)/2	0.29		
		(-7.93--7.39)x(2.01+2.01)/2	-1.09		
		(-7.62--7.93)x(2.23+2.01)/2	0.66		
		(-7.55--7.62)x(2.26+2.23)/2	0.16		
		(-7.36--7.55)x(2.38+2.26)/2	0.44		
		(-7.23--7.36)x(2.41+2.38)/2	0.31		
		(-7.14--7.23)x(2.39+2.41)/2	0.22		
		(-7.08--7.14)x(2.41+2.39)/2	0.14		
		(-7.05--7.08)x(2.41+2.41)/2	0.07		
		(-7.00--7.05)x(2.39+2.39)/2	0.12		
		(-6.90--7.00)x(2.41+2.39)/2	0.24		
		(-6.76--6.90)x(2.34+2.41)/2	0.33		
		(-6.57--6.76)x(2.38+2.34)/2	0.45		
		(-6.53--6.57)x(2.38+2.38)/2	0.10		
		(-6.29--6.53)x(2.36+2.38)/2	0.57		
				0.70	
2	S2	(3.51-5.90)x(1.93+1.87)/2	-4.54		
17.00		(0.00-3.51)x(2.02+1.93)/2	-6.93		
		(-3.50-0.00)x(1.93+2.02)/2	-6.91		
		(-6.29--3.50)x(1.86+1.93)/2	-5.29		
		(-6.22--6.29)x(2.36+2.36)/2	0.17		
		(-6.05--6.22)x(2.35+2.36)/2	0.40		
		(-5.95--6.05)x(2.35+2.35)/2	0.23		
		(-5.90--5.95)x(2.38+2.35)/2	0.12		
		(-5.88--5.90)x(2.44+2.38)/2	0.05		
		(-5.86--5.88)x(2.39+2.44)/2	0.05		
		(-5.75--5.86)x(2.35+2.39)/2	0.26		
		(-5.56--5.75)x(2.36+2.35)/2	0.45		
		(-5.52--5.56)x(2.36+2.36)/2	0.09		
		(-5.44--5.52)x(2.36+2.36)/2	0.19		
		(-5.37--5.44)x(2.37+2.36)/2	0.17		
		(-5.36--5.37)x(2.37+2.37)/2	0.02		
		(-5.30--5.36)x(2.45+2.37)/2	0.14		
		(-5.22--5.30)x(2.38+2.45)/2	0.19		
		(-5.21--5.22)x(2.36+2.38)/2	0.02		
		(-5.15--5.21)x(2.36+2.36)/2	0.14		
		(-5.06--5.15)x(2.35+2.36)/2	0.21		
		(-4.91--5.06)x(2.35+2.35)/2	0.35		
		(-4.64--4.91)x(2.35+2.35)/2	0.63		
		(-4.47--4.64)x(2.34+2.35)/2	0.40		
		(-3.92--4.47)x(2.34+2.34)/2	1.29		
		(-3.42--3.92)x(2.34+2.34)/2	1.17		
		(-2.64--3.42)x(2.33+2.34)/2	1.82		
		(-2.37--2.64)x(2.33+2.33)/2	0.63		
		(-1.42--2.37)x(2.33+2.33)/2	2.21		
		(-1.32--1.42)x(2.33+2.33)/2	0.23		
		(-1.29--1.32)x(2.33+2.33)/2	0.07		
		(-0.27--1.29)x(2.32+2.33)/2	2.37		
		(0.05--0.27)x(2.31+2.32)/2	0.74		
		(0.78-0.05)x(2.30+2.31)/2	1.68		
		(1.40-0.78)x(2.28+2.30)/2	1.42		
		(1.83-1.40)x(2.28+2.28)/2	0.98		
		(2.75-1.83)x(2.26+2.28)/2	2.09		
		(2.88-2.75)x(2.25+2.26)/2	0.29		
		(3.34-2.88)x(2.24+2.25)/2	1.03		
		(3.93-3.34)x(2.23+2.24)/2	1.32		
		(4.08-3.93)x(2.23+2.23)/2	0.33		
		(4.18-4.08)x(2.31+2.23)/2	0.23		
		(4.22-4.18)x(2.27+2.31)/2	0.09		
		(4.24-4.22)x(2.23+2.27)/2	0.05		
		(4.31-4.24)x(2.22+2.23)/2	0.16		
		(4.39-4.31)x(2.22+2.22)/2	0.18		
		(4.54-4.39)x(2.21+2.22)/2	0.33		
		(4.81-4.54)x(2.19+2.21)/2	0.59		
		(4.98-4.81)x(2.18+2.19)/2	0.37		
		(5.44-4.98)x(2.14+2.18)/2	0.99		
		(5.90-5.44)x(2.11+2.14)/2	0.98		
				4.25	
2	S3	(5.90-6.25)x(1.87+1.87)/2	-0.65		
17.00		(6.03-5.90)x(2.10+2.11)/2	0.27		
		(6.25-6.03)x(2.09+2.10)/2	0.46		
				0.08	
2	S4	(6.79-6.25)x(2.06+2.09)/2	1.12		
17.00		(7.08-6.79)x(2.04+2.06)/2	0.59		
		(7.18-7.08)x(2.03+2.04)/2	0.20		
		(7.47-7.18)x(2.01+2.03)/2	0.59		
		(7.53-7.47)x(1.99+2.01)/2	0.12		
		(7.60-7.53)x(1.99+1.99)/2	0.14		
		(7.63-7.60)x(1.98+1.99)/2	0.06		
		(7.64-7.63)x(2.25+1.98)/2	0.02		
		(7.67-7.64)x(2.03+2.17)/2	0.06		
		(7.73-7.67)x(2.06+2.03)/2	0.12		
		(7.80-7.73)x(2.04+2.06)/2	0.14		
		(8.12-7.80)x(2.00+2.04)/2	0.65		
		(8.13-8.12)x(2.00+2.00)/2	0.02		
		(8.60-8.13)x(2.01+2.00)/2	0.94		
		(8.77-8.60)x(2.00+2.01)/2	0.34		
		(8.02-8.77)x(2.00+2.00)/2	-1.50		
		(8.17-8.02)x(1.82+2.00)/2	0.29		
		(6.25-8.17)x(1.87+1.82)/2	-3.54		
		A RIPORTARE mq	0.36		

		CALCOLO DELLE AREE		Foglio n. 2	
STERRI E RIPORTI					
N. SEZIONE PROG.	FIG.	ELEMENTI DI CALCOLO	AREA ELEMENTARE mq	AREA FIGURA mq	NOTE
		RIPORTO mq	0.36		
				0.36	
3	S1	(-5.23--5.20)x(1.99+1.99)/2	-0.06		
30.00		(-5.20--5.23)x(2.02+1.99)/2	0.06		
3	S1	(-6.29--5.20)x(2.15+2.15)/2	-2.34		
30.00		(-6.21--6.29)x(2.37+2.15)/2	0.18		
		(-6.20--6.21)x(2.37+2.37)/2	0.02		
		(-6.13--6.20)x(2.35+2.37)/2	0.17		
		(-6.08--6.13)x(2.26+2.35)/2	0.12		
		(-6.00--6.08)x(2.23+2.26)/2	0.18		
		(-5.87--6.00)x(2.26+2.23)/2	0.29		
		(-5.62--5.87)x(2.33+2.26)/2	0.57		
		(-5.38--5.62)x(2.35+2.33)/2	0.56		
		(-5.30--5.38)x(2.34+2.35)/2	0.19		
		(-5.29--5.30)x(2.35+2.34)/2	0.02		
		(-5.25--5.29)x(2.43+2.35)/2	0.10		
		(-5.22--5.25)x(2.40+2.43)/2	0.07		
		(-5.20--5.22)x(2.39+2.40)/2	0.05		
				0.18	
3	S2	(-5.13--5.20)x(2.35+2.39)/2	0.17		
30.00		(-5.08--5.13)x(2.34+2.35)/2	0.12		
		(-5.01--5.08)x(2.35+2.34)/2	0.16		
		(-4.78--5.01)x(2.40+2.35)/2	0.55		
		(-4.77--4.78)x(2.39+2.40)/2	0.02		
		(-4.71--4.77)x(2.42+2.39)/2	0.14		
		(-4.67--4.71)x(2.38+2.44)/2	0.10		
		(-4.63--4.67)x(2.38+2.38)/2	0.10		
		(-4.49--4.63)x(2.36+2.38)/2	0.33		
		(-4.33--4.49)x(2.34+2.36)/2	0.38		
		(-4.08--4.33)x(2.34+2.34)/2	0.58		
		(-3.28--4.08)x(2.34+2.34)/2	1.87		
		(-3.22--3.28)x(2.34+2.34)/2	0.14		
		(-2.92--3.22)x(2.34+2.34)/2	0.70		
		(-2.24--2.92)x(2.34+2.34)/2	1.59		
		(-2.05--2.24)x(2.34+2.34)/2	0.44		
		(-1.19--2.05)x(2.33+2.34)/2	2.01		
		(-0.63--1.19)x(2.32+2.33)/2	1.30		
		(-0.14--0.63)x(2.32+2.32)/2	1.14		
		(0.61--0.14)x(2.29+2.32)/2	1.73		
		(0.91-0.61)x(2.28+2.29)/2	0.69		
		(1.94-0.91)x(2.25+2.28)/2	2.33		
		(1.96-1.94)x(2.25+2.25)/2	0.05		
		(2.02-1.96)x(2.25+2.25)/2	0.14		
		(3.01-2.02)x(2.22+2.25)/2	2.21		
		(3.27-3.01)x(2.22+2.22)/2	0.58		
		(4.05-3.27)x(2.20+2.22)/2	1.72		
		(4.74-4.05)x(2.26+2.20)/2	1.54		
		(4.82-4.74)x(2.26+2.26)/2	0.18		
		(4.89-4.82)x(2.26+2.26)/2	0.16		
		(4.94-4.89)x(2.26+2.26)/2	0.11		
		(4.98-4.94)x(2.26+2.26)/2	0.09		
		(4.99-4.98)x(2.26+2.26)/2	0.02		
		(5.10-4.99)x(2.13+2.26)/2	0.24		
		(5.16-5.10)x(2.14+2.13)/2	0.13		
		(5.24-5.16)x(2.25+2.14)/2	0.18		
		(5.27-5.24)x(2.25+2.25)/2	0.07		
		(5.28-5.27)x(2.25+2.25)/2	0.02		
		(5.35-5.28)x(2.25+2.25)/2	0.16		
		(5.74-5.35)x(2.07+2.25)/2	0.84		
		(5.90-5.74)x(2.00+2.07)/2	0.33		
		(5.24-5.90)x(2.00+2.00)/2	-1.32		
		(5.39-5.24)x(1.82+2.00)/2	0.29		
		(3.65-5.39)x(1.86+1.82)/2	-3.20		
		(0.00-3.65)x(1.96+1.86)/2	-6.97		
		(-3.50-0.00)x(1.98+1.96)/2	-6.89		
		(-5.20--3.50)x(1.99+1.98)/2	-3.37		
		(-5.09--5.20)x(2.15+2.02)/2	0.23		
		(-5.20--5.09)x(2.15+2.15)/2	-0.24		
				3.89	
3	R1	(6.15-5.90)x(1.88+2.00)/2	0.48		
30.00		(6.20-6.15)x(1.87+1.88)/2	0.09		
		(6.25-6.20)x(2.00+1.87)/2	0.10		
		(5.90-6.25)x(2.00+2.00)/2	-0.70		
				0.03	
3	S3	(6.30-6.25)x(2.14+2.00)/2	0.10		
30.00		(6.33-6.30)x(2.15+2.14)/2	0.06		
		(6.34-6.33)x(2.22+2.10)/2	0.02		
		(6.35-6.34)x(2.16+2.21)/2	0.02		
		(6.37-6.35)x(2.11+2.16)/2	0.04		
		(6.42-6.37)x(2.02+2.11)/2	0.10		
		(6.31-6.42)x(2.00+2.02)/2	-0.22		
		(6.25-6.31)x(2.00+2.00)/2	-0.12		
4	R1	(-5.98--6.45)x(2.25+2.24)/2	1.06		
45.00		(-5.62--5.98)x(2.27+2.25)/2	0.81		
		(-5.58--5.62)x(2.27+2.27)/2	0.09		
		(-5.27--5.58)x(2.30+2.27)/2	0.71		
		(-5.20--5.27)x(2.30+2.30)/2	0.16		
		(-5.09--5.20)x(2.44+2.30)/2	0.26		
		(-6.16--5.09)x(2.43+2.44)/2	-2.61		
		(-6.45--6.16)x(2.24+2.43)/2	-0.68		
				0.20	
4	S1	(-5.21--5.20)x(2.29+2.29)/2	-0.02		
45.00		(-5.20--5.21)x(2.30+2.29)/2	0.02		
4	S2	(-5.20--4.49)x(2.29+2.25)/2	-1.61		
45.00		(-5.09--5.20)x(2.31+2.30)/2	0.25		
		(-4.87--5.09)x(2.36+2.31)/2	0.51		
		(-4.82--4.87)x(2.38+2.36)/2	0.12		
		(-4.81--4.82)x(2.42+2.38)/2	0.02		
		(-4.75--4.81)x(2.35+2.42)/2	0.14		
		(-4.73--4.75)x(2.35+2.35)/2	0.05		
		(-4.66--4.73)x(2.33+2.35)/2	0.16		
		(-4.57--4.66)x(2.32+2.33)/2	0.21		
		(-4.54--4.57)x(2.32+2.32)/2	0.07		
		A RIPORTARE mq	-0.08		

		CALCOLO DELLE AREE		Foglio n. 3	
STERRI E RIPORTI					
N. SEZIONE PROG.	FIG.	ELEMENTI DI CALCOLO	AREA ELEMENTARE mq	AREA FIGURA mq	NOTE
		RIPORTO mq	-0.08		
		(-4.49--4.54)x(2.32+2.32)/2	0.12		
				0.04	
4	S3	(-4.41--4.49)x(2.32+2.32)/2	0.19		
45.00		(-4.38--4.41)x(2.35+2.32)/2	0.07		
		(-4.36--4.38)x(2.39+2.35)/2	0.05		
		(-4.30--4.36)x(2.35+2.39)/2	0.14		
		(-4.24--4.30)x(2.32+2.35)/2	0.14		
		(-4.18--4.24)x(2.32+2.32)/2	0.14		
		(-4.10--4.18)x(2.32+2.32)/2	0.19		
		(-3.96--4.10)x(2.32+2.32)/2	0.32		
		(-3.69--3.96)x(2.32+2.32)/2	0.63		
		(-3.50--3.69)x(2.32+2.32)/2	0.44		
		(-3.00--3.50)x(2.32+2.32)/2	1.16		
		(-2.46--3.00)x(2.32+2.32)/2	1.25		
		(-1.76--2.46)x(2.31+2.32)/2	1.62		
		(-1.42--1.76)x(2.30+2.31)/2	0.78		
		(-0.51--1.42)x(2.29+2.30)/2	2.09		
		(-0.38--0.51)x(2.28+2.29)/2	0.30		
		(0.27--0.38)x(2.27+2.28)/2	1.48		
		(0.66-0.27)x(2.26+2.27)/2	0.88		
		(0.74-0.66)x(2.26+2.26)/2	0.18		
		(1.70-0.74)x(2.26+2.26)/2	2.17		
		(2.39-1.70)x(2.25+2.26)/2	1.56		
		(2.74-2.39)x(2.24+2.25)/2	0.79		
		(3.23-2.74)x(2.23+2.24)/2	1.10		
		(3.78-3.23)x(2.22+2.23)/2	1.22		
		(4.47-3.78)x(2.21+2.22)/2	1.53		
		(4.82-4.47)x(2.20+2.21)/2	0.77		
		(4.91-4.82)x(2.20+2.20)/2	0.20		
		(5.13-4.91)x(2.20+2.20)/2	0.48		
		(5.27-5.13)x(2.21+2.20)/2	0.31		
		(5.51-5.27)x(2.25+2.21)/2	0.54		
		(5.57-5.51)x(2.31+2.25)/2	0.14		
		(5.59-5.57)x(2.22+2.31)/2	0.05		
		(5.62-5.59)x(2.22+2.22)/2	0.07		
		(5.72-5.62)x(2.21+2.22)/2	0.22		
		(5.76-5.72)x(2.21+2.21)/2	0.09		
		(5.84-5.76)x(2.31+2.21)/2	0.18		
		(5.87-5.84)x(2.19+2.31)/2	0.07		
		(5.89-5.87)x(2.18+2.19)/2	0.04		
		(5.90-5.89)x(2.18+2.18)/2	0.02		
		(5.13-5.90)x(1.73+1.73)/2	-1.33		
		(3.88-5.13)x(1.78+1.70)/2	-2.17		
		(0.00-3.88)x(2.00+1.78)/2	-7.33		
		(-3.50-0.00)x(2.20+2.00)/2	-7.35		
		(-4.49--3.50)x(2.25+2.20)/2	-2.20		
				3.22	
4	S4	(6.13-6.25)x(2.15+2.15)/2	-0.26		
45.00		(5.90-6.13)x(1.73+1.73)/2	-0.40		
		(5.91-5.90)x(2.18+2.18)/2	0.02		
		(5.95-5.91)x(2.19+2.18)/2	0.09		
		(6.25-5.95)x(2.20+2.19)/2	0.66		
				0.11	
4	S5	(6.53-6.25)x(2.21+2.20)/2	0.62		
45.00		(6.72-6.53)x(2.21+2.21)/2	0.42		
		(6.63-6.72)x(2.15+2.21)/2	-0.20		
		(6.25-6.63)x(2.15+2.15)/2	-0.82		
				0.02	
5	R1	(-6.16--5.20)x(2.54+2.54)/2	-2.44		
60.00		(-6.52--6.16)x(2.30+2.54)/2	-0.87		
		(-5.70--6.52)x(2.31+2.30)/2	1.89		
		(-5.66--5.70)x(2.31+2.31)/2	0.09		
		(-5.65--5.66)x(2.31+2.31)/2	0.02		
		(-5.45--5.65)x(2.32+2.31)/2	0.46		
		(-5.31--5.45)x(2.31+2.32)/2	0.32		
		(-5.29--5.31)x(2.34+2.31)/2	0.05		
		(-5.21--5.29)x(2.43+2.34)/2	0.19		
		(-5.20--5.21)x(2.41+2.43)/2	0.02		
				0.27	
5	R2	(-5.09--5.20)x(2.54+2.41)/2	0.27		
60.00		(-5.20--5.09)x(2.54+2.54)/2	-0.28		
				0.01	
5	R3	(-5.16--5.20)x(2.35+2.40)/2	0.10		
60.00		(-5.14--5.16)x(2.32+2.35)/2	0.05		
		(-5.04--5.14)x(2.31+2.32)/2	0.23		
		(-4.89--5.04)x(2.31+2.31)/2	0.35		
		(-4.65--4.89)x(2.30+2.31)/2	0.55		
		(-4.63--4.65)x(2.30+2.30)/2	0.05		
		(-4.62--4.63)x(2.31+2.30)/2	0.02		
		(-4.55--4.62)x(2.34+2.31)/2	0.16		
		(-4.49--4.55)x(2.35+2.34)/2	0.14		
		(-5.20--4.49)x(2.40+2.35)/2	-1.69		
				0.04	
5	S1	(-4.49--4.31)x(2.35+2.34)/2	-0.42		
60.00		(-4.31--4.49)x(2.38+2.35)/2	0.43		
				0.01	
5	S2	(-3.50--2.35)x(2.28+2.20)/2	-2.58		
60.00		(-4.31--3.50)x(2.34+2.28)/2	-1.87		
		(-4.19--4.31)x(2.40+2.38)/2	0.29		
		(-4.18--4.19)x(2.42+2.40)/2	0.02		
		(-4.16--4.18)x(2.39+2.42)/2	0.05		
		(-4.09--4.16)x(2.39+2.39)/2	0.17		
		(-4.06--4.09)x(2.39+2.39)/2	0.07		
		(-4.01--4.06)x(2.38+2.39)/2	0.12		
		(-3.95--4.01)x(2.36+2.38)/2	0.14		
		(-3.84--3.95)x(2.35+2.36)/2	0.26		
		(-3.64--3.84)x(2.32+2.35)/2	0.47		
		(-3.60--3.64)x(2.31+2.32)/2	0.09		
		(-2.79--3.60)x(2.30+2.31)/2	1.87		
		(-2.57--2.79)x(2.30+2.30)/2	0.51		
		(-2.35--2.57)x(2.30+2.30)/2	0.51		
				0.12	
5	S3	(-1.85--2.35)x(2.30+2.30)/2	1.15		
60.00		(-1.54--1.85)x(2.30+2.30)/2	0.71		
		(-0.90--1.54)x(2.29+2.30)/2	1.47		
		A RIPORTARE mq	3.33		

		CALCOLO DELLE AREE		Foglio n. 4	
STERRI E RIPORTI					
N. SEZIONE PROG.	FIG.	ELEMENTI DI CALCOLO	AREA ELEMENTARE mq	AREA FIGURA mq	NOTE
		RIPORTO mq	3.33		
		(-0.51--0.90)x(2.28+2.29)/2	0.89		
		(0.04--0.51)x(2.28+2.28)/2	1.25		
		(0.52-0.04)x(2.27+2.28)/2	1.09		
		(0.98-0.52)x(2.26+2.27)/2	1.04		
		(1.55-0.98)x(2.26+2.26)/2	1.29		
		(1.93-1.55)x(2.25+2.26)/2	0.86		
		(2.58-1.93)x(2.25+2.25)/2	1.46		
		(2.87-2.58)x(2.25+2.25)/2	0.65		
		(3.61-2.87)x(2.24+2.25)/2	1.66		
		(4.49-3.61)x(2.23+2.24)/2	1.97		
		(4.64-4.49)x(2.22+2.23)/2	0.33		
		(4.76-4.64)x(2.22+2.22)/2	0.27		
		(5.67-4.76)x(2.22+2.22)/2	2.02		
		(5.87-5.67)x(2.29+2.22)/2	0.45		
		(5.92-5.87)x(2.30+2.29)/2	0.11		
		(5.94-5.92)x(2.31+2.30)/2	0.05		
		(6.04-5.94)x(2.32+2.31)/2	0.23		
		(6.05-6.04)x(2.31+2.32)/2	0.02		
		(6.06-6.05)x(2.32+2.33)/2	0.02		
		(6.14-6.06)x(2.32+2.32)/2	0.19		
		(6.15-6.14)x(2.31+2.32)/2	0.02		
		(6.16-6.15)x(2.31+2.31)/2	0.02		
		(6.18-6.16)x(2.31+2.31)/2	0.05		
		(6.20-6.18)x(2.31+2.31)/2	0.05		
		(6.51-6.20)x(2.30+2.31)/2	0.71		
		(6.55-6.51)x(2.27+2.34)/2	0.09		
		(6.60-6.55)x(2.26+2.27)/2	0.11		
		(6.69-6.60)x(2.24+2.26)/2	0.20		
		(6.70-6.69)x(2.24+2.24)/2	0.02		
		(6.76-6.70)x(2.23+2.24)/2	0.13		
		(6.86-6.76)x(2.23+2.23)/2	0.22		
		(6.70-6.86)x(2.12+2.23)/2	-0.35		
		(6.20-6.70)x(2.12+2.12)/2	-1.06		
		(5.20-6.20)x(1.70+1.70)/2	-1.70		
		(3.95-5.20)x(1.76+1.67)/2	-2.14		
		(0.00-3.95)x(2.04+1.76)/2	-7.50		
		(-2.35-0.00)x(2.20+2.04)/2	-4.98		
				3.07	
6	R1	(-5.21--5.20)x(2.51+2.50)/2	-0.03		
75.00		(-5.20--5.21)x(2.52+2.51)/2	0.03		
		(-6.16--5.20)x(2.64+2.64)/2	-2.53		
		(-6.62--6.16)x(2.33+2.64)/2	-1.14		
		(-5.86--6.62)x(2.34+2.33)/2	1.77		
		(-5.20--5.86)x(2.35+2.34)/2	1.55		
				0.35	
6	R2	(-5.20--4.49)x(2.50+2.46)/2	-1.76		
75.00		(-4.84--5.20)x(2.36+2.35)/2	0.85		
		(-4.83--4.84)x(2.36+2.36)/2	0.02		
		(-4.69--4.83)x(2.38+2.36)/2	0.33		
		(-4.63--4.69)x(2.40+2.38)/2	0.14		
		(-4.49--4.63)x(2.42+2.40)/2	0.34		
				0.08	
6	R2	(-5.09--5.20)x(2.64+2.52)/2	0.28		
75.00		(-5.20--5.09)x(2.64+2.64)/2	-0.29		
				0.01	
6	R3	(-4.33--4.49)x(2.44+2.42)/2	0.39		
75.00		(-4.32--4.33)x(2.44+2.44)/2	0.02		
		(-4.49--4.32)x(2.46+2.45)/2	-0.42		
				0.01	
6	R4	(-4.23--4.31)x(2.43+2.43)/2	0.19		
75.00		(-4.22--4.23)x(2.43+2.43)/2	0.02		
		(-4.21--4.22)x(2.43+2.43)/2	0.02		
		(-4.19--4.21)x(2.43+2.43)/2	0.05		
		(-4.16--4.19)x(2.42+2.43)/2	0.07		
		(-4.13--4.16)x(2.41+2.42)/2	0.07		
		(-4.08--4.13)x(2.40+2.41)/2	0.12		
		(-3.99--4.08)x(2.38+2.40)/2	0.22		
		(-3.81--3.99)x(2.34+2.38)/2	0.42		
		(-3.80--3.81)x(2.33+2.33)/2	0.02		
		(-2.78--3.80)x(2.32+2.33)/2	2.37		
		(-2.76--2.78)x(2.32+2.32)/2	0.05		
		(-2.35--2.76)x(2.32+2.32)/2	0.95		
		(-3.50--2.35)x(2.39+2.32)/2	-2.71		
		(-4.31--3.50)x(2.45+2.39)/2	-1.96		
				0.10	
6	S1	(-1.76--2.35)x(2.33+2.32)/2	1.37		
75.00		(-1.72--1.76)x(2.33+2.33)/2	0.09		
		(-0.73--1.72)x(2.31+2.33)/2	2.30		
		(-0.67--0.73)x(2.31+2.31)/2	0.14		
		(0.29--0.67)x(2.30+2.31)/2	2.21		
		(0.37-0.29)x(2.30+2.30)/2	0.18		
		(1.32-0.37)x(2.30+2.30)/2	2.19		
		(1.41-1.32)x(2.30+2.30)/2	0.21		
		(2.34-1.41)x(2.29+2.30)/2	2.13		
		(2.45-2.34)x(2.29+2.29)/2	0.25		
		(3.37-2.45)x(2.28+2.29)/2	2.10		
		(3.50-3.37)x(2.28+2.28)/2	0.30		
		(4.39-3.50)x(2.28+2.28)/2	2.03		
		(5.27-4.39)x(2.27+2.28)/2	2.00		
		(5.42-5.27)x(2.27+2.27)/2	0.34		
		(5.66-5.42)x(2.29+2.27)/2	0.55		
		(5.82-5.66)x(2.30+2.29)/2	0.37		
		(6.37-5.82)x(2.35+2.30)/2	1.28		
		(6.42-6.37)x(2.31+2.35)/2	0.12		
		(6.43-6.42)x(2.30+2.31)/2	0.02		
		(6.44-6.43)x(2.28+2.30)/2	0.02		
		(6.16-6.44)x(2.28+2.28)/2	-0.64		
		(5.16-6.16)x(1.86+1.86)/2	-1.86		
		(3.91-5.16)x(1.91+1.83)/2	-2.34		
		(0.00-3.91)x(2.17+1.91)/2	-7.98		
		(-2.35-0.00)x(2.32+2.17)/2	-5.28		
				2.10	
7	S1	(-11.18--12.06)x(2.31+2.29)/2	2.02		
90.00		(-11.11--11.18)x(2.31+2.31)/2	0.16		
		(-10.16--11.11)x(2.33+2.31)/2	2.20		
		A RIPORTARE mq	4.38		

STERRI E RIPORTI

N. SEZIONE PROG.	FIG.	ELEMENTI DI CALCOLO	AREA ELEMENTARE mq	AREA FIGURA mq	NOTE
		RIPORTO mq	4.38		
		(-10.12--10.16)x(2.33+2.33)/2	0.09		
		(-9.13--10.12)x(2.36+2.33)/2	2.32		
		(-8.27--9.13)x(2.48+2.36)/2	2.08		
		(-8.20--8.27)x(2.42+2.49)/2	0.17		
		(-8.18--8.20)x(2.42+2.42)/2	0.05		
		(-8.15--8.18)x(2.40+2.42)/2	0.07		
		(-8.11--8.15)x(2.39+2.40)/2	0.10		
		(-8.10--8.11)x(2.39+2.39)/2	0.02		
		(-8.07--8.10)x(2.39+2.39)/2	0.07		
		(-7.39--8.07)x(2.40+2.39)/2	1.63		
		(-12.06--7.39)x(1.89+2.40)/2	-10.02		
				0.96	
7	R1	(-7.39--7.35)x(2.40+2.40)/2	-0.10		
90.00		(-7.35--7.39)x(2.40+2.40)/2	0.10		
7	R2	(-7.08--7.35)x(2.40+2.40)/2	0.65		
90.00		(-7.01--7.08)x(2.40+2.40)/2	0.17		
		(-6.62--7.01)x(2.40+2.40)/2	0.94		
		(-6.73--6.62)x(2.47+2.47)/2	-0.27		
		(-7.35--6.73)x(2.40+2.47)/2	-1.51		
				0.02	
7	R3	(-6.62--4.31)x(2.47+2.58)/2	-5.83		
90.00		(-6.05--6.62)x(2.41+2.40)/2	1.37		
		(-5.95--6.05)x(2.41+2.41)/2	0.24		
		(-5.03--5.95)x(2.40+2.41)/2	2.21		
		(-4.88--5.03)x(2.40+2.40)/2	0.36		
		(-4.31--4.88)x(2.39+2.40)/2	1.37		
				0.28	
7	R4	(-3.51--2.35)x(2.61+2.59)/2	-3.02		
90.00		(-3.73--3.51)x(2.61+2.61)/2	-0.57		
		(-4.31--3.73)x(2.58+2.61)/2	-1.51		
		(-4.00--4.31)x(2.39+2.39)/2	0.74		
		(-3.82--4.00)x(2.39+2.39)/2	0.43		
		(-2.97--3.82)x(2.39+2.39)/2	2.03		
		(-2.76--2.97)x(2.38+2.39)/2	0.50		
		(-2.35--2.76)x(2.38+2.38)/2	0.98		
				0.42	
7	R5	(-1.95--2.35)x(2.37+2.38)/2	0.95		
90.00		(-1.70--1.95)x(2.37+2.37)/2	0.59		
		(-0.92--1.70)x(2.37+2.37)/2	1.85		
		(-0.63--0.92)x(2.37+2.37)/2	0.69		
		(0.10--0.63)x(2.36+2.37)/2	1.73		
		(0.43-0.10)x(2.36+2.36)/2	0.78		
		(1.13-0.43)x(2.36+2.36)/2	1.65		
		(1.49-1.13)x(2.36+2.36)/2	0.85		
		(2.15-1.49)x(2.35+2.36)/2	1.55		
		(2.56-2.15)x(2.34+2.35)/2	0.96		
		(3.18-2.56)x(2.33+2.34)/2	1.45		
		(3.62-3.18)x(2.32+2.33)/2	1.02		
		(4.21-3.62)x(2.31+2.32)/2	1.37		
		(4.76-4.21)x(2.29+2.31)/2	1.26		
		(5.23-4.76)x(2.28+2.29)/2	1.07		
		(5.74-5.23)x(2.27+2.28)/2	1.16		
		(6.26-5.74)x(2.26+2.27)/2	1.18		
		(6.28-6.26)x(2.27+2.26)/2	0.05		
		(6.30-6.28)x(2.29+2.27)/2	0.05		
		(6.31-6.30)x(2.35+2.29)/2	0.02		
		(6.32-6.31)x(2.30+2.35)/2	0.02		
		(6.68-6.32)x(2.29+2.30)/2	0.83		
		(6.73-6.68)x(2.29+2.29)/2	0.11		
		(6.91-6.73)x(2.33+2.29)/2	0.42		
		(6.96-6.91)x(2.33+2.33)/2	0.12		
		(7.18-6.96)x(2.16+2.33)/2	0.49		
		(7.28-7.18)x(2.08+2.16)/2	0.21		
		(7.32-7.28)x(2.09+2.08)/2	0.08		
		(7.38-7.32)x(2.13+2.09)/2	0.13		
		(7.41-7.38)x(2.14+2.13)/2	0.06		
		(7.43-7.41)x(2.17+2.14)/2	0.04		
		(7.51-7.43)x(2.28+2.17)/2	0.18		
		(6.38-7.51)x(2.70+2.28)/2	-2.81		
		(5.24-6.38)x(2.65+2.70)/2	-3.05		
		(5.43-5.24)x(2.42+2.65)/2	0.48		
		(3.68-5.43)x(2.46+2.42)/2	-4.27		
		(-0.01-3.68)x(2.56+2.46)/2	-9.26		
		(-2.35--0.01)x(2.59+2.56)/2	-6.03		
				2.02	
8	R1	(-7.09--7.35)x(2.46+2.46)/2	0.64		
105.00		(-6.71--7.09)x(2.45+2.46)/2	0.93		
		(-6.11--6.71)x(2.45+2.45)/2	1.47		
		(-5.68--6.11)x(2.45+2.45)/2	1.05		
		(-5.12--5.68)x(2.45+2.45)/2	1.37		
		(-4.66--5.12)x(2.44+2.45)/2	1.12		
		(-4.14--4.66)x(2.44+2.44)/2	1.27		
		(-3.63--4.14)x(2.43+2.44)/2	1.24		
		(-3.16--3.63)x(2.43+2.43)/2	1.14		
		(-2.61--3.16)x(2.43+2.43)/2	1.34		
		(-2.18--2.61)x(2.43+2.43)/2	1.04		
		(-1.58--2.18)x(2.43+2.43)/2	1.46		
		(-1.20--1.58)x(2.42+2.43)/2	0.92		
		(-0.55--1.20)x(2.41+2.42)/2	1.57		
		(-0.22--0.55)x(2.41+2.41)/2	0.80		
		(0.47--0.22)x(2.40+2.41)/2	1.66		
		(0.76-0.47)x(2.40+2.40)/2	0.70		
		(1.50-0.76)x(2.39+2.40)/2	1.77		
		(1.74-1.50)x(2.38+2.39)/2	0.57		
		(2.53-1.74)x(2.36+2.38)/2	1.87		
		(2.72-2.53)x(2.36+2.36)/2	0.45		
		(3.55-2.72)x(2.35+2.36)/2	1.95		
		(4.47-3.55)x(2.36+2.35)/2	2.17		
		(4.58-4.47)x(2.37+2.36)/2	0.26		
		(4.68-4.58)x(2.36+2.37)/2	0.24		
		(5.61-4.68)x(2.37+2.36)/2	2.20		
		(5.62-5.61)x(2.37+2.37)/2	0.02		
		(5.77-5.62)x(2.40+2.37)/2	0.36		
		(5.86-5.77)x(2.40+2.40)/2	0.22		
		A RIPORTARE mq	31.80		

STERRI E RIPORTI

N. SEZIONE PROG.	FIG.	ELEMENTI DI CALCOLO	AREA ELEMENTARE mq	AREA FIGURA mq	NOTE
		RIPORTO mq	31.80		
		(5.92-5.86)x(2.41+2.40)/2	0.14		
		(6.12-5.92)x(2.45+2.41)/2	0.49		
		(6.63-6.12)x(2.31+2.45)/2	1.21		
		(6.64-6.63)x(2.31+2.31)/2	0.02		
		(6.85-6.64)x(2.29+2.31)/2	0.48		
		(7.62-6.85)x(2.22+2.29)/2	1.74		
		(7.66-7.62)x(2.22+2.22)/2	0.09		
		(7.72-7.66)x(2.22+2.22)/2	0.13		
		(6.17-7.72)x(3.26+2.22)/2	-4.25		
		(5.10-6.17)x(3.26+3.26)/2	-3.49		
		(5.25-5.10)x(3.08+3.26)/2	0.48		
		(3.51-5.25)x(3.12+3.08)/2	-5.39		
		(0.00-3.51)x(3.21+3.12)/2	-11.11		
		(-3.50-0.00)x(3.12+3.21)/2	-11.08		
		(-5.24--3.50)x(3.08+3.12)/2	-5.39		
		(-5.09--5.24)x(3.26+3.08)/2	0.48		
		(-6.16--5.09)x(3.26+3.26)/2	-3.49		
		(-7.35--6.16)x(2.46+3.26)/2	-3.40		
				10.54	
9 120.00	R1	(7.77-7.86)x(4.13+4.07)/2	-0.37		
		(6.71-7.77)x(4.14+4.13)/2	-4.38		
		(6.86-6.71)x(3.96+4.14)/2	0.61		
		(3.50-6.86)x(4.04+3.96)/2	-13.44		
		(0.00-3.50)x(4.13+4.04)/2	-14.30		
		(-3.50-0.00)x(4.04+4.13)/2	-14.30		
		(-5.24--3.50)x(4.00+4.04)/2	-6.99		
		(-5.09--5.24)x(4.18+4.00)/2	0.61		
		(-6.16--5.09)x(4.18+4.18)/2	-4.47		
		(-8.70--6.16)x(2.48+4.18)/2	-8.46		
		(7.86--8.70)x(4.07+2.48)/2	54.23		
				11.26	
9 120.00	R1	(-8.44--8.70)x(2.48+2.48)/2	0.64		
		(-8.13--8.44)x(2.49+2.48)/2	0.77		
		(-7.41--8.13)x(2.47+2.49)/2	1.79		
		(-7.15--7.41)x(2.46+2.47)/2	0.64		
		(-6.39--7.15)x(2.43+2.46)/2	1.86		
		(-6.17--6.39)x(2.42+2.43)/2	0.53		
		(-5.36--6.17)x(2.44+2.42)/2	1.97		
		(-5.19--5.36)x(2.45+2.44)/2	0.42		
		(-4.33--5.19)x(2.49+2.45)/2	2.12		
		(-4.21--4.33)x(2.49+2.49)/2	0.30		
		(-3.31--4.21)x(2.49+2.49)/2	2.24		
		(-3.23--3.31)x(2.49+2.49)/2	0.20		
		(-2.28--3.23)x(2.49+2.49)/2	2.37		
		(-2.25--2.28)x(2.49+2.49)/2	0.07		
		(-1.62--2.25)x(2.50+2.49)/2	1.57		
		(-1.25--1.62)x(2.51+2.50)/2	0.93		
		(-1.24--1.25)x(2.51+2.51)/2	0.03		
		(-0.23--1.24)x(2.51+2.51)/2	2.54		
		(-0.16--0.23)x(2.51+2.51)/2	0.18		
		(0.80--0.16)x(2.51+2.51)/2	2.41		
		(0.92-0.80)x(2.51+2.51)/2	0.30		
		(1.82-0.92)x(2.49+2.51)/2	2.25		
		(1.99-1.82)x(2.49+2.49)/2	0.42		
		(2.85-1.99)x(2.47+2.49)/2	2.13		
		(3.63-2.85)x(2.46+2.47)/2	1.92		
		(3.88-3.63)x(2.46+2.46)/2	0.61		
		(4.15-3.88)x(2.46+2.46)/2	0.66		
		(4.90-4.15)x(2.46+2.46)/2	1.84		
		(5.22-4.90)x(2.46+2.46)/2	0.79		
		(5.93-5.22)x(2.47+2.46)/2	1.75		
		(5.97-5.93)x(2.50+2.47)/2	0.10		
		(5.99-5.97)x(2.55+2.50)/2	0.05		
		(6.56-5.99)x(2.51+2.52)/2	1.43		
		(6.96-6.56)x(2.49+2.51)/2	1.00		
		(7.38-6.96)x(2.48+2.49)/2	1.04		
		(7.86-7.38)x(2.47+2.48)/2	1.19		
		(-8.70-7.86)x(2.48+2.47)/2	-40.99		
				0.07	
9 120.00	R1	(7.77-7.86)x(4.13+4.07)/2	-0.37		
		(6.71-7.77)x(4.14+4.13)/2	-4.38		
		(6.86-6.71)x(3.96+4.14)/2	0.61		
		(3.50-6.86)x(4.04+3.96)/2	-13.44		
		(0.00-3.50)x(4.13+4.04)/2	-14.30		
		(-3.50-0.00)x(4.04+4.13)/2	-14.30		
		(-5.24--3.50)x(4.00+4.04)/2	-6.99		
		(-5.09--5.24)x(4.18+4.00)/2	0.61		
		(-6.16--5.09)x(4.18+4.18)/2	-4.47		
		(-8.70--6.16)x(2.48+4.18)/2	-8.46		
		(-8.44--8.70)x(2.48+2.48)/2	0.64		
		(-8.13--8.44)x(2.49+2.48)/2	0.77		
		(-7.41--8.13)x(2.47+2.49)/2	1.79		
		(-7.15--7.41)x(2.46+2.47)/2	0.64		
		(-6.39--7.15)x(2.43+2.46)/2	1.86		
		(-6.17--6.39)x(2.42+2.43)/2	0.53		
		(-5.36--6.17)x(2.44+2.42)/2	1.97		
		(-5.19--5.36)x(2.45+2.44)/2	0.42		
		(-4.33--5.19)x(2.49+2.45)/2	2.12		
		(-4.21--4.33)x(2.49+2.49)/2	0.30		
		(-3.31--4.21)x(2.49+2.49)/2	2.24		
		(-3.23--3.31)x(2.49+2.49)/2	0.20		
		(-2.28--3.23)x(2.49+2.49)/2	2.37		
		(-2.25--2.28)x(2.49+2.49)/2	0.07		
		(-1.62--2.25)x(2.50+2.49)/2	1.57		
		(-1.25--1.62)x(2.51+2.50)/2	0.93		
		(-1.24--1.25)x(2.51+2.51)/2	0.03		
		(-0.23--1.24)x(2.51+2.51)/2	2.54		
		(-0.16--0.23)x(2.51+2.51)/2	0.18		
		(0.80--0.16)x(2.51+2.51)/2	2.41		
		(0.92-0.80)x(2.51+2.51)/2	0.30		
		(1.82-0.92)x(2.49+2.51)/2	2.25		
		(1.99-1.82)x(2.49+2.49)/2	0.42		
		(2.85-1.99)x(2.47+2.49)/2	2.13		
		(3.63-2.85)x(2.46+2.47)/2	1.92		
		(3.88-3.63)x(2.46+2.46)/2	0.61		
		A RIPORTARE mq	-34.28		

STERRI E RIPORTI

N. SEZIONE PROG.	FIG.	ELEMENTI DI CALCOLO	AREA ELEMENTARE mq	AREA FIGURA mq	NOTE
		RIPORTO mq	-34.28		
		(4.15-3.88)x(2.46+2.46)/2	0.66		
		(4.90-4.15)x(2.46+2.46)/2	1.84		
		(5.22-4.90)x(2.46+2.46)/2	0.79		
		(5.93-5.22)x(2.47+2.46)/2	1.75		
		(5.97-5.93)x(2.50+2.47)/2	0.10		
		(5.99-5.97)x(2.55+2.50)/2	0.05		
		(6.56-5.99)x(2.51+2.52)/2	1.43		
		(6.96-6.56)x(2.49+2.51)/2	1.00		
		(7.38-6.96)x(2.48+2.49)/2	1.04		
		(7.86-7.38)x(2.47+2.48)/2	1.19		
				24.43	
10 135.00	R1	(-10.17--10.29)x(2.47+2.47)/2	0.30		
		(-9.97--10.17)x(2.53+2.47)/2	0.50		
		(-9.45--9.97)x(2.64+2.53)/2	1.34		
		(-9.43--9.45)x(2.66+2.64)/2	0.05		
		(-9.40--9.43)x(2.60+2.63)/2	0.08		
		(-9.35--9.40)x(2.57+2.60)/2	0.13		
		(-9.28--9.35)x(2.53+2.57)/2	0.18		
		(-9.15--9.28)x(2.47+2.53)/2	0.32		
		(-9.14--9.15)x(2.46+2.47)/2	0.02		
		(-9.07--9.14)x(2.49+2.47)/2	0.17		
		(-9.04--9.07)x(2.52+2.49)/2	0.08		
		(-8.81--9.04)x(2.60+2.52)/2	0.59		
		(-8.66--8.81)x(2.55+2.60)/2	0.39		
		(-8.62--8.66)x(2.55+2.55)/2	0.10		
		(-8.57--8.62)x(2.54+2.55)/2	0.13		
		(-8.49--8.57)x(2.52+2.54)/2	0.20		
		(-8.36--8.49)x(2.49+2.52)/2	0.33		
		(-8.14--8.36)x(2.48+2.49)/2	0.55		
		(-8.11--8.14)x(2.47+2.48)/2	0.07		
		(-7.22--8.11)x(2.49+2.47)/2	2.21		
		(-7.09--7.22)x(2.49+2.49)/2	0.32		
		(-6.24--7.09)x(2.49+2.49)/2	2.12		
		(-6.06--6.24)x(2.49+2.49)/2	0.45		
		(-5.26--6.06)x(2.46+2.49)/2	1.98		
		(-5.04--5.26)x(2.46+2.46)/2	0.54		
		(-4.28--5.04)x(2.49+2.46)/2	1.88		
		(-4.01--4.28)x(2.50+2.49)/2	0.67		
		(-3.30--4.01)x(2.52+2.50)/2	1.78		
		(-2.98--3.30)x(2.52+2.52)/2	0.81		
		(-2.32--2.98)x(2.52+2.52)/2	1.66		
		(-1.96--2.32)x(2.51+2.52)/2	0.91		
		(-1.34--1.96)x(2.52+2.51)/2	1.56		
		(-0.93--1.34)x(2.52+2.52)/2	1.03		
		(-0.36--0.93)x(2.49+2.52)/2	1.43		
		(0.10--0.36)x(2.48+2.49)/2	1.14		
		(0.62-0.10)x(2.48+2.48)/2	1.29		
		(1.12-0.62)x(2.48+2.48)/2	1.24		
		(1.60-1.12)x(2.51+2.48)/2	1.20		
		(2.15-1.60)x(2.52+2.51)/2	1.38		
		(2.75-2.15)x(2.51+2.52)/2	1.51		
		(3.18-2.75)x(2.50+2.51)/2	1.08		
		(3.56-3.18)x(2.49+2.50)/2	0.95		
		(4.20-3.56)x(2.47+2.49)/2	1.59		
		(4.54-4.20)x(2.46+2.47)/2	0.84		
		(5.23-4.54)x(2.44+2.46)/2	1.69		
		(5.49-5.23)x(2.50+2.44)/2	0.64		
		(5.63-5.49)x(2.51+2.50)/2	0.35		
		(5.90-5.63)x(2.53+2.51)/2	0.68		
		(5.91-5.90)x(2.54+2.53)/2	0.03		
		(5.92-5.91)x(2.53+2.53)/2	0.03		
		(5.93-5.92)x(2.53+2.53)/2	0.03		
		(5.95-5.93)x(2.52+2.53)/2	0.05		
		(5.97-5.95)x(2.52+2.52)/2	0.05		
		(6.01-5.97)x(2.51+2.52)/2	0.10		
		(6.09-6.01)x(2.49+2.51)/2	0.20		
		(6.26-6.09)x(2.44+2.49)/2	0.42		
		(6.28-6.26)x(2.44+2.44)/2	0.05		
		(6.43-6.28)x(2.50+2.44)/2	0.37		
		(6.48-6.43)x(2.51+2.51)/2	0.13		
		(6.91-6.48)x(2.54+2.51)/2	1.09		
		(7.02-6.91)x(2.53+2.54)/2	0.28		
		(7.22-7.02)x(2.51+2.53)/2	0.50		
		(7.28-7.22)x(2.50+2.51)/2	0.15		
		(7.49-7.28)x(2.50+2.50)/2	0.52		
		(8.31-7.49)x(2.48+2.50)/2	2.04		
		(8.47-8.31)x(2.46+2.48)/2	0.40		
		(9.33-8.47)x(2.34+2.46)/2	2.06		
		(9.37-9.33)x(2.32+2.34)/2	0.09		
		(9.58-9.37)x(2.25+2.32)/2	0.48		
		(9.67-9.58)x(2.24+2.25)/2	0.20		
		(9.73-9.67)x(2.20+2.24)/2	0.13		
		(9.77-9.73)x(2.15+2.20)/2	0.09		
		(9.80-9.77)x(2.14+2.15)/2	0.06		
		(9.82-9.80)x(2.12+2.14)/2	0.04		
		(9.83-9.82)x(2.13+2.12)/2	0.02		
		(9.84-9.83)x(2.14+2.13)/2	0.02		
		(9.89-9.84)x(2.10+2.14)/2	0.11		
		(10.07-9.89)x(2.04+2.10)/2	0.37		
		(10.09-10.07)x(2.02+2.04)/2	0.04		
		(10.13-10.09)x(2.11+2.02)/2	0.08		
		(10.20-10.13)x(2.10+2.11)/2	0.15		
		(10.34-10.20)x(1.97+2.10)/2	0.28		
		(10.36-10.34)x(1.97+1.97)/2	0.04		
		(10.43-10.36)x(1.93+1.97)/2	0.14		
		(11.39-10.43)x(1.37+1.93)/2	1.58		
		(11.41-11.39)x(1.37+1.37)/2	0.03		
		(11.85-11.41)x(1.33+1.37)/2	0.59		
		(12.39-11.85)x(1.30+1.33)/2	0.71		
		(12.41-12.39)x(1.30+1.30)/2	0.03		
		(13.37-12.41)x(1.64+1.30)/2	1.41		
		(13.44-13.37)x(1.66+1.64)/2	0.12		
		(14.35-13.44)x(1.66+1.66)/2	1.51		
		(14.47-14.35)x(1.67+1.66)/2	0.20		
		(15.33-14.47)x(1.59+1.67)/2	1.40		
		A RIPORTARE mq	58.88		

STERRI E RIPORTI

N. SEZIONE PROG.	FIG.	ELEMENTI DI CALCOLO	AREA ELEMENTARE mq	AREA FIGURA mq	NOTE
		RIPORTO mq	58.88		
		(15.49-15.33)x(1.57+1.59)/2	0.25		
		(15.62-15.49)x(1.57+1.57)/2	0.20		
		(10.28-15.62)x(5.12+1.57)/2	-17.86		
		(9.22-10.28)x(5.13+5.12)/2	-5.43		
		(9.37-9.22)x(4.94+5.13)/2	0.76		
		(3.50-9.37)x(5.09+4.94)/2	-29.44		
		(0.00-3.50)x(5.18+5.09)/2	-17.97		
		(-3.50-0.00)x(5.09+5.18)/2	-17.97		
		(-5.24--3.50)x(5.05+5.09)/2	-8.82		
		(-5.09--5.24)x(5.23+5.05)/2	0.77		
		(-6.16--5.09)x(5.23+5.23)/2	-5.60		
		(-10.29--6.16)x(2.47+5.23)/2	-15.90		
				58.13	
11 150.00	R1	(-11.57--11.70)x(2.58+2.58)/2	0.34		
		(-10.87--11.57)x(2.53+2.58)/2	1.79		
		(-10.49--10.87)x(2.53+2.53)/2	0.96		
		(-9.84--10.49)x(2.51+2.53)/2	1.64		
		(-9.72--9.84)x(2.54+2.51)/2	0.30		
		(-9.59--9.72)x(2.58+2.54)/2	0.33		
		(-9.42--9.59)x(2.64+2.58)/2	0.44		
		(-9.37--9.42)x(2.64+2.64)/2	0.13		
		(-9.36--9.37)x(2.65+2.64)/2	0.03		
		(-9.28--9.36)x(2.65+2.65)/2	0.21		
		(-9.22--9.28)x(2.63+2.65)/2	0.16		
		(-9.08--9.22)x(2.60+2.63)/2	0.37		
		(-9.04--9.08)x(2.58+2.60)/2	0.10		
		(-8.93--9.04)x(2.54+2.58)/2	0.28		
		(-8.82--8.93)x(2.50+2.54)/2	0.28		
		(-8.34--8.82)x(2.50+2.50)/2	1.20		
		(-7.79--8.34)x(2.50+2.50)/2	1.37		
		(-7.26--7.79)x(2.51+2.50)/2	1.33		
		(-6.76--7.26)x(2.52+2.51)/2	1.26		
		(-6.19--6.76)x(2.51+2.52)/2	1.43		
		(-5.74--6.19)x(2.51+2.51)/2	1.13		
		(-5.11--5.74)x(2.52+2.51)/2	1.58		
		(-4.71--5.11)x(2.53+2.52)/2	1.01		
		(-4.03--4.71)x(2.53+2.53)/2	1.72		
		(-3.68--4.03)x(2.53+2.53)/2	0.89		
		(-2.95--3.68)x(2.53+2.53)/2	1.85		
		(-2.66--2.95)x(2.53+2.53)/2	0.73		
		(-1.88--2.66)x(2.55+2.53)/2	1.98		
		(-1.63--1.88)x(2.55+2.55)/2	0.64		
		(-0.80--1.63)x(2.56+2.55)/2	2.12		
		(-0.61--0.80)x(2.56+2.56)/2	0.49		
		(0.28--0.61)x(2.55+2.56)/2	2.27		
		(0.42-0.28)x(2.55+2.55)/2	0.36		
		(1.35-0.42)x(2.53+2.55)/2	2.36		
		(1.45-1.35)x(2.53+2.53)/2	0.25		
		(1.53-1.45)x(2.53+2.53)/2	0.20		
		(2.47-1.53)x(2.53+2.53)/2	2.38		
		(3.39-2.47)x(2.54+2.53)/2	2.33		
		(3.50-3.39)x(2.54+2.54)/2	0.28		
		(4.48-3.50)x(2.52+2.54)/2	2.48		
		(4.53-4.48)x(2.51+2.52)/2	0.13		
		(5.46-4.53)x(2.51+2.51)/2	2.33		
		(5.55-5.46)x(2.51+2.51)/2	0.23		
		(5.56-5.55)x(2.51+2.51)/2	0.03		
		(5.82-5.56)x(2.59+2.51)/2	0.66		
		(6.16-5.82)x(2.59+2.59)/2	0.88		
		(6.24-6.16)x(2.56+2.59)/2	0.21		
		(6.32-6.24)x(2.56+2.56)/2	0.20		
		(6.33-6.32)x(2.56+2.59)/2	0.03		
		(6.34-6.33)x(2.56+2.56)/2	0.03		
		(6.35-6.34)x(2.56+2.56)/2	0.03		
		(6.37-6.35)x(2.57+2.56)/2	0.05		
		(6.41-6.37)x(2.58+2.57)/2	0.10		
		(6.46-6.41)x(2.58+2.58)/2	0.13		
		(6.56-6.46)x(2.59+2.58)/2	0.26		
		(6.58-6.56)x(2.58+2.59)/2	0.05		
		(7.42-6.58)x(2.61+2.58)/2	2.18		
		(7.61-7.42)x(2.62+2.61)/2	0.50		
		(8.40-7.61)x(2.54+2.62)/2	2.04		
		(8.63-8.40)x(2.55+2.54)/2	0.59		
		(9.38-8.63)x(2.44+2.55)/2	1.87		
		(9.66-9.38)x(2.36+2.44)/2	0.67		
		(10.36-9.66)x(2.15+2.36)/2	1.58		
		(10.69-10.36)x(2.03+2.15)/2	0.69		
		(11.34-10.69)x(1.51+2.03)/2	1.15		
		(11.71-11.34)x(1.22+1.51)/2	0.51		
		(12.32-11.71)x(1.01+1.22)/2	0.68		
		(12.74-12.32)x(0.87+1.01)/2	0.39		
		(13.30-12.74)x(1.12+0.87)/2	0.56		
		(13.66-13.30)x(1.28+1.12)/2	0.43		
		(6.16-13.66)x(6.28+1.28)/2	-28.35		
		(5.09-6.16)x(6.28+6.28)/2	-6.72		
		(5.24-5.09)x(6.10+6.28)/2	0.93		
		(3.50-5.24)x(6.14+6.10)/2	-10.65		
		(0.00-3.50)x(6.23+6.14)/2	-21.65		
		(-3.50-0.00)x(6.14+6.23)/2	-21.65		
		(-5.24--3.50)x(6.10+6.14)/2	-10.65		
		(-5.09--5.24)x(6.28+6.10)/2	0.93		
		(-6.16--5.09)x(6.28+6.28)/2	-6.72		
		(-11.70--6.16)x(2.58+6.28)/2	-24.54		
				68.88	
12 165.00	R1	(-13.24--13.33)x(2.55+2.55)/2	0.23		
		(-12.60--13.24)x(2.53+2.55)/2	1.63		
		(-12.25--12.60)x(2.53+2.53)/2	0.89		
		(-12.02--12.25)x(2.55+2.53)/2	0.58		
		(-11.82--12.02)x(2.57+2.55)/2	0.51		
		(-11.73--11.82)x(2.62+2.57)/2	0.23		
		(-11.64--11.73)x(2.57+2.62)/2	0.23		
		(-11.63--11.64)x(2.57+2.57)/2	0.03		
		(-11.46--11.63)x(2.65+2.57)/2	0.44		
		(-11.41--11.46)x(2.58+2.65)/2	0.13		
		(-11.39--11.41)x(2.57+2.58)/2	0.05		
		A RIPORTARE mq	4.95		

STERRI E RIPORTI

N. SEZIONE PROG.	FIG.	ELEMENTI DI CALCOLO	AREA ELEMENTARE mq	AREA FIGURA mq	NOTE
		RIPORTO mq	4.95		
		(-11.33--11.39)x(2.57+2.57)/2	0.15		
		(-11.20--11.33)x(2.57+2.57)/2	0.33		
		(-10.81--11.20)x(2.57+2.57)/2	1.00		
		(-10.54--10.81)x(2.57+2.57)/2	0.69		
		(-10.30--10.54)x(2.59+2.57)/2	0.62		
		(-9.52--10.30)x(2.63+2.59)/2	2.04		
		(-9.32--9.52)x(2.63+2.63)/2	0.53		
		(-8.49--9.32)x(2.62+2.63)/2	2.18		
		(-8.34--8.49)x(2.62+2.62)/2	0.39		
		(-7.47--8.34)x(2.60+2.62)/2	2.27		
		(-7.36--7.47)x(2.60+2.60)/2	0.29		
		(-6.44--7.36)x(2.56+2.60)/2	2.37		
		(-6.38--6.44)x(2.56+2.56)/2	0.15		
		(-5.41--6.38)x(2.58+2.56)/2	2.49		
		(-5.40--5.41)x(2.58+2.58)/2	0.03		
		(-5.07--5.40)x(2.59+2.58)/2	0.85		
		(-4.42--5.07)x(2.62+2.59)/2	1.69		
		(-4.39--4.42)x(2.62+2.62)/2	0.08		
		(-3.44--4.39)x(2.64+2.62)/2	2.50		
		(-3.36--3.44)x(2.64+2.64)/2	0.21		
		(-2.46--3.36)x(2.63+2.64)/2	2.37		
		(-2.33--2.46)x(2.63+2.63)/2	0.34		
		(-1.48--2.33)x(2.62+2.63)/2	2.23		
		(-1.31--1.48)x(2.63+2.62)/2	0.45		
		(-0.49--1.31)x(2.63+2.63)/2	2.16		
		(-0.28--0.49)x(2.63+2.63)/2	0.55		
		(0.49--0.28)x(2.63+2.63)/2	2.03		
		(0.75-0.49)x(2.63+2.63)/2	0.68		
		(1.47-0.75)x(2.63+2.63)/2	1.89		
		(1.77-1.47)x(2.62+2.63)/2	0.79		
		(2.45-1.77)x(2.62+2.62)/2	1.78		
		(2.80-2.45)x(2.61+2.62)/2	0.92		
		(3.43-2.80)x(2.61+2.61)/2	1.64		
		(3.83-3.43)x(2.60+2.61)/2	1.04		
		(4.41-3.83)x(2.60+2.60)/2	1.51		
		(4.85-4.41)x(2.60+2.60)/2	1.14		
		(4.96-4.85)x(2.60+2.60)/2	0.29		
		(5.11-4.96)x(2.60+2.60)/2	0.39		
		(5.22-5.11)x(2.60+2.60)/2	0.29		
		(5.71-5.22)x(2.63+2.60)/2	1.28		
		(5.72-5.71)x(2.67+2.63)/2	0.03		
		(5.74-5.72)x(2.61+2.67)/2	0.05		
		(5.76-5.74)x(2.62+2.61)/2	0.05		
		(5.80-5.76)x(2.59+2.62)/2	0.10		
		(5.85-5.80)x(2.61+2.59)/2	0.13		
		(5.88-5.85)x(2.59+2.61)/2	0.08		
		(5.92-5.88)x(2.59+2.59)/2	0.10		
		(6.20-5.92)x(2.68+2.59)/2	0.74		
		(6.21-6.20)x(2.68+2.68)/2	0.03		
		(6.59-6.21)x(2.58+2.68)/2	1.00		
		(6.68-6.59)x(2.54+2.58)/2	0.23		
		(6.81-6.68)x(2.49+2.54)/2	0.33		
		(6.90-6.81)x(2.46+2.49)/2	0.22		
		(7.35-6.90)x(2.37+2.46)/2	1.09		
		(7.93-7.35)x(2.29+2.37)/2	1.35		
		(8.33-7.93)x(2.20+2.29)/2	0.90		
		(8.90-8.33)x(2.09+2.20)/2	1.22		
		(6.16-8.90)x(7.33+5.50)/2	-17.58		
		(5.09-6.16)x(7.33+7.33)/2	-7.84		
		(5.24-5.09)x(7.15+7.33)/2	1.09		
		(3.50-5.24)x(7.19+7.15)/2	-12.48		
		(0.00-3.50)x(7.28+7.19)/2	-25.32		
		(-3.50-0.00)x(7.19+7.28)/2	-25.32		
		(-5.24--3.50)x(7.15+7.19)/2	-12.48		
		(-5.09--5.24)x(7.33+7.15)/2	1.09		
		(-6.16--5.09)x(7.33+7.33)/2	-7.84		
		(-13.33--6.16)x(2.55+7.33)/2	-35.42		
				84.87	
13 180.00	R1	(-3.04--3.50)x(2.67+2.68)/2	1.23		
		(-2.52--3.04)x(2.67+2.67)/2	1.39		
		(-2.01--2.52)x(2.67+2.67)/2	1.36		
		(-1.54--2.01)x(2.67+2.67)/2	1.25		
		(-0.98--1.54)x(2.68+2.67)/2	1.50		
		(-0.56--0.98)x(2.69+2.68)/2	1.13		
		(0.04--0.56)x(2.69+2.69)/2	1.61		
		(0.42-0.04)x(2.68+2.69)/2	1.02		
		(1.07-0.42)x(2.68+2.68)/2	1.74		
		(1.40-1.07)x(2.68+2.68)/2	0.88		
		(2.10-1.40)x(2.69+2.68)/2	1.88		
		(2.38-2.10)x(2.69+2.69)/2	0.75		
		(3.12-2.38)x(2.69+2.69)/2	1.99		
		(3.36-3.12)x(2.69+2.69)/2	0.65		
		(4.15-3.36)x(2.65+2.69)/2	2.11		
		(4.34-4.15)x(2.65+2.65)/2	0.50		
		(5.18-4.34)x(2.66+2.65)/2	2.23		
		(5.19-5.18)x(2.66+2.66)/2	0.03		
		(5.29-5.19)x(2.67+2.66)/2	0.27		
		(5.36-5.29)x(2.67+2.67)/2	0.19		
		(5.42-5.36)x(2.67+2.67)/2	0.16		
		(5.62-5.42)x(2.74+2.67)/2	0.54		
		(6.02-5.62)x(2.67+2.74)/2	1.08		
		(6.10-6.02)x(2.67+2.67)/2	0.21		
		(6.12-6.10)x(2.67+2.67)/2	0.05		
		(6.13-6.12)x(2.76+2.67)/2	0.03		
		(6.16-6.13)x(2.64+2.76)/2	0.08		
		(6.20-6.16)x(2.61+2.64)/2	0.11		
		(6.30-6.20)x(2.60+2.61)/2	0.26		
		(7.23-6.30)x(2.47+2.60)/2	2.36		
		(7.28-7.23)x(2.46+2.47)/2	0.12		
		(8.26-7.28)x(2.24+2.46)/2	2.30		
		(8.40-8.26)x(2.21+2.24)/2	0.31		
		(9.24-8.40)x(2.01+2.21)/2	1.77		
		(9.28-9.24)x(2.00+2.01)/2	0.08		
		(10.22-9.28)x(1.91+2.00)/2	1.84		
		(10.31-10.22)x(1.89+1.91)/2	0.17		
		A RIPORTARE mq	35.18		

STERRI E RIPORTI

N. SEZIONE PROG.	FIG.	ELEMENTI DI CALCOLO	AREA ELEMENTARE mq	AREA FIGURA mq	NOTE
		RIPORTO mq	35.18		
		(11.20-10.31)x(1.77+1.89)/2	1.63		
		(11.33-11.20)x(1.74+1.77)/2	0.23		
		(12.18-11.33)x(1.56+1.74)/2	1.40		
		(12.36-12.18)x(1.52+1.56)/2	0.28		
		(13.16-12.36)x(1.51+1.52)/2	1.21		
		(13.39-13.16)x(1.52+1.51)/2	0.35		
		(14.14-13.39)x(1.55+1.52)/2	1.15		
		(14.41-14.14)x(1.59+1.55)/2	0.42		
		(15.13-14.41)x(1.53+1.59)/2	1.12		
		(15.44-15.13)x(1.50+1.53)/2	0.47		
		(16.11-15.44)x(1.48+1.50)/2	1.00		
		(16.47-16.11)x(1.48+1.48)/2	0.53		
		(16.50-16.47)x(1.48+1.48)/2	0.04		
		(6.16-16.50)x(8.38+1.48)/2	-50.98		
		(5.09-6.16)x(8.38+8.38)/2	-8.97		
		(5.24-5.09)x(8.20+8.38)/2	1.24		
		(3.50-5.24)x(8.24+8.20)/2	-14.30		
		(0.00-3.50)x(8.33+8.24)/2	-29.00		
		(-3.50-0.00)x(8.24+8.33)/2	-29.00		
				86.00	
14 195.00	R1	(-8.53--8.55)x(2.77+2.77)/2	0.06		
		(-8.51--8.53)x(2.77+2.77)/2	0.06		
		(-8.48--8.51)x(2.76+2.77)/2	0.08		
		(-8.41--8.48)x(2.76+2.76)/2	0.19		
		(-8.25--8.41)x(2.75+2.76)/2	0.44		
		(-8.20--8.25)x(2.75+2.75)/2	0.14		
		(-7.84--8.20)x(2.72+2.75)/2	0.98		
		(-7.49--7.84)x(2.72+2.72)/2	0.95		
		(-6.82--7.49)x(2.71+2.72)/2	1.82		
		(-6.51--6.82)x(2.72+2.71)/2	0.84		
		(-5.79--6.51)x(2.72+2.72)/2	1.96		
		(-5.53--5.79)x(2.73+2.72)/2	0.71		
		(-4.76--5.53)x(2.75+2.73)/2	2.11		
		(-4.55--4.76)x(2.75+2.75)/2	0.58		
		(-3.74--4.55)x(2.78+2.75)/2	2.24		
		(-3.57--3.74)x(2.78+2.78)/2	0.47		
		(-2.71--3.57)x(2.78+2.78)/2	2.39		
		(-2.59--2.71)x(2.78+2.78)/2	0.33		
		(-1.68--2.59)x(2.78+2.78)/2	2.53		
		(-1.61--1.68)x(2.78+2.78)/2	0.19		
		(-0.66--1.61)x(2.80+2.78)/2	2.65		
		(-0.63--0.66)x(2.80+2.80)/2	0.08		
		(-0.07--0.63)x(2.81+2.80)/2	1.57		
		(0.37--0.07)x(2.81+2.81)/2	1.24		
		(0.39-0.37)x(2.81+2.81)/2	0.06		
		(1.40-0.39)x(2.82+2.81)/2	2.84		
		(1.47-1.40)x(2.82+2.82)/2	0.20		
		(2.42-1.47)x(2.80+2.82)/2	2.67		
		(2.54-2.42)x(2.80+2.80)/2	0.34		
		(3.45-2.54)x(2.80+2.80)/2	2.55		
		(3.62-3.45)x(2.79+2.80)/2	0.48		
		(4.47-3.62)x(2.78+2.79)/2	2.37		
		(5.25-4.47)x(2.77+2.78)/2	2.16		
		(5.37-5.25)x(2.77+2.77)/2	0.33		
		(5.42-5.37)x(2.77+2.77)/2	0.14		
		(5.44-5.42)x(2.77+2.77)/2	0.06		
		(5.45-5.44)x(2.77+2.77)/2	0.03		
		(5.46-5.45)x(2.77+2.77)/2	0.03		
		(5.49-5.46)x(2.77+2.77)/2	0.08		
		(5.52-5.49)x(2.82+2.77)/2	0.08		
		(5.53-5.52)x(2.77+2.82)/2	0.03		
		(5.59-5.53)x(2.78+2.77)/2	0.17		
		(5.61-5.59)x(2.78+2.78)/2	0.06		
		(5.70-5.61)x(2.80+2.78)/2	0.25		
		(5.77-5.70)x(2.80+2.80)/2	0.20		
		(5.82-5.77)x(2.80+2.80)/2	0.14		
		(6.01-5.82)x(2.86+2.80)/2	0.54		
		(6.47-6.01)x(2.73+2.86)/2	1.29		
		(6.53-6.47)x(2.71+2.73)/2	0.16		
		(6.85-6.53)x(2.67+2.71)/2	0.86		
		(7.55-6.85)x(2.56+2.67)/2	1.83		
		(7.93-7.55)x(2.51+2.56)/2	0.96		
		(8.58-7.93)x(2.40+2.51)/2	1.60		
		(9.00-8.58)x(2.33+2.40)/2	0.99		
		(9.61-9.00)x(2.22+2.33)/2	1.39		
		(10.08-9.61)x(2.15+2.22)/2	1.03		
		(10.63-10.08)x(2.09+2.15)/2	1.17		
		(11.16-10.63)x(2.03+2.09)/2	1.09		
		(11.66-11.16)x(1.92+2.03)/2	0.99		
		(12.23-11.66)x(1.83+1.92)/2	1.07		
		(12.69-12.23)x(1.64+1.83)/2	0.80		
		(13.31-12.69)x(1.57+1.64)/2	1.00		
		(13.71-13.31)x(1.53+1.57)/2	0.62		
		(14.39-13.71)x(1.62+1.53)/2	1.07		
		(14.74-14.39)x(1.75+1.62)/2	0.59		
		(15.46-14.74)x(1.72+1.75)/2	1.25		
		(15.76-15.46)x(1.74+1.72)/2	0.52		
		(16.54-15.76)x(1.72+1.74)/2	1.35		
		(16.79-16.54)x(1.71+1.72)/2	0.43		
		(17.62-16.79)x(1.73+1.71)/2	1.43		
		(17.63-17.62)x(1.73+1.73)/2	0.02		
		(6.16-17.63)x(9.38+1.73)/2	-63.72		
		(5.09-6.16)x(9.38+9.38)/2	-10.04		
		(5.24-5.09)x(9.20+9.38)/2	1.39		
		(3.50-5.24)x(9.24+9.20)/2	-16.04		
		(0.00-3.50)x(9.33+9.24)/2	-32.50		
		(-3.50-0.00)x(9.24+9.33)/2	-32.50		
		(-5.24--3.50)x(9.20+9.24)/2	-16.04		
		(-5.09--5.24)x(9.38+9.20)/2	1.39		
		(-6.16--5.09)x(9.38+9.38)/2	-10.04		
		(-8.55--6.16)x(7.78+9.38)/2	-20.51		
				134.68	
14bis 220.22	R1	(-8.53--8.55)x(2.77+2.77)/2	0.06		
		(-8.51--8.53)x(2.77+2.77)/2	0.06		
		(-8.48--8.51)x(2.76+2.77)/2	0.08		
		A RIPORTARE mq	0.20		

STERRI E RIPORTI

N. SEZIONE PROG.	FIG.	ELEMENTI DI CALCOLO	AREA ELEMENTARE mq	AREA FIGURA mq	NOTE
		RIPORTO mq	0.20		
		(-8.41--8.48)x(2.76+2.76)/2	0.19		
		(-8.25--8.41)x(2.75+2.76)/2	0.44		
		(-8.20--8.25)x(2.75+2.75)/2	0.14		
		(-7.84--8.20)x(2.72+2.75)/2	0.98		
		(-7.49--7.84)x(2.72+2.72)/2	0.95		
		(-6.82--7.49)x(2.71+2.72)/2	1.82		
		(-6.51--6.82)x(2.72+2.71)/2	0.84		
		(-5.79--6.51)x(2.72+2.72)/2	1.96		
		(-5.53--5.79)x(2.73+2.72)/2	0.71		
		(-4.76--5.53)x(2.75+2.73)/2	2.11		
		(-4.55--4.76)x(2.75+2.75)/2	0.58		
		(-3.74--4.55)x(2.78+2.75)/2	2.24		
		(-3.57--3.74)x(2.78+2.78)/2	0.47		
		(-2.71--3.57)x(2.78+2.78)/2	2.39		
		(-2.59--2.71)x(2.78+2.78)/2	0.33		
		(-1.68--2.59)x(2.78+2.78)/2	2.53		
		(-1.61--1.68)x(2.78+2.78)/2	0.19		
		(-0.66--1.61)x(2.80+2.78)/2	2.65		
		(-0.63--0.66)x(2.80+2.80)/2	0.08		
		(-0.07--0.63)x(2.81+2.80)/2	1.57		
		(0.37--0.07)x(2.81+2.81)/2	1.24		
		(0.39-0.37)x(2.81+2.81)/2	0.06		
		(1.40-0.39)x(2.82+2.81)/2	2.84		
		(1.47-1.40)x(2.82+2.82)/2	0.20		
		(2.42-1.47)x(2.80+2.82)/2	2.67		
		(2.54-2.42)x(2.80+2.80)/2	0.34		
		(3.45-2.54)x(2.80+2.80)/2	2.55		
		(3.62-3.45)x(2.79+2.80)/2	0.48		
		(4.47-3.62)x(2.78+2.79)/2	2.37		
		(5.25-4.47)x(2.77+2.78)/2	2.16		
		(5.37-5.25)x(2.77+2.77)/2	0.33		
		(5.42-5.37)x(2.77+2.77)/2	0.14		
		(5.44-5.42)x(2.77+2.77)/2	0.06		
		(5.45-5.44)x(2.77+2.77)/2	0.03		
		(5.46-5.45)x(2.77+2.77)/2	0.03		
		(5.49-5.46)x(2.77+2.77)/2	0.08		
		(5.52-5.49)x(2.82+2.77)/2	0.08		
		(5.53-5.52)x(2.77+2.82)/2	0.03		
		(5.59-5.53)x(2.78+2.77)/2	0.17		
		(5.61-5.59)x(2.78+2.78)/2	0.06		
		(5.70-5.61)x(2.80+2.78)/2	0.25		
		(5.77-5.70)x(2.80+2.80)/2	0.20		
		(5.82-5.77)x(2.80+2.80)/2	0.14		
		(6.01-5.82)x(2.86+2.80)/2	0.54		
		(6.47-6.01)x(2.73+2.86)/2	1.29		
		(6.53-6.47)x(2.71+2.73)/2	0.16		
		(6.85-6.53)x(2.67+2.71)/2	0.86		
		(7.55-6.85)x(2.56+2.67)/2	1.83		
		(7.93-7.55)x(2.51+2.56)/2	0.96		
		(8.58-7.93)x(2.40+2.51)/2	1.60		
		(9.00-8.58)x(2.33+2.40)/2	0.99		
		(9.61-9.00)x(2.22+2.33)/2	1.39		
		(10.08-9.61)x(2.15+2.22)/2	1.03		
		(10.63-10.08)x(2.09+2.15)/2	1.17		
		(11.16-10.63)x(2.03+2.09)/2	1.09		
		(11.66-11.16)x(1.92+2.03)/2	0.99		
		(12.23-11.66)x(1.83+1.92)/2	1.07		
		(12.69-12.23)x(1.64+1.83)/2	0.80		
		(13.31-12.69)x(1.57+1.64)/2	1.00		
		(13.71-13.31)x(1.53+1.57)/2	0.62		
		(14.39-13.71)x(1.62+1.53)/2	1.07		
		(14.74-14.39)x(1.75+1.62)/2	0.59		
		(15.46-14.74)x(1.72+1.75)/2	1.25		
		(15.76-15.46)x(1.74+1.72)/2	0.52		
		(16.54-15.76)x(1.72+1.74)/2	1.35		
		(16.79-16.54)x(1.71+1.72)/2	0.43		
		(17.62-16.79)x(1.73+1.71)/2	1.43		
		(17.63-17.62)x(1.73+1.73)/2	0.02		
		(6.16-17.63)x(9.38+1.73)/2	-63.72		
		(5.09-6.16)x(9.38+9.38)/2	-10.04		
		(5.24-5.09)x(9.20+9.38)/2	1.39		
		(3.50-5.24)x(9.24+9.20)/2	-16.04		
		(0.00-3.50)x(9.33+9.24)/2	-32.50		
		(-3.50-0.00)x(9.24+9.33)/2	-32.50		
		(-5.24--3.50)x(9.20+9.24)/2	-16.04		
		(-5.09--5.24)x(9.38+9.20)/2	1.39		
		(-6.16--5.09)x(9.38+9.38)/2	-10.04		
		(-8.55--6.16)x(7.78+9.38)/2	-20.51		
				134.68	

Il Direttore dei Lavori	L'Impresa	

N. SEZ.	FIG.	SUPERFICIE STERRO mq	SUPERFICIE RIPORTO mq	PUNTI DI PASSAGGIO (PROGRESSIVA m)	DISTANZA m	VOLUMI PARZIALI STERRO mc	VOLUMI PARZIALI RIPORTO mc	VOLUMI TOTALI STERRO mc	VOLUMI TOTALI RIPORTO mc
2	R1		0.45	(17.00)					
					13.00		2.925		
3	R0		0.00	(30.00)					
2	S1	0.70		(17.00)					
					13.00	4.550			
3	S0	0.00		(30.00)					
2	S2	4.25		(17.00)					
					13.00	54.080			
3	S1	0.18		(30.00)					
	S1	0.00							
	S2	3.89							
2	S3	0.08		(17.00)	9.45	0.378			
				0.08*13.00					
					9.45				
				0.08+0.03					
3	R1		0.03	(30.00)	3.55		0.053		
2	S4	0.36		(17.00)					
					13.00	2.340			
3	S3	0.00		(30.00)					
								61.348	2.978
3	S1	0.18		(30.00)					
	S1	0.00			7.11	0.640			
				0.18*15.00					
					7.11				
				0.18+0.20					
4	R1		0.20	(45.00)	7.89		0.789		
3	S2	3.89		(30.00)					
					15.00	53.625			
4	S1	0.00		(45.00)					
	S2	0.04							
	S3	3.22							
3	R1		0.03	(30.00)	3.21		0.048		
				0.03*15.00					
					3.21				
				0.03+0.11					
4	S4	0.11		(45.00)	11.79	0.648			
3	S3	0.00		(30.00)					
					15.00	0.150			
4	S5	0.02		(45.00)					
								55.063	0.837
4	R1		0.20	(45.00)					
					15.00		3.525		
5	R1		0.27	(60.00)					
4	S1	0.00		(45.00)	0.00	0.000			
				0.00*15.00					
					0.00				
				0.00+0.01					
5	R2		0.01	(60.00)	15.00		0.075		
4	S2	0.04		(45.00)	7.50	0.150			
				0.04*15.00					
					7.50				
				0.04+0.04					
5	R3		0.04	(60.00)	7.50		0.150		
4	S3	3.22		(45.00)					
	S4	0.11							
	S5	0.02							
					15.00	49.125			
5	S1	0.01		(60.00)					
	S2	0.12							
	S3	3.07							
								49.275	3.750
5	R1		0.27	(60.00)					
	R2		0.01						
					15.00		4.725		
6	R1		0.35	(75.00)					
5	R3		0.04	(60.00)					
					15.00		0.975		
6	R2		0.01	(75.00)					
	R2		0.08						
5	S1	0.01		(60.00)	7.50	0.037			
				0.01*15.00					
					7.50				
				0.01+0.01					
6	R3		0.01	(75.00)	7.50		0.037		
5	S2	0.12		(60.00)	8.18	0.491			
				0.12*15.00					
					8.18				
				0.12+0.10					
6	R4		0.10	(75.00)	6.82		0.341		
5	S3	3.07		(60.00)					
					15.00	38.775			
6	S1	2.10		(75.00)					
					A RIPORTARE :	39.303	6.078	165.686	7.565

N. SEZ.	FIG.	SUPERFICIE STERRO mq	SUPERFICIE RIPORTO mq	PUNTI DI PASSAGGIO (PROGRESSIVA m)	DISTANZA m	VOLUMI PARZIALI STERRO mc	VOLUMI PARZIALI RIPORTO mc	VOLUMI TOTALI STERRO mc	VOLUMI TOTALI RIPORTO mc
					RIPORTO :	39.303	6.078	165.686	7.565
								39.303	6.078
6	R1		0.35	(75.00)					
	R2		0.01						
	R2		0.08						
	R3		0.01						
					15.00		5.475		
7	R3		0.28	(90.00)					
6	R4		0.10	(75.00)					
					15.00		3.900		
7	R4		0.42	(90.00)					
6	S1	2.10		(75.00)	7.65	8.033			
				2.10*15.00 / 2.10+2.02	7.65				
7	R5		2.02	(90.00)	7.35		7.423		
6	S0	0.00		(75.00)					
					15.00	7.200			
7	S1	0.96		(90.00)					
6	R0		0.00	(75.00)					
					15.00		0.000		
7	R1		0.00	(90.00)					
6	R0		0.00	(75.00)					
					15.00		0.150		
7	R2		0.02	(90.00)					
								15.233	16.948
7	S1	0.96		(90.00)					
					15.00	7.200			
8	S0	0.00		(105.00)					
7	R1		0.00	(90.00)					
					15.00		0.000		
8	R0		0.00	(105.00)					
7	R2		0.02	(90.00)					
	R3		0.28						
	R4		0.42						
	R5		2.02						
					15.00		99.600		
8	R1		10.54	(105.00)					
								7.200	99.600
8	R1		10.54	(105.00)					
					15.00		347.250		
9	R1		11.26	(120.00)					
	R1		24.43						
	R1		0.07						
									347.250
9	R1		11.26	(120.00)					
					15.00		520.425		
10	R1		58.13	(135.00)					
9	R1		0.07	(120.00)					
					15.00		436.500		
10	R1		58.13	(135.00)					
									956.925
11	R1		68.88	(150.00)					
					15.00		1153.125		
12	R1		84.87	(165.00)					
									1153.125
12	R1		84.87	(165.00)					
					15.00		1281.525		
13	R1		86.00	(180.00)					
									1281.525
13	R1		86.00	(180.00)					
					15.00		1655.100		
14	R1		134.68	(195.00)					
									1655.100

Il Direttore dei Lavori	L'Impresa	Totale Articoli .....:	227.422	5524.116
		A dedurre quantita' precedenti:		
		Quantita' da contabilizzare ..:		

BONIFICA

N. SEZIONE PROG.	FIG.	ELEMENTI DI CALCOLO	AREA ELEMENTARE mq	AREA FIGURA mq	NOTE
2	BO1	(-9.60--9.70)x(1.13+1.18)/2	0.12		
17.00		(-9.48--9.60)x(1.16+1.13)/2	0.14		
		(-9.40--9.48)x(1.14+1.16)/2	0.09		
		(-9.39--9.40)x(1.14+1.14)/2	0.01		
		(-9.38--9.39)x(1.14+1.14)/2	0.01		
		(-9.37--9.38)x(1.14+1.14)/2	0.01		
		(-9.35--9.37)x(0.92+1.14)/2	0.02		
		(-9.30--9.35)x(1.12+0.92)/2	0.05		
		(-8.97--9.30)x(1.38+1.12)/2	0.41		
		(-8.79--8.97)x(1.43+1.38)/2	0.25		
		(-8.67--8.79)x(1.53+1.43)/2	0.18		
		(-8.03--8.67)x(1.94+1.53)/2	1.11		
		(-7.93--8.03)x(2.01+1.94)/2	0.20		
		(-8.03--7.93)x(1.44+1.51)/2	-0.15		
		(-8.67--8.03)x(1.03+1.44)/2	-0.79		
		(-8.79--8.67)x(0.93+1.03)/2	-0.12		
		(-8.97--8.79)x(0.88+0.93)/2	-0.16		
		(-9.30--8.97)x(0.62+0.88)/2	-0.25		
		(-9.35--9.30)x(0.42+0.62)/2	-0.03		
		(-9.37--9.35)x(0.64+0.42)/2	-0.01		
		(-9.38--9.37)x(0.64+0.64)/2	-0.01		
		(-9.39--9.38)x(0.64+0.64)/2	-0.01		
		(-9.40--9.39)x(0.64+0.64)/2	-0.01		
		(-9.48--9.40)x(0.66+0.64)/2	-0.05		
		(-9.60--9.48)x(0.63+0.66)/2	-0.08		
		(-9.70--9.60)x(0.68+0.63)/2	-0.07		
				0.86	
3	BO1	(6.15-5.90)x(1.88+2.00)/2	0.48		
30.00		(6.20-6.15)x(1.87+1.88)/2	0.09		
		(6.25-6.20)x(2.00+1.87)/2	0.10		
		(6.20-6.25)x(1.37+1.50)/2	-0.07		
		(6.15-6.20)x(1.38+1.37)/2	-0.07		
		(5.90-6.15)x(1.50+1.38)/2	-0.36		
				0.17	
3	BO2	(6.46-6.42)x(1.93+2.02)/2	0.08		
30.00		(6.54-6.46)x(2.04+1.93)/2	0.16		
		(6.68-6.54)x(2.08+2.04)/2	0.29		
		(6.54-6.68)x(1.54+1.58)/2	-0.22		
		(6.46-6.54)x(1.43+1.54)/2	-0.12		
		(6.42-6.46)x(1.52+1.43)/2	-0.06		
				0.13	
4	BO1	(-5.98--6.45)x(2.25+2.24)/2	1.06		
45.00		(-5.62--5.98)x(2.27+2.25)/2	0.81		
		(-5.58--5.62)x(2.27+2.27)/2	0.09		
		(-5.27--5.58)x(2.30+2.27)/2	0.71		
		(-5.20--5.27)x(2.30+2.30)/2	0.16		
		(-5.27--5.20)x(1.80+1.80)/2	-0.13		
		(-5.58--5.27)x(1.77+1.80)/2	-0.55		
		(-5.62--5.58)x(1.77+1.77)/2	-0.07		
		(-5.98--5.62)x(1.75+1.77)/2	-0.63		
		(-6.45--5.98)x(1.74+1.75)/2	-0.82		
				0.63	
5	BO1	(-5.70--6.52)x(2.31+2.30)/2	1.89		
60.00		(-5.66--5.70)x(2.31+2.31)/2	0.09		
		(-5.65--5.66)x(2.31+2.31)/2	0.02		
		(-5.45--5.65)x(2.32+2.31)/2	0.46		
		(-5.31--5.45)x(2.31+2.32)/2	0.32		
		(-5.29--5.31)x(2.34+2.31)/2	0.05		
		(-5.21--5.29)x(2.43+2.34)/2	0.19		
		(-5.20--5.21)x(2.41+2.43)/2	0.02		
		(-5.21--5.20)x(1.93+1.91)/2	-0.02		
		(-5.29--5.21)x(1.84+1.93)/2	-0.15		
		(-5.31--5.29)x(1.81+1.84)/2	-0.04		
		(-5.45--5.31)x(1.82+1.81)/2	-0.25		
		(-5.65--5.45)x(1.81+1.82)/2	-0.36		
		(-5.66--5.65)x(1.81+1.81)/2	-0.02		
		(-5.70--5.66)x(1.81+1.81)/2	-0.07		
		(-6.52--5.70)x(1.80+1.81)/2	-1.48		
				0.65	
5	BO2	(-5.16--5.20)x(2.35+2.40)/2	0.10		
60.00		(-5.14--5.16)x(2.32+2.35)/2	0.05		
		(-5.04--5.14)x(2.31+2.32)/2	0.23		
		(-4.89--5.04)x(2.31+2.31)/2	0.35		
		(-4.65--4.89)x(2.30+2.31)/2	0.55		
		(-4.63--4.65)x(2.30+2.30)/2	0.05		
		(-4.62--4.63)x(2.31+2.30)/2	0.02		
		(-4.55--4.62)x(2.34+2.31)/2	0.16		
		(-4.49--4.55)x(2.35+2.34)/2	0.14		
		(-4.55--4.49)x(1.84+1.85)/2	-0.11		
		(-4.62--4.55)x(1.81+1.84)/2	-0.13		
		(-4.63--4.62)x(1.80+1.81)/2	-0.02		
		(-4.65--4.63)x(1.80+1.80)/2	-0.04		
		(-4.89--4.65)x(1.81+1.80)/2	-0.43		
		(-5.04--4.89)x(1.81+1.81)/2	-0.27		
		(-5.14--5.04)x(1.82+1.81)/2	-0.18		
		(-5.16--5.14)x(1.85+1.82)/2	-0.04		
		(-5.20--5.16)x(1.90+1.85)/2	-0.08		
				0.35	
6	BO1	(-5.86--6.62)x(2.34+2.33)/2	1.77		
75.00		(-4.84--5.86)x(2.36+2.34)/2	2.40		
		(-4.83--4.84)x(2.36+2.36)/2	0.02		
		(-4.69--4.83)x(2.38+2.36)/2	0.33		
		(-4.63--4.69)x(2.40+2.38)/2	0.14		
		(-4.33--4.63)x(2.44+2.40)/2	0.73		
		(-4.32--4.33)x(2.44+2.44)/2	0.02		
		(-4.33--4.32)x(1.94+1.94)/2	-0.02		
		(-4.63--4.33)x(1.90+1.94)/2	-0.58		
		(-4.69--4.63)x(1.88+1.90)/2	-0.11		
		(-4.83--4.69)x(1.86+1.88)/2	-0.26		
		(-4.84--4.83)x(1.86+1.86)/2	-0.02		
		(-5.86--4.84)x(1.84+1.86)/2	-1.89		
		(-6.62--5.86)x(1.83+1.84)/2	-1.39		
				1.14	
6	BO2	(-4.23--4.31)x(2.43+2.43)/2	0.19		
75.00		(-4.22--4.23)x(2.43+2.43)/2	0.02		
		(-4.21--4.22)x(2.43+2.43)/2	0.02		
		(-4.19--4.21)x(2.43+2.43)/2	0.05		
		A RIPORTARE mq	0.28		

BONIFICA

N. SEZIONE PROG.	FIG.	ELEMENTI DI CALCOLO	AREA ELEMENTARE mq	AREA FIGURA mq	NOTE
		RIPORTO mq	0.28		
		(-4.16--4.19)x(2.42+2.43)/2	0.07		
		(-4.13--4.16)x(2.41+2.42)/2	0.07		
		(-4.08--4.13)x(2.40+2.41)/2	0.12		
		(-3.99--4.08)x(2.38+2.40)/2	0.22		
		(-3.81--3.99)x(2.34+2.38)/2	0.42		
		(-3.80--3.81)x(2.33+2.33)/2	0.02		
		(-2.78--3.80)x(2.32+2.33)/2	2.37		
		(-2.76--2.78)x(2.32+2.32)/2	0.05		
		(-2.35--2.76)x(2.32+2.32)/2	0.95		
		(-2.76--2.35)x(1.82+1.82)/2	-0.75		
		(-2.78--2.76)x(1.82+1.82)/2	-0.04		
		(-3.80--2.78)x(1.83+1.82)/2	-1.86		
		(-3.81--3.80)x(1.83+1.83)/2	-0.02		
		(-3.99--3.81)x(1.88+1.84)/2	-0.33		
		(-4.08--3.99)x(1.90+1.88)/2	-0.17		
		(-4.13--4.08)x(1.91+1.90)/2	-0.10		
		(-4.16--4.13)x(1.92+1.91)/2	-0.06		
		(-4.19--4.16)x(1.93+1.92)/2	-0.06		
		(-4.21--4.19)x(1.93+1.93)/2	-0.04		
		(-4.22--4.21)x(1.93+1.93)/2	-0.02		
		(-4.23--4.22)x(1.93+1.93)/2	-0.02		
		(-4.31--4.23)x(1.93+1.93)/2	-0.15		
				0.95	
7 90.00	B01	(-7.08--7.39)x(2.40+2.40)/2	0.74		
		(-7.01--7.08)x(2.40+2.40)/2	0.17		
		(-6.05--7.01)x(2.41+2.40)/2	2.31		
		(-5.95--6.05)x(2.41+2.41)/2	0.24		
		(-5.03--5.95)x(2.40+2.41)/2	2.21		
		(-4.88--5.03)x(2.40+2.40)/2	0.36		
		(-4.00--4.88)x(2.39+2.40)/2	2.11		
		(-3.82--4.00)x(2.39+2.39)/2	0.43		
		(-2.97--3.82)x(2.39+2.39)/2	2.03		
		(-2.76--2.97)x(2.38+2.39)/2	0.50		
		(-1.95--2.76)x(2.37+2.38)/2	1.92		
		(-1.70--1.95)x(2.37+2.37)/2	0.59		
		(-0.92--1.70)x(2.37+2.37)/2	1.85		
		(-0.63--0.92)x(2.37+2.37)/2	0.69		
		(0.10--0.63)x(2.36+2.37)/2	1.73		
		(0.43-0.10)x(2.36+2.36)/2	0.78		
		(1.13-0.43)x(2.36+2.36)/2	1.65		
		(1.49-1.13)x(2.36+2.36)/2	0.85		
		(2.15-1.49)x(2.35+2.36)/2	1.55		
		(2.56-2.15)x(2.34+2.35)/2	0.96		
		(3.18-2.56)x(2.33+2.34)/2	1.45		
		(3.62-3.18)x(2.32+2.33)/2	1.02		
		(4.21-3.62)x(2.31+2.32)/2	1.37		
		(4.76-4.21)x(2.29+2.31)/2	1.26		
		(5.23-4.76)x(2.28+2.29)/2	1.07		
		(5.74-5.23)x(2.27+2.28)/2	1.16		
		(6.26-5.74)x(2.26+2.27)/2	1.18		
		(6.28-6.26)x(2.27+2.26)/2	0.05		
		(6.30-6.28)x(2.29+2.27)/2	0.05		
		(6.31-6.30)x(2.35+2.29)/2	0.02		
		(6.32-6.31)x(2.30+2.35)/2	0.02		
		(6.68-6.32)x(2.29+2.30)/2	0.83		
		(6.73-6.68)x(2.29+2.29)/2	0.11		
		(6.91-6.73)x(2.33+2.29)/2	0.42		
		(6.96-6.91)x(2.33+2.33)/2	0.12		
		(7.18-6.96)x(2.16+2.33)/2	0.49		
		(7.28-7.18)x(2.08+2.16)/2	0.21		
		(7.32-7.28)x(2.09+2.08)/2	0.08		
		(7.38-7.32)x(2.13+2.09)/2	0.13		
		(7.41-7.38)x(2.14+2.13)/2	0.06		
		(7.43-7.41)x(2.17+2.14)/2	0.04		
		(7.51-7.43)x(2.28+2.17)/2	0.18		
		(7.43-7.51)x(1.67+1.78)/2	-0.14		
		(7.41-7.43)x(1.64+1.67)/2	-0.03		
		(7.38-7.41)x(1.63+1.64)/2	-0.05		
		(7.32-7.38)x(1.59+1.63)/2	-0.10		
		(7.28-7.32)x(1.58+1.59)/2	-0.06		
		(7.18-7.28)x(1.66+1.58)/2	-0.16		
		(6.96-7.18)x(1.83+1.66)/2	-0.38		
		(6.91-6.96)x(1.83+1.83)/2	-0.09		
		(6.73-6.91)x(1.79+1.83)/2	-0.33		
		(6.68-6.73)x(1.79+1.79)/2	-0.09		
		(6.32-6.68)x(1.80+1.79)/2	-0.65		
		(6.31-6.32)x(1.85+1.80)/2	-0.02		
		(6.30-6.31)x(1.79+1.85)/2	-0.02		
		(6.28-6.30)x(1.77+1.79)/2	-0.04		
		(6.26-6.28)x(1.76+1.77)/2	-0.04		
		(5.74-6.26)x(1.77+1.76)/2	-0.92		
		(5.23-5.74)x(1.78+1.77)/2	-0.91		
		(4.76-5.23)x(1.79+1.78)/2	-0.84		
		(4.21-4.76)x(1.81+1.79)/2	-0.99		
		(3.62-4.21)x(1.82+1.81)/2	-1.07		
		(3.18-3.62)x(1.83+1.82)/2	-0.80		
		(2.56-3.18)x(1.84+1.83)/2	-1.14		
		(2.15-2.56)x(1.85+1.84)/2	-0.76		
		(1.49-2.15)x(1.86+1.85)/2	-1.22		
		(1.13-1.49)x(1.86+1.86)/2	-0.67		
		(0.43-1.13)x(1.86+1.86)/2	-1.30		
		(0.10-0.43)x(1.86+1.86)/2	-0.61		
		(-0.63-0.10)x(1.87+1.86)/2	-1.36		
		(-0.92--0.63)x(1.87+1.87)/2	-0.54		
		(-1.70--0.92)x(1.87+1.87)/2	-1.46		
		(-1.95--1.70)x(1.87+1.87)/2	-0.47		
		(-2.76--1.95)x(1.88+1.87)/2	-1.52		
		(-2.97--2.76)x(1.89+1.88)/2	-0.40		
		(-3.82--2.97)x(1.89+1.89)/2	-1.61		
		(-4.00--3.82)x(1.89+1.89)/2	-0.34		
		(-4.88--4.00)x(1.90+1.89)/2	-1.67		
		(-5.03--4.88)x(1.90+1.90)/2	-0.29		
		(-5.95--5.03)x(1.91+1.90)/2	-1.75		
		(-6.05--5.95)x(1.91+1.91)/2	-0.19		
		(-7.01--6.05)x(1.90+1.91)/2	-1.83		
		A RIPORTARE mq	8.13		

BONIFICA

N. SEZIONE PROG.	FIG.	ELEMENTI DI CALCOLO	AREA ELEMENTARE mq	AREA FIGURA mq	NOTE
		RIPORTO mq	8.13		
		(-7.08--7.01)x(1.90+1.90)/2	-0.13		
		(-7.39--7.08)x(1.90+1.90)/2	-0.59		
				7.41	
8	BO1	(-7.09--7.35)x(2.46+2.46)/2	0.64		
105.00		(-6.71--7.09)x(2.45+2.46)/2	0.93		
		(-6.11--6.71)x(2.45+2.45)/2	1.47		
		(-5.68--6.11)x(2.45+2.45)/2	1.05		
		(-5.12--5.68)x(2.45+2.45)/2	1.37		
		(-4.66--5.12)x(2.44+2.45)/2	1.12		
		(-4.14--4.66)x(2.44+2.44)/2	1.27		
		(-3.63--4.14)x(2.43+2.44)/2	1.24		
		(-3.16--3.63)x(2.43+2.43)/2	1.14		
		(-2.61--3.16)x(2.43+2.43)/2	1.34		
		(-2.18--2.61)x(2.43+2.43)/2	1.04		
		(-1.58--2.18)x(2.43+2.43)/2	1.46		
		(-1.20--1.58)x(2.42+2.43)/2	0.92		
		(-0.55--1.20)x(2.41+2.42)/2	1.57		
		(-0.22--0.55)x(2.41+2.41)/2	0.80		
		(0.47--0.22)x(2.40+2.41)/2	1.66		
		(0.76-0.47)x(2.40+2.40)/2	0.70		
		(1.50-0.76)x(2.39+2.40)/2	1.77		
		(1.74-1.50)x(2.38+2.39)/2	0.57		
		(2.53-1.74)x(2.36+2.38)/2	1.87		
		(2.72-2.53)x(2.36+2.36)/2	0.45		
		(3.55-2.72)x(2.35+2.36)/2	1.95		
		(4.47-3.55)x(2.36+2.35)/2	2.17		
		(4.58-4.47)x(2.37+2.36)/2	0.26		
		(4.68-4.58)x(2.36+2.37)/2	0.24		
		(5.61-4.68)x(2.37+2.36)/2	2.20		
		(5.62-5.61)x(2.37+2.37)/2	0.02		
		(5.77-5.62)x(2.40+2.37)/2	0.36		
		(5.86-5.77)x(2.40+2.40)/2	0.22		
		(5.92-5.86)x(2.41+2.40)/2	0.14		
		(6.12-5.92)x(2.45+2.41)/2	0.49		
		(6.63-6.12)x(2.31+2.45)/2	1.21		
		(6.64-6.63)x(2.31+2.31)/2	0.02		
		(6.85-6.64)x(2.29+2.31)/2	0.48		
		(7.62-6.85)x(2.22+2.29)/2	1.74		
		(7.66-7.62)x(2.22+2.22)/2	0.09		
		(7.72-7.66)x(2.22+2.22)/2	0.13		
		(7.66-7.72)x(1.72+1.72)/2	-0.10		
		(7.62-7.66)x(1.72+1.72)/2	-0.07		
		(6.85-7.62)x(1.79+1.72)/2	-1.35		
		(6.64-6.85)x(1.81+1.79)/2	-0.38		
		(6.63-6.64)x(1.81+1.81)/2	-0.02		
		(6.12-6.63)x(1.95+1.81)/2	-0.96		
		(5.92-6.12)x(1.91+1.95)/2	-0.39		
		(5.86-5.92)x(1.90+1.91)/2	-0.11		
		(5.77-5.86)x(1.90+1.90)/2	-0.17		
		(5.62-5.77)x(1.87+1.90)/2	-0.28		
		(5.61-5.62)x(1.87+1.87)/2	-0.02		
		(4.68-5.61)x(1.86+1.87)/2	-1.73		
		(4.58-4.68)x(1.87+1.86)/2	-0.19		
		(4.47-4.58)x(1.86+1.87)/2	-0.21		
		(3.55-4.47)x(1.85+1.86)/2	-1.71		
		(2.72-3.55)x(1.86+1.85)/2	-1.54		
		(2.53-2.72)x(1.86+1.86)/2	-0.35		
		(1.74-2.53)x(1.88+1.86)/2	-1.48		
		(1.50-1.74)x(1.89+1.88)/2	-0.45		
		(0.76-1.50)x(1.90+1.89)/2	-1.40		
		(0.47-0.76)x(1.90+1.90)/2	-0.55		
		(-0.22-0.47)x(1.91+1.90)/2	-1.31		
		(-0.55--0.22)x(1.91+1.91)/2	-0.63		
		(-1.20--0.55)x(1.92+1.91)/2	-1.24		
		(-1.58--1.20)x(1.93+1.92)/2	-0.73		
		(-2.18--1.58)x(1.93+1.93)/2	-1.16		
		(-2.61--2.18)x(1.93+1.93)/2	-0.83		
		(-3.16--2.61)x(1.93+1.93)/2	-1.06		
		(-3.63--3.16)x(1.93+1.93)/2	-0.91		
		(-4.14--3.63)x(1.94+1.93)/2	-0.99		
		(-4.66--4.14)x(1.94+1.94)/2	-1.01		
		(-5.12--4.66)x(1.95+1.94)/2	-0.89		
		(-5.68--5.12)x(1.95+1.95)/2	-1.09		
		(-6.11--5.68)x(1.95+1.95)/2	-0.84		
		(-6.71--6.11)x(1.95+1.95)/2	-1.17		
		(-7.09--6.71)x(1.96+1.95)/2	-0.74		
		(-7.35--7.09)x(1.96+1.96)/2	-0.51		
				7.53	
9	BO1	(7.38-7.86)x(1.98+1.97)/2	-0.95		
120.00		(6.96-7.38)x(1.99+1.98)/2	-0.83		
		(6.56-6.96)x(2.01+1.99)/2	-0.80		
		(5.99-6.56)x(2.02+2.01)/2	-1.15		
		(5.97-5.99)x(2.00+2.05)/2	-0.04		
		(5.93-5.97)x(1.97+2.00)/2	-0.08		
		(5.22-5.93)x(1.96+1.97)/2	-1.40		
		(4.90-5.22)x(1.96+1.96)/2	-0.63		
		(4.15-4.90)x(1.96+1.96)/2	-1.47		
		(3.88-4.15)x(1.96+1.96)/2	-0.53		
		(3.63-3.88)x(1.96+1.96)/2	-0.49		
		(2.85-3.63)x(1.97+1.96)/2	-1.53		
		(1.99-2.85)x(1.99+1.97)/2	-1.70		
		(1.82-1.99)x(1.99+1.99)/2	-0.34		
		(0.92-1.82)x(2.01+1.99)/2	-1.80		
		(0.80-0.92)x(2.01+2.01)/2	-0.24		
		(-0.16-0.80)x(2.01+2.01)/2	-1.93		
		(-0.23--0.16)x(2.01+2.01)/2	-0.14		
		(-1.24--0.23)x(2.01+2.01)/2	-2.03		
		(-1.25--1.24)x(2.01+2.01)/2	-0.02		
		(-1.62--1.25)x(2.00+2.01)/2	-0.74		
		(-2.25--1.62)x(1.99+2.00)/2	-1.26		
		(-2.28--2.25)x(1.99+1.99)/2	-0.06		
		(-3.23--2.28)x(1.99+1.99)/2	-1.89		
		(-3.31--3.23)x(1.99+1.99)/2	-0.16		
		(-4.21--3.31)x(1.99+1.99)/2	-1.79		
		(-4.33--4.21)x(1.99+1.99)/2	-0.24		
		A RIPORTARE mq	-24.24		

BONIFICA

N. SEZIONE PROG.	FIG.	ELEMENTI DI CALCOLO	AREA ELEMENTARE mq	AREA FIGURA mq	NOTE
		RIPORTO mq	-24.24		
		(-5.19--4.33)x(1.95+1.99)/2	-1.69		
		(-5.36--5.19)x(1.94+1.95)/2	-0.33		
		(-6.17--5.36)x(1.92+1.94)/2	-1.56		
		(-6.39--6.17)x(1.93+1.92)/2	-0.42		
		(-7.15--6.39)x(1.96+1.93)/2	-1.48		
		(-7.41--7.15)x(1.97+1.96)/2	-0.51		
		(-8.13--7.41)x(1.99+1.97)/2	-1.43		
		(-8.44--8.13)x(1.98+1.99)/2	-0.62		
		(-8.70--8.44)x(1.98+1.98)/2	-0.51		
		(7.86--8.70)x(1.97+2.48)/2	36.85		
				4.06	
9	BO1	(-8.44--8.70)x(2.48+2.48)/2	0.64		
120.00		(-8.13--8.44)x(2.49+2.48)/2	0.77		
		(-7.41--8.13)x(2.47+2.49)/2	1.79		
		(-7.15--7.41)x(2.46+2.47)/2	0.64		
		(-6.39--7.15)x(2.43+2.46)/2	1.86		
		(-6.17--6.39)x(2.42+2.43)/2	0.53		
		(-5.36--6.17)x(2.44+2.42)/2	1.97		
		(-5.19--5.36)x(2.45+2.44)/2	0.42		
		(-4.33--5.19)x(2.49+2.45)/2	2.12		
		(-4.21--4.33)x(2.49+2.49)/2	0.30		
		(-3.31--4.21)x(2.49+2.49)/2	2.24		
		(-3.23--3.31)x(2.49+2.49)/2	0.20		
		(-2.28--3.23)x(2.49+2.49)/2	2.37		
		(-2.25--2.28)x(2.49+2.49)/2	0.07		
		(-1.62--2.25)x(2.50+2.49)/2	1.57		
		(-1.25--1.62)x(2.51+2.50)/2	0.93		
		(-1.24--1.25)x(2.51+2.51)/2	0.03		
		(-0.23--1.24)x(2.51+2.51)/2	2.54		
		(-0.16--0.23)x(2.51+2.51)/2	0.18		
		(0.80--0.16)x(2.51+2.51)/2	2.41		
		(0.92-0.80)x(2.51+2.51)/2	0.30		
		(1.82-0.92)x(2.49+2.51)/2	2.25		
		(1.99-1.82)x(2.49+2.49)/2	0.42		
		(2.85-1.99)x(2.47+2.49)/2	2.13		
		(3.63-2.85)x(2.46+2.47)/2	1.92		
		(3.88-3.63)x(2.46+2.46)/2	0.61		
		(4.15-3.88)x(2.46+2.46)/2	0.66		
		(4.90-4.15)x(2.46+2.46)/2	1.84		
		(5.22-4.90)x(2.46+2.46)/2	0.79		
		(5.93-5.22)x(2.47+2.46)/2	1.75		
		(5.97-5.93)x(2.50+2.47)/2	0.10		
		(5.99-5.97)x(2.55+2.50)/2	0.05		
		(6.56-5.99)x(2.51+2.52)/2	1.43		
		(6.96-6.56)x(2.49+2.51)/2	1.00		
		(7.38-6.96)x(2.48+2.49)/2	1.04		
		(7.86-7.38)x(2.47+2.48)/2	1.19		
		(-8.70-7.86)x(2.48+2.47)/2	-40.99		
				0.07	
10	BO1	(-10.17--10.29)x(2.47+2.47)/2	0.30		
135.00		(-9.97--10.17)x(2.53+2.47)/2	0.50		
		(-9.45--9.97)x(2.64+2.53)/2	1.34		
		(-9.43--9.45)x(2.66+2.64)/2	0.05		
		(-9.40--9.43)x(2.60+2.63)/2	0.08		
		(-9.35--9.40)x(2.57+2.60)/2	0.13		
		(-9.28--9.35)x(2.53+2.57)/2	0.18		
		(-9.15--9.28)x(2.47+2.53)/2	0.32		
		(-9.14--9.15)x(2.46+2.47)/2	0.02		
		(-9.07--9.14)x(2.49+2.47)/2	0.17		
		(-9.04--9.07)x(2.52+2.49)/2	0.08		
		(-8.81--9.04)x(2.60+2.52)/2	0.59		
		(-8.66--8.81)x(2.55+2.60)/2	0.39		
		(-8.62--8.66)x(2.55+2.55)/2	0.10		
		(-8.57--8.62)x(2.54+2.55)/2	0.13		
		(-8.49--8.57)x(2.52+2.54)/2	0.20		
		(-8.36--8.49)x(2.49+2.52)/2	0.33		
		(-8.14--8.36)x(2.48+2.49)/2	0.55		
		(-8.11--8.14)x(2.47+2.48)/2	0.07		
		(-7.22--8.11)x(2.49+2.47)/2	2.21		
		(-7.09--7.22)x(2.49+2.49)/2	0.32		
		(-6.24--7.09)x(2.49+2.49)/2	2.12		
		(-6.06--6.24)x(2.49+2.49)/2	0.45		
		(-5.26--6.06)x(2.46+2.49)/2	1.98		
		(-5.04--5.26)x(2.46+2.46)/2	0.54		
		(-4.28--5.04)x(2.49+2.46)/2	1.88		
		(-4.01--4.28)x(2.50+2.49)/2	0.67		
		(-3.30--4.01)x(2.52+2.50)/2	1.78		
		(-2.98--3.30)x(2.52+2.52)/2	0.81		
		(-2.32--2.98)x(2.52+2.52)/2	1.66		
		(-1.96--2.32)x(2.51+2.52)/2	0.91		
		(-1.34--1.96)x(2.52+2.51)/2	1.56		
		(-0.93--1.34)x(2.52+2.52)/2	1.03		
		(-0.36--0.93)x(2.49+2.52)/2	1.43		
		(0.10--0.36)x(2.48+2.49)/2	1.14		
		(0.62-0.10)x(2.48+2.48)/2	1.29		
		(1.12-0.62)x(2.48+2.48)/2	1.24		
		(1.60-1.12)x(2.51+2.48)/2	1.20		
		(2.15-1.60)x(2.52+2.51)/2	1.38		
		(2.75-2.15)x(2.51+2.52)/2	1.51		
		(3.18-2.75)x(2.50+2.51)/2	1.08		
		(3.56-3.18)x(2.49+2.50)/2	0.95		
		(4.20-3.56)x(2.47+2.49)/2	1.59		
		(4.54-4.20)x(2.46+2.47)/2	0.84		
		(5.23-4.54)x(2.44+2.46)/2	1.69		
		(5.49-5.23)x(2.50+2.44)/2	0.64		
		(5.63-5.49)x(2.51+2.50)/2	0.35		
		(5.90-5.63)x(2.53+2.51)/2	0.68		
		(5.91-5.90)x(2.54+2.53)/2	0.03		
		(5.92-5.91)x(2.53+2.53)/2	0.03		
		(5.93-5.92)x(2.53+2.53)/2	0.03		
		(5.95-5.93)x(2.52+2.53)/2	0.05		
		(5.97-5.95)x(2.52+2.52)/2	0.05		
		(6.01-5.97)x(2.51+2.52)/2	0.10		
		(6.09-6.01)x(2.49+2.51)/2	0.20		
		(6.26-6.09)x(2.44+2.49)/2	0.42		
		A RIPORTARE mq	41.37		

BONIFICA

N. SEZIONE PROG.	FIG.	ELEMENTI DI CALCOLO	AREA ELEMENTARE mq	AREA FIGURA mq	NOTE
		RIPORTO mq	41.37		
		(6.28-6.26)x(2.44+2.44)/2	0.05		
		(6.43-6.28)x(2.50+2.44)/2	0.37		
		(6.48-6.43)x(2.51+2.51)/2	0.13		
		(6.91-6.48)x(2.54+2.51)/2	1.09		
		(7.02-6.91)x(2.53+2.54)/2	0.28		
		(7.22-7.02)x(2.51+2.53)/2	0.50		
		(7.28-7.22)x(2.50+2.51)/2	0.15		
		(7.49-7.28)x(2.50+2.50)/2	0.52		
		(8.31-7.49)x(2.48+2.50)/2	2.04		
		(8.47-8.31)x(2.46+2.48)/2	0.40		
		(9.33-8.47)x(2.34+2.46)/2	2.06		
		(9.37-9.33)x(2.32+2.34)/2	0.09		
		(9.58-9.37)x(2.25+2.32)/2	0.48		
		(9.67-9.58)x(2.24+2.25)/2	0.20		
		(9.73-9.67)x(2.20+2.24)/2	0.13		
		(9.77-9.73)x(2.15+2.20)/2	0.09		
		(9.80-9.77)x(2.14+2.15)/2	0.06		
		(9.82-9.80)x(2.12+2.14)/2	0.04		
		(9.83-9.82)x(2.13+2.12)/2	0.02		
		(9.84-9.83)x(2.14+2.13)/2	0.02		
		(9.89-9.84)x(2.10+2.14)/2	0.11		
		(10.07-9.89)x(2.04+2.10)/2	0.37		
		(10.09-10.07)x(2.02+2.04)/2	0.04		
		(10.13-10.09)x(2.11+2.02)/2	0.08		
		(10.20-10.13)x(2.10+2.11)/2	0.15		
		(10.34-10.20)x(1.97+2.10)/2	0.28		
		(10.36-10.34)x(1.97+1.97)/2	0.04		
		(10.43-10.36)x(1.93+1.97)/2	0.14		
		(11.39-10.43)x(1.37+1.93)/2	1.58		
		(11.41-11.39)x(1.37+1.37)/2	0.03		
		(11.85-11.41)x(1.33+1.37)/2	0.59		
		(12.39-11.85)x(1.30+1.33)/2	0.71		
		(12.41-12.39)x(1.30+1.30)/2	0.03		
		(13.37-12.41)x(1.64+1.30)/2	1.41		
		(13.44-13.37)x(1.66+1.64)/2	0.12		
		(14.35-13.44)x(1.66+1.66)/2	1.51		
		(14.47-14.35)x(1.67+1.66)/2	0.20		
		(15.33-14.47)x(1.59+1.67)/2	1.40		
		(15.49-15.33)x(1.57+1.59)/2	0.25		
		(15.62-15.49)x(1.57+1.57)/2	0.20		
		(15.49-15.62)x(1.07+1.07)/2	-0.14		
		(15.33-15.49)x(1.09+1.07)/2	-0.17		
		(14.47-15.33)x(1.17+1.09)/2	-0.97		
		(14.35-14.47)x(1.16+1.17)/2	-0.14		
		(13.44-14.35)x(1.16+1.16)/2	-1.06		
		(13.37-13.44)x(1.14+1.16)/2	-0.08		
		(12.41-13.37)x(0.80+1.14)/2	-0.93		
		(12.39-12.41)x(0.80+0.80)/2	-0.02		
		(11.85-12.39)x(0.83+0.80)/2	-0.44		
		(11.41-11.85)x(0.87+0.83)/2	-0.37		
		(11.39-11.41)x(0.87+0.87)/2	-0.02		
		(10.43-11.39)x(1.43+0.87)/2	-1.10		
		(10.36-10.43)x(1.47+1.43)/2	-0.10		
		(10.34-10.36)x(1.47+1.47)/2	-0.03		
		(10.20-10.34)x(1.60+1.47)/2	-0.21		
		(10.13-10.20)x(1.61+1.60)/2	-0.11		
		(10.09-10.13)x(1.52+1.61)/2	-0.06		
		(10.07-10.09)x(1.54+1.52)/2	-0.03		
		(9.89-10.07)x(1.60+1.54)/2	-0.28		
		(9.84-9.89)x(1.64+1.60)/2	-0.08		
		(9.83-9.84)x(1.63+1.64)/2	-0.02		
		(9.82-9.83)x(1.62+1.63)/2	-0.02		
		(9.80-9.82)x(1.64+1.62)/2	-0.03		
		(9.77-9.80)x(1.65+1.64)/2	-0.05		
		(9.73-9.77)x(1.70+1.65)/2	-0.07		
		(9.67-9.73)x(1.74+1.70)/2	-0.10		
		(9.58-9.67)x(1.75+1.74)/2	-0.16		
		(9.37-9.58)x(1.82+1.75)/2	-0.37		
		(9.33-9.37)x(1.84+1.82)/2	-0.07		
		(8.47-9.33)x(1.96+1.84)/2	-1.63		
		(8.31-8.47)x(1.98+1.96)/2	-0.32		
		(7.49-8.31)x(2.00+1.98)/2	-1.63		
		(7.28-7.49)x(2.00+2.00)/2	-0.42		
		(7.22-7.28)x(2.01+2.00)/2	-0.12		
		(7.02-7.22)x(2.03+2.01)/2	-0.40		
		(6.91-7.02)x(2.04+2.03)/2	-0.22		
		(6.48-6.91)x(2.01+2.04)/2	-0.87		
		(6.43-6.48)x(2.01+2.01)/2	-0.10		
		(6.28-6.43)x(1.94+2.00)/2	-0.30		
		(6.26-6.28)x(1.94+1.94)/2	-0.04		
		(6.09-6.26)x(1.99+1.94)/2	-0.33		
		(6.01-6.09)x(2.01+1.99)/2	-0.16		
		(5.97-6.01)x(2.02+2.01)/2	-0.08		
		(5.95-5.97)x(2.02+2.02)/2	-0.04		
		(5.93-5.95)x(2.03+2.02)/2	-0.04		
		(5.92-5.93)x(2.03+2.03)/2	-0.02		
		(5.91-5.92)x(2.03+2.03)/2	-0.02		
		(5.90-5.91)x(2.03+2.04)/2	-0.02		
		(5.63-5.90)x(2.01+2.03)/2	-0.55		
		(5.49-5.63)x(2.00+2.01)/2	-0.28		
		(5.23-5.49)x(1.94+2.00)/2	-0.51		
		(4.54-5.23)x(1.96+1.94)/2	-1.35		
		(4.20-4.54)x(1.97+1.96)/2	-0.67		
		(3.56-4.20)x(1.99+1.97)/2	-1.27		
		(3.18-3.56)x(2.00+1.99)/2	-0.76		
		(2.75-3.18)x(2.01+2.00)/2	-0.86		
		(2.15-2.75)x(2.02+2.01)/2	-1.21		
		(1.60-2.15)x(2.01+2.02)/2	-1.11		
		(1.12-1.60)x(1.98+2.01)/2	-0.96		
		(0.62-1.12)x(1.98+1.98)/2	-0.99		
		(0.10-0.62)x(1.98+1.98)/2	-1.03		
		(-0.36-0.10)x(1.99+1.98)/2	-0.91		
		(-0.93--0.36)x(2.02+1.99)/2	-1.14		
		(-1.34--0.93)x(2.02+2.02)/2	-0.83		
		(-1.96--1.34)x(2.01+2.02)/2	-1.25		
		A RIPORTARE mq	29.66		

BONIFICA

N. SEZIONE PROG.	FIG.	ELEMENTI DI CALCOLO	AREA ELEMENTARE mq	AREA FIGURA mq	NOTE
		RIPORTO mq	29.66		
		(-2.32--1.96)x(2.02+2.01)/2	-0.73		
		(-2.98--2.32)x(2.02+2.02)/2	-1.33		
		(-3.30--2.98)x(2.02+2.02)/2	-0.65		
		(-4.01--3.30)x(2.00+2.02)/2	-1.43		
		(-4.28--4.01)x(1.99+2.00)/2	-0.54		
		(-5.04--4.28)x(1.96+1.99)/2	-1.50		
		(-5.26--5.04)x(1.96+1.96)/2	-0.43		
		(-6.06--5.26)x(1.99+1.96)/2	-1.58		
		(-6.24--6.06)x(1.99+1.99)/2	-0.36		
		(-7.09--6.24)x(1.99+1.99)/2	-1.69		
		(-7.22--7.09)x(1.99+1.99)/2	-0.26		
		(-8.11--7.22)x(1.97+1.99)/2	-1.76		
		(-8.14--8.11)x(1.98+1.97)/2	-0.06		
		(-8.36--8.14)x(1.99+1.98)/2	-0.44		
		(-8.49--8.36)x(2.02+1.99)/2	-0.26		
		(-8.57--8.49)x(2.04+2.02)/2	-0.16		
		(-8.62--8.57)x(2.05+2.04)/2	-0.10		
		(-8.66--8.62)x(2.05+2.05)/2	-0.08		
		(-8.81--8.66)x(2.10+2.05)/2	-0.31		
		(-9.04--8.81)x(2.02+2.10)/2	-0.47		
		(-9.07--9.04)x(1.99+2.02)/2	-0.06		
		(-9.14--9.07)x(1.97+1.99)/2	-0.14		
		(-9.15--9.14)x(1.97+1.96)/2	-0.02		
		(-9.28--9.15)x(2.03+1.97)/2	-0.26		
		(-9.35--9.28)x(2.07+2.03)/2	-0.14		
		(-9.40--9.35)x(2.10+2.07)/2	-0.10		
		(-9.43--9.40)x(2.13+2.10)/2	-0.06		
		(-9.45--9.43)x(2.14+2.16)/2	-0.04		
		(-9.97--9.45)x(2.03+2.14)/2	-1.08		
		(-10.17--9.97)x(1.97+2.03)/2	-0.40		
		(-10.29--10.17)x(1.97+1.97)/2	-0.24		
				12.98	
11 150.00	BO1	(-11.57--11.70)x(2.58+2.58)/2	0.34		
		(-10.87--11.57)x(2.53+2.58)/2	1.79		
		(-10.49--10.87)x(2.53+2.53)/2	0.96		
		(-9.84--10.49)x(2.51+2.53)/2	1.64		
		(-9.72--9.84)x(2.54+2.51)/2	0.30		
		(-9.59--9.72)x(2.58+2.54)/2	0.33		
		(-9.42--9.59)x(2.64+2.58)/2	0.44		
		(-9.37--9.42)x(2.64+2.64)/2	0.13		
		(-9.36--9.37)x(2.65+2.64)/2	0.03		
		(-9.28--9.36)x(2.65+2.65)/2	0.21		
		(-9.22--9.28)x(2.63+2.65)/2	0.16		
		(-9.08--9.22)x(2.60+2.63)/2	0.37		
		(-9.04--9.08)x(2.58+2.60)/2	0.10		
		(-8.93--9.04)x(2.54+2.58)/2	0.28		
		(-8.82--8.93)x(2.50+2.54)/2	0.28		
		(-8.34--8.82)x(2.50+2.50)/2	1.20		
		(-7.79--8.34)x(2.50+2.50)/2	1.37		
		(-7.26--7.79)x(2.51+2.50)/2	1.33		
		(-6.76--7.26)x(2.52+2.51)/2	1.26		
		(-6.19--6.76)x(2.51+2.52)/2	1.43		
		(-5.74--6.19)x(2.51+2.51)/2	1.13		
		(-5.11--5.74)x(2.52+2.51)/2	1.58		
		(-4.71--5.11)x(2.53+2.52)/2	1.01		
		(-4.03--4.71)x(2.53+2.53)/2	1.72		
		(-3.68--4.03)x(2.53+2.53)/2	0.89		
		(-2.95--3.68)x(2.53+2.53)/2	1.85		
		(-2.66--2.95)x(2.53+2.53)/2	0.73		
		(-1.88--2.66)x(2.55+2.53)/2	1.98		
		(-1.63--1.88)x(2.55+2.55)/2	0.64		
		(-0.80--1.63)x(2.56+2.55)/2	2.12		
		(-0.61--0.80)x(2.56+2.56)/2	0.49		
		(0.28--0.61)x(2.55+2.56)/2	2.27		
		(0.42-0.28)x(2.55+2.55)/2	0.36		
		(1.35-0.42)x(2.53+2.55)/2	2.36		
		(1.45-1.35)x(2.53+2.53)/2	0.25		
		(1.53-1.45)x(2.53+2.53)/2	0.20		
		(2.47-1.53)x(2.53+2.53)/2	2.38		
		(3.39-2.47)x(2.54+2.53)/2	2.33		
		(3.50-3.39)x(2.54+2.54)/2	0.28		
		(4.48-3.50)x(2.52+2.54)/2	2.48		
		(4.53-4.48)x(2.51+2.52)/2	0.13		
		(5.46-4.53)x(2.51+2.51)/2	2.33		
		(5.55-5.46)x(2.51+2.51)/2	0.23		
		(5.56-5.55)x(2.51+2.51)/2	0.03		
		(5.82-5.56)x(2.59+2.51)/2	0.66		
		(6.16-5.82)x(2.59+2.59)/2	0.88		
		(6.24-6.16)x(2.56+2.59)/2	0.21		
		(6.32-6.24)x(2.56+2.56)/2	0.20		
		(6.33-6.32)x(2.56+2.59)/2	0.03		
		(6.34-6.33)x(2.56+2.56)/2	0.03		
		(6.35-6.34)x(2.56+2.56)/2	0.03		
		(6.37-6.35)x(2.57+2.56)/2	0.05		
		(6.41-6.37)x(2.58+2.57)/2	0.10		
		(6.46-6.41)x(2.58+2.58)/2	0.13		
		(6.56-6.46)x(2.59+2.58)/2	0.26		
		(6.58-6.56)x(2.58+2.59)/2	0.05		
		(7.42-6.58)x(2.61+2.58)/2	2.18		
		(7.61-7.42)x(2.62+2.61)/2	0.50		
		(8.40-7.61)x(2.54+2.62)/2	2.04		
		(8.63-8.40)x(2.55+2.54)/2	0.59		
		(9.38-8.63)x(2.44+2.55)/2	1.87		
		(9.66-9.38)x(2.36+2.44)/2	0.67		
		(10.36-9.66)x(2.15+2.36)/2	1.58		
		(10.69-10.36)x(2.03+2.15)/2	0.69		
		(11.34-10.69)x(1.51+2.03)/2	1.15		
		(11.71-11.34)x(1.22+1.51)/2	0.51		
		(12.32-11.71)x(1.01+1.22)/2	0.68		
		(12.74-12.32)x(0.87+1.01)/2	0.39		
		(13.30-12.74)x(1.12+0.87)/2	0.56		
		(13.66-13.30)x(1.28+1.12)/2	0.43		
		(13.30-13.66)x(0.62+0.78)/2	-0.25		
		(12.74-13.30)x(0.37+0.62)/2	-0.28		
		(12.32-12.74)x(0.51+0.37)/2	-0.18		
		A RIPORTARE mq	59.48		

BONIFICA

N. SEZIONE PROG.	FIG.	ELEMENTI DI CALCOLO	AREA ELEMENTARE mq	AREA FIGURA mq	NOTE
		RIPORTO mq	59.48		
		(11.71-12.32)x(0.72+0.51)/2	-0.38		
		(11.34-11.71)x(1.01+0.72)/2	-0.32		
		(10.69-11.34)x(1.53+1.01)/2	-0.83		
		(10.36-10.69)x(1.65+1.53)/2	-0.52		
		(9.66-10.36)x(1.86+1.65)/2	-1.23		
		(9.38-9.66)x(1.94+1.86)/2	-0.53		
		(8.63-9.38)x(2.05+1.94)/2	-1.50		
		(8.40-8.63)x(2.04+2.05)/2	-0.47		
		(7.61-8.40)x(2.12+2.04)/2	-1.64		
		(7.42-7.61)x(2.11+2.12)/2	-0.40		
		(6.58-7.42)x(2.08+2.11)/2	-1.76		
		(6.56-6.58)x(2.09+2.08)/2	-0.04		
		(6.46-6.56)x(2.08+2.09)/2	-0.21		
		(6.41-6.46)x(2.08+2.08)/2	-0.10		
		(6.37-6.41)x(2.07+2.08)/2	-0.08		
		(6.35-6.37)x(2.06+2.07)/2	-0.04		
		(6.34-6.35)x(2.06+2.06)/2	-0.02		
		(6.33-6.34)x(2.06+2.06)/2	-0.02		
		(6.32-6.33)x(2.09+2.06)/2	-0.02		
		(6.24-6.32)x(2.06+2.06)/2	-0.16		
		(6.16-6.24)x(2.09+2.06)/2	-0.17		
		(5.82-6.16)x(2.09+2.09)/2	-0.71		
		(5.56-5.82)x(2.01+2.09)/2	-0.53		
		(5.55-5.56)x(2.01+2.01)/2	-0.02		
		(5.46-5.55)x(2.01+2.01)/2	-0.18		
		(4.53-5.46)x(2.01+2.01)/2	-1.87		
		(4.48-4.53)x(2.02+2.01)/2	-0.10		
		(3.50-4.48)x(2.04+2.02)/2	-1.99		
		(3.39-3.50)x(2.04+2.04)/2	-0.22		
		(2.47-3.39)x(2.03+2.04)/2	-1.87		
		(1.53-2.47)x(2.03+2.03)/2	-1.91		
		(1.45-1.53)x(2.03+2.03)/2	-0.16		
		(1.35-1.45)x(2.03+2.03)/2	-0.20		
		(0.42-1.35)x(2.05+2.03)/2	-1.90		
		(0.28-0.42)x(2.05+2.05)/2	-0.29		
		(-0.61-0.28)x(2.06+2.05)/2	-1.83		
		(-0.80--0.61)x(2.06+2.06)/2	-0.39		
		(-1.63--0.80)x(2.05+2.06)/2	-1.71		
		(-1.88--1.63)x(2.05+2.05)/2	-0.51		
		(-2.66--1.88)x(2.03+2.05)/2	-1.59		
		(-2.95--2.66)x(2.03+2.03)/2	-0.59		
		(-3.68--2.95)x(2.03+2.03)/2	-1.48		
		(-4.03--3.68)x(2.03+2.03)/2	-0.71		
		(-4.71--4.03)x(2.03+2.03)/2	-1.38		
		(-5.11--4.71)x(2.02+2.03)/2	-0.81		
		(-5.74--5.11)x(2.01+2.02)/2	-1.27		
		(-6.19--5.74)x(2.01+2.01)/2	-0.90		
		(-6.76--6.19)x(2.02+2.01)/2	-1.15		
		(-7.26--6.76)x(2.01+2.02)/2	-1.01		
		(-7.79--7.26)x(2.00+2.01)/2	-1.06		
		(-8.34--7.79)x(2.00+2.00)/2	-1.10		
		(-8.82--8.34)x(2.00+2.00)/2	-0.96		
		(-8.93--8.82)x(2.04+2.00)/2	-0.22		
		(-9.04--8.93)x(2.08+2.04)/2	-0.23		
		(-9.08--9.04)x(2.10+2.08)/2	-0.08		
		(-9.22--9.08)x(2.13+2.10)/2	-0.30		
		(-9.28--9.22)x(2.15+2.13)/2	-0.13		
		(-9.36--9.28)x(2.15+2.15)/2	-0.17		
		(-9.37--9.36)x(2.14+2.15)/2	-0.02		
		(-9.42--9.37)x(2.14+2.14)/2	-0.11		
		(-9.59--9.42)x(2.08+2.14)/2	-0.36		
		(-9.72--9.59)x(2.04+2.08)/2	-0.27		
		(-9.84--9.72)x(2.01+2.04)/2	-0.24		
		(-10.49--9.84)x(2.03+2.01)/2	-1.31		
		(-10.87--10.49)x(2.03+2.03)/2	-0.77		
		(-11.57--10.87)x(2.08+2.03)/2	-1.44		
		(-11.70--11.57)x(2.08+2.08)/2	-0.27		
				12.72	
12 165.00	BO1	(-13.24--13.33)x(2.55+2.55)/2	0.23		
		(-12.60--13.24)x(2.53+2.55)/2	1.63		
		(-12.25--12.60)x(2.53+2.53)/2	0.89		
		(-12.02--12.25)x(2.55+2.53)/2	0.58		
		(-11.82--12.02)x(2.57+2.55)/2	0.51		
		(-11.73--11.82)x(2.62+2.57)/2	0.23		
		(-11.64--11.73)x(2.57+2.62)/2	0.23		
		(-11.63--11.64)x(2.57+2.57)/2	0.03		
		(-11.46--11.63)x(2.65+2.57)/2	0.44		
		(-11.41--11.46)x(2.58+2.65)/2	0.13		
		(-11.39--11.41)x(2.57+2.58)/2	0.05		
		(-11.33--11.39)x(2.57+2.57)/2	0.15		
		(-11.20--11.33)x(2.57+2.57)/2	0.33		
		(-10.81--11.20)x(2.57+2.57)/2	1.00		
		(-10.54--10.81)x(2.57+2.57)/2	0.69		
		(-10.30--10.54)x(2.59+2.57)/2	0.62		
		(-9.52--10.30)x(2.63+2.59)/2	2.04		
		(-9.32--9.52)x(2.63+2.63)/2	0.53		
		(-8.49--9.32)x(2.62+2.63)/2	2.18		
		(-8.34--8.49)x(2.62+2.62)/2	0.39		
		(-7.47--8.34)x(2.60+2.62)/2	2.27		
		(-7.36--7.47)x(2.60+2.60)/2	0.29		
		(-6.44--7.36)x(2.56+2.60)/2	2.37		
		(-6.38--6.44)x(2.56+2.56)/2	0.15		
		(-5.41--6.38)x(2.58+2.56)/2	2.49		
		(-5.40--5.41)x(2.58+2.58)/2	0.03		
		(-5.07--5.40)x(2.59+2.58)/2	0.85		
		(-4.42--5.07)x(2.62+2.59)/2	1.69		
		(-4.39--4.42)x(2.62+2.62)/2	0.08		
		(-3.44--4.39)x(2.64+2.62)/2	2.50		
		(-3.36--3.44)x(2.64+2.64)/2	0.21		
		(-2.46--3.36)x(2.63+2.64)/2	2.37		
		(-2.33--2.46)x(2.63+2.63)/2	0.34		
		(-1.48--2.33)x(2.62+2.63)/2	2.23		
		(-1.31--1.48)x(2.63+2.62)/2	0.45		
		(-0.49--1.31)x(2.63+2.63)/2	2.16		
		(-0.28--0.49)x(2.63+2.63)/2	0.55		
		A RIPORTARE mq	33.91		

BONIFICA

N. SEZIONE PROG.	FIG.	ELEMENTI DI CALCOLO	AREA ELEMENTARE mq	AREA FIGURA mq	NOTE
		RIPORTO mq	33.91		
		(0.49--0.28)x(2.63+2.63)/2	2.03		
		(0.75-0.49)x(2.63+2.63)/2	0.68		
		(1.47-0.75)x(2.63+2.63)/2	1.89		
		(1.77-1.47)x(2.62+2.63)/2	0.79		
		(2.45-1.77)x(2.62+2.62)/2	1.78		
		(2.80-2.45)x(2.61+2.62)/2	0.92		
		(3.43-2.80)x(2.61+2.61)/2	1.64		
		(3.83-3.43)x(2.60+2.61)/2	1.04		
		(4.41-3.83)x(2.60+2.60)/2	1.51		
		(4.85-4.41)x(2.60+2.60)/2	1.14		
		(4.96-4.85)x(2.60+2.60)/2	0.29		
		(5.11-4.96)x(2.60+2.60)/2	0.39		
		(5.22-5.11)x(2.60+2.60)/2	0.29		
		(5.71-5.22)x(2.63+2.60)/2	1.28		
		(5.72-5.71)x(2.67+2.63)/2	0.03		
		(5.74-5.72)x(2.61+2.67)/2	0.05		
		(5.76-5.74)x(2.62+2.61)/2	0.05		
		(5.80-5.76)x(2.59+2.62)/2	0.10		
		(5.85-5.80)x(2.61+2.59)/2	0.13		
		(5.88-5.85)x(2.59+2.61)/2	0.08		
		(5.92-5.88)x(2.59+2.59)/2	0.10		
		(6.20-5.92)x(2.68+2.59)/2	0.74		
		(6.21-6.20)x(2.68+2.68)/2	0.03		
		(6.59-6.21)x(2.58+2.68)/2	1.00		
		(6.68-6.59)x(2.54+2.58)/2	0.23		
		(6.81-6.68)x(2.49+2.54)/2	0.33		
		(6.90-6.81)x(2.46+2.49)/2	0.22		
		(7.35-6.90)x(2.37+2.46)/2	1.09		
		(7.93-7.35)x(2.29+2.37)/2	1.35		
		(8.33-7.93)x(2.20+2.29)/2	0.90		
		(8.90-8.33)x(2.09+2.20)/2	1.22		
		(8.33-8.90)x(1.70+1.59)/2	-0.94		
		(7.93-8.33)x(1.79+1.70)/2	-0.70		
		(7.35-7.93)x(1.87+1.79)/2	-1.06		
		(6.90-7.35)x(1.96+1.87)/2	-0.86		
		(6.81-6.90)x(1.99+1.96)/2	-0.18		
		(6.68-6.81)x(2.04+1.99)/2	-0.26		
		(6.59-6.68)x(2.08+2.04)/2	-0.19		
		(6.21-6.59)x(2.18+2.08)/2	-0.81		
		(6.20-6.21)x(2.18+2.18)/2	-0.02		
		(5.92-6.20)x(2.09+2.18)/2	-0.60		
		(5.88-5.92)x(2.09+2.09)/2	-0.08		
		(5.85-5.88)x(2.11+2.09)/2	-0.06		
		(5.80-5.85)x(2.09+2.11)/2	-0.10		
		(5.76-5.80)x(2.12+2.09)/2	-0.08		
		(5.74-5.76)x(2.11+2.12)/2	-0.04		
		(5.72-5.74)x(2.17+2.11)/2	-0.04		
		(5.71-5.72)x(2.13+2.17)/2	-0.02		
		(5.22-5.71)x(2.10+2.13)/2	-1.04		
		(5.11-5.22)x(2.10+2.10)/2	-0.23		
		(4.96-5.11)x(2.10+2.10)/2	-0.32		
		(4.85-4.96)x(2.10+2.10)/2	-0.23		
		(4.41-4.85)x(2.10+2.10)/2	-0.92		
		(3.83-4.41)x(2.10+2.10)/2	-1.22		
		(3.43-3.83)x(2.11+2.10)/2	-0.84		
		(2.80-3.43)x(2.11+2.11)/2	-1.33		
		(2.45-2.80)x(2.12+2.11)/2	-0.74		
		(1.77-2.45)x(2.12+2.12)/2	-1.44		
		(1.47-1.77)x(2.13+2.12)/2	-0.64		
		(0.75-1.47)x(2.13+2.13)/2	-1.53		
		(0.49-0.75)x(2.13+2.13)/2	-0.55		
		(-0.28-0.49)x(2.13+2.13)/2	-1.64		
		(-0.49--0.28)x(2.13+2.13)/2	-0.45		
		(-1.31--0.49)x(2.13+2.13)/2	-1.75		
		(-1.48--1.31)x(2.12+2.13)/2	-0.36		
		(-2.33--1.48)x(2.13+2.12)/2	-1.81		
		(-2.46--2.33)x(2.13+2.13)/2	-0.28		
		(-3.36--2.46)x(2.14+2.13)/2	-1.92		
		(-3.44--3.36)x(2.14+2.14)/2	-0.17		
		(-4.39--3.44)x(2.12+2.14)/2	-2.02		
		(-4.42--4.39)x(2.12+2.12)/2	-0.06		
		(-5.07--4.42)x(2.09+2.12)/2	-1.37		
		(-5.40--5.07)x(2.08+2.09)/2	-0.69		
		(-5.41--5.40)x(2.08+2.08)/2	-0.02		
		(-6.38--5.41)x(2.06+2.08)/2	-2.01		
		(-6.44--6.38)x(2.06+2.06)/2	-0.12		
		(-7.36--6.44)x(2.10+2.06)/2	-1.91		
		(-7.47--7.36)x(2.10+2.10)/2	-0.23		
		(-8.34--7.47)x(2.12+2.10)/2	-1.84		
		(-8.49--8.34)x(2.12+2.12)/2	-0.32		
		(-9.32--8.49)x(2.13+2.12)/2	-1.76		
		(-9.52--9.32)x(2.13+2.13)/2	-0.43		
		(-10.30--9.52)x(2.09+2.13)/2	-1.65		
		(-10.54--10.30)x(2.07+2.09)/2	-0.50		
		(-10.81--10.54)x(2.07+2.07)/2	-0.56		
		(-11.20--10.81)x(2.07+2.07)/2	-0.81		
		(-11.33--11.20)x(2.07+2.07)/2	-0.27		
		(-11.39--11.33)x(2.07+2.07)/2	-0.12		
		(-11.41--11.39)x(2.08+2.07)/2	-0.04		
		(-11.46--11.41)x(2.15+2.08)/2	-0.11		
		(-11.63--11.46)x(2.07+2.15)/2	-0.36		
		(-11.64--11.63)x(2.07+2.07)/2	-0.02		
		(-11.73--11.64)x(2.12+2.07)/2	-0.19		
		(-11.82--11.73)x(2.07+2.12)/2	-0.19		
		(-12.02--11.82)x(2.05+2.07)/2	-0.41		
		(-12.25--12.02)x(2.03+2.05)/2	-0.47		
		(-12.60--12.25)x(2.03+2.03)/2	-0.71		
		(-13.24--12.60)x(2.05+2.03)/2	-1.31		
		(-13.33--13.24)x(2.05+2.05)/2	-0.18		
				11.10	
13 180.00	BO1	(-3.04--3.50)x(2.67+2.68)/2	1.23		
		(-2.52--3.04)x(2.67+2.67)/2	1.39		
		(-2.01--2.52)x(2.67+2.67)/2	1.36		
		(-1.54--2.01)x(2.67+2.67)/2	1.25		
		(-0.98--1.54)x(2.68+2.67)/2	1.50		
		A RIPORTARE mq	6.73		

BONIFICA

N. SEZIONE PROG.	FIG.	ELEMENTI DI CALCOLO	AREA ELEMENTARE mq	AREA FIGURA mq	NOTE
		RIPORTO mq	6.73		
		(-0.56--0.98)x(2.69+2.68)/2	1.13		
		(0.04--0.56)x(2.69+2.69)/2	1.61		
		(0.42-0.04)x(2.68+2.69)/2	1.02		
		(1.07-0.42)x(2.68+2.68)/2	1.74		
		(1.40-1.07)x(2.68+2.68)/2	0.88		
		(2.10-1.40)x(2.69+2.68)/2	1.88		
		(2.38-2.10)x(2.69+2.69)/2	0.75		
		(3.12-2.38)x(2.69+2.69)/2	1.99		
		(3.36-3.12)x(2.69+2.69)/2	0.65		
		(4.15-3.36)x(2.65+2.69)/2	2.11		
		(4.34-4.15)x(2.65+2.65)/2	0.50		
		(5.18-4.34)x(2.66+2.65)/2	2.23		
		(5.19-5.18)x(2.66+2.66)/2	0.03		
		(5.29-5.19)x(2.67+2.66)/2	0.27		
		(5.36-5.29)x(2.67+2.67)/2	0.19		
		(5.42-5.36)x(2.67+2.67)/2	0.16		
		(5.62-5.42)x(2.74+2.67)/2	0.54		
		(6.02-5.62)x(2.67+2.74)/2	1.08		
		(6.10-6.02)x(2.67+2.67)/2	0.21		
		(6.12-6.10)x(2.67+2.67)/2	0.05		
		(6.13-6.12)x(2.76+2.67)/2	0.03		
		(6.16-6.13)x(2.64+2.76)/2	0.08		
		(6.20-6.16)x(2.61+2.64)/2	0.11		
		(6.30-6.20)x(2.60+2.61)/2	0.26		
		(7.23-6.30)x(2.47+2.60)/2	2.36		
		(7.28-7.23)x(2.46+2.47)/2	0.12		
		(8.26-7.28)x(2.24+2.46)/2	2.30		
		(8.40-8.26)x(2.21+2.24)/2	0.31		
		(9.24-8.40)x(2.01+2.21)/2	1.77		
		(9.28-9.24)x(2.00+2.01)/2	0.08		
		(10.22-9.28)x(1.91+2.00)/2	1.84		
		(10.31-10.22)x(1.89+1.91)/2	0.17		
		(11.20-10.31)x(1.77+1.89)/2	1.63		
		(11.33-11.20)x(1.74+1.77)/2	0.23		
		(12.18-11.33)x(1.56+1.74)/2	1.40		
		(12.36-12.18)x(1.52+1.56)/2	0.28		
		(13.16-12.36)x(1.51+1.52)/2	1.21		
		(13.39-13.16)x(1.52+1.51)/2	0.35		
		(14.14-13.39)x(1.55+1.52)/2	1.15		
		(14.41-14.14)x(1.59+1.55)/2	0.42		
		(15.13-14.41)x(1.53+1.59)/2	1.12		
		(15.44-15.13)x(1.50+1.53)/2	0.47		
		(16.11-15.44)x(1.48+1.50)/2	1.00		
		(16.47-16.11)x(1.48+1.48)/2	0.53		
		(16.50-16.47)x(1.48+1.48)/2	0.04		
		(16.47-16.50)x(0.98+0.98)/2	-0.03		
		(16.11-16.47)x(0.98+0.98)/2	-0.35		
		(15.44-16.11)x(1.00+0.98)/2	-0.66		
		(15.13-15.44)x(1.03+1.00)/2	-0.31		
		(14.41-15.13)x(1.09+1.03)/2	-0.76		
		(14.14-14.41)x(1.05+1.09)/2	-0.29		
		(13.39-14.14)x(1.02+1.05)/2	-0.78		
		(13.16-13.39)x(1.01+1.02)/2	-0.23		
		(12.36-13.16)x(1.02+1.01)/2	-0.81		
		(12.18-12.36)x(1.06+1.02)/2	-0.19		
		(11.33-12.18)x(1.24+1.06)/2	-0.98		
		(11.20-11.33)x(1.27+1.24)/2	-0.16		
		(10.31-11.20)x(1.39+1.27)/2	-1.18		
		(10.22-10.31)x(1.41+1.39)/2	-0.13		
		(9.28-10.22)x(1.50+1.41)/2	-1.37		
		(9.24-9.28)x(1.51+1.50)/2	-0.06		
		(8.40-9.24)x(1.71+1.51)/2	-1.35		
		(8.26-8.40)x(1.74+1.71)/2	-0.24		
		(7.28-8.26)x(1.96+1.74)/2	-1.81		
		(7.23-7.28)x(1.97+1.96)/2	-0.10		
		(6.30-7.23)x(2.10+1.97)/2	-1.89		
		(6.20-6.30)x(2.11+2.10)/2	-0.21		
		(6.16-6.20)x(2.14+2.11)/2	-0.09		
		(6.13-6.16)x(2.26+2.14)/2	-0.07		
		(6.12-6.13)x(2.17+2.26)/2	-0.02		
		(6.10-6.12)x(2.17+2.17)/2	-0.04		
		(6.02-6.10)x(2.17+2.17)/2	-0.17		
		(5.62-6.02)x(2.24+2.17)/2	-0.88		
		(5.42-5.62)x(2.17+2.24)/2	-0.44		
		(5.36-5.42)x(2.17+2.17)/2	-0.13		
		(5.29-5.36)x(2.17+2.17)/2	-0.15		
		(5.19-5.29)x(2.16+2.17)/2	-0.22		
		(5.18-5.19)x(2.16+2.16)/2	-0.02		
		(4.34-5.18)x(2.15+2.16)/2	-1.81		
		(4.15-4.34)x(2.15+2.15)/2	-0.41		
		(3.36-4.15)x(2.19+2.15)/2	-1.71		
		(3.12-3.36)x(2.19+2.19)/2	-0.53		
		(2.38-3.12)x(2.19+2.19)/2	-1.62		
		(2.10-2.38)x(2.19+2.19)/2	-0.61		
		(1.40-2.10)x(2.18+2.19)/2	-1.53		
		(1.07-1.40)x(2.18+2.18)/2	-0.72		
		(0.42-1.07)x(2.18+2.18)/2	-1.42		
		(0.04-0.42)x(2.19+2.18)/2	-0.83		
		(-0.56-0.04)x(2.19+2.19)/2	-1.31		
		(-0.98--0.56)x(2.18+2.19)/2	-0.92		
		(-1.54--0.98)x(2.17+2.18)/2	-1.22		
		(-2.01--1.54)x(2.17+2.17)/2	-1.02		
		(-2.52--2.01)x(2.17+2.17)/2	-1.11		
		(-3.04--2.52)x(2.17+2.17)/2	-1.13		
		(-3.50--3.04)x(2.18+2.17)/2	-1.00		
				9.99	
14 195.00	BO1	(-8.53--8.55)x(2.77+2.77)/2	0.06		
		(-8.51--8.53)x(2.77+2.77)/2	0.06		
		(-8.48--8.51)x(2.76+2.77)/2	0.08		
		(-8.41--8.48)x(2.76+2.76)/2	0.19		
		(-8.25--8.41)x(2.75+2.76)/2	0.44		
		(-8.20--8.25)x(2.75+2.75)/2	0.14		
		(-7.84--8.20)x(2.72+2.75)/2	0.98		
		(-7.49--7.84)x(2.72+2.72)/2	0.95		
		(-6.82--7.49)x(2.71+2.72)/2	1.82		
		A RIPORTARE mq	4.72		

BONIFICA

N. SEZIONE PROG.	FIG.	ELEMENTI DI CALCOLO	AREA ELEMENTARE mq	AREA FIGURA mq	NOTE
		RIPORTO mq	4.72		
		(-6.51--6.82)x(2.72+2.71)/2	0.84		
		(-5.79--6.51)x(2.72+2.72)/2	1.96		
		(-5.53--5.79)x(2.73+2.72)/2	0.71		
		(-4.76--5.53)x(2.75+2.73)/2	2.11		
		(-4.55--4.76)x(2.75+2.75)/2	0.58		
		(-3.74--4.55)x(2.78+2.75)/2	2.24		
		(-3.57--3.74)x(2.78+2.78)/2	0.47		
		(-2.71--3.57)x(2.78+2.78)/2	2.39		
		(-2.59--2.71)x(2.78+2.78)/2	0.33		
		(-1.68--2.59)x(2.78+2.78)/2	2.53		
		(-1.61--1.68)x(2.78+2.78)/2	0.19		
		(-0.66--1.61)x(2.80+2.78)/2	2.65		
		(-0.63--0.66)x(2.80+2.80)/2	0.08		
		(-0.07--0.63)x(2.81+2.80)/2	1.57		
		(0.37--0.07)x(2.81+2.81)/2	1.24		
		(0.39-0.37)x(2.81+2.81)/2	0.06		
		(1.40-0.39)x(2.82+2.81)/2	2.84		
		(1.47-1.40)x(2.82+2.82)/2	0.20		
		(2.42-1.47)x(2.80+2.82)/2	2.67		
		(2.54-2.42)x(2.80+2.80)/2	0.34		
		(3.45-2.54)x(2.80+2.80)/2	2.55		
		(3.62-3.45)x(2.79+2.80)/2	0.48		
		(4.47-3.62)x(2.78+2.79)/2	2.37		
		(5.25-4.47)x(2.77+2.78)/2	2.16		
		(5.37-5.25)x(2.77+2.77)/2	0.33		
		(5.42-5.37)x(2.77+2.77)/2	0.14		
		(5.44-5.42)x(2.77+2.77)/2	0.06		
		(5.45-5.44)x(2.77+2.77)/2	0.03		
		(5.46-5.45)x(2.77+2.77)/2	0.03		
		(5.49-5.46)x(2.77+2.77)/2	0.08		
		(5.52-5.49)x(2.82+2.77)/2	0.08		
		(5.53-5.52)x(2.77+2.82)/2	0.03		
		(5.59-5.53)x(2.78+2.77)/2	0.17		
		(5.61-5.59)x(2.78+2.78)/2	0.06		
		(5.70-5.61)x(2.80+2.78)/2	0.25		
		(5.77-5.70)x(2.80+2.80)/2	0.20		
		(5.82-5.77)x(2.80+2.80)/2	0.14		
		(6.01-5.82)x(2.86+2.80)/2	0.54		
		(6.47-6.01)x(2.73+2.86)/2	1.29		
		(6.53-6.47)x(2.71+2.73)/2	0.16		
		(6.85-6.53)x(2.67+2.71)/2	0.86		
		(7.55-6.85)x(2.56+2.67)/2	1.83		
		(7.93-7.55)x(2.51+2.56)/2	0.96		
		(8.58-7.93)x(2.40+2.51)/2	1.60		
		(9.00-8.58)x(2.33+2.40)/2	0.99		
		(9.61-9.00)x(2.22+2.33)/2	1.39		
		(10.08-9.61)x(2.15+2.22)/2	1.03		
		(10.63-10.08)x(2.09+2.15)/2	1.17		
		(11.16-10.63)x(2.03+2.09)/2	1.09		
		(11.66-11.16)x(1.92+2.03)/2	0.99		
		(12.23-11.66)x(1.83+1.92)/2	1.07		
		(12.69-12.23)x(1.64+1.83)/2	0.80		
		(13.31-12.69)x(1.57+1.64)/2	1.00		
		(13.71-13.31)x(1.53+1.57)/2	0.62		
		(14.39-13.71)x(1.62+1.53)/2	1.07		
		(14.74-14.39)x(1.75+1.62)/2	0.59		
		(15.46-14.74)x(1.72+1.75)/2	1.25		
		(15.76-15.46)x(1.74+1.72)/2	0.52		
		(16.54-15.76)x(1.72+1.74)/2	1.35		
		(16.79-16.54)x(1.71+1.72)/2	0.43		
		(17.62-16.79)x(1.73+1.71)/2	1.43		
		(17.63-17.62)x(1.73+1.73)/2	0.02		
		(17.62-17.63)x(1.23+1.23)/2	-0.01		
		(16.79-17.62)x(1.21+1.23)/2	-1.01		
		(16.54-16.79)x(1.22+1.21)/2	-0.30		
		(15.76-16.54)x(1.24+1.22)/2	-0.96		
		(15.46-15.76)x(1.22+1.24)/2	-0.37		
		(14.74-15.46)x(1.25+1.22)/2	-0.89		
		(14.39-14.74)x(1.12+1.25)/2	-0.41		
		(13.71-14.39)x(1.03+1.12)/2	-0.73		
		(13.31-13.71)x(1.07+1.03)/2	-0.42		
		(12.69-13.31)x(1.14+1.07)/2	-0.69		
		(12.23-12.69)x(1.33+1.14)/2	-0.57		
		(11.66-12.23)x(1.42+1.33)/2	-0.78		
		(11.16-11.66)x(1.53+1.42)/2	-0.74		
		(10.63-11.16)x(1.59+1.53)/2	-0.83		
		(10.08-10.63)x(1.65+1.59)/2	-0.89		
		(9.61-10.08)x(1.72+1.65)/2	-0.79		
		(9.00-9.61)x(1.83+1.72)/2	-1.08		
		(8.58-9.00)x(1.90+1.83)/2	-0.78		
		(7.93-8.58)x(2.01+1.90)/2	-1.27		
		(7.55-7.93)x(2.06+2.01)/2	-0.77		
		(6.85-7.55)x(2.17+2.06)/2	-1.48		
		(6.53-6.85)x(2.21+2.17)/2	-0.70		
		(6.47-6.53)x(2.23+2.21)/2	-0.13		
		(6.01-6.47)x(2.36+2.23)/2	-1.06		
		(5.82-6.01)x(2.30+2.36)/2	-0.44		
		(5.77-5.82)x(2.30+2.30)/2	-0.12		
		(5.70-5.77)x(2.30+2.30)/2	-0.16		
		(5.61-5.70)x(2.28+2.30)/2	-0.21		
		(5.59-5.61)x(2.28+2.28)/2	-0.05		
		(5.53-5.59)x(2.27+2.28)/2	-0.14		
		(5.52-5.53)x(2.32+2.27)/2	-0.02		
		(5.49-5.52)x(2.27+2.32)/2	-0.07		
		(5.46-5.49)x(2.27+2.27)/2	-0.07		
		(5.45-5.46)x(2.27+2.27)/2	-0.02		
		(5.44-5.45)x(2.27+2.27)/2	-0.02		
		(5.42-5.44)x(2.27+2.27)/2	-0.05		
		(5.37-5.42)x(2.27+2.27)/2	-0.11		
		(5.25-5.37)x(2.27+2.27)/2	-0.27		
		(4.47-5.25)x(2.28+2.27)/2	-1.77		
		(3.62-4.47)x(2.29+2.28)/2	-1.94		
		(3.45-3.62)x(2.30+2.29)/2	-0.39		
		(2.54-3.45)x(2.30+2.30)/2	-2.09		
		(2.42-2.54)x(2.30+2.30)/2	-0.28		
		A RIPORTARE mq	38.05		

BONIFICA

N. SEZIONE PROG.	FIG.	ELEMENTI DI CALCOLO	AREA ELEMENTARE mq	AREA FIGURA mq	NOTE
		RIPORTO mq	38.05		
		(1.47-2.42)x(2.32+2.30)/2	-2.19		
		(1.40-1.47)x(2.32+2.32)/2	-0.16		
		(0.39-1.40)x(2.31+2.32)/2	-2.34		
		(0.37-0.39)x(2.31+2.31)/2	-0.05		
		(-0.07-0.37)x(2.31+2.31)/2	-1.02		
		(-0.63--0.07)x(2.30+2.31)/2	-1.29		
		(-0.66--0.63)x(2.30+2.30)/2	-0.07		
		(-1.61--0.66)x(2.28+2.30)/2	-2.18		
		(-1.68--1.61)x(2.28+2.28)/2	-0.16		
		(-2.59--1.68)x(2.28+2.28)/2	-2.07		
		(-2.71--2.59)x(2.28+2.28)/2	-0.27		
		(-3.57--2.71)x(2.28+2.28)/2	-1.96		
		(-3.74--3.57)x(2.28+2.28)/2	-0.39		
		(-4.55--3.74)x(2.25+2.28)/2	-1.83		
		(-4.76--4.55)x(2.25+2.25)/2	-0.47		
		(-5.53--4.76)x(2.23+2.25)/2	-1.72		
		(-5.79--5.53)x(2.22+2.23)/2	-0.58		
		(-6.51--5.79)x(2.22+2.22)/2	-1.60		
		(-6.82--6.51)x(2.21+2.22)/2	-0.69		
		(-7.49--6.82)x(2.22+2.21)/2	-1.48		
		(-7.84--7.49)x(2.22+2.22)/2	-0.78		
		(-8.20--7.84)x(2.25+2.22)/2	-0.80		
		(-8.25--8.20)x(2.25+2.25)/2	-0.11		
		(-8.41--8.25)x(2.26+2.25)/2	-0.36		
		(-8.48--8.41)x(2.26+2.26)/2	-0.16		
		(-8.51--8.48)x(2.27+2.26)/2	-0.07		
		(-8.53--8.51)x(2.27+2.27)/2	-0.05		
		(-8.55--8.53)x(2.27+2.27)/2	-0.05		
				13.15	
14bis 220.22	B01	(-8.53--8.55)x(2.77+2.77)/2	0.06		
		(-8.51--8.53)x(2.77+2.77)/2	0.06		
		(-8.48--8.51)x(2.76+2.77)/2	0.08		
		(-8.41--8.48)x(2.76+2.76)/2	0.19		
		(-8.25--8.41)x(2.75+2.76)/2	0.44		
		(-8.20--8.25)x(2.75+2.75)/2	0.14		
		(-7.84--8.20)x(2.72+2.75)/2	0.98		
		(-7.49--7.84)x(2.72+2.72)/2	0.95		
		(-6.82--7.49)x(2.71+2.72)/2	1.82		
		(-6.51--6.82)x(2.72+2.71)/2	0.84		
		(-5.79--6.51)x(2.72+2.72)/2	1.96		
		(-5.53--5.79)x(2.73+2.72)/2	0.71		
		(-4.76--5.53)x(2.75+2.73)/2	2.11		
		(-4.55--4.76)x(2.75+2.75)/2	0.58		
		(-3.74--4.55)x(2.78+2.75)/2	2.24		
		(-3.57--3.74)x(2.78+2.78)/2	0.47		
		(-2.71--3.57)x(2.78+2.78)/2	2.39		
		(-2.59--2.71)x(2.78+2.78)/2	0.33		
		(-1.68--2.59)x(2.78+2.78)/2	2.53		
		(-1.61--1.68)x(2.78+2.78)/2	0.19		
		(-0.66--1.61)x(2.80+2.78)/2	2.65		
		(-0.63--0.66)x(2.80+2.80)/2	0.08		
		(-0.07--0.63)x(2.81+2.80)/2	1.57		
		(0.37--0.07)x(2.81+2.81)/2	1.24		
		(0.39-0.37)x(2.81+2.81)/2	0.06		
		(1.40-0.39)x(2.82+2.81)/2	2.84		
		(1.47-1.40)x(2.82+2.82)/2	0.20		
		(2.42-1.47)x(2.80+2.82)/2	2.67		
		(2.54-2.42)x(2.80+2.80)/2	0.34		
		(3.45-2.54)x(2.80+2.80)/2	2.55		
		(3.62-3.45)x(2.79+2.80)/2	0.48		
		(4.47-3.62)x(2.78+2.79)/2	2.37		
		(5.25-4.47)x(2.77+2.78)/2	2.16		
		(5.37-5.25)x(2.77+2.77)/2	0.33		
		(5.42-5.37)x(2.77+2.77)/2	0.14		
		(5.44-5.42)x(2.77+2.77)/2	0.06		
		(5.45-5.44)x(2.77+2.77)/2	0.03		
		(5.46-5.45)x(2.77+2.77)/2	0.03		
		(5.49-5.46)x(2.77+2.77)/2	0.08		
		(5.52-5.49)x(2.82+2.77)/2	0.08		
		(5.53-5.52)x(2.77+2.82)/2	0.03		
		(5.59-5.53)x(2.78+2.77)/2	0.17		
		(5.61-5.59)x(2.78+2.78)/2	0.06		
		(5.70-5.61)x(2.80+2.78)/2	0.25		
		(5.77-5.70)x(2.80+2.80)/2	0.20		
		(5.82-5.77)x(2.80+2.80)/2	0.14		
		(6.01-5.82)x(2.86+2.80)/2	0.54		
		(6.47-6.01)x(2.73+2.86)/2	1.29		
		(6.53-6.47)x(2.71+2.73)/2	0.16		
		(6.85-6.53)x(2.67+2.71)/2	0.86		
		(7.55-6.85)x(2.56+2.67)/2	1.83		
		(7.93-7.55)x(2.51+2.56)/2	0.96		
		(8.58-7.93)x(2.40+2.51)/2	1.60		
		(9.00-8.58)x(2.33+2.40)/2	0.99		
		(9.61-9.00)x(2.22+2.33)/2	1.39		
		(10.08-9.61)x(2.15+2.22)/2	1.03		
		(10.63-10.08)x(2.09+2.15)/2	1.17		
		(11.16-10.63)x(2.03+2.09)/2	1.09		
		(11.66-11.16)x(1.92+2.03)/2	0.99		
		(12.23-11.66)x(1.83+1.92)/2	1.07		
		(12.69-12.23)x(1.64+1.83)/2	0.80		
		(13.31-12.69)x(1.57+1.64)/2	1.00		
		(13.71-13.31)x(1.53+1.57)/2	0.62		
		(14.39-13.71)x(1.62+1.53)/2	1.07		
		(14.74-14.39)x(1.75+1.62)/2	0.59		
		(15.46-14.74)x(1.72+1.75)/2	1.25		
		(15.76-15.46)x(1.74+1.72)/2	0.52		
		(16.54-15.76)x(1.72+1.74)/2	1.35		
		(16.79-16.54)x(1.71+1.72)/2	0.43		
		(17.62-16.79)x(1.73+1.71)/2	1.43		
		(17.63-17.62)x(1.73+1.73)/2	0.02		
		(17.62-17.63)x(1.23+1.23)/2	-0.01		
		(16.79-17.62)x(1.21+1.23)/2	-1.01		
		(16.54-16.79)x(1.22+1.21)/2	-0.30		
		(15.76-16.54)x(1.24+1.22)/2	-0.96		
		(15.46-15.76)x(1.22+1.24)/2	-0.37		
		A RIPORTARE mq	61.28		

BONIFICA

N. SEZIONE PROG.	FIG.	ELEMENTI DI CALCOLO	AREA ELEMENTARE mq	AREA FIGURA mq	NOTE
		RIPORTO mq	61.28		
		(14.74-15.46)x(1.25+1.22)/2	-0.89		
		(14.39-14.74)x(1.12+1.25)/2	-0.41		
		(13.71-14.39)x(1.03+1.12)/2	-0.73		
		(13.31-13.71)x(1.07+1.03)/2	-0.42		
		(12.69-13.31)x(1.14+1.07)/2	-0.69		
		(12.23-12.69)x(1.33+1.14)/2	-0.57		
		(11.66-12.23)x(1.42+1.33)/2	-0.78		
		(11.16-11.66)x(1.53+1.42)/2	-0.74		
		(10.63-11.16)x(1.59+1.53)/2	-0.83		
		(10.08-10.63)x(1.65+1.59)/2	-0.89		
		(9.61-10.08)x(1.72+1.65)/2	-0.79		
		(9.00-9.61)x(1.83+1.72)/2	-1.08		
		(8.58-9.00)x(1.90+1.83)/2	-0.78		
		(7.93-8.58)x(2.01+1.90)/2	-1.27		
		(7.55-7.93)x(2.06+2.01)/2	-0.77		
		(6.85-7.55)x(2.17+2.06)/2	-1.48		
		(6.53-6.85)x(2.21+2.17)/2	-0.70		
		(6.47-6.53)x(2.23+2.21)/2	-0.13		
		(6.01-6.47)x(2.36+2.23)/2	-1.06		
		(5.82-6.01)x(2.30+2.36)/2	-0.44		
		(5.77-5.82)x(2.30+2.30)/2	-0.12		
		(5.70-5.77)x(2.30+2.30)/2	-0.16		
		(5.61-5.70)x(2.28+2.30)/2	-0.21		
		(5.59-5.61)x(2.28+2.28)/2	-0.05		
		(5.53-5.59)x(2.27+2.28)/2	-0.14		
		(5.52-5.53)x(2.32+2.27)/2	-0.02		
		(5.49-5.52)x(2.27+2.32)/2	-0.07		
		(5.46-5.49)x(2.27+2.27)/2	-0.07		
		(5.45-5.46)x(2.27+2.27)/2	-0.02		
		(5.44-5.45)x(2.27+2.27)/2	-0.02		
		(5.42-5.44)x(2.27+2.27)/2	-0.05		
		(5.37-5.42)x(2.27+2.27)/2	-0.11		
		(5.25-5.37)x(2.27+2.27)/2	-0.27		
		(4.47-5.25)x(2.28+2.27)/2	-1.77		
		(3.62-4.47)x(2.29+2.28)/2	-1.94		
		(3.45-3.62)x(2.30+2.29)/2	-0.39		
		(2.54-3.45)x(2.30+2.30)/2	-2.09		
		(2.42-2.54)x(2.30+2.30)/2	-0.28		
		(1.47-2.42)x(2.32+2.30)/2	-2.19		
		(1.40-1.47)x(2.32+2.32)/2	-0.16		
		(0.39-1.40)x(2.31+2.32)/2	-2.34		
		(0.37-0.39)x(2.31+2.31)/2	-0.05		
		(-0.07-0.37)x(2.31+2.31)/2	-1.02		
		(-0.63--0.07)x(2.30+2.31)/2	-1.29		
		(-0.66--0.63)x(2.30+2.30)/2	-0.07		
		(-1.61--0.66)x(2.28+2.30)/2	-2.18		
		(-1.68--1.61)x(2.28+2.28)/2	-0.16		
		(-2.59--1.68)x(2.28+2.28)/2	-2.07		
		(-2.71--2.59)x(2.28+2.28)/2	-0.27		
		(-3.57--2.71)x(2.28+2.28)/2	-1.96		
		(-3.74--3.57)x(2.28+2.28)/2	-0.39		
		(-4.55--3.74)x(2.25+2.28)/2	-1.83		
		(-4.76--4.55)x(2.25+2.25)/2	-0.47		
		(-5.53--4.76)x(2.23+2.25)/2	-1.72		
		(-5.79--5.53)x(2.22+2.23)/2	-0.58		
		(-6.51--5.79)x(2.22+2.22)/2	-1.60		
		(-6.82--6.51)x(2.21+2.22)/2	-0.69		
		(-7.49--6.82)x(2.22+2.21)/2	-1.48		
		(-7.84--7.49)x(2.22+2.22)/2	-0.78		
		(-8.20--7.84)x(2.25+2.22)/2	-0.80		
		(-8.25--8.20)x(2.25+2.25)/2	-0.11		
		(-8.41--8.25)x(2.26+2.25)/2	-0.36		
		(-8.48--8.41)x(2.26+2.26)/2	-0.16		
		(-8.51--8.48)x(2.27+2.26)/2	-0.07		
		(-8.53--8.51)x(2.27+2.27)/2	-0.05		
		(-8.55--8.53)x(2.27+2.27)/2	-0.05		
				13.15	

Il Direttore dei Lavori | L'Impresa

USURA

N. SEZIONE PROG.	FIG.	ELEMENTI DI CALCOLO	LUNGHEZZA ELEMENTARE ml	LUNGHEZZA FIGURA ml	NOTE
2	a1	(-3.50--7.05)	3.55		
17.00		(0.00--3.50)	3.50		
		(3.51-0.00)	3.51		
		(7.68-3.51)	4.17		
				14.73	
3	a1	(-3.50--4.75)	1.25		
30.00		(0.00--3.50)	3.50		
		(3.65-0.00)	3.65		
		(4.90-3.65)	1.25		
				9.65	
4	a1	(-3.50--4.75)	1.25		
45.00		(0.00--3.50)	3.50		
		(3.88-0.00)	3.88		
		(5.13-3.88)	1.25		
				9.88	
5	a1	(-3.50--4.75)	1.25		
60.00		(0.00--3.50)	3.50		
		(3.95-0.00)	3.95		
		(5.20-3.95)	1.25		
				9.95	
6	a1	(-3.50--4.75)	1.25		
75.00		(0.00--3.50)	3.50		
		(3.91-0.00)	3.91		
		(5.16-3.91)	1.25		
				9.91	
7	a1	(-6.77--12.06)	5.29		
90.00		(-3.72--6.77)	3.05		
		(-3.50--3.72)	0.22		
		(0.00--3.50)	3.50		
		(3.69-0.00)	3.69		
		(4.94-3.69)	1.25		
		(6.44-4.94)	1.50		
		(7.55-6.44)	1.11		
				19.61	
8	a1	(-3.50--4.75)	1.25		
105.00		(0.00--3.50)	3.50		
		(3.51-0.00)	3.51		
		(4.76-3.51)	1.25		
				9.51	
9	a1	(-3.50--4.75)	1.25		
120.00		(0.00--3.50)	3.50		
		(3.50-0.00)	3.50		
		(6.36-3.50)	2.86		
				11.11	
10	a1	(-3.50--4.75)	1.25		
135.00		(0.00--3.50)	3.50		
		(3.50-0.00)	3.50		
		(8.88-3.50)	5.38		
				13.63	
11	a1	(-3.50--4.75)	1.25		
150.00		(0.00--3.50)	3.50		
		(3.50-0.00)	3.50		
		(4.75-3.50)	1.25		
				9.50	
12	a1	(-3.50--4.75)	1.25		
165.00		(0.00--3.50)	3.50		
		(3.50-0.00)	3.50		
		(4.75-3.50)	1.25		
				9.50	
13	a1	(0.00--3.50)	3.50		
180.00		(3.50-0.00)	3.50		
		(4.75-3.50)	1.25		
				8.25	
14	a1	(-3.50--4.75)	1.25		
195.00		(0.00--3.50)	3.50		
		(3.50-0.00)	3.50		
		(4.75-3.50)	1.25		
				9.50	
14bis	a1	(-3.50--4.75)	1.25		
220.22		(0.00--3.50)	3.50		
		(3.50-0.00)	3.50		
		(4.75-3.50)	1.25		
				9.50	

Il Direttore dei Lavori | L'Impresa

VEGETALE

N. SEZIONE PROG.	FIG.	ELEMENTI DI CALCOLO	LUNGHEZZA ELEMENTARE ml	LUNGHEZZA FIGURA ml	NOTE
2	b1	(-8.55--7.20)	1.35		
17.00		(-9.84--8.55)	1.29		
				2.64	
2	b2	(9.18-7.83)	1.35		
17.00		(9.97-9.18)	0.79		
				2.14	
3	b2	(-6.25--4.90)	1.35		
30.00		(-7.14--6.25)	0.89		
				2.24	
3	b1	(6.40-5.05)	1.35		
30.00		(6.71-6.40)	0.31		
				1.66	
4	b1	(-6.25--4.90)	1.35		
45.00		(-6.96--6.25)	0.71		
				2.06	
5	b1	(-6.25--4.90)	1.35		
60.00		(-7.02--6.25)	0.77		
				2.12	
6	b1	(-6.25--4.90)	1.35		
75.00		(-7.15--6.25)	0.90		
				2.25	
7	b1	(6.44-5.09)	1.35		
90.00		(7.55-6.44)	1.11		
				2.46	
8	b2	(-6.25--4.90)	1.35		
105.00		(-7.88--6.25)	1.63		
				2.98	
8	b1	(6.26-4.91)	1.35		
105.00		(8.21-6.26)	1.95		
				3.30	
9	b2	(-6.25--4.90)	1.35		
120.00		(-9.25--6.25)	3.00		
				4.35	
9	b1	(7.86-6.51)	1.35		
				1.35	
10	b1	(-6.25--4.90)	1.35		
135.00		(-10.85--6.25)	4.60		
				5.95	
10	b2	(10.38-9.03)	1.35		
135.00		(16.19-10.38)	5.81		
				7.16	
11	b2	(-6.25--4.90)	1.35		
150.00		(-12.21--6.25)	5.96		
				7.31	
11	b1	(6.25-4.90)	1.35		
150.00		(14.07-6.25)	7.82		
				9.17	
12	b2	(-6.25--4.90)	1.35		
165.00		(-13.86--6.25)	7.61		
				8.96	
12	b1	(6.25-4.90)	1.35		
165.00		(8.90-6.25)	2.65		
				4.00	
13	b1	(6.25-4.90)	1.35		
180.00		(16.98-6.25)	10.73		
				12.08	
14	b1	(6.25-4.90)	1.35		
195.00		(18.16-6.25)	11.91		
				13.26	
14	b2	(-6.25--4.90)	1.35		
195.00		(-8.90--6.25)	2.65		
				4.00	
14bis	b1	(6.25-4.90)	1.35		
220.22		(18.16-6.25)	11.91		
				13.26	
14bis	b2	(-6.25--4.90)	1.35		
220.22		(-8.90--6.25)	2.65		
				4.00	

Il Direttore dei Lavori | L'Impresa

BINDER

N. SEZIONE PROG.	FIG.	ELEMENTI DI CALCOLO	LUNGHEZZA ELEMENTARE ml	LUNGHEZZA FIGURA ml	NOTE
2	c1	(-3.50--7.05)	3.55		
17.00		(0.00--3.50)	3.50		
		(3.51-0.00)	3.51		
		(7.68-3.51)	4.17		
				14.73	
3	c1	(-3.50--4.75)	1.25		
30.00		(0.00--3.50)	3.50		
		(3.65-0.00)	3.65		
		(4.90-3.65)	1.25		
				9.65	
4	c1	(-3.50--4.75)	1.25		
45.00		(0.00--3.50)	3.50		
		(3.88-0.00)	3.88		
		(5.13-3.88)	1.25		
				9.88	
5	c1	(-3.50--4.75)	1.25		
60.00		(0.00--3.50)	3.50		
		(3.95-0.00)	3.95		
		(5.20-3.95)	1.25		
				9.95	
6	c1	(-3.50--4.75)	1.25		
75.00		(0.00--3.50)	3.50		
		(3.91-0.00)	3.91		
		(5.16-3.91)	1.25		
				9.91	
7	c1	(-6.77--12.06)	5.29		
90.00		(-3.72--6.77)	3.05		
		(-3.50--3.72)	0.22		
		(-0.00--3.50)	3.50		
		(3.68--0.00)	3.68		
		(4.94-3.68)	1.26		
				17.00	
8	c1	(-3.50--4.75)	1.25		
105.00		(0.00--3.50)	3.50		
		(3.51-0.00)	3.51		
		(4.76-3.51)	1.25		
				9.51	
9	c1	(-3.50--4.75)	1.25		
120.00		(0.00--3.50)	3.50		
		(3.50-0.00)	3.50		
		(6.36-3.50)	2.86		
				11.11	
10	c1	(-3.50--4.75)	1.25		
135.00		(0.00--3.50)	3.50		
		(3.50-0.00)	3.50		
		(8.88-3.50)	5.38		
				13.63	
11	c1	(-3.50--4.75)	1.25		
150.00		(0.00--3.50)	3.50		
		(3.50-0.00)	3.50		
		(4.75-3.50)	1.25		
				9.50	
12	c1	(-3.50--4.75)	1.25		
165.00		(0.00--3.50)	3.50		
		(3.50-0.00)	3.50		
		(4.75-3.50)	1.25		
				9.50	
13	c1	(0.00--3.50)	3.50		
180.00		(3.50-0.00)	3.50		
		(4.75-3.50)	1.25		
				8.25	
14	c1	(-3.50--4.75)	1.25		
195.00		(0.00--3.50)	3.50		
		(3.50-0.00)	3.50		
		(4.75-3.50)	1.25		
				9.50	
14bis	c1	(-3.50--4.75)	1.25		
220.22		(0.00--3.50)	3.50		
		(3.50-0.00)	3.50		
		(4.75-3.50)	1.25		
				9.50	

Il Direttore dei Lavori | L'Impresa

BASE

N. SEZIONE PROG.	FIG.	ELEMENTI DI CALCOLO	LUNGHEZZA ELEMENTARE ml	LUNGHEZZA FIGURA ml	NOTE
2	d1	(-3.50--7.05)	3.55		
17.00		(0.00--3.50)	3.50		
		(3.51-0.00)	3.51		
		(7.68-3.51)	4.17		
				14.73	
3	d1	(-3.50--4.75)	1.25		
30.00		(0.00--3.50)	3.50		
		(3.65-0.00)	3.65		
		(4.90-3.65)	1.25		
				9.65	
4	d1	(-3.50--4.75)	1.25		
45.00		(0.00--3.50)	3.50		
		(3.88-0.00)	3.88		
		(5.13-3.88)	1.25		
				9.88	
5	d1	(-3.50--4.75)	1.25		
60.00		(0.00--3.50)	3.50		
		(3.95-0.00)	3.95		
		(5.20-3.95)	1.25		
				9.95	
6	d1	(-3.50--4.75)	1.25		
75.00		(0.00--3.50)	3.50		
		(3.91-0.00)	3.91		
		(5.16-3.91)	1.25		
				9.91	
7	d1	(-6.76--12.06)	5.30		
90.00		(-3.73--6.76)	3.03		
		(-3.50--3.73)	0.23		
		(-0.00--3.50)	3.50		
		(3.68--0.00)	3.68		
		(4.94-3.68)	1.26		
				17.00	
8	d1	(-3.50--4.75)	1.25		
105.00		(0.00--3.50)	3.50		
		(3.51-0.00)	3.51		
		(4.76-3.51)	1.25		
				9.51	
9	d1	(-3.50--4.75)	1.25		
120.00		(0.00--3.50)	3.50		
		(3.50-0.00)	3.50		
		(6.36-3.50)	2.86		
				11.11	
10	d1	(-3.50--4.75)	1.25		
135.00		(0.00--3.50)	3.50		
		(3.50-0.00)	3.50		
		(8.88-3.50)	5.38		
				13.63	
11	d1	(-3.50--4.75)	1.25		
150.00		(0.00--3.50)	3.50		
		(3.50-0.00)	3.50		
		(4.75-3.50)	1.25		
				9.50	
12	d1	(-3.50--4.75)	1.25		
165.00		(0.00--3.50)	3.50		
		(3.50-0.00)	3.50		
		(4.75-3.50)	1.25		
				9.50	
13	d1	(0.00--3.50)	3.50		
180.00		(3.50-0.00)	3.50		
		(4.75-3.50)	1.25		
				8.25	
14	d1	(-3.50--4.75)	1.25		
195.00		(0.00--3.50)	3.50		
		(3.50-0.00)	3.50		
		(4.75-3.50)	1.25		
				9.50	
14bis	d1	(-3.50--4.75)	1.25		
220.22		(0.00--3.50)	3.50		
		(3.50-0.00)	3.50		
		(4.75-3.50)	1.25		
				9.50	

Il Direttore dei Lavori | L'Impresa

FONDAZIONE

N. SEZIONE PROG.	FIG.	ELEMENTI DI CALCOLO	LUNGHEZZA ELEMENTARE ml	LUNGHEZZA FIGURA ml	NOTE
2	e1	(-3.50--7.05)	3.55		
17.00		(0.00--3.50)	3.50		
		(3.51-0.00)	3.51		
		(7.68-3.51)	4.17		
				14.73	
3	e1	(-3.50--4.60)	1.10		
30.00		(0.00--3.50)	3.50		
		(3.65-0.00)	3.65		
		(4.90-3.65)	1.25		
				9.50	
4	e1	(-3.50--4.75)	1.25		
45.00		(0.00--3.50)	3.50		
		(3.88-0.00)	3.88		
		(5.13-3.88)	1.25		
				9.88	
5	e1	(-3.50--4.75)	1.25		
60.00		(0.00--3.50)	3.50		
		(3.95-0.00)	3.95		
		(5.20-3.95)	1.25		
				9.95	
6	e1	(-3.50--4.75)	1.25		
75.00		(0.00--3.50)	3.50		
		(3.91-0.00)	3.91		
		(5.16-3.91)	1.25		
				9.91	
7	e1	(-6.75--12.06)	5.31		
90.00		(-3.73--6.75)	3.02		
		(-3.50--3.73)	0.23		
		(-0.00--3.50)	3.50		
		(3.68--0.00)	3.68		
		(4.79-3.68)	1.11		
				16.85	
8	e1	(-3.50--4.75)	1.25		
105.00		(0.00--3.50)	3.50		
		(3.51-0.00)	3.51		
		(4.76-3.51)	1.25		
				9.51	
9	e1	(-3.50--4.75)	1.25		
120.00		(0.00--3.50)	3.50		
		(3.50-0.00)	3.50		
		(6.36-3.50)	2.86		
				11.11	
10	e1	(-3.50--4.75)	1.25		
135.00		(0.00--3.50)	3.50		
		(3.50-0.00)	3.50		
		(8.88-3.50)	5.38		
				13.63	
11	e1	(-3.50--4.75)	1.25		
150.00		(0.00--3.50)	3.50		
		(3.50-0.00)	3.50		
		(4.75-3.50)	1.25		
				9.50	
12	e1	(-3.50--4.75)	1.25		
165.00		(0.00--3.50)	3.50		
		(3.50-0.00)	3.50		
		(4.75-3.50)	1.25		
				9.50	
13	e1	(0.00--3.50)	3.50		
180.00		(3.50-0.00)	3.50		
		(4.75-3.50)	1.25		
				8.25	
14	e1	(-3.50--4.75)	1.25		
195.00		(0.00--3.50)	3.50		
		(3.50-0.00)	3.50		
		(4.75-3.50)	1.25		
				9.50	
14bis	e1	(-3.50--4.75)	1.25		
220.22		(0.00--3.50)	3.50		
		(3.50-0.00)	3.50		
		(4.75-3.50)	1.25		
				9.50	

Il Direttore dei Lavori | L'Impresa

SCOTICO

N. SEZIONE PROG.	FIG.	ELEMENTI DI CALCOLO	LUNGHEZZA ELEMENTARE ml	LUNGHEZZA FIGURA ml	NOTE
2	sc1	(-9.70--9.70)	0.00		
17.00		(-9.60--9.70)	0.10		
		(-9.48--9.60)	0.12		
		(-9.40--9.48)	0.08		
		(-9.39--9.40)	0.01		
		(-9.38--9.39)	0.01		
		(-9.37--9.38)	0.01		
		(-9.35--9.37)	0.02		
		(-9.30--9.35)	0.05		
		(-9.30--9.30)	0.00		
		(-9.30--9.30)	0.00		
		(-9.30--9.30)	0.00		
		(-8.97--9.30)	0.33		
		(-8.79--8.97)	0.18		
		(-8.67--8.79)	0.12		
		(-8.03--8.67)	0.64		
		(-7.93--8.03)	0.10		
		(-7.93--7.93)	0.00		
				1.77	
3	sc3	(5.90-5.90)	0.00		
30.00		(6.15-5.90)	0.25		
		(6.20-6.15)	0.05		
		(6.25-6.20)	0.05		
		(6.25-6.25)	0.00		
				0.35	
3	sc1	(6.71-6.71)	0.00		
30.00		(6.71-6.71)	0.00		
		(6.71-6.71)	0.00		
		(6.71-6.71)	0.00		
				0.00	
3	sc2	(6.42-6.42)	0.00		
30.00		(6.46-6.42)	0.04		
		(6.54-6.46)	0.08		
		(6.68-6.54)	0.14		
		(6.68-6.68)	0.00		
				0.26	
4	sc1	(-6.45--6.45)	0.00		
45.00		(-5.98--6.45)	0.47		
		(-5.62--5.98)	0.36		
		(-5.58--5.62)	0.04		
		(-5.27--5.58)	0.31		
		(-5.20--5.27)	0.07		
		(-5.20--5.20)	0.00		
				1.25	
5	sc2	(-6.52--6.52)	0.00		
60.00		(-5.70--6.52)	0.82		
		(-5.66--5.70)	0.04		
		(-5.65--5.66)	0.01		
		(-5.45--5.65)	0.20		
		(-5.31--5.45)	0.14		
		(-5.29--5.31)	0.02		
		(-5.21--5.29)	0.08		
		(-5.20--5.21)	0.01		
		(-5.20--5.20)	0.00		
				1.32	
5	sc1	(-5.20--5.20)	0.00		
60.00		(-5.16--5.20)	0.04		
		(-5.14--5.16)	0.02		
		(-5.04--5.14)	0.10		
		(-4.89--5.04)	0.15		
		(-4.65--4.89)	0.24		
		(-4.63--4.65)	0.02		
		(-4.62--4.63)	0.01		
		(-4.55--4.62)	0.07		
		(-4.49--4.55)	0.06		
		(-4.49--4.49)	0.00		
				0.71	
6	sc3	(-6.62--6.62)	0.00		
75.00		(-5.86--6.62)	0.76		
		(-4.84--5.86)	1.02		
		(-4.83--4.84)	0.01		
		(-4.69--4.83)	0.14		
		(-4.63--4.69)	0.06		
		(-4.33--4.63)	0.30		
		(-4.32--4.33)	0.01		
		(-4.32--4.32)	0.00		
		(-4.32--4.32)	0.00		
				2.30	
6	sc1	(6.44-6.44)	0.00		
75.00		(6.45-6.44)	0.01		
		(6.46-6.45)	0.01		
		(6.46-6.46)	0.00		
				0.02	
6	sc2	(-4.31--4.31)	0.00		
75.00		(-4.31--4.31)	0.00		
		(-4.23--4.31)	0.08		
		(-4.22--4.23)	0.01		
		(-4.21--4.22)	0.01		
		(-4.19--4.21)	0.02		
		(-4.16--4.19)	0.03		
		(-4.13--4.16)	0.03		
		(-4.08--4.13)	0.05		
		(-3.99--4.08)	0.09		
		(-3.81--3.99)	0.18		
		(-3.81--3.81)	0.00		
		(-3.80--3.81)	0.01		
		(-2.78--3.80)	1.02		
		(-2.76--2.78)	0.02		
		(-2.35--2.76)	0.41		
		(-2.35--2.35)	0.00		
				1.96	
7	sc1	(-7.39--7.39)	0.00		
90.00		(-7.08--7.39)	0.31		
		(-7.01--7.08)	0.07		
		(-6.05--7.01)	0.96		
		(-5.95--6.05)	0.10		
		(-5.03--5.95)	0.92		
		A RIPORTARE ml	2.36		

SCOTICO

N. SEZIONE PROG.	FIG.	ELEMENTI DI CALCOLO	LUNGHEZZA ELEMENTARE ml	LUNGHEZZA FIGURA ml	NOTE
		RIPORTO ml	2.36		
		(-4.88--5.03)	0.15		
		(-4.00--4.88)	0.88		
		(-3.82--4.00)	0.18		
		(-2.97--3.82)	0.85		
		(-2.76--2.97)	0.21		
		(-1.95--2.76)	0.81		
		(-1.70--1.95)	0.25		
		(-0.92--1.70)	0.78		
		(-0.63--0.92)	0.29		
		(0.10--0.63)	0.73		
		(0.43-0.10)	0.33		
		(1.13-0.43)	0.70		
		(1.49-1.13)	0.36		
		(2.15-1.49)	0.66		
		(2.56-2.15)	0.41		
		(3.18-2.56)	0.62		
		(3.62-3.18)	0.44		
		(4.21-3.62)	0.59		
		(4.76-4.21)	0.55		
		(5.23-4.76)	0.47		
		(5.74-5.23)	0.51		
		(6.26-5.74)	0.52		
		(6.28-6.26)	0.02		
		(6.30-6.28)	0.02		
		(6.31-6.30)	0.01		
		(6.32-6.31)	0.01		
		(6.32-6.32)	0.00		
		(6.68-6.32)	0.36		
		(6.73-6.68)	0.05		
		(6.91-6.73)	0.18		
		(6.96-6.91)	0.05		
		(6.96-6.96)	0.00		
		(6.96-6.96)	0.00		
		(7.18-6.96)	0.22		
		(7.28-7.18)	0.10		
		(7.32-7.28)	0.04		
		(7.38-7.32)	0.06		
		(7.41-7.38)	0.03		
		(7.43-7.41)	0.02		
		(7.51-7.43)	0.08		
		(7.51-7.51)	0.00		
				14.90	
8 105.00	sc1	(-7.35--7.35)	0.00		
		(-7.09--7.35)	0.26		
		(-6.71--7.09)	0.38		
		(-6.11--6.71)	0.60		
		(-5.68--6.11)	0.43		
		(-5.12--5.68)	0.56		
		(-4.66--5.12)	0.46		
		(-4.14--4.66)	0.52		
		(-3.63--4.14)	0.51		
		(-3.16--3.63)	0.47		
		(-2.61--3.16)	0.55		
		(-2.18--2.61)	0.43		
		(-1.58--2.18)	0.60		
		(-1.20--1.58)	0.38		
		(-0.55--1.20)	0.65		
		(-0.22--0.55)	0.33		
		(0.47--0.22)	0.69		
		(0.76-0.47)	0.29		
		(1.50-0.76)	0.74		
		(1.74-1.50)	0.24		
		(2.53-1.74)	0.79		
		(2.72-2.53)	0.19		
		(3.55-2.72)	0.83		
		(4.47-3.55)	0.92		
		(4.58-4.47)	0.11		
		(4.68-4.58)	0.10		
		(5.61-4.68)	0.93		
		(5.62-5.61)	0.01		
		(5.77-5.62)	0.15		
		(5.86-5.77)	0.09		
		(5.92-5.86)	0.06		
		(6.12-5.92)	0.20		
		(6.12-6.12)	0.00		
		(6.12-6.12)	0.00		
		(6.63-6.12)	0.51		
		(6.63-6.63)	0.00		
		(6.64-6.63)	0.01		
		(6.85-6.64)	0.21		
		(7.62-6.85)	0.77		
		(7.66-7.62)	0.04		
		(7.72-7.66)	0.06		
		(7.72-7.72)	0.00		
				15.07	
9 120.00	sc1	(-8.70--8.70)	0.00		
		(-8.44--8.70)	0.26		
		(-8.13--8.44)	0.31		
		(-7.41--8.13)	0.72		
		(-7.15--7.41)	0.26		
		(-6.39--7.15)	0.76		
		(-6.17--6.39)	0.22		
		(-5.36--6.17)	0.81		
		(-5.19--5.36)	0.17		
		(-4.33--5.19)	0.86		
		(-4.21--4.33)	0.12		
		(-3.31--4.21)	0.90		
		(-3.23--3.31)	0.08		
		(-2.28--3.23)	0.95		
		(-2.25--2.28)	0.03		
		(-1.62--2.25)	0.63		
		(-1.25--1.62)	0.37		
		(-1.24--1.25)	0.01		
		(-0.23--1.24)	1.01		
		(-0.16--0.23)	0.07		
		A RIPORTARE ml	8.54		

SCOTICO

N. SEZIONE PROG.	FIG.	ELEMENTI DI CALCOLO	LUNGHEZZA ELEMENTARE ml	LUNGHEZZA FIGURA ml	NOTE
		RIPORTO ml	8.54		
		(0.80--0.16)	0.96		
		(0.92-0.80)	0.12		
		(1.82-0.92)	0.90		
		(1.99-1.82)	0.17		
		(2.85-1.99)	0.86		
		(3.63-2.85)	0.78		
		(3.88-3.63)	0.25		
		(4.15-3.88)	0.27		
		(4.90-4.15)	0.75		
		(5.22-4.90)	0.32		
		(5.93-5.22)	0.71		
		(5.97-5.93)	0.04		
		(5.99-5.97)	0.02		
		(5.99-5.99)	0.00		
		(5.99-5.99)	0.00		
		(6.56-5.99)	0.57		
		(6.96-6.56)	0.40		
		(7.38-6.96)	0.42		
		(7.86-7.38)	0.48		
				16.56	
10 135.00	sc1	(-10.29--10.29)	0.00		
		(-10.17--10.29)	0.12		
		(-9.97--10.17)	0.20		
		(-9.45--9.97)	0.52		
		(-9.45--9.45)	0.00		
		(-9.43--9.45)	0.02		
		(-9.43--9.43)	0.00		
		(-9.40--9.43)	0.03		
		(-9.35--9.40)	0.05		
		(-9.28--9.35)	0.07		
		(-9.15--9.28)	0.13		
		(-9.14--9.15)	0.01		
		(-9.14--9.14)	0.00		
		(-9.07--9.14)	0.07		
		(-9.04--9.07)	0.03		
		(-8.81--9.04)	0.23		
		(-8.81--8.81)	0.00		
		(-8.81--8.81)	0.00		
		(-8.66--8.81)	0.15		
		(-8.62--8.66)	0.04		
		(-8.57--8.62)	0.05		
		(-8.49--8.57)	0.08		
		(-8.36--8.49)	0.13		
		(-8.14--8.36)	0.22		
		(-8.11--8.14)	0.03		
		(-7.22--8.11)	0.89		
		(-7.09--7.22)	0.13		
		(-6.24--7.09)	0.85		
		(-6.06--6.24)	0.18		
		(-5.26--6.06)	0.80		
		(-5.04--5.26)	0.22		
		(-4.28--5.04)	0.76		
		(-4.01--4.28)	0.27		
		(-3.30--4.01)	0.71		
		(-2.98--3.30)	0.32		
		(-2.32--2.98)	0.66		
		(-1.96--2.32)	0.36		
		(-1.34--1.96)	0.62		
		(-0.93--1.34)	0.41		
		(-0.36--0.93)	0.57		
		(0.10--0.36)	0.46		
		(0.62-0.10)	0.52		
		(1.12-0.62)	0.50		
		(1.60-1.12)	0.48		
		(2.15-1.60)	0.55		
		(2.75-2.15)	0.60		
		(3.18-2.75)	0.43		
		(3.56-3.18)	0.38		
		(4.20-3.56)	0.64		
		(4.54-4.20)	0.34		
		(5.23-4.54)	0.69		
		(5.49-5.23)	0.26		
		(5.63-5.49)	0.14		
		(5.90-5.63)	0.27		
		(5.90-5.90)	0.00		
		(5.91-5.90)	0.01		
		(5.91-5.91)	0.00		
		(5.91-5.91)	0.00		
		(5.92-5.91)	0.01		
		(5.93-5.92)	0.01		
		(5.95-5.93)	0.02		
		(5.97-5.95)	0.02		
		(6.01-5.97)	0.04		
		(6.09-6.01)	0.08		
		(6.26-6.09)	0.17		
		(6.28-6.26)	0.02		
		(6.43-6.28)	0.15		
		(6.43-6.43)	0.00		
		(6.43-6.43)	0.00		
		(6.48-6.43)	0.05		
		(6.91-6.48)	0.43		
		(7.02-6.91)	0.11		
		(7.22-7.02)	0.20		
		(7.28-7.22)	0.06		
		(7.49-7.28)	0.21		
		(8.31-7.49)	0.82		
		(8.47-8.31)	0.16		
		(9.33-8.47)	0.86		
		(9.37-9.33)	0.04		
		(9.58-9.37)	0.21		
		(9.67-9.58)	0.09		
		(9.73-9.67)	0.06		
		(9.77-9.73)	0.04		
		(9.80-9.77)	0.03		
		(9.82-9.80)	0.02		
		A RIPORTARE ml	20.11		

SCOTICO

N. SEZIONE PROG.	FIG.	ELEMENTI DI CALCOLO	LUNGHEZZA ELEMENTARE ml	LUNGHEZZA FIGURA ml	NOTE
		RIPORTO ml	20.11		
		(9.83-9.82)	0.01		
		(9.84-9.83)	0.01		
		(9.89-9.84)	0.05		
		(9.89-9.89)	0.00		
		(9.89-9.89)	0.00		
		(10.07-9.89)	0.18		
		(10.09-10.07)	0.02		
		(10.13-10.09)	0.04		
		(10.20-10.13)	0.07		
		(10.34-10.20)	0.14		
		(10.36-10.34)	0.02		
		(10.43-10.36)	0.07		
		(11.39-10.43)	0.96		
		(11.41-11.39)	0.02		
		(11.85-11.41)	0.44		
		(12.39-11.85)	0.54		
		(12.41-12.39)	0.02		
		(13.37-12.41)	0.96		
		(13.44-13.37)	0.07		
		(14.35-13.44)	0.91		
		(14.47-14.35)	0.12		
		(15.33-14.47)	0.86		
		(15.49-15.33)	0.16		
		(15.62-15.49)	0.13		
		(15.62-15.62)	0.00		
				25.91	
11 150.00	sc1	(-11.70--11.70)	0.00		
		(-11.57--11.70)	0.13		
		(-10.87--11.57)	0.70		
		(-10.49--10.87)	0.38		
		(-9.84--10.49)	0.65		
		(-9.72--9.84)	0.12		
		(-9.59--9.72)	0.13		
		(-9.42--9.59)	0.17		
		(-9.42--9.42)	0.00		
		(-9.42--9.42)	0.00		
		(-9.37--9.42)	0.05		
		(-9.36--9.37)	0.01		
		(-9.28--9.36)	0.08		
		(-9.22--9.28)	0.06		
		(-9.22--9.22)	0.00		
		(-9.22--9.22)	0.00		
		(-9.08--9.22)	0.14		
		(-9.04--9.08)	0.04		
		(-8.93--9.04)	0.11		
		(-8.82--8.93)	0.11		
		(-8.34--8.82)	0.48		
		(-7.79--8.34)	0.55		
		(-7.26--7.79)	0.53		
		(-6.76--7.26)	0.50		
		(-6.19--6.76)	0.57		
		(-5.74--6.19)	0.45		
		(-5.11--5.74)	0.63		
		(-4.71--5.11)	0.40		
		(-4.03--4.71)	0.68		
		(-3.68--4.03)	0.35		
		(-2.95--3.68)	0.73		
		(-2.66--2.95)	0.29		
		(-1.88--2.66)	0.78		
		(-1.63--1.88)	0.25		
		(-0.80--1.63)	0.83		
		(-0.61--0.80)	0.19		
		(0.28--0.61)	0.89		
		(0.42-0.28)	0.14		
		(1.35-0.42)	0.93		
		(1.45-1.35)	0.10		
		(1.53-1.45)	0.08		
		(2.47-1.53)	0.94		
		(3.39-2.47)	0.92		
		(3.50-3.39)	0.11		
		(3.50-3.50)	0.00		
		(4.48-3.50)	0.98		
		(4.53-4.48)	0.05		
		(5.46-4.53)	0.93		
		(5.55-5.46)	0.09		
		(5.56-5.55)	0.01		
		(5.82-5.56)	0.26		
		(5.82-5.82)	0.00		
		(5.82-5.82)	0.00		
		(6.16-5.82)	0.34		
		(6.24-6.16)	0.08		
		(6.32-6.24)	0.08		
		(6.32-6.32)	0.00		
		(6.32-6.32)	0.00		
		(6.33-6.32)	0.01		
		(6.34-6.33)	0.01		
		(6.35-6.34)	0.01		
		(6.37-6.35)	0.02		
		(6.41-6.37)	0.04		
		(6.46-6.41)	0.05		
		(6.56-6.46)	0.10		
		(6.58-6.56)	0.02		
		(7.42-6.58)	0.84		
		(7.61-7.42)	0.19		
		(8.40-7.61)	0.79		
		(8.63-8.40)	0.23		
		(9.38-8.63)	0.75		
		(9.66-9.38)	0.28		
		(10.36-9.66)	0.70		
		(10.69-10.36)	0.33		
		(11.34-10.69)	0.65		
		(11.71-11.34)	0.37		
		(12.32-11.71)	0.61		
		(12.74-12.32)	0.42		
		(13.30-12.74)	0.56		
		A RIPORTARE ml	25.00		

SCOTICO

N. SEZIONE PROG.	FIG.	ELEMENTI DI CALCOLO	LUNGHEZZA ELEMENTARE ml	LUNGHEZZA FIGURA ml	NOTE
		RIPORTO ml	25.00		
		(13.66-13.30)	0.36		
		(13.66-13.66)	0.00		
				25.36	
12	sc1	(-13.33--13.33)	0.00		
165.00		(-13.24--13.33)	0.09		
		(-12.60--13.24)	0.64		
		(-12.25--12.60)	0.35		
		(-12.02--12.25)	0.23		
		(-11.82--12.02)	0.20		
		(-11.82--11.82)	0.00		
		(-11.73--11.82)	0.09		
		(-11.64--11.73)	0.09		
		(-11.63--11.64)	0.01		
		(-11.63--11.63)	0.00		
		(-11.46--11.63)	0.17		
		(-11.41--11.46)	0.05		
		(-11.39--11.41)	0.02		
		(-11.33--11.39)	0.06		
		(-11.20--11.33)	0.13		
		(-10.81--11.20)	0.39		
		(-10.54--10.81)	0.27		
		(-10.30--10.54)	0.24		
		(-9.52--10.30)	0.78		
		(-9.32--9.52)	0.20		
		(-8.49--9.32)	0.83		
		(-8.34--8.49)	0.15		
		(-7.47--8.34)	0.87		
		(-7.36--7.47)	0.11		
		(-6.44--7.36)	0.92		
		(-6.38--6.44)	0.06		
		(-5.41--6.38)	0.97		
		(-5.40--5.41)	0.01		
		(-5.07--5.40)	0.33		
		(-4.42--5.07)	0.65		
		(-4.39--4.42)	0.03		
		(-3.44--4.39)	0.95		
		(-3.36--3.44)	0.08		
		(-2.46--3.36)	0.90		
		(-2.33--2.46)	0.13		
		(-1.48--2.33)	0.85		
		(-1.31--1.48)	0.17		
		(-0.49--1.31)	0.82		
		(-0.28--0.49)	0.21		
		(0.49--0.28)	0.77		
		(0.75-0.49)	0.26		
		(1.47-0.75)	0.72		
		(1.77-1.47)	0.30		
		(2.45-1.77)	0.68		
		(2.80-2.45)	0.35		
		(3.43-2.80)	0.63		
		(3.83-3.43)	0.40		
		(4.41-3.83)	0.58		
		(4.85-4.41)	0.44		
		(4.96-4.85)	0.11		
		(5.11-4.96)	0.15		
		(5.22-5.11)	0.11		
		(5.71-5.22)	0.49		
		(5.71-5.71)	0.00		
		(5.72-5.71)	0.01		
		(5.74-5.72)	0.02		
		(5.76-5.74)	0.02		
		(5.80-5.76)	0.04		
		(5.85-5.80)	0.05		
		(5.88-5.85)	0.03		
		(5.92-5.88)	0.04		
		(6.20-5.92)	0.28		
		(6.20-6.20)	0.00		
		(6.21-6.20)	0.01		
		(6.59-6.21)	0.38		
		(6.68-6.59)	0.09		
		(6.81-6.68)	0.13		
		(6.90-6.81)	0.09		
		(7.35-6.90)	0.45		
		(7.93-7.35)	0.58		
		(8.33-7.93)	0.40		
		(8.90-8.33)	0.57		
		(8.90-8.90)	0.00		
				22.23	
13	sc1	(-3.50--3.50)	0.00		
180.00		(-3.04--3.50)	0.46		
		(-2.52--3.04)	0.52		
		(-2.01--2.52)	0.51		
		(-1.54--2.01)	0.47		
		(-0.98--1.54)	0.56		
		(-0.56--0.98)	0.42		
		(0.04--0.56)	0.60		
		(0.42-0.04)	0.38		
		(1.07-0.42)	0.65		
		(1.40-1.07)	0.33		
		(2.10-1.40)	0.70		
		(2.38-2.10)	0.28		
		(3.12-2.38)	0.74		
		(3.36-3.12)	0.24		
		(4.15-3.36)	0.79		
		(4.34-4.15)	0.19		
		(5.18-4.34)	0.84		
		(5.19-5.18)	0.01		
		(5.29-5.19)	0.10		
		(5.36-5.29)	0.07		
		(5.42-5.36)	0.06		
		(5.62-5.42)	0.20		
		(5.62-5.62)	0.00		
		(5.62-5.62)	0.00		
		(6.02-5.62)	0.40		
		(6.10-6.02)	0.08		
		A RIPORTARE ml	9.60		

SCOTICO

N. SEZIONE PROG.	FIG.	ELEMENTI DI CALCOLO	LUNGHEZZA ELEMENTARE ml	LUNGHEZZA FIGURA ml	NOTE
		RIPORTO ml	9.60		
		(6.12-6.10)	0.02		
		(6.12-6.12)	0.00		
		(6.13-6.12)	0.01		
		(6.16-6.13)	0.03		
		(6.20-6.16)	0.04		
		(6.30-6.20)	0.10		
		(7.23-6.30)	0.93		
		(7.28-7.23)	0.05		
		(8.26-7.28)	0.98		
		(8.26-8.26)	0.00		
		(8.40-8.26)	0.14		
		(9.24-8.40)	0.84		
		(9.28-9.24)	0.04		
		(10.22-9.28)	0.94		
		(10.31-10.22)	0.09		
		(11.20-10.31)	0.89		
		(11.33-11.20)	0.13		
		(12.18-11.33)	0.85		
		(12.36-12.18)	0.18		
		(13.16-12.36)	0.80		
		(13.39-13.16)	0.23		
		(14.14-13.39)	0.75		
		(14.41-14.14)	0.27		
		(15.13-14.41)	0.72		
		(15.44-15.13)	0.31		
		(16.11-15.44)	0.67		
		(16.47-16.11)	0.36		
		(16.50-16.47)	0.03		
		(16.50-16.50)	0.00		
				20.00	
14 195.00	sc2	(-8.55--8.55)	0.00		
		(-8.55--8.55)	0.00		
		(-8.55--8.55)	0.00		
				0.00	
14 195.00	sc1	(-8.55--8.55)	0.00		
		(-8.55--8.55)	0.00		
		(-8.53--8.55)	0.02		
		(-8.51--8.53)	0.02		
		(-8.48--8.51)	0.03		
		(-8.41--8.48)	0.07		
		(-8.25--8.41)	0.16		
		(-8.20--8.25)	0.05		
		(-7.84--8.20)	0.36		
		(-7.49--7.84)	0.35		
		(-6.82--7.49)	0.67		
		(-6.51--6.82)	0.31		
		(-5.79--6.51)	0.72		
		(-5.53--5.79)	0.26		
		(-4.76--5.53)	0.77		
		(-4.55--4.76)	0.21		
		(-3.74--4.55)	0.81		
		(-3.57--3.74)	0.17		
		(-2.71--3.57)	0.86		
		(-2.59--2.71)	0.12		
		(-1.68--2.59)	0.91		
		(-1.61--1.68)	0.07		
		(-0.66--1.61)	0.95		
		(-0.63--0.66)	0.03		
		(-0.07--0.63)	0.56		
		(0.37--0.07)	0.44		
		(0.39-0.37)	0.02		
		(1.40-0.39)	1.01		
		(1.47-1.40)	0.07		
		(2.42-1.47)	0.95		
		(2.54-2.42)	0.12		
		(3.45-2.54)	0.91		
		(3.62-3.45)	0.17		
		(4.47-3.62)	0.85		
		(5.25-4.47)	0.78		
		(5.37-5.25)	0.12		
		(5.42-5.37)	0.05		
		(5.44-5.42)	0.02		
		(5.45-5.44)	0.01		
		(5.46-5.45)	0.01		
		(5.49-5.46)	0.03		
		(5.52-5.49)	0.03		
		(5.53-5.52)	0.01		
		(5.53-5.53)	0.00		
		(5.59-5.53)	0.06		
		(5.61-5.59)	0.02		
		(5.70-5.61)	0.09		
		(5.77-5.70)	0.07		
		(5.82-5.77)	0.05		
		(6.01-5.82)	0.19		
		(6.01-6.01)	0.00		
		(6.01-6.01)	0.00		
		(6.47-6.01)	0.46		
		(6.53-6.47)	0.06		
		(6.85-6.53)	0.32		
		(7.55-6.85)	0.70		
		(7.93-7.55)	0.38		
		(8.58-7.93)	0.65		
		(9.00-8.58)	0.42		
		(9.61-9.00)	0.61		
		(10.08-9.61)	0.47		
		(10.63-10.08)	0.55		
		(11.16-10.63)	0.53		
		(11.66-11.16)	0.50		
		(12.23-11.66)	0.57		
		(12.69-12.23)	0.46		
		(13.31-12.69)	0.62		
		(13.71-13.31)	0.40		
		(14.39-13.71)	0.68		
		(14.74-14.39)	0.35		
		(15.46-14.74)	0.72		
		A RIPORTARE ml	24.01		

SCOTICO

N. SEZIONE PROG.	FIG.	ELEMENTI DI CALCOLO	LUNGHEZZA ELEMENTARE ml	LUNGHEZZA FIGURA ml	NOTE
		RIPORTO ml	24.01		
		(15.76-15.46)	0.30		
		(16.54-15.76)	0.78		
		(16.79-16.54)	0.25		
		(17.62-16.79)	0.83		
		(17.63-17.62)	0.01		
		(17.63-17.63)	0.00		
				26.18	
14bis	sc2	(-8.55--8.55)	0.00		
220.22		(-8.55--8.55)	0.00		
		(-8.55--8.55)	0.00		
				0.00	
14bis	sc1	(-8.55--8.55)	0.00		
220.22		(-8.55--8.55)	0.00		
		(-8.53--8.55)	0.02		
		(-8.51--8.53)	0.02		
		(-8.48--8.51)	0.03		
		(-8.41--8.48)	0.07		
		(-8.25--8.41)	0.16		
		(-8.20--8.25)	0.05		
		(-7.84--8.20)	0.36		
		(-7.49--7.84)	0.35		
		(-6.82--7.49)	0.67		
		(-6.51--6.82)	0.31		
		(-5.79--6.51)	0.72		
		(-5.53--5.79)	0.26		
		(-4.76--5.53)	0.77		
		(-4.55--4.76)	0.21		
		(-3.74--4.55)	0.81		
		(-3.57--3.74)	0.17		
		(-2.71--3.57)	0.86		
		(-2.59--2.71)	0.12		
		(-1.68--2.59)	0.91		
		(-1.61--1.68)	0.07		
		(-0.66--1.61)	0.95		
		(-0.63--0.66)	0.03		
		(-0.07--0.63)	0.56		
		(0.37--0.07)	0.44		
		(0.39-0.37)	0.02		
		(1.40-0.39)	1.01		
		(1.47-1.40)	0.07		
		(2.42-1.47)	0.95		
		(2.54-2.42)	0.12		
		(3.45-2.54)	0.91		
		(3.62-3.45)	0.17		
		(4.47-3.62)	0.85		
		(5.25-4.47)	0.78		
		(5.37-5.25)	0.12		
		(5.42-5.37)	0.05		
		(5.44-5.42)	0.02		
		(5.45-5.44)	0.01		
		(5.46-5.45)	0.01		
		(5.49-5.46)	0.03		
		(5.52-5.49)	0.03		
		(5.53-5.52)	0.01		
		(5.53-5.53)	0.00		
		(5.59-5.53)	0.06		
		(5.61-5.59)	0.02		
		(5.70-5.61)	0.09		
		(5.77-5.70)	0.07		
		(5.82-5.77)	0.05		
		(6.01-5.82)	0.19		
		(6.01-6.01)	0.00		
		(6.01-6.01)	0.00		
		(6.47-6.01)	0.46		
		(6.53-6.47)	0.06		
		(6.85-6.53)	0.32		
		(7.55-6.85)	0.70		
		(7.93-7.55)	0.38		
		(8.58-7.93)	0.65		
		(9.00-8.58)	0.42		
		(9.61-9.00)	0.61		
		(10.08-9.61)	0.47		
		(10.63-10.08)	0.55		
		(11.16-10.63)	0.53		
		(11.66-11.16)	0.50		
		(12.23-11.66)	0.57		
		(12.69-12.23)	0.46		
		(13.31-12.69)	0.62		
		(13.71-13.31)	0.40		
		(14.39-13.71)	0.68		
		(14.74-14.39)	0.35		
		(15.46-14.74)	0.72		
		(15.76-15.46)	0.30		
		(16.54-15.76)	0.78		
		(16.79-16.54)	0.25		
		(17.62-16.79)	0.83		
		(17.63-17.62)	0.01		
		(17.63-17.63)	0.00		
				26.18	

Il Direttore dei Lavori | L'Impresa

BONIFICA

DALLA SEZ. DA PROG.	ALLA SEZ. A PROG.	SEZIONE	FIGURA	AREA	DISTANZA SEZIONI m	DISTANZA DI CALCOLO m	VOLUME PARZIALE mc	VOLUME TOTALE mc
2	3	2	BO1	0.86	13.00	6.50	5.590	
17.00	30.00	3	BO1	0.17	13.00	6.50	1.105	
		3	BO2	0.13	13.00	6.50	0.845	
								7.540
3	4	3	BO1	0.17	15.00	7.50	1.275	
30.00	45.00	3	BO2	0.13	15.00	7.50	0.975	
		4	BO1	0.63	15.00	7.50	4.725	
								6.975
4	5	4	BO1	0.63	15.00	7.50	4.725	
45.00	60.00	5	BO1	0.65	15.00	7.50	4.875	
		5	BO2	0.35	15.00	7.50	2.625	
								12.225
5	6	5	BO1	0.65	15.00	7.50	4.875	
60.00	75.00	5	BO2	0.35	15.00	7.50	2.625	
		6	BO1	1.14	15.00	7.50	8.550	
		6	BO2	0.95	15.00	7.50	7.125	
								23.175
6	7	6	BO1	1.14	15.00	7.50	8.550	
75.00	90.00	6	BO2	0.95	15.00	7.50	7.125	
		7	BO1	7.41	15.00	7.50	55.575	
								71.250
7	8	7	BO1	7.41	15.00	7.50	55.575	
90.00	105.00	8	BO1	7.53	15.00	7.50	56.475	
								112.050
8	9	8	BO1	7.53	15.00	7.50	56.475	
105.00	120.00	9	BO1	4.06	15.00	7.50	30.450	
		9	BO1	0.07	15.00	7.50	0.525	
								87.450
9	10	9	BO1	4.06	15.00	7.50	30.450	
120.00	135.00	9	BO1	0.07	15.00	7.50	0.525	
		10	BO1	12.98	15.00	7.50	97.350	
								128.325
10	11	10	BO1	12.98	15.00	7.50	97.350	
135.00	150.00	11	BO1	12.72	15.00	7.50	95.400	
								192.750
11	12	11	BO1	12.72	15.00	7.50	95.400	
150.00	165.00	12	BO1	11.10	15.00	7.50	83.250	
								178.650
12	13	12	BO1	11.10	15.00	7.50	83.250	
165.00	180.00	13	BO1	9.99	15.00	7.50	74.925	
								158.175
13	14	13	BO1	9.99	15.00	7.50	74.925	
180.00	195.00	14	BO1	13.15	15.00	7.50	98.625	
								173.550
14	15	14	BO1	13.15	15.00	7.50	98.625	
								98.625
15	14bis	14bis	BO1	13.15	10.22	5.11	67.197	
								67.197

Il Direttore dei Lavori	L'Impresa	TOTALE ARTICOLO	1317.937

USURA

DALLA SEZ. DA PROG.	ALLA SEZ. A PROG.	SEZIONE	FIGURA	LUNGHEZZA	DISTANZA SEZIONI ml	DISTANZA DI CALCOLO ml	AREA PARZIALE mq	AREA TOTALE mq
2	3	2	a1	14.73	13.00	6.50	95.75	
17.00	30.00	3	a1	9.65	13.00	6.50	62.73	
								158.48
3	4	3	a1	9.65	15.00	7.50	72.38	
30.00	45.00	4	a1	9.88	15.00	7.50	74.10	
								146.48
4	5	4	a1	9.88	15.00	7.50	74.10	
45.00	60.00	5	a1	9.95	15.00	7.50	74.63	
								148.73
5	6	5	a1	9.95	15.00	7.50	74.63	
60.00	75.00	6	a1	9.91	15.00	7.50	74.33	
								148.96
6	7	6	a1	9.91	15.00	7.50	74.33	
75.00	90.00	7	a1	19.61	15.00	7.50	147.07	
								221.40
7	8	7	a1	19.61	15.00	7.50	147.07	
90.00	105.00	8	a1	9.51	15.00	7.50	71.33	
								218.40
8	9	8	a1	9.51	15.00	7.50	71.33	
105.00	120.00	9	a1	11.11	15.00	7.50	83.32	
								154.65
9	10	9	a1	11.11	15.00	7.50	83.32	
120.00	135.00	10	a1	13.63	15.00	7.50	102.23	
								185.55
10	11	10	a1	13.63	15.00	7.50	102.23	
135.00	150.00	11	a1	9.50	15.00	7.50	71.25	
								173.48
11	12	11	a1	9.50	15.00	7.50	71.25	
150.00	165.00	12	a1	9.50	15.00	7.50	71.25	
								142.50
12	13	12	a1	9.50	15.00	7.50	71.25	
165.00	180.00	13	a1	8.25	15.00	7.50	61.88	
								133.13
13	14	13	a1	8.25	15.00	7.50	61.88	
180.00	195.00	14	a1	9.50	15.00	7.50	71.25	
								133.13
14	15	14	a1	9.50	15.00	7.50	71.25	
								71.25
15	14bis	14bis	a1	9.50	10.22	5.11	48.55	
								48.55

VEGETALE

DALLA SEZ. DA PROG.	ALLA SEZ. A PROG.	SEZIONE	FIGURA	LUNGHEZZA	DISTANZA SEZIONI ml	DISTANZA DI CALCOLO ml	AREA PARZIALE mq	AREA TOTALE mq
2	3	2	b1	2.64	13.00	6.50	17.16	
17.00	30.00	2	b2	2.14	13.00	6.50	13.91	
		3	b2	2.24	13.00	6.50	14.56	
		3	b1	1.66	13.00	6.50	10.79	
								56.42
3	4	3	b2	2.24	15.00	7.50	16.80	
30.00	45.00	3	b1	1.66	15.00	7.50	12.45	
		4	b1	2.06	15.00	7.50	15.45	
								44.70
4	5	4	b1	2.06	15.00	7.50	15.45	
45.00	60.00	5	b1	2.12	15.00	7.50	15.90	
								31.35
5	6	5	b1	2.12	15.00	7.50	15.90	
60.00	75.00	6	b1	2.25	15.00	7.50	16.88	
								32.78
6	7	6	b1	2.25	15.00	7.50	16.88	
75.00	90.00	7	b1	2.46	15.00	7.50	18.45	
								35.33
7	8	7	b1	2.46	15.00	7.50	18.45	
90.00	105.00	8	b2	2.98	15.00	7.50	22.35	
		8	b1	3.30	15.00	7.50	24.75	
								65.55
8	9	8	b2	2.98	15.00	7.50	22.35	
105.00	120.00	8	b1	3.30	15.00	7.50	24.75	
		9	b2	4.35	15.00	7.50	32.63	
		9	b1	1.35	15.00	7.50	10.13	
								89.86
9	10	9	b2	4.35	15.00	7.50	32.63	
120.00	135.00	9	b1	1.35	15.00	7.50	10.13	
		10	b1	5.95	15.00	7.50	44.63	
		10	b2	7.16	15.00	7.50	53.70	
								141.09
10	11	10	b1	5.95	15.00	7.50	44.63	
135.00	150.00	10	b2	7.16	15.00	7.50	53.70	
		11	b2	7.31	15.00	7.50	54.82	
		11	b1	9.17	15.00	7.50	68.78	
								221.93
11	12	11	b2	7.31	15.00	7.50	54.82	
150.00	165.00	11	b1	9.17	15.00	7.50	68.78	
		12	b2	8.96	15.00	7.50	67.20	
		12	b1	4.00	15.00	7.50	30.00	
								220.80
12	13	12	b2	8.96	15.00	7.50	67.20	
165.00	180.00	12	b1	4.00	15.00	7.50	30.00	
		13	b1	12.08	15.00	7.50	90.60	
								187.80
13	14	13	b1	12.08	15.00	7.50	90.60	
180.00	195.00	14	b1	13.26	15.00	7.50	99.45	
		14	b2	4.00	15.00	7.50	30.00	
								220.05
14	15	14	b1	13.26	15.00	7.50	99.45	
195.00	210.00	14	b2	4.00	15.00	7.50	30.00	
								129.45
15	14bis	14bis	b1	13.26	10.22	5.11	67.76	
210.00	220.22	14bis	b2	4.00	10.22	5.11	20.44	
								88.20

Il Direttore dei Lavori	L'Impresa	TOTALE ARTICOLO	1565.31

BINDER

DALLA SEZ. DA PROG.	ALLA SEZ. A PROG.	SEZIONE	FIGURA	LUNGHEZZA	DISTANZA SEZIONI ml	DISTANZA DI CALCOLO ml	AREA PARZIALE mq	AREA TOTALE mq
2	3	2	c1	14.73	13.00	6.50	95.75	
17.00	30.00	3	c1	9.65	13.00	6.50	62.73	
								158.48
3	4	3	c1	9.65	15.00	7.50	72.38	
30.00	45.00	4	c1	9.88	15.00	7.50	74.10	
								146.48
4	5	4	c1	9.88	15.00	7.50	74.10	
45.00	60.00	5	c1	9.95	15.00	7.50	74.63	
								148.73
5	6	5	c1	9.95	15.00	7.50	74.63	
60.00	75.00	6	c1	9.91	15.00	7.50	74.33	
								148.96
6	7	6	c1	9.91	15.00	7.50	74.33	
75.00	90.00	7	c1	17.00	15.00	7.50	127.50	
								201.83
7	8	7	c1	17.00	15.00	7.50	127.50	
90.00	105.00	8	c1	9.51	15.00	7.50	71.33	
								198.83
8	9	8	c1	9.51	15.00	7.50	71.33	
105.00	120.00	9	c1	11.11	15.00	7.50	83.32	
								154.65
9	10	9	c1	11.11	15.00	7.50	83.32	
120.00	135.00	10	c1	13.63	15.00	7.50	102.23	
								185.55
10	11	10	c1	13.63	15.00	7.50	102.23	
135.00	150.00	11	c1	9.50	15.00	7.50	71.25	
								173.48
11	12	11	c1	9.50	15.00	7.50	71.25	
150.00	165.00	12	c1	9.50	15.00	7.50	71.25	
								142.50
12	13	12	c1	9.50	15.00	7.50	71.25	
165.00	180.00	13	c1	8.25	15.00	7.50	61.88	
								133.13
13	14	13	c1	8.25	15.00	7.50	61.88	
180.00	195.00	14	c1	9.50	15.00	7.50	71.25	
								133.13
14	15	14	c1	9.50	15.00	7.50	71.25	
								71.25
15	14bis	14bis	c1	9.50	10.22	5.11	48.55	
								48.55

BASE

DALLA SEZ. DA PROG.	ALLA SEZ. A PROG.	SEZIONE	FIGURA	LUNGHEZZA	DISTANZA SEZIONI ml	DISTANZA DI CALCOLO ml	AREA PARZIALE mq	AREA TOTALE mq
2	3	2	d1	14.73	13.00	6.50	95.75	
17.00	30.00	3	d1	9.65	13.00	6.50	62.73	
								158.48
3	4	3	d1	9.65	15.00	7.50	72.38	
30.00	45.00	4	d1	9.88	15.00	7.50	74.10	
								146.48
4	5	4	d1	9.88	15.00	7.50	74.10	
45.00	60.00	5	d1	9.95	15.00	7.50	74.63	
								148.73
5	6	5	d1	9.95	15.00	7.50	74.63	
60.00	75.00	6	d1	9.91	15.00	7.50	74.33	
								148.96
6	7	6	d1	9.91	15.00	7.50	74.33	
75.00	90.00	7	d1	17.00	15.00	7.50	127.50	
								201.83
7	8	7	d1	17.00	15.00	7.50	127.50	
90.00	105.00	8	d1	9.51	15.00	7.50	71.33	
								198.83
8	9	8	d1	9.51	15.00	7.50	71.33	
105.00	120.00	9	d1	11.11	15.00	7.50	83.32	
								154.65
9	10	9	d1	11.11	15.00	7.50	83.32	
120.00	135.00	10	d1	13.63	15.00	7.50	102.23	
								185.55
10	11	10	d1	13.63	15.00	7.50	102.23	
135.00	150.00	11	d1	9.50	15.00	7.50	71.25	
								173.48
11	12	11	d1	9.50	15.00	7.50	71.25	
150.00	165.00	12	d1	9.50	15.00	7.50	71.25	
								142.50
12	13	12	d1	9.50	15.00	7.50	71.25	
165.00	180.00	13	d1	8.25	15.00	7.50	61.88	
								133.13
13	14	13	d1	8.25	15.00	7.50	61.88	
180.00	195.00	14	d1	9.50	15.00	7.50	71.25	
								133.13
14	15	14	d1	9.50	15.00	7.50	71.25	
								71.25
15	14bis	14bis	d1	9.50	10.22	5.11	48.55	
								48.55

Il Direttore dei Lavori	L'Impresa	TOTALE ARTICOLO	2045.55

FONDAZIONE

DALLA SEZ. DA PROG.	ALLA SEZ. A PROG.	SEZIONE	FIGURA	LUNGHEZZA	DISTANZA SEZIONI ml	DISTANZA DI CALCOLO ml	AREA PARZIALE mq	AREA TOTALE mq
2	3	2	e1	14.73	13.00	6.50	95.75	
17.00	30.00	3	e1	9.50	13.00	6.50	61.75	
								157.50
3	4	3	e1	9.50	15.00	7.50	71.25	
30.00	45.00	4	e1	9.88	15.00	7.50	74.10	
								145.35
4	5	4	e1	9.88	15.00	7.50	74.10	
45.00	60.00	5	e1	9.95	15.00	7.50	74.63	
								148.73
5	6	5	e1	9.95	15.00	7.50	74.63	
60.00	75.00	6	e1	9.91	15.00	7.50	74.33	
								148.96
6	7	6	e1	9.91	15.00	7.50	74.33	
75.00	90.00	7	e1	16.85	15.00	7.50	126.38	
								200.71
7	8	7	e1	16.85	15.00	7.50	126.38	
90.00	105.00	8	e1	9.51	15.00	7.50	71.33	
								197.71
8	9	8	e1	9.51	15.00	7.50	71.33	
105.00	120.00	9	e1	11.11	15.00	7.50	83.32	
								154.65
9	10	9	e1	11.11	15.00	7.50	83.32	
120.00	135.00	10	e1	13.63	15.00	7.50	102.23	
								185.55
10	11	10	e1	13.63	15.00	7.50	102.23	
135.00	150.00	11	e1	9.50	15.00	7.50	71.25	
								173.48
11	12	11	e1	9.50	15.00	7.50	71.25	
150.00	165.00	12	e1	9.50	15.00	7.50	71.25	
								142.50
12	13	12	e1	9.50	15.00	7.50	71.25	
165.00	180.00	13	e1	8.25	15.00	7.50	61.88	
								133.13
13	14	13	e1	8.25	15.00	7.50	61.88	
180.00	195.00	14	e1	9.50	15.00	7.50	71.25	
								133.13
14	15	14	e1	9.50	15.00	7.50	71.25	
								71.25
15	14bis	14bis	e1	9.50	10.22	5.11	48.55	
								48.55

SCOTICO

DALLA SEZ. DA PROG.	ALLA SEZ. A PROG.	SEZIONE	FIGURA	LUNGHEZZA	DISTANZA SEZIONI ml	DISTANZA DI CALCOLO ml	AREA PARZIALE mq	AREA TOTALE mq
2	3	2	sc1	1.77	13.00	6.50	11.51	
17.00	30.00	3	sc3	0.35	13.00	6.50	2.27	
		3	sc1	0.00	13.00	6.50	0.00	
		3	sc2	0.26	13.00	6.50	1.69	
								15.47
3	4	3	sc3	0.35	15.00	7.50	2.63	
30.00	45.00	3	sc1	0.00	15.00	7.50	0.00	
		3	sc2	0.26	15.00	7.50	1.95	
		4	sc1	1.25	15.00	7.50	9.38	
								13.96
4	5	4	sc1	1.25	15.00	7.50	9.38	
45.00	60.00	5	sc2	1.32	15.00	7.50	9.90	
		5	sc1	0.71	15.00	7.50	5.32	
								24.60
5	6	5	sc2	1.32	15.00	7.50	9.90	
60.00	75.00	5	sc1	0.71	15.00	7.50	5.32	
		6	sc3	2.30	15.00	7.50	17.25	
		6	sc1	0.02	15.00	7.50	0.15	
		6	sc2	1.96	15.00	7.50	14.70	
								47.32
6	7	6	sc3	2.30	15.00	7.50	17.25	
75.00	90.00	6	sc1	0.02	15.00	7.50	0.15	
		6	sc2	1.96	15.00	7.50	14.70	
		7	sc1	14.90	15.00	7.50	111.75	
								143.85
7	8	7	sc1	14.90	15.00	7.50	111.75	
90.00	105.00	8	sc1	15.07	15.00	7.50	113.03	
								224.78
8	9	8	sc1	15.07	15.00	7.50	113.03	
105.00	120.00	9	sc1	16.56	15.00	7.50	124.20	
								237.23
9	10	9	sc1	16.56	15.00	7.50	124.20	
120.00	135.00	10	sc1	25.91	15.00	7.50	194.32	
								318.52
10	11	10	sc1	25.91	15.00	7.50	194.32	
135.00	150.00	11	sc1	25.36	15.00	7.50	190.20	
								384.52
11	12	11	sc1	25.36	15.00	7.50	190.20	
150.00	165.00	12	sc1	22.23	15.00	7.50	166.72	
								356.92
12	13	12	sc1	22.23	15.00	7.50	166.72	
165.00	180.00	13	sc1	20.00	15.00	7.50	150.00	
								316.72
13	14	13	sc1	20.00	15.00	7.50	150.00	
180.00	195.00	14	sc2	0.00	15.00	7.50	0.00	
		14	sc1	26.18	15.00	7.50	196.35	
								346.35
14	15	14	sc2	0.00	15.00	7.50	0.00	
14	15	14	sc1	26.18	15.00	7.50	196.35	
								196.35
15	14bis	14bis	sc2	0.00	10.22	5.11	0.00	
15	14bis	14bis	sc1	26.18	10.22	5.11	133.78	
								133.78

Il Direttore dei Lavori	L'Impresa	TOTALE ARTICOLO	2760.37

Volume dalla sezione 2 alla sezione 14bis

ARTICOLO		VOLUME
STERRO	mc	227.422
RIPORTO	mc	5524.116
BO BONIFICA	mc	1317.937
a USURA	mq	2084.69
b VEGETALE	mq	1565.31
c BINDER	mq	2045.55
d BASE	mq	2045.55
e FONDAZIONE	mq	2041.20
sc SCOTICO	mq	2760.37

	CALCOLO DELLE AREE		Foglio n. 1

STERRI E RIPORTI

N. SEZIONE PROG.	FIG.	ELEMENTI DI CALCOLO	AREA ELEMENTARE mq	AREA FIGURA mq	NOTE
1	S1	(-8.44--8.50)x(3.51+3.51)/2	0.21		
4.90		(-8.38--8.44)x(3.51+3.51)/2	0.21		
		(-8.19--8.38)x(3.50+3.51)/2	0.67		
		(-8.18--8.19)x(3.50+3.50)/2	0.03		
		(-8.17--8.18)x(3.51+3.50)/2	0.04		
		(-8.16--8.17)x(3.50+3.51)/2	0.04		
		(-8.12--8.16)x(3.49+3.50)/2	0.14		
		(-8.05--8.12)x(3.47+3.49)/2	0.24		
		(-8.01--8.05)x(3.46+3.47)/2	0.14		
		(-7.51--8.01)x(3.45+3.46)/2	1.73		
		(-6.81--7.51)x(3.45+3.45)/2	2.42		
		(-6.77--6.81)x(3.45+3.45)/2	0.14		
		(-6.75--6.77)x(3.45+3.45)/2	0.07		
		(-6.04--6.75)x(3.48+3.45)/2	2.46		
		(-5.49--6.04)x(3.48+3.48)/2	1.91		
		(-5.30--5.49)x(3.47+3.48)/2	0.66		
		(-5.05--5.30)x(3.47+3.47)/2	0.87		
		(-4.57--5.05)x(3.48+3.47)/2	1.67		
		(-4.23--4.57)x(3.48+3.48)/2	1.18		
		(-3.83--4.23)x(3.47+3.48)/2	1.39		
		(-3.29--3.83)x(3.47+3.47)/2	1.87		
		(-3.10--3.29)x(3.47+3.47)/2	0.66		
		(-2.97--3.10)x(3.47+3.47)/2	0.45		
		(-2.36--2.97)x(3.47+3.47)/2	2.12		
		(-1.71--2.36)x(3.46+3.47)/2	2.25		
		(-1.63--1.71)x(3.46+3.46)/2	0.28		
		(-1.52--1.63)x(3.46+3.46)/2	0.38		
		(-0.89--1.52)x(3.45+3.46)/2	2.18		
		(-0.45--0.89)x(3.45+3.45)/2	1.52		
		(-0.16--0.45)x(3.44+3.45)/2	1.00		
		(0.24--0.16)x(3.44+3.44)/2	1.38		
		(0.58-0.24)x(3.44+3.44)/2	1.17		
		(0.81-0.58)x(3.43+3.44)/2	0.79		
		(1.31-0.81)x(3.42+3.43)/2	1.71		
		(2.01-1.31)x(3.41+3.42)/2	2.39		
		(2.05-2.01)x(3.41+3.41)/2	0.14		
		(2.08-2.05)x(3.41+3.41)/2	0.10		
		(2.07-2.08)x(3.01+3.41)/2	-0.03		
		(-8.51-2.07)x(3.27+3.01)/2	-33.22		
		(-8.50--8.51)x(3.51+3.27)/2	0.03		
				3.39	
2	S1	(-8.44--8.50)x(3.46+3.46)/2	0.21		
14.34		(-7.53--8.44)x(3.46+3.46)/2	3.15		
		(-7.46--7.53)x(3.46+3.46)/2	0.24		
		(-6.50--7.46)x(3.46+3.46)/2	3.32		
		(-6.48--6.50)x(3.46+3.46)/2	0.07		
		(-5.98--6.48)x(3.48+3.46)/2	1.73		
		(-5.50--5.98)x(3.50+3.48)/2	1.68		
		(-5.47--5.50)x(3.50+3.50)/2	0.11		
		(-4.52--5.47)x(3.46+3.50)/2	3.31		
		(-4.45--4.52)x(3.46+3.46)/2	0.24		
		(-3.54--4.45)x(3.45+3.46)/2	3.14		
		(-3.42--3.54)x(3.45+3.45)/2	0.41		
		(-2.56--3.42)x(3.45+3.45)/2	2.97		
		(-2.39--2.56)x(3.45+3.45)/2	0.59		
		(-1.58--2.39)x(3.43+3.45)/2	2.79		
		(-1.37--1.58)x(3.42+3.43)/2	0.72		
		(-1.24--1.37)x(3.43+3.42)/2	0.45		
		(-1.12--1.24)x(3.45+3.43)/2	0.41		
		(-1.03--1.12)x(3.45+3.45)/2	0.31		
		(-0.96--1.03)x(3.46+3.45)/2	0.24		
		(-0.91--0.96)x(3.47+3.46)/2	0.17		
		(-0.64--0.91)x(3.53+3.47)/2	0.95		
		(-0.42--0.64)x(3.43+3.53)/2	0.77		
		(-0.36--0.42)x(3.40+3.43)/2	0.20		
		(-0.34--0.36)x(3.40+3.40)/2	0.07		
		(0.02--0.34)x(3.38+3.40)/2	1.22		
		(2.22-0.02)x(3.40+3.38)/2	7.46		
		(2.21-2.22)x(3.00+3.40)/2	-0.03		
		(-8.51-2.21)x(3.26+3.00)/2	-33.55		
		(-8.50--8.51)x(3.46+3.26)/2	0.03		
				3.38	
3	S1	(-7.85--8.51)x(3.46+3.48)/2	2.29		
22.46		(-7.71--7.85)x(3.46+3.46)/2	0.48		
		(-7.07--7.71)x(3.46+3.46)/2	2.21		
		(-6.57--7.07)x(3.46+3.46)/2	1.73		
		(-6.30--6.57)x(3.46+3.46)/2	0.93		
		(-5.75--6.30)x(3.48+3.46)/2	1.91		
		(-5.43--5.75)x(3.48+3.48)/2	1.11		
		(-5.15--5.43)x(3.48+3.48)/2	0.97		
		(-4.30--5.15)x(3.48+3.48)/2	2.96		
		(-3.36--4.30)x(3.46+3.48)/2	3.26		
		(-3.16--3.36)x(3.46+3.46)/2	0.69		
		(-2.98--3.16)x(3.46+3.46)/2	0.62		
		(-2.03--2.98)x(3.45+3.46)/2	3.28		
		(-0.98--2.03)x(3.45+3.45)/2	3.62		
		(-0.89--0.98)x(3.45+3.45)/2	0.31		
		(-0.81--0.89)x(3.45+3.45)/2	0.28		
		(0.25--0.81)x(3.43+3.45)/2	3.65		
		(1.36-0.25)x(3.43+3.43)/2	3.81		
		(1.37-1.36)x(3.43+3.43)/2	0.03		
		(1.38-1.37)x(3.43+3.43)/2	0.03		
		(1.41-1.38)x(3.52+3.43)/2	0.10		
		(1.42-1.41)x(3.44+3.52)/2	0.03		
		(1.54-1.42)x(3.46+3.44)/2	0.41		
		(1.60-1.54)x(3.47+3.46)/2	0.21		
		(2.03-1.60)x(3.54+3.47)/2	1.51		
		(2.13-2.03)x(3.55+3.54)/2	0.35		
		(2.18-2.13)x(3.55+3.55)/2	0.18		
		(2.19-2.18)x(3.55+3.55)/2	0.04		
		(2.20-2.19)x(3.55+3.55)/2	0.04		
		(2.23-2.20)x(3.55+3.55)/2	0.11		
		(2.30-2.23)x(3.55+3.55)/2	0.25		
		(2.52-2.30)x(3.48+3.55)/2	0.77		
		(2.70-2.52)x(3.49+3.48)/2	0.63		
		(2.39-2.70)x(3.32+3.49)/2	-1.06		
		(1.00-2.39)x(3.26+3.32)/2	-4.57		
		A RIPORTARE mq	33.17		

		CALCOLO DELLE AREE		Foglio n. 2	
STERRI E RIPORTI					
N. SEZIONE PROG.	FIG.	ELEMENTI DI CALCOLO	AREA ELEMENTARE mq	AREA FIGURA mq	NOTE
		RIPORTO mq	33.17		
		(-8.51-1.00)x(3.39+3.16)/2	-31.15		
				2.02	
4	R1	(-8.43--8.51)x(3.05+3.05)/2	0.24		
36.04		(-7.48--8.43)x(3.01+3.05)/2	2.88		
		(-7.36--7.48)x(3.01+3.01)/2	0.36		
		(-7.08--7.36)x(3.01+3.01)/2	0.84		
		(-6.28--7.08)x(3.03+3.01)/2	2.42		
		(-5.92--6.28)x(3.01+3.03)/2	1.09		
		(-5.21--5.92)x(3.02+3.01)/2	2.14		
		(-4.35--5.21)x(3.11+3.02)/2	2.64		
		(-4.13--4.35)x(3.13+3.11)/2	0.69		
		(-3.65--4.13)x(3.18+3.13)/2	1.51		
		(-3.06--3.65)x(3.23+3.18)/2	1.89		
		(-2.79--3.06)x(3.23+3.23)/2	0.87		
		(-1.98--2.79)x(3.19+3.23)/2	2.60		
		(-1.23--1.98)x(3.19+3.19)/2	2.39		
		(-0.91--1.23)x(3.21+3.19)/2	1.02		
		(-0.22--0.91)x(3.21+3.21)/2	2.21		
		(0.16--0.22)x(3.22+3.21)/2	1.22		
		(0.34-0.16)x(3.22+3.22)/2	0.58		
		(0.99-0.34)x(3.23+3.22)/2	2.10		
		(-8.51-0.99)x(3.87+3.63)/2	-35.63		
				5.94	
5	R1	(-7.96--8.51)x(3.08+3.08)/2	1.69		
53.39		(-7.39--7.96)x(3.09+3.08)/2	1.76		
		(-7.24--7.39)x(3.10+3.09)/2	0.46		
		(-7.07--7.24)x(3.10+3.10)/2	0.53		
		(-6.51--7.07)x(3.12+3.10)/2	1.74		
		(-5.99--6.51)x(3.14+3.12)/2	1.63		
		(-5.79--5.99)x(3.14+3.14)/2	0.63		
		(-5.57--5.79)x(3.15+3.14)/2	0.69		
		(-5.06--5.57)x(3.14+3.15)/2	1.60		
		(-4.59--5.06)x(3.17+3.14)/2	1.48		
		(-4.33--4.59)x(3.18+3.17)/2	0.83		
		(-4.06--4.33)x(3.20+3.18)/2	0.86		
		(-3.61--4.06)x(3.21+3.20)/2	1.44		
		(-3.19--3.61)x(3.22+3.21)/2	1.35		
		(-2.88--3.19)x(3.21+3.22)/2	1.00		
		(-2.55--2.88)x(3.21+3.21)/2	1.06		
		(-2.16--2.55)x(3.20+3.21)/2	1.25		
		(-1.79--2.16)x(3.22+3.20)/2	1.19		
		(-1.43--1.79)x(3.20+3.22)/2	1.16		
		(-1.05--1.43)x(3.23+3.20)/2	1.22		
		(-0.71--1.05)x(3.23+3.23)/2	1.10		
		(-0.39--0.71)x(3.21+3.23)/2	1.03		
		(0.02--0.39)x(3.19+3.21)/2	1.31		
		(0.46-0.02)x(3.17+3.19)/2	1.40		
		(0.74-0.46)x(3.15+3.17)/2	0.88		
		(1.01-0.74)x(3.15+3.15)/2	0.85		
		(1.47-1.01)x(3.17+3.15)/2	1.45		
		(1.97-1.47)x(3.20+3.17)/2	1.59		
		(2.19-1.97)x(3.22+3.20)/2	0.71		
		(2.41-2.19)x(3.23+3.22)/2	0.71		
		(2.92-2.41)x(3.24+3.23)/2	1.65		
		(3.47-2.92)x(3.23+3.24)/2	1.78		
		(3.65-3.47)x(3.22+3.23)/2	0.58		
		(3.75-3.65)x(3.22+3.22)/2	0.32		
		(2.39-3.75)x(4.13+3.22)/2	-5.00		
		(1.00-2.39)x(4.07+4.13)/2	-5.70		
		(-8.51-1.00)x(4.21+3.97)/2	-38.90		
				10.67	
6	R1	(-8.51--7.92)x(3.67+3.65)/2	-2.16		
82.07		(-8.11--8.51)x(3.02+3.08)/2	1.22		
		(-7.92--8.11)x(3.02+3.02)/2	0.57		
				0.37	
6	R2	(-7.65--7.92)x(3.02+3.02)/2	0.82		
82.07		(-6.82--7.65)x(3.05+3.02)/2	2.52		
		(-5.97--6.82)x(3.08+3.05)/2	2.61		
		(-5.53--5.97)x(3.08+3.08)/2	1.36		
		(-4.28--5.53)x(3.05+3.08)/2	3.83		
		(-4.24--4.28)x(3.05+3.05)/2	0.12		
		(-4.08--4.24)x(3.06+3.05)/2	0.49		
		(-2.94--4.08)x(3.09+3.06)/2	3.51		
		(-2.60--2.94)x(3.09+3.09)/2	1.05		
		(-1.65--2.60)x(3.07+3.09)/2	2.93		
		(-1.33--1.65)x(3.06+3.07)/2	0.98		
		(-0.92--1.33)x(3.09+3.06)/2	1.26		
		(-0.60--0.92)x(3.09+3.09)/2	0.99		
		(-0.36--0.60)x(3.07+3.09)/2	0.74		
		(0.77--0.36)x(3.04+3.07)/2	3.45		
		(0.94-0.77)x(3.05+3.04)/2	0.52		
		(1.49-0.94)x(3.05+3.05)/2	1.68		
		(2.23-1.49)x(3.07+3.05)/2	2.26		
		(2.45-2.23)x(3.06+3.07)/2	0.67		
		(3.10-2.45)x(3.12+3.06)/2	2.01		
		(2.39-3.10)x(3.59+3.12)/2	-2.38		
		(1.00-2.39)x(3.53+3.59)/2	-4.95		
		(-7.92-1.00)x(3.65+3.43)/2	-31.58		
				5.11	
7	R1	(-8.47--8.51)x(3.25+3.24)/2	0.13		
96.19		(-7.92--8.47)x(3.31+3.25)/2	1.80		
		(-8.51--7.92)x(3.32+3.31)/2	-1.96		
				0.03	
7	S1	(-7.62--7.92)x(3.34+3.31)/2	1.00		
96.19		(-7.60--7.62)x(3.35+3.34)/2	0.07		
		(-7.52--7.60)x(3.36+3.35)/2	0.27		
		(-6.73--7.52)x(3.52+3.36)/2	2.72		
		(-6.57--6.73)x(3.54+3.52)/2	0.56		
		(-5.86--6.57)x(3.64+3.54)/2	2.55		
		(-5.53--5.86)x(3.68+3.64)/2	1.21		
		(-4.99--5.53)x(3.71+3.68)/2	2.00		
		(-4.48--4.99)x(3.70+3.71)/2	1.89		
		(-3.71--4.48)x(3.64+3.70)/2	2.83		
		(-3.43--3.71)x(3.61+3.64)/2	1.01		
		(-3.26--3.43)x(3.58+3.61)/2	0.61		
		A RIPORTARE mq	16.72		

STERRI E RIPORTI

N. SEZIONE PROG.	FIG.	ELEMENTI DI CALCOLO	AREA ELEMENTARE mq	AREA FIGURA mq	NOTE
		RIPORTO mq	16.72		
		(-2.39--3.26)x(3.47+3.58)/2	3.07		
		(-2.37--2.39)x(3.47+3.47)/2	0.07		
		(-1.52--2.37)x(3.41+3.47)/2	2.92		
		(-1.34--1.52)x(3.41+3.41)/2	0.61		
		(-0.65--1.34)x(3.40+3.41)/2	2.35		
		(-0.30--0.65)x(3.41+3.40)/2	1.19		
		(0.22--0.30)x(3.44+3.41)/2	1.78		
		(0.75-0.22)x(3.47+3.44)/2	1.83		
		(1.09-0.75)x(3.49+3.47)/2	1.18		
		(1.80-1.09)x(3.53+3.49)/2	2.49		
		(1.96-1.80)x(3.54+3.53)/2	0.57		
		(2.78-1.96)x(3.56+3.54)/2	2.91		
		(2.83-2.78)x(3.56+3.56)/2	0.18		
		(2.84-2.83)x(3.56+3.56)/2	0.04		
		(3.70-2.84)x(3.48+3.56)/2	3.03		
		(3.89-3.70)x(3.48+3.48)/2	0.66		
		(4.57-3.89)x(3.48+3.48)/2	2.37		
		(4.93-4.57)x(3.49+3.48)/2	1.25		
		(5.44-4.93)x(3.47+3.49)/2	1.77		
		(5.98-5.44)x(3.51+3.47)/2	1.88		
		(6.31-5.98)x(3.52+3.51)/2	1.16		
		(7.03-6.31)x(3.47+3.52)/2	2.52		
		(7.18-7.03)x(3.46+3.47)/2	0.52		
		(7.93-7.18)x(3.47+3.46)/2	2.60		
		(8.01-7.93)x(3.47+3.47)/2	0.28		
		(9.01-8.01)x(3.51+3.47)/2	3.49		
		(10.19-9.01)x(3.55+3.51)/2	4.17		
		(10.26-10.19)x(3.56+3.55)/2	0.25		
		(10.27-10.26)x(3.56+3.56)/2	0.04		
		(10.28-10.27)x(3.56+3.56)/2	0.04		
		(10.35-10.28)x(3.56+3.56)/2	0.25		
		(10.41-10.35)x(3.57+3.56)/2	0.21		
		(10.47-10.41)x(3.57+3.57)/2	0.21		
		(10.49-10.47)x(3.57+3.57)/2	0.07		
		(10.51-10.49)x(3.57+3.57)/2	0.07		
		(10.53-10.51)x(3.57+3.57)/2	0.07		
		(10.56-10.53)x(3.57+3.57)/2	0.11		
		(10.58-10.56)x(3.57+3.57)/2	0.07		
		(10.96-10.58)x(3.57+3.57)/2	1.36		
		(11.62-10.96)x(3.49+3.57)/2	2.33		
		(12.23-11.62)x(3.48+3.49)/2	2.13		
		(12.24-12.23)x(3.48+3.48)/2	0.03		
		(12.32-12.24)x(3.52+3.48)/2	0.28		
		(12.36-12.32)x(3.46+3.52)/2	0.14		
		(12.49-12.36)x(3.47+3.46)/2	0.45		
		(12.66-12.49)x(3.47+3.47)/2	0.59		
		(12.87-12.66)x(3.45+3.47)/2	0.73		
		(13.08-12.87)x(3.44+3.45)/2	0.72		
		(13.09-13.08)x(3.44+3.44)/2	0.03		
		(13.08-13.09)x(3.04+3.44)/2	-0.03		
		(-0.01-13.08)x(3.11+3.04)/2	-40.25		
		(-7.92--0.01)x(3.31+3.11)/2	-25.39		
				8.12	

Il Direttore dei Lavori | L'Impresa

N. SEZ.	FIG.	SUPERFICIE STERRO mq	SUPERFICIE RIPORTO mq	PUNTI DI PASSAGGIO (PROGRESSIVA m)	DISTANZA m	VOLUMI PARZIALI STERRO mc	VOLUMI PARZIALI RIPORTO mc	VOLUMI TOTALI STERRO mc	VOLUMI TOTALI RIPORTO mc
1	S1	3.39		(4.90)					
					9.44	31.954			
2	S1	3.38		(14.34)					
								31.954	
2	S1	3.38		(14.34)					
					8.12	21.924			
3	S1	2.02		(22.46)					
								21.924	
3	S1	2.02		(22.46)	3.45	3.485			
				2.02*13.58 / 2.02+5.94	3.45				
4	R1		5.94	(36.04)	10.13		30.086		
								3.485	30.086
4	R1		5.94	(36.04)					
					17.35		144.092		
5	R1		10.67	(53.39)					
									144.092
5	R1		10.67	(53.39)					
					28.68		231.591		
6	R1		0.37	(82.07)					
	R2		5.11						
									231.591
6	R1		0.37	(82.07)					
					14.12		2.824		
7	R1		0.03	(96.19)					
6	R2		5.11	(82.07)	5.45		13.925		
				5.11*14.12 / 5.11+8.12	5.45				
7	S1	8.12		(96.19)	8.67	35.200			
								35.200	16.749

Il Direttore dei Lavori	L'Impresa	Totale Articoli .....:	92.563	422.518
		A dedurre quantita' precedenti:		
		Quantita' da contabilizzare ..:		

		CALCOLO DELLE AREE		Foglio n. 5	
BONIFICA					
N. SEZIONE PROG.	FIG.	ELEMENTI DI CALCOLO	AREA ELEMENTARE mq	AREA FIGURA mq	NOTE
4	BO1	(-8.43--8.51)x(3.05+3.05)/2	0.24		
36.04		(-7.48--8.43)x(3.01+3.05)/2	2.88		
		(-7.36--7.48)x(3.01+3.01)/2	0.36		
		(-7.08--7.36)x(3.01+3.01)/2	0.84		
		(-6.28--7.08)x(3.03+3.01)/2	2.42		
		(-5.92--6.28)x(3.01+3.03)/2	1.09		
		(-5.21--5.92)x(3.02+3.01)/2	2.14		
		(-4.35--5.21)x(3.11+3.02)/2	2.64		
		(-4.13--4.35)x(3.13+3.11)/2	0.69		
		(-3.65--4.13)x(3.18+3.13)/2	1.51		
		(-3.06--3.65)x(3.23+3.18)/2	1.89		
		(-2.79--3.06)x(3.23+3.23)/2	0.87		
		(-1.98--2.79)x(3.19+3.23)/2	2.60		
		(-1.23--1.98)x(3.19+3.19)/2	2.39		
		(-0.91--1.23)x(3.21+3.19)/2	1.02		
		(-0.22--0.91)x(3.21+3.21)/2	2.21		
		(0.16--0.22)x(3.22+3.21)/2	1.22		
		(0.34-0.16)x(3.22+3.22)/2	0.58		
		(0.99-0.34)x(3.23+3.22)/2	2.10		
		(0.34-0.99)x(2.72+2.73)/2	-1.77		
		(0.16-0.34)x(2.72+2.72)/2	-0.49		
		(-0.22-0.16)x(2.71+2.72)/2	-1.03		
		(-0.91--0.22)x(2.71+2.71)/2	-1.87		
		(-1.23--0.91)x(2.69+2.71)/2	-0.86		
		(-1.98--1.23)x(2.69+2.69)/2	-2.02		
		(-2.79--1.98)x(2.73+2.69)/2	-2.20		
		(-3.06--2.79)x(2.73+2.73)/2	-0.74		
		(-3.65--3.06)x(2.68+2.73)/2	-1.60		
		(-4.13--3.65)x(2.63+2.68)/2	-1.27		
		(-4.35--4.13)x(2.61+2.63)/2	-0.58		
		(-5.21--4.35)x(2.52+2.61)/2	-2.21		
		(-5.92--5.21)x(2.51+2.52)/2	-1.79		
		(-6.28--5.92)x(2.53+2.51)/2	-0.91		
		(-7.08--6.28)x(2.51+2.53)/2	-2.02		
		(-7.36--7.08)x(2.51+2.51)/2	-0.70		
		(-7.48--7.36)x(2.51+2.51)/2	-0.30		
		(-8.43--7.48)x(2.55+2.51)/2	-2.40		
		(-8.51--8.43)x(2.55+2.55)/2	-0.20		
				4.73	
5	BO1	(-7.96--8.51)x(3.08+3.08)/2	1.69		
53.39		(-7.39--7.96)x(3.09+3.08)/2	1.76		
		(-7.24--7.39)x(3.10+3.09)/2	0.46		
		(-7.07--7.24)x(3.10+3.10)/2	0.53		
		(-6.51--7.07)x(3.12+3.10)/2	1.74		
		(-5.99--6.51)x(3.14+3.12)/2	1.63		
		(-5.79--5.99)x(3.14+3.14)/2	0.63		
		(-5.57--5.79)x(3.15+3.14)/2	0.69		
		(-5.06--5.57)x(3.14+3.15)/2	1.60		
		(-4.59--5.06)x(3.17+3.14)/2	1.48		
		(-4.33--4.59)x(3.18+3.17)/2	0.83		
		(-4.06--4.33)x(3.20+3.18)/2	0.86		
		(-3.61--4.06)x(3.21+3.20)/2	1.44		
		(-3.19--3.61)x(3.22+3.21)/2	1.35		
		(-2.88--3.19)x(3.21+3.22)/2	1.00		
		(-2.55--2.88)x(3.21+3.21)/2	1.06		
		(-2.16--2.55)x(3.20+3.21)/2	1.25		
		(-1.79--2.16)x(3.22+3.20)/2	1.19		
		(-1.43--1.79)x(3.20+3.22)/2	1.16		
		(-1.05--1.43)x(3.23+3.20)/2	1.22		
		(-0.71--1.05)x(3.23+3.23)/2	1.10		
		(-0.39--0.71)x(3.21+3.23)/2	1.03		
		(0.02--0.39)x(3.19+3.21)/2	1.31		
		(0.46-0.02)x(3.17+3.19)/2	1.40		
		(0.74-0.46)x(3.15+3.17)/2	0.88		
		(1.01-0.74)x(3.15+3.15)/2	0.85		
		(1.47-1.01)x(3.17+3.15)/2	1.45		
		(1.97-1.47)x(3.20+3.17)/2	1.59		
		(2.19-1.97)x(3.22+3.20)/2	0.71		
		(2.41-2.19)x(3.23+3.22)/2	0.71		
		(2.92-2.41)x(3.24+3.23)/2	1.65		
		(3.47-2.92)x(3.23+3.24)/2	1.78		
		(3.65-3.47)x(3.22+3.23)/2	0.58		
		(3.75-3.65)x(3.22+3.22)/2	0.32		
		(3.65-3.75)x(2.72+2.72)/2	-0.27		
		(3.47-3.65)x(2.73+2.72)/2	-0.49		
		(2.92-3.47)x(2.74+2.73)/2	-1.50		
		(2.41-2.92)x(2.73+2.74)/2	-1.39		
		(2.19-2.41)x(2.72+2.73)/2	-0.60		
		(1.97-2.19)x(2.70+2.72)/2	-0.60		
		(1.47-1.97)x(2.67+2.70)/2	-1.34		
		(1.01-1.47)x(2.65+2.67)/2	-1.22		
		(0.74-1.01)x(2.65+2.65)/2	-0.72		
		(0.46-0.74)x(2.67+2.65)/2	-0.74		
		(0.02-0.46)x(2.69+2.67)/2	-1.18		
		(-0.39-0.02)x(2.71+2.69)/2	-1.11		
		(-0.71--0.39)x(2.73+2.71)/2	-0.87		
		(-1.05--0.71)x(2.73+2.73)/2	-0.93		
		(-1.43--1.05)x(2.70+2.73)/2	-1.03		
		(-1.79--1.43)x(2.72+2.70)/2	-0.98		
		(-2.16--1.79)x(2.70+2.72)/2	-1.00		
		(-2.55--2.16)x(2.71+2.70)/2	-1.05		
		(-2.88--2.55)x(2.71+2.71)/2	-0.89		
		(-3.19--2.88)x(2.72+2.71)/2	-0.84		
		(-3.61--3.19)x(2.71+2.72)/2	-1.14		
		(-4.06--3.61)x(2.70+2.71)/2	-1.22		
		(-4.33--4.06)x(2.68+2.70)/2	-0.73		
		(-4.59--4.33)x(2.67+2.68)/2	-0.70		
		(-5.06--4.59)x(2.64+2.67)/2	-1.25		
		(-5.57--5.06)x(2.65+2.64)/2	-1.35		
		(-5.79--5.57)x(2.64+2.65)/2	-0.58		
		(-5.99--5.79)x(2.64+2.64)/2	-0.53		
		(-6.51--5.99)x(2.62+2.64)/2	-1.37		
		(-7.07--6.51)x(2.60+2.62)/2	-1.46		
		(-7.24--7.07)x(2.60+2.60)/2	-0.44		
		(-7.39--7.24)x(2.59+2.60)/2	-0.39		
		(-7.96--7.39)x(2.58+2.59)/2	-1.47		
		(-8.51--7.96)x(2.58+2.58)/2	-1.42		
		A RIPORTARE mq	6.13		

BONIFICA

N. SEZIONE PROG.	FIG.	ELEMENTI DI CALCOLO	AREA ELEMENTARE mq	AREA FIGURA mq	NOTE
		RIPORTO mq	6.13		
				6.13	
6	BO1	(-8.11--8.51)x(3.02+3.08)/2	1.22		
82.07		(-7.65--8.11)x(3.02+3.02)/2	1.39		
		(-6.82--7.65)x(3.05+3.02)/2	2.52		
		(-5.97--6.82)x(3.08+3.05)/2	2.61		
		(-5.53--5.97)x(3.08+3.08)/2	1.36		
		(-4.28--5.53)x(3.05+3.08)/2	3.83		
		(-4.24--4.28)x(3.05+3.05)/2	0.12		
		(-4.08--4.24)x(3.06+3.05)/2	0.49		
		(-2.94--4.08)x(3.09+3.06)/2	3.51		
		(-2.60--2.94)x(3.09+3.09)/2	1.05		
		(-1.65--2.60)x(3.07+3.09)/2	2.93		
		(-1.33--1.65)x(3.06+3.07)/2	0.98		
		(-0.92--1.33)x(3.09+3.06)/2	1.26		
		(-0.60--0.92)x(3.09+3.09)/2	0.99		
		(-0.36--0.60)x(3.07+3.09)/2	0.74		
		(0.77--0.36)x(3.04+3.07)/2	3.45		
		(0.94-0.77)x(3.05+3.04)/2	0.52		
		(1.49-0.94)x(3.05+3.05)/2	1.68		
		(2.23-1.49)x(3.07+3.05)/2	2.26		
		(2.45-2.23)x(3.06+3.07)/2	0.67		
		(3.10-2.45)x(3.12+3.06)/2	2.01		
		(2.45-3.10)x(2.56+2.62)/2	-1.68		
		(2.23-2.45)x(2.57+2.56)/2	-0.56		
		(1.49-2.23)x(2.55+2.57)/2	-1.89		
		(0.94-1.49)x(2.55+2.55)/2	-1.40		
		(0.77-0.94)x(2.54+2.55)/2	-0.43		
		(-0.36-0.77)x(2.57+2.54)/2	-2.89		
		(-0.60--0.36)x(2.59+2.57)/2	-0.62		
		(-0.92--0.60)x(2.59+2.59)/2	-0.83		
		(-1.33--0.92)x(2.56+2.59)/2	-1.06		
		(-1.65--1.33)x(2.57+2.56)/2	-0.82		
		(-2.60--1.65)x(2.59+2.57)/2	-2.45		
		(-2.94--2.60)x(2.59+2.59)/2	-0.88		
		(-4.08--2.94)x(2.56+2.59)/2	-2.94		
		(-4.24--4.08)x(2.55+2.56)/2	-0.41		
		(-4.28--4.24)x(2.55+2.55)/2	-0.10		
		(-5.53--4.28)x(2.58+2.55)/2	-3.21		
		(-5.97--5.53)x(2.58+2.58)/2	-1.14		
		(-6.82--5.97)x(2.55+2.58)/2	-2.18		
		(-7.65--6.82)x(2.52+2.55)/2	-2.10		
		(-8.11--7.65)x(2.52+2.52)/2	-1.16		
		(-8.51--8.11)x(2.58+2.52)/2	-1.02		
				5.82	
7	BO1	(-8.47--8.51)x(3.25+3.24)/2	0.13		
96.19		(-7.92--8.47)x(3.31+3.25)/2	1.80		
		(-8.47--7.92)x(2.75+2.81)/2	-1.53		
		(-8.51--8.47)x(2.74+2.75)/2	-0.11		
				0.29	

Il Direttore dei Lavori | L'Impresa

	CALCOLO DELLE LUNGHEZZE		Foglio n. 7

USURA

N. SEZIONE PROG.	FIG.	ELEMENTI DI CALCOLO	LUNGHEZZA ELEMENTARE ml	LUNGHEZZA FIGURA ml	NOTE
1	a1	(2.08--8.50)	10.58	10.58	
2	a1	(2.22--8.50)	10.72	10.72	
3	a1	(1.00--8.50)	9.50	9.50	
4	a1	(1.00--8.50)	9.50	9.50	
5	a1	(1.00--8.50)	9.50	9.50	
6	a1	(1.00--8.50)	9.50	9.50	
7	a1	(0.00--8.50)	8.50		
96.19		(13.08-0.00)	13.08	21.58	

Il Direttore dei Lavori	L'Impresa	

	CALCOLO DELLE LUNGHEZZE		Foglio n. 8

VEGETALE

N. SEZIONE PROG.	FIG.	ELEMENTI DI CALCOLO	LUNGHEZZA ELEMENTARE ml	LUNGHEZZA FIGURA ml	NOTE
3	b1	(1.03-1.00)	0.03		
22.46		(2.50-1.03)	1.47		
		(2.70-2.50)	0.20		
				1.70	
5	b1	(1.03-1.00)	0.03		
53.39		(2.50-1.03)	1.47		
		(4.31-2.50)	1.81		
				3.31	
6	b1	(1.03-1.00)	0.03		
82.07		(2.50-1.03)	1.47		
		(3.60-2.50)	1.10		
				2.60	

Il Direttore dei Lavori	L'Impresa	

SCOTICO

N. SEZIONE PROG.	FIG.	ELEMENTI DI CALCOLO	LUNGHEZZA ELEMENTARE ml	LUNGHEZZA FIGURA ml	NOTE
4	sc1	(-8.51--8.51)	0.00		
36.04		(-8.43--8.51)	0.08		
		(-7.48--8.43)	0.95		
		(-7.36--7.48)	0.12		
		(-7.08--7.36)	0.28		
		(-6.28--7.08)	0.80		
		(-5.92--6.28)	0.36		
		(-5.21--5.92)	0.71		
		(-4.35--5.21)	0.86		
		(-4.13--4.35)	0.22		
		(-3.65--4.13)	0.48		
		(-3.06--3.65)	0.59		
		(-2.79--3.06)	0.27		
		(-1.98--2.79)	0.81		
		(-1.23--1.98)	0.75		
		(-0.91--1.23)	0.32		
		(-0.22--0.91)	0.69		
		(0.16--0.22)	0.38		
		(0.34-0.16)	0.18		
		(0.99-0.34)	0.65		
		(0.99-0.99)	0.00		
				9.50	
5	sc1	(-8.51--8.51)	0.00		
53.39		(-7.96--8.51)	0.55		
		(-7.39--7.96)	0.57		
		(-7.24--7.39)	0.15		
		(-7.07--7.24)	0.17		
		(-6.51--7.07)	0.56		
		(-5.99--6.51)	0.52		
		(-5.79--5.99)	0.20		
		(-5.57--5.79)	0.22		
		(-5.06--5.57)	0.51		
		(-4.59--5.06)	0.47		
		(-4.33--4.59)	0.26		
		(-4.06--4.33)	0.27		
		(-3.61--4.06)	0.45		
		(-3.19--3.61)	0.42		
		(-2.88--3.19)	0.31		
		(-2.55--2.88)	0.33		
		(-2.16--2.55)	0.39		
		(-1.79--2.16)	0.37		
		(-1.43--1.79)	0.36		
		(-1.05--1.43)	0.38		
		(-0.71--1.05)	0.34		
		(-0.39--0.71)	0.32		
		(0.02--0.39)	0.41		
		(0.46-0.02)	0.44		
		(0.74-0.46)	0.28		
		(1.01-0.74)	0.27		
		(1.47-1.01)	0.46		
		(1.97-1.47)	0.50		
		(2.19-1.97)	0.22		
		(2.41-2.19)	0.22		
		(2.92-2.41)	0.51		
		(3.47-2.92)	0.55		
		(3.65-3.47)	0.18		
		(3.75-3.65)	0.10		
		(3.75-3.75)	0.00		
				12.26	
6	sc1	(-8.51--8.51)	0.00		
82.07		(-8.11--8.51)	0.40		
		(-7.65--8.11)	0.46		
		(-6.82--7.65)	0.83		
		(-5.97--6.82)	0.85		
		(-5.53--5.97)	0.44		
		(-4.28--5.53)	1.25		
		(-4.24--4.28)	0.04		
		(-4.08--4.24)	0.16		
		(-2.94--4.08)	1.14		
		(-2.60--2.94)	0.34		
		(-1.65--2.60)	0.95		
		(-1.33--1.65)	0.32		
		(-0.92--1.33)	0.41		
		(-0.60--0.92)	0.32		
		(-0.36--0.60)	0.24		
		(0.77--0.36)	1.13		
		(0.94-0.77)	0.17		
		(1.49-0.94)	0.55		
		(2.23-1.49)	0.74		
		(2.45-2.23)	0.22		
		(3.10-2.45)	0.65		
		(3.10-3.10)	0.00		
				11.61	
7	sc1	(-8.51--8.51)	0.00		
96.19		(-8.47--8.51)	0.04		
		(-7.92--8.47)	0.55		
		(-7.92--7.92)	0.00		
				0.59	

Il Direttore dei Lavori | L'Impresa

BONIFICA

DALLA SEZ. DA PROG.	ALLA SEZ. A PROG.	SEZIONE	FIGURA	AREA	DISTANZA SEZIONI m	DISTANZA DI CALCOLO m	VOLUME PARZIALE mc	VOLUME TOTALE mc
3	4	4	BO1	4.73	13.58	6.79	32.117	
								32.117
4	5	4	BO1	4.73	17.35	8.68	41.056	
36.04	53.39	5	BO1	6.13	17.35	8.68	53.208	
								94.264
5	6	5	BO1	6.13	28.68	14.34	87.904	
53.39	82.07	6	BO1	5.82	28.68	14.34	83.459	
								171.363
6	7	6	BO1	5.82	14.12	7.06	41.089	
82.07	96.19	7	BO1	0.29	14.12	7.06	2.047	
								43.136

Il Direttore dei Lavori | L'Impresa | TOTALE ARTICOLO | 340.880

USURA

DALLA SEZ. DA PROG.	ALLA SEZ. A PROG.	SEZIONE	FIGURA	LUNGHEZZA	DISTANZA SEZIONI ml	DISTANZA DI CALCOLO ml	AREA PARZIALE mq	AREA TOTALE mq
1	2	1	a1	10.58	9.44	4.72	49.94	
4.90	14.34	2	a1	10.72	9.44	4.72	50.60	
								100.54
2	3	2	a1	10.72	8.12	4.06	43.52	
14.34	22.46	3	a1	9.50	8.12	4.06	38.57	
								82.09
3	4	3	a1	9.50	13.58	6.79	64.50	
22.46	36.04	4	a1	9.50	13.58	6.79	64.50	
								129.00
4	5	4	a1	9.50	17.35	8.68	82.46	
36.04	53.39	5	a1	9.50	17.35	8.68	82.46	
								164.92
5	6	5	a1	9.50	28.68	14.34	136.23	
53.39	82.07	6	a1	9.50	28.68	14.34	136.23	
								272.46
6	7	6	a1	9.50	14.12	7.06	67.07	
82.07	96.19	7	a1	21.58	14.12	7.06	152.35	
								219.42

VEGETALE

DALLA SEZ. DA PROG.	ALLA SEZ. A PROG.	SEZIONE	FIGURA	LUNGHEZZA	DISTANZA SEZIONI ml	DISTANZA DI CALCOLO ml	AREA PARZIALE mq	AREA TOTALE mq
2	3	3	b1	1.70	8.12	4.06	6.90	
								6.90
3	4	3	b1	1.70	13.58	6.79	11.54	
								11.54
4	5	5	b1	3.31	17.35	8.68	28.73	
								28.73
5	6	5	b1	3.31	28.68	14.34	47.47	
53.39	82.07	6	b1	2.60	28.68	14.34	37.28	
								84.75
6	7	6	b1	2.60	14.12	7.06	18.36	
								18.36

SCOTICO

DALLA SEZ. DA PROG.	ALLA SEZ. A PROG.	SEZIONE	FIGURA	LUNGHEZZA	DISTANZA SEZIONI ml	DISTANZA DI CALCOLO ml	AREA PARZIALE mq	AREA TOTALE mq
3	4	4	sc1	9.50	13.58	6.79	64.50	
								64.50
4	5	4	sc1	9.50	17.35	8.68	82.46	
36.04	53.39	5	sc1	12.26	17.35	8.68	106.42	
								188.88
5	6	5	sc1	12.26	28.68	14.34	175.81	
53.39	82.07	6	sc1	11.61	28.68	14.34	166.49	
								342.30
6	7	6	sc1	11.61	14.12	7.06	81.97	
82.07	96.19	7	sc1	0.59	14.12	7.06	4.17	
								86.14

Volume dalla sezione 1 alla sezione 7

ARTICOLO		VOLUME
STERRO	mc	92.563
RIPORTO	mc	422.518
BO BONIFICA	mc	340.880
a USURA	mq	968.43
b VEGETALE	mq	150.28
sc SCOTICO	mq	681.82

	CALCOLO DELLE AREE		Foglio n. 1

STERRI E RIPORTI

N. SEZIONE PROG.	FIG.	ELEMENTI DI CALCOLO	AREA ELEMENTARE mq	AREA FIGURA mq	NOTE
1	S1	(-7.92--8.51)x(2.31+2.32)/2	1.37		
0.00		(-7.61--7.92)x(2.31+2.31)/2	0.72		
		(-7.14--7.61)x(2.31+2.31)/2	1.09		
		(-6.56--7.14)x(2.32+2.31)/2	1.34		
		(-6.20--6.56)x(2.32+2.32)/2	0.84		
		(-5.51--6.20)x(2.31+2.32)/2	1.60		
		(-5.34--5.51)x(2.32+2.31)/2	0.39		
		(-4.53--5.34)x(2.32+2.32)/2	1.88		
		(-4.48--4.53)x(2.32+2.32)/2	0.12		
		(-4.46--4.48)x(2.32+2.32)/2	0.05		
		(-3.62--4.46)x(2.32+2.32)/2	1.95		
		(-3.41--3.62)x(2.32+2.32)/2	0.49		
		(-2.75--3.41)x(2.31+2.32)/2	1.53		
		(-2.36--2.75)x(2.31+2.31)/2	0.90		
		(-1.89--2.36)x(2.31+2.31)/2	1.09		
		(-1.31--1.89)x(2.31+2.31)/2	1.34		
		(-1.03--1.31)x(2.31+2.31)/2	0.65		
		(-0.26--1.03)x(2.32+2.31)/2	1.78		
		(-0.17--0.26)x(2.32+2.32)/2	0.21		
		(0.23--0.17)x(2.31+2.32)/2	0.93		
		(0.69-0.23)x(2.31+2.31)/2	1.06		
		(0.79-0.69)x(2.31+2.31)/2	0.23		
		(0.99-0.79)x(2.31+2.31)/2	0.46		
		(-8.51-0.99)x(2.25+2.02)/2	-20.28		
				1.74	
2	R1	(-8.51--0.21)x(2.68+2.47)/2	-21.37		
12.43		(-8.30--8.51)x(2.35+2.35)/2	0.49		
		(-8.16--8.30)x(2.35+2.35)/2	0.33		
		(-8.11--8.16)x(2.36+2.35)/2	0.12		
		(-8.10--8.11)x(2.36+2.36)/2	0.02		
		(-7.94--8.10)x(2.39+2.36)/2	0.38		
		(-7.88--7.94)x(2.43+2.39)/2	0.14		
		(-7.87--7.88)x(2.37+2.43)/2	0.02		
		(-7.73--7.87)x(2.35+2.37)/2	0.33		
		(-7.54--7.73)x(2.35+2.35)/2	0.45		
		(-7.36--7.54)x(2.35+2.35)/2	0.42		
		(-7.26--7.36)x(2.35+2.35)/2	0.24		
		(-7.20--7.26)x(2.35+2.35)/2	0.14		
		(-7.11--7.20)x(2.38+2.35)/2	0.21		
		(-7.09--7.11)x(2.40+2.38)/2	0.05		
		(-7.08--7.09)x(2.41+2.40)/2	0.02		
		(-6.98--7.08)x(2.35+2.41)/2	0.24		
		(-6.97--6.98)x(2.35+2.35)/2	0.02		
		(-6.94--6.97)x(2.35+2.35)/2	0.07		
		(-6.81--6.94)x(2.35+2.35)/2	0.31		
		(-6.63--6.81)x(2.36+2.35)/2	0.42		
		(-5.71--6.63)x(2.39+2.36)/2	2.18		
		(-5.52--5.71)x(2.39+2.39)/2	0.45		
		(-5.31--5.52)x(2.37+2.39)/2	0.50		
		(-5.21--5.31)x(2.40+2.37)/2	0.24		
		(-5.13--5.21)x(2.40+2.40)/2	0.19		
		(-5.10--5.13)x(2.40+2.40)/2	0.07		
		(-5.09--5.10)x(2.40+2.40)/2	0.02		
		(-5.06--5.09)x(2.40+2.40)/2	0.07		
		(-5.05--5.06)x(2.40+2.40)/2	0.02		
		(-4.52--5.05)x(2.29+2.40)/2	1.24		
		(-4.49--4.52)x(2.28+2.29)/2	0.07		
		(-3.85--4.49)x(1.94+2.28)/2	1.35		
		(-3.27--3.85)x(1.70+1.94)/2	1.06		
		(-2.55--3.27)x(1.26+1.70)/2	1.07		
		(-2.33--2.55)x(1.15+1.26)/2	0.27		
		(-2.25--2.33)x(1.09+1.15)/2	0.09		
		(-2.20--2.25)x(1.08+1.09)/2	0.05		
		(-2.11--2.20)x(0.98+1.08)/2	0.09		
		(-2.09--2.11)x(0.94+0.98)/2	0.02		
		(-2.06--2.09)x(0.95+0.92)/2	0.03		
		(-1.97--2.06)x(1.01+0.95)/2	0.09		
		(-0.92--1.97)x(1.19+1.01)/2	1.15		
		(-0.90--0.92)x(1.19+1.19)/2	0.02		
		(-0.82--0.90)x(1.22+1.19)/2	0.10		
		(-0.81--0.82)x(1.23+1.22)/2	0.01		
		(-0.66--0.81)x(1.52+1.23)/2	0.21		
		(-0.65--0.66)x(1.52+1.52)/2	0.02		
		(-0.58--0.65)x(1.51+1.52)/2	0.11		
		(-0.21--0.58)x(1.53+1.51)/2	0.56		
				5.60	
2	R2	(-0.21-1.00)x(2.47+2.44)/2	-2.97		
12.43		(0.25--0.21)x(1.56+1.53)/2	0.71		
		(0.40-0.25)x(1.58+1.56)/2	0.24		
		(0.89-0.40)x(1.61+1.58)/2	0.78		
		(1.00-0.89)x(1.63+1.61)/2	0.18		
				1.06	
2	R3	(1.34-1.00)x(1.67+1.63)/2	0.56		
12.43		(1.63-1.34)x(1.69+1.67)/2	0.49		
		(2.08-1.63)x(1.74+1.69)/2	0.77		
		(2.77-2.08)x(1.74+1.74)/2	1.20		
		(2.82-2.77)x(1.74+1.74)/2	0.09		
		(2.85-2.82)x(1.75+1.74)/2	0.05		
		(3.47-2.85)x(1.88+1.75)/2	1.13		
		(2.39-3.47)x(2.60+1.88)/2	-2.42		
		(1.00-2.39)x(2.54+2.60)/2	-3.57		
				1.70	
3	R1	(-8.22--8.51)x(2.37+2.36)/2	0.69		
25.13		(-8.15--8.22)x(2.38+2.37)/2	0.17		
		(-7.99--8.15)x(2.36+2.38)/2	0.38		
		(-7.93--7.99)x(2.35+2.36)/2	0.14		
		(-7.90--7.93)x(2.35+2.35)/2	0.07		
		(-7.85--7.90)x(2.34+2.35)/2	0.12		
		(-7.82--7.85)x(2.33+2.34)/2	0.07		
		(-7.74--7.82)x(2.32+2.33)/2	0.19		
		(-7.63--7.74)x(2.29+2.32)/2	0.25		
		(-7.60--7.63)x(2.29+2.29)/2	0.07		
		(-7.45--7.60)x(2.25+2.29)/2	0.34		
		(-7.17--7.45)x(2.17+2.25)/2	0.62		
		(-7.04--7.17)x(2.07+2.17)/2	0.28		
		(-6.42--7.04)x(1.70+2.07)/2	1.17		
		(-6.18--6.42)x(1.55+1.70)/2	0.39		
		A RIPORTARE mq	4.95		

		CALCOLO DELLE AREE		Foglio n. 2	
STERRI E RIPORTI					
N. SEZIONE PROG.	FIG.	ELEMENTI DI CALCOLO	AREA ELEMENTARE mq	AREA FIGURA mq	NOTE
		RIPORTO mq	4.95		
		(-6.15--6.18)x(1.54+1.55)/2	0.05		
		(-6.14--6.15)x(1.53+1.54)/2	0.02		
		(-6.12--6.14)x(0.86+1.52)/2	0.02		
		(-6.11--6.12)x(1.27+0.86)/2	0.01		
		(-6.03--6.11)x(1.39+1.27)/2	0.11		
		(-5.93--6.03)x(1.47+1.39)/2	0.14		
		(-5.89--5.93)x(1.46+1.47)/2	0.06		
		(-5.82--5.89)x(1.44+1.46)/2	0.10		
		(-5.68--5.82)x(1.41+1.44)/2	0.20		
		(-5.32--5.68)x(1.44+1.41)/2	0.51		
		(-5.07--5.32)x(1.43+1.44)/2	0.36		
		(-4.69--5.07)x(1.64+1.43)/2	0.58		
		(-4.02--4.69)x(1.97+1.64)/2	1.21		
		(-3.52--4.02)x(2.30+1.97)/2	1.07		
		(-3.47--3.52)x(2.34+2.30)/2	0.12		
		(-3.46--3.47)x(2.35+2.34)/2	0.02		
		(-3.37--3.46)x(2.35+2.35)/2	0.21		
		(-3.36--3.37)x(2.35+2.35)/2	0.02		
		(-3.34--3.36)x(2.35+2.35)/2	0.05		
		(-3.33--3.34)x(2.35+2.35)/2	0.02		
		(-3.16--3.33)x(2.36+2.35)/2	0.40		
		(-2.97--3.16)x(2.36+2.36)/2	0.45		
		(-2.00--2.97)x(2.55+2.36)/2	2.38		
		(-1.92--2.00)x(2.57+2.55)/2	0.20		
		(-1.65--1.92)x(2.59+2.57)/2	0.70		
		(-0.87--1.65)x(2.67+2.59)/2	2.05		
		(-0.65--0.87)x(2.68+2.67)/2	0.59		
		(-0.21--0.65)x(2.70+2.68)/2	1.18		
		(-8.51--0.21)x(2.91+2.70)/2	-23.28		
				5.50	
3	S1	(0.18--0.21)x(2.72+2.70)/2	1.06		
25.13		(0.69-0.18)x(2.72+2.72)/2	1.39		
		(1.00-0.69)x(2.72+2.72)/2	0.84		
		(-0.21-1.00)x(2.70+2.67)/2	-3.25		
				0.04	
3	R2	(1.23-1.00)x(2.72+2.72)/2	0.63		
25.13		(2.04-1.23)x(2.78+2.72)/2	2.23		
		(2.28-2.04)x(2.80+2.78)/2	0.67		
		(2.44-2.28)x(2.80+2.80)/2	0.45		
		(2.39-2.44)x(2.83+2.80)/2	-0.14		
		(1.00-2.39)x(2.77+2.83)/2	-3.89		
				0.05	
4	R1	(-8.51--1.30)x(2.86+2.68)/2	-19.97		
35.60		(-8.31--8.51)x(2.37+2.35)/2	0.47		
		(-8.30--8.31)x(2.37+2.37)/2	0.02		
		(-8.25--8.30)x(2.40+2.37)/2	0.12		
		(-8.22--8.25)x(2.37+2.39)/2	0.07		
		(-8.14--8.22)x(2.37+2.37)/2	0.19		
		(-8.05--8.14)x(2.36+2.37)/2	0.21		
		(-7.90--8.05)x(2.35+2.36)/2	0.35		
		(-7.61--7.90)x(2.34+2.35)/2	0.68		
		(-7.48--7.61)x(2.33+2.34)/2	0.30		
		(-7.46--7.48)x(2.37+2.33)/2	0.05		
		(-7.45--7.46)x(2.36+2.37)/2	0.02		
		(-7.43--7.45)x(2.36+2.36)/2	0.05		
		(-7.38--7.43)x(2.36+2.36)/2	0.12		
		(-7.24--7.38)x(2.32+2.36)/2	0.33		
		(-7.21--7.24)x(2.32+2.32)/2	0.07		
		(-7.17--7.21)x(2.32+2.32)/2	0.09		
		(-7.10--7.17)x(2.32+2.32)/2	0.16		
		(-6.96--7.10)x(2.32+2.32)/2	0.32		
		(-6.61--6.96)x(2.33+2.32)/2	0.81		
		(-6.36--6.61)x(2.34+2.33)/2	0.58		
		(-5.79--6.36)x(2.33+2.34)/2	1.33		
		(-5.46--5.79)x(2.31+2.33)/2	0.77		
		(-5.41--5.46)x(2.30+2.31)/2	0.12		
		(-5.33--5.41)x(2.30+2.30)/2	0.18		
		(-5.32--5.33)x(2.30+2.30)/2	0.02		
		(-5.31--5.32)x(2.30+2.30)/2	0.02		
		(-5.19--5.31)x(2.30+2.30)/2	0.28		
		(-5.18--5.19)x(2.30+2.30)/2	0.02		
		(-5.16--5.18)x(2.30+2.30)/2	0.05		
		(-5.14--5.16)x(2.29+2.30)/2	0.05		
		(-5.05--5.14)x(2.27+2.29)/2	0.21		
		(-4.20--5.05)x(2.01+2.27)/2	1.82		
		(-4.09--4.20)x(1.89+2.01)/2	0.21		
		(-3.75--4.09)x(1.56+1.89)/2	0.59		
		(-3.56--3.75)x(1.34+1.56)/2	0.28		
		(-3.45--3.56)x(1.21+1.34)/2	0.14		
		(-3.43--3.45)x(1.21+1.21)/2	0.02		
		(-3.40--3.43)x(1.22+1.21)/2	0.04		
		(-3.39--3.40)x(1.22+1.22)/2	0.01		
		(-3.35--3.39)x(1.02+1.22)/2	0.04		
		(-3.34--3.35)x(0.92+1.02)/2	0.01		
		(-3.33--3.34)x(0.91+0.92)/2	0.01		
		(-3.30--3.33)x(1.09+0.91)/2	0.03		
		(-3.29--3.30)x(1.09+1.09)/2	0.01		
		(-2.91--3.29)x(1.34+1.09)/2	0.46		
		(-2.61--2.91)x(1.27+1.34)/2	0.39		
		(-2.59--2.61)x(1.28+1.27)/2	0.03		
		(-2.46--2.59)x(1.32+1.28)/2	0.17		
		(-1.30--2.46)x(1.76+1.32)/2	1.79		
				5.86	
4	R2	(-1.25--1.30)x(1.78+1.76)/2	0.09		
35.60		(-1.14--1.25)x(1.82+1.78)/2	0.20		
		(-1.02--1.14)x(1.88+1.82)/2	0.22		
		(-0.60--1.02)x(2.15+1.88)/2	0.85		
		(-0.33--0.60)x(2.23+2.15)/2	0.59		
		(-0.21--0.33)x(2.24+2.23)/2	0.27		
		(-1.30--0.21)x(2.68+2.65)/2	-2.90		
				0.68	
4	R3	(-0.21-1.00)x(2.65+2.62)/2	-3.19		
35.60		(-0.16--0.21)x(2.24+2.24)/2	0.11		
		(-0.04--0.16)x(2.33+2.24)/2	0.27		
		(0.04--0.04)x(2.46+2.33)/2	0.19		
		A RIPORTARE mq	-2.62		

		CALCOLO DELLE AREE		Foglio n. 3	
STERRI E RIPORTI					
N. SEZIONE PROG.	FIG.	ELEMENTI DI CALCOLO	AREA ELEMENTARE mq	AREA FIGURA mq	NOTE
		RIPORTO mq	-2.62		
		(0.11-0.04)x(2.50+2.46)/2	0.17		
		(0.20-0.11)x(2.50+2.50)/2	0.23		
		(0.21-0.20)x(2.41+2.50)/2	0.02		
		(0.25-0.21)x(2.48+2.41)/2	0.10		
		(0.31-0.25)x(2.43+2.48)/2	0.15		
		(0.50-0.31)x(2.58+2.43)/2	0.48		
		(0.58-0.50)x(2.58+2.58)/2	0.21		
		(1.00-0.58)x(2.61+2.58)/2	1.09		
				0.17	
4	R4	(1.43-1.00)x(2.65+2.61)/2	1.13		
35.60		(2.17-1.43)x(2.69+2.65)/2	1.98		
		(2.50-2.17)x(2.71+2.69)/2	0.89		
		(2.39-2.50)x(2.78+2.71)/2	-0.30		
		(1.00-2.39)x(2.72+2.78)/2	-3.82		
				0.12	
5	R1	(-8.23--8.51)x(2.34+2.34)/2	0.66		
49.15		(-7.70--8.23)x(2.35+2.34)/2	1.24		
		(-7.33--7.70)x(2.35+2.35)/2	0.87		
		(-6.66--7.33)x(2.35+2.35)/2	1.57		
		(-6.43--6.66)x(2.35+2.35)/2	0.54		
		(-5.62--6.43)x(2.36+2.35)/2	1.91		
		(-5.52--5.62)x(2.37+2.36)/2	0.24		
		(-4.86--5.52)x(2.36+2.37)/2	1.56		
		(-4.62--4.86)x(2.36+2.36)/2	0.57		
		(-4.59--4.62)x(2.36+2.36)/2	0.07		
		(-4.54--4.59)x(2.36+2.36)/2	0.12		
		(-3.55--4.54)x(2.36+2.36)/2	2.34		
		(-2.82--3.55)x(2.36+2.36)/2	1.72		
		(-2.51--2.82)x(2.37+2.36)/2	0.73		
		(-1.91--2.51)x(2.37+2.37)/2	1.42		
		(-1.48--1.91)x(2.37+2.37)/2	1.02		
		(-1.30--1.48)x(2.37+2.37)/2	0.43		
		(-8.51--1.30)x(2.56+2.37)/2	-17.77		
				0.76	
5	S1	(-1.30-1.00)x(2.37+2.31)/2	-5.38		
49.15		(-1.01--1.30)x(2.37+2.37)/2	0.69		
		(-0.44--1.01)x(2.36+2.37)/2	1.35		
		(-0.11--0.44)x(2.36+2.36)/2	0.78		
		(0.60--0.11)x(2.37+2.36)/2	1.68		
		(1.00-0.60)x(2.37+2.37)/2	0.95		
				0.07	
5	S2	(1.63-1.00)x(2.37+2.37)/2	1.49		
49.15		(1.70-1.63)x(2.37+2.37)/2	0.17		
		(2.13-1.70)x(2.37+2.37)/2	1.02		
		(2.60-2.13)x(2.37+2.37)/2	1.11		
		(2.67-2.60)x(2.37+2.37)/2	0.17		
		(3.50-2.67)x(2.37+2.37)/2	1.97		
		(3.71-3.50)x(2.36+2.37)/2	0.50		
		(4.41-3.71)x(2.37+2.36)/2	1.66		
		(4.74-4.41)x(2.37+2.37)/2	0.78		
		(5.31-4.74)x(2.37+2.37)/2	1.35		
		(5.78-5.31)x(2.37+2.37)/2	1.11		
		(6.41-5.78)x(2.36+2.37)/2	1.49		
		(6.81-6.41)x(2.36+2.36)/2	0.94		
		(7.11-6.81)x(2.36+2.36)/2	0.71		
		(7.85-7.11)x(2.36+2.36)/2	1.75		
		(8.02-7.85)x(2.36+2.36)/2	0.40		
		(8.89-8.02)x(2.37+2.36)/2	2.06		
		(8.92-8.89)x(2.37+2.37)/2	0.07		
		(9.13-8.92)x(2.36+2.37)/2	0.50		
		(9.82-9.13)x(2.36+2.36)/2	1.63		
		(9.92-9.82)x(2.36+2.36)/2	0.24		
		(10.72-9.92)x(2.36+2.36)/2	1.89		
		(10.96-10.72)x(2.36+2.36)/2	0.57		
		(11.63-10.96)x(2.37+2.36)/2	1.58		
		(12.00-11.63)x(2.37+2.37)/2	0.88		
		(12.53-12.00)x(2.38+2.37)/2	1.26		
		(13.03-12.53)x(2.38+2.38)/2	1.19		
		(13.43-13.03)x(2.38+2.38)/2	0.95		
		(13.42-13.43)x(1.98+2.38)/2	-0.02		
		(1.00-13.42)x(2.31+1.98)/2	-26.64		
				2.78	
6	S1	(-8.51--1.30)x(2.29+2.11)/2	-15.86		
60.46		(-8.39--8.51)x(2.29+2.29)/2	0.27		
		(-8.29--8.39)x(2.29+2.29)/2	0.23		
		(-8.18--8.29)x(2.29+2.29)/2	0.25		
		(-7.57--8.18)x(2.27+2.29)/2	1.39		
		(-7.03--7.57)x(2.27+2.27)/2	1.23		
		(-6.84--7.03)x(2.26+2.27)/2	0.43		
		(-6.62--6.84)x(2.25+2.26)/2	0.50		
		(-6.11--6.62)x(2.24+2.25)/2	1.14		
		(-5.67--6.11)x(2.23+2.24)/2	0.98		
		(-5.39--5.67)x(2.23+2.23)/2	0.62		
		(-5.06--5.39)x(2.22+2.23)/2	0.73		
		(-4.66--5.06)x(2.21+2.22)/2	0.89		
		(-4.31--4.66)x(2.20+2.21)/2	0.77		
		(-3.93--4.31)x(2.20+2.20)/2	0.84		
		(-3.50--3.93)x(2.19+2.20)/2	0.94		
		(-3.21--3.50)x(2.18+2.19)/2	0.63		
		(-2.95--3.21)x(2.18+2.18)/2	0.57		
		(-2.48--2.95)x(2.17+2.18)/2	1.02		
		(-1.94--2.48)x(2.16+2.17)/2	1.17		
		(-1.75--1.94)x(2.16+2.16)/2	0.41		
		(-1.59--1.75)x(2.15+2.16)/2	0.34		
		(-1.30--1.59)x(2.15+2.15)/2	0.62		
				0.11	
6	S2	(-1.03--1.30)x(2.15+2.15)/2	0.58		
60.46		(-0.38--1.03)x(2.14+2.15)/2	1.39		
		(-0.30--0.38)x(2.14+2.14)/2	0.17		
		(-0.23--0.30)x(2.14+2.14)/2	0.15		
		(0.43--0.23)x(2.12+2.14)/2	1.41		
		(1.00-0.43)x(2.10+2.12)/2	1.20		
		(-1.30-1.00)x(2.11+2.05)/2	-4.78		
				0.12	
6	R1	(1.13-1.00)x(2.10+2.10)/2	0.27		
		A RIPORTARE mq	0.27		

STERRI E RIPORTI

N. SEZIONE PROG.	FIG.	ELEMENTI DI CALCOLO	AREA ELEMENTARE mq	AREA FIGURA mq	NOTE
		RIPORTO mq	0.27		
60.46		(1.15-1.13)x(2.10+2.10)/2	0.04		
		(1.18-1.15)x(2.10+2.10)/2	0.06		
		(1.83-1.18)x(2.16+2.10)/2	1.38		
		(1.84-1.83)x(2.18+2.16)/2	0.02		
		(1.89-1.84)x(2.17+2.18)/2	0.11		
		(1.91-1.89)x(2.18+2.17)/2	0.04		
		(1.96-1.91)x(2.18+2.18)/2	0.11		
		(1.97-1.96)x(2.18+2.18)/2	0.02		
		(2.08-1.97)x(2.14+2.18)/2	0.24		
		(2.17-2.08)x(2.19+2.14)/2	0.19		
		(2.19-2.17)x(2.15+2.19)/2	0.04		
		(2.22-2.19)x(2.13+2.15)/2	0.06		
		(2.26-2.22)x(2.15+2.13)/2	0.09		
		(2.29-2.26)x(2.17+2.15)/2	0.06		
		(2.33-2.29)x(2.14+2.17)/2	0.09		
		(2.43-2.33)x(2.09+2.14)/2	0.21		
		(2.51-2.43)x(2.09+2.09)/2	0.17		
		(2.58-2.51)x(2.09+2.09)/2	0.15		
		(2.39-2.58)x(2.21+2.09)/2	-0.41		
		(1.00-2.39)x(2.15+2.21)/2	-3.03		
				0.09	
7	S1	(-8.51--0.37)x(2.10+1.89)/2	-16.24		
70.93		(-8.20--8.51)x(2.20+2.21)/2	0.68		
		(-7.68--8.20)x(2.19+2.20)/2	1.14		
		(-7.17--7.68)x(2.19+2.19)/2	1.12		
		(-6.71--7.17)x(2.19+2.19)/2	1.01		
		(-6.15--6.71)x(2.19+2.19)/2	1.23		
		(-5.75--6.15)x(2.20+2.19)/2	0.88		
		(-5.12--5.75)x(2.19+2.20)/2	1.38		
		(-4.78--5.12)x(2.19+2.19)/2	0.74		
		(-4.09--4.78)x(2.17+2.19)/2	1.50		
		(-3.81--4.09)x(2.17+2.17)/2	0.61		
		(-3.06--3.81)x(2.19+2.17)/2	1.63		
		(-2.85--3.06)x(2.19+2.19)/2	0.46		
		(-2.04--2.85)x(2.19+2.19)/2	1.77		
		(-1.88--2.04)x(2.19+2.19)/2	0.35		
		(-1.01--1.88)x(2.19+2.19)/2	1.91		
		(-0.91--1.01)x(2.19+2.19)/2	0.22		
		(-0.37--0.91)x(2.18+2.19)/2	1.18		
				1.57	
7	S2	(-0.37-0.72)x(1.89+1.87)/2	-2.05		
70.93		(0.02--0.37)x(2.18+2.18)/2	0.85		
		(0.05-0.02)x(2.18+2.18)/2	0.07		
		(0.65-0.05)x(2.17+2.18)/2	1.30		
		(0.72-0.65)x(2.17+2.17)/2	0.15		
				0.32	
7	S3	(0.72-0.78)x(1.87+1.87)/2	-0.11		
70.93		(0.78-0.72)x(2.17+2.17)/2	0.13		
				0.02	
7	S4	(0.78-0.84)x(1.87+1.86)/2	-0.11		
70.93		(0.84-0.78)x(2.17+2.17)/2	0.13		
				0.02	
7	S5	(0.84-0.90)x(1.86+1.86)/2	-0.11		
70.93		(0.90-0.84)x(2.17+2.17)/2	0.13		
				0.02	
7	S6	(1.00-0.90)x(2.17+2.17)/2	0.22		
70.93		(0.90-1.00)x(1.86+1.86)/2	-0.19		
				0.03	
7	S7	(1.04-1.00)x(2.17+2.17)/2	0.09		
70.93		(1.07-1.04)x(2.17+2.17)/2	0.07		
		(2.07-1.07)x(2.18+2.17)/2	2.17		
		(2.17-2.07)x(2.18+2.18)/2	0.22		
		(3.10-2.17)x(2.17+2.18)/2	2.02		
		(3.26-3.10)x(2.17+2.17)/2	0.35		
		(4.13-3.26)x(2.16+2.17)/2	1.88		
		(4.36-4.13)x(2.16+2.16)/2	0.50		
		(5.15-4.36)x(2.15+2.16)/2	1.70		
		(5.45-5.15)x(2.15+2.15)/2	0.64		
		(5.58-5.45)x(2.15+2.15)/2	0.28		
		(5.57-5.58)x(1.75+2.15)/2	-0.02		
		(1.00-5.57)x(1.86+1.75)/2	-8.25		
				1.65	
8	S1	(-7.97--8.51)x(2.23+2.24)/2	1.21		
84.33		(-7.23--7.97)x(2.20+2.23)/2	1.64		
		(-6.54--7.23)x(2.17+2.20)/2	1.51		
		(-6.35--6.54)x(2.16+2.17)/2	0.41		
		(-6.21--6.35)x(2.16+2.16)/2	0.30		
		(-6.06--6.21)x(2.16+2.16)/2	0.32		
		(-6.02--6.06)x(2.15+2.16)/2	0.09		
		(-6.01--6.02)x(2.17+2.26)/2	0.02		
		(-5.98--6.01)x(2.16+2.17)/2	0.06		
		(-5.80--5.98)x(2.16+2.16)/2	0.39		
		(-5.43--5.80)x(2.15+2.16)/2	0.80		
		(-5.10--5.43)x(2.13+2.15)/2	0.71		
		(-4.30--5.10)x(2.10+2.13)/2	1.69		
		(-3.98--4.30)x(2.08+2.10)/2	0.67		
		(-3.66--3.98)x(2.06+2.08)/2	0.66		
		(-3.25--3.66)x(2.04+2.06)/2	0.84		
		(-2.84--3.25)x(2.03+2.04)/2	0.83		
		(-2.38--2.84)x(2.07+2.03)/2	0.94		
		(-2.30--2.38)x(2.07+2.07)/2	0.17		
		(-2.07--2.30)x(2.11+2.07)/2	0.48		
		(-1.67--2.07)x(2.13+2.11)/2	0.85		
		(-1.23--1.67)x(2.14+2.13)/2	0.94		
		(-1.16--1.23)x(2.14+2.14)/2	0.15		
		(-0.89--1.16)x(2.10+2.14)/2	0.57		
		(-0.86--0.89)x(2.10+2.10)/2	0.06		
		(-0.84--0.86)x(2.10+2.10)/2	0.04		
		(-0.78--0.84)x(2.10+2.10)/2	0.13		
		(-0.77--0.78)x(2.10+2.10)/2	0.02		
		(-0.75--0.77)x(2.10+2.10)/2	0.04		
		(-0.70--0.75)x(2.10+2.10)/2	0.11		
		(-0.55--0.70)x(2.11+2.10)/2	0.32		
		(-0.48--0.55)x(2.09+2.11)/2	0.15		
		(-0.43--0.48)x(2.02+2.09)/2	0.10		
		A RIPORTARE mq	17.22		

	CALCOLO DELLE AREE		Foglio n. 5

STERRI E RIPORTI

N. SEZIONE PROG.	FIG.	ELEMENTI DI CALCOLO	AREA ELEMENTARE mq	AREA FIGURA mq	NOTE
		RIPORTO mq	17.22		
		(-0.37--0.43)x(1.93+2.02)/2	0.12		
		(-8.51--0.37)x(2.14+1.93)/2	-16.56		
				0.78	
8	R1	(-0.34--0.37)x(1.90+1.93)/2	0.06		
84.33		(0.09--0.34)x(1.71+1.90)/2	0.78		
		(0.28-0.09)x(1.66+1.71)/2	0.32		
		(0.32-0.28)x(1.64+1.66)/2	0.07		
		(0.42-0.32)x(1.68+1.64)/2	0.17		
		(0.56-0.42)x(1.73+1.68)/2	0.24		
		(0.57-0.56)x(1.73+1.73)/2	0.02		
		(0.58-0.57)x(1.34+1.73)/2	0.02		
		(0.61-0.58)x(1.34+1.34)/2	0.04		
		(0.67-0.61)x(1.81+1.34)/2	0.09		
		(0.72-0.67)x(1.90+1.81)/2	0.09		
		(-0.37-0.72)x(1.93+1.90)/2	-2.09		
				0.19	
8	R2	(0.79-0.78)x(1.75+1.90)/2	0.02		
84.33		(0.80-0.79)x(1.13+1.75)/2	0.01		
		(0.83-0.80)x(1.76+1.13)/2	0.04		
		(0.84-0.83)x(1.90+1.76)/2	0.02		
		(0.78-0.84)x(1.90+1.90)/2	-0.11		
				0.02	
8	R3	(1.03-0.90)x(1.64+1.90)/2	0.23		
84.33		(1.56-1.03)x(1.46+1.64)/2	0.82		
		(2.08-1.56)x(1.53+1.46)/2	0.78		
		(3.02-2.08)x(1.63+1.53)/2	1.49		
		(3.50-3.02)x(1.02+1.63)/2	0.64		
		(3.86-3.50)x(0.20+1.02)/2	0.22		
		(3.95-3.86)x(0.06+0.20)/2	0.01		
		(4.04-3.95)x(0.23+0.06)/2	0.01		
		(4.45-4.04)x(0.62+0.23)/2	0.17		
		(4.82-4.45)x(1.46+0.62)/2	0.38		
		(3.29-4.82)x(1.46+1.46)/2	-2.23		
		(2.39-3.29)x(2.06+1.46)/2	-1.58		
		(1.00-2.39)x(2.00+2.06)/2	-2.82		
		(0.90-1.00)x(1.90+1.90)/2	-0.19		
				2.07	

Il Direttore dei Lavori	L'Impresa	

N. SEZ.	FIG.	SUPERFICIE STERRO mq	SUPERFICIE RIPORTO mq	PUNTI DI PASSAGGIO (PROGRESSIVA m)	DISTANZA m	VOLUMI PARZIALI STERRO mc	VOLUMI PARZIALI RIPORTO mc	VOLUMI TOTALI STERRO mc	VOLUMI TOTALI RIPORTO mc
1	S1	1.74		(0.00)	2.14	1.862			
				1.74*12.43					
				1.74+8.36	2.14				
2	R1		5.60	(12.43)					
	R2		1.06						
	R3		1.70		10.29		43.012		
								1.862	43.012
2	R1		5.60	(12.43)					
					12.70		70.485		
3	R1		5.50	(25.13)					
2	R2		1.06	(12.43)	12.24		6.487		
				1.06*12.70					
				1.06+0.04	12.24				
3	S1	0.04		(25.13)	0.46	0.009			
2	R3		1.70	(12.43)					
					12.70		11.112		
3	R2		0.05	(25.13)					
								0.009	88.084
3	R1		5.50	(25.13)					
					10.47		63.029		
4	R1		5.86	(35.60)					
	R2		0.68						
3	S1	0.04		(25.13)	1.99	0.040			
				0.04*10.47					
				0.04+0.17	1.99				
4	R3		0.17	(35.60)	8.48		0.721		
3	R2		0.05	(25.13)					
					10.47		0.890		
4	R4		0.12	(35.60)					
								0.040	64.640
4	R1		5.86	(35.60)					
					13.55		44.851		
5	R1		0.76	(49.15)					
4	R2		0.68	(35.60)					
	R3		0.17						
	R4		0.12		3.44		1.668		
				0.97*13.55					
				0.97+2.85	3.44				
5	S1	0.07		(49.15)					
	S2	2.78			10.11	14.407			
								14.407	46.519
5	R1		0.76	(49.15)	9.88		3.754		
				0.76*11.31					
				0.76+0.11	9.88				
6	S1	0.11		(60.46)	1.43	0.079			
5	S1	0.07		(49.15)					
					11.31	1.074			
6	S2	0.12		(60.46)					
5	S2	2.78		(49.15)	10.96	15.234			
				2.78*11.31					
				2.78+0.09	10.96				
6	R1		0.09	(60.46)	0.35		0.016		
								16.387	3.770
6	S1	0.11		(60.46)					
	S2	0.12							
					10.47	11.569			
7	S1	1.57		(70.93)					
	S2	0.32							
	S3	0.02							
	S4	0.02							
	S5	0.02							
	S6	0.03							
6	R1		0.09	(60.46)	0.54		0.024		
				0.09*10.47					
				0.09+1.65	0.54				
7	S7	1.65		(70.93)	9.93	8.192			
								19.761	0.024
7	S1	1.57		(70.93)					
					13.40	15.745			
8	S1	0.78		(84.33)					
7	S2	0.32		(70.93)	8.41	1.346			
				A RIPORTARE :		17.091		52.466	246.049

N. SEZ.	FIG.	SUPERFICIE STERRO mq	SUPERFICIE RIPORTO mq	PUNTI DI PASSAGGIO (PROGRESSIVA m)	DISTANZA m	VOLUMI PARZIALI STERRO mc	VOLUMI PARZIALI RIPORTO mc	VOLUMI TOTALI STERRO mc	VOLUMI TOTALI RIPORTO mc
				RIPORTO :		17.091		52.466	246.049
				0.32*13.40					
				———————	8.41				
				0.32+0.19					
8	R1		0.19	(84.33)	4.99		0.474		
7	S3	0.02		(70.93)					
					13.40	0.134			
8	S0	0.00		(84.33)					
7	S4	0.02		(70.93)	6.70	0.067			
				0.02*13.40					
				———————	6.70				
				0.02+0.02					
8	R2		0.02	(84.33)	6.70		0.067		
7	S5	0.02		(70.93)					
					13.40	0.134			
8	S0	0.00		(84.33)					
7	S6	0.03		(70.93)					
	S7	1.65			6.00	5.040			
				1.68*13.40					
				———————	6.00				
				1.68+2.07					
8	R3		2.07	(84.33)	7.40		7.659		
								22.466	8.200

Il Direttore dei Lavori	L'Impresa	Totale Articoli .....:	74.932	254.249
		A dedurre quantita' precedenti:		
		Quantita' da contabilizzare ..:		

BONIFICA

N. SEZIONE PROG.	FIG.	ELEMENTI DI CALCOLO	AREA ELEMENTARE mq	AREA FIGURA mq	NOTE
2 12.43	BO1	(-8.30--8.51)x(2.35+2.35)/2	0.49		
		(-8.16--8.30)x(2.35+2.35)/2	0.33		
		(-8.11--8.16)x(2.36+2.35)/2	0.12		
		(-8.10--8.11)x(2.36+2.36)/2	0.02		
		(-7.94--8.10)x(2.39+2.36)/2	0.38		
		(-7.88--7.94)x(2.43+2.39)/2	0.14		
		(-7.87--7.88)x(2.37+2.43)/2	0.02		
		(-7.73--7.87)x(2.35+2.37)/2	0.33		
		(-7.54--7.73)x(2.35+2.35)/2	0.45		
		(-7.36--7.54)x(2.35+2.35)/2	0.42		
		(-7.26--7.36)x(2.35+2.35)/2	0.24		
		(-7.20--7.26)x(2.35+2.35)/2	0.14		
		(-7.11--7.20)x(2.38+2.35)/2	0.21		
		(-7.09--7.11)x(2.40+2.38)/2	0.05		
		(-7.08--7.09)x(2.41+2.40)/2	0.02		
		(-6.98--7.08)x(2.35+2.41)/2	0.24		
		(-6.97--6.98)x(2.35+2.35)/2	0.02		
		(-6.94--6.97)x(2.35+2.35)/2	0.07		
		(-6.81--6.94)x(2.35+2.35)/2	0.31		
		(-6.63--6.81)x(2.36+2.35)/2	0.42		
		(-5.71--6.63)x(2.39+2.36)/2	2.18		
		(-5.52--5.71)x(2.39+2.39)/2	0.45		
		(-5.31--5.52)x(2.37+2.39)/2	0.50		
		(-5.21--5.31)x(2.40+2.37)/2	0.24		
		(-5.13--5.21)x(2.40+2.40)/2	0.19		
		(-5.10--5.13)x(2.40+2.40)/2	0.07		
		(-5.09--5.10)x(2.40+2.40)/2	0.02		
		(-5.06--5.09)x(2.40+2.40)/2	0.07		
		(-5.05--5.06)x(2.40+2.40)/2	0.02		
		(-4.52--5.05)x(2.29+2.40)/2	1.24		
		(-4.49--4.52)x(2.28+2.29)/2	0.07		
		(-3.85--4.49)x(1.94+2.28)/2	1.35		
		(-3.27--3.85)x(1.70+1.94)/2	1.06		
		(-2.55--3.27)x(1.26+1.70)/2	1.07		
		(-2.33--2.55)x(1.15+1.26)/2	0.27		
		(-2.25--2.33)x(1.09+1.15)/2	0.09		
		(-2.20--2.25)x(1.08+1.09)/2	0.05		
		(-2.11--2.20)x(0.98+1.08)/2	0.09		
		(-2.09--2.11)x(0.94+0.98)/2	0.02		
		(-2.06--2.09)x(0.95+0.92)/2	0.03		
		(-1.97--2.06)x(1.01+0.95)/2	0.09		
		(-0.92--1.97)x(1.19+1.01)/2	1.15		
		(-0.90--0.92)x(1.19+1.19)/2	0.02		
		(-0.82--0.90)x(1.22+1.19)/2	0.10		
		(-0.81--0.82)x(1.23+1.22)/2	0.01		
		(-0.66--0.81)x(1.52+1.23)/2	0.21		
		(-0.65--0.66)x(1.52+1.52)/2	0.02		
		(-0.58--0.65)x(1.51+1.52)/2	0.11		
		(0.25--0.58)x(1.56+1.51)/2	1.27		
		(0.40-0.25)x(1.58+1.56)/2	0.24		
		(0.89-0.40)x(1.61+1.58)/2	0.78		
		(1.34-0.89)x(1.67+1.61)/2	0.74		
		(1.63-1.34)x(1.69+1.67)/2	0.49		
		(2.08-1.63)x(1.74+1.69)/2	0.77		
		(2.77-2.08)x(1.74+1.74)/2	1.20		
		(2.82-2.77)x(1.74+1.74)/2	0.09		
		(2.85-2.82)x(1.75+1.74)/2	0.05		
		(3.47-2.85)x(1.88+1.75)/2	1.13		
		(2.85-3.47)x(1.25+1.38)/2	-0.82		
		(2.82-2.85)x(1.24+1.25)/2	-0.04		
		(2.77-2.82)x(1.24+1.24)/2	-0.06		
		(2.08-2.77)x(1.24+1.24)/2	-0.86		
		(1.63-2.08)x(1.19+1.24)/2	-0.55		
		(1.34-1.63)x(1.17+1.19)/2	-0.34		
		(0.89-1.34)x(1.11+1.17)/2	-0.51		
		(0.40-0.89)x(1.08+1.11)/2	-0.54		
		(0.25-0.40)x(1.06+1.08)/2	-0.16		
		(-0.58-0.25)x(1.01+1.06)/2	-0.86		
		(-0.65--0.58)x(1.02+1.01)/2	-0.07		
		(-0.66--0.65)x(1.02+1.02)/2	-0.01		
		(-0.81--0.66)x(0.73+1.02)/2	-0.13		
		(-0.82--0.81)x(0.72+0.73)/2	-0.01		
		(-0.90--0.82)x(0.69+0.72)/2	-0.06		
		(-0.92--0.90)x(0.69+0.69)/2	-0.01		
		(-1.97--0.92)x(0.51+0.69)/2	-0.63		
		(-2.06--1.97)x(0.45+0.51)/2	-0.04		
		(-2.09--2.06)x(0.42+0.45)/2	-0.01		
		(-2.11--2.09)x(0.48+0.44)/2	-0.01		
		(-2.20--2.11)x(0.58+0.48)/2	-0.05		
		(-2.25--2.20)x(0.59+0.58)/2	-0.03		
		(-2.33--2.25)x(0.65+0.59)/2	-0.05		
		(-2.55--2.33)x(0.76+0.65)/2	-0.16		
		(-3.27--2.55)x(1.20+0.76)/2	-0.71		
		(-3.85--3.27)x(1.44+1.20)/2	-0.77		
		(-4.49--3.85)x(1.78+1.44)/2	-1.03		
		(-4.52--4.49)x(1.79+1.78)/2	-0.05		
		(-5.05--4.52)x(1.90+1.79)/2	-0.98		
		(-5.06--5.05)x(1.90+1.90)/2	-0.02		
		(-5.09--5.06)x(1.90+1.90)/2	-0.06		
		(-5.10--5.09)x(1.90+1.90)/2	-0.02		
		(-5.13--5.10)x(1.90+1.90)/2	-0.06		
		(-5.21--5.13)x(1.90+1.90)/2	-0.15		
		(-5.31--5.21)x(1.87+1.90)/2	-0.19		
		(-5.52--5.31)x(1.89+1.87)/2	-0.39		
		(-5.71--5.52)x(1.89+1.89)/2	-0.36		
		(-6.63--5.71)x(1.86+1.89)/2	-1.72		
		(-6.81--6.63)x(1.85+1.86)/2	-0.33		
		(-6.94--6.81)x(1.85+1.85)/2	-0.24		
		(-6.97--6.94)x(1.85+1.85)/2	-0.06		
		(-6.98--6.97)x(1.85+1.85)/2	-0.02		
		(-7.08--6.98)x(1.91+1.85)/2	-0.19		
		(-7.09--7.08)x(1.90+1.91)/2	-0.02		
		(-7.11--7.09)x(1.88+1.90)/2	-0.04		
		(-7.20--7.11)x(1.85+1.88)/2	-0.17		
		(-7.26--7.20)x(1.85+1.85)/2	-0.11		
		(-7.36--7.26)x(1.85+1.85)/2	-0.19		
		(-7.54--7.36)x(1.85+1.85)/2	-0.33		
		A RIPORTARE mq	7.75		

BONIFICA

N. SEZIONE PROG.	FIG.	ELEMENTI DI CALCOLO	AREA ELEMENTARE mq	AREA FIGURA mq	NOTE
		RIPORTO mq	7.75		
		(-7.73--7.54)x(1.85+1.85)/2	-0.35		
		(-7.87--7.73)x(1.87+1.85)/2	-0.26		
		(-7.88--7.87)x(1.93+1.87)/2	-0.02		
		(-7.94--7.88)x(1.89+1.93)/2	-0.11		
		(-8.10--7.94)x(1.86+1.89)/2	-0.30		
		(-8.11--8.10)x(1.86+1.86)/2	-0.02		
		(-8.16--8.11)x(1.85+1.86)/2	-0.09		
		(-8.30--8.16)x(1.85+1.85)/2	-0.26		
		(-8.51--8.30)x(1.85+1.85)/2	-0.39		
				5.95	
3	BO1	(-8.22--8.51)x(2.37+2.36)/2	0.69		
25.13		(-8.15--8.22)x(2.38+2.37)/2	0.17		
		(-7.99--8.15)x(2.36+2.38)/2	0.38		
		(-7.93--7.99)x(2.35+2.36)/2	0.14		
		(-7.90--7.93)x(2.35+2.35)/2	0.07		
		(-7.85--7.90)x(2.34+2.35)/2	0.12		
		(-7.82--7.85)x(2.33+2.34)/2	0.07		
		(-7.74--7.82)x(2.32+2.33)/2	0.19		
		(-7.63--7.74)x(2.29+2.32)/2	0.25		
		(-7.60--7.63)x(2.29+2.29)/2	0.07		
		(-7.45--7.60)x(2.25+2.29)/2	0.34		
		(-7.17--7.45)x(2.17+2.25)/2	0.62		
		(-7.04--7.17)x(2.07+2.17)/2	0.28		
		(-6.42--7.04)x(1.70+2.07)/2	1.17		
		(-6.18--6.42)x(1.55+1.70)/2	0.39		
		(-6.15--6.18)x(1.54+1.55)/2	0.05		
		(-6.14--6.15)x(1.53+1.54)/2	0.02		
		(-6.12--6.14)x(0.86+1.52)/2	0.02		
		(-6.11--6.12)x(1.27+0.86)/2	0.01		
		(-6.03--6.11)x(1.39+1.27)/2	0.11		
		(-5.93--6.03)x(1.47+1.39)/2	0.14		
		(-5.89--5.93)x(1.46+1.47)/2	0.06		
		(-5.82--5.89)x(1.44+1.46)/2	0.10		
		(-5.68--5.82)x(1.41+1.44)/2	0.20		
		(-5.32--5.68)x(1.44+1.41)/2	0.51		
		(-5.07--5.32)x(1.43+1.44)/2	0.36		
		(-4.69--5.07)x(1.64+1.43)/2	0.58		
		(-4.02--4.69)x(1.97+1.64)/2	1.21		
		(-3.52--4.02)x(2.30+1.97)/2	1.07		
		(-3.47--3.52)x(2.34+2.30)/2	0.12		
		(-3.46--3.47)x(2.35+2.34)/2	0.02		
		(-3.37--3.46)x(2.35+2.35)/2	0.21		
		(-3.36--3.37)x(2.35+2.35)/2	0.02		
		(-3.34--3.36)x(2.35+2.35)/2	0.05		
		(-3.33--3.34)x(2.35+2.35)/2	0.02		
		(-3.16--3.33)x(2.36+2.35)/2	0.40		
		(-2.97--3.16)x(2.36+2.36)/2	0.45		
		(-2.00--2.97)x(2.55+2.36)/2	2.38		
		(-1.92--2.00)x(2.57+2.55)/2	0.20		
		(-1.65--1.92)x(2.59+2.57)/2	0.70		
		(-0.87--1.65)x(2.67+2.59)/2	2.05		
		(-0.65--0.87)x(2.68+2.67)/2	0.59		
		(-0.21--0.65)x(2.70+2.68)/2	1.18		
		(-0.65--0.21)x(2.18+2.20)/2	-0.96		
		(-0.87--0.65)x(2.17+2.18)/2	-0.48		
		(-1.65--0.87)x(2.09+2.17)/2	-1.66		
		(-1.92--1.65)x(2.07+2.09)/2	-0.56		
		(-2.00--1.92)x(2.05+2.07)/2	-0.16		
		(-2.97--2.00)x(1.86+2.05)/2	-1.90		
		(-3.16--2.97)x(1.86+1.86)/2	-0.35		
		(-3.33--3.16)x(1.85+1.86)/2	-0.32		
		(-3.34--3.33)x(1.85+1.85)/2	-0.02		
		(-3.36--3.34)x(1.85+1.85)/2	-0.04		
		(-3.37--3.36)x(1.85+1.85)/2	-0.02		
		(-3.46--3.37)x(1.85+1.85)/2	-0.17		
		(-3.47--3.46)x(1.84+1.85)/2	-0.02		
		(-3.52--3.47)x(1.80+1.84)/2	-0.09		
		(-4.02--3.52)x(1.47+1.80)/2	-0.82		
		(-4.69--4.02)x(1.14+1.47)/2	-0.87		
		(-5.07--4.69)x(0.93+1.14)/2	-0.39		
		(-5.32--5.07)x(0.94+0.93)/2	-0.23		
		(-5.68--5.32)x(0.91+0.94)/2	-0.33		
		(-5.82--5.68)x(0.94+0.91)/2	-0.13		
		(-5.89--5.82)x(0.96+0.94)/2	-0.07		
		(-5.93--5.89)x(0.97+0.96)/2	-0.04		
		(-6.03--5.93)x(0.89+0.97)/2	-0.09		
		(-6.11--6.03)x(0.77+0.89)/2	-0.07		
		(-6.12--6.11)x(0.36+0.77)/2	-0.01		
		(-6.14--6.12)x(1.02+0.36)/2	-0.01		
		(-6.15--6.14)x(1.04+1.03)/2	-0.01		
		(-6.18--6.15)x(1.05+1.04)/2	-0.03		
		(-6.42--6.18)x(1.20+1.05)/2	-0.27		
		(-7.04--6.42)x(1.57+1.20)/2	-0.86		
		(-7.17--7.04)x(1.67+1.57)/2	-0.21		
		(-7.45--7.17)x(1.75+1.67)/2	-0.48		
		(-7.60--7.45)x(1.79+1.75)/2	-0.27		
		(-7.63--7.60)x(1.79+1.79)/2	-0.05		
		(-7.74--7.63)x(1.82+1.79)/2	-0.20		
		(-7.82--7.74)x(1.83+1.82)/2	-0.15		
		(-7.85--7.82)x(1.84+1.83)/2	-0.06		
		(-7.90--7.85)x(1.85+1.84)/2	-0.09		
		(-7.93--7.90)x(1.85+1.85)/2	-0.06		
		(-7.99--7.93)x(1.86+1.85)/2	-0.11		
		(-8.15--7.99)x(1.88+1.86)/2	-0.30		
		(-8.22--8.15)x(1.87+1.88)/2	-0.13		
		(-8.51--8.22)x(1.86+1.87)/2	-0.54		
				4.15	
3	BO2	(1.23-1.00)x(2.72+2.72)/2	0.63		
25.13		(2.04-1.23)x(2.78+2.72)/2	2.23		
		(2.28-2.04)x(2.80+2.78)/2	0.67		
		(2.44-2.28)x(2.80+2.80)/2	0.45		
		(2.28-2.44)x(2.30+2.30)/2	-0.37		
		(2.04-2.28)x(2.28+2.30)/2	-0.55		
		(1.23-2.04)x(2.22+2.28)/2	-1.82		
		(1.00-1.23)x(2.22+2.22)/2	-0.51		
		A RIPORTARE mq	0.73		

BONIFICA

N. SEZIONE PROG.	FIG.	ELEMENTI DI CALCOLO	AREA ELEMENTARE mq	AREA FIGURA mq	NOTE
		RIPORTO mq	0.73		
				0.73	
4 35.60	BO1	(-8.31--8.51)x(2.37+2.35)/2	0.47		
		(-8.30--8.31)x(2.37+2.37)/2	0.02		
		(-8.25--8.30)x(2.40+2.37)/2	0.12		
		(-8.22--8.25)x(2.37+2.39)/2	0.07		
		(-8.14--8.22)x(2.37+2.37)/2	0.19		
		(-8.05--8.14)x(2.36+2.37)/2	0.21		
		(-7.90--8.05)x(2.35+2.36)/2	0.35		
		(-7.61--7.90)x(2.34+2.35)/2	0.68		
		(-7.48--7.61)x(2.33+2.34)/2	0.30		
		(-7.46--7.48)x(2.37+2.33)/2	0.05		
		(-7.45--7.46)x(2.36+2.37)/2	0.02		
		(-7.43--7.45)x(2.36+2.36)/2	0.05		
		(-7.38--7.43)x(2.36+2.36)/2	0.12		
		(-7.24--7.38)x(2.32+2.36)/2	0.33		
		(-7.21--7.24)x(2.32+2.32)/2	0.07		
		(-7.17--7.21)x(2.32+2.32)/2	0.09		
		(-7.10--7.17)x(2.32+2.32)/2	0.16		
		(-6.96--7.10)x(2.32+2.32)/2	0.32		
		(-6.61--6.96)x(2.33+2.32)/2	0.81		
		(-6.36--6.61)x(2.34+2.33)/2	0.58		
		(-5.79--6.36)x(2.33+2.34)/2	1.33		
		(-5.46--5.79)x(2.31+2.33)/2	0.77		
		(-5.41--5.46)x(2.30+2.31)/2	0.12		
		(-5.33--5.41)x(2.30+2.30)/2	0.18		
		(-5.32--5.33)x(2.30+2.30)/2	0.02		
		(-5.31--5.32)x(2.30+2.30)/2	0.02		
		(-5.19--5.31)x(2.30+2.30)/2	0.28		
		(-5.18--5.19)x(2.30+2.30)/2	0.02		
		(-5.16--5.18)x(2.30+2.30)/2	0.05		
		(-5.14--5.16)x(2.29+2.30)/2	0.05		
		(-5.05--5.14)x(2.27+2.29)/2	0.21		
		(-4.20--5.05)x(2.01+2.27)/2	1.82		
		(-4.09--4.20)x(1.89+2.01)/2	0.21		
		(-3.75--4.09)x(1.56+1.89)/2	0.59		
		(-3.56--3.75)x(1.34+1.56)/2	0.28		
		(-3.45--3.56)x(1.21+1.34)/2	0.14		
		(-3.43--3.45)x(1.21+1.21)/2	0.02		
		(-3.40--3.43)x(1.22+1.21)/2	0.04		
		(-3.39--3.40)x(1.22+1.22)/2	0.01		
		(-3.35--3.39)x(1.02+1.22)/2	0.04		
		(-3.34--3.35)x(0.92+1.02)/2	0.01		
		(-3.33--3.34)x(0.91+0.92)/2	0.01		
		(-3.30--3.33)x(1.09+0.91)/2	0.03		
		(-3.29--3.30)x(1.09+1.09)/2	0.01		
		(-2.91--3.29)x(1.34+1.09)/2	0.46		
		(-2.61--2.91)x(1.27+1.34)/2	0.39		
		(-2.59--2.61)x(1.28+1.27)/2	0.03		
		(-2.46--2.59)x(1.32+1.28)/2	0.17		
		(-1.25--2.46)x(1.78+1.32)/2	1.88		
		(-1.14--1.25)x(1.82+1.78)/2	0.20		
		(-1.02--1.14)x(1.88+1.82)/2	0.22		
		(-0.60--1.02)x(2.15+1.88)/2	0.85		
		(-0.33--0.60)x(2.23+2.15)/2	0.59		
		(-0.16--0.33)x(2.24+2.23)/2	0.38		
		(-0.04--0.16)x(2.33+2.24)/2	0.27		
		(0.04--0.04)x(2.46+2.33)/2	0.19		
		(0.11-0.04)x(2.50+2.46)/2	0.17		
		(0.20-0.11)x(2.50+2.50)/2	0.23		
		(0.21-0.20)x(2.41+2.50)/2	0.02		
		(0.25-0.21)x(2.48+2.41)/2	0.10		
		(0.31-0.25)x(2.43+2.48)/2	0.15		
		(0.50-0.31)x(2.58+2.43)/2	0.48		
		(0.58-0.50)x(2.58+2.58)/2	0.21		
		(1.43-0.58)x(2.65+2.58)/2	2.22		
		(2.17-1.43)x(2.69+2.65)/2	1.98		
		(2.50-2.17)x(2.71+2.69)/2	0.89		
		(2.17-2.50)x(2.19+2.21)/2	-0.73		
		(1.43-2.17)x(2.15+2.19)/2	-1.61		
		(0.58-1.43)x(2.08+2.15)/2	-1.80		
		(0.50-0.58)x(2.08+2.08)/2	-0.17		
		(0.31-0.50)x(1.93+2.08)/2	-0.38		
		(0.25-0.31)x(1.98+1.93)/2	-0.12		
		(0.21-0.25)x(1.91+1.98)/2	-0.08		
		(0.20-0.21)x(2.00+1.91)/2	-0.02		
		(0.11-0.20)x(2.00+2.00)/2	-0.18		
		(0.04-0.11)x(1.96+2.00)/2	-0.14		
		(-0.04-0.04)x(1.83+1.96)/2	-0.15		
		(-0.16--0.04)x(1.74+1.83)/2	-0.21		
		(-0.33--0.16)x(1.73+1.74)/2	-0.29		
		(-0.60--0.33)x(1.65+1.73)/2	-0.46		
		(-1.02--0.60)x(1.38+1.65)/2	-0.64		
		(-1.14--1.02)x(1.32+1.38)/2	-0.16		
		(-1.25--1.14)x(1.28+1.32)/2	-0.14		
		(-2.46--1.25)x(0.82+1.28)/2	-1.27		
		(-2.59--2.46)x(0.78+0.82)/2	-0.10		
		(-2.61--2.59)x(0.77+0.78)/2	-0.02		
		(-2.91--2.61)x(0.84+0.77)/2	-0.24		
		(-3.29--2.91)x(0.59+0.84)/2	-0.27		
		(-3.30--3.29)x(0.59+0.59)/2	-0.01		
		(-3.33--3.30)x(0.41+0.59)/2	-0.02		
		(-3.34--3.33)x(0.42+0.41)/2	-0.00		
		(-3.35--3.34)x(0.52+0.42)/2	-0.00		
		(-3.39--3.35)x(0.72+0.52)/2	-0.02		
		(-3.40--3.39)x(0.72+0.72)/2	-0.01		
		(-3.43--3.40)x(0.71+0.72)/2	-0.02		
		(-3.45--3.43)x(0.71+0.71)/2	-0.01		
		(-3.56--3.45)x(0.84+0.71)/2	-0.09		
		(-3.75--3.56)x(1.06+0.84)/2	-0.18		
		(-4.09--3.75)x(1.39+1.06)/2	-0.42		
		(-4.20--4.09)x(1.51+1.39)/2	-0.16		
		(-5.05--4.20)x(1.77+1.51)/2	-1.39		
		(-5.14--5.05)x(1.79+1.77)/2	-0.16		
		(-5.16--5.14)x(1.80+1.79)/2	-0.04		
		(-5.18--5.16)x(1.80+1.80)/2	-0.04		
		A RIPORTARE mq	11.60		

BONIFICA

N. SEZIONE PROG.	FIG.	ELEMENTI DI CALCOLO	AREA ELEMENTARE mq	AREA FIGURA mq	NOTE
		RIPORTO mq	11.60		
		(-5.19--5.18)x(1.80+1.80)/2	-0.02		
		(-5.31--5.19)x(1.80+1.80)/2	-0.22		
		(-5.32--5.31)x(1.80+1.80)/2	-0.02		
		(-5.33--5.32)x(1.80+1.80)/2	-0.02		
		(-5.41--5.33)x(1.80+1.80)/2	-0.14		
		(-5.46--5.41)x(1.81+1.80)/2	-0.09		
		(-5.79--5.46)x(1.83+1.81)/2	-0.60		
		(-6.36--5.79)x(1.84+1.83)/2	-1.05		
		(-6.61--6.36)x(1.83+1.84)/2	-0.46		
		(-6.96--6.61)x(1.82+1.83)/2	-0.64		
		(-7.10--6.96)x(1.82+1.82)/2	-0.25		
		(-7.17--7.10)x(1.82+1.82)/2	-0.13		
		(-7.21--7.17)x(1.82+1.82)/2	-0.07		
		(-7.24--7.21)x(1.82+1.82)/2	-0.05		
		(-7.38--7.24)x(1.86+1.82)/2	-0.26		
		(-7.43--7.38)x(1.86+1.86)/2	-0.09		
		(-7.45--7.43)x(1.86+1.86)/2	-0.04		
		(-7.46--7.45)x(1.87+1.86)/2	-0.02		
		(-7.48--7.46)x(1.83+1.87)/2	-0.04		
		(-7.61--7.48)x(1.84+1.83)/2	-0.24		
		(-7.90--7.61)x(1.85+1.84)/2	-0.54		
		(-8.05--7.90)x(1.86+1.85)/2	-0.28		
		(-8.14--8.05)x(1.87+1.86)/2	-0.17		
		(-8.22--8.14)x(1.87+1.87)/2	-0.15		
		(-8.25--8.22)x(1.89+1.87)/2	-0.06		
		(-8.30--8.25)x(1.87+1.90)/2	-0.09		
		(-8.31--8.30)x(1.87+1.87)/2	-0.02		
		(-8.51--8.31)x(1.85+1.87)/2	-0.37		
				5.47	
5 49.15	BO1	(-8.23--8.51)x(2.34+2.34)/2	0.66		
		(-7.70--8.23)x(2.35+2.34)/2	1.24		
		(-7.33--7.70)x(2.35+2.35)/2	0.87		
		(-6.66--7.33)x(2.35+2.35)/2	1.57		
		(-6.43--6.66)x(2.35+2.35)/2	0.54		
		(-5.62--6.43)x(2.36+2.35)/2	1.91		
		(-5.52--5.62)x(2.37+2.36)/2	0.24		
		(-4.86--5.52)x(2.36+2.37)/2	1.56		
		(-4.62--4.86)x(2.36+2.36)/2	0.57		
		(-4.59--4.62)x(2.36+2.36)/2	0.07		
		(-4.54--4.59)x(2.36+2.36)/2	0.12		
		(-3.55--4.54)x(2.36+2.36)/2	2.34		
		(-2.82--3.55)x(2.36+2.36)/2	1.72		
		(-2.51--2.82)x(2.37+2.36)/2	0.73		
		(-1.91--2.51)x(2.37+2.37)/2	1.42		
		(-1.48--1.91)x(2.37+2.37)/2	1.02		
		(-1.30--1.48)x(2.37+2.37)/2	0.43		
		(-1.48--1.30)x(1.87+1.87)/2	-0.34		
		(-1.91--1.48)x(1.87+1.87)/2	-0.80		
		(-2.51--1.91)x(1.87+1.87)/2	-1.12		
		(-2.82--2.51)x(1.86+1.87)/2	-0.58		
		(-3.55--2.82)x(1.86+1.86)/2	-1.36		
		(-4.54--3.55)x(1.86+1.86)/2	-1.84		
		(-4.59--4.54)x(1.86+1.86)/2	-0.09		
		(-4.62--4.59)x(1.86+1.86)/2	-0.06		
		(-4.86--4.62)x(1.86+1.86)/2	-0.45		
		(-5.52--4.86)x(1.87+1.86)/2	-1.23		
		(-5.62--5.52)x(1.86+1.87)/2	-0.19		
		(-6.43--5.62)x(1.85+1.86)/2	-1.50		
		(-6.66--6.43)x(1.85+1.85)/2	-0.43		
		(-7.33--6.66)x(1.85+1.85)/2	-1.24		
		(-7.70--7.33)x(1.85+1.85)/2	-0.68		
		(-8.23--7.70)x(1.84+1.85)/2	-0.98		
		(-8.51--8.23)x(1.84+1.84)/2	-0.52		
				3.60	
6 60.46	BO1	(1.13-1.00)x(2.10+2.10)/2	0.27		
		(1.15-1.13)x(2.10+2.10)/2	0.04		
		(1.18-1.15)x(2.10+2.10)/2	0.06		
		(1.83-1.18)x(2.16+2.10)/2	1.38		
		(1.84-1.83)x(2.18+2.16)/2	0.02		
		(1.89-1.84)x(2.17+2.18)/2	0.11		
		(1.91-1.89)x(2.18+2.17)/2	0.04		
		(1.96-1.91)x(2.18+2.18)/2	0.11		
		(1.97-1.96)x(2.18+2.18)/2	0.02		
		(2.08-1.97)x(2.14+2.18)/2	0.24		
		(2.17-2.08)x(2.19+2.14)/2	0.19		
		(2.19-2.17)x(2.15+2.19)/2	0.04		
		(2.22-2.19)x(2.13+2.15)/2	0.06		
		(2.26-2.22)x(2.15+2.13)/2	0.09		
		(2.29-2.26)x(2.17+2.15)/2	0.06		
		(2.33-2.29)x(2.14+2.17)/2	0.09		
		(2.43-2.33)x(2.09+2.14)/2	0.21		
		(2.51-2.43)x(2.09+2.09)/2	0.17		
		(2.58-2.51)x(2.09+2.09)/2	0.15		
		(2.51-2.58)x(1.59+1.59)/2	-0.11		
		(2.43-2.51)x(1.59+1.59)/2	-0.13		
		(2.33-2.43)x(1.64+1.59)/2	-0.16		
		(2.29-2.33)x(1.67+1.64)/2	-0.07		
		(2.26-2.29)x(1.65+1.67)/2	-0.05		
		(2.22-2.26)x(1.63+1.65)/2	-0.07		
		(2.19-2.22)x(1.65+1.63)/2	-0.05		
		(2.17-2.19)x(1.69+1.65)/2	-0.03		
		(2.08-2.17)x(1.64+1.69)/2	-0.15		
		(1.97-2.08)x(1.68+1.64)/2	-0.18		
		(1.96-1.97)x(1.68+1.68)/2	-0.02		
		(1.91-1.96)x(1.68+1.68)/2	-0.08		
		(1.89-1.91)x(1.67+1.68)/2	-0.03		
		(1.84-1.89)x(1.68+1.67)/2	-0.08		
		(1.83-1.84)x(1.66+1.68)/2	-0.02		
		(1.18-1.83)x(1.60+1.66)/2	-1.06		
		(1.15-1.18)x(1.60+1.60)/2	-0.05		
		(1.13-1.15)x(1.60+1.60)/2	-0.03		
		(1.00-1.13)x(1.60+1.60)/2	-0.21		
				0.77	
8 84.33	BO1	(1.03-0.90)x(1.64+1.90)/2	0.23		
		(1.56-1.03)x(1.46+1.64)/2	0.82		
		A RIPORTARE mq	1.05		

BONIFICA

N. SEZIONE PROG.	FIG.	ELEMENTI DI CALCOLO	AREA ELEMENTARE mq	AREA FIGURA mq	NOTE
		RIPORTO mq	1.05		
		(2.08-1.56)x(1.53+1.46)/2	0.78		
		(3.02-2.08)x(1.63+1.53)/2	1.49		
		(3.50-3.02)x(1.02+1.63)/2	0.64		
		(3.86-3.50)x(0.20+1.02)/2	0.22		
		(3.95-3.86)x(0.06+0.20)/2	0.01		
		(4.04-3.95)x(0.23+0.06)/2	0.01		
		(4.45-4.04)x(0.62+0.23)/2	0.17		
		(4.82-4.45)x(1.46+0.62)/2	0.38		
		(4.45-4.82)x(0.12+0.96)/2	-0.20		
		(4.04-4.45)x(-0.27+0.12)/2	0.03		
		(3.95-4.04)x(-0.44+-0.27)/2	0.03		
		(3.86-3.95)x(-0.30+-0.44)/2	0.03		
		(3.50-3.86)x(0.52+-0.30)/2	-0.04		
		(3.02-3.50)x(1.13+0.52)/2	-0.40		
		(2.08-3.02)x(1.03+1.13)/2	-1.02		
		(1.56-2.08)x(0.96+1.03)/2	-0.52		
		(1.03-1.56)x(1.14+0.96)/2	-0.56		
		(0.90-1.03)x(1.40+1.14)/2	-0.17		
				1.93	
8 84.33	BO2	(0.79-0.78)x(1.75+1.90)/2	0.02		
		(0.80-0.79)x(1.13+1.75)/2	0.01		
		(0.83-0.80)x(1.76+1.13)/2	0.04		
		(0.84-0.83)x(1.90+1.76)/2	0.02		
		(0.83-0.84)x(1.26+1.40)/2	-0.01		
		(0.80-0.83)x(0.63+1.26)/2	-0.03		
		(0.79-0.80)x(1.25+0.63)/2	-0.01		
		(0.78-0.79)x(1.40+1.25)/2	-0.01		
				0.03	
8 84.33	BO3	(-0.34--0.37)x(1.90+1.93)/2	0.06		
		(0.09--0.34)x(1.71+1.90)/2	0.78		
		(0.28-0.09)x(1.66+1.71)/2	0.32		
		(0.32-0.28)x(1.64+1.66)/2	0.07		
		(0.42-0.32)x(1.68+1.64)/2	0.17		
		(0.56-0.42)x(1.73+1.68)/2	0.24		
		(0.57-0.56)x(1.73+1.73)/2	0.02		
		(0.58-0.57)x(1.34+1.73)/2	0.02		
		(0.61-0.58)x(1.34+1.34)/2	0.04		
		(0.67-0.61)x(1.81+1.34)/2	0.09		
		(0.72-0.67)x(1.90+1.81)/2	0.09		
		(0.67-0.72)x(1.31+1.40)/2	-0.07		
		(0.61-0.67)x(0.84+1.31)/2	-0.06		
		(0.58-0.61)x(0.84+0.84)/2	-0.03		
		(0.57-0.58)x(1.23+0.84)/2	-0.01		
		(0.56-0.57)x(1.23+1.23)/2	-0.01		
		(0.42-0.56)x(1.18+1.23)/2	-0.17		
		(0.32-0.42)x(1.14+1.18)/2	-0.12		
		(0.28-0.32)x(1.16+1.14)/2	-0.05		
		(0.09-0.28)x(1.21+1.16)/2	-0.23		
		(-0.34-0.09)x(1.40+1.21)/2	-0.56		
		(-0.37--0.34)x(1.43+1.40)/2	-0.04		
				0.55	

Il Direttore dei Lavori | L'Impresa

	CALCOLO DELLE LUNGHEZZE		Foglio n. 13

USURA

N. SEZIONE PROG.	FIG.	ELEMENTI DI CALCOLO	LUNGHEZZA ELEMENTARE ml	LUNGHEZZA FIGURA ml	NOTE
1	a1	(1.00--8.50)	9.50	9.50	
2	a1	(1.00--8.50)	9.50	9.50	
3	a1	(1.00--8.50)	9.50	9.50	
4	a1	(1.00--8.50)	9.50	9.50	
5	a1	(13.43--8.50)	21.93	21.93	
6	a1	(1.00--8.50)	9.50	9.50	
7	a1	(5.58--8.50)	14.08	14.08	
8	a1	(1.00--8.50)	9.50	9.50	

Il Direttore dei Lavori	L'Impresa	

	CALCOLO DELLE LUNGHEZZE		Foglio n. 14

VEGETALE

N. SEZIONE PROG.	FIG.	ELEMENTI DI CALCOLO	LUNGHEZZA ELEMENTARE ml	LUNGHEZZA FIGURA ml	NOTE
2	b1	(1.03-1.00)	0.03		
12.43		(2.50-1.03)	1.47		
		(3.95-2.50)	1.45		
				2.95	
3	b1	(1.03-1.00)	0.03		
25.13		(2.50-1.03)	1.47		
		(2.97-2.50)	0.47		
				1.97	
4	b1	(1.03-1.00)	0.03		
35.60		(2.50-1.03)	1.47		
		(3.02-2.50)	0.52		
				2.02	
6	b1	(1.03-1.00)	0.03		
60.46		(2.50-1.03)	1.47		
		(3.14-2.50)	0.64		
				2.14	
8	b1	(1.03-1.00)	0.03		
84.33		(2.50-1.03)	1.47		
		(3.39-2.50)	0.89		
		(4.95-3.39)	1.56		
				3.95	

Il Direttore dei Lavori	L'Impresa	

SCOTICO

N. SEZIONE PROG.	FIG.	ELEMENTI DI CALCOLO	LUNGHEZZA ELEMENTARE ml	LUNGHEZZA FIGURA ml	NOTE
2	sc1	(-8.51--8.51)	0.00		
12.43		(-8.51--8.51)	0.00		
		(-8.30--8.51)	0.21		
		(-8.16--8.30)	0.14		
		(-8.11--8.16)	0.05		
		(-8.10--8.11)	0.01		
		(-7.94--8.10)	0.16		
		(-7.88--7.94)	0.06		
		(-7.87--7.88)	0.01		
		(-7.87--7.87)	0.00		
		(-7.73--7.87)	0.14		
		(-7.54--7.73)	0.19		
		(-7.36--7.54)	0.18		
		(-7.26--7.36)	0.10		
		(-7.20--7.26)	0.06		
		(-7.11--7.20)	0.09		
		(-7.09--7.11)	0.02		
		(-7.08--7.09)	0.01		
		(-6.98--7.08)	0.10		
		(-6.97--6.98)	0.01		
		(-6.94--6.97)	0.03		
		(-6.81--6.94)	0.13		
		(-6.63--6.81)	0.18		
		(-5.71--6.63)	0.92		
		(-5.52--5.71)	0.19		
		(-5.31--5.52)	0.21		
		(-5.21--5.31)	0.10		
		(-5.13--5.21)	0.08		
		(-5.10--5.13)	0.03		
		(-5.09--5.10)	0.01		
		(-5.06--5.09)	0.03		
		(-5.05--5.06)	0.01		
		(-4.52--5.05)	0.53		
		(-4.49--4.52)	0.03		
		(-3.85--4.49)	0.64		
		(-3.27--3.85)	0.58		
		(-2.55--3.27)	0.72		
		(-2.33--2.55)	0.22		
		(-2.25--2.33)	0.08		
		(-2.20--2.25)	0.05		
		(-2.11--2.20)	0.09		
		(-2.09--2.11)	0.02		
		(-2.09--2.09)	0.00		
		(-2.09--2.09)	0.00		
		(-2.06--2.09)	0.03		
		(-1.97--2.06)	0.09		
		(-1.97--1.97)	0.00		
		(-1.97--1.97)	0.00		
		(-1.97--1.97)	0.00		
		(-0.92--1.97)	1.05		
		(-0.90--0.92)	0.02		
		(-0.82--0.90)	0.08		
		(-0.81--0.82)	0.01		
		(-0.66--0.81)	0.15		
		(-0.66--0.66)	0.00		
		(-0.65--0.66)	0.01		
		(-0.58--0.65)	0.07		
		(0.25--0.58)	0.83		
		(0.40-0.25)	0.15		
		(0.89-0.40)	0.49		
		(1.34-0.89)	0.45		
		(1.63-1.34)	0.29		
		(2.08-1.63)	0.45		
		(2.77-2.08)	0.69		
		(2.82-2.77)	0.05		
		(2.85-2.82)	0.03		
		(3.47-2.85)	0.62		
		(3.47-3.47)	0.00		
				11.98	
3	sc2	(-8.51--8.51)	0.00		
25.13		(-8.22--8.51)	0.29		
		(-8.15--8.22)	0.07		
		(-7.99--8.15)	0.16		
		(-7.93--7.99)	0.06		
		(-7.90--7.93)	0.03		
		(-7.85--7.90)	0.05		
		(-7.82--7.85)	0.03		
		(-7.74--7.82)	0.08		
		(-7.63--7.74)	0.11		
		(-7.60--7.63)	0.03		
		(-7.45--7.60)	0.15		
		(-7.17--7.45)	0.28		
		(-7.04--7.17)	0.13		
		(-6.42--7.04)	0.62		
		(-6.18--6.42)	0.24		
		(-6.15--6.18)	0.03		
		(-6.14--6.15)	0.01		
		(-6.14--6.14)	0.00		
		(-6.14--6.14)	0.00		
		(-6.12--6.14)	0.02		
		(-6.11--6.12)	0.01		
		(-6.03--6.11)	0.08		
		(-5.93--6.03)	0.10		
		(-5.89--5.93)	0.04		
		(-5.82--5.89)	0.07		
		(-5.68--5.82)	0.14		
		(-5.32--5.68)	0.36		
		(-5.07--5.32)	0.25		
		(-4.69--5.07)	0.38		
		(-4.02--4.69)	0.67		
		(-3.52--4.02)	0.50		
		(-3.47--3.52)	0.05		
		(-3.46--3.47)	0.01		
		(-3.37--3.46)	0.09		
		(-3.36--3.37)	0.01		
		(-3.36--3.36)	0.00		
		(-3.34--3.36)	0.02		
		A RIPORTARE ml	5.17		

SCOTICO

N. SEZIONE PROG.	FIG.	ELEMENTI DI CALCOLO	LUNGHEZZA ELEMENTARE ml	LUNGHEZZA FIGURA ml	NOTE
		RIPORTO ml	5.17		
		(-3.34--3.34)	0.00		
		(-3.33--3.34)	0.01		
		(-3.16--3.33)	0.17		
		(-2.97--3.16)	0.19		
		(-2.00--2.97)	0.97		
		(-1.92--2.00)	0.08		
		(-1.65--1.92)	0.27		
		(-0.87--1.65)	0.78		
		(-0.65--0.87)	0.22		
		(-0.21--0.65)	0.44		
		(-0.21--0.21)	0.00		
				8.30	
3	sc1	(1.00-1.00)	0.00		
25.13		(1.23-1.00)	0.23		
		(2.04-1.23)	0.81		
		(2.28-2.04)	0.24		
		(2.44-2.28)	0.16		
		(2.44-2.44)	0.00		
				1.44	
4	sc1	(-8.51--8.51)	0.00		
35.60		(-8.31--8.51)	0.20		
		(-8.30--8.31)	0.01		
		(-8.25--8.30)	0.05		
		(-8.25--8.25)	0.00		
		(-8.22--8.25)	0.03		
		(-8.14--8.22)	0.08		
		(-8.05--8.14)	0.09		
		(-7.90--8.05)	0.15		
		(-7.61--7.90)	0.29		
		(-7.48--7.61)	0.13		
		(-7.48--7.48)	0.00		
		(-7.46--7.48)	0.02		
		(-7.45--7.46)	0.01		
		(-7.43--7.45)	0.02		
		(-7.38--7.43)	0.05		
		(-7.24--7.38)	0.14		
		(-7.21--7.24)	0.03		
		(-7.17--7.21)	0.04		
		(-7.10--7.17)	0.07		
		(-6.96--7.10)	0.14		
		(-6.61--6.96)	0.35		
		(-6.36--6.61)	0.25		
		(-5.79--6.36)	0.57		
		(-5.46--5.79)	0.33		
		(-5.41--5.46)	0.05		
		(-5.33--5.41)	0.08		
		(-5.32--5.33)	0.01		
		(-5.31--5.32)	0.01		
		(-5.31--5.31)	0.00		
		(-5.31--5.31)	0.00		
		(-5.19--5.31)	0.12		
		(-5.18--5.19)	0.01		
		(-5.16--5.18)	0.02		
		(-5.14--5.16)	0.02		
		(-5.05--5.14)	0.09		
		(-4.20--5.05)	0.85		
		(-4.09--4.20)	0.11		
		(-3.75--4.09)	0.34		
		(-3.56--3.75)	0.19		
		(-3.45--3.56)	0.11		
		(-3.43--3.45)	0.02		
		(-3.40--3.43)	0.03		
		(-3.39--3.40)	0.01		
		(-3.35--3.39)	0.04		
		(-3.34--3.35)	0.01		
		(-3.33--3.34)	0.01		
		(-3.33--3.33)	0.00		
		(-3.30--3.33)	0.03		
		(-3.30--3.30)	0.00		
		(-3.30--3.30)	0.00		
		(-3.29--3.30)	0.01		
		(-2.91--3.29)	0.38		
		(-2.61--2.91)	0.30		
		(-2.59--2.61)	0.02		
		(-2.46--2.59)	0.13		
		(-1.25--2.46)	1.21		
		(-1.14--1.25)	0.11		
		(-1.02--1.14)	0.12		
		(-0.60--1.02)	0.42		
		(-0.33--0.60)	0.27		
		(-0.16--0.33)	0.17		
		(-0.04--0.16)	0.12		
		(0.04--0.04)	0.08		
		(0.11-0.04)	0.07		
		(0.20-0.11)	0.09		
		(0.21-0.20)	0.01		
		(0.25-0.21)	0.04		
		(0.31-0.25)	0.06		
		(0.50-0.31)	0.19		
		(0.58-0.50)	0.08		
		(1.43-0.58)	0.85		
		(2.17-1.43)	0.74		
		(2.50-2.17)	0.33		
		(2.50-2.50)	0.00		
				11.01	
5	sc1	(-8.51--8.51)	0.00		
49.15		(-8.23--8.51)	0.28		
		(-7.70--8.23)	0.53		
		(-7.33--7.70)	0.37		
		(-6.66--7.33)	0.67		
		(-6.43--6.66)	0.23		
		(-5.62--6.43)	0.81		
		(-5.52--5.62)	0.10		
		(-4.86--5.52)	0.66		
		(-4.62--4.86)	0.24		
		A RIPORTARE ml	3.89		

SCOTICO

N. SEZIONE PROG.	FIG.	ELEMENTI DI CALCOLO	LUNGHEZZA ELEMENTARE ml	LUNGHEZZA FIGURA ml	NOTE
		RIPORTO ml	3.89		
		(-4.59--4.62)	0.03		
		(-4.54--4.59)	0.05		
		(-3.55--4.54)	0.99		
		(-2.82--3.55)	0.73		
		(-2.51--2.82)	0.31		
		(-1.91--2.51)	0.60		
		(-1.48--1.91)	0.43		
		(-1.30--1.48)	0.18		
		(-1.30--1.30)	0.00		
				7.21	
6	sc1	(1.00-1.00)	0.00		
60.46		(1.13-1.00)	0.13		
		(1.15-1.13)	0.02		
		(1.18-1.15)	0.03		
		(1.83-1.18)	0.65		
		(1.84-1.83)	0.01		
		(1.89-1.84)	0.05		
		(1.91-1.89)	0.02		
		(1.96-1.91)	0.05		
		(1.97-1.96)	0.01		
		(2.08-1.97)	0.11		
		(2.17-2.08)	0.09		
		(2.19-2.17)	0.02		
		(2.22-2.19)	0.03		
		(2.26-2.22)	0.04		
		(2.29-2.26)	0.03		
		(2.33-2.29)	0.04		
		(2.43-2.33)	0.10		
		(2.51-2.43)	0.08		
		(2.58-2.51)	0.07		
		(2.58-2.58)	0.00		
				1.58	
8	sc3	(-0.37--0.37)	0.00		
84.33		(-0.34--0.37)	0.03		
		(0.09--0.34)	0.43		
		(0.28-0.09)	0.19		
		(0.32-0.28)	0.04		
		(0.32-0.32)	0.00		
		(0.42-0.32)	0.10		
		(0.42-0.42)	0.00		
		(0.56-0.42)	0.14		
		(0.57-0.56)	0.01		
		(0.58-0.57)	0.01		
		(0.61-0.58)	0.03		
		(0.67-0.61)	0.06		
		(0.72-0.67)	0.05		
		(0.72-0.72)	0.00		
				1.09	
8	sc1	(0.90-0.90)	0.00		
84.33		(1.03-0.90)	0.13		
		(1.56-1.03)	0.53		
		(2.08-1.56)	0.52		
		(3.02-2.08)	0.94		
		(3.50-3.02)	0.48		
		(3.86-3.50)	0.36		
		(3.95-3.86)	0.09		
		(4.04-3.95)	0.09		
		(4.45-4.04)	0.41		
		(4.82-4.45)	0.37		
		(4.82-4.82)	0.00		
				3.92	
8	sc2	(0.78-0.78)	0.00		
84.33		(0.79-0.78)	0.01		
		(0.80-0.79)	0.01		
		(0.83-0.80)	0.03		
		(0.84-0.83)	0.01		
		(0.84-0.84)	0.00		
				0.06	

Il Direttore dei Lavori | L'Impresa

BONIFICA

DALLA SEZ. DA PROG.	ALLA SEZ. A PROG.	SEZIONE	FIGURA	AREA	DISTANZA SEZIONI m	DISTANZA DI CALCOLO m	VOLUME PARZIALE mc	VOLUME TOTALE mc
1	2	2	BO1	5.95	12.43	6.21	36.950	
								36.950
2	3	2	BO1	5.95	12.70	6.35	37.782	
12.43	25.13	3	BO1	4.15	12.70	6.35	26.352	
		3	BO2	0.73	12.70	6.35	4.635	
								68.769
3	4	3	BO1	4.15	10.47	5.24	21.746	
25.13	35.60	3	BO2	0.73	10.47	5.24	3.825	
		4	BO1	5.47	10.47	5.24	28.663	
								54.234
4	5	4	BO1	5.47	13.55	6.77	37.032	
35.60	49.15	5	BO1	3.60	13.55	6.77	24.372	
								61.404
5	6	5	BO1	3.60	11.31	5.66	20.376	
49.15	60.46	6	BO1	0.77	11.31	5.66	4.358	
								24.734
6	7	6	BO1	0.77	10.47	5.24	4.035	
								4.035
7	8	8	BO1	1.93	13.40	6.70	12.931	
70.93	84.33	8	BO2	0.03	13.40	6.70	0.201	
		8	BO3	0.55	13.40	6.70	3.685	
								16.817

Il Direttore dei Lavori	L'Impresa	TOTALE ARTICOLO	266.943

USURA

DALLA SEZ. DA PROG.	ALLA SEZ. A PROG.	SEZIONE	FIGURA	LUNGHEZZA	DISTANZA SEZIONI ml	DISTANZA DI CALCOLO ml	AREA PARZIALE mq	AREA TOTALE mq
1	2	1	a1	9.50	12.43	6.21	58.99	
0.00	12.43	2	a1	9.50	12.43	6.21	58.99	
								117.98
2	3	2	a1	9.50	12.70	6.35	60.32	
12.43	25.13	3	a1	9.50	12.70	6.35	60.32	
								120.64
3	4	3	a1	9.50	10.47	5.24	49.78	
25.13	35.60	4	a1	9.50	10.47	5.24	49.78	
								99.56
4	5	4	a1	9.50	13.55	6.77	64.31	
35.60	49.15	5	a1	21.93	13.55	6.77	148.47	
								212.78
5	6	5	a1	21.93	11.31	5.66	124.12	
49.15	60.46	6	a1	9.50	11.31	5.66	53.77	
								177.89
6	7	6	a1	9.50	10.47	5.24	49.78	
60.46	70.93	7	a1	14.08	10.47	5.24	73.78	
								123.56
7	8	7	a1	14.08	13.40	6.70	94.34	
70.93	84.33	8	a1	9.50	13.40	6.70	63.65	
								157.99

VEGETALE

DALLA SEZ. DA PROG.	ALLA SEZ. A PROG.	SEZIONE	FIGURA	LUNGHEZZA	DISTANZA SEZIONI ml	DISTANZA DI CALCOLO ml	AREA PARZIALE mq	AREA TOTALE mq
1	2	2	b1	2.95	12.43	6.21	18.32	18.32
2	3	2	b1	2.95	12.70	6.35	18.73	
12.43	25.13	3	b1	1.97	12.70	6.35	12.51	31.24
3	4	3	b1	1.97	10.47	5.24	10.32	
25.13	35.60	4	b1	2.02	10.47	5.24	10.58	20.90
4	5	4	b1	2.02	13.55	6.77	13.68	13.68
5	6	6	b1	2.14	11.31	5.66	12.11	12.11
6	7	6	b1	2.14	10.47	5.24	11.21	11.21
7	8	8	b1	3.95	13.40	6.70	26.47	26.47

SCOTICO

DALLA SEZ. DA PROG.	ALLA SEZ. A PROG.	SEZIONE	FIGURA	LUNGHEZZA	DISTANZA SEZIONI ml	DISTANZA DI CALCOLO ml	AREA PARZIALE mq	AREA TOTALE mq
1	2	2	sc1	11.98	12.43	6.21	74.40	
								74.40
2	3	2	sc1	11.98	12.70	6.35	76.07	
12.43	25.13	3	sc2	8.30	12.70	6.35	52.70	
		3	sc1	1.44	12.70	6.35	9.14	
								137.91
3	4	3	sc2	8.30	10.47	5.24	43.49	
25.13	35.60	3	sc1	1.44	10.47	5.24	7.55	
		4	sc1	11.01	10.47	5.24	57.69	
								108.73
4	5	4	sc1	11.01	13.55	6.77	74.54	
35.60	49.15	5	sc1	7.21	13.55	6.77	48.81	
								123.35
5	6	5	sc1	7.21	11.31	5.66	40.81	
49.15	60.46	6	sc1	1.58	11.31	5.66	8.94	
								49.75
6	7	6	sc1	1.58	10.47	5.24	8.28	
								8.28
7	8	8	sc3	1.09	13.40	6.70	7.30	
70.93	84.33	8	sc1	3.92	13.40	6.70	26.26	
		8	sc2	0.06	13.40	6.70	0.40	
								33.96

Il Direttore dei Lavori	L'Impresa	TOTALE ARTICOLO	536.38

Volume dalla sezione 1 alla sezione 8

ARTICOLO		VOLUME
STERRO	mc	74.932
RIPORTO	mc	254.249
BO BONIFICA	mc	266.943
a USURA	mq	1010.40
b VEGETALE	mq	133.93
sc SCOTICO	mq	536.38

	CALCOLO DELLE AREE		Foglio n. 1

RILEVATO

N. SEZIONE PROG.	FIG.	ELEMENTI DI CALCOLO	AREA ELEMENTARE mq	AREA FIGURA mq	NOTE
2	A1	(-6.14--6.31)x(3.50+3.39)/2	0.59		
32.50		(-4.75--6.14)x(3.44+3.50)/2	4.82		
		(-5.00--4.75)x(3.40+3.40)/2	-0.85		
		(-5.35--5.00)x(3.39+3.40)/2	-1.19		
		(-6.05--5.35)x(3.39+3.39)/2	-2.37		
		(-6.31--6.05)x(3.39+3.39)/2	-0.88		
				0.12	
3	A1	(-6.14--6.40)x(3.55+3.38)/2	0.90		
47.50		(-4.75--6.14)x(3.49+3.55)/2	4.89		
		(-4.21--4.75)x(3.35+3.39)/2	1.82		
		(-4.60--4.21)x(3.34+3.35)/2	-1.30		
		(-4.84--4.60)x(3.37+3.34)/2	-0.81		
		(-4.99--4.84)x(3.39+3.37)/2	-0.51		
		(-5.37--4.99)x(3.42+3.39)/2	-1.29		
		(-5.38--5.37)x(3.45+3.42)/2	-0.03		
		(-5.41--5.38)x(3.40+3.42)/2	-0.10		
		(-5.45--5.41)x(3.38+3.40)/2	-0.14		
		(-5.53--5.45)x(3.37+3.38)/2	-0.27		
		(-5.63--5.53)x(3.32+3.37)/2	-0.33		
		(-5.69--5.63)x(3.34+3.32)/2	-0.20		
		(-6.24--5.69)x(3.38+3.34)/2	-1.85		
		(-6.25--6.24)x(3.38+3.38)/2	-0.03		
		(-6.26--6.25)x(3.38+3.38)/2	-0.03		
		(-6.28--6.26)x(3.40+3.38)/2	-0.07		
		(-6.30--6.28)x(3.36+3.40)/2	-0.07		
		(-6.33--6.30)x(3.36+3.36)/2	-0.10		
		(-6.36--6.33)x(3.37+3.36)/2	-0.10		
		(-6.41--6.36)x(3.38+3.37)/2	-0.17		
		(-6.40--6.41)x(3.38+3.38)/2	0.03		
				0.24	
4	A1	(-6.14--6.37)x(3.54+3.39)/2	0.80		
62.50		(-4.75--6.14)x(3.48+3.54)/2	4.88		
		(-4.18--4.75)x(3.34+3.38)/2	1.92		
		(-4.20--4.18)x(3.31+3.34)/2	-0.07		
		(-4.21--4.20)x(3.30+3.31)/2	-0.03		
		(-4.55--4.21)x(3.33+3.30)/2	-1.13		
		(-5.09--4.55)x(3.36+3.33)/2	-1.81		
		(-5.08--5.09)x(3.36+3.36)/2	0.03		
		(-5.15--5.08)x(3.33+3.36)/2	-0.23		
		(-5.24--5.15)x(3.32+3.33)/2	-0.30		
		(-5.29--5.24)x(3.32+3.32)/2	-0.17		
		(-6.26--5.29)x(3.40+3.32)/2	-3.26		
		(-6.27--6.26)x(3.40+3.40)/2	-0.03		
		(-6.37--6.27)x(3.39+3.40)/2	-0.34		
				0.26	

Il Direttore dei Lavori	L'Impresa	

	CALCOLO DELLE AREE		Foglio n. 2

STERRO

N. SEZIONE PROG.	FIG.	ELEMENTI DI CALCOLO	AREA ELEMENTARE mq	AREA FIGURA mq	NOTE
1	B1	(-8.08--8.61)x(3.46+3.46)/2	1.83		
17.50		(-7.87--8.08)x(3.47+3.46)/2	0.73		
		(-6.97--7.87)x(3.48+3.47)/2	3.13		
		(-6.83--6.97)x(3.49+3.48)/2	0.49		
		(-6.79--6.83)x(3.49+3.49)/2	0.14		
		(-5.78--6.79)x(3.49+3.49)/2	3.52		
		(-5.50--5.78)x(3.48+3.49)/2	0.98		
		(-4.74--5.50)x(3.47+3.48)/2	2.64		
		(-4.21--4.74)x(3.47+3.47)/2	1.84		
		(-3.69--4.21)x(3.46+3.47)/2	1.80		
		(-3.58--3.69)x(3.46+3.46)/2	0.38		
		(-3.44--3.58)x(3.47+3.46)/2	0.49		
		(-3.35--3.44)x(3.48+3.47)/2	0.31		
		(-3.28--3.35)x(3.49+3.48)/2	0.24		
		(-3.23--3.28)x(3.50+3.49)/2	0.17		
		(-3.02--3.23)x(3.52+3.50)/2	0.74		
		(-2.86--3.02)x(3.52+3.52)/2	0.56		
		(-2.66--2.86)x(3.47+3.52)/2	0.70		
		(-2.65--2.66)x(3.46+3.47)/2	0.03		
		(-2.61--2.65)x(3.47+3.46)/2	0.14		
		(-2.58--2.61)x(3.53+3.47)/2	0.10		
		(-2.57--2.58)x(3.51+3.53)/2	0.04		
		(-2.54--2.57)x(3.51+3.51)/2	0.11		
		(-2.50--2.54)x(3.50+3.51)/2	0.14		
		(-2.45--2.50)x(3.52+3.50)/2	0.18		
		(-2.41--2.45)x(3.50+3.52)/2	0.14		
		(-2.38--2.41)x(3.48+3.50)/2	0.10		
		(-2.35--2.38)x(3.51+3.48)/2	0.10		
		(-1.88--2.35)x(3.45+3.49)/2	1.63		
		(-1.76--1.88)x(3.42+3.45)/2	0.41		
		(-1.61--1.76)x(3.40+3.42)/2	0.51		
		(-1.51--1.61)x(3.41+3.40)/2	0.34		
		(-0.56--1.51)x(3.49+3.41)/2	3.28		
		(-0.34--0.56)x(3.49+3.49)/2	0.77		
		(0.48--0.34)x(3.47+3.49)/2	2.85		
		(0.95-0.48)x(3.45+3.47)/2	1.63		
		(1.52-0.95)x(3.41+3.45)/2	1.96		
		(2.24-1.52)x(3.38+3.41)/2	2.44		
		(2.57-2.24)x(3.36+3.38)/2	1.11		
		(3.53-2.57)x(3.30+3.36)/2	3.20		
		(3.61-3.53)x(3.29+3.30)/2	0.26		
		(3.95-3.61)x(3.29+3.29)/2	1.12		
		(4.66-3.95)x(3.28+3.29)/2	2.33		
		(5.42-4.66)x(3.26+3.28)/2	2.49		
		(5.70-5.42)x(3.25+3.26)/2	0.91		
		(6.11-5.70)x(3.22+3.25)/2	1.33		
		(6.74-6.11)x(3.20+3.22)/2	2.02		
		(7.23-6.74)x(3.17+3.20)/2	1.56		
		(7.30-7.23)x(3.16+3.17)/2	0.22		
		(7.39-7.30)x(3.16+3.16)/2	0.28		
		(7.52-7.39)x(3.15+3.16)/2	0.41		
		(7.79-7.52)x(3.09+3.15)/2	0.84		
		(8.62-7.79)x(3.04+3.09)/2	2.54		
		(7.72-8.62)x(3.00+3.04)/2	-2.72		
		(7.71-7.72)x(2.90+2.90)/2	-0.03		
		(-0.01-7.71)x(3.09+2.90)/2	-23.12		
		(-7.14--0.01)x(3.22+3.09)/2	-22.50		
		(-8.53--7.14)x(3.38+3.32)/2	-4.66		
		(-8.61--8.53)x(3.46+3.38)/2	-0.27		
				4.91	
2	B1	(-4.06--4.75)x(3.42+3.40)/2	2.35		
32.50		(-3.96--4.06)x(3.42+3.42)/2	0.34		
		(-3.53--3.96)x(3.42+3.42)/2	1.47		
		(-2.91--3.53)x(3.43+3.42)/2	2.12		
		(-2.77--2.91)x(3.43+3.43)/2	0.48		
		(-1.87--2.77)x(3.42+3.43)/2	3.08		
		(-1.48--1.87)x(3.43+3.42)/2	1.34		
		(-0.83--1.48)x(3.43+3.43)/2	2.23		
		(-0.19--0.83)x(3.43+3.43)/2	2.20		
		(0.22--0.19)x(3.43+3.43)/2	1.41		
		(0.32-0.22)x(3.45+3.43)/2	0.34		
		(0.40-0.32)x(3.46+3.45)/2	0.28		
		(0.45-0.40)x(3.48+3.46)/2	0.17		
		(0.48-0.45)x(3.48+3.48)/2	0.10		
		(0.51-0.48)x(3.49+3.48)/2	0.10		
		(0.52-0.51)x(3.49+3.49)/2	0.03		
		(0.54-0.52)x(3.49+3.49)/2	0.07		
		(0.55-0.54)x(3.50+3.51)/2	0.04		
		(0.78-0.55)x(3.52+3.50)/2	0.81		
		(0.88-0.78)x(3.51+3.52)/2	0.35		
		(1.03-0.88)x(3.52+3.51)/2	0.53		
		(1.07-1.03)x(3.52+3.52)/2	0.14		
		(1.14-1.07)x(3.52+3.52)/2	0.25		
		(1.21-1.14)x(3.47+3.52)/2	0.24		
		(1.27-1.21)x(3.47+3.47)/2	0.21		
		(1.28-1.27)x(3.47+3.47)/2	0.03		
		(1.93-1.28)x(3.48+3.47)/2	2.26		
		(2.10-1.93)x(3.50+3.48)/2	0.59		
		(2.30-2.10)x(3.49+3.50)/2	0.70		
		(2.39-2.30)x(3.49+3.49)/2	0.31		
		(3.35-2.39)x(3.45+3.49)/2	3.33		
		(3.68-3.35)x(3.43+3.45)/2	1.14		
		(4.39-3.68)x(3.36+3.43)/2	2.41		
		(4.97-4.39)x(3.38+3.36)/2	1.95		
		(5.44-4.97)x(3.40+3.38)/2	1.59		
		(5.60-5.44)x(3.41+3.40)/2	0.54		
		(5.55-5.60)x(3.36+3.41)/2	-0.17		
		(4.75-5.55)x(3.21+3.36)/2	-2.63		
		(4.73-4.75)x(2.81+3.21)/2	-0.06		
		(-4.75-4.73)x(3.34+2.81)/2	-29.15		
				3.52	
3	B1	(-3.86--4.21)x(3.37+3.35)/2	1.18		
47.50		(-3.57--3.86)x(3.38+3.37)/2	0.98		
		(-2.72--3.57)x(3.39+3.38)/2	2.88		
		(-2.54--2.72)x(3.39+3.39)/2	0.61		
		(-1.57--2.54)x(3.40+3.39)/2	3.29		
		(-1.51--1.57)x(3.40+3.40)/2	0.20		
		A RIPORTARE mq	9.14		

STERRO

N. SEZIONE PROG.	FIG.	ELEMENTI DI CALCOLO	AREA ELEMENTARE mq	AREA FIGURA mq	NOTE
		RIPORTO mq	9.14		
		(-0.88--1.51)x(3.41+3.40)/2	2.15		
		(-0.51--0.88)x(3.42+3.41)/2	1.26		
		(-0.48--0.51)x(3.42+3.42)/2	0.10		
		(0.43--0.48)x(3.42+3.42)/2	3.11		
		(0.55-0.43)x(3.42+3.42)/2	0.41		
		(1.36-0.55)x(3.43+3.42)/2	2.77		
		(1.58-1.36)x(3.43+3.43)/2	0.75		
		(2.30-1.58)x(3.43+3.43)/2	2.47		
		(2.61-2.30)x(3.43+3.43)/2	1.06		
		(2.82-2.61)x(3.45+3.43)/2	0.72		
		(2.85-2.82)x(3.45+3.45)/2	0.10		
		(3.14-2.85)x(3.47+3.45)/2	1.00		
		(3.25-3.14)x(3.48+3.47)/2	0.38		
		(3.31-3.25)x(3.48+3.48)/2	0.21		
		(3.34-3.31)x(3.48+3.48)/2	0.10		
		(3.37-3.34)x(3.48+3.48)/2	0.10		
		(3.39-3.37)x(3.49+3.48)/2	0.07		
		(3.46-3.39)x(3.49+3.49)/2	0.24		
		(3.47-3.46)x(3.49+3.49)/2	0.03		
		(3.52-3.47)x(3.48+3.49)/2	0.17		
		(3.53-3.52)x(3.48+3.48)/2	0.03		
		(3.55-3.53)x(3.47+3.48)/2	0.07		
		(3.59-3.55)x(3.46+3.47)/2	0.14		
		(3.64-3.59)x(3.45+3.46)/2	0.17		
		(3.71-3.64)x(3.46+3.45)/2	0.24		
		(3.78-3.71)x(3.46+3.46)/2	0.24		
		(3.82-3.78)x(3.46+3.46)/2	0.14		
		(4.17-3.82)x(3.48+3.46)/2	1.21		
		(4.19-4.17)x(3.48+3.48)/2	0.07		
		(4.22-4.19)x(3.48+3.48)/2	0.10		
		(4.25-4.22)x(3.47+3.48)/2	0.10		
		(4.29-4.25)x(3.47+3.47)/2	0.14		
		(4.35-4.29)x(3.48+3.47)/2	0.21		
		(4.43-4.35)x(3.47+3.48)/2	0.28		
		(4.57-4.43)x(3.45+3.47)/2	0.48		
		(4.67-4.57)x(3.45+3.45)/2	0.34		
		(5.12-4.67)x(3.45+3.45)/2	1.55		
		(5.70-5.12)x(3.44+3.45)/2	2.00		
		(5.55-5.70)x(3.28+3.44)/2	-0.50		
		(4.75-5.55)x(3.13+3.28)/2	-2.56		
		(4.72-4.75)x(2.73+3.13)/2	-0.09		
		(-4.21-4.72)x(3.35+2.73)/2	-27.15		
				3.55	
4 62.50	B1	(-4.15--4.18)x(3.38+3.34)/2	0.10		
		(-4.14--4.15)x(3.41+3.38)/2	0.03		
		(-4.03--4.14)x(3.45+3.41)/2	0.38		
		(-4.02--4.03)x(3.45+3.45)/2	0.03		
		(-3.99--4.02)x(3.44+3.45)/2	0.10		
		(-3.98--3.99)x(3.44+3.44)/2	0.03		
		(-3.97--3.98)x(3.44+3.44)/2	0.03		
		(-3.95--3.97)x(3.43+3.44)/2	0.07		
		(-3.92--3.95)x(3.43+3.43)/2	0.10		
		(-3.89--3.92)x(3.42+3.43)/2	0.10		
		(-3.85--3.89)x(3.42+3.42)/2	0.14		
		(-3.77--3.85)x(3.41+3.42)/2	0.27		
		(-3.63--3.77)x(3.40+3.41)/2	0.48		
		(-3.29--3.63)x(3.37+3.40)/2	1.15		
		(-3.28--3.29)x(3.37+3.37)/2	0.03		
		(-3.18--3.28)x(3.36+3.37)/2	0.34		
		(-2.36--3.18)x(3.40+3.36)/2	2.77		
		(-2.16--2.36)x(3.41+3.40)/2	0.68		
		(-1.38--2.16)x(3.42+3.41)/2	2.66		
		(-1.13--1.38)x(3.42+3.42)/2	0.85		
		(-0.40--1.13)x(3.42+3.42)/2	2.50		
		(-0.10--0.40)x(3.42+3.42)/2	1.03		
		(0.58--0.10)x(3.42+3.42)/2	2.33		
		(0.92-0.58)x(3.43+3.42)/2	1.16		
		(1.56-0.92)x(3.43+3.43)/2	2.20		
		(1.95-1.56)x(3.43+3.43)/2	1.34		
		(2.54-1.95)x(3.44+3.43)/2	2.03		
		(2.98-2.54)x(3.45+3.44)/2	1.52		
		(3.65-2.98)x(3.49+3.45)/2	2.32		
		(4.07-3.65)x(3.50+3.49)/2	1.47		
		(4.15-4.07)x(3.51+3.50)/2	0.28		
		(4.18-4.15)x(3.51+3.51)/2	0.11		
		(4.19-4.18)x(3.52+3.51)/2	0.04		
		(4.20-4.19)x(3.52+3.52)/2	0.04		
		(4.21-4.20)x(3.52+3.52)/2	0.04		
		(4.23-4.21)x(3.52+3.52)/2	0.07		
		(4.24-4.23)x(3.52+3.52)/2	0.04		
		(4.25-4.24)x(3.52+3.52)/2	0.04		
		(4.27-4.25)x(3.52+3.52)/2	0.07		
		(4.29-4.27)x(3.52+3.52)/2	0.07		
		(4.34-4.29)x(3.51+3.52)/2	0.18		
		(4.49-4.34)x(3.50+3.51)/2	0.53		
		(4.55-4.49)x(3.50+3.50)/2	0.21		
		(5.03-4.55)x(3.46+3.50)/2	1.67		
		(5.06-5.03)x(3.46+3.46)/2	0.10		
		(5.19-5.06)x(3.51+3.46)/2	0.45		
		(5.20-5.19)x(3.51+3.51)/2	0.04		
		(5.45-5.20)x(3.49+3.51)/2	0.88		
		(5.51-5.45)x(3.50+3.49)/2	0.21		
		(5.59-5.51)x(3.50+3.50)/2	0.28		
		(5.71-5.59)x(3.49+3.50)/2	0.42		
		(5.79-5.71)x(3.50+3.49)/2	0.28		
		(5.55-5.79)x(3.26+3.50)/2	-0.81		
		(4.75-5.55)x(3.11+3.26)/2	-2.55		
		(4.72-4.75)x(2.72+3.11)/2	-0.09		
		(-4.18-4.72)x(3.34+2.72)/2	-26.97		
				3.87	

	CALCOLO DELLE LUNGHEZZE		Foglio n. 4

USURA

N. SEZIONE PROG.	FIG.	ELEMENTI DI CALCOLO	LUNGHEZZA ELEMENTARE ml	LUNGHEZZA FIGURA ml	NOTE
1	a1	(0.00--7.14)	7.14		
17.50		(7.72-0.00)	7.72		
				14.86	
2	a1	(4.75--4.75)	9.50		
				9.50	
3	a1	(4.75--4.75)	9.50		
				9.50	
4	a1	(4.75--4.75)	9.50		
				9.50	
5	a1	(0.00--4.00)	4.00		
70.74		(5.06-0.00)	5.06		
				9.06	

Il Direttore dei Lavori	L'Impresa	

	CALCOLO DELLE LUNGHEZZE		Foglio n. 5

VEGETALE

N. SEZIONE PROG.	FIG.	ELEMENTI DI CALCOLO	LUNGHEZZA ELEMENTARE ml	LUNGHEZZA FIGURA ml	NOTE
1	b1	(-7.17--7.14)	0.03		
17.50		(-8.64--7.17)	1.47		
		(-9.00--8.64)	0.36		
				1.86	
1	b2	(7.75-7.72)	0.03		
17.50		(9.22-7.75)	1.47		
		(9.81-9.22)	0.59		
				2.09	
2	b1	(-4.78--4.75)	0.03		
32.50		(-6.25--4.78)	1.47		
		(-6.89--6.25)	0.64		
				2.14	
3	b1	(-4.78--4.75)	0.03		
47.50		(-6.25--4.78)	1.47		
		(-7.01--6.25)	0.76		
				2.26	
4	b1	(-4.78--4.75)	0.03		
62.50		(-6.25--4.78)	1.47		
		(-7.07--6.25)	0.82		
				2.32	

Il Direttore dei Lavori	L'Impresa	

RILEVATO

DALLA SEZ. DA PROG.	ALLA SEZ. A PROG.	SEZIONE	FIGURA	AREA	DISTANZA SEZIONI m	DISTANZA DI CALCOLO m	VOLUME PARZIALE mc	VOLUME TOTALE mc
1	2	2	A1	0.12	15.00	7.50	0.900	
								0.900
2	3	2	A1	0.12	15.00	7.50	0.900	
32.50	47.50	3	A1	0.24	15.00	7.50	1.800	
								2.700
3	4	3	A1	0.24	15.00	7.50	1.800	
47.50	62.50	4	A1	0.26	15.00	7.50	1.950	
								3.750
4	5	4	A1	0.26	8.24	4.12	1.071	
								1.071

STERRO

DALLA SEZ. DA PROG.	ALLA SEZ. A PROG.	SEZIONE	FIGURA	AREA	DISTANZA SEZIONI m	DISTANZA DI CALCOLO m	VOLUME PARZIALE mc	VOLUME TOTALE mc
1	2	1	B1	4.91	15.00	7.50	36.825	
17.50	32.50	2	B1	3.52	15.00	7.50	26.400	
								63.225
2	3	2	B1	3.52	15.00	7.50	26.400	
32.50	47.50	3	B1	3.55	15.00	7.50	26.625	
								53.025
3	4	3	B1	3.55	15.00	7.50	26.625	
47.50	62.50	4	B1	3.87	15.00	7.50	29.025	
								55.650
4	5	4	B1	3.87	8.24	4.12	15.944	
								15.944

Il Direttore dei Lavori	L'Impresa	TOTALE ARTICOLO	187.844

USURA

DALLA SEZ. DA PROG.	ALLA SEZ. A PROG.	SEZIONE	FIGURA	LUNGHEZZA	DISTANZA SEZIONI ml	DISTANZA DI CALCOLO ml	AREA PARZIALE mq	AREA TOTALE mq
1	2	1	a1	14.86	15.00	7.50	111.45	
17.50	32.50	2	a1	9.50	15.00	7.50	71.25	
								182.70
2	3	2	a1	9.50	15.00	7.50	71.25	
32.50	47.50	3	a1	9.50	15.00	7.50	71.25	
								142.50
3	4	3	a1	9.50	15.00	7.50	71.25	
47.50	62.50	4	a1	9.50	15.00	7.50	71.25	
								142.50
4	5	4	a1	9.50	8.24	4.12	39.14	
62.50	70.74	5	a1	9.06	8.24	4.12	37.33	
								76.47

VEGETALE

DALLA SEZ. DA PROG.	ALLA SEZ. A PROG.	SEZIONE	FIGURA	LUNGHEZZA	DISTANZA SEZIONI ml	DISTANZA DI CALCOLO ml	AREA PARZIALE mq	AREA TOTALE mq
1	2	1	b1	1.86	15.00	7.50	13.95	
17.50	32.50	1	b2	2.09	15.00	7.50	15.67	
		2	b1	2.14	15.00	7.50	16.05	
								45.67
2	3	2	b1	2.14	15.00	7.50	16.05	
32.50	47.50	3	b1	2.26	15.00	7.50	16.95	
								33.00
3	4	3	b1	2.26	15.00	7.50	16.95	
47.50	62.50	4	b1	2.32	15.00	7.50	17.40	
								34.35
4	5	4	b1	2.32	8.24	4.12	9.56	
								9.56

Volume dalla sezione 1 alla sezione 5

ARTICOLO			VOLUME
A	RILEVATO	mc	8.421
B	STERRO	mc	187.844
a	USURA	mq	544.17
b	VEGETALE	mq	122.58

		CALCOLO DELLE AREE		Foglio n. 1

STERRO

N. SEZIONE PROG.	FIG.	ELEMENTI DI CALCOLO	AREA ELEMENTARE mq	AREA FIGURA mq	NOTE
4 45.00	B1	(-7.10--7.00)x(2.33+2.35)/2	-0.23		
		(-7.17--7.10)x(2.34+2.33)/2	-0.16		
		(-7.23--7.17)x(2.34+2.34)/2	-0.14		
		(-7.40--7.23)x(2.27+2.34)/2	-0.39		
		(-7.43--7.40)x(2.22+2.27)/2	-0.07		
		(-7.44--7.43)x(2.22+2.22)/2	-0.02		
		(-7.48--7.44)x(2.23+2.22)/2	-0.09		
		(-7.50--7.48)x(2.24+2.23)/2	-0.04		
		(-7.51--7.50)x(2.24+2.24)/2	-0.02		
		(-7.57--7.51)x(2.33+2.24)/2	-0.14		
		(-7.72--7.57)x(2.25+2.33)/2	-0.34		
		(-7.96--7.72)x(2.20+2.25)/2	-0.53		
		(-7.99--7.96)x(2.18+2.20)/2	-0.07		
		(-8.31--7.99)x(1.94+2.18)/2	-0.66		
		(-8.47--8.31)x(1.80+1.94)/2	-0.30		
		(-8.57--8.47)x(1.78+1.80)/2	-0.18		
		(-8.98--8.57)x(1.46+1.78)/2	-0.66		
		(-8.99--8.98)x(1.48+1.46)/2	-0.01		
		(-9.86--8.99)x(1.84+1.48)/2	-1.44		
		(-10.02--9.86)x(1.86+1.84)/2	-0.30		
		(-10.23--10.02)x(1.98+1.86)/2	-0.40		
		(-11.05--10.23)x(2.46+1.98)/2	-1.82		
		(-11.40--11.05)x(2.46+2.46)/2	-0.86		
		(-11.47--11.40)x(2.45+2.46)/2	-0.17		
		(-11.50--11.47)x(2.45+2.45)/2	-0.07		
		(-11.51--11.50)x(2.47+2.45)/2	-0.02		
		(-11.52--11.51)x(2.47+2.47)/2	-0.02		
		(-11.61--11.52)x(2.47+2.47)/2	-0.22		
		(-11.62--11.61)x(2.47+2.48)/2	-0.02		
		(-11.68--11.62)x(2.49+2.47)/2	-0.15		
		(-11.70--11.68)x(2.49+2.49)/2	-0.05		
		(-11.77--11.70)x(2.55+2.49)/2	-0.18		
		(-12.09--11.77)x(2.76+2.55)/2	-0.85		
		(-12.58--12.09)x(2.76+2.76)/2	-1.35		
		(-13.12--12.58)x(2.79+2.76)/2	-1.50		
		(-13.75--13.12)x(2.80+2.79)/2	-1.76		
		(-14.15--13.75)x(2.80+2.80)/2	-1.12		
		(-14.93--14.15)x(2.84+2.80)/2	-2.20		
		(-15.00--14.93)x(2.84+2.84)/2	-0.20		
		(-14.93--15.00)x(2.84+2.84)/2	0.20		
		(-14.15--14.93)x(2.80+2.84)/2	2.20		
		(-13.75--14.15)x(2.80+2.80)/2	1.12		
		(-13.12--13.75)x(2.79+2.80)/2	1.76		
		(-12.58--13.12)x(2.76+2.79)/2	1.50		
		(-12.09--12.58)x(2.76+2.76)/2	1.35		
		(-11.77--12.09)x(2.55+2.76)/2	0.85		
		(-11.70--11.77)x(2.49+2.55)/2	0.18		
		(-11.68--11.70)x(2.49+2.49)/2	0.05		
		(-11.62--11.68)x(2.47+2.49)/2	0.15		
		(-11.61--11.62)x(2.48+2.47)/2	0.02		
		(-11.52--11.61)x(2.47+2.47)/2	0.22		
		(-11.51--11.52)x(2.47+2.47)/2	0.02		
		(-11.50--11.51)x(2.45+2.47)/2	0.02		
		(-11.47--11.50)x(2.45+2.45)/2	0.07		
		(-11.40--11.47)x(2.46+2.45)/2	0.17		
		(-11.05--11.40)x(2.46+2.46)/2	0.86		
		(-10.23--11.05)x(1.98+2.46)/2	1.82		
		(-10.02--10.23)x(1.86+1.98)/2	0.40		
		(-9.86--10.02)x(1.84+1.86)/2	0.30		
		(-8.99--9.86)x(1.48+1.84)/2	1.44		
		(-8.98--8.99)x(1.46+1.48)/2	0.01		
		(-8.57--8.98)x(1.78+1.46)/2	0.66		
		(-8.47--8.57)x(1.80+1.78)/2	0.18		
		(-8.31--8.47)x(1.94+1.80)/2	0.30		
		(-7.99--8.31)x(2.18+1.94)/2	0.66		
		(-7.96--7.99)x(2.20+2.18)/2	0.07		
		(-7.72--7.96)x(2.25+2.20)/2	0.53		
		(-7.57--7.72)x(2.33+2.25)/2	0.34		
		(-7.51--7.57)x(2.24+2.33)/2	0.14		
		(-7.50--7.51)x(2.24+2.24)/2	0.02		
		(-7.48--7.50)x(2.23+2.24)/2	0.04		
		(-7.44--7.48)x(2.22+2.23)/2	0.09		
		(-7.43--7.44)x(2.22+2.22)/2	0.02		
		(-7.40--7.43)x(2.27+2.22)/2	0.07		
		(-7.23--7.40)x(2.34+2.27)/2	0.39		
		(-7.17--7.23)x(2.34+2.34)/2	0.14		
		(-7.10--7.17)x(2.33+2.34)/2	0.16		
		(-6.96--7.10)x(2.35+2.33)/2	0.33		
		(-6.92--6.96)x(2.35+2.35)/2	0.09		
		(-6.70--6.92)x(2.34+2.35)/2	0.52		
		(-5.89--6.70)x(2.31+2.34)/2	1.88		
		(-5.87--5.89)x(2.33+2.31)/2	0.05		
		(-5.54--5.87)x(2.36+2.33)/2	0.77		
		(-5.53--5.54)x(2.35+2.36)/2	0.02		
		(-5.50--5.53)x(2.37+2.35)/2	0.07		
		(-5.49--5.50)x(2.38+2.37)/2	0.02		
		(-5.48--5.49)x(2.36+2.38)/2	0.02		
		(-5.42--5.48)x(2.36+2.36)/2	0.14		
		(-5.10--5.42)x(2.37+2.36)/2	0.76		
		(-5.07--5.10)x(2.37+2.37)/2	0.07		
		(-5.02--5.07)x(2.36+2.37)/2	0.12		
		(-4.93--5.02)x(2.33+2.36)/2	0.21		
		(-4.88--4.93)x(2.39+2.33)/2	0.12		
		(-4.87--4.88)x(2.38+2.41)/2	0.02		
		(-4.76--4.87)x(2.32+2.38)/2	0.26		
		(-4.74--4.76)x(2.32+2.32)/2	0.05		
		(-4.71--4.74)x(2.32+2.32)/2	0.07		
		(-4.67--4.71)x(2.32+2.32)/2	0.09		
		(-4.58--4.67)x(2.33+2.32)/2	0.21		
		(-4.33--4.58)x(2.32+2.33)/2	0.58		
		(-3.83--4.33)x(2.33+2.32)/2	1.16		
		(-3.18--3.83)x(2.34+2.33)/2	1.52		
		(-2.79--3.18)x(2.35+2.34)/2	0.91		
		(-2.01--2.79)x(2.36+2.35)/2	1.84		
		(-1.76--2.01)x(2.36+2.36)/2	0.59		
		(-0.83--1.76)x(2.38+2.36)/2	2.20		
		(-0.73--0.83)x(2.38+2.38)/2	0.24		
		A RIPORTARE mq	14.70		

		CALCOLO DELLE AREE		Foglio n. 2	
STERRO					
N. SEZIONE PROG.	FIG.	ELEMENTI DI CALCOLO	AREA ELEMENTARE mq	AREA FIGURA mq	NOTE
		RIPORTO mq	14.70		
		(0.03--0.73)x(2.37+2.38)/2	1.80		
		(0.31-0.03)x(2.37+2.37)/2	0.66		
		(0.34-0.31)x(2.37+2.37)/2	0.07		
		(1.34-0.34)x(2.36+2.37)/2	2.37		
		(1.52-1.34)x(2.36+2.36)/2	0.42		
		(2.37-1.52)x(2.34+2.36)/2	2.00		
		(2.69-2.37)x(2.33+2.34)/2	0.75		
		(3.40-2.69)x(2.31+2.33)/2	1.65		
		(3.87-3.40)x(2.31+2.31)/2	1.09		
		(4.44-3.87)x(2.30+2.31)/2	1.31		
		(4.52-4.44)x(2.30+2.30)/2	0.18		
		(4.54-4.52)x(2.40+2.31)/2	0.05		
		(4.57-4.54)x(2.37+2.38)/2	0.07		
		(4.62-4.57)x(2.31+2.37)/2	0.12		
		(4.69-4.62)x(2.30+2.31)/2	0.16		
		(4.74-4.69)x(2.30+2.30)/2	0.11		
		(4.81-4.74)x(2.29+2.30)/2	0.16		
		(4.93-4.81)x(2.29+2.29)/2	0.27		
		(5.16-4.93)x(2.28+2.29)/2	0.53		
		(5.47-5.16)x(2.27+2.28)/2	0.71		
		(6.08-5.47)x(2.24+2.27)/2	1.38		
		(6.06-6.08)x(1.95+1.95)/2	-0.04		
		(5.38-6.06)x(1.99+1.95)/2	-1.34		
		(0.00-5.38)x(2.27+1.99)/2	-11.46		
		(-5.66-0.00)x(1.97+2.27)/2	-12.00		
		(-6.49--5.66)x(1.93+1.97)/2	-1.62		
		(-6.51--6.49)x(1.93+1.93)/2	-0.04		
		(-7.00--6.51)x(2.35+2.33)/2	-1.15		
				2.91	
4 45.00	B1	(-7.10--7.00)x(2.33+2.35)/2	-0.23		
		(-7.17--7.10)x(2.34+2.33)/2	-0.16		
		(-7.23--7.17)x(2.34+2.34)/2	-0.14		
		(-7.40--7.23)x(2.27+2.34)/2	-0.39		
		(-7.43--7.40)x(2.22+2.27)/2	-0.07		
		(-7.44--7.43)x(2.22+2.22)/2	-0.02		
		(-7.48--7.44)x(2.23+2.22)/2	-0.09		
		(-7.50--7.48)x(2.24+2.23)/2	-0.04		
		(-7.51--7.50)x(2.24+2.24)/2	-0.02		
		(-7.57--7.51)x(2.33+2.24)/2	-0.14		
		(-7.72--7.57)x(2.25+2.33)/2	-0.34		
		(-7.96--7.72)x(2.20+2.25)/2	-0.53		
		(-7.99--7.96)x(2.18+2.20)/2	-0.07		
		(-8.31--7.99)x(1.94+2.18)/2	-0.66		
		(-8.47--8.31)x(1.80+1.94)/2	-0.30		
		(-8.57--8.47)x(1.78+1.80)/2	-0.18		
		(-8.98--8.57)x(1.46+1.78)/2	-0.66		
		(-8.99--8.98)x(1.48+1.46)/2	-0.01		
		(-9.86--8.99)x(1.84+1.48)/2	-1.44		
		(-10.02--9.86)x(1.86+1.84)/2	-0.30		
		(-10.23--10.02)x(1.98+1.86)/2	-0.40		
		(-11.05--10.23)x(2.46+1.98)/2	-1.82		
		(-11.40--11.05)x(2.46+2.46)/2	-0.86		
		(-11.47--11.40)x(2.45+2.46)/2	-0.17		
		(-11.50--11.47)x(2.45+2.45)/2	-0.07		
		(-11.51--11.50)x(2.47+2.45)/2	-0.02		
		(-11.52--11.51)x(2.47+2.47)/2	-0.02		
		(-11.61--11.52)x(2.47+2.47)/2	-0.22		
		(-11.62--11.61)x(2.47+2.48)/2	-0.02		
		(-11.68--11.62)x(2.49+2.47)/2	-0.15		
		(-11.70--11.68)x(2.49+2.49)/2	-0.05		
		(-11.77--11.70)x(2.55+2.49)/2	-0.18		
		(-12.09--11.77)x(2.76+2.55)/2	-0.85		
		(-12.58--12.09)x(2.76+2.76)/2	-1.35		
		(-13.12--12.58)x(2.79+2.76)/2	-1.50		
		(-13.75--13.12)x(2.80+2.79)/2	-1.76		
		(-14.15--13.75)x(2.80+2.80)/2	-1.12		
		(-14.93--14.15)x(2.84+2.80)/2	-2.20		
		(-15.00--14.93)x(2.84+2.84)/2	-0.20		
		(-14.93--15.00)x(2.84+2.84)/2	0.20		
		(-14.15--14.93)x(2.80+2.84)/2	2.20		
		(-13.75--14.15)x(2.80+2.80)/2	1.12		
		(-13.12--13.75)x(2.79+2.80)/2	1.76		
		(-12.58--13.12)x(2.76+2.79)/2	1.50		
		(-12.09--12.58)x(2.76+2.76)/2	1.35		
		(-11.77--12.09)x(2.55+2.76)/2	0.85		
		(-11.70--11.77)x(2.49+2.55)/2	0.18		
		(-11.68--11.70)x(2.49+2.49)/2	0.05		
		(-11.62--11.68)x(2.47+2.49)/2	0.15		
		(-11.61--11.62)x(2.48+2.47)/2	0.02		
		(-11.52--11.61)x(2.47+2.47)/2	0.22		
		(-11.51--11.52)x(2.47+2.47)/2	0.02		
		(-11.50--11.51)x(2.45+2.47)/2	0.02		
		(-11.47--11.50)x(2.45+2.45)/2	0.07		
		(-11.40--11.47)x(2.46+2.45)/2	0.17		
		(-11.05--11.40)x(2.46+2.46)/2	0.86		
		(-10.23--11.05)x(1.98+2.46)/2	1.82		
		(-10.02--10.23)x(1.86+1.98)/2	0.40		
		(-9.86--10.02)x(1.84+1.86)/2	0.30		
		(-8.99--9.86)x(1.48+1.84)/2	1.44		
		(-8.98--8.99)x(1.46+1.48)/2	0.01		
		(-8.57--8.98)x(1.78+1.46)/2	0.66		
		(-8.47--8.57)x(1.80+1.78)/2	0.18		
		(-8.31--8.47)x(1.94+1.80)/2	0.30		
		(-7.99--8.31)x(2.18+1.94)/2	0.66		
		(-7.96--7.99)x(2.20+2.18)/2	0.07		
		(-7.72--7.96)x(2.25+2.20)/2	0.53		
		(-7.57--7.72)x(2.33+2.25)/2	0.34		
		(-7.51--7.57)x(2.24+2.33)/2	0.14		
		(-7.50--7.51)x(2.24+2.24)/2	0.02		
		(-7.48--7.50)x(2.23+2.24)/2	0.04		
		(-7.44--7.48)x(2.22+2.23)/2	0.09		
		(-7.43--7.44)x(2.22+2.22)/2	0.02		
		(-7.40--7.43)x(2.27+2.22)/2	0.07		
		(-7.23--7.40)x(2.34+2.27)/2	0.39		
		(-7.17--7.23)x(2.34+2.34)/2	0.14		
		A RIPORTARE mq	-0.39		

		CALCOLO DELLE AREE		Foglio n. 3	
STERRO					
N. SEZIONE PROG.	FIG.	ELEMENTI DI CALCOLO	AREA ELEMENTARE mq	AREA FIGURA mq	NOTE
		RIPORTO mq	-0.39		
		(-7.10--7.17)x(2.33+2.34)/2	0.16		
		(-6.96--7.10)x(2.35+2.33)/2	0.33		
		(-6.92--6.96)x(2.35+2.35)/2	0.09		
		(-6.70--6.92)x(2.34+2.35)/2	0.52		
		(-5.89--6.70)x(2.31+2.34)/2	1.88		
		(-5.87--5.89)x(2.33+2.31)/2	0.05		
		(-5.54--5.87)x(2.36+2.33)/2	0.77		
		(-5.53--5.54)x(2.35+2.36)/2	0.02		
		(-5.50--5.53)x(2.37+2.35)/2	0.07		
		(-5.49--5.50)x(2.38+2.37)/2	0.02		
		(-5.48--5.49)x(2.36+2.38)/2	0.02		
		(-5.42--5.48)x(2.36+2.36)/2	0.14		
		(-5.10--5.42)x(2.37+2.36)/2	0.76		
		(-5.07--5.10)x(2.37+2.37)/2	0.07		
		(-5.02--5.07)x(2.36+2.37)/2	0.12		
		(-4.93--5.02)x(2.33+2.36)/2	0.21		
		(-4.88--4.93)x(2.39+2.33)/2	0.12		
		(-4.87--4.88)x(2.38+2.41)/2	0.02		
		(-4.76--4.87)x(2.32+2.38)/2	0.26		
		(-4.74--4.76)x(2.32+2.32)/2	0.05		
		(-4.71--4.74)x(2.32+2.32)/2	0.07		
		(-4.67--4.71)x(2.32+2.32)/2	0.09		
		(-4.58--4.67)x(2.33+2.32)/2	0.21		
		(-4.33--4.58)x(2.32+2.33)/2	0.58		
		(-3.83--4.33)x(2.33+2.32)/2	1.16		
		(-3.18--3.83)x(2.34+2.33)/2	1.52		
		(-2.79--3.18)x(2.35+2.34)/2	0.91		
		(-2.01--2.79)x(2.36+2.35)/2	1.84		
		(-1.76--2.01)x(2.36+2.36)/2	0.59		
		(-0.83--1.76)x(2.38+2.36)/2	2.20		
		(-0.73--0.83)x(2.38+2.38)/2	0.24		
		(0.03--0.73)x(2.37+2.38)/2	1.80		
		(0.31-0.03)x(2.37+2.37)/2	0.66		
		(0.34-0.31)x(2.37+2.37)/2	0.07		
		(1.34-0.34)x(2.36+2.37)/2	2.37		
		(1.52-1.34)x(2.36+2.36)/2	0.42		
		(2.37-1.52)x(2.34+2.36)/2	2.00		
		(2.69-2.37)x(2.33+2.34)/2	0.75		
		(3.40-2.69)x(2.31+2.33)/2	1.65		
		(3.87-3.40)x(2.31+2.31)/2	1.09		
		(4.44-3.87)x(2.30+2.31)/2	1.31		
		(4.52-4.44)x(2.30+2.30)/2	0.18		
		(4.54-4.52)x(2.40+2.31)/2	0.05		
		(4.57-4.54)x(2.37+2.38)/2	0.07		
		(4.62-4.57)x(2.31+2.37)/2	0.12		
		(4.69-4.62)x(2.30+2.31)/2	0.16		
		(4.74-4.69)x(2.30+2.30)/2	0.11		
		(4.81-4.74)x(2.29+2.30)/2	0.16		
		(4.93-4.81)x(2.29+2.29)/2	0.27		
		(5.16-4.93)x(2.28+2.29)/2	0.53		
		(5.47-5.16)x(2.27+2.28)/2	0.71		
		(6.08-5.47)x(2.24+2.27)/2	1.38		
		(6.06-6.08)x(1.95+1.95)/2	-0.04		
		(5.38-6.06)x(1.99+1.95)/2	-1.34		
		(0.00-5.38)x(2.27+1.99)/2	-11.46		
		(-5.66-0.00)x(1.97+2.27)/2	-12.00		
		(-6.49--5.66)x(1.93+1.97)/2	-1.62		
		(-6.51--6.49)x(1.93+1.93)/2	-0.04		
		(-7.00--6.51)x(2.35+2.33)/2	-1.15		
				2.91	
5 47.64	B1	(-7.33--6.85)x(2.23+2.32)/2	-1.09		
		(-7.56--7.33)x(2.22+2.23)/2	-0.51		
		(-7.61--7.56)x(2.19+2.22)/2	-0.11		
		(-7.64--7.61)x(2.19+2.19)/2	-0.07		
		(-7.65--7.64)x(2.20+2.19)/2	-0.02		
		(-7.74--7.65)x(2.20+2.20)/2	-0.20		
		(-7.75--7.74)x(2.20+2.20)/2	-0.02		
		(-7.77--7.75)x(2.19+2.19)/2	-0.04		
		(-7.82--7.77)x(2.16+2.19)/2	-0.11		
		(-8.67--7.82)x(1.81+2.16)/2	-1.69		
		(-8.76--8.67)x(1.78+1.81)/2	-0.16		
		(-8.98--8.76)x(1.66+1.78)/2	-0.38		
		(-9.06--8.98)x(1.63+1.66)/2	-0.13		
		(-9.18--9.06)x(1.58+1.63)/2	-0.19		
		(-9.42--9.18)x(1.57+1.58)/2	-0.38		
		(-9.70--9.42)x(1.52+1.57)/2	-0.43		
		(-10.39--9.70)x(1.91+1.52)/2	-1.18		
		(-10.74--10.39)x(2.13+1.91)/2	-0.71		
		(-11.01--10.74)x(2.28+2.13)/2	-0.60		
		(-11.37--11.01)x(2.50+2.28)/2	-0.86		
		(-11.65--11.37)x(2.66+2.50)/2	-0.72		
		(-11.67--11.65)x(2.45+2.67)/2	-0.05		
		(-11.79--11.67)x(2.69+2.45)/2	-0.31		
		(-11.80--11.79)x(2.70+2.69)/2	-0.03		
		(-11.81--11.80)x(2.69+2.70)/2	-0.03		
		(-11.83--11.81)x(2.69+2.69)/2	-0.05		
		(-11.85--11.83)x(2.70+2.69)/2	-0.05		
		(-11.93--11.85)x(2.72+2.70)/2	-0.22		
		(-12.80--11.93)x(2.83+2.72)/2	-2.41		
		(-13.26--12.80)x(2.81+2.83)/2	-1.30		
		(-13.83--13.26)x(2.78+2.81)/2	-1.59		
		(-13.91--13.83)x(2.78+2.78)/2	-0.22		
		(-14.87--13.91)x(2.82+2.78)/2	-2.69		
		(-15.00--14.87)x(2.83+2.82)/2	-0.37		
		(-14.87--15.00)x(2.82+2.83)/2	0.37		
		(-13.91--14.87)x(2.78+2.82)/2	2.69		
		(-13.83--13.91)x(2.78+2.78)/2	0.22		
		(-13.26--13.83)x(2.81+2.78)/2	1.59		
		(-12.80--13.26)x(2.83+2.81)/2	1.30		
		(-11.93--12.80)x(2.72+2.83)/2	2.41		
		(-11.85--11.93)x(2.70+2.72)/2	0.22		
		(-11.83--11.85)x(2.69+2.70)/2	0.05		
		(-11.81--11.83)x(2.69+2.69)/2	0.05		
		(-11.80--11.81)x(2.70+2.69)/2	0.03		
		(-11.79--11.80)x(2.69+2.70)/2	0.03		
		A RIPORTARE mq	-9.96		

		CALCOLO DELLE AREE		Foglio n. 4	
STERRO					
N. SEZIONE PROG.	FIG.	ELEMENTI DI CALCOLO	AREA ELEMENTARE mq	AREA FIGURA mq	NOTE
		RIPORTO mq	-9.96		
		(-11.67--11.79)x(2.45+2.69)/2	0.31		
		(-11.65--11.67)x(2.67+2.45)/2	0.05		
		(-11.37--11.65)x(2.50+2.66)/2	0.72		
		(-11.01--11.37)x(2.28+2.50)/2	0.86		
		(-10.74--11.01)x(2.13+2.28)/2	0.60		
		(-10.39--10.74)x(1.91+2.13)/2	0.71		
		(-9.70--10.39)x(1.52+1.91)/2	1.18		
		(-9.42--9.70)x(1.57+1.52)/2	0.43		
		(-9.18--9.42)x(1.58+1.57)/2	0.38		
		(-9.06--9.18)x(1.63+1.58)/2	0.19		
		(-8.98--9.06)x(1.66+1.63)/2	0.13		
		(-8.76--8.98)x(1.78+1.66)/2	0.38		
		(-8.67--8.76)x(1.81+1.78)/2	0.16		
		(-7.82--8.67)x(2.16+1.81)/2	1.69		
		(-7.77--7.82)x(2.19+2.16)/2	0.11		
		(-7.75--7.77)x(2.19+2.19)/2	0.04		
		(-7.74--7.75)x(2.20+2.20)/2	0.02		
		(-7.65--7.74)x(2.20+2.20)/2	0.20		
		(-7.64--7.65)x(2.19+2.20)/2	0.02		
		(-7.61--7.64)x(2.19+2.19)/2	0.07		
		(-7.56--7.61)x(2.22+2.19)/2	0.11		
		(-7.33--7.56)x(2.23+2.22)/2	0.51		
		(-6.77--7.33)x(2.34+2.23)/2	1.28		
		(-6.76--6.77)x(2.34+2.34)/2	0.02		
		(-6.72--6.76)x(2.34+2.34)/2	0.09		
		(-6.61--6.72)x(2.33+2.34)/2	0.26		
		(-6.40--6.61)x(2.32+2.33)/2	0.49		
		(-6.38--6.40)x(2.33+2.32)/2	0.05		
		(-5.96--6.38)x(2.34+2.33)/2	0.98		
		(-5.80--5.96)x(2.35+2.34)/2	0.38		
		(-5.72--5.80)x(2.36+2.35)/2	0.19		
		(-5.67--5.72)x(2.36+2.36)/2	0.12		
		(-5.64--5.67)x(2.36+2.36)/2	0.07		
		(-5.63--5.64)x(2.37+2.36)/2	0.02		
		(-5.62--5.63)x(2.37+2.37)/2	0.02		
		(-5.56--5.62)x(2.32+2.37)/2	0.14		
		(-5.50--5.56)x(2.33+2.32)/2	0.14		
		(-5.22--5.50)x(2.37+2.33)/2	0.66		
		(-5.14--5.22)x(2.38+2.37)/2	0.19		
		(-5.07--5.14)x(2.38+2.38)/2	0.17		
		(-5.04--5.07)x(2.39+2.38)/2	0.07		
		(-5.03--5.04)x(2.39+2.39)/2	0.02		
		(-5.01--5.03)x(2.38+2.38)/2	0.05		
		(-4.77--5.01)x(2.37+2.38)/2	0.57		
		(-4.54--4.77)x(2.32+2.37)/2	0.54		
		(-4.52--4.54)x(2.32+2.32)/2	0.05		
		(-3.51--4.52)x(2.35+2.32)/2	2.36		
		(-3.34--3.51)x(2.35+2.35)/2	0.40		
		(-2.47--3.34)x(2.36+2.35)/2	2.05		
		(-2.17--2.47)x(2.37+2.36)/2	0.71		
		(-1.44--2.17)x(2.38+2.37)/2	1.73		
		(-0.99--1.44)x(2.38+2.38)/2	1.07		
		(-0.41--0.99)x(2.38+2.38)/2	1.38		
		(0.18--0.41)x(2.37+2.38)/2	1.40		
		(0.62-0.18)x(2.37+2.37)/2	1.04		
		(1.36-0.62)x(2.35+2.37)/2	1.75		
		(1.66-1.36)x(2.35+2.35)/2	0.70		
		(2.53-1.66)x(2.33+2.35)/2	2.04		
		(2.69-2.53)x(2.33+2.33)/2	0.37		
		(3.71-2.69)x(2.30+2.33)/2	2.36		
		(3.72-3.71)x(2.30+2.30)/2	0.02		
		(3.73-3.72)x(2.30+2.30)/2	0.02		
		(4.06-3.73)x(2.30+2.30)/2	0.76		
		(4.23-4.06)x(2.31+2.30)/2	0.39		
		(4.33-4.23)x(2.31+2.31)/2	0.23		
		(4.37-4.33)x(2.30+2.31)/2	0.09		
		(4.38-4.37)x(2.30+2.30)/2	0.02		
		(4.39-4.38)x(2.39+2.30)/2	0.02		
		(4.40-4.39)x(2.37+2.39)/2	0.02		
		(4.43-4.40)x(2.35+2.37)/2	0.07		
		(4.46-4.43)x(2.31+2.35)/2	0.07		
		(4.53-4.46)x(2.30+2.31)/2	0.16		
		(4.73-4.53)x(2.29+2.30)/2	0.46		
		(4.76-4.73)x(2.29+2.29)/2	0.07		
		(4.88-4.76)x(2.29+2.29)/2	0.27		
		(5.79-4.88)x(2.26+2.29)/2	2.07		
		(6.05-5.79)x(2.25+2.26)/2	0.59		
		(6.82-6.05)x(2.21+2.25)/2	1.72		
		(7.23-6.82)x(2.20+2.21)/2	0.90		
		(7.32-7.23)x(2.20+2.20)/2	0.20		
		(7.30-7.32)x(2.03+2.03)/2	-0.04		
		(6.43-7.30)x(2.06+2.03)/2	-1.78		
		(0.00-6.43)x(2.34+2.06)/2	-14.15		
		(-5.51-0.00)x(2.10+2.34)/2	-12.23		
		(-6.83--5.51)x(2.05+2.10)/2	-2.74		
		(-6.85--6.83)x(2.05+2.05)/2	-0.04		
5 47.64	B1	(-7.33--6.85)x(2.23+2.32)/2	-1.09	2.01	
		(-7.56--7.33)x(2.22+2.23)/2	-0.51		
		(-7.61--7.56)x(2.19+2.22)/2	-0.11		
		(-7.64--7.61)x(2.19+2.19)/2	-0.07		
		(-7.65--7.64)x(2.20+2.19)/2	-0.02		
		(-7.74--7.65)x(2.20+2.20)/2	-0.20		
		(-7.75--7.74)x(2.20+2.20)/2	-0.02		
		(-7.77--7.75)x(2.19+2.19)/2	-0.04		
		(-7.82--7.77)x(2.16+2.19)/2	-0.11		
		(-8.67--7.82)x(1.81+2.16)/2	-1.69		
		(-8.76--8.67)x(1.78+1.81)/2	-0.16		
		(-8.98--8.76)x(1.66+1.78)/2	-0.38		
		(-9.06--8.98)x(1.63+1.66)/2	-0.13		
		(-9.18--9.06)x(1.58+1.63)/2	-0.19		
		(-9.42--9.18)x(1.57+1.58)/2	-0.38		
		(-9.70--9.42)x(1.52+1.57)/2	-0.43		
		(-10.39--9.70)x(1.91+1.52)/2	-1.18		
		(-10.74--10.39)x(2.13+1.91)/2	-0.71		
		A RIPORTARE mq	-7.42		

		CALCOLO DELLE AREE		Foglio n. 5	
STERRO					
N. SEZIONE PROG.	FIG.	ELEMENTI DI CALCOLO	AREA ELEMENTARE mq	AREA FIGURA mq	NOTE
		RIPORTO mq	-7.42		
		(-11.01--10.74)x(2.28+2.13)/2	-0.60		
		(-11.37--11.01)x(2.50+2.28)/2	-0.86		
		(-11.65--11.37)x(2.66+2.50)/2	-0.72		
		(-11.67--11.65)x(2.45+2.67)/2	-0.05		
		(-11.79--11.67)x(2.69+2.45)/2	-0.31		
		(-11.80--11.79)x(2.70+2.69)/2	-0.03		
		(-11.81--11.80)x(2.69+2.70)/2	-0.03		
		(-11.83--11.81)x(2.69+2.69)/2	-0.05		
		(-11.85--11.83)x(2.70+2.69)/2	-0.05		
		(-11.93--11.85)x(2.72+2.70)/2	-0.22		
		(-12.80--11.93)x(2.83+2.72)/2	-2.41		
		(-13.26--12.80)x(2.81+2.83)/2	-1.30		
		(-13.83--13.26)x(2.78+2.81)/2	-1.59		
		(-13.91--13.83)x(2.78+2.78)/2	-0.22		
		(-14.87--13.91)x(2.82+2.78)/2	-2.69		
		(-15.00--14.87)x(2.83+2.82)/2	-0.37		
		(-14.87--15.00)x(2.82+2.83)/2	0.37		
		(-13.91--14.87)x(2.78+2.82)/2	2.69		
		(-13.83--13.91)x(2.78+2.78)/2	0.22		
		(-13.26--13.83)x(2.81+2.78)/2	1.59		
		(-12.80--13.26)x(2.83+2.81)/2	1.30		
		(-11.93--12.80)x(2.72+2.83)/2	2.41		
		(-11.85--11.93)x(2.70+2.72)/2	0.22		
		(-11.83--11.85)x(2.69+2.70)/2	0.05		
		(-11.81--11.83)x(2.69+2.69)/2	0.05		
		(-11.80--11.81)x(2.70+2.69)/2	0.03		
		(-11.79--11.80)x(2.69+2.70)/2	0.03		
		(-11.67--11.79)x(2.45+2.69)/2	0.31		
		(-11.65--11.67)x(2.67+2.45)/2	0.05		
		(-11.37--11.65)x(2.50+2.66)/2	0.72		
		(-11.01--11.37)x(2.28+2.50)/2	0.86		
		(-10.74--11.01)x(2.13+2.28)/2	0.60		
		(-10.39--10.74)x(1.91+2.13)/2	0.71		
		(-9.70--10.39)x(1.52+1.91)/2	1.18		
		(-9.42--9.70)x(1.57+1.52)/2	0.43		
		(-9.18--9.42)x(1.58+1.57)/2	0.38		
		(-9.06--9.18)x(1.63+1.58)/2	0.19		
		(-8.98--9.06)x(1.66+1.63)/2	0.13		
		(-8.76--8.98)x(1.78+1.66)/2	0.38		
		(-8.67--8.76)x(1.81+1.78)/2	0.16		
		(-7.82--8.67)x(2.16+1.81)/2	1.69		
		(-7.77--7.82)x(2.19+2.16)/2	0.11		
		(-7.75--7.77)x(2.19+2.19)/2	0.04		
		(-7.74--7.75)x(2.20+2.20)/2	0.02		
		(-7.65--7.74)x(2.20+2.20)/2	0.20		
		(-7.64--7.65)x(2.19+2.20)/2	0.02		
		(-7.61--7.64)x(2.19+2.19)/2	0.07		
		(-7.56--7.61)x(2.22+2.19)/2	0.11		
		(-7.33--7.56)x(2.23+2.22)/2	0.51		
		(-6.77--7.33)x(2.34+2.23)/2	1.28		
		(-6.76--6.77)x(2.34+2.34)/2	0.02		
		(-6.72--6.76)x(2.34+2.34)/2	0.09		
		(-6.61--6.72)x(2.33+2.34)/2	0.26		
		(-6.40--6.61)x(2.32+2.33)/2	0.49		
		(-6.38--6.40)x(2.33+2.32)/2	0.05		
		(-5.96--6.38)x(2.34+2.33)/2	0.98		
		(-5.80--5.96)x(2.35+2.34)/2	0.38		
		(-5.72--5.80)x(2.36+2.35)/2	0.19		
		(-5.67--5.72)x(2.36+2.36)/2	0.12		
		(-5.64--5.67)x(2.36+2.36)/2	0.07		
		(-5.63--5.64)x(2.37+2.36)/2	0.02		
		(-5.62--5.63)x(2.37+2.37)/2	0.02		
		(-5.56--5.62)x(2.32+2.37)/2	0.14		
		(-5.50--5.56)x(2.33+2.32)/2	0.14		
		(-5.22--5.50)x(2.37+2.33)/2	0.66		
		(-5.14--5.22)x(2.38+2.37)/2	0.19		
		(-5.07--5.14)x(2.38+2.38)/2	0.17		
		(-5.04--5.07)x(2.39+2.38)/2	0.07		
		(-5.03--5.04)x(2.39+2.39)/2	0.02		
		(-5.01--5.03)x(2.38+2.38)/2	0.05		
		(-4.77--5.01)x(2.37+2.38)/2	0.57		
		(-4.54--4.77)x(2.32+2.37)/2	0.54		
		(-4.52--4.54)x(2.32+2.32)/2	0.05		
		(-3.51--4.52)x(2.35+2.32)/2	2.36		
		(-3.34--3.51)x(2.35+2.35)/2	0.40		
		(-2.47--3.34)x(2.36+2.35)/2	2.05		
		(-2.17--2.47)x(2.37+2.36)/2	0.71		
		(-1.44--2.17)x(2.38+2.37)/2	1.73		
		(-0.99--1.44)x(2.38+2.38)/2	1.07		
		(-0.41--0.99)x(2.38+2.38)/2	1.38		
		(0.18--0.41)x(2.37+2.38)/2	1.40		
		(0.62-0.18)x(2.37+2.37)/2	1.04		
		(1.36-0.62)x(2.35+2.37)/2	1.75		
		(1.66-1.36)x(2.35+2.35)/2	0.70		
		(2.53-1.66)x(2.33+2.35)/2	2.04		
		(2.69-2.53)x(2.33+2.33)/2	0.37		
		(3.71-2.69)x(2.30+2.33)/2	2.36		
		(3.72-3.71)x(2.30+2.30)/2	0.02		
		(3.73-3.72)x(2.30+2.30)/2	0.02		
		(4.06-3.73)x(2.30+2.30)/2	0.76		
		(4.23-4.06)x(2.31+2.30)/2	0.39		
		(4.33-4.23)x(2.31+2.31)/2	0.23		
		(4.37-4.33)x(2.30+2.31)/2	0.09		
		(4.38-4.37)x(2.30+2.30)/2	0.02		
		(4.39-4.38)x(2.39+2.30)/2	0.02		
		(4.40-4.39)x(2.37+2.39)/2	0.02		
		(4.43-4.40)x(2.35+2.37)/2	0.07		
		(4.46-4.43)x(2.31+2.35)/2	0.07		
		(4.53-4.46)x(2.30+2.31)/2	0.16		
		(4.73-4.53)x(2.29+2.30)/2	0.46		
		(4.76-4.73)x(2.29+2.29)/2	0.07		
		(4.88-4.76)x(2.29+2.29)/2	0.27		
		(5.79-4.88)x(2.26+2.29)/2	2.07		
		(6.05-5.79)x(2.25+2.26)/2	0.59		
		(6.82-6.05)x(2.21+2.25)/2	1.72		
		A RIPORTARE mq	31.89		

	CALCOLO DELLE AREE		Foglio n. 6

STERRO

N. SEZIONE PROG.	FIG.	ELEMENTI DI CALCOLO	AREA ELEMENTARE mq	AREA FIGURA mq	NOTE
		RIPORTO mq	31.89		
		(7.23-6.82)x(2.20+2.21)/2	0.90		
		(7.32-7.23)x(2.20+2.20)/2	0.20		
		(7.30-7.32)x(2.03+2.03)/2	-0.04		
		(6.43-7.30)x(2.06+2.03)/2	-1.78		
		(0.00-6.43)x(2.34+2.06)/2	-14.15		
		(-5.51-0.00)x(2.10+2.34)/2	-12.23		
		(-6.83--5.51)x(2.05+2.10)/2	-2.74		
		(-6.85--6.83)x(2.05+2.05)/2	-0.04		
				2.01	

Il Direttore dei Lavori	L'Impresa	

	CALCOLO DELLE LUNGHEZZE		Foglio n. 7

USURA

N. SEZIONE PROG.	FIG.	ELEMENTI DI CALCOLO	LUNGHEZZA ELEMENTARE ml	LUNGHEZZA FIGURA ml	NOTE
1	a1	(0.00--5.47)	5.47		
0.00		(5.16-0.00)	5.16		
				10.63	
1	a1	(0.00--5.47)	5.47		
0.00		(5.16-0.00)	5.16		
				10.63	
2	a1	(0.00--5.29)	5.29		
15.00		(4.88-0.00)	4.88		
				10.17	
2	a1	(0.00--5.29)	5.29		
15.00		(4.88-0.00)	4.88		
				10.17	
3	a1	(0.00--5.29)	5.29		
30.00		(5.70-0.00)	5.70		
				10.99	
3	a1	(0.00--5.29)	5.29		
30.00		(5.70-0.00)	5.70		
				10.99	
4	a1	(0.00--6.51)	6.51		
45.00		(6.08-0.00)	6.08		
				12.59	
4	a1	(0.00--6.51)	6.51		
45.00		(6.08-0.00)	6.08		
				12.59	
5	a1	(0.00--6.85)	6.85		
47.64		(7.32-0.00)	7.32		
				14.17	
5	a1	(0.00--6.85)	6.85		
47.64		(7.32-0.00)	7.32		
				14.17	

Il Direttore dei Lavori	L'Impresa	

VEGETALE

N. SEZIONE PROG.	FIG.	ELEMENTI DI CALCOLO	LUNGHEZZA ELEMENTARE ml	LUNGHEZZA FIGURA ml	NOTE
4	b4	(-6.54--6.51)	0.03		
45.00		(-8.01--6.54)	1.47		
		(-9.23--8.01)	1.22		
				2.72	
4	b1	(6.11-6.08)	0.03		
45.00		(7.58-6.11)	1.47		
		(7.85-7.58)	0.27		
				1.77	
4	b2	(-6.54--6.51)	0.03		
45.00		(-8.01--6.54)	1.47		
		(-9.23--8.01)	1.22		
				2.72	
4	b3	(6.11-6.08)	0.03		
45.00		(7.58-6.11)	1.47		
		(7.85-7.58)	0.27		
				1.77	
4	b4	(-6.54--6.51)	0.03		
45.00		(-8.01--6.54)	1.47		
		(-9.23--8.01)	1.22		
				2.72	
4	b1	(6.11-6.08)	0.03		
45.00		(7.58-6.11)	1.47		
		(7.85-7.58)	0.27		
				1.77	
4	b2	(-6.54--6.51)	0.03		
45.00		(-8.01--6.54)	1.47		
		(-9.23--8.01)	1.22		
				2.72	
4	b3	(6.11-6.08)	0.03		
45.00		(7.58-6.11)	1.47		
		(7.85-7.58)	0.27		
				1.77	
5	b4	(-6.88--6.85)	0.03		
47.64		(-8.35--6.88)	1.47		
		(-9.77--8.35)	1.42		
				2.92	
5	b1	(7.35-7.32)	0.03		
47.64		(8.82-7.35)	1.47		
		(9.29-8.82)	0.47		
				1.97	
5	b2	(-6.88--6.85)	0.03		
47.64		(-8.35--6.88)	1.47		
		(-9.77--8.35)	1.42		
				2.92	
5	b3	(7.35-7.32)	0.03		
47.64		(8.82-7.35)	1.47		
		(9.29-8.82)	0.47		
				1.97	
5	b4	(-6.88--6.85)	0.03		
47.64		(-8.35--6.88)	1.47		
		(-9.77--8.35)	1.42		
				2.92	
5	b1	(7.35-7.32)	0.03		
47.64		(8.82-7.35)	1.47		
		(9.29-8.82)	0.47		
				1.97	
5	b2	(-6.88--6.85)	0.03		
47.64		(-8.35--6.88)	1.47		
		(-9.77--8.35)	1.42		
				2.92	
5	b3	(7.35-7.32)	0.03		
47.64		(8.82-7.35)	1.47		
		(9.29-8.82)	0.47		
				1.97	

STERRO

DALLA SEZ. DA PROG.	ALLA SEZ. A PROG.	SEZIONE	FIGURA	AREA	DISTANZA SEZIONI m	DISTANZA DI CALCOLO m	VOLUME PARZIALE mc	VOLUME TOTALE mc
3	4	4	B1	2.91	15.00	7.50	21.825	21.825
4	5	4	B1	2.91	2.64	1.32	3.841	
45.00	47.64	5	B1	2.01	2.64	1.32	2.653	6.494

USURA

DALLA SEZ. DA PROG.	ALLA SEZ. A PROG.	SEZIONE	FIGURA	LUNGHEZZA	DISTANZA SEZIONI ml	DISTANZA DI CALCOLO ml	AREA PARZIALE mq	AREA TOTALE mq
1	2	1	a1	10.63	15.00	7.50	79.73	
0.00	15.00	2	a1	10.17	15.00	7.50	76.28	
								156.01
2	3	2	a1	10.17	15.00	7.50	76.28	
15.00	30.00	3	a1	10.99	15.00	7.50	82.42	
								158.70
3	4	3	a1	10.99	15.00	7.50	82.42	
30.00	45.00	4	a1	12.59	15.00	7.50	94.42	
								176.84
4	5	4	a1	12.59	2.64	1.32	16.62	
45.00	47.64	5	a1	14.17	2.64	1.32	18.70	
								35.32

Il Direttore dei Lavori	L'Impresa	TOTALE ARTICOLO	526.87

VEGETALE

DALLA SEZ. DA PROG.	ALLA SEZ. A PROG.	SEZIONE	FIGURA	LUNGHEZZA	DISTANZA SEZIONI ml	DISTANZA DI CALCOLO ml	AREA PARZIALE mq	AREA TOTALE mq
3	4	4	b4	2.72	15.00	7.50	20.40	
30.00	45.00	4	b1	1.77	15.00	7.50	13.28	
		4	b2	2.72	15.00	7.50	20.40	
		4	b3	1.77	15.00	7.50	13.28	
								67.36
4	5	4	b4	2.72	2.64	1.32	3.59	
45.00	47.64	4	b1	1.77	2.64	1.32	2.34	
		4	b2	2.72	2.64	1.32	3.59	
		4	b3	1.77	2.64	1.32	2.34	
		5	b4	2.92	2.64	1.32	3.85	
		5	b1	1.97	2.64	1.32	2.60	
		5	b2	2.92	2.64	1.32	3.85	
		5	b3	1.97	2.64	1.32	2.60	
								24.76

Volume dalla sezione 1 alla sezione 5

ARTICOLO		VOLUME
B STERRO	mc	28.319
a USURA	mq	526.87
b VEGETALE	mq	92.12

	CALCOLO DELLE AREE		Foglio n. 1

STERRI E RIPORTI

N. SEZIONE PROG.	FIG.	ELEMENTI DI CALCOLO	AREA ELEMENTARE mq	AREA FIGURA mq	NOTE
3	R1	(-3.85--4.00)x(2.50+2.50)/2	0.37		
30.00		(-3.35--3.85)x(2.49+2.50)/2	1.25		
		(-3.01--3.35)x(2.48+2.49)/2	0.84		
		(-2.29--3.01)x(2.46+2.48)/2	1.78		
		(-2.07--2.29)x(2.49+2.46)/2	0.54		
		(-1.56--2.07)x(2.53+2.49)/2	1.28		
		(-1.55--1.56)x(2.53+2.55)/2	0.03		
		(-1.54--1.55)x(2.52+2.53)/2	0.03		
		(-1.53--1.54)x(2.52+2.52)/2	0.03		
		(-1.51--1.53)x(2.52+2.52)/2	0.05		
		(-1.49--1.51)x(2.51+2.52)/2	0.05		
		(-1.45--1.49)x(2.51+2.51)/2	0.10		
		(-1.38--1.45)x(2.49+2.51)/2	0.18		
		(-1.25--1.38)x(2.46+2.49)/2	0.32		
		(-1.23--1.25)x(2.45+2.46)/2	0.05		
		(-1.15--1.23)x(2.46+2.45)/2	0.20		
		(-1.03--1.15)x(2.51+2.46)/2	0.30		
		(-0.99--1.03)x(2.51+2.51)/2	0.10		
		(-0.64--0.99)x(2.54+2.51)/2	0.88		
		(-0.55--0.64)x(2.53+2.54)/2	0.23		
		(-0.38--0.55)x(2.51+2.53)/2	0.43		
		(-0.17--0.38)x(2.49+2.51)/2	0.53		
		(0.36--0.17)x(2.49+2.49)/2	1.32		
		(0.89-0.36)x(2.48+2.49)/2	1.32		
		(1.20-0.89)x(2.43+2.48)/2	0.76		
		(1.95-1.20)x(2.34+2.43)/2	1.79		
		(1.99-1.95)x(2.32+2.34)/2	0.09		
		(2.19-1.99)x(2.26+2.32)/2	0.46		
		(2.29-2.19)x(2.24+2.26)/2	0.23		
		(2.35-2.29)x(2.20+2.24)/2	0.13		
		(2.39-2.35)x(2.16+2.20)/2	0.09		
		(2.41-2.39)x(2.15+2.16)/2	0.04		
		(2.44-2.41)x(2.12+2.15)/2	0.06		
		(2.45-2.44)x(2.14+2.12)/2	0.02		
		(2.47-2.45)x(2.15+2.14)/2	0.04		
		(2.51-2.47)x(2.10+2.15)/2	0.08		
		(2.52-2.51)x(2.10+2.10)/2	0.02		
		(2.72-2.52)x(2.04+2.10)/2	0.41		
		(2.75-2.72)x(2.02+2.04)/2	0.06		
		(2.79-2.75)x(2.11+2.02)/2	0.08		
		(2.87-2.79)x(2.11+2.11)/2	0.17		
		(3.01-2.87)x(1.99+2.11)/2	0.29		
		(3.73-3.01)x(1.61+1.99)/2	1.30		
		(4.07-3.73)x(1.46+1.61)/2	0.52		
		(4.57-4.07)x(1.45+1.46)/2	0.73		
		(5.12-4.57)x(1.34+1.45)/2	0.77		
		(5.42-5.12)x(1.45+1.34)/2	0.42		
		(6.18-5.42)x(1.67+1.45)/2	1.19		
		(6.26-6.18)x(1.68+1.67)/2	0.13		
		(6.55-6.26)x(1.68+1.68)/2	0.49		
		(7.08-6.55)x(1.68+1.68)/2	0.89		
		(7.24-7.08)x(1.69+1.68)/2	0.27		
		(7.94-7.24)x(1.60+1.69)/2	1.15		
		(8.31-7.94)x(1.57+1.60)/2	0.59		
		(2.91-8.31)x(5.18+1.57)/2	-18.23		
		(1.84-2.91)x(5.18+5.18)/2	-5.54		
		(2.01-1.84)x(4.98+5.18)/2	0.86		
		(0.00-2.01)x(5.12+4.98)/2	-10.15		
		(-4.00-0.00)x(5.40+5.12)/2	-21.04		
				28.62	
4	R1	(-4.82--5.00)x(2.60+2.59)/2	0.47		
45.00		(-4.13--4.82)x(2.61+2.60)/2	1.80		
		(-3.99--4.13)x(2.62+2.61)/2	0.37		
		(-3.90--3.99)x(2.61+2.62)/2	0.24		
		(-2.89--3.90)x(2.55+2.61)/2	2.61		
		(-2.07--2.89)x(2.42+2.55)/2	2.04		
		(-1.79--2.07)x(2.36+2.42)/2	0.67		
		(-1.35--1.79)x(2.24+2.36)/2	1.01		
		(-0.87--1.35)x(2.10+2.24)/2	1.04		
		(-0.68--0.87)x(2.04+2.10)/2	0.39		
		(-0.08--0.68)x(1.58+2.04)/2	1.09		
		(0.42--0.08)x(1.20+1.58)/2	0.70		
		(0.71-0.42)x(1.11+1.20)/2	0.33		
		(1.43-0.71)x(0.85+1.11)/2	0.71		
		(1.50-1.43)x(0.83+0.85)/2	0.06		
		(1.52-1.50)x(0.82+0.83)/2	0.02		
		(2.29-1.52)x(1.15+0.82)/2	0.76		
		(2.63-2.29)x(1.26+1.15)/2	0.41		
		(3.08-2.63)x(1.30+1.26)/2	0.58		
		(3.73-3.08)x(1.29+1.30)/2	0.84		
		(3.87-3.73)x(1.29+1.29)/2	0.18		
		(4.21-3.87)x(1.30+1.29)/2	0.44		
		(4.66-4.21)x(1.35+1.30)/2	0.60		
		(4.83-4.66)x(1.35+1.35)/2	0.23		
		(5.45-4.83)x(1.35+1.35)/2	0.84		
		(5.94-5.45)x(1.37+1.35)/2	0.67		
		(6.24-5.94)x(1.38+1.37)/2	0.41		
		(6.99-6.24)x(1.38+1.38)/2	1.03		
		(7.03-6.99)x(1.38+1.38)/2	0.06		
		(7.04-7.03)x(1.38+1.38)/2	0.01		
		(7.82-7.04)x(1.37+1.38)/2	1.07		
		(8.14-7.82)x(1.38+1.37)/2	0.44		
		(8.60-8.14)x(1.39+1.38)/2	0.64		
		(9.24-8.60)x(1.41+1.39)/2	0.90		
		(9.39-9.24)x(1.41+1.41)/2	0.21		
		(9.77-9.39)x(1.41+1.41)/2	0.54		
		(10.17-9.77)x(1.41+1.41)/2	0.56		
		(3.15-10.17)x(6.09+1.41)/2	-26.32		
		(2.08-3.15)x(6.09+6.09)/2	-6.52		
		(2.25-2.08)x(5.88+6.09)/2	1.02		
		(0.00-2.25)x(6.04+5.88)/2	-13.41		
		(-4.00-0.00)x(6.32+6.04)/2	-24.72		
		(-5.00--4.00)x(6.39+6.32)/2	-6.36		
				51.34	
5	R1	(-8.51--8.63)x(1.98+1.99)/2	0.24		
60.00		(-8.32--8.51)x(1.97+1.98)/2	0.38		
		(-7.76--8.32)x(1.86+1.97)/2	1.07		
		A RIPORTARE mq	1.69		

		CALCOLO DELLE AREE		Foglio n. 2	
STERRI E RIPORTI					
N. SEZIONE PROG.	FIG.	ELEMENTI DI CALCOLO	AREA ELEMENTARE mq	AREA FIGURA mq	NOTE
		RIPORTO mq	1.69		
		(-7.14--7.76)x(1.72+1.86)/2	1.11		
		(-7.01--7.14)x(1.65+1.72)/2	0.22		
		(-6.80--7.01)x(1.59+1.65)/2	0.34		
		(-6.26--6.80)x(1.37+1.59)/2	0.80		
		(-5.95--6.26)x(1.25+1.37)/2	0.41		
		(-5.51--5.95)x(1.27+1.25)/2	0.55		
		(-4.77--5.51)x(1.37+1.27)/2	0.98		
		(-4.76--4.77)x(1.37+1.37)/2	0.01		
		(-4.01--4.76)x(1.52+1.37)/2	1.08		
		(-3.58--4.01)x(1.56+1.52)/2	0.66		
		(-3.26--3.58)x(1.59+1.56)/2	0.50		
		(-2.73--3.26)x(1.59+1.59)/2	0.84		
		(-2.51--2.73)x(1.60+1.59)/2	0.35		
		(-2.39--2.51)x(1.61+1.60)/2	0.19		
		(-1.76--2.39)x(1.61+1.61)/2	1.01		
		(-1.20--1.76)x(1.61+1.61)/2	0.90		
		(-1.02--1.20)x(1.62+1.61)/2	0.29		
		(-0.69--1.02)x(1.62+1.62)/2	0.53		
		(-0.27--0.69)x(1.64+1.62)/2	0.68		
		(-0.02--0.27)x(1.64+1.64)/2	0.41		
		(0.48--0.02)x(1.66+1.64)/2	0.82		
		(1.17-0.48)x(1.66+1.66)/2	1.15		
		(1.23-1.17)x(1.67+1.66)/2	0.10		
		(1.34-1.23)x(1.67+1.67)/2	0.18		
		(1.98-1.34)x(1.70+1.67)/2	1.08		
		(2.36-1.98)x(1.70+1.70)/2	0.65		
		(2.73-2.36)x(1.70+1.70)/2	0.63		
		(3.38-2.73)x(1.71+1.70)/2	1.11		
		(3.48-3.38)x(1.72+1.71)/2	0.17		
		(3.55-3.48)x(1.71+1.72)/2	0.12		
		(4.23-3.55)x(1.69+1.71)/2	1.16		
		(4.73-4.23)x(1.69+1.69)/2	0.84		
		(4.98-4.73)x(1.68+1.69)/2	0.42		
		(5.41-4.98)x(1.68+1.68)/2	0.72		
		(5.92-5.41)x(1.68+1.68)/2	0.86		
		(6.63-5.92)x(1.69+1.68)/2	1.20		
		(7.11-6.63)x(1.70+1.69)/2	0.81		
		(7.45-7.11)x(1.70+1.70)/2	0.58		
		(7.98-7.45)x(1.70+1.70)/2	0.90		
		(8.29-7.98)x(1.70+1.70)/2	0.53		
		(8.73-8.29)x(1.69+1.70)/2	0.75		
		(9.48-8.73)x(1.68+1.69)/2	1.26		
		(10.23-9.48)x(1.68+1.68)/2	1.26		
		(10.67-10.23)x(1.68+1.68)/2	0.74		
		(10.98-10.67)x(1.70+1.68)/2	0.52		
		(11.23-10.98)x(1.70+1.70)/2	0.42		
		(3.47-11.23)x(6.88+1.70)/2	-33.29		
		(2.40-3.47)x(6.88+6.88)/2	-7.36		
		(2.57-2.40)x(6.67+6.88)/2	1.15		
		(-0.00-2.57)x(6.85+6.67)/2	-17.37		
		(-4.00--0.00)x(7.13+6.85)/2	-27.96		
		(-5.46--4.00)x(7.24+7.13)/2	-10.49		
		(-5.34--5.46)x(7.37+7.24)/2	0.88		
		(-6.41--5.34)x(7.37+7.37)/2	-7.89		
		(-8.63--6.41)x(5.89+7.37)/2	-14.72		
				84.52	
6 75.00	R1	(-13.57--13.76)x(1.65+1.64)/2	0.31		
		(-13.56--13.57)x(1.65+1.65)/2	0.02		
		(-12.83--13.56)x(1.67+1.65)/2	1.21		
		(-12.24--12.83)x(1.68+1.67)/2	0.99		
		(-12.10--12.24)x(1.68+1.68)/2	0.24		
		(-11.94--12.10)x(1.68+1.68)/2	0.27		
		(-11.38--11.94)x(1.66+1.68)/2	0.94		
		(-10.92--11.38)x(1.67+1.66)/2	0.77		
		(-10.65--10.92)x(1.68+1.67)/2	0.45		
		(-10.30--10.65)x(1.68+1.68)/2	0.59		
		(-9.92--10.30)x(1.69+1.68)/2	0.64		
		(-9.61--9.92)x(1.70+1.69)/2	0.53		
		(-9.19--9.61)x(1.69+1.70)/2	0.71		
		(-8.67--9.19)x(1.66+1.69)/2	0.87		
		(-8.46--8.67)x(1.64+1.66)/2	0.35		
		(-8.29--8.46)x(1.63+1.64)/2	0.28		
		(-7.73--8.29)x(1.59+1.63)/2	0.90		
		(-7.03--7.73)x(1.57+1.59)/2	1.11		
		(-7.00--7.03)x(1.57+1.57)/2	0.05		
		(-6.97--7.00)x(1.57+1.57)/2	0.05		
		(-6.27--6.97)x(1.61+1.57)/2	1.11		
		(-5.66--6.27)x(1.64+1.61)/2	0.99		
		(-5.54--5.66)x(1.64+1.64)/2	0.20		
		(-5.40--5.54)x(1.63+1.64)/2	0.23		
		(-4.81--5.40)x(1.61+1.63)/2	0.96		
		(-4.34--4.81)x(1.59+1.61)/2	0.75		
		(-4.08--4.34)x(1.58+1.59)/2	0.41		
		(-3.76--4.08)x(1.55+1.58)/2	0.50		
		(-3.03--3.76)x(1.53+1.55)/2	1.12		
		(-2.13--3.03)x(1.52+1.53)/2	1.37		
		(-1.90--2.13)x(1.53+1.52)/2	0.35		
		(-1.71--1.90)x(1.53+1.53)/2	0.29		
		(-1.17--1.71)x(1.54+1.53)/2	0.83		
		(-0.49--1.17)x(1.54+1.54)/2	1.05		
		(-0.44--0.49)x(1.54+1.54)/2	0.08		
		(-0.39--0.44)x(1.54+1.54)/2	0.08		
		(0.29--0.39)x(1.55+1.54)/2	1.05		
		(0.92-0.29)x(1.55+1.55)/2	0.98		
		(1.02-0.92)x(1.55+1.55)/2	0.15		
		(1.14-1.02)x(1.55+1.55)/2	0.19		
		(1.75-1.14)x(1.54+1.55)/2	0.94		
		(2.24-1.75)x(1.54+1.54)/2	0.75		
		(2.48-2.24)x(1.54+1.54)/2	0.37		
		(2.78-2.48)x(1.55+1.54)/2	0.46		
		(3.21-2.78)x(1.49+1.55)/2	0.65		
		(3.55-3.21)x(1.49+1.49)/2	0.51		
		(3.94-3.55)x(1.47+1.49)/2	0.58		
		(4.41-3.94)x(1.50+1.47)/2	0.70		
		(4.67-4.41)x(1.48+1.50)/2	0.39		
		A RIPORTARE mq	29.32		

		CALCOLO DELLE AREE		Foglio n. 3	
STERRI E RIPORTI					
N. SEZIONE PROG.	FIG.	ELEMENTI DI CALCOLO	AREA ELEMENTARE mq	AREA FIGURA mq	NOTE
		RIPORTO mq	29.32		
		(4.87-4.67)x(1.46+1.48)/2	0.29		
		(5.40-4.87)x(1.41+1.46)/2	0.76		
		(6.05-5.40)x(1.37+1.41)/2	0.90		
		(6.13-6.05)x(1.37+1.37)/2	0.11		
		(6.19-6.13)x(1.36+1.37)/2	0.08		
		(6.85-6.19)x(1.35+1.36)/2	0.89		
		(7.50-6.85)x(1.29+1.35)/2	0.86		
		(7.58-7.50)x(1.28+1.29)/2	0.10		
		(7.68-7.58)x(1.28+1.28)/2	0.13		
		(8.31-7.68)x(1.38+1.28)/2	0.84		
		(8.82-8.31)x(1.31+1.38)/2	0.69		
		(9.04-8.82)x(1.30+1.31)/2	0.29		
		(9.32-9.04)x(1.26+1.30)/2	0.36		
		(9.77-9.32)x(1.29+1.26)/2	0.57		
		(10.14-9.77)x(1.29+1.29)/2	0.48		
		(10.50-10.14)x(1.32+1.29)/2	0.47		
		(10.95-10.50)x(1.28+1.32)/2	0.58		
		(11.23-10.95)x(1.27+1.28)/2	0.36		
		(11.45-11.23)x(1.27+1.27)/2	0.28		
		(11.96-11.45)x(1.26+1.27)/2	0.65		
		(12.59-11.96)x(1.31+1.26)/2	0.81		
		(12.69-12.59)x(1.31+1.31)/2	0.13		
		(12.77-12.69)x(1.32+1.31)/2	0.11		
		(13.42-12.77)x(1.35+1.32)/2	0.87		
		(14.08-13.42)x(1.43+1.35)/2	0.92		
		(14.15-14.08)x(1.43+1.43)/2	0.10		
		(14.22-14.15)x(1.43+1.43)/2	0.10		
		(14.68-14.22)x(1.42+1.43)/2	0.66		
		(14.44-14.68)x(1.58+1.42)/2	-0.36		
		(12.44-14.44)x(1.58+1.58)/2	-3.16		
		(3.44-12.44)x(7.58+1.58)/2	-41.22		
		(2.38-3.44)x(7.58+7.58)/2	-8.03		
		(2.55-2.38)x(7.38+7.58)/2	1.27		
		(-0.00-2.55)x(7.55+7.38)/2	-19.04		
		(-4.00--0.00)x(7.83+7.55)/2	-30.76		
		(-5.46--4.00)x(7.94+7.83)/2	-11.51		
		(-5.34--5.46)x(8.07+7.94)/2	0.96		
		(-6.41--5.34)x(8.07+8.07)/2	-8.63		
		(-13.76--6.41)x(3.17+8.07)/2	-41.31		
7 90.00	R1	(-18.98--19.14)x(1.49+1.50)/2	0.24	119.08	
		(-18.81--18.98)x(1.49+1.49)/2	0.25		
		(-18.63--18.81)x(1.48+1.49)/2	0.27		
		(-18.09--18.63)x(1.48+1.48)/2	0.80		
		(-17.59--18.09)x(1.46+1.48)/2	0.73		
		(-17.36--17.59)x(1.46+1.46)/2	0.34		
		(-17.11--17.36)x(1.47+1.46)/2	0.37		
		(-16.64--17.11)x(1.48+1.47)/2	0.69		
		(-16.20--16.64)x(1.50+1.48)/2	0.66		
		(-15.91--16.20)x(1.52+1.50)/2	0.44		
		(-15.60--15.91)x(1.52+1.52)/2	0.47		
		(-15.18--15.60)x(1.53+1.52)/2	0.64		
		(-14.80--15.18)x(1.53+1.53)/2	0.58		
		(-14.46--14.80)x(1.53+1.53)/2	0.52		
		(-14.08--14.46)x(1.53+1.53)/2	0.58		
		(-13.73--14.08)x(1.52+1.53)/2	0.53		
		(-13.41--13.73)x(1.53+1.52)/2	0.49		
		(-13.01--13.41)x(1.53+1.53)/2	0.61		
		(-12.57--13.01)x(1.53+1.53)/2	0.67		
		(-12.28--12.57)x(1.52+1.53)/2	0.44		
		(-12.02--12.28)x(1.53+1.52)/2	0.40		
		(-11.05--12.02)x(1.56+1.53)/2	1.50		
		(-10.63--11.05)x(1.58+1.56)/2	0.66		
		(-10.10--10.63)x(1.58+1.58)/2	0.84		
		(-9.54--10.10)x(1.59+1.58)/2	0.89		
		(-9.38--9.54)x(1.59+1.59)/2	0.25		
		(-9.24--9.38)x(1.59+1.59)/2	0.22		
		(-8.65--9.24)x(1.59+1.59)/2	0.94		
		(-8.02--8.65)x(1.60+1.59)/2	1.00		
		(-7.93--8.02)x(1.61+1.60)/2	0.14		
		(-7.84--7.93)x(1.61+1.61)/2	0.14		
		(-7.20--7.84)x(1.63+1.61)/2	1.04		
		(-6.50--7.20)x(1.64+1.63)/2	1.14		
		(-6.48--6.50)x(1.64+1.64)/2	0.03		
		(-6.45--6.48)x(1.64+1.64)/2	0.05		
		(-5.75--6.45)x(1.64+1.64)/2	1.15		
		(-5.06--5.75)x(1.66+1.64)/2	1.14		
		(-5.03--5.06)x(1.66+1.66)/2	0.05		
		(-4.99--5.03)x(1.66+1.66)/2	0.07		
		(-4.30--4.99)x(1.67+1.66)/2	1.15		
		(-3.67--4.30)x(1.68+1.67)/2	1.06		
		(-3.57--3.67)x(1.68+1.68)/2	0.17		
		(-3.47--3.57)x(1.68+1.68)/2	0.17		
		(-2.85--3.47)x(1.68+1.68)/2	1.04		
		(-2.27--2.85)x(1.66+1.68)/2	0.97		
		(-2.12--2.27)x(1.66+1.66)/2	0.25		
		(-1.96--2.12)x(1.66+1.66)/2	0.27		
		(-1.40--1.96)x(1.68+1.66)/2	0.94		
		(-0.88--1.40)x(1.67+1.68)/2	0.87		
		(-0.67--0.88)x(1.67+1.67)/2	0.35		
		(-0.44--0.67)x(1.68+1.67)/2	0.39		
		(0.05--0.44)x(1.70+1.68)/2	0.83		
		(0.51-0.05)x(1.70+1.70)/2	0.78		
		(0.78-0.51)x(1.69+1.70)/2	0.46		
		(1.07-0.78)x(1.70+1.69)/2	0.49		
		(1.51-1.07)x(1.71+1.70)/2	0.75		
		(1.90-1.51)x(1.73+1.71)/2	0.67		
		(2.23-1.90)x(1.73+1.73)/2	0.57		
		(2.59-2.23)x(1.72+1.73)/2	0.62		
		(2.96-2.59)x(1.69+1.72)/2	0.63		
		(3.29-2.96)x(1.69+1.69)/2	0.56		
		(3.68-3.29)x(1.70+1.69)/2	0.66		
		(4.10-3.68)x(1.69+1.70)/2	0.71		
		(4.41-4.10)x(1.70+1.69)/2	0.53		
		(4.69-4.41)x(1.70+1.70)/2	0.48		
		A RIPORTARE mq	38.34		

STERRI E RIPORTI

N. SEZIONE PROG.	FIG.	ELEMENTI DI CALCOLO	AREA ELEMENTARE mq	AREA FIGURA mq	NOTE
		RIPORTO mq	38.34		
		(5.13-4.69)x(1.71+1.70)/2	0.75		
		(5.62-5.13)x(1.72+1.71)/2	0.84		
		(5.86-5.62)x(1.72+1.72)/2	0.41		
		(6.08-5.86)x(1.73+1.72)/2	0.38		
		(6.58-6.08)x(1.72+1.73)/2	0.86		
		(7.14-6.58)x(1.70+1.72)/2	0.96		
		(7.31-7.14)x(1.69+1.70)/2	0.29		
		(7.47-7.31)x(1.69+1.69)/2	0.27		
		(8.04-7.47)x(1.68+1.69)/2	0.96		
		(8.65-8.04)x(1.67+1.68)/2	1.02		
		(8.76-8.65)x(1.67+1.67)/2	0.18		
		(8.86-8.76)x(1.67+1.67)/2	0.17		
		(9.49-8.86)x(1.68+1.67)/2	1.06		
		(10.17-9.49)x(1.67+1.68)/2	1.14		
		(10.21-10.17)x(1.67+1.67)/2	0.07		
		(10.26-10.21)x(1.67+1.67)/2	0.08		
		(10.94-10.26)x(1.68+1.67)/2	1.14		
		(11.65-10.94)x(1.70+1.68)/2	1.20		
		(11.68-11.65)x(1.70+1.70)/2	0.05		
		(13.04-11.68)x(1.70+1.70)/2	2.31		
		(13.12-13.04)x(1.70+1.70)/2	0.14		
		(13.20-13.12)x(1.70+1.70)/2	0.14		
		(13.84-13.20)x(1.68+1.70)/2	1.08		
		(14.43-13.84)x(1.68+1.68)/2	0.99		
		(14.57-14.43)x(1.68+1.68)/2	0.24		
		(14.71-14.57)x(1.67+1.68)/2	0.23		
		(15.15-14.71)x(1.67+1.67)/2	0.73		
		(14.40-15.15)x(2.17+1.67)/2	-1.44		
		(12.40-14.40)x(2.17+2.17)/2	-4.34		
		(3.40-12.40)x(8.17+2.17)/2	-46.53		
		(2.33-3.40)x(8.17+8.17)/2	-8.74		
		(2.50-2.33)x(7.97+8.17)/2	1.37		
		(-0.00-2.50)x(8.14+7.97)/2	-20.14		
		(-4.00--0.00)x(8.42+8.14)/2	-33.12		
		(-5.46--4.00)x(8.52+8.42)/2	-12.37		
		(-5.34--5.46)x(8.66+8.52)/2	1.03		
		(-6.41--5.34)x(8.66+8.66)/2	-9.27		
		(-15.41--6.41)x(2.66+8.66)/2	-50.94		
		(-17.41--15.41)x(2.66+2.66)/2	-5.32		
		(-19.14--17.41)x(1.50+2.66)/2	-3.60		
				137.38	
8 105.00	R1	(-19.26--19.50)x(1.74+1.74)/2	0.42		
		(-18.72--19.26)x(1.75+1.74)/2	0.94		
		(-18.03--18.72)x(1.78+1.75)/2	1.22		
		(-17.98--18.03)x(1.78+1.78)/2	0.09		
		(-17.92--17.98)x(1.78+1.78)/2	0.11		
		(-17.24--17.92)x(1.74+1.78)/2	1.20		
		(-16.79--17.24)x(1.74+1.74)/2	0.78		
		(-16.51--16.79)x(1.74+1.74)/2	0.49		
		(-16.08--16.51)x(1.74+1.74)/2	0.75		
		(-15.77--16.08)x(1.73+1.74)/2	0.54		
		(-15.55--15.77)x(1.72+1.73)/2	0.38		
		(-15.03--15.55)x(1.71+1.72)/2	0.89		
		(-14.32--15.03)x(1.72+1.71)/2	1.22		
		(-14.29--14.32)x(1.72+1.72)/2	0.05		
		(-14.25--14.29)x(1.72+1.72)/2	0.07		
		(-13.55--14.25)x(1.71+1.72)/2	1.20		
		(-13.08--13.55)x(1.71+1.71)/2	0.80		
		(-12.81--13.08)x(1.71+1.71)/2	0.46		
		(-12.41--12.81)x(1.69+1.71)/2	0.68		
		(-12.07--12.41)x(1.68+1.69)/2	0.57		
		(-11.84--12.07)x(1.68+1.68)/2	0.39		
		(-11.33--11.84)x(1.67+1.68)/2	0.85		
		(-10.61--11.33)x(1.65+1.67)/2	1.20		
		(-10.60--10.61)x(1.65+1.65)/2	0.02		
		(-10.58--10.60)x(1.65+1.65)/2	0.03		
		(-9.86--10.58)x(1.64+1.65)/2	1.18		
		(-9.37--9.86)x(1.64+1.64)/2	0.80		
		(-9.12--9.37)x(1.63+1.64)/2	0.41		
		(-8.74--9.12)x(1.63+1.63)/2	0.62		
		(-8.38--8.74)x(1.62+1.63)/2	0.58		
		(-8.13--8.38)x(1.61+1.62)/2	0.40		
		(-7.64--8.13)x(1.58+1.61)/2	0.78		
		(-6.91--7.64)x(1.54+1.58)/2	1.14		
		(-6.90--6.91)x(1.54+1.54)/2	0.02		
		(-6.16--6.90)x(1.55+1.54)/2	1.14		
		(-5.66--6.16)x(1.53+1.55)/2	0.77		
		(-5.43--5.66)x(1.54+1.53)/2	0.35		
		(-5.08--5.43)x(1.54+1.54)/2	0.54		
		(-4.69--5.08)x(1.54+1.54)/2	0.60		
		(-4.43--4.69)x(1.54+1.54)/2	0.40		
		(-3.95--4.43)x(1.54+1.54)/2	0.74		
		(-3.24--3.95)x(1.55+1.54)/2	1.10		
		(-3.21--3.24)x(1.55+1.55)/2	0.05		
		(-3.19--3.21)x(1.55+1.55)/2	0.03		
		(-2.47--3.19)x(1.53+1.55)/2	1.11		
		(-1.95--2.47)x(1.51+1.53)/2	0.79		
		(-1.73--1.95)x(1.48+1.51)/2	0.33		
		(-1.41--1.73)x(1.44+1.48)/2	0.47		
		(-0.99--1.41)x(1.39+1.44)/2	0.59		
		(-0.72--0.99)x(1.39+1.39)/2	0.38		
		(-0.26--0.72)x(1.37+1.39)/2	0.63		
		(0.43--0.26)x(1.24+1.37)/2	0.90		
		(0.48-0.43)x(1.23+1.24)/2	0.06		
		(0.52-0.48)x(1.23+1.23)/2	0.05		
		(0.71-0.52)x(1.24+1.23)/2	0.23		
		(1.76-0.71)x(1.32+1.24)/2	1.34		
		(1.96-1.76)x(1.34+1.32)/2	0.27		
		(2.26-1.96)x(1.37+1.34)/2	0.41		
		(2.70-2.26)x(1.37+1.37)/2	0.60		
		(2.99-2.70)x(1.41+1.37)/2	0.40		
		(3.44-2.99)x(1.39+1.41)/2	0.63		
		(4.10-3.44)x(1.42+1.39)/2	0.93		
		(4.18-4.10)x(1.42+1.42)/2	0.11		
		(4.23-4.18)x(1.42+1.42)/2	0.07		
		A RIPORTARE mq	37.30		

STERRI E RIPORTI

N. SEZIONE PROG.	FIG.	ELEMENTI DI CALCOLO	AREA ELEMENTARE mq	AREA FIGURA mq	NOTE
		RIPORTO mq	37.30		
		(4.91-4.23)x(1.42+1.42)/2	0.97		
		(5.47-4.91)x(1.42+1.42)/2	0.80		
		(5.65-5.47)x(1.42+1.42)/2	0.26		
		(5.93-5.65)x(1.43+1.42)/2	0.40		
		(6.39-5.93)x(1.44+1.43)/2	0.66		
		(6.70-6.39)x(1.45+1.44)/2	0.45		
		(7.13-6.70)x(1.46+1.45)/2	0.63		
		(7.77-7.13)x(1.49+1.46)/2	0.94		
		(7.87-7.77)x(1.49+1.49)/2	0.15		
		(7.94-7.87)x(1.50+1.49)/2	0.10		
		(8.61-7.94)x(1.48+1.50)/2	1.00		
		(9.17-8.61)x(1.48+1.48)/2	0.83		
		(9.35-9.17)x(1.47+1.48)/2	0.27		
		(9.60-9.35)x(1.48+1.47)/2	0.37		
		(10.08-9.60)x(1.50+1.48)/2	0.72		
		(10.41-10.08)x(1.50+1.50)/2	0.50		
		(10.82-10.41)x(1.52+1.50)/2	0.62		
		(11.44-10.82)x(1.53+1.52)/2	0.95		
		(11.56-11.44)x(1.54+1.53)/2	0.18		
		(11.65-11.56)x(1.54+1.54)/2	0.14		
		(12.30-11.65)x(1.54+1.54)/2	1.00		
		(12.88-12.30)x(1.56+1.54)/2	0.90		
		(13.04-12.88)x(1.56+1.56)/2	0.25		
		(13.27-13.04)x(1.56+1.56)/2	0.36		
		(14.12-13.27)x(1.57+1.56)/2	1.33		
		(15.10-14.12)x(1.61+1.57)/2	1.56		
		(15.26-15.10)x(1.62+1.61)/2	0.26		
		(15.36-15.26)x(1.62+1.62)/2	0.16		
		(15.87-15.36)x(1.63+1.62)/2	0.83		
		(14.35-15.87)x(2.64+1.63)/2	-3.25		
		(12.35-14.35)x(2.64+2.64)/2	-5.28		
		(3.35-12.35)x(8.64+2.64)/2	-50.76		
		(2.28-3.35)x(8.65+8.64)/2	-9.25		
		(2.45-2.28)x(8.44+8.65)/2	1.45		
		(-0.00-2.45)x(8.61+8.44)/2	-20.89		
		(-4.00--0.00)x(8.89+8.61)/2	-35.00		
		(-5.46--4.00)x(9.00+8.89)/2	-13.06		
		(-5.34--5.46)x(9.13+9.00)/2	1.09		
		(-6.41--5.34)x(9.13+9.13)/2	-9.77		
		(-15.41--6.41)x(3.13+9.13)/2	-55.17		
		(-17.41--15.41)x(3.13+3.13)/2	-6.26		
		(-19.50--17.41)x(1.74+3.13)/2	-5.09		
				156.35	
9 120.00	R1	(-19.86--20.64)x(1.35+1.34)/2	1.05		
		(-19.68--19.86)x(1.35+1.35)/2	0.24		
		(-19.09--19.68)x(1.34+1.35)/2	0.79		
		(-18.55--19.09)x(1.34+1.34)/2	0.72		
		(-18.32--18.55)x(1.33+1.34)/2	0.31		
		(-17.86--18.32)x(1.35+1.33)/2	0.62		
		(-17.55--17.86)x(1.36+1.35)/2	0.42		
		(-17.41--17.55)x(1.37+1.36)/2	0.19		
		(-16.78--17.41)x(1.38+1.37)/2	0.87		
		(-16.28--16.78)x(1.40+1.38)/2	0.69		
		(-16.01--16.28)x(1.42+1.40)/2	0.38		
		(-15.46--16.01)x(1.44+1.42)/2	0.79		
		(-15.24--15.46)x(1.45+1.44)/2	0.32		
		(-15.14--15.24)x(1.45+1.45)/2	0.14		
		(-14.48--15.14)x(1.43+1.45)/2	0.95		
		(-14.01--14.48)x(1.46+1.43)/2	0.68		
		(-13.71--14.01)x(1.47+1.46)/2	0.44		
		(-13.07--13.71)x(1.48+1.47)/2	0.94		
		(-12.94--13.07)x(1.48+1.48)/2	0.19		
		(-12.87--12.94)x(1.48+1.48)/2	0.10		
		(-12.17--12.87)x(1.52+1.48)/2	1.05		
		(-11.74--12.17)x(1.54+1.52)/2	0.66		
		(-11.40--11.74)x(1.56+1.54)/2	0.53		
		(-10.68--11.40)x(1.61+1.56)/2	1.14		
		(-10.63--10.68)x(1.62+1.61)/2	0.08		
		(-10.60--10.63)x(1.62+1.62)/2	0.05		
		(-10.53--10.60)x(1.62+1.62)/2	0.11		
		(-9.47--10.53)x(1.65+1.62)/2	1.73		
		(-9.09--9.47)x(1.65+1.65)/2	0.63		
		(-8.33--9.09)x(1.67+1.65)/2	1.26		
		(-8.32--8.33)x(1.67+1.67)/2	0.02		
		(-8.29--8.32)x(1.67+1.67)/2	0.05		
		(-7.55--8.29)x(1.69+1.67)/2	1.24		
		(-7.20--7.55)x(1.68+1.69)/2	0.59		
		(-6.78--7.20)x(1.68+1.68)/2	0.71		
		(-6.06--6.78)x(1.74+1.68)/2	1.23		
		(-6.01--6.06)x(1.74+1.74)/2	0.09		
		(-5.90--6.01)x(1.74+1.74)/2	0.19		
		(-5.24--5.90)x(1.73+1.74)/2	1.15		
		(-4.93--5.24)x(1.74+1.73)/2	0.54		
		(-4.47--4.93)x(1.76+1.74)/2	0.80		
		(-3.79--4.47)x(1.75+1.76)/2	1.19		
		(-3.70--3.79)x(1.75+1.75)/2	0.16		
		(-3.50--3.70)x(1.76+1.75)/2	0.35		
		(-2.93--3.50)x(1.78+1.76)/2	1.01		
		(-2.66--2.93)x(1.78+1.78)/2	0.48		
		(-2.16--2.66)x(1.77+1.78)/2	0.89		
		(-1.52--2.16)x(1.75+1.77)/2	1.13		
		(-1.39--1.52)x(1.75+1.75)/2	0.23		
		(-1.11--1.39)x(1.75+1.75)/2	0.49		
		(-0.62--1.11)x(1.76+1.75)/2	0.86		
		(-0.39--0.62)x(1.76+1.76)/2	0.40		
		(0.15--0.39)x(1.76+1.76)/2	0.95		
		(0.75-0.15)x(1.76+1.76)/2	1.06		
		(0.92-0.75)x(1.75+1.76)/2	0.30		
		(1.28-0.92)x(1.74+1.75)/2	0.63		
		(1.69-1.28)x(1.72+1.74)/2	0.71		
		(1.88-1.69)x(1.72+1.72)/2	0.33		
		(2.46-1.88)x(1.71+1.72)/2	0.99		
		(3.02-2.46)x(1.71+1.71)/2	0.96		
		(3.23-3.02)x(1.71+1.71)/2	0.36		
		(3.67-3.23)x(1.72+1.71)/2	0.75		
		A RIPORTARE mq	38.91		

STERRI E RIPORTI

N. SEZIONE PROG.	FIG.	ELEMENTI DI CALCOLO	AREA ELEMENTARE mq	AREA FIGURA mq	NOTE
		RIPORTO mq	38.91		
		(4.00-3.67)x(1.72+1.72)/2	0.57		
		(4.15-4.00)x(1.71+1.72)/2	0.26		
		(4.77-4.15)x(1.69+1.71)/2	1.05		
		(5.29-4.77)x(1.70+1.69)/2	0.88		
		(5.54-5.29)x(1.69+1.70)/2	0.42		
		(6.06-5.54)x(1.66+1.69)/2	0.87		
		(6.31-6.06)x(1.65+1.66)/2	0.41		
		(6.42-6.31)x(1.64+1.65)/2	0.18		
		(7.08-6.42)x(1.62+1.64)/2	1.08		
		(7.56-7.08)x(1.60+1.62)/2	0.77		
		(7.84-7.56)x(1.60+1.60)/2	0.45		
		(8.45-7.84)x(1.58+1.60)/2	0.97		
		(8.61-8.45)x(1.58+1.58)/2	0.25		
		(8.69-8.61)x(1.58+1.58)/2	0.13		
		(8.90-8.69)x(1.57+1.58)/2	0.33		
		(9.83-8.90)x(1.53+1.57)/2	1.44		
		(10.15-9.83)x(1.54+1.53)/2	0.49		
		(10.85-10.15)x(1.52+1.54)/2	1.07		
		(10.92-10.85)x(1.52+1.52)/2	0.11		
		(10.96-10.92)x(1.52+1.52)/2	0.06		
		(11.69-10.96)x(1.53+1.52)/2	1.11		
		(12.10-11.69)x(1.53+1.53)/2	0.63		
		(12.46-12.10)x(1.53+1.53)/2	0.55		
		(13.23-12.46)x(1.53+1.53)/2	1.18		
		(13.24-13.23)x(1.53+1.53)/2	0.02		
		(14.00-13.24)x(1.44+1.53)/2	1.13		
		(14.36-14.00)x(1.44+1.44)/2	0.52		
		(14.77-14.36)x(1.37+1.44)/2	0.58		
		(15.50-14.77)x(1.34+1.37)/2	0.99		
		(15.54-15.50)x(1.35+1.34)/2	0.05		
		(15.63-15.54)x(1.34+1.35)/2	0.12		
		(16.31-15.63)x(1.26+1.34)/2	0.88		
		(16.63-16.31)x(1.20+1.26)/2	0.39		
		(17.08-16.63)x(1.22+1.20)/2	0.54		
		(17.32-17.08)x(1.21+1.22)/2	0.29		
		(14.66-17.32)x(2.98+1.21)/2	-5.57		
		(12.66-14.66)x(2.98+2.98)/2	-5.96		
		(3.66-12.66)x(8.98+2.98)/2	-53.82		
		(2.59-3.66)x(8.99+8.98)/2	-9.61		
		(2.77-2.59)x(8.78+8.99)/2	1.60		
		(0.00-2.77)x(8.98+8.78)/2	-24.60		
		(-4.00-0.00)x(9.26+8.98)/2	-36.48		
		(-5.46--4.00)x(9.36+9.26)/2	-13.59		
		(-5.34--5.46)x(9.50+9.36)/2	1.13		
		(-6.41--5.34)x(9.49+9.50)/2	-10.16		
		(-15.41--6.41)x(3.49+9.49)/2	-58.41		
		(-17.41--15.41)x(3.49+3.49)/2	-6.98		
		(-20.64--17.41)x(1.34+3.49)/2	-7.80		
10 135.00	R1	(-19.90--20.36)x(1.77+1.77)/2	0.81	170.57	
		(-19.37--19.90)x(1.78+1.77)/2	0.94		
		(-19.08--19.37)x(1.76+1.78)/2	0.51		
		(-18.30--19.08)x(1.74+1.76)/2	1.36		
		(-18.25--18.30)x(1.74+1.74)/2	0.09		
		(-18.11--18.25)x(1.73+1.74)/2	0.24		
		(-17.43--18.11)x(1.70+1.73)/2	1.17		
		(-17.22--17.43)x(1.70+1.70)/2	0.36		
		(-16.61--17.22)x(1.68+1.70)/2	1.03		
		(-16.15--16.61)x(1.67+1.68)/2	0.77		
		(-15.78--16.15)x(1.68+1.67)/2	0.62		
		(-15.08--15.78)x(1.67+1.68)/2	1.17		
		(-14.96--15.08)x(1.67+1.67)/2	0.20		
		(-14.56--14.96)x(1.67+1.67)/2	0.67		
		(-14.14--14.56)x(1.67+1.67)/2	0.70		
		(-14.01--14.14)x(1.66+1.67)/2	0.22		
		(-13.32--14.01)x(1.60+1.66)/2	1.12		
		(-12.94--13.32)x(1.59+1.60)/2	0.61		
		(-12.49--12.94)x(1.59+1.59)/2	0.72		
		(-11.87--12.49)x(1.59+1.59)/2	0.99		
		(-11.67--11.87)x(1.59+1.59)/2	0.32		
		(-11.01--11.67)x(1.58+1.59)/2	1.05		
		(-10.85--11.01)x(1.58+1.58)/2	0.25		
		(-10.80--10.85)x(1.58+1.58)/2	0.08		
		(-10.03--10.80)x(1.59+1.58)/2	1.22		
		(-9.73--10.03)x(1.58+1.59)/2	0.48		
		(-9.20--9.73)x(1.58+1.58)/2	0.84		
		(-8.66--9.20)x(1.59+1.58)/2	0.86		
		(-8.38--8.66)x(1.53+1.59)/2	0.44		
		(-7.59--8.38)x(1.40+1.53)/2	1.16		
		(-7.56--7.59)x(1.40+1.40)/2	0.04		
		(-7.46--7.56)x(1.38+1.40)/2	0.14		
		(-6.74--7.46)x(1.23+1.38)/2	0.94		
		(-6.51--6.74)x(1.20+1.23)/2	0.28		
		(-5.91--6.51)x(1.27+1.20)/2	0.74		
		(-5.44--5.91)x(1.30+1.27)/2	0.60		
		(-5.09--5.44)x(1.35+1.30)/2	0.46		
		(-4.37--5.09)x(1.43+1.35)/2	1.00		
		(-3.92--4.37)x(1.47+1.43)/2	0.65		
		(-3.30--3.92)x(1.53+1.47)/2	0.93		
		(-2.62--3.30)x(1.54+1.53)/2	1.04		
		(-2.23--2.62)x(1.56+1.54)/2	0.60		
		(-1.80--2.23)x(1.59+1.56)/2	0.68		
		(-1.16--1.80)x(1.61+1.59)/2	1.02		
		(-0.98--1.16)x(1.62+1.61)/2	0.29		
		(-0.37--0.98)x(1.66+1.62)/2	1.00		
		(-0.15--0.37)x(1.68+1.66)/2	0.37		
		(-0.09--0.15)x(1.68+1.68)/2	0.10		
		(0.67--0.09)x(1.69+1.68)/2	1.28		
		(0.98-0.67)x(1.70+1.69)/2	0.53		
		(1.49-0.98)x(1.75+1.70)/2	0.88		
		(2.05-1.49)x(1.77+1.75)/2	0.99		
		(2.31-2.05)x(1.78+1.77)/2	0.46		
		(3.12-2.31)x(1.81+1.78)/2	1.45		
		(3.14-3.12)x(1.81+1.81)/2	0.04		
		(3.18-3.14)x(1.81+1.81)/2	0.07		
		A RIPORTARE mq	37.58		

STERRI E RIPORTI

N. SEZIONE PROG.	FIG.	ELEMENTI DI CALCOLO	AREA ELEMENTARE mq	AREA FIGURA mq	NOTE
		RIPORTO mq	37.58		
		(3.96-3.18)x(1.82+1.81)/2	1.42		
		(4.19-3.96)x(1.83+1.82)/2	0.42		
		(4.78-4.19)x(1.84+1.83)/2	1.08		
		(5.27-4.78)x(1.84+1.84)/2	0.90		
		(5.61-5.27)x(1.84+1.84)/2	0.63		
		(6.34-5.61)x(1.87+1.84)/2	1.35		
		(6.43-6.34)x(1.86+1.87)/2	0.17		
		(6.73-6.43)x(1.86+1.86)/2	0.56		
		(7.25-6.73)x(1.83+1.86)/2	0.96		
		(7.41-7.25)x(1.83+1.83)/2	0.29		
		(8.07-7.41)x(1.79+1.83)/2	1.19		
		(8.48-8.07)x(1.79+1.79)/2	0.73		
		(8.90-8.48)x(1.79+1.79)/2	0.75		
		(9.55-8.90)x(1.80+1.79)/2	1.17		
		(9.72-9.55)x(1.80+1.80)/2	0.31		
		(10.28-9.72)x(1.78+1.80)/2	1.00		
		(10.54-10.28)x(1.77+1.78)/2	0.46		
		(10.62-10.54)x(1.76+1.77)/2	0.14		
		(11.36-10.62)x(1.77+1.76)/2	1.31		
		(11.69-11.36)x(1.76+1.77)/2	0.58		
		(12.19-11.69)x(1.75+1.76)/2	0.88		
		(12.76-12.19)x(1.76+1.75)/2	1.00		
		(13.01-12.76)x(1.74+1.76)/2	0.44		
		(13.83-13.01)x(1.71+1.74)/2	1.41		
		(14.90-13.83)x(1.65+1.71)/2	1.80		
		(15.48-14.90)x(1.65+1.65)/2	0.96		
		(15.97-15.48)x(1.66+1.65)/2	0.81		
		(16.30-15.97)x(1.64+1.66)/2	0.54		
		(17.05-16.30)x(1.62+1.64)/2	1.22		
		(17.12-17.05)x(1.61+1.62)/2	0.11		
		(17.33-17.12)x(1.60+1.61)/2	0.34		
		(14.91-17.33)x(3.22+1.60)/2	-5.83		
		(12.91-14.91)x(3.22+3.22)/2	-6.44		
		(3.91-12.91)x(9.22+3.22)/2	-55.98		
		(2.84-3.91)x(9.22+9.22)/2	-9.87		
		(3.01-2.84)x(9.01+9.22)/2	1.55		
		(0.00-3.01)x(9.23+9.01)/2	-27.45		
		(-4.00-0.00)x(9.51+9.23)/2	-37.48		
		(-5.46--4.00)x(9.61+9.51)/2	-13.96		
		(-5.34--5.46)x(9.74+9.61)/2	1.16		
		(-6.41--5.34)x(9.74+9.74)/2	-10.42		
		(-15.41--6.41)x(3.74+9.74)/2	-60.66		
		(-17.41--15.41)x(3.74+3.74)/2	-7.48		
		(-20.36--17.41)x(1.77+3.74)/2	-8.13		
				178.48	
11 150.00	R1	(-6.41--5.53)x(9.85+9.86)/2	-8.67		
		(-15.41--6.41)x(3.85+9.85)/2	-61.65		
		(-17.41--15.41)x(3.85+3.85)/2	-7.70		
		(-20.99--17.41)x(1.46+3.85)/2	-9.50		
		(-19.60--20.99)x(1.52+1.46)/2	2.07		
		(-19.24--19.60)x(1.54+1.52)/2	0.55		
		(-18.57--19.24)x(1.57+1.54)/2	1.04		
		(-17.67--18.57)x(1.58+1.57)/2	1.42		
		(-17.53--17.67)x(1.58+1.58)/2	0.22		
		(-17.43--17.53)x(1.58+1.58)/2	0.16		
		(-16.73--17.43)x(1.56+1.58)/2	1.10		
		(-16.52--16.73)x(1.55+1.56)/2	0.33		
		(-16.49--16.52)x(1.55+1.55)/2	0.05		
		(-15.62--16.49)x(1.58+1.55)/2	1.36		
		(-15.46--15.62)x(1.59+1.58)/2	0.25		
		(-14.72--15.46)x(1.65+1.59)/2	1.20		
		(-14.42--14.72)x(1.67+1.65)/2	0.50		
		(-13.81--14.42)x(1.69+1.67)/2	1.02		
		(-13.39--13.81)x(1.69+1.69)/2	0.71		
		(-12.91--13.39)x(1.71+1.69)/2	0.82		
		(-12.35--12.91)x(1.73+1.71)/2	0.96		
		(-12.01--12.35)x(1.74+1.73)/2	0.59		
		(-11.31--12.01)x(1.74+1.74)/2	1.22		
		(-11.10--11.31)x(1.74+1.74)/2	0.37		
		(-10.28--11.10)x(1.75+1.74)/2	1.43		
		(-10.20--10.28)x(1.75+1.75)/2	0.14		
		(-9.68--10.20)x(1.78+1.75)/2	0.92		
		(-9.30--9.68)x(1.79+1.78)/2	0.68		
		(-9.24--9.30)x(1.80+1.79)/2	0.11		
		(-8.39--9.24)x(1.81+1.80)/2	1.53		
		(-8.20--8.39)x(1.81+1.81)/2	0.34		
		(-7.49--8.20)x(1.77+1.81)/2	1.27		
		(-7.17--7.49)x(1.76+1.77)/2	0.56		
		(-6.59--7.17)x(1.74+1.76)/2	1.02		
		(-6.13--6.59)x(1.72+1.74)/2	0.80		
		(-5.68--6.13)x(1.73+1.72)/2	0.78		
		(-5.53--5.68)x(1.73+1.73)/2	0.26		
				61.74	
11 150.00	R2	(-5.46--4.41)x(9.72+9.65)/2	-10.17		
		(-5.34--5.46)x(9.86+9.72)/2	1.17		
		(-5.53--5.34)x(9.86+9.86)/2	-1.87		
		(-5.10--5.53)x(1.73+1.73)/2	0.74		
		(-4.78--5.10)x(1.72+1.73)/2	0.55		
		(-4.41--4.78)x(1.72+1.72)/2	0.64		
				8.94	
11 150.00	R3	(-4.06--4.41)x(1.71+1.72)/2	0.60		
		(-3.88--4.06)x(1.70+1.71)/2	0.31		
		(-3.02--3.88)x(1.67+1.70)/2	1.45		
		(-2.97--3.02)x(1.67+1.67)/2	0.08		
		(-2.63--2.97)x(1.66+1.67)/2	0.57		
		(-2.07--2.63)x(1.65+1.66)/2	0.93		
		(-1.99--2.07)x(1.65+1.65)/2	0.13		
		(-1.17--1.99)x(1.65+1.65)/2	1.35		
		(-0.95--1.17)x(1.66+1.65)/2	0.36		
		(-0.66--0.95)x(1.65+1.66)/2	0.48		
		(0.09--0.66)x(1.66+1.65)/2	1.24		
		(0.64-0.09)x(1.64+1.66)/2	0.91		
		(1.12-0.64)x(1.59+1.64)/2	0.78		
		(1.55-1.12)x(1.53+1.59)/2	0.67		
		(2.16-1.55)x(1.41+1.53)/2	0.90		
		A RIPORTARE mq	10.76		

STERRI E RIPORTI

N. SEZIONE PROG.	FIG.	ELEMENTI DI CALCOLO	AREA ELEMENTARE mq	AREA FIGURA mq	NOTE
		RIPORTO mq	10.76		
		(2.45-2.16)x(1.41+1.41)/2	0.41		
		(3.19-2.45)x(1.36+1.41)/2	1.02		
		(3.35-3.19)x(1.38+1.36)/2	0.22		
		(4.23-3.35)x(1.43+1.38)/2	1.24		
		(4.26-4.23)x(1.43+1.43)/2	0.04		
		(4.42-4.26)x(1.44+1.43)/2	0.23		
		(5.16-4.42)x(1.52+1.44)/2	1.10		
		(5.27-5.16)x(1.54+1.52)/2	0.17		
		(6.06-5.27)x(1.67+1.54)/2	1.27		
		(6.30-6.06)x(1.70+1.67)/2	0.40		
		(6.97-6.30)x(1.73+1.70)/2	1.15		
		(7.34-6.97)x(1.73+1.73)/2	0.64		
		(7.87-7.34)x(1.75+1.73)/2	0.92		
		(8.38-7.87)x(1.76+1.75)/2	0.90		
		(8.77-8.38)x(1.76+1.76)/2	0.69		
		(9.41-8.77)x(1.78+1.76)/2	1.13		
		(9.68-9.41)x(1.79+1.78)/2	0.48		
		(10.45-9.68)x(1.80+1.79)/2	1.38		
		(10.58-10.45)x(1.81+1.80)/2	0.23		
		(11.47-10.58)x(1.81+1.81)/2	1.61		
		(11.48-11.47)x(1.81+1.81)/2	0.02		
		(11.49-11.48)x(1.81+1.81)/2	0.02		
		(12.39-11.49)x(1.83+1.81)/2	1.64		
		(12.52-12.39)x(1.84+1.83)/2	0.24		
		(13.29-12.52)x(1.88+1.84)/2	1.43		
		(13.56-13.29)x(1.89+1.88)/2	0.51		
		(14.19-13.56)x(1.88+1.89)/2	1.19		
		(14.59-14.19)x(1.89+1.88)/2	0.75		
		(15.10-14.59)x(1.84+1.89)/2	0.95		
		(15.63-15.10)x(1.82+1.84)/2	0.97		
		(16.00-15.63)x(1.83+1.82)/2	0.68		
		(16.67-16.00)x(1.80+1.83)/2	1.22		
		(14.33-16.67)x(3.40+1.80)/2	-6.08		
		(12.33-14.33)x(3.40+3.40)/2	-6.80		
		(3.33-12.33)x(9.40+3.40)/2	-57.60		
		(2.26-3.33)x(9.41+9.40)/2	-10.06		
		(2.43-2.26)x(9.20+9.41)/2	1.58		
		(0.00-2.43)x(9.36+9.20)/2	-22.55		
		(-4.00-0.00)x(9.62+9.36)/2	-37.96		
		(-4.41--4.00)x(9.65+9.62)/2	-3.95		
				107.81	
12 165.00	R1	(-19.38--20.35)x(1.87+1.84)/2	1.80		
		(-19.13--19.38)x(1.87+1.87)/2	0.47		
		(-18.39--19.13)x(1.84+1.87)/2	1.37		
		(-18.10--18.39)x(1.82+1.84)/2	0.53		
		(-17.40--18.10)x(1.70+1.82)/2	1.23		
		(-17.07--17.40)x(1.66+1.70)/2	0.55		
		(-16.72--17.07)x(1.63+1.66)/2	0.58		
		(-16.05--16.72)x(1.56+1.63)/2	1.07		
		(-15.42--16.05)x(1.58+1.56)/2	0.99		
		(-15.02--15.42)x(1.60+1.58)/2	0.64		
		(-14.43--15.02)x(1.63+1.60)/2	0.95		
		(-14.00--14.43)x(1.64+1.63)/2	0.70		
		(-13.44--14.00)x(1.66+1.64)/2	0.92		
		(-12.97--13.44)x(1.66+1.66)/2	0.78		
		(-12.45--12.97)x(1.68+1.66)/2	0.87		
		(-11.95--12.45)x(1.66+1.68)/2	0.83		
		(-11.46--11.95)x(1.66+1.66)/2	0.81		
		(-10.92--11.46)x(1.66+1.66)/2	0.90		
		(-10.47--10.92)x(1.67+1.66)/2	0.75		
		(-9.89--10.47)x(1.68+1.67)/2	0.97		
		(-9.48--9.89)x(1.66+1.68)/2	0.68		
		(-8.87--9.48)x(1.65+1.66)/2	1.01		
		(-8.49--8.87)x(1.66+1.65)/2	0.63		
		(-7.84--8.49)x(1.69+1.66)/2	1.09		
		(-7.50--7.84)x(1.71+1.69)/2	0.58		
		(-6.82--7.50)x(1.75+1.71)/2	1.18		
		(-6.52--6.82)x(1.77+1.75)/2	0.53		
		(-5.79--6.52)x(1.79+1.77)/2	1.30		
		(-5.53--5.79)x(1.81+1.79)/2	0.47		
		(-5.45--5.53)x(9.31+1.81)/2	0.44		
		(-5.85--5.45)x(9.31+9.31)/2	-3.72		
		(-6.41--5.85)x(9.80+9.81)/2	-5.49		
		(-15.41--6.41)x(3.80+9.80)/2	-61.20		
		(-17.41--15.41)x(3.80+3.80)/2	-7.60		
		(-20.35--17.41)x(1.84+3.80)/2	-8.29		
				60.68	
12 165.00	R2	(-5.00--4.40)x(9.64+9.61)/2	-5.77		
		(-4.41--5.00)x(1.82+9.61)/2	3.37		
		(-4.40--4.41)x(1.82+1.82)/2	0.02		
				2.38	
12 165.00	R3	(-3.74--4.40)x(1.85+1.82)/2	1.21		
		(-3.55--3.74)x(1.85+1.85)/2	0.35		
		(-2.71--3.55)x(1.87+1.85)/2	1.56		
		(-2.56--2.71)x(1.87+1.87)/2	0.28		
		(-1.69--2.56)x(1.84+1.87)/2	1.61		
		(-1.57--1.69)x(1.83+1.84)/2	0.22		
		(-0.66--1.57)x(1.81+1.83)/2	1.66		
		(-0.58--0.66)x(1.80+1.81)/2	0.14		
		(0.37--0.58)x(1.78+1.80)/2	1.70		
		(1.38-0.37)x(1.84+1.78)/2	1.83		
		(1.39-1.38)x(1.84+1.84)/2	0.02		
		(1.40-1.39)x(1.84+1.84)/2	0.02		
		(1.69-1.40)x(1.84+1.84)/2	0.53		
		(2.39-1.69)x(1.84+1.84)/2	1.29		
		(2.42-2.39)x(1.84+1.84)/2	0.06		
		(3.38-2.42)x(1.83+1.84)/2	1.76		
		(3.44-3.38)x(1.83+1.83)/2	0.11		
		(4.37-3.44)x(1.82+1.83)/2	1.70		
		(4.47-4.37)x(1.82+1.82)/2	0.18		
		(5.36-4.47)x(1.83+1.82)/2	1.62		
		(5.50-5.36)x(1.83+1.83)/2	0.26		
		(6.35-5.50)x(1.79+1.83)/2	1.54		
		(6.52-6.35)x(1.78+1.79)/2	0.30		
		(7.34-6.52)x(1.72+1.78)/2	1.44		
		A RIPORTARE mq	21.39		

STERRI E RIPORTI

N. SEZIONE PROG.	FIG.	ELEMENTI DI CALCOLO	AREA ELEMENTARE mq	AREA FIGURA mq	NOTE
		RIPORTO mq	21.39		
		(7.55-7.34)x(1.71+1.72)/2	0.36		
		(8.33-7.55)x(1.62+1.71)/2	1.30		
		(8.57-8.33)x(1.60+1.62)/2	0.39		
		(9.32-8.57)x(1.60+1.60)/2	1.20		
		(9.60-9.32)x(1.59+1.60)/2	0.45		
		(10.31-9.60)x(1.67+1.59)/2	1.16		
		(10.63-10.31)x(1.70+1.67)/2	0.54		
		(11.30-10.63)x(1.75+1.70)/2	1.16		
		(11.65-11.30)x(1.80+1.75)/2	0.62		
		(12.29-11.65)x(1.80+1.80)/2	1.15		
		(12.68-12.29)x(1.81+1.80)/2	0.70		
		(13.28-12.68)x(1.81+1.81)/2	1.09		
		(13.70-13.28)x(1.81+1.81)/2	0.76		
		(14.27-13.70)x(1.82+1.81)/2	1.03		
		(14.73-14.27)x(1.84+1.82)/2	0.84		
		(15.26-14.73)x(1.83+1.84)/2	0.97		
		(15.76-15.26)x(1.83+1.83)/2	0.92		
		(16.25-15.76)x(1.86+1.83)/2	0.90		
		(13.91-16.25)x(3.48+1.86)/2	-6.25		
		(11.91-13.91)x(3.48+3.48)/2	-6.96		
		(2.91-11.91)x(9.48+3.48)/2	-58.32		
		(1.84-2.91)x(9.48+9.48)/2	-10.14		
		(2.00-1.84)x(9.29+9.48)/2	1.50		
		(0.00-2.00)x(9.39+9.29)/2	-18.68		
		(-4.00-0.00)x(9.59+9.39)/2	-37.96		
		(-4.40--4.00)x(9.61+9.59)/2	-3.84		
				103.72	
TR 172.62	R1	(-3.98--4.40)x(1.76+1.74)/2	0.74		
		(-3.61--3.98)x(1.76+1.76)/2	0.65		
		(-2.96--3.61)x(1.81+1.76)/2	1.16		
		(-2.58--2.96)x(1.81+1.81)/2	0.69		
		(-1.93--2.58)x(1.79+1.81)/2	1.17		
		(-1.56--1.93)x(1.81+1.79)/2	0.67		
		(-0.91--1.56)x(1.83+1.81)/2	1.18		
		(-0.53--0.91)x(1.86+1.83)/2	0.70		
		(0.12--0.53)x(1.85+1.86)/2	1.21		
		(0.50-0.12)x(1.85+1.85)/2	0.70		
		(0.87-0.50)x(1.83+1.85)/2	0.68		
		(1.52-0.87)x(1.83+1.83)/2	1.19		
		(2.17-1.52)x(1.87+1.83)/2	1.20		
		(2.55-2.17)x(1.88+1.87)/2	0.71		
		(3.20-2.55)x(1.95+1.88)/2	1.24		
		(3.57-3.20)x(2.02+1.95)/2	0.73		
		(4.22-3.57)x(2.09+2.02)/2	1.34		
		(4.60-4.22)x(2.12+2.09)/2	0.80		
		(5.25-4.60)x(2.03+2.12)/2	1.35		
		(5.62-5.25)x(1.98+2.03)/2	0.74		
		(6.27-5.62)x(1.91+1.98)/2	1.26		
		(6.65-6.27)x(1.85+1.91)/2	0.71		
		(7.30-6.65)x(1.85+1.85)/2	1.20		
		(7.67-7.30)x(1.84+1.85)/2	0.68		
		(8.33-7.67)x(1.82+1.84)/2	1.21		
		(8.70-8.33)x(1.80+1.82)/2	0.67		
		(9.35-8.70)x(1.79+1.80)/2	1.17		
		(9.72-9.35)x(1.79+1.79)/2	0.66		
		(10.38-9.72)x(1.82+1.79)/2	1.19		
		(10.75-10.38)x(1.82+1.82)/2	0.67		
		(11.40-10.75)x(1.83+1.82)/2	1.19		
		(11.77-11.40)x(1.85+1.83)/2	0.68		
		(12.43-11.77)x(1.86+1.85)/2	1.22		
		(12.80-12.43)x(1.89+1.86)/2	0.69		
		(13.46-12.80)x(1.93+1.89)/2	1.26		
		(13.82-13.46)x(1.94+1.93)/2	0.70		
		(14.48-13.82)x(1.95+1.94)/2	1.28		
		(14.85-14.48)x(1.93+1.95)/2	0.72		
		(15.51-14.85)x(1.91+1.93)/2	1.27		
		(15.87-15.51)x(1.89+1.91)/2	0.68		
		(16.27-15.87)x(1.88+1.89)/2	0.75		
		(13.91-16.27)x(3.46+1.88)/2	-6.30		
		(11.91-13.91)x(3.46+3.46)/2	-6.92		
		(2.91-11.91)x(9.46+3.46)/2	-58.14		
		(1.84-2.91)x(9.46+9.46)/2	-10.12		
		(2.00-1.84)x(9.27+9.46)/2	1.50		
		(0.00-2.00)x(9.36+9.27)/2	-18.63		
		(-4.00-0.00)x(9.53+9.36)/2	-37.78		
		(-5.00--4.00)x(9.57+9.53)/2	-9.55		
		(-4.40--5.00)x(1.74+9.54)/2	3.38		
				103.85	
13 180.00	R1	(-3.71--4.40)x(1.77+1.76)/2	1.22		
		(-3.35--3.71)x(1.78+1.77)/2	0.64		
		(-2.68--3.35)x(1.81+1.78)/2	1.20		
		(-2.30--2.68)x(1.80+1.81)/2	0.69		
		(-1.66--2.30)x(1.78+1.80)/2	1.15		
		(-1.24--1.66)x(1.77+1.78)/2	0.75		
		(-0.63--1.24)x(1.76+1.77)/2	1.08		
		(-0.19--0.63)x(1.75+1.76)/2	0.77		
		(0.39--0.19)x(1.76+1.75)/2	1.02		
		(0.95-0.39)x(1.79+1.76)/2	0.99		
		(1.42-0.95)x(1.82+1.79)/2	0.85		
		(1.91-1.42)x(1.83+1.82)/2	0.89		
		(2.45-1.91)x(1.80+1.83)/2	0.98		
		(2.96-2.45)x(1.81+1.80)/2	0.92		
		(3.47-2.96)x(1.81+1.81)/2	0.92		
		(4.01-3.47)x(1.78+1.81)/2	0.97		
		(4.50-4.01)x(1.77+1.78)/2	0.87		
		(5.07-4.50)x(1.77+1.77)/2	1.01		
		(5.52-5.07)x(1.77+1.77)/2	0.80		
		(6.12-5.52)x(1.78+1.77)/2	1.07		
		(6.55-6.12)x(1.78+1.78)/2	0.77		
		(7.17-6.55)x(1.77+1.78)/2	1.10		
		(7.57-7.17)x(1.76+1.77)/2	0.71		
		(8.22-7.57)x(1.79+1.76)/2	1.15		
		(8.60-8.22)x(1.80+1.79)/2	0.68		
		(9.27-8.60)x(1.79+1.80)/2	1.20		
		(9.62-9.27)x(1.79+1.79)/2	0.63		
		A RIPORTARE mq	25.03		

STERRI E RIPORTI

N. SEZIONE PROG.	FIG.	ELEMENTI DI CALCOLO	AREA ELEMENTARE mq	AREA FIGURA mq	NOTE
		RIPORTO mq	25.03		
		(10.32-9.62)x(1.81+1.79)/2	1.26		
		(10.65-10.32)x(1.82+1.81)/2	0.60		
		(11.38-10.65)x(1.80+1.82)/2	1.32		
		(11.68-11.38)x(1.80+1.80)/2	0.54		
		(12.43-11.68)x(1.80+1.80)/2	1.35		
		(12.70-12.43)x(1.80+1.80)/2	0.49		
		(13.48-12.70)x(1.80+1.80)/2	1.40		
		(13.73-13.48)x(1.79+1.80)/2	0.45		
		(14.53-13.73)x(1.79+1.79)/2	1.43		
		(14.75-14.53)x(1.79+1.79)/2	0.39		
		(15.58-14.75)x(1.80+1.79)/2	1.49		
		(15.78-15.58)x(1.80+1.80)/2	0.36		
		(16.32-15.78)x(1.80+1.80)/2	0.97		
		(13.91-16.32)x(3.41+1.80)/2	-6.28		
		(11.91-13.91)x(3.41+3.41)/2	-6.82		
		(2.91-11.91)x(9.41+3.41)/2	-57.69		
		(1.84-2.91)x(9.41+9.41)/2	-10.07		
		(2.00-1.84)x(9.23+9.41)/2	1.49		
		(0.00-2.00)x(9.30+9.23)/2	-18.53		
		(-4.00-0.00)x(9.44+9.30)/2	-37.48		
		(-5.00--4.00)x(9.48+9.44)/2	-9.46		
		(-4.40--5.00)x(1.76+9.45)/2	3.36		
				104.40	
14 195.00	R1	(-4.24--4.42)x(1.65+1.65)/2	0.30		
		(-3.55--4.24)x(1.61+1.65)/2	1.12		
		(-3.22--3.55)x(1.60+1.61)/2	0.53		
		(-2.48--3.22)x(1.64+1.60)/2	1.20		
		(-2.19--2.48)x(1.65+1.64)/2	0.48		
		(-1.42--2.19)x(1.68+1.65)/2	1.28		
		(-1.17--1.42)x(1.68+1.68)/2	0.42		
		(-0.35--1.17)x(1.66+1.68)/2	1.37		
		(-0.14--0.35)x(1.67+1.66)/2	0.35		
		(0.05--0.14)x(1.67+1.67)/2	0.32		
		(0.89-0.05)x(1.73+1.67)/2	1.43		
		(1.79-0.89)x(1.75+1.73)/2	1.57		
		(1.91-1.79)x(1.75+1.75)/2	0.21		
		(2.86-1.91)x(1.75+1.75)/2	1.66		
		(2.94-2.86)x(1.75+1.75)/2	0.14		
		(3.93-2.94)x(1.75+1.75)/2	1.73		
		(3.96-3.93)x(1.75+1.75)/2	0.05		
		(4.90-3.96)x(1.79+1.75)/2	1.66		
		(4.99-4.90)x(1.80+1.79)/2	0.16		
		(6.02-4.99)x(1.75+1.80)/2	1.83		
		(6.06-6.02)x(1.75+1.75)/2	0.07		
		(7.04-6.06)x(1.84+1.75)/2	1.76		
		(7.13-7.04)x(1.84+1.84)/2	0.17		
		(8.07-7.13)x(1.82+1.84)/2	1.72		
		(8.20-8.07)x(1.82+1.82)/2	0.24		
		(9.09-8.20)x(1.79+1.82)/2	1.61		
		(9.27-9.09)x(1.79+1.79)/2	0.32		
		(10.12-9.27)x(1.85+1.79)/2	1.55		
		(10.34-10.12)x(1.86+1.85)/2	0.41		
		(11.15-10.34)x(1.88+1.86)/2	1.51		
		(11.40-11.15)x(1.88+1.88)/2	0.47		
		(12.17-11.40)x(1.89+1.88)/2	1.45		
		(12.47-12.17)x(1.90+1.89)/2	0.57		
		(13.20-12.47)x(1.89+1.90)/2	1.38		
		(13.54-13.20)x(1.89+1.89)/2	0.64		
		(14.23-13.54)x(1.88+1.89)/2	1.30		
		(14.61-14.23)x(1.88+1.88)/2	0.71		
		(15.25-14.61)x(1.87+1.88)/2	1.20		
		(15.68-15.25)x(1.88+1.87)/2	0.81		
		(15.91-15.68)x(1.89+1.88)/2	0.43		
		(13.91-15.91)x(3.23+1.89)/2	-5.12		
		(11.91-13.91)x(3.23+3.23)/2	-6.46		
		(2.91-11.91)x(9.23+3.23)/2	-56.07		
		(1.84-2.91)x(9.23+9.23)/2	-9.88		
		(1.99-1.84)x(9.05+9.23)/2	1.37		
		(0.00-1.99)x(9.10+9.05)/2	-18.06		
		(-4.00-0.00)x(9.20+9.10)/2	-36.60		
		(-5.00--4.00)x(9.22+9.20)/2	-9.21		
		(-4.42--5.00)x(1.65+9.19)/2	3.14		
				100.76	
15 210.00	R1	(-3.81--4.43)x(1.68+1.68)/2	1.04		
		(-3.76--3.81)x(1.68+1.68)/2	0.08		
		(-2.78--3.76)x(1.64+1.68)/2	1.63		
		(-2.69--2.78)x(1.63+1.64)/2	0.15		
		(-1.76--2.69)x(1.46+1.63)/2	1.44		
		(-1.62--1.76)x(1.44+1.46)/2	0.20		
		(-0.73--1.62)x(1.34+1.44)/2	1.24		
		(0.09--0.73)x(1.43+1.34)/2	1.14		
		(0.29-0.09)x(1.47+1.43)/2	0.29		
		(0.51-0.29)x(1.51+1.47)/2	0.33		
		(1.32-0.51)x(1.65+1.51)/2	1.28		
		(1.58-1.32)x(1.65+1.65)/2	0.43		
		(2.35-1.58)x(1.70+1.65)/2	1.29		
		(2.65-2.35)x(1.70+1.70)/2	0.51		
		(3.37-2.65)x(1.70+1.70)/2	1.22		
		(3.72-3.37)x(1.71+1.70)/2	0.60		
		(4.40-3.72)x(1.70+1.71)/2	1.16		
		(4.79-4.40)x(1.69+1.70)/2	0.66		
		(5.42-4.79)x(1.70+1.69)/2	1.07		
		(5.85-5.42)x(1.73+1.70)/2	0.74		
		(6.45-5.85)x(1.74+1.73)/2	1.04		
		(6.92-6.45)x(1.75+1.74)/2	0.82		
		(7.48-6.92)x(1.77+1.75)/2	0.99		
		(7.99-7.48)x(1.76+1.77)/2	0.90		
		(8.50-7.99)x(1.75+1.76)/2	0.90		
		(9.06-8.50)x(1.80+1.75)/2	0.99		
		(9.53-9.06)x(1.81+1.80)/2	0.85		
		(10.13-9.53)x(1.81+1.81)/2	1.09		
		(10.56-10.13)x(1.81+1.81)/2	0.78		
		(11.19-10.56)x(1.81+1.81)/2	1.14		
		(11.58-11.19)x(1.81+1.81)/2	0.71		
		(12.26-11.58)x(1.83+1.81)/2	1.24		
		A RIPORTARE mq	27.95		

STERRI E RIPORTI

N. SEZIONE PROG.	FIG.	ELEMENTI DI CALCOLO	AREA ELEMENTARE mq	AREA FIGURA mq	NOTE
		RIPORTO mq	27.95		
		(12.61-12.26)x(1.84+1.83)/2	0.64		
		(13.33-12.61)x(1.91+1.84)/2	1.35		
		(13.63-13.33)x(1.91+1.91)/2	0.57		
		(14.40-13.63)x(1.90+1.91)/2	1.47		
		(14.66-14.40)x(1.91+1.90)/2	0.50		
		(15.42-14.66)x(1.91+1.91)/2	1.45		
		(13.91-15.42)x(2.91+1.91)/2	-3.64		
		(11.91-13.91)x(2.91+2.91)/2	-5.82		
		(2.91-11.91)x(8.91+2.91)/2	-53.19		
		(1.84-2.91)x(8.92+8.91)/2	-9.54		
		(1.99-1.84)x(8.73+8.92)/2	1.32		
		(0.00-1.99)x(8.78+8.73)/2	-17.42		
		(-4.00-0.00)x(8.88+8.78)/2	-35.32		
		(-5.00--4.00)x(8.91+8.88)/2	-8.89		
		(-4.43--5.00)x(1.68+8.88)/2	3.01		
				95.56	
16 225.00	R1	(-5.04--5.43)x(1.87+1.88)/2	0.73		
		(-4.40--5.04)x(1.91+1.87)/2	1.21		
		(-3.97--4.40)x(1.91+1.91)/2	0.82		
		(-3.38--3.97)x(1.88+1.91)/2	1.12		
		(-2.90--3.38)x(1.82+1.88)/2	0.89		
		(-2.35--2.90)x(1.80+1.82)/2	1.00		
		(-1.83--2.35)x(1.78+1.80)/2	0.93		
		(-1.32--1.83)x(1.76+1.78)/2	0.90		
		(-0.85--1.32)x(1.73+1.76)/2	0.82		
		(-0.30--0.85)x(1.71+1.73)/2	0.95		
		(0.30--0.30)x(1.69+1.71)/2	1.02		
		(0.73-0.30)x(1.65+1.69)/2	0.72		
		(1.37-0.73)x(1.64+1.65)/2	1.05		
		(1.75-1.37)x(1.65+1.64)/2	0.63		
		(2.44-1.75)x(1.60+1.65)/2	1.12		
		(2.78-2.44)x(1.61+1.60)/2	0.55		
		(3.51-2.78)x(1.65+1.61)/2	1.19		
		(3.81-3.51)x(1.63+1.65)/2	0.49		
		(4.58-3.81)x(1.64+1.63)/2	1.26		
		(4.83-4.58)x(1.64+1.64)/2	0.41		
		(5.64-4.83)x(1.64+1.64)/2	1.33		
		(5.86-5.64)x(1.65+1.64)/2	0.36		
		(6.71-5.86)x(1.70+1.65)/2	1.42		
		(6.89-6.71)x(1.70+1.70)/2	0.31		
		(7.78-6.89)x(1.71+1.70)/2	1.52		
		(7.91-7.78)x(1.71+1.71)/2	0.22		
		(8.85-7.91)x(1.71+1.71)/2	1.61		
		(8.94-8.85)x(1.72+1.71)/2	0.15		
		(9.92-8.94)x(1.73+1.72)/2	1.69		
		(9.96-9.92)x(1.73+1.73)/2	0.07		
		(10.99-9.96)x(1.77+1.73)/2	1.80		
		(11.08-10.99)x(1.77+1.77)/2	0.16		
		(12.02-11.08)x(1.76+1.77)/2	1.66		
		(12.05-12.02)x(1.76+1.76)/2	0.05		
		(13.04-12.05)x(1.83+1.76)/2	1.78		
		(13.12-13.04)x(1.83+1.83)/2	0.15		
		(14.07-13.12)x(1.84+1.83)/2	1.74		
		(14.19-14.07)x(1.85+1.84)/2	0.22		
		(14.84-14.19)x(1.86+1.85)/2	1.21		
		(13.91-14.84)x(2.49+1.86)/2	-2.02		
		(11.91-13.91)x(2.49+2.49)/2	-4.98		
		(2.91-11.91)x(8.49+2.49)/2	-49.41		
		(1.84-2.91)x(8.49+8.49)/2	-9.08		
		(1.99-1.84)x(8.31+8.49)/2	1.26		
		(0.00-1.99)x(8.36+8.31)/2	-16.59		
		(-4.00-0.00)x(8.46+8.36)/2	-33.64		
		(-5.47--4.00)x(8.50+8.46)/2	-12.47		
		(-5.34--5.47)x(8.65+8.50)/2	1.11		
		(-6.41--5.34)x(8.65+8.65)/2	-9.26		
		(-11.88--6.41)x(5.00+8.65)/2	-37.33		
		(-5.50--11.88)x(5.00+5.00)/2	31.90		
		(-5.43--5.50)x(1.88+5.00)/2	0.24		
				105.01	
17 240.00	R1	(-4.00-0.00)x(7.92+7.82)/2	-31.48		
		(-5.47--4.00)x(7.96+7.92)/2	-11.67		
		(-5.34--5.47)x(8.11+7.96)/2	1.04		
		(-6.41--5.34)x(8.11+8.11)/2	-8.68		
		(-15.25--6.41)x(2.22+8.11)/2	-45.66		
		(-14.86--15.25)x(2.22+2.22)/2	0.87		
		(-14.23--14.86)x(2.20+2.22)/2	1.39		
		(-13.79--14.23)x(2.20+2.20)/2	0.97		
		(-13.20--13.79)x(2.17+2.20)/2	1.29		
		(-12.72--13.20)x(2.11+2.17)/2	1.03		
		(-12.18--12.72)x(2.06+2.11)/2	1.13		
		(-11.66--12.18)x(2.01+2.06)/2	1.06		
		(-11.15--11.66)x(1.96+2.01)/2	1.01		
		(-10.57--11.15)x(1.96+1.96)/2	1.14		
		(-0.56--10.57)x(5.00+5.00)/2	50.05		
		(0.00--0.56)x(1.71+1.76)/2	0.97		
				35.54	
17 240.00	R2	(1.84-2.91)x(7.95+7.95)/2	-8.51		
		(1.99-1.84)x(7.77+7.95)/2	1.18		
		(0.00-1.99)x(7.82+7.77)/2	-15.51		
		(0.09-0.00)x(1.70+1.71)/2	0.15		
		(0.14-0.09)x(1.71+1.70)/2	0.09		
		(1.16-0.14)x(1.79+1.71)/2	1.79		
		(2.23-1.16)x(1.78+1.79)/2	1.91		
		(3.22-2.23)x(1.67+1.78)/2	1.71		
		(3.30-3.22)x(1.66+1.67)/2	0.13		
		(4.24-3.30)x(1.66+1.66)/2	1.56		
		(4.37-4.24)x(1.64+1.66)/2	0.21		
		(5.27-4.37)x(1.59+1.64)/2	1.45		
		(5.44-5.27)x(1.59+1.59)/2	0.27		
		(6.29-5.44)x(1.56+1.59)/2	1.34		
		(6.50-6.29)x(1.56+1.56)/2	0.33		
		(7.32-6.50)x(1.55+1.56)/2	1.28		
		(7.57-7.32)x(1.56+1.55)/2	0.39		
		(8.35-7.57)x(1.54+1.56)/2	1.21		
		(8.64-8.35)x(1.57+1.54)/2	0.45		
		A RIPORTARE mq	-8.57		

STERRI E RIPORTI

N. SEZIONE PROG.	FIG.	ELEMENTI DI CALCOLO	AREA ELEMENTARE mq	AREA FIGURA mq	NOTE
		RIPORTO mq	-8.57		
		(9.37-8.64)x(1.64+1.57)/2	1.17		
		(9.71-9.37)x(1.66+1.64)/2	0.56		
		(10.40-9.71)x(1.70+1.66)/2	1.16		
		(10.78-10.40)x(1.70+1.70)/2	0.65		
		(11.42-10.78)x(1.72+1.70)/2	1.09		
		(11.85-11.42)x(1.73+1.72)/2	0.74		
		(12.45-11.85)x(1.73+1.73)/2	1.04		
		(12.91-12.45)x(1.74+1.73)/2	0.80		
		(13.48-12.91)x(1.77+1.74)/2	1.00		
		(13.98-13.48)x(1.78+1.77)/2	0.89		
		(14.18-13.98)x(1.77+1.78)/2	0.35		
		(13.91-14.18)x(1.95+1.77)/2	-0.50		
		(11.91-13.91)x(1.95+1.95)/2	-3.90		
		(2.91-11.91)x(7.95+1.95)/2	-44.55		
				48.07	
18 255.00	R1	(-4.00-0.00)x(7.27+7.17)/2	-28.88		
		(-5.47--4.00)x(7.31+7.27)/2	-10.72		
		(-5.34--5.47)x(7.46+7.31)/2	0.96		
		(-6.41--5.34)x(7.46+7.46)/2	-7.98		
		(-15.37--6.41)x(1.49+7.46)/2	-40.10		
		(-15.07--15.37)x(1.58+1.49)/2	0.46		
		(-14.82--15.07)x(1.73+1.58)/2	0.41		
		(-14.00--14.82)x(2.06+1.73)/2	1.55		
		(-13.79--14.00)x(2.18+2.06)/2	0.45		
		(-12.93--13.79)x(2.27+2.18)/2	1.91		
		(-12.77--12.93)x(2.26+2.27)/2	0.36		
		(-11.86--12.77)x(2.23+2.26)/2	2.04		
		(-11.74--11.86)x(2.25+2.23)/2	0.27		
		(-10.75--11.74)x(2.27+2.25)/2	2.24		
		(-9.69--10.75)x(2.21+2.27)/2	2.37		
		(-8.75--9.69)x(2.10+2.21)/2	2.03		
		(-8.67--8.75)x(2.09+2.10)/2	0.17		
		(-7.64--8.67)x(2.04+2.09)/2	2.13		
		(-7.59--7.64)x(2.04+2.04)/2	0.10		
		(-6.61--7.59)x(2.14+2.04)/2	2.05		
		(-6.52--6.61)x(2.15+2.14)/2	0.19		
		(-5.62--6.52)x(2.23+2.15)/2	1.97		
		(0.00--5.62)x(5.00+5.00)/2	28.10		
				37.92	
18 255.00	R2	(1.84-2.91)x(7.30+7.30)/2	-7.81		
		(1.99-1.84)x(7.12+7.30)/2	1.08		
		(0.00-1.99)x(7.17+7.12)/2	-14.22		
		(4.38-0.00)x(5.00+5.00)/2	21.90		
		(4.68-4.38)x(1.86+1.85)/2	0.56		
		(5.23-4.68)x(1.87+1.86)/2	1.03		
		(5.70-5.23)x(1.91+1.87)/2	0.89		
		(6.30-5.70)x(1.85+1.91)/2	1.13		
		(6.73-6.30)x(1.80+1.85)/2	0.78		
		(7.36-6.73)x(1.83+1.80)/2	1.14		
		(7.75-7.36)x(1.85+1.83)/2	0.72		
		(8.43-7.75)x(1.82+1.85)/2	1.25		
		(8.78-8.43)x(1.83+1.82)/2	0.64		
		(9.50-8.78)x(1.70+1.83)/2	1.27		
		(9.81-9.50)x(1.65+1.70)/2	0.52		
		(10.57-9.81)x(1.68+1.65)/2	1.27		
		(10.83-10.57)x(1.67+1.68)/2	0.44		
		(11.33-10.83)x(1.68+1.67)/2	0.84		
		(2.91-11.33)x(7.30+1.68)/2	-37.81		
				24.38	
19 270.00	R1	(-14.39--15.02)x(-0.05+-0.06)/2	-0.03		
		(-14.21--14.39)x(-0.02+-0.05)/2	-0.01		
		(-13.36--14.21)x(0.01+-0.02)/2	-0.00		
		(-13.14--13.36)x(0.13+0.01)/2	0.02		
		(-12.33--13.14)x(0.48+0.13)/2	0.25		
		(-12.07--12.33)x(0.64+0.48)/2	0.15		
		(-11.31--12.07)x(0.84+0.64)/2	0.56		
		(-11.00--11.31)x(0.95+0.84)/2	0.28		
		(-10.28--11.00)x(1.46+0.95)/2	0.87		
		(-9.94--10.28)x(1.62+1.46)/2	0.52		
		(-9.26--9.94)x(1.94+1.62)/2	1.21		
		(-8.87--9.26)x(1.97+1.94)/2	0.76		
		(-8.23--8.87)x(2.11+1.97)/2	1.31		
		(-7.80--8.23)x(2.14+2.11)/2	0.91		
		(-7.20--7.80)x(2.26+2.14)/2	1.32		
		(-6.73--7.20)x(2.26+2.26)/2	1.06		
		(-6.18--6.73)x(2.24+2.26)/2	1.24		
		(-5.66--6.18)x(2.25+2.24)/2	1.17		
		(-5.15--5.66)x(2.28+2.25)/2	1.16		
		(-4.60--5.15)x(2.29+2.28)/2	1.26		
		(-4.12--4.60)x(2.33+2.29)/2	1.11		
		(-3.53--4.12)x(2.34+2.33)/2	1.38		
		(-3.10--3.53)x(2.32+2.34)/2	1.00		
		(-2.70--3.10)x(2.31+2.32)/2	0.93		
		(-2.07--2.70)x(2.31+2.31)/2	1.46		
		(-1.39--2.07)x(2.30+2.31)/2	1.57		
		(-1.05--1.39)x(2.30+2.30)/2	0.78		
		(-0.68--1.05)x(2.28+2.30)/2	0.85		
		(5.30--0.68)x(5.00+5.00)/2	29.90		
		(2.91-5.30)x(6.60+5.00)/2	-13.86		
		(1.84-2.91)x(6.60+6.60)/2	-7.06		
		(1.99-1.84)x(6.42+6.60)/2	0.98		
		(0.00-1.99)x(6.47+6.42)/2	-12.83		
		(-4.00-0.00)x(6.57+6.47)/2	-26.08		
		(-5.47--4.00)x(6.61+6.57)/2	-9.69		
		(-5.34--5.47)x(6.76+6.61)/2	0.87		
		(-6.41--5.34)x(6.76+6.76)/2	-7.23		
		(-15.02--6.41)x(1.02+6.76)/2	-33.49		
				55.40	
20 285.00	R1	(-11.21--11.68)x(-0.03+-0.04)/2	-0.02		
		(-10.87--11.21)x(-0.05+-0.03)/2	-0.01		
		(-10.15--10.87)x(-0.15+-0.05)/2	-0.07		
		(-9.85--10.15)x(-0.17+-0.15)/2	-0.05		
		(-9.08--9.85)x(-0.10+-0.17)/2	-0.10		
		(-8.82--9.08)x(-0.07+-0.10)/2	-0.02		
		(-8.01--8.82)x(0.14+-0.07)/2	0.03		
		A RIPORTARE mq	-0.24		

STERRI E RIPORTI

N. SEZIONE PROG.	FIG.	ELEMENTI DI CALCOLO	AREA ELEMENTARE mq	AREA FIGURA mq	NOTE
		RIPORTO mq	-0.24		
		(-7.79--8.01)x(0.17+0.14)/2	0.03		
		(-6.94--7.79)x(0.18+0.17)/2	0.15		
		(-6.77--6.94)x(0.22+0.18)/2	0.03		
		(-5.87--6.77)x(1.02+0.22)/2	0.56		
		(-5.74--5.87)x(1.14+1.02)/2	0.14		
		(-4.80--5.74)x(1.47+1.14)/2	1.23		
		(-4.72--4.80)x(1.47+1.47)/2	0.12		
		(-3.74--4.72)x(2.07+1.47)/2	1.73		
		(-3.69--3.74)x(2.11+2.07)/2	0.10		
		(-3.65--3.69)x(2.12+2.11)/2	0.08		
		(-2.66--3.65)x(2.21+2.12)/2	2.14		
		(-2.57--2.66)x(2.22+2.21)/2	0.20		
		(-1.64--2.57)x(2.31+2.22)/2	2.11		
		(-1.60--1.64)x(2.31+2.31)/2	0.09		
		(-0.61--1.60)x(2.32+2.31)/2	2.29		
		(-0.53--0.61)x(2.33+2.32)/2	0.19		
		(0.41--0.53)x(2.24+2.33)/2	2.15		
		(0.54-0.41)x(2.24+2.24)/2	0.29		
		(1.44-0.54)x(2.36+2.24)/2	2.07		
		(1.60-1.44)x(2.33+2.36)/2	0.38		
		(2.47-1.60)x(2.19+2.33)/2	1.97		
		(2.67-2.47)x(2.20+2.19)/2	0.44		
		(3.49-2.67)x(2.17+2.20)/2	1.79		
		(3.74-3.49)x(2.18+2.17)/2	0.54		
		(4.27-3.74)x(2.19+2.18)/2	1.16		
		(4.48-4.27)x(5.00+5.00)/2	1.05		
		(2.91-4.48)x(6.05+5.00)/2	-8.67		
		(1.84-2.91)x(6.05+6.05)/2	-6.47		
		(1.99-1.84)x(5.87+6.05)/2	0.89		
		(0.00-1.99)x(5.92+5.87)/2	-11.73		
		(-4.00-0.00)x(6.02+5.92)/2	-23.88		
		(-5.47--4.00)x(6.06+6.02)/2	-8.88		
		(-5.34--5.47)x(6.22+6.06)/2	0.80		
		(-6.41--5.34)x(6.21+6.22)/2	-6.65		
		(-11.68--6.41)x(2.70+6.21)/2	-23.48		
				65.28	
21 300.00	R1	(-8.41--9.21)x(0.39+1.05)/2	0.58		
		(-8.30--8.41)x(0.35+0.39)/2	0.04		
		(-7.38--8.30)x(-0.06+0.35)/2	0.13		
		(-7.22--7.38)x(-0.06+-0.06)/2	-0.01		
		(-6.36--7.22)x(-0.07+-0.06)/2	-0.06		
		(-6.15--6.36)x(-0.07+-0.07)/2	-0.01		
		(-5.33--6.15)x(-0.05+-0.07)/2	-0.05		
		(-5.07--5.33)x(-0.05+-0.05)/2	-0.01		
		(-4.30--5.07)x(-0.08+-0.05)/2	-0.05		
		(-3.60--4.30)x(-0.08+-0.08)/2	-0.06		
		(-3.28--3.60)x(-0.06+-0.08)/2	-0.02		
		(-2.92--3.28)x(0.02+-0.06)/2	-0.01		
		(-2.25--2.92)x(0.05+0.02)/2	0.02		
		(-1.84--2.25)x(0.10+0.05)/2	0.03		
		(-1.22--1.84)x(0.28+0.10)/2	0.12		
		(-0.77--1.22)x(0.73+0.28)/2	0.23		
		(-0.20--0.77)x(1.24+0.73)/2	0.56		
		(0.31--0.20)x(1.56+1.24)/2	0.71		
		(0.83-0.31)x(1.81+1.56)/2	0.88		
		(1.39-0.83)x(1.76+1.81)/2	1.00		
		(1.86-1.39)x(1.92+1.76)/2	0.86		
		(2.46-1.86)x(2.05+1.92)/2	1.19		
		(2.88-2.46)x(2.06+2.05)/2	0.86		
		(3.54-2.88)x(2.13+2.06)/2	1.38		
		(3.91-3.54)x(2.20+2.13)/2	0.80		
		(4.62-3.91)x(2.17+2.20)/2	1.55		
		(4.93-4.62)x(2.19+2.17)/2	0.68		
		(5.69-4.93)x(2.21+2.19)/2	1.67		
		(5.96-5.69)x(2.21+2.21)/2	0.60		
		(6.77-5.96)x(2.28+2.21)/2	1.82		
		(6.99-6.77)x(2.29+2.28)/2	0.50		
		(7.84-6.99)x(2.30+2.29)/2	1.95		
		(7.98-7.84)x(2.29+2.30)/2	0.32		
		(2.91-7.98)x(5.67+2.29)/2	-20.18		
		(1.84-2.91)x(5.68+5.67)/2	-6.07		
		(2.00-1.84)x(5.49+5.68)/2	0.89		
		(0.00-2.00)x(5.56+5.49)/2	-11.05		
		(-4.00-0.00)x(5.69+5.56)/2	-22.50		
		(-5.47--4.00)x(5.73+5.69)/2	-8.39		
		(-5.34--5.47)x(5.89+5.73)/2	0.76		
		(-6.41--5.34)x(5.88+5.89)/2	-6.30		
		(-9.21--6.41)x(4.02+5.88)/2	-13.86		
				68.50	
22 315.00	R1	(-7.35--7.60)x(1.74+1.74)/2	0.43		
		(-7.08--7.35)x(1.77+1.74)/2	0.47		
		(-6.32--7.08)x(1.81+1.77)/2	1.36		
		(-5.95--6.32)x(1.70+1.81)/2	0.65		
		(-5.29--5.95)x(1.57+1.70)/2	1.08		
		(-4.74--5.29)x(1.28+1.57)/2	0.78		
		(-4.26--4.74)x(0.98+1.28)/2	0.54		
		(-3.69--4.26)x(0.64+0.98)/2	0.46		
		(-3.23--3.69)x(0.31+0.64)/2	0.22		
		(-2.56--3.23)x(0.08+0.31)/2	0.13		
		(-1.42--2.20)x(-0.10+-0.08)/2	-0.07		
		(-1.17--1.42)x(-0.10+-0.10)/2	-0.03		
		(-0.29--1.17)x(-0.04+-0.10)/2	-0.06		
		(-0.14--0.29)x(-0.04+-0.04)/2	-0.01		
		(0.84--0.14)x(-0.03+-0.04)/2	-0.03		
		(0.88-0.84)x(-0.03+-0.03)/2	-0.00		
		(1.33-0.88)x(-0.02+-0.03)/2	-0.01		
		(1.91-1.33)x(-0.00+-0.02)/2	-0.01		
		(1.97-1.91)x(0.01+-0.00)/2	0.00		
		(2.94-1.97)x(0.24+0.01)/2	0.12		
		(3.10-2.94)x(0.29+0.24)/2	0.04		
		(3.97-3.10)x(0.50+0.29)/2	0.34		
		(4.24-3.97)x(0.67+0.50)/2	0.16		
		(4.71-4.24)x(1.08+0.67)/2	0.41		
		(2.91-4.71)x(5.47+4.27)/2	-8.77		
		(1.84-2.91)x(5.47+5.47)/2	-5.85		
		A RIPORTARE mq	-7.65		

STERRI E RIPORTI

N. SEZIONE PROG.	FIG.	ELEMENTI DI CALCOLO	AREA ELEMENTARE mq	AREA FIGURA mq	NOTE
		RIPORTO mq	-7.65		
		(2.00-1.84)x(5.28+5.47)/2	0.86		
		(0.00-2.00)x(5.37+5.28)/2	-10.65		
		(-4.00-0.00)x(5.55+5.37)/2	-21.84		
		(-5.47--4.00)x(5.62+5.55)/2	-8.21		
		(-5.34--5.47)x(5.77+5.62)/2	0.74		
		(-6.41--5.34)x(5.76+5.77)/2	-6.17		
		(-7.60--6.41)x(4.97+5.76)/2	-6.38		
				59.30	
23 330.00	R1	(-4.43--5.00)x(1.93+1.99)/2	1.12		
		(-4.11--4.43)x(1.89+1.93)/2	0.61		
		(-3.20--4.11)x(1.85+1.89)/2	1.70		
		(-3.07--3.20)x(1.84+1.85)/2	0.24		
		(-2.39--3.07)x(1.70+1.84)/2	1.20		
		(-2.03--2.39)x(1.62+1.70)/2	0.60		
		(-1.96--2.03)x(1.58+1.62)/2	0.11		
		(-0.99--1.96)x(1.14+1.58)/2	1.32		
		(-0.72--0.99)x(0.96+1.14)/2	0.28		
		(0.05--0.72)x(0.41+0.96)/2	0.53		
		(0.51-0.05)x(0.31+0.41)/2	0.17		
		(1.09-0.51)x(0.12+0.31)/2	0.12		
		(1.75-1.09)x(0.07+0.12)/2	0.06		
		(2.12-1.75)x(0.06+0.07)/2	0.02		
		(2.98-2.12)x(0.03+0.06)/2	0.04		
		(3.16-2.98)x(0.03+0.03)/2	0.01		
		(4.11-3.16)x(-0.00+0.03)/2	0.01		
		(4.20-4.11)x(-0.01+-0.00)/2	-0.00		
		(4.22-4.20)x(-0.00+-0.01)/2	-0.00		
		(5.24-4.22)x(0.02+-0.00)/2	0.01		
		(5.45-5.24)x(0.09+0.02)/2	0.01		
		(6.28-5.45)x(0.25+0.09)/2	0.14		
		(6.43-6.28)x(0.31+0.25)/2	0.04		
		(2.91-6.43)x(5.46+3.11)/2	-15.08		
		(1.84-2.91)x(5.46+5.46)/2	-5.84		
		(2.00-1.84)x(5.27+5.46)/2	0.86		
		(0.00-2.00)x(5.36+5.27)/2	-10.63		
		(-4.00-0.00)x(5.55+5.36)/2	-21.82		
		(-5.00--4.00)x(5.60+5.55)/2	-5.57		
				49.74	

Il Direttore dei Lavori | L'Impresa

N. SEZ.	FIG.	SUPERFICIE STERRO mq	SUPERFICIE RIPORTO mq	PUNTI DI PASSAGGIO (PROGRESSIVA m)	DISTANZA m	VOLUMI PARZIALI STERRO mc	VOLUMI PARZIALI RIPORTO mc	VOLUMI TOTALI STERRO mc	VOLUMI TOTALI RIPORTO mc
3	R1		28.62	(30.00)					
					15.00		599.700		
4	R1		51.34	(45.00)					
									599.700
4	R1		51.34	(45.00)					
					15.00		1018.950		
5	R1		84.52	(60.00)					
									1018.950
5	R1		84.52	(60.00)					
					15.00		1527.000		
6	R1		119.08	(75.00)					
									1527.000
6	R1		119.08	(75.00)					
					15.00		1923.450		
7	R1		137.38	(90.00)					
									1923.450
7	R1		137.38	(90.00)					
					15.00		2202.975		
8	R1		156.35	(105.00)					
									2202.975
8	R1		156.35	(105.00)					
					15.00		2451.900		
9	R1		170.57	(120.00)					
									2451.900
9	R1		170.57	(120.00)					
					15.00		2617.875		
10	R1		178.48	(135.00)					
									2617.875
10	R1		178.48	(135.00)					
					15.00		2677.275		
11	R1		61.74	(150.00)					
	R2		8.94						
	R3		107.81						
									2677.275
11	R1		61.74	(150.00)					
					15.00		918.150		
12	R1		60.68	(165.00)					
11	R2		8.94	(150.00)					
					15.00		67.050		
12	R0		0.00	(165.00)					
11	R3		107.81	(150.00)					
					15.00		1604.325		
12	R2		2.38	(165.00)					
	R3		103.72						
									2589.525
12	R1		60.68	(165.00)					
					7.62		231.191		
TR	R0		0.00	(172.62)					
12	R2		2.38	(165.00)					
					7.62		9.068		
TR	R0		0.00	(172.62)					
12	R3		103.72	(165.00)					
					7.62		790.842		
TR	R1		103.85	(172.62)					
									1031.101
TR	R1		103.85	(172.62)					
					7.38		768.442		
13	R1		104.40	(180.00)					
									768.442
13	R1		104.40	(180.00)					
					15.00		1538.700		
14	R1		100.76	(195.00)					
									1538.700
14	R1		100.76	(195.00)					
					15.00		1472.400		
15	R1		95.56	(210.00)					
									1472.400
15	R1		95.56	(210.00)					
					15.00		1504.275		
16	R1		105.01	(225.00)					
									1504.275
					A RIPORTARE :				

N. SEZ.	FIG.	SUPERFICIE STERRO mq	SUPERFICIE RIPORTO mq	PUNTI DI PASSAGGIO (PROGRESSIVA m)	DISTANZA m	VOLUMI PARZIALI STERRO mc	VOLUMI PARZIALI RIPORTO mc	VOLUMI TOTALI STERRO mc	VOLUMI TOTALI RIPORTO mc
					RIPORTO :				
19	R1		55.40	(270.00)					
					15.00		905.100		
20	R1		65.28	(285.00)					
									905.100
20	R1		65.28	(285.00)					
					15.00		1003.350		
21	R1		68.50	(300.00)					
									1003.350
21	R1		68.50	(300.00)					
					15.00		958.500		
22	R1		59.30	(315.00)					
									958.500
22	R1		59.30	(315.00)					
					15.00		817.800		
23	R1		49.74	(330.00)					
									817.800

Il Direttore dei Lavori	L'Impresa	Totale Articoli .....: A dedurre quantita' precedenti: Quantita' da contabilizzare ..:	0.000	27608.318

BONIFICA

N. SEZIONE PROG.	FIG.	ELEMENTI DI CALCOLO	AREA ELEMENTARE mq	AREA FIGURA mq	NOTE
3 30.00	BO1	(-3.85--4.00)x(2.50+2.50)/2	0.37		
		(-3.35--3.85)x(2.49+2.50)/2	1.25		
		(-3.01--3.35)x(2.48+2.49)/2	0.84		
		(-2.29--3.01)x(2.46+2.48)/2	1.78		
		(-2.07--2.29)x(2.49+2.46)/2	0.54		
		(-1.56--2.07)x(2.53+2.49)/2	1.28		
		(-1.55--1.56)x(2.53+2.55)/2	0.03		
		(-1.54--1.55)x(2.52+2.53)/2	0.03		
		(-1.53--1.54)x(2.52+2.52)/2	0.03		
		(-1.51--1.53)x(2.52+2.52)/2	0.05		
		(-1.49--1.51)x(2.51+2.52)/2	0.05		
		(-1.45--1.49)x(2.51+2.51)/2	0.10		
		(-1.38--1.45)x(2.49+2.51)/2	0.18		
		(-1.25--1.38)x(2.46+2.49)/2	0.32		
		(-1.23--1.25)x(2.45+2.46)/2	0.05		
		(-1.15--1.23)x(2.46+2.45)/2	0.20		
		(-1.03--1.15)x(2.51+2.46)/2	0.30		
		(-0.99--1.03)x(2.51+2.51)/2	0.10		
		(-0.64--0.99)x(2.54+2.51)/2	0.88		
		(-0.55--0.64)x(2.53+2.54)/2	0.23		
		(-0.38--0.55)x(2.51+2.53)/2	0.43		
		(-0.17--0.38)x(2.49+2.51)/2	0.53		
		(0.36--0.17)x(2.49+2.49)/2	1.32		
		(0.89-0.36)x(2.48+2.49)/2	1.32		
		(1.20-0.89)x(2.43+2.48)/2	0.76		
		(1.95-1.20)x(2.34+2.43)/2	1.79		
		(1.99-1.95)x(2.32+2.34)/2	0.09		
		(2.19-1.99)x(2.26+2.32)/2	0.46		
		(2.29-2.19)x(2.24+2.26)/2	0.23		
		(2.35-2.29)x(2.20+2.24)/2	0.13		
		(2.39-2.35)x(2.16+2.20)/2	0.09		
		(2.41-2.39)x(2.15+2.16)/2	0.04		
		(2.44-2.41)x(2.12+2.15)/2	0.06		
		(2.45-2.44)x(2.14+2.12)/2	0.02		
		(2.47-2.45)x(2.15+2.14)/2	0.04		
		(2.51-2.47)x(2.10+2.15)/2	0.08		
		(2.52-2.51)x(2.10+2.10)/2	0.02		
		(2.72-2.52)x(2.04+2.10)/2	0.41		
		(2.75-2.72)x(2.02+2.04)/2	0.06		
		(2.79-2.75)x(2.11+2.02)/2	0.08		
		(2.87-2.79)x(2.11+2.11)/2	0.17		
		(3.01-2.87)x(1.99+2.11)/2	0.29		
		(3.73-3.01)x(1.61+1.99)/2	1.30		
		(4.07-3.73)x(1.46+1.61)/2	0.52		
		(4.57-4.07)x(1.45+1.46)/2	0.73		
		(5.12-4.57)x(1.34+1.45)/2	0.77		
		(5.42-5.12)x(1.45+1.34)/2	0.42		
		(6.18-5.42)x(1.67+1.45)/2	1.19		
		(6.26-6.18)x(1.68+1.67)/2	0.13		
		(6.55-6.26)x(1.68+1.68)/2	0.49		
		(7.08-6.55)x(1.68+1.68)/2	0.89		
		(7.24-7.08)x(1.69+1.68)/2	0.27		
		(7.94-7.24)x(1.60+1.69)/2	1.15		
		(8.31-7.94)x(1.58+1.60)/2	0.59		
		(8.30-8.31)x(0.58+0.58)/2	-0.01		
		(7.94-8.30)x(0.60+0.58)/2	-0.21		
		(7.24-7.94)x(0.69+0.60)/2	-0.45		
		(7.08-7.24)x(0.68+0.69)/2	-0.11		
		(6.55-7.08)x(0.68+0.68)/2	-0.36		
		(6.26-6.55)x(0.68+0.68)/2	-0.20		
		(6.18-6.26)x(0.67+0.68)/2	-0.05		
		(5.42-6.18)x(0.45+0.67)/2	-0.43		
		(5.12-5.42)x(0.34+0.45)/2	-0.12		
		(4.57-5.12)x(0.45+0.34)/2	-0.22		
		(4.07-4.57)x(0.46+0.45)/2	-0.23		
		(3.73-4.07)x(0.61+0.46)/2	-0.18		
		(3.01-3.73)x(0.99+0.61)/2	-0.58		
		(2.87-3.01)x(1.11+0.99)/2	-0.15		
		(2.79-2.87)x(1.11+1.11)/2	-0.09		
		(2.75-2.79)x(1.02+1.11)/2	-0.04		
		(2.72-2.75)x(1.04+1.02)/2	-0.03		
		(2.52-2.72)x(1.10+1.04)/2	-0.21		
		(2.51-2.52)x(1.10+1.10)/2	-0.01		
		(2.47-2.51)x(1.15+1.10)/2	-0.04		
		(2.45-2.47)x(1.14+1.15)/2	-0.02		
		(2.44-2.45)x(1.12+1.14)/2	-0.01		
		(2.41-2.44)x(1.15+1.12)/2	-0.03		
		(2.39-2.41)x(1.16+1.15)/2	-0.02		
		(2.35-2.39)x(1.20+1.16)/2	-0.05		
		(2.29-2.35)x(1.24+1.20)/2	-0.07		
		(2.19-2.29)x(1.26+1.24)/2	-0.13		
		(1.99-2.19)x(1.32+1.26)/2	-0.26		
		(1.95-1.99)x(1.34+1.32)/2	-0.05		
		(1.20-1.95)x(1.43+1.34)/2	-1.04		
		(0.89-1.20)x(1.48+1.43)/2	-0.45		
		(0.36-0.89)x(1.49+1.48)/2	-0.79		
		(-0.17-0.36)x(1.49+1.49)/2	-0.79		
		(-0.38--0.17)x(1.51+1.49)/2	-0.32		
		(-0.55--0.38)x(1.53+1.51)/2	-0.26		
		(-0.64--0.55)x(1.54+1.53)/2	-0.14		
		(-0.99--0.64)x(1.51+1.54)/2	-0.53		
		(-1.03--0.99)x(1.51+1.51)/2	-0.06		
		(-1.15--1.03)x(1.46+1.51)/2	-0.18		
		(-1.23--1.15)x(1.45+1.46)/2	-0.12		
		(-1.25--1.23)x(1.46+1.45)/2	-0.03		
		(-1.38--1.25)x(1.49+1.46)/2	-0.19		
		(-1.45--1.38)x(1.51+1.49)/2	-0.11		
		(-1.49--1.45)x(1.51+1.51)/2	-0.06		
		(-1.51--1.49)x(1.52+1.51)/2	-0.03		
		(-1.53--1.51)x(1.52+1.52)/2	-0.03		
		(-1.54--1.53)x(1.52+1.52)/2	-0.02		
		(-1.55--1.54)x(1.53+1.52)/2	-0.02		
		(-1.56--1.55)x(1.55+1.53)/2	-0.02		
		(-2.07--1.56)x(1.49+1.53)/2	-0.77		
		(-2.29--2.07)x(1.46+1.49)/2	-0.32		
		(-3.01--2.29)x(1.48+1.46)/2	-1.06		
		(-3.35--3.01)x(1.49+1.48)/2	-0.50		
		A RIPORTARE mq	13.28		

BONIFICA

N. SEZIONE PROG.	FIG.	ELEMENTI DI CALCOLO	AREA ELEMENTARE mq	AREA FIGURA mq	NOTE
		RIPORTO mq	13.28		
		(-3.85--3.35)x(1.50+1.49)/2	-0.75		
		(-4.00--3.85)x(1.50+1.50)/2	-0.22		
				12.31	
4	BO1	(-4.82--5.00)x(2.60+2.59)/2	0.47		
45.00		(-4.13--4.82)x(2.61+2.60)/2	1.80		
		(-3.99--4.13)x(2.62+2.61)/2	0.37		
		(-3.90--3.99)x(2.61+2.62)/2	0.24		
		(-2.89--3.90)x(2.55+2.61)/2	2.61		
		(-2.07--2.89)x(2.42+2.55)/2	2.04		
		(-1.79--2.07)x(2.36+2.42)/2	0.67		
		(-1.35--1.79)x(2.24+2.36)/2	1.01		
		(-0.87--1.35)x(2.10+2.24)/2	1.04		
		(-0.68--0.87)x(2.04+2.10)/2	0.39		
		(-0.08--0.68)x(1.58+2.04)/2	1.09		
		(0.42--0.08)x(1.20+1.58)/2	0.70		
		(0.71-0.42)x(1.11+1.20)/2	0.33		
		(1.43-0.71)x(0.85+1.11)/2	0.71		
		(1.50-1.43)x(0.83+0.85)/2	0.06		
		(1.52-1.50)x(0.82+0.83)/2	0.02		
		(2.29-1.52)x(1.15+0.82)/2	0.76		
		(2.63-2.29)x(1.26+1.15)/2	0.41		
		(3.08-2.63)x(1.30+1.26)/2	0.58		
		(3.73-3.08)x(1.29+1.30)/2	0.84		
		(3.87-3.73)x(1.29+1.29)/2	0.18		
		(4.21-3.87)x(1.30+1.29)/2	0.44		
		(4.66-4.21)x(1.35+1.30)/2	0.60		
		(4.83-4.66)x(1.35+1.35)/2	0.23		
		(5.45-4.83)x(1.35+1.35)/2	0.84		
		(5.94-5.45)x(1.37+1.35)/2	0.67		
		(6.24-5.94)x(1.38+1.37)/2	0.41		
		(6.99-6.24)x(1.38+1.38)/2	1.03		
		(7.03-6.99)x(1.38+1.38)/2	0.06		
		(7.04-7.03)x(1.38+1.38)/2	0.01		
		(7.82-7.04)x(1.37+1.38)/2	1.07		
		(8.14-7.82)x(1.38+1.37)/2	0.44		
		(8.60-8.14)x(1.39+1.38)/2	0.64		
		(9.24-8.60)x(1.41+1.39)/2	0.90		
		(9.39-9.24)x(1.41+1.41)/2	0.21		
		(9.77-9.39)x(1.41+1.41)/2	0.54		
		(10.18-9.77)x(1.41+1.41)/2	0.58		
		(9.39-10.18)x(0.41+0.41)/2	-0.32		
		(9.24-9.39)x(0.41+0.41)/2	-0.06		
		(8.60-9.24)x(0.39+0.41)/2	-0.26		
		(8.14-8.60)x(0.38+0.39)/2	-0.18		
		(7.82-8.14)x(0.37+0.38)/2	-0.12		
		(7.04-7.82)x(0.38+0.37)/2	-0.29		
		(7.03-7.04)x(0.38+0.38)/2	-0.00		
		(6.99-7.03)x(0.38+0.38)/2	-0.02		
		(6.24-6.99)x(0.38+0.38)/2	-0.29		
		(5.94-6.24)x(0.37+0.38)/2	-0.11		
		(5.45-5.94)x(0.35+0.37)/2	-0.18		
		(4.83-5.45)x(0.35+0.35)/2	-0.22		
		(4.66-4.83)x(0.35+0.35)/2	-0.06		
		(4.21-4.66)x(0.30+0.35)/2	-0.15		
		(3.87-4.21)x(0.29+0.30)/2	-0.10		
		(3.73-3.87)x(0.29+0.29)/2	-0.04		
		(3.08-3.73)x(0.30+0.29)/2	-0.19		
		(2.63-3.08)x(0.26+0.30)/2	-0.13		
		(2.29-2.63)x(0.15+0.26)/2	-0.07		
		(1.52-2.29)x(-0.18+0.15)/2	0.01		
		(1.50-1.52)x(-0.17+-0.18)/2	0.00		
		(1.43-1.50)x(-0.15+-0.17)/2	0.01		
		(0.71-1.43)x(0.11+-0.15)/2	0.01		
		(0.42-0.71)x(0.20+0.11)/2	-0.04		
		(-0.08-0.42)x(0.58+0.20)/2	-0.20		
		(-0.68--0.08)x(1.04+0.58)/2	-0.49		
		(-0.87--0.68)x(1.10+1.04)/2	-0.20		
		(-1.35--0.87)x(1.24+1.10)/2	-0.56		
		(-1.79--1.35)x(1.36+1.24)/2	-0.57		
		(-2.07--1.79)x(1.42+1.36)/2	-0.39		
		(-2.89--2.07)x(1.55+1.42)/2	-1.22		
		(-3.90--2.89)x(1.61+1.55)/2	-1.60		
		(-3.99--3.90)x(1.62+1.61)/2	-0.15		
		(-4.13--3.99)x(1.61+1.62)/2	-0.23		
		(-4.82--4.13)x(1.60+1.61)/2	-1.11		
		(-5.00--4.82)x(1.59+1.60)/2	-0.29		
				15.18	
5	BO1	(-8.51--8.63)x(1.98+1.99)/2	0.24		
60.00		(-8.32--8.51)x(1.97+1.98)/2	0.38		
		(-7.76--8.32)x(1.86+1.97)/2	1.07		
		(-7.14--7.76)x(1.72+1.86)/2	1.11		
		(-7.01--7.14)x(1.65+1.72)/2	0.22		
		(-6.80--7.01)x(1.59+1.65)/2	0.34		
		(-6.26--6.80)x(1.37+1.59)/2	0.80		
		(-5.95--6.26)x(1.25+1.37)/2	0.41		
		(-5.51--5.95)x(1.27+1.25)/2	0.55		
		(-4.77--5.51)x(1.37+1.27)/2	0.98		
		(-4.76--4.77)x(1.37+1.37)/2	0.01		
		(-4.01--4.76)x(1.52+1.37)/2	1.08		
		(-3.58--4.01)x(1.56+1.52)/2	0.66		
		(-3.26--3.58)x(1.59+1.56)/2	0.50		
		(-2.73--3.26)x(1.59+1.59)/2	0.84		
		(-2.51--2.73)x(1.60+1.59)/2	0.35		
		(-2.39--2.51)x(1.61+1.60)/2	0.19		
		(-1.76--2.39)x(1.61+1.61)/2	1.01		
		(-1.20--1.76)x(1.61+1.61)/2	0.90		
		(-1.02--1.20)x(1.62+1.61)/2	0.29		
		(-0.69--1.02)x(1.62+1.62)/2	0.53		
		(-0.27--0.69)x(1.64+1.62)/2	0.68		
		(-0.02--0.27)x(1.64+1.64)/2	0.41		
		(0.48--0.02)x(1.66+1.64)/2	0.82		
		(1.17-0.48)x(1.66+1.66)/2	1.15		
		(1.23-1.17)x(1.67+1.66)/2	0.10		
		(1.34-1.23)x(1.67+1.67)/2	0.18		
		(1.98-1.34)x(1.70+1.67)/2	1.08		
		A RIPORTARE mq	16.88		

BONIFICA

N. SEZIONE PROG.	FIG.	ELEMENTI DI CALCOLO	AREA ELEMENTARE mq	AREA FIGURA mq	NOTE
		RIPORTO mq	16.88		
		(2.36-1.98)x(1.70+1.70)/2	0.65		
		(2.73-2.36)x(1.70+1.70)/2	0.63		
		(3.38-2.73)x(1.71+1.70)/2	1.11		
		(3.48-3.38)x(1.72+1.71)/2	0.17		
		(3.55-3.48)x(1.71+1.72)/2	0.12		
		(4.23-3.55)x(1.69+1.71)/2	1.16		
		(4.73-4.23)x(1.69+1.69)/2	0.84		
		(4.98-4.73)x(1.68+1.69)/2	0.42		
		(5.41-4.98)x(1.68+1.68)/2	0.72		
		(5.92-5.41)x(1.68+1.68)/2	0.86		
		(6.63-5.92)x(1.69+1.68)/2	1.20		
		(7.11-6.63)x(1.70+1.69)/2	0.81		
		(7.45-7.11)x(1.70+1.70)/2	0.58		
		(7.98-7.45)x(1.70+1.70)/2	0.90		
		(8.29-7.98)x(1.70+1.70)/2	0.53		
		(8.73-8.29)x(1.69+1.70)/2	0.75		
		(9.48-8.73)x(1.68+1.69)/2	1.26		
		(10.23-9.48)x(1.68+1.68)/2	1.26		
		(10.67-10.23)x(1.68+1.68)/2	0.74		
		(10.98-10.67)x(1.70+1.68)/2	0.52		
		(11.23-10.98)x(1.70+1.70)/2	0.42		
		(10.23-11.23)x(0.68+0.69)/2	-0.69		
		(9.48-10.23)x(0.68+0.68)/2	-0.51		
		(8.73-9.48)x(0.69+0.68)/2	-0.51		
		(8.29-8.73)x(0.70+0.69)/2	-0.31		
		(7.98-8.29)x(0.70+0.70)/2	-0.22		
		(7.45-7.98)x(0.70+0.70)/2	-0.37		
		(7.11-7.45)x(0.70+0.70)/2	-0.24		
		(6.63-7.11)x(0.69+0.70)/2	-0.33		
		(5.92-6.63)x(0.68+0.69)/2	-0.49		
		(5.41-5.92)x(0.68+0.68)/2	-0.35		
		(4.98-5.41)x(0.68+0.68)/2	-0.29		
		(4.73-4.98)x(0.69+0.68)/2	-0.17		
		(4.23-4.73)x(0.69+0.69)/2	-0.34		
		(3.55-4.23)x(0.71+0.69)/2	-0.48		
		(3.48-3.55)x(0.72+0.71)/2	-0.05		
		(3.38-3.48)x(0.71+0.72)/2	-0.07		
		(2.73-3.38)x(0.70+0.71)/2	-0.46		
		(2.36-2.73)x(0.70+0.70)/2	-0.26		
		(1.98-2.36)x(0.70+0.70)/2	-0.27		
		(1.34-1.98)x(0.67+0.70)/2	-0.44		
		(1.23-1.34)x(0.67+0.67)/2	-0.07		
		(1.17-1.23)x(0.66+0.67)/2	-0.04		
		(0.48-1.17)x(0.66+0.66)/2	-0.46		
		(-0.02-0.48)x(0.64+0.66)/2	-0.33		
		(-0.27--0.02)x(0.64+0.64)/2	-0.16		
		(-0.69--0.27)x(0.62+0.64)/2	-0.26		
		(-1.02--0.69)x(0.62+0.62)/2	-0.20		
		(-1.20--1.02)x(0.61+0.62)/2	-0.11		
		(-1.76--1.20)x(0.61+0.61)/2	-0.34		
		(-2.39--1.76)x(0.61+0.61)/2	-0.38		
		(-2.51--2.39)x(0.60+0.61)/2	-0.07		
		(-2.73--2.51)x(0.59+0.60)/2	-0.13		
		(-3.26--2.73)x(0.59+0.59)/2	-0.31		
		(-3.58--3.26)x(0.56+0.59)/2	-0.18		
		(-4.01--3.58)x(0.52+0.56)/2	-0.23		
		(-4.76--4.01)x(0.37+0.52)/2	-0.33		
		(-4.77--4.76)x(0.37+0.37)/2	-0.00		
		(-5.51--4.77)x(0.27+0.37)/2	-0.24		
		(-5.95--5.51)x(0.25+0.27)/2	-0.11		
		(-6.26--5.95)x(0.37+0.25)/2	-0.10		
		(-6.80--6.26)x(0.59+0.37)/2	-0.26		
		(-7.01--6.80)x(0.65+0.59)/2	-0.13		
		(-7.14--7.01)x(0.72+0.65)/2	-0.09		
		(-7.76--7.14)x(0.86+0.72)/2	-0.49		
		(-8.32--7.76)x(0.97+0.86)/2	-0.51		
		(-8.51--8.32)x(0.98+0.97)/2	-0.19		
		(-8.63--8.51)x(0.99+0.98)/2	-0.12		
				19.84	
6 75.00	BO1	(-13.57--13.76)x(1.65+1.64)/2	0.31		
		(-13.56--13.57)x(1.65+1.65)/2	0.02		
		(-12.83--13.56)x(1.67+1.65)/2	1.21		
		(-12.24--12.83)x(1.68+1.67)/2	0.99		
		(-12.10--12.24)x(1.68+1.68)/2	0.24		
		(-11.94--12.10)x(1.68+1.68)/2	0.27		
		(-11.38--11.94)x(1.66+1.68)/2	0.94		
		(-10.92--11.38)x(1.67+1.66)/2	0.77		
		(-10.65--10.92)x(1.68+1.67)/2	0.45		
		(-10.30--10.65)x(1.68+1.68)/2	0.59		
		(-9.92--10.30)x(1.69+1.68)/2	0.64		
		(-9.61--9.92)x(1.70+1.69)/2	0.53		
		(-9.19--9.61)x(1.69+1.70)/2	0.71		
		(-8.67--9.19)x(1.66+1.69)/2	0.87		
		(-8.46--8.67)x(1.64+1.66)/2	0.35		
		(-8.29--8.46)x(1.63+1.64)/2	0.28		
		(-7.73--8.29)x(1.59+1.63)/2	0.90		
		(-7.03--7.73)x(1.57+1.59)/2	1.11		
		(-7.00--7.03)x(1.57+1.57)/2	0.05		
		(-6.97--7.00)x(1.57+1.57)/2	0.05		
		(-6.27--6.97)x(1.61+1.57)/2	1.11		
		(-5.66--6.27)x(1.64+1.61)/2	0.99		
		(-5.54--5.66)x(1.64+1.64)/2	0.20		
		(-5.40--5.54)x(1.63+1.64)/2	0.23		
		(-4.81--5.40)x(1.61+1.63)/2	0.96		
		(-4.34--4.81)x(1.59+1.61)/2	0.75		
		(-4.08--4.34)x(1.58+1.59)/2	0.41		
		(-3.76--4.08)x(1.55+1.58)/2	0.50		
		(-3.03--3.76)x(1.53+1.55)/2	1.12		
		(-2.13--3.03)x(1.52+1.53)/2	1.37		
		(-1.90--2.13)x(1.53+1.52)/2	0.35		
		(-1.71--1.90)x(1.53+1.53)/2	0.29		
		(-1.17--1.71)x(1.54+1.53)/2	0.83		
		(-0.49--1.17)x(1.54+1.54)/2	1.05		
		(-0.44--0.49)x(1.54+1.54)/2	0.08		
		(-0.39--0.44)x(1.54+1.54)/2	0.08		
		A RIPORTARE mq	21.60		

		CALCOLO DELLE AREE		Foglio n. 20	
BONIFICA					
N. SEZIONE PROG.	FIG.	ELEMENTI DI CALCOLO	AREA ELEMENTARE mq	AREA FIGURA mq	NOTE
		RIPORTO mq	21.60		
		(0.29--0.39)x(1.55+1.54)/2	1.05		
		(0.92-0.29)x(1.55+1.55)/2	0.98		
		(1.02-0.92)x(1.55+1.55)/2	0.15		
		(1.14-1.02)x(1.55+1.55)/2	0.19		
		(1.75-1.14)x(1.54+1.55)/2	0.94		
		(2.24-1.75)x(1.54+1.54)/2	0.75		
		(2.48-2.24)x(1.54+1.54)/2	0.37		
		(2.78-2.48)x(1.55+1.54)/2	0.46		
		(3.21-2.78)x(1.49+1.55)/2	0.65		
		(3.55-3.21)x(1.49+1.49)/2	0.51		
		(3.94-3.55)x(1.47+1.49)/2	0.58		
		(4.41-3.94)x(1.50+1.47)/2	0.70		
		(4.67-4.41)x(1.48+1.50)/2	0.39		
		(4.87-4.67)x(1.46+1.48)/2	0.29		
		(5.40-4.87)x(1.41+1.46)/2	0.76		
		(6.05-5.40)x(1.37+1.41)/2	0.90		
		(6.13-6.05)x(1.37+1.37)/2	0.11		
		(6.19-6.13)x(1.36+1.37)/2	0.08		
		(6.85-6.19)x(1.35+1.36)/2	0.89		
		(7.50-6.85)x(1.29+1.35)/2	0.86		
		(7.58-7.50)x(1.28+1.29)/2	0.10		
		(7.68-7.58)x(1.28+1.28)/2	0.13		
		(8.31-7.68)x(1.38+1.28)/2	0.84		
		(8.82-8.31)x(1.31+1.38)/2	0.69		
		(9.04-8.82)x(1.30+1.31)/2	0.29		
		(9.32-9.04)x(1.26+1.30)/2	0.36		
		(9.77-9.32)x(1.29+1.26)/2	0.57		
		(10.14-9.77)x(1.29+1.29)/2	0.48		
		(10.50-10.14)x(1.32+1.29)/2	0.47		
		(10.95-10.50)x(1.28+1.32)/2	0.58		
		(11.23-10.95)x(1.27+1.28)/2	0.36		
		(11.45-11.23)x(1.27+1.27)/2	0.28		
		(11.96-11.45)x(1.26+1.27)/2	0.65		
		(12.59-11.96)x(1.31+1.26)/2	0.81		
		(12.69-12.59)x(1.31+1.31)/2	0.13		
		(12.77-12.69)x(1.32+1.31)/2	0.11		
		(13.42-12.77)x(1.35+1.32)/2	0.87		
		(14.08-13.42)x(1.43+1.35)/2	0.92		
		(14.15-14.08)x(1.43+1.43)/2	0.10		
		(14.22-14.15)x(1.43+1.43)/2	0.10		
		(14.68-14.22)x(1.42+1.43)/2	0.66		
		(11.96-14.68)x(0.26+0.47)/2	-0.99		
		(11.45-11.96)x(0.27+0.26)/2	-0.14		
		(11.23-11.45)x(0.27+0.27)/2	-0.06		
		(10.95-11.23)x(0.28+0.27)/2	-0.08		
		(10.50-10.95)x(0.32+0.28)/2	-0.13		
		(10.14-10.50)x(0.29+0.32)/2	-0.11		
		(9.77-10.14)x(0.29+0.29)/2	-0.11		
		(9.32-9.77)x(0.26+0.29)/2	-0.12		
		(9.04-9.32)x(0.30+0.26)/2	-0.08		
		(8.82-9.04)x(0.31+0.30)/2	-0.07		
		(8.31-8.82)x(0.38+0.31)/2	-0.18		
		(7.68-8.31)x(0.28+0.38)/2	-0.21		
		(7.58-7.68)x(0.28+0.28)/2	-0.03		
		(7.50-7.58)x(0.29+0.28)/2	-0.02		
		(6.85-7.50)x(0.35+0.29)/2	-0.21		
		(6.19-6.85)x(0.36+0.35)/2	-0.23		
		(6.13-6.19)x(0.37+0.36)/2	-0.02		
		(6.05-6.13)x(0.37+0.37)/2	-0.03		
		(5.40-6.05)x(0.41+0.37)/2	-0.25		
		(4.87-5.40)x(0.46+0.41)/2	-0.23		
		(4.67-4.87)x(0.48+0.46)/2	-0.09		
		(4.41-4.67)x(0.50+0.48)/2	-0.13		
		(3.94-4.41)x(0.47+0.50)/2	-0.23		
		(3.55-3.94)x(0.49+0.47)/2	-0.19		
		(3.21-3.55)x(0.49+0.49)/2	-0.17		
		(2.78-3.21)x(0.55+0.49)/2	-0.22		
		(2.48-2.78)x(0.54+0.55)/2	-0.16		
		(2.24-2.48)x(0.54+0.54)/2	-0.13		
		(1.75-2.24)x(0.54+0.54)/2	-0.26		
		(1.14-1.75)x(0.55+0.54)/2	-0.33		
		(1.02-1.14)x(0.55+0.55)/2	-0.07		
		(0.92-1.02)x(0.55+0.55)/2	-0.05		
		(0.29-0.92)x(0.55+0.55)/2	-0.35		
		(-0.39-0.29)x(0.54+0.55)/2	-0.37		
		(-0.44--0.39)x(0.54+0.54)/2	-0.03		
		(-0.49--0.44)x(0.54+0.54)/2	-0.03		
		(-1.17--0.49)x(0.54+0.54)/2	-0.37		
		(-1.71--1.17)x(0.53+0.54)/2	-0.29		
		(-1.90--1.71)x(0.53+0.53)/2	-0.10		
		(-2.13--1.90)x(0.52+0.53)/2	-0.12		
		(-3.03--2.13)x(0.53+0.52)/2	-0.47		
		(-3.76--3.03)x(0.55+0.53)/2	-0.39		
		(-4.08--3.76)x(0.58+0.55)/2	-0.18		
		(-4.34--4.08)x(0.59+0.58)/2	-0.15		
		(-4.81--4.34)x(0.61+0.59)/2	-0.28		
		(-5.40--4.81)x(0.63+0.61)/2	-0.37		
		(-5.54--5.40)x(0.64+0.63)/2	-0.09		
		(-5.66--5.54)x(0.64+0.64)/2	-0.08		
		(-6.27--5.66)x(0.61+0.64)/2	-0.38		
		(-6.97--6.27)x(0.57+0.61)/2	-0.41		
		(-7.00--6.97)x(0.57+0.57)/2	-0.02		
		(-7.03--7.00)x(0.57+0.57)/2	-0.02		
		(-7.73--7.03)x(0.59+0.57)/2	-0.41		
		(-8.29--7.73)x(0.63+0.59)/2	-0.34		
		(-8.46--8.29)x(0.64+0.63)/2	-0.11		
		(-8.67--8.46)x(0.66+0.64)/2	-0.14		
		(-9.19--8.67)x(0.69+0.66)/2	-0.35		
		(-9.61--9.19)x(0.70+0.69)/2	-0.29		
		(-9.92--9.61)x(0.69+0.70)/2	-0.22		
		(-10.30--9.92)x(0.68+0.69)/2	-0.26		
		(-10.65--10.30)x(0.68+0.68)/2	-0.24		
		(-10.92--10.65)x(0.67+0.68)/2	-0.18		
		(-11.38--10.92)x(0.66+0.67)/2	-0.31		
		(-11.94--11.38)x(0.68+0.66)/2	-0.38		
		A RIPORTARE mq	29.65		

BONIFICA

N. SEZIONE PROG.	FIG.	ELEMENTI DI CALCOLO	AREA ELEMENTARE mq	AREA FIGURA mq	NOTE
		RIPORTO mq	29.65		
		(-12.10--11.94)x(0.68+0.68)/2	-0.11		
		(-12.24--12.10)x(0.68+0.68)/2	-0.10		
		(-12.83--12.24)x(0.67+0.68)/2	-0.40		
		(-13.56--12.83)x(0.65+0.67)/2	-0.48		
		(-13.57--13.56)x(0.65+0.65)/2	-0.01		
		(-13.76--13.57)x(0.64+0.65)/2	-0.12		
				28.43	
7	BO1	(-18.98--19.14)x(1.49+1.50)/2	0.24		
90.00		(-18.81--18.98)x(1.49+1.49)/2	0.25		
		(-18.63--18.81)x(1.48+1.49)/2	0.27		
		(-18.09--18.63)x(1.48+1.48)/2	0.80		
		(-17.59--18.09)x(1.46+1.48)/2	0.73		
		(-17.36--17.59)x(1.46+1.46)/2	0.34		
		(-17.11--17.36)x(1.47+1.46)/2	0.37		
		(-16.64--17.11)x(1.48+1.47)/2	0.69		
		(-16.20--16.64)x(1.50+1.48)/2	0.66		
		(-15.91--16.20)x(1.52+1.50)/2	0.44		
		(-15.60--15.91)x(1.52+1.52)/2	0.47		
		(-15.18--15.60)x(1.53+1.52)/2	0.64		
		(-14.80--15.18)x(1.53+1.53)/2	0.58		
		(-14.46--14.80)x(1.53+1.53)/2	0.52		
		(-14.08--14.46)x(1.53+1.53)/2	0.58		
		(-13.73--14.08)x(1.52+1.53)/2	0.53		
		(-13.41--13.73)x(1.53+1.52)/2	0.49		
		(-13.01--13.41)x(1.53+1.53)/2	0.61		
		(-12.57--13.01)x(1.53+1.53)/2	0.67		
		(-12.28--12.57)x(1.52+1.53)/2	0.44		
		(-12.02--12.28)x(1.53+1.52)/2	0.40		
		(-11.05--12.02)x(1.56+1.53)/2	1.50		
		(-10.63--11.05)x(1.58+1.56)/2	0.66		
		(-10.10--10.63)x(1.58+1.58)/2	0.84		
		(-9.54--10.10)x(1.59+1.58)/2	0.89		
		(-9.38--9.54)x(1.59+1.59)/2	0.25		
		(-9.24--9.38)x(1.59+1.59)/2	0.22		
		(-8.65--9.24)x(1.59+1.59)/2	0.94		
		(-8.02--8.65)x(1.60+1.59)/2	1.00		
		(-7.93--8.02)x(1.61+1.60)/2	0.14		
		(-7.84--7.93)x(1.61+1.61)/2	0.14		
		(-7.20--7.84)x(1.63+1.61)/2	1.04		
		(-6.50--7.20)x(1.64+1.63)/2	1.14		
		(-6.48--6.50)x(1.64+1.64)/2	0.03		
		(-6.45--6.48)x(1.64+1.64)/2	0.05		
		(-5.75--6.45)x(1.64+1.64)/2	1.15		
		(-5.06--5.75)x(1.66+1.64)/2	1.14		
		(-5.03--5.06)x(1.66+1.66)/2	0.05		
		(-4.99--5.03)x(1.66+1.66)/2	0.07		
		(-4.30--4.99)x(1.67+1.66)/2	1.15		
		(-3.67--4.30)x(1.68+1.67)/2	1.06		
		(-3.57--3.67)x(1.68+1.68)/2	0.17		
		(-3.47--3.57)x(1.68+1.68)/2	0.17		
		(-2.85--3.47)x(1.68+1.68)/2	1.04		
		(-2.27--2.85)x(1.66+1.68)/2	0.97		
		(-2.12--2.27)x(1.66+1.66)/2	0.25		
		(-1.96--2.12)x(1.66+1.66)/2	0.27		
		(-1.40--1.96)x(1.68+1.66)/2	0.94		
		(-0.88--1.40)x(1.67+1.68)/2	0.87		
		(-0.67--0.88)x(1.67+1.67)/2	0.35		
		(-0.44--0.67)x(1.68+1.67)/2	0.39		
		(0.05--0.44)x(1.70+1.68)/2	0.83		
		(0.51-0.05)x(1.70+1.70)/2	0.78		
		(0.78-0.51)x(1.69+1.70)/2	0.46		
		(1.07-0.78)x(1.70+1.69)/2	0.49		
		(1.51-1.07)x(1.71+1.70)/2	0.75		
		(1.90-1.51)x(1.73+1.71)/2	0.67		
		(2.23-1.90)x(1.73+1.73)/2	0.57		
		(2.59-2.23)x(1.72+1.73)/2	0.62		
		(2.96-2.59)x(1.69+1.72)/2	0.63		
		(3.29-2.96)x(1.69+1.69)/2	0.56		
		(3.68-3.29)x(1.70+1.69)/2	0.66		
		(4.10-3.68)x(1.69+1.70)/2	0.71		
		(4.41-4.10)x(1.70+1.69)/2	0.53		
		(4.69-4.41)x(1.70+1.70)/2	0.48		
		(5.13-4.69)x(1.71+1.70)/2	0.75		
		(5.62-5.13)x(1.72+1.71)/2	0.84		
		(5.86-5.62)x(1.72+1.72)/2	0.41		
		(6.08-5.86)x(1.73+1.72)/2	0.38		
		(6.58-6.08)x(1.72+1.73)/2	0.86		
		(7.14-6.58)x(1.70+1.72)/2	0.96		
		(7.31-7.14)x(1.69+1.70)/2	0.29		
		(7.47-7.31)x(1.69+1.69)/2	0.27		
		(8.04-7.47)x(1.68+1.69)/2	0.96		
		(8.65-8.04)x(1.67+1.68)/2	1.02		
		(8.76-8.65)x(1.67+1.67)/2	0.18		
		(8.86-8.76)x(1.67+1.67)/2	0.17		
		(9.49-8.86)x(1.68+1.67)/2	1.06		
		(10.17-9.49)x(1.67+1.68)/2	1.14		
		(10.21-10.17)x(1.67+1.67)/2	0.07		
		(10.26-10.21)x(1.67+1.67)/2	0.08		
		(10.94-10.26)x(1.68+1.67)/2	1.14		
		(11.65-10.94)x(1.70+1.68)/2	1.20		
		(11.68-11.65)x(1.70+1.70)/2	0.05		
		(13.04-11.68)x(1.70+1.70)/2	2.31		
		(13.12-13.04)x(1.70+1.70)/2	0.14		
		(13.20-13.12)x(1.70+1.70)/2	0.14		
		(13.84-13.20)x(1.68+1.70)/2	1.08		
		(14.43-13.84)x(1.68+1.68)/2	0.99		
		(14.57-14.43)x(1.68+1.68)/2	0.24		
		(14.71-14.57)x(1.67+1.68)/2	0.23		
		(15.15-14.71)x(1.67+1.67)/2	0.73		
		(11.68-15.15)x(0.70+0.71)/2	-2.45		
		(11.65-11.68)x(0.70+0.70)/2	-0.02		
		(10.94-11.65)x(0.68+0.70)/2	-0.49		
		(10.26-10.94)x(0.67+0.68)/2	-0.46		
		(10.21-10.26)x(0.67+0.67)/2	-0.03		
		(10.17-10.21)x(0.67+0.67)/2	-0.03		
		A RIPORTARE mq	52.55		

BONIFICA

N. SEZIONE PROG.	FIG.	ELEMENTI DI CALCOLO	AREA ELEMENTARE mq	AREA FIGURA mq	NOTE
		RIPORTO mq	52.55		
		(9.49-10.17)x(0.68+0.67)/2	-0.46		
		(8.86-9.49)x(0.67+0.68)/2	-0.43		
		(8.76-8.86)x(0.67+0.67)/2	-0.07		
		(8.65-8.76)x(0.67+0.67)/2	-0.07		
		(8.04-8.65)x(0.68+0.67)/2	-0.41		
		(7.47-8.04)x(0.69+0.68)/2	-0.39		
		(7.31-7.47)x(0.69+0.69)/2	-0.11		
		(7.14-7.31)x(0.70+0.69)/2	-0.12		
		(6.58-7.14)x(0.72+0.70)/2	-0.40		
		(6.08-6.58)x(0.73+0.72)/2	-0.36		
		(5.86-6.08)x(0.72+0.73)/2	-0.16		
		(5.62-5.86)x(0.72+0.72)/2	-0.17		
		(5.13-5.62)x(0.71+0.72)/2	-0.35		
		(4.69-5.13)x(0.70+0.71)/2	-0.31		
		(4.41-4.69)x(0.70+0.70)/2	-0.20		
		(4.10-4.41)x(0.69+0.70)/2	-0.22		
		(3.68-4.10)x(0.70+0.69)/2	-0.29		
		(3.29-3.68)x(0.69+0.70)/2	-0.27		
		(2.96-3.29)x(0.69+0.69)/2	-0.23		
		(2.59-2.96)x(0.72+0.69)/2	-0.26		
		(2.23-2.59)x(0.73+0.72)/2	-0.26		
		(1.90-2.23)x(0.73+0.73)/2	-0.24		
		(1.51-1.90)x(0.71+0.73)/2	-0.28		
		(1.07-1.51)x(0.70+0.71)/2	-0.31		
		(0.78-1.07)x(0.69+0.70)/2	-0.20		
		(0.51-0.78)x(0.70+0.69)/2	-0.19		
		(0.05-0.51)x(0.70+0.70)/2	-0.32		
		(-0.44-0.05)x(0.68+0.70)/2	-0.34		
		(-0.67--0.44)x(0.67+0.68)/2	-0.16		
		(-0.88--0.67)x(0.67+0.67)/2	-0.14		
		(-1.40--0.88)x(0.68+0.67)/2	-0.35		
		(-1.96--1.40)x(0.66+0.68)/2	-0.38		
		(-2.12--1.96)x(0.66+0.66)/2	-0.11		
		(-2.27--2.12)x(0.66+0.66)/2	-0.10		
		(-2.85--2.27)x(0.68+0.66)/2	-0.39		
		(-3.47--2.85)x(0.68+0.68)/2	-0.42		
		(-3.57--3.47)x(0.68+0.68)/2	-0.07		
		(-3.67--3.57)x(0.68+0.68)/2	-0.07		
		(-4.30--3.67)x(0.67+0.68)/2	-0.43		
		(-4.99--4.30)x(0.66+0.67)/2	-0.46		
		(-5.03--4.99)x(0.66+0.66)/2	-0.03		
		(-5.06--5.03)x(0.66+0.66)/2	-0.02		
		(-5.75--5.06)x(0.64+0.66)/2	-0.45		
		(-6.45--5.75)x(0.64+0.64)/2	-0.45		
		(-6.48--6.45)x(0.64+0.64)/2	-0.02		
		(-6.50--6.48)x(0.64+0.64)/2	-0.01		
		(-7.20--6.50)x(0.63+0.64)/2	-0.44		
		(-7.84--7.20)x(0.61+0.63)/2	-0.40		
		(-7.93--7.84)x(0.61+0.61)/2	-0.05		
		(-8.02--7.93)x(0.60+0.61)/2	-0.05		
		(-8.65--8.02)x(0.59+0.60)/2	-0.37		
		(-9.24--8.65)x(0.59+0.59)/2	-0.35		
		(-9.38--9.24)x(0.59+0.59)/2	-0.08		
		(-9.54--9.38)x(0.59+0.59)/2	-0.09		
		(-10.10--9.54)x(0.58+0.59)/2	-0.33		
		(-10.63--10.10)x(0.58+0.58)/2	-0.31		
		(-11.05--10.63)x(0.56+0.58)/2	-0.24		
		(-12.02--11.05)x(0.53+0.56)/2	-0.53		
		(-12.28--12.02)x(0.52+0.53)/2	-0.14		
		(-12.57--12.28)x(0.53+0.52)/2	-0.15		
		(-13.01--12.57)x(0.53+0.53)/2	-0.23		
		(-13.41--13.01)x(0.53+0.53)/2	-0.21		
		(-13.73--13.41)x(0.52+0.53)/2	-0.17		
		(-14.08--13.73)x(0.53+0.52)/2	-0.18		
		(-14.46--14.08)x(0.53+0.53)/2	-0.20		
		(-14.80--14.46)x(0.53+0.53)/2	-0.18		
		(-15.18--14.80)x(0.53+0.53)/2	-0.20		
		(-15.60--15.18)x(0.52+0.53)/2	-0.22		
		(-15.91--15.60)x(0.52+0.52)/2	-0.16		
		(-16.20--15.91)x(0.50+0.52)/2	-0.15		
		(-16.64--16.20)x(0.48+0.50)/2	-0.22		
		(-19.14--16.64)x(0.41+0.48)/2	-1.11		
				34.31	
8 105.00	BO1	(-19.26--19.50)x(1.74+1.74)/2	0.42		
		(-18.72--19.26)x(1.75+1.74)/2	0.94		
		(-18.03--18.72)x(1.78+1.75)/2	1.22		
		(-17.98--18.03)x(1.78+1.78)/2	0.09		
		(-17.92--17.98)x(1.78+1.78)/2	0.11		
		(-17.24--17.92)x(1.74+1.78)/2	1.20		
		(-16.79--17.24)x(1.74+1.74)/2	0.78		
		(-16.51--16.79)x(1.74+1.74)/2	0.49		
		(-16.08--16.51)x(1.74+1.74)/2	0.75		
		(-15.77--16.08)x(1.73+1.74)/2	0.54		
		(-15.55--15.77)x(1.72+1.73)/2	0.38		
		(-15.03--15.55)x(1.71+1.72)/2	0.89		
		(-14.32--15.03)x(1.72+1.71)/2	1.22		
		(-14.29--14.32)x(1.72+1.72)/2	0.05		
		(-14.25--14.29)x(1.72+1.72)/2	0.07		
		(-13.55--14.25)x(1.71+1.72)/2	1.20		
		(-13.08--13.55)x(1.71+1.71)/2	0.80		
		(-12.81--13.08)x(1.71+1.71)/2	0.46		
		(-12.41--12.81)x(1.69+1.71)/2	0.68		
		(-12.07--12.41)x(1.68+1.69)/2	0.57		
		(-11.84--12.07)x(1.68+1.68)/2	0.39		
		(-11.33--11.84)x(1.67+1.68)/2	0.85		
		(-10.61--11.33)x(1.65+1.67)/2	1.20		
		(-10.60--10.61)x(1.65+1.65)/2	0.02		
		(-10.58--10.60)x(1.65+1.65)/2	0.03		
		(-9.86--10.58)x(1.64+1.65)/2	1.18		
		(-9.37--9.86)x(1.64+1.64)/2	0.80		
		(-9.12--9.37)x(1.63+1.64)/2	0.41		
		(-8.74--9.12)x(1.63+1.63)/2	0.62		
		(-8.38--8.74)x(1.62+1.63)/2	0.58		
		(-8.13--8.38)x(1.61+1.62)/2	0.40		
		(-7.64--8.13)x(1.58+1.61)/2	0.78		
		A RIPORTARE mq	20.12		

BONIFICA

N. SEZIONE PROG.	FIG.	ELEMENTI DI CALCOLO	AREA ELEMENTARE mq	AREA FIGURA mq	NOTE
		RIPORTO mq	20.12		
		(-6.91--7.64)x(1.54+1.58)/2	1.14		
		(-6.90--6.91)x(1.54+1.54)/2	0.02		
		(-6.16--6.90)x(1.55+1.54)/2	1.14		
		(-5.66--6.16)x(1.53+1.55)/2	0.77		
		(-5.43--5.66)x(1.54+1.53)/2	0.35		
		(-5.08--5.43)x(1.54+1.54)/2	0.54		
		(-4.69--5.08)x(1.54+1.54)/2	0.60		
		(-4.43--4.69)x(1.54+1.54)/2	0.40		
		(-3.95--4.43)x(1.54+1.54)/2	0.74		
		(-3.24--3.95)x(1.55+1.54)/2	1.10		
		(-3.21--3.24)x(1.55+1.55)/2	0.05		
		(-3.19--3.21)x(1.55+1.55)/2	0.03		
		(-2.47--3.19)x(1.53+1.55)/2	1.11		
		(-1.95--2.47)x(1.51+1.53)/2	0.79		
		(-1.73--1.95)x(1.48+1.51)/2	0.33		
		(-1.41--1.73)x(1.44+1.48)/2	0.47		
		(-0.99--1.41)x(1.39+1.44)/2	0.59		
		(-0.72--0.99)x(1.39+1.39)/2	0.38		
		(-0.26--0.72)x(1.37+1.39)/2	0.63		
		(0.43--0.26)x(1.24+1.37)/2	0.90		
		(0.48-0.43)x(1.23+1.24)/2	0.06		
		(0.52-0.48)x(1.23+1.23)/2	0.05		
		(0.71-0.52)x(1.24+1.23)/2	0.23		
		(1.76-0.71)x(1.32+1.24)/2	1.34		
		(1.96-1.76)x(1.34+1.32)/2	0.27		
		(2.26-1.96)x(1.37+1.34)/2	0.41		
		(2.70-2.26)x(1.37+1.37)/2	0.60		
		(2.99-2.70)x(1.41+1.37)/2	0.40		
		(3.44-2.99)x(1.39+1.41)/2	0.63		
		(4.10-3.44)x(1.42+1.39)/2	0.93		
		(4.18-4.10)x(1.42+1.42)/2	0.11		
		(4.23-4.18)x(1.42+1.42)/2	0.07		
		(4.91-4.23)x(1.42+1.42)/2	0.97		
		(5.47-4.91)x(1.42+1.42)/2	0.80		
		(5.65-5.47)x(1.42+1.42)/2	0.26		
		(5.93-5.65)x(1.43+1.42)/2	0.40		
		(6.39-5.93)x(1.44+1.43)/2	0.66		
		(6.70-6.39)x(1.45+1.44)/2	0.45		
		(7.13-6.70)x(1.46+1.45)/2	0.63		
		(7.77-7.13)x(1.49+1.46)/2	0.94		
		(7.87-7.77)x(1.49+1.49)/2	0.15		
		(7.94-7.87)x(1.50+1.49)/2	0.10		
		(8.61-7.94)x(1.48+1.50)/2	1.00		
		(9.17-8.61)x(1.48+1.48)/2	0.83		
		(9.35-9.17)x(1.47+1.48)/2	0.27		
		(9.60-9.35)x(1.48+1.47)/2	0.37		
		(10.08-9.60)x(1.50+1.48)/2	0.72		
		(10.41-10.08)x(1.50+1.50)/2	0.50		
		(10.82-10.41)x(1.52+1.50)/2	0.62		
		(11.44-10.82)x(1.53+1.52)/2	0.95		
		(11.56-11.44)x(1.54+1.53)/2	0.18		
		(11.65-11.56)x(1.54+1.54)/2	0.14		
		(12.30-11.65)x(1.54+1.54)/2	1.00		
		(12.88-12.30)x(1.56+1.54)/2	0.90		
		(13.04-12.88)x(1.56+1.56)/2	0.25		
		(13.27-13.04)x(1.56+1.56)/2	0.36		
		(14.12-13.27)x(1.57+1.56)/2	1.33		
		(15.10-14.12)x(1.61+1.57)/2	1.56		
		(15.26-15.10)x(1.62+1.61)/2	0.26		
		(15.36-15.26)x(1.62+1.62)/2	0.16		
		(15.87-15.36)x(1.63+1.62)/2	0.83		
		(14.12-15.87)x(0.57+0.64)/2	-1.06		
		(13.27-14.12)x(0.56+0.57)/2	-0.48		
		(13.04-13.27)x(0.56+0.56)/2	-0.13		
		(12.88-13.04)x(0.56+0.56)/2	-0.09		
		(12.30-12.88)x(0.54+0.56)/2	-0.32		
		(11.65-12.30)x(0.54+0.54)/2	-0.35		
		(11.56-11.65)x(0.54+0.54)/2	-0.05		
		(11.44-11.56)x(0.53+0.54)/2	-0.06		
		(10.82-11.44)x(0.52+0.53)/2	-0.33		
		(10.41-10.82)x(0.50+0.52)/2	-0.21		
		(10.08-10.41)x(0.50+0.50)/2	-0.17		
		(9.60-10.08)x(0.48+0.50)/2	-0.24		
		(9.35-9.60)x(0.47+0.48)/2	-0.12		
		(9.17-9.35)x(0.48+0.47)/2	-0.09		
		(8.61-9.17)x(0.48+0.48)/2	-0.27		
		(7.94-8.61)x(0.50+0.48)/2	-0.33		
		(7.87-7.94)x(0.49+0.50)/2	-0.03		
		(7.77-7.87)x(0.49+0.49)/2	-0.05		
		(7.13-7.77)x(0.46+0.49)/2	-0.30		
		(6.70-7.13)x(0.45+0.46)/2	-0.20		
		(6.39-6.70)x(0.44+0.45)/2	-0.14		
		(5.93-6.39)x(0.43+0.44)/2	-0.20		
		(5.65-5.93)x(0.42+0.43)/2	-0.12		
		(5.47-5.65)x(0.42+0.42)/2	-0.08		
		(4.91-5.47)x(0.42+0.42)/2	-0.24		
		(4.23-4.91)x(0.42+0.42)/2	-0.29		
		(4.18-4.23)x(0.42+0.42)/2	-0.02		
		(4.10-4.18)x(0.42+0.42)/2	-0.03		
		(3.44-4.10)x(0.39+0.42)/2	-0.27		
		(2.99-3.44)x(0.41+0.39)/2	-0.18		
		(2.70-2.99)x(0.37+0.41)/2	-0.11		
		(2.26-2.70)x(0.37+0.37)/2	-0.16		
		(1.96-2.26)x(0.34+0.37)/2	-0.11		
		(1.76-1.96)x(0.32+0.34)/2	-0.07		
		(0.71-1.76)x(0.24+0.32)/2	-0.29		
		(0.52-0.71)x(0.23+0.24)/2	-0.04		
		(0.48-0.52)x(0.23+0.23)/2	-0.01		
		(0.43-0.48)x(0.24+0.23)/2	-0.01		
		(-0.26-0.43)x(0.37+0.24)/2	-0.21		
		(-0.72--0.26)x(0.39+0.37)/2	-0.17		
		(-0.99--0.72)x(0.39+0.39)/2	-0.11		
		(-1.41--0.99)x(0.44+0.39)/2	-0.17		
		(-1.73--1.41)x(0.48+0.44)/2	-0.15		
		(-1.95--1.73)x(0.51+0.48)/2	-0.11		
		A RIPORTARE mq	46.72		

BONIFICA

N. SEZIONE PROG.	FIG.	ELEMENTI DI CALCOLO	AREA ELEMENTARE mq	AREA FIGURA mq	NOTE
		RIPORTO mq	46.72		
		(-2.47--1.95)x(0.53+0.51)/2	-0.27		
		(-3.19--2.47)x(0.55+0.53)/2	-0.39		
		(-3.21--3.19)x(0.55+0.55)/2	-0.01		
		(-3.24--3.21)x(0.55+0.55)/2	-0.02		
		(-3.95--3.24)x(0.54+0.55)/2	-0.39		
		(-4.43--3.95)x(0.54+0.54)/2	-0.26		
		(-4.69--4.43)x(0.54+0.54)/2	-0.14		
		(-5.08--4.69)x(0.54+0.54)/2	-0.21		
		(-5.43--5.08)x(0.54+0.54)/2	-0.19		
		(-5.66--5.43)x(0.53+0.54)/2	-0.12		
		(-6.16--5.66)x(0.55+0.53)/2	-0.27		
		(-6.90--6.16)x(0.54+0.55)/2	-0.40		
		(-6.91--6.90)x(0.54+0.54)/2	-0.01		
		(-7.64--6.91)x(0.58+0.54)/2	-0.41		
		(-8.13--7.64)x(0.61+0.58)/2	-0.29		
		(-8.38--8.13)x(0.62+0.61)/2	-0.15		
		(-8.74--8.38)x(0.63+0.62)/2	-0.22		
		(-9.12--8.74)x(0.63+0.63)/2	-0.24		
		(-9.37--9.12)x(0.64+0.63)/2	-0.16		
		(-9.86--9.37)x(0.64+0.64)/2	-0.31		
		(-10.58--9.86)x(0.65+0.64)/2	-0.46		
		(-10.60--10.58)x(0.65+0.65)/2	-0.01		
		(-10.61--10.60)x(0.65+0.65)/2	-0.01		
		(-11.33--10.61)x(0.67+0.65)/2	-0.48		
		(-11.84--11.33)x(0.68+0.67)/2	-0.34		
		(-12.07--11.84)x(0.68+0.68)/2	-0.16		
		(-12.41--12.07)x(0.69+0.68)/2	-0.23		
		(-12.81--12.41)x(0.71+0.69)/2	-0.28		
		(-13.08--12.81)x(0.71+0.71)/2	-0.19		
		(-13.55--13.08)x(0.71+0.71)/2	-0.33		
		(-14.25--13.55)x(0.72+0.71)/2	-0.50		
		(-14.29--14.25)x(0.72+0.72)/2	-0.03		
		(-14.32--14.29)x(0.72+0.72)/2	-0.02		
		(-15.03--14.32)x(0.71+0.72)/2	-0.51		
		(-15.55--15.03)x(0.72+0.71)/2	-0.37		
		(-15.77--15.55)x(0.73+0.72)/2	-0.16		
		(-16.08--15.77)x(0.74+0.73)/2	-0.23		
		(-16.51--16.08)x(0.74+0.74)/2	-0.32		
		(-16.79--16.51)x(0.74+0.74)/2	-0.21		
		(-17.24--16.79)x(0.74+0.74)/2	-0.33		
		(-17.92--17.24)x(0.78+0.74)/2	-0.52		
		(-17.98--17.92)x(0.78+0.78)/2	-0.05		
		(-18.03--17.98)x(0.78+0.78)/2	-0.04		
		(-18.72--18.03)x(0.75+0.78)/2	-0.53		
		(-19.26--18.72)x(0.74+0.75)/2	-0.40		
		(-19.50--19.26)x(0.74+0.74)/2	-0.18		
				35.37	
9 120.00	BO1	(-19.86--20.64)x(1.35+1.34)/2	1.05		
		(-19.68--19.86)x(1.35+1.35)/2	0.24		
		(-19.09--19.68)x(1.34+1.35)/2	0.79		
		(-18.55--19.09)x(1.34+1.34)/2	0.72		
		(-18.32--18.55)x(1.33+1.34)/2	0.31		
		(-17.86--18.32)x(1.35+1.33)/2	0.62		
		(-17.55--17.86)x(1.36+1.35)/2	0.42		
		(-17.41--17.55)x(1.37+1.36)/2	0.19		
		(-16.78--17.41)x(1.38+1.37)/2	0.87		
		(-16.28--16.78)x(1.40+1.38)/2	0.69		
		(-16.01--16.28)x(1.42+1.40)/2	0.38		
		(-15.46--16.01)x(1.44+1.42)/2	0.79		
		(-15.24--15.46)x(1.45+1.44)/2	0.32		
		(-15.14--15.24)x(1.45+1.45)/2	0.14		
		(-14.48--15.14)x(1.43+1.45)/2	0.95		
		(-14.01--14.48)x(1.46+1.43)/2	0.68		
		(-13.71--14.01)x(1.47+1.46)/2	0.44		
		(-13.07--13.71)x(1.48+1.47)/2	0.94		
		(-12.94--13.07)x(1.48+1.48)/2	0.19		
		(-12.87--12.94)x(1.48+1.48)/2	0.10		
		(-12.17--12.87)x(1.52+1.48)/2	1.05		
		(-11.74--12.17)x(1.54+1.52)/2	0.66		
		(-11.40--11.74)x(1.56+1.54)/2	0.53		
		(-10.68--11.40)x(1.61+1.56)/2	1.14		
		(-10.63--10.68)x(1.62+1.61)/2	0.08		
		(-10.60--10.63)x(1.62+1.62)/2	0.05		
		(-10.53--10.60)x(1.62+1.62)/2	0.11		
		(-9.47--10.53)x(1.65+1.62)/2	1.73		
		(-9.09--9.47)x(1.65+1.65)/2	0.63		
		(-8.33--9.09)x(1.67+1.65)/2	1.26		
		(-8.32--8.33)x(1.67+1.67)/2	0.02		
		(-8.29--8.32)x(1.67+1.67)/2	0.05		
		(-7.55--8.29)x(1.69+1.67)/2	1.24		
		(-7.20--7.55)x(1.68+1.69)/2	0.59		
		(-6.78--7.20)x(1.68+1.68)/2	0.71		
		(-6.06--6.78)x(1.74+1.68)/2	1.23		
		(-6.01--6.06)x(1.74+1.74)/2	0.09		
		(-5.90--6.01)x(1.74+1.74)/2	0.19		
		(-5.24--5.90)x(1.73+1.74)/2	1.15		
		(-4.93--5.24)x(1.74+1.73)/2	0.54		
		(-4.47--4.93)x(1.76+1.74)/2	0.80		
		(-3.79--4.47)x(1.75+1.76)/2	1.19		
		(-3.70--3.79)x(1.75+1.75)/2	0.16		
		(-3.50--3.70)x(1.76+1.75)/2	0.35		
		(-2.93--3.50)x(1.78+1.76)/2	1.01		
		(-2.66--2.93)x(1.78+1.78)/2	0.48		
		(-2.16--2.66)x(1.77+1.78)/2	0.89		
		(-1.52--2.16)x(1.75+1.77)/2	1.13		
		(-1.39--1.52)x(1.75+1.75)/2	0.23		
		(-1.11--1.39)x(1.75+1.75)/2	0.49		
		(-0.62--1.11)x(1.76+1.75)/2	0.86		
		(-0.39--0.62)x(1.76+1.76)/2	0.40		
		(0.15--0.39)x(1.76+1.76)/2	0.95		
		(0.75-0.15)x(1.76+1.76)/2	1.06		
		(0.92-0.75)x(1.75+1.76)/2	0.30		
		(1.28-0.92)x(1.74+1.75)/2	0.63		
		(1.69-1.28)x(1.72+1.74)/2	0.71		
		(1.88-1.69)x(1.72+1.72)/2	0.33		
		A RIPORTARE mq	35.85		

BONIFICA

N. SEZIONE PROG.	FIG.	ELEMENTI DI CALCOLO	AREA ELEMENTARE mq	AREA FIGURA mq	NOTE
		RIPORTO mq	35.85		
		(2.46-1.88)x(1.71+1.72)/2	0.99		
		(3.02-2.46)x(1.71+1.71)/2	0.96		
		(3.23-3.02)x(1.71+1.71)/2	0.36		
		(3.67-3.23)x(1.72+1.71)/2	0.75		
		(4.00-3.67)x(1.72+1.72)/2	0.57		
		(4.15-4.00)x(1.71+1.72)/2	0.26		
		(4.77-4.15)x(1.69+1.71)/2	1.05		
		(5.29-4.77)x(1.70+1.69)/2	0.88		
		(5.54-5.29)x(1.69+1.70)/2	0.42		
		(6.06-5.54)x(1.66+1.69)/2	0.87		
		(6.31-6.06)x(1.65+1.66)/2	0.41		
		(6.42-6.31)x(1.64+1.65)/2	0.18		
		(7.08-6.42)x(1.62+1.64)/2	1.08		
		(7.56-7.08)x(1.60+1.62)/2	0.77		
		(7.84-7.56)x(1.60+1.60)/2	0.45		
		(8.45-7.84)x(1.58+1.60)/2	0.97		
		(8.61-8.45)x(1.58+1.58)/2	0.25		
		(8.69-8.61)x(1.58+1.58)/2	0.13		
		(8.90-8.69)x(1.57+1.58)/2	0.33		
		(9.83-8.90)x(1.53+1.57)/2	1.44		
		(10.15-9.83)x(1.54+1.53)/2	0.49		
		(10.85-10.15)x(1.52+1.54)/2	1.07		
		(10.92-10.85)x(1.52+1.52)/2	0.11		
		(10.96-10.92)x(1.52+1.52)/2	0.06		
		(11.69-10.96)x(1.53+1.52)/2	1.11		
		(12.10-11.69)x(1.53+1.53)/2	0.63		
		(12.46-12.10)x(1.53+1.53)/2	0.55		
		(13.23-12.46)x(1.53+1.53)/2	1.18		
		(13.24-13.23)x(1.53+1.53)/2	0.02		
		(14.00-13.24)x(1.44+1.53)/2	1.13		
		(14.36-14.00)x(1.44+1.44)/2	0.52		
		(14.77-14.36)x(1.37+1.44)/2	0.58		
		(15.50-14.77)x(1.34+1.37)/2	0.99		
		(15.54-15.50)x(1.35+1.34)/2	0.05		
		(15.63-15.54)x(1.34+1.35)/2	0.12		
		(16.31-15.63)x(1.26+1.34)/2	0.88		
		(16.63-16.31)x(1.20+1.26)/2	0.39		
		(17.08-16.63)x(1.22+1.20)/2	0.54		
		(17.32-17.08)x(1.21+1.22)/2	0.29		
		(16.31-17.32)x(0.26+0.08)/2	-0.17		
		(15.63-16.31)x(0.34+0.26)/2	-0.20		
		(15.54-15.63)x(0.35+0.34)/2	-0.03		
		(15.50-15.54)x(0.34+0.35)/2	-0.01		
		(14.77-15.50)x(0.37+0.34)/2	-0.26		
		(14.36-14.77)x(0.44+0.37)/2	-0.17		
		(14.00-14.36)x(0.44+0.44)/2	-0.16		
		(13.24-14.00)x(0.53+0.44)/2	-0.37		
		(13.23-13.24)x(0.53+0.53)/2	-0.01		
		(12.46-13.23)x(0.53+0.53)/2	-0.41		
		(12.10-12.46)x(0.53+0.53)/2	-0.19		
		(11.69-12.10)x(0.53+0.53)/2	-0.22		
		(10.96-11.69)x(0.52+0.53)/2	-0.38		
		(10.92-10.96)x(0.52+0.52)/2	-0.02		
		(10.85-10.92)x(0.52+0.52)/2	-0.04		
		(10.15-10.85)x(0.54+0.52)/2	-0.37		
		(9.83-10.15)x(0.53+0.54)/2	-0.17		
		(8.90-9.83)x(0.57+0.53)/2	-0.51		
		(8.69-8.90)x(0.58+0.57)/2	-0.12		
		(8.61-8.69)x(0.58+0.58)/2	-0.05		
		(8.45-8.61)x(0.58+0.58)/2	-0.09		
		(7.84-8.45)x(0.60+0.58)/2	-0.36		
		(7.56-7.84)x(0.60+0.60)/2	-0.17		
		(7.08-7.56)x(0.62+0.60)/2	-0.29		
		(6.42-7.08)x(0.64+0.62)/2	-0.42		
		(6.31-6.42)x(0.65+0.64)/2	-0.07		
		(6.06-6.31)x(0.66+0.65)/2	-0.16		
		(5.54-6.06)x(0.69+0.66)/2	-0.35		
		(5.29-5.54)x(0.70+0.69)/2	-0.17		
		(4.77-5.29)x(0.69+0.70)/2	-0.36		
		(4.15-4.77)x(0.71+0.69)/2	-0.43		
		(4.00-4.15)x(0.72+0.71)/2	-0.11		
		(3.67-4.00)x(0.72+0.72)/2	-0.24		
		(3.23-3.67)x(0.71+0.72)/2	-0.31		
		(3.02-3.23)x(0.71+0.71)/2	-0.15		
		(2.46-3.02)x(0.71+0.71)/2	-0.40		
		(1.88-2.46)x(0.72+0.71)/2	-0.41		
		(1.69-1.88)x(0.72+0.72)/2	-0.14		
		(1.28-1.69)x(0.74+0.72)/2	-0.30		
		(0.92-1.28)x(0.75+0.74)/2	-0.27		
		(0.75-0.92)x(0.76+0.75)/2	-0.13		
		(0.15-0.75)x(0.76+0.76)/2	-0.46		
		(-0.39-0.15)x(0.76+0.76)/2	-0.41		
		(-0.62--0.39)x(0.76+0.76)/2	-0.17		
		(-1.11--0.62)x(0.75+0.76)/2	-0.37		
		(-1.39--1.11)x(0.75+0.75)/2	-0.21		
		(-1.52--1.39)x(0.75+0.75)/2	-0.10		
		(-2.16--1.52)x(0.77+0.75)/2	-0.49		
		(-2.66--2.16)x(0.78+0.77)/2	-0.39		
		(-2.93--2.66)x(0.78+0.78)/2	-0.21		
		(-3.50--2.93)x(0.76+0.78)/2	-0.44		
		(-3.70--3.50)x(0.75+0.76)/2	-0.15		
		(-3.79--3.70)x(0.75+0.75)/2	-0.07		
		(-4.47--3.79)x(0.76+0.75)/2	-0.51		
		(-4.93--4.47)x(0.74+0.76)/2	-0.34		
		(-5.24--4.93)x(0.73+0.74)/2	-0.23		
		(-5.90--5.24)x(0.74+0.73)/2	-0.49		
		(-6.01--5.90)x(0.74+0.74)/2	-0.08		
		(-6.06--6.01)x(0.74+0.74)/2	-0.04		
		(-6.78--6.06)x(0.68+0.74)/2	-0.51		
		(-7.20--6.78)x(0.68+0.68)/2	-0.29		
		(-7.55--7.20)x(0.69+0.68)/2	-0.24		
		(-8.29--7.55)x(0.67+0.69)/2	-0.50		
		(-8.32--8.29)x(0.67+0.67)/2	-0.02		
		(-8.33--8.32)x(0.67+0.67)/2	-0.01		
		(-9.09--8.33)x(0.65+0.67)/2	-0.50		
		A RIPORTARE mq	43.26		

BONIFICA

N. SEZIONE PROG.	FIG.	ELEMENTI DI CALCOLO	AREA ELEMENTARE mq	AREA FIGURA mq	NOTE
		RIPORTO mq	43.26		
		(-9.47--9.09)x(0.65+0.65)/2	-0.25		
		(-10.53--9.47)x(0.62+0.65)/2	-0.67		
		(-10.60--10.53)x(0.62+0.62)/2	-0.04		
		(-10.63--10.60)x(0.62+0.62)/2	-0.02		
		(-10.68--10.63)x(0.61+0.62)/2	-0.03		
		(-11.40--10.68)x(0.56+0.61)/2	-0.42		
		(-11.74--11.40)x(0.54+0.56)/2	-0.19		
		(-12.17--11.74)x(0.52+0.54)/2	-0.23		
		(-12.87--12.17)x(0.48+0.52)/2	-0.35		
		(-12.94--12.87)x(0.48+0.48)/2	-0.03		
		(-13.07--12.94)x(0.48+0.48)/2	-0.06		
		(-13.71--13.07)x(0.47+0.48)/2	-0.30		
		(-14.01--13.71)x(0.46+0.47)/2	-0.14		
		(-14.48--14.01)x(0.43+0.46)/2	-0.21		
		(-15.14--14.48)x(0.45+0.43)/2	-0.29		
		(-15.24--15.14)x(0.45+0.45)/2	-0.04		
		(-15.46--15.24)x(0.44+0.45)/2	-0.10		
		(-16.01--15.46)x(0.42+0.44)/2	-0.24		
		(-16.28--16.01)x(0.40+0.42)/2	-0.11		
		(-16.78--16.28)x(0.38+0.40)/2	-0.20		
		(-17.41--16.78)x(0.37+0.38)/2	-0.24		
		(-17.55--17.41)x(0.36+0.37)/2	-0.05		
		(-17.86--17.55)x(0.35+0.36)/2	-0.11		
		(-18.32--17.86)x(0.33+0.35)/2	-0.16		
		(-18.55--18.32)x(0.34+0.33)/2	-0.08		
		(-19.09--18.55)x(0.34+0.34)/2	-0.18		
		(-19.68--19.09)x(0.35+0.34)/2	-0.20		
		(-19.86--19.68)x(0.35+0.35)/2	-0.06		
		(-20.64--19.86)x(0.34+0.35)/2	-0.27		
				37.99	
10 135.00	B01	(-19.90--20.36)x(1.77+1.77)/2	0.81		
		(-19.37--19.90)x(1.78+1.77)/2	0.94		
		(-19.08--19.37)x(1.76+1.78)/2	0.51		
		(-18.30--19.08)x(1.74+1.76)/2	1.36		
		(-18.25--18.30)x(1.74+1.74)/2	0.09		
		(-18.11--18.25)x(1.73+1.74)/2	0.24		
		(-17.43--18.11)x(1.70+1.73)/2	1.17		
		(-17.22--17.43)x(1.70+1.70)/2	0.36		
		(-16.61--17.22)x(1.68+1.70)/2	1.03		
		(-16.15--16.61)x(1.67+1.68)/2	0.77		
		(-15.78--16.15)x(1.68+1.67)/2	0.62		
		(-15.08--15.78)x(1.67+1.68)/2	1.17		
		(-14.96--15.08)x(1.67+1.67)/2	0.20		
		(-14.56--14.96)x(1.67+1.67)/2	0.67		
		(-14.14--14.56)x(1.67+1.67)/2	0.70		
		(-14.01--14.14)x(1.66+1.67)/2	0.22		
		(-13.32--14.01)x(1.60+1.66)/2	1.12		
		(-12.94--13.32)x(1.59+1.60)/2	0.61		
		(-12.49--12.94)x(1.59+1.59)/2	0.72		
		(-11.87--12.49)x(1.59+1.59)/2	0.99		
		(-11.67--11.87)x(1.59+1.59)/2	0.32		
		(-11.01--11.67)x(1.58+1.59)/2	1.05		
		(-10.85--11.01)x(1.58+1.58)/2	0.25		
		(-10.80--10.85)x(1.58+1.58)/2	0.08		
		(-10.03--10.80)x(1.59+1.58)/2	1.22		
		(-9.73--10.03)x(1.58+1.59)/2	0.48		
		(-9.20--9.73)x(1.58+1.58)/2	0.84		
		(-8.66--9.20)x(1.59+1.58)/2	0.86		
		(-8.38--8.66)x(1.53+1.59)/2	0.44		
		(-7.59--8.38)x(1.40+1.53)/2	1.16		
		(-7.56--7.59)x(1.40+1.40)/2	0.04		
		(-7.46--7.56)x(1.38+1.40)/2	0.14		
		(-6.74--7.46)x(1.23+1.38)/2	0.94		
		(-6.51--6.74)x(1.20+1.23)/2	0.28		
		(-5.91--6.51)x(1.27+1.20)/2	0.74		
		(-5.44--5.91)x(1.30+1.27)/2	0.60		
		(-5.09--5.44)x(1.35+1.30)/2	0.46		
		(-4.37--5.09)x(1.43+1.35)/2	1.00		
		(-3.92--4.37)x(1.47+1.43)/2	0.65		
		(-3.30--3.92)x(1.53+1.47)/2	0.93		
		(-2.62--3.30)x(1.54+1.53)/2	1.04		
		(-2.23--2.62)x(1.56+1.54)/2	0.60		
		(-1.80--2.23)x(1.59+1.56)/2	0.68		
		(-1.16--1.80)x(1.61+1.59)/2	1.02		
		(-0.98--1.16)x(1.62+1.61)/2	0.29		
		(-0.37--0.98)x(1.66+1.62)/2	1.00		
		(-0.15--0.37)x(1.68+1.66)/2	0.37		
		(-0.09--0.15)x(1.68+1.68)/2	0.10		
		(0.67--0.09)x(1.69+1.68)/2	1.28		
		(0.98-0.67)x(1.70+1.69)/2	0.53		
		(1.49-0.98)x(1.75+1.70)/2	0.88		
		(2.05-1.49)x(1.77+1.75)/2	0.99		
		(2.31-2.05)x(1.78+1.77)/2	0.46		
		(3.12-2.31)x(1.81+1.78)/2	1.45		
		(3.14-3.12)x(1.81+1.81)/2	0.04		
		(3.18-3.14)x(1.81+1.81)/2	0.07		
		(3.96-3.18)x(1.82+1.81)/2	1.42		
		(4.19-3.96)x(1.83+1.82)/2	0.42		
		(4.78-4.19)x(1.84+1.83)/2	1.08		
		(5.27-4.78)x(1.84+1.84)/2	0.90		
		(5.61-5.27)x(1.84+1.84)/2	0.63		
		(6.34-5.61)x(1.87+1.84)/2	1.35		
		(6.43-6.34)x(1.86+1.87)/2	0.17		
		(6.73-6.43)x(1.86+1.86)/2	0.56		
		(7.25-6.73)x(1.83+1.86)/2	0.96		
		(7.41-7.25)x(1.83+1.83)/2	0.29		
		(8.07-7.41)x(1.79+1.83)/2	1.19		
		(8.48-8.07)x(1.79+1.79)/2	0.73		
		(8.90-8.48)x(1.79+1.79)/2	0.75		
		(9.55-8.90)x(1.80+1.79)/2	1.17		
		(9.72-9.55)x(1.80+1.80)/2	0.31		
		(10.28-9.72)x(1.78+1.80)/2	1.00		
		(10.54-10.28)x(1.77+1.78)/2	0.46		
		(10.62-10.54)x(1.76+1.77)/2	0.14		
		(11.36-10.62)x(1.77+1.76)/2	1.31		
		A RIPORTARE mq	52.42		

BONIFICA

N. SEZIONE PROG.	FIG.	ELEMENTI DI CALCOLO	AREA ELEMENTARE mq	AREA FIGURA mq	NOTE
		RIPORTO mq	52.42		
		(11.69-11.36)x(1.76+1.77)/2	0.58		
		(12.19-11.69)x(1.75+1.76)/2	0.88		
		(12.76-12.19)x(1.76+1.75)/2	1.00		
		(13.01-12.76)x(1.74+1.76)/2	0.44		
		(13.83-13.01)x(1.71+1.74)/2	1.41		
		(14.90-13.83)x(1.65+1.71)/2	1.80		
		(15.48-14.90)x(1.65+1.65)/2	0.96		
		(15.97-15.48)x(1.66+1.65)/2	0.81		
		(16.30-15.97)x(1.64+1.66)/2	0.54		
		(17.05-16.30)x(1.62+1.64)/2	1.22		
		(17.12-17.05)x(1.61+1.62)/2	0.11		
		(17.33-17.12)x(1.60+1.61)/2	0.34		
		(15.97-17.33)x(0.66+0.61)/2	-0.86		
		(15.48-15.97)x(0.65+0.66)/2	-0.32		
		(14.90-15.48)x(0.65+0.65)/2	-0.38		
		(13.83-14.90)x(0.71+0.65)/2	-0.73		
		(13.01-13.83)x(0.74+0.71)/2	-0.59		
		(12.76-13.01)x(0.76+0.74)/2	-0.19		
		(12.19-12.76)x(0.75+0.76)/2	-0.43		
		(11.69-12.19)x(0.76+0.75)/2	-0.38		
		(11.36-11.69)x(0.77+0.76)/2	-0.25		
		(10.62-11.36)x(0.76+0.77)/2	-0.57		
		(10.54-10.62)x(0.77+0.76)/2	-0.06		
		(10.28-10.54)x(0.78+0.77)/2	-0.20		
		(9.72-10.28)x(0.80+0.78)/2	-0.44		
		(9.55-9.72)x(0.80+0.80)/2	-0.14		
		(8.90-9.55)x(0.79+0.80)/2	-0.52		
		(8.48-8.90)x(0.79+0.79)/2	-0.33		
		(8.07-8.48)x(0.79+0.79)/2	-0.32		
		(7.41-8.07)x(0.83+0.79)/2	-0.53		
		(7.25-7.41)x(0.83+0.83)/2	-0.13		
		(6.73-7.25)x(0.86+0.83)/2	-0.44		
		(6.43-6.73)x(0.86+0.86)/2	-0.26		
		(6.34-6.43)x(0.87+0.86)/2	-0.08		
		(5.61-6.34)x(0.84+0.87)/2	-0.62		
		(5.27-5.61)x(0.84+0.84)/2	-0.29		
		(4.78-5.27)x(0.84+0.84)/2	-0.41		
		(4.19-4.78)x(0.83+0.84)/2	-0.49		
		(3.96-4.19)x(0.82+0.83)/2	-0.19		
		(3.18-3.96)x(0.81+0.82)/2	-0.64		
		(3.14-3.18)x(0.81+0.81)/2	-0.03		
		(3.12-3.14)x(0.81+0.81)/2	-0.02		
		(2.31-3.12)x(0.78+0.81)/2	-0.64		
		(2.05-2.31)x(0.77+0.78)/2	-0.20		
		(1.49-2.05)x(0.75+0.77)/2	-0.43		
		(0.98-1.49)x(0.70+0.75)/2	-0.37		
		(0.67-0.98)x(0.69+0.70)/2	-0.22		
		(-0.09-0.67)x(0.68+0.69)/2	-0.52		
		(-0.15--0.09)x(0.68+0.68)/2	-0.04		
		(-0.37--0.15)x(0.66+0.68)/2	-0.15		
		(-0.98--0.37)x(0.62+0.66)/2	-0.39		
		(-1.16--0.98)x(0.61+0.62)/2	-0.11		
		(-1.80--1.16)x(0.59+0.61)/2	-0.38		
		(-2.23--1.80)x(0.56+0.59)/2	-0.25		
		(-2.62--2.23)x(0.54+0.56)/2	-0.21		
		(-3.30--2.62)x(0.53+0.54)/2	-0.36		
		(-3.92--3.30)x(0.47+0.53)/2	-0.31		
		(-4.37--3.92)x(0.43+0.47)/2	-0.20		
		(-5.09--4.37)x(0.35+0.43)/2	-0.28		
		(-5.44--5.09)x(0.30+0.35)/2	-0.11		
		(-5.91--5.44)x(0.27+0.30)/2	-0.13		
		(-6.51--5.91)x(0.20+0.27)/2	-0.14		
		(-6.74--6.51)x(0.23+0.20)/2	-0.05		
		(-7.46--6.74)x(0.38+0.23)/2	-0.22		
		(-7.56--7.46)x(0.40+0.38)/2	-0.04		
		(-7.59--7.56)x(0.40+0.40)/2	-0.01		
		(-8.38--7.59)x(0.53+0.40)/2	-0.37		
		(-8.66--8.38)x(0.59+0.53)/2	-0.16		
		(-9.20--8.66)x(0.58+0.59)/2	-0.32		
		(-9.73--9.20)x(0.58+0.58)/2	-0.31		
		(-10.03--9.73)x(0.59+0.58)/2	-0.18		
		(-10.80--10.03)x(0.58+0.59)/2	-0.45		
		(-10.85--10.80)x(0.58+0.58)/2	-0.03		
		(-11.01--10.85)x(0.58+0.58)/2	-0.09		
		(-11.67--11.01)x(0.59+0.58)/2	-0.39		
		(-11.87--11.67)x(0.59+0.59)/2	-0.12		
		(-12.49--11.87)x(0.59+0.59)/2	-0.37		
		(-12.94--12.49)x(0.59+0.59)/2	-0.27		
		(-13.32--12.94)x(0.60+0.59)/2	-0.23		
		(-14.01--13.32)x(0.66+0.60)/2	-0.43		
		(-14.14--14.01)x(0.67+0.66)/2	-0.09		
		(-14.56--14.14)x(0.67+0.67)/2	-0.28		
		(-14.96--14.56)x(0.67+0.67)/2	-0.27		
		(-15.08--14.96)x(0.67+0.67)/2	-0.08		
		(-15.78--15.08)x(0.68+0.67)/2	-0.47		
		(-16.15--15.78)x(0.67+0.68)/2	-0.25		
		(-16.61--16.15)x(0.68+0.67)/2	-0.31		
		(-17.22--16.61)x(0.70+0.68)/2	-0.42		
		(-17.43--17.22)x(0.70+0.70)/2	-0.15		
		(-18.11--17.43)x(0.73+0.70)/2	-0.49		
		(-18.25--18.11)x(0.74+0.73)/2	-0.10		
		(-18.30--18.25)x(0.74+0.74)/2	-0.04		
		(-19.08--18.30)x(0.76+0.74)/2	-0.58		
		(-19.37--19.08)x(0.78+0.76)/2	-0.22		
		(-19.90--19.37)x(0.77+0.78)/2	-0.41		
		(-20.36--19.90)x(0.77+0.77)/2	-0.35		
				37.68	
11 150.00	BO1	(-19.60--20.99)x(1.52+1.46)/2	2.07		
		(-19.24--19.60)x(1.54+1.52)/2	0.55		
		(-18.57--19.24)x(1.57+1.54)/2	1.04		
		(-17.67--18.57)x(1.58+1.57)/2	1.42		
		(-17.53--17.67)x(1.58+1.58)/2	0.22		
		(-17.43--17.53)x(1.58+1.58)/2	0.16		
		(-16.73--17.43)x(1.56+1.58)/2	1.10		
		(-16.52--16.73)x(1.55+1.56)/2	0.33		
		A RIPORTARE mq	6.89		

BONIFICA

N. SEZIONE PROG.	FIG.	ELEMENTI DI CALCOLO	AREA ELEMENTARE mq	AREA FIGURA mq	NOTE
		RIPORTO mq	6.89		
		(-16.49--16.52)x(1.55+1.55)/2	0.05		
		(-15.62--16.49)x(1.58+1.55)/2	1.36		
		(-15.46--15.62)x(1.59+1.58)/2	0.25		
		(-14.72--15.46)x(1.65+1.59)/2	1.20		
		(-14.42--14.72)x(1.67+1.65)/2	0.50		
		(-13.81--14.42)x(1.69+1.67)/2	1.02		
		(-13.39--13.81)x(1.69+1.69)/2	0.71		
		(-12.91--13.39)x(1.71+1.69)/2	0.82		
		(-12.35--12.91)x(1.73+1.71)/2	0.96		
		(-12.01--12.35)x(1.74+1.73)/2	0.59		
		(-11.31--12.01)x(1.74+1.74)/2	1.22		
		(-11.10--11.31)x(1.74+1.74)/2	0.37		
		(-10.28--11.10)x(1.75+1.74)/2	1.43		
		(-10.20--10.28)x(1.75+1.75)/2	0.14		
		(-9.68--10.20)x(1.78+1.75)/2	0.92		
		(-9.30--9.68)x(1.79+1.78)/2	0.68		
		(-9.24--9.30)x(1.80+1.79)/2	0.11		
		(-8.39--9.24)x(1.81+1.80)/2	1.53		
		(-8.20--8.39)x(1.81+1.81)/2	0.34		
		(-7.49--8.20)x(1.77+1.81)/2	1.27		
		(-7.17--7.49)x(1.76+1.77)/2	0.56		
		(-6.59--7.17)x(1.74+1.76)/2	1.02		
		(-6.13--6.59)x(1.72+1.74)/2	0.80		
		(-5.68--6.13)x(1.73+1.72)/2	0.78		
		(-5.10--5.68)x(1.73+1.73)/2	1.00		
		(-4.78--5.10)x(1.72+1.73)/2	0.55		
		(-4.06--4.78)x(1.71+1.72)/2	1.23		
		(-3.88--4.06)x(1.70+1.71)/2	0.31		
		(-3.02--3.88)x(1.67+1.70)/2	1.45		
		(-2.97--3.02)x(1.67+1.67)/2	0.08		
		(-2.63--2.97)x(1.66+1.67)/2	0.57		
		(-2.07--2.63)x(1.65+1.66)/2	0.93		
		(-1.99--2.07)x(1.65+1.65)/2	0.13		
		(-1.17--1.99)x(1.65+1.65)/2	1.35		
		(-0.95--1.17)x(1.66+1.65)/2	0.36		
		(-0.66--0.95)x(1.65+1.66)/2	0.48		
		(0.09--0.66)x(1.66+1.65)/2	1.24		
		(0.64-0.09)x(1.64+1.66)/2	0.91		
		(1.12-0.64)x(1.59+1.64)/2	0.78		
		(1.55-1.12)x(1.53+1.59)/2	0.67		
		(2.16-1.55)x(1.41+1.53)/2	0.90		
		(2.45-2.16)x(1.41+1.41)/2	0.41		
		(3.19-2.45)x(1.36+1.41)/2	1.02		
		(3.35-3.19)x(1.38+1.36)/2	0.22		
		(4.23-3.35)x(1.43+1.38)/2	1.24		
		(4.26-4.23)x(1.43+1.43)/2	0.04		
		(4.42-4.26)x(1.44+1.43)/2	0.23		
		(5.16-4.42)x(1.52+1.44)/2	1.10		
		(5.27-5.16)x(1.54+1.52)/2	0.17		
		(6.06-5.27)x(1.67+1.54)/2	1.27		
		(6.30-6.06)x(1.70+1.67)/2	0.40		
		(6.97-6.30)x(1.73+1.70)/2	1.15		
		(7.34-6.97)x(1.73+1.73)/2	0.64		
		(7.87-7.34)x(1.75+1.73)/2	0.92		
		(8.38-7.87)x(1.76+1.75)/2	0.90		
		(8.77-8.38)x(1.76+1.76)/2	0.69		
		(9.41-8.77)x(1.78+1.76)/2	1.13		
		(9.68-9.41)x(1.79+1.78)/2	0.48		
		(10.45-9.68)x(1.80+1.79)/2	1.38		
		(10.58-10.45)x(1.81+1.80)/2	0.23		
		(11.47-10.58)x(1.81+1.81)/2	1.61		
		(11.48-11.47)x(1.81+1.81)/2	0.02		
		(11.49-11.48)x(1.81+1.81)/2	0.02		
		(12.39-11.49)x(1.83+1.81)/2	1.64		
		(12.52-12.39)x(1.84+1.83)/2	0.24		
		(13.29-12.52)x(1.88+1.84)/2	1.43		
		(13.56-13.29)x(1.89+1.88)/2	0.51		
		(14.19-13.56)x(1.88+1.89)/2	1.19		
		(14.59-14.19)x(1.89+1.88)/2	0.75		
		(15.10-14.59)x(1.84+1.89)/2	0.95		
		(15.63-15.10)x(1.82+1.84)/2	0.97		
		(16.00-15.63)x(1.83+1.82)/2	0.68		
		(16.67-16.00)x(1.80+1.83)/2	1.22		
		(16.73-16.67)x(0.80+1.80)/2	0.08		
		(16.00-16.73)x(0.83+0.80)/2	-0.59		
		(15.63-16.00)x(0.82+0.83)/2	-0.31		
		(15.10-15.63)x(0.84+0.82)/2	-0.44		
		(14.59-15.10)x(0.89+0.84)/2	-0.44		
		(14.19-14.59)x(0.88+0.89)/2	-0.35		
		(13.56-14.19)x(0.89+0.88)/2	-0.56		
		(13.29-13.56)x(0.88+0.89)/2	-0.24		
		(12.52-13.29)x(0.84+0.88)/2	-0.66		
		(12.39-12.52)x(0.83+0.84)/2	-0.11		
		(11.49-12.39)x(0.81+0.83)/2	-0.74		
		(11.48-11.49)x(0.81+0.81)/2	-0.01		
		(11.47-11.48)x(0.81+0.81)/2	-0.01		
		(10.58-11.47)x(0.81+0.81)/2	-0.72		
		(10.45-10.58)x(0.80+0.81)/2	-0.10		
		(9.68-10.45)x(0.79+0.80)/2	-0.61		
		(9.41-9.68)x(0.78+0.79)/2	-0.21		
		(8.77-9.41)x(0.76+0.78)/2	-0.49		
		(8.38-8.77)x(0.76+0.76)/2	-0.30		
		(7.87-8.38)x(0.75+0.76)/2	-0.39		
		(7.34-7.87)x(0.73+0.75)/2	-0.39		
		(6.97-7.34)x(0.73+0.73)/2	-0.27		
		(6.30-6.97)x(0.70+0.73)/2	-0.48		
		(6.06-6.30)x(0.67+0.70)/2	-0.16		
		(5.27-6.06)x(0.54+0.67)/2	-0.48		
		(5.16-5.27)x(0.52+0.54)/2	-0.06		
		(4.42-5.16)x(0.44+0.52)/2	-0.36		
		(4.26-4.42)x(0.43+0.44)/2	-0.07		
		(4.23-4.26)x(0.43+0.43)/2	-0.01		
		(3.35-4.23)x(0.38+0.43)/2	-0.36		
		(3.19-3.35)x(0.36+0.38)/2	-0.06		
		(2.45-3.19)x(0.41+0.36)/2	-0.28		
		A RIPORTARE mq	53.13		

BONIFICA

N. SEZIONE PROG.	FIG.	ELEMENTI DI CALCOLO	AREA ELEMENTARE mq	AREA FIGURA mq	NOTE
		RIPORTO mq	53.13		
		(2.16-2.45)x(0.41+0.41)/2	-0.12		
		(1.55-2.16)x(0.53+0.41)/2	-0.29		
		(1.12-1.55)x(0.59+0.53)/2	-0.24		
		(0.64-1.12)x(0.64+0.59)/2	-0.30		
		(0.09-0.64)x(0.66+0.64)/2	-0.36		
		(-0.66-0.09)x(0.65+0.66)/2	-0.49		
		(-0.95--0.66)x(0.66+0.65)/2	-0.19		
		(-1.17--0.95)x(0.65+0.66)/2	-0.14		
		(-1.99--1.17)x(0.65+0.65)/2	-0.53		
		(-2.07--1.99)x(0.65+0.65)/2	-0.05		
		(-2.63--2.07)x(0.66+0.65)/2	-0.37		
		(-2.97--2.63)x(0.67+0.66)/2	-0.23		
		(-3.02--2.97)x(0.67+0.67)/2	-0.03		
		(-3.88--3.02)x(0.70+0.67)/2	-0.59		
		(-4.06--3.88)x(0.71+0.70)/2	-0.13		
		(-4.78--4.06)x(0.72+0.71)/2	-0.51		
		(-5.10--4.78)x(0.73+0.72)/2	-0.23		
		(-5.68--5.10)x(0.73+0.73)/2	-0.42		
		(-6.13--5.68)x(0.72+0.73)/2	-0.33		
		(-6.59--6.13)x(0.74+0.72)/2	-0.34		
		(-7.17--6.59)x(0.76+0.74)/2	-0.44		
		(-7.49--7.17)x(0.77+0.76)/2	-0.24		
		(-8.20--7.49)x(0.81+0.77)/2	-0.56		
		(-8.39--8.20)x(0.81+0.81)/2	-0.15		
		(-9.24--8.39)x(0.80+0.81)/2	-0.68		
		(-9.30--9.24)x(0.79+0.80)/2	-0.05		
		(-9.68--9.30)x(0.78+0.79)/2	-0.30		
		(-10.20--9.68)x(0.75+0.78)/2	-0.40		
		(-10.28--10.20)x(0.75+0.75)/2	-0.06		
		(-11.10--10.28)x(0.74+0.75)/2	-0.61		
		(-11.31--11.10)x(0.74+0.74)/2	-0.16		
		(-12.01--11.31)x(0.74+0.74)/2	-0.52		
		(-12.35--12.01)x(0.73+0.74)/2	-0.25		
		(-12.91--12.35)x(0.71+0.73)/2	-0.40		
		(-13.39--12.91)x(0.69+0.71)/2	-0.34		
		(-13.81--13.39)x(0.69+0.69)/2	-0.29		
		(-14.42--13.81)x(0.67+0.69)/2	-0.41		
		(-14.72--14.42)x(0.65+0.67)/2	-0.20		
		(-15.46--14.72)x(0.59+0.65)/2	-0.46		
		(-15.62--15.46)x(0.58+0.59)/2	-0.09		
		(-16.49--15.62)x(0.55+0.58)/2	-0.49		
		(-16.52--16.49)x(0.55+0.55)/2	-0.02		
		(-16.73--16.52)x(0.56+0.55)/2	-0.12		
		(-17.43--16.73)x(0.58+0.56)/2	-0.40		
		(-17.53--17.43)x(0.58+0.58)/2	-0.06		
		(-17.67--17.53)x(0.58+0.58)/2	-0.08		
		(-18.57--17.67)x(0.57+0.58)/2	-0.52		
		(-19.24--18.57)x(0.54+0.57)/2	-0.37		
		(-19.60--19.24)x(0.52+0.54)/2	-0.19		
		(-20.99--19.60)x(0.46+0.52)/2	-0.68		
				37.70	
12 165.00	BO1	(-19.38--20.35)x(1.87+1.84)/2	1.80		
		(-19.13--19.38)x(1.87+1.87)/2	0.47		
		(-18.39--19.13)x(1.84+1.87)/2	1.37		
		(-18.10--18.39)x(1.82+1.84)/2	0.53		
		(-17.40--18.10)x(1.70+1.82)/2	1.23		
		(-17.07--17.40)x(1.66+1.70)/2	0.55		
		(-16.72--17.07)x(1.63+1.66)/2	0.58		
		(-16.05--16.72)x(1.56+1.63)/2	1.07		
		(-15.42--16.05)x(1.58+1.56)/2	0.99		
		(-15.02--15.42)x(1.60+1.58)/2	0.64		
		(-14.43--15.02)x(1.63+1.60)/2	0.95		
		(-14.00--14.43)x(1.64+1.63)/2	0.70		
		(-13.44--14.00)x(1.66+1.64)/2	0.92		
		(-12.97--13.44)x(1.66+1.66)/2	0.78		
		(-12.45--12.97)x(1.68+1.66)/2	0.87		
		(-11.95--12.45)x(1.66+1.68)/2	0.83		
		(-11.46--11.95)x(1.66+1.66)/2	0.81		
		(-10.92--11.46)x(1.66+1.66)/2	0.90		
		(-10.47--10.92)x(1.67+1.66)/2	0.75		
		(-9.89--10.47)x(1.68+1.67)/2	0.97		
		(-9.48--9.89)x(1.66+1.68)/2	0.68		
		(-8.87--9.48)x(1.65+1.66)/2	1.01		
		(-8.49--8.87)x(1.66+1.65)/2	0.63		
		(-7.81--8.49)x(1.69+1.66)/2	1.14		
		(-8.49--7.81)x(0.66+0.69)/2	-0.46		
		(-8.87--8.49)x(0.65+0.66)/2	-0.25		
		(-9.48--8.87)x(0.66+0.65)/2	-0.40		
		(-9.89--9.48)x(0.68+0.66)/2	-0.27		
		(-10.47--9.89)x(0.67+0.68)/2	-0.39		
		(-10.92--10.47)x(0.66+0.67)/2	-0.30		
		(-11.46--10.92)x(0.66+0.66)/2	-0.36		
		(-11.95--11.46)x(0.66+0.66)/2	-0.32		
		(-12.45--11.95)x(0.68+0.66)/2	-0.34		
		(-12.97--12.45)x(0.66+0.68)/2	-0.35		
		(-13.44--12.97)x(0.66+0.66)/2	-0.31		
		(-14.00--13.44)x(0.64+0.66)/2	-0.36		
		(-14.43--14.00)x(0.63+0.64)/2	-0.27		
		(-15.02--14.43)x(0.60+0.63)/2	-0.36		
		(-15.42--15.02)x(0.58+0.60)/2	-0.24		
		(-16.05--15.42)x(0.56+0.58)/2	-0.36		
		(-16.72--16.05)x(0.63+0.56)/2	-0.40		
		(-17.07--16.72)x(0.66+0.63)/2	-0.23		
		(-17.40--17.07)x(0.70+0.66)/2	-0.22		
		(-18.10--17.40)x(0.82+0.70)/2	-0.53		
		(-18.39--18.10)x(0.84+0.82)/2	-0.24		
		(-19.13--18.39)x(0.87+0.84)/2	-0.63		
		(-19.38--19.13)x(0.87+0.87)/2	-0.22		
		(-20.35--19.38)x(0.84+0.87)/2	-0.83		
				12.53	
12 165.00	BO2	(1.38-1.02)x(1.84+1.82)/2	0.66		
		(1.39-1.38)x(1.84+1.84)/2	0.02		
		(1.40-1.39)x(1.84+1.84)/2	0.02		
		(1.69-1.40)x(1.84+1.84)/2	0.53		
		(2.39-1.69)x(1.84+1.84)/2	1.29		
		A RIPORTARE mq	2.52		

BONIFICA

N. SEZIONE PROG.	FIG.	ELEMENTI DI CALCOLO	AREA ELEMENTARE mq	AREA FIGURA mq	NOTE
		RIPORTO mq	2.52		
		(2.42-2.39)x(1.84+1.84)/2	0.06		
		(3.38-2.42)x(1.83+1.84)/2	1.76		
		(3.44-3.38)x(1.83+1.83)/2	0.11		
		(4.37-3.44)x(1.82+1.83)/2	1.70		
		(4.47-4.37)x(1.82+1.82)/2	0.18		
		(5.36-4.47)x(1.83+1.82)/2	1.62		
		(5.50-5.36)x(1.83+1.83)/2	0.26		
		(6.35-5.50)x(1.79+1.83)/2	1.54		
		(6.52-6.35)x(1.78+1.79)/2	0.30		
		(7.34-6.52)x(1.72+1.78)/2	1.44		
		(7.55-7.34)x(1.71+1.72)/2	0.36		
		(8.33-7.55)x(1.62+1.71)/2	1.30		
		(8.57-8.33)x(1.60+1.62)/2	0.39		
		(9.32-8.57)x(1.60+1.60)/2	1.20		
		(9.60-9.32)x(1.59+1.60)/2	0.45		
		(10.31-9.60)x(1.67+1.59)/2	1.16		
		(10.63-10.31)x(1.70+1.67)/2	0.54		
		(11.30-10.63)x(1.75+1.70)/2	1.16		
		(11.65-11.30)x(1.80+1.75)/2	0.62		
		(12.29-11.65)x(1.80+1.80)/2	1.15		
		(12.68-12.29)x(1.81+1.80)/2	0.70		
		(13.28-12.68)x(1.81+1.81)/2	1.09		
		(13.70-13.28)x(1.81+1.81)/2	0.76		
		(14.27-13.70)x(1.82+1.81)/2	1.03		
		(14.73-14.27)x(1.84+1.82)/2	0.84		
		(15.26-14.73)x(1.83+1.84)/2	0.97		
		(15.76-15.26)x(1.83+1.83)/2	0.92		
		(16.25-15.76)x(1.86+1.83)/2	0.90		
		(16.33-16.25)x(0.86+1.86)/2	0.11		
		(16.25-16.33)x(0.86+0.86)/2	-0.07		
		(15.76-16.25)x(0.83+0.86)/2	-0.41		
		(15.26-15.76)x(0.83+0.83)/2	-0.41		
		(14.73-15.26)x(0.84+0.83)/2	-0.44		
		(14.27-14.73)x(0.82+0.84)/2	-0.38		
		(13.70-14.27)x(0.81+0.82)/2	-0.46		
		(13.28-13.70)x(0.81+0.81)/2	-0.34		
		(12.68-13.28)x(0.81+0.81)/2	-0.49		
		(12.29-12.68)x(0.80+0.81)/2	-0.31		
		(11.65-12.29)x(0.80+0.80)/2	-0.51		
		(11.30-11.65)x(0.75+0.80)/2	-0.27		
		(10.63-11.30)x(0.70+0.75)/2	-0.49		
		(10.31-10.63)x(0.67+0.70)/2	-0.22		
		(9.60-10.31)x(0.59+0.67)/2	-0.45		
		(9.32-9.60)x(0.60+0.59)/2	-0.17		
		(8.57-9.32)x(0.60+0.60)/2	-0.45		
		(8.33-8.57)x(0.62+0.60)/2	-0.15		
		(7.55-8.33)x(0.71+0.62)/2	-0.52		
		(7.34-7.55)x(0.72+0.71)/2	-0.15		
		(6.52-7.34)x(0.78+0.72)/2	-0.62		
		(6.35-6.52)x(0.79+0.78)/2	-0.13		
		(5.50-6.35)x(0.83+0.79)/2	-0.69		
		(5.36-5.50)x(0.83+0.83)/2	-0.12		
		(4.47-5.36)x(0.82+0.83)/2	-0.73		
		(4.37-4.47)x(0.82+0.82)/2	-0.08		
		(3.44-4.37)x(0.83+0.82)/2	-0.77		
		(3.38-3.44)x(0.83+0.83)/2	-0.05		
		(2.42-3.38)x(0.84+0.83)/2	-0.80		
		(2.39-2.42)x(0.84+0.84)/2	-0.03		
		(1.69-2.39)x(0.84+0.84)/2	-0.59		
		(1.40-1.69)x(0.84+0.84)/2	-0.24		
		(1.39-1.40)x(0.84+0.84)/2	-0.01		
		(1.38-1.39)x(0.84+0.84)/2	-0.01		
		(1.02-1.38)x(0.82+0.84)/2	-0.30		
				15.28	
TR 172.62	B01	(2.17-1.54)x(1.87+1.83)/2	1.17		
		(2.55-2.17)x(1.88+1.87)/2	0.71		
		(3.20-2.55)x(1.95+1.88)/2	1.24		
		(3.57-3.20)x(2.02+1.95)/2	0.73		
		(4.22-3.57)x(2.09+2.02)/2	1.34		
		(4.60-4.22)x(2.12+2.09)/2	0.80		
		(5.25-4.60)x(2.03+2.12)/2	1.35		
		(5.62-5.25)x(1.98+2.03)/2	0.74		
		(6.27-5.62)x(1.91+1.98)/2	1.26		
		(6.65-6.27)x(1.85+1.91)/2	0.71		
		(7.30-6.65)x(1.85+1.85)/2	1.20		
		(7.67-7.30)x(1.84+1.85)/2	0.68		
		(8.33-7.67)x(1.82+1.84)/2	1.21		
		(8.70-8.33)x(1.80+1.82)/2	0.67		
		(9.35-8.70)x(1.79+1.80)/2	1.17		
		(9.72-9.35)x(1.79+1.79)/2	0.66		
		(10.38-9.72)x(1.82+1.79)/2	1.19		
		(10.75-10.38)x(1.82+1.82)/2	0.67		
		(11.40-10.75)x(1.83+1.82)/2	1.19		
		(11.77-11.40)x(1.85+1.83)/2	0.68		
		(12.43-11.77)x(1.86+1.85)/2	1.22		
		(12.80-12.43)x(1.89+1.86)/2	0.69		
		(13.46-12.80)x(1.93+1.89)/2	1.26		
		(13.82-13.46)x(1.94+1.93)/2	0.70		
		(14.48-13.82)x(1.95+1.94)/2	1.28		
		(14.85-14.48)x(1.93+1.95)/2	0.72		
		(15.51-14.85)x(1.91+1.93)/2	1.27		
		(15.87-15.51)x(1.89+1.91)/2	0.68		
		(16.27-15.87)x(1.88+1.89)/2	0.75		
		(15.87-16.27)x(0.89+0.88)/2	-0.35		
		(15.51-15.87)x(0.91+0.89)/2	-0.32		
		(14.85-15.51)x(0.93+0.91)/2	-0.61		
		(14.48-14.85)x(0.95+0.93)/2	-0.35		
		(13.82-14.48)x(0.94+0.95)/2	-0.62		
		(13.46-13.82)x(0.93+0.94)/2	-0.34		
		(12.80-13.46)x(0.89+0.93)/2	-0.60		
		(12.43-12.80)x(0.86+0.89)/2	-0.32		
		(11.77-12.43)x(0.85+0.86)/2	-0.56		
		(11.40-11.77)x(0.83+0.85)/2	-0.31		
		(10.75-11.40)x(0.82+0.83)/2	-0.54		
		(10.38-10.75)x(0.82+0.82)/2	-0.30		
		A RIPORTARE mq	22.72		

BONIFICA

N. SEZIONE PROG.	FIG.	ELEMENTI DI CALCOLO	AREA ELEMENTARE mq	AREA FIGURA mq	NOTE
		RIPORTO mq	22.72		
		(9.72-10.38)x(0.79+0.82)/2	-0.53		
		(9.35-9.72)x(0.79+0.79)/2	-0.29		
		(8.70-9.35)x(0.80+0.79)/2	-0.52		
		(8.33-8.70)x(0.82+0.80)/2	-0.30		
		(7.67-8.33)x(0.84+0.82)/2	-0.55		
		(7.30-7.67)x(0.85+0.84)/2	-0.31		
		(6.65-7.30)x(0.85+0.85)/2	-0.55		
		(6.27-6.65)x(0.91+0.85)/2	-0.33		
		(5.62-6.27)x(0.98+0.91)/2	-0.61		
		(5.25-5.62)x(1.03+0.98)/2	-0.37		
		(4.60-5.25)x(1.12+1.03)/2	-0.70		
		(4.22-4.60)x(1.09+1.12)/2	-0.42		
		(3.57-4.22)x(1.02+1.09)/2	-0.69		
		(3.20-3.57)x(0.95+1.02)/2	-0.36		
		(2.55-3.20)x(0.88+0.95)/2	-0.59		
		(2.17-2.55)x(0.87+0.88)/2	-0.33		
		(1.54-2.17)x(0.83+0.87)/2	-0.54		
				14.73	
13 180.00	BO1	(1.91-1.54)x(1.83+1.82)/2	0.68		
		(2.45-1.91)x(1.80+1.83)/2	0.98		
		(2.96-2.45)x(1.81+1.80)/2	0.92		
		(3.47-2.96)x(1.81+1.81)/2	0.92		
		(4.01-3.47)x(1.78+1.81)/2	0.97		
		(4.50-4.01)x(1.77+1.78)/2	0.87		
		(5.07-4.50)x(1.77+1.77)/2	1.01		
		(5.52-5.07)x(1.77+1.77)/2	0.80		
		(6.12-5.52)x(1.78+1.77)/2	1.07		
		(6.55-6.12)x(1.78+1.78)/2	0.77		
		(7.17-6.55)x(1.77+1.78)/2	1.10		
		(7.57-7.17)x(1.76+1.77)/2	0.71		
		(8.22-7.57)x(1.79+1.76)/2	1.15		
		(8.60-8.22)x(1.80+1.79)/2	0.68		
		(9.27-8.60)x(1.79+1.80)/2	1.20		
		(9.62-9.27)x(1.79+1.79)/2	0.63		
		(10.32-9.62)x(1.81+1.79)/2	1.26		
		(10.65-10.32)x(1.82+1.81)/2	0.60		
		(11.38-10.65)x(1.80+1.82)/2	1.32		
		(11.68-11.38)x(1.80+1.80)/2	0.54		
		(12.43-11.68)x(1.80+1.80)/2	1.35		
		(12.70-12.43)x(1.80+1.80)/2	0.49		
		(13.48-12.70)x(1.80+1.80)/2	1.40		
		(13.73-13.48)x(1.79+1.80)/2	0.45		
		(14.53-13.73)x(1.79+1.79)/2	1.43		
		(14.75-14.53)x(1.79+1.79)/2	0.39		
		(15.58-14.75)x(1.80+1.79)/2	1.49		
		(15.78-15.58)x(1.80+1.80)/2	0.36		
		(16.32-15.78)x(1.80+1.80)/2	0.97		
		(15.78-16.32)x(0.80+0.80)/2	-0.43		
		(15.58-15.78)x(0.80+0.80)/2	-0.16		
		(14.75-15.58)x(0.79+0.80)/2	-0.66		
		(14.53-14.75)x(0.79+0.79)/2	-0.17		
		(13.73-14.53)x(0.79+0.79)/2	-0.63		
		(13.48-13.73)x(0.80+0.79)/2	-0.20		
		(12.70-13.48)x(0.80+0.80)/2	-0.62		
		(12.43-12.70)x(0.80+0.80)/2	-0.22		
		(11.68-12.43)x(0.80+0.80)/2	-0.60		
		(11.38-11.68)x(0.80+0.80)/2	-0.24		
		(10.65-11.38)x(0.82+0.80)/2	-0.59		
		(10.32-10.65)x(0.81+0.82)/2	-0.27		
		(9.62-10.32)x(0.79+0.81)/2	-0.56		
		(9.27-9.62)x(0.79+0.79)/2	-0.28		
		(8.60-9.27)x(0.80+0.79)/2	-0.53		
		(8.22-8.60)x(0.79+0.80)/2	-0.30		
		(7.57-8.22)x(0.76+0.79)/2	-0.50		
		(7.17-7.57)x(0.77+0.76)/2	-0.31		
		(6.55-7.17)x(0.78+0.77)/2	-0.48		
		(6.12-6.55)x(0.78+0.78)/2	-0.34		
		(5.52-6.12)x(0.77+0.78)/2	-0.47		
		(5.07-5.52)x(0.77+0.77)/2	-0.35		
		(4.50-5.07)x(0.77+0.77)/2	-0.44		
		(4.01-4.50)x(0.78+0.77)/2	-0.38		
		(3.47-4.01)x(0.81+0.78)/2	-0.43		
		(2.96-3.47)x(0.81+0.81)/2	-0.41		
		(2.45-2.96)x(0.80+0.81)/2	-0.41		
		(1.91-2.45)x(0.83+0.80)/2	-0.44		
		(1.54-1.91)x(0.82+0.83)/2	-0.31		
				14.78	
14 195.00	BO1	(1.79-1.54)x(1.75+1.75)/2	0.44		
		(1.91-1.79)x(1.75+1.75)/2	0.21		
		(2.86-1.91)x(1.75+1.75)/2	1.66		
		(2.94-2.86)x(1.75+1.75)/2	0.14		
		(3.93-2.94)x(1.75+1.75)/2	1.73		
		(3.96-3.93)x(1.75+1.75)/2	0.05		
		(4.90-3.96)x(1.79+1.75)/2	1.66		
		(4.99-4.90)x(1.80+1.79)/2	0.16		
		(6.02-4.99)x(1.75+1.80)/2	1.83		
		(6.06-6.02)x(1.75+1.75)/2	0.07		
		(7.04-6.06)x(1.84+1.75)/2	1.76		
		(7.13-7.04)x(1.84+1.84)/2	0.17		
		(8.07-7.13)x(1.82+1.84)/2	1.72		
		(8.20-8.07)x(1.82+1.82)/2	0.24		
		(9.09-8.20)x(1.79+1.82)/2	1.61		
		(9.27-9.09)x(1.79+1.79)/2	0.32		
		(10.12-9.27)x(1.85+1.79)/2	1.55		
		(10.34-10.12)x(1.86+1.85)/2	0.41		
		(11.15-10.34)x(1.88+1.86)/2	1.51		
		(11.40-11.15)x(1.88+1.88)/2	0.47		
		(12.17-11.40)x(1.89+1.88)/2	1.45		
		(12.47-12.17)x(1.90+1.89)/2	0.57		
		(13.20-12.47)x(1.89+1.90)/2	1.38		
		(13.54-13.20)x(1.89+1.89)/2	0.64		
		(14.23-13.54)x(1.88+1.89)/2	1.30		
		(14.61-14.23)x(1.88+1.88)/2	0.71		
		(15.25-14.61)x(1.87+1.88)/2	1.20		
		(15.68-15.25)x(1.88+1.87)/2	0.81		
		A RIPORTARE mq	25.77		

BONIFICA

N. SEZIONE PROG.	FIG.	ELEMENTI DI CALCOLO	AREA ELEMENTARE mq	AREA FIGURA mq	NOTE
		RIPORTO mq	25.77		
		(15.91-15.68)x(1.89+1.88)/2	0.43		
		(15.68-15.91)x(0.88+0.89)/2	-0.20		
		(15.25-15.68)x(0.87+0.88)/2	-0.38		
		(14.61-15.25)x(0.88+0.87)/2	-0.56		
		(14.23-14.61)x(0.88+0.88)/2	-0.33		
		(13.54-14.23)x(0.89+0.88)/2	-0.61		
		(13.20-13.54)x(0.89+0.89)/2	-0.30		
		(12.47-13.20)x(0.90+0.89)/2	-0.65		
		(12.17-12.47)x(0.89+0.90)/2	-0.27		
		(11.40-12.17)x(0.88+0.89)/2	-0.68		
		(11.15-11.40)x(0.88+0.88)/2	-0.22		
		(10.34-11.15)x(0.86+0.88)/2	-0.70		
		(10.12-10.34)x(0.85+0.86)/2	-0.19		
		(9.27-10.12)x(0.79+0.85)/2	-0.70		
		(9.09-9.27)x(0.79+0.79)/2	-0.14		
		(8.20-9.09)x(0.82+0.79)/2	-0.72		
		(8.07-8.20)x(0.82+0.82)/2	-0.11		
		(7.13-8.07)x(0.84+0.82)/2	-0.78		
		(7.04-7.13)x(0.84+0.84)/2	-0.08		
		(6.06-7.04)x(0.75+0.84)/2	-0.78		
		(6.02-6.06)x(0.75+0.75)/2	-0.03		
		(4.99-6.02)x(0.80+0.75)/2	-0.80		
		(4.90-4.99)x(0.79+0.80)/2	-0.07		
		(3.96-4.90)x(0.75+0.79)/2	-0.72		
		(3.93-3.96)x(0.75+0.75)/2	-0.02		
		(2.94-3.93)x(0.75+0.75)/2	-0.74		
		(2.86-2.94)x(0.75+0.75)/2	-0.06		
		(1.91-2.86)x(0.75+0.75)/2	-0.71		
		(1.79-1.91)x(0.75+0.75)/2	-0.09		
		(1.54-1.79)x(0.75+0.75)/2	-0.19		
				14.37	
15 210.00	BO1	(2.35-1.54)x(1.70+1.64)/2	1.35		
		(2.65-2.35)x(1.70+1.70)/2	0.51		
		(3.37-2.65)x(1.70+1.70)/2	1.22		
		(3.72-3.37)x(1.71+1.70)/2	0.60		
		(4.40-3.72)x(1.70+1.71)/2	1.16		
		(4.79-4.40)x(1.69+1.70)/2	0.66		
		(5.42-4.79)x(1.70+1.69)/2	1.07		
		(5.85-5.42)x(1.73+1.70)/2	0.74		
		(6.45-5.85)x(1.74+1.73)/2	1.04		
		(6.92-6.45)x(1.75+1.74)/2	0.82		
		(7.48-6.92)x(1.77+1.75)/2	0.99		
		(7.99-7.48)x(1.76+1.77)/2	0.90		
		(8.50-7.99)x(1.75+1.76)/2	0.90		
		(9.06-8.50)x(1.80+1.75)/2	0.99		
		(9.53-9.06)x(1.81+1.80)/2	0.85		
		(10.13-9.53)x(1.81+1.81)/2	1.09		
		(10.56-10.13)x(1.81+1.81)/2	0.78		
		(11.19-10.56)x(1.81+1.81)/2	1.14		
		(11.58-11.19)x(1.81+1.81)/2	0.71		
		(12.26-11.58)x(1.83+1.81)/2	1.24		
		(12.61-12.26)x(1.84+1.83)/2	0.64		
		(13.33-12.61)x(1.91+1.84)/2	1.35		
		(13.63-13.33)x(1.91+1.91)/2	0.57		
		(14.40-13.63)x(1.90+1.91)/2	1.47		
		(14.66-14.40)x(1.91+1.90)/2	0.50		
		(15.42-14.66)x(1.91+1.91)/2	1.45		
		(14.66-15.42)x(0.91+0.91)/2	-0.69		
		(14.40-14.66)x(0.90+0.91)/2	-0.24		
		(13.63-14.40)x(0.91+0.90)/2	-0.70		
		(13.33-13.63)x(0.91+0.91)/2	-0.27		
		(12.61-13.33)x(0.84+0.91)/2	-0.63		
		(12.26-12.61)x(0.83+0.84)/2	-0.29		
		(11.58-12.26)x(0.81+0.83)/2	-0.56		
		(11.19-11.58)x(0.81+0.81)/2	-0.32		
		(10.56-11.19)x(0.81+0.81)/2	-0.51		
		(10.13-10.56)x(0.81+0.81)/2	-0.35		
		(9.53-10.13)x(0.81+0.81)/2	-0.49		
		(9.06-9.53)x(0.80+0.81)/2	-0.38		
		(8.50-9.06)x(0.75+0.80)/2	-0.43		
		(7.99-8.50)x(0.76+0.75)/2	-0.39		
		(7.48-7.99)x(0.77+0.76)/2	-0.39		
		(6.92-7.48)x(0.75+0.77)/2	-0.43		
		(6.45-6.92)x(0.74+0.75)/2	-0.35		
		(5.85-6.45)x(0.73+0.74)/2	-0.44		
		(5.42-5.85)x(0.70+0.73)/2	-0.31		
		(4.79-5.42)x(0.69+0.70)/2	-0.44		
		(4.40-4.79)x(0.70+0.69)/2	-0.27		
		(3.72-4.40)x(0.71+0.70)/2	-0.48		
		(3.37-3.72)x(0.70+0.71)/2	-0.25		
		(2.65-3.37)x(0.70+0.70)/2	-0.50		
		(2.35-2.65)x(0.70+0.70)/2	-0.21		
		(1.58-2.35)x(0.65+0.70)/2	-0.52		
		(1.54-1.58)x(0.65+0.65)/2	-0.03		
				13.87	
16 225.00	BO1	(-5.04--5.43)x(1.87+1.88)/2	0.73		
		(-4.40--5.04)x(1.91+1.87)/2	1.21		
		(-3.97--4.40)x(1.91+1.91)/2	0.82		
		(-3.38--3.97)x(1.88+1.91)/2	1.12		
		(-2.90--3.38)x(1.82+1.88)/2	0.89		
		(-2.35--2.90)x(1.80+1.82)/2	1.00		
		(-1.83--2.35)x(1.78+1.80)/2	0.93		
		(-1.32--1.83)x(1.76+1.78)/2	0.90		
		(-0.85--1.32)x(1.73+1.76)/2	0.82		
		(-0.30--0.85)x(1.71+1.73)/2	0.95		
		(0.30--0.30)x(1.69+1.71)/2	1.02		
		(0.73-0.30)x(1.65+1.69)/2	0.72		
		(1.37-0.73)x(1.64+1.65)/2	1.05		
		(1.75-1.37)x(1.65+1.64)/2	0.63		
		(2.44-1.75)x(1.60+1.65)/2	1.12		
		(2.78-2.44)x(1.61+1.60)/2	0.55		
		(3.51-2.78)x(1.65+1.61)/2	1.19		
		(3.81-3.51)x(1.63+1.65)/2	0.49		
		(4.58-3.81)x(1.64+1.63)/2	1.26		
		(4.83-4.58)x(1.64+1.64)/2	0.41		
		A RIPORTARE mq	17.81		

BONIFICA

N. SEZIONE PROG.	FIG.	ELEMENTI DI CALCOLO	AREA ELEMENTARE mq	AREA FIGURA mq	NOTE
		RIPORTO mq	17.81		
		(5.64-4.83)x(1.64+1.64)/2	1.33		
		(5.86-5.64)x(1.65+1.64)/2	0.36		
		(6.71-5.86)x(1.70+1.65)/2	1.42		
		(6.89-6.71)x(1.70+1.70)/2	0.31		
		(7.78-6.89)x(1.71+1.70)/2	1.52		
		(7.91-7.78)x(1.71+1.71)/2	0.22		
		(8.85-7.91)x(1.71+1.71)/2	1.61		
		(8.94-8.85)x(1.72+1.71)/2	0.15		
		(9.92-8.94)x(1.73+1.72)/2	1.69		
		(9.96-9.92)x(1.73+1.73)/2	0.07		
		(10.99-9.96)x(1.77+1.73)/2	1.80		
		(11.08-10.99)x(1.77+1.77)/2	0.16		
		(12.02-11.08)x(1.76+1.77)/2	1.66		
		(12.05-12.02)x(1.76+1.76)/2	0.05		
		(13.04-12.05)x(1.83+1.76)/2	1.78		
		(13.12-13.04)x(1.83+1.83)/2	0.15		
		(14.07-13.12)x(1.84+1.83)/2	1.74		
		(14.19-14.07)x(1.85+1.84)/2	0.22		
		(14.84-14.19)x(1.86+1.85)/2	1.21		
		(14.19-14.84)x(0.85+0.86)/2	-0.56		
		(14.07-14.19)x(0.84+0.85)/2	-0.10		
		(13.12-14.07)x(0.83+0.84)/2	-0.79		
		(13.04-13.12)x(0.83+0.83)/2	-0.07		
		(12.05-13.04)x(0.76+0.83)/2	-0.79		
		(12.02-12.05)x(0.76+0.76)/2	-0.02		
		(11.08-12.02)x(0.77+0.76)/2	-0.72		
		(10.99-11.08)x(0.77+0.77)/2	-0.07		
		(9.96-10.99)x(0.73+0.77)/2	-0.77		
		(9.92-9.96)x(0.73+0.73)/2	-0.03		
		(8.94-9.92)x(0.72+0.73)/2	-0.71		
		(8.85-8.94)x(0.71+0.72)/2	-0.06		
		(7.91-8.85)x(0.71+0.71)/2	-0.67		
		(7.78-7.91)x(0.71+0.71)/2	-0.09		
		(6.89-7.78)x(0.70+0.71)/2	-0.63		
		(6.71-6.89)x(0.70+0.70)/2	-0.13		
		(5.86-6.71)x(0.65+0.70)/2	-0.57		
		(5.64-5.86)x(0.64+0.65)/2	-0.14		
		(4.83-5.64)x(0.64+0.64)/2	-0.52		
		(4.58-4.83)x(0.64+0.64)/2	-0.16		
		(3.81-4.58)x(0.63+0.64)/2	-0.49		
		(3.51-3.81)x(0.65+0.63)/2	-0.19		
		(2.78-3.51)x(0.61+0.65)/2	-0.46		
		(2.44-2.78)x(0.60+0.61)/2	-0.21		
		(1.75-2.44)x(0.65+0.60)/2	-0.43		
		(1.37-1.75)x(0.64+0.65)/2	-0.25		
		(0.73-1.37)x(0.65+0.64)/2	-0.41		
		(0.30-0.73)x(0.69+0.65)/2	-0.29		
		(-0.30-0.30)x(0.71+0.69)/2	-0.42		
		(-0.85--0.30)x(0.73+0.71)/2	-0.40		
		(-1.32--0.85)x(0.76+0.73)/2	-0.35		
		(-1.83--1.32)x(0.78+0.76)/2	-0.39		
		(-2.35--1.83)x(0.80+0.78)/2	-0.41		
		(-2.90--2.35)x(0.82+0.80)/2	-0.45		
		(-3.38--2.90)x(0.88+0.82)/2	-0.41		
		(-3.97--3.38)x(0.91+0.88)/2	-0.53		
		(-4.40--3.97)x(0.91+0.91)/2	-0.39		
		(-5.04--4.40)x(0.87+0.91)/2	-0.57		
		(-5.43--5.04)x(0.88+0.87)/2	-0.34		
		(-5.50--5.43)x(0.89+0.88)/2	-0.06		
		(-5.43--5.50)x(1.88+0.89)/2	0.10		
				20.31	
17 240.00	BO1	(-10.12--10.57)x(1.94+1.96)/2	0.88		
		(-9.52--10.12)x(1.92+1.94)/2	1.16		
		(-9.10--9.52)x(1.94+1.92)/2	0.81		
		(-8.45--9.10)x(1.92+1.94)/2	1.25		
		(-8.07--8.45)x(1.90+1.92)/2	0.73		
		(-7.38--8.07)x(1.96+1.90)/2	1.33		
		(-7.05--7.38)x(1.94+1.96)/2	0.64		
		(-6.31--7.05)x(1.93+1.94)/2	1.43		
		(-6.02--6.31)x(1.95+1.93)/2	0.56		
		(-5.25--6.02)x(1.85+1.95)/2	1.46		
		(-4.99--5.25)x(1.83+1.85)/2	0.48		
		(-4.18--4.99)x(1.88+1.83)/2	1.50		
		(-3.97--4.18)x(1.88+1.88)/2	0.39		
		(-3.11--3.97)x(1.84+1.88)/2	1.60		
		(-2.94--3.11)x(1.83+1.84)/2	0.31		
		(-2.04--2.94)x(1.78+1.83)/2	1.62		
		(-1.92--2.04)x(1.77+1.78)/2	0.21		
		(-1.80--1.92)x(1.77+1.77)/2	0.21		
		(-0.89--1.80)x(1.78+1.77)/2	1.62		
		(-0.56--0.89)x(1.76+1.78)/2	0.58		
		(-0.89--0.56)x(0.78+0.76)/2	-0.25		
		(-1.80--0.89)x(0.77+0.78)/2	-0.71		
		(-1.92--1.80)x(0.77+0.77)/2	-0.09		
		(-2.04--1.92)x(0.78+0.77)/2	-0.09		
		(-2.94--2.04)x(0.83+0.78)/2	-0.72		
		(-3.11--2.94)x(0.84+0.83)/2	-0.14		
		(-3.97--3.11)x(0.88+0.84)/2	-0.74		
		(-4.18--3.97)x(0.88+0.88)/2	-0.18		
		(-4.99--4.18)x(0.83+0.88)/2	-0.69		
		(-5.25--4.99)x(0.85+0.83)/2	-0.22		
		(-6.02--5.25)x(0.95+0.85)/2	-0.69		
		(-6.31--6.02)x(0.93+0.95)/2	-0.27		
		(-7.05--6.31)x(0.94+0.93)/2	-0.69		
		(-7.38--7.05)x(0.96+0.94)/2	-0.31		
		(-8.07--7.38)x(0.90+0.96)/2	-0.64		
		(-8.45--8.07)x(0.92+0.90)/2	-0.35		
		(-9.10--8.45)x(0.94+0.92)/2	-0.60		
		(-9.52--9.10)x(0.92+0.94)/2	-0.39		
		(-10.12--9.52)x(0.94+0.92)/2	-0.56		
		(-10.57--10.12)x(0.96+0.94)/2	-0.43		
				10.01	
17 240.00	BO2	(-14.86--15.25)x(2.22+2.22)/2	0.87		
		(-14.23--14.86)x(2.20+2.22)/2	1.39		
		(-13.79--14.23)x(2.20+2.20)/2	0.97		
		A RIPORTARE mq	3.23		

BONIFICA

N. SEZIONE PROG.	FIG.	ELEMENTI DI CALCOLO	AREA ELEMENTARE mq	AREA FIGURA mq	NOTE
		RIPORTO mq	3.23		
		(-13.20--13.79)x(2.17+2.20)/2	1.29		
		(-12.72--13.20)x(2.11+2.17)/2	1.03		
		(-12.18--12.72)x(2.06+2.11)/2	1.13		
		(-11.66--12.18)x(2.01+2.06)/2	1.06		
		(-11.15--11.66)x(1.96+2.01)/2	1.01		
		(-10.59--11.15)x(1.96+1.96)/2	1.10		
		(-10.12--10.59)x(1.94+1.96)/2	0.92		
		(-9.52--10.12)x(1.92+1.94)/2	1.16		
		(-9.10--9.52)x(1.94+1.92)/2	0.81		
		(-8.45--9.10)x(1.92+1.94)/2	1.25		
		(-8.07--8.45)x(1.90+1.92)/2	0.73		
		(-7.38--8.07)x(1.96+1.90)/2	1.33		
		(-7.05--7.38)x(1.94+1.96)/2	0.64		
		(-6.31--7.05)x(1.93+1.94)/2	1.43		
		(-6.02--6.31)x(1.95+1.93)/2	0.56		
		(-5.25--6.02)x(1.85+1.95)/2	1.46		
		(-4.99--5.25)x(1.83+1.85)/2	0.48		
		(-4.18--4.99)x(1.88+1.83)/2	1.50		
		(-3.97--4.18)x(1.88+1.88)/2	0.39		
		(-3.11--3.97)x(1.84+1.88)/2	1.60		
		(-2.94--3.11)x(1.83+1.84)/2	0.31		
		(-2.04--2.94)x(1.78+1.83)/2	1.62		
		(-1.92--2.04)x(1.77+1.78)/2	0.21		
		(-1.80--1.92)x(1.77+1.77)/2	0.21		
		(-0.89--1.80)x(1.78+1.77)/2	1.62		
		(0.09--0.89)x(1.70+1.78)/2	1.71		
		(0.14-0.09)x(1.71+1.70)/2	0.09		
		(1.16-0.14)x(1.79+1.71)/2	1.79		
		(2.19-1.16)x(1.78+1.79)/2	1.84		
		(2.23-2.19)x(1.78+1.78)/2	0.07		
		(3.22-2.23)x(1.67+1.78)/2	1.71		
		(3.30-3.22)x(1.66+1.67)/2	0.13		
		(4.24-3.30)x(1.66+1.66)/2	1.56		
		(4.37-4.24)x(1.64+1.66)/2	0.21		
		(5.27-4.37)x(1.59+1.64)/2	1.45		
		(5.44-5.27)x(1.59+1.59)/2	0.27		
		(6.29-5.44)x(1.56+1.59)/2	1.34		
		(6.50-6.29)x(1.56+1.56)/2	0.33		
		(7.32-6.50)x(1.55+1.56)/2	1.28		
		(7.57-7.32)x(1.56+1.55)/2	0.39		
		(8.35-7.57)x(1.54+1.56)/2	1.21		
		(8.64-8.35)x(1.57+1.54)/2	0.45		
		(9.37-8.64)x(1.64+1.57)/2	1.17		
		(9.71-9.37)x(1.66+1.64)/2	0.56		
		(10.40-9.71)x(1.70+1.66)/2	1.16		
		(10.78-10.40)x(1.70+1.70)/2	0.65		
		(11.42-10.78)x(1.72+1.70)/2	1.09		
		(11.85-11.42)x(1.73+1.72)/2	0.74		
		(12.45-11.85)x(1.73+1.73)/2	1.04		
		(12.91-12.45)x(1.74+1.73)/2	0.80		
		(13.48-12.91)x(1.77+1.74)/2	1.00		
		(13.98-13.48)x(1.78+1.77)/2	0.89		
		(14.18-13.98)x(1.77+1.78)/2	0.35		
		(13.98-14.18)x(0.78+0.77)/2	-0.15		
		(13.48-13.98)x(0.77+0.78)/2	-0.39		
		(12.91-13.48)x(0.74+0.77)/2	-0.43		
		(12.45-12.91)x(0.73+0.74)/2	-0.34		
		(11.85-12.45)x(0.73+0.73)/2	-0.44		
		(11.42-11.85)x(0.72+0.73)/2	-0.31		
		(10.78-11.42)x(0.70+0.72)/2	-0.45		
		(10.40-10.78)x(0.70+0.70)/2	-0.27		
		(9.71-10.40)x(0.66+0.70)/2	-0.47		
		(9.37-9.71)x(0.64+0.66)/2	-0.22		
		(8.64-9.37)x(0.57+0.64)/2	-0.44		
		(8.35-8.64)x(0.54+0.57)/2	-0.16		
		(7.57-8.35)x(0.56+0.54)/2	-0.43		
		(7.32-7.57)x(0.55+0.56)/2	-0.14		
		(6.50-7.32)x(0.56+0.55)/2	-0.46		
		(6.29-6.50)x(0.56+0.56)/2	-0.12		
		(5.44-6.29)x(0.59+0.56)/2	-0.49		
		(5.27-5.44)x(0.59+0.59)/2	-0.10		
		(4.37-5.27)x(0.64+0.59)/2	-0.55		
		(4.24-4.37)x(0.66+0.64)/2	-0.08		
		(3.30-4.24)x(0.66+0.66)/2	-0.62		
		(3.22-3.30)x(0.67+0.66)/2	-0.05		
		(2.23-3.22)x(0.78+0.67)/2	-0.72		
		(2.19-2.23)x(0.78+0.78)/2	-0.03		
		(1.16-2.19)x(0.79+0.78)/2	-0.81		
		(0.14-1.16)x(0.71+0.79)/2	-0.77		
		(0.09-0.14)x(0.70+0.71)/2	-0.04		
		(-0.89-0.09)x(0.78+0.70)/2	-0.73		
		(-1.80--0.89)x(0.77+0.78)/2	-0.71		
		(-1.92--1.80)x(0.77+0.77)/2	-0.09		
		(-2.04--1.92)x(0.78+0.77)/2	-0.09		
		(-2.94--2.04)x(0.83+0.78)/2	-0.72		
		(-3.11--2.94)x(0.84+0.83)/2	-0.14		
		(-3.97--3.11)x(0.88+0.84)/2	-0.74		
		(-4.18--3.97)x(0.88+0.88)/2	-0.18		
		(-4.99--4.18)x(0.83+0.88)/2	-0.69		
		(-5.25--4.99)x(0.85+0.83)/2	-0.22		
		(-6.02--5.25)x(0.95+0.85)/2	-0.69		
		(-6.31--6.02)x(0.93+0.95)/2	-0.27		
		(-7.05--6.31)x(0.94+0.93)/2	-0.69		
		(-7.38--7.05)x(0.96+0.94)/2	-0.31		
		(-8.07--7.38)x(0.90+0.96)/2	-0.64		
		(-8.45--8.07)x(0.92+0.90)/2	-0.35		
		(-9.10--8.45)x(0.94+0.92)/2	-0.60		
		(-9.52--9.10)x(0.92+0.94)/2	-0.39		
		(-10.12--9.52)x(0.94+0.92)/2	-0.56		
		(-10.59--10.12)x(0.96+0.94)/2	-0.45		
		(-11.15--10.59)x(0.96+0.96)/2	-0.54		
		(-11.66--11.15)x(1.01+0.96)/2	-0.50		
		(-12.18--11.66)x(1.06+1.01)/2	-0.54		
		(-12.72--12.18)x(1.11+1.06)/2	-0.59		
		(-13.20--12.72)x(1.17+1.11)/2	-0.55		
		A RIPORTARE mq	31.90		

BONIFICA

N. SEZIONE PROG.	FIG.	ELEMENTI DI CALCOLO	AREA ELEMENTARE mq	AREA FIGURA mq	NOTE
		RIPORTO mq	31.90		
		(-13.79--13.20)x(1.20+1.17)/2	-0.70		
		(-14.23--13.79)x(1.20+1.20)/2	-0.53		
		(-14.86--14.23)x(1.22+1.20)/2	-0.76		
		(-15.25--14.86)x(1.22+1.22)/2	-0.48		
				29.43	
18	BO1	(-5.46--5.62)x(2.23+2.24)/2	0.36		
255.00		(-4.56--5.46)x(2.17+2.23)/2	1.98		
		(-4.39--4.56)x(2.15+2.17)/2	0.37		
		(-3.53--4.39)x(2.12+2.15)/2	1.84		
		(-3.32--3.53)x(2.11+2.12)/2	0.44		
		(-2.51--3.32)x(2.13+2.11)/2	1.72		
		(-1.76--2.51)x(2.04+2.13)/2	1.56		
		(-1.48--1.76)x(2.04+2.04)/2	0.57		
		(-1.18--1.48)x(2.01+2.04)/2	0.61		
		(-0.45--1.18)x(1.92+2.01)/2	1.43		
		(-0.11--0.45)x(1.93+1.92)/2	0.65		
		(0.57--0.11)x(1.98+1.93)/2	1.33		
		(0.95-0.57)x(1.96+1.98)/2	0.75		
		(1.60-0.95)x(1.88+1.96)/2	1.25		
		(2.02-1.60)x(1.86+1.88)/2	0.79		
		(2.62-2.02)x(1.81+1.86)/2	1.10		
		(3.09-2.62)x(1.79+1.81)/2	0.85		
		(3.65-3.09)x(1.79+1.79)/2	1.00		
		(4.16-3.65)x(1.83+1.79)/2	0.92		
		(4.38-4.16)x(1.85+1.83)/2	0.40		
		(4.16-4.38)x(0.83+0.85)/2	-0.18		
		(3.65-4.16)x(0.79+0.83)/2	-0.41		
		(3.09-3.65)x(0.79+0.79)/2	-0.44		
		(2.62-3.09)x(0.81+0.79)/2	-0.38		
		(2.02-2.62)x(0.86+0.81)/2	-0.50		
		(1.60-2.02)x(0.88+0.86)/2	-0.37		
		(0.95-1.60)x(0.96+0.88)/2	-0.60		
		(0.57-0.95)x(0.98+0.96)/2	-0.37		
		(-0.11-0.57)x(0.93+0.98)/2	-0.65		
		(-0.45--0.11)x(0.92+0.93)/2	-0.31		
		(-1.18--0.45)x(1.01+0.92)/2	-0.70		
		(-1.48--1.18)x(1.04+1.01)/2	-0.31		
		(-1.76--1.48)x(1.04+1.04)/2	-0.29		
		(-2.51--1.76)x(1.13+1.04)/2	-0.81		
		(-3.32--2.51)x(1.11+1.13)/2	-0.91		
		(-3.53--3.32)x(1.12+1.11)/2	-0.23		
		(-4.39--3.53)x(1.15+1.12)/2	-0.98		
		(-4.56--4.39)x(1.17+1.15)/2	-0.20		
		(-5.46--4.56)x(1.23+1.17)/2	-1.08		
		(-5.59--5.46)x(1.23+1.23)/2	-0.16		
		(-5.62--5.59)x(1.23+1.23)/2	-0.04		
				10.00	
18	BO2	(-15.07--15.37)x(1.58+1.49)/2	0.46		
255.00		(-14.82--15.07)x(1.73+1.58)/2	0.41		
		(-14.00--14.82)x(2.06+1.73)/2	1.55		
		(-13.79--14.00)x(2.18+2.06)/2	0.45		
		(-12.93--13.79)x(2.27+2.18)/2	1.91		
		(-12.77--12.93)x(2.26+2.27)/2	0.36		
		(-11.86--12.77)x(2.23+2.26)/2	2.04		
		(-11.74--11.86)x(2.25+2.23)/2	0.27		
		(-10.80--11.74)x(2.27+2.25)/2	2.12		
		(-10.72--10.80)x(2.27+2.27)/2	0.18		
		(-9.73--10.72)x(2.21+2.27)/2	2.22		
		(-9.69--9.73)x(2.21+2.21)/2	0.09		
		(-8.75--9.69)x(2.10+2.21)/2	2.03		
		(-8.66--8.75)x(2.09+2.10)/2	0.19		
		(-7.64--8.66)x(2.04+2.09)/2	2.11		
		(-7.59--7.64)x(2.04+2.04)/2	0.10		
		(-6.61--7.59)x(2.14+2.04)/2	2.05		
		(-6.52--6.61)x(2.15+2.14)/2	0.19		
		(-5.59--6.52)x(2.23+2.15)/2	2.04		
		(-5.46--5.59)x(2.23+2.23)/2	0.29		
		(-4.56--5.46)x(2.17+2.23)/2	1.98		
		(-4.39--4.56)x(2.15+2.17)/2	0.37		
		(-3.53--4.39)x(2.12+2.15)/2	1.84		
		(-3.32--3.53)x(2.11+2.12)/2	0.44		
		(-2.51--3.32)x(2.13+2.11)/2	1.72		
		(-1.76--2.51)x(2.04+2.13)/2	1.56		
		(-1.48--1.76)x(2.04+2.04)/2	0.57		
		(-1.18--1.48)x(2.01+2.04)/2	0.61		
		(-0.45--1.18)x(1.92+2.01)/2	1.43		
		(-0.11--0.45)x(1.93+1.92)/2	0.65		
		(0.57--0.11)x(1.98+1.93)/2	1.33		
		(0.95-0.57)x(1.96+1.98)/2	0.75		
		(1.60-0.95)x(1.88+1.96)/2	1.25		
		(2.02-1.60)x(1.86+1.88)/2	0.79		
		(2.62-2.02)x(1.81+1.86)/2	1.10		
		(3.09-2.62)x(1.79+1.81)/2	0.85		
		(3.65-3.09)x(1.79+1.79)/2	1.00		
		(4.16-3.65)x(1.83+1.79)/2	0.92		
		(4.68-4.16)x(1.86+1.83)/2	0.96		
		(5.23-4.68)x(1.87+1.86)/2	1.03		
		(5.70-5.23)x(1.91+1.87)/2	0.89		
		(6.30-5.70)x(1.85+1.91)/2	1.13		
		(6.73-6.30)x(1.80+1.85)/2	0.78		
		(7.36-6.73)x(1.83+1.80)/2	1.14		
		(7.75-7.36)x(1.85+1.83)/2	0.72		
		(8.43-7.75)x(1.82+1.85)/2	1.25		
		(8.78-8.43)x(1.83+1.82)/2	0.64		
		(9.50-8.78)x(1.70+1.83)/2	1.27		
		(9.81-9.50)x(1.65+1.70)/2	0.52		
		(10.57-9.81)x(1.68+1.65)/2	1.27		
		(10.83-10.57)x(1.67+1.68)/2	0.44		
		(11.33-10.83)x(1.68+1.67)/2	0.84		
		(10.83-11.33)x(0.67+0.68)/2	-0.34		
		(10.57-10.83)x(0.68+0.67)/2	-0.18		
		(9.81-10.57)x(0.65+0.68)/2	-0.51		
		(9.50-9.81)x(0.70+0.65)/2	-0.21		
		(8.78-9.50)x(0.83+0.70)/2	-0.55		
		(8.43-8.78)x(0.82+0.83)/2	-0.29		
		A RIPORTARE mq	51.02		

BONIFICA

N. SEZIONE PROG.	FIG.	ELEMENTI DI CALCOLO	AREA ELEMENTARE mq	AREA FIGURA mq	NOTE
		RIPORTO mq	51.02		
		(7.75-8.43)x(0.85+0.82)/2	-0.57		
		(7.36-7.75)x(0.83+0.85)/2	-0.33		
		(6.73-7.36)x(0.80+0.83)/2	-0.51		
		(6.30-6.73)x(0.85+0.80)/2	-0.35		
		(5.70-6.30)x(0.91+0.85)/2	-0.53		
		(5.23-5.70)x(0.87+0.91)/2	-0.42		
		(4.68-5.23)x(0.86+0.87)/2	-0.48		
		(4.16-4.68)x(0.83+0.86)/2	-0.44		
		(3.65-4.16)x(0.79+0.83)/2	-0.41		
		(3.09-3.65)x(0.79+0.79)/2	-0.44		
		(2.62-3.09)x(0.81+0.79)/2	-0.38		
		(2.02-2.62)x(0.86+0.81)/2	-0.50		
		(1.60-2.02)x(0.88+0.86)/2	-0.37		
		(0.95-1.60)x(0.96+0.88)/2	-0.60		
		(0.57-0.95)x(0.98+0.96)/2	-0.37		
		(-0.11-0.57)x(0.93+0.98)/2	-0.65		
		(-0.45--0.11)x(0.92+0.93)/2	-0.31		
		(-1.18--0.45)x(1.01+0.92)/2	-0.70		
		(-1.48--1.18)x(1.04+1.01)/2	-0.31		
		(-1.76--1.48)x(1.04+1.04)/2	-0.29		
		(-2.51--1.76)x(1.13+1.04)/2	-0.81		
		(-3.32--2.51)x(1.11+1.13)/2	-0.91		
		(-3.53--3.32)x(1.12+1.11)/2	-0.23		
		(-4.39--3.53)x(1.15+1.12)/2	-0.98		
		(-4.56--4.39)x(1.17+1.15)/2	-0.20		
		(-5.46--4.56)x(1.23+1.17)/2	-1.08		
		(-5.59--5.46)x(1.23+1.23)/2	-0.16		
		(-6.52--5.59)x(1.15+1.23)/2	-1.11		
		(-6.61--6.52)x(1.14+1.15)/2	-0.10		
		(-7.59--6.61)x(1.04+1.14)/2	-1.07		
		(-7.64--7.59)x(1.04+1.04)/2	-0.05		
		(-8.66--7.64)x(1.09+1.04)/2	-1.09		
		(-8.75--8.66)x(1.10+1.09)/2	-0.10		
		(-9.69--8.75)x(1.21+1.10)/2	-1.09		
		(-9.73--9.69)x(1.21+1.21)/2	-0.05		
		(-10.72--9.73)x(1.27+1.21)/2	-1.23		
		(-10.80--10.72)x(1.27+1.27)/2	-0.10		
		(-11.74--10.80)x(1.25+1.27)/2	-1.18		
		(-11.86--11.74)x(1.23+1.25)/2	-0.15		
		(-12.77--11.86)x(1.26+1.23)/2	-1.13		
		(-12.93--12.77)x(1.27+1.26)/2	-0.20		
		(-13.79--12.93)x(1.18+1.27)/2	-1.05		
		(-14.00--13.79)x(1.06+1.18)/2	-0.24		
		(-14.82--14.00)x(0.73+1.06)/2	-0.73		
		(-15.07--14.82)x(0.58+0.73)/2	-0.16		
		(-15.37--15.07)x(0.49+0.58)/2	-0.16		
				26.70	
19 270.00	BO1	(-14.39--15.02)x(-0.05+-0.06)/2	-0.03		
		(-14.21--14.39)x(-0.02+-0.05)/2	-0.01		
		(-13.36--14.21)x(0.01+-0.02)/2	-0.00		
		(-13.14--13.36)x(0.13+0.01)/2	0.02		
		(-12.33--13.14)x(0.48+0.13)/2	0.25		
		(-12.07--12.33)x(0.64+0.48)/2	0.15		
		(-11.31--12.07)x(0.84+0.64)/2	0.56		
		(-11.00--11.31)x(0.95+0.84)/2	0.28		
		(-10.28--11.00)x(1.46+0.95)/2	0.87		
		(-9.94--10.28)x(1.62+1.46)/2	0.52		
		(-9.26--9.94)x(1.94+1.62)/2	1.21		
		(-8.87--9.26)x(1.97+1.94)/2	0.76		
		(-8.23--8.87)x(2.11+1.97)/2	1.31		
		(-7.80--8.23)x(2.14+2.11)/2	0.91		
		(-7.20--7.80)x(2.26+2.14)/2	1.32		
		(-6.73--7.20)x(2.26+2.26)/2	1.06		
		(-6.18--6.73)x(2.24+2.26)/2	1.24		
		(-5.66--6.18)x(2.25+2.24)/2	1.17		
		(-5.15--5.66)x(2.28+2.25)/2	1.16		
		(-4.60--5.15)x(2.29+2.28)/2	1.26		
		(-4.12--4.60)x(2.33+2.29)/2	1.11		
		(-3.53--4.12)x(2.34+2.33)/2	1.38		
		(-3.10--3.53)x(2.32+2.34)/2	1.00		
		(-2.70--3.10)x(2.31+2.32)/2	0.93		
		(-2.07--2.70)x(2.31+2.31)/2	1.46		
		(-1.39--2.07)x(2.30+2.31)/2	1.57		
		(-1.05--1.39)x(2.30+2.30)/2	0.78		
		(-0.68--1.05)x(2.28+2.30)/2	0.85		
		(-1.05--0.68)x(1.30+1.28)/2	-0.48		
		(-1.39--1.05)x(1.30+1.30)/2	-0.44		
		(-2.07--1.39)x(1.31+1.30)/2	-0.89		
		(-2.70--2.07)x(1.31+1.31)/2	-0.83		
		(-3.10--2.70)x(1.32+1.31)/2	-0.53		
		(-3.53--3.10)x(1.34+1.32)/2	-0.57		
		(-4.12--3.53)x(1.33+1.34)/2	-0.79		
		(-4.60--4.12)x(1.29+1.33)/2	-0.63		
		(-5.15--4.60)x(1.28+1.29)/2	-0.71		
		(-5.66--5.15)x(1.25+1.28)/2	-0.65		
		(-6.18--5.66)x(1.24+1.25)/2	-0.65		
		(-6.73--6.18)x(1.26+1.24)/2	-0.69		
		(-7.20--6.73)x(1.26+1.26)/2	-0.59		
		(-7.80--7.20)x(1.14+1.26)/2	-0.72		
		(-8.23--7.80)x(1.11+1.14)/2	-0.48		
		(-8.87--8.23)x(0.97+1.11)/2	-0.67		
		(-9.26--8.87)x(0.94+0.97)/2	-0.37		
		(-9.94--9.26)x(0.62+0.94)/2	-0.53		
		(-10.28--9.94)x(0.46+0.62)/2	-0.18		
		(-11.00--10.28)x(-0.05+0.46)/2	-0.15		
		(-11.31--11.00)x(-0.16+-0.05)/2	0.03		
		(-12.07--11.31)x(-0.36+-0.16)/2	0.20		
		(-12.33--12.07)x(-0.52+-0.36)/2	0.11		
		(-13.14--12.33)x(-0.87+-0.52)/2	0.56		
		(-13.36--13.14)x(-0.99+-0.87)/2	0.20		
		(-14.21--13.36)x(-1.02+-0.99)/2	0.85		
		(-14.39--14.21)x(-1.05+-1.02)/2	0.19		
		(-15.02--14.39)x(-1.06+-1.05)/2	0.66		
				14.34	
20	BO1	(-11.21--11.68)x(-0.03+-0.04)/2	-0.02		
		A RIPORTARE mq	-0.02		

BONIFICA

N. SEZIONE PROG.	FIG.	ELEMENTI DI CALCOLO	AREA ELEMENTARE mq	AREA FIGURA mq	NOTE
		RIPORTO mq	-0.02		
285.00		(-10.87--11.21)x(-0.05+-0.03)/2	-0.01		
		(-10.15--10.87)x(-0.15+-0.05)/2	-0.07		
		(-9.85--10.15)x(-0.17+-0.15)/2	-0.05		
		(-9.08--9.85)x(-0.10+-0.17)/2	-0.10		
		(-8.82--9.08)x(-0.07+-0.10)/2	-0.02		
		(-8.01--8.82)x(0.14+-0.07)/2	0.03		
		(-7.79--8.01)x(0.17+0.14)/2	0.03		
		(-6.94--7.79)x(0.18+0.17)/2	0.15		
		(-6.77--6.94)x(0.22+0.18)/2	0.03		
		(-5.87--6.77)x(1.02+0.22)/2	0.56		
		(-5.74--5.87)x(1.14+1.02)/2	0.14		
		(-4.80--5.74)x(1.47+1.14)/2	1.23		
		(-4.72--4.80)x(1.47+1.47)/2	0.12		
		(-3.74--4.72)x(2.07+1.47)/2	1.73		
		(-3.69--3.74)x(2.11+2.07)/2	0.10		
		(-3.65--3.69)x(2.12+2.11)/2	0.08		
		(-2.66--3.65)x(2.21+2.12)/2	2.14		
		(-2.57--2.66)x(2.22+2.21)/2	0.20		
		(-1.64--2.57)x(2.31+2.22)/2	2.11		
		(-1.60--1.64)x(2.31+2.31)/2	0.09		
		(-0.61--1.60)x(2.32+2.31)/2	2.29		
		(-0.53--0.61)x(2.33+2.32)/2	0.19		
		(0.41--0.53)x(2.24+2.33)/2	2.15		
		(0.54-0.41)x(2.24+2.24)/2	0.29		
		(1.44-0.54)x(2.36+2.24)/2	2.07		
		(1.60-1.44)x(2.33+2.36)/2	0.38		
		(2.47-1.60)x(2.19+2.33)/2	1.97		
		(2.67-2.47)x(2.20+2.19)/2	0.44		
		(3.49-2.67)x(2.17+2.20)/2	1.79		
		(3.74-3.49)x(2.18+2.17)/2	0.54		
		(4.27-3.74)x(2.19+2.18)/2	1.16		
		(3.74-4.27)x(1.18+1.19)/2	-0.63		
		(3.49-3.74)x(1.17+1.18)/2	-0.29		
		(2.67-3.49)x(1.20+1.17)/2	-0.97		
		(2.47-2.67)x(1.19+1.20)/2	-0.24		
		(1.60-2.47)x(1.33+1.19)/2	-1.10		
		(1.44-1.60)x(1.36+1.33)/2	-0.22		
		(0.54-1.44)x(1.24+1.36)/2	-1.17		
		(0.41-0.54)x(1.24+1.24)/2	-0.16		
		(-0.53-0.41)x(1.33+1.24)/2	-1.21		
		(-0.61--0.53)x(1.32+1.33)/2	-0.11		
		(-1.60--0.61)x(1.31+1.32)/2	-1.30		
		(-1.64--1.60)x(1.31+1.31)/2	-0.05		
		(-2.57--1.64)x(1.22+1.31)/2	-1.18		
		(-2.66--2.57)x(1.21+1.22)/2	-0.11		
		(-3.65--2.66)x(1.12+1.21)/2	-1.15		
		(-3.69--3.65)x(1.11+1.12)/2	-0.04		
		(-3.74--3.69)x(1.07+1.11)/2	-0.05		
		(-4.72--3.74)x(0.47+1.07)/2	-0.75		
		(-4.80--4.72)x(0.47+0.47)/2	-0.04		
		(-5.74--4.80)x(0.14+0.47)/2	-0.29		
		(-5.87--5.74)x(0.02+0.14)/2	-0.01		
		(-6.77--5.87)x(-0.78+0.02)/2	0.34		
		(-6.94--6.77)x(-0.82+-0.78)/2	0.14		
		(-7.79--6.94)x(-0.83+-0.82)/2	0.70		
		(-8.01--7.79)x(-0.86+-0.83)/2	0.19		
		(-8.82--8.01)x(-1.07+-0.86)/2	0.78		
		(-9.08--8.82)x(-1.10+-1.07)/2	0.28		
		(-9.85--9.08)x(-1.17+-1.10)/2	0.87		
		(-10.15--9.85)x(-1.15+-1.17)/2	0.35		
		(-10.87--10.15)x(-1.05+-1.15)/2	0.79		
		(-11.21--10.87)x(-1.03+-1.05)/2	0.35		
		(-11.68--11.21)x(-1.04+-1.03)/2	0.49		
				15.95	
21 300.00	BO1	(-8.41--9.21)x(0.39+1.05)/2	0.58		
		(-8.30--8.41)x(0.35+0.39)/2	0.04		
		(-7.38--8.30)x(-0.06+0.35)/2	0.13		
		(-7.22--7.38)x(-0.06+-0.06)/2	-0.01		
		(-6.36--7.22)x(-0.07+-0.06)/2	-0.06		
		(-6.15--6.36)x(-0.07+-0.07)/2	-0.01		
		(-5.33--6.15)x(-0.05+-0.07)/2	-0.05		
		(-5.07--5.33)x(-0.05+-0.05)/2	-0.01		
		(-4.30--5.07)x(-0.08+-0.05)/2	-0.05		
		(-3.60--4.30)x(-0.08+-0.08)/2	-0.06		
		(-3.28--3.60)x(-0.06+-0.08)/2	-0.02		
		(-2.92--3.28)x(0.02+-0.06)/2	-0.01		
		(-2.25--2.92)x(0.05+0.02)/2	0.02		
		(-1.84--2.25)x(0.10+0.05)/2	0.03		
		(-1.22--1.84)x(0.28+0.10)/2	0.12		
		(-0.77--1.22)x(0.73+0.28)/2	0.23		
		(-0.20--0.77)x(1.24+0.73)/2	0.56		
		(0.31--0.20)x(1.56+1.24)/2	0.71		
		(0.83-0.31)x(1.81+1.56)/2	0.88		
		(1.39-0.83)x(1.76+1.81)/2	1.00		
		(1.86-1.39)x(1.92+1.76)/2	0.86		
		(2.46-1.86)x(2.05+1.92)/2	1.19		
		(2.88-2.46)x(2.06+2.05)/2	0.86		
		(3.54-2.88)x(2.13+2.06)/2	1.38		
		(3.91-3.54)x(2.20+2.13)/2	0.80		
		(4.62-3.91)x(2.17+2.20)/2	1.55		
		(4.93-4.62)x(2.19+2.17)/2	0.68		
		(5.69-4.93)x(2.21+2.19)/2	1.67		
		(5.96-5.69)x(2.21+2.21)/2	0.60		
		(6.77-5.96)x(2.28+2.21)/2	1.82		
		(6.99-6.77)x(2.29+2.28)/2	0.50		
		(7.84-6.99)x(2.30+2.29)/2	1.95		
		(8.01-7.84)x(2.29+2.30)/2	0.39		
		(8.92-8.01)x(2.30+2.29)/2	2.09		
		(9.04-8.92)x(2.30+2.30)/2	0.28		
		(9.17-9.04)x(2.30+2.30)/2	0.30		
		(9.04-9.17)x(1.30+1.30)/2	-0.17		
		(8.92-9.04)x(1.30+1.30)/2	-0.16		
		(8.01-8.92)x(1.29+1.30)/2	-1.18		
		(7.84-8.01)x(1.30+1.29)/2	-0.22		
		(6.99-7.84)x(1.29+1.30)/2	-1.10		
		A RIPORTARE mq	18.11		

BONIFICA

N. SEZIONE PROG.	FIG.	ELEMENTI DI CALCOLO	AREA ELEMENTARE mq	AREA FIGURA mq	NOTE
		RIPORTO mq	18.11		
		(6.77-6.99)x(1.28+1.29)/2	-0.28		
		(5.96-6.77)x(1.21+1.28)/2	-1.01		
		(5.69-5.96)x(1.21+1.21)/2	-0.33		
		(4.93-5.69)x(1.19+1.21)/2	-0.91		
		(4.62-4.93)x(1.17+1.19)/2	-0.37		
		(3.91-4.62)x(1.20+1.17)/2	-0.84		
		(3.54-3.91)x(1.13+1.20)/2	-0.43		
		(2.88-3.54)x(1.06+1.13)/2	-0.72		
		(2.46-2.88)x(1.05+1.06)/2	-0.44		
		(1.86-2.46)x(0.92+1.05)/2	-0.59		
		(1.39-1.86)x(0.76+0.92)/2	-0.39		
		(0.83-1.39)x(0.81+0.76)/2	-0.44		
		(0.31-0.83)x(0.56+0.81)/2	-0.36		
		(-0.20-0.31)x(0.24+0.56)/2	-0.20		
		(-0.77--0.20)x(-0.27+0.24)/2	0.01		
		(-1.22--0.77)x(-0.72+-0.27)/2	0.22		
		(-1.84--1.22)x(-0.90+-0.72)/2	0.50		
		(-2.25--1.84)x(-0.95+-0.90)/2	0.38		
		(-2.92--2.25)x(-0.98+-0.95)/2	0.65		
		(-3.28--2.92)x(-1.06+-0.98)/2	0.37		
		(-3.60--3.28)x(-1.08+-1.06)/2	0.34		
		(-4.30--3.60)x(-1.08+-1.08)/2	0.76		
		(-5.07--4.30)x(-1.05+-1.08)/2	0.82		
		(-5.33--5.07)x(-1.05+-1.05)/2	0.27		
		(-6.15--5.33)x(-1.07+-1.05)/2	0.87		
		(-6.36--6.15)x(-1.07+-1.07)/2	0.22		
		(-7.22--6.36)x(-1.06+-1.07)/2	0.92		
		(-7.38--7.22)x(-1.06+-1.06)/2	0.17		
		(-8.30--7.38)x(-0.65+-1.06)/2	0.79		
		(-8.41--8.30)x(-0.61+-0.65)/2	0.07		
		(-9.21--8.41)x(0.05+-0.61)/2	0.22		
				18.38	
22 315.00	BO1	(-7.08--7.27)x(1.77+1.75)/2	0.33		
		(-6.32--7.08)x(1.81+1.77)/2	1.36		
		(-5.95--6.32)x(1.70+1.81)/2	0.65		
		(-5.29--5.95)x(1.57+1.70)/2	1.08		
		(-4.74--5.29)x(1.28+1.57)/2	0.78		
		(-4.26--4.74)x(0.98+1.28)/2	0.54		
		(-3.69--4.26)x(0.64+0.98)/2	0.46		
		(-3.23--3.69)x(0.31+0.64)/2	0.22		
		(-2.56--3.23)x(0.08+0.31)/2	0.13		
		(-1.42--2.20)x(-0.10+-0.08)/2	-0.07		
		(-1.17--1.42)x(-0.10+-0.10)/2	-0.03		
		(-0.29--1.17)x(-0.04+-0.10)/2	-0.06		
		(-0.14--0.29)x(-0.04+-0.04)/2	-0.01		
		(0.84--0.14)x(-0.03+-0.04)/2	-0.03		
		(0.88-0.84)x(-0.03+-0.03)/2	-0.00		
		(1.33-0.88)x(-0.02+-0.03)/2	-0.01		
		(1.91-1.33)x(-0.00+-0.02)/2	-0.01		
		(1.97-1.91)x(0.01+-0.00)/2	0.00		
		(2.94-1.97)x(0.24+0.01)/2	0.12		
		(3.10-2.94)x(0.29+0.24)/2	0.04		
		(3.97-3.10)x(0.50+0.29)/2	0.34		
		(4.24-3.97)x(0.67+0.50)/2	0.16		
		(4.71-4.24)x(1.08+0.67)/2	0.41		
		(4.24-4.71)x(-0.33+0.08)/2	0.06		
		(3.97-4.24)x(-0.50+-0.33)/2	0.11		
		(3.10-3.97)x(-0.71+-0.50)/2	0.53		
		(2.94-3.10)x(-0.76+-0.71)/2	0.12		
		(1.97-2.94)x(-0.99+-0.76)/2	0.85		
		(1.91-1.97)x(-1.00+-0.99)/2	0.06		
		(1.33-1.91)x(-1.02+-1.00)/2	0.59		
		(0.88-1.33)x(-1.03+-1.02)/2	0.46		
		(0.84-0.88)x(-1.03+-1.03)/2	0.04		
		(-0.14-0.84)x(-1.04+-1.03)/2	1.01		
		(-0.29--0.14)x(-1.04+-1.04)/2	0.16		
		(-1.17--0.29)x(-1.10+-1.04)/2	0.94		
		(-1.42--1.17)x(-1.10+-1.10)/2	0.28		
		(-2.20--1.42)x(-1.08+-1.10)/2	0.85		
		(-2.56--2.20)x(-0.92+-1.08)/2	0.36		
		(-3.23--2.56)x(-0.69+-0.92)/2	0.54		
		(-3.69--3.23)x(-0.36+-0.69)/2	0.24		
		(-4.26--3.69)x(-0.02+-0.36)/2	0.11		
		(-4.74--4.26)x(0.28+-0.02)/2	-0.06		
		(-5.29--4.74)x(0.57+0.28)/2	-0.23		
		(-5.95--5.29)x(0.70+0.57)/2	-0.42		
		(-6.32--5.95)x(0.81+0.70)/2	-0.28		
		(-7.27--6.32)x(0.75+0.81)/2	-0.74		
				11.98	
23 330.00	BO1	(-4.43--5.00)x(1.93+1.99)/2	1.12		
		(-4.11--4.43)x(1.89+1.93)/2	0.61		
		(-3.20--4.11)x(1.85+1.89)/2	1.70		
		(-3.07--3.20)x(1.84+1.85)/2	0.24		
		(-2.39--3.07)x(1.70+1.84)/2	1.20		
		(-2.03--2.39)x(1.62+1.70)/2	0.60		
		(-1.96--2.03)x(1.58+1.62)/2	0.11		
		(-0.99--1.96)x(1.14+1.58)/2	1.32		
		(-0.72--0.99)x(0.96+1.14)/2	0.28		
		(0.05--0.72)x(0.41+0.96)/2	0.53		
		(0.51-0.05)x(0.31+0.41)/2	0.17		
		(1.09-0.51)x(0.12+0.31)/2	0.12		
		(1.75-1.09)x(0.07+0.12)/2	0.06		
		(2.12-1.75)x(0.06+0.07)/2	0.02		
		(2.98-2.12)x(0.03+0.06)/2	0.04		
		(3.16-2.98)x(0.03+0.03)/2	0.01		
		(4.11-3.16)x(-0.00+0.03)/2	0.01		
		(4.20-4.11)x(-0.01+-0.00)/2	-0.00		
		(4.22-4.20)x(-0.00+-0.01)/2	-0.00		
		(5.24-4.22)x(0.02+-0.00)/2	0.01		
		(5.45-5.24)x(0.09+0.02)/2	0.01		
		(6.28-5.45)x(0.25+0.09)/2	0.14		
		(6.43-6.28)x(0.31+0.25)/2	0.04		
		(5.45-6.43)x(-0.91+-0.72)/2	0.80		
		(5.24-5.45)x(-0.98+-0.91)/2	0.20		
		(4.22-5.24)x(-1.00+-0.98)/2	1.01		
		A RIPORTARE mq	10.35		

BONIFICA

N. SEZIONE PROG.	FIG.	ELEMENTI DI CALCOLO	AREA ELEMENTARE mq	AREA FIGURA mq	NOTE
		RIPORTO mq	10.35		
		(4.20-4.22)x(-1.01+-1.00)/2	0.02		
		(4.11-4.20)x(-1.00+-1.01)/2	0.09		
		(3.16-4.11)x(-0.97+-1.00)/2	0.94		
		(2.98-3.16)x(-0.97+-0.97)/2	0.17		
		(2.12-2.98)x(-0.94+-0.97)/2	0.82		
		(1.75-2.12)x(-0.93+-0.94)/2	0.35		
		(1.09-1.75)x(-0.88+-0.93)/2	0.60		
		(0.51-1.09)x(-0.69+-0.88)/2	0.46		
		(0.05-0.51)x(-0.59+-0.69)/2	0.29		
		(-0.72-0.05)x(-0.04+-0.59)/2	0.24		
		(-0.99--0.72)x(0.14+-0.04)/2	-0.01		
		(-1.96--0.99)x(0.58+0.14)/2	-0.35		
		(-2.03--1.96)x(0.62+0.58)/2	-0.04		
		(-2.39--2.03)x(0.70+0.62)/2	-0.24		
		(-3.07--2.39)x(0.84+0.70)/2	-0.52		
		(-3.20--3.07)x(0.85+0.84)/2	-0.11		
		(-4.11--3.20)x(0.89+0.85)/2	-0.79		
		(-4.43--4.11)x(0.93+0.89)/2	-0.29		
		(-5.00--4.43)x(0.99+0.93)/2	-0.55		
				11.43	

Il Direttore dei Lavori | L'Impresa

SCAVO MURO

N. SEZIONE PROG.	FIG.	ELEMENTI DI CALCOLO	AREA ELEMENTARE mq	AREA FIGURA mq	NOTE
12	H1	(-7.50--7.81)x(1.71+1.69)/2	0.53		
165.00		(-6.82--7.50)x(1.75+1.71)/2	1.18		
		(-6.52--6.82)x(1.77+1.75)/2	0.53		
		(-5.79--6.52)x(1.79+1.77)/2	1.30		
		(-5.53--5.79)x(1.81+1.79)/2	0.47		
		(-4.76--5.53)x(1.81+1.81)/2	1.39		
		(-4.54--4.76)x(1.82+1.81)/2	0.40		
		(-3.74--4.54)x(1.85+1.82)/2	1.47		
		(-3.55--3.74)x(1.85+1.85)/2	0.35		
		(-2.71--3.55)x(1.87+1.85)/2	1.56		
		(-2.56--2.71)x(1.87+1.87)/2	0.28		
		(-1.69--2.56)x(1.84+1.87)/2	1.61		
		(-1.57--1.69)x(1.83+1.84)/2	0.22		
		(-0.66--1.57)x(1.81+1.83)/2	1.66		
		(-0.58--0.66)x(1.80+1.81)/2	0.14		
		(0.37--0.58)x(1.78+1.80)/2	1.70		
		(1.02-0.37)x(1.82+1.78)/2	1.17		
		(-0.35-1.02)x(-0.56+0.82)/2	-0.18		
		(-6.55--0.35)x(-0.56+-0.56)/2	3.47		
		(-7.81--6.55)x(0.69+-0.56)/2	-0.08		
				19.17	
TR	H1	(-8.73--8.90)x(1.80+1.79)/2	0.31		
172.62		(-8.09--8.73)x(1.80+1.80)/2	1.15		
		(-7.71--8.09)x(1.78+1.80)/2	0.68		
		(-7.06--7.71)x(1.74+1.78)/2	1.14		
		(-6.68--7.06)x(1.74+1.74)/2	0.66		
		(-6.04--6.68)x(1.70+1.74)/2	1.10		
		(-5.66--6.04)x(1.70+1.70)/2	0.65		
		(-5.01--5.66)x(1.71+1.70)/2	1.11		
		(-4.63--5.01)x(1.73+1.71)/2	0.65		
		(-3.98--4.63)x(1.76+1.73)/2	1.13		
		(-3.61--3.98)x(1.76+1.76)/2	0.65		
		(-2.96--3.61)x(1.81+1.76)/2	1.16		
		(-2.58--2.96)x(1.81+1.81)/2	0.69		
		(-1.93--2.58)x(1.79+1.81)/2	1.17		
		(-1.56--1.93)x(1.81+1.79)/2	0.67		
		(-0.91--1.56)x(1.83+1.81)/2	1.18		
		(-0.53--0.91)x(1.86+1.83)/2	0.70		
		(0.12--0.53)x(1.85+1.86)/2	1.21		
		(0.50-0.12)x(1.85+1.85)/2	0.70		
		(0.87-0.50)x(1.83+1.85)/2	0.68		
		(1.54-0.87)x(1.83+1.83)/2	1.23		
		(-0.35-1.54)x(-0.56+0.83)/2	-0.26		
		(-6.55--0.35)x(-0.56+-0.56)/2	3.47		
		(-8.90--6.55)x(1.79+-0.56)/2	-1.45		
				20.38	
13	H1	(-8.61--8.71)x(1.61+1.60)/2	0.16		
180.00		(-7.81--8.61)x(1.60+1.61)/2	1.28		
		(-7.55--7.81)x(1.63+1.60)/2	0.42		
		(-6.78--7.55)x(1.73+1.63)/2	1.29		
		(-6.50--6.78)x(1.73+1.73)/2	0.48		
		(-5.76--6.50)x(1.73+1.73)/2	1.28		
		(-5.45--5.76)x(1.72+1.73)/2	0.53		
		(-4.73--5.45)x(1.73+1.72)/2	1.24		
		(-4.40--4.73)x(1.76+1.73)/2	0.58		
		(-3.71--4.40)x(1.77+1.76)/2	1.22		
		(-3.35--3.71)x(1.78+1.77)/2	0.64		
		(-2.68--3.35)x(1.81+1.78)/2	1.20		
		(-2.30--2.68)x(1.80+1.81)/2	0.69		
		(-1.66--2.30)x(1.78+1.80)/2	1.15		
		(-1.24--1.66)x(1.77+1.78)/2	0.75		
		(-0.63--1.24)x(1.76+1.77)/2	1.08		
		(-0.19--0.63)x(1.75+1.76)/2	0.77		
		(0.39--0.19)x(1.76+1.75)/2	1.02		
		(0.95-0.39)x(1.79+1.76)/2	0.99		
		(1.42-0.95)x(1.82+1.79)/2	0.85		
		(1.54-1.42)x(1.82+1.82)/2	0.22		
		(-0.35-1.54)x(-0.56+0.82)/2	-0.25		
		(-6.55--0.35)x(-0.56+-0.56)/2	3.47		
		(-8.71--6.55)x(1.60+-0.56)/2	-1.12		
				19.94	
14	H1	(-8.89--9.15)x(1.67+1.66)/2	0.43		
195.00		(-8.35--8.89)x(1.66+1.67)/2	0.90		
		(-7.82--8.35)x(1.62+1.66)/2	0.87		
		(-7.32--7.82)x(1.63+1.62)/2	0.81		
		(-6.76--7.32)x(1.57+1.63)/2	0.90		
		(-6.30--6.76)x(1.57+1.57)/2	0.72		
		(-5.69--6.30)x(1.63+1.57)/2	0.98		
		(-5.27--5.69)x(1.61+1.63)/2	0.68		
		(-4.62--5.27)x(1.65+1.61)/2	1.06		
		(-4.24--4.62)x(1.65+1.65)/2	0.63		
		(-3.55--4.24)x(1.61+1.65)/2	1.12		
		(-3.22--3.55)x(1.60+1.61)/2	0.53		
		(-2.48--3.22)x(1.64+1.60)/2	1.20		
		(-2.19--2.48)x(1.65+1.64)/2	0.48		
		(-1.42--2.19)x(1.68+1.65)/2	1.28		
		(-1.17--1.42)x(1.68+1.68)/2	0.42		
		(-0.35--1.17)x(1.66+1.68)/2	1.37		
		(-0.14--0.35)x(1.67+1.66)/2	0.35		
		(0.05--0.14)x(1.67+1.67)/2	0.32		
		(0.89-0.05)x(1.73+1.67)/2	1.43		
		(1.54-0.89)x(1.75+1.73)/2	1.13		
		(-0.35-1.54)x(-0.94+0.75)/2	0.18		
		(-6.55--0.35)x(-0.94+-0.94)/2	5.83		
		(-9.15--6.55)x(1.66+-0.94)/2	-0.94		
				22.68	
15	H1	(-9.10--9.52)x(2.01+2.03)/2	0.85		
210.00		(-8.94--9.10)x(2.01+2.01)/2	0.32		
		(-8.03--8.94)x(1.86+2.01)/2	1.76		
		(-7.91--8.03)x(1.85+1.86)/2	0.22		
		(-6.97--7.91)x(1.83+1.85)/2	1.73		
		(-6.89--6.97)x(1.82+1.83)/2	0.15		
		(-5.90--6.89)x(1.77+1.82)/2	1.78		
		(-5.86--5.90)x(1.76+1.77)/2	0.07		
		(-5.02--5.86)x(1.69+1.76)/2	1.45		
		(-4.84--5.02)x(1.68+1.69)/2	0.30		
		(-4.83--4.84)x(1.68+1.68)/2	0.02		
		A RIPORTARE mq	8.65		

SCAVO MURO

N. SEZIONE PROG.	FIG.	ELEMENTI DI CALCOLO	AREA ELEMENTARE mq	AREA FIGURA mq	NOTE
		RIPORTO mq	8.65		
		(-3.81--4.83)x(1.68+1.68)/2	1.71		
		(-3.76--3.81)x(1.68+1.68)/2	0.08		
		(-2.78--3.76)x(1.64+1.68)/2	1.63		
		(-2.69--2.78)x(1.63+1.64)/2	0.15		
		(-1.76--2.69)x(1.46+1.63)/2	1.44		
		(-1.62--1.76)x(1.44+1.46)/2	0.20		
		(-0.73--1.62)x(1.34+1.44)/2	1.24		
		(0.09--0.73)x(1.43+1.34)/2	1.14		
		(0.29-0.09)x(1.47+1.43)/2	0.29		
		(0.51-0.29)x(1.51+1.47)/2	0.33		
		(1.32-0.51)x(1.65+1.51)/2	1.28		
		(1.54-1.32)x(1.65+1.65)/2	0.36		
		(-0.35-1.54)x(-0.94+0.65)/2	0.27		
		(-6.55--0.35)x(-0.94+-0.94)/2	5.83		
		(-9.52--6.55)x(2.03+-0.94)/2	-1.62		
				22.98	

Il Direttore dei Lavori | L'Impresa

USURA

N. SEZIONE PROG.	FIG.	ELEMENTI DI CALCOLO	LUNGHEZZA ELEMENTARE ml	LUNGHEZZA FIGURA ml	NOTE
3	a1	(0.00--4.00)	4.00		
30.00		(1.50-0.00)	1.50		
				5.50	
4	a1	(-4.00--5.00)	1.00		
45.00		(0.00--4.00)	4.00		
		(1.74-0.00)	1.74		
				6.74	
5	a1	(-4.00--5.00)	1.00		
60.00		(0.00--4.00)	4.00		
		(2.06-0.00)	2.06		
				7.06	
6	a1	(-4.00--5.00)	1.00		
75.00		(0.00--4.00)	4.00		
		(2.04-0.00)	2.04		
				7.04	
7	a1	(-4.00--5.00)	1.00		
90.00		(0.00--4.00)	4.00		
		(1.99-0.00)	1.99		
				6.99	
8	a1	(-4.00--5.00)	1.00		
105.00		(0.00--4.00)	4.00		
		(1.94-0.00)	1.94		
				6.94	
9	a1	(-4.00--5.00)	1.00		
120.00		(0.00--4.00)	4.00		
		(2.25-0.00)	2.25		
				7.25	
10	a1	(-4.00--5.00)	1.00		
135.00		(0.00--4.00)	4.00		
		(2.50-0.00)	2.50		
				7.50	
11	a1	(-4.00--5.00)	1.00		
150.00		(0.00--4.00)	4.00		
		(1.92-0.00)	1.92		
				6.92	
12	a1	(-4.00--5.00)	1.00		
165.00		(0.00--4.00)	4.00		
		(1.50-0.00)	1.50		
				6.50	
TR	a1	(-4.00--5.00)	1.00		
172.62		(0.00--4.00)	4.00		
		(1.50-0.00)	1.50		
				6.50	
13	a1	(-4.00--5.00)	1.00		
180.00		(0.00--4.00)	4.00		
		(1.50-0.00)	1.50		
				6.50	
14	a1	(-4.00--5.00)	1.00		
195.00		(0.00--4.00)	4.00		
		(1.50-0.00)	1.50		
				6.50	
15	a1	(-4.00--5.00)	1.00		
210.00		(0.00--4.00)	4.00		
		(1.50-0.00)	1.50		
				6.50	
16	a1	(-4.00--5.00)	1.00		
225.00		(0.00--4.00)	4.00		
		(1.50-0.00)	1.50		
				6.50	
17	a1	(-4.00--5.00)	1.00		
240.00		(0.00--4.00)	4.00		
		(1.50-0.00)	1.50		
				6.50	
18	a1	(-4.00--5.00)	1.00		
255.00		(0.00--4.00)	4.00		
		(1.50-0.00)	1.50		
				6.50	
19	a1	(-4.00--5.00)	1.00		
270.00		(0.00--4.00)	4.00		
		(1.50-0.00)	1.50		
				6.50	
20	a1	(-4.00--5.00)	1.00		
285.00		(0.00--4.00)	4.00		
		(1.50-0.00)	1.50		
				6.50	
21	a1	(-4.00--5.00)	1.00		
300.00		(0.00--4.00)	4.00		
		(1.50-0.00)	1.50		
				6.50	
22	a1	(-4.00--5.00)	1.00		
315.00		(0.00--4.00)	4.00		
		(1.50-0.00)	1.50		
				6.50	
23	a1	(-4.00--5.00)	1.00		
330.00		(0.00--4.00)	4.00		
		(1.50-0.00)	1.50		
				6.50	

Il Direttore dei Lavori | L'Impresa

VEGETALE

N. SEZIONE PROG.	FIG.	ELEMENTI DI CALCOLO	LUNGHEZZA ELEMENTARE ml	LUNGHEZZA FIGURA ml	NOTE
3	b1	(3.00-1.65)	1.35		
30.00		(8.88-3.00)	5.88		
				7.23	
4	b1	(3.24-1.89)	1.35		
45.00		(10.70-3.24)	7.46		
				8.81	
5	b2	(-6.50--5.15)	1.35		
60.00		(-8.63--6.50)	2.13		
				3.48	
5	b1	(3.56-2.21)	1.35		
60.00		(11.79-3.56)	8.23		
				9.58	
6	b1	(-6.50--5.15)	1.35		
75.00		(-13.76--6.50)	7.26		
				8.61	
6	b2	(3.54-2.19)	1.35		
75.00		(12.54-3.54)	9.00		
		(14.54-12.54)	2.00		
		(15.23-14.54)	0.69		
				13.04	
7	b2	(-6.50--5.15)	1.35		
90.00		(-15.50--6.50)	9.00		
		(-17.50--15.50)	2.00		
		(-19.66--17.50)	2.16		
				14.51	
7	b1	(3.49-2.14)	1.35		
90.00		(12.49-3.49)	9.00		
		(14.49-12.49)	2.00		
		(15.71-14.49)	1.22		
				13.57	
8	b2	(-6.50--5.15)	1.35		
105.00		(-15.50--6.50)	9.00		
		(-17.50--15.50)	2.00		
		(-20.03--17.50)	2.53		
				14.88	
8	b1	(3.44-2.09)	1.35		
105.00		(12.44-3.44)	9.00		
		(14.44-12.44)	2.00		
		(16.38-14.44)	1.94		
				14.29	
9	b2	(-6.50--5.15)	1.35		
120.00		(-15.50--6.50)	9.00		
		(-17.50--15.50)	2.00		
		(-21.20--17.50)	3.70		
				16.05	
9	b1	(3.75-2.40)	1.35		
120.00		(12.75-3.75)	9.00		
		(14.75-12.75)	2.00		
		(17.85-14.75)	3.10		
				15.45	
10	b2	(-6.50--5.15)	1.35		
135.00		(-15.50--6.50)	9.00		
		(-17.50--15.50)	2.00		
		(-20.90--17.50)	3.40		
				15.75	
10	b1	(4.00-2.65)	1.35		
135.00		(13.00-4.00)	9.00		
		(15.00-13.00)	2.00		
		(17.94-15.00)	2.94		
				15.29	
11	b2	(-6.50--5.15)	1.35		
150.00		(-15.50--6.50)	9.00		
		(-17.50--15.50)	2.00		
		(-21.57--17.50)	4.07		
				16.42	
11	b1	(3.42-2.07)	1.35		
150.00		(12.42-3.42)	9.00		
		(14.42-12.42)	2.00		
		(17.29-14.42)	2.87		
				15.22	
12	b1	(3.00-1.65)	1.35		
165.00		(12.00-3.00)	9.00		
		(14.00-12.00)	2.00		
		(16.85-14.00)	2.85		
				15.20	
12	b2	(-6.50--5.15)	1.35		
165.00		(-15.50--6.50)	9.00		
		(-17.50--15.50)	2.00		
		(-20.92--17.50)	3.42		
				15.77	
TR	b1	(3.00-1.65)	1.35		
172.62		(12.00-3.00)	9.00		
		(14.00-12.00)	2.00		
		(16.82-14.00)	2.82		
				15.17	
13	b1	(3.00-1.65)	1.35		
180.00		(12.00-3.00)	9.00		
		(14.00-12.00)	2.00		
		(16.86-14.00)	2.86		
				15.21	
14	b1	(3.00-1.65)	1.35		
195.00		(12.00-3.00)	9.00		
		(14.00-12.00)	2.00		
		(16.42-14.00)	2.42		
				14.77	
15	b1	(3.00-1.65)	1.35		
210.00		(12.00-3.00)	9.00		
		(14.00-12.00)	2.00		
		(15.94-14.00)	1.94		
				14.29	
16	b2	(-6.50--5.15)	1.35		
225.00		(-12.42--6.50)	5.92		
				7.27	
16	b1	(3.00-1.65)	1.35		
225.00		(12.00-3.00)	9.00		
		(14.00-12.00)	2.00		
		(15.37-14.00)	1.37		
		A RIPORTARE ml	13.72		

VEGETALE

N. SEZIONE PROG.	FIG.	ELEMENTI DI CALCOLO	LUNGHEZZA ELEMENTARE ml	LUNGHEZZA FIGURA ml	NOTE
		RIPORTO ml	13.72		
				13.72	
17	b2	(-6.50--5.15)	1.35		
240.00		(-15.76--6.50)	9.26		
				10.61	
17	b1	(3.00-1.65)	1.35		
240.00		(12.00-3.00)	9.00		
		(14.00-12.00)	2.00		
		(14.72-14.00)	0.72		
				13.07	
18	b2	(-6.50--5.15)	1.35		
255.00		(-17.34--6.50)	10.84		
				12.19	
18	b1	(3.00-1.65)	1.35		
255.00		(11.87-3.00)	8.87		
				10.22	
19	b2	(-6.50--5.15)	1.35		
270.00		(-15.02--6.50)	8.52		
				9.87	
19	b1	(3.00-1.65)	1.35		
270.00		(5.85-3.00)	2.85		
				4.20	
20	b2	(-6.50--5.15)	1.35		
285.00		(-11.68--6.50)	5.18		
				6.53	
20	b1	(3.00-1.65)	1.35		
285.00		(5.03-3.00)	2.03		
				3.38	
21	b2	(-6.50--5.15)	1.35		
300.00		(-9.21--6.50)	2.71		
				4.06	
21	b1	(3.00-1.65)	1.35		
300.00		(8.51-3.00)	5.51		
				6.86	
22	b2	(-6.50--5.15)	1.35		
315.00		(-7.60--6.50)	1.10		
				2.45	
22	b1	(3.00-1.65)	1.35		
315.00		(4.71-3.00)	1.71		
				3.06	
23	b1	(3.00-1.65)	1.35		
330.00		(6.43-3.00)	3.43		
				4.78	

BINDER

N. SEZIONE PROG.	FIG.	ELEMENTI DI CALCOLO	LUNGHEZZA ELEMENTARE ml	LUNGHEZZA FIGURA ml	NOTE
3	c1	(0.00--4.00)	4.00		
30.00		(1.50-0.00)	1.50		
				5.50	
4	c1	(-4.00--5.00)	1.00		
45.00		(0.00--4.00)	4.00		
		(1.74-0.00)	1.74		
				6.74	
5	c1	(-4.00--5.00)	1.00		
60.00		(-0.00--4.00)	4.00		
		(2.06--0.00)	2.06		
				7.06	
6	c1	(-4.00--5.00)	1.00		
75.00		(-0.00--4.00)	4.00		
		(2.04--0.00)	2.04		
				7.04	
7	c1	(-4.00--5.00)	1.00		
90.00		(-0.00--4.00)	4.00		
		(1.99--0.00)	1.99		
				6.99	
8	c1	(-4.00--5.00)	1.00		
105.00		(-0.00--4.00)	4.00		
		(1.94--0.00)	1.94		
				6.94	
9	c1	(-4.00--5.00)	1.00		
120.00		(0.00--4.00)	4.00		
		(2.25-0.00)	2.25		
				7.25	
10	c1	(-4.00--5.00)	1.00		
135.00		(0.00--4.00)	4.00		
		(2.50-0.00)	2.50		
				7.50	
11	c1	(-4.00--5.00)	1.00		
150.00		(0.00--4.00)	4.00		
		(1.92-0.00)	1.92		
				6.92	
12	c1	(-4.00--5.00)	1.00		
165.00		(0.00--4.00)	4.00		
		(1.50-0.00)	1.50		
				6.50	
TR	c1	(-4.00--5.00)	1.00		
172.62		(0.00--4.00)	4.00		
		(1.50-0.00)	1.50		
				6.50	
13	c1	(-4.00--5.00)	1.00		
180.00		(0.00--4.00)	4.00		
		(1.50-0.00)	1.50		
				6.50	
14	c1	(-4.00--5.00)	1.00		
195.00		(0.00--4.00)	4.00		
		(1.50-0.00)	1.50		
				6.50	
15	c1	(-4.00--5.00)	1.00		
210.00		(0.00--4.00)	4.00		
		(1.50-0.00)	1.50		
				6.50	
16	c1	(-4.00--5.00)	1.00		
225.00		(0.00--4.00)	4.00		
		(1.50-0.00)	1.50		
				6.50	
17	c1	(-4.00--5.00)	1.00		
240.00		(0.00--4.00)	4.00		
		(1.50-0.00)	1.50		
				6.50	
18	c1	(-4.00--5.00)	1.00		
255.00		(0.00--4.00)	4.00		
		(1.50-0.00)	1.50		
				6.50	
19	c1	(-4.00--5.00)	1.00		
270.00		(0.00--4.00)	4.00		
		(1.50-0.00)	1.50		
				6.50	
20	c1	(-4.00--5.00)	1.00		
285.00		(0.00--4.00)	4.00		
		(1.50-0.00)	1.50		
				6.50	
21	c1	(-4.00--5.00)	1.00		
300.00		(0.00--4.00)	4.00		
		(1.50-0.00)	1.50		
				6.50	
22	c1	(-4.00--5.00)	1.00		
315.00		(0.00--4.00)	4.00		
		(1.50-0.00)	1.50		
				6.50	
23	c1	(-4.00--5.00)	1.00		
330.00		(0.00--4.00)	4.00		
		(1.50-0.00)	1.50		
				6.50	

Il Direttore dei Lavori | L'Impresa

BASE

N. SEZIONE PROG.	FIG.	ELEMENTI DI CALCOLO	LUNGHEZZA ELEMENTARE ml	LUNGHEZZA FIGURA ml	NOTE
3	d1	(0.00--4.00)	4.00		
30.00		(1.50-0.00)	1.50		
				5.50	
4	d1	(-4.00--5.00)	1.00		
45.00		(0.00--4.00)	4.00		
		(1.74-0.00)	1.74		
				6.74	
5	d1	(-4.00--5.00)	1.00		
60.00		(-0.00--4.00)	4.00		
		(2.06--0.00)	2.06		
				7.06	
6	d1	(-4.00--5.00)	1.00		
75.00		(-0.00--4.00)	4.00		
		(2.04--0.00)	2.04		
				7.04	
7	d1	(-4.00--5.00)	1.00		
90.00		(-0.00--4.00)	4.00		
		(1.99--0.00)	1.99		
				6.99	
8	d1	(-4.00--5.00)	1.00		
105.00		(-0.00--4.00)	4.00		
		(1.94--0.00)	1.94		
				6.94	
9	d1	(-4.00--5.00)	1.00		
120.00		(0.00--4.00)	4.00		
		(2.25-0.00)	2.25		
				7.25	
10	d1	(-4.00--5.00)	1.00		
135.00		(0.00--4.00)	4.00		
		(2.50-0.00)	2.50		
				7.50	
11	d1	(-4.00--5.00)	1.00		
150.00		(0.00--4.00)	4.00		
		(1.92-0.00)	1.92		
				6.92	
12	d1	(-4.00--5.00)	1.00		
165.00		(0.00--4.00)	4.00		
		(1.50-0.00)	1.50		
				6.50	
TR	d1	(-4.00--5.00)	1.00		
172.62		(0.00--4.00)	4.00		
		(1.50-0.00)	1.50		
				6.50	
13	d1	(-4.00--5.00)	1.00		
180.00		(0.00--4.00)	4.00		
		(1.50-0.00)	1.50		
				6.50	
14	d1	(-4.00--5.00)	1.00		
195.00		(0.00--4.00)	4.00		
		(1.50-0.00)	1.50		
				6.50	
15	d1	(-4.00--5.00)	1.00		
210.00		(0.00--4.00)	4.00		
		(1.50-0.00)	1.50		
				6.50	
16	d1	(-4.00--5.00)	1.00		
225.00		(0.00--4.00)	4.00		
		(1.50-0.00)	1.50		
				6.50	
17	d1	(-4.00--5.00)	1.00		
240.00		(0.00--4.00)	4.00		
		(1.50-0.00)	1.50		
				6.50	
18	d1	(-4.00--5.00)	1.00		
255.00		(0.00--4.00)	4.00		
		(1.50-0.00)	1.50		
				6.50	
19	d1	(-4.00--5.00)	1.00		
270.00		(0.00--4.00)	4.00		
		(1.50-0.00)	1.50		
				6.50	
20	d1	(-4.00--5.00)	1.00		
285.00		(0.00--4.00)	4.00		
		(1.50-0.00)	1.50		
				6.50	
21	d1	(-4.00--5.00)	1.00		
300.00		(0.00--4.00)	4.00		
		(1.50-0.00)	1.50		
				6.50	
22	d1	(-4.00--5.00)	1.00		
315.00		(0.00--4.00)	4.00		
		(1.50-0.00)	1.50		
				6.50	
23	d1	(-4.00--5.00)	1.00		
330.00		(0.00--4.00)	4.00		
		(1.50-0.00)	1.50		
				6.50	

Il Direttore dei Lavori | L'Impresa

FONDAZIONE

N. SEZIONE PROG.	FIG.	ELEMENTI DI CALCOLO	LUNGHEZZA ELEMENTARE ml	LUNGHEZZA FIGURA ml	NOTE
3	e1	(0.00--4.00)	4.00		
30.00		(1.50-0.00)	1.50		
				5.50	
4	e1	(-4.00--5.00)	1.00		
45.00		(0.00--4.00)	4.00		
		(1.74-0.00)	1.74		
				6.74	
5	e1	(-4.00--5.00)	1.00		
60.00		(-0.00--4.00)	4.00		
		(2.06--0.00)	2.06		
				7.06	
6	e1	(-4.00--5.00)	1.00		
75.00		(-0.00--4.00)	4.00		
		(2.04--0.00)	2.04		
				7.04	
7	e1	(-4.00--5.00)	1.00		
90.00		(-0.00--4.00)	4.00		
		(1.99--0.00)	1.99		
				6.99	
8	e1	(-4.00--5.00)	1.00		
105.00		(-0.00--4.00)	4.00		
		(1.94--0.00)	1.94		
				6.94	
9	e1	(-4.00--5.00)	1.00		
120.00		(0.00--4.00)	4.00		
		(2.25-0.00)	2.25		
				7.25	
10	e1	(-4.00--5.00)	1.00		
135.00		(0.00--4.00)	4.00		
		(2.50-0.00)	2.50		
				7.50	
11	e1	(-4.00--5.00)	1.00		
150.00		(0.00--4.00)	4.00		
		(1.92-0.00)	1.92		
				6.92	
12	e1	(-4.00--5.00)	1.00		
165.00		(0.00--4.00)	4.00		
		(1.50-0.00)	1.50		
				6.50	
TR	e1	(-4.00--5.00)	1.00		
172.62		(0.00--4.00)	4.00		
		(1.50-0.00)	1.50		
				6.50	
13	e1	(-4.00--5.00)	1.00		
180.00		(0.00--4.00)	4.00		
		(1.50-0.00)	1.50		
				6.50	
14	e1	(-4.00--5.00)	1.00		
195.00		(0.00--4.00)	4.00		
		(1.50-0.00)	1.50		
				6.50	
15	e1	(-4.00--5.00)	1.00		
210.00		(0.00--4.00)	4.00		
		(1.50-0.00)	1.50		
				6.50	
16	e1	(-4.00--5.00)	1.00		
225.00		(0.00--4.00)	4.00		
		(1.50-0.00)	1.50		
				6.50	
17	e1	(-4.00--5.00)	1.00		
240.00		(0.00--4.00)	4.00		
		(1.50-0.00)	1.50		
				6.50	
18	e1	(-4.00--5.00)	1.00		
255.00		(0.00--4.00)	4.00		
		(1.50-0.00)	1.50		
				6.50	
19	e1	(-4.00--5.00)	1.00		
270.00		(0.00--4.00)	4.00		
		(1.50-0.00)	1.50		
				6.50	
20	e1	(-4.00--5.00)	1.00		
285.00		(0.00--4.00)	4.00		
		(1.50-0.00)	1.50		
				6.50	
21	e1	(-4.00--5.00)	1.00		
300.00		(0.00--4.00)	4.00		
		(1.50-0.00)	1.50		
				6.50	
22	e1	(-4.00--5.00)	1.00		
315.00		(0.00--4.00)	4.00		
		(1.50-0.00)	1.50		
				6.50	
23	e1	(-4.00--5.00)	1.00		
330.00		(0.00--4.00)	4.00		
		(1.50-0.00)	1.50		
				6.50	

Il Direttore dei Lavori | L'Impresa

SCOTICO

N. SEZIONE PROG.	FIG.	ELEMENTI DI CALCOLO	LUNGHEZZA ELEMENTARE ml	LUNGHEZZA FIGURA ml	NOTE
3	sc1	(-4.00--4.00)	0.00		
30.00		(-3.85--4.00)	0.15		
		(-3.35--3.85)	0.50		
		(-3.01--3.35)	0.34		
		(-2.29--3.01)	0.72		
		(-2.07--2.29)	0.22		
		(-1.56--2.07)	0.51		
		(-1.56--1.56)	0.00		
		(-1.56--1.56)	0.00		
		(-1.55--1.56)	0.01		
		(-1.54--1.55)	0.01		
		(-1.53--1.54)	0.01		
		(-1.51--1.53)	0.02		
		(-1.49--1.51)	0.02		
		(-1.45--1.49)	0.04		
		(-1.38--1.45)	0.07		
		(-1.25--1.38)	0.13		
		(-1.23--1.25)	0.02		
		(-1.15--1.23)	0.08		
		(-1.03--1.15)	0.12		
		(-1.03--1.03)	0.00		
		(-1.03--1.03)	0.00		
		(-0.99--1.03)	0.04		
		(-0.64--0.99)	0.35		
		(-0.55--0.64)	0.09		
		(-0.38--0.55)	0.17		
		(-0.17--0.38)	0.21		
		(0.36--0.17)	0.53		
		(0.89-0.36)	0.53		
		(1.20-0.89)	0.31		
		(1.95-1.20)	0.75		
		(1.99-1.95)	0.04		
		(2.19-1.99)	0.20		
		(2.29-2.19)	0.10		
		(2.35-2.29)	0.06		
		(2.39-2.35)	0.04		
		(2.41-2.39)	0.02		
		(2.44-2.41)	0.03		
		(2.45-2.44)	0.01		
		(2.47-2.45)	0.02		
		(2.51-2.47)	0.04		
		(2.51-2.51)	0.00		
		(2.52-2.51)	0.01		
		(2.72-2.52)	0.20		
		(2.75-2.72)	0.03		
		(2.79-2.75)	0.04		
		(2.87-2.79)	0.08		
		(3.01-2.87)	0.14		
		(3.73-3.01)	0.72		
		(4.07-3.73)	0.34		
		(4.57-4.07)	0.50		
		(5.12-4.57)	0.55		
		(5.42-5.12)	0.30		
		(6.18-5.42)	0.76		
		(6.26-6.18)	0.08		
		(6.55-6.26)	0.29		
		(7.08-6.55)	0.53		
		(7.24-7.08)	0.16		
		(7.94-7.24)	0.70		
		(8.30-7.94)	0.36		
		(8.31-8.30)	0.01		
		(8.31-8.31)	0.00		
				12.31	
4	sc1	(-5.00--5.00)	0.00		
45.00		(-4.82--5.00)	0.18		
		(-4.13--4.82)	0.69		
		(-3.99--4.13)	0.14		
		(-3.90--3.99)	0.09		
		(-2.89--3.90)	1.01		
		(-2.07--2.89)	0.82		
		(-1.79--2.07)	0.28		
		(-1.35--1.79)	0.44		
		(-0.87--1.35)	0.48		
		(-0.68--0.87)	0.19		
		(-0.08--0.68)	0.60		
		(0.42--0.08)	0.50		
		(0.71-0.42)	0.29		
		(1.43-0.71)	0.72		
		(1.50-1.43)	0.07		
		(1.52-1.50)	0.02		
		(2.29-1.52)	0.77		
		(2.63-2.29)	0.34		
		(3.08-2.63)	0.45		
		(3.73-3.08)	0.65		
		(3.87-3.73)	0.14		
		(4.21-3.87)	0.34		
		(4.66-4.21)	0.45		
		(4.83-4.66)	0.17		
		(5.45-4.83)	0.62		
		(5.94-5.45)	0.49		
		(6.24-5.94)	0.30		
		(6.99-6.24)	0.75		
		(7.03-6.99)	0.04		
		(7.04-7.03)	0.01		
		(7.82-7.04)	0.78		
		(8.14-7.82)	0.32		
		(8.60-8.14)	0.46		
		(9.24-8.60)	0.64		
		(9.39-9.24)	0.15		
		(9.77-9.39)	0.38		
		(10.18-9.77)	0.41		
				15.18	
5	sc1	(-8.63--8.63)	0.00		
60.00		(-8.51--8.63)	0.12		
		(-8.32--8.51)	0.19		
		(-7.76--8.32)	0.56		
		(-7.14--7.76)	0.62		
		A RIPORTARE ml	1.49		

SCOTICO

N. SEZIONE PROG.	FIG.	ELEMENTI DI CALCOLO	LUNGHEZZA ELEMENTARE ml	LUNGHEZZA FIGURA ml	NOTE
		RIPORTO ml	1.49		
		(-7.01--7.14)	0.13		
		(-6.80--7.01)	0.21		
		(-6.26--6.80)	0.54		
		(-5.95--6.26)	0.31		
		(-5.51--5.95)	0.44		
		(-4.77--5.51)	0.74		
		(-4.76--4.77)	0.01		
		(-4.76--4.76)	0.00		
		(-4.01--4.76)	0.75		
		(-3.58--4.01)	0.43		
		(-3.26--3.58)	0.32		
		(-2.73--3.26)	0.53		
		(-2.51--2.73)	0.22		
		(-2.39--2.51)	0.12		
		(-1.76--2.39)	0.63		
		(-1.20--1.76)	0.56		
		(-1.02--1.20)	0.18		
		(-0.69--1.02)	0.33		
		(-0.27--0.69)	0.42		
		(-0.02--0.27)	0.25		
		(0.48--0.02)	0.50		
		(1.17-0.48)	0.69		
		(1.23-1.17)	0.06		
		(1.34-1.23)	0.11		
		(1.98-1.34)	0.64		
		(2.36-1.98)	0.38		
		(2.73-2.36)	0.37		
		(3.38-2.73)	0.65		
		(3.48-3.38)	0.10		
		(3.55-3.48)	0.07		
		(4.23-3.55)	0.68		
		(4.73-4.23)	0.50		
		(4.98-4.73)	0.25		
		(5.41-4.98)	0.43		
		(5.92-5.41)	0.51		
		(6.63-5.92)	0.71		
		(7.11-6.63)	0.48		
		(7.45-7.11)	0.34		
		(7.98-7.45)	0.53		
		(8.29-7.98)	0.31		
		(8.73-8.29)	0.44		
		(9.48-8.73)	0.75		
		(9.48-9.48)	0.00		
		(9.48-9.48)	0.00		
		(10.23-9.48)	0.75		
		(10.67-10.23)	0.44		
		(11.23-10.67)	0.56		
				19.86	
6 75.00	sc1	(-13.76--13.76)	0.00		
		(-13.57--13.76)	0.19		
		(-13.56--13.57)	0.01		
		(-13.56--13.56)	0.00		
		(-12.83--13.56)	0.73		
		(-12.24--12.83)	0.59		
		(-12.10--12.24)	0.14		
		(-11.94--12.10)	0.16		
		(-11.38--11.94)	0.56		
		(-10.92--11.38)	0.46		
		(-10.65--10.92)	0.27		
		(-10.30--10.65)	0.35		
		(-9.92--10.30)	0.38		
		(-9.61--9.92)	0.31		
		(-9.19--9.61)	0.42		
		(-8.67--9.19)	0.52		
		(-8.46--8.67)	0.21		
		(-8.29--8.46)	0.17		
		(-7.73--8.29)	0.56		
		(-7.03--7.73)	0.70		
		(-7.00--7.03)	0.03		
		(-6.97--7.00)	0.03		
		(-6.27--6.97)	0.70		
		(-5.66--6.27)	0.61		
		(-5.54--5.66)	0.12		
		(-5.40--5.54)	0.14		
		(-4.81--5.40)	0.59		
		(-4.34--4.81)	0.47		
		(-4.08--4.34)	0.26		
		(-3.76--4.08)	0.32		
		(-3.03--3.76)	0.73		
		(-2.13--3.03)	0.90		
		(-1.90--2.13)	0.23		
		(-1.71--1.90)	0.19		
		(-1.17--1.71)	0.54		
		(-0.49--1.17)	0.68		
		(-0.44--0.49)	0.05		
		(-0.39--0.44)	0.05		
		(0.29--0.39)	0.68		
		(0.92-0.29)	0.63		
		(1.02-0.92)	0.10		
		(1.14-1.02)	0.12		
		(1.75-1.14)	0.61		
		(2.24-1.75)	0.49		
		(2.48-2.24)	0.24		
		(2.78-2.48)	0.30		
		(3.21-2.78)	0.43		
		(3.55-3.21)	0.34		
		(3.94-3.55)	0.39		
		(4.41-3.94)	0.47		
		(4.67-4.41)	0.26		
		(4.87-4.67)	0.20		
		(5.40-4.87)	0.53		
		(6.05-5.40)	0.65		
		(6.13-6.05)	0.08		
		(6.19-6.13)	0.06		
		(6.85-6.19)	0.66		
		A RIPORTARE ml	20.61		

SCOTICO

N. SEZIONE PROG.	FIG.	ELEMENTI DI CALCOLO	LUNGHEZZA ELEMENTARE ml	LUNGHEZZA FIGURA ml	NOTE
		RIPORTO ml	20.61		
		(7.50-6.85)	0.65		
		(7.58-7.50)	0.08		
		(7.68-7.58)	0.10		
		(8.31-7.68)	0.63		
		(8.82-8.31)	0.51		
		(9.04-8.82)	0.22		
		(9.32-9.04)	0.28		
		(9.77-9.32)	0.45		
		(10.14-9.77)	0.37		
		(10.50-10.14)	0.36		
		(10.95-10.50)	0.45		
		(11.23-10.95)	0.28		
		(11.45-11.23)	0.22		
		(11.96-11.45)	0.51		
		(12.59-11.96)	0.63		
		(12.69-12.59)	0.10		
		(12.77-12.69)	0.08		
		(14.68-12.77)	1.91		
				28.44	
7 90.00	sc1	(-17.11--19.14)	2.03		
		(-16.64--17.11)	0.47		
		(-16.20--16.64)	0.44		
		(-15.91--16.20)	0.29		
		(-15.60--15.91)	0.31		
		(-15.18--15.60)	0.42		
		(-14.80--15.18)	0.38		
		(-14.46--14.80)	0.34		
		(-14.08--14.46)	0.38		
		(-13.73--14.08)	0.35		
		(-13.41--13.73)	0.32		
		(-13.01--13.41)	0.40		
		(-12.57--13.01)	0.44		
		(-12.28--12.57)	0.29		
		(-12.02--12.28)	0.26		
		(-11.05--12.02)	0.97		
		(-10.63--11.05)	0.42		
		(-10.10--10.63)	0.53		
		(-9.54--10.10)	0.56		
		(-9.38--9.54)	0.16		
		(-9.24--9.38)	0.14		
		(-8.65--9.24)	0.59		
		(-8.02--8.65)	0.63		
		(-7.93--8.02)	0.09		
		(-7.84--7.93)	0.09		
		(-7.20--7.84)	0.64		
		(-6.50--7.20)	0.70		
		(-6.48--6.50)	0.02		
		(-6.45--6.48)	0.03		
		(-5.75--6.45)	0.70		
		(-5.06--5.75)	0.69		
		(-5.03--5.06)	0.03		
		(-4.99--5.03)	0.04		
		(-4.30--4.99)	0.69		
		(-3.67--4.30)	0.63		
		(-3.57--3.67)	0.10		
		(-3.47--3.57)	0.10		
		(-2.85--3.47)	0.62		
		(-2.27--2.85)	0.58		
		(-2.12--2.27)	0.15		
		(-1.96--2.12)	0.16		
		(-1.40--1.96)	0.56		
		(-0.88--1.40)	0.52		
		(-0.67--0.88)	0.21		
		(-0.44--0.67)	0.23		
		(0.05--0.44)	0.49		
		(0.51-0.05)	0.46		
		(0.78-0.51)	0.27		
		(1.07-0.78)	0.29		
		(1.51-1.07)	0.44		
		(1.90-1.51)	0.39		
		(2.23-1.90)	0.33		
		(2.59-2.23)	0.36		
		(2.96-2.59)	0.37		
		(3.29-2.96)	0.33		
		(3.68-3.29)	0.39		
		(4.10-3.68)	0.42		
		(4.41-4.10)	0.31		
		(4.69-4.41)	0.28		
		(5.13-4.69)	0.44		
		(5.62-5.13)	0.49		
		(5.86-5.62)	0.24		
		(6.08-5.86)	0.22		
		(6.58-6.08)	0.50		
		(7.14-6.58)	0.56		
		(7.31-7.14)	0.17		
		(7.47-7.31)	0.16		
		(8.04-7.47)	0.57		
		(8.65-8.04)	0.61		
		(8.76-8.65)	0.11		
		(8.86-8.76)	0.10		
		(9.49-8.86)	0.63		
		(10.17-9.49)	0.68		
		(10.21-10.17)	0.04		
		(10.26-10.21)	0.05		
		(10.94-10.26)	0.68		
		(11.65-10.94)	0.71		
		(11.68-11.65)	0.03		
		(13.04-11.68)	1.36		
		(15.15-13.04)	2.11		
				34.29	
8 105.00	sc1	(-19.50--19.50)	0.00		
		(-19.26--19.50)	0.24		
		(-18.72--19.26)	0.54		
		(-18.03--18.72)	0.69		
		(-17.98--18.03)	0.05		
		A RIPORTARE ml	1.52		

SCOTICO

N. SEZIONE PROG.	FIG.	ELEMENTI DI CALCOLO	LUNGHEZZA ELEMENTARE ml	LUNGHEZZA FIGURA ml	NOTE
		RIPORTO ml	1.52		
		(-17.92--17.98)	0.06		
		(-17.24--17.92)	0.68		
		(-16.79--17.24)	0.45		
		(-16.51--16.79)	0.28		
		(-16.08--16.51)	0.43		
		(-15.77--16.08)	0.31		
		(-15.55--15.77)	0.22		
		(-15.03--15.55)	0.52		
		(-14.32--15.03)	0.71		
		(-14.29--14.32)	0.03		
		(-14.25--14.29)	0.04		
		(-13.55--14.25)	0.70		
		(-13.08--13.55)	0.47		
		(-12.81--13.08)	0.27		
		(-12.41--12.81)	0.40		
		(-12.07--12.41)	0.34		
		(-11.84--12.07)	0.23		
		(-11.33--11.84)	0.51		
		(-10.61--11.33)	0.72		
		(-10.60--10.61)	0.01		
		(-10.58--10.60)	0.02		
		(-9.86--10.58)	0.72		
		(-9.37--9.86)	0.49		
		(-9.12--9.37)	0.25		
		(-8.74--9.12)	0.38		
		(-8.38--8.74)	0.36		
		(-8.13--8.38)	0.25		
		(-7.64--8.13)	0.49		
		(-6.91--7.64)	0.73		
		(-6.90--6.91)	0.01		
		(-6.90--6.90)	0.00		
		(-6.16--6.90)	0.74		
		(-5.66--6.16)	0.50		
		(-5.43--5.66)	0.23		
		(-5.08--5.43)	0.35		
		(-4.69--5.08)	0.39		
		(-4.43--4.69)	0.26		
		(-3.95--4.43)	0.48		
		(-3.24--3.95)	0.71		
		(-3.21--3.24)	0.03		
		(-3.19--3.21)	0.02		
		(-2.47--3.19)	0.72		
		(-1.95--2.47)	0.52		
		(-1.73--1.95)	0.22		
		(-1.41--1.73)	0.32		
		(-0.99--1.41)	0.42		
		(-0.72--0.99)	0.27		
		(-0.26--0.72)	0.46		
		(0.43--0.26)	0.69		
		(0.48-0.43)	0.05		
		(0.52-0.48)	0.04		
		(0.71-0.52)	0.19		
		(1.76-0.71)	1.05		
		(1.96-1.76)	0.20		
		(2.26-1.96)	0.30		
		(2.70-2.26)	0.44		
		(2.99-2.70)	0.29		
		(3.44-2.99)	0.45		
		(4.10-3.44)	0.66		
		(4.18-4.10)	0.08		
		(4.23-4.18)	0.05		
		(4.91-4.23)	0.68		
		(5.47-4.91)	0.56		
		(5.65-5.47)	0.18		
		(5.93-5.65)	0.28		
		(6.39-5.93)	0.46		
		(6.70-6.39)	0.31		
		(7.13-6.70)	0.43		
		(7.77-7.13)	0.64		
		(7.87-7.77)	0.10		
		(7.94-7.87)	0.07		
		(8.61-7.94)	0.67		
		(9.17-8.61)	0.56		
		(9.35-9.17)	0.18		
		(9.60-9.35)	0.25		
		(10.08-9.60)	0.48		
		(10.41-10.08)	0.33		
		(10.82-10.41)	0.41		
		(11.44-10.82)	0.62		
		(11.56-11.44)	0.12		
		(11.65-11.56)	0.09		
		(12.30-11.65)	0.65		
		(12.88-12.30)	0.58		
		(13.04-12.88)	0.16		
		(13.27-13.04)	0.23		
		(14.12-13.27)	0.85		
		(15.10-14.12)	0.98		
		(15.26-15.10)	0.16		
		(15.36-15.26)	0.10		
		(15.87-15.36)	0.51		
				35.37	
9 120.00	sc1	(-20.64--20.64)	0.00		
		(-19.86--20.64)	0.78		
		(-19.68--19.86)	0.18		
		(-19.09--19.68)	0.59		
		(-18.55--19.09)	0.54		
		(-18.32--18.55)	0.23		
		(-17.86--18.32)	0.46		
		(-17.55--17.86)	0.31		
		(-17.41--17.55)	0.14		
		(-16.78--17.41)	0.63		
		(-16.28--16.78)	0.50		
		(-16.01--16.28)	0.27		
		(-15.46--16.01)	0.55		
		(-15.24--15.46)	0.22		
		A RIPORTARE ml	5.40		

SCOTICO

N. SEZIONE PROG.	FIG.	ELEMENTI DI CALCOLO	LUNGHEZZA ELEMENTARE ml	LUNGHEZZA FIGURA ml	NOTE
		RIPORTO ml	5.40		
		(-15.14--15.24)	0.10		
		(-14.48--15.14)	0.66		
		(-14.01--14.48)	0.47		
		(-13.71--14.01)	0.30		
		(-13.07--13.71)	0.64		
		(-12.94--13.07)	0.13		
		(-12.87--12.94)	0.07		
		(-12.17--12.87)	0.70		
		(-11.74--12.17)	0.43		
		(-11.40--11.74)	0.34		
		(-10.68--11.40)	0.72		
		(-10.63--10.68)	0.05		
		(-10.60--10.63)	0.03		
		(-10.53--10.60)	0.07		
		(-9.47--10.53)	1.06		
		(-9.09--9.47)	0.38		
		(-8.33--9.09)	0.76		
		(-8.32--8.33)	0.01		
		(-8.29--8.32)	0.03		
		(-7.55--8.29)	0.74		
		(-7.20--7.55)	0.35		
		(-6.78--7.20)	0.42		
		(-6.06--6.78)	0.72		
		(-6.01--6.06)	0.05		
		(-5.90--6.01)	0.11		
		(-5.24--5.90)	0.66		
		(-4.93--5.24)	0.31		
		(-4.47--4.93)	0.46		
		(-3.79--4.47)	0.68		
		(-3.70--3.79)	0.09		
		(-3.50--3.70)	0.20		
		(-2.93--3.50)	0.57		
		(-2.66--2.93)	0.27		
		(-2.16--2.66)	0.50		
		(-1.52--2.16)	0.64		
		(-1.39--1.52)	0.13		
		(-1.11--1.39)	0.28		
		(-0.62--1.11)	0.49		
		(-0.39--0.62)	0.23		
		(0.15--0.39)	0.54		
		(0.75-0.15)	0.60		
		(0.92-0.75)	0.17		
		(1.28-0.92)	0.36		
		(1.69-1.28)	0.41		
		(1.88-1.69)	0.19		
		(2.46-1.88)	0.58		
		(3.02-2.46)	0.56		
		(3.23-3.02)	0.21		
		(3.67-3.23)	0.44		
		(4.00-3.67)	0.33		
		(4.15-4.00)	0.15		
		(4.77-4.15)	0.62		
		(5.29-4.77)	0.52		
		(5.54-5.29)	0.25		
		(6.06-5.54)	0.52		
		(6.31-6.06)	0.25		
		(6.42-6.31)	0.11		
		(7.08-6.42)	0.66		
		(7.56-7.08)	0.48		
		(7.84-7.56)	0.28		
		(8.45-7.84)	0.61		
		(8.61-8.45)	0.16		
		(8.69-8.61)	0.08		
		(8.90-8.69)	0.21		
		(9.83-8.90)	0.93		
		(10.15-9.83)	0.32		
		(10.85-10.15)	0.70		
		(10.92-10.85)	0.07		
		(10.96-10.92)	0.04		
		(11.69-10.96)	0.73		
		(12.10-11.69)	0.41		
		(12.46-12.10)	0.36		
		(13.23-12.46)	0.77		
		(13.23-13.23)	0.00		
		(13.24-13.23)	0.01		
		(14.00-13.24)	0.76		
		(14.36-14.00)	0.36		
		(14.77-14.36)	0.41		
		(15.50-14.77)	0.73		
		(15.54-15.50)	0.04		
		(15.63-15.54)	0.09		
		(16.31-15.63)	0.68		
		(16.63-16.31)	0.32		
		(17.32-16.63)	0.69		
				37.96	
10 135.00	sc1	(-20.36--20.36)	0.00		
		(-19.90--20.36)	0.46		
		(-19.37--19.90)	0.53		
		(-19.08--19.37)	0.29		
		(-18.30--19.08)	0.78		
		(-18.25--18.30)	0.05		
		(-18.11--18.25)	0.14		
		(-17.43--18.11)	0.68		
		(-17.22--17.43)	0.21		
		(-16.61--17.22)	0.61		
		(-16.15--16.61)	0.46		
		(-15.78--16.15)	0.37		
		(-15.08--15.78)	0.70		
		(-14.96--15.08)	0.12		
		(-14.56--14.96)	0.40		
		(-14.14--14.56)	0.42		
		(-14.01--14.14)	0.13		
		(-13.32--14.01)	0.69		
		(-12.94--13.32)	0.38		
		(-12.49--12.94)	0.45		
		A RIPORTARE ml	7.87		

SCOTICO

N. SEZIONE PROG.	FIG.	ELEMENTI DI CALCOLO	LUNGHEZZA ELEMENTARE ml	LUNGHEZZA FIGURA ml	NOTE
		RIPORTO ml	7.87		
		(-11.87--12.49)	0.62		
		(-11.67--11.87)	0.20		
		(-11.01--11.67)	0.66		
		(-10.85--11.01)	0.16		
		(-10.80--10.85)	0.05		
		(-10.03--10.80)	0.77		
		(-9.73--10.03)	0.30		
		(-9.20--9.73)	0.53		
		(-8.66--9.20)	0.54		
		(-8.38--8.66)	0.28		
		(-7.59--8.38)	0.79		
		(-7.56--7.59)	0.03		
		(-7.46--7.56)	0.10		
		(-6.74--7.46)	0.72		
		(-6.51--6.74)	0.23		
		(-5.91--6.51)	0.60		
		(-5.44--5.91)	0.47		
		(-5.09--5.44)	0.35		
		(-4.37--5.09)	0.72		
		(-3.92--4.37)	0.45		
		(-3.30--3.92)	0.62		
		(-2.62--3.30)	0.68		
		(-2.23--2.62)	0.39		
		(-1.80--2.23)	0.43		
		(-1.16--1.80)	0.64		
		(-0.98--1.16)	0.18		
		(-0.37--0.98)	0.61		
		(-0.15--0.37)	0.22		
		(-0.09--0.15)	0.06		
		(0.67--0.09)	0.76		
		(0.98-0.67)	0.31		
		(1.49-0.98)	0.51		
		(2.05-1.49)	0.56		
		(2.31-2.05)	0.26		
		(3.12-2.31)	0.81		
		(3.14-3.12)	0.02		
		(3.18-3.14)	0.04		
		(3.96-3.18)	0.78		
		(4.19-3.96)	0.23		
		(4.78-4.19)	0.59		
		(5.27-4.78)	0.49		
		(5.61-5.27)	0.34		
		(6.34-5.61)	0.73		
		(6.43-6.34)	0.09		
		(6.73-6.43)	0.30		
		(7.25-6.73)	0.52		
		(7.41-7.25)	0.16		
		(8.07-7.41)	0.66		
		(8.48-8.07)	0.41		
		(8.90-8.48)	0.42		
		(9.55-8.90)	0.65		
		(9.72-9.55)	0.17		
		(10.28-9.72)	0.56		
		(10.54-10.28)	0.26		
		(10.62-10.54)	0.08		
		(11.36-10.62)	0.74		
		(11.69-11.36)	0.33		
		(12.19-11.69)	0.50		
		(12.76-12.19)	0.57		
		(13.01-12.76)	0.25		
		(13.83-13.01)	0.82		
		(13.83-13.83)	0.00		
		(13.83-13.83)	0.00		
		(14.90-13.83)	1.07		
		(15.48-14.90)	0.58		
		(15.97-15.48)	0.49		
		(16.30-15.97)	0.33		
		(17.33-16.30)	1.03		
				37.69	
11 150.00	sc1	(-20.99--20.99)	0.00		
		(-19.60--20.99)	1.39		
		(-19.24--19.60)	0.36		
		(-18.57--19.24)	0.67		
		(-17.67--18.57)	0.90		
		(-17.53--17.67)	0.14		
		(-17.43--17.53)	0.10		
		(-16.73--17.43)	0.70		
		(-16.52--16.73)	0.21		
		(-16.49--16.52)	0.03		
		(-15.62--16.49)	0.87		
		(-15.46--15.62)	0.16		
		(-14.72--15.46)	0.74		
		(-14.42--14.72)	0.30		
		(-13.81--14.42)	0.61		
		(-13.39--13.81)	0.42		
		(-12.91--13.39)	0.48		
		(-12.35--12.91)	0.56		
		(-12.01--12.35)	0.34		
		(-11.31--12.01)	0.70		
		(-11.10--11.31)	0.21		
		(-10.28--11.10)	0.82		
		(-10.20--10.28)	0.08		
		(-9.68--10.20)	0.52		
		(-9.30--9.68)	0.38		
		(-9.24--9.30)	0.06		
		(-8.39--9.24)	0.85		
		(-8.20--8.39)	0.19		
		(-7.49--8.20)	0.71		
		(-7.17--7.49)	0.32		
		(-6.59--7.17)	0.58		
		(-6.13--6.59)	0.46		
		(-5.68--6.13)	0.45		
		(-5.10--5.68)	0.58		
		(-4.78--5.10)	0.32		
		(-4.06--4.78)	0.72		
		A RIPORTARE ml	16.93		

SCOTICO

N. SEZIONE PROG.	FIG.	ELEMENTI DI CALCOLO	LUNGHEZZA ELEMENTARE ml	LUNGHEZZA FIGURA ml	NOTE
		RIPORTO ml	16.93		
		(-3.88--4.06)	0.18		
		(-3.02--3.88)	0.86		
		(-2.97--3.02)	0.05		
		(-2.63--2.97)	0.34		
		(-2.07--2.63)	0.56		
		(-1.99--2.07)	0.08		
		(-1.17--1.99)	0.82		
		(-0.95--1.17)	0.22		
		(-0.66--0.95)	0.29		
		(0.09--0.66)	0.75		
		(0.64-0.09)	0.55		
		(1.12-0.64)	0.48		
		(1.55-1.12)	0.43		
		(2.16-1.55)	0.61		
		(2.45-2.16)	0.29		
		(3.19-2.45)	0.74		
		(3.35-3.19)	0.16		
		(4.23-3.35)	0.88		
		(4.26-4.23)	0.03		
		(4.42-4.26)	0.16		
		(5.16-4.42)	0.74		
		(5.27-5.16)	0.11		
		(6.06-5.27)	0.79		
		(6.30-6.06)	0.24		
		(6.97-6.30)	0.67		
		(7.34-6.97)	0.37		
		(7.87-7.34)	0.53		
		(8.38-7.87)	0.51		
		(8.77-8.38)	0.39		
		(9.41-8.77)	0.64		
		(9.68-9.41)	0.27		
		(10.45-9.68)	0.77		
		(10.58-10.45)	0.13		
		(11.47-10.58)	0.89		
		(11.48-11.47)	0.01		
		(11.49-11.48)	0.01		
		(12.39-11.49)	0.90		
		(12.52-12.39)	0.13		
		(13.29-12.52)	0.77		
		(13.56-13.29)	0.27		
		(14.19-13.56)	0.63		
		(14.59-14.19)	0.40		
		(15.10-14.59)	0.51		
		(15.63-15.10)	0.53		
		(16.00-15.63)	0.37		
		(16.73-16.00)	0.73		
				37.72	
12 165.00	sc2	(-20.35--20.35)	0.00		
		(-19.38--20.35)	0.97		
		(-19.13--19.38)	0.25		
		(-18.39--19.13)	0.74		
		(-18.10--18.39)	0.29		
		(-17.40--18.10)	0.70		
		(-17.07--17.40)	0.33		
		(-16.72--17.07)	0.35		
		(-16.05--16.72)	0.67		
		(-15.42--16.05)	0.63		
		(-15.02--15.42)	0.40		
		(-14.43--15.02)	0.59		
		(-14.00--14.43)	0.43		
		(-13.44--14.00)	0.56		
		(-12.97--13.44)	0.47		
		(-12.45--12.97)	0.52		
		(-11.95--12.45)	0.50		
		(-11.46--11.95)	0.49		
		(-10.92--11.46)	0.54		
		(-10.47--10.92)	0.45		
		(-9.89--10.47)	0.58		
		(-9.48--9.89)	0.41		
		(-8.87--9.48)	0.61		
		(-8.49--8.87)	0.38		
		(-7.81--8.49)	0.68		
				12.54	
12 165.00	sc1	(1.69-1.02)	0.67		
		(2.39-1.69)	0.70		
		(2.42-2.39)	0.03		
		(3.38-2.42)	0.96		
		(3.44-3.38)	0.06		
		(4.37-3.44)	0.93		
		(4.47-4.37)	0.10		
		(5.36-4.47)	0.89		
		(5.50-5.36)	0.14		
		(6.35-5.50)	0.85		
		(6.52-6.35)	0.17		
		(7.34-6.52)	0.82		
		(7.55-7.34)	0.21		
		(8.33-7.55)	0.78		
		(8.57-8.33)	0.24		
		(9.32-8.57)	0.75		
		(9.60-9.32)	0.28		
		(10.31-9.60)	0.71		
		(10.63-10.31)	0.32		
		(11.30-10.63)	0.67		
		(11.65-11.30)	0.35		
		(12.29-11.65)	0.64		
		(12.68-12.29)	0.39		
		(13.28-12.68)	0.60		
		(13.70-13.28)	0.42		
		(14.27-13.70)	0.57		
		(14.73-14.27)	0.46		
		(15.26-14.73)	0.53		
		(15.76-15.26)	0.50		
		(16.25-15.76)	0.49		
		(16.33-16.25)	0.08		
		(16.33-16.33)	0.00		
		A RIPORTARE ml	15.31		

SCOTICO

N. SEZIONE PROG.	FIG.	ELEMENTI DI CALCOLO	LUNGHEZZA ELEMENTARE ml	LUNGHEZZA FIGURA ml	NOTE
		RIPORTO ml	15.31		
				15.31	
TR	sc1	(2.17-1.54)	0.63		
172.62		(2.55-2.17)	0.38		
		(3.20-2.55)	0.65		
		(3.57-3.20)	0.37		
		(4.22-3.57)	0.65		
		(4.60-4.22)	0.38		
		(5.25-4.60)	0.65		
		(5.62-5.25)	0.37		
		(6.27-5.62)	0.65		
		(6.65-6.27)	0.38		
		(7.30-6.65)	0.65		
		(7.67-7.30)	0.37		
		(8.33-7.67)	0.66		
		(8.70-8.33)	0.37		
		(9.35-8.70)	0.65		
		(9.72-9.35)	0.37		
		(10.38-9.72)	0.66		
		(10.75-10.38)	0.37		
		(11.40-10.75)	0.65		
		(11.77-11.40)	0.37		
		(12.43-11.77)	0.66		
		(12.80-12.43)	0.37		
		(13.46-12.80)	0.66		
		(13.82-13.46)	0.36		
		(14.48-13.82)	0.66		
		(14.85-14.48)	0.37		
		(15.51-14.85)	0.66		
		(15.87-15.51)	0.36		
		(16.27-15.87)	0.40		
		(16.27-16.27)	0.00		
				14.73	
13	sc2	(-4.40--4.40)	0.00		
180.00		(-4.40--4.40)	0.00		
		(-4.40--4.40)	0.00		
				0.00	
13	sc1	(1.91-1.54)	0.37		
180.00		(2.45-1.91)	0.54		
		(2.96-2.45)	0.51		
		(3.47-2.96)	0.51		
		(4.01-3.47)	0.54		
		(4.50-4.01)	0.49		
		(5.07-4.50)	0.57		
		(5.52-5.07)	0.45		
		(6.12-5.52)	0.60		
		(6.55-6.12)	0.43		
		(7.17-6.55)	0.62		
		(7.57-7.17)	0.40		
		(8.22-7.57)	0.65		
		(8.60-8.22)	0.38		
		(9.27-8.60)	0.67		
		(9.62-9.27)	0.35		
		(10.32-9.62)	0.70		
		(10.65-10.32)	0.33		
		(11.38-10.65)	0.73		
		(11.68-11.38)	0.30		
		(12.43-11.68)	0.75		
		(12.70-12.43)	0.27		
		(13.48-12.70)	0.78		
		(13.73-13.48)	0.25		
		(14.53-13.73)	0.80		
		(14.75-14.53)	0.22		
		(15.58-14.75)	0.83		
		(15.78-15.58)	0.20		
		(16.32-15.78)	0.54		
		(16.32-16.32)	0.00		
				14.78	
14	sc1	(1.79-1.54)	0.25		
195.00		(1.91-1.79)	0.12		
		(2.86-1.91)	0.95		
		(2.94-2.86)	0.08		
		(3.93-2.94)	0.99		
		(3.96-3.93)	0.03		
		(4.90-3.96)	0.94		
		(4.99-4.90)	0.09		
		(4.99-4.99)	0.00		
		(6.02-4.99)	1.03		
		(6.06-6.02)	0.04		
		(7.04-6.06)	0.98		
		(7.13-7.04)	0.09		
		(8.07-7.13)	0.94		
		(8.20-8.07)	0.13		
		(9.09-8.20)	0.89		
		(9.27-9.09)	0.18		
		(10.12-9.27)	0.85		
		(10.34-10.12)	0.22		
		(11.15-10.34)	0.81		
		(11.40-11.15)	0.25		
		(12.17-11.40)	0.77		
		(12.47-12.17)	0.30		
		(13.20-12.47)	0.73		
		(13.54-13.20)	0.34		
		(14.23-13.54)	0.69		
		(14.61-14.23)	0.38		
		(15.25-14.61)	0.64		
		(15.68-15.25)	0.43		
		(15.91-15.68)	0.23		
		(15.91-15.91)	0.00		
				14.37	
15	sc1	(1.58-1.54)	0.04		
210.00		(2.35-1.58)	0.77		
		(2.65-2.35)	0.30		
		(3.37-2.65)	0.72		
		(3.72-3.37)	0.35		
		(4.40-3.72)	0.68		
		A RIPORTARE ml	2.86		

SCOTICO

N. SEZIONE PROG.	FIG.	ELEMENTI DI CALCOLO	LUNGHEZZA ELEMENTARE ml	LUNGHEZZA FIGURA ml	NOTE
		RIPORTO ml	2.86		
		(4.79-4.40)	0.39		
		(5.42-4.79)	0.63		
		(5.85-5.42)	0.43		
		(6.45-5.85)	0.60		
		(6.92-6.45)	0.47		
		(7.48-6.92)	0.56		
		(7.99-7.48)	0.51		
		(8.50-7.99)	0.51		
		(9.06-8.50)	0.56		
		(9.53-9.06)	0.47		
		(10.13-9.53)	0.60		
		(10.56-10.13)	0.43		
		(11.19-10.56)	0.63		
		(11.58-11.19)	0.39		
		(12.26-11.58)	0.68		
		(12.61-12.26)	0.35		
		(13.33-12.61)	0.72		
		(13.63-13.33)	0.30		
		(14.40-13.63)	0.77		
		(14.66-14.40)	0.26		
		(15.42-14.66)	0.76		
		(15.42-15.42)	0.00		
				13.88	
16 225.00	sc1	(-5.50--5.50)	0.00		
		(-5.43--5.50)	0.07		
		(-5.04--5.43)	0.39		
		(-4.40--5.04)	0.64		
		(-3.97--4.40)	0.43		
		(-3.38--3.97)	0.59		
		(-2.90--3.38)	0.48		
		(-2.35--2.90)	0.55		
		(-1.83--2.35)	0.52		
		(-1.32--1.83)	0.51		
		(-0.85--1.32)	0.47		
		(-0.30--0.85)	0.55		
		(0.30--0.30)	0.60		
		(0.73-0.30)	0.43		
		(1.37-0.73)	0.64		
		(1.75-1.37)	0.38		
		(2.44-1.75)	0.69		
		(2.78-2.44)	0.34		
		(3.51-2.78)	0.73		
		(3.81-3.51)	0.30		
		(4.58-3.81)	0.77		
		(4.83-4.58)	0.25		
		(5.64-4.83)	0.81		
		(5.86-5.64)	0.22		
		(6.71-5.86)	0.85		
		(6.89-6.71)	0.18		
		(7.78-6.89)	0.89		
		(7.91-7.78)	0.13		
		(8.85-7.91)	0.94		
		(8.94-8.85)	0.09		
		(9.92-8.94)	0.98		
		(9.96-9.92)	0.04		
		(10.99-9.96)	1.03		
		(10.99-10.99)	0.00		
		(11.08-10.99)	0.09		
		(12.02-11.08)	0.94		
		(12.05-12.02)	0.03		
		(13.04-12.05)	0.99		
		(13.12-13.04)	0.08		
		(14.07-13.12)	0.95		
		(14.19-14.07)	0.12		
		(14.84-14.19)	0.65		
		(14.84-14.84)	0.00		
				20.34	
17 240.00	sc1	(-10.57--10.57)	0.00		
		(-10.12--10.57)	0.45		
		(-9.52--10.12)	0.60		
		(-9.10--9.52)	0.42		
		(-8.45--9.10)	0.65		
		(-8.07--8.45)	0.38		
		(-7.38--8.07)	0.69		
		(-7.05--7.38)	0.33		
		(-6.31--7.05)	0.74		
		(-6.02--6.31)	0.29		
		(-5.25--6.02)	0.77		
		(-4.99--5.25)	0.26		
		(-4.18--4.99)	0.81		
		(-3.97--4.18)	0.21		
		(-3.11--3.97)	0.86		
		(-2.94--3.11)	0.17		
		(-2.04--2.94)	0.90		
		(-1.92--2.04)	0.12		
		(-1.80--1.92)	0.12		
		(-0.89--1.80)	0.91		
		(-0.56--0.89)	0.33		
		(-0.56--0.56)	0.00		
				10.01	
17 240.00	sc2	(-15.25--15.25)	0.00		
		(-14.86--15.25)	0.39		
		(-14.23--14.86)	0.63		
		(-13.79--14.23)	0.44		
		(-13.20--13.79)	0.59		
		(-12.72--13.20)	0.48		
		(-12.18--12.72)	0.54		
		(-11.66--12.18)	0.52		
		(-11.15--11.66)	0.51		
		(-10.59--11.15)	0.56		
		(-10.12--10.59)	0.47		
		(-9.52--10.12)	0.60		
		(-9.10--9.52)	0.42		
		(-8.45--9.10)	0.65		
		(-8.07--8.45)	0.38		
		A RIPORTARE ml	7.18		

SCOTICO

N. SEZIONE PROG.	FIG.	ELEMENTI DI CALCOLO	LUNGHEZZA ELEMENTARE ml	LUNGHEZZA FIGURA ml	NOTE
		RIPORTO ml	7.18		
		(-7.38--8.07)	0.69		
		(-7.05--7.38)	0.33		
		(-6.31--7.05)	0.74		
		(-6.02--6.31)	0.29		
		(-5.25--6.02)	0.77		
		(-4.99--5.25)	0.26		
		(-4.18--4.99)	0.81		
		(-3.97--4.18)	0.21		
		(-3.11--3.97)	0.86		
		(-2.94--3.11)	0.17		
		(-2.04--2.94)	0.90		
		(-1.92--2.04)	0.12		
		(-1.80--1.92)	0.12		
		(-0.89--1.80)	0.91		
		(0.09--0.89)	0.98		
		(0.14-0.09)	0.05		
		(1.16-0.14)	1.02		
		(1.16-1.16)	0.00		
		(2.19-1.16)	1.03		
		(2.23-2.19)	0.04		
		(3.22-2.23)	0.99		
		(3.30-3.22)	0.08		
		(4.24-3.30)	0.94		
		(4.37-4.24)	0.13		
		(5.27-4.37)	0.90		
		(5.44-5.27)	0.17		
		(6.29-5.44)	0.85		
		(6.50-6.29)	0.21		
		(7.32-6.50)	0.82		
		(7.57-7.32)	0.25		
		(8.35-7.57)	0.78		
		(8.64-8.35)	0.29		
		(9.37-8.64)	0.73		
		(9.71-9.37)	0.34		
		(10.40-9.71)	0.69		
		(10.78-10.40)	0.38		
		(11.42-10.78)	0.64		
		(11.85-11.42)	0.43		
		(12.45-11.85)	0.60		
		(12.91-12.45)	0.46		
		(13.48-12.91)	0.57		
		(13.98-13.48)	0.50		
		(14.18-13.98)	0.20		
		(14.18-14.18)	0.00		
				29.43	
18 255.00	sc1	(-15.37--15.37)	0.00		
		(-15.07--15.37)	0.30		
		(-14.82--15.07)	0.25		
		(-14.00--14.82)	0.82		
		(-13.79--14.00)	0.21		
		(-12.93--13.79)	0.86		
		(-12.77--12.93)	0.16		
		(-11.86--12.77)	0.91		
		(-11.74--11.86)	0.12		
		(-10.80--11.74)	0.94		
		(-10.72--10.80)	0.08		
		(-9.73--10.72)	0.99		
		(-9.69--9.73)	0.04		
		(-8.75--9.69)	0.94		
		(-8.66--8.75)	0.09		
		(-8.66--8.66)	0.00		
		(-7.64--8.66)	1.02		
		(-7.59--7.64)	0.05		
		(-6.61--7.59)	0.98		
		(-6.52--6.61)	0.09		
		(-5.62--6.52)	0.90		
				9.75	
18 255.00	sc2	(4.68-4.38)	0.30		
		(5.23-4.68)	0.55		
		(5.70-5.23)	0.47		
		(6.30-5.70)	0.60		
		(6.73-6.30)	0.43		
		(7.36-6.73)	0.63		
		(7.75-7.36)	0.39		
		(8.43-7.75)	0.68		
		(8.78-8.43)	0.35		
		(9.50-8.78)	0.72		
		(9.81-9.50)	0.31		
		(10.57-9.81)	0.76		
		(10.83-10.57)	0.26		
		(11.33-10.83)	0.50		
		(11.33-11.33)	0.00		
				6.95	
19 270.00	sc1	(-14.39--15.02)	0.63		
		(-14.21--14.39)	0.18		
		(-13.36--14.21)	0.85		
		(-13.14--13.36)	0.22		
		(-12.33--13.14)	0.81		
		(-12.07--12.33)	0.26		
		(-11.31--12.07)	0.76		
		(-11.00--11.31)	0.31		
		(-10.28--11.00)	0.72		
		(-9.94--10.28)	0.34		
		(-9.26--9.94)	0.68		
		(-8.87--9.26)	0.39		
		(-8.23--8.87)	0.64		
		(-7.80--8.23)	0.43		
		(-7.20--7.80)	0.60		
		(-6.73--7.20)	0.47		
		(-6.18--6.73)	0.55		
		(-5.66--6.18)	0.52		
		(-5.15--5.66)	0.51		
		(-4.60--5.15)	0.55		
		(-4.12--4.60)	0.48		
		(-3.53--4.12)	0.59		
		A RIPORTARE ml	11.49		

SCOTICO

N. SEZIONE PROG.	FIG.	ELEMENTI DI CALCOLO	LUNGHEZZA ELEMENTARE ml	LUNGHEZZA FIGURA ml	NOTE
		RIPORTO ml	11.49		
		(-3.10--3.53)	0.43		
		(-2.70--3.10)	0.40		
		(-2.07--2.70)	0.63		
		(-1.39--2.07)	0.68		
		(-1.05--1.39)	0.34		
		(-0.68--1.05)	0.37		
		(-0.68--0.68)	0.00		
				14.34	
20	sc1	(-11.21--11.68)	0.47		
285.00		(-10.87--11.21)	0.34		
		(-10.15--10.87)	0.72		
		(-9.85--10.15)	0.30		
		(-9.08--9.85)	0.77		
		(-8.82--9.08)	0.26		
		(-8.01--8.82)	0.81		
		(-7.79--8.01)	0.22		
		(-6.94--7.79)	0.85		
		(-6.77--6.94)	0.17		
		(-5.87--6.77)	0.90		
		(-5.74--5.87)	0.13		
		(-4.80--5.74)	0.94		
		(-4.72--4.80)	0.08		
		(-3.74--4.72)	0.98		
		(-3.69--3.74)	0.05		
		(-3.65--3.69)	0.04		
		(-2.66--3.65)	0.99		
		(-2.57--2.66)	0.09		
		(-1.64--2.57)	0.93		
		(-1.60--1.64)	0.04		
		(-0.61--1.60)	0.99		
		(-0.53--0.61)	0.08		
		(0.41--0.53)	0.94		
		(0.54-0.41)	0.13		
		(1.44-0.54)	0.90		
		(1.60-1.44)	0.16		
		(2.47-1.60)	0.87		
		(2.67-2.47)	0.20		
		(3.49-2.67)	0.82		
		(3.74-3.49)	0.25		
		(4.27-3.74)	0.53		
		(4.27-4.27)	0.00		
				15.95	
21	sc1	(-8.41--9.21)	0.80		
300.00		(-8.30--8.41)	0.11		
		(-7.38--8.30)	0.92		
		(-7.22--7.38)	0.16		
		(-6.36--7.22)	0.86		
		(-6.15--6.36)	0.21		
		(-5.33--6.15)	0.82		
		(-5.07--5.33)	0.26		
		(-4.30--5.07)	0.77		
		(-3.60--4.30)	0.70		
		(-3.28--3.60)	0.32		
		(-2.92--3.28)	0.36		
		(-2.25--2.92)	0.67		
		(-1.84--2.25)	0.41		
		(-1.22--1.84)	0.62		
		(-0.77--1.22)	0.45		
		(-0.20--0.77)	0.57		
		(0.31--0.20)	0.51		
		(0.83-0.31)	0.52		
		(1.39-0.83)	0.56		
		(1.86-1.39)	0.47		
		(2.46-1.86)	0.60		
		(2.88-2.46)	0.42		
		(3.54-2.88)	0.66		
		(3.91-3.54)	0.37		
		(4.62-3.91)	0.71		
		(4.93-4.62)	0.31		
		(5.69-4.93)	0.76		
		(5.96-5.69)	0.27		
		(6.77-5.96)	0.81		
		(6.99-6.77)	0.22		
		(7.84-6.99)	0.85		
		(8.01-7.84)	0.17		
		(8.92-8.01)	0.91		
		(9.04-8.92)	0.12		
		(9.17-9.04)	0.13		
		(9.17-9.17)	0.00		
				18.38	
22	sc1	(-6.32--7.27)	0.95		
315.00		(-5.95--6.32)	0.37		
		(-5.29--5.95)	0.66		
		(-4.74--5.29)	0.55		
		(-4.26--4.74)	0.48		
		(-3.69--4.26)	0.57		
		(-3.23--3.69)	0.46		
		(-2.56--3.23)	0.67		
		(-2.20--2.56)	0.36		
		(-1.42--2.20)	0.78		
		(-1.17--1.42)	0.25		
		(-0.29--1.17)	0.88		
		(-0.14--0.29)	0.15		
		(0.84--0.14)	0.98		
		(0.88-0.84)	0.04		
		(1.33-0.88)	0.45		
		(1.91-1.33)	0.58		
		(1.97-1.91)	0.06		
		(2.94-1.97)	0.97		
		(3.10-2.94)	0.16		
		(3.97-3.10)	0.87		
		(4.24-3.97)	0.27		
		(4.71-4.24)	0.47		
				11.98	
23	sc1	(-5.00--5.00)	0.00		
		A RIPORTARE ml	0.00		

SCOTICO

N. SEZIONE PROG.	FIG.	ELEMENTI DI CALCOLO	LUNGHEZZA ELEMENTARE ml	LUNGHEZZA FIGURA ml	NOTE
		RIPORTO ml	0.00		
330.00		(-4.43--5.00)	0.57		
		(-4.11--4.43)	0.32		
		(-3.20--4.11)	0.91		
		(-3.07--3.20)	0.13		
		(-2.39--3.07)	0.68		
		(-2.03--2.39)	0.36		
		(-1.96--2.03)	0.07		
		(-0.99--1.96)	0.97		
		(-0.72--0.99)	0.27		
		(0.05--0.72)	0.77		
		(0.51-0.05)	0.46		
		(1.09-0.51)	0.58		
		(1.75-1.09)	0.66		
		(2.12-1.75)	0.37		
		(2.98-2.12)	0.86		
		(3.16-2.98)	0.18		
		(4.11-3.16)	0.95		
		(4.20-4.11)	0.09		
		(4.22-4.20)	0.02		
		(5.24-4.22)	1.02		
		(5.45-5.24)	0.21		
		(6.28-5.45)	0.83		
		(6.43-6.28)	0.15		
				11.43	

Il Direttore dei Lavori | L'Impresa

BONIFICA

DALLA SEZ. DA PROG.	ALLA SEZ. A PROG.	SEZIONE	FIGURA	AREA	DISTANZA SEZIONI m	DISTANZA DI CALCOLO m	VOLUME PARZIALE mc	VOLUME TOTALE mc
3	4	3	BO1	12.31	15.00	7.50	92.325	
30.00	45.00	4	BO1	15.18	15.00	7.50	113.850	
								206.175
4	5	4	BO1	15.18	15.00	7.50	113.850	
45.00	60.00	5	BO1	19.84	15.00	7.50	148.800	
								262.650
5	6	5	BO1	19.84	15.00	7.50	148.800	
60.00	75.00	6	BO1	28.43	15.00	7.50	213.225	
								362.025
6	7	6	BO1	28.43	15.00	7.50	213.225	
75.00	90.00	7	BO1	34.31	15.00	7.50	257.325	
								470.550
7	8	7	BO1	34.31	15.00	7.50	257.325	
90.00	105.00	8	BO1	35.37	15.00	7.50	265.275	
								522.600
8	9	8	BO1	35.37	15.00	7.50	265.275	
105.00	120.00	9	BO1	37.99	15.00	7.50	284.925	
								550.200
9	10	9	BO1	37.99	15.00	7.50	284.925	
120.00	135.00	10	BO1	37.68	15.00	7.50	282.600	
								567.525
10	11	10	BO1	37.68	15.00	7.50	282.600	
135.00	150.00	11	BO1	37.70	15.00	7.50	282.750	
								565.350
11	12	11	BO1	37.70	15.00	7.50	282.750	
150.00	165.00	12	BO1	12.53	15.00	7.50	93.975	
		12	BO2	15.28	15.00	7.50	114.600	
								491.325
12	TR	12	BO1	12.53	7.62	3.81	47.739	
165.00	172.62	12	BO2	15.28	7.62	3.81	58.217	
		TR	BO1	14.73	7.62	3.81	56.121	
								162.077
TR	13	TR	BO1	14.73	7.38	3.69	54.354	
172.62	180.00	13	BO1	14.78	7.38	3.69	54.538	
								108.892
13	14	13	BO1	14.78	15.00	7.50	110.850	
180.00	195.00	14	BO1	14.37	15.00	7.50	107.775	
								218.625
14	15	14	BO1	14.37	15.00	7.50	107.775	
195.00	210.00	15	BO1	13.87	15.00	7.50	104.025	
								211.800
15	16	15	BO1	13.87	15.00	7.50	104.025	
210.00	225.00	16	BO1	20.31	15.00	7.50	152.325	
								256.350
16	17	16	BO1	20.31	15.00	7.50	152.325	
225.00	240.00	17	BO1	10.01	15.00	7.50	75.075	
		17	BO2	29.43	15.00	7.50	220.725	
								448.125
17	18	17	BO1	10.01	15.00	7.50	75.075	
240.00	255.00	17	BO2	29.43	15.00	7.50	220.725	
		18	BO1	10.00	15.00	7.50	75.000	
		18	BO2	26.70	15.00	7.50	200.250	
								571.050
18	19	18	BO1	10.00	15.00	7.50	75.000	
255.00	270.00	18	BO2	26.70	15.00	7.50	200.250	
		19	BO1	14.34	15.00	7.50	107.550	
								382.800
19	20	19	BO1	14.34	15.00	7.50	107.550	
270.00	285.00	20	BO1	15.95	15.00	7.50	119.625	
								227.175
20	21	20	BO1	15.95	15.00	7.50	119.625	
285.00	300.00	21	BO1	18.38	15.00	7.50	137.850	
								257.475
21	22	21	BO1	18.38	15.00	7.50	137.850	
300.00	315.00	22	BO1	11.98	15.00	7.50	89.850	
								227.700
22	23	22	BO1	11.98	15.00	7.50	89.850	
315.00	330.00	23	BO1	11.43	15.00	7.50	85.725	
								175.575

Il Direttore dei Lavori	L'Impresa	TOTALE ARTICOLO	7246.044

SCAVO MURO

DALLA SEZ. DA PROG.	ALLA SEZ. A PROG.	SEZIONE	FIGURA	AREA	DISTANZA SEZIONI m	DISTANZA DI CALCOLO m	VOLUME PARZIALE mc	VOLUME TOTALE mc
11	12	12	H1	19.17	15.00	7.50	143.775	
								143.775
12	TR	12	H1	19.17	7.62	3.81	73.038	
165.00	172.62	TR	H1	20.38	7.62	3.81	77.648	
								150.686
TR	13	TR	H1	20.38	7.38	3.69	75.202	
172.62	180.00	13	H1	19.94	7.38	3.69	73.579	
								148.781
13	14	13	H1	19.94	15.00	7.50	149.550	
180.00	195.00	14	H1	22.68	15.00	7.50	170.100	
								319.650
14	15	14	H1	22.68	15.00	7.50	170.100	
195.00	210.00	15	H1	22.98	15.00	7.50	172.350	
								342.450
15	16	15	H1	22.98	15.00	7.50	172.350	
								172.350

Il Direttore dei Lavori	L'Impresa	TOTALE ARTICOLO	1277.692

USURA

DALLA SEZ. DA PROG.	ALLA SEZ. A PROG.	SEZIONE	FIGURA	LUNGHEZZA	DISTANZA SEZIONI ml	DISTANZA DI CALCOLO ml	AREA PARZIALE mq	AREA TOTALE mq
3	4	3	a1	5.50	15.00	7.50	41.25	
30.00	45.00	4	a1	6.74	15.00	7.50	50.55	
								91.80
4	5	4	a1	6.74	15.00	7.50	50.55	
45.00	60.00	5	a1	7.06	15.00	7.50	52.95	
								103.50
5	6	5	a1	7.06	15.00	7.50	52.95	
60.00	75.00	6	a1	7.04	15.00	7.50	52.80	
								105.75
6	7	6	a1	7.04	15.00	7.50	52.80	
75.00	90.00	7	a1	6.99	15.00	7.50	52.43	
								105.23
7	8	7	a1	6.99	15.00	7.50	52.43	
90.00	105.00	8	a1	6.94	15.00	7.50	52.05	
								104.48
8	9	8	a1	6.94	15.00	7.50	52.05	
105.00	120.00	9	a1	7.25	15.00	7.50	54.38	
								106.43
9	10	9	a1	7.25	15.00	7.50	54.38	
120.00	135.00	10	a1	7.50	15.00	7.50	56.25	
								110.63
10	11	10	a1	7.50	15.00	7.50	56.25	
135.00	150.00	11	a1	6.92	15.00	7.50	51.90	
								108.15
11	12	11	a1	6.92	15.00	7.50	51.90	
150.00	165.00	12	a1	6.50	15.00	7.50	48.75	
								100.65
12	TR	12	a1	6.50	7.62	3.81	24.77	
165.00	172.62	TR	a1	6.50	7.62	3.81	24.77	
								49.54
TR	13	TR	a1	6.50	7.38	3.69	23.98	
172.62	180.00	13	a1	6.50	7.38	3.69	23.98	
								47.96
13	14	13	a1	6.50	15.00	7.50	48.75	
180.00	195.00	14	a1	6.50	15.00	7.50	48.75	
								97.50
14	15	14	a1	6.50	15.00	7.50	48.75	
195.00	210.00	15	a1	6.50	15.00	7.50	48.75	
								97.50
15	16	15	a1	6.50	15.00	7.50	48.75	
210.00	225.00	16	a1	6.50	15.00	7.50	48.75	
								97.50
16	17	16	a1	6.50	15.00	7.50	48.75	
225.00	240.00	17	a1	6.50	15.00	7.50	48.75	
								97.50
17	18	17	a1	6.50	15.00	7.50	48.75	
240.00	255.00	18	a1	6.50	15.00	7.50	48.75	
								97.50
18	19	18	a1	6.50	15.00	7.50	48.75	
255.00	270.00	19	a1	6.50	15.00	7.50	48.75	
								97.50
19	20	19	a1	6.50	15.00	7.50	48.75	
270.00	285.00	20	a1	6.50	15.00	7.50	48.75	
								97.50
20	21	20	a1	6.50	15.00	7.50	48.75	
285.00	300.00	21	a1	6.50	15.00	7.50	48.75	
								97.50
21	22	21	a1	6.50	15.00	7.50	48.75	
300.00	315.00	22	a1	6.50	15.00	7.50	48.75	
								97.50
22	23	22	a1	6.50	15.00	7.50	48.75	
315.00	330.00	23	a1	6.50	15.00	7.50	48.75	
								97.50

VEGETALE

DALLA SEZ. DA PROG.	ALLA SEZ. A PROG.	SEZIONE	FIGURA	LUNGHEZZA	DISTANZA SEZIONI ml	DISTANZA DI CALCOLO ml	AREA PARZIALE mq	AREA TOTALE mq
3	4	3	b1	7.23	15.00	7.50	54.23	
30.00	45.00	4	b1	8.81	15.00	7.50	66.08	
								120.31
4	5	4	b1	8.81	15.00	7.50	66.08	
45.00	60.00	5	b2	3.48	15.00	7.50	26.10	
		5	b1	9.58	15.00	7.50	71.85	
								164.03
5	6	5	b2	3.48	15.00	7.50	26.10	
60.00	75.00	5	b1	9.58	15.00	7.50	71.85	
		6	b1	8.61	15.00	7.50	64.57	
		6	b2	13.04	15.00	7.50	97.80	
								260.32
6	7	6	b1	8.61	15.00	7.50	64.57	
75.00	90.00	6	b2	13.04	15.00	7.50	97.80	
		7	b2	14.51	15.00	7.50	108.83	
		7	b1	13.57	15.00	7.50	101.78	
								372.98
7	8	7	b2	14.51	15.00	7.50	108.83	
90.00	105.00	7	b1	13.57	15.00	7.50	101.78	
		8	b2	14.88	15.00	7.50	111.60	
		8	b1	14.29	15.00	7.50	107.17	
								429.38
8	9	8	b2	14.88	15.00	7.50	111.60	
105.00	120.00	8	b1	14.29	15.00	7.50	107.17	
		9	b2	16.05	15.00	7.50	120.38	
		9	b1	15.45	15.00	7.50	115.88	
								455.03
9	10	9	b2	16.05	15.00	7.50	120.38	
120.00	135.00	9	b1	15.45	15.00	7.50	115.88	
		10	b2	15.75	15.00	7.50	118.13	
		10	b1	15.29	15.00	7.50	114.67	
								469.06
10	11	10	b2	15.75	15.00	7.50	118.13	
135.00	150.00	10	b1	15.29	15.00	7.50	114.67	
		11	b2	16.42	15.00	7.50	123.15	
		11	b1	15.22	15.00	7.50	114.15	
								470.10
11	12	11	b2	16.42	15.00	7.50	123.15	
150.00	165.00	11	b1	15.22	15.00	7.50	114.15	
		12	b1	15.20	15.00	7.50	114.00	
		12	b2	15.77	15.00	7.50	118.27	
								469.57
12	TR	12	b1	15.20	7.62	3.81	57.91	
165.00	172.62	12	b2	15.77	7.62	3.81	60.08	
		TR	b1	15.17	7.62	3.81	57.80	
								175.79
TR	13	TR	b1	15.17	7.38	3.69	55.98	
172.62	180.00	13	b1	15.21	7.38	3.69	56.12	
								112.10
13	14	13	b1	15.21	15.00	7.50	114.08	
180.00	195.00	14	b1	14.77	15.00	7.50	110.77	
								224.85
14	15	14	b1	14.77	15.00	7.50	110.77	
195.00	210.00	15	b1	14.29	15.00	7.50	107.17	
								217.94
15	16	15	b1	14.29	15.00	7.50	107.17	
210.00	225.00	16	b2	7.27	15.00	7.50	54.52	
		16	b1	13.72	15.00	7.50	102.90	
								264.59
16	17	16	b2	7.27	15.00	7.50	54.52	
225.00	240.00	16	b1	13.72	15.00	7.50	102.90	
		17	b2	10.61	15.00	7.50	79.57	
		17	b1	13.07	15.00	7.50	98.03	
								335.02
17	18	17	b2	10.61	15.00	7.50	79.57	
240.00	255.00	17	b1	13.07	15.00	7.50	98.03	
		18	b2	12.19	15.00	7.50	91.42	
		18	b1	10.22	15.00	7.50	76.65	
								345.67
18	19	18	b2	12.19	15.00	7.50	91.42	
255.00	270.00	18	b1	10.22	15.00	7.50	76.65	
		19	b2	9.87	15.00	7.50	74.02	
		19	b1	4.20	15.00	7.50	31.50	
								273.59
19	20	19	b2	9.87	15.00	7.50	74.02	
270.00	285.00	19	b1	4.20	15.00	7.50	31.50	
		20	b2	6.53	15.00	7.50	48.98	
		20	b1	3.38	15.00	7.50	25.35	
								179.85
20	21	20	b2	6.53	15.00	7.50	48.98	
285.00	300.00	20	b1	3.38	15.00	7.50	25.35	
		21	b2	4.06	15.00	7.50	30.45	
		21	b1	6.86	15.00	7.50	51.45	
								156.23
21	22	21	b2	4.06	15.00	7.50	30.45	
300.00	315.00	21	b1	6.86	15.00	7.50	51.45	
		22	b2	2.45	15.00	7.50	18.38	
		22	b1	3.06	15.00	7.50	22.95	
								123.23
22	23	22	b2	2.45	15.00	7.50	18.38	
315.00	330.00	22	b1	3.06	15.00	7.50	22.95	
		23	b1	4.78	15.00	7.50	35.85	
								77.18

Il Direttore dei Lavori	L'Impresa	TOTALE ARTICOLO	5696.82

BINDER

DALLA SEZ. DA PROG.	ALLA SEZ. A PROG.	SEZIONE	FIGURA	LUNGHEZZA	DISTANZA SEZIONI ml	DISTANZA DI CALCOLO ml	AREA PARZIALE mq	AREA TOTALE mq
3	4	3	c1	5.50	15.00	7.50	41.25	
30.00	45.00	4	c1	6.74	15.00	7.50	50.55	
								91.80
4	5	4	c1	6.74	15.00	7.50	50.55	
45.00	60.00	5	c1	7.06	15.00	7.50	52.95	
								103.50
5	6	5	c1	7.06	15.00	7.50	52.95	
60.00	75.00	6	c1	7.04	15.00	7.50	52.80	
								105.75
6	7	6	c1	7.04	15.00	7.50	52.80	
75.00	90.00	7	c1	6.99	15.00	7.50	52.43	
								105.23
7	8	7	c1	6.99	15.00	7.50	52.43	
90.00	105.00	8	c1	6.94	15.00	7.50	52.05	
								104.48
8	9	8	c1	6.94	15.00	7.50	52.05	
105.00	120.00	9	c1	7.25	15.00	7.50	54.38	
								106.43
9	10	9	c1	7.25	15.00	7.50	54.38	
120.00	135.00	10	c1	7.50	15.00	7.50	56.25	
								110.63
10	11	10	c1	7.50	15.00	7.50	56.25	
135.00	150.00	11	c1	6.92	15.00	7.50	51.90	
								108.15
11	12	11	c1	6.92	15.00	7.50	51.90	
150.00	165.00	12	c1	6.50	15.00	7.50	48.75	
								100.65
12	TR	12	c1	6.50	7.62	3.81	24.77	
165.00	172.62	TR	c1	6.50	7.62	3.81	24.77	
								49.54
TR	13	TR	c1	6.50	7.38	3.69	23.98	
172.62	180.00	13	c1	6.50	7.38	3.69	23.98	
								47.96
13	14	13	c1	6.50	15.00	7.50	48.75	
180.00	195.00	14	c1	6.50	15.00	7.50	48.75	
								97.50
14	15	14	c1	6.50	15.00	7.50	48.75	
195.00	210.00	15	c1	6.50	15.00	7.50	48.75	
								97.50
15	16	15	c1	6.50	15.00	7.50	48.75	
210.00	225.00	16	c1	6.50	15.00	7.50	48.75	
								97.50
16	17	16	c1	6.50	15.00	7.50	48.75	
225.00	240.00	17	c1	6.50	15.00	7.50	48.75	
								97.50
17	18	17	c1	6.50	15.00	7.50	48.75	
240.00	255.00	18	c1	6.50	15.00	7.50	48.75	
								97.50
18	19	18	c1	6.50	15.00	7.50	48.75	
255.00	270.00	19	c1	6.50	15.00	7.50	48.75	
								97.50
19	20	19	c1	6.50	15.00	7.50	48.75	
270.00	285.00	20	c1	6.50	15.00	7.50	48.75	
								97.50
20	21	20	c1	6.50	15.00	7.50	48.75	
285.00	300.00	21	c1	6.50	15.00	7.50	48.75	
								97.50
21	22	21	c1	6.50	15.00	7.50	48.75	
300.00	315.00	22	c1	6.50	15.00	7.50	48.75	
								97.50
22	23	22	c1	6.50	15.00	7.50	48.75	
315.00	330.00	23	c1	6.50	15.00	7.50	48.75	
								97.50

BASE

DALLA SEZ. DA PROG.	ALLA SEZ. A PROG.	SEZIONE	FIGURA	LUNGHEZZA	DISTANZA SEZIONI ml	DISTANZA DI CALCOLO ml	AREA PARZIALE mq	AREA TOTALE mq
3	4	3	d1	5.50	15.00	7.50	41.25	
30.00	45.00	4	d1	6.74	15.00	7.50	50.55	
								91.80
4	5	4	d1	6.74	15.00	7.50	50.55	
45.00	60.00	5	d1	7.06	15.00	7.50	52.95	
								103.50
5	6	5	d1	7.06	15.00	7.50	52.95	
60.00	75.00	6	d1	7.04	15.00	7.50	52.80	
								105.75
6	7	6	d1	7.04	15.00	7.50	52.80	
75.00	90.00	7	d1	6.99	15.00	7.50	52.43	
								105.23
7	8	7	d1	6.99	15.00	7.50	52.43	
90.00	105.00	8	d1	6.94	15.00	7.50	52.05	
								104.48
8	9	8	d1	6.94	15.00	7.50	52.05	
105.00	120.00	9	d1	7.25	15.00	7.50	54.38	
								106.43
9	10	9	d1	7.25	15.00	7.50	54.38	
120.00	135.00	10	d1	7.50	15.00	7.50	56.25	
								110.63
10	11	10	d1	7.50	15.00	7.50	56.25	
135.00	150.00	11	d1	6.92	15.00	7.50	51.90	
								108.15
11	12	11	d1	6.92	15.00	7.50	51.90	
150.00	165.00	12	d1	6.50	15.00	7.50	48.75	
								100.65
12	TR	12	d1	6.50	7.62	3.81	24.77	
165.00	172.62	TR	d1	6.50	7.62	3.81	24.77	
								49.54
TR	13	TR	d1	6.50	7.38	3.69	23.98	
172.62	180.00	13	d1	6.50	7.38	3.69	23.98	
								47.96
13	14	13	d1	6.50	15.00	7.50	48.75	
180.00	195.00	14	d1	6.50	15.00	7.50	48.75	
								97.50
14	15	14	d1	6.50	15.00	7.50	48.75	
195.00	210.00	15	d1	6.50	15.00	7.50	48.75	
								97.50
15	16	15	d1	6.50	15.00	7.50	48.75	
210.00	225.00	16	d1	6.50	15.00	7.50	48.75	
								97.50
16	17	16	d1	6.50	15.00	7.50	48.75	
225.00	240.00	17	d1	6.50	15.00	7.50	48.75	
								97.50
17	18	17	d1	6.50	15.00	7.50	48.75	
240.00	255.00	18	d1	6.50	15.00	7.50	48.75	
								97.50
18	19	18	d1	6.50	15.00	7.50	48.75	
255.00	270.00	19	d1	6.50	15.00	7.50	48.75	
								97.50
19	20	19	d1	6.50	15.00	7.50	48.75	
270.00	285.00	20	d1	6.50	15.00	7.50	48.75	
								97.50
20	21	20	d1	6.50	15.00	7.50	48.75	
285.00	300.00	21	d1	6.50	15.00	7.50	48.75	
								97.50
21	22	21	d1	6.50	15.00	7.50	48.75	
300.00	315.00	22	d1	6.50	15.00	7.50	48.75	
								97.50
22	23	22	d1	6.50	15.00	7.50	48.75	
315.00	330.00	23	d1	6.50	15.00	7.50	48.75	
								97.50

FONDAZIONE

DALLA SEZ. DA PROG.	ALLA SEZ. A PROG.	SEZIONE	FIGURA	LUNGHEZZA	DISTANZA SEZIONI ml	DISTANZA DI CALCOLO ml	AREA PARZIALE mq	AREA TOTALE mq
3	4	3	e1	5.50	15.00	7.50	41.25	
30.00	45.00	4	e1	6.74	15.00	7.50	50.55	
								91.80
4	5	4	e1	6.74	15.00	7.50	50.55	
45.00	60.00	5	e1	7.06	15.00	7.50	52.95	
								103.50
5	6	5	e1	7.06	15.00	7.50	52.95	
60.00	75.00	6	e1	7.04	15.00	7.50	52.80	
								105.75
6	7	6	e1	7.04	15.00	7.50	52.80	
75.00	90.00	7	e1	6.99	15.00	7.50	52.43	
								105.23
7	8	7	e1	6.99	15.00	7.50	52.43	
90.00	105.00	8	e1	6.94	15.00	7.50	52.05	
								104.48
8	9	8	e1	6.94	15.00	7.50	52.05	
105.00	120.00	9	e1	7.25	15.00	7.50	54.38	
								106.43
9	10	9	e1	7.25	15.00	7.50	54.38	
120.00	135.00	10	e1	7.50	15.00	7.50	56.25	
								110.63
10	11	10	e1	7.50	15.00	7.50	56.25	
135.00	150.00	11	e1	6.92	15.00	7.50	51.90	
								108.15
11	12	11	e1	6.92	15.00	7.50	51.90	
150.00	165.00	12	e1	6.50	15.00	7.50	48.75	
								100.65
12	TR	12	e1	6.50	7.62	3.81	24.77	
165.00	172.62	TR	e1	6.50	7.62	3.81	24.77	
								49.54
TR	13	TR	e1	6.50	7.38	3.69	23.98	
172.62	180.00	13	e1	6.50	7.38	3.69	23.98	
								47.96
13	14	13	e1	6.50	15.00	7.50	48.75	
180.00	195.00	14	e1	6.50	15.00	7.50	48.75	
								97.50
14	15	14	e1	6.50	15.00	7.50	48.75	
195.00	210.00	15	e1	6.50	15.00	7.50	48.75	
								97.50
15	16	15	e1	6.50	15.00	7.50	48.75	
210.00	225.00	16	e1	6.50	15.00	7.50	48.75	
								97.50
16	17	16	e1	6.50	15.00	7.50	48.75	
225.00	240.00	17	e1	6.50	15.00	7.50	48.75	
								97.50
17	18	17	e1	6.50	15.00	7.50	48.75	
240.00	255.00	18	e1	6.50	15.00	7.50	48.75	
								97.50
18	19	18	e1	6.50	15.00	7.50	48.75	
255.00	270.00	19	e1	6.50	15.00	7.50	48.75	
								97.50
19	20	19	e1	6.50	15.00	7.50	48.75	
270.00	285.00	20	e1	6.50	15.00	7.50	48.75	
								97.50
20	21	20	e1	6.50	15.00	7.50	48.75	
285.00	300.00	21	e1	6.50	15.00	7.50	48.75	
								97.50
21	22	21	e1	6.50	15.00	7.50	48.75	
300.00	315.00	22	e1	6.50	15.00	7.50	48.75	
								97.50
22	23	22	e1	6.50	15.00	7.50	48.75	
315.00	330.00	23	e1	6.50	15.00	7.50	48.75	
								97.50

SCOTICO

DALLA SEZ. DA PROG.	ALLA SEZ. A PROG.	SEZIONE	FIGURA	LUNGHEZZA	DISTANZA SEZIONI ml	DISTANZA DI CALCOLO ml	AREA PARZIALE mq	AREA TOTALE mq
3	4	3	sc1	12.31	15.00	7.50	92.33	
30.00	45.00	4	sc1	15.18	15.00	7.50	113.85	
								206.18
4	5	4	sc1	15.18	15.00	7.50	113.85	
45.00	60.00	5	sc1	19.86	15.00	7.50	148.95	
								262.80
5	6	5	sc1	19.86	15.00	7.50	148.95	
60.00	75.00	6	sc1	28.44	15.00	7.50	213.30	
								362.25
6	7	6	sc1	28.44	15.00	7.50	213.30	
75.00	90.00	7	sc1	34.29	15.00	7.50	257.18	
								470.48
7	8	7	sc1	34.29	15.00	7.50	257.18	
90.00	105.00	8	sc1	35.37	15.00	7.50	265.27	
								522.45
8	9	8	sc1	35.37	15.00	7.50	265.27	
105.00	120.00	9	sc1	37.96	15.00	7.50	284.70	
								549.97
9	10	9	sc1	37.96	15.00	7.50	284.70	
120.00	135.00	10	sc1	37.69	15.00	7.50	282.67	
								567.37
10	11	10	sc1	37.69	15.00	7.50	282.67	
135.00	150.00	11	sc1	37.72	15.00	7.50	282.90	
								565.57
11	12	11	sc1	37.72	15.00	7.50	282.90	
150.00	165.00	12	sc2	12.54	15.00	7.50	94.05	
		12	sc1	15.31	15.00	7.50	114.83	
								491.78
12	TR	12	sc2	12.54	7.62	3.81	47.78	
165.00	172.62	12	sc1	15.31	7.62	3.81	58.33	
		TR	sc1	14.73	7.62	3.81	56.12	
								162.23
TR	13	TR	sc1	14.73	7.38	3.69	54.35	
172.62	180.00	13	sc2	0.00	7.38	3.69	0.00	
		13	sc1	14.78	7.38	3.69	54.54	
								108.89
13	14	13	sc2	0.00	15.00	7.50	0.00	
13	14	13	sc1	14.78	15.00	7.50	110.85	
180.00	195.00	14	sc1	14.37	15.00	7.50	107.77	
								218.62
14	15	14	sc1	14.37	15.00	7.50	107.77	
195.00	210.00	15	sc1	13.88	15.00	7.50	104.10	
								211.87
15	16	15	sc1	13.88	15.00	7.50	104.10	
210.00	225.00	16	sc1	20.34	15.00	7.50	152.55	
								256.65
16	17	16	sc1	20.34	15.00	7.50	152.55	
225.00	240.00	17	sc1	10.01	15.00	7.50	75.08	
		17	sc2	29.43	15.00	7.50	220.72	
								448.35
17	18	17	sc1	10.01	15.00	7.50	75.08	
240.00	255.00	17	sc2	29.43	15.00	7.50	220.72	
		18	sc1	9.75	15.00	7.50	73.13	
		18	sc2	6.95	15.00	7.50	52.13	
								421.06
18	19	18	sc1	9.75	15.00	7.50	73.13	
255.00	270.00	18	sc2	6.95	15.00	7.50	52.13	
		19	sc1	14.34	15.00	7.50	107.55	
								232.81
19	20	19	sc1	14.34	15.00	7.50	107.55	
270.00	285.00	20	sc1	15.95	15.00	7.50	119.63	
								227.18
20	21	20	sc1	15.95	15.00	7.50	119.63	
285.00	300.00	21	sc1	18.38	15.00	7.50	137.85	
								257.48
21	22	21	sc1	18.38	15.00	7.50	137.85	
300.00	315.00	22	sc1	11.98	15.00	7.50	89.85	
								227.70
22	23	22	sc1	11.98	15.00	7.50	89.85	
315.00	330.00	23	sc1	11.43	15.00	7.50	85.72	
								175.57

Il Direttore dei Lavori	L'Impresa	TOTALE ARTICOLO	6947.26

Volume dalla sezione 3 alla sezione 23

ARTICOLO		VOLUME
RIPORTO	mc	27608.318
BO BONIFICA	mc	7246.044
H SCAVO MURO	mc	1277.692
a USURA	mq	2009.12
b VEGETALE	mq	5696.82
c BINDER	mq	2009.12
d BASE	mq	2009.12
e FONDAZIONE	mq	2009.12
sc SCOTICO	mq	6947.26

		CALCOLO DELLE AREE		Foglio n. 1	
STERRI E RIPORTI					
N. SEZIONE PROG.	FIG.	ELEMENTI DI CALCOLO	AREA ELEMENTARE mq	AREA FIGURA mq	NOTE
7bis	R1	(-4.75--5.00)x(2.97+2.96)/2	0.74		
81.08		(-3.96--4.75)x(2.99+2.97)/2	2.35		
		(-3.55--3.96)x(2.99+2.99)/2	1.23		
		(-2.91--3.55)x(3.00+2.99)/2	1.92		
		(-2.35--2.91)x(3.00+3.00)/2	1.68		
		(-2.21--2.35)x(3.00+3.00)/2	0.42		
		(-1.99--2.21)x(3.00+3.00)/2	0.66		
		(-1.47--1.99)x(3.01+3.00)/2	1.56		
		(-1.15--1.47)x(3.01+3.01)/2	0.96		
		(-0.03--1.15)x(3.03+3.01)/2	3.38		
		(0.06--0.03)x(3.03+3.03)/2	0.27		
		(0.19-0.06)x(3.02+3.03)/2	0.39		
		(1.26-0.19)x(3.00+3.02)/2	3.22		
		(1.93-1.26)x(2.99+3.00)/2	2.01		
		(2.46-1.93)x(2.98+2.99)/2	1.58		
		(3.29-2.46)x(2.95+2.98)/2	2.46		
		(3.66-3.29)x(2.94+2.95)/2	1.09		
		(3.90-3.66)x(2.93+2.94)/2	0.70		
		(4.86-3.90)x(2.90+2.93)/2	2.80		
		(4.88-4.86)x(2.90+2.90)/2	0.06		
		(2.91-4.88)x(4.21+2.90)/2	-7.00		
		(1.84-2.91)x(4.21+4.21)/2	-4.50		
		(2.01-1.84)x(4.01+4.21)/2	0.70		
		(0.00-2.01)x(4.15+4.01)/2	-8.20		
		(-4.00-0.00)x(4.42+4.15)/2	-17.14		
		(-5.00--4.00)x(4.49+4.42)/2	-4.46		
				11.12	
7	R1	(-4.75--5.00)x(2.97+2.96)/2	0.74		
90.00		(-3.96--4.75)x(2.99+2.97)/2	2.35		
		(-3.55--3.96)x(2.99+2.99)/2	1.23		
		(-2.91--3.55)x(3.00+2.99)/2	1.92		
		(-2.35--2.91)x(3.00+3.00)/2	1.68		
		(-2.21--2.35)x(3.00+3.00)/2	0.42		
		(-1.99--2.21)x(3.00+3.00)/2	0.66		
		(-1.47--1.99)x(3.01+3.00)/2	1.56		
		(-1.15--1.47)x(3.01+3.01)/2	0.96		
		(-0.03--1.15)x(3.03+3.01)/2	3.38		
		(0.06--0.03)x(3.03+3.03)/2	0.27		
		(0.19-0.06)x(3.02+3.03)/2	0.39		
		(1.26-0.19)x(3.00+3.02)/2	3.22		
		(1.93-1.26)x(2.99+3.00)/2	2.01		
		(2.46-1.93)x(2.98+2.99)/2	1.58		
		(3.29-2.46)x(2.95+2.98)/2	2.46		
		(3.66-3.29)x(2.94+2.95)/2	1.09		
		(3.90-3.66)x(2.93+2.94)/2	0.70		
		(4.86-3.90)x(2.90+2.93)/2	2.80		
		(4.88-4.86)x(2.90+2.90)/2	0.06		
		(2.91-4.88)x(4.21+2.90)/2	-7.00		
		(1.84-2.91)x(4.21+4.21)/2	-4.50		
		(2.01-1.84)x(4.01+4.21)/2	0.70		
		(0.00-2.01)x(4.15+4.01)/2	-8.20		
		(-4.00-0.00)x(4.42+4.15)/2	-17.14		
		(-5.00--4.00)x(4.49+4.42)/2	-4.46		
				11.12	
8	R1	(-7.02--7.46)x(2.95+2.94)/2	1.30		
105.00		(-6.64--7.02)x(2.96+2.95)/2	1.12		
		(-5.71--6.64)x(2.97+2.96)/2	2.76		
		(-5.00--5.71)x(2.98+2.97)/2	2.11		
		(-4.40--5.00)x(2.99+2.98)/2	1.79		
		(-3.36--4.40)x(3.01+2.99)/2	3.12		
		(-3.08--3.36)x(3.01+3.01)/2	0.84		
		(-1.98--3.08)x(2.98+3.01)/2	3.29		
		(-1.77--1.98)x(2.98+2.98)/2	0.63		
		(-1.72--1.77)x(2.97+2.98)/2	0.15		
		(-0.46--1.72)x(2.94+2.97)/2	3.72		
		(-0.08--0.46)x(2.93+2.94)/2	1.12		
		(0.85--0.08)x(2.92+2.93)/2	2.72		
		(1.57-0.85)x(2.89+2.92)/2	2.09		
		(2.17-1.57)x(2.88+2.89)/2	1.73		
		(3.21-2.17)x(2.84+2.88)/2	2.97		
		(3.48-3.21)x(2.83+2.84)/2	0.77		
		(4.55-3.48)x(2.81+2.83)/2	3.02		
		(4.79-4.55)x(2.80+2.81)/2	0.67		
		(4.85-4.79)x(2.80+2.80)/2	0.17		
		(4.99-4.85)x(2.79+2.80)/2	0.39		
		(2.91-4.99)x(4.18+2.79)/2	-7.25		
		(1.84-2.91)x(4.18+4.18)/2	-4.47		
		(2.01-1.84)x(3.98+4.18)/2	0.69		
		(0.00-2.01)x(4.12+3.98)/2	-8.14		
		(-4.00-0.00)x(4.40+4.12)/2	-17.04		
		(-5.46--4.00)x(4.50+4.40)/2	-6.50		
		(-5.34--5.46)x(4.63+4.50)/2	0.55		
		(-6.41--5.34)x(4.63+4.63)/2	-4.95		
		(-7.46--6.41)x(3.93+4.63)/2	-4.49		
				15.12	
9	R1	(-8.89--8.93)x(3.00+3.00)/2	0.12		
120.00		(-7.61--8.89)x(2.98+3.00)/2	3.83		
		(-7.46--7.61)x(2.98+2.98)/2	0.45		
		(-6.14--7.46)x(2.92+2.98)/2	3.89		
		(-6.03--6.14)x(2.92+2.92)/2	0.32		
		(-4.67--6.03)x(2.89+2.92)/2	3.95		
		(-4.63--4.67)x(2.89+2.89)/2	0.12		
		(-4.60--4.63)x(2.89+2.89)/2	0.09		
		(-3.91--4.60)x(2.88+2.89)/2	1.99		
		(-3.19--3.91)x(2.86+2.88)/2	2.07		
		(-3.17--3.19)x(2.86+2.86)/2	0.06		
		(-2.31--3.17)x(2.83+2.86)/2	2.45		
		(-1.74--2.31)x(2.81+2.83)/2	1.61		
		(-1.72--1.74)x(2.81+2.81)/2	0.06		
		(-0.31--1.72)x(2.77+2.81)/2	3.93		
		(-0.25--0.31)x(2.77+2.77)/2	0.17		
		(1.12--0.25)x(2.76+2.77)/2	3.79		
		(1.22-1.12)x(2.76+2.76)/2	0.28		
		(2.55-1.22)x(2.66+2.76)/2	3.60		
		(2.69-2.55)x(2.65+2.66)/2	0.37		
		(3.98-2.69)x(3.07+2.65)/2	3.69		
		(4.16-3.98)x(3.15+3.07)/2	0.56		
		A RIPORTARE mq	37.40		

STERRI E RIPORTI

N. SEZIONE PROG.	FIG.	ELEMENTI DI CALCOLO	AREA ELEMENTARE mq	AREA FIGURA mq	NOTE
		RIPORTO mq	37.40		
		(4.40-4.16)x(3.24+3.15)/2	0.77		
		(2.91-4.40)x(4.24+3.24)/2	-5.57		
		(1.84-2.91)x(4.24+4.24)/2	-4.54		
		(2.01-1.84)x(4.03+4.24)/2	0.70		
		(0.00-2.01)x(4.17+4.03)/2	-8.24		
		(-4.00-0.00)x(4.45+4.17)/2	-17.24		
		(-5.46--4.00)x(4.55+4.45)/2	-6.57		
		(-5.34--5.46)x(4.69+4.55)/2	0.55		
		(-6.41--5.34)x(4.69+4.69)/2	-5.02		
		(-8.93--6.41)x(3.00+4.69)/2	-9.69		
				17.45	
10 135.00	R1	(-8.97--9.62)x(2.76+2.78)/2	1.80		
		(-8.60--8.97)x(2.75+2.76)/2	1.02		
		(-7.48--8.60)x(2.74+2.75)/2	3.07		
		(-7.32--7.48)x(2.74+2.74)/2	0.44		
		(-7.27--7.32)x(2.73+2.74)/2	0.14		
		(-6.03--7.27)x(2.71+2.73)/2	3.37		
		(-5.56--6.03)x(2.72+2.71)/2	1.28		
		(-4.75--5.56)x(2.78+2.72)/2	2.23		
		(-3.86--4.75)x(2.75+2.78)/2	2.46		
		(-3.46--3.86)x(2.69+2.75)/2	1.09		
		(-2.24--3.46)x(2.59+2.69)/2	3.22		
		(-2.18--2.24)x(2.58+2.59)/2	0.16		
		(-2.16--2.18)x(2.58+2.58)/2	0.05		
		(-0.90--2.16)x(2.48+2.58)/2	3.19		
		(-0.46--0.90)x(2.47+2.48)/2	1.09		
		(0.39--0.46)x(2.47+2.47)/2	2.10		
		(1.24-0.39)x(2.46+2.47)/2	2.10		
		(1.67-1.24)x(2.46+2.46)/2	1.06		
		(2.95-1.67)x(2.59+2.46)/2	3.23		
		(2.96-2.95)x(2.59+2.59)/2	0.03		
		(3.00-2.96)x(2.59+2.59)/2	0.10		
		(4.24-3.00)x(2.68+2.59)/2	3.27		
		(4.65-4.24)x(2.73+2.68)/2	1.11		
		(5.15-4.65)x(2.79+2.73)/2	1.38		
		(5.39-5.15)x(2.81+2.79)/2	0.67		
		(2.91-5.39)x(4.47+2.81)/2	-9.03		
		(1.84-2.91)x(4.47+4.47)/2	-4.78		
		(2.01-1.84)x(4.27+4.47)/2	0.74		
		(0.00-2.01)x(4.41+4.27)/2	-8.72		
		(-4.00-0.00)x(4.69+4.41)/2	-18.20		
		(-5.46--4.00)x(4.79+4.69)/2	-6.92		
		(-5.34--5.46)x(4.92+4.79)/2	0.58		
		(-6.41--5.34)x(4.92+4.92)/2	-5.26		
		(-9.62--6.41)x(2.78+4.92)/2	-12.36		
				24.29	
11 150.00	R1	(-10.24--10.36)x(2.61+2.61)/2	0.31		
		(-9.52--10.24)x(2.57+2.61)/2	1.86		
		(-9.04--9.52)x(2.55+2.57)/2	1.23		
		(-8.73--9.04)x(2.55+2.55)/2	0.79		
		(-7.84--8.73)x(2.64+2.55)/2	2.31		
		(-6.75--7.84)x(2.81+2.64)/2	2.97		
		(-6.65--6.75)x(2.83+2.81)/2	0.28		
		(-6.48--6.65)x(2.87+2.83)/2	0.48		
		(-5.45--6.48)x(3.13+2.87)/2	3.09		
		(-4.77--5.45)x(3.31+3.13)/2	2.19		
		(-4.25--4.77)x(3.43+3.31)/2	1.75		
		(-3.45--4.25)x(3.35+3.43)/2	2.71		
		(-3.05--3.45)x(3.36+3.35)/2	1.34		
		(-2.79--3.05)x(3.30+3.36)/2	0.87		
		(-1.85--2.79)x(3.03+3.30)/2	2.98		
		(-0.81--1.85)x(2.81+3.03)/2	3.04		
		(-0.65--0.81)x(2.79+2.81)/2	0.45		
		(-0.41--0.65)x(2.79+2.79)/2	0.67		
		(0.55--0.41)x(2.77+2.79)/2	2.67		
		(1.17-0.55)x(2.77+2.77)/2	1.72		
		(1.74-1.17)x(2.77+2.77)/2	1.58		
		(2.43-1.74)x(2.82+2.77)/2	1.93		
		(2.47-2.43)x(2.82+2.82)/2	0.11		
		(2.49-2.47)x(2.88+2.82)/2	0.06		
		(2.55-2.49)x(2.85+2.88)/2	0.17		
		(2.96-2.55)x(2.76+2.85)/2	1.15		
		(2.97-2.96)x(2.76+2.76)/2	0.03		
		(3.15-2.97)x(2.74+2.76)/2	0.49		
		(4.14-3.15)x(2.76+2.74)/2	2.72		
		(5.13-4.14)x(2.77+2.76)/2	2.74		
		(5.34-5.13)x(2.77+2.77)/2	0.58		
		(5.67-5.34)x(2.76+2.77)/2	0.91		
		(6.13-5.67)x(2.76+2.76)/2	1.27		
		(2.91-6.13)x(4.91+2.76)/2	-12.35		
		(1.84-2.91)x(4.91+4.91)/2	-5.25		
		(2.01-1.84)x(4.72+4.91)/2	0.82		
		(0.00-2.01)x(4.82+4.72)/2	-9.59		
		(-4.00-0.00)x(5.03+4.82)/2	-19.70		
		(-5.46--4.00)x(5.11+5.03)/2	-7.40		
		(-5.34--5.46)x(5.25+5.11)/2	0.62		
		(-6.41--5.34)x(5.25+5.25)/2	-5.62		
		(-10.36--6.41)x(2.61+5.25)/2	-15.52		
				26.54	
12 165.00	R1	(-9.71--10.54)x(3.19+3.00)/2	2.57		
		(-8.99--9.71)x(3.21+3.19)/2	2.30		
		(-8.55--8.99)x(3.18+3.21)/2	1.41		
		(-8.04--8.55)x(3.12+3.18)/2	1.61		
		(-7.39--8.04)x(3.04+3.12)/2	2.00		
		(-6.82--7.39)x(2.96+3.04)/2	1.71		
		(-6.53--6.82)x(2.91+2.96)/2	0.85		
		(-6.50--6.53)x(2.92+2.91)/2	0.09		
		(-6.44--6.50)x(2.96+2.92)/2	0.18		
		(-6.21--6.44)x(2.87+2.96)/2	0.67		
		(-6.17--6.21)x(2.84+2.87)/2	0.11		
		(-5.97--6.17)x(2.84+2.84)/2	0.57		
		(-5.68--5.97)x(2.83+2.84)/2	0.82		
		(-5.06--5.68)x(2.80+2.83)/2	1.75		
		(-4.66--5.06)x(2.79+2.80)/2	1.12		
		(-3.90--4.66)x(2.81+2.79)/2	2.13		
		A RIPORTARE mq	19.89		

STERRI E RIPORTI

N. SEZIONE PROG.	FIG.	ELEMENTI DI CALCOLO	AREA ELEMENTARE mq	AREA FIGURA mq	NOTE
		RIPORTO mq	19.89		
		(-3.02--3.90)x(2.80+2.81)/2	2.47		
		(-2.73--3.02)x(2.80+2.80)/2	0.81		
		(-2.49--2.73)x(2.80+2.80)/2	0.67		
		(-1.57--2.49)x(2.81+2.80)/2	2.58		
		(-0.51--1.57)x(2.80+2.81)/2	2.97		
		(-0.41--0.51)x(2.80+2.80)/2	0.28		
		(-0.32--0.41)x(2.80+2.80)/2	0.25		
		(0.76--0.32)x(2.81+2.80)/2	3.03		
		(1.85-0.76)x(2.79+2.81)/2	3.05		
		(1.92-1.85)x(2.79+2.79)/2	0.20		
		(2.00-1.92)x(2.79+2.79)/2	0.22		
		(3.08-2.00)x(2.78+2.79)/2	3.01		
		(4.02-3.08)x(2.79+2.78)/2	2.62		
		(4.25-4.02)x(2.79+2.79)/2	0.64		
		(4.51-4.25)x(2.79+2.79)/2	0.73		
		(5.41-4.51)x(2.78+2.79)/2	2.51		
		(6.19-5.41)x(2.77+2.78)/2	2.16		
		(6.77-6.19)x(2.87+2.77)/2	1.64		
		(6.81-6.77)x(2.88+2.87)/2	0.12		
		(6.84-6.81)x(2.88+2.88)/2	0.09		
		(6.86-6.84)x(2.88+2.88)/2	0.06		
		(6.87-6.86)x(2.88+2.88)/2	0.03		
		(6.88-6.87)x(2.88+2.88)/2	0.03		
		(2.91-6.88)x(5.53+2.88)/2	-16.69		
		(1.84-2.91)x(5.53+5.53)/2	-5.92		
		(2.00-1.84)x(5.35+5.53)/2	0.87		
		(0.00-2.00)x(5.42+5.35)/2	-10.77		
		(-4.00-0.00)x(5.56+5.42)/2	-21.96		
		(-5.47--4.00)x(5.61+5.56)/2	-8.21		
		(-5.34--5.47)x(5.76+5.61)/2	0.74		
		(-6.41--5.34)x(5.76+5.76)/2	-6.16		
		(-10.54--6.41)x(3.00+5.76)/2	-18.09		
				36.13	
12bis 166.40	R1	(0.00-1.07)x(5.48+5.45)/2	-5.85		
		(-4.00-0.00)x(5.61+5.48)/2	-22.18		
		(-5.47--4.00)x(5.66+5.61)/2	-8.28		
		(-5.34--5.47)x(5.82+5.66)/2	0.75		
		(-6.41--5.34)x(5.81+5.82)/2	-6.22		
		(-11.23--6.41)x(2.60+5.81)/2	-20.27		
		(-10.86--11.23)x(2.70+2.60)/2	0.98		
		(-10.12--10.86)x(2.89+2.70)/2	2.07		
		(-9.47--10.12)x(2.95+2.89)/2	1.90		
		(-8.96--9.47)x(2.98+2.95)/2	1.51		
		(-8.37--8.96)x(2.95+2.98)/2	1.75		
		(-7.79--8.37)x(2.92+2.95)/2	1.70		
		(-7.62--7.79)x(2.90+2.92)/2	0.49		
		(-7.53--7.62)x(2.89+2.90)/2	0.26		
		(-7.30--7.53)x(2.94+2.89)/2	0.67		
		(-7.27--7.30)x(2.96+2.94)/2	0.09		
		(-7.00--7.27)x(2.86+2.96)/2	0.79		
		(-6.99--7.00)x(2.86+2.86)/2	0.03		
		(-6.86--6.99)x(2.83+2.86)/2	0.37		
		(-6.63--6.86)x(2.83+2.83)/2	0.65		
		(-5.88--6.63)x(2.81+2.83)/2	2.12		
		(-5.47--5.88)x(2.80+2.81)/2	1.15		
		(-5.11--5.47)x(2.80+2.80)/2	1.01		
		(-4.31--5.11)x(2.80+2.80)/2	2.24		
		(-3.39--4.31)x(2.80+2.80)/2	2.58		
		(-3.15--3.39)x(2.80+2.80)/2	0.67		
		(-2.93--3.15)x(2.80+2.80)/2	0.62		
		(-1.98--2.93)x(2.80+2.80)/2	2.66		
		(-0.89--1.98)x(2.80+2.80)/2	3.05		
		(-0.82--0.89)x(2.80+2.80)/2	0.20		
		(-0.76--0.82)x(2.80+2.80)/2	0.17		
		(-0.05--0.76)x(2.86+2.80)/2	2.01		
		(0.01--0.05)x(2.86+2.86)/2	0.17		
		(0.34-0.01)x(2.81+2.86)/2	0.94		
		(1.07-0.34)x(2.82+2.81)/2	2.05		
				27.15	
12bis 166.40	R2	(1.84-1.95)x(5.60+5.60)/2	-0.62		
		(1.95-1.84)x(5.47+5.60)/2	0.61		
				0.01	
12bis 166.40	R2	(1.07-1.95)x(5.45+5.42)/2	-4.78		
		(1.42-1.07)x(2.82+2.82)/2	0.99		
		(1.50-1.42)x(2.82+2.82)/2	0.23		
		(1.60-1.50)x(2.82+2.82)/2	0.28		
		(1.95-1.60)x(2.82+2.82)/2	0.99		
				2.29	
12bis 166.40	R3	(2.67-1.95)x(2.81+2.82)/2	2.03		
		(3.60-2.67)x(2.78+2.81)/2	2.60		
		(3.83-3.60)x(2.79+2.78)/2	0.64		
		(4.09-3.83)x(2.80+2.79)/2	0.73		
		(4.99-4.09)x(2.85+2.80)/2	2.54		
		(5.26-4.99)x(2.87+2.85)/2	0.77		
		(5.48-5.26)x(2.90+2.87)/2	0.63		
		(5.49-5.48)x(2.90+2.90)/2	0.03		
		(5.79-5.49)x(2.88+2.90)/2	0.87		
		(5.93-5.79)x(2.85+2.88)/2	0.40		
		(5.94-5.93)x(2.85+2.85)/2	0.03		
		(6.02-5.94)x(2.88+2.85)/2	0.23		
		(6.15-6.02)x(2.86+2.88)/2	0.37		
		(6.58-6.15)x(2.89+2.86)/2	1.24		
		(6.96-6.58)x(2.90+2.89)/2	1.10		
		(2.91-6.96)x(5.60+2.90)/2	-17.21		
		(1.95-2.91)x(5.60+5.60)/2	-5.38		
		(2.00-1.95)x(5.42+5.47)/2	0.27		
		(1.95-2.00)x(5.42+5.42)/2	-0.27		
				8.38	
13 180.00	R1	(0.00-1.00)x(6.16+6.13)/2	-6.14		
		(-4.00-0.00)x(6.26+6.16)/2	-24.84		
		(-5.47--4.00)x(6.29+6.26)/2	-9.22		
		(-5.34--5.47)x(6.45+6.29)/2	0.83		
		(-6.41--5.34)x(6.45+6.45)/2	-6.90		
		(-11.00--6.41)x(3.39+6.45)/2	-22.58		
		(-10.86--11.00)x(3.39+3.39)/2	0.47		
		A RIPORTARE mq	-68.38		

STERRI E RIPORTI

N. SEZIONE PROG.	FIG.	ELEMENTI DI CALCOLO	AREA ELEMENTARE mq	AREA FIGURA mq	NOTE
		RIPORTO mq	-68.38		
		(-9.86--10.86)x(3.43+3.39)/2	3.41		
		(-8.97--9.86)x(3.43+3.43)/2	3.05		
		(-8.70--8.97)x(3.43+3.43)/2	0.93		
		(-8.41--8.70)x(3.44+3.43)/2	1.00		
		(-7.55--8.41)x(3.46+3.44)/2	2.97		
		(-6.77--7.55)x(3.47+3.46)/2	2.70		
		(-6.39--6.77)x(3.48+3.47)/2	1.32		
		(-5.96--6.39)x(3.47+3.48)/2	1.49		
		(-5.23--5.96)x(3.47+3.47)/2	2.53		
		(-4.57--5.23)x(3.45+3.47)/2	2.28		
		(-4.24--4.57)x(3.43+3.45)/2	1.14		
		(-4.07--4.24)x(3.43+3.43)/2	0.58		
		(-3.48--4.07)x(3.42+3.43)/2	2.02		
		(-2.91--3.48)x(3.46+3.42)/2	1.96		
		(-2.72--2.91)x(3.47+3.46)/2	0.66		
		(-2.37--2.72)x(3.48+3.47)/2	1.22		
		(-1.75--2.37)x(3.49+3.48)/2	2.16		
		(-1.05--1.75)x(3.46+3.49)/2	2.43		
		(-0.59--1.05)x(3.45+3.46)/2	1.59		
		(-0.17--0.59)x(3.46+3.45)/2	1.45		
		(0.57--0.17)x(3.51+3.46)/2	2.58		
		(1.00-0.57)x(3.58+3.51)/2	1.52		
				27.39	
13 180.00	R2	(1.07-1.00)x(3.59+3.58)/2	0.25		
		(1.50-1.07)x(6.09+3.59)/2	2.08		
		(1.00-1.50)x(6.13+6.12)/2	-3.06		
				0.73	
13 180.00	R3	(2.02-1.95)x(3.73+3.72)/2	0.26		
		(2.89-2.02)x(3.76+3.73)/2	3.26		
		(3.85-2.89)x(3.62+3.76)/2	3.54		
		(4.05-3.85)x(3.59+3.62)/2	0.72		
		(4.22-4.05)x(3.53+3.59)/2	0.61		
		(5.20-4.22)x(3.08+3.53)/2	3.24		
		(5.77-5.20)x(2.78+3.08)/2	1.67		
		(5.81-5.77)x(2.78+2.78)/2	0.11		
		(5.89-5.81)x(2.78+2.78)/2	0.22		
		(5.91-5.89)x(2.78+2.78)/2	0.06		
		(5.94-5.91)x(2.79+2.78)/2	0.08		
		(6.09-5.94)x(2.88+2.79)/2	0.43		
		(6.13-6.09)x(2.86+2.88)/2	0.11		
		(6.26-6.13)x(2.86+2.86)/2	0.37		
		(6.30-6.26)x(2.84+2.86)/2	0.11		
		(6.31-6.30)x(2.84+2.84)/2	0.03		
		(6.33-6.31)x(2.85+2.84)/2	0.06		
		(6.38-6.33)x(2.74+2.85)/2	0.14		
		(6.42-6.38)x(2.74+2.74)/2	0.11		
		(7.14-6.42)x(2.75+2.74)/2	1.98		
		(7.19-7.14)x(2.78+2.75)/2	0.14		
		(7.26-7.19)x(2.82+2.78)/2	0.20		
		(7.29-7.26)x(2.84+2.82)/2	0.08		
		(7.31-7.29)x(2.85+2.84)/2	0.06		
		(7.32-7.31)x(2.85+2.85)/2	0.03		
		(7.33-7.32)x(2.86+2.85)/2	0.03		
		(7.71-7.33)x(2.78+2.86)/2	1.07		
		(7.90-7.71)x(2.76+2.78)/2	0.53		
		(8.19-7.90)x(2.76+2.76)/2	0.80		
		(2.91-8.19)x(6.28+2.76)/2	-23.87		
		(2.25-2.91)x(6.29+6.28)/2	-4.15		
		(1.95-2.25)x(5.79+5.79)/2	-1.74		
				9.71	
13bis 185.51	R1	(-10.62--11.17)x(3.58+3.55)/2	1.96		
		(-10.44--10.62)x(3.59+3.58)/2	0.65		
		(-10.24--10.44)x(3.58+3.59)/2	0.72		
		(-9.28--10.24)x(3.57+3.58)/2	3.43		
		(-8.42--9.28)x(3.53+3.57)/2	3.05		
		(-8.12--8.42)x(3.53+3.53)/2	1.06		
		(-7.79--8.12)x(3.52+3.53)/2	1.16		
		(-6.96--7.79)x(3.49+3.52)/2	2.91		
		(-6.22--6.96)x(3.48+3.49)/2	2.58		
		(-5.80--6.22)x(3.47+3.48)/2	1.46		
		(-5.34--5.80)x(3.48+3.47)/2	1.60		
		(-4.64--5.34)x(3.48+3.48)/2	2.44		
		(-4.02--4.64)x(3.48+3.48)/2	2.16		
		(-3.48--4.02)x(3.51+3.48)/2	1.89		
		(-2.88--3.48)x(3.51+3.51)/2	2.11		
		(-2.33--2.88)x(3.52+3.51)/2	1.93		
		(-1.82--2.33)x(3.52+3.52)/2	1.80		
		(-1.17--1.82)x(3.48+3.52)/2	2.28		
		(-0.43--1.17)x(3.40+3.48)/2	2.55		
		(-0.01--0.43)x(3.36+3.40)/2	1.42		
		(0.38--0.01)x(3.31+3.36)/2	1.30		
		(1.00-0.38)x(3.23+3.31)/2	2.03		
		(1.50-1.00)x(6.36+3.23)/2	2.40		
		(0.00-1.50)x(6.43+6.39)/2	-9.62		
		(-4.00-0.00)x(6.53+6.43)/2	-25.92		
		(-5.47--4.00)x(6.57+6.53)/2	-9.63		
		(-5.34--5.47)x(6.72+6.57)/2	0.86		
		(-6.41--5.34)x(6.72+6.72)/2	-7.19		
		(-11.17--6.41)x(3.55+6.72)/2	-24.44		
				31.05	
14 195.00	R1	(-11.44--11.86)x(3.60+3.56)/2	1.50		
		(-11.23--11.44)x(3.62+3.60)/2	0.76		
		(-11.04--11.23)x(3.63+3.62)/2	0.69		
		(-10.07--11.04)x(3.66+3.63)/2	3.54		
		(-8.99--10.07)x(3.59+3.66)/2	3.92		
		(-8.91--8.99)x(3.58+3.59)/2	0.29		
		(-8.84--8.91)x(3.58+3.58)/2	0.25		
		(-7.75--8.84)x(3.48+3.58)/2	3.85		
		(-6.64--7.75)x(3.44+3.48)/2	3.84		
		(-6.59--6.64)x(3.44+3.44)/2	0.17		
		(-6.53--6.59)x(3.43+3.44)/2	0.21		
		(-5.43--6.53)x(3.35+3.43)/2	3.73		
		(-4.44--5.43)x(3.29+3.35)/2	3.29		
		(-4.27--4.44)x(3.27+3.29)/2	0.56		
		(-4.08--4.27)x(3.26+3.27)/2	0.62		
		A RIPORTARE mq	27.22		

STERRI E RIPORTI

N. SEZIONE PROG.	FIG.	ELEMENTI DI CALCOLO	AREA ELEMENTARE mq	AREA FIGURA mq	NOTE
		RIPORTO mq	27.22		
		(-3.11--4.08)x(3.21+3.26)/2	3.14		
		(-2.25--3.11)x(3.20+3.21)/2	2.76		
		(-1.96--2.25)x(3.19+3.20)/2	0.93		
		(-1.63--1.96)x(3.18+3.19)/2	1.05		
		(-0.80--1.63)x(3.16+3.18)/2	2.63		
		(-0.05--0.80)x(3.08+3.16)/2	2.34		
		(0.36--0.05)x(3.03+3.08)/2	1.25		
		(0.94-0.36)x(2.91+3.03)/2	1.72		
		(1.50-0.94)x(6.84+2.91)/2	2.73		
		(0.00-1.50)x(6.91+6.87)/2	-10.34		
		(-4.00-0.00)x(7.01+6.91)/2	-27.84		
		(-5.47--4.00)x(7.04+7.01)/2	-10.33		
		(-5.34--5.47)x(7.20+7.04)/2	0.93		
		(-6.41--5.34)x(7.20+7.20)/2	-7.70		
		(-11.86--6.41)x(3.56+7.20)/2	-29.32		
				38.83	
15 210.00	R1	(-13.11--13.15)x(3.45+3.45)/2	0.14		
		(-12.59--13.11)x(3.45+3.45)/2	1.79		
		(-12.01--12.59)x(3.42+3.45)/2	1.99		
		(-11.43--12.01)x(3.38+3.42)/2	1.97		
		(-10.91--11.43)x(3.34+3.38)/2	1.75		
		(-10.27--10.91)x(3.29+3.34)/2	2.12		
		(-9.56--10.27)x(3.22+3.29)/2	2.31		
		(-9.12--9.56)x(3.19+3.22)/2	1.41		
		(-8.71--9.12)x(3.18+3.19)/2	1.31		
		(-7.96--8.71)x(3.22+3.18)/2	2.40		
		(-7.11--7.96)x(3.13+3.22)/2	2.70		
		(-6.80--7.11)x(3.12+3.13)/2	0.97		
		(-6.52--6.80)x(3.10+3.12)/2	0.87		
		(-5.64--6.52)x(3.06+3.10)/2	2.71		
		(-4.66--5.64)x(3.05+3.06)/2	2.99		
		(-4.48--4.66)x(3.05+3.05)/2	0.55		
		(-4.32--4.48)x(3.03+3.05)/2	0.49		
		(-3.32--4.32)x(2.88+3.03)/2	2.96		
		(-2.91--3.32)x(2.82+2.88)/2	1.17		
		(-2.89--2.91)x(2.83+2.82)/2	0.06		
		(-2.80--2.89)x(2.91+2.83)/2	0.26		
		(-2.28--2.80)x(2.85+2.91)/2	1.50		
		(-2.15--2.28)x(2.82+2.85)/2	0.37		
		(-1.68--2.15)x(2.93+2.82)/2	1.35		
		(-1.43--1.68)x(2.85+2.93)/2	0.72		
		(-1.39--1.43)x(2.83+2.85)/2	0.11		
		(-1.00--1.39)x(2.83+2.83)/2	1.10		
		(0.08--1.00)x(2.86+2.83)/2	3.07		
		(0.16-0.08)x(2.86+2.86)/2	0.23		
		(0.24-0.16)x(2.86+2.86)/2	0.23		
		(0.93-0.24)x(2.83+2.86)/2	1.96		
		(1.50-0.93)x(7.59+2.83)/2	2.97		
		(0.00-1.50)x(7.66+7.62)/2	-11.46		
		(-4.00-0.00)x(7.76+7.66)/2	-30.84		
		(-5.47--4.00)x(7.79+7.76)/2	-11.43		
		(-5.34--5.47)x(7.95+7.79)/2	1.02		
		(-6.41--5.34)x(7.95+7.95)/2	-8.51		
		(-13.15--6.41)x(3.45+7.95)/2	-38.42		
				53.11	
16 225.00	R1	(-14.02--14.47)x(3.15+3.15)/2	1.42		
		(-13.28--14.02)x(3.12+3.15)/2	2.32		
		(-12.85--13.28)x(3.11+3.12)/2	1.34		
		(-12.49--12.85)x(3.09+3.11)/2	1.12		
		(-11.97--12.49)x(3.10+3.09)/2	1.61		
		(-11.68--11.97)x(3.07+3.10)/2	0.89		
		(-11.21--11.68)x(3.05+3.07)/2	1.44		
		(-10.51--11.21)x(2.97+3.05)/2	2.11		
		(-10.46--10.51)x(2.96+2.97)/2	0.15		
		(-10.36--10.46)x(2.96+2.96)/2	0.30		
		(-9.34--10.36)x(2.90+2.96)/2	2.99		
		(-8.24--9.34)x(2.77+2.90)/2	3.12		
		(-8.17--8.24)x(2.76+2.77)/2	0.19		
		(-8.12--8.17)x(2.77+2.76)/2	0.14		
		(-7.21--8.12)x(2.84+2.77)/2	2.55		
		(-7.19--7.21)x(2.83+2.84)/2	0.06		
		(-7.04--7.19)x(2.89+2.83)/2	0.43		
		(-7.00--7.04)x(2.87+2.89)/2	0.12		
		(-6.98--7.00)x(2.87+2.87)/2	0.06		
		(-6.97--6.98)x(2.88+2.87)/2	0.03		
		(-6.94--6.97)x(2.89+2.88)/2	0.09		
		(-6.87--6.94)x(2.87+2.89)/2	0.20		
		(-6.83--6.87)x(2.87+2.87)/2	0.11		
		(-6.68--6.83)x(2.77+2.87)/2	0.42		
		(-6.58--6.68)x(2.87+2.77)/2	0.28		
		(-6.55--6.58)x(2.87+2.87)/2	0.09		
		(-6.49--6.55)x(2.89+2.87)/2	0.17		
		(-6.43--6.49)x(2.88+2.89)/2	0.17		
		(-6.40--6.43)x(2.88+2.88)/2	0.09		
		(-6.33--6.40)x(2.87+2.88)/2	0.20		
		(-6.01--6.33)x(2.82+2.87)/2	0.91		
		(-5.83--6.01)x(2.81+2.82)/2	0.51		
		(-5.48--5.83)x(2.82+2.81)/2	0.99		
		(-4.66--5.48)x(2.84+2.82)/2	2.32		
		(-3.98--4.66)x(2.84+2.84)/2	1.93		
		(-3.49--3.98)x(2.83+2.84)/2	1.39		
		(-2.88--3.49)x(2.84+2.83)/2	1.73		
		(-2.32--2.88)x(2.85+2.84)/2	1.59		
		(-2.15--2.32)x(2.84+2.85)/2	0.48		
		(-2.12--2.15)x(2.85+2.84)/2	0.09		
		(-1.68--2.12)x(2.89+2.85)/2	1.26		
		(-1.51--1.68)x(2.83+2.89)/2	0.49		
		(-1.40--1.51)x(2.83+2.83)/2	0.31		
		(-1.15--1.40)x(2.83+2.83)/2	0.71		
		(-0.28--1.15)x(2.79+2.83)/2	2.44		
		(0.02--0.28)x(2.78+2.79)/2	0.84		
		(0.27-0.02)x(2.77+2.78)/2	0.69		
		(0.91-0.27)x(2.77+2.77)/2	1.77		
		(1.50-0.91)x(8.39+2.77)/2	3.29		
		(0.00-1.50)x(8.41+8.42)/2	-12.62		
		A RIPORTARE mq	35.33		

STERRI E RIPORTI

N. SEZIONE PROG.	FIG.	ELEMENTI DI CALCOLO	AREA ELEMENTARE mq	AREA FIGURA mq	NOTE
		RIPORTO mq	35.33		
		(-4.00-0.00)x(8.37+8.41)/2	-33.56		
		(-5.49--4.00)x(8.35+8.37)/2	-12.46		
		(-5.34--5.49)x(8.53+8.35)/2	1.27		
		(-6.41--5.34)x(8.52+8.53)/2	-9.12		
		(-14.47--6.41)x(3.15+8.52)/2	-47.03		
				65.57	
17	R1	(-15.29--15.51)x(2.79+2.80)/2	0.61		
240.00		(-14.20--15.29)x(2.80+2.79)/2	3.05		
		(-14.07--14.20)x(2.81+2.80)/2	0.36		
		(-13.85--14.07)x(2.80+2.81)/2	0.62		
		(-12.86--13.85)x(2.76+2.80)/2	2.75		
		(-12.64--12.86)x(2.77+2.76)/2	0.61		
		(-12.30--12.64)x(2.79+2.77)/2	0.95		
		(-11.90--12.30)x(2.80+2.79)/2	1.12		
		(-11.64--11.90)x(2.81+2.80)/2	0.73		
		(-10.45--11.64)x(2.78+2.81)/2	3.33		
		(-10.42--10.45)x(2.78+2.78)/2	0.08		
		(-10.40--10.42)x(2.78+2.78)/2	0.06		
		(-9.20--10.40)x(2.79+2.78)/2	3.34		
		(-9.04--9.20)x(2.80+2.79)/2	0.45		
		(-9.03--9.04)x(2.80+2.80)/2	0.03		
		(-8.74--9.03)x(3.38+2.80)/2	0.90		
		(-8.69--8.74)x(3.46+3.38)/2	0.17		
		(-8.60--8.69)x(3.65+3.46)/2	0.32		
		(-8.58--8.60)x(3.90+3.65)/2	0.08		
		(-8.56--8.58)x(3.71+3.90)/2	0.08		
		(-8.52--8.56)x(3.31+3.71)/2	0.14		
		(-8.42--8.52)x(3.33+3.31)/2	0.33		
		(-8.38--8.42)x(3.72+3.33)/2	0.14		
		(-8.36--8.38)x(3.89+3.72)/2	0.08		
		(-8.34--8.36)x(3.61+3.89)/2	0.07		
		(-8.21--8.34)x(2.81+3.61)/2	0.42		
		(-8.19--8.21)x(2.81+2.81)/2	0.06		
		(-8.16--8.19)x(2.79+2.81)/2	0.08		
		(-8.14--8.16)x(2.80+2.79)/2	0.06		
		(-8.10--8.14)x(2.84+2.80)/2	0.11		
		(-7.98--8.10)x(2.85+2.84)/2	0.34		
		(-7.86--7.98)x(2.85+2.85)/2	0.34		
		(-7.22--7.86)x(2.83+2.85)/2	1.82		
		(-6.77--7.22)x(2.78+2.83)/2	1.26		
		(-6.60--6.77)x(2.78+2.78)/2	0.47		
		(-6.59--6.60)x(2.87+2.78)/2	0.03		
		(-6.44--6.59)x(2.86+2.87)/2	0.43		
		(-5.69--6.44)x(2.86+2.86)/2	2.15		
		(-5.60--5.69)x(2.86+2.86)/2	0.26		
		(-5.45--5.60)x(2.88+2.86)/2	0.43		
		(-5.00--5.45)x(2.87+2.88)/2	1.29		
		(-4.70--5.00)x(2.83+2.87)/2	0.85		
		(-4.55--4.70)x(2.87+2.83)/2	0.43		
		(-4.33--4.55)x(2.85+2.87)/2	0.63		
		(-3.67--4.33)x(2.86+2.85)/2	1.88		
		(-3.11--3.67)x(2.87+2.86)/2	1.60		
		(-2.80--3.11)x(2.85+2.87)/2	0.89		
		(-2.25--2.80)x(2.81+2.85)/2	1.56		
		(-1.89--2.25)x(2.81+2.81)/2	1.01		
		(-1.51--1.89)x(2.81+2.81)/2	1.07		
		(-0.90--1.51)x(2.79+2.81)/2	1.71		
		(-0.68--0.90)x(2.78+2.79)/2	0.61		
		(-0.02--0.68)x(2.73+2.78)/2	1.82		
		(0.04--0.02)x(2.77+2.73)/2	0.16		
		(0.05-0.04)x(2.86+2.77)/2	0.03		
		(0.11-0.05)x(2.83+2.86)/2	0.17		
		(0.15-0.11)x(2.83+2.83)/2	0.11		
		(0.39-0.15)x(2.76+2.83)/2	0.67		
		(0.48-0.39)x(2.75+2.76)/2	0.25		
		(0.53-0.48)x(2.74+2.75)/2	0.14		
		(0.55-0.53)x(2.75+2.74)/2	0.05		
		(0.56-0.55)x(2.84+2.75)/2	0.03		
		(0.57-0.56)x(2.82+2.84)/2	0.03		
		(0.70-0.57)x(2.81+2.82)/2	0.37		
		(0.72-0.70)x(2.79+2.81)/2	0.06		
		(0.91-0.72)x(2.78+2.79)/2	0.53		
		(1.50-0.91)x(9.01+2.78)/2	3.48		
		(0.00-1.50)x(8.96+9.04)/2	-13.50		
		(-4.00-0.00)x(8.76+8.96)/2	-35.44		
		(-5.50--4.00)x(8.68+8.76)/2	-13.08		
		(-5.34--5.50)x(8.87+8.68)/2	1.40		
		(-6.41--5.34)x(8.87+8.87)/2	-9.49		
		(-15.51--6.41)x(2.80+8.87)/2	-53.10		
				73.12	
18	R1	(-15.36--15.76)x(2.92+2.89)/2	1.16		
255.00		(-15.19--15.36)x(2.99+2.92)/2	0.50		
		(-14.73--15.19)x(3.07+2.99)/2	1.39		
		(-14.47--14.73)x(3.08+3.07)/2	0.80		
		(-14.39--14.47)x(3.08+3.08)/2	0.25		
		(-13.72--14.39)x(3.07+3.08)/2	2.06		
		(-13.18--13.72)x(3.11+3.07)/2	1.67		
		(-12.08--13.18)x(3.17+3.11)/2	3.45		
		(-11.87--12.08)x(3.18+3.17)/2	0.67		
		(-11.04--11.87)x(3.19+3.18)/2	2.64		
		(-10.56--11.04)x(3.19+3.19)/2	1.53		
		(-10.44--10.56)x(3.19+3.19)/2	0.38		
		(-9.24--10.44)x(3.23+3.19)/2	3.85		
		(-8.80--9.24)x(3.26+3.23)/2	1.43		
		(-7.93--8.80)x(3.29+3.26)/2	2.85		
		(-7.16--7.93)x(3.31+3.29)/2	2.54		
		(-6.62--7.16)x(3.31+3.31)/2	1.79		
		(-5.52--6.62)x(3.22+3.31)/2	3.59		
		(-5.30--5.52)x(3.21+3.22)/2	0.71		
		(-5.15--5.30)x(3.17+3.21)/2	0.48		
		(-4.33--5.15)x(3.08+3.17)/2	2.56		
		(-4.25--4.33)x(3.02+3.08)/2	0.24		
		(-4.24--4.25)x(3.01+3.02)/2	0.03		
		(-4.15--4.24)x(3.01+3.01)/2	0.27		
		(-4.14--4.15)x(2.87+2.89)/2	0.03		
		A RIPORTARE mq	36.87		

STERRI E RIPORTI

N. SEZIONE PROG.	FIG.	ELEMENTI DI CALCOLO	AREA ELEMENTARE mq	AREA FIGURA mq	NOTE
		RIPORTO mq	36.87		
		(-4.10--4.14)x(2.87+2.87)/2	0.11		
		(-4.09--4.10)x(2.90+2.87)/2	0.03		
		(-3.96--4.09)x(2.95+2.90)/2	0.38		
		(-3.93--3.96)x(2.95+2.95)/2	0.09		
		(-3.92--3.93)x(2.95+2.95)/2	0.03		
		(-3.47--3.92)x(2.90+2.95)/2	1.32		
		(-3.46--3.47)x(2.91+2.91)/2	0.03		
		(-3.42--3.46)x(2.91+2.91)/2	0.12		
		(-3.24--3.42)x(2.93+2.91)/2	0.53		
		(-3.18--3.24)x(2.93+2.93)/2	0.18		
		(-3.10--3.18)x(2.93+2.93)/2	0.23		
		(-3.07--3.10)x(2.91+2.93)/2	0.09		
		(-3.02--3.07)x(2.84+2.91)/2	0.14		
		(-2.68--3.02)x(2.82+2.84)/2	0.96		
		(-2.48--2.68)x(2.82+2.82)/2	0.56		
		(-2.23--2.48)x(2.82+2.82)/2	0.70		
		(-1.75--2.23)x(2.83+2.82)/2	1.36		
		(-1.36--1.75)x(2.81+2.83)/2	1.10		
		(-0.59--1.36)x(2.79+2.81)/2	2.16		
		(-0.05--0.59)x(2.77+2.79)/2	1.50		
		(0.44--0.05)x(2.77+2.77)/2	1.36		
		(0.73-0.44)x(2.78+2.77)/2	0.80		
		(0.80-0.73)x(2.81+2.78)/2	0.20		
		(0.92-0.80)x(2.82+2.81)/2	0.34		
		(1.50-0.92)x(9.09+2.82)/2	3.45		
		(0.00-1.50)x(9.06+9.09)/2	-13.61		
		(-4.00-0.00)x(8.98+9.06)/2	-36.08		
		(-5.49--4.00)x(8.95+8.98)/2	-13.36		
		(-5.34--5.49)x(9.13+8.95)/2	1.36		
		(-6.41--5.34)x(9.13+9.13)/2	-9.77		
		(-15.76--6.41)x(2.89+9.13)/2	-56.19		
				73.01	
18 bis 265.11	R1	(0.00-0.92)x(8.88+8.87)/2	-8.17		
		(-4.00-0.00)x(8.91+8.88)/2	-35.58		
		(-5.48--4.00)x(8.92+8.91)/2	-13.19		
		(-5.34--5.48)x(9.09+8.92)/2	1.26		
		(-6.41--5.34)x(9.08+9.09)/2	-9.72		
		(-15.92--6.41)x(2.75+9.08)/2	-56.25		
		(-14.83--15.92)x(2.71+2.75)/2	2.98		
		(-14.82--14.83)x(2.71+2.71)/2	0.03		
		(-14.77--14.82)x(2.71+2.71)/2	0.14		
		(-13.43--14.77)x(2.71+2.71)/2	3.63		
		(-13.32--13.43)x(2.71+2.71)/2	0.30		
		(-12.03--13.32)x(2.71+2.71)/2	3.50		
		(-11.83--12.03)x(2.73+2.71)/2	0.54		
		(-11.67--11.83)x(2.74+2.73)/2	0.44		
		(-11.56--11.67)x(2.75+2.74)/2	0.30		
		(-11.48--11.56)x(2.75+2.75)/2	0.22		
		(-11.17--11.48)x(2.78+2.75)/2	0.86		
		(-11.16--11.17)x(2.78+2.78)/2	0.03		
		(-10.74--11.16)x(2.74+2.78)/2	1.16		
		(-10.69--10.74)x(2.73+2.74)/2	0.14		
		(-10.63--10.69)x(2.72+2.73)/2	0.16		
		(-10.50--10.63)x(2.73+2.72)/2	0.35		
		(-10.37--10.50)x(2.74+2.73)/2	0.36		
		(-9.94--10.37)x(2.80+2.74)/2	1.19		
		(-9.28--9.94)x(2.74+2.80)/2	1.83		
		(-9.23--9.28)x(2.74+2.74)/2	0.14		
		(-8.79--9.23)x(2.75+2.74)/2	1.21		
		(-7.83--8.79)x(2.76+2.75)/2	2.64		
		(-7.28--7.83)x(2.81+2.76)/2	1.53		
		(-6.44--7.28)x(2.92+2.81)/2	2.41		
		(-5.78--6.44)x(2.97+2.92)/2	1.94		
		(-5.39--5.78)x(3.00+2.97)/2	1.16		
		(-5.04--5.39)x(3.02+3.00)/2	1.05		
		(-4.67--5.04)x(3.04+3.02)/2	1.12		
		(-4.27--4.67)x(3.03+3.04)/2	1.21		
		(-3.64--4.27)x(3.04+3.03)/2	1.91		
		(-2.76--3.64)x(3.08+3.04)/2	2.69		
		(-2.24--2.76)x(3.09+3.08)/2	1.60		
		(-2.11--2.24)x(3.07+3.09)/2	0.40		
		(-1.63--2.11)x(2.97+3.07)/2	1.45		
		(-1.60--1.63)x(2.96+2.97)/2	0.09		
		(-1.58--1.60)x(2.96+2.96)/2	0.06		
		(-1.56--1.58)x(2.91+2.96)/2	0.06		
		(-1.53--1.56)x(3.00+2.91)/2	0.09		
		(-1.51--1.53)x(2.97+3.02)/2	0.06		
		(-1.48--1.51)x(2.88+2.97)/2	0.09		
		(-1.36--1.48)x(2.90+2.88)/2	0.35		
		(-1.26--1.36)x(2.89+2.90)/2	0.29		
		(-1.22--1.26)x(2.89+2.89)/2	0.12		
		(-1.21--1.22)x(2.89+2.89)/2	0.03		
		(-0.95--1.21)x(2.89+2.89)/2	0.75		
		(-0.83--0.95)x(2.92+2.89)/2	0.35		
		(-0.82--0.83)x(2.92+2.92)/2	0.03		
		(-0.59--0.82)x(2.84+2.92)/2	0.66		
		(-0.31--0.59)x(2.81+2.84)/2	0.79		
		(0.26--0.31)x(2.82+2.81)/2	1.60		
		(0.37-0.26)x(2.84+2.82)/2	0.31		
		(0.55-0.37)x(2.82+2.84)/2	0.51		
		(0.92-0.55)x(2.81+2.82)/2	1.04		
				73.75	
18 bis 265.11	R2	(1.50-0.92)x(8.84+2.81)/2	3.38		
		(0.92-1.50)x(8.87+8.87)/2	-5.14		
				1.76	
18 bis 265.11	R3	(3.28-1.95)x(2.73+2.78)/2	3.66		
		(3.35-3.28)x(2.73+2.73)/2	0.19		
		(3.75-3.35)x(2.74+2.73)/2	1.09		
		(3.78-3.75)x(2.74+2.74)/2	0.08		
		(3.91-3.78)x(2.79+2.74)/2	0.36		
		(3.94-3.91)x(2.70+2.76)/2	0.08		
		(4.04-3.94)x(2.71+2.70)/2	0.27		
		(4.19-4.04)x(2.73+2.71)/2	0.41		
		(4.23-4.19)x(2.73+2.73)/2	0.11		
		(4.30-4.23)x(2.77+2.73)/2	0.19		
		A RIPORTARE mq	6.44		

STERRI E RIPORTI

N. SEZIONE PROG.	FIG.	ELEMENTI DI CALCOLO	AREA ELEMENTARE mq	AREA FIGURA mq	NOTE
		RIPORTO mq	6.44		
		(4.32-4.30)x(2.70+2.77)/2	0.05		
		(4.40-4.32)x(2.69+2.70)/2	0.22		
		(4.75-4.40)x(2.69+2.69)/2	0.94		
		(4.78-4.75)x(2.70+2.69)/2	0.08		
		(6.14-4.78)x(2.70+2.70)/2	3.67		
		(6.22-6.14)x(2.70+2.70)/2	0.22		
		(6.67-6.22)x(2.68+2.70)/2	1.21		
		(6.89-6.67)x(2.65+2.68)/2	0.59		
		(7.01-6.89)x(2.67+2.65)/2	0.32		
		(7.02-7.01)x(2.70+2.67)/2	0.03		
		(7.18-7.02)x(2.62+2.70)/2	0.43		
		(7.25-7.18)x(2.60+2.62)/2	0.18		
		(7.54-7.25)x(2.56+2.60)/2	0.75		
		(7.60-7.54)x(2.55+2.56)/2	0.15		
		(7.62-7.60)x(2.54+2.55)/2	0.05		
		(7.71-7.62)x(2.27+2.54)/2	0.22		
		(7.72-7.71)x(2.27+2.27)/2	0.02		
		(7.74-7.72)x(2.27+2.27)/2	0.05		
		(7.75-7.74)x(2.27+2.27)/2	0.02		
		(7.82-7.75)x(2.45+2.39)/2	0.17		
		(7.96-7.82)x(2.44+2.45)/2	0.34		
		(8.10-7.96)x(2.44+2.44)/2	0.34		
		(8.39-8.10)x(2.43+2.44)/2	0.71		
		(8.58-8.39)x(2.40+2.43)/2	0.46		
		(8.63-8.58)x(2.50+2.40)/2	0.12		
		(8.68-8.63)x(2.81+2.50)/2	0.13		
		(8.71-8.68)x(2.64+2.81)/2	0.08		
		(9.03-8.71)x(2.41+2.64)/2	0.81		
		(9.06-9.03)x(2.42+2.41)/2	0.07		
		(9.12-9.06)x(2.43+2.42)/2	0.15		
		(9.31-9.12)x(2.46+2.43)/2	0.46		
		(10.34-9.31)x(2.64+2.46)/2	2.63		
		(10.82-10.34)x(2.67+2.64)/2	1.27		
		(11.73-10.82)x(2.69+2.67)/2	2.44		
		(12.33-11.73)x(2.67+2.69)/2	1.61		
		(12.45-12.33)x(2.67+2.67)/2	0.32		
		(2.91-12.45)x(9.04+2.67)/2	-55.86		
		(2.25-2.91)x(9.04+9.04)/2	-5.97		
		(1.95-2.25)x(8.54+8.54)/2	-2.56		
				36.64	
19 270.00	R1	(0.00-0.92)x(8.72+8.71)/2	-8.02		
		(-4.00-0.00)x(8.78+8.72)/2	-35.00		
		(-5.48--4.00)x(8.80+8.78)/2	-13.01		
		(-5.34--5.48)x(8.96+8.80)/2	1.24		
		(-6.41--5.34)x(8.96+8.96)/2	-9.59		
		(-7.89--6.41)x(7.97+8.96)/2	-12.53		
		(-7.67--7.89)x(2.70+2.71)/2	0.60		
		(-7.66--7.67)x(2.70+2.70)/2	0.03		
		(-7.35--7.66)x(2.73+2.70)/2	0.84		
		(-6.45--7.35)x(2.75+2.73)/2	2.47		
		(-6.43--6.45)x(2.74+2.78)/2	0.06		
		(-6.41--6.43)x(2.74+2.74)/2	0.05		
		(-6.37--6.41)x(2.74+2.74)/2	0.11		
		(-6.32--6.37)x(2.72+2.74)/2	0.14		
		(-6.22--6.32)x(2.72+2.72)/2	0.27		
		(-6.21--6.22)x(2.72+2.72)/2	0.03		
		(-5.68--6.21)x(2.74+2.72)/2	1.45		
		(-5.51--5.68)x(2.76+2.74)/2	0.47		
		(-5.09--5.51)x(2.79+2.76)/2	1.17		
		(-5.08--5.09)x(2.79+2.79)/2	0.03		
		(-5.03--5.08)x(2.89+2.79)/2	0.14		
		(-5.01--5.03)x(2.94+2.89)/2	0.06		
		(-4.97--5.01)x(2.87+2.94)/2	0.12		
		(-4.88--4.97)x(2.87+2.87)/2	0.26		
		(-4.86--4.88)x(2.94+2.87)/2	0.06		
		(-4.85--4.86)x(2.82+2.94)/2	0.03		
		(-4.77--4.85)x(2.74+2.82)/2	0.22		
		(-4.76--4.77)x(2.74+2.74)/2	0.03		
		(-3.33--4.76)x(2.87+2.74)/2	4.01		
		(-3.30--3.33)x(2.87+2.87)/2	0.09		
		(-1.88--3.30)x(3.03+2.87)/2	4.19		
		(-1.85--1.88)x(3.03+3.03)/2	0.09		
		(-0.43--1.85)x(3.02+3.03)/2	4.30		
		(-0.41--0.43)x(3.02+3.02)/2	0.06		
		(0.08--0.41)x(3.02+3.02)/2	1.48		
		(0.27-0.08)x(2.99+3.02)/2	0.57		
		(0.31-0.27)x(2.98+2.99)/2	0.12		
		(0.35-0.31)x(2.90+2.98)/2	0.12		
		(0.37-0.35)x(2.98+2.90)/2	0.06		
		(0.38-0.37)x(2.99+2.98)/2	0.03		
		(0.42-0.38)x(2.84+2.94)/2	0.12		
		(0.43-0.42)x(2.84+2.84)/2	0.03		
		(0.58-0.43)x(2.89+2.84)/2	0.43		
		(0.92-0.58)x(2.86+2.89)/2	0.98		
				51.59	
19 270.00	R2	(1.84-1.95)x(8.87+8.87)/2	-0.98		
		(1.95-1.84)x(8.74+8.87)/2	0.97		
				0.01	
19 270.00	R2	(0.92-1.95)x(8.71+8.69)/2	-8.96		
		(1.01-0.92)x(2.86+2.86)/2	0.26		
		(1.02-1.01)x(2.88+2.86)/2	0.03		
		(1.04-1.02)x(2.87+2.88)/2	0.06		
		(1.10-1.04)x(2.93+2.87)/2	0.17		
		(1.14-1.10)x(2.93+2.93)/2	0.12		
		(1.16-1.14)x(2.92+2.93)/2	0.06		
		(1.61-1.16)x(2.89+2.92)/2	1.31		
		(1.95-1.61)x(2.87+2.89)/2	0.98		
				5.97	
19 270.00	R3	(2.39-1.95)x(2.85+2.87)/2	1.26		
		(2.46-2.39)x(2.84+2.85)/2	0.20		
		(2.51-2.46)x(2.84+2.84)/2	0.14		
		(3.90-2.51)x(2.78+2.84)/2	3.91		
		(3.97-3.90)x(2.78+2.78)/2	0.19		
		(5.35-3.97)x(2.74+2.78)/2	3.81		
		(5.40-5.35)x(2.74+2.74)/2	0.14		
		A RIPORTARE mq	9.65		

STERRI E RIPORTI

N. SEZIONE PROG.	FIG.	ELEMENTI DI CALCOLO	AREA ELEMENTARE mq	AREA FIGURA mq	NOTE
		RIPORTO mq	9.65		
		(5.84-5.40)x(2.76+2.74)/2	1.21		
		(5.89-5.84)x(2.76+2.76)/2	0.14		
		(6.02-5.89)x(2.79+2.76)/2	0.36		
		(6.05-6.02)x(2.76+2.79)/2	0.08		
		(6.08-6.05)x(2.76+2.76)/2	0.08		
		(6.16-6.08)x(2.74+2.76)/2	0.22		
		(6.22-6.16)x(2.74+2.74)/2	0.16		
		(6.30-6.22)x(2.76+2.74)/2	0.22		
		(6.32-6.30)x(2.76+2.76)/2	0.06		
		(6.34-6.32)x(2.76+2.76)/2	0.06		
		(6.44-6.34)x(2.70+2.76)/2	0.27		
		(6.59-6.44)x(2.73+2.70)/2	0.41		
		(6.60-6.59)x(2.73+2.73)/2	0.03		
		(6.81-6.60)x(2.70+2.74)/2	0.57		
		(6.83-6.81)x(2.70+2.70)/2	0.05		
		(6.88-6.83)x(2.70+2.70)/2	0.13		
		(7.01-6.88)x(2.76+2.70)/2	0.35		
		(7.66-7.01)x(2.95+2.76)/2	1.86		
		(8.15-7.66)x(2.82+2.95)/2	1.41		
		(8.19-8.15)x(2.80+2.82)/2	0.11		
		(8.20-8.19)x(2.80+2.80)/2	0.03		
		(8.21-8.20)x(2.80+2.80)/2	0.03		
		(8.23-8.21)x(2.79+2.80)/2	0.06		
		(8.32-8.23)x(2.76+2.79)/2	0.25		
		(8.86-8.32)x(2.73+2.76)/2	1.48		
		(8.90-8.86)x(2.73+2.73)/2	0.11		
		(9.04-8.90)x(2.72+2.73)/2	0.38		
		(9.08-9.04)x(2.71+2.72)/2	0.11		
		(9.11-9.08)x(2.71+2.71)/2	0.08		
		(9.23-9.11)x(2.68+2.71)/2	0.32		
		(9.35-9.23)x(2.68+2.68)/2	0.32		
		(9.61-9.35)x(2.38+2.68)/2	0.66		
		(9.64-9.61)x(2.26+2.38)/2	0.07		
		(9.66-9.64)x(2.26+2.26)/2	0.05		
		(9.68-9.66)x(2.26+2.26)/2	0.05		
		(9.70-9.68)x(2.26+2.26)/2	0.05		
		(9.71-9.70)x(2.60+2.26)/2	0.02		
		(9.72-9.71)x(2.60+2.60)/2	0.03		
		(9.73-9.72)x(2.60+2.60)/2	0.03		
		(10.20-9.73)x(2.44+2.60)/2	1.18		
		(10.31-10.20)x(2.50+2.44)/2	0.27		
		(10.46-10.31)x(2.73+2.50)/2	0.39		
		(10.64-10.46)x(2.38+2.73)/2	0.46		
		(10.68-10.64)x(2.31+2.38)/2	0.09		
		(11.13-10.68)x(2.44+2.31)/2	1.07		
		(11.18-11.13)x(2.46+2.44)/2	0.12		
		(11.24-11.18)x(2.47+2.46)/2	0.15		
		(11.91-11.24)x(2.63+2.47)/2	1.71		
		(12.25-11.91)x(2.64+2.63)/2	0.90		
		(2.91-12.25)x(8.86+2.64)/2	-53.70		
		(1.95-2.91)x(8.87+8.86)/2	-8.51		
		(1.99-1.95)x(8.69+8.74)/2	0.35		
		(1.95-1.99)x(8.69+8.69)/2	-0.35		
				34.31	
20 285.00	R1	(0.14-0.00)x(2.66+2.66)/2	0.37		
		(1.13-0.14)x(2.65+2.66)/2	2.63		
		(1.18-1.13)x(2.65+2.65)/2	0.13		
		(1.42-1.18)x(2.64+2.65)/2	0.63		
		(2.21-1.42)x(2.62+2.64)/2	2.08		
		(2.34-2.21)x(2.62+2.62)/2	0.34		
		(3.25-2.34)x(2.63+2.62)/2	2.39		
		(3.55-3.25)x(2.64+2.63)/2	0.79		
		(4.28-3.55)x(2.68+2.64)/2	1.94		
		(4.33-4.28)x(2.69+2.68)/2	0.13		
		(4.42-4.33)x(2.70+2.69)/2	0.24		
		(4.49-4.42)x(2.69+2.70)/2	0.19		
		(4.72-4.49)x(2.74+2.69)/2	0.62		
		(5.26-4.72)x(2.69+2.74)/2	1.47		
		(5.32-5.26)x(2.69+2.69)/2	0.16		
		(5.63-5.32)x(2.70+2.69)/2	0.84		
		(5.95-5.63)x(2.72+2.70)/2	0.87		
		(6.16-5.95)x(2.74+2.72)/2	0.57		
		(6.17-6.16)x(2.75+2.74)/2	0.03		
		(6.18-6.17)x(2.70+2.75)/2	0.03		
		(6.20-6.18)x(2.70+2.70)/2	0.05		
		(6.35-6.20)x(2.68+2.70)/2	0.40		
		(7.18-6.35)x(2.67+2.68)/2	2.22		
		(7.39-7.18)x(2.67+2.67)/2	0.56		
		(8.39-7.39)x(2.67+2.67)/2	2.67		
		(8.43-8.39)x(2.67+2.67)/2	0.11		
		(8.65-8.43)x(2.67+2.67)/2	0.59		
		(9.46-8.65)x(2.66+2.67)/2	2.16		
		(9.49-9.46)x(2.67+2.66)/2	0.08		
		(10.21-9.49)x(2.69+2.67)/2	1.93		
		(10.22-10.21)x(2.69+2.69)/2	0.03		
		(10.30-10.22)x(2.71+2.69)/2	0.22		
		(10.41-10.30)x(2.64+2.73)/2	0.30		
		(10.44-10.41)x(2.64+2.64)/2	0.08		
		(10.54-10.44)x(2.70+2.64)/2	0.27		
		(10.70-10.54)x(2.65+2.71)/2	0.43		
		(10.71-10.70)x(2.65+2.65)/2	0.03		
		(10.76-10.71)x(2.69+2.69)/2	0.13		
		(10.82-10.76)x(2.69+2.69)/2	0.16		
		(10.97-10.82)x(2.68+2.69)/2	0.40		
		(2.91-10.97)x(8.05+2.68)/2	-43.24		
		(1.84-2.91)x(8.06+8.05)/2	-8.62		
		(1.99-1.84)x(7.87+8.06)/2	1.19		
		(0.00-1.99)x(7.92+7.87)/2	-15.71		
				37.11	

Il Direttore dei Lavori | L'Impresa

N. SEZ.	FIG.	SUPERFICIE STERRO mq	SUPERFICIE RIPORTO mq	PUNTI DI PASSAGGIO (PROGRESSIVA m)	DISTANZA m	VOLUMI PARZIALI STERRO mc	VOLUMI PARZIALI RIPORTO mc	VOLUMI TOTALI STERRO mc	VOLUMI TOTALI RIPORTO mc
9	R1		17.45	(120.00)					
					15.00		313.050		
10	R1		24.29	(135.00)					
									313.050
10	R1		24.29	(135.00)					
					15.00		381.225		
11	R1		26.54	(150.00)					
									381.225
11	R1		26.54	(150.00)					
					15.00		470.025		
12	R1		36.13	(165.00)					
									470.025
12	R1		36.13	(165.00)					
					1.40		51.772		
12bis	R1		27.15	(166.40)					
	R2		2.29						
	R2		0.01						
	R3		8.38						
									51.772
12bis	R1		27.15	(166.40)					
					13.60		375.836		
13	R1		27.39	(180.00)					
	R2		0.73						
12bis	R2		2.29	(166.40)					
					13.60		15.572		
13	R0		0.00	(180.00)					
12bis	R2		0.01	(166.40)					
					13.60		0.068		
13	R0		0.00	(180.00)					
12bis	R3		8.38	(166.40)					
					13.60		123.012		
13	R3		9.71	(180.00)					
									514.488
13	R1		27.39	(180.00)					
					5.51		161.002		
13bis	R1		31.05	(185.51)					
13	R2		0.73	(180.00)					
					5.51		2.011		
13bis	R0		0.00	(185.51)					
13	R3		9.71	(180.00)					
					5.51		26.751		
13bis	R0		0.00	(185.51)					
									189.764
13bis	R1		31.05	(185.51)					
					9.49		331.581		
14	R1		38.83	(195.00)					
									331.581
14	R1		38.83	(195.00)					
					15.00		689.550		
15	R1		53.11	(210.00)					
									689.550
15	R1		53.11	(210.00)					
					15.00		890.100		
16	R1		65.57	(225.00)					
									890.100
16	R1		65.57	(225.00)					
					15.00		1040.175		
17	R1		73.12	(240.00)					
									1040.175
17	R1		73.12	(240.00)					
					15.00		1095.975		
18	R1		73.01	(255.00)					
									1095.975
18	R1		73.01	(255.00)					
					10.11		741.872		
18 bis	R1		73.75	(265.11)					
18	R0		0.00	(255.00)					
					10.11		8.897		
				A RIPORTARE :			750.769		5967.705

N. SEZ.	FIG.	SUPERFICIE STERRO mq	SUPERFICIE RIPORTO mq	PUNTI DI PASSAGGIO (PROGRESSIVA m)	DISTANZA m	VOLUMI PARZIALI STERRO mc	VOLUMI PARZIALI RIPORTO mc	VOLUMI TOTALI STERRO mc	VOLUMI TOTALI RIPORTO mc
					RIPORTO :	0.000	750.769		5967.705
18 bis	R2		1.76	(265.11)					
18	R0		0.00	(255.00)					
					10.11		185.215		
18 bis	R3		36.64	(265.11)					
									935.984
18 bis	R1		73.75	(265.11)					
	R2		1.76						
					4.89		310.760		
19	R1		51.59	(270.00)					
18 bis	R3		36.64	(265.11)					
					4.89		173.473		
19	R3		34.31	(270.00)					
18 bis	R0		0.00	(265.11)					
					4.89		14.597		
19	R2		5.97	(270.00)					
18 bis	R0		0.00	(265.11)					
					4.89		0.024		
19	R2		0.01	(270.00)					
									498.854
19	R1		51.59	(270.00)					
	R2		5.97						
	R2		0.01						
	R3		34.31						
					15.00		967.425		
20	R1		37.11	(285.00)					
									967.425

Il Direttore dei Lavori	L'Impresa	Totale Articoli .....:	0.000	8369.968
		A dedurre quantita' precedenti:		
		Quantita' da contabilizzare ..:		

BONIFICA

N. SEZIONE PROG.	FIG.	ELEMENTI DI CALCOLO	AREA ELEMENTARE mq	AREA FIGURA mq	NOTE
7bis	BO1	(-4.75--5.00)x(2.97+2.96)/2	0.74		
81.08		(-3.96--4.75)x(2.99+2.97)/2	2.35		
		(-3.55--3.96)x(2.99+2.99)/2	1.23		
		(-2.91--3.55)x(3.00+2.99)/2	1.92		
		(-2.35--2.91)x(3.00+3.00)/2	1.68		
		(-2.21--2.35)x(3.00+3.00)/2	0.42		
		(-1.99--2.21)x(3.00+3.00)/2	0.66		
		(-1.47--1.99)x(3.01+3.00)/2	1.56		
		(-1.15--1.47)x(3.01+3.01)/2	0.96		
		(-0.03--1.15)x(3.03+3.01)/2	3.38		
		(0.06--0.03)x(3.03+3.03)/2	0.27		
		(0.19-0.06)x(3.02+3.03)/2	0.39		
		(1.26-0.19)x(3.00+3.02)/2	3.22		
		(1.93-1.26)x(2.99+3.00)/2	2.01		
		(2.46-1.93)x(2.98+2.99)/2	1.58		
		(3.29-2.46)x(2.95+2.98)/2	2.46		
		(3.66-3.29)x(2.94+2.95)/2	1.09		
		(3.90-3.66)x(2.93+2.94)/2	0.70		
		(4.86-3.90)x(2.90+2.93)/2	2.80		
		(4.88-4.86)x(2.90+2.90)/2	0.06		
		(4.86-4.88)x(2.40+2.40)/2	-0.05		
		(3.90-4.86)x(2.43+2.40)/2	-2.32		
		(3.66-3.90)x(2.44+2.43)/2	-0.58		
		(3.29-3.66)x(2.45+2.44)/2	-0.90		
		(2.46-3.29)x(2.48+2.45)/2	-2.05		
		(1.93-2.46)x(2.49+2.48)/2	-1.32		
		(1.26-1.93)x(2.50+2.49)/2	-1.67		
		(0.19-1.26)x(2.52+2.50)/2	-2.69		
		(0.06-0.19)x(2.53+2.52)/2	-0.33		
		(-0.03-0.06)x(2.53+2.53)/2	-0.23		
		(-1.15--0.03)x(2.51+2.53)/2	-2.82		
		(-1.47--1.15)x(2.51+2.51)/2	-0.80		
		(-1.99--1.47)x(2.50+2.51)/2	-1.30		
		(-2.21--1.99)x(2.50+2.50)/2	-0.55		
		(-2.35--2.21)x(2.50+2.50)/2	-0.35		
		(-2.91--2.35)x(2.50+2.50)/2	-1.40		
		(-3.55--2.91)x(2.49+2.50)/2	-1.60		
		(-3.96--3.55)x(2.49+2.49)/2	-1.02		
		(-4.75--3.96)x(2.47+2.49)/2	-1.96		
		(-5.00--4.75)x(2.46+2.47)/2	-0.62		
				4.92	
7	BO1	(-4.75--5.00)x(2.97+2.96)/2	0.74		
90.00		(-3.96--4.75)x(2.99+2.97)/2	2.35		
		(-3.55--3.96)x(2.99+2.99)/2	1.23		
		(-2.91--3.55)x(3.00+2.99)/2	1.92		
		(-2.35--2.91)x(3.00+3.00)/2	1.68		
		(-2.21--2.35)x(3.00+3.00)/2	0.42		
		(-1.99--2.21)x(3.00+3.00)/2	0.66		
		(-1.47--1.99)x(3.01+3.00)/2	1.56		
		(-1.15--1.47)x(3.01+3.01)/2	0.96		
		(-0.03--1.15)x(3.03+3.01)/2	3.38		
		(0.06--0.03)x(3.03+3.03)/2	0.27		
		(0.19-0.06)x(3.02+3.03)/2	0.39		
		(1.26-0.19)x(3.00+3.02)/2	3.22		
		(1.93-1.26)x(2.99+3.00)/2	2.01		
		(2.46-1.93)x(2.98+2.99)/2	1.58		
		(3.29-2.46)x(2.95+2.98)/2	2.46		
		(3.66-3.29)x(2.94+2.95)/2	1.09		
		(3.90-3.66)x(2.93+2.94)/2	0.70		
		(4.86-3.90)x(2.90+2.93)/2	2.80		
		(4.88-4.86)x(2.90+2.90)/2	0.06		
		(4.86-4.88)x(2.40+2.40)/2	-0.05		
		(3.90-4.86)x(2.43+2.40)/2	-2.32		
		(3.66-3.90)x(2.44+2.43)/2	-0.58		
		(3.29-3.66)x(2.45+2.44)/2	-0.90		
		(2.46-3.29)x(2.48+2.45)/2	-2.05		
		(1.93-2.46)x(2.49+2.48)/2	-1.32		
		(1.26-1.93)x(2.50+2.49)/2	-1.67		
		(0.19-1.26)x(2.52+2.50)/2	-2.69		
		(0.06-0.19)x(2.53+2.52)/2	-0.33		
		(-0.03-0.06)x(2.53+2.53)/2	-0.23		
		(-1.15--0.03)x(2.51+2.53)/2	-2.82		
		(-1.47--1.15)x(2.51+2.51)/2	-0.80		
		(-1.99--1.47)x(2.50+2.51)/2	-1.30		
		(-2.21--1.99)x(2.50+2.50)/2	-0.55		
		(-2.35--2.21)x(2.50+2.50)/2	-0.35		
		(-2.91--2.35)x(2.50+2.50)/2	-1.40		
		(-3.55--2.91)x(2.49+2.50)/2	-1.60		
		(-3.96--3.55)x(2.49+2.49)/2	-1.02		
		(-4.75--3.96)x(2.47+2.49)/2	-1.96		
		(-5.00--4.75)x(2.46+2.47)/2	-0.62		
				4.92	
8	BO1	(-7.02--7.78)x(2.95+2.93)/2	2.23		
105.00		(-6.64--7.02)x(2.96+2.95)/2	1.12		
		(-5.71--6.64)x(2.97+2.96)/2	2.76		
		(-5.00--5.71)x(2.98+2.97)/2	2.11		
		(-4.40--5.00)x(2.99+2.98)/2	1.79		
		(-3.36--4.40)x(3.01+2.99)/2	3.12		
		(-3.08--3.36)x(3.01+3.01)/2	0.84		
		(-1.98--3.08)x(2.98+3.01)/2	3.29		
		(-1.77--1.98)x(2.98+2.98)/2	0.63		
		(-1.72--1.77)x(2.97+2.98)/2	0.15		
		(-0.46--1.72)x(2.94+2.97)/2	3.72		
		(-0.08--0.46)x(2.93+2.94)/2	1.12		
		(0.85--0.08)x(2.92+2.93)/2	2.72		
		(1.57-0.85)x(2.89+2.92)/2	2.09		
		(2.17-1.57)x(2.88+2.89)/2	1.73		
		(3.21-2.17)x(2.84+2.88)/2	2.97		
		(3.48-3.21)x(2.83+2.84)/2	0.77		
		(4.55-3.48)x(2.81+2.83)/2	3.02		
		(4.79-4.55)x(2.80+2.81)/2	0.67		
		(4.85-4.79)x(2.80+2.80)/2	0.17		
		(4.99-4.85)x(2.79+2.80)/2	0.39		
		(4.85-4.99)x(2.30+2.29)/2	-0.32		
		(4.79-4.85)x(2.30+2.30)/2	-0.14		
		(4.55-4.79)x(2.31+2.30)/2	-0.55		
		(3.48-4.55)x(2.33+2.31)/2	-2.48		
		A RIPORTARE mq	33.92		

BONIFICA

N. SEZIONE PROG.	FIG.	ELEMENTI DI CALCOLO	AREA ELEMENTARE mq	AREA FIGURA mq	NOTE
		RIPORTO mq	33.92		
		(3.21-3.48)x(2.34+2.33)/2	-0.63		
		(2.17-3.21)x(2.38+2.34)/2	-2.45		
		(1.57-2.17)x(2.39+2.38)/2	-1.43		
		(0.85-1.57)x(2.42+2.39)/2	-1.73		
		(-0.08-0.85)x(2.43+2.42)/2	-2.26		
		(-0.46--0.08)x(2.44+2.43)/2	-0.93		
		(-1.72--0.46)x(2.47+2.44)/2	-3.09		
		(-1.77--1.72)x(2.48+2.47)/2	-0.12		
		(-1.98--1.77)x(2.48+2.48)/2	-0.52		
		(-3.08--1.98)x(2.51+2.48)/2	-2.74		
		(-3.36--3.08)x(2.51+2.51)/2	-0.70		
		(-4.40--3.36)x(2.49+2.51)/2	-2.60		
		(-5.00--4.40)x(2.48+2.49)/2	-1.49		
		(-5.71--5.00)x(2.47+2.48)/2	-1.76		
		(-6.64--5.71)x(2.46+2.47)/2	-2.29		
		(-7.78--6.64)x(2.44+2.46)/2	-2.79		
				6.39	
9 120.00	BO1	(-8.89--8.93)x(3.00+3.00)/2	0.12		
		(-7.61--8.89)x(2.98+3.00)/2	3.83		
		(-7.46--7.61)x(2.98+2.98)/2	0.45		
		(-6.14--7.46)x(2.92+2.98)/2	3.89		
		(-6.03--6.14)x(2.92+2.92)/2	0.32		
		(-4.67--6.03)x(2.89+2.92)/2	3.95		
		(-4.63--4.67)x(2.89+2.89)/2	0.12		
		(-4.60--4.63)x(2.89+2.89)/2	0.09		
		(-3.91--4.60)x(2.88+2.89)/2	1.99		
		(-3.19--3.91)x(2.86+2.88)/2	2.07		
		(-3.17--3.19)x(2.86+2.86)/2	0.06		
		(-2.31--3.17)x(2.83+2.86)/2	2.45		
		(-1.74--2.31)x(2.81+2.83)/2	1.61		
		(-1.72--1.74)x(2.81+2.81)/2	0.06		
		(-0.31--1.72)x(2.77+2.81)/2	3.93		
		(-0.25--0.31)x(2.77+2.77)/2	0.17		
		(1.12--0.25)x(2.76+2.77)/2	3.79		
		(1.22-1.12)x(2.76+2.76)/2	0.28		
		(2.55-1.22)x(2.66+2.76)/2	3.60		
		(2.69-2.55)x(2.65+2.66)/2	0.37		
		(3.98-2.69)x(3.07+2.65)/2	3.69		
		(4.16-3.98)x(3.15+3.07)/2	0.56		
		(4.40-4.16)x(3.24+3.15)/2	0.77		
		(4.16-4.40)x(2.65+2.74)/2	-0.65		
		(3.98-4.16)x(2.57+2.65)/2	-0.47		
		(2.69-3.98)x(2.15+2.57)/2	-3.04		
		(2.55-2.69)x(2.16+2.15)/2	-0.30		
		(1.22-2.55)x(2.26+2.16)/2	-2.94		
		(1.12-1.22)x(2.26+2.26)/2	-0.23		
		(-0.25-1.12)x(2.27+2.26)/2	-3.10		
		(-0.31--0.25)x(2.27+2.27)/2	-0.14		
		(-1.72--0.31)x(2.31+2.27)/2	-3.23		
		(-1.74--1.72)x(2.31+2.31)/2	-0.05		
		(-2.31--1.74)x(2.33+2.31)/2	-1.32		
		(-3.17--2.31)x(2.36+2.33)/2	-2.02		
		(-3.19--3.17)x(2.36+2.36)/2	-0.05		
		(-3.91--3.19)x(2.38+2.36)/2	-1.71		
		(-4.60--3.91)x(2.39+2.38)/2	-1.65		
		(-4.63--4.60)x(2.39+2.39)/2	-0.07		
		(-4.67--4.63)x(2.39+2.39)/2	-0.10		
		(-6.03--4.67)x(2.42+2.39)/2	-3.27		
		(-6.14--6.03)x(2.42+2.42)/2	-0.27		
		(-7.46--6.14)x(2.48+2.42)/2	-3.23		
		(-7.61--7.46)x(2.48+2.48)/2	-0.37		
		(-8.89--7.61)x(2.50+2.48)/2	-3.19		
		(-8.93--8.89)x(2.50+2.50)/2	-0.10		
				6.67	
10 135.00	BO1	(-8.97--9.62)x(2.76+2.78)/2	1.80		
		(-8.60--8.97)x(2.75+2.76)/2	1.02		
		(-7.48--8.60)x(2.74+2.75)/2	3.07		
		(-7.32--7.48)x(2.74+2.74)/2	0.44		
		(-7.27--7.32)x(2.73+2.74)/2	0.14		
		(-6.03--7.27)x(2.71+2.73)/2	3.37		
		(-5.56--6.03)x(2.72+2.71)/2	1.28		
		(-4.75--5.56)x(2.78+2.72)/2	2.23		
		(-3.86--4.75)x(2.75+2.78)/2	2.46		
		(-3.46--3.86)x(2.69+2.75)/2	1.09		
		(-2.24--3.46)x(2.59+2.69)/2	3.22		
		(-2.18--2.24)x(2.58+2.59)/2	0.16		
		(-2.16--2.18)x(2.58+2.58)/2	0.05		
		(-0.90--2.16)x(2.48+2.58)/2	3.19		
		(-0.46--0.90)x(2.47+2.48)/2	1.09		
		(0.39--0.46)x(2.47+2.47)/2	2.10		
		(1.24-0.39)x(2.46+2.47)/2	2.10		
		(1.67-1.24)x(2.46+2.46)/2	1.06		
		(2.95-1.67)x(2.59+2.46)/2	3.23		
		(2.96-2.95)x(2.59+2.59)/2	0.03		
		(3.00-2.96)x(2.59+2.59)/2	0.10		
		(4.24-3.00)x(2.68+2.59)/2	3.27		
		(4.65-4.24)x(2.73+2.68)/2	1.11		
		(5.15-4.65)x(2.79+2.73)/2	1.38		
		(5.39-5.15)x(2.81+2.79)/2	0.67		
		(5.15-5.39)x(2.29+2.31)/2	-0.55		
		(4.65-5.15)x(2.23+2.29)/2	-1.13		
		(4.24-4.65)x(2.18+2.23)/2	-0.90		
		(3.00-4.24)x(2.09+2.18)/2	-2.65		
		(2.96-3.00)x(2.09+2.09)/2	-0.08		
		(2.95-2.96)x(2.09+2.09)/2	-0.02		
		(1.67-2.95)x(1.96+2.09)/2	-2.59		
		(1.24-1.67)x(1.96+1.96)/2	-0.84		
		(0.39-1.24)x(1.97+1.96)/2	-1.67		
		(-0.46-0.39)x(1.97+1.97)/2	-1.67		
		(-0.90--0.46)x(1.98+1.97)/2	-0.87		
		(-2.16--0.90)x(2.08+1.98)/2	-2.56		
		(-2.18--2.16)x(2.08+2.08)/2	-0.04		
		(-2.24--2.18)x(2.09+2.08)/2	-0.13		
		(-3.46--2.24)x(2.19+2.09)/2	-2.61		
		(-3.86--3.46)x(2.25+2.19)/2	-0.89		
		A RIPORTARE mq	20.46		

BONIFICA

N. SEZIONE PROG.	FIG.	ELEMENTI DI CALCOLO	AREA ELEMENTARE mq	AREA FIGURA mq	NOTE
		RIPORTO mq	20.46		
		(-4.75--3.86)x(2.28+2.25)/2	-2.02		
		(-5.56--4.75)x(2.22+2.28)/2	-1.82		
		(-6.03--5.56)x(2.21+2.22)/2	-1.04		
		(-7.27--6.03)x(2.23+2.21)/2	-2.75		
		(-7.32--7.27)x(2.24+2.23)/2	-0.11		
		(-7.48--7.32)x(2.24+2.24)/2	-0.36		
		(-8.60--7.48)x(2.25+2.24)/2	-2.51		
		(-8.97--8.60)x(2.26+2.25)/2	-0.83		
		(-9.62--8.97)x(2.28+2.26)/2	-1.48		
				7.54	
11	B01	(-10.24--10.36)x(2.61+2.61)/2	0.31		
150.00		(-9.52--10.24)x(2.57+2.61)/2	1.86		
		(-9.04--9.52)x(2.55+2.57)/2	1.23		
		(-8.73--9.04)x(2.55+2.55)/2	0.79		
		(-7.84--8.73)x(2.64+2.55)/2	2.31		
		(-6.75--7.84)x(2.81+2.64)/2	2.97		
		(-6.65--6.75)x(2.83+2.81)/2	0.28		
		(-6.48--6.65)x(2.87+2.83)/2	0.48		
		(-5.45--6.48)x(3.13+2.87)/2	3.09		
		(-4.77--5.45)x(3.31+3.13)/2	2.19		
		(-4.25--4.77)x(3.43+3.31)/2	1.75		
		(-3.45--4.25)x(3.35+3.43)/2	2.71		
		(-3.05--3.45)x(3.36+3.35)/2	1.34		
		(-2.79--3.05)x(3.30+3.36)/2	0.87		
		(-1.85--2.79)x(3.03+3.30)/2	2.98		
		(-0.81--1.85)x(2.81+3.03)/2	3.04		
		(-0.65--0.81)x(2.79+2.81)/2	0.45		
		(-0.41--0.65)x(2.79+2.79)/2	0.67		
		(0.55--0.41)x(2.77+2.79)/2	2.67		
		(1.17-0.55)x(2.77+2.77)/2	1.72		
		(1.74-1.17)x(2.77+2.77)/2	1.58		
		(2.43-1.74)x(2.82+2.77)/2	1.93		
		(2.47-2.43)x(2.82+2.82)/2	0.11		
		(2.49-2.47)x(2.88+2.82)/2	0.06		
		(2.55-2.49)x(2.85+2.88)/2	0.17		
		(2.96-2.55)x(2.76+2.85)/2	1.15		
		(2.97-2.96)x(2.76+2.76)/2	0.03		
		(3.15-2.97)x(2.74+2.76)/2	0.49		
		(4.14-3.15)x(2.76+2.74)/2	2.72		
		(5.13-4.14)x(2.77+2.76)/2	2.74		
		(5.34-5.13)x(2.77+2.77)/2	0.58		
		(5.67-5.34)x(2.76+2.77)/2	0.91		
		(6.13-5.67)x(2.76+2.76)/2	1.27		
		(5.67-6.13)x(2.26+2.26)/2	-1.04		
		(5.34-5.67)x(2.27+2.26)/2	-0.75		
		(5.13-5.34)x(2.27+2.27)/2	-0.48		
		(4.14-5.13)x(2.26+2.27)/2	-2.24		
		(3.15-4.14)x(2.24+2.26)/2	-2.23		
		(2.97-3.15)x(2.26+2.24)/2	-0.40		
		(2.96-2.97)x(2.26+2.26)/2	-0.02		
		(2.55-2.96)x(2.35+2.26)/2	-0.95		
		(2.49-2.55)x(2.38+2.35)/2	-0.14		
		(2.47-2.49)x(2.32+2.38)/2	-0.05		
		(2.43-2.47)x(2.32+2.32)/2	-0.09		
		(1.74-2.43)x(2.27+2.32)/2	-1.58		
		(1.17-1.74)x(2.27+2.27)/2	-1.29		
		(0.55-1.17)x(2.27+2.27)/2	-1.41		
		(-0.41-0.55)x(2.29+2.27)/2	-2.19		
		(-0.65--0.41)x(2.29+2.29)/2	-0.55		
		(-0.81--0.65)x(2.31+2.29)/2	-0.37		
		(-1.85--0.81)x(2.53+2.31)/2	-2.52		
		(-2.79--1.85)x(2.80+2.53)/2	-2.51		
		(-3.05--2.79)x(2.86+2.80)/2	-0.74		
		(-3.45--3.05)x(2.85+2.86)/2	-1.14		
		(-4.25--3.45)x(2.93+2.85)/2	-2.31		
		(-4.77--4.25)x(2.81+2.93)/2	-1.49		
		(-5.45--4.77)x(2.63+2.81)/2	-1.85		
		(-6.48--5.45)x(2.37+2.63)/2	-2.58		
		(-6.65--6.48)x(2.33+2.37)/2	-0.40		
		(-6.75--6.65)x(2.31+2.33)/2	-0.23		
		(-7.84--6.75)x(2.14+2.31)/2	-2.43		
		(-8.73--7.84)x(2.05+2.14)/2	-1.86		
		(-9.04--8.73)x(2.05+2.05)/2	-0.64		
		(-9.52--9.04)x(2.07+2.05)/2	-0.99		
		(-10.24--9.52)x(2.11+2.07)/2	-1.50		
		(-10.36--10.24)x(2.11+2.11)/2	-0.25		
				8.23	
12	B01	(-9.71--10.54)x(3.19+3.00)/2	2.57		
165.00		(-8.99--9.71)x(3.21+3.19)/2	2.30		
		(-8.55--8.99)x(3.18+3.21)/2	1.41		
		(-8.04--8.55)x(3.12+3.18)/2	1.61		
		(-7.39--8.04)x(3.04+3.12)/2	2.00		
		(-6.82--7.39)x(2.96+3.04)/2	1.71		
		(-6.53--6.82)x(2.91+2.96)/2	0.85		
		(-6.50--6.53)x(2.92+2.91)/2	0.09		
		(-6.44--6.50)x(2.96+2.92)/2	0.18		
		(-6.21--6.44)x(2.87+2.96)/2	0.67		
		(-6.17--6.21)x(2.84+2.87)/2	0.11		
		(-5.97--6.17)x(2.84+2.84)/2	0.57		
		(-5.68--5.97)x(2.83+2.84)/2	0.82		
		(-5.06--5.68)x(2.80+2.83)/2	1.75		
		(-4.66--5.06)x(2.79+2.80)/2	1.12		
		(-3.90--4.66)x(2.81+2.79)/2	2.13		
		(-3.02--3.90)x(2.80+2.81)/2	2.47		
		(-2.73--3.02)x(2.80+2.80)/2	0.81		
		(-2.49--2.73)x(2.80+2.80)/2	0.67		
		(-1.57--2.49)x(2.81+2.80)/2	2.58		
		(-0.51--1.57)x(2.80+2.81)/2	2.97		
		(-0.41--0.51)x(2.80+2.80)/2	0.28		
		(-0.32--0.41)x(2.80+2.80)/2	0.25		
		(0.76--0.32)x(2.81+2.80)/2	3.03		
		(1.85-0.76)x(2.79+2.81)/2	3.05		
		(1.92-1.85)x(2.79+2.79)/2	0.20		
		(2.00-1.92)x(2.79+2.79)/2	0.22		
		(3.08-2.00)x(2.78+2.79)/2	3.01		
		A RIPORTARE mq	39.43		

BONIFICA

N. SEZIONE PROG.	FIG.	ELEMENTI DI CALCOLO	AREA ELEMENTARE mq	AREA FIGURA mq	NOTE
		RIPORTO mq	39.43		
		(4.02-3.08)x(2.79+2.78)/2	2.62		
		(4.25-4.02)x(2.79+2.79)/2	0.64		
		(4.51-4.25)x(2.79+2.79)/2	0.73		
		(5.41-4.51)x(2.78+2.79)/2	2.51		
		(6.19-5.41)x(2.77+2.78)/2	2.16		
		(6.77-6.19)x(2.87+2.77)/2	1.64		
		(6.81-6.77)x(2.88+2.87)/2	0.12		
		(6.84-6.81)x(2.88+2.88)/2	0.09		
		(6.86-6.84)x(2.88+2.88)/2	0.06		
		(6.87-6.86)x(2.88+2.88)/2	0.03		
		(6.88-6.87)x(2.88+2.88)/2	0.03		
		(6.87-6.88)x(2.38+2.38)/2	-0.02		
		(6.86-6.87)x(2.38+2.38)/2	-0.02		
		(6.84-6.86)x(2.38+2.38)/2	-0.05		
		(6.81-6.84)x(2.38+2.38)/2	-0.07		
		(6.77-6.81)x(2.37+2.38)/2	-0.10		
		(6.19-6.77)x(2.27+2.37)/2	-1.35		
		(5.41-6.19)x(2.28+2.27)/2	-1.77		
		(4.51-5.41)x(2.29+2.28)/2	-2.06		
		(4.25-4.51)x(2.29+2.29)/2	-0.60		
		(4.02-4.25)x(2.29+2.29)/2	-0.53		
		(3.08-4.02)x(2.28+2.29)/2	-2.15		
		(2.00-3.08)x(2.29+2.28)/2	-2.47		
		(1.92-2.00)x(2.29+2.29)/2	-0.18		
		(1.85-1.92)x(2.29+2.29)/2	-0.16		
		(0.76-1.85)x(2.31+2.29)/2	-2.51		
		(-0.32-0.76)x(2.30+2.31)/2	-2.49		
		(-0.41--0.32)x(2.30+2.30)/2	-0.21		
		(-0.51--0.41)x(2.30+2.30)/2	-0.23		
		(-1.57--0.51)x(2.31+2.30)/2	-2.44		
		(-2.49--1.57)x(2.30+2.31)/2	-2.12		
		(-2.73--2.49)x(2.30+2.30)/2	-0.55		
		(-3.02--2.73)x(2.30+2.30)/2	-0.67		
		(-3.90--3.02)x(2.31+2.30)/2	-2.03		
		(-4.66--3.90)x(2.29+2.31)/2	-1.75		
		(-5.06--4.66)x(2.30+2.29)/2	-0.92		
		(-5.68--5.06)x(2.33+2.30)/2	-1.44		
		(-5.97--5.68)x(2.34+2.33)/2	-0.68		
		(-6.17--5.97)x(2.34+2.34)/2	-0.47		
		(-6.21--6.17)x(2.37+2.34)/2	-0.09		
		(-6.44--6.21)x(2.46+2.37)/2	-0.56		
		(-6.50--6.44)x(2.42+2.46)/2	-0.15		
		(-6.53--6.50)x(2.41+2.42)/2	-0.07		
		(-6.82--6.53)x(2.46+2.41)/2	-0.71		
		(-7.39--6.82)x(2.54+2.46)/2	-1.42		
		(-8.04--7.39)x(2.62+2.54)/2	-1.68		
		(-8.55--8.04)x(2.68+2.62)/2	-1.35		
		(-8.99--8.55)x(2.71+2.68)/2	-1.19		
		(-9.71--8.99)x(2.69+2.71)/2	-1.94		
		(-10.54--9.71)x(2.50+2.69)/2	-2.15		
				8.71	
12bis 166.40	B01	(-10.86--11.23)x(2.70+2.60)/2	0.98		
		(-10.12--10.86)x(2.89+2.70)/2	2.07		
		(-9.47--10.12)x(2.95+2.89)/2	1.90		
		(-8.96--9.47)x(2.98+2.95)/2	1.51		
		(-8.37--8.96)x(2.95+2.98)/2	1.75		
		(-7.79--8.37)x(2.92+2.95)/2	1.70		
		(-7.62--7.79)x(2.90+2.92)/2	0.49		
		(-7.53--7.62)x(2.89+2.90)/2	0.26		
		(-7.30--7.53)x(2.94+2.89)/2	0.67		
		(-7.27--7.30)x(2.96+2.94)/2	0.09		
		(-7.00--7.27)x(2.86+2.96)/2	0.79		
		(-6.99--7.00)x(2.86+2.86)/2	0.03		
		(-6.86--6.99)x(2.83+2.86)/2	0.37		
		(-6.63--6.86)x(2.83+2.83)/2	0.65		
		(-5.88--6.63)x(2.81+2.83)/2	2.12		
		(-5.47--5.88)x(2.80+2.81)/2	1.15		
		(-5.11--5.47)x(2.80+2.80)/2	1.01		
		(-4.31--5.11)x(2.80+2.80)/2	2.24		
		(-3.39--4.31)x(2.80+2.80)/2	2.58		
		(-3.15--3.39)x(2.80+2.80)/2	0.67		
		(-2.93--3.15)x(2.80+2.80)/2	0.62		
		(-1.98--2.93)x(2.80+2.80)/2	2.66		
		(-0.89--1.98)x(2.80+2.80)/2	3.05		
		(-0.82--0.89)x(2.80+2.80)/2	0.20		
		(-0.76--0.82)x(2.80+2.80)/2	0.17		
		(-0.05--0.76)x(2.86+2.80)/2	2.01		
		(0.01--0.05)x(2.86+2.86)/2	0.17		
		(0.34-0.01)x(2.81+2.86)/2	0.94		
		(1.42-0.34)x(2.82+2.81)/2	3.04		
		(1.50-1.42)x(2.82+2.82)/2	0.23		
		(1.60-1.50)x(2.82+2.82)/2	0.28		
		(2.67-1.60)x(2.81+2.82)/2	3.01		
		(3.60-2.67)x(2.78+2.81)/2	2.60		
		(3.83-3.60)x(2.79+2.78)/2	0.64		
		(4.09-3.83)x(2.80+2.79)/2	0.73		
		(4.99-4.09)x(2.85+2.80)/2	2.54		
		(5.26-4.99)x(2.87+2.85)/2	0.77		
		(5.48-5.26)x(2.90+2.87)/2	0.63		
		(5.49-5.48)x(2.90+2.90)/2	0.03		
		(5.79-5.49)x(2.88+2.90)/2	0.87		
		(5.93-5.79)x(2.85+2.88)/2	0.40		
		(5.94-5.93)x(2.85+2.85)/2	0.03		
		(6.02-5.94)x(2.88+2.85)/2	0.23		
		(6.15-6.02)x(2.86+2.88)/2	0.37		
		(6.58-6.15)x(2.89+2.86)/2	1.24		
		(6.96-6.58)x(2.90+2.89)/2	1.10		
		(6.58-6.96)x(2.39+2.40)/2	-0.91		
		(6.15-6.58)x(2.36+2.39)/2	-1.02		
		(6.02-6.15)x(2.38+2.36)/2	-0.31		
		(5.94-6.02)x(2.35+2.38)/2	-0.19		
		(5.93-5.94)x(2.35+2.35)/2	-0.02		
		(5.79-5.93)x(2.38+2.35)/2	-0.33		
		(5.49-5.79)x(2.40+2.38)/2	-0.72		
		(5.48-5.49)x(2.40+2.40)/2	-0.02		
		A RIPORTARE mq	48.07		

BONIFICA

N. SEZIONE PROG.	FIG.	ELEMENTI DI CALCOLO	AREA ELEMENTARE mq	AREA FIGURA mq	NOTE
		RIPORTO mq	48.07		
		(5.26-5.48)x(2.37+2.40)/2	-0.52		
		(4.99-5.26)x(2.35+2.37)/2	-0.64		
		(4.09-4.99)x(2.30+2.35)/2	-2.09		
		(3.83-4.09)x(2.29+2.30)/2	-0.60		
		(3.60-3.83)x(2.28+2.29)/2	-0.53		
		(2.67-3.60)x(2.31+2.28)/2	-2.13		
		(1.60-2.67)x(2.32+2.31)/2	-2.48		
		(1.50-1.60)x(2.32+2.32)/2	-0.23		
		(1.42-1.50)x(2.32+2.32)/2	-0.19		
		(0.34-1.42)x(2.31+2.32)/2	-2.50		
		(0.01-0.34)x(2.36+2.31)/2	-0.77		
		(-0.05-0.01)x(2.36+2.36)/2	-0.14		
		(-0.76--0.05)x(2.30+2.36)/2	-1.65		
		(-0.82--0.76)x(2.30+2.30)/2	-0.14		
		(-0.89--0.82)x(2.30+2.30)/2	-0.16		
		(-1.98--0.89)x(2.30+2.30)/2	-2.51		
		(-2.93--1.98)x(2.30+2.30)/2	-2.19		
		(-3.15--2.93)x(2.30+2.30)/2	-0.51		
		(-3.39--3.15)x(2.30+2.30)/2	-0.55		
		(-4.31--3.39)x(2.30+2.30)/2	-2.12		
		(-5.11--4.31)x(2.30+2.30)/2	-1.84		
		(-5.47--5.11)x(2.30+2.30)/2	-0.83		
		(-5.88--5.47)x(2.31+2.30)/2	-0.95		
		(-6.63--5.88)x(2.33+2.31)/2	-1.74		
		(-6.86--6.63)x(2.33+2.33)/2	-0.54		
		(-6.99--6.86)x(2.36+2.33)/2	-0.30		
		(-7.00--6.99)x(2.36+2.36)/2	-0.02		
		(-7.27--7.00)x(2.46+2.36)/2	-0.65		
		(-7.30--7.27)x(2.44+2.46)/2	-0.07		
		(-7.53--7.30)x(2.39+2.44)/2	-0.56		
		(-7.62--7.53)x(2.40+2.39)/2	-0.22		
		(-7.79--7.62)x(2.42+2.40)/2	-0.41		
		(-8.37--7.79)x(2.45+2.42)/2	-1.41		
		(-8.96--8.37)x(2.48+2.45)/2	-1.45		
		(-9.47--8.96)x(2.45+2.48)/2	-1.26		
		(-10.12--9.47)x(2.39+2.45)/2	-1.57		
		(-10.86--10.12)x(2.20+2.39)/2	-1.70		
		(-11.23--10.86)x(2.10+2.20)/2	-0.80		
				9.10	
13 180.00	BO1	(-11.17--11.59)x(3.38+3.35)/2	1.41		
		(-11.02--11.17)x(3.39+3.38)/2	0.51		
		(-10.86--11.02)x(3.39+3.39)/2	0.54		
		(-9.86--10.86)x(3.43+3.39)/2	3.41		
		(-8.97--9.86)x(3.43+3.43)/2	3.05		
		(-8.70--8.97)x(3.43+3.43)/2	0.93		
		(-8.41--8.70)x(3.44+3.43)/2	1.00		
		(-7.55--8.41)x(3.46+3.44)/2	2.97		
		(-6.77--7.55)x(3.47+3.46)/2	2.70		
		(-6.39--6.77)x(3.48+3.47)/2	1.32		
		(-5.96--6.39)x(3.47+3.48)/2	1.49		
		(-5.23--5.96)x(3.47+3.47)/2	2.53		
		(-4.57--5.23)x(3.45+3.47)/2	2.28		
		(-4.24--4.57)x(3.43+3.45)/2	1.14		
		(-4.07--4.24)x(3.43+3.43)/2	0.58		
		(-4.06--4.07)x(3.43+3.43)/2	0.03		
		(-4.07--4.06)x(2.93+2.93)/2	-0.03		
		(-4.08--4.07)x(2.93+2.93)/2	-0.03		
		(-4.26--4.08)x(2.93+2.93)/2	-0.53		
		(-4.27--4.26)x(2.93+2.93)/2	-0.03		
		(-4.59--4.27)x(2.95+2.93)/2	-0.94		
		(-5.24--4.59)x(2.97+2.95)/2	-1.92		
		(-5.96--5.24)x(2.97+2.97)/2	-2.14		
		(-6.38--5.96)x(2.98+2.97)/2	-1.25		
		(-6.76--6.38)x(2.97+2.98)/2	-1.13		
		(-7.53--6.76)x(2.96+2.97)/2	-2.28		
		(-8.40--7.53)x(2.94+2.96)/2	-2.57		
		(-8.70--8.40)x(2.93+2.94)/2	-0.88		
		(-8.71--8.70)x(2.93+2.93)/2	-0.03		
		(-8.97--8.71)x(2.93+2.93)/2	-0.76		
		(-9.85--8.97)x(2.93+2.93)/2	-2.58		
		(-10.84--9.85)x(2.89+2.93)/2	-2.88		
		(-10.85--10.84)x(2.89+2.89)/2	-0.03		
		(-11.00--10.85)x(2.89+2.89)/2	-0.43		
		(-11.14--11.00)x(2.88+2.89)/2	-0.40		
		(-11.59--11.14)x(2.85+2.88)/2	-1.29		
				3.76	
13bis 185.51	BO1	(-10.62--11.17)x(3.58+3.55)/2	1.96		
		(-10.44--10.62)x(3.59+3.58)/2	0.65		
		(-10.24--10.44)x(3.58+3.59)/2	0.72		
		(-9.28--10.24)x(3.57+3.58)/2	3.43		
		(-8.42--9.28)x(3.53+3.57)/2	3.05		
		(-8.12--8.42)x(3.53+3.53)/2	1.06		
		(-7.79--8.12)x(3.52+3.53)/2	1.16		
		(-6.96--7.79)x(3.49+3.52)/2	2.91		
		(-6.22--6.96)x(3.48+3.49)/2	2.58		
		(-5.80--6.22)x(3.47+3.48)/2	1.46		
		(-5.34--5.80)x(3.48+3.47)/2	1.60		
		(-4.64--5.34)x(3.48+3.48)/2	2.44		
		(-4.11--4.64)x(3.48+3.48)/2	1.84		
		(-4.64--4.11)x(2.98+2.98)/2	-1.58		
		(-5.34--4.64)x(2.98+2.98)/2	-2.09		
		(-5.80--5.34)x(2.97+2.98)/2	-1.37		
		(-6.22--5.80)x(2.98+2.97)/2	-1.25		
		(-6.96--6.22)x(2.99+2.98)/2	-2.21		
		(-7.79--6.96)x(3.02+2.99)/2	-2.49		
		(-8.12--7.79)x(3.03+3.02)/2	-1.00		
		(-8.42--8.12)x(3.03+3.03)/2	-0.91		
		(-9.28--8.42)x(3.07+3.03)/2	-2.62		
		(-10.24--9.28)x(3.08+3.07)/2	-2.95		
		(-10.44--10.24)x(3.09+3.08)/2	-0.62		
		(-10.62--10.44)x(3.08+3.09)/2	-0.56		
		(-11.17--10.62)x(3.05+3.08)/2	-1.69		
				3.52	
14 195.00	BO1	(-11.44--11.86)x(3.60+3.56)/2	1.50		
		(-11.23--11.44)x(3.62+3.60)/2	0.76		
		A RIPORTARE mq	2.26		

BONIFICA

N. SEZIONE PROG.	FIG.	ELEMENTI DI CALCOLO	AREA ELEMENTARE mq	AREA FIGURA mq	NOTE
		RIPORTO mq	2.26		
		(-11.04--11.23)x(3.63+3.62)/2	0.69		
		(-10.07--11.04)x(3.66+3.63)/2	3.54		
		(-8.99--10.07)x(3.59+3.66)/2	3.92		
		(-8.91--8.99)x(3.58+3.59)/2	0.29		
		(-8.84--8.91)x(3.58+3.58)/2	0.25		
		(-7.75--8.84)x(3.48+3.58)/2	3.85		
		(-6.64--7.75)x(3.44+3.48)/2	3.84		
		(-6.59--6.64)x(3.44+3.44)/2	0.17		
		(-6.53--6.59)x(3.43+3.44)/2	0.21		
		(-5.43--6.53)x(3.35+3.43)/2	3.73		
		(-4.44--5.43)x(3.29+3.35)/2	3.29		
		(-4.27--4.44)x(3.27+3.29)/2	0.56		
		(-4.08--4.27)x(3.26+3.27)/2	0.62		
		(-3.88--4.08)x(3.25+3.26)/2	0.65		
		(-4.08--3.88)x(2.76+2.75)/2	-0.55		
		(-4.27--4.08)x(2.77+2.76)/2	-0.53		
		(-4.44--4.27)x(2.79+2.77)/2	-0.47		
		(-5.43--4.44)x(2.85+2.79)/2	-2.79		
		(-6.53--5.43)x(2.93+2.85)/2	-3.18		
		(-6.59--6.53)x(2.94+2.93)/2	-0.18		
		(-6.64--6.59)x(2.94+2.94)/2	-0.15		
		(-7.75--6.64)x(2.98+2.94)/2	-3.29		
		(-8.84--7.75)x(3.08+2.98)/2	-3.30		
		(-8.91--8.84)x(3.08+3.08)/2	-0.22		
		(-8.99--8.91)x(3.09+3.08)/2	-0.25		
		(-10.07--8.99)x(3.16+3.09)/2	-3.38		
		(-11.04--10.07)x(3.13+3.16)/2	-3.05		
		(-11.23--11.04)x(3.12+3.13)/2	-0.59		
		(-11.44--11.23)x(3.10+3.12)/2	-0.65		
		(-11.86--11.44)x(3.06+3.10)/2	-1.29		
				4.00	
15 210.00	BO1	(-13.11--13.15)x(3.45+3.45)/2	0.14		
		(-12.59--13.11)x(3.45+3.45)/2	1.79		
		(-12.01--12.59)x(3.42+3.45)/2	1.99		
		(-11.43--12.01)x(3.38+3.42)/2	1.97		
		(-10.91--11.43)x(3.34+3.38)/2	1.75		
		(-10.27--10.91)x(3.29+3.34)/2	2.12		
		(-9.56--10.27)x(3.22+3.29)/2	2.31		
		(-9.12--9.56)x(3.19+3.22)/2	1.41		
		(-8.71--9.12)x(3.18+3.19)/2	1.31		
		(-7.96--8.71)x(3.22+3.18)/2	2.40		
		(-7.11--7.96)x(3.13+3.22)/2	2.70		
		(-6.80--7.11)x(3.12+3.13)/2	0.97		
		(-6.52--6.80)x(3.10+3.12)/2	0.87		
		(-5.64--6.52)x(3.06+3.10)/2	2.71		
		(-4.66--5.64)x(3.05+3.06)/2	2.99		
		(-4.48--4.66)x(3.05+3.05)/2	0.55		
		(-4.32--4.48)x(3.03+3.05)/2	0.49		
		(-3.55--4.32)x(2.92+3.03)/2	2.29		
		(-4.32--3.55)x(2.53+2.42)/2	-1.91		
		(-4.48--4.32)x(2.55+2.53)/2	-0.41		
		(-4.66--4.48)x(2.55+2.55)/2	-0.46		
		(-5.64--4.66)x(2.56+2.55)/2	-2.50		
		(-6.52--5.64)x(2.60+2.56)/2	-2.27		
		(-6.80--6.52)x(2.62+2.60)/2	-0.73		
		(-7.11--6.80)x(2.63+2.62)/2	-0.81		
		(-7.96--7.11)x(2.72+2.63)/2	-2.27		
		(-8.71--7.96)x(2.68+2.72)/2	-2.03		
		(-9.12--8.71)x(2.69+2.68)/2	-1.10		
		(-9.56--9.12)x(2.72+2.69)/2	-1.19		
		(-10.27--9.56)x(2.79+2.72)/2	-1.96		
		(-10.91--10.27)x(2.84+2.79)/2	-1.80		
		(-11.43--10.91)x(2.88+2.84)/2	-1.49		
		(-12.01--11.43)x(2.92+2.88)/2	-1.68		
		(-12.59--12.01)x(2.95+2.92)/2	-1.70		
		(-13.11--12.59)x(2.95+2.95)/2	-1.53		
		(-13.15--13.11)x(2.95+2.95)/2	-0.12		
				4.80	
16 225.00	BO1	(-14.02--14.47)x(3.15+3.15)/2	1.42		
		(-13.28--14.02)x(3.12+3.15)/2	2.32		
		(-12.85--13.28)x(3.11+3.12)/2	1.34		
		(-12.49--12.85)x(3.09+3.11)/2	1.12		
		(-11.97--12.49)x(3.10+3.09)/2	1.61		
		(-11.68--11.97)x(3.07+3.10)/2	0.89		
		(-11.21--11.68)x(3.05+3.07)/2	1.44		
		(-10.51--11.21)x(2.97+3.05)/2	2.11		
		(-10.46--10.51)x(2.96+2.97)/2	0.15		
		(-10.36--10.46)x(2.96+2.96)/2	0.30		
		(-9.34--10.36)x(2.90+2.96)/2	2.99		
		(-8.24--9.34)x(2.77+2.90)/2	3.12		
		(-8.17--8.24)x(2.76+2.77)/2	0.19		
		(-8.12--8.17)x(2.77+2.76)/2	0.14		
		(-7.21--8.12)x(2.84+2.77)/2	2.55		
		(-7.19--7.21)x(2.83+2.84)/2	0.06		
		(-7.04--7.19)x(2.89+2.83)/2	0.43		
		(-7.00--7.04)x(2.87+2.89)/2	0.12		
		(-6.98--7.00)x(2.87+2.87)/2	0.06		
		(-6.97--6.98)x(2.88+2.87)/2	0.03		
		(-6.94--6.97)x(2.89+2.88)/2	0.09		
		(-6.87--6.94)x(2.87+2.89)/2	0.20		
		(-6.83--6.87)x(2.87+2.87)/2	0.11		
		(-6.68--6.83)x(2.77+2.87)/2	0.42		
		(-6.58--6.68)x(2.87+2.77)/2	0.28		
		(-6.55--6.58)x(2.87+2.87)/2	0.09		
		(-6.49--6.55)x(2.89+2.87)/2	0.17		
		(-6.43--6.49)x(2.88+2.89)/2	0.17		
		(-6.40--6.43)x(2.88+2.88)/2	0.09		
		(-6.33--6.40)x(2.87+2.88)/2	0.20		
		(-6.01--6.33)x(2.82+2.87)/2	0.91		
		(-5.83--6.01)x(2.81+2.82)/2	0.51		
		(-5.48--5.83)x(2.82+2.81)/2	0.99		
		(-4.66--5.48)x(2.84+2.82)/2	2.32		
		(-3.98--4.66)x(2.84+2.84)/2	1.93		
		(-3.49--3.98)x(2.83+2.84)/2	1.39		
		(-3.98--3.49)x(2.34+2.33)/2	-1.14		
		A RIPORTARE mq	31.12		

BONIFICA

N. SEZIONE PROG.	FIG.	ELEMENTI DI CALCOLO	AREA ELEMENTARE mq	AREA FIGURA mq	NOTE
		RIPORTO mq	31.12		
		(-4.66--3.98)x(2.34+2.34)/2	-1.59		
		(-5.48--4.66)x(2.32+2.34)/2	-1.91		
		(-5.83--5.48)x(2.31+2.32)/2	-0.81		
		(-6.01--5.83)x(2.32+2.31)/2	-0.42		
		(-6.33--6.01)x(2.37+2.32)/2	-0.75		
		(-6.40--6.33)x(2.38+2.37)/2	-0.17		
		(-6.43--6.40)x(2.38+2.38)/2	-0.07		
		(-6.49--6.43)x(2.39+2.38)/2	-0.14		
		(-6.55--6.49)x(2.37+2.39)/2	-0.14		
		(-6.58--6.55)x(2.37+2.37)/2	-0.07		
		(-6.68--6.58)x(2.27+2.37)/2	-0.23		
		(-6.83--6.68)x(2.37+2.27)/2	-0.35		
		(-6.87--6.83)x(2.37+2.37)/2	-0.09		
		(-6.94--6.87)x(2.39+2.37)/2	-0.17		
		(-6.97--6.94)x(2.38+2.39)/2	-0.07		
		(-6.98--6.97)x(2.37+2.38)/2	-0.02		
		(-7.00--6.98)x(2.37+2.37)/2	-0.05		
		(-7.04--7.00)x(2.39+2.37)/2	-0.10		
		(-7.19--7.04)x(2.33+2.39)/2	-0.35		
		(-7.21--7.19)x(2.34+2.33)/2	-0.05		
		(-8.12--7.21)x(2.27+2.34)/2	-2.10		
		(-8.17--8.12)x(2.26+2.27)/2	-0.11		
		(-8.24--8.17)x(2.27+2.26)/2	-0.16		
		(-9.34--8.24)x(2.40+2.27)/2	-2.57		
		(-10.36--9.34)x(2.46+2.40)/2	-2.48		
		(-10.46--10.36)x(2.46+2.46)/2	-0.25		
		(-10.51--10.46)x(2.47+2.46)/2	-0.12		
		(-11.21--10.51)x(2.55+2.47)/2	-1.76		
		(-11.68--11.21)x(2.57+2.55)/2	-1.20		
		(-11.97--11.68)x(2.60+2.57)/2	-0.75		
		(-12.49--11.97)x(2.59+2.60)/2	-1.35		
		(-12.85--12.49)x(2.61+2.59)/2	-0.94		
		(-13.28--12.85)x(2.62+2.61)/2	-1.12		
		(-14.02--13.28)x(2.65+2.62)/2	-1.95		
		(-14.47--14.02)x(2.65+2.65)/2	-1.19		
				5.52	
17 240.00	BO1	(-15.29--15.51)x(2.79+2.80)/2	0.61		
		(-14.20--15.29)x(2.80+2.79)/2	3.05		
		(-14.07--14.20)x(2.81+2.80)/2	0.36		
		(-13.85--14.07)x(2.80+2.81)/2	0.62		
		(-12.86--13.85)x(2.76+2.80)/2	2.75		
		(-12.64--12.86)x(2.77+2.76)/2	0.61		
		(-12.30--12.64)x(2.79+2.77)/2	0.95		
		(-11.90--12.30)x(2.80+2.79)/2	1.12		
		(-11.64--11.90)x(2.81+2.80)/2	0.73		
		(-10.45--11.64)x(2.78+2.81)/2	3.33		
		(-10.42--10.45)x(2.78+2.78)/2	0.08		
		(-10.40--10.42)x(2.78+2.78)/2	0.06		
		(-9.20--10.40)x(2.79+2.78)/2	3.34		
		(-9.04--9.20)x(2.80+2.79)/2	0.45		
		(-9.03--9.04)x(2.80+2.80)/2	0.03		
		(-8.74--9.03)x(3.38+2.80)/2	0.90		
		(-8.69--8.74)x(3.46+3.38)/2	0.17		
		(-8.60--8.69)x(3.65+3.46)/2	0.32		
		(-8.58--8.60)x(3.90+3.65)/2	0.08		
		(-8.56--8.58)x(3.71+3.90)/2	0.08		
		(-8.52--8.56)x(3.31+3.71)/2	0.14		
		(-8.42--8.52)x(3.33+3.31)/2	0.33		
		(-8.38--8.42)x(3.72+3.33)/2	0.14		
		(-8.36--8.38)x(3.89+3.72)/2	0.08		
		(-8.34--8.36)x(3.61+3.89)/2	0.07		
		(-8.21--8.34)x(2.81+3.61)/2	0.42		
		(-8.19--8.21)x(2.81+2.81)/2	0.06		
		(-8.16--8.19)x(2.79+2.81)/2	0.08		
		(-8.14--8.16)x(2.80+2.79)/2	0.06		
		(-8.10--8.14)x(2.84+2.80)/2	0.11		
		(-7.98--8.10)x(2.85+2.84)/2	0.34		
		(-7.86--7.98)x(2.85+2.85)/2	0.34		
		(-7.22--7.86)x(2.83+2.85)/2	1.82		
		(-6.77--7.22)x(2.78+2.83)/2	1.26		
		(-6.60--6.77)x(2.78+2.78)/2	0.47		
		(-6.59--6.60)x(2.87+2.78)/2	0.03		
		(-6.44--6.59)x(2.86+2.87)/2	0.43		
		(-5.69--6.44)x(2.86+2.86)/2	2.15		
		(-5.60--5.69)x(2.86+2.86)/2	0.26		
		(-5.45--5.60)x(2.88+2.86)/2	0.43		
		(-5.00--5.45)x(2.87+2.88)/2	1.29		
		(-4.70--5.00)x(2.83+2.87)/2	0.85		
		(-4.55--4.70)x(2.87+2.83)/2	0.43		
		(-4.33--4.55)x(2.85+2.87)/2	0.63		
		(-3.67--4.33)x(2.86+2.85)/2	1.88		
		(-3.49--3.67)x(2.86+2.86)/2	0.51		
		(-3.67--3.49)x(2.36+2.36)/2	-0.42		
		(-4.33--3.67)x(2.35+2.36)/2	-1.55		
		(-4.55--4.33)x(2.37+2.35)/2	-0.52		
		(-4.70--4.55)x(2.33+2.37)/2	-0.35		
		(-5.00--4.70)x(2.37+2.33)/2	-0.70		
		(-5.45--5.00)x(2.38+2.37)/2	-1.07		
		(-5.60--5.45)x(2.36+2.38)/2	-0.36		
		(-5.69--5.60)x(2.36+2.36)/2	-0.21		
		(-6.44--5.69)x(2.36+2.36)/2	-1.77		
		(-6.59--6.44)x(2.37+2.36)/2	-0.35		
		(-6.60--6.59)x(2.28+2.37)/2	-0.02		
		(-6.77--6.60)x(2.28+2.28)/2	-0.39		
		(-7.22--6.77)x(2.33+2.28)/2	-1.04		
		(-7.86--7.22)x(2.35+2.33)/2	-1.50		
		(-7.98--7.86)x(2.35+2.35)/2	-0.28		
		(-8.10--7.98)x(2.34+2.35)/2	-0.28		
		(-8.14--8.10)x(2.30+2.34)/2	-0.09		
		(-8.16--8.14)x(2.29+2.30)/2	-0.05		
		(-8.19--8.16)x(2.31+2.29)/2	-0.07		
		(-8.21--8.19)x(2.31+2.31)/2	-0.05		
		(-8.34--8.21)x(3.11+2.31)/2	-0.35		
		(-8.36--8.34)x(3.39+3.11)/2	-0.06		
		(-8.38--8.36)x(3.22+3.39)/2	-0.07		
		A RIPORTARE mq	22.70		

BONIFICA

N. SEZIONE PROG.	FIG.	ELEMENTI DI CALCOLO	AREA ELEMENTARE mq	AREA FIGURA mq	NOTE
		RIPORTO mq	22.70		
		(-8.42--8.38)x(2.83+3.22)/2	-0.12		
		(-8.52--8.42)x(2.81+2.83)/2	-0.28		
		(-8.56--8.52)x(3.21+2.81)/2	-0.12		
		(-8.58--8.56)x(3.40+3.21)/2	-0.07		
		(-8.60--8.58)x(3.15+3.40)/2	-0.07		
		(-8.69--8.60)x(2.96+3.15)/2	-0.27		
		(-8.74--8.69)x(2.88+2.96)/2	-0.15		
		(-9.03--8.74)x(2.30+2.88)/2	-0.75		
		(-9.04--9.03)x(2.30+2.30)/2	-0.02		
		(-9.20--9.04)x(2.29+2.30)/2	-0.37		
		(-10.40--9.20)x(2.28+2.29)/2	-2.74		
		(-10.42--10.40)x(2.28+2.28)/2	-0.05		
		(-10.45--10.42)x(2.28+2.28)/2	-0.07		
		(-11.64--10.45)x(2.31+2.28)/2	-2.73		
		(-11.90--11.64)x(2.30+2.31)/2	-0.60		
		(-12.30--11.90)x(2.29+2.30)/2	-0.92		
		(-12.64--12.30)x(2.27+2.29)/2	-0.78		
		(-12.86--12.64)x(2.26+2.27)/2	-0.50		
		(-13.85--12.86)x(2.30+2.26)/2	-2.26		
		(-14.07--13.85)x(2.31+2.30)/2	-0.51		
		(-14.20--14.07)x(2.30+2.31)/2	-0.30		
		(-15.29--14.20)x(2.29+2.30)/2	-2.50		
		(-15.51--15.29)x(2.30+2.29)/2	-0.50		
				6.02	
18 255.00	BO1	(-15.36--15.76)x(2.92+2.89)/2	1.16		
		(-15.19--15.36)x(2.99+2.92)/2	0.50		
		(-14.73--15.19)x(3.07+2.99)/2	1.39		
		(-14.47--14.73)x(3.08+3.07)/2	0.80		
		(-14.39--14.47)x(3.08+3.08)/2	0.25		
		(-13.72--14.39)x(3.07+3.08)/2	2.06		
		(-13.18--13.72)x(3.11+3.07)/2	1.67		
		(-12.08--13.18)x(3.17+3.11)/2	3.45		
		(-11.87--12.08)x(3.18+3.17)/2	0.67		
		(-11.04--11.87)x(3.19+3.18)/2	2.64		
		(-10.56--11.04)x(3.19+3.19)/2	1.53		
		(-10.44--10.56)x(3.19+3.19)/2	0.38		
		(-9.24--10.44)x(3.23+3.19)/2	3.85		
		(-8.80--9.24)x(3.26+3.23)/2	1.43		
		(-7.93--8.80)x(3.29+3.26)/2	2.85		
		(-7.16--7.93)x(3.31+3.29)/2	2.54		
		(-6.62--7.16)x(3.31+3.31)/2	1.79		
		(-5.52--6.62)x(3.22+3.31)/2	3.59		
		(-5.30--5.52)x(3.21+3.22)/2	0.71		
		(-5.15--5.30)x(3.17+3.21)/2	0.48		
		(-4.33--5.15)x(3.08+3.17)/2	2.56		
		(-4.25--4.33)x(3.02+3.08)/2	0.24		
		(-4.24--4.25)x(3.01+3.02)/2	0.03		
		(-4.15--4.24)x(3.01+3.01)/2	0.27		
		(-4.14--4.15)x(2.87+2.89)/2	0.03		
		(-4.10--4.14)x(2.87+2.87)/2	0.11		
		(-4.09--4.10)x(2.90+2.87)/2	0.03		
		(-3.96--4.09)x(2.95+2.90)/2	0.38		
		(-3.93--3.96)x(2.95+2.95)/2	0.09		
		(-3.92--3.93)x(2.95+2.95)/2	0.03		
		(-3.54--3.92)x(2.91+2.95)/2	1.11		
		(-3.92--3.54)x(2.45+2.41)/2	-0.92		
		(-3.93--3.92)x(2.45+2.45)/2	-0.02		
		(-3.96--3.93)x(2.45+2.45)/2	-0.07		
		(-4.09--3.96)x(2.40+2.45)/2	-0.32		
		(-4.10--4.09)x(2.37+2.40)/2	-0.02		
		(-4.14--4.10)x(2.37+2.37)/2	-0.09		
		(-4.15--4.14)x(2.39+2.37)/2	-0.02		
		(-4.24--4.15)x(2.51+2.51)/2	-0.23		
		(-4.25--4.24)x(2.52+2.51)/2	-0.03		
		(-4.33--4.25)x(2.58+2.52)/2	-0.20		
		(-5.15--4.33)x(2.67+2.58)/2	-2.15		
		(-5.30--5.15)x(2.71+2.67)/2	-0.40		
		(-5.52--5.30)x(2.72+2.71)/2	-0.60		
		(-6.62--5.52)x(2.81+2.72)/2	-3.04		
		(-7.16--6.62)x(2.81+2.81)/2	-1.52		
		(-7.93--7.16)x(2.79+2.81)/2	-2.16		
		(-8.80--7.93)x(2.76+2.79)/2	-2.41		
		(-9.24--8.80)x(2.73+2.76)/2	-1.21		
		(-10.44--9.24)x(2.69+2.73)/2	-3.25		
		(-10.56--10.44)x(2.69+2.69)/2	-0.32		
		(-11.04--10.56)x(2.69+2.69)/2	-1.29		
		(-11.87--11.04)x(2.68+2.69)/2	-2.23		
		(-12.08--11.87)x(2.67+2.68)/2	-0.56		
		(-13.18--12.08)x(2.61+2.67)/2	-2.90		
		(-13.72--13.18)x(2.57+2.61)/2	-1.40		
		(-14.39--13.72)x(2.58+2.57)/2	-1.73		
		(-14.47--14.39)x(2.58+2.58)/2	-0.21		
		(-14.73--14.47)x(2.57+2.58)/2	-0.67		
		(-15.19--14.73)x(2.49+2.57)/2	-1.16		
		(-15.36--15.19)x(2.42+2.49)/2	-0.42		
		(-15.76--15.36)x(2.39+2.42)/2	-0.96		
				6.11	
18 bis 265.11	BO1	(-14.83--15.92)x(2.71+2.75)/2	2.98		
		(-14.82--14.83)x(2.71+2.71)/2	0.03		
		(-14.77--14.82)x(2.71+2.71)/2	0.14		
		(-13.43--14.77)x(2.71+2.71)/2	3.63		
		(-13.32--13.43)x(2.71+2.71)/2	0.30		
		(-12.03--13.32)x(2.71+2.71)/2	3.50		
		(-11.83--12.03)x(2.73+2.71)/2	0.54		
		(-11.67--11.83)x(2.74+2.73)/2	0.44		
		(-11.56--11.67)x(2.75+2.74)/2	0.30		
		(-11.48--11.56)x(2.75+2.75)/2	0.22		
		(-11.17--11.48)x(2.78+2.75)/2	0.86		
		(-11.16--11.17)x(2.78+2.78)/2	0.03		
		(-10.74--11.16)x(2.74+2.78)/2	1.16		
		(-10.69--10.74)x(2.73+2.74)/2	0.14		
		(-10.63--10.69)x(2.72+2.73)/2	0.16		
		(-10.50--10.63)x(2.73+2.72)/2	0.35		
		(-10.37--10.50)x(2.74+2.73)/2	0.36		
		(-9.94--10.37)x(2.80+2.74)/2	1.19		
		A RIPORTARE mq	16.33		

BONIFICA

N. SEZIONE PROG.	FIG.	ELEMENTI DI CALCOLO	AREA ELEMENTARE mq	AREA FIGURA mq	NOTE
		RIPORTO mq	16.33		
		(-9.28--9.94)x(2.74+2.80)/2	1.83		
		(-9.23--9.28)x(2.74+2.74)/2	0.14		
		(-8.79--9.23)x(2.75+2.74)/2	1.21		
		(-7.83--8.79)x(2.76+2.75)/2	2.64		
		(-7.28--7.83)x(2.81+2.76)/2	1.53		
		(-6.44--7.28)x(2.92+2.81)/2	2.41		
		(-5.78--6.44)x(2.97+2.92)/2	1.94		
		(-5.39--5.78)x(3.00+2.97)/2	1.16		
		(-5.04--5.39)x(3.02+3.00)/2	1.05		
		(-4.67--5.04)x(3.04+3.02)/2	1.12		
		(-4.27--4.67)x(3.03+3.04)/2	1.21		
		(-3.67--4.27)x(3.04+3.03)/2	1.82		
		(-4.27--3.67)x(2.53+2.54)/2	-1.52		
		(-4.67--4.27)x(2.54+2.53)/2	-1.01		
		(-5.04--4.67)x(2.52+2.54)/2	-0.94		
		(-5.39--5.04)x(2.50+2.52)/2	-0.88		
		(-5.78--5.39)x(2.47+2.50)/2	-0.97		
		(-6.44--5.78)x(2.42+2.47)/2	-1.61		
		(-7.28--6.44)x(2.31+2.42)/2	-1.99		
		(-7.83--7.28)x(2.26+2.31)/2	-1.26		
		(-8.79--7.83)x(2.25+2.26)/2	-2.16		
		(-9.23--8.79)x(2.24+2.25)/2	-0.99		
		(-9.28--9.23)x(2.24+2.24)/2	-0.11		
		(-9.94--9.28)x(2.30+2.24)/2	-1.50		
		(-10.37--9.94)x(2.24+2.30)/2	-0.98		
		(-10.50--10.37)x(2.23+2.24)/2	-0.29		
		(-10.63--10.50)x(2.22+2.23)/2	-0.29		
		(-10.69--10.63)x(2.23+2.22)/2	-0.13		
		(-10.74--10.69)x(2.24+2.23)/2	-0.11		
		(-11.16--10.74)x(2.28+2.24)/2	-0.95		
		(-11.17--11.16)x(2.28+2.28)/2	-0.02		
		(-11.48--11.17)x(2.25+2.28)/2	-0.70		
		(-11.56--11.48)x(2.25+2.25)/2	-0.18		
		(-11.67--11.56)x(2.24+2.25)/2	-0.25		
		(-11.83--11.67)x(2.23+2.24)/2	-0.36		
		(-12.03--11.83)x(2.21+2.23)/2	-0.44		
		(-13.32--12.03)x(2.21+2.21)/2	-2.85		
		(-13.43--13.32)x(2.21+2.21)/2	-0.24		
		(-14.77--13.43)x(2.21+2.21)/2	-2.96		
		(-14.82--14.77)x(2.21+2.21)/2	-0.11		
		(-14.83--14.82)x(2.21+2.21)/2	-0.02		
		(-15.92--14.83)x(2.25+2.21)/2	-2.43		
				6.14	
18 bis 265.11	BO2	(4.75-4.52)x(2.69+2.69)/2	0.62		
		(4.78-4.75)x(2.70+2.69)/2	0.08		
		(6.14-4.78)x(2.70+2.70)/2	3.67		
		(6.22-6.14)x(2.70+2.70)/2	0.22		
		(6.67-6.22)x(2.68+2.70)/2	1.21		
		(6.89-6.67)x(2.65+2.68)/2	0.59		
		(7.01-6.89)x(2.67+2.65)/2	0.32		
		(7.02-7.01)x(2.70+2.67)/2	0.03		
		(7.18-7.02)x(2.62+2.70)/2	0.43		
		(7.25-7.18)x(2.60+2.62)/2	0.18		
		(7.54-7.25)x(2.56+2.60)/2	0.75		
		(7.60-7.54)x(2.55+2.56)/2	0.15		
		(7.62-7.60)x(2.54+2.55)/2	0.05		
		(7.71-7.62)x(2.27+2.54)/2	0.22		
		(7.72-7.71)x(2.27+2.27)/2	0.02		
		(7.74-7.72)x(2.27+2.27)/2	0.05		
		(7.75-7.74)x(2.27+2.27)/2	0.02		
		(7.82-7.75)x(2.45+2.39)/2	0.17		
		(7.96-7.82)x(2.44+2.45)/2	0.34		
		(8.10-7.96)x(2.44+2.44)/2	0.34		
		(8.39-8.10)x(2.43+2.44)/2	0.71		
		(8.58-8.39)x(2.40+2.43)/2	0.46		
		(8.63-8.58)x(2.50+2.40)/2	0.12		
		(8.68-8.63)x(2.81+2.50)/2	0.13		
		(8.71-8.68)x(2.64+2.81)/2	0.08		
		(9.03-8.71)x(2.41+2.64)/2	0.81		
		(9.06-9.03)x(2.42+2.41)/2	0.07		
		(9.12-9.06)x(2.43+2.42)/2	0.15		
		(9.31-9.12)x(2.46+2.43)/2	0.46		
		(10.34-9.31)x(2.64+2.46)/2	2.63		
		(10.82-10.34)x(2.67+2.64)/2	1.27		
		(11.73-10.82)x(2.69+2.67)/2	2.44		
		(12.33-11.73)x(2.67+2.69)/2	1.61		
		(12.45-12.33)x(2.67+2.67)/2	0.32		
		(12.33-12.45)x(2.17+2.17)/2	-0.26		
		(11.73-12.33)x(2.19+2.17)/2	-1.31		
		(10.82-11.73)x(2.17+2.19)/2	-1.98		
		(10.34-10.82)x(2.14+2.17)/2	-1.03		
		(9.31-10.34)x(1.96+2.14)/2	-2.11		
		(9.12-9.31)x(1.93+1.96)/2	-0.37		
		(9.06-9.12)x(1.92+1.93)/2	-0.12		
		(9.03-9.06)x(1.91+1.92)/2	-0.06		
		(8.71-9.03)x(2.14+1.91)/2	-0.65		
		(8.68-8.71)x(2.31+2.14)/2	-0.07		
		(8.63-8.68)x(2.00+2.31)/2	-0.11		
		(8.58-8.63)x(1.90+2.00)/2	-0.10		
		(8.39-8.58)x(1.93+1.90)/2	-0.36		
		(8.10-8.39)x(1.94+1.93)/2	-0.56		
		(7.96-8.10)x(1.94+1.94)/2	-0.27		
		(7.82-7.96)x(1.95+1.94)/2	-0.27		
		(7.75-7.82)x(1.89+1.95)/2	-0.13		
		(7.74-7.75)x(1.77+1.77)/2	-0.02		
		(7.72-7.74)x(1.77+1.77)/2	-0.04		
		(7.71-7.72)x(1.77+1.77)/2	-0.02		
		(7.62-7.71)x(2.04+1.77)/2	-0.17		
		(7.60-7.62)x(2.05+2.04)/2	-0.04		
		(7.54-7.60)x(2.06+2.05)/2	-0.12		
		(7.25-7.54)x(2.10+2.06)/2	-0.60		
		(7.18-7.25)x(2.12+2.10)/2	-0.15		
		(7.02-7.18)x(2.20+2.12)/2	-0.35		
		(7.01-7.02)x(2.17+2.20)/2	-0.02		
		(6.89-7.01)x(2.15+2.17)/2	-0.26		
		A RIPORTARE mq	9.17		

BONIFICA

N. SEZIONE PROG.	FIG.	ELEMENTI DI CALCOLO	AREA ELEMENTARE mq	AREA FIGURA mq	NOTE
		RIPORTO mq	9.17		
		(6.67-6.89)x(2.18+2.15)/2	-0.48		
		(6.22-6.67)x(2.20+2.18)/2	-0.99		
		(6.14-6.22)x(2.20+2.20)/2	-0.18		
		(4.78-6.14)x(2.20+2.20)/2	-2.99		
		(4.75-4.78)x(2.19+2.20)/2	-0.07		
		(4.40-4.75)x(2.19+2.19)/2	-0.77		
		(4.32-4.40)x(2.20+2.19)/2	-0.18		
		(4.30-4.32)x(2.27+2.20)/2	-0.04		
		(4.23-4.30)x(2.23+2.27)/2	-0.16		
		(4.19-4.23)x(2.23+2.23)/2	-0.09		
		(4.04-4.19)x(2.21+2.23)/2	-0.33		
		(4.52-4.04)x(2.69+2.21)/2	1.18		
				4.07	
19 270.00	BO1	(-7.67--7.89)x(2.70+2.71)/2	0.60		
		(-7.66--7.67)x(2.70+2.70)/2	0.03		
		(-7.35--7.66)x(2.73+2.70)/2	0.84		
		(-6.45--7.35)x(2.75+2.73)/2	2.47		
		(-6.43--6.45)x(2.74+2.78)/2	0.06		
		(-6.41--6.43)x(2.74+2.74)/2	0.05		
		(-6.37--6.41)x(2.74+2.74)/2	0.11		
		(-6.32--6.37)x(2.72+2.74)/2	0.14		
		(-6.22--6.32)x(2.72+2.72)/2	0.27		
		(-6.21--6.22)x(2.72+2.72)/2	0.03		
		(-5.68--6.21)x(2.74+2.72)/2	1.45		
		(-5.51--5.68)x(2.76+2.74)/2	0.47		
		(-5.09--5.51)x(2.79+2.76)/2	1.17		
		(-5.08--5.09)x(2.79+2.79)/2	0.03		
		(-5.03--5.08)x(2.89+2.79)/2	0.14		
		(-5.01--5.03)x(2.94+2.89)/2	0.06		
		(-4.97--5.01)x(2.87+2.94)/2	0.12		
		(-4.88--4.97)x(2.87+2.87)/2	0.26		
		(-4.86--4.88)x(2.94+2.87)/2	0.06		
		(-4.85--4.86)x(2.82+2.94)/2	0.03		
		(-4.77--4.85)x(2.74+2.82)/2	0.22		
		(-4.76--4.77)x(2.74+2.74)/2	0.03		
		(-3.33--4.76)x(2.87+2.74)/2	4.01		
		(-3.30--3.33)x(2.87+2.87)/2	0.09		
		(-1.88--3.30)x(3.03+2.87)/2	4.19		
		(-1.85--1.88)x(3.03+3.03)/2	0.09		
		(-0.43--1.85)x(3.02+3.03)/2	4.30		
		(-0.41--0.43)x(3.02+3.02)/2	0.06		
		(0.08--0.41)x(3.02+3.02)/2	1.48		
		(0.27-0.08)x(2.99+3.02)/2	0.57		
		(0.31-0.27)x(2.98+2.99)/2	0.12		
		(0.35-0.31)x(2.90+2.98)/2	0.12		
		(0.37-0.35)x(2.98+2.90)/2	0.06		
		(0.38-0.37)x(2.99+2.98)/2	0.03		
		(0.42-0.38)x(2.84+2.94)/2	0.12		
		(0.43-0.42)x(2.84+2.84)/2	0.03		
		(0.58-0.43)x(2.89+2.84)/2	0.43		
		(1.01-0.58)x(2.86+2.89)/2	1.24		
		(1.02-1.01)x(2.88+2.86)/2	0.03		
		(1.04-1.02)x(2.87+2.88)/2	0.06		
		(1.10-1.04)x(2.93+2.87)/2	0.17		
		(1.14-1.10)x(2.93+2.93)/2	0.12		
		(1.16-1.14)x(2.92+2.93)/2	0.06		
		(1.61-1.16)x(2.89+2.92)/2	1.31		
		(2.39-1.61)x(2.85+2.89)/2	2.24		
		(2.46-2.39)x(2.84+2.85)/2	0.20		
		(2.51-2.46)x(2.84+2.84)/2	0.14		
		(3.90-2.51)x(2.78+2.84)/2	3.91		
		(3.97-3.90)x(2.78+2.78)/2	0.19		
		(5.35-3.97)x(2.74+2.78)/2	3.81		
		(5.40-5.35)x(2.74+2.74)/2	0.14		
		(5.84-5.40)x(2.76+2.74)/2	1.21		
		(5.89-5.84)x(2.76+2.76)/2	0.14		
		(6.02-5.89)x(2.79+2.76)/2	0.36		
		(6.05-6.02)x(2.76+2.79)/2	0.08		
		(6.08-6.05)x(2.76+2.76)/2	0.08		
		(6.16-6.08)x(2.74+2.76)/2	0.22		
		(6.22-6.16)x(2.74+2.74)/2	0.16		
		(6.30-6.22)x(2.76+2.74)/2	0.22		
		(6.32-6.30)x(2.76+2.76)/2	0.06		
		(6.34-6.32)x(2.76+2.76)/2	0.06		
		(6.44-6.34)x(2.70+2.76)/2	0.27		
		(6.59-6.44)x(2.73+2.70)/2	0.41		
		(6.60-6.59)x(2.73+2.73)/2	0.03		
		(6.81-6.60)x(2.70+2.74)/2	0.57		
		(6.83-6.81)x(2.70+2.70)/2	0.05		
		(6.88-6.83)x(2.70+2.70)/2	0.13		
		(7.01-6.88)x(2.76+2.70)/2	0.35		
		(7.66-7.01)x(2.95+2.76)/2	1.86		
		(8.15-7.66)x(2.82+2.95)/2	1.41		
		(8.19-8.15)x(2.80+2.82)/2	0.11		
		(8.20-8.19)x(2.80+2.80)/2	0.03		
		(8.21-8.20)x(2.80+2.80)/2	0.03		
		(8.23-8.21)x(2.79+2.80)/2	0.06		
		(8.32-8.23)x(2.76+2.79)/2	0.25		
		(8.86-8.32)x(2.73+2.76)/2	1.48		
		(8.90-8.86)x(2.73+2.73)/2	0.11		
		(9.04-8.90)x(2.72+2.73)/2	0.38		
		(9.08-9.04)x(2.71+2.72)/2	0.11		
		(9.11-9.08)x(2.71+2.71)/2	0.08		
		(9.23-9.11)x(2.68+2.71)/2	0.32		
		(9.35-9.23)x(2.68+2.68)/2	0.32		
		(9.61-9.35)x(2.38+2.68)/2	0.66		
		(9.64-9.61)x(2.26+2.38)/2	0.07		
		(9.66-9.64)x(2.26+2.26)/2	0.05		
		(9.68-9.66)x(2.26+2.26)/2	0.05		
		(9.70-9.68)x(2.26+2.26)/2	0.05		
		(9.71-9.70)x(2.60+2.26)/2	0.02		
		(9.72-9.71)x(2.60+2.60)/2	0.03		
		(9.73-9.72)x(2.60+2.60)/2	0.03		
		(10.20-9.73)x(2.44+2.60)/2	1.18		
		(10.31-10.20)x(2.50+2.44)/2	0.27		
		A RIPORTARE mq	51.32		

BONIFICA

N. SEZIONE PROG.	FIG.	ELEMENTI DI CALCOLO	AREA ELEMENTARE mq	AREA FIGURA mq	NOTE
		RIPORTO mq	51.32		
		(10.46-10.31)x(2.73+2.50)/2	0.39		
		(10.64-10.46)x(2.38+2.73)/2	0.46		
		(10.68-10.64)x(2.31+2.38)/2	0.09		
		(11.13-10.68)x(2.44+2.31)/2	1.07		
		(11.18-11.13)x(2.46+2.44)/2	0.12		
		(11.24-11.18)x(2.47+2.46)/2	0.15		
		(11.91-11.24)x(2.63+2.47)/2	1.71		
		(12.25-11.91)x(2.64+2.63)/2	0.90		
		(11.91-12.25)x(2.13+2.14)/2	-0.73		
		(11.24-11.91)x(1.97+2.13)/2	-1.37		
		(11.18-11.24)x(1.96+1.97)/2	-0.12		
		(11.13-11.18)x(1.94+1.96)/2	-0.10		
		(10.68-11.13)x(1.81+1.94)/2	-0.84		
		(10.64-10.68)x(1.88+1.81)/2	-0.07		
		(10.46-10.64)x(2.23+1.88)/2	-0.37		
		(10.31-10.46)x(2.00+2.23)/2	-0.32		
		(10.20-10.31)x(1.94+2.00)/2	-0.22		
		(9.73-10.20)x(2.10+1.94)/2	-0.95		
		(9.72-9.73)x(2.10+2.10)/2	-0.02		
		(9.71-9.72)x(2.10+2.10)/2	-0.02		
		(9.70-9.71)x(1.76+2.10)/2	-0.02		
		(9.68-9.70)x(1.76+1.76)/2	-0.04		
		(9.66-9.68)x(1.76+1.76)/2	-0.04		
		(9.64-9.66)x(1.76+1.76)/2	-0.04		
		(9.61-9.64)x(1.88+1.76)/2	-0.05		
		(9.35-9.61)x(2.18+1.88)/2	-0.53		
		(9.23-9.35)x(2.18+2.18)/2	-0.26		
		(9.11-9.23)x(2.21+2.18)/2	-0.26		
		(9.08-9.11)x(2.21+2.21)/2	-0.07		
		(9.04-9.08)x(2.22+2.21)/2	-0.09		
		(8.90-9.04)x(2.23+2.22)/2	-0.31		
		(8.86-8.90)x(2.23+2.23)/2	-0.09		
		(8.32-8.86)x(2.26+2.23)/2	-1.21		
		(8.23-8.32)x(2.29+2.26)/2	-0.20		
		(8.21-8.23)x(2.30+2.29)/2	-0.05		
		(8.20-8.21)x(2.30+2.30)/2	-0.02		
		(8.19-8.20)x(2.30+2.30)/2	-0.02		
		(8.15-8.19)x(2.32+2.30)/2	-0.09		
		(7.66-8.15)x(2.45+2.32)/2	-1.17		
		(7.01-7.66)x(2.26+2.45)/2	-1.53		
		(6.88-7.01)x(2.20+2.26)/2	-0.29		
		(6.83-6.88)x(2.20+2.20)/2	-0.11		
		(6.81-6.83)x(2.20+2.20)/2	-0.04		
		(6.60-6.81)x(2.24+2.20)/2	-0.47		
		(6.59-6.60)x(2.23+2.23)/2	-0.02		
		(6.44-6.59)x(2.20+2.23)/2	-0.33		
		(6.34-6.44)x(2.26+2.20)/2	-0.22		
		(6.32-6.34)x(2.26+2.26)/2	-0.05		
		(6.30-6.32)x(2.26+2.26)/2	-0.05		
		(6.22-6.30)x(2.24+2.26)/2	-0.18		
		(6.16-6.22)x(2.24+2.24)/2	-0.13		
		(6.08-6.16)x(2.26+2.24)/2	-0.18		
		(6.05-6.08)x(2.26+2.26)/2	-0.07		
		(6.02-6.05)x(2.29+2.26)/2	-0.07		
		(5.89-6.02)x(2.26+2.29)/2	-0.30		
		(5.84-5.89)x(2.26+2.26)/2	-0.11		
		(5.40-5.84)x(2.24+2.26)/2	-0.99		
		(5.35-5.40)x(2.24+2.24)/2	-0.11		
		(3.97-5.35)x(2.28+2.24)/2	-3.12		
		(3.90-3.97)x(2.28+2.28)/2	-0.16		
		(2.51-3.90)x(2.34+2.28)/2	-3.21		
		(2.46-2.51)x(2.34+2.34)/2	-0.12		
		(2.39-2.46)x(2.35+2.34)/2	-0.16		
		(1.61-2.39)x(2.39+2.35)/2	-1.85		
		(1.16-1.61)x(2.42+2.39)/2	-1.08		
		(1.14-1.16)x(2.43+2.42)/2	-0.05		
		(1.10-1.14)x(2.43+2.43)/2	-0.10		
		(1.04-1.10)x(2.37+2.43)/2	-0.14		
		(1.02-1.04)x(2.38+2.37)/2	-0.05		
		(1.01-1.02)x(2.36+2.38)/2	-0.02		
		(0.58-1.01)x(2.39+2.36)/2	-1.02		
		(0.43-0.58)x(2.34+2.39)/2	-0.35		
		(0.42-0.43)x(2.34+2.34)/2	-0.02		
		(0.38-0.42)x(2.44+2.34)/2	-0.10		
		(0.37-0.38)x(2.48+2.49)/2	-0.02		
		(0.35-0.37)x(2.40+2.48)/2	-0.05		
		(0.31-0.35)x(2.48+2.40)/2	-0.10		
		(0.27-0.31)x(2.49+2.48)/2	-0.10		
		(0.08-0.27)x(2.52+2.49)/2	-0.48		
		(-0.41-0.08)x(2.52+2.52)/2	-1.23		
		(-0.43--0.41)x(2.52+2.52)/2	-0.05		
		(-1.85--0.43)x(2.53+2.52)/2	-3.59		
		(-1.88--1.85)x(2.53+2.53)/2	-0.08		
		(-3.30--1.88)x(2.37+2.53)/2	-3.48		
		(-3.33--3.30)x(2.37+2.37)/2	-0.07		
		(-4.76--3.33)x(2.24+2.37)/2	-3.30		
		(-4.77--4.76)x(2.24+2.24)/2	-0.02		
		(-4.85--4.77)x(2.32+2.24)/2	-0.18		
		(-4.86--4.85)x(2.44+2.32)/2	-0.02		
		(-4.88--4.86)x(2.37+2.44)/2	-0.05		
		(-4.97--4.88)x(2.37+2.37)/2	-0.21		
		(-5.01--4.97)x(2.44+2.37)/2	-0.10		
		(-5.03--5.01)x(2.39+2.44)/2	-0.05		
		(-5.08--5.03)x(2.29+2.39)/2	-0.12		
		(-5.09--5.08)x(2.29+2.29)/2	-0.02		
		(-5.51--5.09)x(2.26+2.29)/2	-0.96		
		(-5.68--5.51)x(2.24+2.26)/2	-0.38		
		(-6.21--5.68)x(2.22+2.24)/2	-1.18		
		(-6.22--6.21)x(2.22+2.22)/2	-0.02		
		(-6.32--6.22)x(2.22+2.22)/2	-0.22		
		(-6.37--6.32)x(2.24+2.22)/2	-0.11		
		(-6.41--6.37)x(2.24+2.24)/2	-0.09		
		(-6.43--6.41)x(2.24+2.24)/2	-0.04		
		(-6.45--6.43)x(2.28+2.24)/2	-0.05		
		(-7.35--6.45)x(2.23+2.25)/2	-2.02		
		A RIPORTARE mq	11.33		

	CALCOLO DELLE AREE		Foglio n. 23

BONIFICA

N. SEZIONE PROG.	FIG.	ELEMENTI DI CALCOLO	AREA ELEMENTARE mq	AREA FIGURA mq	NOTE
		RIPORTO mq	11.33		
		(-7.66--7.35)x(2.20+2.23)/2	-0.69		
		(-7.67--7.66)x(2.20+2.20)/2	-0.02		
		(-7.89--7.67)x(2.21+2.20)/2	-0.49		
				10.13	

Il Direttore dei Lavori	L'Impresa	

SCAVO MURO

N. SEZIONE PROG.	FIG.	ELEMENTI DI CALCOLO	AREA ELEMENTARE mq	AREA FIGURA mq	NOTE
13	H1	(-3.48--4.06)x(3.42+3.43)/2	1.99		
180.00		(-2.91--3.48)x(3.46+3.42)/2	1.96		
		(-2.72--2.91)x(3.47+3.46)/2	0.66		
		(-2.37--2.72)x(3.48+3.47)/2	1.22		
		(-1.75--2.37)x(3.49+3.48)/2	2.16		
		(-1.05--1.75)x(3.46+3.49)/2	2.43		
		(-0.59--1.05)x(3.45+3.46)/2	1.59		
		(-0.17--0.59)x(3.46+3.45)/2	1.45		
		(0.57--0.17)x(3.51+3.46)/2	2.58		
		(1.40-0.57)x(3.63+3.51)/2	2.96		
		(1.73-1.40)x(3.70+3.63)/2	1.21		
		(2.02-1.73)x(3.73+3.70)/2	1.08		
		(2.89-2.02)x(3.76+3.73)/2	3.26		
		(3.85-2.89)x(3.62+3.76)/2	3.54		
		(4.05-3.85)x(3.59+3.62)/2	0.72		
		(4.22-4.05)x(3.53+3.59)/2	0.61		
		(5.00-4.22)x(3.17+3.53)/2	2.61		
		(3.05-5.00)x(1.22+3.17)/2	-4.28		
		(-2.35-3.05)x(1.22+1.22)/2	-6.59		
		(-4.06--2.35)x(2.93+1.22)/2	-3.55		
				17.61	
13bis	H1	(-4.02--4.11)x(3.48+3.48)/2	0.31		
185.51		(-3.48--4.02)x(3.51+3.48)/2	1.89		
		(-2.88--3.48)x(3.51+3.51)/2	2.11		
		(-2.33--2.88)x(3.52+3.51)/2	1.93		
		(-1.82--2.33)x(3.52+3.52)/2	1.80		
		(-1.17--1.82)x(3.48+3.52)/2	2.28		
		(-0.43--1.17)x(3.40+3.48)/2	2.55		
		(-0.01--0.43)x(3.36+3.40)/2	1.42		
		(0.38--0.01)x(3.31+3.36)/2	1.30		
		(1.15-0.38)x(3.21+3.31)/2	2.51		
		(2.02-1.15)x(3.12+3.21)/2	2.75		
		(2.31-2.02)x(3.09+3.12)/2	0.90		
		(2.57-2.31)x(3.06+3.09)/2	0.80		
		(3.47-2.57)x(2.97+3.06)/2	2.71		
		(3.92-3.47)x(2.91+2.97)/2	1.32		
		(3.99-3.92)x(2.90+2.91)/2	0.20		
		(4.60-3.99)x(2.87+2.90)/2	1.76		
		(4.61-4.60)x(2.83+2.87)/2	0.03		
		(4.62-4.61)x(2.85+2.83)/2	0.03		
		(4.63-4.62)x(2.81+2.85)/2	0.03		
		(4.65-4.63)x(2.83+2.81)/2	0.06		
		(3.05-4.65)x(1.22+2.82)/2	-3.23		
		(-2.35-3.05)x(1.22+1.22)/2	-6.59		
		(-4.11--2.35)x(2.98+1.22)/2	-3.70		
				15.17	
14	H1	(-3.11--3.88)x(3.21+3.25)/2	2.49		
195.00		(-2.25--3.11)x(3.20+3.21)/2	2.76		
		(-1.96--2.25)x(3.19+3.20)/2	0.93		
		(-1.63--1.96)x(3.18+3.19)/2	1.05		
		(-0.80--1.63)x(3.16+3.18)/2	2.63		
		(-0.05--0.80)x(3.08+3.16)/2	2.34		
		(0.36--0.05)x(3.03+3.08)/2	1.25		
		(1.27-0.36)x(2.85+3.03)/2	2.68		
		(1.61-1.27)x(2.80+2.85)/2	0.96		
		(1.66-1.61)x(2.80+2.80)/2	0.14		
		(1.68-1.66)x(2.79+2.80)/2	0.06		
		(1.74-1.68)x(2.78+2.79)/2	0.17		
		(1.75-1.74)x(2.81+2.78)/2	0.03		
		(1.94-1.75)x(2.86+2.88)/2	0.55		
		(1.99-1.94)x(2.85+2.86)/2	0.14		
		(2.07-1.99)x(2.84+2.85)/2	0.23		
		(2.22-2.07)x(2.82+2.84)/2	0.42		
		(2.50-2.22)x(2.79+2.82)/2	0.79		
		(2.61-2.50)x(2.82+2.79)/2	0.31		
		(2.63-2.61)x(2.83+2.82)/2	0.06		
		(2.68-2.63)x(2.82+2.83)/2	0.14		
		(3.08-2.68)x(2.85+2.82)/2	1.13		
		(3.84-3.08)x(2.78+2.85)/2	2.14		
		(4.35-3.84)x(2.78+2.78)/2	1.42		
		(4.62-4.35)x(2.79+2.78)/2	0.75		
		(3.05-4.62)x(1.22+2.79)/2	-3.15		
		(-2.35-3.05)x(1.22+1.22)/2	-6.59		
		(-3.88--2.35)x(2.75+1.22)/2	-3.04		
				12.79	
15	H1	(-3.32--3.55)x(2.88+2.92)/2	0.67		
210.00		(-2.91--3.32)x(2.82+2.88)/2	1.17		
		(-2.89--2.91)x(2.83+2.82)/2	0.06		
		(-2.80--2.89)x(2.91+2.83)/2	0.26		
		(-2.28--2.80)x(2.85+2.91)/2	1.50		
		(-2.15--2.28)x(2.82+2.85)/2	0.37		
		(-1.68--2.15)x(2.93+2.82)/2	1.35		
		(-1.43--1.68)x(2.85+2.93)/2	0.72		
		(-1.39--1.43)x(2.83+2.85)/2	0.11		
		(-1.00--1.39)x(2.83+2.83)/2	1.10		
		(0.08--1.00)x(2.86+2.83)/2	3.07		
		(0.16-0.08)x(2.86+2.86)/2	0.23		
		(0.24-0.16)x(2.86+2.86)/2	0.23		
		(1.32-0.24)x(2.82+2.86)/2	3.07		
		(2.28-1.32)x(2.83+2.82)/2	2.71		
		(2.41-2.28)x(2.83+2.83)/2	0.37		
		(2.46-2.41)x(2.86+2.83)/2	0.14		
		(2.53-2.46)x(2.89+2.86)/2	0.20		
		(2.70-2.53)x(2.87+2.89)/2	0.49		
		(2.85-2.70)x(2.87+2.87)/2	0.43		
		(2.87-2.85)x(2.87+2.87)/2	0.06		
		(3.17-2.87)x(2.83+2.87)/2	0.85		
		(3.63-3.17)x(2.82+2.83)/2	1.30		
		(4.48-3.63)x(2.82+2.82)/2	2.40		
		(4.65-4.48)x(2.82+2.82)/2	0.48		
		(3.05-4.65)x(1.22+2.82)/2	-3.23		
		(-2.35-3.05)x(1.22+1.22)/2	-6.59		
		(-3.55--2.35)x(2.42+1.22)/2	-2.18		
				11.34	
16	H1	(-2.88--3.49)x(2.84+2.83)/2	1.73		
225.00		(-2.32--2.88)x(2.85+2.84)/2	1.59		
		(-2.15--2.32)x(2.84+2.85)/2	0.48		
		A RIPORTARE mq	3.80		

SCAVO MURO

N. SEZIONE PROG.	FIG.	ELEMENTI DI CALCOLO	AREA ELEMENTARE mq	AREA FIGURA mq	NOTE
		RIPORTO mq	3.80		
		(-2.12--2.15)x(2.85+2.84)/2	0.09		
		(-1.68--2.12)x(2.89+2.85)/2	1.26		
		(-1.51--1.68)x(2.83+2.89)/2	0.49		
		(-1.40--1.51)x(2.83+2.83)/2	0.31		
		(-1.15--1.40)x(2.83+2.83)/2	0.71		
		(-0.28--1.15)x(2.79+2.83)/2	2.44		
		(0.02--0.28)x(2.78+2.79)/2	0.84		
		(0.27-0.02)x(2.77+2.78)/2	0.69		
		(1.19-0.27)x(2.77+2.77)/2	2.55		
		(2.32-1.19)x(2.72+2.77)/2	3.10		
		(2.36-2.32)x(2.72+2.72)/2	0.11		
		(2.38-2.36)x(2.72+2.72)/2	0.05		
		(2.51-2.38)x(2.76+2.72)/2	0.36		
		(2.60-2.51)x(2.76+2.76)/2	0.25		
		(2.67-2.60)x(2.80+2.76)/2	0.19		
		(2.72-2.67)x(2.80+2.80)/2	0.14		
		(2.76-2.72)x(2.80+2.80)/2	0.11		
		(2.79-2.76)x(2.81+2.80)/2	0.08		
		(2.82-2.79)x(2.81+2.81)/2	0.08		
		(2.85-2.82)x(2.81+2.81)/2	0.08		
		(2.86-2.85)x(2.86+2.81)/2	0.03		
		(2.87-2.86)x(2.82+2.86)/2	0.03		
		(2.91-2.87)x(2.71+2.82)/2	0.11		
		(2.96-2.91)x(2.75+2.71)/2	0.14		
		(3.01-2.96)x(2.72+2.75)/2	0.14		
		(3.08-3.01)x(2.77+2.72)/2	0.19		
		(3.13-3.08)x(2.77+2.77)/2	0.14		
		(3.16-3.13)x(2.77+2.77)/2	0.08		
		(3.24-3.16)x(2.77+2.77)/2	0.22		
		(3.29-3.24)x(2.80+2.77)/2	0.14		
		(3.33-3.29)x(2.81+2.80)/2	0.11		
		(3.35-3.33)x(2.85+2.81)/2	0.06		
		(3.36-3.35)x(2.80+2.85)/2	0.03		
		(3.71-3.36)x(2.78+2.80)/2	0.98		
		(3.84-3.71)x(2.78+2.78)/2	0.36		
		(3.89-3.84)x(2.80+2.78)/2	0.14		
		(4.53-3.89)x(2.79+2.80)/2	1.79		
		(4.61-4.53)x(2.78+2.79)/2	0.22		
		(3.05-4.61)x(1.22+2.78)/2	-3.12		
		(-2.35-3.05)x(1.22+1.22)/2	-6.59		
		(-3.49--2.35)x(2.33+1.22)/2	-2.02		
				10.91	
17 240.00	H1	(-3.11--3.49)x(2.87+2.86)/2	1.09		
		(-2.80--3.11)x(2.85+2.87)/2	0.89		
		(-2.25--2.80)x(2.81+2.85)/2	1.56		
		(-1.89--2.25)x(2.81+2.81)/2	1.01		
		(-1.51--1.89)x(2.81+2.81)/2	1.07		
		(-0.90--1.51)x(2.79+2.81)/2	1.71		
		(-0.68--0.90)x(2.78+2.79)/2	0.61		
		(-0.02--0.68)x(2.73+2.78)/2	1.82		
		(0.04--0.02)x(2.77+2.73)/2	0.16		
		(0.05-0.04)x(2.86+2.77)/2	0.03		
		(0.11-0.05)x(2.83+2.86)/2	0.17		
		(0.15-0.11)x(2.83+2.83)/2	0.11		
		(0.39-0.15)x(2.76+2.83)/2	0.67		
		(0.48-0.39)x(2.75+2.76)/2	0.25		
		(0.53-0.48)x(2.74+2.75)/2	0.14		
		(0.55-0.53)x(2.75+2.74)/2	0.05		
		(0.56-0.55)x(2.84+2.75)/2	0.03		
		(0.57-0.56)x(2.82+2.84)/2	0.03		
		(0.70-0.57)x(2.81+2.82)/2	0.37		
		(0.72-0.70)x(2.79+2.81)/2	0.06		
		(1.00-0.72)x(2.78+2.79)/2	0.78		
		(1.76-1.00)x(2.73+2.78)/2	2.09		
		(2.90-1.76)x(2.60+2.73)/2	3.04		
		(2.98-2.90)x(2.59+2.60)/2	0.21		
		(3.42-2.98)x(2.57+2.59)/2	1.14		
		(3.60-3.42)x(2.58+2.57)/2	0.46		
		(3.62-3.60)x(2.58+2.58)/2	0.05		
		(3.64-3.62)x(2.76+2.58)/2	0.05		
		(3.72-3.64)x(2.51+2.76)/2	0.21		
		(3.88-3.72)x(2.45+2.51)/2	0.40		
		(4.19-3.88)x(2.40+2.45)/2	0.75		
		(4.22-4.19)x(2.39+2.40)/2	0.07		
		(3.05-4.22)x(1.22+2.39)/2	-2.11		
		(-2.35-3.05)x(1.22+1.22)/2	-6.59		
		(-3.49--2.35)x(2.36+1.22)/2	-2.04		
				10.34	
18 255.00	H1	(-3.47--3.54)x(2.90+2.91)/2	0.20		
		(-3.46--3.47)x(2.91+2.91)/2	0.03		
		(-3.42--3.46)x(2.91+2.91)/2	0.12		
		(-3.24--3.42)x(2.93+2.91)/2	0.53		
		(-3.18--3.24)x(2.93+2.93)/2	0.18		
		(-3.10--3.18)x(2.93+2.93)/2	0.23		
		(-3.07--3.10)x(2.91+2.93)/2	0.09		
		(-3.02--3.07)x(2.84+2.91)/2	0.14		
		(-2.68--3.02)x(2.82+2.84)/2	0.96		
		(-2.48--2.68)x(2.82+2.82)/2	0.56		
		(-2.23--2.48)x(2.82+2.82)/2	0.70		
		(-1.75--2.23)x(2.83+2.82)/2	1.36		
		(-1.36--1.75)x(2.81+2.83)/2	1.10		
		(-0.59--1.36)x(2.79+2.81)/2	2.16		
		(-0.05--0.59)x(2.77+2.79)/2	1.50		
		(0.44--0.05)x(2.77+2.77)/2	1.36		
		(0.73-0.44)x(2.78+2.77)/2	0.80		
		(0.80-0.73)x(2.81+2.78)/2	0.20		
		(1.04-0.80)x(2.84+2.81)/2	0.68		
		(1.10-1.04)x(2.80+2.84)/2	0.17		
		(1.13-1.10)x(2.78+2.80)/2	0.08		
		(1.20-1.13)x(2.71+2.78)/2	0.19		
		(1.29-1.20)x(2.78+2.71)/2	0.25		
		(1.33-1.29)x(2.77+2.78)/2	0.11		
		(1.55-1.33)x(2.82+2.77)/2	0.61		
		(1.62-1.55)x(2.78+2.82)/2	0.20		
		(1.65-1.62)x(2.77+2.78)/2	0.08		
		A RIPORTARE mq	14.59		

SCAVO MURO

N. SEZIONE PROG.	FIG.	ELEMENTI DI CALCOLO	AREA ELEMENTARE mq	AREA FIGURA mq	NOTE
		RIPORTO mq	14.59		
		(1.67-1.65)x(2.76+2.77)/2	0.06		
		(1.90-1.67)x(2.75+2.76)/2	0.63		
		(2.58-1.90)x(2.78+2.75)/2	1.88		
		(2.69-2.58)x(2.79+2.78)/2	0.31		
		(3.89-2.69)x(2.87+2.79)/2	3.40		
		(4.01-3.89)x(2.86+2.87)/2	0.34		
		(4.03-4.01)x(2.87+2.86)/2	0.06		
		(4.14-4.03)x(2.83+2.87)/2	0.31		
		(4.19-4.14)x(2.82+2.83)/2	0.14		
		(4.23-4.19)x(2.80+2.82)/2	0.11		
		(4.46-4.23)x(2.84+2.80)/2	0.65		
		(4.48-4.46)x(2.83+2.84)/2	0.06		
		(4.60-4.48)x(2.77+2.83)/2	0.34		
		(3.05-4.60)x(1.22+2.77)/2	-3.09		
		(-2.35-3.05)x(1.22+1.22)/2	-6.59		
		(-3.54--2.35)x(2.41+1.22)/2	-2.16		
				11.04	
18 bis 265.11	H1	(-3.64--3.67)x(3.04+3.04)/2	0.09		
		(-2.76--3.64)x(3.08+3.04)/2	2.69		
		(-2.24--2.76)x(3.09+3.08)/2	1.60		
		(-2.11--2.24)x(3.07+3.09)/2	0.40		
		(-1.63--2.11)x(2.97+3.07)/2	1.45		
		(-1.60--1.63)x(2.96+2.97)/2	0.09		
		(-1.58--1.60)x(2.96+2.96)/2	0.06		
		(-1.56--1.58)x(2.91+2.96)/2	0.06		
		(-1.53--1.56)x(3.00+2.91)/2	0.09		
		(-1.51--1.53)x(2.97+3.02)/2	0.06		
		(-1.48--1.51)x(2.88+2.97)/2	0.09		
		(-1.36--1.48)x(2.90+2.88)/2	0.35		
		(-1.26--1.36)x(2.89+2.90)/2	0.29		
		(-1.22--1.26)x(2.89+2.89)/2	0.12		
		(-1.21--1.22)x(2.89+2.89)/2	0.03		
		(-0.95--1.21)x(2.89+2.89)/2	0.75		
		(-0.83--0.95)x(2.92+2.89)/2	0.35		
		(-0.82--0.83)x(2.92+2.92)/2	0.03		
		(-0.59--0.82)x(2.84+2.92)/2	0.66		
		(-0.31--0.59)x(2.81+2.84)/2	0.79		
		(0.26--0.31)x(2.82+2.81)/2	1.60		
		(0.37-0.26)x(2.84+2.82)/2	0.31		
		(0.55-0.37)x(2.82+2.84)/2	0.51		
		(1.77-0.55)x(2.79+2.82)/2	3.42		
		(1.95-1.77)x(2.78+2.79)/2	0.50		
		(3.28-1.95)x(2.73+2.78)/2	3.66		
		(3.35-3.28)x(2.73+2.73)/2	0.19		
		(3.75-3.35)x(2.74+2.73)/2	1.09		
		(3.78-3.75)x(2.74+2.74)/2	0.08		
		(3.91-3.78)x(2.79+2.74)/2	0.36		
		(3.94-3.91)x(2.70+2.76)/2	0.08		
		(4.04-3.94)x(2.71+2.70)/2	0.27		
		(4.19-4.04)x(2.73+2.71)/2	0.41		
		(4.23-4.19)x(2.73+2.73)/2	0.11		
		(4.30-4.23)x(2.77+2.73)/2	0.19		
		(4.32-4.30)x(2.70+2.77)/2	0.05		
		(4.40-4.32)x(2.69+2.70)/2	0.22		
		(4.52-4.40)x(2.69+2.69)/2	0.32		
		(3.05-4.52)x(1.22+2.69)/2	-2.87		
		(-2.35-3.05)x(1.22+1.22)/2	-6.59		
		(-3.67--2.35)x(2.54+1.22)/2	-2.48		
				11.48	

Il Direttore dei Lavori | L'Impresa

SPIANAMENTO

N. SEZIONE PROG.	FIG.	ELEMENTI DI CALCOLO	AREA ELEMENTARE mq	AREA FIGURA mq	NOTE
9	SP1	(3.98-2.69)x(3.07+2.65)/2	3.69		
120.00		(4.16-3.98)x(3.15+3.07)/2	0.56		
		(5.41-4.16)x(3.64+3.15)/2	4.24		
		(5.52-5.41)x(3.67+3.64)/2	0.40		
		(5.63-5.52)x(3.70+3.67)/2	0.41		
		(6.24-5.63)x(3.69+3.70)/2	2.25		
		(6.84-6.24)x(3.62+3.69)/2	2.19		
		(7.10-6.84)x(3.59+3.62)/2	0.94		
		(8.27-7.10)x(3.32+3.59)/2	4.04		
		(8.57-8.27)x(3.24+3.32)/2	0.98		
		(9.70-8.57)x(2.82+3.24)/2	3.42		
		(10.04-9.70)x(2.82+2.82)/2	0.96		
		(11.13-10.04)x(3.18+2.82)/2	3.27		
		(11.51-11.13)x(3.25+3.18)/2	1.22		
		(12.56-11.51)x(3.27+3.25)/2	3.42		
		(12.98-12.56)x(3.17+3.27)/2	1.35		
		(13.99-12.98)x(2.88+3.17)/2	3.06		
		(14.22-13.99)x(2.82+2.88)/2	0.66		
		(14.30-14.22)x(2.80+2.82)/2	0.22		
		(14.44-14.30)x(2.83+2.80)/2	0.39		
		(14.61-14.44)x(2.87+2.83)/2	0.48		
		(14.76-14.61)x(2.75+2.87)/2	0.42		
		(14.78-14.76)x(2.74+2.75)/2	0.05		
		(2.69-14.78)x(2.65+2.74)/2	-32.58		
				6.04	

Il Direttore dei Lavori

L'Impresa

USURA

N. SEZIONE PROG.	FIG.	ELEMENTI DI CALCOLO	LUNGHEZZA ELEMENTARE ml	LUNGHEZZA FIGURA ml	NOTE
7bis	a1	(-4.00--5.00)	1.00		
81.08		(0.00--4.00)	4.00		
		(1.50-0.00)	1.50		
				6.50	
7	a1	(-4.00--5.00)	1.00		
90.00		(0.00--4.00)	4.00		
		(1.50-0.00)	1.50		
				6.50	
8	a1	(-4.00--5.00)	1.00		
105.00		(0.00--4.00)	4.00		
		(1.50-0.00)	1.50		
				6.50	
9	a1	(-4.00--5.00)	1.00		
120.00		(0.00--4.00)	4.00		
		(1.50-0.00)	1.50		
				6.50	
10	a1	(-4.00--5.00)	1.00		
135.00		(0.00--4.00)	4.00		
		(1.50-0.00)	1.50		
				6.50	
11	a1	(-4.00--5.00)	1.00		
150.00		(0.00--4.00)	4.00		
		(1.50-0.00)	1.50		
				6.50	
12	a1	(-4.00--5.00)	1.00		
165.00		(0.00--4.00)	4.00		
		(1.50-0.00)	1.50		
				6.50	
12bis	a1	(-4.00--5.00)	1.00		
166.40		(0.00--4.00)	4.00		
		(1.50-0.00)	1.50		
				6.50	
13	a1	(-4.00--5.00)	1.00		
180.00		(0.00--4.00)	4.00		
		(1.50-0.00)	1.50		
		(3.00-1.50)	1.50		
		(8.73-3.00)	5.73		
				13.73	
13bis	a1	(-4.00--5.00)	1.00		
185.51		(0.00--4.00)	4.00		
		(1.50-0.00)	1.50		
				6.50	
14	a1	(-4.00--5.00)	1.00		
195.00		(0.00--4.00)	4.00		
		(1.50-0.00)	1.50		
				6.50	
15	a1	(-4.00--5.00)	1.00		
210.00		(0.00--4.00)	4.00		
		(1.50-0.00)	1.50		
				6.50	
16	a1	(-4.00--5.00)	1.00		
225.00		(0.00--4.00)	4.00		
		(1.50-0.00)	1.50		
				6.50	
17	a1	(-4.00--5.00)	1.00		
240.00		(0.00--4.00)	4.00		
		(1.50-0.00)	1.50		
				6.50	
18	a1	(-4.00--5.00)	1.00		
255.00		(0.00--4.00)	4.00		
		(1.50-0.00)	1.50		
				6.50	
18 bis	a1	(-4.00--5.00)	1.00		
265.11		(0.00--4.00)	4.00		
		(1.50-0.00)	1.50		
				6.50	
19	a1	(-4.00--5.00)	1.00		
270.00		(0.00--4.00)	4.00		
		(1.50-0.00)	1.50		
				6.50	
20	a1	(1.50-0.00)	1.50		
				1.50	

VEGETALE

N. SEZIONE PROG.	FIG.	ELEMENTI DI CALCOLO	LUNGHEZZA ELEMENTARE ml	LUNGHEZZA FIGURA ml	NOTE
7bis	b1	(3.00-1.65)	1.35		
81.08		(5.44-3.00)	2.44		
				3.79	
7	b1	(3.00-1.65)	1.35		
90.00		(5.44-3.00)	2.44		
				3.79	
8	b2	(-6.50--5.15)	1.35		
105.00		(-7.78--6.50)	1.28		
				2.63	
8	b1	(3.00-1.65)	1.35		
105.00		(5.56-3.00)	2.56		
				3.91	
9	b2	(-6.50--5.15)	1.35		
120.00		(-9.50--6.50)	3.00		
				4.35	
9	b1	(3.00-1.65)	1.35		
120.00		(5.79-3.00)	2.79		
				4.14	
10	b2	(-6.50--5.15)	1.35		
135.00		(-10.13--6.50)	3.63		
				4.98	
10	b1	(3.00-1.65)	1.35		
135.00		(5.83-3.00)	2.83		
				4.18	
11	b2	(-6.50--5.15)	1.35		
150.00		(-10.89--6.50)	4.39		
				5.74	
11	b1	(3.00-1.65)	1.35		
150.00		(6.67-3.00)	3.67		
				5.02	
12	b2	(-6.50--5.15)	1.35		
165.00		(-11.44--6.50)	4.94		
				6.29	
12	b1	(3.00-1.65)	1.35		
165.00		(7.56-3.00)	4.56		
				5.91	
12bis	b2	(-6.50--5.15)	1.35		
166.40		(-11.85--6.50)	5.35		
				6.70	
12bis	b1	(3.00-1.65)	1.35		
166.40		(7.43-3.00)	4.43		
				5.78	
13	b2	(-6.50--5.15)	1.35		
180.00		(-11.59--6.50)	5.09		
				6.44	
13	b1	(3.00-1.65)	1.35		
180.00		(8.73-3.00)	5.73		
				7.08	
13bis	b1	(-6.50--5.15)	1.35		
185.51		(-11.75--6.50)	5.25		
				6.60	
14	b1	(-6.50--5.15)	1.35		
195.00		(-12.49--6.50)	5.99		
				7.34	
15	b1	(-6.50--5.15)	1.35		
210.00		(-13.70--6.50)	7.20		
				8.55	
16	b1	(-6.50--5.15)	1.35		
225.00		(-15.01--6.50)	8.51		
				9.86	
17	b1	(-6.50--5.15)	1.35		
240.00		(-16.00--6.50)	9.50		
				10.85	
18	b1	(-6.50--5.15)	1.35		
255.00		(-16.36--6.50)	9.86		
				11.21	
19	b1	(-6.50--5.15)	1.35		
270.00		(-7.89--6.50)	1.39		
				2.74	
19	b2	(3.00-1.65)	1.35		
270.00		(12.78-3.00)	9.78		
				11.13	
20	b1	(3.00-1.65)	1.35		
285.00		(11.56-3.00)	8.56		
				9.91	

Il Direttore dei Lavori | L'Impresa

BINDER

N. SEZIONE PROG.	FIG.	ELEMENTI DI CALCOLO	LUNGHEZZA ELEMENTARE ml	LUNGHEZZA FIGURA ml	NOTE
7bis	c1	(-4.00--5.00)	1.00		
81.08		(0.00--4.00)	4.00		
		(1.50-0.00)	1.50		
				6.50	
7	c1	(-4.00--5.00)	1.00		
90.00		(0.00--4.00)	4.00		
		(1.50-0.00)	1.50		
				6.50	
8	c1	(-4.00--5.00)	1.00		
105.00		(0.00--4.00)	4.00		
		(1.50-0.00)	1.50		
				6.50	
9	c1	(-4.00--5.00)	1.00		
120.00		(0.00--4.00)	4.00		
		(1.50-0.00)	1.50		
				6.50	
10	c1	(-4.00--5.00)	1.00		
135.00		(0.00--4.00)	4.00		
		(1.50-0.00)	1.50		
				6.50	
11	c1	(-4.00--5.00)	1.00		
150.00		(0.00--4.00)	4.00		
		(1.50-0.00)	1.50		
				6.50	
12	c1	(-4.00--5.00)	1.00		
165.00		(0.00--4.00)	4.00		
		(1.50-0.00)	1.50		
				6.50	
12bis	c1	(-4.00--5.00)	1.00		
166.40		(0.00--4.00)	4.00		
		(1.50-0.00)	1.50		
				6.50	
13	c1	(-4.00--5.00)	1.00		
180.00		(0.00--4.00)	4.00		
		(1.50-0.00)	1.50		
				6.50	
13bis	c1	(-4.00--5.00)	1.00		
185.51		(0.00--4.00)	4.00		
		(1.50-0.00)	1.50		
				6.50	
14	c1	(-4.00--5.00)	1.00		
195.00		(0.00--4.00)	4.00		
		(1.50-0.00)	1.50		
				6.50	
15	c1	(-4.00--5.00)	1.00		
210.00		(0.00--4.00)	4.00		
		(1.50-0.00)	1.50		
				6.50	
16	c1	(-4.00--5.00)	1.00		
225.00		(0.00--4.00)	4.00		
		(1.50-0.00)	1.50		
				6.50	
17	c1	(-4.00--5.00)	1.00		
240.00		(0.00--4.00)	4.00		
		(1.50-0.00)	1.50		
				6.50	
18	c1	(-4.00--5.00)	1.00		
255.00		(0.00--4.00)	4.00		
		(1.50-0.00)	1.50		
				6.50	
18 bis	c1	(-4.00--5.00)	1.00		
265.11		(0.00--4.00)	4.00		
		(1.50-0.00)	1.50		
				6.50	
19	c1	(-4.00--5.00)	1.00		
270.00		(0.00--4.00)	4.00		
		(1.50-0.00)	1.50		
				6.50	
20	c1	(1.50-0.00)	1.50		
				1.50	

Il Direttore dei Lavori | L'Impresa

BASE

N. SEZIONE PROG.	FIG.	ELEMENTI DI CALCOLO	LUNGHEZZA ELEMENTARE ml	LUNGHEZZA FIGURA ml	NOTE
7bis	d1	(-4.00--5.00)	1.00		
81.08		(0.00--4.00)	4.00		
		(1.50-0.00)	1.50		
				6.50	
7	d1	(-4.00--5.00)	1.00		
90.00		(0.00--4.00)	4.00		
		(1.50-0.00)	1.50		
				6.50	
8	d1	(-4.00--5.00)	1.00		
105.00		(0.00--4.00)	4.00		
		(1.50-0.00)	1.50		
				6.50	
9	d1	(-4.00--5.00)	1.00		
120.00		(0.00--4.00)	4.00		
		(1.50-0.00)	1.50		
				6.50	
10	d1	(-4.00--5.00)	1.00		
135.00		(0.00--4.00)	4.00		
		(1.50-0.00)	1.50		
				6.50	
11	d1	(-4.00--5.00)	1.00		
150.00		(0.00--4.00)	4.00		
		(1.50-0.00)	1.50		
				6.50	
12	d1	(-4.00--5.00)	1.00		
165.00		(0.00--4.00)	4.00		
		(1.50-0.00)	1.50		
				6.50	
12bis	d1	(-4.00--5.00)	1.00		
166.40		(0.00--4.00)	4.00		
		(1.50-0.00)	1.50		
				6.50	
13	d1	(-4.00--5.00)	1.00		
180.00		(0.00--4.00)	4.00		
		(1.50-0.00)	1.50		
				6.50	
13bis	d1	(-4.00--5.00)	1.00		
185.51		(0.00--4.00)	4.00		
		(1.50-0.00)	1.50		
				6.50	
14	d1	(-4.00--5.00)	1.00		
195.00		(0.00--4.00)	4.00		
		(1.50-0.00)	1.50		
				6.50	
15	d1	(-4.00--5.00)	1.00		
210.00		(0.00--4.00)	4.00		
		(1.50-0.00)	1.50		
				6.50	
16	d1	(-4.00--5.00)	1.00		
225.00		(0.00--4.00)	4.00		
		(1.50-0.00)	1.50		
				6.50	
17	d1	(-4.00--5.00)	1.00		
240.00		(0.00--4.00)	4.00		
		(1.50-0.00)	1.50		
				6.50	
18	d1	(-4.00--5.00)	1.00		
255.00		(0.00--4.00)	4.00		
		(1.50-0.00)	1.50		
				6.50	
18 bis	d1	(-4.00--5.00)	1.00		
265.11		(0.00--4.00)	4.00		
		(1.50-0.00)	1.50		
				6.50	
19	d1	(-4.00--5.00)	1.00		
270.00		(0.00--4.00)	4.00		
		(1.50-0.00)	1.50		
				6.50	
20	d1	(1.50-0.00)	1.50		
				1.50	

Il Direttore dei Lavori | L'Impresa

FONDAZIONE

N. SEZIONE PROG.	FIG.	ELEMENTI DI CALCOLO	LUNGHEZZA ELEMENTARE ml	LUNGHEZZA FIGURA ml	NOTE
7bis	e1	(-4.00--5.00)	1.00		
81.08		(0.00--4.00)	4.00		
		(1.50-0.00)	1.50		
				6.50	
7	e1	(-4.00--5.00)	1.00		
90.00		(0.00--4.00)	4.00		
		(1.50-0.00)	1.50		
				6.50	
8	e1	(-4.00--5.00)	1.00		
105.00		(0.00--4.00)	4.00		
		(1.50-0.00)	1.50		
				6.50	
9	e1	(-4.00--5.00)	1.00		
120.00		(0.00--4.00)	4.00		
		(1.50-0.00)	1.50		
				6.50	
10	e1	(-4.00--5.00)	1.00		
135.00		(0.00--4.00)	4.00		
		(1.50-0.00)	1.50		
				6.50	
11	e1	(-4.00--5.00)	1.00		
150.00		(0.00--4.00)	4.00		
		(1.50-0.00)	1.50		
				6.50	
12	e1	(-4.00--5.00)	1.00		
165.00		(0.00--4.00)	4.00		
		(1.50-0.00)	1.50		
				6.50	
12bis	e1	(-4.00--5.00)	1.00		
166.40		(0.00--4.00)	4.00		
		(1.50-0.00)	1.50		
				6.50	
13	e1	(-4.00--5.00)	1.00		
180.00		(0.00--4.00)	4.00		
		(1.50-0.00)	1.50		
				6.50	
13bis	e1	(-4.00--5.00)	1.00		
185.51		(0.00--4.00)	4.00		
		(1.50-0.00)	1.50		
				6.50	
14	e1	(-4.00--5.00)	1.00		
195.00		(0.00--4.00)	4.00		
		(1.50-0.00)	1.50		
				6.50	
15	e1	(-4.00--5.00)	1.00		
210.00		(0.00--4.00)	4.00		
		(1.50-0.00)	1.50		
				6.50	
16	e1	(-4.00--5.00)	1.00		
225.00		(0.00--4.00)	4.00		
		(1.50-0.00)	1.50		
				6.50	
17	e1	(-4.00--5.00)	1.00		
240.00		(0.00--4.00)	4.00		
		(1.50-0.00)	1.50		
				6.50	
18	e1	(-4.00--5.00)	1.00		
255.00		(0.00--4.00)	4.00		
		(1.50-0.00)	1.50		
				6.50	
18 bis	e1	(-4.00--5.00)	1.00		
265.11		(0.00--4.00)	4.00		
		(1.50-0.00)	1.50		
				6.50	
19	e1	(-4.00--5.00)	1.00		
270.00		(0.00--4.00)	4.00		
		(1.50-0.00)	1.50		
				6.50	
20	e1	(1.50-0.00)	1.50		
				1.50	

Il Direttore dei Lavori | L'Impresa

SCOTICO

N. SEZIONE PROG.	FIG.	ELEMENTI DI CALCOLO	LUNGHEZZA ELEMENTARE ml	LUNGHEZZA FIGURA ml	NOTE
7bis	sc1	(-5.00--5.00)	0.00		
81.08		(-4.75--5.00)	0.25		
		(-3.96--4.75)	0.79		
		(-3.55--3.96)	0.41		
		(-2.91--3.55)	0.64		
		(-2.35--2.91)	0.56		
		(-2.21--2.35)	0.14		
		(-1.99--2.21)	0.22		
		(-1.47--1.99)	0.52		
		(-1.15--1.47)	0.32		
		(-0.03--1.15)	1.12		
		(0.06--0.03)	0.09		
		(0.19-0.06)	0.13		
		(1.26-0.19)	1.07		
		(1.93-1.26)	0.67		
		(2.46-1.93)	0.53		
		(3.29-2.46)	0.83		
		(3.66-3.29)	0.37		
		(3.90-3.66)	0.24		
		(4.86-3.90)	0.96		
		(4.88-4.86)	0.02		
		(4.88-4.88)	0.00		
				9.88	
7	sc1	(-5.00--5.00)	0.00		
90.00		(-4.75--5.00)	0.25		
		(-3.96--4.75)	0.79		
		(-3.55--3.96)	0.41		
		(-2.91--3.55)	0.64		
		(-2.35--2.91)	0.56		
		(-2.21--2.35)	0.14		
		(-1.99--2.21)	0.22		
		(-1.47--1.99)	0.52		
		(-1.15--1.47)	0.32		
		(-0.03--1.15)	1.12		
		(0.06--0.03)	0.09		
		(0.19-0.06)	0.13		
		(1.26-0.19)	1.07		
		(1.93-1.26)	0.67		
		(2.46-1.93)	0.53		
		(3.29-2.46)	0.83		
		(3.66-3.29)	0.37		
		(3.90-3.66)	0.24		
		(4.86-3.90)	0.96		
		(4.88-4.86)	0.02		
		(4.88-4.88)	0.00		
				9.88	
8	sc1	(-6.64--7.78)	1.14		
105.00		(-5.71--6.64)	0.93		
		(-5.00--5.71)	0.71		
		(-4.40--5.00)	0.60		
		(-3.36--4.40)	1.04		
		(-3.08--3.36)	0.28		
		(-1.98--3.08)	1.10		
		(-1.77--1.98)	0.21		
		(-1.72--1.77)	0.05		
		(-0.46--1.72)	1.26		
		(-0.08--0.46)	0.38		
		(0.85--0.08)	0.93		
		(1.57-0.85)	0.72		
		(2.17-1.57)	0.60		
		(3.21-2.17)	1.04		
		(3.48-3.21)	0.27		
		(4.55-3.48)	1.07		
		(4.79-4.55)	0.24		
		(4.85-4.79)	0.06		
		(4.99-4.85)	0.14		
		(4.99-4.99)	0.00		
				12.77	
9	sc1	(-8.93--8.93)	0.00		
120.00		(-8.89--8.93)	0.04		
		(-7.61--8.89)	1.28		
		(-7.46--7.61)	0.15		
		(-6.14--7.46)	1.32		
		(-6.03--6.14)	0.11		
		(-4.67--6.03)	1.36		
		(-4.63--4.67)	0.04		
		(-4.60--4.63)	0.03		
		(-3.91--4.60)	0.69		
		(-3.19--3.91)	0.72		
		(-3.17--3.19)	0.02		
		(-2.31--3.17)	0.86		
		(-1.74--2.31)	0.57		
		(-1.72--1.74)	0.02		
		(-0.31--1.72)	1.41		
		(-0.25--0.31)	0.06		
		(1.12--0.25)	1.37		
		(1.22-1.12)	0.10		
		(2.55-1.22)	1.33		
		(2.69-2.55)	0.14		
		(3.98-2.69)	1.29		
		(4.16-3.98)	0.18		
		(4.40-4.16)	0.24		
		(4.40-4.40)	0.00		
				13.33	
10	sc1	(-9.62--9.62)	0.00		
135.00		(-8.97--9.62)	0.65		
		(-8.60--8.97)	0.37		
		(-7.48--8.60)	1.12		
		(-7.32--7.48)	0.16		
		(-7.27--7.32)	0.05		
		(-6.03--7.27)	1.24		
		(-5.56--6.03)	0.47		
		(-4.75--5.56)	0.81		
		(-3.86--4.75)	0.89		
		(-3.46--3.86)	0.40		
		(-2.24--3.46)	1.22		
		(-2.18--2.24)	0.06		
		A RIPORTARE ml	7.44		

SCOTICO

N. SEZIONE PROG.	FIG.	ELEMENTI DI CALCOLO	LUNGHEZZA ELEMENTARE ml	LUNGHEZZA FIGURA ml	NOTE
		RIPORTO ml	7.44		
		(-2.16--2.18)	0.02		
		(-0.90--2.16)	1.26		
		(-0.46--0.90)	0.44		
		(0.39--0.46)	0.85		
		(1.24-0.39)	0.85		
		(1.67-1.24)	0.43		
		(2.95-1.67)	1.28		
		(2.96-2.95)	0.01		
		(3.00-2.96)	0.04		
		(4.24-3.00)	1.24		
		(4.65-4.24)	0.41		
		(5.15-4.65)	0.50		
		(5.39-5.15)	0.24		
		(5.39-5.39)	0.00		
				15.01	
11	sc1	(-10.36--10.36)	0.00		
150.00		(-10.24--10.36)	0.12		
		(-9.52--10.24)	0.72		
		(-9.04--9.52)	0.48		
		(-8.73--9.04)	0.31		
		(-7.84--8.73)	0.89		
		(-6.75--7.84)	1.09		
		(-6.65--6.75)	0.10		
		(-6.48--6.65)	0.17		
		(-5.45--6.48)	1.03		
		(-4.77--5.45)	0.68		
		(-4.25--4.77)	0.52		
		(-3.45--4.25)	0.80		
		(-3.05--3.45)	0.40		
		(-2.79--3.05)	0.26		
		(-1.85--2.79)	0.94		
		(-0.81--1.85)	1.04		
		(-0.65--0.81)	0.16		
		(-0.41--0.65)	0.24		
		(0.55--0.41)	0.96		
		(1.17-0.55)	0.62		
		(1.74-1.17)	0.57		
		(2.43-1.74)	0.69		
		(2.47-2.43)	0.04		
		(2.49-2.47)	0.02		
		(2.55-2.49)	0.06		
		(2.96-2.55)	0.41		
		(2.97-2.96)	0.01		
		(3.15-2.97)	0.18		
		(4.14-3.15)	0.99		
		(5.13-4.14)	0.99		
		(5.34-5.13)	0.21		
		(5.67-5.34)	0.33		
		(6.13-5.67)	0.46		
		(6.13-6.13)	0.00		
				16.49	
12	sc1	(-10.54--10.54)	0.00		
165.00		(-9.71--10.54)	0.83		
		(-8.99--9.71)	0.72		
		(-8.55--8.99)	0.44		
		(-8.04--8.55)	0.51		
		(-7.39--8.04)	0.65		
		(-6.82--7.39)	0.57		
		(-6.53--6.82)	0.29		
		(-6.50--6.53)	0.03		
		(-6.44--6.50)	0.06		
		(-6.21--6.44)	0.23		
		(-6.17--6.21)	0.04		
		(-5.97--6.17)	0.20		
		(-5.68--5.97)	0.29		
		(-5.06--5.68)	0.62		
		(-4.66--5.06)	0.40		
		(-3.90--4.66)	0.76		
		(-3.02--3.90)	0.88		
		(-2.73--3.02)	0.29		
		(-2.49--2.73)	0.24		
		(-1.57--2.49)	0.92		
		(-0.51--1.57)	1.06		
		(-0.41--0.51)	0.10		
		(-0.32--0.41)	0.09		
		(0.76--0.32)	1.08		
		(1.85-0.76)	1.09		
		(1.92-1.85)	0.07		
		(2.00-1.92)	0.08		
		(3.08-2.00)	1.08		
		(4.02-3.08)	0.94		
		(4.25-4.02)	0.23		
		(4.51-4.25)	0.26		
		(5.41-4.51)	0.90		
		(6.19-5.41)	0.78		
		(6.77-6.19)	0.58		
		(6.81-6.77)	0.04		
		(6.84-6.81)	0.03		
		(6.86-6.84)	0.02		
		(6.87-6.86)	0.01		
		(6.87-6.87)	0.00		
		(6.88-6.87)	0.01		
		(6.88-6.88)	0.00		
				17.42	
12bis	sc1	(-11.23--11.23)	0.00		
166.40		(-10.86--11.23)	0.37		
		(-10.12--10.86)	0.74		
		(-9.47--10.12)	0.65		
		(-8.96--9.47)	0.51		
		(-8.37--8.96)	0.59		
		(-7.79--8.37)	0.58		
		(-7.62--7.79)	0.17		
		(-7.53--7.62)	0.09		
		(-7.30--7.53)	0.23		
		(-7.27--7.30)	0.03		
		A RIPORTARE ml	3.96		

SCOTICO

N. SEZIONE PROG.	FIG.	ELEMENTI DI CALCOLO	LUNGHEZZA ELEMENTARE ml	LUNGHEZZA FIGURA ml	NOTE
		RIPORTO ml	3.96		
		(-7.00--7.27)	0.27		
		(-6.99--7.00)	0.01		
		(-6.86--6.99)	0.13		
		(-6.63--6.86)	0.23		
		(-5.88--6.63)	0.75		
		(-5.47--5.88)	0.41		
		(-5.11--5.47)	0.36		
		(-4.31--5.11)	0.80		
		(-3.39--4.31)	0.92		
		(-3.15--3.39)	0.24		
		(-2.93--3.15)	0.22		
		(-1.98--2.93)	0.95		
		(-0.89--1.98)	1.09		
		(-0.82--0.89)	0.07		
		(-0.76--0.82)	0.06		
		(-0.05--0.76)	0.71		
		(0.01--0.05)	0.06		
		(0.34-0.01)	0.33		
		(1.42-0.34)	1.08		
		(1.50-1.42)	0.08		
		(1.60-1.50)	0.10		
		(2.67-1.60)	1.07		
		(3.60-2.67)	0.93		
		(3.83-3.60)	0.23		
		(4.09-3.83)	0.26		
		(4.99-4.09)	0.90		
		(5.26-4.99)	0.27		
		(5.48-5.26)	0.22		
		(5.49-5.48)	0.01		
		(5.79-5.49)	0.30		
		(5.93-5.79)	0.14		
		(5.94-5.93)	0.01		
		(6.02-5.94)	0.08		
		(6.15-6.02)	0.13		
		(6.58-6.15)	0.43		
		(6.96-6.58)	0.38		
		(6.96-6.96)	0.00		
				18.19	
13 180.00	sc1	(-11.00--11.00)	0.00		
		(-10.86--11.00)	0.14		
		(-9.86--10.86)	1.00		
		(-8.97--9.86)	0.89		
		(-8.70--8.97)	0.27		
		(-8.41--8.70)	0.29		
		(-7.55--8.41)	0.86		
		(-6.77--7.55)	0.78		
		(-6.39--6.77)	0.38		
		(-5.96--6.39)	0.43		
		(-5.23--5.96)	0.73		
		(-4.57--5.23)	0.66		
		(-4.24--4.57)	0.33		
		(-4.07--4.24)	0.17		
		(-4.06--4.07)	0.01		
				6.94	
13bis 185.51	sc1	(-11.17--11.17)	0.00		
		(-10.62--11.17)	0.55		
		(-10.44--10.62)	0.18		
		(-10.24--10.44)	0.20		
		(-9.28--10.24)	0.96		
		(-8.42--9.28)	0.86		
		(-8.12--8.42)	0.30		
		(-7.79--8.12)	0.33		
		(-6.96--7.79)	0.83		
		(-6.22--6.96)	0.74		
		(-5.80--6.22)	0.42		
		(-5.34--5.80)	0.46		
		(-4.64--5.34)	0.70		
		(-4.02--4.64)	0.62		
		(-3.48--4.02)	0.54		
		(-2.88--3.48)	0.60		
		(-2.33--2.88)	0.55		
		(-1.82--2.33)	0.51		
		(-1.17--1.82)	0.65		
		(-0.43--1.17)	0.74		
		(-0.01--0.43)	0.42		
		(0.38--0.01)	0.39		
		(1.00-0.38)	0.62		
		(1.00-1.00)	0.00		
				12.17	
14 195.00	sc1	(-11.86--11.86)	0.00		
		(-11.44--11.86)	0.42		
		(-11.23--11.44)	0.21		
		(-11.04--11.23)	0.19		
		(-10.07--11.04)	0.97		
		(-8.99--10.07)	1.08		
		(-8.91--8.99)	0.08		
		(-8.84--8.91)	0.07		
		(-7.75--8.84)	1.09		
		(-6.64--7.75)	1.11		
		(-6.59--6.64)	0.05		
		(-6.53--6.59)	0.06		
		(-5.43--6.53)	1.10		
		(-4.44--5.43)	0.99		
		(-4.27--4.44)	0.17		
		(-4.08--4.27)	0.19		
		(-3.11--4.08)	0.97		
		(-2.25--3.11)	0.86		
		(-1.96--2.25)	0.29		
		(-1.63--1.96)	0.33		
		(-0.80--1.63)	0.83		
		(-0.05--0.80)	0.75		
		(0.36--0.05)	0.41		
		(0.94-0.36)	0.58		
		(0.94-0.94)	0.00		
				12.80	
		A RIPORTARE ml			

SCOTICO

N. SEZIONE PROG.	FIG.	ELEMENTI DI CALCOLO	LUNGHEZZA ELEMENTARE ml	LUNGHEZZA FIGURA ml	NOTE
		RIPORTO ml			
15	sc1	(-13.15--13.15)	0.00		
210.00		(-13.11--13.15)	0.04		
		(-12.59--13.11)	0.52		
		(-12.01--12.59)	0.58		
		(-11.43--12.01)	0.58		
		(-10.91--11.43)	0.52		
		(-10.27--10.91)	0.64		
		(-9.56--10.27)	0.71		
		(-9.12--9.56)	0.44		
		(-8.71--9.12)	0.41		
		(-7.96--8.71)	0.75		
		(-7.11--7.96)	0.85		
		(-6.80--7.11)	0.31		
		(-6.52--6.80)	0.28		
		(-5.64--6.52)	0.88		
		(-4.66--5.64)	0.98		
		(-4.48--4.66)	0.18		
		(-4.32--4.48)	0.16		
		(-3.55--4.32)	0.77		
				9.60	
16	sc1	(-14.47--14.47)	0.00		
225.00		(-14.02--14.47)	0.45		
		(-13.28--14.02)	0.74		
		(-12.85--13.28)	0.43		
		(-12.49--12.85)	0.36		
		(-11.97--12.49)	0.52		
		(-11.68--11.97)	0.29		
		(-11.21--11.68)	0.47		
		(-10.51--11.21)	0.70		
		(-10.46--10.51)	0.05		
		(-10.36--10.46)	0.10		
		(-9.34--10.36)	1.02		
		(-8.24--9.34)	1.10		
		(-8.17--8.24)	0.07		
		(-8.12--8.17)	0.05		
		(-7.21--8.12)	0.91		
		(-7.19--7.21)	0.02		
		(-7.04--7.19)	0.15		
		(-7.00--7.04)	0.04		
		(-6.98--7.00)	0.02		
		(-6.97--6.98)	0.01		
		(-6.94--6.97)	0.03		
		(-6.87--6.94)	0.07		
		(-6.83--6.87)	0.04		
		(-6.68--6.83)	0.15		
		(-6.58--6.68)	0.10		
		(-6.55--6.58)	0.03		
		(-6.49--6.55)	0.06		
		(-6.43--6.49)	0.06		
		(-6.40--6.43)	0.03		
		(-6.33--6.40)	0.07		
		(-6.01--6.33)	0.32		
		(-6.01--6.01)	0.00		
		(-5.83--6.01)	0.18		
		(-5.48--5.83)	0.35		
		(-4.66--5.48)	0.82		
		(-3.98--4.66)	0.68		
		(-3.49--3.98)	0.49		
				10.98	
17	sc1	(-15.51--15.51)	0.00		
240.00		(-15.29--15.51)	0.22		
		(-14.20--15.29)	1.09		
		(-14.07--14.20)	0.13		
		(-13.85--14.07)	0.22		
		(-12.86--13.85)	0.99		
		(-12.64--12.86)	0.22		
		(-12.30--12.64)	0.34		
		(-11.90--12.30)	0.40		
		(-11.64--11.90)	0.26		
		(-10.45--11.64)	1.19		
		(-10.42--10.45)	0.03		
		(-10.40--10.42)	0.02		
		(-9.20--10.40)	1.20		
		(-9.04--9.20)	0.16		
		(-9.03--9.04)	0.01		
		(-8.74--9.03)	0.29		
		(-8.69--8.74)	0.05		
		(-8.60--8.69)	0.09		
		(-8.58--8.60)	0.02		
		(-8.56--8.58)	0.02		
		(-8.52--8.56)	0.04		
		(-8.42--8.52)	0.10		
		(-8.38--8.42)	0.04		
		(-8.36--8.38)	0.02		
		(-8.34--8.36)	0.02		
		(-8.21--8.34)	0.13		
		(-8.19--8.21)	0.02		
		(-8.16--8.19)	0.03		
		(-8.14--8.16)	0.02		
		(-8.10--8.14)	0.04		
		(-7.98--8.10)	0.12		
		(-7.86--7.98)	0.12		
		(-7.22--7.86)	0.64		
		(-6.77--7.22)	0.45		
		(-6.60--6.77)	0.17		
		(-6.59--6.60)	0.01		
		(-6.44--6.59)	0.15		
		(-5.69--6.44)	0.75		
		(-5.60--5.69)	0.09		
		(-5.45--5.60)	0.15		
		(-5.00--5.45)	0.45		
		(-4.70--5.00)	0.30		
		(-4.55--4.70)	0.15		
		(-4.33--4.55)	0.22		
		(-3.67--4.33)	0.66		
		A RIPORTARE ml	11.84		

SCOTICO

N. SEZIONE PROG.	FIG.	ELEMENTI DI CALCOLO	LUNGHEZZA ELEMENTARE ml	LUNGHEZZA FIGURA ml	NOTE
		RIPORTO ml	11.84		
		(-3.49--3.67)	0.18		
				12.02	
18	sc1	(-15.76--15.76)	0.00		
255.00		(-15.36--15.76)	0.40		
		(-15.19--15.36)	0.17		
		(-14.73--15.19)	0.46		
		(-14.47--14.73)	0.26		
		(-14.39--14.47)	0.08		
		(-13.72--14.39)	0.67		
		(-13.18--13.72)	0.54		
		(-12.08--13.18)	1.10		
		(-11.87--12.08)	0.21		
		(-11.04--11.87)	0.83		
		(-10.56--11.04)	0.48		
		(-10.44--10.56)	0.12		
		(-9.24--10.44)	1.20		
		(-8.80--9.24)	0.44		
		(-7.93--8.80)	0.87		
		(-7.16--7.93)	0.77		
		(-6.62--7.16)	0.54		
		(-5.52--6.62)	1.10		
		(-5.30--5.52)	0.22		
		(-5.15--5.30)	0.15		
		(-4.33--5.15)	0.82		
		(-4.25--4.33)	0.08		
		(-4.24--4.25)	0.01		
		(-4.15--4.24)	0.09		
		(-4.15--4.15)	0.00		
		(-4.15--4.15)	0.00		
		(-4.14--4.15)	0.01		
		(-4.10--4.14)	0.04		
		(-4.09--4.10)	0.01		
		(-3.96--4.09)	0.13		
		(-3.93--3.96)	0.03		
		(-3.92--3.93)	0.01		
		(-3.54--3.92)	0.38		
				12.22	
18 bis	sc2	(-15.92--15.92)	0.00		
265.11		(-14.83--15.92)	1.09		
		(-14.82--14.83)	0.01		
		(-14.77--14.82)	0.05		
		(-13.43--14.77)	1.34		
		(-13.32--13.43)	0.11		
		(-12.03--13.32)	1.29		
		(-11.83--12.03)	0.20		
		(-11.67--11.83)	0.16		
		(-11.56--11.67)	0.11		
		(-11.48--11.56)	0.08		
		(-11.17--11.48)	0.31		
		(-11.16--11.17)	0.01		
		(-11.16--11.16)	0.00		
		(-10.74--11.16)	0.42		
		(-10.69--10.74)	0.05		
		(-10.63--10.69)	0.06		
		(-10.50--10.63)	0.13		
		(-10.37--10.50)	0.13		
		(-9.94--10.37)	0.43		
		(-9.94--9.94)	0.00		
		(-9.94--9.94)	0.00		
		(-9.28--9.94)	0.66		
		(-9.23--9.28)	0.05		
		(-8.79--9.23)	0.44		
		(-7.83--8.79)	0.96		
		(-7.28--7.83)	0.55		
		(-6.44--7.28)	0.84		
		(-5.78--6.44)	0.66		
		(-5.39--5.78)	0.39		
		(-5.04--5.39)	0.35		
		(-4.67--5.04)	0.37		
		(-4.27--4.67)	0.40		
		(-3.67--4.27)	0.60		
				12.25	
18 bis	sc1	(4.40-4.33)	0.07		
265.11		(4.75-4.40)	0.35		
		(4.78-4.75)	0.03		
		(6.14-4.78)	1.36		
		(6.22-6.14)	0.08		
		(6.67-6.22)	0.45		
		(6.89-6.67)	0.22		
		(7.01-6.89)	0.12		
		(7.02-7.01)	0.01		
		(7.18-7.02)	0.16		
		(7.25-7.18)	0.07		
		(7.54-7.25)	0.29		
		(7.60-7.54)	0.06		
		(7.62-7.60)	0.02		
		(7.71-7.62)	0.09		
		(7.72-7.71)	0.01		
		(7.74-7.72)	0.02		
		(7.75-7.74)	0.01		
		(7.75-7.75)	0.00		
		(7.82-7.75)	0.07		
		(7.96-7.82)	0.14		
		(8.10-7.96)	0.14		
		(8.39-8.10)	0.29		
		(8.58-8.39)	0.19		
		(8.63-8.58)	0.05		
		(8.68-8.63)	0.05		
		(8.71-8.68)	0.03		
		(9.03-8.71)	0.32		
		(9.06-9.03)	0.03		
		(9.12-9.06)	0.06		
		(9.31-9.12)	0.19		
		(10.34-9.31)	1.03		
		(10.82-10.34)	0.48		
		A RIPORTARE ml	6.49		

SCOTICO

N. SEZIONE PROG.	FIG.	ELEMENTI DI CALCOLO	LUNGHEZZA ELEMENTARE ml	LUNGHEZZA FIGURA ml	NOTE
		RIPORTO ml	6.49		
		(11.73-10.82)	0.91		
		(12.33-11.73)	0.60		
		(12.45-12.33)	0.12		
		(12.45-12.45)	0.00		
				8.12	
19	sc1	(-7.89--7.89)	0.00		
270.00		(-7.67--7.89)	0.22		
		(-7.66--7.67)	0.01		
		(-7.35--7.66)	0.31		
		(-6.45--7.35)	0.90		
		(-6.45--6.45)	0.00		
		(-6.45--6.45)	0.00		
		(-6.43--6.45)	0.02		
		(-6.41--6.43)	0.02		
		(-6.37--6.41)	0.04		
		(-6.32--6.37)	0.05		
		(-6.22--6.32)	0.10		
		(-6.22--6.22)	0.00		
		(-6.21--6.22)	0.01		
		(-6.21--6.21)	0.00		
		(-5.68--6.21)	0.53		
		(-5.51--5.68)	0.17		
		(-5.09--5.51)	0.42		
		(-5.08--5.09)	0.01		
		(-5.08--5.08)	0.00		
		(-5.03--5.08)	0.05		
		(-5.01--5.03)	0.02		
		(-4.97--5.01)	0.04		
		(-4.88--4.97)	0.09		
		(-4.86--4.88)	0.02		
		(-4.85--4.86)	0.01		
		(-4.77--4.85)	0.08		
		(-4.77--4.77)	0.00		
		(-4.76--4.77)	0.01		
		(-3.33--4.76)	1.43		
		(-3.30--3.33)	0.03		
		(-1.88--3.30)	1.42		
		(-1.85--1.88)	0.03		
		(-0.43--1.85)	1.42		
		(-0.41--0.43)	0.02		
		(0.08--0.41)	0.49		
		(0.27-0.08)	0.19		
		(0.31-0.27)	0.04		
		(0.35-0.31)	0.04		
		(0.37-0.35)	0.02		
		(0.38-0.37)	0.01		
		(0.38-0.38)	0.00		
		(0.42-0.38)	0.04		
		(0.43-0.42)	0.01		
		(0.58-0.43)	0.15		
		(1.01-0.58)	0.43		
		(1.02-1.01)	0.01		
		(1.04-1.02)	0.02		
		(1.10-1.04)	0.06		
		(1.10-1.10)	0.00		
		(1.14-1.10)	0.04		
		(1.16-1.14)	0.02		
		(1.61-1.16)	0.45		
		(2.39-1.61)	0.78		
		(2.46-2.39)	0.07		
		(2.51-2.46)	0.05		
		(3.90-2.51)	1.39		
		(3.97-3.90)	0.07		
		(5.35-3.97)	1.38		
		(5.40-5.35)	0.05		
		(5.84-5.40)	0.44		
		(5.89-5.84)	0.05		
		(6.02-5.89)	0.13		
		(6.05-6.02)	0.03		
		(6.08-6.05)	0.03		
		(6.16-6.08)	0.08		
		(6.22-6.16)	0.06		
		(6.30-6.22)	0.08		
		(6.32-6.30)	0.02		
		(6.34-6.32)	0.02		
		(6.44-6.34)	0.10		
		(6.59-6.44)	0.15		
		(6.60-6.59)	0.01		
		(6.60-6.60)	0.00		
		(6.81-6.60)	0.21		
		(6.81-6.81)	0.00		
		(6.83-6.81)	0.02		
		(6.88-6.83)	0.05		
		(7.01-6.88)	0.13		
		(7.66-7.01)	0.65		
		(8.15-7.66)	0.49		
		(8.19-8.15)	0.04		
		(8.20-8.19)	0.01		
		(8.21-8.20)	0.01		
		(8.23-8.21)	0.02		
		(8.32-8.23)	0.09		
		(8.86-8.32)	0.54		
		(8.90-8.86)	0.04		
		(9.04-8.90)	0.14		
		(9.08-9.04)	0.04		
		(9.11-9.08)	0.03		
		(9.23-9.11)	0.12		
		(9.35-9.23)	0.12		
		(9.61-9.35)	0.26		
		(9.64-9.61)	0.03		
		(9.66-9.64)	0.02		
		(9.68-9.66)	0.02		
		(9.70-9.68)	0.02		
		(9.71-9.70)	0.01		
		(9.71-9.71)	0.00		
		A RIPORTARE ml	17.60		

SCOTICO

N. SEZIONE PROG.	FIG.	ELEMENTI DI CALCOLO	LUNGHEZZA ELEMENTARE ml	LUNGHEZZA FIGURA ml	NOTE
		RIPORTO ml	17.60		
		(9.71-9.71)	0.00		
		(9.72-9.71)	0.01		
		(9.73-9.72)	0.01		
		(10.20-9.73)	0.47		
		(10.31-10.20)	0.11		
		(10.46-10.31)	0.15		
		(10.64-10.46)	0.18		
		(10.68-10.64)	0.04		
		(11.13-10.68)	0.45		
		(11.18-11.13)	0.05		
		(11.24-11.18)	0.06		
		(11.91-11.24)	0.67		
		(12.25-11.91)	0.34		
		(12.25-12.25)	0.00		
				20.14	
20	sc2	(0.00-0.00)	0.00		
285.00		(0.14-0.00)	0.14		
		(1.13-0.14)	0.99		
		(1.18-1.13)	0.05		
		(1.42-1.18)	0.24		
		(2.21-1.42)	0.79		
		(2.34-2.21)	0.13		
		(3.25-2.34)	0.91		
		(3.55-3.25)	0.30		
		(4.28-3.55)	0.73		
		(4.33-4.28)	0.05		
		(4.42-4.33)	0.09		
		(4.49-4.42)	0.07		
		(4.72-4.49)	0.23		
		(4.72-4.72)	0.00		
		(4.72-4.72)	0.00		
		(5.26-4.72)	0.54		
		(5.32-5.26)	0.06		
		(5.63-5.32)	0.31		
		(5.95-5.63)	0.32		
		(6.16-5.95)	0.21		
		(6.17-6.16)	0.01		
		(6.18-6.17)	0.01		
		(6.20-6.18)	0.02		
		(6.35-6.20)	0.15		
		(7.18-6.35)	0.83		
		(7.39-7.18)	0.21		
		(8.39-7.39)	1.00		
		(8.43-8.39)	0.04		
		(8.65-8.43)	0.22		
		(9.46-8.65)	0.81		
		(9.49-9.46)	0.03		
		(10.21-9.49)	0.72		
		(10.22-10.21)	0.01		
		(10.30-10.22)	0.08		
		(10.30-10.30)	0.00		
		(10.41-10.30)	0.11		
		(10.44-10.41)	0.03		
		(10.44-10.44)	0.00		
		(10.54-10.44)	0.10		
		(10.54-10.54)	0.00		
		(10.70-10.54)	0.16		
		(10.70-10.70)	0.00		
		(10.71-10.70)	0.01		
		(10.71-10.71)	0.00		
		(10.76-10.71)	0.05		
		(10.82-10.76)	0.06		
		(10.96-10.82)	0.14		
		(10.97-10.96)	0.01		
				10.97	
20	sc1	(10.97-10.97)	0.00		
285.00		(10.97-10.97)	0.00		
		(10.97-10.97)	0.00		
				0.00	

Il Direttore dei Lavori | L'Impresa

BONIFICA

DALLA SEZ. DA PROG.	ALLA SEZ. A PROG.	SEZIONE	FIGURA	AREA	DISTANZA SEZIONI m	DISTANZA DI CALCOLO m	VOLUME PARZIALE mc	VOLUME TOTALE mc
7bis	7	7bis	BO1	4.92	8.92	4.46	21.943	
81.08	90.00	7	BO1	4.92	8.92	4.46	21.943	
								43.886
7	8	7	BO1	4.92	15.00	7.50	36.900	
90.00	105.00	8	BO1	6.39	15.00	7.50	47.925	
								84.825
8	9	8	BO1	6.39	15.00	7.50	47.925	
105.00	120.00	9	BO1	6.67	15.00	7.50	50.025	
								97.950
9	10	9	BO1	6.67	15.00	7.50	50.025	
120.00	135.00	10	BO1	7.54	15.00	7.50	56.550	
								106.575
10	11	10	BO1	7.54	15.00	7.50	56.550	
135.00	150.00	11	BO1	8.23	15.00	7.50	61.725	
								118.275
11	12	11	BO1	8.23	15.00	7.50	61.725	
150.00	165.00	12	BO1	8.71	15.00	7.50	65.325	
								127.050
12	12bis	12	BO1	8.71	1.40	0.70	6.097	
165.00	166.40	12bis	BO1	9.10	1.40	0.70	6.370	
								12.467
12bis	13	12bis	BO1	9.10	13.60	6.80	61.880	
166.40	180.00	13	BO1	3.76	13.60	6.80	25.568	
								87.448
13	13bis	13	BO1	3.76	5.51	2.75	10.340	
180.00	185.51	13bis	BO1	3.52	5.51	2.75	9.680	
								20.020
13bis	14	13bis	BO1	3.52	9.49	4.75	16.720	
185.51	195.00	14	BO1	4.00	9.49	4.75	19.000	
								35.720
14	15	14	BO1	4.00	15.00	7.50	30.000	
195.00	210.00	15	BO1	4.80	15.00	7.50	36.000	
								66.000
15	16	15	BO1	4.80	15.00	7.50	36.000	
210.00	225.00	16	BO1	5.52	15.00	7.50	41.400	
								77.400
16	17	16	BO1	5.52	15.00	7.50	41.400	
225.00	240.00	17	BO1	6.02	15.00	7.50	45.150	
								86.550
17	18	17	BO1	6.02	15.00	7.50	45.150	
240.00	255.00	18	BO1	6.11	15.00	7.50	45.825	
								90.975
18	18 bis	18	BO1	6.11	10.11	5.06	30.917	
255.00	265.11	18 bis	BO1	6.14	10.11	5.06	31.068	
		18 bis	BO2	4.07	10.11	5.06	20.594	
								82.579
18 bis	19	18 bis	BO1	6.14	4.89	2.44	14.982	
265.11	270.00	18 bis	BO2	4.07	4.89	2.44	9.931	
		19	BO1	10.13	4.89	2.44	24.717	
								49.630
19	20	19	BO1	10.13	15.00	7.50	75.975	
								75.975

Il Direttore dei Lavori	L'Impresa	TOTALE ARTICOLO	1263.325

SCAVO MURO

DALLA SEZ. DA PROG.	ALLA SEZ. A PROG.	SEZIONE	FIGURA	AREA	DISTANZA SEZIONI m	DISTANZA DI CALCOLO m	VOLUME PARZIALE mc	VOLUME TOTALE mc
12bis	13	13	H1	17.61	13.60	6.80	119.748	
								119.748
13	13bis	13	H1	17.61	5.51	2.75	48.427	
180.00	185.51	13bis	H1	15.17	5.51	2.75	41.718	
								90.145
13bis	14	13bis	H1	15.17	9.49	4.75	72.058	
185.51	195.00	14	H1	12.79	9.49	4.75	60.752	
								132.810
14	15	14	H1	12.79	15.00	7.50	95.925	
195.00	210.00	15	H1	11.34	15.00	7.50	85.050	
								180.975
15	16	15	H1	11.34	15.00	7.50	85.050	
210.00	225.00	16	H1	10.91	15.00	7.50	81.825	
								166.875
16	17	16	H1	10.91	15.00	7.50	81.825	
225.00	240.00	17	H1	10.34	15.00	7.50	77.550	
								159.375
17	18	17	H1	10.34	15.00	7.50	77.550	
240.00	255.00	18	H1	11.04	15.00	7.50	82.800	
								160.350
18	18 bis	18	H1	11.04	10.11	5.06	55.862	
255.00	265.11	18 bis	H1	11.48	10.11	5.06	58.089	
								113.951
18 bis	19	18 bis	H1	11.48	4.89	2.44	28.011	
								28.011

Il Direttore dei Lavori	L'Impresa	TOTALE ARTICOLO	1152.240

SPIANAMENTO

DALLA SEZ. DA PROG.	ALLA SEZ. A PROG.	SEZIONE	FIGURA	AREA	DISTANZA SEZIONI m	DISTANZA DI CALCOLO m	VOLUME PARZIALE mc	VOLUME TOTALE mc
8	9	9	SP1	6.04	15.00	7.50	45.300	45.300
9	10	9	SP1	6.04	15.00	7.50	45.300	45.300

USURA

DALLA SEZ. DA PROG.	ALLA SEZ. A PROG.	SEZIONE	FIGURA	LUNGHEZZA	DISTANZA SEZIONI ml	DISTANZA DI CALCOLO ml	AREA PARZIALE mq	AREA TOTALE mq
7bis	7	7bis	a1	6.50	8.92	4.46	28.99	
81.08	90.00	7	a1	6.50	8.92	4.46	28.99	
								57.98
7	8	7	a1	6.50	15.00	7.50	48.75	
90.00	105.00	8	a1	6.50	15.00	7.50	48.75	
								97.50
8	9	8	a1	6.50	15.00	7.50	48.75	
105.00	120.00	9	a1	6.50	15.00	7.50	48.75	
								97.50
9	10	9	a1	6.50	15.00	7.50	48.75	
120.00	135.00	10	a1	6.50	15.00	7.50	48.75	
								97.50
10	11	10	a1	6.50	15.00	7.50	48.75	
135.00	150.00	11	a1	6.50	15.00	7.50	48.75	
								97.50
11	12	11	a1	6.50	15.00	7.50	48.75	
150.00	165.00	12	a1	6.50	15.00	7.50	48.75	
								97.50
12	12bis	12	a1	6.50	1.40	0.70	4.55	
165.00	166.40	12bis	a1	6.50	1.40	0.70	4.55	
								9.10
12bis	13	12bis	a1	6.50	13.60	6.80	44.20	
166.40	180.00	13	a1	13.73	13.60	6.80	93.36	
								137.56
13	13bis	13	a1	13.73	5.51	2.75	37.76	
180.00	185.51	13bis	a1	6.50	5.51	2.75	17.88	
								55.64
13bis	14	13bis	a1	6.50	9.49	4.75	30.88	
185.51	195.00	14	a1	6.50	9.49	4.75	30.88	
								61.76
14	15	14	a1	6.50	15.00	7.50	48.75	
195.00	210.00	15	a1	6.50	15.00	7.50	48.75	
								97.50
15	16	15	a1	6.50	15.00	7.50	48.75	
210.00	225.00	16	a1	6.50	15.00	7.50	48.75	
								97.50
16	17	16	a1	6.50	15.00	7.50	48.75	
225.00	240.00	17	a1	6.50	15.00	7.50	48.75	
								97.50
17	18	17	a1	6.50	15.00	7.50	48.75	
240.00	255.00	18	a1	6.50	15.00	7.50	48.75	
								97.50
18	18 bis	18	a1	6.50	10.11	5.06	32.89	
255.00	265.11	18 bis	a1	6.50	10.11	5.06	32.89	
								65.78
18 bis	19	18 bis	a1	6.50	4.89	2.44	15.86	
265.11	270.00	19	a1	6.50	4.89	2.44	15.86	
								31.72
19	20	19	a1	6.50	15.00	7.50	48.75	
270.00	285.00	20	a1	1.50	15.00	7.50	11.25	
								60.00

VEGETALE

DALLA SEZ. DA PROG.	ALLA SEZ. A PROG.	SEZIONE	FIGURA	LUNGHEZZA	DISTANZA SEZIONI ml	DISTANZA DI CALCOLO ml	AREA PARZIALE mq	AREA TOTALE mq
7bis	7	7bis	b1	3.79	8.92	4.46	16.90	
81.08	90.00	7	b1	3.79	8.92	4.46	16.90	
								33.80
7	8	7	b1	3.79	15.00	7.50	28.43	
90.00	105.00	8	b2	2.63	15.00	7.50	19.72	
		8	b1	3.91	15.00	7.50	29.33	
								77.48
8	9	8	b2	2.63	15.00	7.50	19.72	
105.00	120.00	8	b1	3.91	15.00	7.50	29.33	
		9	b2	4.35	15.00	7.50	32.63	
		9	b1	4.14	15.00	7.50	31.05	
								112.73
9	10	9	b2	4.35	15.00	7.50	32.63	
120.00	135.00	9	b1	4.14	15.00	7.50	31.05	
		10	b2	4.98	15.00	7.50	37.35	
		10	b1	4.18	15.00	7.50	31.35	
								132.38
10	11	10	b2	4.98	15.00	7.50	37.35	
135.00	150.00	10	b1	4.18	15.00	7.50	31.35	
		11	b2	5.74	15.00	7.50	43.05	
		11	b1	5.02	15.00	7.50	37.65	
								149.40
11	12	11	b2	5.74	15.00	7.50	43.05	
150.00	165.00	11	b1	5.02	15.00	7.50	37.65	
		12	b2	6.29	15.00	7.50	47.17	
		12	b1	5.91	15.00	7.50	44.33	
								172.20
12	12bis	12	b2	6.29	1.40	0.70	4.40	
165.00	166.40	12	b1	5.91	1.40	0.70	4.14	
		12bis	b2	6.70	1.40	0.70	4.69	
		12bis	b1	5.78	1.40	0.70	4.05	
								17.28
12bis	13	12bis	b2	6.70	13.60	6.80	45.56	
166.40	180.00	12bis	b1	5.78	13.60	6.80	39.30	
		13	b2	6.44	13.60	6.80	43.79	
		13	b1	7.08	13.60	6.80	48.14	
								176.79
13	13bis	13	b2	6.44	5.51	2.75	17.71	
180.00	185.51	13	b1	7.08	5.51	2.75	19.47	
		13bis	b1	6.60	5.51	2.75	18.15	
								55.33
13bis	14	13bis	b1	6.60	9.49	4.75	31.35	
185.51	195.00	14	b1	7.34	9.49	4.75	34.87	
								66.22
14	15	14	b1	7.34	15.00	7.50	55.05	
195.00	210.00	15	b1	8.55	15.00	7.50	64.13	
								119.18
15	16	15	b1	8.55	15.00	7.50	64.13	
210.00	225.00	16	b1	9.86	15.00	7.50	73.95	
								138.08
16	17	16	b1	9.86	15.00	7.50	73.95	
225.00	240.00	17	b1	10.85	15.00	7.50	81.38	
								155.33
17	18	17	b1	10.85	15.00	7.50	81.38	
240.00	255.00	18	b1	11.21	15.00	7.50	84.08	
								165.46
18	18 bis	18	b1	11.21	10.11	5.06	56.72	
								56.72
18 bis	19	19	b1	2.74	4.89	2.44	6.69	
265.11	270.00	19	b2	11.13	4.89	2.44	27.16	
								33.85
19	20	19	b1	2.74	15.00	7.50	20.55	
270.00	285.00	19	b2	11.13	15.00	7.50	83.48	
		20	b1	9.91	15.00	7.50	74.33	
								178.36

Il Direttore dei Lavori	L'Impresa	TOTALE ARTICOLO	1840.59

BINDER

DALLA SEZ. DA PROG.	ALLA SEZ. A PROG.	SEZIONE	FIGURA	LUNGHEZZA	DISTANZA SEZIONI ml	DISTANZA DI CALCOLO ml	AREA PARZIALE mq	AREA TOTALE mq
7bis	7	7bis	c1	6.50	8.92	4.46	28.99	
81.08	90.00	7	c1	6.50	8.92	4.46	28.99	
								57.98
7	8	7	c1	6.50	15.00	7.50	48.75	
90.00	105.00	8	c1	6.50	15.00	7.50	48.75	
								97.50
8	9	8	c1	6.50	15.00	7.50	48.75	
105.00	120.00	9	c1	6.50	15.00	7.50	48.75	
								97.50
9	10	9	c1	6.50	15.00	7.50	48.75	
120.00	135.00	10	c1	6.50	15.00	7.50	48.75	
								97.50
10	11	10	c1	6.50	15.00	7.50	48.75	
135.00	150.00	11	c1	6.50	15.00	7.50	48.75	
								97.50
11	12	11	c1	6.50	15.00	7.50	48.75	
150.00	165.00	12	c1	6.50	15.00	7.50	48.75	
								97.50
12	12bis	12	c1	6.50	1.40	0.70	4.55	
165.00	166.40	12bis	c1	6.50	1.40	0.70	4.55	
								9.10
12bis	13	12bis	c1	6.50	13.60	6.80	44.20	
166.40	180.00	13	c1	6.50	13.60	6.80	44.20	
								88.40
13	13bis	13	c1	6.50	5.51	2.75	17.88	
180.00	185.51	13bis	c1	6.50	5.51	2.75	17.88	
								35.76
13bis	14	13bis	c1	6.50	9.49	4.75	30.88	
185.51	195.00	14	c1	6.50	9.49	4.75	30.88	
								61.76
14	15	14	c1	6.50	15.00	7.50	48.75	
195.00	210.00	15	c1	6.50	15.00	7.50	48.75	
								97.50
15	16	15	c1	6.50	15.00	7.50	48.75	
210.00	225.00	16	c1	6.50	15.00	7.50	48.75	
								97.50
16	17	16	c1	6.50	15.00	7.50	48.75	
225.00	240.00	17	c1	6.50	15.00	7.50	48.75	
								97.50
17	18	17	c1	6.50	15.00	7.50	48.75	
240.00	255.00	18	c1	6.50	15.00	7.50	48.75	
								97.50
18	18 bis	18	c1	6.50	10.11	5.06	32.89	
255.00	265.11	18 bis	c1	6.50	10.11	5.06	32.89	
								65.78
18 bis	19	18 bis	c1	6.50	4.89	2.44	15.86	
265.11	270.00	19	c1	6.50	4.89	2.44	15.86	
								31.72
19	20	19	c1	6.50	15.00	7.50	48.75	
270.00	285.00	20	c1	1.50	15.00	7.50	11.25	
								60.00

BASE

DALLA SEZ. DA PROG.	ALLA SEZ. A PROG.	SEZIONE	FIGURA	LUNGHEZZA	DISTANZA SEZIONI ml	DISTANZA DI CALCOLO ml	AREA PARZIALE mq	AREA TOTALE mq
7bis	7	7bis	d1	6.50	8.92	4.46	28.99	
81.08	90.00	7	d1	6.50	8.92	4.46	28.99	
								57.98
7	8	7	d1	6.50	15.00	7.50	48.75	
90.00	105.00	8	d1	6.50	15.00	7.50	48.75	
								97.50
8	9	8	d1	6.50	15.00	7.50	48.75	
105.00	120.00	9	d1	6.50	15.00	7.50	48.75	
								97.50
9	10	9	d1	6.50	15.00	7.50	48.75	
120.00	135.00	10	d1	6.50	15.00	7.50	48.75	
								97.50
10	11	10	d1	6.50	15.00	7.50	48.75	
135.00	150.00	11	d1	6.50	15.00	7.50	48.75	
								97.50
11	12	11	d1	6.50	15.00	7.50	48.75	
150.00	165.00	12	d1	6.50	15.00	7.50	48.75	
								97.50
12	12bis	12	d1	6.50	1.40	0.70	4.55	
165.00	166.40	12bis	d1	6.50	1.40	0.70	4.55	
								9.10
12bis	13	12bis	d1	6.50	13.60	6.80	44.20	
166.40	180.00	13	d1	6.50	13.60	6.80	44.20	
								88.40
13	13bis	13	d1	6.50	5.51	2.75	17.88	
180.00	185.51	13bis	d1	6.50	5.51	2.75	17.88	
								35.76
13bis	14	13bis	d1	6.50	9.49	4.75	30.88	
185.51	195.00	14	d1	6.50	9.49	4.75	30.88	
								61.76
14	15	14	d1	6.50	15.00	7.50	48.75	
195.00	210.00	15	d1	6.50	15.00	7.50	48.75	
								97.50
15	16	15	d1	6.50	15.00	7.50	48.75	
210.00	225.00	16	d1	6.50	15.00	7.50	48.75	
								97.50
16	17	16	d1	6.50	15.00	7.50	48.75	
225.00	240.00	17	d1	6.50	15.00	7.50	48.75	
								97.50
17	18	17	d1	6.50	15.00	7.50	48.75	
240.00	255.00	18	d1	6.50	15.00	7.50	48.75	
								97.50
18	18 bis	18	d1	6.50	10.11	5.06	32.89	
255.00	265.11	18 bis	d1	6.50	10.11	5.06	32.89	
								65.78
18 bis	19	18 bis	d1	6.50	4.89	2.44	15.86	
265.11	270.00	19	d1	6.50	4.89	2.44	15.86	
								31.72
19	20	19	d1	6.50	15.00	7.50	48.75	
270.00	285.00	20	d1	1.50	15.00	7.50	11.25	
								60.00

FONDAZIONE

DALLA SEZ. DA PROG.	ALLA SEZ. A PROG.	SEZIONE	FIGURA	LUNGHEZZA	DISTANZA SEZIONI ml	DISTANZA DI CALCOLO ml	AREA PARZIALE mq	AREA TOTALE mq
7bis	7	7bis	e1	6.50	8.92	4.46	28.99	
81.08	90.00	7	e1	6.50	8.92	4.46	28.99	
								57.98
7	8	7	e1	6.50	15.00	7.50	48.75	
90.00	105.00	8	e1	6.50	15.00	7.50	48.75	
								97.50
8	9	8	e1	6.50	15.00	7.50	48.75	
105.00	120.00	9	e1	6.50	15.00	7.50	48.75	
								97.50
9	10	9	e1	6.50	15.00	7.50	48.75	
120.00	135.00	10	e1	6.50	15.00	7.50	48.75	
								97.50
10	11	10	e1	6.50	15.00	7.50	48.75	
135.00	150.00	11	e1	6.50	15.00	7.50	48.75	
								97.50
11	12	11	e1	6.50	15.00	7.50	48.75	
150.00	165.00	12	e1	6.50	15.00	7.50	48.75	
								97.50
12	12bis	12	e1	6.50	1.40	0.70	4.55	
165.00	166.40	12bis	e1	6.50	1.40	0.70	4.55	
								9.10
12bis	13	12bis	e1	6.50	13.60	6.80	44.20	
166.40	180.00	13	e1	6.50	13.60	6.80	44.20	
								88.40
13	13bis	13	e1	6.50	5.51	2.75	17.88	
180.00	185.51	13bis	e1	6.50	5.51	2.75	17.88	
								35.76
13bis	14	13bis	e1	6.50	9.49	4.75	30.88	
185.51	195.00	14	e1	6.50	9.49	4.75	30.88	
								61.76
14	15	14	e1	6.50	15.00	7.50	48.75	
195.00	210.00	15	e1	6.50	15.00	7.50	48.75	
								97.50
15	16	15	e1	6.50	15.00	7.50	48.75	
210.00	225.00	16	e1	6.50	15.00	7.50	48.75	
								97.50
16	17	16	e1	6.50	15.00	7.50	48.75	
225.00	240.00	17	e1	6.50	15.00	7.50	48.75	
								97.50
17	18	17	e1	6.50	15.00	7.50	48.75	
240.00	255.00	18	e1	6.50	15.00	7.50	48.75	
								97.50
18	18 bis	18	e1	6.50	10.11	5.06	32.89	
255.00	265.11	18 bis	e1	6.50	10.11	5.06	32.89	
								65.78
18 bis	19	18 bis	e1	6.50	4.89	2.44	15.86	
265.11	270.00	19	e1	6.50	4.89	2.44	15.86	
								31.72
19	20	19	e1	6.50	15.00	7.50	48.75	
270.00	285.00	20	e1	1.50	15.00	7.50	11.25	
								60.00

Il Direttore dei Lavori	L'Impresa	TOTALE ARTICOLO	1288.00

SCOTICO

DALLA SEZ. DA PROG.	ALLA SEZ. A PROG.	SEZIONE	FIGURA	LUNGHEZZA	DISTANZA SEZIONI ml	DISTANZA DI CALCOLO ml	AREA PARZIALE mq	AREA TOTALE mq
7bis	7	7bis	sc1	9.88	8.92	4.46	44.06	
81.08	90.00	7	sc1	9.88	8.92	4.46	44.06	
								88.12
7	8	7	sc1	9.88	15.00	7.50	74.10	
90.00	105.00	8	sc1	12.77	15.00	7.50	95.77	
								169.87
8	9	8	sc1	12.77	15.00	7.50	95.77	
105.00	120.00	9	sc1	13.33	15.00	7.50	99.97	
								195.74
9	10	9	sc1	13.33	15.00	7.50	99.97	
120.00	135.00	10	sc1	15.01	15.00	7.50	112.58	
								212.55
10	11	10	sc1	15.01	15.00	7.50	112.58	
135.00	150.00	11	sc1	16.49	15.00	7.50	123.67	
								236.25
11	12	11	sc1	16.49	15.00	7.50	123.67	
150.00	165.00	12	sc1	17.42	15.00	7.50	130.65	
								254.32
12	12bis	12	sc1	17.42	1.40	0.70	12.19	
165.00	166.40	12bis	sc1	18.19	1.40	0.70	12.73	
								24.92
12bis	13	12bis	sc1	18.19	13.60	6.80	123.69	
166.40	180.00	13	sc1	6.94	13.60	6.80	47.19	
								170.88
13	13bis	13	sc1	6.94	5.51	2.75	19.09	
180.00	185.51	13bis	sc1	12.17	5.51	2.75	33.47	
								52.56
13bis	14	13bis	sc1	12.17	9.49	4.75	57.81	
185.51	195.00	14	sc1	12.80	9.49	4.75	60.80	
								118.61
14	15	14	sc1	12.80	15.00	7.50	96.00	
195.00	210.00	15	sc1	9.60	15.00	7.50	72.00	
								168.00
15	16	15	sc1	9.60	15.00	7.50	72.00	
210.00	225.00	16	sc1	10.98	15.00	7.50	82.35	
								154.35
16	17	16	sc1	10.98	15.00	7.50	82.35	
225.00	240.00	17	sc1	12.02	15.00	7.50	90.15	
								172.50
17	18	17	sc1	12.02	15.00	7.50	90.15	
240.00	255.00	18	sc1	12.22	15.00	7.50	91.65	
								181.80
18	18 bis	18	sc1	12.22	10.11	5.06	61.83	
255.00	265.11	18 bis	sc2	12.25	10.11	5.06	61.98	
		18 bis	sc1	8.12	10.11	5.06	41.09	
								164.90
18 bis	19	18 bis	sc2	12.25	4.89	2.44	29.89	
265.11	270.00	18 bis	sc1	8.12	4.89	2.44	19.81	
		19	sc1	20.14	4.89	2.44	49.14	
								98.84
19	20	19	sc1	20.14	15.00	7.50	151.05	
270.00	285.00	20	sc2	10.97	15.00	7.50	82.28	
		20	sc1	0.00	15.00	7.50	0.00	
								233.33

Il Direttore dei Lavori	L'Impresa	TOTALE ARTICOLO	2697.54

Volume dalla sezione 7bis alla sezione 20

ARTICOLO		VOLUME
RIPORTO	mc	8369.968
BO BONIFICA	mc	1263.325
H SCAVO MURO	mc	1152.240
SP SPIANAMENTO	mc	90.600
a USURA	mq	1357.04
b VEGETALE	mq	1840.59
c BINDER	mq	1288.00
d BASE	mq	1288.00
e FONDAZIONE	mq	1288.00
sc SCOTICO	mq	2697.54

	CALCOLO DELLE AREE		Foglio n. 1

STERRI E RIPORTI

N. SEZIONE PROG.	FIG.	ELEMENTI DI CALCOLO	AREA ELEMENTARE mq	AREA FIGURA mq	NOTE
6	R1	(-4.75--5.00)x(2.61+2.64)/2	0.66		
75.00		(-4.17--4.75)x(2.55+2.61)/2	1.50		
		(-3.56--4.17)x(2.49+2.55)/2	1.54		
		(-3.14--3.56)x(2.45+2.49)/2	1.04		
		(-2.37--3.14)x(2.38+2.45)/2	1.86		
		(-1.28--2.37)x(2.26+2.38)/2	2.53		
		(-1.18--1.28)x(2.25+2.26)/2	0.23		
		(-1.12--1.18)x(2.25+2.25)/2	0.13		
		(0.01--1.12)x(2.22+2.25)/2	2.53		
		(0.90-0.01)x(2.22+2.22)/2	1.98		
		(1.20-0.90)x(2.21+2.22)/2	0.66		
		(1.62-1.20)x(2.20+2.21)/2	0.93		
		(2.39-1.62)x(2.19+2.20)/2	1.69		
		(2.92-2.39)x(2.16+2.19)/2	1.15		
		(3.58-2.92)x(2.13+2.16)/2	1.42		
		(4.51-3.58)x(2.10+2.13)/2	1.97		
		(4.76-4.51)x(2.09+2.10)/2	0.52		
		(4.94-4.76)x(2.07+2.09)/2	0.37		
		(5.95-4.94)x(1.93+2.07)/2	2.02		
		(6.96-5.95)x(1.75+1.93)/2	1.86		
		(7.14-6.96)x(1.72+1.75)/2	0.31		
		(7.40-7.14)x(1.66+1.72)/2	0.44		
		(8.33-7.40)x(1.50+1.66)/2	1.47		
		(8.36-8.33)x(1.49+1.50)/2	0.04		
		(3.23-8.36)x(4.91+1.49)/2	-16.42		
		(2.17-3.23)x(4.92+4.91)/2	-5.21		
		(2.33-2.17)x(4.71+4.92)/2	0.77		
		(0.32-2.33)x(4.84+4.71)/2	-9.60		
		(0.00-0.32)x(4.86+4.84)/2	-1.55		
		(-4.00-0.00)x(5.12+4.86)/2	-19.96		
		(-5.00--4.00)x(5.18+5.12)/2	-5.15		
				28.27	
7	R1	(-10.38--10.60)x(2.63+2.63)/2	0.58		
90.00		(-9.20--10.38)x(2.61+2.63)/2	3.09		
		(-9.10--9.20)x(2.60+2.61)/2	0.26		
		(-8.78--9.10)x(2.57+2.60)/2	0.83		
		(-7.82--8.78)x(2.47+2.57)/2	2.42		
		(-7.50--7.82)x(2.44+2.47)/2	0.79		
		(-6.54--7.50)x(2.40+2.44)/2	2.32		
		(-5.79--6.54)x(2.36+2.40)/2	1.78		
		(-5.26--5.79)x(2.36+2.36)/2	1.25		
		(-4.08--5.26)x(2.37+2.36)/2	2.79		
		(-3.97--4.08)x(2.38+2.37)/2	0.26		
		(-3.67--3.97)x(2.39+2.38)/2	0.72		
		(-2.69--3.67)x(2.45+2.39)/2	2.37		
		(-2.37--2.69)x(2.45+2.45)/2	0.78		
		(-1.41--2.37)x(2.42+2.45)/2	2.34		
		(-0.66--1.41)x(2.44+2.42)/2	1.82		
		(-0.13--0.66)x(2.45+2.44)/2	1.30		
		(0.38--0.13)x(2.47+2.45)/2	1.25		
		(1.05-0.38)x(2.51+2.47)/2	1.67		
		(1.11-1.05)x(2.51+2.51)/2	0.15		
		(1.15-1.11)x(2.51+2.51)/2	0.10		
		(1.45-1.15)x(2.48+2.51)/2	0.75		
		(2.43-1.45)x(2.39+2.48)/2	2.39		
		(2.76-2.43)x(2.34+2.39)/2	0.78		
		(3.71-2.76)x(2.16+2.34)/2	2.14		
		(4.47-3.71)x(2.27+2.16)/2	1.68		
		(4.99-4.47)x(2.34+2.27)/2	1.20		
		(6.18-4.99)x(2.38+2.34)/2	2.81		
		(6.28-6.18)x(2.38+2.38)/2	0.24		
		(6.56-6.28)x(2.30+2.38)/2	0.66		
		(7.56-6.56)x(2.04+2.30)/2	2.17		
		(7.64-7.56)x(2.05+2.04)/2	0.16		
		(3.23-7.64)x(4.99+2.05)/2	-15.52		
		(2.17-3.23)x(4.99+4.99)/2	-5.29		
		(2.33-2.17)x(4.79+4.99)/2	0.78		
		(0.32-2.33)x(4.92+4.79)/2	-9.76		
		(0.00-0.32)x(4.94+4.92)/2	-1.58		
		(-4.00-0.00)x(5.20+4.94)/2	-20.28		
		(-5.46--4.00)x(5.29+5.20)/2	-7.66		
		(-5.34--5.46)x(5.43+5.29)/2	0.64		
		(-6.41--5.34)x(5.43+5.43)/2	-5.81		
		(-10.60--6.41)x(2.63+5.43)/2	-16.89		
				37.52	
8	R1	(-10.76--11.01)x(2.58+2.61)/2	0.65		
105.00		(-10.56--10.76)x(2.59+2.58)/2	0.52		
		(-9.27--10.56)x(2.60+2.59)/2	3.35		
		(-9.16--9.27)x(2.60+2.60)/2	0.29		
		(-7.77--9.16)x(2.56+2.60)/2	3.59		
		(-7.75--7.77)x(2.56+2.56)/2	0.05		
		(-7.44--7.75)x(2.56+2.56)/2	0.79		
		(-6.34--7.44)x(2.58+2.56)/2	2.83		
		(-6.27--6.34)x(2.59+2.58)/2	0.18		
		(-4.94--6.27)x(2.60+2.59)/2	3.45		
		(-4.77--4.94)x(2.60+2.60)/2	0.44		
		(-3.53--4.77)x(2.50+2.60)/2	3.16		
		(-3.28--3.53)x(2.47+2.50)/2	0.62		
		(-2.12--3.28)x(2.30+2.47)/2	2.77		
		(-1.78--2.12)x(2.21+2.30)/2	0.77		
		(-0.71--1.78)x(1.98+2.21)/2	2.24		
		(-0.28--0.71)x(1.87+1.98)/2	0.83		
		(0.69--0.28)x(1.65+1.87)/2	1.71		
		(1.21-0.69)x(1.58+1.65)/2	0.84		
		(2.10-1.21)x(1.64+1.58)/2	1.43		
		(2.71-2.10)x(1.73+1.64)/2	1.03		
		(3.51-2.71)x(1.82+1.73)/2	1.42		
		(4.21-3.51)x(1.90+1.82)/2	1.30		
		(4.91-4.21)x(1.93+1.90)/2	1.34		
		(5.71-4.91)x(2.00+1.93)/2	1.57		
		(6.32-5.71)x(2.09+2.00)/2	1.25		
		(7.20-6.32)x(2.21+2.09)/2	1.89		
		(7.69-7.20)x(2.27+2.21)/2	1.10		
		(3.23-7.69)x(5.24+2.27)/2	-16.75		
		(2.17-3.23)x(5.25+5.24)/2	-5.56		
		(2.33-2.17)x(5.04+5.25)/2	0.82		
		(0.32-2.33)x(5.17+5.04)/2	-10.26		
		A RIPORTARE mq	9.66		

		CALCOLO DELLE AREE		Foglio n. 2	
STERRI E RIPORTI					
N. SEZIONE PROG.	FIG.	ELEMENTI DI CALCOLO	AREA ELEMENTARE mq	AREA FIGURA mq	NOTE
		RIPORTO mq	9.66		
		(0.00-0.32)x(5.19+5.17)/2	-1.66		
		(-4.00-0.00)x(5.45+5.19)/2	-21.28		
		(-5.46--4.00)x(5.54+5.45)/2	-8.02		
		(-5.34--5.46)x(5.68+5.54)/2	0.67		
		(-6.41--5.34)x(5.68+5.68)/2	-6.08		
		(-11.01--6.41)x(2.61+5.68)/2	-19.07		
				45.78	
9 120.00	R1	(-11.22--11.83)x(2.42+2.50)/2	1.50		
		(-10.91--11.22)x(2.37+2.42)/2	0.74		
		(-9.64--10.91)x(2.08+2.37)/2	2.83		
		(-9.57--9.64)x(2.07+2.08)/2	0.15		
		(-9.14--9.57)x(2.00+2.07)/2	0.88		
		(-8.22--9.14)x(1.85+2.00)/2	1.77		
		(-8.06--8.22)x(1.84+1.85)/2	0.30		
		(-6.87--8.06)x(1.70+1.84)/2	2.11		
		(-6.48--6.87)x(1.62+1.70)/2	0.65		
		(-5.53--6.48)x(1.39+1.62)/2	1.43		
		(-4.90--5.53)x(1.33+1.39)/2	0.86		
		(-4.18--4.90)x(1.47+1.33)/2	1.01		
		(-3.78--4.18)x(1.55+1.47)/2	0.60		
		(-3.32--3.78)x(1.64+1.55)/2	0.73		
		(-2.83--3.32)x(1.67+1.64)/2	0.81		
		(-1.74--2.83)x(1.69+1.67)/2	1.83		
		(-1.49--1.74)x(1.70+1.69)/2	0.42		
		(-0.15--1.49)x(1.70+1.70)/2	2.28		
		(-0.14--0.15)x(1.70+1.70)/2	0.02		
		(-0.07--0.14)x(1.70+1.70)/2	0.12		
		(1.21--0.07)x(1.73+1.70)/2	2.20		
		(1.43-1.21)x(1.73+1.73)/2	0.38		
		(2.55-1.43)x(1.75+1.73)/2	1.95		
		(3.01-2.55)x(1.78+1.75)/2	0.81		
		(3.90-3.01)x(1.88+1.78)/2	1.63		
		(4.59-3.90)x(1.97+1.88)/2	1.33		
		(5.25-4.59)x(2.02+1.97)/2	1.32		
		(6.17-5.25)x(2.07+2.02)/2	1.88		
		(6.59-6.17)x(2.08+2.07)/2	0.87		
		(7.75-6.59)x(2.11+2.08)/2	2.43		
		(7.94-7.75)x(2.11+2.11)/2	0.40		
		(8.66-7.94)x(2.06+2.11)/2	1.50		
		(3.23-8.66)x(5.68+2.06)/2	-21.01		
		(2.17-3.23)x(5.68+5.68)/2	-6.02		
		(2.33-2.17)x(5.48+5.68)/2	0.89		
		(0.32-2.33)x(5.61+5.48)/2	-11.15		
		(0.00-0.32)x(5.63+5.61)/2	-1.80		
		(-4.00-0.00)x(5.89+5.63)/2	-23.04		
		(-5.46--4.00)x(5.98+5.89)/2	-8.67		
		(-5.34--5.46)x(6.12+5.98)/2	0.73		
		(-6.41--5.34)x(6.11+6.12)/2	-6.54		
		(-11.83--6.41)x(2.50+6.11)/2	-23.33		
				62.20	
10 135.00	R1	(-14.17--14.35)x(1.43+1.43)/2	0.26		
		(-13.93--14.17)x(1.47+1.43)/2	0.35		
		(-13.42--13.93)x(1.51+1.47)/2	0.76		
		(-12.69--13.42)x(1.60+1.51)/2	1.14		
		(-12.34--12.69)x(1.63+1.60)/2	0.57		
		(-11.46--12.34)x(1.69+1.63)/2	1.46		
		(-10.51--11.46)x(1.73+1.69)/2	1.62		
		(-10.22--10.51)x(1.73+1.73)/2	0.50		
		(-9.61--10.22)x(1.71+1.73)/2	1.05		
		(-8.98--9.61)x(1.69+1.71)/2	1.07		
		(-8.68--8.98)x(1.70+1.69)/2	0.51		
		(-7.74--8.68)x(1.74+1.70)/2	1.62		
		(-6.85--7.74)x(1.76+1.74)/2	1.56		
		(-6.51--6.85)x(1.78+1.76)/2	0.60		
		(-5.79--6.51)x(1.84+1.78)/2	1.30		
		(-5.27--5.79)x(1.89+1.84)/2	0.97		
		(-5.02--5.27)x(1.91+1.89)/2	0.47		
		(-4.03--5.02)x(2.01+1.91)/2	1.94		
		(-3.19--4.03)x(2.01+2.01)/2	1.69		
		(-2.79--3.19)x(2.01+2.01)/2	0.80		
		(-1.98--2.79)x(2.00+2.01)/2	1.62		
		(-1.56--1.98)x(2.01+2.00)/2	0.84		
		(-1.35--1.56)x(2.00+2.01)/2	0.42		
		(-0.32--1.35)x(1.95+2.00)/2	2.03		
		(0.48--0.32)x(1.93+1.95)/2	1.55		
		(0.92-0.48)x(1.94+1.93)/2	0.85		
		(1.84-0.92)x(1.96+1.94)/2	1.79		
		(2.16-1.84)x(1.97+1.96)/2	0.63		
		(2.31-2.16)x(1.98+1.97)/2	0.30		
		(3.39-2.31)x(2.00+1.98)/2	2.15		
		(4.14-3.39)x(1.99+2.00)/2	1.50		
		(4.43-4.14)x(1.99+1.99)/2	0.58		
		(4.63-4.43)x(1.97+1.99)/2	0.40		
		(5.17-4.63)x(1.97+1.97)/2	1.06		
		(5.87-5.17)x(1.98+1.97)/2	1.38		
		(5.97-5.87)x(1.98+1.98)/2	0.20		
		(6.65-5.97)x(1.99+1.98)/2	1.35		
		(7.11-6.65)x(2.00+1.99)/2	0.92		
		(7.80-7.11)x(1.97+2.00)/2	1.37		
		(8.34-7.80)x(1.95+1.97)/2	1.06		
		(9.47-8.34)x(1.89+1.95)/2	2.17		
		(9.58-9.47)x(1.89+1.89)/2	0.21		
		(9.63-9.58)x(1.89+1.89)/2	0.09		
		(9.84-9.63)x(1.88+1.89)/2	0.40		
		(3.23-9.84)x(6.29+1.88)/2	-27.00		
		(2.17-3.23)x(6.29+6.29)/2	-6.67		
		(2.33-2.17)x(6.09+6.29)/2	0.99		
		(0.32-2.33)x(6.22+6.09)/2	-12.37		
		(0.00-0.32)x(6.24+6.22)/2	-1.99		
		(-4.00-0.00)x(6.50+6.24)/2	-25.48		
		(-5.46--4.00)x(6.59+6.50)/2	-9.56		
		(-5.34--5.46)x(6.73+6.59)/2	0.80		
		(-6.41--5.34)x(6.73+6.73)/2	-7.20		
		(-14.35--6.41)x(1.43+6.73)/2	-32.40		
				75.77	
		A RIPORTARE mq			

STERRI E RIPORTI

N. SEZIONE PROG.	FIG.	ELEMENTI DI CALCOLO	AREA ELEMENTARE mq	AREA FIGURA mq	NOTE
		RIPORTO mq			
11 150.00	R1	(-13.71--14.43)x(2.01+2.08)/2	1.47		
		(-13.64--13.71)x(2.01+2.01)/2	0.14		
		(-13.56--13.64)x(2.01+2.01)/2	0.16		
		(-12.48--13.56)x(2.07+2.01)/2	2.20		
		(-11.53--12.48)x(2.13+2.07)/2	2.00		
		(-11.32--11.53)x(2.15+2.13)/2	0.45		
		(-11.07--11.32)x(2.15+2.15)/2	0.54		
		(-10.15--11.07)x(2.17+2.15)/2	1.99		
		(-9.35--10.15)x(2.18+2.17)/2	1.74		
		(-8.99--9.35)x(2.19+2.18)/2	0.79		
		(-8.59--8.99)x(2.20+2.19)/2	0.88		
		(-7.83--8.59)x(2.21+2.20)/2	1.68		
		(-7.17--7.83)x(2.21+2.21)/2	1.46		
		(-6.67--7.17)x(2.19+2.21)/2	1.10		
		(-6.11--6.67)x(2.20+2.19)/2	1.23		
		(-5.51--6.11)x(2.17+2.20)/2	1.31		
		(-4.99--5.51)x(2.15+2.17)/2	1.12		
		(-4.35--4.99)x(2.05+2.15)/2	1.34		
		(-3.62--4.35)x(1.97+2.05)/2	1.47		
		(-3.19--3.62)x(1.90+1.97)/2	0.83		
		(-2.80--3.19)x(1.89+1.90)/2	0.74		
		(-2.02--2.80)x(1.87+1.89)/2	1.47		
		(-1.14--2.02)x(1.87+1.87)/2	1.65		
		(-0.86--1.14)x(1.87+1.87)/2	0.52		
		(-0.62--0.86)x(1.88+1.87)/2	0.45		
		(0.30--0.62)x(1.93+1.88)/2	1.75		
		(1.35-0.30)x(1.85+1.93)/2	1.98		
		(1.46-1.35)x(1.85+1.85)/2	0.20		
		(1.56-1.46)x(1.83+1.85)/2	0.18		
		(2.62-1.56)x(1.76+1.83)/2	1.90		
		(3.74-2.62)x(1.66+1.76)/2	1.92		
		(3.78-3.74)x(1.66+1.66)/2	0.07		
		(3.83-3.78)x(1.66+1.66)/2	0.08		
		(4.94-3.83)x(1.65+1.66)/2	1.84		
		(5.92-4.94)x(1.57+1.65)/2	1.58		
		(6.11-5.92)x(1.57+1.57)/2	0.30		
		(6.31-6.11)x(1.58+1.57)/2	0.31		
		(7.27-6.31)x(1.64+1.58)/2	1.55		
		(8.11-7.27)x(1.71+1.64)/2	1.41		
		(8.43-8.11)x(1.73+1.71)/2	0.55		
		(8.80-8.43)x(1.76+1.73)/2	0.65		
		(9.59-8.80)x(1.84+1.76)/2	1.42		
		(10.29-9.59)x(1.80+1.84)/2	1.27		
		(10.75-10.29)x(1.77+1.80)/2	0.82		
		(11.10-10.75)x(1.76+1.77)/2	0.62		
		(3.16-11.10)x(7.06+1.76)/2	-35.02		
		(2.09-3.16)x(7.06+7.06)/2	-7.55		
		(2.26-2.09)x(6.86+7.06)/2	1.18		
		(0.25-2.26)x(6.97+6.86)/2	-13.90		
		(0.00-0.25)x(6.99+6.97)/2	-1.75		
		(-4.00-0.00)x(7.21+6.99)/2	-28.40		
		(-5.46--4.00)x(7.29+7.21)/2	-10.58		
		(-5.34--5.46)x(7.43+7.29)/2	0.88		
		(-6.41--5.34)x(7.43+7.43)/2	-7.95		
		(-14.43--6.41)x(2.08+7.43)/2	-38.14		
				92.10	
12 165.00	R1	(-15.29--15.78)x(1.75+1.76)/2	0.86		
		(-15.01--15.29)x(1.75+1.75)/2	0.49		
		(-14.52--15.01)x(1.75+1.75)/2	0.86		
		(-13.89--14.52)x(1.79+1.75)/2	1.12		
		(-13.74--13.89)x(1.79+1.79)/2	0.27		
		(-13.42--13.74)x(1.79+1.79)/2	0.57		
		(-12.76--13.42)x(1.77+1.79)/2	1.17		
		(-12.21--12.76)x(1.71+1.77)/2	0.96		
		(-11.63--12.21)x(1.67+1.71)/2	0.98		
		(-10.95--11.63)x(1.57+1.67)/2	1.10		
		(-10.51--10.95)x(1.51+1.57)/2	0.68		
		(-10.14--10.51)x(1.49+1.51)/2	0.55		
		(-9.38--10.14)x(1.46+1.49)/2	1.12		
		(-8.48--9.38)x(1.39+1.46)/2	1.28		
		(-8.25--8.48)x(1.40+1.39)/2	0.32		
		(-8.07--8.25)x(1.41+1.40)/2	0.25		
		(-7.13--8.07)x(1.47+1.41)/2	1.35		
		(-6.01--7.13)x(1.60+1.47)/2	1.72		
		(-6.00--6.01)x(1.60+1.60)/2	0.02		
		(-4.87--6.00)x(1.67+1.60)/2	1.85		
		(-3.92--4.87)x(1.70+1.67)/2	1.60		
		(-3.75--3.92)x(1.71+1.70)/2	0.29		
		(-3.53--3.75)x(1.72+1.71)/2	0.38		
		(-2.62--3.53)x(1.75+1.72)/2	1.58		
		(-1.85--2.62)x(1.78+1.75)/2	1.36		
		(-1.49--1.85)x(1.80+1.78)/2	0.64		
		(-1.06--1.49)x(1.79+1.80)/2	0.77		
		(-0.37--1.06)x(1.76+1.79)/2	1.22		
		(0.22--0.37)x(1.76+1.76)/2	1.04		
		(0.76-0.22)x(1.74+1.76)/2	0.95		
		(1.41-0.76)x(1.74+1.74)/2	1.13		
		(1.89-1.41)x(1.73+1.74)/2	0.83		
		(2.29-1.89)x(1.73+1.73)/2	0.69		
		(3.01-2.29)x(1.73+1.73)/2	1.25		
		(3.88-3.01)x(1.75+1.73)/2	1.51		
		(4.14-3.88)x(1.76+1.75)/2	0.46		
		(4.36-4.14)x(1.78+1.76)/2	0.39		
		(5.27-4.36)x(1.87+1.78)/2	1.66		
		(6.36-5.27)x(1.96+1.87)/2	2.09		
		(6.39-6.36)x(1.96+1.96)/2	0.06		
		(6.43-6.39)x(1.96+1.96)/2	0.08		
		(7.52-6.43)x(1.98+1.96)/2	2.15		
		(8.50-7.52)x(2.06+1.98)/2	1.98		
		(8.65-8.50)x(2.07+2.06)/2	0.31		
		(8.83-8.65)x(2.08+2.07)/2	0.37		
		(9.77-8.83)x(2.16+2.08)/2	1.99		
		(10.57-9.77)x(2.19+2.16)/2	1.74		
		(10.90-10.57)x(2.20+2.19)/2	0.72		
		(11.30-10.90)x(2.24+2.20)/2	0.89		
		A RIPORTARE mq	47.65		

STERRI E RIPORTI

N. SEZIONE PROG.	FIG.	ELEMENTI DI CALCOLO	AREA ELEMENTARE mq	AREA FIGURA mq	NOTE
		RIPORTO mq	47.65		
		(3.01-11.30)x(7.76+2.24)/2	-41.45		
		(1.95-3.01)x(7.76+7.76)/2	-8.23		
		(2.11-1.95)x(7.57+7.76)/2	1.23		
		(0.11-2.11)x(7.65+7.57)/2	-15.22		
		(0.00-0.11)x(7.65+7.65)/2	-0.84		
		(-4.00-0.00)x(7.80+7.65)/2	-30.90		
		(-5.47--4.00)x(7.86+7.80)/2	-11.51		
		(-5.34--5.47)x(8.01+7.86)/2	1.03		
		(-6.41--5.34)x(8.01+8.01)/2	-8.57		
		(-15.78--6.41)x(1.76+8.01)/2	-45.77		
				112.58	
13 180.00	R1	(-16.12--16.19)x(1.84+1.87)/2	0.13		
		(-15.18--16.12)x(1.64+1.84)/2	1.64		
		(-15.00--15.18)x(1.60+1.64)/2	0.29		
		(-14.77--15.00)x(1.59+1.60)/2	0.37		
		(-13.88--14.77)x(1.66+1.59)/2	1.45		
		(-13.18--13.88)x(1.70+1.66)/2	1.18		
		(-12.76--13.18)x(1.73+1.70)/2	0.72		
		(-12.23--12.76)x(1.73+1.73)/2	0.92		
		(-11.64--12.23)x(1.74+1.73)/2	1.02		
		(-11.18--11.64)x(1.74+1.74)/2	0.80		
		(-10.52--11.18)x(1.76+1.74)/2	1.16		
		(-9.68--10.52)x(1.75+1.76)/2	1.47		
		(-9.40--9.68)x(1.75+1.75)/2	0.49		
		(-9.18--9.40)x(1.77+1.75)/2	0.39		
		(-8.28--9.18)x(1.82+1.77)/2	1.62		
		(-7.18--8.28)x(1.88+1.82)/2	2.03		
		(-7.16--7.18)x(1.88+1.88)/2	0.04		
		(-7.13--7.16)x(1.89+1.88)/2	0.06		
		(-6.37--7.13)x(1.90+1.89)/2	1.44		
		(-6.04--6.37)x(1.90+1.90)/2	0.63		
		(-5.60--6.04)x(1.94+1.90)/2	0.84		
		(-4.92--5.60)x(1.98+1.94)/2	1.33		
		(-4.82--4.92)x(1.98+1.98)/2	0.20		
		(-4.59--4.82)x(2.00+1.98)/2	0.46		
		(-3.80--4.59)x(2.03+2.00)/2	1.59		
		(-3.18--3.80)x(2.04+2.03)/2	1.26		
		(-2.68--3.18)x(2.04+2.04)/2	1.02		
		(-2.04--2.68)x(2.05+2.04)/2	1.31		
		(-1.56--2.04)x(2.06+2.05)/2	0.99		
		(-1.18--1.56)x(2.05+2.06)/2	0.78		
		(-0.44--1.18)x(2.03+2.05)/2	1.51		
		(-0.15--0.44)x(2.03+2.03)/2	0.59		
		(0.50--0.15)x(1.98+2.03)/2	1.30		
		(0.63-0.50)x(1.97+1.98)/2	0.26		
		(0.68-0.63)x(1.97+1.97)/2	0.10		
		(0.82-0.68)x(1.97+1.97)/2	0.28		
		(1.80-0.82)x(1.97+1.97)/2	1.93		
		(2.82-1.80)x(1.98+1.97)/2	2.01		
		(2.92-2.82)x(1.98+1.98)/2	0.20		
		(3.05-2.92)x(1.98+1.98)/2	0.26		
		(4.04-3.05)x(2.00+1.98)/2	1.97		
		(4.82-4.04)x(2.00+2.00)/2	1.56		
		(5.16-4.82)x(2.00+2.00)/2	0.68		
		(5.60-5.16)x(1.98+2.00)/2	0.88		
		(6.28-5.60)x(1.92+1.98)/2	1.33		
		(6.82-6.28)x(1.92+1.92)/2	1.04		
		(7.40-6.82)x(1.90+1.92)/2	1.11		
		(8.14-7.40)x(1.88+1.90)/2	1.40		
		(8.52-8.14)x(1.87+1.88)/2	0.71		
		(8.82-8.52)x(1.85+1.87)/2	0.56		
		(9.64-8.82)x(1.81+1.85)/2	1.50		
		(10.69-9.64)x(1.73+1.81)/2	1.86		
		(10.76-10.69)x(1.72+1.73)/2	0.12		
		(10.82-10.76)x(1.72+1.72)/2	0.10		
		(11.88-10.82)x(1.72+1.72)/2	1.82		
		(12.64-11.88)x(1.74+1.72)/2	1.31		
		(2.91-12.64)x(8.22+1.74)/2	-48.46		
		(1.85-2.91)x(8.23+8.22)/2	-8.72		
		(2.00-1.85)x(8.05+8.23)/2	1.22		
		(0.00-2.00)x(8.10+8.05)/2	-16.15		
		(-4.00-0.00)x(8.20+8.10)/2	-32.60		
		(-5.47--4.00)x(8.23+8.20)/2	-12.08		
		(-5.34--5.47)x(8.39+8.23)/2	1.08		
		(-6.41--5.34)x(8.39+8.39)/2	-8.98		
		(-16.19--6.41)x(1.87+8.39)/2	-50.17		
				120.84	
14 195.00	R1	(-15.77--16.14)x(2.17+2.12)/2	0.79		
		(-15.12--15.77)x(2.27+2.17)/2	1.44		
		(-14.61--15.12)x(2.32+2.27)/2	1.17		
		(-14.00--14.61)x(2.35+2.32)/2	1.42		
		(-13.22--14.00)x(2.38+2.35)/2	1.84		
		(-12.88--13.22)x(2.39+2.38)/2	0.81		
		(-12.61--12.88)x(2.40+2.39)/2	0.65		
		(-11.76--12.61)x(2.41+2.40)/2	2.04		
		(-10.68--11.76)x(2.36+2.41)/2	2.58		
		(-10.64--10.68)x(2.36+2.36)/2	0.09		
		(-10.61--10.64)x(2.36+2.36)/2	0.07		
		(-9.52--10.61)x(2.27+2.36)/2	2.52		
		(-8.61--9.52)x(2.26+2.27)/2	2.06		
		(-8.40--8.61)x(2.25+2.26)/2	0.47		
		(-8.13--8.40)x(2.24+2.25)/2	0.61		
		(-7.28--8.13)x(2.08+2.24)/2	1.84		
		(-6.61--7.28)x(2.00+2.08)/2	1.37		
		(-6.16--6.61)x(1.92+2.00)/2	0.88		
		(-5.59--6.16)x(1.87+1.92)/2	1.08		
		(-5.04--5.59)x(1.85+1.87)/2	1.02		
		(-4.61--5.04)x(1.83+1.85)/2	0.79		
		(-3.92--4.61)x(1.80+1.83)/2	1.25		
		(-3.04--3.92)x(1.81+1.80)/2	1.59		
		(-2.80--3.04)x(1.82+1.81)/2	0.44		
		(-2.61--2.80)x(1.81+1.82)/2	0.34		
		(-1.68--2.61)x(1.78+1.81)/2	1.67		
		(-0.61--1.68)x(1.72+1.78)/2	1.87		
		(-0.56--0.61)x(1.72+1.72)/2	0.09		
		A RIPORTARE mq	32.79		

STERRI E RIPORTI

N. SEZIONE PROG.	FIG.	ELEMENTI DI CALCOLO	AREA ELEMENTARE mq	AREA FIGURA mq	NOTE
		RIPORTO mq	32.79		
		(-0.49--0.56)x(1.72+1.72)/2	0.12		
		(0.56--0.49)x(1.73+1.72)/2	1.81		
		(1.39-0.56)x(1.72+1.73)/2	1.43		
		(1.68-1.39)x(1.72+1.72)/2	0.50		
		(2.05-1.68)x(1.72+1.72)/2	0.64		
		(2.80-2.05)x(1.71+1.72)/2	1.29		
		(3.39-2.80)x(1.67+1.71)/2	1.00		
		(3.92-3.39)x(1.64+1.67)/2	0.88		
		(4.60-3.92)x(1.66+1.64)/2	1.12		
		(4.91-4.60)x(1.68+1.66)/2	0.52		
		(5.04-4.91)x(1.68+1.68)/2	0.22		
		(5.68-5.04)x(1.68+1.68)/2	1.08		
		(6.16-5.68)x(1.70+1.68)/2	0.81		
		(7.15-6.16)x(1.75+1.70)/2	1.71		
		(7.24-7.15)x(1.76+1.75)/2	0.16		
		(7.28-7.24)x(1.76+1.76)/2	0.07		
		(7.39-7.28)x(1.76+1.76)/2	0.19		
		(8.40-7.39)x(1.74+1.76)/2	1.77		
		(9.39-8.40)x(1.74+1.74)/2	1.72		
		(9.52-9.39)x(1.74+1.74)/2	0.23		
		(9.69-9.52)x(1.74+1.74)/2	0.30		
		(10.64-9.69)x(1.75+1.74)/2	1.66		
		(11.39-10.64)x(1.74+1.75)/2	1.31		
		(11.76-11.39)x(1.74+1.74)/2	0.64		
		(12.24-11.76)x(1.75+1.74)/2	0.84		
		(12.88-12.24)x(1.77+1.75)/2	1.13		
		(12.91-12.88)x(1.77+1.77)/2	0.05		
		(2.91-12.91)x(8.44+1.77)/2	-51.05		
		(1.84-2.91)x(8.45+8.44)/2	-9.04		
		(1.99-1.84)x(8.26+8.45)/2	1.25		
		(0.00-1.99)x(8.31+8.26)/2	-16.49		
		(-4.00-0.00)x(8.41+8.31)/2	-33.44		
		(-5.47--4.00)x(8.45+8.41)/2	-12.39		
		(-5.34--5.47)x(8.61+8.45)/2	1.11		
		(-6.41--5.34)x(8.60+8.61)/2	-9.21		
		(-16.14--6.41)x(2.12+8.60)/2	-52.15		
				125.42	
15 210.00	R1	(-16.77--16.96)x(1.57+1.56)/2	0.30		
		(-16.36--16.77)x(1.59+1.57)/2	0.65		
		(-16.05--16.36)x(1.59+1.59)/2	0.49		
		(-15.24--16.05)x(1.59+1.59)/2	1.29		
		(-14.22--15.24)x(1.64+1.59)/2	1.65		
		(-14.12--14.22)x(1.64+1.64)/2	0.16		
		(-13.38--14.12)x(1.65+1.64)/2	1.22		
		(-13.00--13.38)x(1.65+1.65)/2	0.63		
		(-12.05--13.00)x(1.69+1.65)/2	1.59		
		(-11.88--12.05)x(1.69+1.69)/2	0.29		
		(-11.68--11.88)x(1.71+1.69)/2	0.34		
		(-10.76--11.68)x(1.76+1.71)/2	1.60		
		(-10.05--10.76)x(1.77+1.76)/2	1.25		
		(-9.64--10.05)x(1.78+1.77)/2	0.73		
		(-9.13--9.64)x(1.86+1.78)/2	0.93		
		(-8.52--9.13)x(1.95+1.86)/2	1.16		
		(-8.05--8.52)x(2.02+1.95)/2	0.93		
		(-7.40--8.05)x(2.11+2.02)/2	1.34		
		(-6.58--7.40)x(2.22+2.11)/2	1.78		
		(-6.28--6.58)x(2.25+2.22)/2	0.67		
		(-6.05--6.28)x(2.25+2.25)/2	0.52		
		(-5.16--6.05)x(2.27+2.25)/2	2.01		
		(-4.05--5.16)x(2.27+2.27)/2	2.52		
		(-4.04--4.05)x(2.27+2.27)/2	0.02		
		(-2.92--4.04)x(2.24+2.27)/2	2.53		
		(-2.05--2.92)x(2.21+2.24)/2	1.94		
		(-1.80--2.05)x(2.19+2.21)/2	0.55		
		(-1.49--1.80)x(2.17+2.19)/2	0.68		
		(-0.68--1.49)x(2.14+2.17)/2	1.75		
		(-0.05--0.68)x(2.12+2.14)/2	1.34		
		(0.44--0.05)x(2.10+2.12)/2	1.03		
		(1.06-0.44)x(2.08+2.10)/2	1.30		
		(1.56-1.06)x(2.06+2.08)/2	1.04		
		(1.95-1.56)x(2.07+2.06)/2	0.81		
		(2.68-1.95)x(2.07+2.07)/2	1.51		
		(3.60-2.68)x(2.12+2.07)/2	1.93		
		(3.80-3.60)x(2.13+2.12)/2	0.42		
		(3.95-3.80)x(2.12+2.13)/2	0.32		
		(4.92-3.95)x(2.08+2.12)/2	2.04		
		(5.95-4.92)x(2.02+2.08)/2	2.11		
		(6.04-5.95)x(2.02+2.02)/2	0.18		
		(6.15-6.04)x(2.01+2.02)/2	0.22		
		(7.16-6.15)x(1.97+2.01)/2	2.01		
		(7.95-7.16)x(1.92+1.97)/2	1.54		
		(8.28-7.95)x(1.90+1.92)/2	0.63		
		(8.69-8.28)x(1.88+1.90)/2	0.77		
		(9.40-8.69)x(1.85+1.88)/2	1.32		
		(9.95-9.40)x(1.84+1.85)/2	1.01		
		(10.52-9.95)x(1.85+1.84)/2	1.05		
		(11.24-10.52)x(1.84+1.85)/2	1.33		
		(11.64-11.24)x(1.84+1.84)/2	0.74		
		(11.95-11.64)x(1.84+1.84)/2	0.57		
		(12.76-11.95)x(1.83+1.84)/2	1.49		
		(12.82-12.76)x(1.83+1.83)/2	0.11		
		(2.91-12.82)x(8.44+1.83)/2	-50.89		
		(1.84-2.91)x(8.44+8.44)/2	-9.03		
		(1.99-1.84)x(8.26+8.44)/2	1.25		
		(0.00-1.99)x(8.31+8.26)/2	-16.49		
		(-4.00-0.00)x(8.41+8.31)/2	-33.44		
		(-5.47--4.00)x(8.44+8.41)/2	-12.38		
		(-5.34--5.47)x(8.60+8.44)/2	1.11		
		(-6.41--5.34)x(8.60+8.60)/2	-9.20		
		(-16.96--6.41)x(1.56+8.60)/2	-53.59		
				124.32	
16 225.00	R1	(-15.47--15.57)x(2.28+2.30)/2	0.23		
		(-15.34--15.47)x(2.26+2.28)/2	0.30		
		(-15.24--15.34)x(2.24+2.26)/2	0.22		
		(-14.22--15.24)x(2.08+2.24)/2	2.20		
		A RIPORTARE mq	2.95		

STERRI E RIPORTI

N. SEZIONE PROG.	FIG.	ELEMENTI DI CALCOLO	AREA ELEMENTARE mq	AREA FIGURA mq	NOTE
		RIPORTO mq	2.95		
		(-13.27--14.22)x(1.79+2.08)/2	1.84		
		(-13.11--13.27)x(1.74+1.79)/2	0.28		
		(-12.88--13.11)x(1.71+1.74)/2	0.40		
		(-11.99--12.88)x(1.59+1.71)/2	1.47		
		(-11.31--11.99)x(1.57+1.59)/2	1.07		
		(-10.87--11.31)x(1.56+1.57)/2	0.69		
		(-10.30--10.87)x(1.59+1.56)/2	0.90		
		(-9.75--10.30)x(1.62+1.59)/2	0.88		
		(-9.34--9.75)x(1.63+1.62)/2	0.67		
		(-8.64--9.34)x(1.66+1.63)/2	1.15		
		(-7.71--8.64)x(1.72+1.66)/2	1.57		
		(-7.52--7.71)x(1.73+1.72)/2	0.33		
		(-6.80--7.52)x(1.77+1.73)/2	1.26		
		(-6.40--6.80)x(1.79+1.77)/2	0.71		
		(-5.41--6.40)x(1.74+1.79)/2	1.75		
		(-5.29--5.41)x(1.73+1.74)/2	0.21		
		(-5.13--5.29)x(1.73+1.73)/2	0.28		
		(-4.17--5.13)x(1.78+1.73)/2	1.68		
		(-3.44--4.17)x(1.92+1.78)/2	1.35		
		(-3.05--3.44)x(2.00+1.92)/2	0.76		
		(-2.54--3.05)x(2.13+2.00)/2	1.05		
		(-1.94--2.54)x(2.25+2.13)/2	1.31		
		(-1.48--1.94)x(2.29+2.25)/2	1.04		
		(-0.82--1.48)x(2.37+2.29)/2	1.54		
		(0.04--0.82)x(2.38+2.37)/2	2.04		
		(0.30-0.04)x(2.38+2.38)/2	0.62		
		(0.49-0.30)x(2.39+2.38)/2	0.45		
		(1.41-0.49)x(2.42+2.39)/2	2.21		
		(2.46-1.41)x(2.39+2.42)/2	2.53		
		(2.53-2.46)x(2.39+2.39)/2	0.17		
		(2.63-2.53)x(2.38+2.39)/2	0.24		
		(3.65-2.63)x(2.36+2.38)/2	2.42		
		(4.42-3.65)x(2.35+2.36)/2	1.81		
		(4.76-4.42)x(2.34+2.35)/2	0.80		
		(5.21-4.76)x(2.32+2.34)/2	1.05		
		(5.88-5.21)x(2.27+2.32)/2	1.54		
		(6.39-5.88)x(2.21+2.27)/2	1.14		
		(7.00-6.39)x(2.13+2.21)/2	1.32		
		(7.80-7.00)x(2.04+2.13)/2	1.67		
		(8.12-7.80)x(2.00+2.04)/2	0.65		
		(8.36-8.12)x(1.99+2.00)/2	0.48		
		(9.23-8.36)x(1.94+1.99)/2	1.71		
		(10.32-9.23)x(1.77+1.94)/2	2.02		
		(10.35-10.32)x(1.77+1.77)/2	0.05		
		(10.38-10.35)x(1.77+1.77)/2	0.05		
		(11.47-10.38)x(1.85+1.77)/2	1.97		
		(12.29-11.47)x(1.88+1.85)/2	1.53		
		(12.43-12.29)x(1.89+1.88)/2	0.26		
		(2.98-12.43)x(8.19+1.89)/2	-47.63		
		(1.92-2.98)x(8.19+8.19)/2	-8.68		
		(2.07-1.92)x(8.01+8.19)/2	1.21		
		(0.07-2.07)x(8.07+8.01)/2	-16.08		
		(0.00-0.07)x(8.08+8.07)/2	-0.57		
		(-4.00-0.00)x(8.21+8.08)/2	-32.58		
		(-5.47--4.00)x(8.26+8.21)/2	-12.11		
		(-5.34--5.47)x(8.41+8.26)/2	1.08		
		(-6.41--5.34)x(8.41+8.41)/2	-9.00		
		(-15.57--6.41)x(2.30+8.41)/2	-49.05		
				117.54	
17 240.00	R1	(-10.29--10.35)x(2.70+2.70)/2	0.16		
		(-10.08--10.29)x(2.66+2.70)/2	0.56		
		(-9.96--10.08)x(2.64+2.66)/2	0.32		
		(-8.99--9.96)x(2.47+2.64)/2	2.48		
		(-8.21--8.99)x(2.33+2.47)/2	1.87		
		(-7.89--8.21)x(2.28+2.33)/2	0.74		
		(-7.37--7.89)x(2.16+2.28)/2	1.15		
		(-6.80--7.37)x(2.02+2.16)/2	1.19		
		(-6.45--6.80)x(1.93+2.02)/2	0.69		
		(-5.70--6.45)x(1.71+1.93)/2	1.36		
		(-4.70--5.70)x(1.62+1.71)/2	1.67		
		(-4.61--4.70)x(1.61+1.62)/2	0.15		
		(-4.46--4.61)x(1.62+1.61)/2	0.24		
		(-3.51--4.46)x(1.69+1.62)/2	1.57		
		(-2.94--3.51)x(1.73+1.69)/2	0.97		
		(-2.42--2.94)x(1.77+1.73)/2	0.91		
		(-1.54--2.42)x(1.83+1.77)/2	1.58		
		(-1.32--1.54)x(1.84+1.83)/2	0.40		
		(-0.59--1.32)x(1.82+1.84)/2	1.34		
		(-0.23--0.59)x(1.82+1.82)/2	0.66		
		(0.56--0.23)x(1.81+1.82)/2	1.43		
		(0.87-0.56)x(1.81+1.81)/2	0.56		
		(1.38-0.87)x(1.81+1.81)/2	0.92		
		(1.96-1.38)x(1.80+1.81)/2	1.05		
		(2.32-1.96)x(1.79+1.80)/2	0.65		
		(3.06-2.32)x(1.77+1.79)/2	1.32		
		(4.07-3.06)x(1.78+1.77)/2	1.79		
		(4.15-4.07)x(1.79+1.78)/2	0.14		
		(4.29-4.15)x(1.78+1.79)/2	0.25		
		(5.25-4.29)x(1.75+1.78)/2	1.69		
		(5.83-5.25)x(1.86+1.75)/2	1.05		
		(6.34-5.83)x(1.96+1.86)/2	0.97		
		(7.21-6.34)x(2.23+1.96)/2	1.82		
		(7.44-7.21)x(2.28+2.23)/2	0.52		
		(7.58-7.44)x(2.28+2.28)/2	0.32		
		(8.54-7.58)x(2.26+2.28)/2	2.18		
		(9.33-8.54)x(2.30+2.26)/2	1.80		
		(9.63-9.33)x(2.27+2.30)/2	0.69		
		(10.12-9.63)x(2.31+2.27)/2	1.12		
		(10.73-10.12)x(2.38+2.31)/2	1.43		
		(11.05-10.73)x(2.41+2.38)/2	0.77		
		(3.12-11.05)x(7.70+2.41)/2	-40.09		
		(2.05-3.12)x(7.70+7.70)/2	-8.24		
		(2.22-2.05)x(7.51+7.70)/2	1.29		
		(0.21-2.22)x(7.61+7.51)/2	-15.20		
		(0.00-0.21)x(7.62+7.61)/2	-1.60		
		A RIPORTARE mq	-21.36		

STERRI E RIPORTI

N. SEZIONE PROG.	FIG.	ELEMENTI DI CALCOLO	AREA ELEMENTARE mq	AREA FIGURA mq	NOTE
		RIPORTO mq	-21.36		
		(-4.00-0.00)x(7.82+7.62)/2	-30.88		
		(-5.46--4.00)x(7.89+7.82)/2	-11.47		
		(-5.34--5.46)x(8.04+7.89)/2	0.96		
		(-6.41--5.34)x(8.04+8.04)/2	-8.60		
		(-10.35--6.41)x(5.41+8.04)/2	-26.50		
				97.85	
18 255.00	R1	(-6.76--7.06)x(3.63+3.58)/2	1.08		
		(-6.02--6.76)x(3.79+3.63)/2	2.75		
		(-5.93--6.02)x(3.79+3.79)/2	0.34		
		(-5.57--5.93)x(3.83+3.79)/2	1.37		
		(-4.96--5.57)x(3.88+3.83)/2	2.35		
		(-4.73--4.96)x(3.85+3.88)/2	0.89		
		(-3.90--4.73)x(3.78+3.85)/2	3.17		
		(-3.27--3.90)x(3.61+3.78)/2	2.33		
		(-2.83--3.27)x(3.49+3.61)/2	1.56		
		(-1.81--2.83)x(3.34+3.49)/2	3.48		
		(-1.77--1.81)x(3.33+3.34)/2	0.13		
		(-1.68--1.77)x(3.32+3.33)/2	0.30		
		(-0.71--1.68)x(3.24+3.32)/2	3.18		
		(-0.35--0.71)x(3.19+3.24)/2	1.16		
		(0.35--0.35)x(3.10+3.19)/2	2.20		
		(1.12-0.35)x(2.99+3.10)/2	2.34		
		(1.42-1.12)x(2.95+2.99)/2	0.89		
		(2.22-1.42)x(2.79+2.95)/2	2.30		
		(2.48-2.22)x(2.72+2.79)/2	0.72		
		(2.58-2.48)x(2.69+2.72)/2	0.27		
		(3.54-2.58)x(2.45+2.69)/2	2.47		
		(4.09-3.54)x(2.30+2.45)/2	1.31		
		(4.61-4.09)x(2.17+2.30)/2	1.16		
		(5.50-4.61)x(1.96+2.17)/2	1.84		
		(5.67-5.50)x(1.92+1.96)/2	0.33		
		(6.11-5.67)x(1.89+1.92)/2	0.84		
		(6.73-6.11)x(1.87+1.89)/2	1.17		
		(6.96-6.73)x(1.87+1.87)/2	0.43		
		(7.79-6.96)x(1.91+1.87)/2	1.57		
		(8.43-7.79)x(2.00+1.91)/2	1.25		
		(8.86-8.43)x(2.06+2.00)/2	0.87		
		(9.89-8.86)x(2.15+2.06)/2	2.17		
		(9.92-9.89)x(2.16+2.15)/2	0.06		
		(10.00-9.92)x(2.16+2.16)/2	0.17		
		(10.42-10.00)x(2.18+2.16)/2	0.91		
		(3.21-10.42)x(6.99+2.18)/2	-33.06		
		(2.14-3.21)x(7.00+6.99)/2	-7.48		
		(2.31-2.14)x(6.80+7.00)/2	1.17		
		(0.30-2.31)x(6.92+6.80)/2	-13.79		
		(0.00-0.30)x(6.94+6.92)/2	-2.08		
		(-4.00-0.00)x(7.18+6.94)/2	-28.24		
		(-5.46--4.00)x(7.27+7.18)/2	-10.55		
		(-5.34--5.46)x(7.41+7.27)/2	0.88		
		(-6.41--5.34)x(7.41+7.41)/2	-7.93		
		(-7.06--6.41)x(6.97+7.41)/2	-4.67		
				56.39	
19 270.00	R1	(-4.80--5.00)x(3.30+3.30)/2	0.66		
		(-4.77--4.80)x(3.31+3.30)/2	0.10		
		(-4.72--4.77)x(3.36+3.31)/2	0.17		
		(-4.50--4.72)x(3.34+3.36)/2	0.74		
		(-3.68--4.50)x(3.28+3.34)/2	2.71		
		(-3.52--3.68)x(3.30+3.28)/2	0.53		
		(-2.64--3.52)x(3.27+3.30)/2	2.89		
		(-2.27--2.64)x(3.31+3.27)/2	1.22		
		(-1.60--2.27)x(3.33+3.31)/2	2.22		
		(-1.03--1.60)x(3.27+3.33)/2	1.88		
		(-0.56--1.03)x(3.20+3.27)/2	1.52		
		(0.22--0.56)x(3.05+3.20)/2	2.44		
		(0.48-0.22)x(3.00+3.05)/2	0.79		
		(1.46-0.48)x(2.81+3.00)/2	2.85		
		(1.51-1.46)x(2.80+2.81)/2	0.14		
		(1.78-1.51)x(2.74+2.80)/2	0.75		
		(2.44-1.78)x(2.60+2.74)/2	1.76		
		(2.55-2.44)x(2.58+2.60)/2	0.28		
		(3.34-2.55)x(2.41+2.58)/2	1.97		
		(3.59-3.34)x(2.29+2.41)/2	0.59		
		(4.23-3.59)x(2.25+2.29)/2	1.45		
		(4.63-4.23)x(2.27+2.25)/2	0.90		
		(5.12-4.63)x(2.30+2.27)/2	1.12		
		(5.67-5.12)x(2.33+2.30)/2	1.27		
		(6.01-5.67)x(2.35+2.33)/2	0.80		
		(6.71-6.01)x(2.29+2.35)/2	1.62		
		(7.69-6.71)x(2.22+2.29)/2	2.21		
		(7.75-7.69)x(2.22+2.22)/2	0.13		
		(7.79-7.75)x(2.22+2.22)/2	0.09		
		(8.05-7.79)x(2.21+2.22)/2	0.58		
		(8.79-8.05)x(2.22+2.21)/2	1.64		
		(8.94-8.79)x(2.23+2.22)/2	0.33		
		(8.98-8.94)x(2.23+2.23)/2	0.09		
		(3.21-8.98)x(6.09+2.23)/2	-24.00		
		(2.14-3.21)x(6.09+6.09)/2	-6.52		
		(2.31-2.14)x(5.89+6.09)/2	1.02		
		(0.30-2.31)x(6.01+5.89)/2	-11.96		
		(0.00-0.30)x(6.03+6.01)/2	-1.81		
		(-4.00-0.00)x(6.27+6.03)/2	-24.60		
		(-5.00--4.00)x(6.33+6.27)/2	-6.30		
				35.73	

Il Direttore dei Lavori | L'Impresa

N. SEZ.	FIG.	SUPERFICIE STERRO mq	SUPERFICIE RIPORTO mq	PUNTI DI PASSAGGIO (PROGRESSIVA m)	DISTANZA m	VOLUMI PARZIALI STERRO mc	VOLUMI PARZIALI RIPORTO mc	VOLUMI TOTALI STERRO mc	VOLUMI TOTALI RIPORTO mc
6	R1		28.27	(75.00)					
					15.00		493.425		
7	R1		37.52	(90.00)					
									493.425
7	R1		37.52	(90.00)					
					15.00		624.750		
8	R1		45.78	(105.00)					
									624.750
8	R1		45.78	(105.00)					
					15.00		809.850		
9	R1		62.20	(120.00)					
									809.850
9	R1		62.20	(120.00)					
					15.00		1034.775		
10	R1		75.77	(135.00)					
									1034.775
10	R1		75.77	(135.00)					
					15.00		1259.025		
11	R1		92.10	(150.00)					
									1259.025
11	R1		92.10	(150.00)					
					15.00		1535.100		
12	R1		112.58	(165.00)					
									1535.100
12	R1		112.58	(165.00)					
					15.00		1750.650		
13	R1		120.84	(180.00)					
									1750.650
13	R1		120.84	(180.00)					
					15.00		1846.950		
14	R1		125.42	(195.00)					
									1846.950
14	R1		125.42	(195.00)					
					15.00		1873.050		
15	R1		124.32	(210.00)					
									1873.050
15	R1		124.32	(210.00)					
					15.00		1813.950		
16	R1		117.54	(225.00)					
									1813.950
16	R1		117.54	(225.00)					
					15.00		1615.425		
17	R1		97.85	(240.00)					
									1615.425
17	R1		97.85	(240.00)					
					15.00		1156.800		
18	R1		56.39	(255.00)					
									1156.800
18	R1		56.39	(255.00)					
					15.00		690.900		
19	R1		35.73	(270.00)					
									690.900

Il Direttore dei Lavori	L'Impresa	Totale Articoli .....:	0.000	16504.650
		A dedurre quantita' precedenti:		
		Quantita' da contabilizzare ..:		

BONIFICA

N. SEZIONE PROG.	FIG.	ELEMENTI DI CALCOLO	AREA ELEMENTARE mq	AREA FIGURA mq	NOTE
6	BO1	(-4.75--5.00)x(2.61+2.64)/2	0.66		
75.00		(-4.17--4.75)x(2.55+2.61)/2	1.50		
		(-3.56--4.17)x(2.49+2.55)/2	1.54		
		(-3.14--3.56)x(2.45+2.49)/2	1.04		
		(-2.37--3.14)x(2.38+2.45)/2	1.86		
		(-1.28--2.37)x(2.26+2.38)/2	2.53		
		(-1.18--1.28)x(2.25+2.26)/2	0.23		
		(-1.12--1.18)x(2.25+2.25)/2	0.13		
		(0.01--1.12)x(2.22+2.25)/2	2.53		
		(0.90-0.01)x(2.22+2.22)/2	1.98		
		(1.20-0.90)x(2.21+2.22)/2	0.66		
		(1.62-1.20)x(2.20+2.21)/2	0.93		
		(2.39-1.62)x(2.19+2.20)/2	1.69		
		(2.92-2.39)x(2.16+2.19)/2	1.15		
		(3.58-2.92)x(2.13+2.16)/2	1.42		
		(4.51-3.58)x(2.10+2.13)/2	1.97		
		(4.76-4.51)x(2.09+2.10)/2	0.52		
		(4.94-4.76)x(2.07+2.09)/2	0.37		
		(5.95-4.94)x(1.93+2.07)/2	2.02		
		(6.96-5.95)x(1.75+1.93)/2	1.86		
		(7.14-6.96)x(1.72+1.75)/2	0.31		
		(7.40-7.14)x(1.66+1.72)/2	0.44		
		(8.33-7.40)x(1.50+1.66)/2	1.47		
		(8.36-8.33)x(1.49+1.50)/2	0.04		
		(8.33-8.36)x(1.00+0.99)/2	-0.03		
		(7.40-8.33)x(1.16+1.00)/2	-1.00		
		(7.14-7.40)x(1.22+1.16)/2	-0.31		
		(6.96-7.14)x(1.25+1.22)/2	-0.22		
		(5.95-6.96)x(1.43+1.25)/2	-1.35		
		(4.94-5.95)x(1.57+1.43)/2	-1.51		
		(4.76-4.94)x(1.59+1.57)/2	-0.28		
		(4.51-4.76)x(1.60+1.59)/2	-0.40		
		(3.58-4.51)x(1.63+1.60)/2	-1.50		
		(2.92-3.58)x(1.66+1.63)/2	-1.09		
		(2.39-2.92)x(1.69+1.66)/2	-0.89		
		(1.62-2.39)x(1.70+1.69)/2	-1.31		
		(1.20-1.62)x(1.71+1.70)/2	-0.72		
		(0.90-1.20)x(1.72+1.71)/2	-0.51		
		(0.01-0.90)x(1.72+1.72)/2	-1.53		
		(-1.12-0.01)x(1.75+1.72)/2	-1.96		
		(-1.18--1.12)x(1.75+1.75)/2	-0.10		
		(-1.28--1.18)x(1.76+1.75)/2	-0.18		
		(-2.37--1.28)x(1.88+1.76)/2	-1.98		
		(-3.14--2.37)x(1.95+1.88)/2	-1.47		
		(-3.56--3.14)x(1.99+1.95)/2	-0.83		
		(-4.17--3.56)x(2.05+1.99)/2	-1.23		
		(-4.75--4.17)x(2.11+2.05)/2	-1.21		
		(-5.00--4.75)x(2.14+2.11)/2	-0.53		
				6.71	
7	BO1	(-10.38--10.60)x(2.63+2.63)/2	0.58		
90.00		(-9.20--10.38)x(2.61+2.63)/2	3.09		
		(-9.10--9.20)x(2.60+2.61)/2	0.26		
		(-8.78--9.10)x(2.57+2.60)/2	0.83		
		(-7.82--8.78)x(2.47+2.57)/2	2.42		
		(-7.50--7.82)x(2.44+2.47)/2	0.79		
		(-6.54--7.50)x(2.40+2.44)/2	2.32		
		(-5.79--6.54)x(2.36+2.40)/2	1.78		
		(-5.26--5.79)x(2.36+2.36)/2	1.25		
		(-4.08--5.26)x(2.37+2.36)/2	2.79		
		(-3.97--4.08)x(2.38+2.37)/2	0.26		
		(-3.67--3.97)x(2.39+2.38)/2	0.72		
		(-2.69--3.67)x(2.45+2.39)/2	2.37		
		(-2.37--2.69)x(2.45+2.45)/2	0.78		
		(-1.41--2.37)x(2.42+2.45)/2	2.34		
		(-0.66--1.41)x(2.44+2.42)/2	1.82		
		(-0.13--0.66)x(2.45+2.44)/2	1.30		
		(0.38--0.13)x(2.47+2.45)/2	1.25		
		(1.05-0.38)x(2.51+2.47)/2	1.67		
		(1.11-1.05)x(2.51+2.51)/2	0.15		
		(1.15-1.11)x(2.51+2.51)/2	0.10		
		(1.45-1.15)x(2.48+2.51)/2	0.75		
		(2.43-1.45)x(2.39+2.48)/2	2.39		
		(2.76-2.43)x(2.34+2.39)/2	0.78		
		(3.71-2.76)x(2.16+2.34)/2	2.14		
		(4.47-3.71)x(2.27+2.16)/2	1.68		
		(4.99-4.47)x(2.34+2.27)/2	1.20		
		(6.18-4.99)x(2.38+2.34)/2	2.81		
		(6.28-6.18)x(2.38+2.38)/2	0.24		
		(6.56-6.28)x(2.30+2.38)/2	0.66		
		(7.56-6.56)x(2.04+2.30)/2	2.17		
		(7.64-7.56)x(2.05+2.04)/2	0.16		
		(7.56-7.64)x(1.54+1.55)/2	-0.12		
		(6.56-7.56)x(1.80+1.54)/2	-1.67		
		(6.28-6.56)x(1.88+1.80)/2	-0.52		
		(6.18-6.28)x(1.88+1.88)/2	-0.19		
		(4.99-6.18)x(1.84+1.88)/2	-2.21		
		(4.47-4.99)x(1.77+1.84)/2	-0.94		
		(3.71-4.47)x(1.66+1.77)/2	-1.30		
		(2.76-3.71)x(1.84+1.66)/2	-1.66		
		(2.43-2.76)x(1.89+1.84)/2	-0.62		
		(1.45-2.43)x(1.98+1.89)/2	-1.90		
		(1.15-1.45)x(2.01+1.98)/2	-0.60		
		(1.11-1.15)x(2.01+2.01)/2	-0.08		
		(1.05-1.11)x(2.01+2.01)/2	-0.12		
		(0.38-1.05)x(1.97+2.01)/2	-1.33		
		(-0.13-0.38)x(1.95+1.97)/2	-1.00		
		(-0.66--0.13)x(1.94+1.95)/2	-1.03		
		(-1.41--0.66)x(1.92+1.94)/2	-1.45		
		(-2.37--1.41)x(1.95+1.92)/2	-1.86		
		(-2.69--2.37)x(1.95+1.95)/2	-0.62		
		(-3.67--2.69)x(1.89+1.95)/2	-1.88		
		(-3.97--3.67)x(1.88+1.89)/2	-0.57		
		(-4.08--3.97)x(1.87+1.88)/2	-0.21		
		(-5.26--4.08)x(1.86+1.87)/2	-2.20		
		(-5.79--5.26)x(1.86+1.86)/2	-0.99		
		(-6.54--5.79)x(1.90+1.86)/2	-1.41		
		(-7.50--6.54)x(1.94+1.90)/2	-1.84		
		A RIPORTARE mq	15.53		

BONIFICA

N. SEZIONE PROG.	FIG.	ELEMENTI DI CALCOLO	AREA ELEMENTARE mq	AREA FIGURA mq	NOTE
		RIPORTO mq	15.53		
		(-7.82--7.50)x(1.97+1.94)/2	-0.63		
		(-8.78--7.82)x(2.07+1.97)/2	-1.94		
		(-9.10--8.78)x(2.10+2.07)/2	-0.67		
		(-9.20--9.10)x(2.11+2.10)/2	-0.21		
		(-10.38--9.20)x(2.13+2.11)/2	-2.50		
		(-10.60--10.38)x(2.13+2.13)/2	-0.47		
				9.11	
8	BO1	(-10.76--11.01)x(2.58+2.61)/2	0.65		
105.00		(-10.56--10.76)x(2.59+2.58)/2	0.52		
		(-9.27--10.56)x(2.60+2.59)/2	3.35		
		(-9.16--9.27)x(2.60+2.60)/2	0.29		
		(-7.77--9.16)x(2.56+2.60)/2	3.59		
		(-7.75--7.77)x(2.56+2.56)/2	0.05		
		(-7.44--7.75)x(2.56+2.56)/2	0.79		
		(-6.34--7.44)x(2.58+2.56)/2	2.83		
		(-6.27--6.34)x(2.59+2.58)/2	0.18		
		(-4.94--6.27)x(2.60+2.59)/2	3.45		
		(-4.77--4.94)x(2.60+2.60)/2	0.44		
		(-3.53--4.77)x(2.50+2.60)/2	3.16		
		(-3.28--3.53)x(2.47+2.50)/2	0.62		
		(-2.12--3.28)x(2.30+2.47)/2	2.77		
		(-1.78--2.12)x(2.21+2.30)/2	0.77		
		(-0.71--1.78)x(1.98+2.21)/2	2.24		
		(-0.28--0.71)x(1.87+1.98)/2	0.83		
		(0.69--0.28)x(1.65+1.87)/2	1.71		
		(1.21-0.69)x(1.58+1.65)/2	0.84		
		(2.10-1.21)x(1.64+1.58)/2	1.43		
		(2.71-2.10)x(1.73+1.64)/2	1.03		
		(3.51-2.71)x(1.82+1.73)/2	1.42		
		(4.21-3.51)x(1.90+1.82)/2	1.30		
		(4.91-4.21)x(1.93+1.90)/2	1.34		
		(5.71-4.91)x(2.00+1.93)/2	1.57		
		(6.32-5.71)x(2.09+2.00)/2	1.25		
		(7.20-6.32)x(2.21+2.09)/2	1.89		
		(7.69-7.20)x(2.27+2.21)/2	1.10		
		(7.20-7.69)x(1.71+1.77)/2	-0.85		
		(6.32-7.20)x(1.59+1.71)/2	-1.45		
		(5.71-6.32)x(1.50+1.59)/2	-0.94		
		(4.91-5.71)x(1.43+1.50)/2	-1.17		
		(4.21-4.91)x(1.40+1.43)/2	-0.99		
		(3.51-4.21)x(1.32+1.40)/2	-0.95		
		(2.71-3.51)x(1.23+1.32)/2	-1.02		
		(2.10-2.71)x(1.14+1.23)/2	-0.72		
		(1.21-2.10)x(1.08+1.14)/2	-0.99		
		(0.69-1.21)x(1.15+1.08)/2	-0.58		
		(-0.28-0.69)x(1.37+1.15)/2	-1.22		
		(-0.71--0.28)x(1.48+1.37)/2	-0.61		
		(-1.78--0.71)x(1.71+1.48)/2	-1.71		
		(-2.12--1.78)x(1.80+1.71)/2	-0.60		
		(-3.28--2.12)x(1.97+1.80)/2	-2.19		
		(-3.53--3.28)x(2.00+1.97)/2	-0.50		
		(-4.77--3.53)x(2.10+2.00)/2	-2.54		
		(-4.94--4.77)x(2.10+2.10)/2	-0.36		
		(-6.27--4.94)x(2.09+2.10)/2	-2.79		
		(-6.34--6.27)x(2.08+2.09)/2	-0.15		
		(-7.44--6.34)x(2.06+2.08)/2	-2.28		
		(-7.75--7.44)x(2.06+2.06)/2	-0.64		
		(-7.77--7.75)x(2.06+2.06)/2	-0.04		
		(-9.16--7.77)x(2.10+2.06)/2	-2.89		
		(-9.27--9.16)x(2.10+2.10)/2	-0.23		
		(-10.56--9.27)x(2.09+2.10)/2	-2.70		
		(-10.76--10.56)x(2.08+2.09)/2	-0.42		
		(-11.01--10.76)x(2.11+2.08)/2	-0.52		
				9.36	
9	BO1	(-11.22--11.83)x(2.42+2.50)/2	1.50		
120.00		(-10.91--11.22)x(2.37+2.42)/2	0.74		
		(-9.64--10.91)x(2.08+2.37)/2	2.83		
		(-9.57--9.64)x(2.07+2.08)/2	0.15		
		(-9.14--9.57)x(2.00+2.07)/2	0.88		
		(-8.22--9.14)x(1.85+2.00)/2	1.77		
		(-8.06--8.22)x(1.84+1.85)/2	0.30		
		(-6.87--8.06)x(1.70+1.84)/2	2.11		
		(-6.48--6.87)x(1.62+1.70)/2	0.65		
		(-5.53--6.48)x(1.39+1.62)/2	1.43		
		(-4.90--5.53)x(1.33+1.39)/2	0.86		
		(-4.18--4.90)x(1.47+1.33)/2	1.01		
		(-3.78--4.18)x(1.55+1.47)/2	0.60		
		(-3.32--3.78)x(1.64+1.55)/2	0.73		
		(-2.83--3.32)x(1.67+1.64)/2	0.81		
		(-1.74--2.83)x(1.69+1.67)/2	1.83		
		(-1.49--1.74)x(1.70+1.69)/2	0.42		
		(-0.15--1.49)x(1.70+1.70)/2	2.28		
		(-0.14--0.15)x(1.70+1.70)/2	0.02		
		(-0.07--0.14)x(1.70+1.70)/2	0.12		
		(1.21--0.07)x(1.73+1.70)/2	2.20		
		(1.43-1.21)x(1.73+1.73)/2	0.38		
		(2.55-1.43)x(1.75+1.73)/2	1.95		
		(3.01-2.55)x(1.78+1.75)/2	0.81		
		(3.90-3.01)x(1.88+1.78)/2	1.63		
		(4.59-3.90)x(1.97+1.88)/2	1.33		
		(5.25-4.59)x(2.02+1.97)/2	1.32		
		(6.17-5.25)x(2.07+2.02)/2	1.88		
		(6.59-6.17)x(2.08+2.07)/2	0.87		
		(7.75-6.59)x(2.11+2.08)/2	2.43		
		(7.94-7.75)x(2.11+2.11)/2	0.40		
		(8.66-7.94)x(2.06+2.11)/2	1.50		
		(7.94-8.66)x(1.61+1.56)/2	-1.14		
		(7.75-7.94)x(1.61+1.61)/2	-0.31		
		(6.59-7.75)x(1.58+1.61)/2	-1.85		
		(6.17-6.59)x(1.57+1.58)/2	-0.66		
		(5.25-6.17)x(1.52+1.57)/2	-1.42		
		(4.59-5.25)x(1.47+1.52)/2	-0.99		
		(3.90-4.59)x(1.38+1.47)/2	-0.98		
		(3.01-3.90)x(1.28+1.38)/2	-1.18		
		(2.55-3.01)x(1.25+1.28)/2	-0.58		
		A RIPORTARE mq	28.63		

BONIFICA

N. SEZIONE PROG.	FIG.	ELEMENTI DI CALCOLO	AREA ELEMENTARE mq	AREA FIGURA mq	NOTE
		RIPORTO mq	28.63		
		(1.43-2.55)x(1.23+1.25)/2	-1.39		
		(1.21-1.43)x(1.23+1.23)/2	-0.27		
		(-0.07-1.21)x(1.20+1.23)/2	-1.56		
		(-0.14--0.07)x(1.20+1.20)/2	-0.08		
		(-0.15--0.14)x(1.20+1.20)/2	-0.01		
		(-1.49--0.15)x(1.20+1.20)/2	-1.61		
		(-1.74--1.49)x(1.19+1.20)/2	-0.30		
		(-2.83--1.74)x(1.17+1.19)/2	-1.29		
		(-3.32--2.83)x(1.14+1.17)/2	-0.57		
		(-3.78--3.32)x(1.05+1.14)/2	-0.50		
		(-4.18--3.78)x(0.97+1.05)/2	-0.40		
		(-4.90--4.18)x(0.83+0.97)/2	-0.65		
		(-5.53--4.90)x(0.89+0.83)/2	-0.54		
		(-6.48--5.53)x(1.12+0.89)/2	-0.95		
		(-6.87--6.48)x(1.20+1.12)/2	-0.45		
		(-8.06--6.87)x(1.34+1.20)/2	-1.51		
		(-8.22--8.06)x(1.35+1.34)/2	-0.22		
		(-9.14--8.22)x(1.50+1.35)/2	-1.31		
		(-9.57--9.14)x(1.57+1.50)/2	-0.66		
		(-9.64--9.57)x(1.58+1.57)/2	-0.11		
		(-10.91--9.64)x(1.87+1.58)/2	-2.19		
		(-11.22--10.91)x(1.92+1.87)/2	-0.59		
		(-11.83--11.22)x(2.00+1.92)/2	-1.20		
				10.27	
10 135.00	B01	(-14.17--14.35)x(1.43+1.43)/2	0.26		
		(-13.93--14.17)x(1.47+1.43)/2	0.35		
		(-13.42--13.93)x(1.51+1.47)/2	0.76		
		(-12.69--13.42)x(1.60+1.51)/2	1.14		
		(-12.34--12.69)x(1.63+1.60)/2	0.57		
		(-11.46--12.34)x(1.69+1.63)/2	1.46		
		(-10.51--11.46)x(1.73+1.69)/2	1.62		
		(-10.22--10.51)x(1.73+1.73)/2	0.50		
		(-9.61--10.22)x(1.71+1.73)/2	1.05		
		(-8.98--9.61)x(1.69+1.71)/2	1.07		
		(-8.68--8.98)x(1.70+1.69)/2	0.51		
		(-7.74--8.68)x(1.74+1.70)/2	1.62		
		(-6.85--7.74)x(1.76+1.74)/2	1.56		
		(-6.51--6.85)x(1.78+1.76)/2	0.60		
		(-5.79--6.51)x(1.84+1.78)/2	1.30		
		(-5.27--5.79)x(1.89+1.84)/2	0.97		
		(-5.02--5.27)x(1.91+1.89)/2	0.47		
		(-4.03--5.02)x(2.01+1.91)/2	1.94		
		(-3.19--4.03)x(2.01+2.01)/2	1.69		
		(-2.79--3.19)x(2.01+2.01)/2	0.80		
		(-1.98--2.79)x(2.00+2.01)/2	1.62		
		(-1.56--1.98)x(2.01+2.00)/2	0.84		
		(-1.35--1.56)x(2.00+2.01)/2	0.42		
		(-0.32--1.35)x(1.95+2.00)/2	2.03		
		(0.48--0.32)x(1.93+1.95)/2	1.55		
		(0.92-0.48)x(1.94+1.93)/2	0.85		
		(1.84-0.92)x(1.96+1.94)/2	1.79		
		(2.16-1.84)x(1.97+1.96)/2	0.63		
		(2.31-2.16)x(1.98+1.97)/2	0.30		
		(3.39-2.31)x(2.00+1.98)/2	2.15		
		(4.14-3.39)x(1.99+2.00)/2	1.50		
		(4.43-4.14)x(1.99+1.99)/2	0.58		
		(4.63-4.43)x(1.97+1.99)/2	0.40		
		(5.17-4.63)x(1.97+1.97)/2	1.06		
		(5.87-5.17)x(1.98+1.97)/2	1.38		
		(5.97-5.87)x(1.98+1.98)/2	0.20		
		(6.65-5.97)x(1.99+1.98)/2	1.35		
		(7.11-6.65)x(2.00+1.99)/2	0.92		
		(7.80-7.11)x(1.97+2.00)/2	1.37		
		(8.34-7.80)x(1.95+1.97)/2	1.06		
		(9.47-8.34)x(1.89+1.95)/2	2.17		
		(9.58-9.47)x(1.89+1.89)/2	0.21		
		(9.63-9.58)x(1.89+1.89)/2	0.09		
		(9.84-9.63)x(1.88+1.89)/2	0.40		
		(9.63-9.84)x(1.39+1.38)/2	-0.29		
		(9.58-9.63)x(1.39+1.39)/2	-0.07		
		(9.47-9.58)x(1.39+1.39)/2	-0.15		
		(8.34-9.47)x(1.45+1.39)/2	-1.60		
		(7.80-8.34)x(1.47+1.45)/2	-0.79		
		(7.11-7.80)x(1.50+1.47)/2	-1.02		
		(6.65-7.11)x(1.49+1.50)/2	-0.69		
		(5.97-6.65)x(1.48+1.49)/2	-1.01		
		(5.87-5.97)x(1.48+1.48)/2	-0.15		
		(5.17-5.87)x(1.47+1.48)/2	-1.03		
		(4.63-5.17)x(1.47+1.47)/2	-0.79		
		(4.43-4.63)x(1.49+1.47)/2	-0.30		
		(4.14-4.43)x(1.49+1.49)/2	-0.43		
		(3.39-4.14)x(1.50+1.49)/2	-1.12		
		(2.31-3.39)x(1.48+1.50)/2	-1.61		
		(2.16-2.31)x(1.47+1.48)/2	-0.22		
		(1.84-2.16)x(1.46+1.47)/2	-0.47		
		(0.92-1.84)x(1.44+1.46)/2	-1.33		
		(0.48-0.92)x(1.43+1.44)/2	-0.63		
		(-0.32-0.48)x(1.45+1.43)/2	-1.15		
		(-1.35--0.32)x(1.50+1.45)/2	-1.52		
		(-1.56--1.35)x(1.51+1.50)/2	-0.32		
		(-1.98--1.56)x(1.50+1.51)/2	-0.63		
		(-2.79--1.98)x(1.51+1.50)/2	-1.22		
		(-3.19--2.79)x(1.51+1.51)/2	-0.60		
		(-4.03--3.19)x(1.51+1.51)/2	-1.27		
		(-5.02--4.03)x(1.41+1.51)/2	-1.45		
		(-5.27--5.02)x(1.39+1.41)/2	-0.35		
		(-5.79--5.27)x(1.34+1.39)/2	-0.71		
		(-6.51--5.79)x(1.28+1.34)/2	-0.94		
		(-6.85--6.51)x(1.26+1.28)/2	-0.43		
		(-7.74--6.85)x(1.24+1.26)/2	-1.11		
		(-8.68--7.74)x(1.20+1.24)/2	-1.15		
		(-8.98--8.68)x(1.19+1.20)/2	-0.36		
		(-9.61--8.98)x(1.21+1.19)/2	-0.76		
		(-10.22--9.61)x(1.23+1.21)/2	-0.74		
		(-10.51--10.22)x(1.23+1.23)/2	-0.36		
		A RIPORTARE mq	16.34		

BONIFICA

N. SEZIONE PROG.	FIG.	ELEMENTI DI CALCOLO	AREA ELEMENTARE mq	AREA FIGURA mq	NOTE
		RIPORTO mq	16.34		
		(-11.46--10.51)x(1.19+1.23)/2	-1.15		
		(-12.34--11.46)x(1.13+1.19)/2	-1.02		
		(-12.69--12.34)x(1.10+1.13)/2	-0.39		
		(-13.42--12.69)x(1.01+1.10)/2	-0.77		
		(-13.93--13.42)x(0.97+1.01)/2	-0.50		
		(-14.17--13.93)x(0.93+0.97)/2	-0.23		
		(-14.35--14.17)x(0.93+0.93)/2	-0.17		
				12.11	
11	BO1	(-13.71--14.43)x(2.01+2.08)/2	1.47		
150.00		(-13.64--13.71)x(2.01+2.01)/2	0.14		
		(-13.56--13.64)x(2.01+2.01)/2	0.16		
		(-12.48--13.56)x(2.07+2.01)/2	2.20		
		(-11.53--12.48)x(2.13+2.07)/2	2.00		
		(-11.32--11.53)x(2.15+2.13)/2	0.45		
		(-11.07--11.32)x(2.15+2.15)/2	0.54		
		(-10.15--11.07)x(2.17+2.15)/2	1.99		
		(-9.35--10.15)x(2.18+2.17)/2	1.74		
		(-8.99--9.35)x(2.19+2.18)/2	0.79		
		(-8.59--8.99)x(2.20+2.19)/2	0.88		
		(-7.83--8.59)x(2.21+2.20)/2	1.68		
		(-7.17--7.83)x(2.21+2.21)/2	1.46		
		(-6.67--7.17)x(2.19+2.21)/2	1.10		
		(-6.11--6.67)x(2.20+2.19)/2	1.23		
		(-5.51--6.11)x(2.17+2.20)/2	1.31		
		(-4.99--5.51)x(2.15+2.17)/2	1.12		
		(-4.35--4.99)x(2.05+2.15)/2	1.34		
		(-3.62--4.35)x(1.97+2.05)/2	1.47		
		(-3.19--3.62)x(1.90+1.97)/2	0.83		
		(-2.80--3.19)x(1.89+1.90)/2	0.74		
		(-2.02--2.80)x(1.87+1.89)/2	1.47		
		(-1.14--2.02)x(1.87+1.87)/2	1.65		
		(-0.86--1.14)x(1.87+1.87)/2	0.52		
		(-0.62--0.86)x(1.88+1.87)/2	0.45		
		(0.30--0.62)x(1.93+1.88)/2	1.75		
		(1.35-0.30)x(1.85+1.93)/2	1.98		
		(1.46-1.35)x(1.85+1.85)/2	0.20		
		(1.56-1.46)x(1.83+1.85)/2	0.18		
		(2.62-1.56)x(1.76+1.83)/2	1.90		
		(3.74-2.62)x(1.66+1.76)/2	1.92		
		(3.78-3.74)x(1.66+1.66)/2	0.07		
		(3.83-3.78)x(1.66+1.66)/2	0.08		
		(4.94-3.83)x(1.65+1.66)/2	1.84		
		(5.92-4.94)x(1.57+1.65)/2	1.58		
		(6.11-5.92)x(1.57+1.57)/2	0.30		
		(6.31-6.11)x(1.58+1.57)/2	0.31		
		(7.27-6.31)x(1.64+1.58)/2	1.55		
		(8.11-7.27)x(1.71+1.64)/2	1.41		
		(8.43-8.11)x(1.73+1.71)/2	0.55		
		(8.80-8.43)x(1.76+1.73)/2	0.65		
		(9.59-8.80)x(1.84+1.76)/2	1.42		
		(10.29-9.59)x(1.80+1.84)/2	1.27		
		(10.75-10.29)x(1.77+1.80)/2	0.82		
		(11.10-10.75)x(1.76+1.77)/2	0.62		
		(10.75-11.10)x(1.27+1.26)/2	-0.44		
		(10.29-10.75)x(1.30+1.27)/2	-0.59		
		(9.59-10.29)x(1.34+1.30)/2	-0.92		
		(8.80-9.59)x(1.26+1.34)/2	-1.03		
		(8.43-8.80)x(1.23+1.26)/2	-0.46		
		(8.11-8.43)x(1.21+1.23)/2	-0.39		
		(7.27-8.11)x(1.14+1.21)/2	-0.99		
		(6.31-7.27)x(1.08+1.14)/2	-1.07		
		(6.11-6.31)x(1.07+1.08)/2	-0.21		
		(5.92-6.11)x(1.07+1.07)/2	-0.20		
		(4.94-5.92)x(1.15+1.07)/2	-1.09		
		(3.83-4.94)x(1.16+1.15)/2	-1.28		
		(3.78-3.83)x(1.16+1.16)/2	-0.06		
		(3.74-3.78)x(1.16+1.16)/2	-0.05		
		(2.62-3.74)x(1.26+1.16)/2	-1.36		
		(1.56-2.62)x(1.33+1.26)/2	-1.37		
		(1.46-1.56)x(1.35+1.33)/2	-0.13		
		(1.35-1.46)x(1.35+1.35)/2	-0.15		
		(0.30-1.35)x(1.43+1.35)/2	-1.46		
		(-0.62-0.30)x(1.38+1.43)/2	-1.29		
		(-0.86--0.62)x(1.37+1.38)/2	-0.33		
		(-1.14--0.86)x(1.37+1.37)/2	-0.38		
		(-2.02--1.14)x(1.37+1.37)/2	-1.21		
		(-2.80--2.02)x(1.39+1.37)/2	-1.08		
		(-3.19--2.80)x(1.40+1.39)/2	-0.54		
		(-3.62--3.19)x(1.47+1.40)/2	-0.62		
		(-4.35--3.62)x(1.55+1.47)/2	-1.10		
		(-4.99--4.35)x(1.65+1.55)/2	-1.02		
		(-5.51--4.99)x(1.67+1.65)/2	-0.86		
		(-6.11--5.51)x(1.70+1.67)/2	-1.01		
		(-6.67--6.11)x(1.69+1.70)/2	-0.95		
		(-7.17--6.67)x(1.71+1.69)/2	-0.85		
		(-7.83--7.17)x(1.71+1.71)/2	-1.13		
		(-8.59--7.83)x(1.70+1.71)/2	-1.30		
		(-8.99--8.59)x(1.69+1.70)/2	-0.68		
		(-9.35--8.99)x(1.68+1.69)/2	-0.61		
		(-10.15--9.35)x(1.67+1.68)/2	-1.34		
		(-11.07--10.15)x(1.65+1.67)/2	-1.53		
		(-11.32--11.07)x(1.65+1.65)/2	-0.41		
		(-11.53--11.32)x(1.63+1.65)/2	-0.34		
		(-12.48--11.53)x(1.57+1.63)/2	-1.52		
		(-13.56--12.48)x(1.51+1.57)/2	-1.66		
		(-13.64--13.56)x(1.51+1.51)/2	-0.12		
		(-13.71--13.64)x(1.51+1.51)/2	-0.11		
		(-14.43--13.71)x(1.58+1.51)/2	-1.11		
				12.78	
12	BO1	(-15.29--15.78)x(1.75+1.76)/2	0.86		
165.00		(-15.01--15.29)x(1.75+1.75)/2	0.49		
		(-14.52--15.01)x(1.75+1.75)/2	0.86		
		(-13.89--14.52)x(1.79+1.75)/2	1.12		
		(-13.74--13.89)x(1.79+1.79)/2	0.27		
		(-13.42--13.74)x(1.79+1.79)/2	0.57		
		A RIPORTARE mq	4.17		

BONIFICA

N. SEZIONE PROG.	FIG.	ELEMENTI DI CALCOLO	AREA ELEMENTARE mq	AREA FIGURA mq	NOTE
		RIPORTO mq	4.17		
		(-12.76--13.42)x(1.77+1.79)/2	1.17		
		(-12.21--12.76)x(1.71+1.77)/2	0.96		
		(-11.63--12.21)x(1.67+1.71)/2	0.98		
		(-10.95--11.63)x(1.57+1.67)/2	1.10		
		(-10.51--10.95)x(1.51+1.57)/2	0.68		
		(-10.14--10.51)x(1.49+1.51)/2	0.55		
		(-9.38--10.14)x(1.46+1.49)/2	1.12		
		(-8.48--9.38)x(1.39+1.46)/2	1.28		
		(-8.25--8.48)x(1.40+1.39)/2	0.32		
		(-8.07--8.25)x(1.41+1.40)/2	0.25		
		(-7.13--8.07)x(1.47+1.41)/2	1.35		
		(-6.01--7.13)x(1.60+1.47)/2	1.72		
		(-6.00--6.01)x(1.60+1.60)/2	0.02		
		(-4.87--6.00)x(1.67+1.60)/2	1.85		
		(-3.92--4.87)x(1.70+1.67)/2	1.60		
		(-3.75--3.92)x(1.71+1.70)/2	0.29		
		(-3.53--3.75)x(1.72+1.71)/2	0.38		
		(-2.62--3.53)x(1.75+1.72)/2	1.58		
		(-1.85--2.62)x(1.78+1.75)/2	1.36		
		(-1.49--1.85)x(1.80+1.78)/2	0.64		
		(-1.06--1.49)x(1.79+1.80)/2	0.77		
		(-0.37--1.06)x(1.76+1.79)/2	1.22		
		(0.22--0.37)x(1.76+1.76)/2	1.04		
		(0.76-0.22)x(1.74+1.76)/2	0.95		
		(1.41-0.76)x(1.74+1.74)/2	1.13		
		(1.89-1.41)x(1.73+1.74)/2	0.83		
		(2.29-1.89)x(1.73+1.73)/2	0.69		
		(3.01-2.29)x(1.73+1.73)/2	1.25		
		(3.88-3.01)x(1.75+1.73)/2	1.51		
		(4.14-3.88)x(1.76+1.75)/2	0.46		
		(4.36-4.14)x(1.78+1.76)/2	0.39		
		(5.27-4.36)x(1.87+1.78)/2	1.66		
		(6.36-5.27)x(1.96+1.87)/2	2.09		
		(6.39-6.36)x(1.96+1.96)/2	0.06		
		(6.43-6.39)x(1.96+1.96)/2	0.08		
		(7.52-6.43)x(1.98+1.96)/2	2.15		
		(8.50-7.52)x(2.06+1.98)/2	1.98		
		(8.65-8.50)x(2.07+2.06)/2	0.31		
		(8.83-8.65)x(2.08+2.07)/2	0.37		
		(9.77-8.83)x(2.16+2.08)/2	1.99		
		(10.57-9.77)x(2.19+2.16)/2	1.74		
		(10.90-10.57)x(2.20+2.19)/2	0.72		
		(11.30-10.90)x(2.24+2.20)/2	0.89		
		(10.90-11.30)x(1.70+1.74)/2	-0.69		
		(10.57-10.90)x(1.69+1.70)/2	-0.56		
		(9.77-10.57)x(1.66+1.69)/2	-1.34		
		(8.83-9.77)x(1.58+1.66)/2	-1.52		
		(8.65-8.83)x(1.57+1.58)/2	-0.28		
		(8.50-8.65)x(1.56+1.57)/2	-0.23		
		(7.52-8.50)x(1.48+1.56)/2	-1.49		
		(6.43-7.52)x(1.46+1.48)/2	-1.60		
		(6.39-6.43)x(1.46+1.46)/2	-0.06		
		(6.36-6.39)x(1.46+1.46)/2	-0.04		
		(5.27-6.36)x(1.37+1.46)/2	-1.54		
		(4.36-5.27)x(1.28+1.37)/2	-1.21		
		(4.14-4.36)x(1.26+1.28)/2	-0.28		
		(3.88-4.14)x(1.25+1.26)/2	-0.33		
		(3.01-3.88)x(1.23+1.25)/2	-1.08		
		(2.29-3.01)x(1.23+1.23)/2	-0.89		
		(1.89-2.29)x(1.23+1.23)/2	-0.49		
		(1.41-1.89)x(1.24+1.23)/2	-0.59		
		(0.76-1.41)x(1.24+1.24)/2	-0.81		
		(0.22-0.76)x(1.26+1.24)/2	-0.68		
		(-0.37-0.22)x(1.26+1.26)/2	-0.74		
		(-1.06--0.37)x(1.29+1.26)/2	-0.88		
		(-1.49--1.06)x(1.30+1.29)/2	-0.56		
		(-1.85--1.49)x(1.28+1.30)/2	-0.46		
		(-2.62--1.85)x(1.25+1.28)/2	-0.97		
		(-3.53--2.62)x(1.22+1.25)/2	-1.12		
		(-3.75--3.53)x(1.21+1.22)/2	-0.27		
		(-3.92--3.75)x(1.20+1.21)/2	-0.20		
		(-4.87--3.92)x(1.17+1.20)/2	-1.13		
		(-6.00--4.87)x(1.10+1.17)/2	-1.28		
		(-6.01--6.00)x(1.10+1.10)/2	-0.01		
		(-7.13--6.01)x(0.97+1.10)/2	-1.16		
		(-8.07--7.13)x(0.91+0.97)/2	-0.88		
		(-8.25--8.07)x(0.90+0.91)/2	-0.16		
		(-8.48--8.25)x(0.89+0.90)/2	-0.21		
		(-9.38--8.48)x(0.96+0.89)/2	-0.83		
		(-10.14--9.38)x(0.99+0.96)/2	-0.74		
		(-10.51--10.14)x(1.01+0.99)/2	-0.37		
		(-10.95--10.51)x(1.07+1.01)/2	-0.46		
		(-11.63--10.95)x(1.17+1.07)/2	-0.76		
		(-12.21--11.63)x(1.21+1.17)/2	-0.69		
		(-12.76--12.21)x(1.27+1.21)/2	-0.68		
		(-13.42--12.76)x(1.29+1.27)/2	-0.84		
		(-13.74--13.42)x(1.29+1.29)/2	-0.41		
		(-13.89--13.74)x(1.29+1.29)/2	-0.19		
		(-14.52--13.89)x(1.25+1.29)/2	-0.80		
		(-15.01--14.52)x(1.25+1.25)/2	-0.61		
		(-15.29--15.01)x(1.25+1.25)/2	-0.35		
		(-15.78--15.29)x(1.26+1.25)/2	-0.61		
				13.57	
13 180.00	BO1	(-16.12--16.19)x(1.84+1.87)/2	0.13		
		(-15.18--16.12)x(1.64+1.84)/2	1.64		
		(-15.00--15.18)x(1.60+1.64)/2	0.29		
		(-14.77--15.00)x(1.59+1.60)/2	0.37		
		(-13.88--14.77)x(1.66+1.59)/2	1.45		
		(-13.18--13.88)x(1.70+1.66)/2	1.18		
		(-12.76--13.18)x(1.73+1.70)/2	0.72		
		(-12.23--12.76)x(1.73+1.73)/2	0.92		
		(-11.64--12.23)x(1.74+1.73)/2	1.02		
		(-11.18--11.64)x(1.74+1.74)/2	0.80		
		(-10.52--11.18)x(1.76+1.74)/2	1.16		
		(-9.68--10.52)x(1.75+1.76)/2	1.47		
		A RIPORTARE mq	11.15		

BONIFICA

N. SEZIONE PROG.	FIG.	ELEMENTI DI CALCOLO	AREA ELEMENTARE mq	AREA FIGURA mq	NOTE
		RIPORTO mq	11.15		
		(-9.40--9.68)x(1.75+1.75)/2	0.49		
		(-9.18--9.40)x(1.77+1.75)/2	0.39		
		(-8.28--9.18)x(1.82+1.77)/2	1.62		
		(-7.18--8.28)x(1.88+1.82)/2	2.03		
		(-7.16--7.18)x(1.88+1.88)/2	0.04		
		(-7.13--7.16)x(1.89+1.88)/2	0.06		
		(-6.37--7.13)x(1.90+1.89)/2	1.44		
		(-6.04--6.37)x(1.90+1.90)/2	0.63		
		(-5.60--6.04)x(1.94+1.90)/2	0.84		
		(-4.92--5.60)x(1.98+1.94)/2	1.33		
		(-4.82--4.92)x(1.98+1.98)/2	0.20		
		(-4.59--4.82)x(2.00+1.98)/2	0.46		
		(-3.80--4.59)x(2.03+2.00)/2	1.59		
		(-3.18--3.80)x(2.04+2.03)/2	1.26		
		(-2.68--3.18)x(2.04+2.04)/2	1.02		
		(-2.04--2.68)x(2.05+2.04)/2	1.31		
		(-1.56--2.04)x(2.06+2.05)/2	0.99		
		(-1.18--1.56)x(2.05+2.06)/2	0.78		
		(-0.44--1.18)x(2.03+2.05)/2	1.51		
		(-0.15--0.44)x(2.03+2.03)/2	0.59		
		(0.50--0.15)x(1.98+2.03)/2	1.30		
		(0.63-0.50)x(1.97+1.98)/2	0.26		
		(0.68-0.63)x(1.97+1.97)/2	0.10		
		(0.82-0.68)x(1.97+1.97)/2	0.28		
		(1.80-0.82)x(1.97+1.97)/2	1.93		
		(2.82-1.80)x(1.98+1.97)/2	2.01		
		(2.92-2.82)x(1.98+1.98)/2	0.20		
		(3.05-2.92)x(1.98+1.98)/2	0.26		
		(4.04-3.05)x(2.00+1.98)/2	1.97		
		(4.82-4.04)x(2.00+2.00)/2	1.56		
		(5.16-4.82)x(2.00+2.00)/2	0.68		
		(5.60-5.16)x(1.98+2.00)/2	0.88		
		(6.28-5.60)x(1.92+1.98)/2	1.33		
		(6.82-6.28)x(1.92+1.92)/2	1.04		
		(7.40-6.82)x(1.90+1.92)/2	1.11		
		(8.14-7.40)x(1.88+1.90)/2	1.40		
		(8.52-8.14)x(1.87+1.88)/2	0.71		
		(8.82-8.52)x(1.85+1.87)/2	0.56		
		(9.64-8.82)x(1.81+1.85)/2	1.50		
		(10.69-9.64)x(1.73+1.81)/2	1.86		
		(10.76-10.69)x(1.72+1.73)/2	0.12		
		(10.82-10.76)x(1.72+1.72)/2	0.10		
		(11.88-10.82)x(1.72+1.72)/2	1.82		
		(12.64-11.88)x(1.74+1.72)/2	1.31		
		(11.88-12.64)x(1.22+1.24)/2	-0.93		
		(10.82-11.88)x(1.22+1.22)/2	-1.29		
		(10.76-10.82)x(1.22+1.22)/2	-0.07		
		(10.69-10.76)x(1.23+1.22)/2	-0.09		
		(9.64-10.69)x(1.31+1.23)/2	-1.33		
		(8.82-9.64)x(1.35+1.31)/2	-1.09		
		(8.52-8.82)x(1.37+1.35)/2	-0.41		
		(8.14-8.52)x(1.38+1.37)/2	-0.52		
		(7.40-8.14)x(1.40+1.38)/2	-1.03		
		(6.82-7.40)x(1.42+1.40)/2	-0.82		
		(6.28-6.82)x(1.42+1.42)/2	-0.77		
		(5.60-6.28)x(1.48+1.42)/2	-0.99		
		(5.16-5.60)x(1.50+1.48)/2	-0.66		
		(4.82-5.16)x(1.50+1.50)/2	-0.51		
		(4.04-4.82)x(1.50+1.50)/2	-1.17		
		(3.05-4.04)x(1.48+1.50)/2	-1.48		
		(2.92-3.05)x(1.48+1.48)/2	-0.19		
		(2.82-2.92)x(1.48+1.48)/2	-0.15		
		(1.80-2.82)x(1.47+1.48)/2	-1.50		
		(0.82-1.80)x(1.47+1.47)/2	-1.44		
		(0.68-0.82)x(1.47+1.47)/2	-0.21		
		(0.63-0.68)x(1.47+1.47)/2	-0.07		
		(0.50-0.63)x(1.48+1.47)/2	-0.19		
		(-0.15-0.50)x(1.53+1.48)/2	-0.98		
		(-0.44--0.15)x(1.53+1.53)/2	-0.44		
		(-1.18--0.44)x(1.55+1.53)/2	-1.14		
		(-1.56--1.18)x(1.56+1.55)/2	-0.59		
		(-2.04--1.56)x(1.55+1.56)/2	-0.75		
		(-2.68--2.04)x(1.54+1.55)/2	-0.99		
		(-3.18--2.68)x(1.54+1.54)/2	-0.77		
		(-3.80--3.18)x(1.53+1.54)/2	-0.95		
		(-4.59--3.80)x(1.50+1.53)/2	-1.20		
		(-4.82--4.59)x(1.48+1.50)/2	-0.34		
		(-4.92--4.82)x(1.48+1.48)/2	-0.15		
		(-5.60--4.92)x(1.44+1.48)/2	-0.99		
		(-6.04--5.60)x(1.40+1.44)/2	-0.62		
		(-6.37--6.04)x(1.40+1.40)/2	-0.46		
		(-7.13--6.37)x(1.39+1.40)/2	-1.06		
		(-7.16--7.13)x(1.38+1.39)/2	-0.04		
		(-7.18--7.16)x(1.38+1.38)/2	-0.03		
		(-8.28--7.18)x(1.32+1.38)/2	-1.48		
		(-9.18--8.28)x(1.27+1.32)/2	-1.17		
		(-9.40--9.18)x(1.25+1.27)/2	-0.28		
		(-9.68--9.40)x(1.25+1.25)/2	-0.35		
		(-10.52--9.68)x(1.26+1.25)/2	-1.05		
		(-11.18--10.52)x(1.24+1.26)/2	-0.83		
		(-11.64--11.18)x(1.24+1.24)/2	-0.57		
		(-12.23--11.64)x(1.23+1.24)/2	-0.73		
		(-12.76--12.23)x(1.23+1.23)/2	-0.65		
		(-13.18--12.76)x(1.20+1.23)/2	-0.51		
		(-13.88--13.18)x(1.16+1.20)/2	-0.83		
		(-14.77--13.88)x(1.09+1.16)/2	-1.00		
		(-15.00--14.77)x(1.10+1.09)/2	-0.25		
		(-15.18--15.00)x(1.14+1.10)/2	-0.20		
		(-16.12--15.18)x(1.34+1.14)/2	-1.17		
		(-16.19--16.12)x(1.37+1.34)/2	-0.09		
				14.45	
14 195.00	BO1	(-15.77--16.14)x(2.17+2.12)/2	0.79		
		(-15.12--15.77)x(2.27+2.17)/2	1.44		
		(-14.61--15.12)x(2.32+2.27)/2	1.17		
		(-14.00--14.61)x(2.35+2.32)/2	1.42		
		A RIPORTARE mq	4.82		

BONIFICA

N. SEZIONE PROG.	FIG.	ELEMENTI DI CALCOLO	AREA ELEMENTARE mq	AREA FIGURA mq	NOTE
		RIPORTO mq	4.82		
		(-13.22--14.00)x(2.38+2.35)/2	1.84		
		(-12.88--13.22)x(2.39+2.38)/2	0.81		
		(-12.61--12.88)x(2.40+2.39)/2	0.65		
		(-11.76--12.61)x(2.41+2.40)/2	2.04		
		(-10.68--11.76)x(2.36+2.41)/2	2.58		
		(-10.64--10.68)x(2.36+2.36)/2	0.09		
		(-10.61--10.64)x(2.36+2.36)/2	0.07		
		(-9.52--10.61)x(2.27+2.36)/2	2.52		
		(-8.61--9.52)x(2.26+2.27)/2	2.06		
		(-8.40--8.61)x(2.25+2.26)/2	0.47		
		(-8.13--8.40)x(2.24+2.25)/2	0.61		
		(-7.28--8.13)x(2.08+2.24)/2	1.84		
		(-6.61--7.28)x(2.00+2.08)/2	1.37		
		(-6.16--6.61)x(1.92+2.00)/2	0.88		
		(-5.59--6.16)x(1.87+1.92)/2	1.08		
		(-5.04--5.59)x(1.85+1.87)/2	1.02		
		(-4.61--5.04)x(1.83+1.85)/2	0.79		
		(-3.92--4.61)x(1.80+1.83)/2	1.25		
		(-3.04--3.92)x(1.81+1.80)/2	1.59		
		(-2.80--3.04)x(1.82+1.81)/2	0.44		
		(-2.61--2.80)x(1.81+1.82)/2	0.34		
		(-1.68--2.61)x(1.78+1.81)/2	1.67		
		(-0.61--1.68)x(1.72+1.78)/2	1.87		
		(-0.56--0.61)x(1.72+1.72)/2	0.09		
		(-0.49--0.56)x(1.72+1.72)/2	0.12		
		(0.56--0.49)x(1.73+1.72)/2	1.81		
		(1.39-0.56)x(1.72+1.73)/2	1.43		
		(1.68-1.39)x(1.72+1.72)/2	0.50		
		(2.05-1.68)x(1.72+1.72)/2	0.64		
		(2.80-2.05)x(1.71+1.72)/2	1.29		
		(3.39-2.80)x(1.67+1.71)/2	1.00		
		(3.92-3.39)x(1.64+1.67)/2	0.88		
		(4.60-3.92)x(1.66+1.64)/2	1.12		
		(4.91-4.60)x(1.68+1.66)/2	0.52		
		(5.04-4.91)x(1.68+1.68)/2	0.22		
		(5.68-5.04)x(1.68+1.68)/2	1.08		
		(6.16-5.68)x(1.70+1.68)/2	0.81		
		(7.15-6.16)x(1.75+1.70)/2	1.71		
		(7.24-7.15)x(1.76+1.75)/2	0.16		
		(7.28-7.24)x(1.76+1.76)/2	0.07		
		(7.39-7.28)x(1.76+1.76)/2	0.19		
		(8.40-7.39)x(1.74+1.76)/2	1.77		
		(9.39-8.40)x(1.74+1.74)/2	1.72		
		(9.52-9.39)x(1.74+1.74)/2	0.23		
		(9.69-9.52)x(1.74+1.74)/2	0.30		
		(10.64-9.69)x(1.75+1.74)/2	1.66		
		(11.39-10.64)x(1.74+1.75)/2	1.31		
		(11.76-11.39)x(1.74+1.74)/2	0.64		
		(12.24-11.76)x(1.75+1.74)/2	0.84		
		(12.88-12.24)x(1.77+1.75)/2	1.13		
		(12.91-12.88)x(1.77+1.77)/2	0.05		
		(12.88-12.91)x(1.27+1.27)/2	-0.04		
		(12.24-12.88)x(1.25+1.27)/2	-0.81		
		(11.76-12.24)x(1.24+1.25)/2	-0.60		
		(11.39-11.76)x(1.24+1.24)/2	-0.46		
		(10.64-11.39)x(1.25+1.24)/2	-0.93		
		(9.69-10.64)x(1.24+1.25)/2	-1.18		
		(9.52-9.69)x(1.24+1.24)/2	-0.21		
		(9.39-9.52)x(1.24+1.24)/2	-0.16		
		(8.40-9.39)x(1.24+1.24)/2	-1.23		
		(7.39-8.40)x(1.26+1.24)/2	-1.26		
		(7.28-7.39)x(1.26+1.26)/2	-0.14		
		(7.24-7.28)x(1.26+1.26)/2	-0.05		
		(7.15-7.24)x(1.25+1.26)/2	-0.11		
		(6.16-7.15)x(1.20+1.25)/2	-1.21		
		(5.68-6.16)x(1.18+1.20)/2	-0.57		
		(5.04-5.68)x(1.18+1.18)/2	-0.76		
		(4.91-5.04)x(1.18+1.18)/2	-0.15		
		(4.60-4.91)x(1.16+1.18)/2	-0.36		
		(3.92-4.60)x(1.14+1.16)/2	-0.78		
		(3.39-3.92)x(1.17+1.14)/2	-0.61		
		(2.80-3.39)x(1.21+1.17)/2	-0.70		
		(2.05-2.80)x(1.22+1.21)/2	-0.91		
		(1.68-2.05)x(1.22+1.22)/2	-0.45		
		(1.39-1.68)x(1.22+1.22)/2	-0.35		
		(0.56-1.39)x(1.23+1.22)/2	-1.02		
		(-0.49-0.56)x(1.22+1.23)/2	-1.29		
		(-0.56--0.49)x(1.22+1.22)/2	-0.09		
		(-0.61--0.56)x(1.22+1.22)/2	-0.06		
		(-1.68--0.61)x(1.28+1.22)/2	-1.34		
		(-2.61--1.68)x(1.31+1.28)/2	-1.20		
		(-2.80--2.61)x(1.32+1.31)/2	-0.25		
		(-3.04--2.80)x(1.31+1.32)/2	-0.32		
		(-3.92--3.04)x(1.30+1.31)/2	-1.15		
		(-4.61--3.92)x(1.33+1.30)/2	-0.91		
		(-5.04--4.61)x(1.35+1.33)/2	-0.58		
		(-5.59--5.04)x(1.37+1.35)/2	-0.75		
		(-6.16--5.59)x(1.42+1.37)/2	-0.80		
		(-6.61--6.16)x(1.50+1.42)/2	-0.66		
		(-7.28--6.61)x(1.58+1.50)/2	-1.03		
		(-8.13--7.28)x(1.74+1.58)/2	-1.41		
		(-8.40--8.13)x(1.75+1.74)/2	-0.47		
		(-8.61--8.40)x(1.76+1.75)/2	-0.37		
		(-9.52--8.61)x(1.77+1.76)/2	-1.61		
		(-10.61--9.52)x(1.86+1.77)/2	-1.98		
		(-10.64--10.61)x(1.86+1.86)/2	-0.06		
		(-10.68--10.64)x(1.86+1.86)/2	-0.07		
		(-11.76--10.68)x(1.91+1.86)/2	-2.04		
		(-12.61--11.76)x(1.90+1.91)/2	-1.62		
		(-12.88--12.61)x(1.89+1.90)/2	-0.51		
		(-13.22--12.88)x(1.88+1.89)/2	-0.64		
		(-14.00--13.22)x(1.85+1.88)/2	-1.45		
		(-14.61--14.00)x(1.82+1.85)/2	-1.12		
		(-15.12--14.61)x(1.77+1.82)/2	-0.92		
		(-15.77--15.12)x(1.67+1.77)/2	-1.12		
		A RIPORTARE mq	15.12		

BONIFICA

N. SEZIONE PROG.	FIG.	ELEMENTI DI CALCOLO	AREA ELEMENTARE mq	AREA FIGURA mq	NOTE
		RIPORTO mq	15.12		
		(-16.14--15.77)x(1.62+1.67)/2	-0.61		
15 210.00	BO1	(-16.77--16.96)x(1.57+1.56)/2	0.30	14.51	
		(-16.36--16.77)x(1.59+1.57)/2	0.65		
		(-16.05--16.36)x(1.59+1.59)/2	0.49		
		(-15.24--16.05)x(1.59+1.59)/2	1.29		
		(-14.22--15.24)x(1.64+1.59)/2	1.65		
		(-14.12--14.22)x(1.64+1.64)/2	0.16		
		(-13.38--14.12)x(1.65+1.64)/2	1.22		
		(-13.00--13.38)x(1.65+1.65)/2	0.63		
		(-12.05--13.00)x(1.69+1.65)/2	1.59		
		(-11.88--12.05)x(1.69+1.69)/2	0.29		
		(-11.68--11.88)x(1.71+1.69)/2	0.34		
		(-10.76--11.68)x(1.76+1.71)/2	1.60		
		(-10.05--10.76)x(1.77+1.76)/2	1.25		
		(-9.64--10.05)x(1.78+1.77)/2	0.73		
		(-9.13--9.64)x(1.86+1.78)/2	0.93		
		(-8.52--9.13)x(1.95+1.86)/2	1.16		
		(-8.05--8.52)x(2.02+1.95)/2	0.93		
		(-7.40--8.05)x(2.11+2.02)/2	1.34		
		(-6.58--7.40)x(2.22+2.11)/2	1.78		
		(-6.28--6.58)x(2.25+2.22)/2	0.67		
		(-6.05--6.28)x(2.25+2.25)/2	0.52		
		(-5.16--6.05)x(2.27+2.25)/2	2.01		
		(-4.05--5.16)x(2.27+2.27)/2	2.52		
		(-4.04--4.05)x(2.27+2.27)/2	0.02		
		(-2.92--4.04)x(2.24+2.27)/2	2.53		
		(-2.05--2.92)x(2.21+2.24)/2	1.94		
		(-1.80--2.05)x(2.19+2.21)/2	0.55		
		(-1.49--1.80)x(2.17+2.19)/2	0.68		
		(-0.68--1.49)x(2.14+2.17)/2	1.75		
		(-0.05--0.68)x(2.12+2.14)/2	1.34		
		(0.44--0.05)x(2.10+2.12)/2	1.03		
		(1.06-0.44)x(2.08+2.10)/2	1.30		
		(1.56-1.06)x(2.06+2.08)/2	1.04		
		(1.95-1.56)x(2.07+2.06)/2	0.81		
		(2.68-1.95)x(2.07+2.07)/2	1.51		
		(3.60-2.68)x(2.12+2.07)/2	1.93		
		(3.80-3.60)x(2.13+2.12)/2	0.42		
		(3.95-3.80)x(2.12+2.13)/2	0.32		
		(4.92-3.95)x(2.08+2.12)/2	2.04		
		(5.95-4.92)x(2.02+2.08)/2	2.11		
		(6.04-5.95)x(2.02+2.02)/2	0.18		
		(6.15-6.04)x(2.01+2.02)/2	0.22		
		(7.16-6.15)x(1.97+2.01)/2	2.01		
		(7.95-7.16)x(1.92+1.97)/2	1.54		
		(8.28-7.95)x(1.90+1.92)/2	0.63		
		(8.69-8.28)x(1.88+1.90)/2	0.77		
		(9.40-8.69)x(1.85+1.88)/2	1.32		
		(9.95-9.40)x(1.84+1.85)/2	1.01		
		(10.52-9.95)x(1.85+1.84)/2	1.05		
		(11.24-10.52)x(1.84+1.85)/2	1.33		
		(11.64-11.24)x(1.84+1.84)/2	0.74		
		(11.95-11.64)x(1.84+1.84)/2	0.57		
		(12.76-11.95)x(1.83+1.84)/2	1.49		
		(12.82-12.76)x(1.83+1.83)/2	0.11		
		(12.76-12.82)x(1.33+1.33)/2	-0.08		
		(11.95-12.76)x(1.34+1.33)/2	-1.08		
		(11.64-11.95)x(1.34+1.34)/2	-0.42		
		(11.24-11.64)x(1.34+1.34)/2	-0.54		
		(10.52-11.24)x(1.35+1.34)/2	-0.97		
		(9.95-10.52)x(1.34+1.35)/2	-0.77		
		(9.40-9.95)x(1.35+1.34)/2	-0.74		
		(8.69-9.40)x(1.38+1.35)/2	-0.97		
		(8.28-8.69)x(1.40+1.38)/2	-0.57		
		(7.95-8.28)x(1.42+1.40)/2	-0.47		
		(7.16-7.95)x(1.47+1.42)/2	-1.14		
		(6.15-7.16)x(1.51+1.47)/2	-1.50		
		(6.04-6.15)x(1.52+1.51)/2	-0.17		
		(5.95-6.04)x(1.52+1.52)/2	-0.14		
		(4.92-5.95)x(1.58+1.52)/2	-1.60		
		(3.95-4.92)x(1.62+1.58)/2	-1.55		
		(3.80-3.95)x(1.63+1.62)/2	-0.24		
		(3.60-3.80)x(1.62+1.63)/2	-0.32		
		(2.68-3.60)x(1.57+1.62)/2	-1.47		
		(1.95-2.68)x(1.57+1.57)/2	-1.15		
		(1.56-1.95)x(1.56+1.57)/2	-0.61		
		(1.06-1.56)x(1.58+1.56)/2	-0.79		
		(0.44-1.06)x(1.60+1.58)/2	-0.99		
		(-0.05-0.44)x(1.62+1.60)/2	-0.79		
		(-0.68--0.05)x(1.64+1.62)/2	-1.03		
		(-1.49--0.68)x(1.67+1.64)/2	-1.34		
		(-1.80--1.49)x(1.69+1.67)/2	-0.52		
		(-2.05--1.80)x(1.71+1.69)/2	-0.42		
		(-2.92--2.05)x(1.74+1.71)/2	-1.50		
		(-4.04--2.92)x(1.77+1.74)/2	-1.97		
		(-4.05--4.04)x(1.77+1.77)/2	-0.02		
		(-5.16--4.05)x(1.77+1.77)/2	-1.96		
		(-6.05--5.16)x(1.75+1.77)/2	-1.57		
		(-6.28--6.05)x(1.75+1.75)/2	-0.40		
		(-6.58--6.28)x(1.72+1.75)/2	-0.52		
		(-7.40--6.58)x(1.61+1.72)/2	-1.37		
		(-8.05--7.40)x(1.52+1.61)/2	-1.02		
		(-8.52--8.05)x(1.45+1.52)/2	-0.70		
		(-9.13--8.52)x(1.36+1.45)/2	-0.86		
		(-9.64--9.13)x(1.28+1.36)/2	-0.67		
		(-10.05--9.64)x(1.27+1.28)/2	-0.52		
		(-10.76--10.05)x(1.26+1.27)/2	-0.90		
		(-11.68--10.76)x(1.21+1.26)/2	-1.14		
		(-11.88--11.68)x(1.19+1.21)/2	-0.24		
		(-12.05--11.88)x(1.19+1.19)/2	-0.20		
		(-13.00--12.05)x(1.15+1.19)/2	-1.11		
		(-13.38--13.00)x(1.15+1.15)/2	-0.44		
		(-14.12--13.38)x(1.14+1.15)/2	-0.85		
		(-14.22--14.12)x(1.14+1.14)/2	-0.11		
		A RIPORTARE mq	17.89		

BONIFICA

N. SEZIONE PROG.	FIG.	ELEMENTI DI CALCOLO	AREA ELEMENTARE mq	AREA FIGURA mq	NOTE
		RIPORTO mq	17.89		
		(-15.24--14.22)x(1.09+1.14)/2	-1.14		
		(-16.05--15.24)x(1.09+1.09)/2	-0.88		
		(-16.36--16.05)x(1.09+1.09)/2	-0.34		
		(-16.77--16.36)x(1.07+1.09)/2	-0.44		
		(-16.96--16.77)x(1.06+1.07)/2	-0.20		
				14.89	
16 225.00	BO1	(-15.47--15.57)x(2.28+2.30)/2	0.23		
		(-15.34--15.47)x(2.26+2.28)/2	0.30		
		(-15.24--15.34)x(2.24+2.26)/2	0.22		
		(-14.22--15.24)x(2.08+2.24)/2	2.20		
		(-13.27--14.22)x(1.79+2.08)/2	1.84		
		(-13.11--13.27)x(1.74+1.79)/2	0.28		
		(-12.88--13.11)x(1.71+1.74)/2	0.40		
		(-11.99--12.88)x(1.59+1.71)/2	1.47		
		(-11.31--11.99)x(1.57+1.59)/2	1.07		
		(-10.87--11.31)x(1.56+1.57)/2	0.69		
		(-10.30--10.87)x(1.59+1.56)/2	0.90		
		(-9.75--10.30)x(1.62+1.59)/2	0.88		
		(-9.34--9.75)x(1.63+1.62)/2	0.67		
		(-8.64--9.34)x(1.66+1.63)/2	1.15		
		(-7.71--8.64)x(1.72+1.66)/2	1.57		
		(-7.52--7.71)x(1.73+1.72)/2	0.33		
		(-6.80--7.52)x(1.77+1.73)/2	1.26		
		(-6.40--6.80)x(1.79+1.77)/2	0.71		
		(-5.41--6.40)x(1.74+1.79)/2	1.75		
		(-5.29--5.41)x(1.73+1.74)/2	0.21		
		(-5.13--5.29)x(1.73+1.73)/2	0.28		
		(-4.17--5.13)x(1.78+1.73)/2	1.68		
		(-3.44--4.17)x(1.92+1.78)/2	1.35		
		(-3.05--3.44)x(2.00+1.92)/2	0.76		
		(-2.54--3.05)x(2.13+2.00)/2	1.05		
		(-1.94--2.54)x(2.25+2.13)/2	1.31		
		(-1.48--1.94)x(2.29+2.25)/2	1.04		
		(-0.82--1.48)x(2.37+2.29)/2	1.54		
		(0.04--0.82)x(2.38+2.37)/2	2.04		
		(0.30-0.04)x(2.38+2.38)/2	0.62		
		(0.49-0.30)x(2.39+2.38)/2	0.45		
		(1.41-0.49)x(2.42+2.39)/2	2.21		
		(2.46-1.41)x(2.39+2.42)/2	2.53		
		(2.53-2.46)x(2.39+2.39)/2	0.17		
		(2.63-2.53)x(2.38+2.39)/2	0.24		
		(3.65-2.63)x(2.36+2.38)/2	2.42		
		(4.42-3.65)x(2.35+2.36)/2	1.81		
		(4.76-4.42)x(2.34+2.35)/2	0.80		
		(5.21-4.76)x(2.32+2.34)/2	1.05		
		(5.88-5.21)x(2.27+2.32)/2	1.54		
		(6.39-5.88)x(2.21+2.27)/2	1.14		
		(7.00-6.39)x(2.13+2.21)/2	1.32		
		(7.80-7.00)x(2.04+2.13)/2	1.67		
		(8.12-7.80)x(2.00+2.04)/2	0.65		
		(8.36-8.12)x(1.99+2.00)/2	0.48		
		(9.23-8.36)x(1.94+1.99)/2	1.71		
		(10.32-9.23)x(1.77+1.94)/2	2.02		
		(10.35-10.32)x(1.77+1.77)/2	0.05		
		(10.38-10.35)x(1.77+1.77)/2	0.05		
		(11.47-10.38)x(1.85+1.77)/2	1.97		
		(12.29-11.47)x(1.88+1.85)/2	1.53		
		(12.43-12.29)x(1.89+1.88)/2	0.26		
		(12.29-12.43)x(1.38+1.39)/2	-0.19		
		(11.47-12.29)x(1.35+1.38)/2	-1.12		
		(10.38-11.47)x(1.27+1.35)/2	-1.43		
		(10.35-10.38)x(1.27+1.27)/2	-0.04		
		(10.32-10.35)x(1.27+1.27)/2	-0.04		
		(9.23-10.32)x(1.44+1.27)/2	-1.48		
		(8.36-9.23)x(1.49+1.44)/2	-1.27		
		(8.12-8.36)x(1.50+1.49)/2	-0.36		
		(7.80-8.12)x(1.54+1.50)/2	-0.49		
		(7.00-7.80)x(1.63+1.54)/2	-1.27		
		(6.39-7.00)x(1.71+1.63)/2	-1.02		
		(5.88-6.39)x(1.77+1.71)/2	-0.89		
		(5.21-5.88)x(1.82+1.77)/2	-1.20		
		(4.76-5.21)x(1.84+1.82)/2	-0.82		
		(4.42-4.76)x(1.85+1.84)/2	-0.63		
		(3.65-4.42)x(1.86+1.85)/2	-1.43		
		(2.63-3.65)x(1.88+1.86)/2	-1.91		
		(2.53-2.63)x(1.89+1.88)/2	-0.19		
		(2.46-2.53)x(1.89+1.89)/2	-0.13		
		(1.41-2.46)x(1.92+1.89)/2	-2.00		
		(0.49-1.41)x(1.89+1.92)/2	-1.75		
		(0.30-0.49)x(1.88+1.89)/2	-0.36		
		(0.04-0.30)x(1.88+1.88)/2	-0.49		
		(-0.82-0.04)x(1.87+1.88)/2	-1.61		
		(-1.48--0.82)x(1.79+1.87)/2	-1.21		
		(-1.94--1.48)x(1.75+1.79)/2	-0.81		
		(-2.54--1.94)x(1.63+1.75)/2	-1.01		
		(-3.05--2.54)x(1.50+1.63)/2	-0.80		
		(-3.44--3.05)x(1.42+1.50)/2	-0.57		
		(-4.17--3.44)x(1.28+1.42)/2	-0.99		
		(-5.13--4.17)x(1.23+1.28)/2	-1.20		
		(-5.29--5.13)x(1.23+1.23)/2	-0.20		
		(-5.41--5.29)x(1.24+1.23)/2	-0.15		
		(-6.40--5.41)x(1.29+1.24)/2	-1.25		
		(-6.80--6.40)x(1.27+1.29)/2	-0.51		
		(-7.52--6.80)x(1.23+1.27)/2	-0.90		
		(-7.71--7.52)x(1.22+1.23)/2	-0.23		
		(-8.64--7.71)x(1.16+1.22)/2	-1.11		
		(-9.34--8.64)x(1.13+1.16)/2	-0.80		
		(-9.75--9.34)x(1.12+1.13)/2	-0.46		
		(-10.30--9.75)x(1.09+1.12)/2	-0.61		
		(-10.87--10.30)x(1.06+1.09)/2	-0.61		
		(-11.31--10.87)x(1.07+1.06)/2	-0.47		
		(-11.99--11.31)x(1.09+1.07)/2	-0.73		
		(-12.88--11.99)x(1.21+1.09)/2	-1.02		
		(-13.11--12.88)x(1.24+1.21)/2	-0.28		
		(-13.27--13.11)x(1.29+1.24)/2	-0.20		
		A RIPORTARE mq	17.63		

BONIFICA

N. SEZIONE PROG.	FIG.	ELEMENTI DI CALCOLO	AREA ELEMENTARE mq	AREA FIGURA mq	NOTE
		RIPORTO mq	17.63		
		(-14.22--13.27)x(1.58+1.29)/2	-1.36		
		(-15.24--14.22)x(1.74+1.58)/2	-1.69		
		(-15.34--15.24)x(1.76+1.74)/2	-0.17		
		(-15.47--15.34)x(1.78+1.76)/2	-0.23		
		(-15.57--15.47)x(1.80+1.78)/2	-0.18		
				14.00	
17	BO1	(-10.29--10.35)x(2.70+2.70)/2	0.16		
240.00		(-10.08--10.29)x(2.66+2.70)/2	0.56		
		(-9.96--10.08)x(2.64+2.66)/2	0.32		
		(-8.99--9.96)x(2.47+2.64)/2	2.48		
		(-8.21--8.99)x(2.33+2.47)/2	1.87		
		(-7.89--8.21)x(2.28+2.33)/2	0.74		
		(-7.37--7.89)x(2.16+2.28)/2	1.15		
		(-6.80--7.37)x(2.02+2.16)/2	1.19		
		(-6.45--6.80)x(1.93+2.02)/2	0.69		
		(-5.70--6.45)x(1.71+1.93)/2	1.36		
		(-4.70--5.70)x(1.62+1.71)/2	1.67		
		(-4.61--4.70)x(1.61+1.62)/2	0.15		
		(-4.46--4.61)x(1.62+1.61)/2	0.24		
		(-3.51--4.46)x(1.69+1.62)/2	1.57		
		(-2.94--3.51)x(1.73+1.69)/2	0.97		
		(-2.42--2.94)x(1.77+1.73)/2	0.91		
		(-1.54--2.42)x(1.83+1.77)/2	1.58		
		(-1.32--1.54)x(1.84+1.83)/2	0.40		
		(-0.59--1.32)x(1.82+1.84)/2	1.34		
		(-0.23--0.59)x(1.82+1.82)/2	0.66		
		(0.56--0.23)x(1.81+1.82)/2	1.43		
		(0.87-0.56)x(1.81+1.81)/2	0.56		
		(1.38-0.87)x(1.81+1.81)/2	0.92		
		(1.96-1.38)x(1.80+1.81)/2	1.05		
		(2.32-1.96)x(1.79+1.80)/2	0.65		
		(3.06-2.32)x(1.77+1.79)/2	1.32		
		(4.07-3.06)x(1.78+1.77)/2	1.79		
		(4.15-4.07)x(1.79+1.78)/2	0.14		
		(4.29-4.15)x(1.78+1.79)/2	0.25		
		(5.25-4.29)x(1.75+1.78)/2	1.69		
		(5.83-5.25)x(1.86+1.75)/2	1.05		
		(6.34-5.83)x(1.96+1.86)/2	0.97		
		(7.21-6.34)x(2.23+1.96)/2	1.82		
		(7.44-7.21)x(2.28+2.23)/2	0.52		
		(7.58-7.44)x(2.28+2.28)/2	0.32		
		(8.54-7.58)x(2.26+2.28)/2	2.18		
		(9.33-8.54)x(2.30+2.26)/2	1.80		
		(9.63-9.33)x(2.27+2.30)/2	0.69		
		(10.12-9.63)x(2.31+2.27)/2	1.12		
		(10.73-10.12)x(2.38+2.31)/2	1.43		
		(11.05-10.73)x(2.41+2.38)/2	0.77		
		(10.73-11.05)x(1.88+1.91)/2	-0.61		
		(10.12-10.73)x(1.81+1.88)/2	-1.13		
		(9.63-10.12)x(1.77+1.81)/2	-0.88		
		(9.33-9.63)x(1.80+1.77)/2	-0.54		
		(8.54-9.33)x(1.76+1.80)/2	-1.41		
		(7.58-8.54)x(1.78+1.76)/2	-1.70		
		(7.44-7.58)x(1.78+1.78)/2	-0.25		
		(7.21-7.44)x(1.73+1.78)/2	-0.40		
		(6.34-7.21)x(1.46+1.73)/2	-1.39		
		(5.83-6.34)x(1.36+1.46)/2	-0.72		
		(5.25-5.83)x(1.25+1.36)/2	-0.76		
		(4.29-5.25)x(1.28+1.25)/2	-1.21		
		(4.15-4.29)x(1.29+1.28)/2	-0.18		
		(4.07-4.15)x(1.28+1.29)/2	-0.10		
		(3.06-4.07)x(1.27+1.28)/2	-1.29		
		(2.32-3.06)x(1.29+1.27)/2	-0.95		
		(1.96-2.32)x(1.30+1.29)/2	-0.47		
		(1.38-1.96)x(1.31+1.30)/2	-0.76		
		(0.87-1.38)x(1.31+1.31)/2	-0.67		
		(0.56-0.87)x(1.31+1.31)/2	-0.41		
		(-0.23-0.56)x(1.32+1.31)/2	-1.04		
		(-0.59--0.23)x(1.32+1.32)/2	-0.48		
		(-1.32--0.59)x(1.34+1.32)/2	-0.97		
		(-1.54--1.32)x(1.33+1.34)/2	-0.29		
		(-2.42--1.54)x(1.27+1.33)/2	-1.14		
		(-2.94--2.42)x(1.23+1.27)/2	-0.65		
		(-3.51--2.94)x(1.19+1.23)/2	-0.69		
		(-4.46--3.51)x(1.12+1.19)/2	-1.10		
		(-4.61--4.46)x(1.11+1.12)/2	-0.17		
		(-4.70--4.61)x(1.12+1.11)/2	-0.10		
		(-5.70--4.70)x(1.21+1.12)/2	-1.17		
		(-6.45--5.70)x(1.43+1.21)/2	-0.99		
		(-6.80--6.45)x(1.52+1.43)/2	-0.52		
		(-7.37--6.80)x(1.66+1.52)/2	-0.91		
		(-7.89--7.37)x(1.78+1.66)/2	-0.89		
		(-8.21--7.89)x(1.83+1.78)/2	-0.58		
		(-8.99--8.21)x(1.97+1.83)/2	-1.48		
		(-9.96--8.99)x(2.14+1.97)/2	-1.99		
		(-10.08--9.96)x(2.16+2.14)/2	-0.26		
		(-10.29--10.08)x(2.20+2.16)/2	-0.46		
		(-10.35--10.29)x(2.20+2.20)/2	-0.13		
				10.64	
18	BO1	(-6.76--7.06)x(3.63+3.58)/2	1.08		
255.00		(-6.02--6.76)x(3.79+3.63)/2	2.75		
		(-5.93--6.02)x(3.79+3.79)/2	0.34		
		(-5.57--5.93)x(3.83+3.79)/2	1.37		
		(-4.96--5.57)x(3.88+3.83)/2	2.35		
		(-4.73--4.96)x(3.85+3.88)/2	0.89		
		(-3.90--4.73)x(3.78+3.85)/2	3.17		
		(-3.27--3.90)x(3.61+3.78)/2	2.33		
		(-2.83--3.27)x(3.49+3.61)/2	1.56		
		(-1.81--2.83)x(3.34+3.49)/2	3.48		
		(-1.77--1.81)x(3.33+3.34)/2	0.13		
		(-1.68--1.77)x(3.32+3.33)/2	0.30		
		(-0.71--1.68)x(3.24+3.32)/2	3.18		
		(-0.35--0.71)x(3.19+3.24)/2	1.16		
		(0.35--0.35)x(3.10+3.19)/2	2.20		
		(1.12-0.35)x(2.99+3.10)/2	2.34		
		A RIPORTARE mq	28.63		

BONIFICA

N. SEZIONE PROG.	FIG.	ELEMENTI DI CALCOLO	AREA ELEMENTARE mq	AREA FIGURA mq	NOTE
		RIPORTO mq	28.63		
		(1.42-1.12)x(2.95+2.99)/2	0.89		
		(2.22-1.42)x(2.79+2.95)/2	2.30		
		(2.48-2.22)x(2.72+2.79)/2	0.72		
		(2.58-2.48)x(2.69+2.72)/2	0.27		
		(3.54-2.58)x(2.45+2.69)/2	2.47		
		(4.09-3.54)x(2.30+2.45)/2	1.31		
		(4.61-4.09)x(2.17+2.30)/2	1.16		
		(5.50-4.61)x(1.96+2.17)/2	1.84		
		(5.67-5.50)x(1.92+1.96)/2	0.33		
		(6.11-5.67)x(1.89+1.92)/2	0.84		
		(6.73-6.11)x(1.87+1.89)/2	1.17		
		(6.96-6.73)x(1.87+1.87)/2	0.43		
		(7.79-6.96)x(1.91+1.87)/2	1.57		
		(8.43-7.79)x(2.00+1.91)/2	1.25		
		(8.86-8.43)x(2.06+2.00)/2	0.87		
		(9.89-8.86)x(2.15+2.06)/2	2.17		
		(9.92-9.89)x(2.16+2.15)/2	0.06		
		(10.00-9.92)x(2.16+2.16)/2	0.17		
		(10.42-10.00)x(2.18+2.16)/2	0.91		
		(10.00-10.42)x(1.66+1.68)/2	-0.70		
		(9.92-10.00)x(1.66+1.66)/2	-0.13		
		(9.89-9.92)x(1.65+1.66)/2	-0.05		
		(8.86-9.89)x(1.56+1.65)/2	-1.65		
		(8.43-8.86)x(1.50+1.56)/2	-0.66		
		(7.79-8.43)x(1.41+1.50)/2	-0.93		
		(6.96-7.79)x(1.37+1.41)/2	-1.15		
		(6.73-6.96)x(1.37+1.37)/2	-0.32		
		(6.11-6.73)x(1.39+1.37)/2	-0.86		
		(5.67-6.11)x(1.42+1.39)/2	-0.62		
		(5.50-5.67)x(1.46+1.42)/2	-0.24		
		(4.61-5.50)x(1.67+1.46)/2	-1.39		
		(4.09-4.61)x(1.80+1.67)/2	-0.90		
		(3.54-4.09)x(1.95+1.80)/2	-1.03		
		(2.58-3.54)x(2.19+1.95)/2	-1.99		
		(2.48-2.58)x(2.22+2.19)/2	-0.22		
		(2.22-2.48)x(2.29+2.22)/2	-0.59		
		(1.42-2.22)x(2.45+2.29)/2	-1.90		
		(1.12-1.42)x(2.49+2.45)/2	-0.74		
		(0.35-1.12)x(2.60+2.49)/2	-1.96		
		(-0.35-0.35)x(2.69+2.60)/2	-1.85		
		(-0.71--0.35)x(2.74+2.69)/2	-0.98		
		(-1.68--0.71)x(2.82+2.74)/2	-2.70		
		(-1.77--1.68)x(2.83+2.82)/2	-0.25		
		(-1.81--1.77)x(2.84+2.83)/2	-0.11		
		(-2.83--1.81)x(2.99+2.84)/2	-2.97		
		(-3.27--2.83)x(3.11+2.99)/2	-1.34		
		(-3.90--3.27)x(3.28+3.11)/2	-2.01		
		(-4.73--3.90)x(3.35+3.28)/2	-2.75		
		(-4.96--4.73)x(3.38+3.35)/2	-0.77		
		(-5.57--4.96)x(3.33+3.38)/2	-2.05		
		(-5.93--5.57)x(3.29+3.33)/2	-1.19		
		(-6.02--5.93)x(3.29+3.29)/2	-0.30		
		(-6.76--6.02)x(3.13+3.29)/2	-2.38		
		(-7.06--6.76)x(3.08+3.13)/2	-0.93		
				8.75	
19 270.00	BO1	(-4.80--5.00)x(3.30+3.30)/2	0.66		
		(-4.77--4.80)x(3.31+3.30)/2	0.10		
		(-4.72--4.77)x(3.36+3.31)/2	0.17		
		(-4.50--4.72)x(3.34+3.36)/2	0.74		
		(-3.68--4.50)x(3.28+3.34)/2	2.71		
		(-3.52--3.68)x(3.30+3.28)/2	0.53		
		(-2.64--3.52)x(3.27+3.30)/2	2.89		
		(-2.27--2.64)x(3.31+3.27)/2	1.22		
		(-1.60--2.27)x(3.33+3.31)/2	2.22		
		(-1.03--1.60)x(3.27+3.33)/2	1.88		
		(-0.56--1.03)x(3.20+3.27)/2	1.52		
		(0.22--0.56)x(3.05+3.20)/2	2.44		
		(0.48-0.22)x(3.00+3.05)/2	0.79		
		(1.46-0.48)x(2.81+3.00)/2	2.85		
		(1.51-1.46)x(2.80+2.81)/2	0.14		
		(1.78-1.51)x(2.74+2.80)/2	0.75		
		(2.44-1.78)x(2.60+2.74)/2	1.76		
		(2.55-2.44)x(2.58+2.60)/2	0.28		
		(3.34-2.55)x(2.41+2.58)/2	1.97		
		(3.59-3.34)x(2.29+2.41)/2	0.59		
		(4.23-3.59)x(2.25+2.29)/2	1.45		
		(4.63-4.23)x(2.27+2.25)/2	0.90		
		(5.12-4.63)x(2.30+2.27)/2	1.12		
		(5.67-5.12)x(2.33+2.30)/2	1.27		
		(6.01-5.67)x(2.35+2.33)/2	0.80		
		(6.71-6.01)x(2.29+2.35)/2	1.62		
		(7.69-6.71)x(2.22+2.29)/2	2.21		
		(7.75-7.69)x(2.22+2.22)/2	0.13		
		(7.79-7.75)x(2.22+2.22)/2	0.09		
		(8.05-7.79)x(2.21+2.22)/2	0.58		
		(8.79-8.05)x(2.22+2.21)/2	1.64		
		(8.94-8.79)x(2.23+2.22)/2	0.33		
		(8.98-8.94)x(2.23+2.23)/2	0.09		
		(8.94-8.98)x(1.73+1.73)/2	-0.07		
		(8.79-8.94)x(1.72+1.73)/2	-0.26		
		(8.05-8.79)x(1.71+1.72)/2	-1.27		
		(7.79-8.05)x(1.72+1.71)/2	-0.45		
		(7.75-7.79)x(1.72+1.72)/2	-0.07		
		(7.69-7.75)x(1.72+1.72)/2	-0.10		
		(6.71-7.69)x(1.79+1.72)/2	-1.72		
		(6.01-6.71)x(1.85+1.79)/2	-1.27		
		(5.67-6.01)x(1.83+1.85)/2	-0.63		
		(5.12-5.67)x(1.80+1.83)/2	-1.00		
		(4.63-5.12)x(1.77+1.80)/2	-0.87		
		(4.23-4.63)x(1.75+1.77)/2	-0.70		
		(3.59-4.23)x(1.79+1.75)/2	-1.13		
		(3.34-3.59)x(1.91+1.79)/2	-0.46		
		(2.55-3.34)x(2.08+1.91)/2	-1.58		
		(2.44-2.55)x(2.10+2.08)/2	-0.23		
		(1.78-2.44)x(2.24+2.10)/2	-1.43		
		A RIPORTARE mq	25.20		

BONIFICA

N. SEZIONE PROG.	FIG.	ELEMENTI DI CALCOLO	AREA ELEMENTARE mq	AREA FIGURA mq	NOTE
		RIPORTO mq	25.20		
		(1.51-1.78)x(2.30+2.24)/2	-0.61		
		(1.46-1.51)x(2.31+2.30)/2	-0.12		
		(0.48-1.46)x(2.50+2.31)/2	-2.36		
		(0.22-0.48)x(2.55+2.50)/2	-0.66		
		(-0.56-0.22)x(2.70+2.55)/2	-2.05		
		(-1.03--0.56)x(2.77+2.70)/2	-1.29		
		(-1.60--1.03)x(2.83+2.77)/2	-1.60		
		(-2.27--1.60)x(2.81+2.83)/2	-1.89		
		(-2.64--2.27)x(2.77+2.81)/2	-1.03		
		(-3.52--2.64)x(2.80+2.77)/2	-2.45		
		(-3.68--3.52)x(2.78+2.80)/2	-0.45		
		(-4.50--3.68)x(2.84+2.78)/2	-2.30		
		(-4.72--4.50)x(2.86+2.84)/2	-0.63		
		(-4.77--4.72)x(2.81+2.86)/2	-0.14		
		(-4.80--4.77)x(2.80+2.81)/2	-0.08		
		(-5.00--4.80)x(2.80+2.80)/2	-0.56		
				6.98	

Il Direttore dei Lavori | L'Impresa

USURA

N. SEZIONE PROG.	FIG.	ELEMENTI DI CALCOLO	LUNGHEZZA ELEMENTARE ml	LUNGHEZZA FIGURA ml	NOTE
6	a1	(-4.00--5.00)	1.00		
75.00		(0.00--4.00)	4.00		
		(0.32-0.00)	0.32		
		(1.82-0.32)	1.50		
				6.82	
7	a1	(-4.00--5.00)	1.00		
90.00		(0.00--4.00)	4.00		
		(0.32-0.00)	0.32		
		(1.82-0.32)	1.50		
				6.82	
8	a1	(-4.00--5.00)	1.00		
105.00		(0.00--4.00)	4.00		
		(0.32-0.00)	0.32		
		(1.82-0.32)	1.50		
				6.82	
9	a1	(-4.00--5.00)	1.00		
120.00		(0.00--4.00)	4.00		
		(0.32-0.00)	0.32		
		(1.82-0.32)	1.50		
				6.82	
10	a1	(-4.00--5.00)	1.00		
135.00		(0.00--4.00)	4.00		
		(0.32-0.00)	0.32		
		(1.82-0.32)	1.50		
				6.82	
11	a1	(-4.00--5.00)	1.00		
150.00		(0.00--4.00)	4.00		
		(0.25-0.00)	0.25		
		(1.75-0.25)	1.50		
				6.75	
12	a1	(-4.00--5.00)	1.00		
165.00		(0.00--4.00)	4.00		
		(0.11-0.00)	0.11		
		(1.61-0.11)	1.50		
				6.61	
13	a1	(-4.00--5.00)	1.00		
180.00		(0.00--4.00)	4.00		
		(0.00-0.00)	0.00		
		(1.50-0.00)	1.50		
				6.50	
14	a1	(-4.00--5.00)	1.00		
195.00		(0.00--4.00)	4.00		
		(0.00-0.00)	0.00		
		(1.50-0.00)	1.50		
				6.50	
15	a1	(-4.00--5.00)	1.00		
210.00		(0.00--4.00)	4.00		
		(0.00-0.00)	0.00		
		(1.50-0.00)	1.50		
				6.50	
16	a1	(-4.00--5.00)	1.00		
225.00		(0.00--4.00)	4.00		
		(0.07-0.00)	0.07		
		(1.57-0.07)	1.50		
				6.57	
17	a1	(-4.00--5.00)	1.00		
240.00		(0.00--4.00)	4.00		
		(0.21-0.00)	0.21		
		(1.71-0.21)	1.50		
				6.71	
18	a1	(-4.00--5.00)	1.00		
255.00		(0.00--4.00)	4.00		
		(0.30-0.00)	0.30		
		(1.80-0.30)	1.50		
				6.80	
19	a1	(-4.00--5.00)	1.00		
270.00		(0.00--4.00)	4.00		
		(0.30-0.00)	0.30		
		(1.80-0.30)	1.50		
				6.80	

VEGETALE

N. SEZIONE PROG.	FIG.	ELEMENTI DI CALCOLO	LUNGHEZZA ELEMENTARE ml	LUNGHEZZA FIGURA ml	NOTE
6	b1	(3.32-1.97)	1.35		
75.00		(9.13-3.32)	5.81		
				7.16	
7	b1	(-6.50--5.15)	1.35		
90.00		(-11.15--6.50)	4.65		
				6.00	
7	b2	(3.32-1.97)	1.35		
90.00		(8.08-3.32)	4.76		
				6.11	
8	b1	(-6.50--5.15)	1.35		
105.00		(-11.47--6.50)	4.97		
				6.32	
8	b2	(3.32-1.97)	1.35		
105.00		(8.20-3.32)	4.88		
				6.23	
9	b1	(-6.50--5.15)	1.35		
120.00		(-12.29--6.50)	5.79		
				7.14	
9	b2	(3.32-1.97)	1.35		
120.00		(9.26-3.32)	5.94		
				7.29	
10	b1	(-6.50--5.15)	1.35		
135.00		(-14.87--6.50)	8.37		
				9.72	
10	b2	(3.32-1.97)	1.35		
135.00		(10.39-3.32)	7.07		
				8.42	
11	b1	(-6.50--5.15)	1.35		
150.00		(-14.90--6.50)	8.40		
				9.75	
11	b2	(3.25-1.90)	1.35		
150.00		(11.67-3.25)	8.42		
				9.77	
12	b1	(-6.50--5.15)	1.35		
165.00		(-16.30--6.50)	9.80		
				11.15	
12	b2	(3.11-1.76)	1.35		
165.00		(11.78-3.11)	8.67		
				10.02	
13	b2	(-6.50--5.15)	1.35		
180.00		(-16.52--6.50)	10.02		
				11.37	
13	b1	(3.00-1.65)	1.35		
180.00		(13.18-3.00)	10.18		
				11.53	
14	b2	(-6.50--5.15)	1.35		
195.00		(-16.88--6.50)	10.38		
				11.73	
14	b1	(3.00-1.65)	1.35		
195.00		(13.46-3.00)	10.46		
				11.81	
15	b2	(-6.50--5.15)	1.35		
210.00		(-17.54--6.50)	11.04		
				12.39	
15	b1	(3.00-1.65)	1.35		
210.00		(13.33-3.00)	10.33		
				11.68	
16	b2	(-6.50--5.15)	1.35		
225.00		(-16.00--6.50)	9.50		
				10.85	
16	b1	(3.07-1.72)	1.35		
225.00		(12.96-3.07)	9.89		
				11.24	
17	b1	(-6.50--5.15)	1.35		
240.00		(-10.63--6.50)	4.13		
				5.48	
17	b2	(3.21-1.86)	1.35		
240.00		(11.52-3.21)	8.31		
				9.66	
18	b1	(-6.50--5.15)	1.35		
255.00		(-7.33--6.50)	0.83		
				2.18	
18	b2	(3.30-1.95)	1.35		
255.00		(10.92-3.30)	7.62		
				8.97	
19	b1	(3.30-1.95)	1.35		
270.00		(9.49-3.30)	6.19		
				7.54	

Il Direttore dei Lavori | L'Impresa

BINDER

N. SEZIONE PROG.	FIG.	ELEMENTI DI CALCOLO	LUNGHEZZA ELEMENTARE ml	LUNGHEZZA FIGURA ml	NOTE
6	c1	(-4.00--5.00)	1.00		
75.00		(0.00--4.00)	4.00		
		(0.32-0.00)	0.32		
		(1.82-0.32)	1.50		
				6.82	
7	c1	(-4.00--5.00)	1.00		
90.00		(0.00--4.00)	4.00		
		(0.32-0.00)	0.32		
		(1.82-0.32)	1.50		
				6.82	
8	c1	(-4.00--5.00)	1.00		
105.00		(0.00--4.00)	4.00		
		(0.32-0.00)	0.32		
		(1.82-0.32)	1.50		
				6.82	
9	c1	(-4.00--5.00)	1.00		
120.00		(0.00--4.00)	4.00		
		(0.32-0.00)	0.32		
		(1.82-0.32)	1.50		
				6.82	
10	c1	(-4.00--5.00)	1.00		
135.00		(0.00--4.00)	4.00		
		(0.32-0.00)	0.32		
		(1.82-0.32)	1.50		
				6.82	
11	c1	(-4.00--5.00)	1.00		
150.00		(0.00--4.00)	4.00		
		(0.25-0.00)	0.25		
		(1.75-0.25)	1.50		
				6.75	
12	c1	(-4.00--5.00)	1.00		
165.00		(0.00--4.00)	4.00		
		(0.11-0.00)	0.11		
		(1.61-0.11)	1.50		
				6.61	
13	c1	(-4.00--5.00)	1.00		
180.00		(0.00--4.00)	4.00		
		(0.00-0.00)	0.00		
		(1.50-0.00)	1.50		
				6.50	
14	c1	(-4.00--5.00)	1.00		
195.00		(0.00--4.00)	4.00		
		(0.00-0.00)	0.00		
		(1.50-0.00)	1.50		
				6.50	
15	c1	(-4.00--5.00)	1.00		
210.00		(0.00--4.00)	4.00		
		(0.00-0.00)	0.00		
		(1.50-0.00)	1.50		
				6.50	
16	c1	(-4.00--5.00)	1.00		
225.00		(0.00--4.00)	4.00		
		(0.07-0.00)	0.07		
		(1.57-0.07)	1.50		
				6.57	
17	c1	(-4.00--5.00)	1.00		
240.00		(0.00--4.00)	4.00		
		(0.21-0.00)	0.21		
		(1.71-0.21)	1.50		
				6.71	
18	c1	(-4.00--5.00)	1.00		
255.00		(0.00--4.00)	4.00		
		(0.30-0.00)	0.30		
		(1.80-0.30)	1.50		
				6.80	
19	c1	(-4.00--5.00)	1.00		
270.00		(0.00--4.00)	4.00		
		(0.30-0.00)	0.30		
		(1.80-0.30)	1.50		
				6.80	

Il Direttore dei Lavori | L'Impresa

BASE

N. SEZIONE PROG.	FIG.	ELEMENTI DI CALCOLO	LUNGHEZZA ELEMENTARE ml	LUNGHEZZA FIGURA ml	NOTE
6	d1	(-4.00--5.00)	1.00		
75.00		(0.00--4.00)	4.00		
		(0.32-0.00)	0.32		
		(1.82-0.32)	1.50		
				6.82	
7	d1	(-4.00--5.00)	1.00		
90.00		(0.00--4.00)	4.00		
		(0.32-0.00)	0.32		
		(1.82-0.32)	1.50		
				6.82	
8	d1	(-4.00--5.00)	1.00		
105.00		(0.00--4.00)	4.00		
		(0.32-0.00)	0.32		
		(1.82-0.32)	1.50		
				6.82	
9	d1	(-4.00--5.00)	1.00		
120.00		(0.00--4.00)	4.00		
		(0.32-0.00)	0.32		
		(1.82-0.32)	1.50		
				6.82	
10	d1	(-4.00--5.00)	1.00		
135.00		(0.00--4.00)	4.00		
		(0.32-0.00)	0.32		
		(1.82-0.32)	1.50		
				6.82	
11	d1	(-4.00--5.00)	1.00		
150.00		(0.00--4.00)	4.00		
		(0.25-0.00)	0.25		
		(1.75-0.25)	1.50		
				6.75	
12	d1	(-4.00--5.00)	1.00		
165.00		(0.00--4.00)	4.00		
		(0.11-0.00)	0.11		
		(1.61-0.11)	1.50		
				6.61	
13	d1	(-4.00--5.00)	1.00		
180.00		(0.00--4.00)	4.00		
		(0.00-0.00)	0.00		
		(1.50-0.00)	1.50		
				6.50	
14	d1	(-4.00--5.00)	1.00		
195.00		(0.00--4.00)	4.00		
		(0.00-0.00)	0.00		
		(1.50-0.00)	1.50		
				6.50	
15	d1	(-4.00--5.00)	1.00		
210.00		(0.00--4.00)	4.00		
		(0.00-0.00)	0.00		
		(1.50-0.00)	1.50		
				6.50	
16	d1	(-4.00--5.00)	1.00		
225.00		(0.00--4.00)	4.00		
		(0.07-0.00)	0.07		
		(1.57-0.07)	1.50		
				6.57	
17	d1	(-4.00--5.00)	1.00		
240.00		(0.00--4.00)	4.00		
		(0.21-0.00)	0.21		
		(1.71-0.21)	1.50		
				6.71	
18	d1	(-4.00--5.00)	1.00		
255.00		(0.00--4.00)	4.00		
		(0.30-0.00)	0.30		
		(1.80-0.30)	1.50		
				6.80	
19	d1	(-4.00--5.00)	1.00		
270.00		(0.00--4.00)	4.00		
		(0.30-0.00)	0.30		
		(1.80-0.30)	1.50		
				6.80	

Il Direttore dei Lavori | L'Impresa

FONDAZIONE

N. SEZIONE PROG.	FIG.	ELEMENTI DI CALCOLO	LUNGHEZZA ELEMENTARE ml	LUNGHEZZA FIGURA ml	NOTE
6	e1	(-4.00--5.00)	1.00		
75.00		(0.00--4.00)	4.00		
		(0.32-0.00)	0.32		
		(1.82-0.32)	1.50		
				6.82	
7	e1	(-4.00--5.00)	1.00		
90.00		(0.00--4.00)	4.00		
		(0.32-0.00)	0.32		
		(1.82-0.32)	1.50		
				6.82	
8	e1	(-4.00--5.00)	1.00		
105.00		(0.00--4.00)	4.00		
		(0.32-0.00)	0.32		
		(1.82-0.32)	1.50		
				6.82	
9	e1	(-4.00--5.00)	1.00		
120.00		(0.00--4.00)	4.00		
		(0.32-0.00)	0.32		
		(1.82-0.32)	1.50		
				6.82	
10	e1	(-4.00--5.00)	1.00		
135.00		(0.00--4.00)	4.00		
		(0.32-0.00)	0.32		
		(1.82-0.32)	1.50		
				6.82	
11	e1	(-4.00--5.00)	1.00		
150.00		(0.00--4.00)	4.00		
		(0.25-0.00)	0.25		
		(1.75-0.25)	1.50		
				6.75	
12	e1	(-4.00--5.00)	1.00		
165.00		(0.00--4.00)	4.00		
		(0.11-0.00)	0.11		
		(1.61-0.11)	1.50		
				6.61	
13	e1	(-4.00--5.00)	1.00		
180.00		(0.00--4.00)	4.00		
		(0.00-0.00)	0.00		
		(1.50-0.00)	1.50		
				6.50	
14	e1	(-4.00--5.00)	1.00		
195.00		(0.00--4.00)	4.00		
		(0.00-0.00)	0.00		
		(1.50-0.00)	1.50		
				6.50	
15	e1	(-4.00--5.00)	1.00		
210.00		(0.00--4.00)	4.00		
		(0.00-0.00)	0.00		
		(1.50-0.00)	1.50		
				6.50	
16	e1	(-4.00--5.00)	1.00		
225.00		(0.00--4.00)	4.00		
		(0.07-0.00)	0.07		
		(1.57-0.07)	1.50		
				6.57	
17	e1	(-4.00--5.00)	1.00		
240.00		(0.00--4.00)	4.00		
		(0.21-0.00)	0.21		
		(1.71-0.21)	1.50		
				6.71	
18	e1	(-4.00--5.00)	1.00		
255.00		(0.00--4.00)	4.00		
		(0.30-0.00)	0.30		
		(1.80-0.30)	1.50		
				6.80	
19	e1	(-4.00--5.00)	1.00		
270.00		(0.00--4.00)	4.00		
		(0.30-0.00)	0.30		
		(1.80-0.30)	1.50		
				6.80	

Il Direttore dei Lavori | L'Impresa

SCOTICO

N. SEZIONE PROG.	FIG.	ELEMENTI DI CALCOLO	LUNGHEZZA ELEMENTARE ml	LUNGHEZZA FIGURA ml	NOTE
6	sc1	(-5.00--5.00)	0.00		
75.00		(-4.75--5.00)	0.25		
		(-4.17--4.75)	0.58		
		(-3.56--4.17)	0.61		
		(-3.14--3.56)	0.42		
		(-2.37--3.14)	0.77		
		(-1.28--2.37)	1.09		
		(-1.18--1.28)	0.10		
		(-1.12--1.18)	0.06		
		(0.01--1.12)	1.13		
		(0.90-0.01)	0.89		
		(1.20-0.90)	0.30		
		(1.62-1.20)	0.42		
		(2.39-1.62)	0.77		
		(2.92-2.39)	0.53		
		(3.58-2.92)	0.66		
		(4.51-3.58)	0.93		
		(4.76-4.51)	0.25		
		(4.94-4.76)	0.18		
		(5.95-4.94)	1.01		
		(6.96-5.95)	1.01		
		(7.14-6.96)	0.18		
		(7.40-7.14)	0.26		
		(8.33-7.40)	0.93		
		(8.36-8.33)	0.03		
		(8.36-8.36)	0.00		
				13.36	
7	sc1	(-10.60--10.60)	0.00		
90.00		(-10.38--10.60)	0.22		
		(-9.20--10.38)	1.18		
		(-9.10--9.20)	0.10		
		(-8.78--9.10)	0.32		
		(-7.82--8.78)	0.96		
		(-7.50--7.82)	0.32		
		(-6.54--7.50)	0.96		
		(-5.79--6.54)	0.75		
		(-5.26--5.79)	0.53		
		(-4.08--5.26)	1.18		
		(-3.97--4.08)	0.11		
		(-3.67--3.97)	0.30		
		(-2.69--3.67)	0.98		
		(-2.37--2.69)	0.32		
		(-1.41--2.37)	0.96		
		(-0.66--1.41)	0.75		
		(-0.13--0.66)	0.53		
		(0.38--0.13)	0.51		
		(1.05-0.38)	0.67		
		(1.11-1.05)	0.06		
		(1.15-1.11)	0.04		
		(1.45-1.15)	0.30		
		(2.43-1.45)	0.98		
		(2.76-2.43)	0.33		
		(3.71-2.76)	0.95		
		(4.47-3.71)	0.76		
		(4.99-4.47)	0.52		
		(6.18-4.99)	1.19		
		(6.28-6.18)	0.10		
		(6.56-6.28)	0.28		
		(7.56-6.56)	1.00		
		(7.64-7.56)	0.08		
		(7.64-7.64)	0.00		
				18.24	
8	sc1	(-11.01--11.01)	0.00		
105.00		(-10.76--11.01)	0.25		
		(-10.56--10.76)	0.20		
		(-9.27--10.56)	1.29		
		(-9.16--9.27)	0.11		
		(-7.77--9.16)	1.39		
		(-7.75--7.77)	0.02		
		(-7.44--7.75)	0.31		
		(-6.34--7.44)	1.10		
		(-6.27--6.34)	0.07		
		(-4.94--6.27)	1.33		
		(-4.77--4.94)	0.17		
		(-3.53--4.77)	1.24		
		(-3.28--3.53)	0.25		
		(-2.12--3.28)	1.16		
		(-1.78--2.12)	0.34		
		(-0.71--1.78)	1.07		
		(-0.28--0.71)	0.43		
		(0.69--0.28)	0.97		
		(1.21-0.69)	0.52		
		(2.10-1.21)	0.89		
		(2.71-2.10)	0.61		
		(3.51-2.71)	0.80		
		(4.21-3.51)	0.70		
		(4.91-4.21)	0.70		
		(5.71-4.91)	0.80		
		(6.32-5.71)	0.61		
		(7.20-6.32)	0.88		
		(7.69-7.20)	0.49		
		(7.69-7.69)	0.00		
				18.70	
9	sc1	(-11.83--11.83)	0.00		
120.00		(-11.22--11.83)	0.61		
		(-10.91--11.22)	0.31		
		(-9.64--10.91)	1.27		
		(-9.57--9.64)	0.07		
		(-9.14--9.57)	0.43		
		(-8.22--9.14)	0.92		
		(-8.06--8.22)	0.16		
		(-6.87--8.06)	1.19		
		(-6.48--6.87)	0.39		
		(-5.53--6.48)	0.95		
		(-4.90--5.53)	0.63		
		(-4.18--4.90)	0.72		
		(-3.78--4.18)	0.40		
		A RIPORTARE ml	8.05		

SCOTICO

N. SEZIONE PROG.	FIG.	ELEMENTI DI CALCOLO	LUNGHEZZA ELEMENTARE ml	LUNGHEZZA FIGURA ml	NOTE
		RIPORTO ml	8.05		
		(-3.32--3.78)	0.46		
		(-2.83--3.32)	0.49		
		(-1.74--2.83)	1.09		
		(-1.49--1.74)	0.25		
		(-0.15--1.49)	1.34		
		(-0.14--0.15)	0.01		
		(-0.07--0.14)	0.07		
		(1.21--0.07)	1.28		
		(1.43-1.21)	0.22		
		(2.55-1.43)	1.12		
		(3.01-2.55)	0.46		
		(3.90-3.01)	0.89		
		(4.59-3.90)	0.69		
		(5.25-4.59)	0.66		
		(6.17-5.25)	0.92		
		(6.59-6.17)	0.42		
		(7.75-6.59)	1.16		
		(7.94-7.75)	0.19		
		(8.66-7.94)	0.72		
		(8.66-8.66)	0.00		
				20.49	
10 135.00	sc1	(-14.35--14.35)	0.00		
		(-14.17--14.35)	0.18		
		(-13.93--14.17)	0.24		
		(-13.42--13.93)	0.51		
		(-12.69--13.42)	0.73		
		(-12.34--12.69)	0.35		
		(-11.46--12.34)	0.88		
		(-10.51--11.46)	0.95		
		(-10.22--10.51)	0.29		
		(-9.61--10.22)	0.61		
		(-8.98--9.61)	0.63		
		(-8.68--8.98)	0.30		
		(-7.74--8.68)	0.94		
		(-6.85--7.74)	0.89		
		(-6.51--6.85)	0.34		
		(-5.79--6.51)	0.72		
		(-5.27--5.79)	0.52		
		(-5.02--5.27)	0.25		
		(-4.03--5.02)	0.99		
		(-3.19--4.03)	0.84		
		(-2.79--3.19)	0.40		
		(-1.98--2.79)	0.81		
		(-1.56--1.98)	0.42		
		(-1.35--1.56)	0.21		
		(-0.32--1.35)	1.03		
		(0.48--0.32)	0.80		
		(0.92-0.48)	0.44		
		(1.84-0.92)	0.92		
		(2.16-1.84)	0.32		
		(2.31-2.16)	0.15		
		(3.39-2.31)	1.08		
		(4.14-3.39)	0.75		
		(4.43-4.14)	0.29		
		(4.63-4.43)	0.20		
		(5.17-4.63)	0.54		
		(5.87-5.17)	0.70		
		(5.97-5.87)	0.10		
		(6.65-5.97)	0.68		
		(7.11-6.65)	0.46		
		(7.80-7.11)	0.69		
		(8.34-7.80)	0.54		
		(9.47-8.34)	1.13		
		(9.58-9.47)	0.11		
		(9.63-9.58)	0.05		
		(9.84-9.63)	0.21		
		(9.84-9.84)	0.00		
				24.19	
11 150.00	sc1	(-14.43--14.43)	0.00		
		(-13.71--14.43)	0.72		
		(-13.64--13.71)	0.07		
		(-13.56--13.64)	0.08		
		(-12.48--13.56)	1.08		
		(-11.53--12.48)	0.95		
		(-11.32--11.53)	0.21		
		(-11.07--11.32)	0.25		
		(-10.15--11.07)	0.92		
		(-9.35--10.15)	0.80		
		(-8.99--9.35)	0.36		
		(-8.59--8.99)	0.40		
		(-7.83--8.59)	0.76		
		(-7.17--7.83)	0.66		
		(-6.67--7.17)	0.50		
		(-6.11--6.67)	0.56		
		(-5.51--6.11)	0.60		
		(-4.99--5.51)	0.52		
		(-4.35--4.99)	0.64		
		(-3.62--4.35)	0.73		
		(-3.19--3.62)	0.43		
		(-2.80--3.19)	0.39		
		(-2.02--2.80)	0.78		
		(-1.14--2.02)	0.88		
		(-0.86--1.14)	0.28		
		(-0.62--0.86)	0.24		
		(0.30--0.62)	0.92		
		(1.35-0.30)	1.05		
		(1.46-1.35)	0.11		
		(1.56-1.46)	0.10		
		(2.62-1.56)	1.06		
		(3.74-2.62)	1.12		
		(3.78-3.74)	0.04		
		(3.83-3.78)	0.05		
		(4.94-3.83)	1.11		
		(5.92-4.94)	0.98		
		(6.11-5.92)	0.19		
		A RIPORTARE ml	20.54		

SCOTICO

N. SEZIONE PROG.	FIG.	ELEMENTI DI CALCOLO	LUNGHEZZA ELEMENTARE ml	LUNGHEZZA FIGURA ml	NOTE
		RIPORTO ml	20.54		
		(6.31-6.11)	0.20		
		(7.27-6.31)	0.96		
		(8.11-7.27)	0.84		
		(8.43-8.11)	0.32		
		(8.80-8.43)	0.37		
		(9.59-8.80)	0.79		
		(10.29-9.59)	0.70		
		(10.75-10.29)	0.46		
		(11.10-10.75)	0.35		
		(11.10-11.10)	0.00		
				25.53	
12	sc2	(-15.78--15.78)	0.00		
165.00		(-15.29--15.78)	0.49		
		(-15.01--15.29)	0.28		
		(-14.52--15.01)	0.49		
		(-13.89--14.52)	0.63		
		(-13.74--13.89)	0.15		
		(-13.42--13.74)	0.32		
		(-12.76--13.42)	0.66		
		(-12.21--12.76)	0.55		
		(-11.63--12.21)	0.58		
		(-10.95--11.63)	0.68		
		(-10.51--10.95)	0.44		
		(-10.14--10.51)	0.37		
		(-9.38--10.14)	0.76		
		(-8.48--9.38)	0.90		
		(-8.25--8.48)	0.23		
		(-8.07--8.25)	0.18		
		(-7.13--8.07)	0.94		
		(-6.01--7.13)	1.12		
		(-6.00--6.01)	0.01		
		(-6.00--6.00)	0.00		
		(-4.87--6.00)	1.13		
		(-3.92--4.87)	0.95		
		(-3.75--3.92)	0.17		
		(-3.53--3.75)	0.22		
		(-2.62--3.53)	0.91		
		(-1.85--2.62)	0.77		
		(-1.49--1.85)	0.36		
		(-1.06--1.49)	0.43		
		(-0.37--1.06)	0.69		
		(0.22--0.37)	0.59		
		(0.76-0.22)	0.54		
		(1.41-0.76)	0.65		
		(1.89-1.41)	0.48		
		(2.29-1.89)	0.40		
		(3.01-2.29)	0.72		
		(3.88-3.01)	0.87		
		(4.14-3.88)	0.26		
		(4.36-4.14)	0.22		
		(5.27-4.36)	0.91		
		(6.36-5.27)	1.09		
		(6.39-6.36)	0.03		
		(6.43-6.39)	0.04		
		(7.52-6.43)	1.09		
		(8.50-7.52)	0.98		
		(8.65-8.50)	0.15		
		(8.83-8.65)	0.18		
		(9.77-8.83)	0.94		
		(10.57-9.77)	0.80		
		(10.90-10.57)	0.33		
		(11.30-10.90)	0.40		
		(11.30-11.30)	0.00		
				27.08	
12	sc1	(11.30-11.30)	0.00		
165.00		(11.30-11.30)	0.00		
		(11.30-11.30)	0.00		
				0.00	
13	sc1	(-16.19--16.19)	0.00		
180.00		(-16.12--16.19)	0.07		
		(-15.18--16.12)	0.94		
		(-15.00--15.18)	0.18		
		(-14.77--15.00)	0.23		
		(-13.88--14.77)	0.89		
		(-13.18--13.88)	0.70		
		(-12.76--13.18)	0.42		
		(-12.23--12.76)	0.53		
		(-11.64--12.23)	0.59		
		(-11.18--11.64)	0.46		
		(-10.52--11.18)	0.66		
		(-9.68--10.52)	0.84		
		(-9.40--9.68)	0.28		
		(-9.18--9.40)	0.22		
		(-8.28--9.18)	0.90		
		(-7.18--8.28)	1.10		
		(-7.16--7.18)	0.02		
		(-7.13--7.16)	0.03		
		(-6.37--7.13)	0.76		
		(-6.04--6.37)	0.33		
		(-5.60--6.04)	0.44		
		(-4.92--5.60)	0.68		
		(-4.82--4.92)	0.10		
		(-4.59--4.82)	0.23		
		(-3.80--4.59)	0.79		
		(-3.18--3.80)	0.62		
		(-2.68--3.18)	0.50		
		(-2.04--2.68)	0.64		
		(-1.56--2.04)	0.48		
		(-1.18--1.56)	0.38		
		(-0.44--1.18)	0.74		
		(-0.15--0.44)	0.29		
		(0.50--0.15)	0.65		
		(0.63-0.50)	0.13		
		(0.68-0.63)	0.05		
		(0.82-0.68)	0.14		
		A RIPORTARE ml	17.01		

SCOTICO

N. SEZIONE PROG.	FIG.	ELEMENTI DI CALCOLO	LUNGHEZZA ELEMENTARE ml	LUNGHEZZA FIGURA ml	NOTE
		RIPORTO ml	17.01		
		(1.80-0.82)	0.98		
		(2.82-1.80)	1.02		
		(2.92-2.82)	0.10		
		(3.05-2.92)	0.13		
		(4.04-3.05)	0.99		
		(4.82-4.04)	0.78		
		(5.16-4.82)	0.34		
		(5.60-5.16)	0.44		
		(6.28-5.60)	0.68		
		(6.82-6.28)	0.54		
		(7.40-6.82)	0.58		
		(8.14-7.40)	0.74		
		(8.52-8.14)	0.38		
		(8.82-8.52)	0.30		
		(9.64-8.82)	0.82		
		(10.69-9.64)	1.05		
		(10.76-10.69)	0.07		
		(10.82-10.76)	0.06		
		(11.88-10.82)	1.06		
		(12.64-11.88)	0.76		
		(12.64-12.64)	0.00		
				28.83	
14	sc1	(-16.14--16.14)	0.00		
195.00		(-15.77--16.14)	0.37		
		(-15.12--15.77)	0.65		
		(-14.61--15.12)	0.51		
		(-14.00--14.61)	0.61		
		(-13.22--14.00)	0.78		
		(-12.88--13.22)	0.34		
		(-12.61--12.88)	0.27		
		(-11.76--12.61)	0.85		
		(-10.68--11.76)	1.08		
		(-10.64--10.68)	0.04		
		(-10.61--10.64)	0.03		
		(-9.52--10.61)	1.09		
		(-8.61--9.52)	0.91		
		(-8.40--8.61)	0.21		
		(-8.13--8.40)	0.27		
		(-7.28--8.13)	0.85		
		(-6.61--7.28)	0.67		
		(-6.16--6.61)	0.45		
		(-5.59--6.16)	0.57		
		(-5.04--5.59)	0.55		
		(-4.61--5.04)	0.43		
		(-3.92--4.61)	0.69		
		(-3.04--3.92)	0.88		
		(-2.80--3.04)	0.24		
		(-2.61--2.80)	0.19		
		(-1.68--2.61)	0.93		
		(-0.61--1.68)	1.07		
		(-0.56--0.61)	0.05		
		(-0.49--0.56)	0.07		
		(0.56--0.49)	1.05		
		(1.39-0.56)	0.83		
		(1.68-1.39)	0.29		
		(2.05-1.68)	0.37		
		(2.80-2.05)	0.75		
		(3.39-2.80)	0.59		
		(3.92-3.39)	0.53		
		(4.60-3.92)	0.68		
		(4.91-4.60)	0.31		
		(5.04-4.91)	0.13		
		(5.68-5.04)	0.64		
		(6.16-5.68)	0.48		
		(7.15-6.16)	0.99		
		(7.24-7.15)	0.09		
		(7.28-7.24)	0.04		
		(7.39-7.28)	0.11		
		(8.40-7.39)	1.01		
		(9.39-8.40)	0.99		
		(9.52-9.39)	0.13		
		(9.69-9.52)	0.17		
		(10.64-9.69)	0.95		
		(11.39-10.64)	0.75		
		(11.76-11.39)	0.37		
		(12.24-11.76)	0.48		
		(12.88-12.24)	0.64		
		(12.91-12.88)	0.03		
		(12.91-12.91)	0.00		
				29.05	
15	sc1	(-16.96--16.96)	0.00		
210.00		(-16.77--16.96)	0.19		
		(-16.36--16.77)	0.41		
		(-16.05--16.36)	0.31		
		(-15.24--16.05)	0.81		
		(-14.22--15.24)	1.02		
		(-14.12--14.22)	0.10		
		(-13.38--14.12)	0.74		
		(-13.00--13.38)	0.38		
		(-12.05--13.00)	0.95		
		(-11.88--12.05)	0.17		
		(-11.68--11.88)	0.20		
		(-10.76--11.68)	0.92		
		(-10.05--10.76)	0.71		
		(-9.64--10.05)	0.41		
		(-9.13--9.64)	0.51		
		(-8.52--9.13)	0.61		
		(-8.05--8.52)	0.47		
		(-7.40--8.05)	0.65		
		(-6.58--7.40)	0.82		
		(-6.28--6.58)	0.30		
		(-6.05--6.28)	0.23		
		(-5.16--6.05)	0.89		
		(-4.05--5.16)	1.11		
		(-4.04--4.05)	0.01		
		A RIPORTARE ml	12.92		

SCOTICO

N. SEZIONE PROG.	FIG.	ELEMENTI DI CALCOLO	LUNGHEZZA ELEMENTARE ml	LUNGHEZZA FIGURA ml	NOTE
		RIPORTO ml	12.92		
		(-4.04--4.04)	0.00		
		(-2.92--4.04)	1.12		
		(-2.05--2.92)	0.87		
		(-1.80--2.05)	0.25		
		(-1.49--1.80)	0.31		
		(-0.68--1.49)	0.81		
		(-0.05--0.68)	0.63		
		(0.44--0.05)	0.49		
		(1.06-0.44)	0.62		
		(1.56-1.06)	0.50		
		(1.95-1.56)	0.39		
		(2.68-1.95)	0.73		
		(3.60-2.68)	0.92		
		(3.80-3.60)	0.20		
		(3.95-3.80)	0.15		
		(4.92-3.95)	0.97		
		(5.95-4.92)	1.03		
		(6.04-5.95)	0.09		
		(6.15-6.04)	0.11		
		(7.16-6.15)	1.01		
		(7.95-7.16)	0.79		
		(8.28-7.95)	0.33		
		(8.69-8.28)	0.41		
		(9.40-8.69)	0.71		
		(9.95-9.40)	0.55		
		(10.52-9.95)	0.57		
		(11.24-10.52)	0.72		
		(11.64-11.24)	0.40		
		(11.95-11.64)	0.31		
		(12.76-11.95)	0.81		
		(12.82-12.76)	0.06		
		(12.82-12.82)	0.00		
				29.78	
16 225.00	sc1	(-15.57--15.57)	0.00		
		(-15.47--15.57)	0.10		
		(-15.34--15.47)	0.13		
		(-15.24--15.34)	0.10		
		(-14.22--15.24)	1.02		
		(-13.27--14.22)	0.95		
		(-13.11--13.27)	0.16		
		(-12.88--13.11)	0.23		
		(-11.99--12.88)	0.89		
		(-11.31--11.99)	0.68		
		(-10.87--11.31)	0.44		
		(-10.30--10.87)	0.57		
		(-9.75--10.30)	0.55		
		(-9.34--9.75)	0.41		
		(-8.64--9.34)	0.70		
		(-7.71--8.64)	0.93		
		(-7.52--7.71)	0.19		
		(-6.80--7.52)	0.72		
		(-6.40--6.80)	0.40		
		(-5.41--6.40)	0.99		
		(-5.29--5.41)	0.12		
		(-5.13--5.29)	0.16		
		(-4.17--5.13)	0.96		
		(-3.44--4.17)	0.73		
		(-3.05--3.44)	0.39		
		(-2.54--3.05)	0.51		
		(-1.94--2.54)	0.60		
		(-1.48--1.94)	0.46		
		(-0.82--1.48)	0.66		
		(0.04--0.82)	0.86		
		(0.30-0.04)	0.26		
		(0.49-0.30)	0.19		
		(1.41-0.49)	0.92		
		(2.46-1.41)	1.05		
		(2.53-2.46)	0.07		
		(2.63-2.53)	0.10		
		(3.65-2.63)	1.02		
		(4.42-3.65)	0.77		
		(4.76-4.42)	0.34		
		(5.21-4.76)	0.45		
		(5.88-5.21)	0.67		
		(6.39-5.88)	0.51		
		(7.00-6.39)	0.61		
		(7.80-7.00)	0.80		
		(8.12-7.80)	0.32		
		(8.36-8.12)	0.24		
		(9.23-8.36)	0.87		
		(10.32-9.23)	1.09		
		(10.35-10.32)	0.03		
		(10.38-10.35)	0.03		
		(11.47-10.38)	1.09		
		(12.29-11.47)	0.82		
		(12.43-12.29)	0.14		
		(12.43-12.43)	0.00		
				28.00	
17 240.00	sc1	(-10.35--10.35)	0.00		
		(-10.29--10.35)	0.06		
		(-10.08--10.29)	0.21		
		(-9.96--10.08)	0.12		
		(-8.99--9.96)	0.97		
		(-8.21--8.99)	0.78		
		(-7.89--8.21)	0.32		
		(-7.37--7.89)	0.52		
		(-6.80--7.37)	0.57		
		(-6.45--6.80)	0.35		
		(-5.70--6.45)	0.75		
		(-4.70--5.70)	1.00		
		(-4.61--4.70)	0.09		
		(-4.46--4.61)	0.15		
		(-3.51--4.46)	0.95		
		(-2.94--3.51)	0.57		
		(-2.42--2.94)	0.52		
		A RIPORTARE ml	7.93		

SCOTICO

N. SEZIONE PROG.	FIG.	ELEMENTI DI CALCOLO	LUNGHEZZA ELEMENTARE ml	LUNGHEZZA FIGURA ml	NOTE
		RIPORTO ml	7.93		
		(-1.54--2.42)	0.88		
		(-1.32--1.54)	0.22		
		(-0.59--1.32)	0.73		
		(-0.23--0.59)	0.36		
		(0.56--0.23)	0.79		
		(0.87-0.56)	0.31		
		(1.38-0.87)	0.51		
		(1.96-1.38)	0.58		
		(2.32-1.96)	0.36		
		(3.06-2.32)	0.74		
		(4.07-3.06)	1.01		
		(4.15-4.07)	0.08		
		(4.29-4.15)	0.14		
		(5.25-4.29)	0.96		
		(5.83-5.25)	0.58		
		(6.34-5.83)	0.51		
		(7.21-6.34)	0.87		
		(7.44-7.21)	0.23		
		(7.58-7.44)	0.14		
		(8.54-7.58)	0.96		
		(9.33-8.54)	0.79		
		(9.63-9.33)	0.30		
		(10.12-9.63)	0.49		
		(10.73-10.12)	0.61		
		(11.05-10.73)	0.32		
		(11.05-11.05)	0.00		
				21.40	
18 255.00	sc1	(-7.06--7.06)	0.00		
		(-6.76--7.06)	0.30		
		(-6.02--6.76)	0.74		
		(-5.93--6.02)	0.09		
		(-5.57--5.93)	0.36		
		(-4.96--5.57)	0.61		
		(-4.73--4.96)	0.23		
		(-3.90--4.73)	0.83		
		(-3.27--3.90)	0.63		
		(-2.83--3.27)	0.44		
		(-1.81--2.83)	1.02		
		(-1.77--1.81)	0.04		
		(-1.68--1.77)	0.09		
		(-0.71--1.68)	0.97		
		(-0.35--0.71)	0.36		
		(0.35--0.35)	0.70		
		(1.12-0.35)	0.77		
		(1.42-1.12)	0.30		
		(2.22-1.42)	0.80		
		(2.48-2.22)	0.26		
		(2.58-2.48)	0.10		
		(3.54-2.58)	0.96		
		(4.09-3.54)	0.55		
		(4.61-4.09)	0.52		
		(5.50-4.61)	0.89		
		(5.67-5.50)	0.17		
		(6.11-5.67)	0.44		
		(6.73-6.11)	0.62		
		(6.96-6.73)	0.23		
		(7.79-6.96)	0.83		
		(8.43-7.79)	0.64		
		(8.86-8.43)	0.43		
		(9.89-8.86)	1.03		
		(9.92-9.89)	0.03		
		(10.00-9.92)	0.08		
		(10.42-10.00)	0.42		
		(10.42-10.42)	0.00		
				17.48	
19 270.00	sc1	(-5.00--5.00)	0.00		
		(-4.80--5.00)	0.20		
		(-4.77--4.80)	0.03		
		(-4.72--4.77)	0.05		
		(-4.50--4.72)	0.22		
		(-3.68--4.50)	0.82		
		(-3.52--3.68)	0.16		
		(-2.64--3.52)	0.88		
		(-2.27--2.64)	0.37		
		(-1.60--2.27)	0.67		
		(-1.03--1.60)	0.57		
		(-0.56--1.03)	0.47		
		(0.22--0.56)	0.78		
		(0.48-0.22)	0.26		
		(1.46-0.48)	0.98		
		(1.51-1.46)	0.05		
		(1.78-1.51)	0.27		
		(2.44-1.78)	0.66		
		(2.55-2.44)	0.11		
		(3.34-2.55)	0.79		
		(3.59-3.34)	0.25		
		(4.23-3.59)	0.64		
		(4.63-4.23)	0.40		
		(5.12-4.63)	0.49		
		(5.67-5.12)	0.55		
		(6.01-5.67)	0.34		
		(6.71-6.01)	0.70		
		(7.69-6.71)	0.98		
		(7.75-7.69)	0.06		
		(7.79-7.75)	0.04		
		(8.05-7.79)	0.26		
		(8.79-8.05)	0.74		
		(8.94-8.79)	0.15		
		(8.98-8.94)	0.04		
		(8.98-8.98)	0.00		
				13.98	

Il Direttore dei Lavori | L'Impresa

BONIFICA

DALLA SEZ. DA PROG.	ALLA SEZ. A PROG.	SEZIONE	FIGURA	AREA	DISTANZA SEZIONI m	DISTANZA DI CALCOLO m	VOLUME PARZIALE mc	VOLUME TOTALE mc
6	7	6	BO1	6.71	15.00	7.50	50.325	
75.00	90.00	7	BO1	9.11	15.00	7.50	68.325	
								118.650
7	8	7	BO1	9.11	15.00	7.50	68.325	
90.00	105.00	8	BO1	9.36	15.00	7.50	70.200	
								138.525
8	9	8	BO1	9.36	15.00	7.50	70.200	
105.00	120.00	9	BO1	10.27	15.00	7.50	77.025	
								147.225
9	10	9	BO1	10.27	15.00	7.50	77.025	
120.00	135.00	10	BO1	12.11	15.00	7.50	90.825	
								167.850
10	11	10	BO1	12.11	15.00	7.50	90.825	
135.00	150.00	11	BO1	12.78	15.00	7.50	95.850	
								186.675
11	12	11	BO1	12.78	15.00	7.50	95.850	
150.00	165.00	12	BO1	13.57	15.00	7.50	101.775	
								197.625
12	13	12	BO1	13.57	15.00	7.50	101.775	
165.00	180.00	13	BO1	14.45	15.00	7.50	108.375	
								210.150
13	14	13	BO1	14.45	15.00	7.50	108.375	
180.00	195.00	14	BO1	14.51	15.00	7.50	108.825	
								217.200
14	15	14	BO1	14.51	15.00	7.50	108.825	
195.00	210.00	15	BO1	14.89	15.00	7.50	111.675	
								220.500
15	16	15	BO1	14.89	15.00	7.50	111.675	
210.00	225.00	16	BO1	14.00	15.00	7.50	105.000	
								216.675
16	17	16	BO1	14.00	15.00	7.50	105.000	
225.00	240.00	17	BO1	10.64	15.00	7.50	79.800	
								184.800
17	18	17	BO1	10.64	15.00	7.50	79.800	
240.00	255.00	18	BO1	8.75	15.00	7.50	65.625	
								145.425
18	19	18	BO1	8.75	15.00	7.50	65.625	
255.00	270.00	19	BO1	6.98	15.00	7.50	52.350	
								117.975

Il Direttore dei Lavori	L'Impresa	TOTALE ARTICOLO	2269.275

USURA

DALLA SEZ. DA PROG.	ALLA SEZ. A PROG.	SEZIONE	FIGURA	LUNGHEZZA	DISTANZA SEZIONI ml	DISTANZA DI CALCOLO ml	AREA PARZIALE mq	AREA TOTALE mq
6	7	6	a1	6.82	15.00	7.50	51.15	
75.00	90.00	7	a1	6.82	15.00	7.50	51.15	
								102.30
7	8	7	a1	6.82	15.00	7.50	51.15	
90.00	105.00	8	a1	6.82	15.00	7.50	51.15	
								102.30
8	9	8	a1	6.82	15.00	7.50	51.15	
105.00	120.00	9	a1	6.82	15.00	7.50	51.15	
								102.30
9	10	9	a1	6.82	15.00	7.50	51.15	
120.00	135.00	10	a1	6.82	15.00	7.50	51.15	
								102.30
10	11	10	a1	6.82	15.00	7.50	51.15	
135.00	150.00	11	a1	6.75	15.00	7.50	50.63	
								101.78
11	12	11	a1	6.75	15.00	7.50	50.63	
150.00	165.00	12	a1	6.61	15.00	7.50	49.58	
								100.21
12	13	12	a1	6.61	15.00	7.50	49.58	
165.00	180.00	13	a1	6.50	15.00	7.50	48.75	
								98.33
13	14	13	a1	6.50	15.00	7.50	48.75	
180.00	195.00	14	a1	6.50	15.00	7.50	48.75	
								97.50
14	15	14	a1	6.50	15.00	7.50	48.75	
195.00	210.00	15	a1	6.50	15.00	7.50	48.75	
								97.50
15	16	15	a1	6.50	15.00	7.50	48.75	
210.00	225.00	16	a1	6.57	15.00	7.50	49.28	
								98.03
16	17	16	a1	6.57	15.00	7.50	49.28	
225.00	240.00	17	a1	6.71	15.00	7.50	50.33	
								99.61
17	18	17	a1	6.71	15.00	7.50	50.33	
240.00	255.00	18	a1	6.80	15.00	7.50	51.00	
								101.33
18	19	18	a1	6.80	15.00	7.50	51.00	
255.00	270.00	19	a1	6.80	15.00	7.50	51.00	
								102.00

VEGETALE

DALLA SEZ. DA PROG.	ALLA SEZ. A PROG.	SEZIONE	FIGURA	LUNGHEZZA	DISTANZA SEZIONI ml	DISTANZA DI CALCOLO ml	AREA PARZIALE mq	AREA TOTALE mq
6	7	6	b1	7.16	15.00	7.50	53.70	
75.00	90.00	7	b1	6.00	15.00	7.50	45.00	
		7	b2	6.11	15.00	7.50	45.83	
								144.53
7	8	7	b1	6.00	15.00	7.50	45.00	
90.00	105.00	7	b2	6.11	15.00	7.50	45.83	
		8	b1	6.32	15.00	7.50	47.40	
		8	b2	6.23	15.00	7.50	46.73	
								184.96
8	9	8	b1	6.32	15.00	7.50	47.40	
105.00	120.00	8	b2	6.23	15.00	7.50	46.73	
		9	b1	7.14	15.00	7.50	53.55	
		9	b2	7.29	15.00	7.50	54.67	
								202.35
9	10	9	b1	7.14	15.00	7.50	53.55	
120.00	135.00	9	b2	7.29	15.00	7.50	54.67	
		10	b1	9.72	15.00	7.50	72.90	
		10	b2	8.42	15.00	7.50	63.15	
								244.27
10	11	10	b1	9.72	15.00	7.50	72.90	
135.00	150.00	10	b2	8.42	15.00	7.50	63.15	
		11	b1	9.75	15.00	7.50	73.13	
		11	b2	9.77	15.00	7.50	73.27	
								282.45
11	12	11	b1	9.75	15.00	7.50	73.13	
150.00	165.00	11	b2	9.77	15.00	7.50	73.27	
		12	b1	11.15	15.00	7.50	83.63	
		12	b2	10.02	15.00	7.50	75.15	
								305.18
12	13	12	b1	11.15	15.00	7.50	83.63	
165.00	180.00	12	b2	10.02	15.00	7.50	75.15	
		13	b2	11.37	15.00	7.50	85.27	
		13	b1	11.53	15.00	7.50	86.47	
								330.52
13	14	13	b2	11.37	15.00	7.50	85.27	
180.00	195.00	13	b1	11.53	15.00	7.50	86.47	
		14	b2	11.73	15.00	7.50	87.98	
		14	b1	11.81	15.00	7.50	88.58	
								348.30
14	15	14	b2	11.73	15.00	7.50	87.98	
195.00	210.00	14	b1	11.81	15.00	7.50	88.58	
		15	b2	12.39	15.00	7.50	92.93	
		15	b1	11.68	15.00	7.50	87.60	
								357.09
15	16	15	b2	12.39	15.00	7.50	92.93	
210.00	225.00	15	b1	11.68	15.00	7.50	87.60	
		16	b2	10.85	15.00	7.50	81.38	
		16	b1	11.24	15.00	7.50	84.30	
								346.21
16	17	16	b2	10.85	15.00	7.50	81.38	
225.00	240.00	16	b1	11.24	15.00	7.50	84.30	
		17	b1	5.48	15.00	7.50	41.10	
		17	b2	9.66	15.00	7.50	72.45	
								279.23
17	18	17	b1	5.48	15.00	7.50	41.10	
240.00	255.00	17	b2	9.66	15.00	7.50	72.45	
		18	b1	2.18	15.00	7.50	16.35	
		18	b2	8.97	15.00	7.50	67.28	
								197.18
18	19	18	b1	2.18	15.00	7.50	16.35	
255.00	270.00	18	b2	8.97	15.00	7.50	67.28	
		19	b1	7.54	15.00	7.50	56.55	
								140.18

Il Direttore dei Lavori	L'Impresa	TOTALE ARTICOLO	3362.45

BINDER

DALLA SEZ. DA PROG.	ALLA SEZ. A PROG.	SEZIONE	FIGURA	LUNGHEZZA	DISTANZA SEZIONI ml	DISTANZA DI CALCOLO ml	AREA PARZIALE mq	AREA TOTALE mq
6	7	6	c1	6.82	15.00	7.50	51.15	
75.00	90.00	7	c1	6.82	15.00	7.50	51.15	
								102.30
7	8	7	c1	6.82	15.00	7.50	51.15	
90.00	105.00	8	c1	6.82	15.00	7.50	51.15	
								102.30
8	9	8	c1	6.82	15.00	7.50	51.15	
105.00	120.00	9	c1	6.82	15.00	7.50	51.15	
								102.30
9	10	9	c1	6.82	15.00	7.50	51.15	
120.00	135.00	10	c1	6.82	15.00	7.50	51.15	
								102.30
10	11	10	c1	6.82	15.00	7.50	51.15	
135.00	150.00	11	c1	6.75	15.00	7.50	50.63	
								101.78
11	12	11	c1	6.75	15.00	7.50	50.63	
150.00	165.00	12	c1	6.61	15.00	7.50	49.58	
								100.21
12	13	12	c1	6.61	15.00	7.50	49.58	
165.00	180.00	13	c1	6.50	15.00	7.50	48.75	
								98.33
13	14	13	c1	6.50	15.00	7.50	48.75	
180.00	195.00	14	c1	6.50	15.00	7.50	48.75	
								97.50
14	15	14	c1	6.50	15.00	7.50	48.75	
195.00	210.00	15	c1	6.50	15.00	7.50	48.75	
								97.50
15	16	15	c1	6.50	15.00	7.50	48.75	
210.00	225.00	16	c1	6.57	15.00	7.50	49.28	
								98.03
16	17	16	c1	6.57	15.00	7.50	49.28	
225.00	240.00	17	c1	6.71	15.00	7.50	50.33	
								99.61
17	18	17	c1	6.71	15.00	7.50	50.33	
240.00	255.00	18	c1	6.80	15.00	7.50	51.00	
								101.33
18	19	18	c1	6.80	15.00	7.50	51.00	
255.00	270.00	19	c1	6.80	15.00	7.50	51.00	
								102.00

Il Direttore dei Lavori	L'Impresa	TOTALE ARTICOLO	1305.49

BASE

DALLA SEZ. DA PROG.	ALLA SEZ. A PROG.	SEZIONE	FIGURA	LUNGHEZZA	DISTANZA SEZIONI ml	DISTANZA DI CALCOLO ml	AREA PARZIALE mq	AREA TOTALE mq
6	7	6	d1	6.82	15.00	7.50	51.15	
75.00	90.00	7	d1	6.82	15.00	7.50	51.15	
								102.30
7	8	7	d1	6.82	15.00	7.50	51.15	
90.00	105.00	8	d1	6.82	15.00	7.50	51.15	
								102.30
8	9	8	d1	6.82	15.00	7.50	51.15	
105.00	120.00	9	d1	6.82	15.00	7.50	51.15	
								102.30
9	10	9	d1	6.82	15.00	7.50	51.15	
120.00	135.00	10	d1	6.82	15.00	7.50	51.15	
								102.30
10	11	10	d1	6.82	15.00	7.50	51.15	
135.00	150.00	11	d1	6.75	15.00	7.50	50.63	
								101.78
11	12	11	d1	6.75	15.00	7.50	50.63	
150.00	165.00	12	d1	6.61	15.00	7.50	49.58	
								100.21
12	13	12	d1	6.61	15.00	7.50	49.58	
165.00	180.00	13	d1	6.50	15.00	7.50	48.75	
								98.33
13	14	13	d1	6.50	15.00	7.50	48.75	
180.00	195.00	14	d1	6.50	15.00	7.50	48.75	
								97.50
14	15	14	d1	6.50	15.00	7.50	48.75	
195.00	210.00	15	d1	6.50	15.00	7.50	48.75	
								97.50
15	16	15	d1	6.50	15.00	7.50	48.75	
210.00	225.00	16	d1	6.57	15.00	7.50	49.28	
								98.03
16	17	16	d1	6.57	15.00	7.50	49.28	
225.00	240.00	17	d1	6.71	15.00	7.50	50.33	
								99.61
17	18	17	d1	6.71	15.00	7.50	50.33	
240.00	255.00	18	d1	6.80	15.00	7.50	51.00	
								101.33
18	19	18	d1	6.80	15.00	7.50	51.00	
255.00	270.00	19	d1	6.80	15.00	7.50	51.00	
								102.00

FONDAZIONE

DALLA SEZ. DA PROG.	ALLA SEZ. A PROG.	SEZIONE	FIGURA	LUNGHEZZA	DISTANZA SEZIONI ml	DISTANZA DI CALCOLO ml	AREA PARZIALE mq	AREA TOTALE mq
6	7	6	e1	6.82	15.00	7.50	51.15	
75.00	90.00	7	e1	6.82	15.00	7.50	51.15	
								102.30
7	8	7	e1	6.82	15.00	7.50	51.15	
90.00	105.00	8	e1	6.82	15.00	7.50	51.15	
								102.30
8	9	8	e1	6.82	15.00	7.50	51.15	
105.00	120.00	9	e1	6.82	15.00	7.50	51.15	
								102.30
9	10	9	e1	6.82	15.00	7.50	51.15	
120.00	135.00	10	e1	6.82	15.00	7.50	51.15	
								102.30
10	11	10	e1	6.82	15.00	7.50	51.15	
135.00	150.00	11	e1	6.75	15.00	7.50	50.63	
								101.78
11	12	11	e1	6.75	15.00	7.50	50.63	
150.00	165.00	12	e1	6.61	15.00	7.50	49.58	
								100.21
12	13	12	e1	6.61	15.00	7.50	49.58	
165.00	180.00	13	e1	6.50	15.00	7.50	48.75	
								98.33
13	14	13	e1	6.50	15.00	7.50	48.75	
180.00	195.00	14	e1	6.50	15.00	7.50	48.75	
								97.50
14	15	14	e1	6.50	15.00	7.50	48.75	
195.00	210.00	15	e1	6.50	15.00	7.50	48.75	
								97.50
15	16	15	e1	6.50	15.00	7.50	48.75	
210.00	225.00	16	e1	6.57	15.00	7.50	49.28	
								98.03
16	17	16	e1	6.57	15.00	7.50	49.28	
225.00	240.00	17	e1	6.71	15.00	7.50	50.33	
								99.61
17	18	17	e1	6.71	15.00	7.50	50.33	
240.00	255.00	18	e1	6.80	15.00	7.50	51.00	
								101.33
18	19	18	e1	6.80	15.00	7.50	51.00	
255.00	270.00	19	e1	6.80	15.00	7.50	51.00	
								102.00

SCOTICO

DALLA SEZ. DA PROG.	ALLA SEZ. A PROG.	SEZIONE	FIGURA	LUNGHEZZA	DISTANZA SEZIONI ml	DISTANZA DI CALCOLO ml	AREA PARZIALE mq	AREA TOTALE mq
6	7	6	sc1	13.36	15.00	7.50	100.20	
75.00	90.00	7	sc1	18.24	15.00	7.50	136.80	
								237.00
7	8	7	sc1	18.24	15.00	7.50	136.80	
90.00	105.00	8	sc1	18.70	15.00	7.50	140.25	
								277.05
8	9	8	sc1	18.70	15.00	7.50	140.25	
105.00	120.00	9	sc1	20.49	15.00	7.50	153.67	
								293.92
9	10	9	sc1	20.49	15.00	7.50	153.67	
120.00	135.00	10	sc1	24.19	15.00	7.50	181.43	
								335.10
10	11	10	sc1	24.19	15.00	7.50	181.43	
135.00	150.00	11	sc1	25.53	15.00	7.50	191.48	
								372.91
11	12	11	sc1	25.53	15.00	7.50	191.48	
150.00	165.00	12	sc2	27.08	15.00	7.50	203.10	
		12	sc1	0.00	15.00	7.50	0.00	
								394.58
12	13	12	sc2	27.08	15.00	7.50	203.10	
165.00	180.00	12	sc1	0.00	15.00	7.50	0.00	
		13	sc1	28.83	15.00	7.50	216.22	
								419.32
13	14	13	sc1	28.83	15.00	7.50	216.22	
180.00	195.00	14	sc1	29.05	15.00	7.50	217.88	
								434.10
14	15	14	sc1	29.05	15.00	7.50	217.88	
195.00	210.00	15	sc1	29.78	15.00	7.50	223.35	
								441.23
15	16	15	sc1	29.78	15.00	7.50	223.35	
210.00	225.00	16	sc1	28.00	15.00	7.50	210.00	
								433.35
16	17	16	sc1	28.00	15.00	7.50	210.00	
225.00	240.00	17	sc1	21.40	15.00	7.50	160.50	
								370.50
17	18	17	sc1	21.40	15.00	7.50	160.50	
240.00	255.00	18	sc1	17.48	15.00	7.50	131.10	
								291.60
18	19	18	sc1	17.48	15.00	7.50	131.10	
255.00	270.00	19	sc1	13.98	15.00	7.50	104.85	
								235.95

Il Direttore dei Lavori	L'Impresa	TOTALE ARTICOLO	4536.61

Volume dalla sezione 6 alla sezione 19

ARTICOLO		VOLUME
RIPORTO	mc	16504.650
BO BONIFICA	mc	2269.275
a USURA	mq	1305.49
b VEGETALE	mq	3362.45
c BINDER	mq	1305.49
d BASE	mq	1305.49
e FONDAZIONE	mq	1305.49
sc SCOTICO	mq	4536.61

	CALCOLO DELLE AREE		Foglio n. 1

STERRI E RIPORTI

N. SEZIONE PROG.	FIG.	ELEMENTI DI CALCOLO	AREA ELEMENTARE mq	AREA FIGURA mq	NOTE
5	R1	(-4.69--5.00)x(3.58+3.52)/2	1.10		
60.00		(-4.58--4.69)x(3.59+3.58)/2	0.39		
		(-4.24--4.58)x(3.58+3.59)/2	1.22		
		(-3.77--4.24)x(3.57+3.58)/2	1.68		
		(-3.61--3.77)x(3.56+3.57)/2	0.57		
		(-3.50--3.61)x(3.56+3.56)/2	0.39		
		(-3.11--3.50)x(3.25+3.56)/2	1.33		
		(-3.10--3.11)x(3.18+3.25)/2	0.03		
		(-3.08--3.10)x(3.27+3.18)/2	0.06		
		(-3.05--3.08)x(3.19+3.27)/2	0.10		
		(-3.01--3.05)x(3.12+3.19)/2	0.13		
		(-2.95--3.01)x(3.11+3.12)/2	0.19		
		(-2.88--2.95)x(3.08+3.11)/2	0.22		
		(-2.79--2.88)x(3.07+3.08)/2	0.28		
		(-2.64--2.79)x(3.06+3.07)/2	0.46		
		(-2.53--2.64)x(3.06+3.06)/2	0.34		
		(-2.15--2.53)x(2.90+3.06)/2	1.13		
		(-1.44--2.15)x(2.59+2.90)/2	1.95		
		(-1.34--1.44)x(2.54+2.59)/2	0.26		
		(-1.03--1.34)x(2.41+2.54)/2	0.77		
		(-0.53--1.03)x(2.20+2.41)/2	1.15		
		(-0.36--0.53)x(2.13+2.20)/2	0.37		
		(0.28--0.36)x(1.89+2.13)/2	1.29		
		(0.72-0.28)x(1.68+1.89)/2	0.79		
		(1.09-0.72)x(1.50+1.68)/2	0.59		
		(1.80-1.09)x(1.10+1.50)/2	0.92		
		(1.90-1.80)x(1.05+1.10)/2	0.11		
		(2.19-1.90)x(0.88+1.05)/2	0.28		
		(2.71-2.19)x(0.57+0.88)/2	0.38		
		(2.88-2.71)x(0.50+0.57)/2	0.09		
		(3.52-2.88)x(0.32+0.50)/2	0.26		
		(3.97-3.52)x(0.17+0.32)/2	0.11		
		(4.33-3.97)x(0.18+0.17)/2	0.06		
		(5.05-4.33)x(0.16+0.18)/2	0.12		
		(5.14-5.05)x(0.15+0.16)/2	0.01		
		(5.40-5.14)x(0.17+0.15)/2	0.04		
		(5.95-5.40)x(0.20+0.17)/2	0.10		
		(6.13-5.95)x(0.22+0.20)/2	0.04		
		(6.76-6.13)x(0.30+0.22)/2	0.16		
		(7.21-6.76)x(0.32+0.30)/2	0.14		
		(7.57-7.21)x(0.46+0.32)/2	0.14		
		(8.29-7.57)x(0.70+0.46)/2	0.42		
		(8.37-8.29)x(0.76+0.70)/2	0.06		
		(8.62-8.37)x(1.01+0.76)/2	0.22		
		(9.18-8.62)x(1.58+1.01)/2	0.73		
		(9.37-9.18)x(1.74+1.58)/2	0.32		
		(9.99-9.37)x(2.11+1.74)/2	1.19		
		(10.46-9.99)x(2.30+2.11)/2	1.04		
		(10.80-10.46)x(2.32+2.30)/2	0.79		
		(11.54-10.80)x(2.43+2.32)/2	1.76		
		(11.61-11.54)x(2.43+2.43)/2	0.17		
		(11.84-11.61)x(2.44+2.43)/2	0.56		
		(12.42-11.84)x(2.46+2.44)/2	1.42		
		(12.62-12.42)x(2.48+2.46)/2	0.49		
		(13.19-12.62)x(2.51+2.48)/2	1.42		
		(11.96-13.19)x(3.74+2.51)/2	-3.84		
		(4.47-11.96)x(3.74+3.74)/2	-28.01		
		(3.04-4.47)x(4.70+3.74)/2	-6.03		
		(1.98-3.04)x(4.70+4.70)/2	-4.98		
		(2.15-1.98)x(4.50+4.70)/2	0.78		
		(0.13-2.15)x(4.64+4.50)/2	-9.23		
		(-4.00-0.13)x(4.92+4.64)/2	-19.74		
		(-5.00--4.00)x(4.99+4.92)/2	-4.96		
				45.67	
6	R1	(-7.36--7.59)x(3.12+3.14)/2	0.72		
75.00		(-7.27--7.36)x(2.96+3.12)/2	0.27		
		(-7.14--7.27)x(2.98+2.96)/2	0.39		
		(-7.08--7.14)x(2.96+2.98)/2	0.18		
		(-6.94--7.08)x(2.91+2.96)/2	0.41		
		(-6.30--6.94)x(2.69+2.91)/2	1.79		
		(-6.03--6.30)x(2.62+2.69)/2	0.72		
		(-5.52--6.03)x(2.49+2.62)/2	1.30		
		(-4.92--5.52)x(2.46+2.49)/2	1.48		
		(-4.73--4.92)x(2.36+2.46)/2	0.46		
		(-4.28--4.73)x(1.84+2.36)/2	0.95		
		(-3.95--4.28)x(1.51+1.84)/2	0.55		
		(-3.81--3.95)x(1.32+1.51)/2	0.20		
		(-3.17--3.81)x(1.03+1.32)/2	0.75		
		(-2.70--3.17)x(0.95+1.03)/2	0.47		
		(-2.38--2.70)x(0.86+0.95)/2	0.29		
		(-1.62--2.38)x(0.93+0.86)/2	0.68		
		(-1.60--1.62)x(0.93+0.93)/2	0.02		
		(-1.59--1.60)x(0.92+0.93)/2	0.01		
		(-0.81--1.59)x(0.66+0.92)/2	0.62		
		(-0.48--0.81)x(0.61+0.66)/2	0.21		
		(-0.03--0.48)x(0.48+0.61)/2	0.25		
		(0.63--0.03)x(0.40+0.48)/2	0.29		
		(0.75-0.63)x(0.37+0.40)/2	0.05		
		(1.04-0.75)x(0.36+0.37)/2	0.11		
		(1.54-1.04)x(0.34+0.36)/2	0.17		
		(1.74-1.54)x(0.35+0.34)/2	0.07		
		(2.32-1.74)x(0.37+0.35)/2	0.21		
		(2.86-2.32)x(0.37+0.37)/2	0.20		
		(3.10-2.86)x(0.59+0.37)/2	0.12		
		(3.70-3.10)x(0.96+0.59)/2	0.47		
		(3.89-3.70)x(1.08+0.96)/2	0.19		
		(3.97-3.89)x(1.14+1.08)/2	0.09		
		(4.67-3.97)x(1.82+1.14)/2	1.04		
		(5.08-4.67)x(2.19+1.82)/2	0.82		
		(5.46-5.08)x(2.28+2.19)/2	0.85		
		(6.19-5.46)x(2.37+2.28)/2	1.70		
		(6.24-6.19)x(2.36+2.37)/2	0.12		
		(6.36-6.24)x(2.36+2.36)/2	0.28		
		(7.02-6.36)x(2.37+2.36)/2	1.56		
		(7.30-7.02)x(2.37+2.37)/2	0.66		
		(7.81-7.30)x(2.37+2.37)/2	1.21		
		(8.41-7.81)x(2.38+2.37)/2	1.43		
		A RIPORTARE mq	24.36		

		CALCOLO DELLE AREE		Foglio n. 2	
STERRI E RIPORTI					
N. SEZIONE PROG.	FIG.	ELEMENTI DI CALCOLO	AREA ELEMENTARE mq	AREA FIGURA mq	NOTE
		RIPORTO mq	24.36		
		(8.59-8.41)x(2.39+2.38)/2	0.43		
		(9.02-8.59)x(2.43+2.39)/2	1.04		
		(9.37-9.02)x(2.45+2.43)/2	0.85		
		(9.52-9.37)x(2.46+2.45)/2	0.37		
		(10.16-9.52)x(2.49+2.46)/2	1.58		
		(10.63-10.16)x(2.53+2.49)/2	1.18		
		(10.94-10.63)x(2.55+2.53)/2	0.79		
		(11.68-10.94)x(2.54+2.55)/2	1.88		
		(11.73-11.68)x(2.54+2.54)/2	0.13		
		(11.74-11.73)x(2.54+2.54)/2	0.03		
		(11.83-11.74)x(2.54+2.54)/2	0.23		
		(11.24-11.83)x(3.13+2.54)/2	-1.67		
		(6.53-11.24)x(3.13+3.13)/2	-14.74		
		(3.19-6.53)x(5.35+3.13)/2	-14.16		
		(2.12-3.19)x(5.36+5.35)/2	-5.73		
		(2.29-2.12)x(5.15+5.36)/2	0.89		
		(0.28-2.29)x(5.29+5.15)/2	-10.49		
		(-4.00-0.28)x(5.59+5.29)/2	-23.28		
		(-5.46--4.00)x(5.69+5.59)/2	-8.23		
		(-5.34--5.46)x(5.83+5.69)/2	0.69		
		(-6.41--5.34)x(5.82+5.83)/2	-6.23		
		(-7.59--6.41)x(5.04+5.82)/2	-6.41		
				56.49	
7 90.00	R1	(-10.36--10.74)x(1.39+1.47)/2	0.54		
		(-9.98--10.36)x(1.27+1.39)/2	0.51		
		(-9.31--9.98)x(1.03+1.27)/2	0.77		
		(-9.23--9.31)x(1.00+1.03)/2	0.08		
		(-9.18--9.23)x(0.98+1.00)/2	0.05		
		(-8.48--9.18)x(0.60+0.98)/2	0.55		
		(-8.01--8.48)x(0.39+0.60)/2	0.23		
		(-7.72--8.01)x(0.37+0.39)/2	0.11		
		(-7.22--7.72)x(0.33+0.37)/2	0.17		
		(-6.97--7.22)x(0.30+0.33)/2	0.08		
		(-6.83--6.97)x(0.30+0.30)/2	0.04		
		(-6.22--6.83)x(0.32+0.30)/2	0.19		
		(-5.66--6.22)x(0.34+0.32)/2	0.18		
		(-5.47--5.66)x(0.35+0.34)/2	0.07		
		(-5.13--5.47)x(0.34+0.35)/2	0.12		
		(-4.71--5.13)x(0.34+0.34)/2	0.14		
		(-4.48--4.71)x(0.36+0.34)/2	0.08		
		(-3.96--4.48)x(0.50+0.36)/2	0.22		
		(-3.30--3.96)x(0.60+0.50)/2	0.36		
		(-3.21--3.30)x(0.68+0.60)/2	0.06		
		(-3.04--3.21)x(0.79+0.68)/2	0.12		
		(-2.45--3.04)x(1.19+0.79)/2	0.58		
		(-2.13--2.45)x(1.44+1.19)/2	0.42		
		(-1.70--2.13)x(1.65+1.44)/2	0.66		
		(-0.95--1.70)x(2.04+1.65)/2	1.38		
		(-0.20--0.95)x(2.35+2.04)/2	1.65		
		(0.23--0.20)x(2.45+2.35)/2	1.03		
		(0.56-0.23)x(2.45+2.45)/2	0.81		
		(1.15-0.56)x(2.45+2.45)/2	1.45		
		(1.31-1.15)x(2.44+2.45)/2	0.39		
		(1.40-1.31)x(2.44+2.44)/2	0.22		
		(2.06-1.40)x(2.45+2.44)/2	1.61		
		(2.58-2.06)x(2.48+2.45)/2	1.28		
		(2.82-2.58)x(2.49+2.48)/2	0.60		
		(3.24-2.82)x(2.53+2.49)/2	1.05		
		(3.75-3.24)x(2.57+2.53)/2	1.30		
		(4.42-3.75)x(2.59+2.57)/2	1.73		
		(4.93-4.42)x(2.59+2.59)/2	1.32		
		(5.33-4.93)x(2.60+2.59)/2	1.04		
		(5.83-5.33)x(2.60+2.60)/2	1.30		
		(6.11-5.83)x(2.61+2.60)/2	0.73		
		(6.31-6.11)x(2.60+2.61)/2	0.52		
		(4.44-6.31)x(5.12+5.12)/2	-9.57		
		(3.27-4.44)x(5.90+5.12)/2	-6.45		
		(2.20-3.27)x(5.90+5.90)/2	-6.31		
		(2.38-2.20)x(5.70+5.90)/2	1.04		
		(0.36-2.38)x(5.84+5.70)/2	-11.66		
		(-4.00-0.36)x(6.14+5.84)/2	-26.12		
		(-5.46--4.00)x(6.24+6.14)/2	-9.04		
		(-5.34--5.46)x(6.38+6.24)/2	0.76		
		(-6.41--5.34)x(6.37+6.38)/2	-6.82		
		(-10.73--6.41)x(3.49+6.37)/2	-21.30		
		(-10.74--10.73)x(1.47+3.49)/2	-0.02		
				69.75	
7bis 96.31	R1	(-10.50--10.88)x(0.24+0.23)/2	0.09		
		(-9.91--10.50)x(0.28+0.24)/2	0.15		
		(-9.76--9.91)x(0.28+0.28)/2	0.04		
		(-9.67--9.76)x(0.29+0.28)/2	0.03		
		(-9.02--9.67)x(0.32+0.29)/2	0.20		
		(-8.45--9.02)x(0.33+0.32)/2	0.19		
		(-8.27--8.45)x(0.31+0.33)/2	0.06		
		(-7.99--8.27)x(0.34+0.31)/2	0.09		
		(-7.53--7.99)x(0.34+0.34)/2	0.16		
		(-7.24--7.53)x(0.37+0.34)/2	0.10		
		(-6.79--7.24)x(0.61+0.37)/2	0.22		
		(-6.07--6.79)x(1.11+0.61)/2	0.62		
		(-6.04--6.07)x(1.13+1.11)/2	0.03		
		(-6.02--6.04)x(1.14+1.13)/2	0.02		
		(-5.30--6.02)x(1.56+1.14)/2	0.97		
		(-4.81--5.30)x(1.92+1.56)/2	0.85		
		(-4.56--4.81)x(2.00+1.92)/2	0.49		
		(-4.16--4.56)x(2.09+2.00)/2	0.82		
		(-3.82--4.16)x(2.18+2.09)/2	0.73		
		(-3.60--3.82)x(2.26+2.18)/2	0.49		
		(-3.07--3.60)x(2.37+2.26)/2	1.23		
		(-2.38--3.07)x(2.46+2.37)/2	1.67		
		(-2.33--2.38)x(2.47+2.46)/2	0.12		
		(-2.24--2.33)x(2.48+2.47)/2	0.22		
		(-1.59--2.24)x(2.51+2.48)/2	1.62		
		(-1.17--1.59)x(2.52+2.51)/2	1.06		
		(-0.84--1.17)x(2.50+2.52)/2	0.83		
		(-0.33--0.84)x(2.49+2.50)/2	1.27		
		A RIPORTARE mq	14.37		

STERRI E RIPORTI

N. SEZIONE PROG.	FIG.	ELEMENTI DI CALCOLO	AREA ELEMENTARE mq	AREA FIGURA mq	NOTE
		RIPORTO mq	14.37		
		(-0.10--0.33)x(2.49+2.49)/2	0.57		
		(0.04--0.10)x(2.48+2.49)/2	0.35		
		(0.64-0.04)x(2.45+2.48)/2	1.48		
		(1.26-0.64)x(2.43+2.45)/2	1.51		
		(1.39-1.26)x(2.43+2.43)/2	0.32		
		(1.59-1.39)x(2.45+2.43)/2	0.49		
		(1.79-1.59)x(2.46+2.45)/2	0.49		
		(4.74-1.79)x(5.12+5.12)/2	15.10		
		(3.27-4.74)x(6.10+5.12)/2	-8.25		
		(2.21-3.27)x(6.10+6.10)/2	-6.47		
		(2.38-2.21)x(5.90+6.10)/2	1.02		
		(0.36-2.38)x(6.04+5.90)/2	-12.06		
		(-4.00-0.36)x(6.34+6.04)/2	-26.99		
		(-5.46--4.00)x(6.44+6.34)/2	-9.33		
		(-5.34--5.46)x(6.58+6.44)/2	0.78		
		(-6.41--5.34)x(6.57+6.58)/2	-7.04		
		(-10.88--6.41)x(3.59+6.57)/2	-22.71		
				56.37	
8 105.00	R1	(-13.15--13.39)x(0.45+0.38)/2	0.10		
		(-12.45--13.15)x(0.75+0.45)/2	0.42		
		(-12.42--12.45)x(0.78+0.75)/2	0.02		
		(-12.37--12.42)x(0.80+0.78)/2	0.04		
		(-11.68--12.37)x(1.31+0.80)/2	0.73		
		(-11.17--11.68)x(1.66+1.31)/2	0.76		
		(-10.95--11.17)x(1.77+1.66)/2	0.38		
		(-10.65--10.95)x(1.91+1.77)/2	0.55		
		(-10.22--10.65)x(2.11+1.91)/2	0.86		
		(-9.90--10.22)x(2.25+2.11)/2	0.70		
		(-9.48--9.90)x(2.30+2.25)/2	0.96		
		(-8.93--9.48)x(2.35+2.30)/2	1.28		
		(-8.75--8.93)x(2.37+2.35)/2	0.42		
		(-8.62--8.75)x(2.37+2.37)/2	0.31		
		(-8.02--8.62)x(2.35+2.37)/2	1.42		
		(-7.34--8.02)x(2.37+2.35)/2	1.60		
		(-7.28--7.34)x(2.37+2.37)/2	0.14		
		(-7.20--7.28)x(2.37+2.37)/2	0.19		
		(-6.55--7.20)x(2.37+2.37)/2	1.54		
		(-6.07--6.55)x(2.38+2.37)/2	1.14		
		(-5.82--6.07)x(2.39+2.38)/2	0.60		
		(-5.70--5.82)x(2.38+2.39)/2	0.29		
		(-5.67--5.70)x(5.12+2.38)/2	0.11		
		(5.10--5.67)x(5.12+5.12)/2	55.14		
		(3.27-5.10)x(6.34+5.12)/2	-10.49		
		(2.21-3.27)x(6.34+6.34)/2	-6.72		
		(2.38-2.21)x(6.14+6.34)/2	1.06		
		(0.36-2.38)x(6.28+6.14)/2	-12.54		
		(-4.00-0.36)x(6.58+6.28)/2	-28.03		
		(-5.46--4.00)x(6.68+6.58)/2	-9.68		
		(-5.34--5.46)x(6.82+6.68)/2	0.81		
		(-6.41--5.34)x(6.81+6.82)/2	-7.29		
		(-13.39--6.41)x(2.16+6.81)/2	-31.31		
				34.49	
8tris 113.22	R1	(0.15-0.00)x(1.97+1.99)/2	0.30		
		(0.25-0.15)x(1.96+1.97)/2	0.20		
		(0.34-0.25)x(1.94+1.96)/2	0.18		
		(0.98-0.34)x(1.91+1.94)/2	1.23		
		(1.69-0.98)x(1.89+1.91)/2	1.35		
		(1.71-1.69)x(1.89+1.89)/2	0.04		
		(1.73-1.71)x(1.89+1.89)/2	0.04		
		(2.44-1.73)x(1.94+1.89)/2	1.36		
		(3.04-2.44)x(1.97+1.94)/2	1.17		
		(3.16-3.04)x(1.97+1.97)/2	0.24		
		(3.31-3.16)x(1.98+1.97)/2	0.30		
		(3.89-3.31)x(2.01+1.98)/2	1.16		
		(4.38-3.89)x(1.99+2.01)/2	0.98		
		(4.62-4.38)x(1.99+1.99)/2	0.48		
		(4.89-4.62)x(1.98+1.99)/2	0.54		
		(5.73-4.89)x(1.98+1.98)/2	1.66		
		(6.47-5.73)x(2.00+1.98)/2	1.47		
		(6.80-6.47)x(2.01+2.00)/2	0.66		
		(7.08-6.80)x(2.01+2.01)/2	0.56		
		(7.53-7.08)x(2.00+2.01)/2	0.90		
		(8.06-7.53)x(2.00+2.00)/2	1.06		
		(8.25-8.06)x(1.99+2.00)/2	0.38		
		(8.42-8.25)x(1.98+1.99)/2	0.34		
		(8.98-8.42)x(1.98+1.98)/2	1.11		
		(9.64-8.98)x(2.00+1.98)/2	1.31		
		(9.71-9.64)x(2.00+2.00)/2	0.14		
		(9.77-9.71)x(2.00+2.00)/2	0.12		
		(10.07-9.77)x(2.00+2.00)/2	0.60		
		(3.27-10.07)x(6.53+2.00)/2	-29.00		
		(2.21-3.27)x(6.53+6.53)/2	-6.92		
		(2.38-2.21)x(6.33+6.53)/2	1.09		
		(0.36-2.38)x(6.47+6.33)/2	-12.93		
		(-4.00-0.36)x(6.77+6.47)/2	-28.86		
		(-5.46--4.00)x(6.87+6.77)/2	-9.96		
		(-5.34--5.46)x(7.01+6.87)/2	0.83		
		(-6.41--5.34)x(7.01+7.01)/2	-7.50		
		(-9.24--6.41)x(5.12+7.01)/2	-17.16		
		(0.00--9.24)x(5.12+5.12)/2	47.31		
				43.22	
9 120.00	R1	(-8.10--8.42)x(2.44+2.43)/2	0.78		
		(-7.42--8.10)x(2.53+2.44)/2	1.69		
		(-7.38--7.42)x(2.53+2.53)/2	0.10		
		(-7.33--7.38)x(2.53+2.53)/2	0.13		
		(-5.93--7.33)x(2.02+2.53)/2	3.19		
		(-5.92--5.93)x(2.01+2.02)/2	0.02		
		(-5.20--5.92)x(1.96+2.01)/2	1.43		
		(-4.50--5.20)x(1.98+1.96)/2	1.38		
		(-4.47--4.50)x(1.99+1.98)/2	0.06		
		(-4.45--4.47)x(1.99+1.99)/2	0.04		
		(-3.75--4.45)x(2.05+1.99)/2	1.41		
		(-3.08--3.75)x(2.10+2.05)/2	1.39		
		(-3.02--3.08)x(2.10+2.10)/2	0.13		
		(-2.96--3.02)x(2.09+2.10)/2	0.13		
		A RIPORTARE mq	11.88		

STERRI E RIPORTI

N. SEZIONE PROG.	FIG.	ELEMENTI DI CALCOLO	AREA ELEMENTARE mq	AREA FIGURA mq	NOTE
		RIPORTO mq	11.88		
		(-2.30--2.96)x(2.03+2.09)/2	1.36		
		(-1.66--2.30)x(1.99+2.03)/2	1.29		
		(-1.57--1.66)x(1.99+1.99)/2	0.18		
		(-1.48--1.57)x(1.99+1.99)/2	0.18		
		(-0.85--1.48)x(2.01+1.99)/2	1.26		
		(-0.25--0.85)x(2.02+2.01)/2	1.21		
		(-0.12--0.25)x(2.02+2.02)/2	0.26		
		(0.01--0.12)x(2.02+2.02)/2	0.26		
		(0.60-0.01)x(2.03+2.02)/2	1.19		
		(1.17-0.60)x(2.01+2.03)/2	1.15		
		(1.33-1.17)x(2.00+2.01)/2	0.32		
		(1.49-1.33)x(2.00+2.00)/2	0.32		
		(2.05-1.49)x(2.03+2.00)/2	1.13		
		(2.59-2.05)x(2.03+2.03)/2	1.10		
		(2.78-2.59)x(2.04+2.03)/2	0.39		
		(2.97-2.78)x(2.03+2.04)/2	0.39		
		(3.50-2.97)x(2.03+2.03)/2	1.08		
		(4.01-3.50)x(2.02+2.03)/2	1.03		
		(4.23-4.01)x(2.02+2.02)/2	0.44		
		(4.46-4.23)x(2.02+2.02)/2	0.46		
		(4.95-4.46)x(2.01+2.02)/2	0.99		
		(5.42-4.95)x(2.01+2.01)/2	0.94		
		(5.68-5.42)x(2.00+2.01)/2	0.52		
		(5.94-5.68)x(2.01+2.00)/2	0.52		
		(6.40-5.94)x(2.02+2.01)/2	0.93		
		(6.84-6.40)x(2.01+2.02)/2	0.89		
		(7.13-6.84)x(2.01+2.01)/2	0.58		
		(7.43-7.13)x(2.01+2.01)/2	0.60		
		(7.85-7.43)x(2.01+2.01)/2	0.84		
		(8.26-7.85)x(2.01+2.01)/2	0.82		
		(8.58-8.26)x(2.03+2.01)/2	0.65		
		(8.91-8.58)x(2.03+2.03)/2	0.67		
		(9.30-8.91)x(2.04+2.03)/2	0.79		
		(9.68-9.30)x(2.03+2.04)/2	0.77		
		(10.03-9.68)x(2.03+2.03)/2	0.71		
		(10.22-10.03)x(2.04+2.03)/2	0.39		
		(3.27-10.22)x(6.67+2.04)/2	-30.27		
		(2.21-3.27)x(6.67+6.67)/2	-7.07		
		(2.38-2.21)x(6.46+6.67)/2	1.12		
		(0.36-2.38)x(6.60+6.46)/2	-13.19		
		(-4.00-0.36)x(6.91+6.60)/2	-29.45		
		(-5.46--4.00)x(7.01+6.91)/2	-10.16		
		(-5.34--5.46)x(7.14+7.01)/2	0.85		
		(-6.41--5.34)x(7.14+7.14)/2	-7.64		
		(-9.44--6.41)x(5.12+7.14)/2	-18.57		
		(-8.42--9.44)x(5.12+5.12)/2	5.22		
				70.67	
10 135.00	R1	(-13.84--14.31)x(2.08+2.09)/2	0.98		
		(-13.32--13.84)x(2.06+2.08)/2	1.08		
		(-13.11--13.32)x(2.07+2.06)/2	0.43		
		(-12.84--13.11)x(2.06+2.07)/2	0.56		
		(-12.38--12.84)x(2.06+2.06)/2	0.95		
		(-12.00--12.38)x(2.06+2.06)/2	0.78		
		(-11.65--12.00)x(2.07+2.06)/2	0.72		
		(-11.22--11.65)x(2.07+2.07)/2	0.89		
		(-10.92--11.22)x(2.07+2.07)/2	0.62		
		(-10.68--10.92)x(2.07+2.07)/2	0.50		
		(-10.19--10.68)x(2.05+2.07)/2	1.01		
		(-9.60--10.19)x(2.06+2.05)/2	1.21		
		(-9.46--9.60)x(2.07+2.06)/2	0.29		
		(-9.35--9.46)x(2.08+2.07)/2	0.23		
		(-8.73--9.35)x(2.09+2.08)/2	1.29		
		(-8.03--8.73)x(2.10+2.09)/2	1.47		
		(-8.01--8.03)x(2.10+2.10)/2	0.04		
		(-7.97--8.01)x(2.10+2.10)/2	0.08		
		(-7.28--7.97)x(2.11+2.10)/2	1.45		
		(-6.71--7.28)x(2.11+2.11)/2	1.20		
		(-6.55--6.71)x(2.12+2.11)/2	0.34		
		(-6.35--6.55)x(2.11+2.12)/2	0.42		
		(-5.82--6.35)x(2.09+2.11)/2	1.11		
		(-5.39--5.82)x(2.09+2.09)/2	0.90		
		(-5.09--5.39)x(2.09+2.09)/2	0.63		
		(-4.73--5.09)x(2.11+2.09)/2	0.76		
		(-4.36--4.73)x(2.11+2.11)/2	0.78		
		(-4.06--4.36)x(2.10+2.11)/2	0.63		
		(-3.63--4.06)x(2.09+2.10)/2	0.90		
		(-3.10--3.63)x(2.07+2.09)/2	1.10		
		(-2.90--3.10)x(2.07+2.07)/2	0.41		
		(-2.74--2.90)x(2.06+2.07)/2	0.33		
		(-2.18--2.74)x(2.04+2.06)/2	1.15		
		(-1.48--2.18)x(2.05+2.04)/2	1.43		
		(-1.45--1.48)x(2.05+2.05)/2	0.06		
		(-1.42--1.45)x(2.05+2.05)/2	0.06		
		(-0.72--1.42)x(2.08+2.05)/2	1.45		
		(-0.10--0.72)x(2.12+2.08)/2	1.30		
		(0.01--0.10)x(2.12+2.12)/2	0.23		
		(0.14-0.01)x(2.12+2.12)/2	0.28		
		(0.74-0.14)x(2.12+2.12)/2	1.27		
		(1.23-0.74)x(2.17+2.12)/2	1.05		
		(1.47-1.23)x(2.19+2.17)/2	0.52		
		(1.77-1.47)x(2.21+2.19)/2	0.66		
		(2.20-1.77)x(2.19+2.21)/2	0.95		
		(2.55-2.20)x(2.19+2.19)/2	0.77		
		(3.39-2.55)x(2.20+2.19)/2	1.84		
		(3.87-3.39)x(2.19+2.20)/2	1.05		
		(4.38-3.87)x(2.16+2.19)/2	1.11		
		(5.01-4.38)x(2.12+2.16)/2	1.35		
		(5.11-5.01)x(2.12+2.12)/2	0.21		
		(5.19-5.11)x(2.11+2.12)/2	0.17		
		(5.84-5.19)x(2.10+2.11)/2	1.37		
		(6.51-5.84)x(2.11+2.10)/2	1.41		
		(6.57-6.51)x(2.11+2.11)/2	0.13		
		(6.64-6.57)x(2.11+2.11)/2	0.15		
		(7.30-6.64)x(2.14+2.11)/2	1.40		
		(7.84-7.30)x(2.15+2.14)/2	1.16		
		A RIPORTARE mq	46.62		

STERRI E RIPORTI

N. SEZIONE PROG.	FIG.	ELEMENTI DI CALCOLO	AREA ELEMENTARE mq	AREA FIGURA mq	NOTE
		RIPORTO mq	46.62		
		(8.03-7.84)x(2.16+2.15)/2	0.41		
		(8.26-8.03)x(2.17+2.16)/2	0.50		
		(8.76-8.26)x(2.18+2.17)/2	1.09		
		(9.16-8.76)x(2.19+2.18)/2	0.87		
		(9.49-9.16)x(2.20+2.19)/2	0.72		
		(9.89-9.49)x(2.19+2.20)/2	0.88		
		(10.21-9.89)x(2.18+2.19)/2	0.70		
		(10.33-10.21)x(2.18+2.18)/2	0.26		
		(3.27-10.33)x(6.88+2.18)/2	-31.98		
		(2.21-3.27)x(6.88+6.88)/2	-7.29		
		(2.38-2.21)x(6.68+6.88)/2	1.15		
		(0.36-2.38)x(6.82+6.68)/2	-13.63		
		(-4.00-0.36)x(7.12+6.82)/2	-30.39		
		(-5.46--4.00)x(7.22+7.12)/2	-10.47		
		(-5.34--5.46)x(7.36+7.22)/2	0.87		
		(-6.41--5.34)x(7.36+7.36)/2	-7.88		
		(-14.31--6.41)x(2.09+7.36)/2	-37.33		
				84.90	
11 150.00	R1	(-13.98--14.36)x(2.15+2.16)/2	0.82		
		(-13.67--13.98)x(2.14+2.15)/2	0.66		
		(-13.16--13.67)x(2.13+2.14)/2	1.09		
		(-12.92--13.16)x(2.14+2.13)/2	0.51		
		(-12.77--12.92)x(2.15+2.14)/2	0.32		
		(-12.18--12.77)x(2.20+2.15)/2	1.28		
		(-11.57--12.18)x(2.24+2.20)/2	1.35		
		(-11.44--11.57)x(2.24+2.24)/2	0.29		
		(-11.23--11.44)x(2.26+2.24)/2	0.47		
		(-10.69--11.23)x(2.26+2.26)/2	1.22		
		(-10.36--10.69)x(2.27+2.26)/2	0.75		
		(-9.95--10.36)x(2.28+2.27)/2	0.93		
		(-9.29--9.95)x(2.25+2.28)/2	1.49		
		(-9.20--9.29)x(2.24+2.25)/2	0.20		
		(-9.15--9.20)x(2.24+2.24)/2	0.11		
		(-8.46--9.15)x(2.23+2.24)/2	1.54		
		(-7.94--8.46)x(2.25+2.23)/2	1.16		
		(-7.36--7.94)x(2.23+2.25)/2	1.30		
		(-6.73--7.36)x(2.22+2.23)/2	1.40		
		(-6.23--6.73)x(2.22+2.22)/2	1.11		
		(-5.52--6.23)x(2.20+2.22)/2	1.57		
		(-5.48--5.52)x(2.20+2.20)/2	0.09		
		(-5.42--5.48)x(2.20+2.20)/2	0.13		
		(-4.74--5.42)x(2.23+2.20)/2	1.51		
		(-4.31--4.74)x(2.23+2.23)/2	0.96		
		(-3.99--4.31)x(2.24+2.23)/2	0.72		
		(-3.49--3.99)x(2.24+2.24)/2	1.12		
		(-3.25--3.49)x(2.23+2.24)/2	0.54		
		(-3.10--3.25)x(2.23+2.23)/2	0.33		
		(-2.51--3.10)x(2.22+2.23)/2	1.31		
		(-1.89--2.51)x(2.22+2.22)/2	1.38		
		(-1.76--1.89)x(2.22+2.22)/2	0.29		
		(-1.55--1.76)x(2.23+2.22)/2	0.47		
		(-1.02--1.55)x(2.26+2.23)/2	1.19		
		(-0.68--1.02)x(2.26+2.26)/2	0.77		
		(-0.27--0.68)x(2.23+2.26)/2	0.92		
		(0.38--0.27)x(2.22+2.23)/2	1.45		
		(0.47-0.38)x(2.22+2.22)/2	0.20		
		(0.52-0.47)x(2.22+2.22)/2	0.11		
		(1.21-0.52)x(2.22+2.22)/2	1.53		
		(1.73-1.21)x(2.21+2.22)/2	1.15		
		(1.96-1.73)x(2.22+2.21)/2	0.51		
		(2.32-1.96)x(2.23+2.22)/2	0.80		
		(2.70-2.32)x(2.23+2.23)/2	0.85		
		(2.94-2.70)x(2.22+2.23)/2	0.53		
		(3.45-2.94)x(2.21+2.22)/2	1.13		
		(4.15-3.45)x(2.20+2.21)/2	1.54		
		(4.19-4.15)x(2.19+2.20)/2	0.09		
		(4.25-4.19)x(2.19+2.19)/2	0.13		
		(4.93-4.25)x(2.16+2.19)/2	1.48		
		(5.36-4.93)x(2.14+2.16)/2	0.92		
		(5.68-5.36)x(2.12+2.14)/2	0.68		
		(6.19-5.68)x(2.08+2.12)/2	1.07		
		(6.42-6.19)x(2.06+2.08)/2	0.48		
		(6.57-6.42)x(2.06+2.06)/2	0.31		
		(7.17-6.57)x(2.02+2.06)/2	1.22		
		(7.78-7.17)x(1.89+2.02)/2	1.19		
		(7.91-7.78)x(1.88+1.89)/2	0.25		
		(8.12-7.91)x(1.87+1.88)/2	0.39		
		(8.65-8.12)x(1.99+1.87)/2	1.02		
		(8.99-8.65)x(2.01+1.99)/2	0.68		
		(9.40-8.99)x(2.04+2.01)/2	0.83		
		(10.06-9.40)x(2.07+2.04)/2	1.36		
		(10.14-10.06)x(2.08+2.07)/2	0.17		
		(10.20-10.14)x(2.08+2.08)/2	0.12		
		(10.61-10.20)x(2.09+2.08)/2	0.85		
		(3.27-10.61)x(6.98+2.09)/2	-33.29		
		(2.21-3.27)x(6.99+6.98)/2	-7.40		
		(2.38-2.21)x(6.78+6.99)/2	1.17		
		(0.36-2.38)x(6.92+6.78)/2	-13.84		
		(-4.00-0.36)x(7.22+6.92)/2	-30.83		
		(-5.46--4.00)x(7.32+7.22)/2	-10.61		
		(-5.34--5.46)x(7.46+7.32)/2	0.89		
		(-6.41--5.34)x(7.46+7.46)/2	-7.98		
		(-14.36--6.41)x(2.16+7.46)/2	-38.24		
				85.79	
12 165.00	R1	(-14.24--14.31)x(2.18+2.18)/2	0.15		
		(-14.11--14.24)x(2.19+2.18)/2	0.28		
		(-13.82--14.11)x(2.24+2.19)/2	0.64		
		(-13.34--13.82)x(2.29+2.24)/2	1.09		
		(-13.11--13.34)x(2.32+2.29)/2	0.53		
		(-12.57--13.11)x(2.32+2.32)/2	1.25		
		(-11.99--12.57)x(2.29+2.32)/2	1.34		
		(-11.79--11.99)x(2.29+2.29)/2	0.46		
		(-11.38--11.79)x(2.29+2.29)/2	0.94		
		(-11.02--11.38)x(2.30+2.29)/2	0.83		
		(-10.86--11.02)x(2.29+2.30)/2	0.37		
		A RIPORTARE mq	7.88		

STERRI E RIPORTI

N. SEZIONE PROG.	FIG.	ELEMENTI DI CALCOLO	AREA ELEMENTARE mq	AREA FIGURA mq	NOTE
		RIPORTO mq	7.88		
		(-10.25--10.86)x(2.28+2.29)/2	1.39		
		(-9.73--10.25)x(2.28+2.28)/2	1.19		
		(-9.48--9.73)x(2.28+2.28)/2	0.57		
		(-8.94--9.48)x(2.24+2.28)/2	1.22		
		(-8.70--8.94)x(2.24+2.24)/2	0.54		
		(-8.60--8.70)x(2.24+2.24)/2	0.22		
		(-7.93--8.60)x(2.32+2.24)/2	1.53		
		(-7.47--7.93)x(2.33+2.32)/2	1.07		
		(-7.16--7.47)x(2.33+2.33)/2	0.72		
		(-6.50--7.16)x(2.31+2.33)/2	1.53		
		(-6.39--6.50)x(2.30+2.31)/2	0.25		
		(-6.34--6.39)x(2.30+2.30)/2	0.11		
		(-5.61--6.34)x(2.29+2.30)/2	1.68		
		(-5.21--5.61)x(2.28+2.29)/2	0.91		
		(-4.84--5.21)x(2.28+2.28)/2	0.84		
		(-4.08--4.84)x(2.25+2.28)/2	1.72		
		(-4.07--4.08)x(2.25+2.25)/2	0.02		
		(-4.05--4.07)x(2.25+2.25)/2	0.05		
		(-3.30--4.05)x(2.26+2.25)/2	1.69		
		(-2.95--3.30)x(2.26+2.26)/2	0.79		
		(-2.52--2.95)x(2.26+2.26)/2	0.97		
		(-1.82--2.52)x(2.27+2.26)/2	1.59		
		(-1.75--1.82)x(2.27+2.27)/2	0.16		
		(-1.61--1.75)x(2.27+2.27)/2	0.32		
		(-0.98--1.61)x(2.27+2.27)/2	1.43		
		(-0.69--0.98)x(2.27+2.27)/2	0.66		
		(-0.21--0.69)x(2.27+2.27)/2	1.09		
		(0.44--0.21)x(2.27+2.27)/2	1.48		
		(0.83-0.44)x(2.27+2.27)/2	0.89		
		(1.57-0.83)x(2.26+2.27)/2	1.68		
		(2.11-1.57)x(2.26+2.26)/2	1.22		
		(2.70-2.11)x(2.28+2.26)/2	1.34		
		(2.88-2.70)x(2.29+2.28)/2	0.41		
		(3.27-2.88)x(2.30+2.29)/2	0.90		
		(3.65-3.27)x(2.31+2.30)/2	0.88		
		(3.83-3.65)x(2.31+2.31)/2	0.42		
		(4.43-3.83)x(2.30+2.31)/2	1.38		
		(4.96-4.43)x(2.29+2.30)/2	1.22		
		(5.20-4.96)x(2.29+2.29)/2	0.55		
		(5.71-5.20)x(2.29+2.29)/2	1.17		
		(5.97-5.71)x(2.28+2.29)/2	0.59		
		(6.09-5.97)x(2.28+2.28)/2	0.27		
		(6.74-6.09)x(2.27+2.28)/2	1.48		
		(7.22-6.74)x(2.26+2.27)/2	1.09		
		(7.52-7.22)x(2.26+2.26)/2	0.68		
		(8.15-7.52)x(2.26+2.26)/2	1.42		
		(8.29-8.15)x(2.26+2.26)/2	0.32		
		(8.35-8.29)x(2.26+2.26)/2	0.14		
		(9.06-8.35)x(2.23+2.26)/2	1.59		
		(9.48-9.06)x(2.23+2.23)/2	0.94		
		(9.83-9.48)x(2.22+2.23)/2	0.78		
		(10.38-9.83)x(2.23+2.22)/2	1.22		
		(3.27-10.38)x(6.97+2.23)/2	-32.71		
		(2.21-3.27)x(6.98+6.97)/2	-7.39		
		(2.38-2.21)x(6.77+6.98)/2	1.17		
		(0.36-2.38)x(6.91+6.77)/2	-13.82		
		(-4.00-0.36)x(7.21+6.91)/2	-30.78		
		(-5.46--4.00)x(7.31+7.21)/2	-10.60		
		(-5.34--5.46)x(7.45+7.31)/2	0.89		
		(-6.41--5.34)x(7.45+7.45)/2	-7.97		
		(-14.31--6.41)x(2.18+7.45)/2	-38.04		
				83.05	
13 180.00	R1	(-12.73--13.02)x(2.92+2.92)/2	0.85		
		(-12.17--12.73)x(2.93+2.92)/2	1.64		
		(-11.10--12.17)x(2.89+2.93)/2	3.11		
		(-11.09--11.10)x(2.89+2.89)/2	0.03		
		(-10.28--11.09)x(2.71+2.89)/2	2.27		
		(-10.02--10.28)x(2.66+2.71)/2	0.70		
		(-9.46--10.02)x(2.62+2.66)/2	1.48		
		(-8.94--9.46)x(2.55+2.62)/2	1.34		
		(-8.65--8.94)x(2.55+2.55)/2	0.74		
		(-7.86--8.65)x(2.52+2.55)/2	2.00		
		(-7.83--7.86)x(2.52+2.52)/2	0.08		
		(-7.72--7.83)x(2.51+2.52)/2	0.28		
		(-7.01--7.72)x(2.45+2.51)/2	1.76		
		(-6.79--7.01)x(2.43+2.45)/2	0.54		
		(-6.20--6.79)x(2.38+2.43)/2	1.42		
		(-5.71--6.20)x(2.36+2.38)/2	1.16		
		(-5.38--5.71)x(2.33+2.36)/2	0.77		
		(-4.64--5.38)x(2.28+2.33)/2	1.71		
		(-4.57--4.64)x(2.28+2.28)/2	0.16		
		(-4.35--4.57)x(2.28+2.28)/2	0.50		
		(-3.75--4.35)x(2.28+2.28)/2	1.37		
		(-3.56--3.75)x(2.27+2.28)/2	0.43		
		(-2.93--3.56)x(2.24+2.27)/2	1.42		
		(-2.48--2.93)x(2.22+2.24)/2	1.00		
		(-2.12--2.48)x(2.20+2.22)/2	0.80		
		(-1.41--2.12)x(2.17+2.20)/2	1.55		
		(-1.30--1.41)x(2.17+2.17)/2	0.24		
		(-0.97--1.30)x(2.17+2.17)/2	0.72		
		(-0.49--0.97)x(2.18+2.17)/2	1.04		
		(-0.33--0.49)x(2.17+2.18)/2	0.35		
		(0.33--0.33)x(2.21+2.17)/2	1.45		
		(0.74-0.33)x(2.24+2.21)/2	0.91		
		(1.15-0.74)x(2.26+2.24)/2	0.92		
		(1.82-1.15)x(2.28+2.26)/2	1.52		
		(1.96-1.82)x(2.27+2.28)/2	0.32		
		(2.41-1.96)x(2.28+2.27)/2	1.02		
		(2.78-2.41)x(2.29+2.28)/2	0.85		
		(2.90-2.78)x(2.29+2.29)/2	0.27		
		(3.59-2.90)x(2.26+2.29)/2	1.57		
		(3.97-3.59)x(2.27+2.26)/2	0.86		
		(4.41-3.97)x(2.27+2.27)/2	1.00		
		(5.05-4.41)x(2.24+2.27)/2	1.44		
		(5.23-5.05)x(2.24+2.24)/2	0.40		
		A RIPORTARE mq	43.99		

STERRI E RIPORTI

N. SEZIONE PROG.	FIG.	ELEMENTI DI CALCOLO	AREA ELEMENTARE mq	AREA FIGURA mq	NOTE
		RIPORTO mq	43.99		
		(5.78-5.23)x(2.22+2.24)/2	1.23		
		(6.04-5.78)x(2.21+2.22)/2	0.58		
		(6.13-6.04)x(2.21+2.21)/2	0.20		
		(6.28-6.13)x(2.20+2.21)/2	0.33		
		(7.20-6.28)x(2.17+2.20)/2	2.01		
		(7.68-7.20)x(2.16+2.17)/2	1.04		
		(8.28-7.68)x(2.14+2.16)/2	1.29		
		(8.49-8.28)x(2.14+2.14)/2	0.45		
		(9.16-8.49)x(2.14+2.14)/2	1.43		
		(9.31-9.16)x(2.14+2.14)/2	0.32		
		(9.35-9.31)x(2.13+2.14)/2	0.09		
		(10.12-9.35)x(2.15+2.13)/2	1.65		
		(10.31-10.12)x(2.15+2.15)/2	0.41		
		(3.26-10.31)x(6.85+2.15)/2	-31.73		
		(2.19-3.26)x(6.85+6.85)/2	-7.33		
		(2.36-2.19)x(6.65+6.85)/2	1.15		
		(0.35-2.36)x(6.79+6.65)/2	-13.51		
		(-4.00-0.35)x(7.09+6.79)/2	-30.19		
		(-5.46--4.00)x(7.19+7.09)/2	-10.42		
		(-5.34--5.46)x(7.33+7.19)/2	0.87		
		(-6.41--5.34)x(7.32+7.33)/2	-7.84		
		(-13.02--6.41)x(2.92+7.32)/2	-33.84		
				77.82	
14 195.00	R1	(-9.63--10.11)x(1.99+1.87)/2	0.93		
		(-9.06--9.63)x(2.13+1.99)/2	1.17		
		(-8.76--9.06)x(2.21+2.13)/2	0.65		
		(-8.02--8.76)x(2.39+2.21)/2	1.70		
		(-7.30--8.02)x(2.57+2.39)/2	1.79		
		(-6.97--7.30)x(2.66+2.57)/2	0.86		
		(-6.16--6.97)x(2.77+2.66)/2	2.20		
		(-5.92--6.16)x(2.82+2.77)/2	0.67		
		(-5.29--5.92)x(2.82+2.82)/2	1.78		
		(-4.87--5.29)x(2.83+2.82)/2	1.19		
		(-4.42--4.87)x(2.85+2.83)/2	1.28		
		(-3.83--4.42)x(2.86+2.85)/2	1.68		
		(-3.56--3.83)x(2.86+2.86)/2	0.77		
		(-2.78--3.56)x(2.88+2.86)/2	2.24		
		(-2.69--2.78)x(2.88+2.88)/2	0.26		
		(-2.26--2.69)x(2.89+2.88)/2	1.24		
		(-1.82--2.26)x(2.90+2.89)/2	1.27		
		(-1.73--1.82)x(2.90+2.90)/2	0.26		
		(-0.96--1.73)x(2.90+2.90)/2	2.23		
		(-0.69--0.96)x(2.90+2.90)/2	0.78		
		(-0.09--0.69)x(2.86+2.90)/2	1.73		
		(0.36--0.09)x(2.85+2.86)/2	1.28		
		(0.78-0.36)x(2.76+2.85)/2	1.18		
		(1.41-0.78)x(2.70+2.76)/2	1.72		
		(1.65-1.41)x(2.68+2.70)/2	0.65		
		(2.46-1.65)x(2.51+2.68)/2	2.10		
		(2.51-2.46)x(2.51+2.51)/2	0.13		
		(2.79-2.51)x(2.49+2.51)/2	0.70		
		(3.38-2.79)x(2.46+2.49)/2	1.46		
		(3.50-3.38)x(2.45+2.46)/2	0.29		
		(4.25-3.50)x(2.43+2.45)/2	1.83		
		(4.55-4.25)x(2.42+2.43)/2	0.73		
		(5.11-4.55)x(2.36+2.42)/2	1.34		
		(5.60-5.11)x(2.30+2.36)/2	1.14		
		(5.98-5.60)x(2.29+2.30)/2	0.87		
		(6.64-5.98)x(2.25+2.29)/2	1.50		
		(6.85-6.64)x(2.25+2.25)/2	0.47		
		(7.69-6.85)x(2.26+2.25)/2	1.89		
		(7.72-7.69)x(2.26+2.26)/2	0.07		
		(7.84-7.72)x(2.26+2.26)/2	0.27		
		(8.58-7.84)x(2.25+2.26)/2	1.67		
		(8.74-8.58)x(2.25+2.25)/2	0.36		
		(9.45-8.74)x(2.21+2.25)/2	1.58		
		(9.79-9.45)x(2.18+2.21)/2	0.75		
		(9.84-9.79)x(2.18+2.18)/2	0.11		
		(3.14-9.84)x(6.65+2.18)/2	-29.58		
		(2.07-3.14)x(6.65+6.65)/2	-7.12		
		(2.23-2.07)x(6.46+6.65)/2	1.05		
		(0.23-2.23)x(6.57+6.46)/2	-13.03		
		(-4.00-0.23)x(6.79+6.57)/2	-28.26		
		(-5.46--4.00)x(6.87+6.79)/2	-9.97		
		(-5.34--5.46)x(7.01+6.87)/2	0.83		
		(-6.41--5.34)x(7.01+7.01)/2	-7.50		
		(-10.13--6.41)x(4.53+7.01)/2	-21.46		
		(-10.11--10.13)x(1.87+4.53)/2	0.06		
				64.21	
15 210.00	R1	(-2.69--2.79)x(2.23+2.17)/2	0.22		
		(-2.21--2.69)x(2.36+2.23)/2	1.10		
		(-1.79--2.21)x(2.53+2.36)/2	1.03		
		(-1.17--1.79)x(2.66+2.53)/2	1.61		
		(-0.89--1.17)x(2.66+2.66)/2	0.74		
		(-0.13--0.89)x(2.70+2.66)/2	2.04		
		(0.01--0.13)x(2.71+2.70)/2	0.38		
		(0.90-0.01)x(2.71+2.71)/2	2.41		
		(0.91-0.90)x(2.71+2.71)/2	0.03		
		(0.99-0.91)x(2.71+2.71)/2	0.22		
		(1.81-0.99)x(2.71+2.71)/2	2.22		
		(1.94-1.81)x(2.71+2.71)/2	0.35		
		(2.71-1.94)x(2.72+2.71)/2	2.09		
		(2.98-2.71)x(2.71+2.72)/2	0.73		
		(3.61-2.98)x(2.73+2.71)/2	1.71		
		(4.01-3.61)x(2.73+2.73)/2	1.09		
		(4.51-4.01)x(2.76+2.73)/2	1.37		
		(5.05-4.51)x(2.81+2.76)/2	1.50		
		(5.41-5.05)x(2.83+2.81)/2	1.02		
		(6.09-5.41)x(2.86+2.83)/2	1.93		
		(6.32-6.09)x(2.86+2.86)/2	0.66		
		(7.12-6.32)x(2.87+2.86)/2	2.29		
		(7.22-7.12)x(2.87+2.87)/2	0.29		
		(7.82-7.22)x(2.88+2.87)/2	1.73		
		(8.12-7.82)x(2.89+2.88)/2	0.87		
		(8.16-8.12)x(2.89+2.89)/2	0.12		
		A RIPORTARE mq	29.75		

STERRI E RIPORTI

N. SEZIONE PROG.	FIG.	ELEMENTI DI CALCOLO	AREA ELEMENTARE mq	AREA FIGURA mq	NOTE
		RIPORTO mq	29.75		
		(8.17-8.16)x(2.89+2.89)/2	0.03		
		(2.99-8.17)x(6.34+2.89)/2	-23.91		
		(1.93-2.99)x(6.34+6.34)/2	-6.72		
		(2.08-1.93)x(6.16+6.34)/2	0.94		
		(0.08-2.08)x(6.23+6.16)/2	-12.39		
		(-4.00-0.08)x(6.37+6.23)/2	-25.70		
		(-5.47--4.00)x(6.42+6.37)/2	-9.40		
		(-5.34--5.47)x(6.57+6.42)/2	0.84		
		(-6.41--5.34)x(6.57+6.57)/2	-7.03		
		(-8.62--6.41)x(5.10+6.57)/2	-12.90		
		(-2.79--8.62)x(5.10+5.10)/2	29.73		
				36.76	
15bis 216.28	R1	(0.63-0.00)x(2.07+1.87)/2	1.24		
		(0.77-0.63)x(2.11+2.07)/2	0.29		
		(0.79-0.77)x(2.12+2.11)/2	0.04		
		(1.67-0.79)x(2.34+2.12)/2	1.96		
		(1.82-1.67)x(2.36+2.34)/2	0.35		
		(2.58-1.82)x(2.39+2.36)/2	1.80		
		(2.86-2.58)x(2.41+2.39)/2	0.67		
		(3.48-2.86)x(2.44+2.41)/2	1.50		
		(3.90-3.48)x(2.48+2.44)/2	1.03		
		(4.39-3.90)x(2.51+2.48)/2	1.22		
		(4.93-4.39)x(2.56+2.51)/2	1.37		
		(5.29-4.93)x(2.57+2.56)/2	0.92		
		(5.97-5.29)x(2.63+2.57)/2	1.77		
		(6.20-5.97)x(2.63+2.63)/2	0.60		
		(7.00-6.20)x(2.67+2.63)/2	2.12		
		(7.11-7.00)x(2.67+2.67)/2	0.29		
		(7.81-7.11)x(2.69+2.67)/2	1.88		
		(8.01-7.81)x(2.70+2.69)/2	0.54		
		(8.04-8.01)x(2.70+2.70)/2	0.08		
		(8.14-8.04)x(2.70+2.70)/2	0.27		
		(2.94-8.14)x(6.17+2.70)/2	-23.06		
		(1.87-2.94)x(6.18+6.17)/2	-6.61		
		(2.03-1.87)x(5.99+6.18)/2	0.97		
		(0.03-2.03)x(6.05+5.99)/2	-12.04		
		(-4.00-0.03)x(6.16+6.05)/2	-24.60		
		(-5.47--4.00)x(6.20+6.16)/2	-9.08		
		(-5.34--5.47)x(6.36+6.20)/2	0.82		
		(-6.41--5.34)x(6.35+6.36)/2	-6.80		
		(-8.29--6.41)x(5.10+6.35)/2	-10.76		
		(0.00--8.29)x(5.10+5.10)/2	42.28		
				28.94	
16 225.00	R1	(-4.00-0.00)x(5.87+5.77)/2	-23.28		
		(-5.47--4.00)x(5.91+5.87)/2	-8.66		
		(-5.34--5.47)x(6.07+5.91)/2	0.78		
		(-6.41--5.34)x(6.07+6.07)/2	-6.49		
		(-10.76--6.41)x(3.16+6.07)/2	-20.08		
		(-10.39--10.76)x(3.16+3.16)/2	1.17		
		(-10.30--10.39)x(3.16+3.16)/2	0.28		
		(-9.65--10.30)x(3.18+3.16)/2	2.06		
		(-9.39--9.65)x(3.19+3.18)/2	0.83		
		(-9.35--9.39)x(3.19+3.19)/2	0.13		
		(-8.49--9.35)x(3.21+3.19)/2	2.75		
		(-8.32--8.49)x(3.21+3.21)/2	0.55		
		(-7.58--8.32)x(3.20+3.21)/2	2.37		
		(-7.28--7.58)x(3.21+3.20)/2	0.96		
		(-6.67--7.28)x(3.18+3.21)/2	1.95		
		(-6.50--6.67)x(3.18+3.18)/2	0.54		
		(0.00--6.50)x(5.10+5.10)/2	33.15		
				10.99	
16 225.00	R2	(1.87-2.93)x(5.90+5.89)/2	-6.25		
		(2.02-1.87)x(5.72+5.90)/2	0.87		
		(0.00-2.02)x(5.77+5.72)/2	-11.60		
		(3.83-0.00)x(5.10+5.10)/2	19.53		
		(4.11-3.83)x(1.69+1.77)/2	0.48		
		(4.20-4.11)x(1.70+1.69)/2	0.15		
		(4.81-4.20)x(1.72+1.70)/2	1.04		
		(5.10-4.81)x(1.70+1.72)/2	0.50		
		(5.15-5.10)x(1.72+1.70)/2	0.09		
		(6.01-5.15)x(1.80+1.72)/2	1.51		
		(6.18-6.01)x(1.85+1.80)/2	0.31		
		(6.92-6.18)x(1.95+1.85)/2	1.41		
		(7.22-6.92)x(2.00+1.95)/2	0.59		
		(7.82-7.22)x(2.10+2.00)/2	1.23		
		(8.25-7.82)x(2.15+2.10)/2	0.91		
		(8.49-8.25)x(2.19+2.15)/2	0.52		
		(2.93-8.49)x(5.89+2.19)/2	-22.46		
				11.17	
17 240.00	R1	(-10.15--10.35)x(2.96+2.96)/2	0.59		
		(-9.40--10.15)x(2.97+2.96)/2	2.22		
		(-9.22--9.40)x(2.97+2.97)/2	0.53		
		(-8.37--9.22)x(3.00+2.97)/2	2.54		
		(-8.29--8.37)x(3.00+3.00)/2	0.24		
		(-7.63--8.29)x(2.99+3.00)/2	1.98		
		(-7.37--7.63)x(2.99+2.99)/2	0.78		
		(-7.34--7.37)x(2.99+2.99)/2	0.09		
		(-6.44--7.34)x(3.04+2.99)/2	2.71		
		(-6.30--6.44)x(3.04+3.04)/2	0.43		
		(-5.51--6.30)x(3.09+3.04)/2	2.42		
		(-5.27--5.51)x(3.10+3.09)/2	0.74		
		(-4.58--5.27)x(3.09+3.10)/2	2.14		
		(-4.24--4.58)x(3.10+3.09)/2	1.05		
		(-3.66--4.24)x(3.09+3.10)/2	1.80		
		(-3.21--3.66)x(3.07+3.09)/2	1.39		
		(-2.73--3.21)x(3.06+3.07)/2	1.47		
		(-2.18--2.73)x(3.05+3.06)/2	1.68		
		(-1.80--2.18)x(3.06+3.05)/2	1.16		
		(-1.14--1.80)x(3.07+3.06)/2	2.02		
		(-0.32--1.14)x(3.09+3.07)/2	2.53		
		(-0.11--0.32)x(3.10+3.09)/2	0.65		
		(0.00--0.11)x(3.10+3.10)/2	0.34		
		(3.35-0.00)x(5.10+5.10)/2	17.09		
		(3.07-3.35)x(5.29+5.10)/2	-1.45		
		(2.00-3.07)x(5.29+5.29)/2	-5.66		
		A RIPORTARE mq	41.48		

STERRI E RIPORTI

N. SEZIONE PROG.	FIG.	ELEMENTI DI CALCOLO	AREA ELEMENTARE mq	AREA FIGURA mq	NOTE
		RIPORTO mq	41.48		
		(2.16-2.00)x(5.10+5.29)/2	0.83		
		(0.16-2.16)x(5.19+5.10)/2	-10.29		
		(-4.00-0.16)x(5.37+5.19)/2	-21.96		
		(-5.47--4.00)x(5.44+5.37)/2	-7.95		
		(-5.34--5.47)x(5.59+5.44)/2	0.72		
		(-6.41--5.34)x(5.58+5.59)/2	-5.98		
		(-10.35--6.41)x(2.96+5.58)/2	-16.82		
				19.97	
18 255.00	R1	(-8.36--8.98)x(2.76+2.76)/2	1.71		
		(-8.20--8.36)x(2.76+2.76)/2	0.44		
		(-7.37--8.20)x(2.81+2.76)/2	2.31		
		(-7.17--7.37)x(2.82+2.81)/2	0.56		
		(-6.37--7.17)x(2.84+2.82)/2	2.26		
		(-6.15--6.37)x(2.86+2.84)/2	0.63		
		(-5.38--6.15)x(2.89+2.86)/2	2.21		
		(-5.12--5.38)x(2.89+2.89)/2	0.75		
		(-4.39--5.12)x(2.91+2.89)/2	2.12		
		(-4.09--4.39)x(2.93+2.91)/2	0.88		
		(-3.39--4.09)x(2.93+2.93)/2	2.05		
		(-3.07--3.39)x(2.93+2.93)/2	0.94		
		(-2.40--3.07)x(2.94+2.93)/2	1.97		
		(-2.04--2.40)x(2.95+2.94)/2	1.06		
		(-1.40--2.04)x(2.97+2.95)/2	1.89		
		(-1.02--1.40)x(2.97+2.97)/2	1.13		
		(-0.41--1.02)x(2.99+2.97)/2	1.82		
		(0.01--0.41)x(2.99+2.99)/2	1.26		
		(0.45-0.01)x(3.01+2.99)/2	1.32		
		(1.03-0.45)x(3.04+3.01)/2	1.75		
		(1.58-1.03)x(3.07+3.04)/2	1.68		
		(2.06-1.58)x(3.10+3.07)/2	1.48		
		(2.57-2.06)x(3.10+3.10)/2	1.58		
		(3.09-2.57)x(3.12+3.10)/2	1.62		
		(3.57-3.09)x(3.10+3.12)/2	1.49		
		(4.11-3.57)x(3.09+3.10)/2	1.67		
		(4.56-4.11)x(3.08+3.09)/2	1.39		
		(5.14-4.56)x(3.07+3.08)/2	1.78		
		(5.25-5.14)x(3.07+3.07)/2	0.34		
		(3.19-5.25)x(4.66+4.74)/2	-9.68		
		(2.12-3.19)x(4.66+4.66)/2	-4.99		
		(2.29-2.12)x(4.46+4.66)/2	0.78		
		(0.28-2.29)x(4.58+4.46)/2	-9.09		
		(-4.00-0.28)x(4.84+4.58)/2	-20.16		
		(-5.46--4.00)x(4.93+4.84)/2	-7.13		
		(-5.34--5.46)x(5.07+4.93)/2	0.60		
		(-6.41--5.34)x(5.06+5.07)/2	-5.42		
		(-8.98--6.41)x(3.35+5.06)/2	-10.81		
				23.81	
19bis 274.71	R1	(-4.74--5.00)x(2.96+2.95)/2	0.77		
		(-4.37--4.74)x(2.99+2.96)/2	1.10		
		(-3.63--4.37)x(2.86+2.99)/2	2.16		
		(-3.34--3.63)x(2.82+2.86)/2	0.82		
		(-2.53--3.34)x(2.83+2.82)/2	2.29		
		(-2.32--2.53)x(2.83+2.83)/2	0.59		
		(-1.43--2.32)x(2.89+2.83)/2	2.55		
		(-1.29--1.43)x(2.90+2.89)/2	0.41		
		(-0.33--1.29)x(2.93+2.90)/2	2.80		
		(-0.26--0.33)x(2.93+2.93)/2	0.21		
		(-0.20--0.26)x(2.93+2.93)/2	0.18		
		(0.64--0.20)x(2.94+2.93)/2	2.47		
		(0.76-0.64)x(2.94+2.94)/2	0.35		
		(0.77-0.76)x(2.94+2.94)/2	0.03		
		(0.78-0.77)x(2.94+2.94)/2	0.03		
		(1.79-0.78)x(2.96+2.94)/2	2.98		
		(1.88-1.79)x(2.96+2.96)/2	0.27		
		(2.82-1.88)x(2.97+2.96)/2	2.79		
		(2.98-2.82)x(2.98+2.97)/2	0.48		
		(3.85-2.98)x(2.99+2.98)/2	2.60		
		(4.08-3.85)x(2.99+2.99)/2	0.69		
		(4.88-4.08)x(3.03+2.99)/2	2.41		
		(5.02-4.88)x(3.03+3.03)/2	0.42		
		(3.20-5.02)x(4.24+3.03)/2	-6.62		
		(2.13-3.20)x(4.24+4.24)/2	-4.54		
		(2.30-2.13)x(4.04+4.24)/2	0.70		
		(0.29-2.30)x(4.16+4.04)/2	-8.24		
		(-4.00-0.29)x(4.42+4.16)/2	-18.40		
		(-5.00--4.00)x(4.48+4.42)/2	-4.45		
				12.15	
19bis 274.71	R1	(-4.74--5.00)x(2.96+2.95)/2	0.77		
		(-4.37--4.74)x(2.99+2.96)/2	1.10		
		(-3.63--4.37)x(2.86+2.99)/2	2.16		
		(-3.34--3.63)x(2.82+2.86)/2	0.82		
		(-2.53--3.34)x(2.83+2.82)/2	2.29		
		(-2.32--2.53)x(2.83+2.83)/2	0.59		
		(-1.43--2.32)x(2.89+2.83)/2	2.55		
		(-1.29--1.43)x(2.90+2.89)/2	0.41		
		(-0.33--1.29)x(2.93+2.90)/2	2.80		
		(-0.26--0.33)x(2.93+2.93)/2	0.21		
		(-0.20--0.26)x(2.93+2.93)/2	0.18		
		(0.64--0.20)x(2.94+2.93)/2	2.47		
		(0.76-0.64)x(2.94+2.94)/2	0.35		
		(0.77-0.76)x(2.94+2.94)/2	0.03		
		(0.78-0.77)x(2.94+2.94)/2	0.03		
		(1.79-0.78)x(2.96+2.94)/2	2.98		
		(1.88-1.79)x(2.96+2.96)/2	0.27		
		(2.82-1.88)x(2.97+2.96)/2	2.79		
		(2.98-2.82)x(2.98+2.97)/2	0.48		
		(3.85-2.98)x(2.99+2.98)/2	2.60		
		(4.08-3.85)x(2.99+2.99)/2	0.69		
		(4.88-4.08)x(3.03+2.99)/2	2.41		
		(5.02-4.88)x(3.03+3.03)/2	0.42		
		(3.20-5.02)x(4.24+3.03)/2	-6.62		
		(2.13-3.20)x(4.24+4.24)/2	-4.54		
		(2.30-2.13)x(4.04+4.24)/2	0.70		
		(0.29-2.30)x(4.16+4.04)/2	-8.24		
		(-4.00-0.29)x(4.42+4.16)/2	-18.40		
		A RIPORTARE mq	-7.70		

	CALCOLO DELLE AREE		Foglio n. 10

STERRI E RIPORTI

N. SEZIONE PROG.	FIG.	ELEMENTI DI CALCOLO	AREA ELEMENTARE mq	AREA FIGURA mq	NOTE
		RIPORTO mq	-7.70		
		(-5.00--4.00)x(4.48+4.42)/2	-4.45	12.15	

Il Direttore dei Lavori	L'Impresa	

N. SEZ.	FIG.	SUPERFICIE STERRO mq	SUPERFICIE RIPORTO mq	PUNTI DI PASSAGGIO (PROGRESSIVA m)	DISTANZA m	VOLUMI PARZIALI STERRO mc	VOLUMI PARZIALI RIPORTO mc	VOLUMI TOTALI STERRO mc	VOLUMI TOTALI RIPORTO mc
5	R1		45.67	(60.00)					
					15.00		766.200		
6	R1		56.49	(75.00)					
									766.200
6	R1		56.49	(75.00)					
					15.00		946.800		
7	R1		69.75	(90.00)					
									946.800
7	R1		69.75	(90.00)					
					6.31		397.909		
7bis	R1		56.37	(96.31)					
									397.909
7bis	R1		56.37	(96.31)					
					8.69		394.787		
8	R1		34.49	(105.00)					
									394.787
8	R1		34.49	(105.00)					
					8.22		141.754		
8tris	R0		0.00	(113.22)					
8	R0		0.00	(105.00)					
					8.22		177.634		
8tris	R1		43.22	(113.22)					
									319.388
8tris	R1		43.22	(113.22)					
					6.78		386.087		
9	R1		70.67	(120.00)					
									386.087
9	R1		70.67	(120.00)					
					15.00		1166.775		
10	R1		84.90	(135.00)					
									1166.775
10	R1		84.90	(135.00)					
					15.00		1280.175		
11	R1		85.79	(150.00)					
									1280.175
11	R1		85.79	(150.00)					
					15.00		1266.300		
12	R1		83.05	(165.00)					
									1266.300
12	R1		83.05	(165.00)					
					15.00		1206.525		
13	R1		77.82	(180.00)					
									1206.525
13	R1		77.82	(180.00)					
					15.00		1065.225		
14	R1		64.21	(195.00)					
									1065.225
14	R1		64.21	(195.00)					
					15.00		757.275		
15	R1		36.76	(210.00)					
									757.275
15	R1		36.76	(210.00)					
					6.28		206.298		
15bis	R1		28.94	(216.28)					
									206.298
17	R1		19.97	(240.00)					
					15.00		328.350		
18	R1		23.81	(255.00)					
									328.350
18	R1		23.81	(255.00)					
					19.71		354.386		
19bis	R1		12.15	(274.71)					
									354.386

Il Direttore dei Lavori	L'Impresa	Totale Articoli .....:	0.000	10842.480
		A dedurre quantita' precedenti:		
		Quantita' da contabilizzare ..:		

BONIFICA

N. SEZIONE PROG.	FIG.	ELEMENTI DI CALCOLO	AREA ELEMENTARE mq	AREA FIGURA mq	NOTE
5 60.00	BO1	(-4.69--5.00)x(3.58+3.52)/2	1.10		
		(-4.58--4.69)x(3.59+3.58)/2	0.39		
		(-4.24--4.58)x(3.58+3.59)/2	1.22		
		(-3.77--4.24)x(3.57+3.58)/2	1.68		
		(-3.61--3.77)x(3.56+3.57)/2	0.57		
		(-3.50--3.61)x(3.56+3.56)/2	0.39		
		(-3.11--3.50)x(3.25+3.56)/2	1.33		
		(-3.10--3.11)x(3.18+3.25)/2	0.03		
		(-3.08--3.10)x(3.27+3.18)/2	0.06		
		(-3.05--3.08)x(3.19+3.27)/2	0.10		
		(-3.01--3.05)x(3.12+3.19)/2	0.13		
		(-2.95--3.01)x(3.11+3.12)/2	0.19		
		(-2.88--2.95)x(3.08+3.11)/2	0.22		
		(-2.79--2.88)x(3.07+3.08)/2	0.28		
		(-2.64--2.79)x(3.06+3.07)/2	0.46		
		(-2.53--2.64)x(3.06+3.06)/2	0.34		
		(-2.15--2.53)x(2.90+3.06)/2	1.13		
		(-1.44--2.15)x(2.59+2.90)/2	1.95		
		(-1.34--1.44)x(2.54+2.59)/2	0.26		
		(-1.03--1.34)x(2.41+2.54)/2	0.77		
		(-0.53--1.03)x(2.20+2.41)/2	1.15		
		(-0.36--0.53)x(2.13+2.20)/2	0.37		
		(0.28--0.36)x(1.89+2.13)/2	1.29		
		(0.72-0.28)x(1.68+1.89)/2	0.79		
		(1.09-0.72)x(1.50+1.68)/2	0.59		
		(1.80-1.09)x(1.10+1.50)/2	0.92		
		(1.90-1.80)x(1.05+1.10)/2	0.11		
		(2.19-1.90)x(0.88+1.05)/2	0.28		
		(2.71-2.19)x(0.57+0.88)/2	0.38		
		(2.88-2.71)x(0.50+0.57)/2	0.09		
		(3.52-2.88)x(0.32+0.50)/2	0.26		
		(3.97-3.52)x(0.17+0.32)/2	0.11		
		(4.33-3.97)x(0.18+0.17)/2	0.06		
		(5.05-4.33)x(0.16+0.18)/2	0.12		
		(5.14-5.05)x(0.15+0.16)/2	0.01		
		(5.40-5.14)x(0.17+0.15)/2	0.04		
		(5.95-5.40)x(0.20+0.17)/2	0.10		
		(6.13-5.95)x(0.22+0.20)/2	0.04		
		(6.76-6.13)x(0.30+0.22)/2	0.16		
		(7.21-6.76)x(0.32+0.30)/2	0.14		
		(7.57-7.21)x(0.46+0.32)/2	0.14		
		(8.29-7.57)x(0.70+0.46)/2	0.42		
		(8.37-8.29)x(0.76+0.70)/2	0.06		
		(8.62-8.37)x(1.01+0.76)/2	0.22		
		(9.18-8.62)x(1.58+1.01)/2	0.73		
		(9.37-9.18)x(1.74+1.58)/2	0.32		
		(9.99-9.37)x(2.11+1.74)/2	1.19		
		(10.46-9.99)x(2.30+2.11)/2	1.04		
		(10.80-10.46)x(2.32+2.30)/2	0.79		
		(11.54-10.80)x(2.43+2.32)/2	1.76		
		(11.61-11.54)x(2.43+2.43)/2	0.17		
		(11.84-11.61)x(2.44+2.43)/2	0.56		
		(12.42-11.84)x(2.46+2.44)/2	1.42		
		(12.62-12.42)x(2.48+2.46)/2	0.49		
		(13.19-12.62)x(2.51+2.48)/2	1.42		
		(12.62-13.19)x(1.98+2.01)/2	-1.14		
		(12.42-12.62)x(1.96+1.98)/2	-0.39		
		(11.84-12.42)x(1.94+1.96)/2	-1.13		
		(11.61-11.84)x(1.93+1.94)/2	-0.45		
		(11.54-11.61)x(1.93+1.93)/2	-0.14		
		(10.80-11.54)x(1.82+1.93)/2	-1.39		
		(10.46-10.80)x(1.80+1.82)/2	-0.62		
		(9.99-10.46)x(1.61+1.80)/2	-0.80		
		(9.37-9.99)x(1.24+1.61)/2	-0.88		
		(9.18-9.37)x(1.08+1.24)/2	-0.22		
		(8.62-9.18)x(0.51+1.08)/2	-0.45		
		(8.37-8.62)x(0.26+0.51)/2	-0.10		
		(8.29-8.37)x(0.20+0.26)/2	-0.02		
		(7.57-8.29)x(-0.04+0.20)/2	-0.06		
		(7.21-7.57)x(-0.18+-0.04)/2	0.04		
		(6.76-7.21)x(-0.20+-0.18)/2	0.09		
		(6.13-6.76)x(-0.28+-0.20)/2	0.15		
		(5.95-6.13)x(-0.30+-0.28)/2	0.05		
		(5.40-5.95)x(-0.33+-0.30)/2	0.17		
		(5.14-5.40)x(-0.35+-0.33)/2	0.09		
		(5.05-5.14)x(-0.34+-0.35)/2	0.03		
		(4.33-5.05)x(-0.32+-0.34)/2	0.24		
		(3.97-4.33)x(-0.33+-0.32)/2	0.12		
		(3.52-3.97)x(-0.18+-0.33)/2	0.11		
		(2.88-3.52)x(-0.00+-0.18)/2	0.06		
		(2.71-2.88)x(0.07+-0.00)/2	-0.01		
		(2.19-2.71)x(0.38+0.07)/2	-0.12		
		(1.90-2.19)x(0.55+0.38)/2	-0.13		
		(1.80-1.90)x(0.60+0.55)/2	-0.06		
		(1.09-1.80)x(1.00+0.60)/2	-0.57		
		(0.72-1.09)x(1.18+1.00)/2	-0.40		
		(0.28-0.72)x(1.39+1.18)/2	-0.57		
		(-0.36-0.28)x(1.63+1.39)/2	-0.97		
		(-0.53--0.36)x(1.70+1.63)/2	-0.28		
		(-1.03--0.53)x(1.91+1.70)/2	-0.90		
		(-1.34--1.03)x(2.04+1.91)/2	-0.61		
		(-1.44--1.34)x(2.09+2.04)/2	-0.21		
		(-2.15--1.44)x(2.40+2.09)/2	-1.59		
		(-2.53--2.15)x(2.56+2.40)/2	-0.94		
		(-2.64--2.53)x(2.56+2.56)/2	-0.28		
		(-2.79--2.64)x(2.57+2.56)/2	-0.38		
		(-2.88--2.79)x(2.58+2.57)/2	-0.23		
		(-2.95--2.88)x(2.61+2.58)/2	-0.18		
		(-3.01--2.95)x(2.62+2.61)/2	-0.16		
		(-3.05--3.01)x(2.69+2.62)/2	-0.11		
		(-3.08--3.05)x(2.77+2.69)/2	-0.08		
		(-3.10--3.08)x(2.68+2.77)/2	-0.05		
		(-3.11--3.10)x(2.75+2.68)/2	-0.03		
		(-3.50--3.11)x(3.06+2.75)/2	-1.13		
		(-3.61--3.50)x(3.06+3.06)/2	-0.34		
		(-3.77--3.61)x(3.07+3.06)/2	-0.49		
		(-4.24--3.77)x(3.08+3.07)/2	-1.45		
		A RIPORTARE mq	11.43		

		CALCOLO DELLE AREE		Foglio n. 13	
BONIFICA					
N. SEZIONE PROG.	FIG.	ELEMENTI DI CALCOLO	AREA ELEMENTARE mq	AREA FIGURA mq	NOTE
		RIPORTO mq	11.43		
		(-4.58--4.24)x(3.09+3.08)/2	-1.05		
		(-4.69--4.58)x(3.08+3.09)/2	-0.34		
		(-5.00--4.69)x(3.02+3.08)/2	-0.95		
				9.09	
6	BO1	(-7.36--7.59)x(3.12+3.14)/2	0.72		
75.00		(-7.27--7.36)x(2.96+3.12)/2	0.27		
		(-7.14--7.27)x(2.98+2.96)/2	0.39		
		(-7.08--7.14)x(2.96+2.98)/2	0.18		
		(-6.94--7.08)x(2.91+2.96)/2	0.41		
		(-6.30--6.94)x(2.69+2.91)/2	1.79		
		(-6.03--6.30)x(2.62+2.69)/2	0.72		
		(-5.52--6.03)x(2.49+2.62)/2	1.30		
		(-4.92--5.52)x(2.46+2.49)/2	1.48		
		(-4.73--4.92)x(2.36+2.46)/2	0.46		
		(-4.28--4.73)x(1.84+2.36)/2	0.95		
		(-3.95--4.28)x(1.51+1.84)/2	0.55		
		(-3.81--3.95)x(1.32+1.51)/2	0.20		
		(-3.17--3.81)x(1.03+1.32)/2	0.75		
		(-2.70--3.17)x(0.95+1.03)/2	0.47		
		(-2.38--2.70)x(0.86+0.95)/2	0.29		
		(-1.62--2.38)x(0.93+0.86)/2	0.68		
		(-1.60--1.62)x(0.93+0.93)/2	0.02		
		(-1.59--1.60)x(0.92+0.93)/2	0.01		
		(-0.81--1.59)x(0.66+0.92)/2	0.62		
		(-0.48--0.81)x(0.61+0.66)/2	0.21		
		(-0.03--0.48)x(0.48+0.61)/2	0.25		
		(0.63--0.03)x(0.40+0.48)/2	0.29		
		(0.75-0.63)x(0.37+0.40)/2	0.05		
		(1.04-0.75)x(0.36+0.37)/2	0.11		
		(1.54-1.04)x(0.34+0.36)/2	0.17		
		(1.74-1.54)x(0.35+0.34)/2	0.07		
		(2.32-1.74)x(0.37+0.35)/2	0.21		
		(2.86-2.32)x(0.37+0.37)/2	0.20		
		(3.10-2.86)x(0.59+0.37)/2	0.12		
		(3.70-3.10)x(0.96+0.59)/2	0.47		
		(3.89-3.70)x(1.08+0.96)/2	0.19		
		(3.97-3.89)x(1.14+1.08)/2	0.09		
		(4.67-3.97)x(1.82+1.14)/2	1.04		
		(5.08-4.67)x(2.19+1.82)/2	0.82		
		(5.46-5.08)x(2.28+2.19)/2	0.85		
		(6.19-5.46)x(2.37+2.28)/2	1.70		
		(6.24-6.19)x(2.36+2.37)/2	0.12		
		(6.36-6.24)x(2.36+2.36)/2	0.28		
		(7.02-6.36)x(2.37+2.36)/2	1.56		
		(7.30-7.02)x(2.37+2.37)/2	0.66		
		(7.81-7.30)x(2.37+2.37)/2	1.21		
		(8.41-7.81)x(2.38+2.37)/2	1.43		
		(8.59-8.41)x(2.39+2.38)/2	0.43		
		(9.02-8.59)x(2.43+2.39)/2	1.04		
		(9.37-9.02)x(2.45+2.43)/2	0.85		
		(9.52-9.37)x(2.46+2.45)/2	0.37		
		(10.16-9.52)x(2.49+2.46)/2	1.58		
		(10.63-10.16)x(2.53+2.49)/2	1.18		
		(10.94-10.63)x(2.55+2.53)/2	0.79		
		(11.68-10.94)x(2.54+2.55)/2	1.88		
		(11.73-11.68)x(2.54+2.54)/2	0.13		
		(11.74-11.73)x(2.54+2.54)/2	0.03		
		(11.83-11.74)x(2.54+2.54)/2	0.23		
		(11.74-11.83)x(2.04+2.04)/2	-0.18		
		(11.73-11.74)x(2.04+2.04)/2	-0.02		
		(11.68-11.73)x(2.04+2.04)/2	-0.10		
		(10.94-11.68)x(2.05+2.04)/2	-1.51		
		(10.63-10.94)x(2.03+2.05)/2	-0.63		
		(10.16-10.63)x(1.99+2.03)/2	-0.94		
		(9.52-10.16)x(1.96+1.99)/2	-1.26		
		(9.37-9.52)x(1.95+1.96)/2	-0.29		
		(9.02-9.37)x(1.93+1.95)/2	-0.68		
		(8.59-9.02)x(1.89+1.93)/2	-0.82		
		(8.41-8.59)x(1.88+1.89)/2	-0.34		
		(7.81-8.41)x(1.87+1.88)/2	-1.13		
		(7.30-7.81)x(1.87+1.87)/2	-0.95		
		(7.02-7.30)x(1.87+1.87)/2	-0.52		
		(6.36-7.02)x(1.86+1.87)/2	-1.23		
		(6.24-6.36)x(1.86+1.86)/2	-0.22		
		(6.19-6.24)x(1.87+1.86)/2	-0.09		
		(5.46-6.19)x(1.78+1.87)/2	-1.33		
		(5.08-5.46)x(1.69+1.78)/2	-0.66		
		(4.67-5.08)x(1.32+1.69)/2	-0.62		
		(3.97-4.67)x(0.64+1.32)/2	-0.69		
		(3.89-3.97)x(0.58+0.64)/2	-0.05		
		(3.70-3.89)x(0.46+0.58)/2	-0.10		
		(3.10-3.70)x(0.09+0.46)/2	-0.17		
		(2.86-3.10)x(-0.13+0.09)/2	0.00		
		(2.32-2.86)x(-0.13+-0.13)/2	0.07		
		(1.74-2.32)x(-0.15+-0.13)/2	0.08		
		(1.54-1.74)x(-0.16+-0.15)/2	0.03		
		(1.04-1.54)x(-0.14+-0.16)/2	0.08		
		(0.75-1.04)x(-0.13+-0.14)/2	0.04		
		(0.63-0.75)x(-0.10+-0.13)/2	0.01		
		(-0.03-0.63)x(-0.02+-0.10)/2	0.04		
		(-0.48--0.03)x(0.11+-0.02)/2	-0.02		
		(-0.81--0.48)x(0.16+0.11)/2	-0.04		
		(-1.59--0.81)x(0.42+0.16)/2	-0.23		
		(-1.60--1.59)x(0.43+0.42)/2	-0.00		
		(-1.62--1.60)x(0.43+0.43)/2	-0.01		
		(-2.38--1.62)x(0.36+0.43)/2	-0.30		
		(-2.70--2.38)x(0.45+0.36)/2	-0.13		
		(-3.17--2.70)x(0.53+0.45)/2	-0.23		
		(-3.81--3.17)x(0.82+0.53)/2	-0.43		
		(-3.95--3.81)x(1.01+0.82)/2	-0.13		
		(-4.28--3.95)x(1.34+1.01)/2	-0.39		
		(-4.73--4.28)x(1.86+1.34)/2	-0.72		
		(-4.92--4.73)x(1.96+1.86)/2	-0.36		
		(-5.52--4.92)x(1.99+1.96)/2	-1.18		
		(-6.03--5.52)x(2.12+1.99)/2	-1.05		
		A RIPORTARE mq	13.47		

BONIFICA

N. SEZIONE PROG.	FIG.	ELEMENTI DI CALCOLO	AREA ELEMENTARE mq	AREA FIGURA mq	NOTE
		RIPORTO mq	13.47		
		(-6.30--6.03)x(2.19+2.12)/2	-0.58		
		(-6.94--6.30)x(2.41+2.19)/2	-1.47		
		(-7.08--6.94)x(2.46+2.41)/2	-0.34		
		(-7.14--7.08)x(2.48+2.46)/2	-0.15		
		(-7.27--7.14)x(2.46+2.48)/2	-0.32		
		(-7.36--7.27)x(2.62+2.46)/2	-0.23		
		(-7.59--7.36)x(2.64+2.62)/2	-0.60		
				9.78	
7	BO1	(-10.36--10.74)x(1.39+1.47)/2	0.54		
90.00		(-9.98--10.36)x(1.27+1.39)/2	0.51		
		(-9.31--9.98)x(1.03+1.27)/2	0.77		
		(-9.23--9.31)x(1.00+1.03)/2	0.08		
		(-9.18--9.23)x(0.98+1.00)/2	0.05		
		(-8.48--9.18)x(0.60+0.98)/2	0.55		
		(-8.01--8.48)x(0.39+0.60)/2	0.23		
		(-7.72--8.01)x(0.37+0.39)/2	0.11		
		(-7.22--7.72)x(0.33+0.37)/2	0.17		
		(-6.97--7.22)x(0.30+0.33)/2	0.08		
		(-6.83--6.97)x(0.30+0.30)/2	0.04		
		(-6.22--6.83)x(0.32+0.30)/2	0.19		
		(-5.66--6.22)x(0.34+0.32)/2	0.18		
		(-5.47--5.66)x(0.35+0.34)/2	0.07		
		(-5.13--5.47)x(0.34+0.35)/2	0.12		
		(-4.71--5.13)x(0.34+0.34)/2	0.14		
		(-4.48--4.71)x(0.36+0.34)/2	0.08		
		(-3.96--4.48)x(0.50+0.36)/2	0.22		
		(-3.30--3.96)x(0.60+0.50)/2	0.36		
		(-3.21--3.30)x(0.68+0.60)/2	0.06		
		(-3.04--3.21)x(0.79+0.68)/2	0.12		
		(-2.45--3.04)x(1.19+0.79)/2	0.58		
		(-2.13--2.45)x(1.44+1.19)/2	0.42		
		(-1.70--2.13)x(1.65+1.44)/2	0.66		
		(-0.95--1.70)x(2.04+1.65)/2	1.38		
		(-0.20--0.95)x(2.35+2.04)/2	1.65		
		(0.23--0.20)x(2.45+2.35)/2	1.03		
		(0.56-0.23)x(2.45+2.45)/2	0.81		
		(1.15-0.56)x(2.45+2.45)/2	1.45		
		(1.31-1.15)x(2.44+2.45)/2	0.39		
		(1.40-1.31)x(2.44+2.44)/2	0.22		
		(2.06-1.40)x(2.45+2.44)/2	1.61		
		(2.58-2.06)x(2.48+2.45)/2	1.28		
		(2.82-2.58)x(2.49+2.48)/2	0.60		
		(3.24-2.82)x(2.53+2.49)/2	1.05		
		(3.75-3.24)x(2.57+2.53)/2	1.30		
		(4.42-3.75)x(2.59+2.57)/2	1.73		
		(4.93-4.42)x(2.59+2.59)/2	1.32		
		(5.33-4.93)x(2.60+2.59)/2	1.04		
		(5.83-5.33)x(2.60+2.60)/2	1.30		
		(6.11-5.83)x(2.61+2.60)/2	0.73		
		(6.31-6.11)x(2.60+2.61)/2	0.52		
		(6.11-6.31)x(2.11+2.10)/2	-0.42		
		(5.83-6.11)x(2.10+2.11)/2	-0.59		
		(5.33-5.83)x(2.10+2.10)/2	-1.05		
		(4.93-5.33)x(2.09+2.10)/2	-0.84		
		(4.42-4.93)x(2.09+2.09)/2	-1.07		
		(3.75-4.42)x(2.07+2.09)/2	-1.39		
		(3.24-3.75)x(2.03+2.07)/2	-1.05		
		(2.82-3.24)x(1.99+2.03)/2	-0.84		
		(2.58-2.82)x(1.98+1.99)/2	-0.48		
		(2.06-2.58)x(1.95+1.98)/2	-1.02		
		(1.40-2.06)x(1.94+1.95)/2	-1.28		
		(1.31-1.40)x(1.94+1.94)/2	-0.17		
		(1.15-1.31)x(1.95+1.94)/2	-0.31		
		(0.56-1.15)x(1.95+1.95)/2	-1.15		
		(0.23-0.56)x(1.95+1.95)/2	-0.64		
		(-0.20-0.23)x(1.85+1.95)/2	-0.82		
		(-0.95--0.20)x(1.54+1.85)/2	-1.27		
		(-1.70--0.95)x(1.15+1.54)/2	-1.01		
		(-2.13--1.70)x(0.94+1.15)/2	-0.45		
		(-2.45--2.13)x(0.69+0.94)/2	-0.26		
		(-3.04--2.45)x(0.29+0.69)/2	-0.29		
		(-3.21--3.04)x(0.18+0.29)/2	-0.04		
		(-3.30--3.21)x(0.10+0.18)/2	-0.01		
		(-3.96--3.30)x(0.00+0.10)/2	-0.03		
		(-4.48--3.96)x(-0.14+0.00)/2	0.04		
		(-4.71--4.48)x(-0.16+-0.14)/2	0.03		
		(-5.13--4.71)x(-0.16+-0.16)/2	0.07		
		(-5.47--5.13)x(-0.15+-0.16)/2	0.05		
		(-5.66--5.47)x(-0.16+-0.15)/2	0.03		
		(-6.22--5.66)x(-0.18+-0.16)/2	0.10		
		(-6.83--6.22)x(-0.20+-0.18)/2	0.12		
		(-6.97--6.83)x(-0.20+-0.20)/2	0.03		
		(-7.22--6.97)x(-0.17+-0.20)/2	0.05		
		(-7.72--7.22)x(-0.13+-0.17)/2	0.08		
		(-8.01--7.72)x(-0.11+-0.13)/2	0.03		
		(-8.48--8.01)x(0.10+-0.11)/2	0.00		
		(-9.18--8.48)x(0.48+0.10)/2	-0.20		
		(-9.23--9.18)x(0.50+0.48)/2	-0.02		
		(-9.31--9.23)x(0.53+0.50)/2	-0.04		
		(-9.98--9.31)x(0.77+0.53)/2	-0.44		
		(-10.36--9.98)x(0.89+0.77)/2	-0.32		
		(-10.74--10.36)x(0.97+0.89)/2	-0.35		
				8.52	
7bis	BO1	(-10.50--10.88)x(0.24+0.23)/2	0.09		
96.31		(-9.91--10.50)x(0.28+0.24)/2	0.15		
		(-9.76--9.91)x(0.28+0.28)/2	0.04		
		(-9.67--9.76)x(0.29+0.28)/2	0.03		
		(-9.02--9.67)x(0.32+0.29)/2	0.20		
		(-8.45--9.02)x(0.33+0.32)/2	0.19		
		(-8.27--8.45)x(0.31+0.33)/2	0.06		
		(-7.99--8.27)x(0.34+0.31)/2	0.09		
		(-7.53--7.99)x(0.34+0.34)/2	0.16		
		(-7.24--7.53)x(0.37+0.34)/2	0.10		
		(-6.79--7.24)x(0.61+0.37)/2	0.22		
		(-6.07--6.79)x(1.11+0.61)/2	0.62		
		A RIPORTARE mq	1.95		

BONIFICA

N. SEZIONE PROG.	FIG.	ELEMENTI DI CALCOLO	AREA ELEMENTARE mq	AREA FIGURA mq	NOTE
		RIPORTO mq	1.95		
		(-6.04--6.07)x(1.13+1.11)/2	0.03		
		(-6.02--6.04)x(1.14+1.13)/2	0.02		
		(-5.30--6.02)x(1.56+1.14)/2	0.97		
		(-4.81--5.30)x(1.92+1.56)/2	0.85		
		(-4.56--4.81)x(2.00+1.92)/2	0.49		
		(-4.16--4.56)x(2.09+2.00)/2	0.82		
		(-3.82--4.16)x(2.18+2.09)/2	0.73		
		(-3.60--3.82)x(2.26+2.18)/2	0.49		
		(-3.07--3.60)x(2.37+2.26)/2	1.23		
		(-2.38--3.07)x(2.46+2.37)/2	1.67		
		(-2.33--2.38)x(2.47+2.46)/2	0.12		
		(-2.24--2.33)x(2.48+2.47)/2	0.22		
		(-1.59--2.24)x(2.51+2.48)/2	1.62		
		(-1.17--1.59)x(2.52+2.51)/2	1.06		
		(-0.84--1.17)x(2.50+2.52)/2	0.83		
		(-0.33--0.84)x(2.49+2.50)/2	1.27		
		(-0.10--0.33)x(2.49+2.49)/2	0.57		
		(0.04--0.10)x(2.48+2.49)/2	0.35		
		(0.64-0.04)x(2.45+2.48)/2	1.48		
		(1.26-0.64)x(2.43+2.45)/2	1.51		
		(1.39-1.26)x(2.43+2.43)/2	0.32		
		(1.59-1.39)x(2.45+2.43)/2	0.49		
		(1.79-1.59)x(2.46+2.45)/2	0.49		
		(1.59-1.79)x(1.95+1.96)/2	-0.39		
		(1.39-1.59)x(1.93+1.95)/2	-0.39		
		(1.26-1.39)x(1.93+1.93)/2	-0.25		
		(0.64-1.26)x(1.95+1.93)/2	-1.20		
		(0.04-0.64)x(1.98+1.95)/2	-1.18		
		(-0.10-0.04)x(1.99+1.98)/2	-0.28		
		(-0.33--0.10)x(1.99+1.99)/2	-0.46		
		(-0.84--0.33)x(2.00+1.99)/2	-1.02		
		(-1.17--0.84)x(2.02+2.00)/2	-0.66		
		(-1.59--1.17)x(2.01+2.02)/2	-0.85		
		(-2.24--1.59)x(1.98+2.01)/2	-1.30		
		(-2.33--2.24)x(1.97+1.98)/2	-0.18		
		(-2.38--2.33)x(1.96+1.97)/2	-0.10		
		(-3.07--2.38)x(1.87+1.96)/2	-1.32		
		(-3.60--3.07)x(1.76+1.87)/2	-0.96		
		(-3.82--3.60)x(1.68+1.76)/2	-0.38		
		(-4.16--3.82)x(1.59+1.68)/2	-0.56		
		(-4.56--4.16)x(1.50+1.59)/2	-0.62		
		(-4.81--4.56)x(1.42+1.50)/2	-0.36		
		(-5.30--4.81)x(1.06+1.42)/2	-0.61		
		(-6.02--5.30)x(0.64+1.06)/2	-0.61		
		(-6.04--6.02)x(0.63+0.64)/2	-0.01		
		(-6.07--6.04)x(0.61+0.63)/2	-0.02		
		(-6.79--6.07)x(0.11+0.61)/2	-0.26		
		(-7.24--6.79)x(-0.13+0.11)/2	0.00		
		(-7.53--7.24)x(-0.16+-0.13)/2	0.04		
		(-7.99--7.53)x(-0.16+-0.16)/2	0.07		
		(-8.27--7.99)x(-0.19+-0.16)/2	0.05		
		(-8.45--8.27)x(-0.17+-0.19)/2	0.03		
		(-9.02--8.45)x(-0.18+-0.17)/2	0.10		
		(-9.67--9.02)x(-0.21+-0.18)/2	0.13		
		(-9.76--9.67)x(-0.22+-0.21)/2	0.02		
		(-9.91--9.76)x(-0.22+-0.22)/2	0.03		
		(-10.50--9.91)x(-0.26+-0.22)/2	0.14		
		(-10.88--10.50)x(-0.27+-0.26)/2	0.10		
				6.32	
8 105.00	BO1	(-13.15--13.39)x(0.45+0.38)/2	0.10		
		(-12.45--13.15)x(0.75+0.45)/2	0.42		
		(-12.42--12.45)x(0.78+0.75)/2	0.02		
		(-12.37--12.42)x(0.80+0.78)/2	0.04		
		(-11.68--12.37)x(1.31+0.80)/2	0.73		
		(-11.17--11.68)x(1.66+1.31)/2	0.76		
		(-10.95--11.17)x(1.77+1.66)/2	0.38		
		(-10.65--10.95)x(1.91+1.77)/2	0.55		
		(-10.22--10.65)x(2.11+1.91)/2	0.86		
		(-9.90--10.22)x(2.25+2.11)/2	0.70		
		(-9.48--9.90)x(2.30+2.25)/2	0.96		
		(-8.93--9.48)x(2.35+2.30)/2	1.28		
		(-8.75--8.93)x(2.37+2.35)/2	0.42		
		(-8.62--8.75)x(2.37+2.37)/2	0.31		
		(-8.02--8.62)x(2.35+2.37)/2	1.42		
		(-7.34--8.02)x(2.37+2.35)/2	1.60		
		(-7.28--7.34)x(2.37+2.37)/2	0.14		
		(-7.20--7.28)x(2.37+2.37)/2	0.19		
		(-6.55--7.20)x(2.37+2.37)/2	1.54		
		(-6.07--6.55)x(2.38+2.37)/2	1.14		
		(-5.82--6.07)x(2.39+2.38)/2	0.60		
		(-5.70--5.82)x(2.38+2.39)/2	0.29		
		(-5.82--5.70)x(1.89+1.88)/2	-0.23		
		(-6.07--5.82)x(1.88+1.89)/2	-0.47		
		(-6.55--6.07)x(1.87+1.88)/2	-0.90		
		(-7.20--6.55)x(1.87+1.87)/2	-1.22		
		(-7.28--7.20)x(1.87+1.87)/2	-0.15		
		(-7.34--7.28)x(1.87+1.87)/2	-0.11		
		(-8.02--7.34)x(1.85+1.87)/2	-1.26		
		(-8.62--8.02)x(1.87+1.85)/2	-1.12		
		(-8.75--8.62)x(1.87+1.87)/2	-0.24		
		(-8.93--8.75)x(1.85+1.87)/2	-0.33		
		(-9.48--8.93)x(1.80+1.85)/2	-1.00		
		(-9.90--9.48)x(1.75+1.80)/2	-0.75		
		(-10.22--9.90)x(1.61+1.75)/2	-0.54		
		(-10.65--10.22)x(1.41+1.61)/2	-0.65		
		(-10.95--10.65)x(1.27+1.41)/2	-0.40		
		(-11.17--10.95)x(1.16+1.27)/2	-0.27		
		(-11.68--11.17)x(0.81+1.16)/2	-0.50		
		(-12.37--11.68)x(0.30+0.81)/2	-0.38		
		(-12.42--12.37)x(0.28+0.30)/2	-0.01		
		(-12.45--12.42)x(0.25+0.28)/2	-0.01		
		(-13.15--12.45)x(-0.05+0.25)/2	-0.07		
		(-13.39--13.15)x(-0.12+-0.05)/2	0.02		
				3.86	
8tris	BO1	(0.15-0.00)x(1.97+1.99)/2	0.30		
		A RIPORTARE mq	0.30		

BONIFICA

N. SEZIONE PROG.	FIG.	ELEMENTI DI CALCOLO	AREA ELEMENTARE mq	AREA FIGURA mq	NOTE
		RIPORTO mq	0.30		
113.22		(0.25-0.15)x(1.96+1.97)/2	0.20		
		(0.34-0.25)x(1.94+1.96)/2	0.18		
		(0.98-0.34)x(1.91+1.94)/2	1.23		
		(1.69-0.98)x(1.89+1.91)/2	1.35		
		(1.71-1.69)x(1.89+1.89)/2	0.04		
		(1.73-1.71)x(1.89+1.89)/2	0.04		
		(2.44-1.73)x(1.94+1.89)/2	1.36		
		(3.04-2.44)x(1.97+1.94)/2	1.17		
		(3.16-3.04)x(1.97+1.97)/2	0.24		
		(3.31-3.16)x(1.98+1.97)/2	0.30		
		(3.89-3.31)x(2.01+1.98)/2	1.16		
		(4.38-3.89)x(1.99+2.01)/2	0.98		
		(4.62-4.38)x(1.99+1.99)/2	0.48		
		(4.89-4.62)x(1.98+1.99)/2	0.54		
		(5.73-4.89)x(1.98+1.98)/2	1.66		
		(6.47-5.73)x(2.00+1.98)/2	1.47		
		(6.80-6.47)x(2.01+2.00)/2	0.66		
		(7.08-6.80)x(2.01+2.01)/2	0.56		
		(7.53-7.08)x(2.00+2.01)/2	0.90		
		(8.06-7.53)x(2.00+2.00)/2	1.06		
		(8.25-8.06)x(1.99+2.00)/2	0.38		
		(8.42-8.25)x(1.98+1.99)/2	0.34		
		(8.98-8.42)x(1.98+1.98)/2	1.11		
		(9.64-8.98)x(2.00+1.98)/2	1.31		
		(9.71-9.64)x(2.00+2.00)/2	0.14		
		(9.77-9.71)x(2.00+2.00)/2	0.12		
		(10.07-9.77)x(2.00+2.00)/2	0.60		
		(9.77-10.07)x(1.50+1.50)/2	-0.45		
		(9.71-9.77)x(1.50+1.50)/2	-0.09		
		(9.64-9.71)x(1.50+1.50)/2	-0.11		
		(8.98-9.64)x(1.48+1.50)/2	-0.98		
		(8.42-8.98)x(1.48+1.48)/2	-0.83		
		(8.25-8.42)x(1.49+1.48)/2	-0.25		
		(8.06-8.25)x(1.50+1.49)/2	-0.28		
		(7.53-8.06)x(1.50+1.50)/2	-0.80		
		(7.08-7.53)x(1.51+1.50)/2	-0.68		
		(6.80-7.08)x(1.51+1.51)/2	-0.42		
		(6.47-6.80)x(1.50+1.51)/2	-0.50		
		(5.73-6.47)x(1.48+1.50)/2	-1.10		
		(4.89-5.73)x(1.48+1.48)/2	-1.24		
		(4.62-4.89)x(1.49+1.48)/2	-0.40		
		(4.38-4.62)x(1.49+1.49)/2	-0.36		
		(3.89-4.38)x(1.51+1.49)/2	-0.73		
		(3.31-3.89)x(1.48+1.51)/2	-0.87		
		(3.16-3.31)x(1.47+1.48)/2	-0.22		
		(3.04-3.16)x(1.47+1.47)/2	-0.18		
		(2.44-3.04)x(1.44+1.47)/2	-0.87		
		(1.73-2.44)x(1.39+1.44)/2	-1.00		
		(1.71-1.73)x(1.39+1.39)/2	-0.03		
		(1.69-1.71)x(1.39+1.39)/2	-0.03		
		(0.98-1.69)x(1.41+1.39)/2	-0.99		
		(0.34-0.98)x(1.44+1.41)/2	-0.91		
		(0.25-0.34)x(1.46+1.44)/2	-0.13		
		(0.15-0.25)x(1.47+1.46)/2	-0.15		
		(0.00-0.15)x(1.49+1.47)/2	-0.22		
				5.06	
9 120.00	BO1	(-8.10--8.42)x(2.44+2.43)/2	0.78		
		(-7.42--8.10)x(2.53+2.44)/2	1.69		
		(-7.38--7.42)x(2.53+2.53)/2	0.10		
		(-7.33--7.38)x(2.53+2.53)/2	0.13		
		(-5.93--7.33)x(2.02+2.53)/2	3.19		
		(-5.92--5.93)x(2.01+2.02)/2	0.02		
		(-5.20--5.92)x(1.96+2.01)/2	1.43		
		(-4.50--5.20)x(1.98+1.96)/2	1.38		
		(-4.47--4.50)x(1.99+1.98)/2	0.06		
		(-4.45--4.47)x(1.99+1.99)/2	0.04		
		(-3.75--4.45)x(2.05+1.99)/2	1.41		
		(-3.08--3.75)x(2.10+2.05)/2	1.39		
		(-3.02--3.08)x(2.10+2.10)/2	0.13		
		(-2.96--3.02)x(2.09+2.10)/2	0.13		
		(-2.30--2.96)x(2.03+2.09)/2	1.36		
		(-1.66--2.30)x(1.99+2.03)/2	1.29		
		(-1.57--1.66)x(1.99+1.99)/2	0.18		
		(-1.48--1.57)x(1.99+1.99)/2	0.18		
		(-0.85--1.48)x(2.01+1.99)/2	1.26		
		(-0.25--0.85)x(2.02+2.01)/2	1.21		
		(-0.12--0.25)x(2.02+2.02)/2	0.26		
		(0.01--0.12)x(2.02+2.02)/2	0.26		
		(0.60-0.01)x(2.03+2.02)/2	1.19		
		(1.17-0.60)x(2.01+2.03)/2	1.15		
		(1.33-1.17)x(2.00+2.01)/2	0.32		
		(1.49-1.33)x(2.00+2.00)/2	0.32		
		(2.05-1.49)x(2.03+2.00)/2	1.13		
		(2.59-2.05)x(2.03+2.03)/2	1.10		
		(2.78-2.59)x(2.04+2.03)/2	0.39		
		(2.97-2.78)x(2.03+2.04)/2	0.39		
		(3.50-2.97)x(2.03+2.03)/2	1.08		
		(4.01-3.50)x(2.02+2.03)/2	1.03		
		(4.23-4.01)x(2.02+2.02)/2	0.44		
		(4.46-4.23)x(2.02+2.02)/2	0.46		
		(4.95-4.46)x(2.01+2.02)/2	0.99		
		(5.42-4.95)x(2.01+2.01)/2	0.94		
		(5.68-5.42)x(2.00+2.01)/2	0.52		
		(5.94-5.68)x(2.01+2.00)/2	0.52		
		(6.40-5.94)x(2.02+2.01)/2	0.93		
		(6.84-6.40)x(2.01+2.02)/2	0.89		
		(7.13-6.84)x(2.01+2.01)/2	0.58		
		(7.43-7.13)x(2.01+2.01)/2	0.60		
		(7.85-7.43)x(2.01+2.01)/2	0.84		
		(8.26-7.85)x(2.01+2.01)/2	0.82		
		(8.58-8.26)x(2.03+2.01)/2	0.65		
		(8.91-8.58)x(2.03+2.03)/2	0.67		
		(9.30-8.91)x(2.04+2.03)/2	0.79		
		(9.68-9.30)x(2.03+2.04)/2	0.77		
		(10.03-9.68)x(2.03+2.03)/2	0.71		
		A RIPORTARE mq	38.10		

BONIFICA

N. SEZIONE PROG.	FIG.	ELEMENTI DI CALCOLO	AREA ELEMENTARE mq	AREA FIGURA mq	NOTE
		RIPORTO mq	38.10		
		(10.22-10.03)x(2.04+2.03)/2	0.39		
		(10.03-10.22)x(1.53+1.54)/2	-0.29		
		(9.68-10.03)x(1.53+1.53)/2	-0.54		
		(9.30-9.68)x(1.54+1.53)/2	-0.58		
		(8.91-9.30)x(1.53+1.54)/2	-0.60		
		(8.58-8.91)x(1.53+1.53)/2	-0.50		
		(8.26-8.58)x(1.51+1.53)/2	-0.49		
		(7.85-8.26)x(1.51+1.51)/2	-0.62		
		(7.43-7.85)x(1.51+1.51)/2	-0.63		
		(7.13-7.43)x(1.51+1.51)/2	-0.45		
		(6.84-7.13)x(1.51+1.51)/2	-0.44		
		(6.40-6.84)x(1.52+1.51)/2	-0.67		
		(5.94-6.40)x(1.51+1.52)/2	-0.70		
		(5.68-5.94)x(1.50+1.51)/2	-0.39		
		(5.42-5.68)x(1.51+1.50)/2	-0.39		
		(4.95-5.42)x(1.51+1.51)/2	-0.71		
		(4.46-4.95)x(1.52+1.51)/2	-0.74		
		(4.23-4.46)x(1.52+1.52)/2	-0.35		
		(4.01-4.23)x(1.52+1.52)/2	-0.33		
		(3.50-4.01)x(1.53+1.52)/2	-0.78		
		(2.97-3.50)x(1.53+1.53)/2	-0.81		
		(2.78-2.97)x(1.54+1.53)/2	-0.29		
		(2.59-2.78)x(1.53+1.54)/2	-0.29		
		(2.05-2.59)x(1.53+1.53)/2	-0.83		
		(1.49-2.05)x(1.50+1.53)/2	-0.85		
		(1.33-1.49)x(1.50+1.50)/2	-0.24		
		(1.17-1.33)x(1.51+1.50)/2	-0.24		
		(0.60-1.17)x(1.53+1.51)/2	-0.87		
		(0.01-0.60)x(1.52+1.53)/2	-0.90		
		(-0.12-0.01)x(1.52+1.52)/2	-0.20		
		(-0.25--0.12)x(1.52+1.52)/2	-0.20		
		(-0.85--0.25)x(1.51+1.52)/2	-0.91		
		(-1.48--0.85)x(1.49+1.51)/2	-0.95		
		(-1.57--1.48)x(1.49+1.49)/2	-0.13		
		(-1.66--1.57)x(1.49+1.49)/2	-0.13		
		(-2.30--1.66)x(1.53+1.49)/2	-0.97		
		(-2.96--2.30)x(1.59+1.53)/2	-1.03		
		(-3.02--2.96)x(1.60+1.59)/2	-0.10		
		(-3.08--3.02)x(1.60+1.60)/2	-0.10		
		(-3.75--3.08)x(1.55+1.60)/2	-1.06		
		(-4.45--3.75)x(1.49+1.55)/2	-1.06		
		(-4.47--4.45)x(1.49+1.49)/2	-0.03		
		(-4.50--4.47)x(1.48+1.49)/2	-0.04		
		(-5.20--4.50)x(1.46+1.48)/2	-1.03		
		(-5.92--5.20)x(1.51+1.46)/2	-1.07		
		(-5.93--5.92)x(1.52+1.51)/2	-0.02		
		(-7.33--5.93)x(2.03+1.52)/2	-2.49		
		(-7.38--7.33)x(2.03+2.03)/2	-0.10		
		(-7.42--7.38)x(2.03+2.03)/2	-0.08		
		(-8.10--7.42)x(1.94+2.03)/2	-1.35		
		(-8.42--8.10)x(1.93+1.94)/2	-0.62		
				9.30	
10 135.00	B01	(-13.84--14.31)x(2.08+2.09)/2	0.98		
		(-13.32--13.84)x(2.06+2.08)/2	1.08		
		(-13.11--13.32)x(2.07+2.06)/2	0.43		
		(-12.84--13.11)x(2.06+2.07)/2	0.56		
		(-12.38--12.84)x(2.06+2.06)/2	0.95		
		(-12.00--12.38)x(2.06+2.06)/2	0.78		
		(-11.65--12.00)x(2.07+2.06)/2	0.72		
		(-11.22--11.65)x(2.07+2.07)/2	0.89		
		(-10.92--11.22)x(2.07+2.07)/2	0.62		
		(-10.68--10.92)x(2.07+2.07)/2	0.50		
		(-10.19--10.68)x(2.05+2.07)/2	1.01		
		(-9.60--10.19)x(2.06+2.05)/2	1.21		
		(-9.46--9.60)x(2.07+2.06)/2	0.29		
		(-9.35--9.46)x(2.08+2.07)/2	0.23		
		(-8.73--9.35)x(2.09+2.08)/2	1.29		
		(-8.03--8.73)x(2.10+2.09)/2	1.47		
		(-8.01--8.03)x(2.10+2.10)/2	0.04		
		(-7.97--8.01)x(2.10+2.10)/2	0.08		
		(-7.28--7.97)x(2.11+2.10)/2	1.45		
		(-6.71--7.28)x(2.11+2.11)/2	1.20		
		(-6.55--6.71)x(2.12+2.11)/2	0.34		
		(-6.35--6.55)x(2.11+2.12)/2	0.42		
		(-5.82--6.35)x(2.09+2.11)/2	1.11		
		(-5.39--5.82)x(2.09+2.09)/2	0.90		
		(-5.09--5.39)x(2.09+2.09)/2	0.63		
		(-4.73--5.09)x(2.11+2.09)/2	0.76		
		(-4.36--4.73)x(2.11+2.11)/2	0.78		
		(-4.06--4.36)x(2.10+2.11)/2	0.63		
		(-3.63--4.06)x(2.09+2.10)/2	0.90		
		(-3.10--3.63)x(2.07+2.09)/2	1.10		
		(-2.90--3.10)x(2.07+2.07)/2	0.41		
		(-2.74--2.90)x(2.06+2.07)/2	0.33		
		(-2.18--2.74)x(2.04+2.06)/2	1.15		
		(-1.48--2.18)x(2.05+2.04)/2	1.43		
		(-1.45--1.48)x(2.05+2.05)/2	0.06		
		(-1.42--1.45)x(2.05+2.05)/2	0.06		
		(-0.72--1.42)x(2.08+2.05)/2	1.45		
		(-0.10--0.72)x(2.12+2.08)/2	1.30		
		(0.01--0.10)x(2.12+2.12)/2	0.23		
		(0.14-0.01)x(2.12+2.12)/2	0.28		
		(0.74-0.14)x(2.12+2.12)/2	1.27		
		(1.23-0.74)x(2.17+2.12)/2	1.05		
		(1.47-1.23)x(2.19+2.17)/2	0.52		
		(1.77-1.47)x(2.21+2.19)/2	0.66		
		(2.20-1.77)x(2.19+2.21)/2	0.95		
		(2.55-2.20)x(2.19+2.19)/2	0.77		
		(3.39-2.55)x(2.20+2.19)/2	1.84		
		(3.87-3.39)x(2.19+2.20)/2	1.05		
		(4.38-3.87)x(2.16+2.19)/2	1.11		
		(5.01-4.38)x(2.12+2.16)/2	1.35		
		(5.11-5.01)x(2.12+2.12)/2	0.21		
		(5.19-5.11)x(2.11+2.12)/2	0.17		
		(5.84-5.19)x(2.10+2.11)/2	1.37		
		A RIPORTARE mq	42.37		

BONIFICA

N. SEZIONE PROG.	FIG.	ELEMENTI DI CALCOLO	AREA ELEMENTARE mq	AREA FIGURA mq	NOTE
		RIPORTO mq	42.37		
		(6.51-5.84)x(2.11+2.10)/2	1.41		
		(6.57-6.51)x(2.11+2.11)/2	0.13		
		(6.64-6.57)x(2.11+2.11)/2	0.15		
		(7.30-6.64)x(2.14+2.11)/2	1.40		
		(7.84-7.30)x(2.15+2.14)/2	1.16		
		(8.03-7.84)x(2.16+2.15)/2	0.41		
		(8.26-8.03)x(2.17+2.16)/2	0.50		
		(8.76-8.26)x(2.18+2.17)/2	1.09		
		(9.16-8.76)x(2.19+2.18)/2	0.87		
		(9.49-9.16)x(2.20+2.19)/2	0.72		
		(9.89-9.49)x(2.19+2.20)/2	0.88		
		(10.21-9.89)x(2.18+2.19)/2	0.70		
		(10.33-10.21)x(2.18+2.18)/2	0.26		
		(10.21-10.33)x(1.68+1.68)/2	-0.20		
		(9.89-10.21)x(1.69+1.68)/2	-0.54		
		(9.49-9.89)x(1.70+1.69)/2	-0.68		
		(9.16-9.49)x(1.69+1.70)/2	-0.56		
		(8.76-9.16)x(1.68+1.69)/2	-0.67		
		(8.26-8.76)x(1.67+1.68)/2	-0.84		
		(8.03-8.26)x(1.66+1.67)/2	-0.38		
		(7.84-8.03)x(1.65+1.66)/2	-0.31		
		(7.30-7.84)x(1.64+1.65)/2	-0.89		
		(6.64-7.30)x(1.61+1.64)/2	-1.07		
		(6.57-6.64)x(1.61+1.61)/2	-0.11		
		(6.51-6.57)x(1.61+1.61)/2	-0.10		
		(5.84-6.51)x(1.60+1.61)/2	-1.08		
		(5.19-5.84)x(1.61+1.60)/2	-1.04		
		(5.11-5.19)x(1.62+1.61)/2	-0.13		
		(5.01-5.11)x(1.62+1.62)/2	-0.16		
		(4.38-5.01)x(1.66+1.62)/2	-1.03		
		(3.87-4.38)x(1.69+1.66)/2	-0.85		
		(3.39-3.87)x(1.70+1.69)/2	-0.81		
		(2.55-3.39)x(1.69+1.70)/2	-1.42		
		(2.20-2.55)x(1.69+1.69)/2	-0.59		
		(1.77-2.20)x(1.71+1.69)/2	-0.73		
		(1.47-1.77)x(1.69+1.71)/2	-0.51		
		(1.23-1.47)x(1.67+1.69)/2	-0.40		
		(0.74-1.23)x(1.62+1.67)/2	-0.81		
		(0.14-0.74)x(1.62+1.62)/2	-0.97		
		(0.01-0.14)x(1.62+1.62)/2	-0.21		
		(-0.10-0.01)x(1.62+1.62)/2	-0.18		
		(-0.72--0.10)x(1.58+1.62)/2	-0.99		
		(-1.42--0.72)x(1.55+1.58)/2	-1.10		
		(-1.45--1.42)x(1.55+1.55)/2	-0.05		
		(-1.48--1.45)x(1.55+1.55)/2	-0.05		
		(-2.18--1.48)x(1.54+1.55)/2	-1.08		
		(-2.74--2.18)x(1.56+1.54)/2	-0.87		
		(-2.90--2.74)x(1.57+1.56)/2	-0.25		
		(-3.10--2.90)x(1.57+1.57)/2	-0.31		
		(-3.63--3.10)x(1.59+1.57)/2	-0.84		
		(-4.06--3.63)x(1.60+1.59)/2	-0.69		
		(-4.36--4.06)x(1.61+1.60)/2	-0.48		
		(-4.73--4.36)x(1.61+1.61)/2	-0.60		
		(-5.09--4.73)x(1.59+1.61)/2	-0.58		
		(-5.39--5.09)x(1.59+1.59)/2	-0.48		
		(-5.82--5.39)x(1.59+1.59)/2	-0.68		
		(-6.35--5.82)x(1.61+1.59)/2	-0.85		
		(-6.55--6.35)x(1.62+1.61)/2	-0.32		
		(-6.71--6.55)x(1.61+1.62)/2	-0.26		
		(-7.28--6.71)x(1.61+1.61)/2	-0.92		
		(-7.97--7.28)x(1.60+1.61)/2	-1.11		
		(-8.01--7.97)x(1.60+1.60)/2	-0.06		
		(-8.03--8.01)x(1.60+1.60)/2	-0.03		
		(-8.73--8.03)x(1.59+1.60)/2	-1.12		
		(-9.35--8.73)x(1.58+1.59)/2	-0.98		
		(-9.46--9.35)x(1.57+1.58)/2	-0.17		
		(-9.60--9.46)x(1.56+1.57)/2	-0.22		
		(-10.19--9.60)x(1.55+1.56)/2	-0.92		
		(-10.68--10.19)x(1.57+1.55)/2	-0.76		
		(-10.92--10.68)x(1.57+1.57)/2	-0.38		
		(-11.22--10.92)x(1.57+1.57)/2	-0.47		
		(-11.65--11.22)x(1.57+1.57)/2	-0.68		
		(-12.00--11.65)x(1.56+1.57)/2	-0.55		
		(-12.38--12.00)x(1.56+1.56)/2	-0.59		
		(-12.84--12.38)x(1.56+1.56)/2	-0.72		
		(-13.11--12.84)x(1.57+1.56)/2	-0.42		
		(-13.32--13.11)x(1.56+1.57)/2	-0.33		
		(-13.84--13.32)x(1.58+1.56)/2	-0.82		
		(-14.31--13.84)x(1.59+1.58)/2	-0.74		
				12.31	
11 150.00	BO1	(-13.98--14.36)x(2.15+2.16)/2	0.82		
		(-13.67--13.98)x(2.14+2.15)/2	0.66		
		(-13.16--13.67)x(2.13+2.14)/2	1.09		
		(-12.92--13.16)x(2.14+2.13)/2	0.51		
		(-12.77--12.92)x(2.15+2.14)/2	0.32		
		(-12.18--12.77)x(2.20+2.15)/2	1.28		
		(-11.57--12.18)x(2.24+2.20)/2	1.35		
		(-11.44--11.57)x(2.24+2.24)/2	0.29		
		(-11.23--11.44)x(2.26+2.24)/2	0.47		
		(-10.69--11.23)x(2.26+2.26)/2	1.22		
		(-10.36--10.69)x(2.27+2.26)/2	0.75		
		(-9.95--10.36)x(2.28+2.27)/2	0.93		
		(-9.29--9.95)x(2.25+2.28)/2	1.49		
		(-9.20--9.29)x(2.24+2.25)/2	0.20		
		(-9.15--9.20)x(2.24+2.24)/2	0.11		
		(-8.46--9.15)x(2.23+2.24)/2	1.54		
		(-7.94--8.46)x(2.25+2.23)/2	1.16		
		(-7.36--7.94)x(2.23+2.25)/2	1.30		
		(-6.73--7.36)x(2.22+2.23)/2	1.40		
		(-6.23--6.73)x(2.22+2.22)/2	1.11		
		(-5.52--6.23)x(2.20+2.22)/2	1.57		
		(-5.48--5.52)x(2.20+2.20)/2	0.09		
		(-5.42--5.48)x(2.20+2.20)/2	0.13		
		(-4.74--5.42)x(2.23+2.20)/2	1.51		
		(-4.31--4.74)x(2.23+2.23)/2	0.96		
		A RIPORTARE mq	22.26		

BONIFICA

N. SEZIONE PROG.	FIG.	ELEMENTI DI CALCOLO	AREA ELEMENTARE mq	AREA FIGURA mq	NOTE
		RIPORTO mq	22.26		
		(-3.99--4.31)x(2.24+2.23)/2	0.72		
		(-3.49--3.99)x(2.24+2.24)/2	1.12		
		(-3.25--3.49)x(2.23+2.24)/2	0.54		
		(-3.10--3.25)x(2.23+2.23)/2	0.33		
		(-2.51--3.10)x(2.22+2.23)/2	1.31		
		(-1.89--2.51)x(2.22+2.22)/2	1.38		
		(-1.76--1.89)x(2.22+2.22)/2	0.29		
		(-1.55--1.76)x(2.23+2.22)/2	0.47		
		(-1.02--1.55)x(2.26+2.23)/2	1.19		
		(-0.68--1.02)x(2.26+2.26)/2	0.77		
		(-0.27--0.68)x(2.23+2.26)/2	0.92		
		(0.38--0.27)x(2.22+2.23)/2	1.45		
		(0.47-0.38)x(2.22+2.22)/2	0.20		
		(0.52-0.47)x(2.22+2.22)/2	0.11		
		(1.21-0.52)x(2.22+2.22)/2	1.53		
		(1.73-1.21)x(2.21+2.22)/2	1.15		
		(1.96-1.73)x(2.22+2.21)/2	0.51		
		(2.32-1.96)x(2.23+2.22)/2	0.80		
		(2.70-2.32)x(2.23+2.23)/2	0.85		
		(2.94-2.70)x(2.22+2.23)/2	0.53		
		(3.45-2.94)x(2.21+2.22)/2	1.13		
		(4.15-3.45)x(2.20+2.21)/2	1.54		
		(4.19-4.15)x(2.19+2.20)/2	0.09		
		(4.25-4.19)x(2.19+2.19)/2	0.13		
		(4.93-4.25)x(2.16+2.19)/2	1.48		
		(5.36-4.93)x(2.14+2.16)/2	0.92		
		(5.68-5.36)x(2.12+2.14)/2	0.68		
		(6.19-5.68)x(2.08+2.12)/2	1.07		
		(6.42-6.19)x(2.06+2.08)/2	0.48		
		(6.57-6.42)x(2.06+2.06)/2	0.31		
		(7.17-6.57)x(2.02+2.06)/2	1.22		
		(7.78-7.17)x(1.89+2.02)/2	1.19		
		(7.91-7.78)x(1.88+1.89)/2	0.25		
		(8.12-7.91)x(1.87+1.88)/2	0.39		
		(8.65-8.12)x(1.99+1.87)/2	1.02		
		(8.99-8.65)x(2.01+1.99)/2	0.68		
		(9.40-8.99)x(2.04+2.01)/2	0.83		
		(10.06-9.40)x(2.07+2.04)/2	1.36		
		(10.14-10.06)x(2.08+2.07)/2	0.17		
		(10.20-10.14)x(2.08+2.08)/2	0.12		
		(10.61-10.20)x(2.09+2.08)/2	0.85		
		(10.20-10.61)x(1.58+1.59)/2	-0.65		
		(10.14-10.20)x(1.58+1.58)/2	-0.09		
		(10.06-10.14)x(1.57+1.58)/2	-0.13		
		(9.40-10.06)x(1.54+1.57)/2	-1.03		
		(8.99-9.40)x(1.51+1.54)/2	-0.63		
		(8.65-8.99)x(1.49+1.51)/2	-0.51		
		(8.12-8.65)x(1.37+1.49)/2	-0.76		
		(7.91-8.12)x(1.38+1.37)/2	-0.29		
		(7.78-7.91)x(1.39+1.38)/2	-0.18		
		(7.17-7.78)x(1.52+1.39)/2	-0.89		
		(6.57-7.17)x(1.56+1.52)/2	-0.92		
		(6.42-6.57)x(1.56+1.56)/2	-0.23		
		(6.19-6.42)x(1.58+1.56)/2	-0.36		
		(5.68-6.19)x(1.62+1.58)/2	-0.82		
		(5.36-5.68)x(1.64+1.62)/2	-0.52		
		(4.93-5.36)x(1.66+1.64)/2	-0.71		
		(4.25-4.93)x(1.69+1.66)/2	-1.14		
		(4.19-4.25)x(1.69+1.69)/2	-0.10		
		(4.15-4.19)x(1.70+1.69)/2	-0.07		
		(3.45-4.15)x(1.71+1.70)/2	-1.19		
		(2.94-3.45)x(1.72+1.71)/2	-0.87		
		(2.70-2.94)x(1.73+1.72)/2	-0.41		
		(2.32-2.70)x(1.73+1.73)/2	-0.66		
		(1.96-2.32)x(1.72+1.73)/2	-0.62		
		(1.73-1.96)x(1.71+1.72)/2	-0.39		
		(1.21-1.73)x(1.72+1.71)/2	-0.89		
		(0.52-1.21)x(1.72+1.72)/2	-1.19		
		(0.47-0.52)x(1.72+1.72)/2	-0.09		
		(0.38-0.47)x(1.72+1.72)/2	-0.15		
		(-0.27-0.38)x(1.73+1.72)/2	-1.12		
		(-0.68--0.27)x(1.76+1.73)/2	-0.72		
		(-1.02--0.68)x(1.76+1.76)/2	-0.60		
		(-1.55--1.02)x(1.73+1.76)/2	-0.92		
		(-1.76--1.55)x(1.72+1.73)/2	-0.36		
		(-1.89--1.76)x(1.72+1.72)/2	-0.22		
		(-2.51--1.89)x(1.72+1.72)/2	-1.07		
		(-3.10--2.51)x(1.73+1.72)/2	-1.02		
		(-3.25--3.10)x(1.73+1.73)/2	-0.26		
		(-3.49--3.25)x(1.74+1.73)/2	-0.42		
		(-3.99--3.49)x(1.74+1.74)/2	-0.87		
		(-4.31--3.99)x(1.73+1.74)/2	-0.56		
		(-4.74--4.31)x(1.73+1.73)/2	-0.74		
		(-5.42--4.74)x(1.70+1.73)/2	-1.17		
		(-5.48--5.42)x(1.70+1.70)/2	-0.10		
		(-5.52--5.48)x(1.70+1.70)/2	-0.07		
		(-6.23--5.52)x(1.72+1.70)/2	-1.21		
		(-6.73--6.23)x(1.72+1.72)/2	-0.86		
		(-7.36--6.73)x(1.73+1.72)/2	-1.09		
		(-7.94--7.36)x(1.75+1.73)/2	-1.01		
		(-8.46--7.94)x(1.73+1.75)/2	-0.90		
		(-9.15--8.46)x(1.74+1.73)/2	-1.20		
		(-9.20--9.15)x(1.74+1.74)/2	-0.09		
		(-9.29--9.20)x(1.75+1.74)/2	-0.16		
		(-9.95--9.29)x(1.78+1.75)/2	-1.16		
		(-10.36--9.95)x(1.77+1.78)/2	-0.73		
		(-10.69--10.36)x(1.76+1.77)/2	-0.58		
		(-11.23--10.69)x(1.76+1.76)/2	-0.95		
		(-11.44--11.23)x(1.74+1.76)/2	-0.37		
		(-11.57--11.44)x(1.74+1.74)/2	-0.23		
		(-12.18--11.57)x(1.70+1.74)/2	-1.05		
		(-12.77--12.18)x(1.65+1.70)/2	-0.99		
		(-12.92--12.77)x(1.64+1.65)/2	-0.25		
		(-13.16--12.92)x(1.63+1.64)/2	-0.39		
		(-13.67--13.16)x(1.64+1.63)/2	-0.83		
		A RIPORTARE mq	13.58		

BONIFICA

N. SEZIONE PROG.	FIG.	ELEMENTI DI CALCOLO	AREA ELEMENTARE mq	AREA FIGURA mq	NOTE
		RIPORTO mq	13.58		
		(-13.98--13.67)x(1.65+1.64)/2	-0.51		
		(-14.36--13.98)x(1.66+1.65)/2	-0.63		
				12.44	
12	BO1	(-14.24--14.31)x(2.18+2.18)/2	0.15		
165.00		(-14.11--14.24)x(2.19+2.18)/2	0.28		
		(-13.82--14.11)x(2.24+2.19)/2	0.64		
		(-13.34--13.82)x(2.29+2.24)/2	1.09		
		(-13.11--13.34)x(2.32+2.29)/2	0.53		
		(-12.57--13.11)x(2.32+2.32)/2	1.25		
		(-11.99--12.57)x(2.29+2.32)/2	1.34		
		(-11.79--11.99)x(2.29+2.29)/2	0.46		
		(-11.38--11.79)x(2.29+2.29)/2	0.94		
		(-11.02--11.38)x(2.30+2.29)/2	0.83		
		(-10.86--11.02)x(2.29+2.30)/2	0.37		
		(-10.25--10.86)x(2.28+2.29)/2	1.39		
		(-9.73--10.25)x(2.28+2.28)/2	1.19		
		(-9.48--9.73)x(2.28+2.28)/2	0.57		
		(-8.94--9.48)x(2.24+2.28)/2	1.22		
		(-8.70--8.94)x(2.24+2.24)/2	0.54		
		(-8.60--8.70)x(2.24+2.24)/2	0.22		
		(-7.93--8.60)x(2.32+2.24)/2	1.53		
		(-7.47--7.93)x(2.33+2.32)/2	1.07		
		(-7.16--7.47)x(2.33+2.33)/2	0.72		
		(-6.50--7.16)x(2.31+2.33)/2	1.53		
		(-6.39--6.50)x(2.30+2.31)/2	0.25		
		(-6.34--6.39)x(2.30+2.30)/2	0.11		
		(-5.61--6.34)x(2.29+2.30)/2	1.68		
		(-5.21--5.61)x(2.28+2.29)/2	0.91		
		(-4.84--5.21)x(2.28+2.28)/2	0.84		
		(-4.08--4.84)x(2.25+2.28)/2	1.72		
		(-4.07--4.08)x(2.25+2.25)/2	0.02		
		(-4.05--4.07)x(2.25+2.25)/2	0.05		
		(-3.30--4.05)x(2.26+2.25)/2	1.69		
		(-2.95--3.30)x(2.26+2.26)/2	0.79		
		(-2.52--2.95)x(2.26+2.26)/2	0.97		
		(-1.82--2.52)x(2.27+2.26)/2	1.59		
		(-1.75--1.82)x(2.27+2.27)/2	0.16		
		(-1.61--1.75)x(2.27+2.27)/2	0.32		
		(-0.98--1.61)x(2.27+2.27)/2	1.43		
		(-0.69--0.98)x(2.27+2.27)/2	0.66		
		(-0.21--0.69)x(2.27+2.27)/2	1.09		
		(0.44--0.21)x(2.27+2.27)/2	1.48		
		(0.83-0.44)x(2.27+2.27)/2	0.89		
		(1.57-0.83)x(2.26+2.27)/2	1.68		
		(2.11-1.57)x(2.26+2.26)/2	1.22		
		(2.70-2.11)x(2.28+2.26)/2	1.34		
		(2.88-2.70)x(2.29+2.28)/2	0.41		
		(3.27-2.88)x(2.30+2.29)/2	0.90		
		(3.65-3.27)x(2.31+2.30)/2	0.88		
		(3.83-3.65)x(2.31+2.31)/2	0.42		
		(4.43-3.83)x(2.30+2.31)/2	1.38		
		(4.96-4.43)x(2.29+2.30)/2	1.22		
		(5.20-4.96)x(2.29+2.29)/2	0.55		
		(5.71-5.20)x(2.29+2.29)/2	1.17		
		(5.97-5.71)x(2.28+2.29)/2	0.59		
		(6.09-5.97)x(2.28+2.28)/2	0.27		
		(6.74-6.09)x(2.27+2.28)/2	1.48		
		(7.22-6.74)x(2.26+2.27)/2	1.09		
		(7.52-7.22)x(2.26+2.26)/2	0.68		
		(8.15-7.52)x(2.26+2.26)/2	1.42		
		(8.29-8.15)x(2.26+2.26)/2	0.32		
		(8.35-8.29)x(2.26+2.26)/2	0.14		
		(9.06-8.35)x(2.23+2.26)/2	1.59		
		(9.48-9.06)x(2.23+2.23)/2	0.94		
		(9.83-9.48)x(2.22+2.23)/2	0.78		
		(10.38-9.83)x(2.23+2.22)/2	1.22		
		(9.83-10.38)x(1.72+1.73)/2	-0.95		
		(9.48-9.83)x(1.73+1.72)/2	-0.60		
		(9.06-9.48)x(1.73+1.73)/2	-0.73		
		(8.35-9.06)x(1.76+1.73)/2	-1.24		
		(8.29-8.35)x(1.76+1.76)/2	-0.11		
		(8.15-8.29)x(1.76+1.76)/2	-0.25		
		(7.52-8.15)x(1.76+1.76)/2	-1.11		
		(7.22-7.52)x(1.76+1.76)/2	-0.53		
		(6.74-7.22)x(1.77+1.76)/2	-0.85		
		(6.09-6.74)x(1.78+1.77)/2	-1.15		
		(5.97-6.09)x(1.78+1.78)/2	-0.21		
		(5.71-5.97)x(1.79+1.78)/2	-0.46		
		(5.20-5.71)x(1.79+1.79)/2	-0.91		
		(4.96-5.20)x(1.79+1.79)/2	-0.43		
		(4.43-4.96)x(1.80+1.79)/2	-0.95		
		(3.83-4.43)x(1.81+1.80)/2	-1.08		
		(3.65-3.83)x(1.81+1.81)/2	-0.33		
		(3.27-3.65)x(1.80+1.81)/2	-0.69		
		(2.88-3.27)x(1.79+1.80)/2	-0.70		
		(2.70-2.88)x(1.78+1.79)/2	-0.32		
		(2.11-2.70)x(1.76+1.78)/2	-1.04		
		(1.57-2.11)x(1.76+1.76)/2	-0.95		
		(0.83-1.57)x(1.77+1.76)/2	-1.31		
		(0.44-0.83)x(1.77+1.77)/2	-0.69		
		(-0.21-0.44)x(1.77+1.77)/2	-1.15		
		(-0.69--0.21)x(1.77+1.77)/2	-0.85		
		(-0.98--0.69)x(1.77+1.77)/2	-0.51		
		(-1.61--0.98)x(1.77+1.77)/2	-1.12		
		(-1.75--1.61)x(1.77+1.77)/2	-0.25		
		(-1.82--1.75)x(1.77+1.77)/2	-0.12		
		(-2.52--1.82)x(1.76+1.77)/2	-1.24		
		(-2.95--2.52)x(1.76+1.76)/2	-0.76		
		(-3.30--2.95)x(1.76+1.76)/2	-0.62		
		(-4.05--3.30)x(1.75+1.76)/2	-1.32		
		(-4.07--4.05)x(1.75+1.75)/2	-0.04		
		(-4.08--4.07)x(1.75+1.75)/2	-0.02		
		(-4.84--4.08)x(1.78+1.75)/2	-1.34		
		(-5.21--4.84)x(1.78+1.78)/2	-0.66		
		(-5.61--5.21)x(1.79+1.78)/2	-0.71		
		A RIPORTARE mq	27.90		

BONIFICA

N. SEZIONE PROG.	FIG.	ELEMENTI DI CALCOLO	AREA ELEMENTARE mq	AREA FIGURA mq	NOTE
		RIPORTO mq	27.90		
		(-6.34--5.61)x(1.80+1.79)/2	-1.31		
		(-6.39--6.34)x(1.80+1.80)/2	-0.09		
		(-6.50--6.39)x(1.81+1.80)/2	-0.20		
		(-7.16--6.50)x(1.83+1.81)/2	-1.20		
		(-7.47--7.16)x(1.83+1.83)/2	-0.57		
		(-7.93--7.47)x(1.82+1.83)/2	-0.84		
		(-8.60--7.93)x(1.74+1.82)/2	-1.19		
		(-8.70--8.60)x(1.74+1.74)/2	-0.17		
		(-8.94--8.70)x(1.74+1.74)/2	-0.42		
		(-9.48--8.94)x(1.78+1.74)/2	-0.95		
		(-9.73--9.48)x(1.78+1.78)/2	-0.45		
		(-10.25--9.73)x(1.78+1.78)/2	-0.93		
		(-10.86--10.25)x(1.79+1.78)/2	-1.09		
		(-11.02--10.86)x(1.80+1.79)/2	-0.29		
		(-11.38--11.02)x(1.79+1.80)/2	-0.65		
		(-11.79--11.38)x(1.79+1.79)/2	-0.73		
		(-11.99--11.79)x(1.79+1.79)/2	-0.36		
		(-12.57--11.99)x(1.82+1.79)/2	-1.05		
		(-13.11--12.57)x(1.82+1.82)/2	-0.98		
		(-13.34--13.11)x(1.79+1.82)/2	-0.42		
		(-13.82--13.34)x(1.74+1.79)/2	-0.85		
		(-14.11--13.82)x(1.69+1.74)/2	-0.50		
		(-14.24--14.11)x(1.68+1.69)/2	-0.22		
		(-14.31--14.24)x(1.68+1.68)/2	-0.12		
				12.32	
13 180.00	BO1	(-12.73--13.02)x(2.92+2.92)/2	0.85		
		(-12.17--12.73)x(2.93+2.92)/2	1.64		
		(-11.10--12.17)x(2.89+2.93)/2	3.11		
		(-11.09--11.10)x(2.89+2.89)/2	0.03		
		(-10.28--11.09)x(2.71+2.89)/2	2.27		
		(-10.02--10.28)x(2.66+2.71)/2	0.70		
		(-9.46--10.02)x(2.62+2.66)/2	1.48		
		(-8.94--9.46)x(2.55+2.62)/2	1.34		
		(-8.65--8.94)x(2.55+2.55)/2	0.74		
		(-7.86--8.65)x(2.52+2.55)/2	2.00		
		(-7.83--7.86)x(2.52+2.52)/2	0.08		
		(-7.72--7.83)x(2.51+2.52)/2	0.28		
		(-7.01--7.72)x(2.45+2.51)/2	1.76		
		(-6.79--7.01)x(2.43+2.45)/2	0.54		
		(-6.20--6.79)x(2.38+2.43)/2	1.42		
		(-5.71--6.20)x(2.36+2.38)/2	1.16		
		(-5.38--5.71)x(2.33+2.36)/2	0.77		
		(-4.64--5.38)x(2.28+2.33)/2	1.71		
		(-4.57--4.64)x(2.28+2.28)/2	0.16		
		(-4.35--4.57)x(2.28+2.28)/2	0.50		
		(-3.75--4.35)x(2.28+2.28)/2	1.37		
		(-3.56--3.75)x(2.27+2.28)/2	0.43		
		(-2.93--3.56)x(2.24+2.27)/2	1.42		
		(-2.48--2.93)x(2.22+2.24)/2	1.00		
		(-2.12--2.48)x(2.20+2.22)/2	0.80		
		(-1.41--2.12)x(2.17+2.20)/2	1.55		
		(-1.30--1.41)x(2.17+2.17)/2	0.24		
		(-0.97--1.30)x(2.17+2.17)/2	0.72		
		(-0.49--0.97)x(2.18+2.17)/2	1.04		
		(-0.33--0.49)x(2.17+2.18)/2	0.35		
		(0.33--0.33)x(2.21+2.17)/2	1.45		
		(0.74-0.33)x(2.24+2.21)/2	0.91		
		(1.15-0.74)x(2.26+2.24)/2	0.92		
		(1.82-1.15)x(2.28+2.26)/2	1.52		
		(1.96-1.82)x(2.27+2.28)/2	0.32		
		(2.41-1.96)x(2.28+2.27)/2	1.02		
		(2.78-2.41)x(2.29+2.28)/2	0.85		
		(2.90-2.78)x(2.29+2.29)/2	0.27		
		(3.59-2.90)x(2.26+2.29)/2	1.57		
		(3.97-3.59)x(2.27+2.26)/2	0.86		
		(4.41-3.97)x(2.27+2.27)/2	1.00		
		(5.05-4.41)x(2.24+2.27)/2	1.44		
		(5.23-5.05)x(2.24+2.24)/2	0.40		
		(5.78-5.23)x(2.22+2.24)/2	1.23		
		(6.04-5.78)x(2.21+2.22)/2	0.58		
		(6.13-6.04)x(2.21+2.21)/2	0.20		
		(6.28-6.13)x(2.20+2.21)/2	0.33		
		(7.20-6.28)x(2.17+2.20)/2	2.01		
		(7.68-7.20)x(2.16+2.17)/2	1.04		
		(8.28-7.68)x(2.14+2.16)/2	1.29		
		(8.49-8.28)x(2.14+2.14)/2	0.45		
		(9.16-8.49)x(2.14+2.14)/2	1.43		
		(9.31-9.16)x(2.14+2.14)/2	0.32		
		(9.35-9.31)x(2.13+2.14)/2	0.09		
		(10.12-9.35)x(2.15+2.13)/2	1.65		
		(10.31-10.12)x(2.15+2.15)/2	0.41		
		(10.12-10.31)x(1.65+1.65)/2	-0.31		
		(9.35-10.12)x(1.63+1.65)/2	-1.26		
		(9.31-9.35)x(1.64+1.63)/2	-0.07		
		(9.16-9.31)x(1.64+1.64)/2	-0.25		
		(8.49-9.16)x(1.64+1.64)/2	-1.10		
		(8.28-8.49)x(1.64+1.64)/2	-0.34		
		(7.68-8.28)x(1.66+1.64)/2	-0.99		
		(7.20-7.68)x(1.67+1.66)/2	-0.80		
		(6.28-7.20)x(1.70+1.67)/2	-1.55		
		(6.13-6.28)x(1.71+1.70)/2	-0.26		
		(6.04-6.13)x(1.71+1.71)/2	-0.15		
		(5.78-6.04)x(1.72+1.71)/2	-0.45		
		(5.23-5.78)x(1.74+1.72)/2	-0.95		
		(5.05-5.23)x(1.74+1.74)/2	-0.31		
		(4.41-5.05)x(1.77+1.74)/2	-1.12		
		(3.97-4.41)x(1.77+1.77)/2	-0.78		
		(3.59-3.97)x(1.76+1.77)/2	-0.67		
		(2.90-3.59)x(1.79+1.76)/2	-1.22		
		(2.78-2.90)x(1.79+1.79)/2	-0.21		
		(2.41-2.78)x(1.78+1.79)/2	-0.66		
		(1.96-2.41)x(1.77+1.78)/2	-0.80		
		(1.82-1.96)x(1.78+1.77)/2	-0.25		
		(1.15-1.82)x(1.76+1.78)/2	-1.19		
		(0.74-1.15)x(1.74+1.76)/2	-0.72		
		A RIPORTARE mq	38.61		

BONIFICA

N. SEZIONE PROG.	FIG.	ELEMENTI DI CALCOLO	AREA ELEMENTARE mq	AREA FIGURA mq	NOTE
		RIPORTO mq	38.61		
		(0.33-0.74)x(1.71+1.74)/2	-0.71		
		(-0.33-0.33)x(1.67+1.71)/2	-1.12		
		(-0.49--0.33)x(1.68+1.67)/2	-0.27		
		(-0.97--0.49)x(1.67+1.68)/2	-0.80		
		(-1.30--0.97)x(1.67+1.67)/2	-0.55		
		(-1.41--1.30)x(1.67+1.67)/2	-0.18		
		(-2.12--1.41)x(1.70+1.67)/2	-1.20		
		(-2.48--2.12)x(1.72+1.70)/2	-0.62		
		(-2.93--2.48)x(1.74+1.72)/2	-0.78		
		(-3.56--2.93)x(1.77+1.74)/2	-1.11		
		(-3.75--3.56)x(1.78+1.77)/2	-0.34		
		(-4.35--3.75)x(1.78+1.78)/2	-1.07		
		(-4.57--4.35)x(1.78+1.78)/2	-0.39		
		(-4.64--4.57)x(1.78+1.78)/2	-0.12		
		(-5.38--4.64)x(1.83+1.78)/2	-1.34		
		(-5.71--5.38)x(1.86+1.83)/2	-0.61		
		(-6.20--5.71)x(1.88+1.86)/2	-0.92		
		(-6.79--6.20)x(1.93+1.88)/2	-1.12		
		(-7.01--6.79)x(1.95+1.93)/2	-0.43		
		(-7.72--7.01)x(2.01+1.95)/2	-1.41		
		(-7.83--7.72)x(2.02+2.01)/2	-0.22		
		(-7.86--7.83)x(2.02+2.02)/2	-0.06		
		(-8.65--7.86)x(2.05+2.02)/2	-1.61		
		(-8.94--8.65)x(2.05+2.05)/2	-0.59		
		(-9.46--8.94)x(2.12+2.05)/2	-1.08		
		(-10.02--9.46)x(2.16+2.12)/2	-1.20		
		(-10.28--10.02)x(2.21+2.16)/2	-0.57		
		(-11.09--10.28)x(2.39+2.21)/2	-1.86		
		(-11.10--11.09)x(2.39+2.39)/2	-0.02		
		(-12.17--11.10)x(2.43+2.39)/2	-2.58		
		(-12.73--12.17)x(2.42+2.43)/2	-1.36		
		(-13.02--12.73)x(2.42+2.42)/2	-0.70		
				11.67	
14 195.00	BO1	(-9.63--10.11)x(1.99+1.87)/2	0.93		
		(-9.06--9.63)x(2.13+1.99)/2	1.17		
		(-8.76--9.06)x(2.21+2.13)/2	0.65		
		(-8.02--8.76)x(2.39+2.21)/2	1.70		
		(-7.30--8.02)x(2.57+2.39)/2	1.79		
		(-6.97--7.30)x(2.66+2.57)/2	0.86		
		(-6.16--6.97)x(2.77+2.66)/2	2.20		
		(-5.92--6.16)x(2.82+2.77)/2	0.67		
		(-5.29--5.92)x(2.82+2.82)/2	1.78		
		(-4.87--5.29)x(2.83+2.82)/2	1.19		
		(-4.42--4.87)x(2.85+2.83)/2	1.28		
		(-3.83--4.42)x(2.86+2.85)/2	1.68		
		(-3.56--3.83)x(2.86+2.86)/2	0.77		
		(-2.78--3.56)x(2.88+2.86)/2	2.24		
		(-2.69--2.78)x(2.88+2.88)/2	0.26		
		(-2.26--2.69)x(2.89+2.88)/2	1.24		
		(-1.82--2.26)x(2.90+2.89)/2	1.27		
		(-1.73--1.82)x(2.90+2.90)/2	0.26		
		(-0.96--1.73)x(2.90+2.90)/2	2.23		
		(-0.69--0.96)x(2.90+2.90)/2	0.78		
		(-0.09--0.69)x(2.86+2.90)/2	1.73		
		(0.36--0.09)x(2.85+2.86)/2	1.28		
		(0.78-0.36)x(2.76+2.85)/2	1.18		
		(1.41-0.78)x(2.70+2.76)/2	1.72		
		(1.65-1.41)x(2.68+2.70)/2	0.65		
		(2.46-1.65)x(2.51+2.68)/2	2.10		
		(2.51-2.46)x(2.51+2.51)/2	0.13		
		(2.79-2.51)x(2.49+2.51)/2	0.70		
		(3.38-2.79)x(2.46+2.49)/2	1.46		
		(3.50-3.38)x(2.45+2.46)/2	0.29		
		(4.25-3.50)x(2.43+2.45)/2	1.83		
		(4.55-4.25)x(2.42+2.43)/2	0.73		
		(5.11-4.55)x(2.36+2.42)/2	1.34		
		(5.60-5.11)x(2.30+2.36)/2	1.14		
		(5.98-5.60)x(2.29+2.30)/2	0.87		
		(6.64-5.98)x(2.25+2.29)/2	1.50		
		(6.85-6.64)x(2.25+2.25)/2	0.47		
		(7.69-6.85)x(2.26+2.25)/2	1.89		
		(7.72-7.69)x(2.26+2.26)/2	0.07		
		(7.84-7.72)x(2.26+2.26)/2	0.27		
		(8.58-7.84)x(2.25+2.26)/2	1.67		
		(8.74-8.58)x(2.25+2.25)/2	0.36		
		(9.45-8.74)x(2.21+2.25)/2	1.58		
		(9.79-9.45)x(2.18+2.21)/2	0.75		
		(9.84-9.79)x(2.18+2.18)/2	0.11		
		(9.79-9.84)x(1.68+1.68)/2	-0.08		
		(9.45-9.79)x(1.71+1.68)/2	-0.58		
		(8.74-9.45)x(1.75+1.71)/2	-1.23		
		(8.58-8.74)x(1.75+1.75)/2	-0.28		
		(7.84-8.58)x(1.76+1.75)/2	-1.30		
		(7.72-7.84)x(1.76+1.76)/2	-0.21		
		(7.69-7.72)x(1.76+1.76)/2	-0.05		
		(6.85-7.69)x(1.75+1.76)/2	-1.47		
		(6.64-6.85)x(1.75+1.75)/2	-0.37		
		(5.98-6.64)x(1.79+1.75)/2	-1.17		
		(5.60-5.98)x(1.80+1.79)/2	-0.68		
		(5.11-5.60)x(1.86+1.80)/2	-0.90		
		(4.55-5.11)x(1.92+1.86)/2	-1.06		
		(4.25-4.55)x(1.93+1.92)/2	-0.58		
		(3.50-4.25)x(1.95+1.93)/2	-1.46		
		(3.38-3.50)x(1.96+1.95)/2	-0.23		
		(2.79-3.38)x(1.99+1.96)/2	-1.17		
		(2.51-2.79)x(2.01+1.99)/2	-0.56		
		(2.46-2.51)x(2.01+2.01)/2	-0.10		
		(1.65-2.46)x(2.18+2.01)/2	-1.70		
		(1.41-1.65)x(2.20+2.18)/2	-0.53		
		(0.78-1.41)x(2.26+2.20)/2	-1.40		
		(0.36-0.78)x(2.35+2.26)/2	-0.97		
		(-0.09-0.36)x(2.36+2.35)/2	-1.06		
		(-0.69--0.09)x(2.40+2.36)/2	-1.43		
		(-0.96--0.69)x(2.40+2.40)/2	-0.65		
		(-1.73--0.96)x(2.40+2.40)/2	-1.85		
		A RIPORTARE mq	27.70		

BONIFICA

N. SEZIONE PROG.	FIG.	ELEMENTI DI CALCOLO	AREA ELEMENTARE mq	AREA FIGURA mq	NOTE
		RIPORTO mq	27.70		
		(-1.82--1.73)x(2.40+2.40)/2	-0.22		
		(-2.26--1.82)x(2.39+2.40)/2	-1.05		
		(-2.69--2.26)x(2.38+2.39)/2	-1.03		
		(-2.78--2.69)x(2.38+2.38)/2	-0.21		
		(-3.56--2.78)x(2.36+2.38)/2	-1.85		
		(-3.83--3.56)x(2.36+2.36)/2	-0.64		
		(-4.42--3.83)x(2.35+2.36)/2	-1.39		
		(-4.87--4.42)x(2.33+2.35)/2	-1.05		
		(-5.29--4.87)x(2.32+2.33)/2	-0.98		
		(-5.92--5.29)x(2.32+2.32)/2	-1.46		
		(-6.16--5.92)x(2.27+2.32)/2	-0.55		
		(-6.97--6.16)x(2.16+2.27)/2	-1.79		
		(-7.30--6.97)x(2.07+2.16)/2	-0.70		
		(-8.02--7.30)x(1.89+2.07)/2	-1.43		
		(-8.76--8.02)x(1.71+1.89)/2	-1.33		
		(-9.06--8.76)x(1.63+1.71)/2	-0.50		
		(-9.63--9.06)x(1.49+1.63)/2	-0.89		
		(-10.11--9.63)x(1.37+1.49)/2	-0.69		
				9.94	
15 210.00	BO1	(-2.69--2.79)x(2.23+2.17)/2	0.22		
		(-2.21--2.69)x(2.36+2.23)/2	1.10		
		(-1.79--2.21)x(2.53+2.36)/2	1.03		
		(-1.17--1.79)x(2.66+2.53)/2	1.61		
		(-0.89--1.17)x(2.66+2.66)/2	0.74		
		(-0.13--0.89)x(2.70+2.66)/2	2.04		
		(0.01--0.13)x(2.71+2.70)/2	0.38		
		(0.90-0.01)x(2.71+2.71)/2	2.41		
		(0.91-0.90)x(2.71+2.71)/2	0.03		
		(0.99-0.91)x(2.71+2.71)/2	0.22		
		(1.81-0.99)x(2.71+2.71)/2	2.22		
		(1.94-1.81)x(2.71+2.71)/2	0.35		
		(2.71-1.94)x(2.72+2.71)/2	2.09		
		(2.98-2.71)x(2.71+2.72)/2	0.73		
		(3.61-2.98)x(2.73+2.71)/2	1.71		
		(4.01-3.61)x(2.73+2.73)/2	1.09		
		(4.51-4.01)x(2.76+2.73)/2	1.37		
		(5.05-4.51)x(2.81+2.76)/2	1.50		
		(5.41-5.05)x(2.83+2.81)/2	1.02		
		(6.09-5.41)x(2.86+2.83)/2	1.93		
		(6.32-6.09)x(2.86+2.86)/2	0.66		
		(7.12-6.32)x(2.87+2.86)/2	2.29		
		(7.22-7.12)x(2.87+2.87)/2	0.29		
		(7.82-7.22)x(2.88+2.87)/2	1.73		
		(8.12-7.82)x(2.89+2.88)/2	0.87		
		(8.16-8.12)x(2.89+2.89)/2	0.12		
		(8.17-8.16)x(2.89+2.89)/2	0.03		
		(8.16-8.17)x(2.39+2.39)/2	-0.02		
		(8.12-8.16)x(2.39+2.39)/2	-0.10		
		(7.82-8.12)x(2.38+2.39)/2	-0.72		
		(7.22-7.82)x(2.37+2.38)/2	-1.43		
		(7.12-7.22)x(2.37+2.37)/2	-0.24		
		(6.32-7.12)x(2.36+2.37)/2	-1.89		
		(6.09-6.32)x(2.36+2.36)/2	-0.54		
		(5.41-6.09)x(2.33+2.36)/2	-1.59		
		(5.05-5.41)x(2.31+2.33)/2	-0.84		
		(4.51-5.05)x(2.26+2.31)/2	-1.23		
		(4.01-4.51)x(2.23+2.26)/2	-1.12		
		(3.61-4.01)x(2.23+2.23)/2	-0.89		
		(2.98-3.61)x(2.21+2.23)/2	-1.40		
		(2.71-2.98)x(2.22+2.21)/2	-0.60		
		(1.94-2.71)x(2.21+2.22)/2	-1.71		
		(1.81-1.94)x(2.21+2.21)/2	-0.29		
		(0.99-1.81)x(2.21+2.21)/2	-1.81		
		(0.91-0.99)x(2.21+2.21)/2	-0.18		
		(0.90-0.91)x(2.21+2.21)/2	-0.02		
		(0.01-0.90)x(2.21+2.21)/2	-1.97		
		(-0.13-0.01)x(2.20+2.21)/2	-0.31		
		(-0.89--0.13)x(2.16+2.20)/2	-1.66		
		(-1.17--0.89)x(2.16+2.16)/2	-0.60		
		(-1.79--1.17)x(2.03+2.16)/2	-1.30		
		(-2.21--1.79)x(1.86+2.03)/2	-0.82		
		(-2.69--2.21)x(1.73+1.86)/2	-0.86		
		(-2.79--2.69)x(1.67+1.73)/2	-0.17		
				5.47	
15bis 216.28	BO1	(0.63-0.00)x(2.07+1.87)/2	1.24		
		(0.77-0.63)x(2.11+2.07)/2	0.29		
		(0.79-0.77)x(2.12+2.11)/2	0.04		
		(1.67-0.79)x(2.34+2.12)/2	1.96		
		(1.82-1.67)x(2.36+2.34)/2	0.35		
		(2.58-1.82)x(2.39+2.36)/2	1.80		
		(2.86-2.58)x(2.41+2.39)/2	0.67		
		(3.48-2.86)x(2.44+2.41)/2	1.50		
		(3.90-3.48)x(2.48+2.44)/2	1.03		
		(4.39-3.90)x(2.51+2.48)/2	1.22		
		(4.93-4.39)x(2.56+2.51)/2	1.37		
		(5.29-4.93)x(2.57+2.56)/2	0.92		
		(5.97-5.29)x(2.63+2.57)/2	1.77		
		(6.20-5.97)x(2.63+2.63)/2	0.60		
		(7.00-6.20)x(2.67+2.63)/2	2.12		
		(7.11-7.00)x(2.67+2.67)/2	0.29		
		(7.81-7.11)x(2.69+2.67)/2	1.88		
		(8.01-7.81)x(2.70+2.69)/2	0.54		
		(8.04-8.01)x(2.70+2.70)/2	0.08		
		(8.14-8.04)x(2.70+2.70)/2	0.27		
		(8.04-8.14)x(2.20+2.20)/2	-0.22		
		(8.01-8.04)x(2.20+2.20)/2	-0.07		
		(7.81-8.01)x(2.19+2.20)/2	-0.44		
		(7.11-7.81)x(2.17+2.19)/2	-1.53		
		(7.00-7.11)x(2.17+2.17)/2	-0.24		
		(6.20-7.00)x(2.13+2.17)/2	-1.72		
		(5.97-6.20)x(2.13+2.13)/2	-0.49		
		(5.29-5.97)x(2.07+2.13)/2	-1.43		
		(4.93-5.29)x(2.06+2.07)/2	-0.74		
		(4.39-4.93)x(2.01+2.06)/2	-1.10		
		(3.90-4.39)x(1.98+2.01)/2	-0.98		
		A RIPORTARE mq	10.98		

BONIFICA

N. SEZIONE PROG.	FIG.	ELEMENTI DI CALCOLO	AREA ELEMENTARE mq	AREA FIGURA mq	NOTE
		RIPORTO mq	10.98		
		(3.48-3.90)x(1.94+1.98)/2	-0.82		
		(2.86-3.48)x(1.91+1.94)/2	-1.19		
		(2.58-2.86)x(1.89+1.91)/2	-0.53		
		(1.82-2.58)x(1.86+1.89)/2	-1.43		
		(1.67-1.82)x(1.84+1.86)/2	-0.28		
		(0.79-1.67)x(1.62+1.84)/2	-1.52		
		(0.77-0.79)x(1.61+1.62)/2	-0.03		
		(0.63-0.77)x(1.57+1.61)/2	-0.22		
		(0.00-0.63)x(1.37+1.57)/2	-0.93		
				4.03	
16 225.00	BO1	(-6.25--6.50)x(3.17+3.18)/2	0.79		
		(-5.77--6.25)x(3.18+3.17)/2	1.52		
		(-5.21--5.77)x(3.17+3.18)/2	1.78		
		(-4.86--5.21)x(3.17+3.17)/2	1.11		
		(-4.18--4.86)x(3.17+3.17)/2	2.16		
		(-3.96--4.18)x(3.18+3.17)/2	0.70		
		(-3.14--3.96)x(3.19+3.18)/2	2.61		
		(-2.42--3.14)x(3.15+3.19)/2	2.28		
		(-2.10--2.42)x(3.14+3.15)/2	1.01		
		(-1.24--2.10)x(3.09+3.14)/2	2.68		
		(-1.07--1.24)x(3.10+3.09)/2	0.53		
		(-0.33--1.07)x(2.99+3.10)/2	2.25		
		(-0.03--0.33)x(2.94+2.99)/2	0.89		
		(0.57--0.03)x(2.83+2.94)/2	1.73		
		(1.00-0.57)x(2.72+2.83)/2	1.19		
		(1.48-1.00)x(2.60+2.72)/2	1.28		
		(2.04-1.48)x(2.44+2.60)/2	1.41		
		(2.39-2.04)x(2.16+2.44)/2	0.81		
		(3.07-2.39)x(1.89+2.16)/2	1.38		
		(3.29-3.07)x(1.91+1.89)/2	0.42		
		(3.83-3.29)x(1.77+1.91)/2	0.99		
		(3.29-3.83)x(1.41+1.27)/2	-0.72		
		(3.07-3.29)x(1.39+1.41)/2	-0.31		
		(2.39-3.07)x(1.66+1.39)/2	-1.04		
		(2.04-2.39)x(1.94+1.66)/2	-0.63		
		(1.48-2.04)x(2.10+1.94)/2	-1.13		
		(1.00-1.48)x(2.22+2.10)/2	-1.04		
		(0.57-1.00)x(2.33+2.22)/2	-0.98		
		(-0.03-0.57)x(2.44+2.33)/2	-1.43		
		(-0.33--0.03)x(2.49+2.44)/2	-0.74		
		(-1.07--0.33)x(2.60+2.49)/2	-1.88		
		(-1.24--1.07)x(2.59+2.60)/2	-0.44		
		(-2.10--1.24)x(2.64+2.59)/2	-2.25		
		(-2.42--2.10)x(2.65+2.64)/2	-0.85		
		(-3.14--2.42)x(2.69+2.65)/2	-1.92		
		(-3.96--3.14)x(2.68+2.69)/2	-2.20		
		(-4.18--3.96)x(2.67+2.68)/2	-0.59		
		(-4.86--4.18)x(2.67+2.67)/2	-1.82		
		(-5.21--4.86)x(2.67+2.67)/2	-0.93		
		(-5.77--5.21)x(2.68+2.67)/2	-1.50		
		(-6.25--5.77)x(2.67+2.68)/2	-1.28		
		(-6.50--6.25)x(2.68+2.67)/2	-0.67		
				5.17	
16 225.00	BO2	(-10.39--10.76)x(3.16+3.16)/2	1.17		
		(-10.30--10.39)x(3.16+3.16)/2	0.28		
		(-9.65--10.30)x(3.18+3.16)/2	2.06		
		(-9.39--9.65)x(3.19+3.18)/2	0.83		
		(-9.35--9.39)x(3.19+3.19)/2	0.13		
		(-8.49--9.35)x(3.21+3.19)/2	2.75		
		(-8.32--8.49)x(3.21+3.21)/2	0.55		
		(-7.58--8.32)x(3.20+3.21)/2	2.37		
		(-7.28--7.58)x(3.21+3.20)/2	0.96		
		(-6.67--7.28)x(3.18+3.21)/2	1.95		
		(-6.25--6.67)x(3.17+3.18)/2	1.33		
		(-5.77--6.25)x(3.18+3.17)/2	1.52		
		(-5.21--5.77)x(3.17+3.18)/2	1.78		
		(-4.86--5.21)x(3.17+3.17)/2	1.11		
		(-4.18--4.86)x(3.17+3.17)/2	2.16		
		(-3.96--4.18)x(3.18+3.17)/2	0.70		
		(-3.14--3.96)x(3.19+3.18)/2	2.61		
		(-2.42--3.14)x(3.15+3.19)/2	2.28		
		(-2.10--2.42)x(3.14+3.15)/2	1.01		
		(-1.24--2.10)x(3.09+3.14)/2	2.68		
		(-1.07--1.24)x(3.10+3.09)/2	0.53		
		(-0.33--1.07)x(2.99+3.10)/2	2.25		
		(-0.03--0.33)x(2.94+2.99)/2	0.89		
		(0.57--0.03)x(2.83+2.94)/2	1.73		
		(1.00-0.57)x(2.72+2.83)/2	1.19		
		(1.48-1.00)x(2.60+2.72)/2	1.28		
		(2.04-1.48)x(2.44+2.60)/2	1.41		
		(2.39-2.04)x(2.16+2.44)/2	0.81		
		(3.07-2.39)x(1.89+2.16)/2	1.38		
		(3.29-3.07)x(1.91+1.89)/2	0.42		
		(4.11-3.29)x(1.69+1.91)/2	1.48		
		(4.20-4.11)x(1.70+1.69)/2	0.15		
		(4.81-4.20)x(1.72+1.70)/2	1.04		
		(5.10-4.81)x(1.70+1.72)/2	0.50		
		(5.15-5.10)x(1.72+1.70)/2	0.09		
		(6.01-5.15)x(1.80+1.72)/2	1.51		
		(6.18-6.01)x(1.85+1.80)/2	0.31		
		(6.92-6.18)x(1.95+1.85)/2	1.41		
		(7.22-6.92)x(2.00+1.95)/2	0.59		
		(7.82-7.22)x(2.10+2.00)/2	1.23		
		(8.25-7.82)x(2.15+2.10)/2	0.91		
		(8.49-8.25)x(2.19+2.15)/2	0.52		
		(8.25-8.49)x(1.65+1.69)/2	-0.40		
		(7.82-8.25)x(1.60+1.65)/2	-0.70		
		(7.22-7.82)x(1.50+1.60)/2	-0.93		
		(6.92-7.22)x(1.45+1.50)/2	-0.44		
		(6.18-6.92)x(1.35+1.45)/2	-1.04		
		(6.01-6.18)x(1.30+1.35)/2	-0.23		
		(5.15-6.01)x(1.22+1.30)/2	-1.08		
		(5.10-5.15)x(1.20+1.22)/2	-0.06		
		(4.81-5.10)x(1.22+1.20)/2	-0.35		
		(4.20-4.81)x(1.20+1.22)/2	-0.74		
		A RIPORTARE mq	45.89		

BONIFICA

N. SEZIONE PROG.	FIG.	ELEMENTI DI CALCOLO	AREA ELEMENTARE mq	AREA FIGURA mq	NOTE
		RIPORTO mq	45.89		
		(4.11-4.20)x(1.19+1.20)/2	-0.11		
		(3.29-4.11)x(1.41+1.19)/2	-1.07		
		(3.07-3.29)x(1.39+1.41)/2	-0.31		
		(2.39-3.07)x(1.66+1.39)/2	-1.04		
		(2.04-2.39)x(1.94+1.66)/2	-0.63		
		(1.48-2.04)x(2.10+1.94)/2	-1.13		
		(1.00-1.48)x(2.22+2.10)/2	-1.04		
		(0.57-1.00)x(2.33+2.22)/2	-0.98		
		(-0.03-0.57)x(2.44+2.33)/2	-1.43		
		(-0.33--0.03)x(2.49+2.44)/2	-0.74		
		(-1.07--0.33)x(2.60+2.49)/2	-1.88		
		(-1.24--1.07)x(2.59+2.60)/2	-0.44		
		(-2.10--1.24)x(2.64+2.59)/2	-2.25		
		(-2.42--2.10)x(2.65+2.64)/2	-0.85		
		(-3.14--2.42)x(2.69+2.65)/2	-1.92		
		(-3.96--3.14)x(2.68+2.69)/2	-2.20		
		(-4.18--3.96)x(2.67+2.68)/2	-0.59		
		(-4.86--4.18)x(2.67+2.67)/2	-1.82		
		(-5.21--4.86)x(2.67+2.67)/2	-0.93		
		(-5.77--5.21)x(2.68+2.67)/2	-1.50		
		(-6.25--5.77)x(2.67+2.68)/2	-1.28		
		(-6.67--6.25)x(2.68+2.67)/2	-1.12		
		(-7.28--6.67)x(2.71+2.68)/2	-1.64		
		(-7.58--7.28)x(2.70+2.71)/2	-0.81		
		(-8.32--7.58)x(2.71+2.70)/2	-2.00		
		(-8.49--8.32)x(2.71+2.71)/2	-0.46		
		(-9.35--8.49)x(2.69+2.71)/2	-2.32		
		(-9.39--9.35)x(2.69+2.69)/2	-0.11		
		(-9.65--9.39)x(2.68+2.69)/2	-0.70		
		(-10.30--9.65)x(2.66+2.68)/2	-1.74		
		(-10.39--10.30)x(2.66+2.66)/2	-0.24		
		(-10.76--10.39)x(2.66+2.66)/2	-0.98		
				9.63	
17 240.00	BO1	(-10.15--10.35)x(2.96+2.96)/2	0.59		
		(-9.40--10.15)x(2.97+2.96)/2	2.22		
		(-9.22--9.40)x(2.97+2.97)/2	0.53		
		(-8.37--9.22)x(3.00+2.97)/2	2.54		
		(-8.29--8.37)x(3.00+3.00)/2	0.24		
		(-7.63--8.29)x(2.99+3.00)/2	1.98		
		(-7.37--7.63)x(2.99+2.99)/2	0.78		
		(-7.34--7.37)x(2.99+2.99)/2	0.09		
		(-6.44--7.34)x(3.04+2.99)/2	2.71		
		(-6.30--6.44)x(3.04+3.04)/2	0.43		
		(-5.51--6.30)x(3.09+3.04)/2	2.42		
		(-5.27--5.51)x(3.10+3.09)/2	0.74		
		(-4.58--5.27)x(3.09+3.10)/2	2.14		
		(-4.24--4.58)x(3.10+3.09)/2	1.05		
		(-3.66--4.24)x(3.09+3.10)/2	1.80		
		(-3.21--3.66)x(3.07+3.09)/2	1.39		
		(-2.73--3.21)x(3.06+3.07)/2	1.47		
		(-2.18--2.73)x(3.05+3.06)/2	1.68		
		(-1.80--2.18)x(3.06+3.05)/2	1.16		
		(-1.14--1.80)x(3.07+3.06)/2	2.02		
		(-0.32--1.14)x(3.09+3.07)/2	2.53		
		(-0.11--0.32)x(3.10+3.09)/2	0.65		
		(0.00--0.11)x(3.10+3.10)/2	0.34		
		(-0.11-0.00)x(2.60+2.60)/2	-0.29		
		(-0.32--0.11)x(2.59+2.60)/2	-0.54		
		(-1.14--0.32)x(2.57+2.59)/2	-2.12		
		(-1.80--1.14)x(2.56+2.57)/2	-1.69		
		(-2.18--1.80)x(2.55+2.56)/2	-0.97		
		(-2.73--2.18)x(2.56+2.55)/2	-1.41		
		(-3.21--2.73)x(2.57+2.56)/2	-1.23		
		(-3.66--3.21)x(2.59+2.57)/2	-1.16		
		(-4.24--3.66)x(2.60+2.59)/2	-1.51		
		(-4.58--4.24)x(2.59+2.60)/2	-0.88		
		(-5.27--4.58)x(2.60+2.59)/2	-1.79		
		(-5.51--5.27)x(2.59+2.60)/2	-0.62		
		(-6.30--5.51)x(2.54+2.59)/2	-2.03		
		(-6.44--6.30)x(2.54+2.54)/2	-0.36		
		(-7.34--6.44)x(2.49+2.54)/2	-2.26		
		(-7.37--7.34)x(2.49+2.49)/2	-0.07		
		(-7.63--7.37)x(2.49+2.49)/2	-0.65		
		(-8.29--7.63)x(2.50+2.49)/2	-1.65		
		(-8.37--8.29)x(2.50+2.50)/2	-0.20		
		(-9.22--8.37)x(2.47+2.50)/2	-2.11		
		(-9.40--9.22)x(2.47+2.47)/2	-0.44		
		(-10.15--9.40)x(2.46+2.47)/2	-1.85		
		(-10.35--10.15)x(2.46+2.46)/2	-0.49		
				5.18	
18 255.00	BO1	(-8.36--8.98)x(2.76+2.76)/2	1.71		
		(-8.20--8.36)x(2.76+2.76)/2	0.44		
		(-7.37--8.20)x(2.81+2.76)/2	2.31		
		(-7.17--7.37)x(2.82+2.81)/2	0.56		
		(-6.37--7.17)x(2.84+2.82)/2	2.26		
		(-6.15--6.37)x(2.86+2.84)/2	0.63		
		(-5.38--6.15)x(2.89+2.86)/2	2.21		
		(-5.12--5.38)x(2.89+2.89)/2	0.75		
		(-4.39--5.12)x(2.91+2.89)/2	2.12		
		(-4.09--4.39)x(2.93+2.91)/2	0.88		
		(-3.39--4.09)x(2.93+2.93)/2	2.05		
		(-3.07--3.39)x(2.93+2.93)/2	0.94		
		(-2.40--3.07)x(2.94+2.93)/2	1.97		
		(-2.04--2.40)x(2.95+2.94)/2	1.06		
		(-1.40--2.04)x(2.97+2.95)/2	1.89		
		(-1.02--1.40)x(2.97+2.97)/2	1.13		
		(-0.41--1.02)x(2.99+2.97)/2	1.82		
		(0.01--0.41)x(2.99+2.99)/2	1.26		
		(0.45-0.01)x(3.01+2.99)/2	1.32		
		(1.03-0.45)x(3.04+3.01)/2	1.75		
		(1.58-1.03)x(3.07+3.04)/2	1.68		
		(2.06-1.58)x(3.10+3.07)/2	1.48		
		(2.57-2.06)x(3.10+3.10)/2	1.58		
		(3.09-2.57)x(3.12+3.10)/2	1.62		
		(3.57-3.09)x(3.10+3.12)/2	1.49		
		A RIPORTARE mq	36.91		

BONIFICA

N. SEZIONE PROG.	FIG.	ELEMENTI DI CALCOLO	AREA ELEMENTARE mq	AREA FIGURA mq	NOTE
		RIPORTO mq	36.91		
		(4.11-3.57)x(3.09+3.10)/2	1.67		
		(4.56-4.11)x(3.08+3.09)/2	1.39		
		(5.14-4.56)x(3.07+3.08)/2	1.78		
		(5.25-5.14)x(3.07+3.07)/2	0.34		
		(5.14-5.25)x(2.57+2.57)/2	-0.28		
		(4.56-5.14)x(2.58+2.57)/2	-1.49		
		(4.11-4.56)x(2.59+2.58)/2	-1.16		
		(3.57-4.11)x(2.60+2.59)/2	-1.40		
		(3.09-3.57)x(2.62+2.60)/2	-1.25		
		(2.57-3.09)x(2.60+2.62)/2	-1.36		
		(2.06-2.57)x(2.60+2.60)/2	-1.33		
		(1.58-2.06)x(2.57+2.60)/2	-1.24		
		(1.03-1.58)x(2.54+2.57)/2	-1.41		
		(0.45-1.03)x(2.51+2.54)/2	-1.46		
		(0.01-0.45)x(2.49+2.51)/2	-1.10		
		(-0.41-0.01)x(2.49+2.49)/2	-1.05		
		(-1.02--0.41)x(2.47+2.49)/2	-1.51		
		(-1.40--1.02)x(2.47+2.47)/2	-0.94		
		(-2.04--1.40)x(2.45+2.47)/2	-1.57		
		(-2.40--2.04)x(2.44+2.45)/2	-0.88		
		(-3.07--2.40)x(2.43+2.44)/2	-1.63		
		(-3.39--3.07)x(2.43+2.43)/2	-0.78		
		(-4.09--3.39)x(2.43+2.43)/2	-1.70		
		(-4.39--4.09)x(2.41+2.43)/2	-0.73		
		(-5.12--4.39)x(2.39+2.41)/2	-1.75		
		(-5.38--5.12)x(2.39+2.39)/2	-0.62		
		(-6.15--5.38)x(2.36+2.39)/2	-1.83		
		(-6.37--6.15)x(2.34+2.36)/2	-0.52		
		(-7.17--6.37)x(2.32+2.34)/2	-1.86		
		(-7.37--7.17)x(2.31+2.32)/2	-0.46		
		(-8.20--7.37)x(2.26+2.31)/2	-1.90		
		(-8.36--8.20)x(2.26+2.26)/2	-0.36		
		(-8.98--8.36)x(2.26+2.26)/2	-1.40		
				7.12	
19bis 274.71	BO1	(-4.74--5.00)x(2.96+2.95)/2	0.77		
		(-4.37--4.74)x(2.99+2.96)/2	1.10		
		(-3.63--4.37)x(2.86+2.99)/2	2.16		
		(-3.34--3.63)x(2.82+2.86)/2	0.82		
		(-2.53--3.34)x(2.83+2.82)/2	2.29		
		(-2.32--2.53)x(2.83+2.83)/2	0.59		
		(-1.43--2.32)x(2.89+2.83)/2	2.55		
		(-1.29--1.43)x(2.90+2.89)/2	0.41		
		(-0.33--1.29)x(2.93+2.90)/2	2.80		
		(-0.26--0.33)x(2.93+2.93)/2	0.21		
		(-0.20--0.26)x(2.93+2.93)/2	0.18		
		(0.64--0.20)x(2.94+2.93)/2	2.47		
		(0.76-0.64)x(2.94+2.94)/2	0.35		
		(0.77-0.76)x(2.94+2.94)/2	0.03		
		(0.78-0.77)x(2.94+2.94)/2	0.03		
		(1.79-0.78)x(2.96+2.94)/2	2.98		
		(1.88-1.79)x(2.96+2.96)/2	0.27		
		(2.82-1.88)x(2.97+2.96)/2	2.79		
		(2.98-2.82)x(2.98+2.97)/2	0.48		
		(3.85-2.98)x(2.99+2.98)/2	2.60		
		(4.08-3.85)x(2.99+2.99)/2	0.69		
		(4.88-4.08)x(3.03+2.99)/2	2.41		
		(5.02-4.88)x(3.03+3.03)/2	0.42		
		(4.88-5.02)x(2.53+2.53)/2	-0.35		
		(4.08-4.88)x(2.49+2.53)/2	-2.01		
		(3.85-4.08)x(2.49+2.49)/2	-0.57		
		(2.98-3.85)x(2.48+2.49)/2	-2.16		
		(2.82-2.98)x(2.47+2.48)/2	-0.40		
		(1.88-2.82)x(2.46+2.47)/2	-2.32		
		(1.79-1.88)x(2.46+2.46)/2	-0.22		
		(0.78-1.79)x(2.44+2.46)/2	-2.47		
		(0.77-0.78)x(2.44+2.44)/2	-0.02		
		(0.76-0.77)x(2.44+2.44)/2	-0.02		
		(0.64-0.76)x(2.44+2.44)/2	-0.29		
		(-0.20-0.64)x(2.43+2.44)/2	-2.05		
		(-0.26--0.20)x(2.43+2.43)/2	-0.15		
		(-0.33--0.26)x(2.43+2.43)/2	-0.17		
		(-1.29--0.33)x(2.40+2.43)/2	-2.32		
		(-1.43--1.29)x(2.39+2.40)/2	-0.34		
		(-2.32--1.43)x(2.33+2.39)/2	-2.10		
		(-2.53--2.32)x(2.33+2.33)/2	-0.49		
		(-3.34--2.53)x(2.32+2.33)/2	-1.88		
		(-3.63--3.34)x(2.36+2.32)/2	-0.68		
		(-4.37--3.63)x(2.49+2.36)/2	-1.79		
		(-4.74--4.37)x(2.46+2.49)/2	-0.92		
		(-5.00--4.74)x(2.45+2.46)/2	-0.64		
				5.04	
19bis 274.71	BO1	(-4.74--5.00)x(2.96+2.95)/2	0.77		
		(-4.37--4.74)x(2.99+2.96)/2	1.10		
		(-3.63--4.37)x(2.86+2.99)/2	2.16		
		(-3.34--3.63)x(2.82+2.86)/2	0.82		
		(-2.53--3.34)x(2.83+2.82)/2	2.29		
		(-2.32--2.53)x(2.83+2.83)/2	0.59		
		(-1.43--2.32)x(2.89+2.83)/2	2.55		
		(-1.29--1.43)x(2.90+2.89)/2	0.41		
		(-0.33--1.29)x(2.93+2.90)/2	2.80		
		(-0.26--0.33)x(2.93+2.93)/2	0.21		
		(-0.20--0.26)x(2.93+2.93)/2	0.18		
		(0.64--0.20)x(2.94+2.93)/2	2.47		
		(0.76-0.64)x(2.94+2.94)/2	0.35		
		(0.77-0.76)x(2.94+2.94)/2	0.03		
		(0.78-0.77)x(2.94+2.94)/2	0.03		
		(1.79-0.78)x(2.96+2.94)/2	2.98		
		(1.88-1.79)x(2.96+2.96)/2	0.27		
		(2.82-1.88)x(2.97+2.96)/2	2.79		
		(2.98-2.82)x(2.98+2.97)/2	0.48		
		(3.85-2.98)x(2.99+2.98)/2	2.60		
		(4.08-3.85)x(2.99+2.99)/2	0.69		
		(4.88-4.08)x(3.03+2.99)/2	2.41		
		(5.02-4.88)x(3.03+3.03)/2	0.42		
		(4.88-5.02)x(2.53+2.53)/2	-0.35		
		A RIPORTARE mq	29.05		

BONIFICA

N. SEZIONE PROG.	FIG.	ELEMENTI DI CALCOLO	AREA ELEMENTARE mq	AREA FIGURA mq	NOTE
		RIPORTO mq	29.05		
		(4.08-4.88)x(2.49+2.53)/2	-2.01		
		(3.85-4.08)x(2.49+2.49)/2	-0.57		
		(2.98-3.85)x(2.48+2.49)/2	-2.16		
		(2.82-2.98)x(2.47+2.48)/2	-0.40		
		(1.88-2.82)x(2.46+2.47)/2	-2.32		
		(1.79-1.88)x(2.46+2.46)/2	-0.22		
		(0.78-1.79)x(2.44+2.46)/2	-2.47		
		(0.77-0.78)x(2.44+2.44)/2	-0.02		
		(0.76-0.77)x(2.44+2.44)/2	-0.02		
		(0.64-0.76)x(2.44+2.44)/2	-0.29		
		(-0.20-0.64)x(2.43+2.44)/2	-2.05		
		(-0.26--0.20)x(2.43+2.43)/2	-0.15		
		(-0.33--0.26)x(2.43+2.43)/2	-0.17		
		(-1.29--0.33)x(2.40+2.43)/2	-2.32		
		(-1.43--1.29)x(2.39+2.40)/2	-0.34		
		(-2.32--1.43)x(2.33+2.39)/2	-2.10		
		(-2.53--2.32)x(2.33+2.33)/2	-0.49		
		(-3.34--2.53)x(2.32+2.33)/2	-1.88		
		(-3.63--3.34)x(2.36+2.32)/2	-0.68		
		(-4.37--3.63)x(2.49+2.36)/2	-1.79		
		(-4.74--4.37)x(2.46+2.49)/2	-0.92		
		(-5.00--4.74)x(2.45+2.46)/2	-0.64		
				5.04	

Il Direttore dei Lavori | L'Impresa

USURA

N. SEZIONE PROG.	FIG.	ELEMENTI DI CALCOLO	LUNGHEZZA ELEMENTARE ml	LUNGHEZZA FIGURA ml	NOTE
5	a1	(-4.00--5.00)	1.00		
60.00		(0.00--4.00)	4.00		
		(1.63-0.00)	1.63		
				6.63	
6	a1	(-4.00--5.00)	1.00		
75.00		(0.00--4.00)	4.00		
		(1.78-0.00)	1.78		
				6.78	
7	a1	(-4.00--5.00)	1.00		
90.00		(0.00--4.00)	4.00		
		(1.86-0.00)	1.86		
				6.86	
7bis	a1	(-4.00--5.00)	1.00		
96.31		(0.00--4.00)	4.00		
		(1.86-0.00)	1.86		
				6.86	
8	a1	(-4.00--5.00)	1.00		
105.00		(0.00--4.00)	4.00		
		(1.86-0.00)	1.86		
				6.86	
8tris	a1	(-4.00--5.00)	1.00		
113.22		(0.00--4.00)	4.00		
		(1.86-0.00)	1.86		
				6.86	
9	a1	(-4.00--5.00)	1.00		
120.00		(0.00--4.00)	4.00		
		(1.86-0.00)	1.86		
				6.86	
10	a1	(-4.00--5.00)	1.00		
135.00		(0.00--4.00)	4.00		
		(1.86-0.00)	1.86		
				6.86	
11	a1	(-4.00--5.00)	1.00		
150.00		(0.00--4.00)	4.00		
		(1.86-0.00)	1.86		
				6.86	
12	a1	(-4.00--5.00)	1.00		
165.00		(0.00--4.00)	4.00		
		(1.86-0.00)	1.86		
				6.86	
13	a1	(-4.00--5.00)	1.00		
180.00		(0.00--4.00)	4.00		
		(1.85-0.00)	1.85		
				6.85	
14	a1	(-4.00--5.00)	1.00		
195.00		(0.00--4.00)	4.00		
		(1.73-0.00)	1.73		
				6.73	
15	a1	(-4.00--5.00)	1.00		
210.00		(0.00--4.00)	4.00		
		(1.58-0.00)	1.58		
				6.58	
15bis	a1	(-4.00--5.00)	1.00		
216.28		(0.00--4.00)	4.00		
		(1.53-0.00)	1.53		
				6.53	
16	a1	(-4.00--5.00)	1.00		
225.00		(0.00--4.00)	4.00		
		(1.53-0.00)	1.53		
				6.53	
17	a1	(-4.00--5.00)	1.00		
240.00		(0.00--4.00)	4.00		
		(1.66-0.00)	1.66		
				6.66	
18	a1	(-4.00--5.00)	1.00		
255.00		(0.00--4.00)	4.00		
		(1.78-0.00)	1.78		
				6.78	
19bis	a1	(-4.00--5.00)	1.00		
274.71		(0.00--4.00)	4.00		
		(1.79-0.00)	1.79		
				6.79	
19bis	a1	(-4.00--5.00)	1.00		
274.71		(0.00--4.00)	4.00		
		(1.79-0.00)	1.79		
				6.79	

VEGETALE

N. SEZIONE PROG.	FIG.	ELEMENTI DI CALCOLO	LUNGHEZZA ELEMENTARE ml	LUNGHEZZA FIGURA ml	NOTE
5	b1	(3.13-1.78)	1.35		
60.00		(5.01-3.13)	1.88		
				3.23	
6	b1	(-6.50--5.15)	1.35		
75.00		(-7.86--6.50)	1.36		
				2.71	
6	b2	(3.28-1.93)	1.35		
75.00		(7.07-3.28)	3.79		
				5.14	
7	b1	(-6.50--5.15)	1.35		
90.00		(-10.72--6.50)	4.22		
				5.57	
7	b2	(3.36-2.01)	1.35		
90.00		(4.98-3.36)	1.62		
				2.97	
7bis	b1	(-6.50--5.15)	1.35		
96.31		(-10.88--6.50)	4.38		
				5.73	
7bis	b2	(3.36-2.01)	1.35		
96.31		(5.28-3.36)	1.92		
				3.27	
8	b1	(-6.50--5.15)	1.35		
105.00		(-13.39--6.50)	6.89		
				8.24	
8	b2	(3.36-2.01)	1.35		
105.00		(5.64-3.36)	2.28		
				3.63	
8tris	b1	(-6.50--5.15)	1.35		
113.22		(-9.78--6.50)	3.28		
				4.63	
8tris	b2	(3.36-2.01)	1.35		
113.22		(10.62-3.36)	7.26		
				8.61	
9	b1	(-6.50--5.15)	1.35		
120.00		(-9.98--6.50)	3.48		
				4.83	
9	b2	(3.36-2.01)	1.35		
120.00		(10.73-3.36)	7.37		
				8.72	
10	b2	(-6.50--5.15)	1.35		
135.00		(-14.85--6.50)	8.35		
				9.70	
10	b1	(3.36-2.01)	1.35		
135.00		(10.86-3.36)	7.50		
				8.85	
11	b2	(-6.50--5.15)	1.35		
150.00		(-14.90--6.50)	8.40		
				9.75	
11	b1	(3.36-2.01)	1.35		
150.00		(11.14-3.36)	7.78		
				9.13	
12	b2	(-6.50--5.15)	1.35		
165.00		(-14.92--6.50)	8.42		
				9.77	
12	b1	(3.36-2.01)	1.35		
165.00		(10.92-3.36)	7.56		
				8.91	
13	b2	(-6.50--5.15)	1.35		
180.00		(-13.58--6.50)	7.08		
				8.43	
13	b1	(3.35-2.00)	1.35		
180.00		(10.86-3.35)	7.51		
				8.86	
14	b1	(-6.50--5.15)	1.35		
195.00		(-10.13--6.50)	3.63		
				4.98	
14	b2	(3.23-1.88)	1.35		
195.00		(10.41-3.23)	7.18		
				8.53	
15	b1	(-6.50--5.15)	1.35		
210.00		(-9.16--6.50)	2.66		
				4.01	
15	b2	(3.08-1.73)	1.35		
210.00		(8.75-3.08)	5.67		
				7.02	
15bis	b1	(-6.50--5.15)	1.35		
216.28		(-8.83--6.50)	2.33		
				3.68	
15bis	b2	(3.03-1.68)	1.35		
216.28		(8.63-3.03)	5.60		
				6.95	
16	b2	(-6.50--5.15)	1.35		
225.00		(-11.31--6.50)	4.81		
				6.16	
16	b1	(3.03-1.68)	1.35		
225.00		(8.94-3.03)	5.91		
				7.26	
17	b2	(-6.50--5.15)	1.35		
240.00		(-10.90--6.50)	4.40		
				5.75	
17	b1	(3.16-1.81)	1.35		
240.00		(3.89-3.16)	0.73		
				2.08	
18	b1	(-6.50--5.15)	1.35		
255.00		(-8.98--6.50)	2.48		
				3.83	
18	b2	(3.28-1.93)	1.35		
255.00		(5.25-3.28)	1.97		
				3.32	
19bis	b1	(3.29-1.94)	1.35		
274.71		(5.55-3.29)	2.26		
				3.61	
19bis	b1	(3.29-1.94)	1.35		
274.71		(5.55-3.29)	2.26		
				3.61	

BINDER

N. SEZIONE PROG.	FIG.	ELEMENTI DI CALCOLO	LUNGHEZZA ELEMENTARE ml	LUNGHEZZA FIGURA ml	NOTE
5	c1	(-4.00--5.00)	1.00		
60.00		(0.13--4.00)	4.13		
		(1.63-0.13)	1.50		
				6.63	
6	c1	(-4.00--5.00)	1.00		
75.00		(0.28--4.00)	4.28		
		(1.78-0.28)	1.50		
				6.78	
7	c1	(-4.00--5.00)	1.00		
90.00		(0.36--4.00)	4.36		
		(1.86-0.36)	1.50		
				6.86	
7bis	c1	(-4.00--5.00)	1.00		
96.31		(0.36--4.00)	4.36		
		(1.86-0.36)	1.50		
				6.86	
8	c1	(-4.00--5.00)	1.00		
105.00		(0.36--4.00)	4.36		
		(1.86-0.36)	1.50		
				6.86	
8tris	c1	(-4.00--5.00)	1.00		
113.22		(0.36--4.00)	4.36		
		(1.86-0.36)	1.50		
				6.86	
9	c1	(-4.00--5.00)	1.00		
120.00		(0.36--4.00)	4.36		
		(1.86-0.36)	1.50		
				6.86	
10	c1	(-4.00--5.00)	1.00		
135.00		(0.36--4.00)	4.36		
		(1.86-0.36)	1.50		
				6.86	
11	c1	(-4.00--5.00)	1.00		
150.00		(0.36--4.00)	4.36		
		(1.86-0.36)	1.50		
				6.86	
12	c1	(-4.00--5.00)	1.00		
165.00		(0.36--4.00)	4.36		
		(1.86-0.36)	1.50		
				6.86	
13	c1	(-4.00--5.00)	1.00		
180.00		(0.35--4.00)	4.35		
		(1.85-0.35)	1.50		
				6.85	
14	c1	(-4.00--5.00)	1.00		
195.00		(0.23--4.00)	4.23		
		(1.73-0.23)	1.50		
				6.73	
15	c1	(-4.00--5.00)	1.00		
210.00		(0.08--4.00)	4.08		
		(1.58-0.08)	1.50		
				6.58	
15bis	c1	(-4.00--5.00)	1.00		
216.28		(0.03--4.00)	4.03		
		(1.53-0.03)	1.50		
				6.53	
16	c1	(-4.00--5.00)	1.00		
225.00		(0.03--4.00)	4.03		
		(1.53-0.03)	1.50		
				6.53	
17	c1	(-4.00--5.00)	1.00		
240.00		(0.16--4.00)	4.16		
		(1.66-0.16)	1.50		
				6.66	
18	c1	(-4.00--5.00)	1.00		
255.00		(0.28--4.00)	4.28		
		(1.78-0.28)	1.50		
				6.78	
19bis	c1	(-4.00--5.00)	1.00		
274.71		(0.29--4.00)	4.29		
		(1.79-0.29)	1.50		
				6.79	
19bis	c1	(-4.00--5.00)	1.00		
274.71		(0.29--4.00)	4.29		
		(1.79-0.29)	1.50		
				6.79	

BASE

N. SEZIONE PROG.	FIG.	ELEMENTI DI CALCOLO	LUNGHEZZA ELEMENTARE ml	LUNGHEZZA FIGURA ml	NOTE
5	d1	(-4.00--5.00)	1.00		
60.00		(0.13--4.00)	4.13		
		(1.63-0.13)	1.50		
				6.63	
6	d1	(-4.00--5.00)	1.00		
75.00		(0.28--4.00)	4.28		
		(1.78-0.28)	1.50		
				6.78	
7	d1	(-4.00--5.00)	1.00		
90.00		(0.36--4.00)	4.36		
		(1.86-0.36)	1.50		
				6.86	
7bis	d1	(-4.00--5.00)	1.00		
96.31		(0.36--4.00)	4.36		
		(1.86-0.36)	1.50		
				6.86	
8	d1	(-4.00--5.00)	1.00		
105.00		(0.36--4.00)	4.36		
		(1.86-0.36)	1.50		
				6.86	
8tris	d1	(-4.00--5.00)	1.00		
113.22		(0.36--4.00)	4.36		
		(1.86-0.36)	1.50		
				6.86	
9	d1	(-4.00--5.00)	1.00		
120.00		(0.36--4.00)	4.36		
		(1.86-0.36)	1.50		
				6.86	
10	d1	(-4.00--5.00)	1.00		
135.00		(0.36--4.00)	4.36		
		(1.86-0.36)	1.50		
				6.86	
11	d1	(-4.00--5.00)	1.00		
150.00		(0.36--4.00)	4.36		
		(1.86-0.36)	1.50		
				6.86	
12	d1	(-4.00--5.00)	1.00		
165.00		(0.36--4.00)	4.36		
		(1.86-0.36)	1.50		
				6.86	
13	d1	(-4.00--5.00)	1.00		
180.00		(0.35--4.00)	4.35		
		(1.85-0.35)	1.50		
				6.85	
14	d1	(-4.00--5.00)	1.00		
195.00		(0.23--4.00)	4.23		
		(1.73-0.23)	1.50		
				6.73	
15	d1	(-4.00--5.00)	1.00		
210.00		(0.08--4.00)	4.08		
		(1.58-0.08)	1.50		
				6.58	
15bis	d1	(-4.00--5.00)	1.00		
216.28		(0.03--4.00)	4.03		
		(1.53-0.03)	1.50		
				6.53	
16	d1	(-4.00--5.00)	1.00		
225.00		(0.03--4.00)	4.03		
		(1.53-0.03)	1.50		
				6.53	
17	d1	(-4.00--5.00)	1.00		
240.00		(0.16--4.00)	4.16		
		(1.66-0.16)	1.50		
				6.66	
18	d1	(-4.00--5.00)	1.00		
255.00		(0.28--4.00)	4.28		
		(1.78-0.28)	1.50		
				6.78	
19bis	d1	(-4.00--5.00)	1.00		
274.71		(0.29--4.00)	4.29		
		(1.79-0.29)	1.50		
				6.79	
19bis	d1	(-4.00--5.00)	1.00		
274.71		(0.29--4.00)	4.29		
		(1.79-0.29)	1.50		
				6.79	

FONDAZIONE

N. SEZIONE PROG.	FIG.	ELEMENTI DI CALCOLO	LUNGHEZZA ELEMENTARE ml	LUNGHEZZA FIGURA ml	NOTE
5	e1	(-4.00--5.00)	1.00		
60.00		(0.13--4.00)	4.13		
		(1.63-0.13)	1.50		
				6.63	
6	e1	(-4.00--5.00)	1.00		
75.00		(0.28--4.00)	4.28		
		(1.78-0.28)	1.50		
				6.78	
7	e1	(-4.00--5.00)	1.00		
90.00		(0.36--4.00)	4.36		
		(1.86-0.36)	1.50		
				6.86	
7bis	e1	(-4.00--5.00)	1.00		
96.31		(0.36--4.00)	4.36		
		(1.86-0.36)	1.50		
				6.86	
8	e1	(-4.00--5.00)	1.00		
105.00		(0.36--4.00)	4.36		
		(1.86-0.36)	1.50		
				6.86	
8tris	e1	(-4.00--5.00)	1.00		
113.22		(0.36--4.00)	4.36		
		(1.86-0.36)	1.50		
				6.86	
9	e1	(-4.00--5.00)	1.00		
120.00		(0.36--4.00)	4.36		
		(1.86-0.36)	1.50		
				6.86	
10	e1	(-4.00--5.00)	1.00		
135.00		(0.36--4.00)	4.36		
		(1.86-0.36)	1.50		
				6.86	
11	e1	(-4.00--5.00)	1.00		
150.00		(0.36--4.00)	4.36		
		(1.86-0.36)	1.50		
				6.86	
12	e1	(-4.00--5.00)	1.00		
165.00		(0.36--4.00)	4.36		
		(1.86-0.36)	1.50		
				6.86	
13	e1	(-4.00--5.00)	1.00		
180.00		(0.35--4.00)	4.35		
		(1.85-0.35)	1.50		
				6.85	
14	e1	(-4.00--5.00)	1.00		
195.00		(0.23--4.00)	4.23		
		(1.73-0.23)	1.50		
				6.73	
15	e1	(-4.00--5.00)	1.00		
210.00		(0.08--4.00)	4.08		
		(1.58-0.08)	1.50		
				6.58	
15bis	e1	(-4.00--5.00)	1.00		
216.28		(0.03--4.00)	4.03		
		(1.53-0.03)	1.50		
				6.53	
16	e1	(-4.00--5.00)	1.00		
225.00		(0.03--4.00)	4.03		
		(1.53-0.03)	1.50		
				6.53	
17	e1	(-4.00--5.00)	1.00		
240.00		(0.16--4.00)	4.16		
		(1.66-0.16)	1.50		
				6.66	
18	e1	(-4.00--5.00)	1.00		
255.00		(0.28--4.00)	4.28		
		(1.78-0.28)	1.50		
				6.78	
19bis	e1	(-4.00--5.00)	1.00		
274.71		(0.29--4.00)	4.29		
		(1.79-0.29)	1.50		
				6.79	
19bis	e1	(-4.00--5.00)	1.00		
274.71		(0.29--4.00)	4.29		
		(1.79-0.29)	1.50		
				6.79	

Il Direttore dei Lavori | L'Impresa

SCOTICO

N. SEZIONE PROG.	FIG.	ELEMENTI DI CALCOLO	LUNGHEZZA ELEMENTARE ml	LUNGHEZZA FIGURA ml	NOTE
5	sc1	(-5.00--5.00)	0.00		
60.00		(-4.69--5.00)	0.31		
		(-4.58--4.69)	0.11		
		(-4.24--4.58)	0.34		
		(-3.77--4.24)	0.47		
		(-3.61--3.77)	0.16		
		(-3.50--3.61)	0.11		
		(-3.11--3.50)	0.39		
		(-3.11--3.11)	0.00		
		(-3.10--3.11)	0.01		
		(-3.08--3.10)	0.02		
		(-3.05--3.08)	0.03		
		(-3.01--3.05)	0.04		
		(-2.95--3.01)	0.06		
		(-2.88--2.95)	0.07		
		(-2.79--2.88)	0.09		
		(-2.64--2.79)	0.15		
		(-2.53--2.64)	0.11		
		(-2.15--2.53)	0.38		
		(-1.44--2.15)	0.71		
		(-1.34--1.44)	0.10		
		(-1.03--1.34)	0.31		
		(-0.53--1.03)	0.50		
		(-0.36--0.53)	0.17		
		(0.28--0.36)	0.64		
		(0.72-0.28)	0.44		
		(1.09-0.72)	0.37		
		(1.80-1.09)	0.71		
		(1.90-1.80)	0.10		
		(2.19-1.90)	0.29		
		(2.71-2.19)	0.52		
		(2.88-2.71)	0.17		
		(3.52-2.88)	0.64		
		(3.97-3.52)	0.45		
		(4.33-3.97)	0.36		
		(5.05-4.33)	0.72		
		(5.14-5.05)	0.09		
		(5.40-5.14)	0.26		
		(5.95-5.40)	0.55		
		(6.13-5.95)	0.18		
		(6.76-6.13)	0.63		
		(7.21-6.76)	0.45		
		(7.57-7.21)	0.36		
		(8.29-7.57)	0.72		
		(8.37-8.29)	0.08		
		(8.62-8.37)	0.25		
		(9.18-8.62)	0.56		
		(9.37-9.18)	0.19		
		(9.99-9.37)	0.62		
		(10.46-9.99)	0.47		
		(10.80-10.46)	0.34		
		(11.54-10.80)	0.74		
		(11.61-11.54)	0.07		
		(11.84-11.61)	0.23		
		(12.42-11.84)	0.58		
		(12.62-12.42)	0.20		
		(13.19-12.62)	0.57		
		(13.19-13.19)	0.00		
				18.19	
6	sc1	(-7.59--7.59)	0.00		
75.00		(-7.36--7.59)	0.23		
		(-7.27--7.36)	0.09		
		(-7.14--7.27)	0.13		
		(-7.08--7.14)	0.06		
		(-6.94--7.08)	0.14		
		(-6.30--6.94)	0.64		
		(-6.03--6.30)	0.27		
		(-5.52--6.03)	0.51		
		(-4.92--5.52)	0.60		
		(-4.73--4.92)	0.19		
		(-4.28--4.73)	0.45		
		(-3.95--4.28)	0.33		
		(-3.81--3.95)	0.14		
		(-3.17--3.81)	0.64		
		(-2.70--3.17)	0.47		
		(-2.38--2.70)	0.32		
		(-1.62--2.38)	0.76		
		(-1.60--1.62)	0.02		
		(-1.59--1.60)	0.01		
		(-0.81--1.59)	0.78		
		(-0.48--0.81)	0.33		
		(-0.03--0.48)	0.45		
		(0.63--0.03)	0.66		
		(0.75-0.63)	0.12		
		(1.04-0.75)	0.29		
		(1.54-1.04)	0.50		
		(1.74-1.54)	0.20		
		(2.32-1.74)	0.58		
		(2.86-2.32)	0.54		
		(3.10-2.86)	0.24		
		(3.70-3.10)	0.60		
		(3.89-3.70)	0.19		
		(3.97-3.89)	0.08		
		(4.67-3.97)	0.70		
		(5.08-4.67)	0.41		
		(5.46-5.08)	0.38		
		(6.19-5.46)	0.73		
		(6.24-6.19)	0.05		
		(6.36-6.24)	0.12		
		(7.02-6.36)	0.66		
		(7.30-7.02)	0.28		
		(7.81-7.30)	0.51		
		(8.41-7.81)	0.60		
		(8.59-8.41)	0.18		
		(9.02-8.59)	0.43		
		(9.37-9.02)	0.35		
		(9.52-9.37)	0.15		
		A RIPORTARE ml	17.11		

SCOTICO

N. SEZIONE PROG.	FIG.	ELEMENTI DI CALCOLO	LUNGHEZZA ELEMENTARE ml	LUNGHEZZA FIGURA ml	NOTE
		RIPORTO ml	17.11		
		(10.16-9.52)	0.64		
		(10.63-10.16)	0.47		
		(10.94-10.63)	0.31		
		(11.68-10.94)	0.74		
		(11.73-11.68)	0.05		
		(11.74-11.73)	0.01		
		(11.83-11.74)	0.09		
		(11.83-11.83)	0.00		
				19.42	
7	sc1	(-10.74--10.74)	0.00		
90.00		(-10.36--10.74)	0.38		
		(-9.98--10.36)	0.38		
		(-9.31--9.98)	0.67		
		(-9.23--9.31)	0.08		
		(-9.18--9.23)	0.05		
		(-8.48--9.18)	0.70		
		(-8.01--8.48)	0.47		
		(-7.72--8.01)	0.29		
		(-7.22--7.72)	0.50		
		(-6.97--7.22)	0.25		
		(-6.83--6.97)	0.14		
		(-6.22--6.83)	0.61		
		(-5.66--6.22)	0.56		
		(-5.47--5.66)	0.19		
		(-5.13--5.47)	0.34		
		(-4.71--5.13)	0.42		
		(-4.48--4.71)	0.23		
		(-3.96--4.48)	0.52		
		(-3.30--3.96)	0.66		
		(-3.21--3.30)	0.09		
		(-3.04--3.21)	0.17		
		(-2.45--3.04)	0.59		
		(-2.13--2.45)	0.32		
		(-1.70--2.13)	0.43		
		(-0.95--1.70)	0.75		
		(-0.95--0.95)	0.00		
		(-0.95--0.95)	0.00		
		(-0.20--0.95)	0.75		
		(0.23--0.20)	0.43		
		(0.56-0.23)	0.33		
		(1.15-0.56)	0.59		
		(1.31-1.15)	0.16		
		(1.40-1.31)	0.09		
		(2.06-1.40)	0.66		
		(2.58-2.06)	0.52		
		(2.82-2.58)	0.24		
		(3.24-2.82)	0.42		
		(3.75-3.24)	0.51		
		(4.42-3.75)	0.67		
		(4.93-4.42)	0.51		
		(5.33-4.93)	0.40		
		(5.83-5.33)	0.50		
		(6.11-5.83)	0.28		
		(6.31-6.11)	0.20		
		(6.31-6.31)	0.00		
				17.05	
7bis	sc1	(-10.88--10.88)	0.00		
96.31		(-10.50--10.88)	0.38		
		(-9.91--10.50)	0.59		
		(-9.76--9.91)	0.15		
		(-9.67--9.76)	0.09		
		(-9.02--9.67)	0.65		
		(-8.45--9.02)	0.57		
		(-8.27--8.45)	0.18		
		(-7.99--8.27)	0.28		
		(-7.53--7.99)	0.46		
		(-7.24--7.53)	0.29		
		(-6.79--7.24)	0.45		
		(-6.07--6.79)	0.72		
		(-6.04--6.07)	0.03		
		(-6.02--6.04)	0.02		
		(-5.30--6.02)	0.72		
		(-4.81--5.30)	0.49		
		(-4.56--4.81)	0.25		
		(-4.16--4.56)	0.40		
		(-3.82--4.16)	0.34		
		(-3.60--3.82)	0.22		
		(-3.07--3.60)	0.53		
		(-2.38--3.07)	0.69		
		(-2.33--2.38)	0.05		
		(-2.24--2.33)	0.09		
		(-1.59--2.24)	0.65		
		(-1.17--1.59)	0.42		
		(-0.84--1.17)	0.33		
		(-0.33--0.84)	0.51		
		(-0.10--0.33)	0.23		
		(0.04--0.10)	0.14		
		(0.64-0.04)	0.60		
		(1.26-0.64)	0.62		
		(1.39-1.26)	0.13		
		(1.59-1.39)	0.20		
		(1.79-1.59)	0.20		
		(1.79-1.79)	0.00		
				12.67	
8	sc1	(-13.39--13.39)	0.00		
105.00		(-13.15--13.39)	0.24		
		(-12.45--13.15)	0.70		
		(-12.42--12.45)	0.03		
		(-12.37--12.42)	0.05		
		(-11.68--12.37)	0.69		
		(-11.17--11.68)	0.51		
		(-10.95--11.17)	0.22		
		(-10.65--10.95)	0.30		
		(-10.22--10.65)	0.43		
		(-9.90--10.22)	0.32		
		A RIPORTARE ml	3.49		

SCOTICO

N. SEZIONE PROG.	FIG.	ELEMENTI DI CALCOLO	LUNGHEZZA ELEMENTARE ml	LUNGHEZZA FIGURA ml	NOTE
		RIPORTO ml	3.49		
		(-9.48--9.90)	0.42		
		(-8.93--9.48)	0.55		
		(-8.75--8.93)	0.18		
		(-8.62--8.75)	0.13		
		(-8.02--8.62)	0.60		
		(-7.34--8.02)	0.68		
		(-7.28--7.34)	0.06		
		(-7.20--7.28)	0.08		
		(-6.55--7.20)	0.65		
		(-6.07--6.55)	0.48		
		(-5.82--6.07)	0.25		
		(-5.70--5.82)	0.12		
		(-5.70--5.70)	0.00		
				7.69	
8tris	sc1	(0.00-0.00)	0.00		
113.22		(0.15-0.00)	0.15		
		(0.25-0.15)	0.10		
		(0.34-0.25)	0.09		
		(0.98-0.34)	0.64		
		(1.69-0.98)	0.71		
		(1.71-1.69)	0.02		
		(1.73-1.71)	0.02		
		(2.44-1.73)	0.71		
		(3.04-2.44)	0.60		
		(3.16-3.04)	0.12		
		(3.31-3.16)	0.15		
		(3.89-3.31)	0.58		
		(4.38-3.89)	0.49		
		(4.62-4.38)	0.24		
		(4.89-4.62)	0.27		
		(5.73-4.89)	0.84		
		(6.47-5.73)	0.74		
		(6.80-6.47)	0.33		
		(7.08-6.80)	0.28		
		(7.53-7.08)	0.45		
		(8.06-7.53)	0.53		
		(8.25-8.06)	0.19		
		(8.42-8.25)	0.17		
		(8.98-8.42)	0.56		
		(9.64-8.98)	0.66		
		(9.71-9.64)	0.07		
		(9.77-9.71)	0.06		
		(10.07-9.77)	0.30		
		(10.07-10.07)	0.00		
				10.07	
9	sc1	(-8.42--8.42)	0.00		
120.00		(-8.10--8.42)	0.32		
		(-7.42--8.10)	0.68		
		(-7.38--7.42)	0.04		
		(-7.33--7.38)	0.05		
		(-5.93--7.33)	1.40		
		(-5.92--5.93)	0.01		
		(-5.20--5.92)	0.72		
		(-4.50--5.20)	0.70		
		(-4.47--4.50)	0.03		
		(-4.45--4.47)	0.02		
		(-3.75--4.45)	0.70		
		(-3.08--3.75)	0.67		
		(-3.02--3.08)	0.06		
		(-2.96--3.02)	0.06		
		(-2.30--2.96)	0.66		
		(-1.66--2.30)	0.64		
		(-1.57--1.66)	0.09		
		(-1.48--1.57)	0.09		
		(-0.85--1.48)	0.63		
		(-0.25--0.85)	0.60		
		(-0.12--0.25)	0.13		
		(0.01--0.12)	0.13		
		(0.60-0.01)	0.59		
		(1.17-0.60)	0.57		
		(1.33-1.17)	0.16		
		(1.49-1.33)	0.16		
		(2.05-1.49)	0.56		
		(2.59-2.05)	0.54		
		(2.78-2.59)	0.19		
		(2.97-2.78)	0.19		
		(3.50-2.97)	0.53		
		(4.01-3.50)	0.51		
		(4.23-4.01)	0.22		
		(4.46-4.23)	0.23		
		(4.95-4.46)	0.49		
		(5.42-4.95)	0.47		
		(5.68-5.42)	0.26		
		(5.94-5.68)	0.26		
		(6.40-5.94)	0.46		
		(6.84-6.40)	0.44		
		(7.13-6.84)	0.29		
		(7.43-7.13)	0.30		
		(7.85-7.43)	0.42		
		(8.26-7.85)	0.41		
		(8.58-8.26)	0.32		
		(8.91-8.58)	0.33		
		(9.30-8.91)	0.39		
		(9.68-9.30)	0.38		
		(10.03-9.68)	0.35		
		(10.22-10.03)	0.19		
		(10.22-10.22)	0.00		
				18.64	
10	sc1	(-14.31--14.31)	0.00		
135.00		(-13.84--14.31)	0.47		
		(-13.32--13.84)	0.52		
		(-13.11--13.32)	0.21		
		(-12.84--13.11)	0.27		
		(-12.38--12.84)	0.46		
		(-12.00--12.38)	0.38		
		A RIPORTARE ml	2.31		

SCOTICO

N. SEZIONE PROG.	FIG.	ELEMENTI DI CALCOLO	LUNGHEZZA ELEMENTARE ml	LUNGHEZZA FIGURA ml	NOTE
		RIPORTO ml	2.31		
		(-11.65--12.00)	0.35		
		(-11.22--11.65)	0.43		
		(-10.92--11.22)	0.30		
		(-10.68--10.92)	0.24		
		(-10.19--10.68)	0.49		
		(-9.60--10.19)	0.59		
		(-9.46--9.60)	0.14		
		(-9.35--9.46)	0.11		
		(-8.73--9.35)	0.62		
		(-8.03--8.73)	0.70		
		(-8.01--8.03)	0.02		
		(-7.97--8.01)	0.04		
		(-7.28--7.97)	0.69		
		(-6.71--7.28)	0.57		
		(-6.55--6.71)	0.16		
		(-6.35--6.55)	0.20		
		(-5.82--6.35)	0.53		
		(-5.39--5.82)	0.43		
		(-5.09--5.39)	0.30		
		(-4.73--5.09)	0.36		
		(-4.36--4.73)	0.37		
		(-4.06--4.36)	0.30		
		(-3.63--4.06)	0.43		
		(-3.10--3.63)	0.53		
		(-2.90--3.10)	0.20		
		(-2.74--2.90)	0.16		
		(-2.18--2.74)	0.56		
		(-1.48--2.18)	0.70		
		(-1.45--1.48)	0.03		
		(-1.42--1.45)	0.03		
		(-0.72--1.42)	0.70		
		(-0.10--0.72)	0.62		
		(0.01--0.10)	0.11		
		(0.14-0.01)	0.13		
		(0.74-0.14)	0.60		
		(1.23-0.74)	0.49		
		(1.47-1.23)	0.24		
		(1.77-1.47)	0.30		
		(2.20-1.77)	0.43		
		(2.55-2.20)	0.35		
		(3.39-2.55)	0.84		
		(3.87-3.39)	0.48		
		(4.38-3.87)	0.51		
		(5.01-4.38)	0.63		
		(5.11-5.01)	0.10		
		(5.19-5.11)	0.08		
		(5.84-5.19)	0.65		
		(6.51-5.84)	0.67		
		(6.57-6.51)	0.06		
		(6.64-6.57)	0.07		
		(7.30-6.64)	0.66		
		(7.84-7.30)	0.54		
		(8.03-7.84)	0.19		
		(8.26-8.03)	0.23		
		(8.76-8.26)	0.50		
		(9.16-8.76)	0.40		
		(9.49-9.16)	0.33		
		(9.89-9.49)	0.40		
		(10.21-9.89)	0.32		
		(10.33-10.21)	0.12		
		(10.33-10.33)	0.00		
				24.64	
11 150.00	sc1	(-14.36--14.36)	0.00		
		(-13.98--14.36)	0.38		
		(-13.67--13.98)	0.31		
		(-13.16--13.67)	0.51		
		(-12.92--13.16)	0.24		
		(-12.77--12.92)	0.15		
		(-12.18--12.77)	0.59		
		(-11.57--12.18)	0.61		
		(-11.44--11.57)	0.13		
		(-11.23--11.44)	0.21		
		(-10.69--11.23)	0.54		
		(-10.36--10.69)	0.33		
		(-9.95--10.36)	0.41		
		(-9.29--9.95)	0.66		
		(-9.20--9.29)	0.09		
		(-9.15--9.20)	0.05		
		(-8.46--9.15)	0.69		
		(-7.94--8.46)	0.52		
		(-7.36--7.94)	0.58		
		(-6.73--7.36)	0.63		
		(-6.23--6.73)	0.50		
		(-5.52--6.23)	0.71		
		(-5.48--5.52)	0.04		
		(-5.42--5.48)	0.06		
		(-4.74--5.42)	0.68		
		(-4.31--4.74)	0.43		
		(-3.99--4.31)	0.32		
		(-3.49--3.99)	0.50		
		(-3.25--3.49)	0.24		
		(-3.10--3.25)	0.15		
		(-2.51--3.10)	0.59		
		(-1.89--2.51)	0.62		
		(-1.76--1.89)	0.13		
		(-1.55--1.76)	0.21		
		(-1.02--1.55)	0.53		
		(-0.68--1.02)	0.34		
		(-0.27--0.68)	0.41		
		(0.38--0.27)	0.65		
		(0.47-0.38)	0.09		
		(0.52-0.47)	0.05		
		(1.21-0.52)	0.69		
		(1.73-1.21)	0.52		
		(1.96-1.73)	0.23		
		A RIPORTARE ml	16.32		

SCOTICO

N. SEZIONE PROG.	FIG.	ELEMENTI DI CALCOLO	LUNGHEZZA ELEMENTARE ml	LUNGHEZZA FIGURA ml	NOTE
		RIPORTO ml	16.32		
		(2.32-1.96)	0.36		
		(2.70-2.32)	0.38		
		(2.94-2.70)	0.24		
		(3.45-2.94)	0.51		
		(4.15-3.45)	0.70		
		(4.19-4.15)	0.04		
		(4.25-4.19)	0.06		
		(4.93-4.25)	0.68		
		(5.36-4.93)	0.43		
		(5.68-5.36)	0.32		
		(6.19-5.68)	0.51		
		(6.42-6.19)	0.23		
		(6.57-6.42)	0.15		
		(7.17-6.57)	0.60		
		(7.78-7.17)	0.61		
		(7.91-7.78)	0.13		
		(8.12-7.91)	0.21		
		(8.65-8.12)	0.53		
		(8.99-8.65)	0.34		
		(9.40-8.99)	0.41		
		(10.06-9.40)	0.66		
		(10.14-10.06)	0.08		
		(10.20-10.14)	0.06		
		(10.61-10.20)	0.41		
		(10.61-10.61)	0.00		
				24.97	
12 165.00	sc1	(-14.31--14.31)	0.00		
		(-14.24--14.31)	0.07		
		(-14.11--14.24)	0.13		
		(-13.82--14.11)	0.29		
		(-13.34--13.82)	0.48		
		(-13.11--13.34)	0.23		
		(-12.57--13.11)	0.54		
		(-11.99--12.57)	0.58		
		(-11.79--11.99)	0.20		
		(-11.38--11.79)	0.41		
		(-11.02--11.38)	0.36		
		(-10.86--11.02)	0.16		
		(-10.25--10.86)	0.61		
		(-9.73--10.25)	0.52		
		(-9.48--9.73)	0.25		
		(-8.94--9.48)	0.54		
		(-8.70--8.94)	0.24		
		(-8.60--8.70)	0.10		
		(-7.93--8.60)	0.67		
		(-7.47--7.93)	0.46		
		(-7.16--7.47)	0.31		
		(-6.50--7.16)	0.66		
		(-6.39--6.50)	0.11		
		(-6.34--6.39)	0.05		
		(-5.61--6.34)	0.73		
		(-5.21--5.61)	0.40		
		(-4.84--5.21)	0.37		
		(-4.08--4.84)	0.76		
		(-4.07--4.08)	0.01		
		(-4.05--4.07)	0.02		
		(-3.30--4.05)	0.75		
		(-2.95--3.30)	0.35		
		(-2.52--2.95)	0.43		
		(-1.82--2.52)	0.70		
		(-1.75--1.82)	0.07		
		(-1.61--1.75)	0.14		
		(-0.98--1.61)	0.63		
		(-0.69--0.98)	0.29		
		(-0.21--0.69)	0.48		
		(0.44--0.21)	0.65		
		(0.83-0.44)	0.39		
		(1.57-0.83)	0.74		
		(2.11-1.57)	0.54		
		(2.70-2.11)	0.59		
		(2.88-2.70)	0.18		
		(3.27-2.88)	0.39		
		(3.65-3.27)	0.38		
		(3.83-3.65)	0.18		
		(4.43-3.83)	0.60		
		(4.96-4.43)	0.53		
		(5.20-4.96)	0.24		
		(5.71-5.20)	0.51		
		(5.97-5.71)	0.26		
		(6.09-5.97)	0.12		
		(6.74-6.09)	0.65		
		(7.22-6.74)	0.48		
		(7.52-7.22)	0.30		
		(8.15-7.52)	0.63		
		(8.29-8.15)	0.14		
		(8.35-8.29)	0.06		
		(9.06-8.35)	0.71		
		(9.48-9.06)	0.42		
		(9.83-9.48)	0.35		
		(10.38-9.83)	0.55		
		(10.38-10.38)	0.00		
				24.69	
13 180.00	sc1	(-13.02--13.02)	0.00		
		(-12.73--13.02)	0.29		
		(-12.17--12.73)	0.56		
		(-11.10--12.17)	1.07		
		(-11.09--11.10)	0.01		
		(-10.28--11.09)	0.81		
		(-10.02--10.28)	0.26		
		(-9.46--10.02)	0.56		
		(-8.94--9.46)	0.52		
		(-8.65--8.94)	0.29		
		(-7.86--8.65)	0.79		
		(-7.83--7.86)	0.03		
		(-7.72--7.83)	0.11		
		A RIPORTARE ml	5.30		

SCOTICO

N. SEZIONE PROG.	FIG.	ELEMENTI DI CALCOLO	LUNGHEZZA ELEMENTARE ml	LUNGHEZZA FIGURA ml	NOTE
		RIPORTO ml	5.30		
		(-7.01--7.72)	0.71		
		(-6.79--7.01)	0.22		
		(-6.20--6.79)	0.59		
		(-5.71--6.20)	0.49		
		(-5.38--5.71)	0.33		
		(-4.64--5.38)	0.74		
		(-4.57--4.64)	0.07		
		(-4.35--4.57)	0.22		
		(-3.75--4.35)	0.60		
		(-3.56--3.75)	0.19		
		(-2.93--3.56)	0.63		
		(-2.48--2.93)	0.45		
		(-2.12--2.48)	0.36		
		(-1.41--2.12)	0.71		
		(-1.30--1.41)	0.11		
		(-0.97--1.30)	0.33		
		(-0.49--0.97)	0.48		
		(-0.33--0.49)	0.16		
		(0.33--0.33)	0.66		
		(0.74-0.33)	0.41		
		(1.15-0.74)	0.41		
		(1.82-1.15)	0.67		
		(1.96-1.82)	0.14		
		(2.41-1.96)	0.45		
		(2.78-2.41)	0.37		
		(2.90-2.78)	0.12		
		(3.59-2.90)	0.69		
		(3.97-3.59)	0.38		
		(4.41-3.97)	0.44		
		(5.05-4.41)	0.64		
		(5.23-5.05)	0.18		
		(5.78-5.23)	0.55		
		(6.04-5.78)	0.26		
		(6.13-6.04)	0.09		
		(6.28-6.13)	0.15		
		(7.20-6.28)	0.92		
		(7.68-7.20)	0.48		
		(8.28-7.68)	0.60		
		(8.49-8.28)	0.21		
		(9.16-8.49)	0.67		
		(9.31-9.16)	0.15		
		(9.35-9.31)	0.04		
		(10.12-9.35)	0.77		
		(10.31-10.12)	0.19		
		(10.31-10.31)	0.00		
				23.33	
14 195.00	sc1	(-10.11--10.11)	0.00		
		(-9.63--10.11)	0.48		
		(-9.06--9.63)	0.57		
		(-8.76--9.06)	0.30		
		(-8.02--8.76)	0.74		
		(-7.30--8.02)	0.72		
		(-6.97--7.30)	0.33		
		(-6.16--6.97)	0.81		
		(-5.92--6.16)	0.24		
		(-5.29--5.92)	0.63		
		(-4.87--5.29)	0.42		
		(-4.42--4.87)	0.45		
		(-3.83--4.42)	0.59		
		(-3.56--3.83)	0.27		
		(-2.78--3.56)	0.78		
		(-2.69--2.78)	0.09		
		(-2.26--2.69)	0.43		
		(-1.82--2.26)	0.44		
		(-1.73--1.82)	0.09		
		(-0.96--1.73)	0.77		
		(-0.69--0.96)	0.27		
		(-0.09--0.69)	0.60		
		(0.36--0.09)	0.45		
		(0.78-0.36)	0.42		
		(1.41-0.78)	0.63		
		(1.65-1.41)	0.24		
		(2.46-1.65)	0.81		
		(2.51-2.46)	0.05		
		(2.79-2.51)	0.28		
		(3.38-2.79)	0.59		
		(3.50-3.38)	0.12		
		(4.25-3.50)	0.75		
		(4.55-4.25)	0.30		
		(5.11-4.55)	0.56		
		(5.60-5.11)	0.49		
		(5.98-5.60)	0.38		
		(6.64-5.98)	0.66		
		(6.85-6.64)	0.21		
		(7.69-6.85)	0.84		
		(7.72-7.69)	0.03		
		(7.84-7.72)	0.12		
		(8.58-7.84)	0.74		
		(8.74-8.58)	0.16		
		(9.45-8.74)	0.71		
		(9.79-9.45)	0.34		
		(9.84-9.79)	0.05		
		(9.84-9.84)	0.00		
				19.95	
15 210.00	sc1	(-2.79--2.79)	0.00		
		(-2.69--2.79)	0.10		
		(-2.21--2.69)	0.48		
		(-1.79--2.21)	0.42		
		(-1.17--1.79)	0.62		
		(-0.89--1.17)	0.28		
		(-0.13--0.89)	0.76		
		(0.01--0.13)	0.14		
		(0.90-0.01)	0.89		
		(0.91-0.90)	0.01		
		(0.99-0.91)	0.08		
		A RIPORTARE ml	3.78		

SCOTICO

N. SEZIONE PROG.	FIG.	ELEMENTI DI CALCOLO	LUNGHEZZA ELEMENTARE ml	LUNGHEZZA FIGURA ml	NOTE
		RIPORTO ml	3.78		
		(1.81-0.99)	0.82		
		(1.94-1.81)	0.13		
		(2.71-1.94)	0.77		
		(2.98-2.71)	0.27		
		(3.61-2.98)	0.63		
		(4.01-3.61)	0.40		
		(4.51-4.01)	0.50		
		(5.05-4.51)	0.54		
		(5.41-5.05)	0.36		
		(6.09-5.41)	0.68		
		(6.32-6.09)	0.23		
		(7.12-6.32)	0.80		
		(7.22-7.12)	0.10		
		(7.82-7.22)	0.60		
		(8.12-7.82)	0.30		
		(8.16-8.12)	0.04		
		(8.17-8.16)	0.01		
		(8.17-8.17)	0.00		
				10.96	
15bis 216.28	sc1	(0.00-0.00)	0.00		
		(0.63-0.00)	0.63		
		(0.77-0.63)	0.14		
		(0.79-0.77)	0.02		
		(1.67-0.79)	0.88		
		(1.82-1.67)	0.15		
		(2.58-1.82)	0.76		
		(2.86-2.58)	0.28		
		(3.48-2.86)	0.62		
		(3.90-3.48)	0.42		
		(4.39-3.90)	0.49		
		(4.93-4.39)	0.54		
		(5.29-4.93)	0.36		
		(5.97-5.29)	0.68		
		(6.20-5.97)	0.23		
		(7.00-6.20)	0.80		
		(7.11-7.00)	0.11		
		(7.81-7.11)	0.70		
		(8.01-7.81)	0.20		
		(8.04-8.01)	0.03		
		(8.14-8.04)	0.10		
		(8.14-8.14)	0.00		
				8.14	
16 225.00	sc1	(-6.50--6.50)	0.00		
		(-6.25--6.50)	0.25		
		(-5.77--6.25)	0.48		
		(-5.21--5.77)	0.56		
		(-4.86--5.21)	0.35		
		(-4.18--4.86)	0.68		
		(-3.96--4.18)	0.22		
		(-3.14--3.96)	0.82		
		(-2.42--3.14)	0.72		
		(-2.10--2.42)	0.32		
		(-1.24--2.10)	0.86		
		(-1.07--1.24)	0.17		
		(-0.33--1.07)	0.74		
		(-0.03--0.33)	0.30		
		(0.57--0.03)	0.60		
		(1.00-0.57)	0.43		
		(1.48-1.00)	0.48		
		(2.04-1.48)	0.56		
		(2.39-2.04)	0.35		
		(3.07-2.39)	0.68		
		(3.29-3.07)	0.22		
		(3.83-3.29)	0.54		
		(3.83-3.83)	0.00		
				10.33	
16 225.00	sc2	(-10.76--10.76)	0.00		
		(-10.39--10.76)	0.37		
		(-10.30--10.39)	0.09		
		(-9.65--10.30)	0.65		
		(-9.39--9.65)	0.26		
		(-9.35--9.39)	0.04		
		(-8.49--9.35)	0.86		
		(-8.32--8.49)	0.17		
		(-7.58--8.32)	0.74		
		(-7.28--7.58)	0.30		
		(-6.67--7.28)	0.61		
		(-6.25--6.67)	0.42		
		(-5.77--6.25)	0.48		
		(-5.21--5.77)	0.56		
		(-4.86--5.21)	0.35		
		(-4.18--4.86)	0.68		
		(-3.96--4.18)	0.22		
		(-3.14--3.96)	0.82		
		(-2.42--3.14)	0.72		
		(-2.10--2.42)	0.32		
		(-1.24--2.10)	0.86		
		(-1.07--1.24)	0.17		
		(-0.33--1.07)	0.74		
		(-0.03--0.33)	0.30		
		(0.57--0.03)	0.60		
		(1.00-0.57)	0.43		
		(1.48-1.00)	0.48		
		(2.04-1.48)	0.56		
		(2.39-2.04)	0.35		
		(3.07-2.39)	0.68		
		(3.29-3.07)	0.22		
		(4.11-3.29)	0.82		
		(4.20-4.11)	0.09		
		(4.81-4.20)	0.61		
		(5.10-4.81)	0.29		
		(5.15-5.10)	0.05		
		(6.01-5.15)	0.86		
		(6.18-6.01)	0.17		
		(6.92-6.18)	0.74		
		A RIPORTARE ml	17.68		

SCOTICO

N. SEZIONE PROG.	FIG.	ELEMENTI DI CALCOLO	LUNGHEZZA ELEMENTARE ml	LUNGHEZZA FIGURA ml	NOTE
		RIPORTO ml	17.68		
		(7.22-6.92)	0.30		
		(7.82-7.22)	0.60		
		(8.25-7.82)	0.43		
		(8.49-8.25)	0.24		
		(8.49-8.49)	0.00		
				19.25	
17	sc1	(-10.35--10.35)	0.00		
240.00		(-10.15--10.35)	0.20		
		(-9.40--10.15)	0.75		
		(-9.22--9.40)	0.18		
		(-8.37--9.22)	0.85		
		(-8.29--8.37)	0.08		
		(-7.63--8.29)	0.66		
		(-7.37--7.63)	0.26		
		(-7.34--7.37)	0.03		
		(-6.44--7.34)	0.90		
		(-6.30--6.44)	0.14		
		(-5.51--6.30)	0.79		
		(-5.27--5.51)	0.24		
		(-4.58--5.27)	0.69		
		(-4.24--4.58)	0.34		
		(-3.66--4.24)	0.58		
		(-3.21--3.66)	0.45		
		(-2.73--3.21)	0.48		
		(-2.18--2.73)	0.55		
		(-1.80--2.18)	0.38		
		(-1.14--1.80)	0.66		
		(-0.32--1.14)	0.82		
		(-0.11--0.32)	0.21		
		(0.00--0.11)	0.11		
		(0.00-0.00)	0.00		
				10.35	
18	sc1	(-8.98--8.98)	0.00		
255.00		(-8.36--8.98)	0.62		
		(-8.20--8.36)	0.16		
		(-7.37--8.20)	0.83		
		(-7.17--7.37)	0.20		
		(-6.37--7.17)	0.80		
		(-6.15--6.37)	0.22		
		(-5.38--6.15)	0.77		
		(-5.12--5.38)	0.26		
		(-4.39--5.12)	0.73		
		(-4.09--4.39)	0.30		
		(-3.39--4.09)	0.70		
		(-3.07--3.39)	0.32		
		(-2.40--3.07)	0.67		
		(-2.04--2.40)	0.36		
		(-1.40--2.04)	0.64		
		(-1.02--1.40)	0.38		
		(-0.41--1.02)	0.61		
		(0.01--0.41)	0.42		
		(0.45-0.01)	0.44		
		(1.03-0.45)	0.58		
		(1.58-1.03)	0.55		
		(2.06-1.58)	0.48		
		(2.57-2.06)	0.51		
		(3.09-2.57)	0.52		
		(3.57-3.09)	0.48		
		(4.11-3.57)	0.54		
		(4.56-4.11)	0.45		
		(5.14-4.56)	0.58		
		(5.25-5.14)	0.11		
		(5.25-5.25)	0.00		
				14.23	
19bis	sc1	(-5.00--5.00)	0.00		
274.71		(-4.74--5.00)	0.26		
		(-4.37--4.74)	0.37		
		(-3.63--4.37)	0.74		
		(-3.34--3.63)	0.29		
		(-2.53--3.34)	0.81		
		(-2.32--2.53)	0.21		
		(-1.43--2.32)	0.89		
		(-1.29--1.43)	0.14		
		(-0.33--1.29)	0.96		
		(-0.26--0.33)	0.07		
		(-0.20--0.26)	0.06		
		(0.64--0.20)	0.84		
		(0.76-0.64)	0.12		
		(0.77-0.76)	0.01		
		(0.78-0.77)	0.01		
		(1.79-0.78)	1.01		
		(1.88-1.79)	0.09		
		(2.82-1.88)	0.94		
		(2.98-2.82)	0.16		
		(3.85-2.98)	0.87		
		(4.08-3.85)	0.23		
		(4.88-4.08)	0.80		
		(5.02-4.88)	0.14		
		(5.02-5.02)	0.00		
				10.02	
19bis	sc1	(-5.00--5.00)	0.00		
274.71		(-4.74--5.00)	0.26		
		(-4.37--4.74)	0.37		
		(-3.63--4.37)	0.74		
		(-3.34--3.63)	0.29		
		(-2.53--3.34)	0.81		
		(-2.32--2.53)	0.21		
		(-1.43--2.32)	0.89		
		(-1.29--1.43)	0.14		
		(-0.33--1.29)	0.96		
		(-0.26--0.33)	0.07		
		(-0.20--0.26)	0.06		
		(0.64--0.20)	0.84		
		(0.76-0.64)	0.12		
		(0.77-0.76)	0.01		
		A RIPORTARE ml	5.77		

SCOTICO

N. SEZIONE PROG.	FIG.	ELEMENTI DI CALCOLO	LUNGHEZZA ELEMENTARE ml	LUNGHEZZA FIGURA ml	NOTE
		RIPORTO ml	5.77		
		(0.78-0.77)	0.01		
		(1.79-0.78)	1.01		
		(1.88-1.79)	0.09		
		(2.82-1.88)	0.94		
		(2.98-2.82)	0.16		
		(3.85-2.98)	0.87		
		(4.08-3.85)	0.23		
		(4.88-4.08)	0.80		
		(5.02-4.88)	0.14		
		(5.02-5.02)	0.00		
				10.02	

Il Direttore dei Lavori | L'Impresa

BONIFICA

DALLA SEZ. DA PROG.	ALLA SEZ. A PROG.	SEZIONE	FIGURA	AREA	DISTANZA SEZIONI m	DISTANZA DI CALCOLO m	VOLUME PARZIALE mc	VOLUME TOTALE mc
5	6	5	BO1	9.09	15.00	7.50	68.175	
60.00	75.00	6	BO1	9.78	15.00	7.50	73.350	
								141.525
6	7	6	BO1	9.78	15.00	7.50	73.350	
75.00	90.00	7	BO1	8.52	15.00	7.50	63.900	
								137.250
7	7bis	7	BO1	8.52	6.31	3.16	26.923	
90.00	96.31	7bis	BO1	6.32	6.31	3.16	19.971	
								46.894
7bis	8	7bis	BO1	6.32	8.69	4.34	27.429	
96.31	105.00	8	BO1	3.86	8.69	4.34	16.752	
								44.181
8	8tris	8	BO1	3.86	8.22	4.11	15.865	
105.00	113.22	8tris	BO1	5.06	8.22	4.11	20.797	
								36.662
8tris	9	8tris	BO1	5.06	6.78	3.39	17.153	
113.22	120.00	9	BO1	9.30	6.78	3.39	31.527	
								48.680
9	10	9	BO1	9.30	15.00	7.50	69.750	
120.00	135.00	10	BO1	12.31	15.00	7.50	92.325	
								162.075
10	11	10	BO1	12.31	15.00	7.50	92.325	
135.00	150.00	11	BO1	12.44	15.00	7.50	93.300	
								185.625
11	12	11	BO1	12.44	15.00	7.50	93.300	
150.00	165.00	12	BO1	12.32	15.00	7.50	92.400	
								185.700
12	13	12	BO1	12.32	15.00	7.50	92.400	
165.00	180.00	13	BO1	11.67	15.00	7.50	87.525	
								179.925
13	14	13	BO1	11.67	15.00	7.50	87.525	
180.00	195.00	14	BO1	9.94	15.00	7.50	74.550	
								162.075
14	15	14	BO1	9.94	15.00	7.50	74.550	
195.00	210.00	15	BO1	5.47	15.00	7.50	41.025	
								115.575
15	15bis	15	BO1	5.47	6.28	3.14	17.176	
210.00	216.28	15bis	BO1	4.03	6.28	3.14	12.654	
								29.830
15bis	16	15bis	BO1	4.03	8.72	4.36	17.571	
216.28	225.00	16	BO1	5.17	8.72	4.36	22.541	
		16	BO2	9.63	8.72	4.36	41.987	
								82.099
16	17	16	BO1	5.17	15.00	7.50	38.775	
225.00	240.00	16	BO2	9.63	15.00	7.50	72.225	
		17	BO1	5.18	15.00	7.50	38.850	
								149.850
17	18	17	BO1	5.18	15.00	7.50	38.850	
240.00	255.00	18	BO1	7.12	15.00	7.50	53.400	
								92.250
18	19bis	18	BO1	7.12	19.71	9.85	70.132	
255.00	274.71	19bis	BO1	5.04	19.71	9.85	49.644	
								119.776

Il Direttore dei Lavori	L'Impresa	TOTALE ARTICOLO	1919.972

USURA

DALLA SEZ. DA PROG.	ALLA SEZ. A PROG.	SEZIONE	FIGURA	LUNGHEZZA	DISTANZA SEZIONI ml	DISTANZA DI CALCOLO ml	AREA PARZIALE mq	AREA TOTALE mq
5	6	5	a1	6.63	15.00	7.50	49.73	
60.00	75.00	6	a1	6.78	15.00	7.50	50.85	
								100.58
6	7	6	a1	6.78	15.00	7.50	50.85	
75.00	90.00	7	a1	6.86	15.00	7.50	51.45	
								102.30
7	7bis	7	a1	6.86	6.31	3.16	21.68	
90.00	96.31	7bis	a1	6.86	6.31	3.16	21.68	
								43.36
7bis	8	7bis	a1	6.86	8.69	4.34	29.77	
96.31	105.00	8	a1	6.86	8.69	4.34	29.77	
								59.54
8	8tris	8	a1	6.86	8.22	4.11	28.19	
105.00	113.22	8tris	a1	6.86	8.22	4.11	28.19	
								56.38
8tris	9	8tris	a1	6.86	6.78	3.39	23.26	
113.22	120.00	9	a1	6.86	6.78	3.39	23.26	
								46.52
9	10	9	a1	6.86	15.00	7.50	51.45	
120.00	135.00	10	a1	6.86	15.00	7.50	51.45	
								102.90
10	11	10	a1	6.86	15.00	7.50	51.45	
135.00	150.00	11	a1	6.86	15.00	7.50	51.45	
								102.90
11	12	11	a1	6.86	15.00	7.50	51.45	
150.00	165.00	12	a1	6.86	15.00	7.50	51.45	
								102.90
12	13	12	a1	6.86	15.00	7.50	51.45	
165.00	180.00	13	a1	6.85	15.00	7.50	51.38	
								102.83
13	14	13	a1	6.85	15.00	7.50	51.38	
180.00	195.00	14	a1	6.73	15.00	7.50	50.48	
								101.86
14	15	14	a1	6.73	15.00	7.50	50.48	
195.00	210.00	15	a1	6.58	15.00	7.50	49.35	
								99.83
15	15bis	15	a1	6.58	6.28	3.14	20.66	
210.00	216.28	15bis	a1	6.53	6.28	3.14	20.50	
								41.16
15bis	16	15bis	a1	6.53	8.72	4.36	28.47	
216.28	225.00	16	a1	6.53	8.72	4.36	28.47	
								56.94
16	17	16	a1	6.53	15.00	7.50	48.98	
225.00	240.00	17	a1	6.66	15.00	7.50	49.95	
								98.93
17	18	17	a1	6.66	15.00	7.50	49.95	
240.00	255.00	18	a1	6.78	15.00	7.50	50.85	
								100.80
18	19bis	18	a1	6.78	19.71	9.85	66.78	
255.00	274.71	19bis	a1	6.79	19.71	9.85	66.88	
								133.66

VEGETALE

DALLA SEZ. DA PROG.	ALLA SEZ. A PROG.	SEZIONE	FIGURA	LUNGHEZZA	DISTANZA SEZIONI ml	DISTANZA DI CALCOLO ml	AREA PARZIALE mq	AREA TOTALE mq
5	6	5	b1	3.23	15.00	7.50	24.23	
60.00	75.00	6	b1	2.71	15.00	7.50	20.32	
		6	b2	5.14	15.00	7.50	38.55	
								83.10
6	7	6	b1	2.71	15.00	7.50	20.32	
75.00	90.00	6	b2	5.14	15.00	7.50	38.55	
		7	b1	5.57	15.00	7.50	41.78	
		7	b2	2.97	15.00	7.50	22.28	
								122.93
7	7bis	7	b1	5.57	6.31	3.16	17.60	
90.00	96.31	7	b2	2.97	6.31	3.16	9.39	
		7bis	b1	5.73	6.31	3.16	18.11	
		7bis	b2	3.27	6.31	3.16	10.33	
								55.43
7bis	8	7bis	b1	5.73	8.69	4.34	24.87	
96.31	105.00	7bis	b2	3.27	8.69	4.34	14.19	
		8	b1	8.24	8.69	4.34	35.76	
		8	b2	3.63	8.69	4.34	15.75	
								90.57
8	8tris	8	b1	8.24	8.22	4.11	33.87	
105.00	113.22	8	b2	3.63	8.22	4.11	14.92	
		8tris	b1	4.63	8.22	4.11	19.03	
		8tris	b2	8.61	8.22	4.11	35.39	
								103.21
8tris	9	8tris	b1	4.63	6.78	3.39	15.70	
113.22	120.00	8tris	b2	8.61	6.78	3.39	29.19	
		9	b1	4.83	6.78	3.39	16.37	
		9	b2	8.72	6.78	3.39	29.56	
								90.82
9	10	9	b1	4.83	15.00	7.50	36.23	
120.00	135.00	9	b2	8.72	15.00	7.50	65.40	
		10	b2	9.70	15.00	7.50	72.75	
		10	b1	8.85	15.00	7.50	66.38	
								240.76
10	11	10	b2	9.70	15.00	7.50	72.75	
135.00	150.00	10	b1	8.85	15.00	7.50	66.38	
		11	b2	9.75	15.00	7.50	73.13	
		11	b1	9.13	15.00	7.50	68.48	
								280.74
11	12	11	b2	9.75	15.00	7.50	73.13	
150.00	165.00	11	b1	9.13	15.00	7.50	68.48	
		12	b2	9.77	15.00	7.50	73.27	
		12	b1	8.91	15.00	7.50	66.83	
								281.71
12	13	12	b2	9.77	15.00	7.50	73.27	
165.00	180.00	12	b1	8.91	15.00	7.50	66.83	
		13	b2	8.43	15.00	7.50	63.22	
		13	b1	8.86	15.00	7.50	66.45	
								269.77
13	14	13	b2	8.43	15.00	7.50	63.22	
180.00	195.00	13	b1	8.86	15.00	7.50	66.45	
		14	b1	4.98	15.00	7.50	37.35	
		14	b2	8.53	15.00	7.50	63.97	
								230.99
14	15	14	b1	4.98	15.00	7.50	37.35	
195.00	210.00	14	b2	8.53	15.00	7.50	63.97	
		15	b1	4.01	15.00	7.50	30.07	
		15	b2	7.02	15.00	7.50	52.65	
								184.04
15	15bis	15	b1	4.01	6.28	3.14	12.59	
210.00	216.28	15	b2	7.02	6.28	3.14	22.04	
		15bis	b1	3.68	6.28	3.14	11.56	
		15bis	b2	6.95	6.28	3.14	21.82	
								68.01
15bis	16	15bis	b1	3.68	8.72	4.36	16.04	
216.28	225.00	15bis	b2	6.95	8.72	4.36	30.30	
		16	b2	6.16	8.72	4.36	26.86	
		16	b1	7.26	8.72	4.36	31.65	
								104.85
16	17	16	b2	6.16	15.00	7.50	46.20	
225.00	240.00	16	b1	7.26	15.00	7.50	54.45	
		17	b2	5.75	15.00	7.50	43.13	
		17	b1	2.08	15.00	7.50	15.60	
								159.38
17	18	17	b2	5.75	15.00	7.50	43.13	
240.00	255.00	17	b1	2.08	15.00	7.50	15.60	
		18	b1	3.83	15.00	7.50	28.73	
		18	b2	3.32	15.00	7.50	24.90	
								112.36
18	19bis	18	b1	3.83	19.71	9.85	37.73	
255.00	274.71	18	b2	3.32	19.71	9.85	32.70	
		19bis	b1	3.61	19.71	9.85	35.56	
								105.99

Il Direttore dei Lavori	L'Impresa	TOTALE ARTICOLO	2584.66

BINDER

DALLA SEZ. DA PROG.	ALLA SEZ. A PROG.	SEZIONE	FIGURA	LUNGHEZZA	DISTANZA SEZIONI ml	DISTANZA DI CALCOLO ml	AREA PARZIALE mq	AREA TOTALE mq
5	6	5	c1	6.63	15.00	7.50	49.73	
60.00	75.00	6	c1	6.78	15.00	7.50	50.85	
								100.58
6	7	6	c1	6.78	15.00	7.50	50.85	
75.00	90.00	7	c1	6.86	15.00	7.50	51.45	
								102.30
7	7bis	7	c1	6.86	6.31	3.16	21.68	
90.00	96.31	7bis	c1	6.86	6.31	3.16	21.68	
								43.36
7bis	8	7bis	c1	6.86	8.69	4.34	29.77	
96.31	105.00	8	c1	6.86	8.69	4.34	29.77	
								59.54
8	8tris	8	c1	6.86	8.22	4.11	28.19	
105.00	113.22	8tris	c1	6.86	8.22	4.11	28.19	
								56.38
8tris	9	8tris	c1	6.86	6.78	3.39	23.26	
113.22	120.00	9	c1	6.86	6.78	3.39	23.26	
								46.52
9	10	9	c1	6.86	15.00	7.50	51.45	
120.00	135.00	10	c1	6.86	15.00	7.50	51.45	
								102.90
10	11	10	c1	6.86	15.00	7.50	51.45	
135.00	150.00	11	c1	6.86	15.00	7.50	51.45	
								102.90
11	12	11	c1	6.86	15.00	7.50	51.45	
150.00	165.00	12	c1	6.86	15.00	7.50	51.45	
								102.90
12	13	12	c1	6.86	15.00	7.50	51.45	
165.00	180.00	13	c1	6.85	15.00	7.50	51.38	
								102.83
13	14	13	c1	6.85	15.00	7.50	51.38	
180.00	195.00	14	c1	6.73	15.00	7.50	50.48	
								101.86
14	15	14	c1	6.73	15.00	7.50	50.48	
195.00	210.00	15	c1	6.58	15.00	7.50	49.35	
								99.83
15	15bis	15	c1	6.58	6.28	3.14	20.66	
210.00	216.28	15bis	c1	6.53	6.28	3.14	20.50	
								41.16
15bis	16	15bis	c1	6.53	8.72	4.36	28.47	
216.28	225.00	16	c1	6.53	8.72	4.36	28.47	
								56.94
16	17	16	c1	6.53	15.00	7.50	48.98	
225.00	240.00	17	c1	6.66	15.00	7.50	49.95	
								98.93
17	18	17	c1	6.66	15.00	7.50	49.95	
240.00	255.00	18	c1	6.78	15.00	7.50	50.85	
								100.80
18	19bis	18	c1	6.78	19.71	9.85	66.78	
255.00	274.71	19bis	c1	6.79	19.71	9.85	66.88	
								133.66

BASE

DALLA SEZ. DA PROG.	ALLA SEZ. A PROG.	SEZIONE	FIGURA	LUNGHEZZA	DISTANZA SEZIONI ml	DISTANZA DI CALCOLO ml	AREA PARZIALE mq	AREA TOTALE mq
5	6	5	d1	6.63	15.00	7.50	49.73	
60.00	75.00	6	d1	6.78	15.00	7.50	50.85	
								100.58
6	7	6	d1	6.78	15.00	7.50	50.85	
75.00	90.00	7	d1	6.86	15.00	7.50	51.45	
								102.30
7	7bis	7	d1	6.86	6.31	3.16	21.68	
90.00	96.31	7bis	d1	6.86	6.31	3.16	21.68	
								43.36
7bis	8	7bis	d1	6.86	8.69	4.34	29.77	
96.31	105.00	8	d1	6.86	8.69	4.34	29.77	
								59.54
8	8tris	8	d1	6.86	8.22	4.11	28.19	
105.00	113.22	8tris	d1	6.86	8.22	4.11	28.19	
								56.38
8tris	9	8tris	d1	6.86	6.78	3.39	23.26	
113.22	120.00	9	d1	6.86	6.78	3.39	23.26	
								46.52
9	10	9	d1	6.86	15.00	7.50	51.45	
120.00	135.00	10	d1	6.86	15.00	7.50	51.45	
								102.90
10	11	10	d1	6.86	15.00	7.50	51.45	
135.00	150.00	11	d1	6.86	15.00	7.50	51.45	
								102.90
11	12	11	d1	6.86	15.00	7.50	51.45	
150.00	165.00	12	d1	6.86	15.00	7.50	51.45	
								102.90
12	13	12	d1	6.86	15.00	7.50	51.45	
165.00	180.00	13	d1	6.85	15.00	7.50	51.38	
								102.83
13	14	13	d1	6.85	15.00	7.50	51.38	
180.00	195.00	14	d1	6.73	15.00	7.50	50.48	
								101.86
14	15	14	d1	6.73	15.00	7.50	50.48	
195.00	210.00	15	d1	6.58	15.00	7.50	49.35	
								99.83
15	15bis	15	d1	6.58	6.28	3.14	20.66	
210.00	216.28	15bis	d1	6.53	6.28	3.14	20.50	
								41.16
15bis	16	15bis	d1	6.53	8.72	4.36	28.47	
216.28	225.00	16	d1	6.53	8.72	4.36	28.47	
								56.94
16	17	16	d1	6.53	15.00	7.50	48.98	
225.00	240.00	17	d1	6.66	15.00	7.50	49.95	
								98.93
17	18	17	d1	6.66	15.00	7.50	49.95	
240.00	255.00	18	d1	6.78	15.00	7.50	50.85	
								100.80
18	19bis	18	d1	6.78	19.71	9.85	66.78	
255.00	274.71	19bis	d1	6.79	19.71	9.85	66.88	
								133.66

Il Direttore dei Lavori	L'Impresa	TOTALE ARTICOLO	1453.39

FONDAZIONE

DALLA SEZ. DA PROG.	ALLA SEZ. A PROG.	SEZIONE	FIGURA	LUNGHEZZA	DISTANZA SEZIONI ml	DISTANZA DI CALCOLO ml	AREA PARZIALE mq	AREA TOTALE mq
5	6	5	e1	6.63	15.00	7.50	49.73	
60.00	75.00	6	e1	6.78	15.00	7.50	50.85	
								100.58
6	7	6	e1	6.78	15.00	7.50	50.85	
75.00	90.00	7	e1	6.86	15.00	7.50	51.45	
								102.30
7	7bis	7	e1	6.86	6.31	3.16	21.68	
90.00	96.31	7bis	e1	6.86	6.31	3.16	21.68	
								43.36
7bis	8	7bis	e1	6.86	8.69	4.34	29.77	
96.31	105.00	8	e1	6.86	8.69	4.34	29.77	
								59.54
8	8tris	8	e1	6.86	8.22	4.11	28.19	
105.00	113.22	8tris	e1	6.86	8.22	4.11	28.19	
								56.38
8tris	9	8tris	e1	6.86	6.78	3.39	23.26	
113.22	120.00	9	e1	6.86	6.78	3.39	23.26	
								46.52
9	10	9	e1	6.86	15.00	7.50	51.45	
120.00	135.00	10	e1	6.86	15.00	7.50	51.45	
								102.90
10	11	10	e1	6.86	15.00	7.50	51.45	
135.00	150.00	11	e1	6.86	15.00	7.50	51.45	
								102.90
11	12	11	e1	6.86	15.00	7.50	51.45	
150.00	165.00	12	e1	6.86	15.00	7.50	51.45	
								102.90
12	13	12	e1	6.86	15.00	7.50	51.45	
165.00	180.00	13	e1	6.85	15.00	7.50	51.38	
								102.83
13	14	13	e1	6.85	15.00	7.50	51.38	
180.00	195.00	14	e1	6.73	15.00	7.50	50.48	
								101.86
14	15	14	e1	6.73	15.00	7.50	50.48	
195.00	210.00	15	e1	6.58	15.00	7.50	49.35	
								99.83
15	15bis	15	e1	6.58	6.28	3.14	20.66	
210.00	216.28	15bis	e1	6.53	6.28	3.14	20.50	
								41.16
15bis	16	15bis	e1	6.53	8.72	4.36	28.47	
216.28	225.00	16	e1	6.53	8.72	4.36	28.47	
								56.94
16	17	16	e1	6.53	15.00	7.50	48.98	
225.00	240.00	17	e1	6.66	15.00	7.50	49.95	
								98.93
17	18	17	e1	6.66	15.00	7.50	49.95	
240.00	255.00	18	e1	6.78	15.00	7.50	50.85	
								100.80
18	19bis	18	e1	6.78	19.71	9.85	66.78	
255.00	274.71	19bis	e1	6.79	19.71	9.85	66.88	
								133.66

Il Direttore dei Lavori	L'Impresa	TOTALE ARTICOLO	1453.39

SCOTICO

DALLA SEZ. DA PROG.	ALLA SEZ. A PROG.	SEZIONE	FIGURA	LUNGHEZZA	DISTANZA SEZIONI ml	DISTANZA DI CALCOLO ml	AREA PARZIALE mq	AREA TOTALE mq
5	6	5	sc1	18.19	15.00	7.50	136.43	
60.00	75.00	6	sc1	19.42	15.00	7.50	145.65	
								282.08
6	7	6	sc1	19.42	15.00	7.50	145.65	
75.00	90.00	7	sc1	17.05	15.00	7.50	127.88	
								273.53
7	7bis	7	sc1	17.05	6.31	3.16	53.88	
90.00	96.31	7bis	sc1	12.67	6.31	3.16	40.04	
								93.92
7bis	8	7bis	sc1	12.67	8.69	4.34	54.99	
96.31	105.00	8	sc1	7.69	8.69	4.34	33.37	
								88.36
8	8tris	8	sc1	7.69	8.22	4.11	31.61	
105.00	113.22	8tris	sc1	10.07	8.22	4.11	41.39	
								73.00
8tris	9	8tris	sc1	10.07	6.78	3.39	34.14	
113.22	120.00	9	sc1	18.64	6.78	3.39	63.19	
								97.33
9	10	9	sc1	18.64	15.00	7.50	139.80	
120.00	135.00	10	sc1	24.64	15.00	7.50	184.80	
								324.60
10	11	10	sc1	24.64	15.00	7.50	184.80	
135.00	150.00	11	sc1	24.97	15.00	7.50	187.27	
								372.07
11	12	11	sc1	24.97	15.00	7.50	187.27	
150.00	165.00	12	sc1	24.69	15.00	7.50	185.18	
								372.45
12	13	12	sc1	24.69	15.00	7.50	185.18	
165.00	180.00	13	sc1	23.33	15.00	7.50	174.97	
								360.15
13	14	13	sc1	23.33	15.00	7.50	174.97	
180.00	195.00	14	sc1	19.95	15.00	7.50	149.63	
								324.60
14	15	14	sc1	19.95	15.00	7.50	149.63	
195.00	210.00	15	sc1	10.96	15.00	7.50	82.20	
								231.83
15	15bis	15	sc1	10.96	6.28	3.14	34.41	
210.00	216.28	15bis	sc1	8.14	6.28	3.14	25.56	
								59.97
15bis	16	15bis	sc1	8.14	8.72	4.36	35.49	
216.28	225.00	16	sc1	10.33	8.72	4.36	45.04	
		16	sc2	19.25	8.72	4.36	83.93	
								164.46
16	17	16	sc1	10.33	15.00	7.50	77.47	
225.00	240.00	16	sc2	19.25	15.00	7.50	144.38	
		17	sc1	10.35	15.00	7.50	77.63	
								299.48
17	18	17	sc1	10.35	15.00	7.50	77.63	
240.00	255.00	18	sc1	14.23	15.00	7.50	106.73	
								184.36
18	19bis	18	sc1	14.23	19.71	9.85	140.17	
255.00	274.71	19bis	sc1	10.02	19.71	9.85	98.70	
								238.87

Il Direttore dei Lavori	L'Impresa	TOTALE ARTICOLO	3841.06

Volume dalla sezione 5 alla sezione 19bis

ARTICOLO		VOLUME
RIPORTO	mc	10842.480
BO BONIFICA	mc	1919.972
a USURA	mq	1453.39
b VEGETALE	mq	2584.66
c BINDER	mq	1453.39
d BASE	mq	1453.39
e FONDAZIONE	mq	1453.39
sc SCOTICO	mq	3841.06

PISTE MANUTENZIONE

	CALCOLO DELLE AREE		Foglio n. 1

STERRI E RIPORTI

N. SEZIONE PROG.	FIG.	ELEMENTI DI CALCOLO	AREA ELEMENTARE mq	AREA FIGURA mq	NOTE
1	S1	(-4.54--5.76)x(1.68+1.65)/2	2.03		
0.00		(-4.43--4.54)x(1.73+1.68)/2	0.19		
		(-3.79--4.43)x(1.68+1.73)/2	1.09		
		(-3.19--3.79)x(1.68+1.68)/2	1.01		
		(-3.00--3.19)x(1.68+1.68)/2	0.32		
		(-2.65--3.00)x(1.66+1.68)/2	0.58		
		(-1.73--2.65)x(1.65+1.66)/2	1.52		
		(-0.32--1.73)x(1.62+1.65)/2	2.31		
		(0.09--0.32)x(1.62+1.62)/2	0.66		
		(0.22-0.09)x(1.62+1.62)/2	0.21		
		(0.91-0.22)x(1.60+1.62)/2	1.11		
		(1.29-0.91)x(1.61+1.60)/2	0.61		
		(2.01-1.29)x(1.61+1.61)/2	1.16		
		(2.21-2.01)x(1.61+1.61)/2	0.32		
		(1.95-2.21)x(1.35+1.61)/2	-0.38		
		(1.50-1.95)x(1.29+1.35)/2	-0.59		
		(0.00-1.50)x(1.29+1.29)/2	-1.94		
		(-4.00-0.00)x(1.29+1.29)/2	-5.16		
		(-5.00--4.00)x(1.29+1.29)/2	-1.29		
		(-5.45--5.00)x(1.35+1.29)/2	-0.59		
		(-5.76--5.45)x(1.65+1.35)/2	-0.46		
				2.71	
2	S1	(-5.55--5.67)x(1.60+1.60)/2	0.19		
25.00		(-4.91--5.55)x(1.62+1.60)/2	1.03		
		(-4.52--4.91)x(1.62+1.62)/2	0.63		
		(-3.98--4.52)x(1.62+1.62)/2	0.87		
		(-3.49--3.98)x(1.62+1.62)/2	0.79		
		(-3.04--3.49)x(1.64+1.62)/2	0.73		
		(-2.46--3.04)x(1.67+1.64)/2	0.96		
		(-2.10--2.46)x(1.66+1.67)/2	0.60		
		(-1.43--2.10)x(1.65+1.66)/2	1.11		
		(-1.16--1.43)x(1.66+1.65)/2	0.45		
		(-0.40--1.16)x(1.65+1.66)/2	1.26		
		(-0.22--0.40)x(1.65+1.65)/2	0.30		
		(0.63--0.22)x(1.65+1.65)/2	1.40		
		(0.72-0.63)x(1.65+1.65)/2	0.15		
		(1.65-0.72)x(1.68+1.65)/2	1.55		
		(1.66-1.65)x(1.68+1.68)/2	0.02		
		(2.24-1.66)x(1.67+1.68)/2	0.97		
		(1.95-2.24)x(1.38+1.67)/2	-0.44		
		(1.50-1.95)x(1.32+1.38)/2	-0.61		
		(0.00-1.50)x(1.32+1.32)/2	-1.98		
		(-4.00-0.00)x(1.32+1.32)/2	-5.28		
		(-5.00--4.00)x(1.32+1.32)/2	-1.32		
		(-5.45--5.00)x(1.38+1.32)/2	-0.61		
		(-5.67--5.45)x(1.60+1.38)/2	-0.33		
				2.44	
3	S1	(-4.00--1.75)x(1.36+1.36)/2	-3.06		
50.00		(-5.00--4.00)x(1.36+1.36)/2	-1.36		
		(-5.45--5.00)x(1.41+1.36)/2	-0.62		
		(-5.68--5.45)x(1.64+1.41)/2	-0.35		
		(-5.55--5.68)x(1.64+1.64)/2	0.21		
		(-5.10--5.55)x(1.63+1.64)/2	0.74		
		(-4.86--5.10)x(1.63+1.63)/2	0.39		
		(-4.35--4.86)x(1.63+1.63)/2	0.83		
		(-3.70--4.35)x(1.62+1.63)/2	1.06		
		(-3.59--3.70)x(1.61+1.62)/2	0.18		
		(-3.40--3.59)x(1.61+1.61)/2	0.31		
		(-2.83--3.40)x(1.58+1.61)/2	0.91		
		(-2.53--2.83)x(1.58+1.58)/2	0.47		
		(-2.08--2.53)x(1.58+1.58)/2	0.71		
		(-1.75--2.08)x(1.58+1.58)/2	0.52		
				0.94	
3	S2	(-1.36--1.75)x(1.58+1.58)/2	0.62		
50.00		(-1.32--1.36)x(1.58+1.58)/2	0.06		
		(-1.25--1.32)x(1.59+1.58)/2	0.11		
		(-0.57--1.25)x(1.57+1.59)/2	1.07		
		(-0.20--0.57)x(1.58+1.57)/2	0.58		
		(0.19--0.20)x(1.57+1.58)/2	0.61		
		(0.90-0.19)x(1.58+1.57)/2	1.12		
		(0.95-0.90)x(1.58+1.58)/2	0.08		
		(0.97-0.95)x(1.58+1.58)/2	0.03		
		(1.70-0.97)x(1.54+1.58)/2	1.14		
		(2.09-1.70)x(1.55+1.54)/2	0.60		
		(1.95-2.09)x(1.41+1.55)/2	-0.21		
		(1.50-1.95)x(1.36+1.41)/2	-0.62		
		(0.00-1.50)x(1.36+1.36)/2	-2.04		
		(-1.75-0.00)x(1.36+1.36)/2	-2.38		
				0.77	
4	S1	(-5.21--5.52)x(1.52+1.52)/2	0.47		
75.00		(-4.99--5.21)x(1.52+1.52)/2	0.33		
		(-4.85--4.99)x(1.52+1.52)/2	0.21		
		(-4.24--4.85)x(1.52+1.52)/2	0.93		
		(-3.64--4.24)x(1.51+1.52)/2	0.91		
		(-3.50--3.64)x(1.50+1.51)/2	0.21		
		(-3.27--3.50)x(1.49+1.50)/2	0.34		
		(-2.76--3.27)x(1.48+1.49)/2	0.76		
		(-2.43--2.76)x(1.48+1.48)/2	0.49		
		(-2.01--2.43)x(1.43+1.48)/2	0.61		
		(-1.75--2.01)x(1.39+1.43)/2	0.37		
		(-4.00--1.75)x(1.39+1.39)/2	-3.13		
		(-5.00--4.00)x(1.39+1.39)/2	-1.39		
		(-5.45--5.00)x(1.44+1.39)/2	-0.64		
		(-5.52--5.45)x(1.52+1.44)/2	-0.10		
				0.37	
4	R1	(-1.33--1.75)x(1.32+1.39)/2	0.57		
75.00		(-1.27--1.33)x(1.31+1.32)/2	0.08		
		(-1.23--1.27)x(1.31+1.31)/2	0.05		
		(-0.52--1.23)x(1.26+1.31)/2	0.91		
		(-0.02--0.52)x(1.22+1.26)/2	0.62		
		(0.22--0.02)x(1.26+1.22)/2	0.30		
		(0.60-0.22)x(1.26+1.26)/2	0.48		
		(0.96-0.60)x(1.28+1.26)/2	0.46		
		(1.19-0.96)x(1.26+1.28)/2	0.29		
		(1.71-1.19)x(1.31+1.26)/2	0.67		
		(2.10-1.71)x(1.34+1.31)/2	0.52		
		(1.95-2.10)x(1.44+1.34)/2	-0.21		
		A RIPORTARE mq	4.74		

STERRI E RIPORTI

N. SEZIONE PROG.	FIG.	ELEMENTI DI CALCOLO	AREA ELEMENTARE mq	AREA FIGURA mq	NOTE
		RIPORTO mq	4.74		
		(1.50-1.95)x(1.39+1.44)/2	-0.64		
		(0.00-1.50)x(1.39+1.39)/2	-2.08		
		(-1.75-0.00)x(1.39+1.39)/2	-2.43		
				0.41	
5	S1	(-4.00--2.43)x(1.42+1.42)/2	-2.23		
100.00		(-5.00--4.00)x(1.42+1.42)/2	-1.42		
		(-5.45--5.00)x(1.48+1.42)/2	-0.65		
		(-5.51--5.45)x(1.54+1.48)/2	-0.09		
		(-5.43--5.51)x(1.54+1.54)/2	0.12		
		(-5.08--5.43)x(1.56+1.54)/2	0.54		
		(-4.64--5.08)x(1.58+1.56)/2	0.69		
		(-3.98--4.64)x(1.60+1.58)/2	1.05		
		(-3.84--3.98)x(1.60+1.60)/2	0.22		
		(-3.48--3.84)x(1.61+1.60)/2	0.58		
		(-3.05--3.48)x(1.61+1.61)/2	0.69		
		(-2.88--3.05)x(1.61+1.61)/2	0.27		
		(-2.43--2.88)x(1.63+1.61)/2	0.73		
				0.50	
5	S2	(-2.26--2.43)x(1.64+1.63)/2	0.28		
100.00		(-1.79--2.26)x(1.66+1.64)/2	0.78		
		(-1.75--1.79)x(1.66+1.66)/2	0.07		
		(-2.43--1.75)x(1.42+1.42)/2	-0.97		
				0.16	
5	S3	(-0.74--1.75)x(1.69+1.66)/2	1.69		
100.00		(-0.69--0.74)x(1.69+1.69)/2	0.08		
		(-0.67--0.69)x(1.69+1.69)/2	0.03		
		(-0.61--0.67)x(1.69+1.69)/2	0.10		
		(0.13--0.61)x(1.67+1.69)/2	1.24		
		(0.41-0.13)x(1.68+1.67)/2	0.47		
		(0.92-0.41)x(1.70+1.68)/2	0.86		
		(1.51-0.92)x(1.69+1.70)/2	1.00		
		(1.71-1.51)x(1.69+1.69)/2	0.34		
		(2.18-1.71)x(1.70+1.69)/2	0.80		
		(1.95-2.18)x(1.48+1.70)/2	-0.37		
		(1.50-1.95)x(1.42+1.48)/2	-0.65		
		(0.00-1.50)x(1.42+1.42)/2	-2.13		
		(-1.75-0.00)x(1.42+1.42)/2	-2.48		
				0.98	
6	S1	(-5.43--5.52)x(1.57+1.57)/2	0.14		
125.00		(-5.36--5.43)x(1.56+1.57)/2	0.11		
		(-4.53--5.36)x(1.54+1.56)/2	1.29		
		(-4.32--4.53)x(1.53+1.54)/2	0.32		
		(-3.64--4.32)x(1.52+1.53)/2	1.04		
		(-3.28--3.64)x(1.51+1.52)/2	0.55		
		(-2.75--3.28)x(1.47+1.51)/2	0.79		
		(-2.43--2.75)x(1.45+1.47)/2	0.47		
		(-4.00--2.43)x(1.45+1.45)/2	-2.28		
		(-5.00--4.00)x(1.45+1.45)/2	-1.45		
		(-5.45--5.00)x(1.51+1.45)/2	-0.67		
		(-5.52--5.45)x(1.57+1.51)/2	-0.11		
				0.20	
6	R1	(-2.24--2.43)x(1.44+1.45)/2	0.27		
125.00		(-1.85--2.24)x(1.43+1.44)/2	0.56		
		(-1.20--1.85)x(1.42+1.43)/2	0.93		
		(-0.96--1.20)x(1.41+1.42)/2	0.34		
		(-0.16--0.96)x(1.41+1.41)/2	1.13		
		(-0.07--0.16)x(1.40+1.41)/2	0.13		
		(0.52--0.07)x(1.38+1.40)/2	0.82		
		(0.82-0.52)x(1.37+1.38)/2	0.41		
		(0.87-0.82)x(1.37+1.37)/2	0.07		
		(1.72-0.87)x(1.32+1.37)/2	1.14		
		(1.91-1.72)x(1.30+1.32)/2	0.25		
		(2.34-1.91)x(1.25+1.30)/2	0.55		
		(1.95-2.34)x(1.51+1.25)/2	-0.54		
		(1.50-1.95)x(1.45+1.51)/2	-0.67		
		(0.00-1.50)x(1.45+1.45)/2	-2.17		
		(-2.43-0.00)x(1.45+1.45)/2	-3.52		
				0.30	
7	S1	(-4.00--2.43)x(1.48+1.48)/2	-2.32		
150.00		(-5.00--4.00)x(1.48+1.48)/2	-1.48		
		(-5.45--5.00)x(1.54+1.48)/2	-0.68		
		(-5.73--5.45)x(1.82+1.54)/2	-0.47		
		(-5.50--5.73)x(1.81+1.82)/2	0.42		
		(-4.82--5.50)x(1.80+1.81)/2	1.23		
		(-4.46--4.82)x(1.80+1.80)/2	0.65		
		(-3.91--4.46)x(1.80+1.80)/2	0.99		
		(-3.43--3.91)x(1.79+1.80)/2	0.86		
		(-3.01--3.43)x(1.80+1.79)/2	0.75		
		(-2.43--3.01)x(1.79+1.80)/2	1.04		
				0.99	
7	S2	(-2.39--2.43)x(1.79+1.79)/2	0.07		
150.00		(-2.10--2.39)x(1.79+1.79)/2	0.52		
		(-1.36--2.10)x(1.78+1.79)/2	1.32		
		(-1.19--1.36)x(1.78+1.78)/2	0.30		
		(-0.32--1.19)x(1.77+1.78)/2	1.54		
		(-0.28--0.32)x(1.77+1.77)/2	0.07		
		(0.03--0.28)x(1.77+1.77)/2	0.55		
		(0.63-0.03)x(1.77+1.77)/2	1.06		
		(0.71-0.63)x(1.77+1.77)/2	0.14		
		(1.54-0.71)x(1.77+1.77)/2	1.47		
		(1.75-1.54)x(1.77+1.77)/2	0.37		
		(2.16-1.75)x(1.75+1.77)/2	0.72		
		(1.95-2.16)x(1.54+1.75)/2	-0.35		
		(1.50-1.95)x(1.48+1.54)/2	-0.68		
		(0.00-1.50)x(1.48+1.48)/2	-2.22		
		(-2.43-0.00)x(1.48+1.48)/2	-3.60		
				1.28	
8	S1	(-5.07--5.84)x(1.92+1.96)/2	1.49		
175.00		(-4.97--5.07)x(1.92+1.92)/2	0.19		
		(-4.04--4.97)x(1.92+1.92)/2	1.79		
		(-4.01--4.04)x(1.92+1.92)/2	0.06		
		(-3.63--4.01)x(1.93+1.92)/2	0.73		
		(-3.05--3.63)x(1.96+1.93)/2	1.13		
		(-3.01--3.05)x(1.96+1.96)/2	0.08		
		(-2.09--3.01)x(1.97+1.96)/2	1.81		
		A RIPORTARE mq	7.28		

		CALCOLO DELLE AREE		Foglio n. 3	
STERRI E RIPORTI					
N. SEZIONE PROG.	FIG.	ELEMENTI DI CALCOLO	AREA ELEMENTARE mq	AREA FIGURA mq	NOTE
		RIPORTO mq	7.28		
		(-1.98--2.09)x(1.97+1.97)/2	0.22		
		(-1.14--1.98)x(1.99+1.97)/2	1.66		
		(-0.95--1.14)x(1.99+1.99)/2	0.38		
		(-0.18--0.95)x(1.99+1.99)/2	1.53		
		(0.07--0.18)x(1.99+1.99)/2	0.50		
		(0.78-0.07)x(2.00+1.99)/2	1.42		
		(1.10-0.78)x(2.00+2.00)/2	0.64		
		(1.74-1.10)x(1.99+2.00)/2	1.28		
		(2.13-1.74)x(1.98+1.99)/2	0.77		
		(2.36-2.13)x(1.98+1.98)/2	0.46		
		(1.95-2.36)x(1.57+1.98)/2	-0.73		
		(1.50-1.95)x(1.51+1.57)/2	-0.69		
		(0.00-1.50)x(1.51+1.51)/2	-2.27		
		(-4.00-0.00)x(1.51+1.51)/2	-6.04		
		(-5.00--4.00)x(1.51+1.51)/2	-1.51		
		(-5.45--5.00)x(1.57+1.51)/2	-0.69		
		(-5.84--5.45)x(1.96+1.57)/2	-0.69		
				3.52	
9	S1	(-5.49--5.72)x(1.88+1.88)/2	0.43		
200.00		(-5.30--5.49)x(1.87+1.88)/2	0.36		
		(-5.08--5.30)x(1.88+1.87)/2	0.41		
		(-4.27--5.08)x(1.89+1.88)/2	1.53		
		(-3.58--4.27)x(1.87+1.89)/2	1.30		
		(-3.25--3.58)x(1.87+1.87)/2	0.62		
		(-2.62--3.25)x(1.89+1.87)/2	1.18		
		(-2.22--2.62)x(1.88+1.89)/2	0.75		
		(-1.66--2.22)x(1.89+1.88)/2	1.06		
		(-1.19--1.66)x(1.92+1.89)/2	0.90		
		(-0.70--1.19)x(1.93+1.92)/2	0.94		
		(-0.16--0.70)x(1.94+1.93)/2	1.04		
		(0.25--0.16)x(1.95+1.94)/2	0.80		
		(0.87-0.25)x(1.95+1.95)/2	1.21		
		(1.21-0.87)x(1.96+1.95)/2	0.66		
		(1.89-1.21)x(2.00+1.96)/2	1.35		
		(2.17-1.89)x(2.01+2.00)/2	0.56		
		(2.35-2.17)x(2.01+2.01)/2	0.36		
		(1.95-2.35)x(1.61+2.01)/2	-0.72		
		(1.50-1.95)x(1.55+1.61)/2	-0.71		
		(0.00-1.50)x(1.55+1.55)/2	-2.33		
		(-4.00-0.00)x(1.55+1.55)/2	-6.20		
		(-5.00--4.00)x(1.55+1.55)/2	-1.55		
		(-5.45--5.00)x(1.61+1.55)/2	-0.71		
		(-5.72--5.45)x(1.88+1.61)/2	-0.47		
				2.77	
10	R1	(-6.98--7.55)x(1.67+1.65)/2	0.95		
225.00		(-6.57--6.98)x(1.67+1.67)/2	0.68		
		(-6.02--6.57)x(1.66+1.67)/2	0.92		
		(-5.54--6.02)x(1.62+1.66)/2	0.79		
		(-5.06--5.54)x(1.63+1.62)/2	0.78		
		(-4.51--5.06)x(1.63+1.63)/2	0.90		
		(-4.10--4.51)x(1.65+1.63)/2	0.67		
		(-3.48--4.10)x(1.66+1.65)/2	1.03		
		(-2.76--3.48)x(1.61+1.66)/2	1.18		
		(-2.45--2.76)x(1.62+1.61)/2	0.50		
		(-2.19--2.45)x(1.60+1.62)/2	0.42		
		(-1.43--2.19)x(1.75+1.60)/2	1.27		
		(-1.23--1.43)x(1.77+1.75)/2	0.35		
		(-0.40--1.23)x(1.78+1.77)/2	1.47		
		(-0.27--0.40)x(1.78+1.78)/2	0.23		
		(0.63--0.27)x(1.79+1.78)/2	1.61		
		(0.69-0.63)x(1.78+1.79)/2	0.11		
		(1.48-0.69)x(1.80+1.78)/2	1.41		
		(1.65-1.48)x(1.81+1.80)/2	0.31		
		(1.66-1.65)x(1.81+1.81)/2	0.02		
		(2.60-1.66)x(1.81+1.81)/2	1.70		
		(2.69-2.60)x(1.81+1.81)/2	0.16		
		(3.56-2.69)x(1.82+1.81)/2	1.58		
		(3.71-3.56)x(1.83+1.82)/2	0.27		
		(3.79-3.71)x(1.83+1.83)/2	0.15		
		(1.95-3.79)x(3.05+1.83)/2	-4.49		
		(1.50-1.95)x(3.00+3.05)/2	-1.36		
		(0.00-1.50)x(3.00+3.00)/2	-4.50		
		(-4.00-0.00)x(3.00+3.00)/2	-12.00		
		(-5.00--4.00)x(3.00+3.00)/2	-3.00		
		(-5.45--5.00)x(3.05+3.00)/2	-1.36		
		(-7.55--5.45)x(1.65+3.05)/2	-4.93		
				12.18	
11	R1	(-9.42--9.63)x(2.24+2.25)/2	0.47		
250.00		(-8.86--9.42)x(2.22+2.24)/2	1.25		
		(-8.46--8.86)x(2.19+2.22)/2	0.88		
		(-7.83--8.46)x(2.18+2.19)/2	1.38		
		(-7.50--7.83)x(2.17+2.18)/2	0.72		
		(-6.80--7.50)x(2.10+2.17)/2	1.49		
		(-6.55--6.80)x(2.10+2.10)/2	0.53		
		(-5.77--6.55)x(2.07+2.10)/2	1.63		
		(-5.59--5.77)x(2.06+2.07)/2	0.37		
		(-4.75--5.59)x(2.07+2.06)/2	1.73		
		(-4.63--4.75)x(2.07+2.07)/2	0.25		
		(-3.72--4.63)x(2.04+2.07)/2	1.87		
		(-3.67--3.72)x(2.04+2.04)/2	0.10		
		(-3.03--3.67)x(2.00+2.04)/2	1.29		
		(-2.71--3.03)x(1.98+2.00)/2	0.64		
		(-2.69--2.71)x(1.98+1.98)/2	0.04		
		(-1.76--2.69)x(1.99+1.98)/2	1.85		
		(-1.66--1.76)x(1.99+1.99)/2	0.20		
		(-1.55--1.66)x(2.00+1.99)/2	0.22		
		(-0.63--1.55)x(2.02+2.00)/2	1.85		
		(0.16--0.63)x(2.00+2.02)/2	1.59		
		(0.39-0.16)x(2.00+2.00)/2	0.46		
		(1.12-0.39)x(1.97+2.00)/2	1.45		
		(1.42-1.12)x(1.94+1.97)/2	0.59		
		(2.08-1.42)x(1.85+1.94)/2	1.25		
		(2.45-2.08)x(1.82+1.85)/2	0.68		
		(3.04-2.45)x(1.83+1.82)/2	1.08		
		(3.48-3.04)x(1.78+1.83)/2	0.79		
		A RIPORTARE mq	26.65		

STERRI E RIPORTI

N. SEZIONE PROG.	FIG.	ELEMENTI DI CALCOLO	AREA ELEMENTARE mq	AREA FIGURA mq	NOTE
		RIPORTO mq	26.65		
		(3.99-3.48)x(1.82+1.78)/2	0.92		
		(4.51-3.99)x(1.81+1.82)/2	0.94		
		(4.95-4.51)x(1.80+1.81)/2	0.79		
		(5.53-4.95)x(1.86+1.80)/2	1.06		
		(5.91-5.53)x(1.85+1.86)/2	0.70		
		(6.56-5.91)x(1.82+1.85)/2	1.19		
		(6.87-6.56)x(1.75+1.82)/2	0.55		
		(6.89-6.87)x(1.75+1.75)/2	0.03		
		(1.95-6.89)x(5.04+1.75)/2	-16.77		
		(1.50-1.95)x(4.98+5.04)/2	-2.25		
		(0.00-1.50)x(4.98+4.98)/2	-7.47		
		(-4.00-0.00)x(4.98+4.98)/2	-19.92		
		(-5.00--4.00)x(4.98+4.98)/2	-4.98		
		(-5.45--5.00)x(5.04+4.98)/2	-2.25		
		(-9.63--5.45)x(2.25+5.04)/2	-15.24		
				36.05	
12 275.00	R1	(-12.49--12.83)x(0.59+0.58)/2	0.20		
		(-12.15--12.49)x(0.74+0.59)/2	0.23		
		(-11.46--12.15)x(1.17+0.74)/2	0.66		
		(-11.11--11.46)x(1.34+1.17)/2	0.44		
		(-10.43--11.11)x(1.78+1.34)/2	1.06		
		(-10.08--10.43)x(1.77+1.78)/2	0.62		
		(-9.41--10.08)x(1.94+1.77)/2	1.24		
		(-9.04--9.41)x(2.03+1.94)/2	0.73		
		(-8.38--9.04)x(2.10+2.03)/2	1.36		
		(-8.00--8.38)x(2.07+2.10)/2	0.79		
		(-7.36--8.00)x(2.12+2.07)/2	1.34		
		(-6.97--7.36)x(2.19+2.12)/2	0.84		
		(-6.33--6.97)x(2.26+2.19)/2	1.42		
		(-5.93--6.33)x(2.28+2.26)/2	0.91		
		(-5.31--5.93)x(2.32+2.28)/2	1.43		
		(-4.90--5.31)x(2.30+2.32)/2	0.95		
		(-4.28--4.90)x(2.23+2.30)/2	1.40		
		(-3.86--4.28)x(2.20+2.23)/2	0.93		
		(-3.26--3.86)x(2.23+2.20)/2	1.33		
		(-2.82--3.26)x(2.28+2.23)/2	0.99		
		(-2.23--2.82)x(2.34+2.28)/2	1.36		
		(-1.79--2.23)x(2.32+2.34)/2	1.03		
		(-1.21--1.79)x(2.21+2.32)/2	1.31		
		(-0.75--1.21)x(2.21+2.21)/2	1.02		
		(-0.18--0.75)x(2.25+2.21)/2	1.27		
		(0.38--0.18)x(2.26+2.25)/2	1.26		
		(0.84-0.38)x(2.26+2.26)/2	1.04		
		(1.32-0.84)x(2.23+2.26)/2	1.08		
		(1.87-1.32)x(2.21+2.23)/2	1.22		
		(2.36-1.87)x(2.16+2.21)/2	1.07		
		(2.89-2.36)x(2.14+2.16)/2	1.14		
		(3.39-2.89)x(2.11+2.14)/2	1.06		
		(3.92-3.39)x(2.08+2.11)/2	1.11		
		(4.43-3.92)x(2.08+2.08)/2	1.06		
		(4.95-4.43)x(2.11+2.08)/2	1.09		
		(5.46-4.95)x(2.15+2.11)/2	1.09		
		(5.97-5.46)x(2.10+2.15)/2	1.08		
		(6.50-5.97)x(2.12+2.10)/2	1.12		
		(6.97-6.50)x(2.15+2.12)/2	1.00		
		(1.95-6.97)x(5.50+2.15)/2	-19.20		
		(1.50-1.95)x(5.44+5.50)/2	-2.46		
		(0.00-1.50)x(5.44+5.44)/2	-8.16		
		(-4.00-0.00)x(5.44+5.44)/2	-21.76		
		(-5.00--4.00)x(5.44+5.44)/2	-5.44		
		(-5.45--5.00)x(5.50+5.44)/2	-2.46		
		(-12.83--5.45)x(0.58+5.50)/2	-22.44		
				41.64	
13 300.00	R1	(-11.85--12.04)x(-0.01+-0.01)/2	-0.00		
		(-11.16--11.85)x(-0.05+-0.01)/2	-0.02		
		(-10.40--11.16)x(-0.05+-0.05)/2	-0.04		
		(-10.09--10.40)x(-0.03+-0.05)/2	-0.01		
		(-9.28--10.09)x(-0.01+-0.03)/2	-0.02		
		(-9.03--9.28)x(-0.00+-0.01)/2	-0.00		
		(-8.94--9.03)x(0.01+-0.00)/2	0.00		
		(-7.97--8.94)x(0.08+0.01)/2	0.04		
		(-7.49--7.97)x(0.19+0.08)/2	0.06		
		(-6.91--7.49)x(0.34+0.19)/2	0.15		
		(-6.03--6.91)x(0.82+0.34)/2	0.51		
		(-5.85--6.03)x(0.90+0.82)/2	0.15		
		(-5.35--5.85)x(1.20+0.90)/2	0.53		
		(-4.78--5.35)x(1.51+1.20)/2	0.77		
		(-4.57--4.78)x(1.56+1.51)/2	0.32		
		(-3.72--4.57)x(1.79+1.56)/2	1.42		
		(-3.23--3.72)x(1.84+1.79)/2	0.89		
		(-2.66--3.23)x(2.02+1.84)/2	1.10		
		(-1.66--2.66)x(2.10+2.02)/2	2.06		
		(-1.60--1.66)x(2.11+2.10)/2	0.13		
		(-1.42--1.60)x(2.10+2.11)/2	0.38		
		(-0.53--1.42)x(2.06+2.10)/2	1.85		
		(-0.21--0.53)x(2.09+2.06)/2	0.66		
		(0.53--0.21)x(2.16+2.09)/2	1.57		
		(1.25-0.53)x(2.05+2.16)/2	1.52		
		(1.59-1.25)x(2.03+2.05)/2	0.69		
		(2.51-1.59)x(2.14+2.03)/2	1.92		
		(2.65-2.51)x(2.16+2.14)/2	0.30		
		(2.71-2.65)x(2.16+2.16)/2	0.13		
		(3.71-2.71)x(2.13+2.16)/2	2.15		
		(4.16-3.71)x(2.13+2.13)/2	0.96		
		(4.78-4.16)x(2.16+2.13)/2	1.33		
		(5.27-4.78)x(2.17+2.16)/2	1.06		
		(1.95-5.27)x(4.39+2.17)/2	-10.89		
		(1.50-1.95)x(4.33+4.39)/2	-1.96		
		(0.00-1.50)x(4.33+4.33)/2	-6.50		
		(-4.00-0.00)x(4.33+4.33)/2	-17.32		
		(-5.00--4.00)x(4.33+4.33)/2	-4.33		
		(-5.45--5.00)x(4.39+4.33)/2	-1.96		
		(-12.04--5.45)x(-0.01+4.39)/2	-14.43		
				34.83	
14	R1	(-8.84--9.14)x(-0.06+-0.06)/2	-0.02		
		A RIPORTARE mq	-0.02		

		CALCOLO DELLE AREE		Foglio n. 5	
STERRI E RIPORTI					
N. SEZIONE PROG.	FIG.	ELEMENTI DI CALCOLO	AREA ELEMENTARE mq	AREA FIGURA mq	NOTE
		RIPORTO mq	-0.02		
325.00		(-8.12--8.84)x(-0.08+-0.06)/2	-0.05		
		(-7.76--8.12)x(-0.09+-0.08)/2	-0.03		
		(-7.06--7.76)x(-0.04+-0.09)/2	-0.05		
		(-6.68--7.06)x(-0.00+-0.04)/2	-0.01		
		(-6.48--6.68)x(0.04+-0.00)/2	0.00		
		(-5.59--6.48)x(0.27+0.04)/2	0.14		
		(-4.84--5.59)x(0.48+0.27)/2	0.28		
		(-4.51--4.84)x(0.54+0.48)/2	0.17		
		(-3.88--4.51)x(0.79+0.54)/2	0.42		
		(-3.43--3.88)x(1.01+0.79)/2	0.40		
		(-3.20--3.43)x(1.13+1.01)/2	0.25		
		(-2.34--3.20)x(1.65+1.13)/2	1.20		
		(-1.56--2.34)x(1.81+1.65)/2	1.35		
		(-1.26--1.56)x(1.90+1.81)/2	0.56		
		(-0.69--1.26)x(2.03+1.90)/2	1.12		
		(-0.18--0.69)x(2.13+2.03)/2	1.06		
		(0.08--0.18)x(2.13+2.13)/2	0.55		
		(0.90-0.08)x(2.14+2.13)/2	1.75		
		(1.73-0.90)x(2.14+2.14)/2	1.78		
		(1.99-1.73)x(2.15+2.14)/2	0.56		
		(2.30-1.99)x(2.17+2.15)/2	0.67		
		(1.95-2.30)x(2.40+2.17)/2	-0.80		
		(1.50-1.95)x(2.34+2.40)/2	-1.07		
		(0.00-1.50)x(2.34+2.34)/2	-3.51		
		(-4.00-0.00)x(2.34+2.34)/2	-9.36		
		(-5.00--4.00)x(2.34+2.34)/2	-2.34		
		(-5.45--5.00)x(2.40+2.34)/2	-1.07		
		(-9.14--5.45)x(-0.06+2.40)/2	-4.32		
				10.37	
15 350.00	R1	(-8.40--8.80)x(0.00+0.01)/2	0.00		
		(-7.58--8.40)x(0.03+0.00)/2	0.01		
		(-7.30--7.58)x(0.03+0.03)/2	0.01		
		(-6.84--7.30)x(0.06+0.03)/2	0.02		
		(-6.21--6.84)x(0.10+0.06)/2	0.05		
		(-5.82--6.21)x(0.16+0.10)/2	0.05		
		(-5.11--5.82)x(0.27+0.16)/2	0.15		
		(-4.06--5.11)x(0.51+0.27)/2	0.41		
		(-4.02--4.06)x(0.52+0.51)/2	0.02		
		(-3.95--4.02)x(0.55+0.52)/2	0.04		
		(-2.92--3.95)x(1.27+0.55)/2	0.94		
		(-2.41--2.92)x(1.69+1.27)/2	0.75		
		(-1.82--2.41)x(1.85+1.69)/2	1.04		
		(-1.05--1.82)x(1.94+1.85)/2	1.46		
		(-0.73--1.05)x(1.99+1.94)/2	0.63		
		(-0.53--0.73)x(2.00+1.99)/2	0.40		
		(0.37--0.53)x(2.12+2.00)/2	1.85		
		(1.24-0.37)x(2.16+2.12)/2	1.86		
		(1.47-1.24)x(2.18+2.16)/2	0.50		
		(1.84-1.47)x(2.15+2.18)/2	0.80		
		(2.12-1.84)x(2.13+2.15)/2	0.60		
		(1.95-2.12)x(2.24+2.13)/2	-0.37		
		(1.50-1.95)x(2.19+2.24)/2	-1.00		
		(0.00-1.50)x(2.19+2.19)/2	-3.29		
		(-4.00-0.00)x(2.19+2.19)/2	-8.76		
		(-5.00--4.00)x(2.19+2.19)/2	-2.19		
		(-5.45--5.00)x(2.24+2.19)/2	-1.00		
		(-8.80--5.45)x(0.01+2.24)/2	-3.77		
				8.79	
16 375.00	R1	(0.00-0.32)x(2.17+2.17)/2	-0.69		
		(-4.00-0.00)x(2.17+2.17)/2	-8.68		
		(-5.00--4.00)x(2.17+2.17)/2	-2.17		
		(-5.45--5.00)x(2.23+2.17)/2	-0.99		
		(-8.72--5.45)x(0.04+2.23)/2	-3.71		
		(-8.36--8.72)x(0.04+0.04)/2	0.01		
		(-8.00--8.36)x(0.03+0.04)/2	0.01		
		(-7.41--8.00)x(0.02+0.03)/2	0.01		
		(-6.90--7.41)x(0.01+0.02)/2	0.01		
		(-6.59--6.90)x(0.06+0.01)/2	0.01		
		(-5.81--6.59)x(0.13+0.06)/2	0.07		
		(-4.83--5.81)x(0.32+0.13)/2	0.22		
		(-4.71--4.83)x(0.34+0.32)/2	0.04		
		(-4.52--4.71)x(0.43+0.34)/2	0.07		
		(-3.62--4.52)x(0.84+0.43)/2	0.57		
		(-3.07--3.62)x(1.11+0.84)/2	0.54		
		(-2.52--3.07)x(1.34+1.11)/2	0.67		
		(-1.62--2.52)x(1.80+1.34)/2	1.41		
		(-1.42--1.62)x(1.88+1.80)/2	0.37		
		(-1.30--1.42)x(1.89+1.88)/2	0.23		
		(-0.33--1.30)x(1.94+1.89)/2	1.86		
		(0.32--0.33)x(1.99+1.94)/2	1.28		
				8.86	
16 375.00	R2	(0.46-0.32)x(2.00+1.99)/2	0.28		
		(0.77-0.46)x(2.03+2.00)/2	0.62		
		(1.27-0.77)x(2.10+2.03)/2	1.03		
		(1.79-1.27)x(2.21+2.10)/2	1.12		
		(1.50-1.79)x(2.17+2.21)/2	-0.64		
		(0.32-1.50)x(2.17+2.17)/2	-2.56		
				0.15	
17 400.00	R1	(-7.98--8.66)x(0.06+0.07)/2	0.04		
		(-7.60--7.98)x(0.07+0.06)/2	0.02		
		(-7.37--7.60)x(0.08+0.07)/2	0.02		
		(-6.50--7.37)x(0.12+0.08)/2	0.09		
		(-5.60--6.50)x(0.17+0.12)/2	0.13		
		(-5.41--5.60)x(0.18+0.17)/2	0.03		
		(-5.09--5.41)x(0.24+0.18)/2	0.07		
		(-4.31--5.09)x(0.33+0.24)/2	0.22		
		(-3.84--4.31)x(0.64+0.33)/2	0.23		
		(-3.22--3.84)x(0.96+0.64)/2	0.50		
		(-2.93--3.22)x(1.12+0.96)/2	0.30		
		(-2.19--2.93)x(1.57+1.12)/2	1.00		
		(-2.14--2.19)x(1.61+1.57)/2	0.08		
		(-2.12--2.14)x(1.62+1.61)/2	0.03		
		(-2.07--2.12)x(1.63+1.62)/2	0.08		
		(-1.02--2.07)x(1.97+1.63)/2	1.89		
		(-0.31--1.02)x(2.08+1.97)/2	1.44		
		A RIPORTARE mq	6.17		

	CALCOLO DELLE AREE		Foglio n. 6

STERRI E RIPORTI

N. SEZIONE PROG.	FIG.	ELEMENTI DI CALCOLO	AREA ELEMENTARE mq	AREA FIGURA mq	NOTE
		RIPORTO mq	6.17		
		(0.07--0.31)x(2.11+2.08)/2	0.80		
		(0.32-0.07)x(2.15+2.11)/2	0.53		
		(0.00-0.32)x(2.15+2.15)/2	-0.69		
		(-4.00-0.00)x(2.15+2.15)/2	-8.60		
		(-5.00--4.00)x(2.15+2.15)/2	-2.15		
		(-5.45--5.00)x(2.21+2.15)/2	-0.98		
		(-8.66--5.45)x(0.07+2.21)/2	-3.66		
				8.58	
17	S1	(0.70-0.32)x(2.21+2.15)/2	0.83		
400.00		(1.17-0.70)x(2.25+2.21)/2	1.05		
		(1.45-1.17)x(2.26+2.25)/2	0.63		
		(1.98-1.45)x(2.24+2.26)/2	1.19		
		(1.95-1.98)x(2.21+2.24)/2	-0.07		
		(1.50-1.95)x(2.15+2.21)/2	-0.98		
		(0.32-1.50)x(2.15+2.15)/2	-2.54		
				0.11	
18	R1	(0.00-0.32)x(2.14+2.14)/2	-0.68		
425.00		(-4.00-0.00)x(2.14+2.14)/2	-8.56		
		(-5.00--4.00)x(2.14+2.14)/2	-2.14		
		(-5.45--5.00)x(2.19+2.14)/2	-0.97		
		(-8.63--5.45)x(0.07+2.19)/2	-3.59		
		(-8.55--8.63)x(0.07+0.07)/2	0.01		
		(-8.30--8.55)x(0.05+0.07)/2	0.02		
		(-8.14--8.30)x(0.05+0.05)/2	0.01		
		(-7.20--8.14)x(0.02+0.05)/2	0.03		
		(-6.38--7.20)x(0.10+0.02)/2	0.05		
		(-6.10--6.38)x(0.11+0.10)/2	0.03		
		(-5.66--6.10)x(0.14+0.11)/2	0.05		
		(-5.01--5.66)x(0.18+0.14)/2	0.10		
		(-4.61--5.01)x(0.28+0.18)/2	0.09		
		(-3.91--4.61)x(0.41+0.28)/2	0.24		
		(-2.85--3.91)x(0.91+0.41)/2	0.70		
		(-2.82--2.85)x(0.93+0.91)/2	0.03		
		(-2.80--2.82)x(0.94+0.93)/2	0.02		
		(-2.76--2.80)x(0.95+0.94)/2	0.04		
		(-2.01--2.76)x(1.35+0.95)/2	0.86		
		(-1.72--2.01)x(1.48+1.35)/2	0.41		
		(-1.08--1.72)x(1.71+1.48)/2	1.02		
		(-0.62--1.08)x(1.90+1.71)/2	0.83		
		(0.13--0.62)x(2.06+1.90)/2	1.48		
		(0.32-0.13)x(2.09+2.06)/2	0.39		
				9.53	
18	R2	(0.47-0.32)x(2.12+2.09)/2	0.32		
425.00		(0.68-0.47)x(2.13+2.12)/2	0.45		
		(1.07-0.68)x(2.14+2.13)/2	0.83		
		(0.32-1.07)x(2.14+2.14)/2	-1.60		
19	R1	(-7.90--8.62)x(-0.05+0.06)/2	0.00		
450.00		(-7.15--7.90)x(-0.03+-0.05)/2	-0.03		
		(-6.80--7.15)x(-0.05+-0.03)/2	-0.01		
		(-6.23--6.80)x(0.01+-0.05)/2	-0.01		
		(-5.70--6.23)x(0.06+0.01)/2	0.02		
		(-5.39--5.70)x(0.11+0.06)/2	0.03		
		(-4.61--5.39)x(0.18+0.11)/2	0.11		
		(-3.62--4.61)x(0.41+0.18)/2	0.29		
		(-3.51--3.62)x(0.44+0.41)/2	0.05		
		(-3.33--3.51)x(0.52+0.44)/2	0.09		
		(-2.42--3.33)x(0.99+0.52)/2	0.69		
		(-1.86--2.42)x(1.25+0.99)/2	0.63		
		(-1.32--1.86)x(1.49+1.25)/2	0.74		
		(-1.08--1.32)x(1.58+1.49)/2	0.37		
		(-0.44--1.08)x(1.78+1.58)/2	1.08		
		(-0.28--0.44)x(1.83+1.78)/2	0.29		
		(-0.22--0.28)x(1.84+1.83)/2	0.11		
		(-0.09--0.22)x(1.86+1.84)/2	0.24		
		(0.87--0.09)x(1.97+1.86)/2	1.84		
		(1.67-0.87)x(2.10+1.97)/2	1.63		
		(1.97-1.67)x(2.14+2.10)/2	0.64		
		(2.00-1.97)x(2.15+2.14)/2	0.06		
		(1.95-2.00)x(2.18+2.15)/2	-0.11		
		(1.50-1.95)x(2.12+2.18)/2	-0.97		
		(0.00-1.50)x(2.12+2.12)/2	-3.18		
		(-4.00-0.00)x(2.12+2.12)/2	-8.48		
		(-5.00--4.00)x(2.12+2.12)/2	-2.12		
		(-5.45--5.00)x(2.18+2.12)/2	-0.97		
		(-8.62--5.45)x(0.06+2.18)/2	-3.55		
				10.52	
20	R1	(-8.59--8.67)x(-0.01+0.02)/2	0.00		
463.37		(-8.57--8.59)x(-0.01+-0.01)/2	-0.00		
		(-8.56--8.57)x(-0.01+-0.01)/2	-0.00		
		(-7.48--8.56)x(-0.09+-0.01)/2	-0.05		
		(-6.82--7.48)x(-0.09+-0.09)/2	-0.06		
		(-6.38--6.82)x(-0.09+-0.09)/2	-0.04		
		(-6.18--6.38)x(-0.09+-0.09)/2	-0.02		
		(-5.66--6.18)x(-0.09+-0.09)/2	-0.05		
		(-5.39--5.66)x(-0.09+-0.09)/2	-0.02		
		(-5.29--5.39)x(-0.09+-0.09)/2	-0.01		
		(-5.06--5.29)x(-0.07+-0.09)/2	-0.02		
		(-4.19--5.06)x(-0.02+-0.07)/2	-0.04		
		(-3.29--4.19)x(0.33+-0.02)/2	0.14		
		(-3.09--3.29)x(0.39+0.33)/2	0.07		
		(-2.77--3.09)x(0.61+0.39)/2	0.16		
		(-2.00--2.77)x(1.11+0.61)/2	0.66		
		(-1.53--2.00)x(1.27+1.11)/2	0.56		
		(-0.90--1.53)x(1.53+1.27)/2	0.88		
		(0.13--0.90)x(1.73+1.53)/2	1.68		
		(0.20-0.13)x(1.74+1.73)/2	0.12		
		(0.24-0.20)x(1.75+1.74)/2	0.07		
		(1.29-0.24)x(1.90+1.75)/2	1.92		
		(2.00-1.29)x(1.98+1.90)/2	1.38		
		(2.20-2.00)x(2.00+1.98)/2	0.40		
		(1.95-2.20)x(2.17+2.00)/2	-0.52		
		(1.50-1.95)x(2.11+2.17)/2	-0.96		
		(0.00-1.50)x(2.11+2.11)/2	-3.17		
		(-4.00-0.00)x(2.11+2.11)/2	-8.44		
		A RIPORTARE mq	-5.36		

STERRI E RIPORTI

N. SEZIONE PROG.	FIG.	ELEMENTI DI CALCOLO	AREA ELEMENTARE mq	AREA FIGURA mq	NOTE
		RIPORTO mq	-5.36		
		(-5.00--4.00)x(2.11+2.11)/2	-2.11		
		(-5.45--5.00)x(2.17+2.11)/2	-0.96		
		(-8.67--5.45)x(0.02+2.17)/2	-3.53		
				11.96	
21	R1	(-8.19--8.41)x(0.09+0.17)/2	0.03		
500.00		(-7.36--8.19)x(-0.06+0.09)/2	0.01		
		(-7.10--7.36)x(-0.10+-0.06)/2	-0.02		
		(-6.93--7.10)x(-0.10+-0.10)/2	-0.02		
		(-6.00--6.93)x(-0.13+-0.10)/2	-0.11		
		(-5.17--6.00)x(-0.13+-0.13)/2	-0.11		
		(-4.90--5.17)x(-0.13+-0.13)/2	-0.04		
		(-4.47--4.90)x(-0.10+-0.13)/2	-0.05		
		(-3.81--4.47)x(-0.00+-0.10)/2	-0.03		
		(-3.41--3.81)x(0.12+-0.00)/2	0.02		
		(-2.71--3.41)x(0.34+0.12)/2	0.16		
		(-1.64--2.71)x(0.96+0.34)/2	0.70		
		(-1.62--1.64)x(0.97+0.96)/2	0.02		
		(-1.57--1.62)x(0.99+0.97)/2	0.05		
		(-0.52--1.57)x(1.38+0.99)/2	1.24		
		(0.12--0.52)x(1.53+1.38)/2	0.93		
		(0.58-0.12)x(1.65+1.53)/2	0.73		
		(1.32-0.58)x(1.80+1.65)/2	1.28		
		(1.67-1.32)x(1.87+1.80)/2	0.64		
		(2.08-1.67)x(2.05+1.87)/2	0.80		
		(1.95-2.08)x(2.14+2.05)/2	-0.27		
		(1.50-1.95)x(2.09+2.14)/2	-0.95		
		(0.00-1.50)x(2.09+2.09)/2	-3.13		
		(-4.00-0.00)x(2.09+2.09)/2	-8.36		
		(-5.00--4.00)x(2.09+2.09)/2	-2.09		
		(-5.45--5.00)x(2.14+2.09)/2	-0.95		
		(-8.41--5.45)x(0.17+2.14)/2	-3.42		
				12.94	
22	R1	(-5.00--4.46)x(2.07+2.07)/2	-1.12		
525.00		(-5.45--5.00)x(2.13+2.07)/2	-0.95		
		(-6.75--5.45)x(1.26+2.13)/2	-2.20		
		(-6.59--6.75)x(1.16+1.26)/2	0.19		
		(-5.74--6.59)x(0.59+1.16)/2	0.74		
		(-5.61--5.74)x(0.55+0.59)/2	0.07		
		(-4.71--5.61)x(0.10+0.55)/2	0.29		
		(-4.62--4.71)x(0.10+0.10)/2	0.01		
		(-4.46--4.62)x(0.09+0.10)/2	0.02		
				2.95	
22	R2	(-3.69--4.46)x(0.06+0.09)/2	0.06		
525.00		(-2.68--3.69)x(0.06+0.06)/2	0.06		
		(-2.66--2.68)x(0.06+0.06)/2	0.00		
		(-2.64--2.66)x(0.07+0.06)/2	0.00		
		(-2.12--2.64)x(0.05+0.07)/2	0.03		
		(-1.65--2.12)x(0.04+0.05)/2	0.02		
		(-1.63--1.65)x(0.04+0.04)/2	0.00		
		(-0.66--1.63)x(0.04+0.04)/2	0.04		
		(-0.61--0.66)x(0.03+0.04)/2	0.00		
		(0.32--0.61)x(0.07+0.03)/2	0.05		
		(0.42-0.32)x(0.07+0.07)/2	0.01		
		(1.31-0.42)x(0.35+0.07)/2	0.19		
		(1.44-1.31)x(0.37+0.35)/2	0.05		
		(2.30-1.44)x(0.86+0.37)/2	0.53		
		(2.47-2.30)x(0.95+0.86)/2	0.15		
		(3.24-2.47)x(1.27+0.95)/2	0.85		
		(1.95-3.24)x(2.13+1.27)/2	-2.19		
		(1.50-1.95)x(2.07+2.13)/2	-0.94		
		(0.00-1.50)x(2.07+2.07)/2	-3.10		
		(-4.00-0.00)x(2.07+2.07)/2	-8.28		
		(-4.46--4.00)x(2.07+2.07)/2	-0.95		
				13.42	
23	S1	(-4.75--5.48)x(2.08+2.14)/2	1.54		
550.00		(-4.46--4.75)x(2.05+2.08)/2	0.60		
		(-5.00--4.46)x(2.05+2.05)/2	-1.11		
		(-5.45--5.00)x(2.11+2.05)/2	-0.94		
		(-5.48--5.45)x(2.14+2.11)/2	-0.06		
				0.03	
23	R1	(-4.00--2.16)x(2.05+2.05)/2	-3.77		
550.00		(-4.46--4.00)x(2.05+2.05)/2	-0.94		
		(-3.42--4.46)x(1.96+2.05)/2	2.09		
		(-3.41--3.42)x(1.96+1.96)/2	0.02		
		(-3.40--3.41)x(1.96+1.96)/2	0.02		
		(-3.37--3.40)x(1.95+1.96)/2	0.06		
		(-2.54--3.37)x(1.89+1.95)/2	1.59		
		(-2.36--2.54)x(1.87+1.89)/2	0.34		
		(-2.16--2.36)x(1.86+1.87)/2	0.37		
				0.22	
23	R2	(-2.08--2.16)x(1.85+1.86)/2	0.15		
550.00		(-1.31--2.08)x(1.80+1.85)/2	1.41		
		(-0.75--1.31)x(1.74+1.80)/2	0.99		
		(-0.26--0.75)x(1.69+1.74)/2	0.84		
		(0.59--0.26)x(1.60+1.69)/2	1.40		
		(0.79-0.59)x(1.56+1.60)/2	0.32		
		(1.51-0.79)x(1.55+1.56)/2	1.12		
		(1.84-1.51)x(1.54+1.55)/2	0.51		
		(1.93-1.84)x(1.52+1.54)/2	0.14		
		(2.88-1.93)x(1.35+1.52)/2	1.36		
		(3.26-2.88)x(1.11+1.35)/2	0.47		
		(3.93-3.26)x(0.78+1.11)/2	0.63		
		(4.17-3.93)x(0.63+0.78)/2	0.17		
		(1.95-4.17)x(2.11+0.63)/2	-3.04		
		(1.50-1.95)x(2.05+2.11)/2	-0.94		
		(0.00-1.50)x(2.05+2.05)/2	-3.07		
		(-2.16-0.00)x(2.05+2.05)/2	-4.43		
				1.97	
24	S1	(-5.00--4.46)x(2.04+2.04)/2	-1.10		
575.00		(-5.45--5.00)x(2.09+2.04)/2	-0.93		
		(-5.64--5.45)x(2.28+2.09)/2	-0.42		
		(-5.03--5.64)x(2.25+2.28)/2	1.38		
		(-4.94--5.03)x(2.24+2.25)/2	0.20		
		(-4.89--4.94)x(2.24+2.24)/2	0.11		
		(-4.46--4.89)x(2.20+2.24)/2	0.95		
		A RIPORTARE mq	0.19		

STERRI E RIPORTI

N. SEZIONE PROG.	FIG.	ELEMENTI DI CALCOLO	AREA ELEMENTARE mq	AREA FIGURA mq	NOTE
		RIPORTO mq	0.19		
				0.19	
24	S2	(-3.84--4.46)x(2.16+2.20)/2	1.35		
575.00		(-3.10--3.84)x(2.10+2.16)/2	1.58		
		(-2.75--3.10)x(2.08+2.10)/2	0.73		
		(-2.59--2.75)x(2.07+2.08)/2	0.33		
		(-2.19--2.59)x(2.04+2.07)/2	0.82		
		(-2.16--2.19)x(2.04+2.04)/2	0.06		
		(-4.00--2.16)x(2.04+2.04)/2	-3.75		
		(-4.46--4.00)x(2.04+2.04)/2	-0.94		
				0.18	
24	R1	(-2.16--0.27)x(2.04+2.04)/2	-3.86		
575.00		(-1.80--2.16)x(2.00+2.04)/2	0.73		
		(-1.65--1.80)x(1.99+2.00)/2	0.30		
		(-1.30--1.65)x(1.95+1.99)/2	0.69		
		(-0.55--1.30)x(1.88+1.95)/2	1.44		
		(-0.27--0.55)x(1.85+1.88)/2	0.52		
				0.18	
24	R2	(-0.27--0.09)x(2.04+2.04)/2	-0.37		
575.00		(-0.21--0.27)x(1.84+1.85)/2	0.11		
		(-0.09--0.21)x(1.83+1.84)/2	0.22		
				0.04	
24	R3	(0.20--0.09)x(1.79+1.83)/2	0.52		
575.00		(0.21-0.20)x(1.79+1.79)/2	0.02		
		(0.22-0.21)x(1.75+1.79)/2	0.02		
		(0.24-0.22)x(1.73+1.74)/2	0.03		
		(0.28-0.24)x(1.75+1.73)/2	0.07		
		(0.56-0.28)x(1.76+1.75)/2	0.49		
		(0.57-0.56)x(1.76+1.76)/2	0.02		
		(0.58-0.57)x(1.75+1.76)/2	0.02		
		(0.66-0.58)x(1.75+1.75)/2	0.14		
		(1.65-0.66)x(1.75+1.75)/2	1.73		
		(2.28-1.65)x(1.72+1.75)/2	1.09		
		(2.52-2.28)x(1.71+1.72)/2	0.41		
		(1.95-2.52)x(2.09+1.71)/2	-1.08		
		(1.50-1.95)x(2.04+2.09)/2	-0.93		
		(0.00-1.50)x(2.04+2.04)/2	-3.06		
		(-0.09-0.00)x(2.04+2.04)/2	-0.18		
				0.69	
25	S1	(-4.00--2.16)x(2.02+2.02)/2	-3.72		
600.00		(-5.00--4.00)x(2.02+2.02)/2	-2.02		
		(-5.45--5.00)x(2.08+2.02)/2	-0.92		
		(-5.66--5.45)x(2.29+2.08)/2	-0.46		
		(-4.72--5.66)x(2.25+2.29)/2	2.13		
		(-4.06--4.72)x(2.22+2.25)/2	1.48		
		(-3.62--4.06)x(2.20+2.22)/2	0.97		
		(-2.92--3.62)x(2.17+2.20)/2	1.53		
		(-2.52--2.92)x(2.15+2.17)/2	0.86		
		(-2.27--2.52)x(2.14+2.15)/2	0.54		
		(-2.16--2.27)x(2.13+2.14)/2	0.23		
				0.62	
25	S2	(-1.42--2.16)x(2.10+2.13)/2	1.57		
600.00		(-1.04--1.42)x(2.08+2.10)/2	0.79		
		(-0.32--1.04)x(2.03+2.08)/2	1.48		
		(-0.29--0.32)x(2.03+2.03)/2	0.06		
		(-0.27--0.29)x(2.02+2.03)/2	0.04		
		(-2.16--0.27)x(2.02+2.02)/2	-3.82		
				0.12	
25	R1	(-0.05--0.09)x(2.00+2.02)/2	0.08		
600.00		(0.03--0.05)x(1.97+2.00)/2	0.16		
		(0.18-0.03)x(1.97+1.97)/2	0.30		
		(0.54-0.18)x(1.94+1.97)/2	0.70		
		(0.78-0.54)x(1.92+1.94)/2	0.46		
		(1.32-0.78)x(1.91+1.92)/2	1.03		
		(1.88-1.32)x(1.90+1.91)/2	1.07		
		(2.27-1.88)x(1.86+1.90)/2	0.73		
		(1.95-2.27)x(2.08+1.86)/2	-0.63		
		(1.50-1.95)x(2.02+2.08)/2	-0.92		
		(0.00-1.50)x(2.02+2.02)/2	-3.03		
		(-0.09-0.00)x(2.02+2.02)/2	-0.18		
				0.23	
26	S1	(-4.00--0.27)x(2.00+2.00)/2	-7.46		
625.00		(-5.00--4.00)x(2.00+2.00)/2	-2.00		
		(-5.45--5.00)x(2.06+2.00)/2	-0.91		
		(-5.81--5.45)x(2.42+2.06)/2	-0.81		
		(-5.59--5.81)x(2.41+2.42)/2	0.53		
		(-5.02--5.59)x(2.38+2.41)/2	1.37		
		(-4.49--5.02)x(2.36+2.38)/2	1.26		
		(-3.65--4.49)x(2.32+2.36)/2	1.97		
		(-3.39--3.65)x(2.31+2.32)/2	0.60		
		(-3.23--3.39)x(2.31+2.31)/2	0.37		
		(-2.29--3.23)x(2.27+2.31)/2	2.15		
		(-1.44--2.29)x(2.25+2.27)/2	1.92		
		(-1.19--1.44)x(2.24+2.25)/2	0.56		
		(-1.13--1.19)x(2.23+2.24)/2	0.13		
		(-0.82--1.13)x(2.19+2.23)/2	0.69		
		(-0.75--0.82)x(2.18+2.19)/2	0.15		
		(-0.64--0.75)x(2.21+2.18)/2	0.24		
		(-0.60--0.64)x(2.19+2.21)/2	0.09		
		(-0.59--0.60)x(2.18+2.19)/2	0.02		
		(-0.54--0.59)x(2.20+2.19)/2	0.11		
		(-0.50--0.54)x(2.18+2.20)/2	0.09		
		(-0.27--0.50)x(2.19+2.18)/2	0.50		
				1.57	
26	S2	(-0.27--0.09)x(2.00+2.00)/2	-0.36		
625.00		(-0.21--0.27)x(2.19+2.19)/2	0.13		
		(-0.09--0.21)x(2.18+2.19)/2	0.26		
				0.03	
26	S3	(0.00-1.35)x(2.00+2.00)/2	-2.70		
625.00		(-0.09-0.00)x(2.00+2.00)/2	-0.18		
		(0.50--0.09)x(2.12+2.18)/2	1.27		
		(1.01-0.50)x(2.09+2.12)/2	1.07		
		(1.35-1.01)x(2.06+2.09)/2	0.71		
				0.17	
26	S4	(1.74-1.35)x(2.03+2.06)/2	0.80		
625.00		(1.50-1.74)x(2.00+2.03)/2	-0.48		
		A RIPORTARE mq	0.32		

STERRI E RIPORTI

N. SEZIONE PROG.	FIG.	ELEMENTI DI CALCOLO	AREA ELEMENTARE mq	AREA FIGURA mq	NOTE
		RIPORTO mq	0.32		
		(1.35-1.50)x(2.00+2.00)/2	-0.30		
				0.02	
27	S1	(-4.00--3.33)x(1.99+1.99)/2	-1.33		
650.00		(-5.00--4.00)x(1.99+1.99)/2	-1.99		
		(-5.45--5.00)x(2.04+1.99)/2	-0.91		
		(-5.36--5.45)x(2.06+2.04)/2	0.18		
		(-4.38--5.36)x(2.00+2.06)/2	1.99		
		(-4.26--4.38)x(1.99+2.00)/2	0.24		
		(-4.19--4.26)x(2.00+1.99)/2	0.14		
		(-3.33--4.19)x(2.01+2.00)/2	1.72		
				0.04	
27	S2	(-3.16--3.33)x(2.01+2.01)/2	0.34		
650.00		(-2.40--3.16)x(2.03+2.01)/2	1.54		
		(-2.06--2.40)x(2.04+2.03)/2	0.69		
		(-1.54--2.06)x(2.06+2.04)/2	1.07		
		(-0.97--1.54)x(2.09+2.06)/2	1.18		
		(-0.60--0.97)x(2.08+2.09)/2	0.77		
		(0.13--0.60)x(2.09+2.08)/2	1.52		
		(1.19-0.13)x(2.01+2.09)/2	2.17		
		(1.23-1.19)x(2.01+2.01)/2	0.08		
		(1.25-1.23)x(2.00+2.01)/2	0.04		
		(1.35-1.25)x(1.99+2.00)/2	0.20		
		(0.00-1.35)x(1.99+1.99)/2	-2.69		
		(-3.33-0.00)x(1.99+1.99)/2	-6.63		
				0.28	
27	R1	(1.71-1.35)x(1.92+1.99)/2	0.70		
650.00		(1.89-1.71)x(1.92+1.92)/2	0.35		
		(1.99-1.89)x(1.91+1.92)/2	0.19		
		(2.05-1.99)x(1.88+1.91)/2	0.11		
		(2.18-2.05)x(1.83+1.88)/2	0.24		
		(2.21-2.18)x(1.80+1.83)/2	0.05		
		(2.25-2.21)x(1.82+1.80)/2	0.07		
		(2.26-2.25)x(1.82+1.82)/2	0.02		
		(2.31-2.26)x(1.80+1.82)/2	0.09		
		(1.95-2.31)x(2.04+1.80)/2	-0.69		
		(1.50-1.95)x(1.99+2.04)/2	-0.91		
		(1.35-1.50)x(1.99+1.99)/2	-0.30		
				0.08	
28	S1	(-6.94--7.17)x(3.64+3.75)/2	0.85		
675.00		(-6.23--6.94)x(3.27+3.64)/2	2.45		
		(-5.15--6.23)x(2.76+3.27)/2	3.26		
		(-5.14--5.15)x(2.75+2.76)/2	0.03		
		(-5.11--5.14)x(2.74+2.75)/2	0.08		
		(-4.04--5.11)x(2.22+2.74)/2	2.65		
		(-3.36--4.04)x(1.98+2.22)/2	1.43		
		(-3.33--3.36)x(1.97+1.98)/2	0.06		
		(-4.00--3.33)x(1.97+1.97)/2	-1.32		
		(-5.00--4.00)x(1.97+1.97)/2	-1.97		
		(-5.45--5.00)x(2.03+1.97)/2	-0.90		
		(-7.17--5.45)x(3.75+2.03)/2	-4.97		
				1.65	
28	R1	(-3.33--1.96)x(1.97+1.97)/2	-2.70		
675.00		(-2.94--3.33)x(1.83+1.97)/2	0.74		
		(-2.27--2.94)x(1.66+1.83)/2	1.17		
		(-1.96--2.27)x(1.58+1.66)/2	0.50		
				0.29	
28	R2	(-1.84--1.96)x(1.55+1.58)/2	0.19		
675.00		(-1.57--1.84)x(1.46+1.55)/2	0.41		
		(-0.74--1.57)x(1.22+1.46)/2	1.11		
		(-0.53--0.74)x(1.15+1.22)/2	0.25		
		(-0.26--0.53)x(1.11+1.15)/2	0.31		
		(-0.23--0.26)x(1.22+1.11)/2	0.03		
		(-0.10--0.23)x(1.58+1.22)/2	0.18		
		(-0.09--0.10)x(1.76+1.58)/2	0.02		
		(-0.08--0.09)x(1.54+1.76)/2	0.02		
		(-0.03--0.08)x(1.32+1.54)/2	0.07		
		(0.06--0.03)x(1.08+1.32)/2	0.11		
		(0.36-0.06)x(0.87+1.08)/2	0.29		
		(0.57-0.36)x(0.80+0.87)/2	0.18		
		(1.35-0.57)x(0.57+0.80)/2	0.53		
		(0.00-1.35)x(1.97+1.97)/2	-2.66		
		(-1.96-0.00)x(1.97+1.97)/2	-3.86		
				2.82	
28	R3	(1.46-1.35)x(0.53+0.57)/2	0.06		
675.00		(2.02-1.46)x(0.35+0.53)/2	0.25		
		(2.56-2.02)x(0.16+0.35)/2	0.14		
		(2.80-2.56)x(0.07+0.16)/2	0.03		
		(3.16-2.80)x(-0.08+0.07)/2	-0.00		
		(3.31-3.16)x(-0.10+-0.08)/2	-0.01		
		(3.34-3.31)x(-0.12+-0.10)/2	-0.00		
		(3.35-3.34)x(-0.12+-0.12)/2	-0.00		
		(3.36-3.35)x(-0.22+-0.12)/2	-0.00		
		(3.43-3.36)x(-0.15+-0.19)/2	-0.01		
		(3.63-3.43)x(-0.13+-0.15)/2	-0.03		
		(3.66-3.63)x(-0.13+-0.13)/2	-0.00		
		(3.81-3.66)x(-0.13+-0.13)/2	-0.02		
		(4.76-3.81)x(-0.11+-0.13)/2	-0.11		
		(5.16-4.76)x(-0.12+-0.11)/2	-0.05		
		(1.95-5.16)x(2.03+-0.12)/2	-3.07		
		(1.50-1.95)x(1.97+2.03)/2	-0.90		
		(1.35-1.50)x(1.97+1.97)/2	-0.30		
				4.02	
29	S1	(-4.00--3.33)x(1.95+1.95)/2	-1.31		
700.00		(-5.00--4.00)x(1.95+1.95)/2	-1.95		
		(-5.45--5.00)x(2.01+1.95)/2	-0.89		
		(-8.59--5.45)x(5.15+2.01)/2	-11.24		
		(-8.21--8.59)x(4.96+5.15)/2	1.92		
		(-7.90--8.21)x(4.76+4.96)/2	1.51		
		(-7.11--7.90)x(4.25+4.76)/2	3.56		
		(-6.76--7.11)x(4.02+4.25)/2	1.45		
		(-6.01--6.76)x(3.62+4.02)/2	2.86		
		(-5.84--6.01)x(3.56+3.62)/2	0.61		
		(-4.91--5.84)x(3.22+3.56)/2	3.15		
		(-4.32--4.91)x(2.96+3.22)/2	1.82		
		(-3.81--4.32)x(2.76+2.96)/2	1.46		
		A RIPORTARE mq	2.95		

STERRI E RIPORTI

N. SEZIONE PROG.	FIG.	ELEMENTI DI CALCOLO	AREA ELEMENTARE mq	AREA FIGURA mq	NOTE
		RIPORTO mq	2.95		
		(-3.33--3.81)x(2.55+2.76)/2	1.27		
				4.22	
29	S2	(-3.00--3.33)x(2.40+2.55)/2	0.82		
700.00		(-2.71--3.00)x(2.27+2.40)/2	0.68		
		(-2.53--2.71)x(2.20+2.27)/2	0.40		
		(-1.96--2.53)x(1.95+2.20)/2	1.18		
		(-3.33--1.96)x(1.95+1.95)/2	-2.67		
				0.41	
29	R1	(-1.96--0.59)x(1.95+1.95)/2	-2.67		
700.00		(-1.61--1.96)x(1.80+1.95)/2	0.66		
		(-0.73--1.61)x(1.37+1.80)/2	1.39		
		(-0.59--0.73)x(1.30+1.37)/2	0.19		
				0.43	
29	R2	(-0.51--0.59)x(1.26+1.30)/2	0.10		
700.00		(-0.16--0.51)x(1.10+1.26)/2	0.41		
		(0.59--0.16)x(0.77+1.10)/2	0.70		
		(1.06-0.59)x(0.56+0.77)/2	0.31		
		(1.69-1.06)x(0.24+0.56)/2	0.25		
		(2.68-1.69)x(-0.09+0.24)/2	0.07		
		(2.79-2.68)x(-0.12+-0.09)/2	-0.01		
		(3.23-2.79)x(-0.11+-0.12)/2	-0.05		
		(3.34-3.23)x(-0.09+-0.11)/2	-0.01		
		(3.37-3.34)x(-0.09+-0.09)/2	-0.00		
		(3.38-3.37)x(-0.21+-0.09)/2	-0.00		
		(3.39-3.38)x(0.04+-0.21)/2	-0.00		
		(3.42-3.39)x(0.19+0.04)/2	0.00		
		(3.44-3.42)x(0.01+0.19)/2	0.00		
		(3.48-3.44)x(-0.03+0.01)/2	-0.00		
		(3.53-3.48)x(-0.12+-0.03)/2	-0.00		
		(3.69-3.53)x(-0.11+-0.12)/2	-0.02		
		(3.89-3.69)x(-0.12+-0.11)/2	-0.02		
		(4.64-3.89)x(-0.10+-0.12)/2	-0.08		
		(4.98-4.64)x(-0.09+-0.10)/2	-0.03		
		(5.10-4.98)x(-0.09+-0.09)/2	-0.01		
		(1.95-5.10)x(2.01+-0.09)/2	-3.02		
		(1.50-1.95)x(1.95+2.01)/2	-0.89		
		(0.00-1.50)x(1.95+1.95)/2	-2.92		
		(-0.59-0.00)x(1.95+1.95)/2	-1.15		
				6.37	
30	S1	(-4.00--2.33)x(1.94+1.94)/2	-3.24		
725.00		(-5.00--4.00)x(1.94+1.94)/2	-1.94		
		(-5.45--5.00)x(1.99+1.94)/2	-0.88		
		(-7.74--5.45)x(4.28+1.99)/2	-7.18		
		(-7.07--7.74)x(4.13+4.28)/2	2.82		
		(-6.88--7.07)x(4.09+4.13)/2	0.78		
		(-6.80--6.88)x(4.08+4.09)/2	0.33		
		(-6.58--6.80)x(4.04+4.08)/2	0.89		
		(-6.00--6.58)x(3.94+4.04)/2	2.31		
		(-5.78--6.00)x(3.89+3.94)/2	0.86		
		(-5.28--5.78)x(3.77+3.89)/2	1.92		
		(-4.68--5.28)x(3.59+3.77)/2	2.21		
		(-3.73--4.68)x(3.22+3.59)/2	3.23		
		(-3.58--3.73)x(3.16+3.22)/2	0.48		
		(-3.49--3.58)x(3.12+3.16)/2	0.28		
		(-2.48--3.49)x(2.67+3.12)/2	2.92		
		(-2.33--2.48)x(2.60+2.67)/2	0.40		
				6.19	
30	S2	(-1.96--2.33)x(2.43+2.60)/2	0.93		
725.00		(-2.33--1.96)x(1.94+1.94)/2	-0.72		
				0.21	
30	S3	(-1.70--1.96)x(2.31+2.43)/2	0.62		
725.00		(-1.38--1.70)x(2.18+2.31)/2	0.72		
		(-0.89--1.38)x(2.03+2.18)/2	1.03		
		(-0.59--0.89)x(1.94+2.03)/2	0.60		
		(-1.96--0.59)x(1.94+1.94)/2	-2.66		
				0.31	
30	R1	(-0.28--0.59)x(1.83+1.94)/2	0.58		
725.00		(0.10--0.28)x(1.68+1.83)/2	0.67		
		(0.81-0.10)x(1.41+1.68)/2	1.10		
		(1.89-0.81)x(0.83+1.41)/2	1.21		
		(1.91-1.89)x(0.82+0.83)/2	0.02		
		(1.95-1.91)x(0.80+0.82)/2	0.03		
		(3.01-1.95)x(0.32+0.80)/2	0.59		
		(3.30-3.01)x(0.24+0.32)/2	0.08		
		(3.65-3.30)x(-0.07+0.24)/2	0.03		
		(3.76-3.65)x(-0.15+-0.06)/2	-0.01		
		(3.79-3.76)x(-0.20+-0.15)/2	-0.01		
		(3.81-3.79)x(0.01+-0.20)/2	-0.00		
		(4.11-3.81)x(0.15+0.01)/2	0.02		
		(4.30-4.11)x(0.14+0.15)/2	0.03		
		(4.78-4.30)x(0.11+0.14)/2	0.06		
		(1.95-4.78)x(1.99+0.11)/2	-2.97		
		(1.50-1.95)x(1.94+1.99)/2	-0.88		
		(0.00-1.50)x(1.94+1.94)/2	-2.91		
		(-0.59-0.00)x(1.94+1.94)/2	-1.14		
				3.50	
31	S1	(-4.00--2.66)x(1.92+1.92)/2	-2.57		
750.00		(-5.00--4.00)x(1.92+1.92)/2	-1.92		
		(-5.45--5.00)x(1.98+1.92)/2	-0.88		
		(-7.94--5.45)x(4.46+1.98)/2	-8.02		
		(-7.75--7.94)x(4.38+4.46)/2	0.84		
		(-7.31--7.75)x(4.20+4.38)/2	1.89		
		(-6.65--7.31)x(3.91+4.20)/2	2.68		
		(-6.24--6.65)x(3.82+3.91)/2	1.58		
		(-5.55--6.24)x(3.65+3.82)/2	2.58		
		(-5.25--5.55)x(3.63+3.65)/2	1.09		
		(-4.46--5.25)x(3.53+3.63)/2	2.83		
		(-4.45--4.46)x(3.53+3.53)/2	0.04		
		(-3.36--4.45)x(2.81+3.52)/2	3.45		
		(-2.66--3.36)x(2.22+2.81)/2	1.76		
				5.35	
31	S2	(-2.33--2.66)x(1.92+2.21)/2	0.68		
750.00		(-2.66--2.33)x(1.92+1.92)/2	-0.63		
				0.05	
31	R1	(-2.33--0.59)x(1.92+1.92)/2	-3.34		
		A RIPORTARE mq	-3.34		

STERRI E RIPORTI

N. SEZIONE PROG.	FIG.	ELEMENTI DI CALCOLO	AREA ELEMENTARE mq	AREA FIGURA mq	NOTE
		RIPORTO mq	-3.34		
750.00		(-2.26--2.33)x(1.86+1.92)/2	0.13		
		(-1.62--2.26)x(1.66+1.86)/2	1.13		
		(-1.16--1.62)x(1.56+1.66)/2	0.74		
		(-0.86--1.16)x(1.50+1.56)/2	0.46		
		(-0.59--0.86)x(1.45+1.50)/2	0.40		
				0.48	
31	R2	(-0.06--0.59)x(1.36+1.45)/2	0.74		
750.00		(0.93--0.06)x(1.04+1.36)/2	1.19		
		(1.04-0.93)x(1.01+1.04)/2	0.11		
		(1.22-1.04)x(0.95+1.01)/2	0.18		
		(2.14-1.22)x(0.66+0.95)/2	0.74		
		(2.72-2.14)x(0.53+0.66)/2	0.35		
		(3.24-2.72)x(0.39+0.53)/2	0.24		
		(3.47-3.24)x(0.35+0.39)/2	0.09		
		(3.83-3.47)x(0.32+0.35)/2	0.12		
		(3.92-3.83)x(0.30+0.32)/2	0.03		
		(3.93-3.92)x(0.28+0.30)/2	0.00		
		(4.08-3.93)x(-0.21+0.28)/2	0.01		
		(4.11-4.08)x(0.18+-0.21)/2	-0.00		
		(4.29-4.11)x(0.33+0.29)/2	0.06		
		(4.34-4.29)x(0.33+0.33)/2	0.02		
		(4.42-4.34)x(0.33+0.33)/2	0.03		
		(1.95-4.42)x(1.98+0.33)/2	-2.85		
		(1.50-1.95)x(1.92+1.98)/2	-0.88		
		(0.00-1.50)x(1.92+1.92)/2	-2.88		
		(-0.59-0.00)x(1.92+1.92)/2	-1.13		
				3.83	
32	S1	(-4.00--3.08)x(1.90+1.90)/2	-1.75		
775.00		(-5.00--4.00)x(1.90+1.90)/2	-1.90		
		(-5.45--5.00)x(1.96+1.90)/2	-0.87		
		(-7.10--5.45)x(3.61+1.96)/2	-4.60		
		(-6.43--7.10)x(3.37+3.61)/2	2.34		
		(-5.41--6.43)x(2.94+3.37)/2	3.22		
		(-5.33--5.41)x(2.91+2.94)/2	0.23		
		(-5.20--5.33)x(2.85+2.91)/2	0.37		
		(-4.23--5.20)x(2.47+2.85)/2	2.58		
		(-3.71--4.23)x(2.26+2.47)/2	1.23		
		(-3.13--3.71)x(2.04+2.26)/2	1.25		
		(-3.08--3.13)x(2.03+2.04)/2	0.10		
				2.20	
32	S2	(-2.66--3.08)x(1.90+2.03)/2	0.83		
775.00		(-3.08--2.66)x(1.90+1.90)/2	-0.80		
				0.03	
32	R1	(-2.66--2.33)x(1.90+1.90)/2	-0.63		
775.00		(-2.35--2.66)x(1.81+1.90)/2	0.58		
		(-2.33--2.35)x(1.81+1.81)/2	0.04		
				0.01	
32	R2	(-2.03--2.33)x(1.73+1.81)/2	0.53		
775.00		(-1.83--2.03)x(1.71+1.73)/2	0.34		
		(-0.93--1.83)x(1.61+1.71)/2	1.49		
		(-0.03--0.93)x(1.59+1.61)/2	1.44		
		(0.17--0.03)x(1.58+1.59)/2	0.32		
		(0.49-0.17)x(1.54+1.58)/2	0.50		
		(1.27-0.49)x(1.43+1.54)/2	1.16		
		(1.76-1.27)x(1.20+1.43)/2	0.64		
		(2.37-1.76)x(0.95+1.20)/2	0.66		
		(3.33-2.37)x(0.55+0.95)/2	0.72		
		(3.47-3.33)x(0.50+0.55)/2	0.07		
		(3.48-3.47)x(0.48+0.50)/2	0.00		
		(4.20-3.48)x(-0.04+0.48)/2	0.16		
		(4.38-4.20)x(-0.21+-0.04)/2	-0.02		
		(4.39-4.38)x(0.03+-0.21)/2	-0.00		
		(4.57-4.39)x(0.13+0.03)/2	0.01		
		(4.71-4.57)x(0.12+0.13)/2	0.02		
		(1.95-4.71)x(1.96+0.12)/2	-2.87		
		(1.50-1.95)x(1.90+1.96)/2	-0.87		
		(0.00-1.50)x(1.90+1.90)/2	-2.85		
		(-2.33-0.00)x(1.90+1.90)/2	-4.43		
				2.98	
33	S1	(-6.37--6.81)x(3.14+3.30)/2	1.42		
800.00		(-6.20--6.37)x(3.08+3.14)/2	0.53		
		(-5.93--6.20)x(3.01+3.08)/2	0.82		
		(-5.10--5.93)x(2.77+3.01)/2	2.40		
		(-4.58--5.10)x(2.60+2.77)/2	1.40		
		(-4.00--4.58)x(2.42+2.60)/2	1.46		
		(-3.08--4.00)x(1.89+2.42)/2	1.98		
		(-4.00--3.08)x(1.89+1.89)/2	-1.74		
		(-5.00--4.00)x(1.89+1.89)/2	-1.89		
		(-5.45--5.00)x(1.94+1.89)/2	-0.86		
		(-6.81--5.45)x(3.30+1.94)/2	-3.56		
				1.96	
33	R1	(-3.08--2.91)x(1.89+1.89)/2	-0.32		
800.00		(-2.91--3.08)x(1.78+1.89)/2	0.31		
				0.01	
33	R2	(-2.90--2.91)x(1.78+1.78)/2	0.02		
800.00		(-2.66--2.90)x(1.66+1.78)/2	0.41		
		(-2.91--2.66)x(1.89+1.89)/2	-0.47		
				0.04	
33	R3	(-2.16--2.66)x(1.41+1.66)/2	0.77		
800.00		(-1.80--2.16)x(1.32+1.41)/2	0.49		
		(-0.99--1.80)x(1.27+1.32)/2	1.05		
		(-0.70--0.99)x(1.23+1.27)/2	0.36		
		(-0.24--0.70)x(1.23+1.23)/2	0.57		
		(0.40--0.24)x(1.20+1.23)/2	0.78		
		(0.80-0.40)x(1.09+1.20)/2	0.46		
		(1.50-0.80)x(1.01+1.09)/2	0.73		
		(2.59-1.50)x(0.71+1.01)/2	0.94		
		(2.60-2.59)x(0.70+0.70)/2	0.01		
		(3.69-2.60)x(0.47+0.70)/2	0.64		
		(4.13-3.69)x(0.49+0.47)/2	0.21		
		(1.95-4.13)x(1.94+0.49)/2	-2.65		
		(1.50-1.95)x(1.89+1.94)/2	-0.86		
		(0.00-1.50)x(1.89+1.89)/2	-2.83		
		(-2.66-0.00)x(1.89+1.89)/2	-5.03		
				4.36	
		A RIPORTARE mq			

STERRI E RIPORTI

N. SEZIONE PROG.	FIG.	ELEMENTI DI CALCOLO	AREA ELEMENTARE mq	AREA FIGURA mq	NOTE
		RIPORTO mq			
34	S1	(-4.00--3.08)x(1.87+1.87)/2	-1.72		
825.00		(-5.00--4.00)x(1.87+1.87)/2	-1.87		
		(-5.45--5.00)x(1.93+1.87)/2	-0.86		
		(-6.96--5.45)x(3.43+1.93)/2	-4.05		
		(-6.66--6.96)x(3.27+3.43)/2	1.00		
		(-5.97--6.66)x(2.92+3.27)/2	2.14		
		(-5.54--5.97)x(2.79+2.92)/2	1.23		
		(-4.87--5.54)x(2.59+2.79)/2	1.80		
		(-3.82--4.87)x(2.25+2.59)/2	2.54		
		(-3.77--3.82)x(2.24+2.25)/2	0.11		
		(-3.75--3.77)x(2.22+2.24)/2	0.04		
		(-3.08--3.75)x(1.94+2.22)/2	1.39		
				1.75	
34	S2	(-3.08--2.95)x(1.87+1.87)/2	-0.24		
825.00		(-2.95--3.08)x(1.89+1.94)/2	0.25		
				0.01	
34	S3	(-2.91--2.95)x(1.87+1.89)/2	0.08		
825.00		(-2.95--2.91)x(1.87+1.87)/2	-0.07		
				0.01	
34	R1	(-2.67--2.91)x(1.77+1.87)/2	0.44		
825.00		(-2.20--2.67)x(1.59+1.77)/2	0.79		
		(-1.58--2.20)x(1.33+1.59)/2	0.91		
		(-0.97--1.58)x(1.20+1.33)/2	0.77		
		(-0.48--0.97)x(1.13+1.20)/2	0.57		
		(-0.16--0.48)x(1.11+1.13)/2	0.36		
		(0.62--0.16)x(1.06+1.11)/2	0.85		
		(1.63-0.62)x(0.82+1.06)/2	0.95		
		(1.72-1.63)x(0.81+0.82)/2	0.07		
		(1.87-1.72)x(0.76+0.81)/2	0.12		
		(2.82-1.87)x(0.50+0.76)/2	0.60		
		(3.42-2.82)x(0.35+0.50)/2	0.26		
		(3.92-3.42)x(0.19+0.35)/2	0.14		
		(4.56-3.92)x(0.18+0.19)/2	0.12		
		(1.95-4.56)x(1.93+0.18)/2	-2.75		
		(1.50-1.95)x(1.87+1.93)/2	-0.85		
		(0.00-1.50)x(1.87+1.87)/2	-2.81		
		(-2.91-0.00)x(1.87+1.87)/2	-5.44		
				4.90	
35	S1	(-6.73--7.21)x(3.52+3.68)/2	1.73		
829.37		(-6.56--6.73)x(3.46+3.52)/2	0.59		
		(-6.46--6.56)x(3.43+3.46)/2	0.34		
		(-5.46--6.46)x(3.01+3.43)/2	3.22		
		(-4.67--5.46)x(2.69+3.01)/2	2.25		
		(-4.36--4.67)x(2.55+2.69)/2	0.81		
		(-4.23--4.36)x(2.50+2.55)/2	0.33		
		(-3.89--4.23)x(2.32+2.50)/2	0.82		
		(-3.44--3.89)x(2.08+2.32)/2	0.99		
		(-3.27--3.44)x(2.00+2.08)/2	0.35		
		(-2.95--3.27)x(1.87+2.00)/2	0.62		
		(-4.00--2.95)x(1.87+1.87)/2	-1.96		
		(-5.00--4.00)x(1.87+1.87)/2	-1.87		
		(-5.45--5.00)x(1.92+1.87)/2	-0.85		
		(-7.21--5.45)x(3.68+1.92)/2	-4.93		
				2.44	
35	R1	(-2.95--2.91)x(1.87+1.87)/2	-0.07		
829.37		(-2.91--2.95)x(1.84+1.87)/2	0.07		
35	R2	(-2.87--2.91)x(1.83+1.84)/2	0.07		
829.37		(-2.17--2.87)x(1.53+1.83)/2	1.18		
		(-1.08--2.17)x(1.18+1.53)/2	1.48		
		(-1.07--1.08)x(1.17+1.18)/2	0.01		
		(-1.04--1.07)x(1.17+1.17)/2	0.04		
		(0.03--1.04)x(1.12+1.17)/2	1.23		
		(0.71-0.03)x(0.95+1.12)/2	0.70		
		(1.13-0.71)x(0.85+0.95)/2	0.38		
		(1.80-1.13)x(0.66+0.85)/2	0.51		
		(2.23-1.80)x(0.56+0.66)/2	0.26		
		(2.50-2.23)x(0.49+0.56)/2	0.14		
		(3.33-2.50)x(0.28+0.49)/2	0.32		
		(4.29-3.33)x(0.21+0.28)/2	0.24		
		(4.43-4.29)x(0.19+0.21)/2	0.03		
		(4.56-4.43)x(0.18+0.19)/2	0.02		
		(1.95-4.56)x(1.92+0.18)/2	-2.74		
		(1.50-1.95)x(1.87+1.92)/2	-0.85		
		(0.00-1.50)x(1.87+1.87)/2	-2.81		
		(-2.91-0.00)x(1.87+1.87)/2	-5.44		
				5.23	

N. SEZ.	FIG.	SUPERFICIE STERRO mq	SUPERFICIE RIPORTO mq	PUNTI DI PASSAGGIO (PROGRESSIVA m)	DISTANZA m	VOLUMI PARZIALI STERRO mc	VOLUMI PARZIALI RIPORTO mc	VOLUMI TOTALI STERRO mc	VOLUMI TOTALI RIPORTO mc
1	S1	2.71		(0.00)					
					25.00	64.375			
2	S1	2.44		(25.00)					
								64.375	
2	S1	2.44		(25.00)					
					25.00	51.875			
3	S1	0.94		(50.00)					
	S2	0.77							
								51.875	
3	S1	0.94		(50.00)					
					25.00	16.375			
4	S1	0.37		(75.00)					
3	S2	0.77		(50.00)	16.31	6.279			
				0.77*25.00					
					16.31				
				0.77+0.41					
4	R1		0.41	(75.00)	8.69		1.781		
								22.654	1.781
4	S1	0.37		(75.00)					
					25.00	12.875			
5	S1	0.50		(100.00)					
	S2	0.16							
4	R1		0.41	(75.00)	7.37		1.511		
				0.41*25.00					
					7.37				
				0.41+0.98					
5	S3	0.98		(100.00)	17.63	8.639			
								21.514	1.511
5	S1	0.50		(100.00)					
					25.00	8.750			
6	S1	0.20		(125.00)					
5	S2	0.16		(100.00)					
	S3	0.98			19.79	11.280			
				1.14*25.00					
					19.79				
				1.14+0.30					
6	R1		0.30	(125.00)	5.21		0.781		
								20.030	0.781
6	S1	0.20		(125.00)					
					25.00	14.875			
7	S1	0.99		(150.00)					
6	R1		0.30	(125.00)	4.75		0.713		
				0.30*25.00					
					4.75				
				0.30+1.28					
7	S2	1.28		(150.00)	20.25	12.960			
								27.835	0.713
7	S1	0.99		(150.00)					
	S2	1.28							
					25.00	72.375			
8	S1	3.52		(175.00)					
								72.375	
8	S1	3.52		(175.00)					
					25.00	78.625			
9	S1	2.77		(200.00)					
								78.625	
9	S1	2.77		(200.00)	4.63	6.413			
				2.77*25.00					
					4.63				
				2.77+12.18					
10	R1		12.18	(225.00)	20.37		124.053		
								6.413	124.053
10	R1		12.18	(225.00)					
					25.00		602.875		
11	R1		36.05	(250.00)					
									602.875
11	R1		36.05	(250.00)					
					25.00		971.125		
12	R1		41.64	(275.00)					
									971.125
12	R1		41.64	(275.00)					
					25.00		955.875		
13	R1		34.83	(300.00)					
									955.875
					A RIPORTARE :			365.696	2658.714

N. SEZ.	FIG.	SUPERFICIE STERRO mq	SUPERFICIE RIPORTO mq	PUNTI DI PASSAGGIO (PROGRESSIVA m)	DISTANZA m	VOLUMI PARZIALI STERRO mc	VOLUMI PARZIALI RIPORTO mc	VOLUMI TOTALI STERRO mc	VOLUMI TOTALI RIPORTO mc
					RIPORTO :	0.000		365.696	2658.714
13	R1		34.83	(300.00)					
					25.00		565.000		
14	R1		10.37	(325.00)					
									565.000
14	R1		10.37	(325.00)					
					25.00		239.500		
15	R1		8.79	(350.00)					
									239.500
15	R1		8.79	(350.00)					
					25.00		222.500		
16	R1		8.86	(375.00)					
	R2		0.15						
									222.500
16	R1		8.86	(375.00)					
					25.00		218.000		
17	R1		8.58	(400.00)					
16	R2		0.15	(375.00)	14.42		1.081		
				0.15*25.00					
				———————————	14.42				
				0.15+0.11					
17	S1	0.11		(400.00)	10.58	0.582			
								0.582	219.081
17	R1		8.58	(400.00)					
					25.00		226.375		
18	R1		9.53	(425.00)					
17	S1	0.11		(400.00)	25.00	1.375			
				0.11*25.00					
				———————————	25.00				
				0.11+0.00					
18	R2		0.00	(425.00)	0.00		0.000		
								1.375	226.375
18	R1		9.53	(425.00)					
	R2		0.00						
					25.00		250.625		
19	R1		10.52	(450.00)					
									250.625
19	R1		10.52	(450.00)					
					13.37		150.279		
20	R1		11.96	(463.37)					
									150.279
20	R1		11.96	(463.37)					
					36.63		456.043		
21	R1		12.94	(500.00)					
									456.043
21	R1		12.94	(500.00)					
					25.00		366.375		
22	R1		2.95	(525.00)					
	R2		13.42						
									366.375
22	R1		2.95	(525.00)	24.75		36.506		
				2.95*25.00					
				———————————	24.75				
				2.95+0.03					
23	S1	0.03		(550.00)	0.25	0.004			
22	R2		13.42	(525.00)					
					25.00		195.125		
23	R1		0.22	(550.00)					
	R2		1.97						
								0.004	231.631
23	S1	0.03		(550.00)					
					25.00	2.750			
24	S1	0.19		(575.00)					
23	R1		0.22	(550.00)	13.75		1.512		
				0.22*25.00					
				———————————	13.75				
				0.22+0.18					
24	S2	0.18		(575.00)	11.25	1.012			
23	R2		1.97	(550.00)					
					25.00		36.000		
24	R1		0.18	(575.00)					
	R2		0.04						
	R3		0.69						
								3.762	37.512
24	S1	0.19		(575.00)					
	S2	0.18							
					25.00	12.375			
25	S1	0.62		(600.00)					
24	R1		0.18	(575.00)	15.00		1.350		
					A RIPORTARE :	12.375	1.350	371.419	5623.635

N. SEZ.	FIG.	SUPERFICIE STERRO mq	SUPERFICIE RIPORTO mq	PUNTI DI PASSAGGIO (PROGRESSIVA m)	DISTANZA m	VOLUMI PARZIALI STERRO mc	VOLUMI PARZIALI RIPORTO mc	VOLUMI TOTALI STERRO mc	VOLUMI TOTALI RIPORTO mc
				RIPORTO :		12.375	1.350	371.419	5623.635
				0.18*25.00					
					15.00				
				0.18+0.12					
25	S2	0.12		(600.00)	10.00	0.600			
24	R2		0.04	(575.00)					
					25.00		0.500		
25	R0		0.00	(600.00)					
24	R3		0.69	(575.00)					
					25.00		11.500		
25	R1		0.23	(600.00)					
								12.975	13.350
25	S1	0.62		(600.00)					
	S2	0.12							
					25.00	28.875			
26	S1	1.57		(625.00)					
25	R1		0.23	(600.00)	13.69		1.574		
				0.23*25.00					
					13.69				
				0.23+0.19					
26	S3	0.17		(625.00)					
	S4	0.02			11.31	1.074			
25	S0	0.00		(600.00)					
					25.00	0.375			
26	S2	0.03		(625.00)					
								30.324	1.574
26	S1	1.57		(625.00)					
	S2	0.03							
	S3	0.17							
					25.00	26.125			
27	S1	0.04		(650.00)					
	S2	0.28							
26	S4	0.02		(625.00)	5.00	0.050			
				0.02*25.00					
					5.00				
				0.02+0.08					
27	R1		0.08	(650.00)	20.00		0.800		
								26.175	0.800
27	S1	0.04		(650.00)					
					25.00	21.125			
28	S1	1.65		(675.00)					
27	S2	0.28		(650.00)	2.06	0.288			
				0.28*25.00					
					2.06				
				0.28+3.11					
28	R1		0.29	(675.00)					
	R2		2.82		22.94		35.672		
27	R1		0.08	(650.00)					
					25.00		51.250		
28	R3		4.02	(675.00)					
								21.413	86.922
28	S1	1.65		(675.00)					
					25.00	73.375			
29	S1	4.22		(700.00)					
28	R1		0.29	(675.00)	10.36		1.502		
				0.29*25.00					
					10.36				
				0.29+0.41					
29	S2	0.41		(700.00)	14.64	3.001			
28	R2		2.82	(675.00)					
	R3		4.02						
					25.00		170.500		
29	R1		0.43	(700.00)					
	R2		6.37						
								76.376	172.002
29	S1	4.22		(700.00)					
	S2	0.41							
					25.00	137.875			
30	S1	6.19		(725.00)					
	S2	0.21							
29	R1		0.43	(700.00)	14.53		3.124		
				0.43*25.00					
					14.53				
				0.43+0.31					
30	S3	0.31		(725.00)	10.47	1.623			
29	R2		6.37	(700.00)					
					25.00		123.375		
30	R1		3.50	(725.00)					
								139.498	126.499
30	S1	6.19		(725.00)					
					25.00	144.875			
31	S1	5.35		(750.00)					
	S2	0.05							
30	S2	0.21		(725.00)					
	S3	0.31			13.00	3.380			
				A RIPORTARE :		148.255		678.180	6024.782

N. SEZ.	FIG.	SUPERFICIE STERRO mq	SUPERFICIE RIPORTO mq	PUNTI DI PASSAGGIO (PROGRESSIVA m)	DISTANZA m	VOLUMI PARZIALI STERRO mc	VOLUMI PARZIALI RIPORTO mc	VOLUMI TOTALI STERRO mc	VOLUMI TOTALI RIPORTO mc
				RIPORTO :		148.255		678.180	6024.782
				0.52*25.00					
					13.00				
				0.52+0.48					
31	R1		0.48	(750.00)	12.00		2.880		
30	R1		3.50	(725.00)					
					25.00		91.625		
31	R2		3.83	(750.00)					
								148.255	94.505
31	S1	5.35		(750.00)					
					25.00	94.750			
32	S1	2.20		(775.00)					
	S2	0.03							
31	S2	0.05		(750.00)	20.83	0.521			
				0.05*25.00					
					20.83				
				0.05+0.01					
32	R1		0.01	(775.00)	4.17		0.021		
31	R1		0.48	(750.00)					
	R2		3.83						
					25.00		91.125		
32	R2		2.98	(775.00)					
								95.271	91.146
32	S1	2.20		(775.00)					
					25.00	52.000			
33	S1	1.96		(800.00)					
32	S2	0.03		(775.00)	9.38	0.141			
				0.03*25.00					
					9.38				
				0.03+0.05					
33	R1		0.01	(800.00)					
	R2		0.04		15.62		0.391		
32	R1		0.01	(775.00)					
	R2		2.98						
					25.00		91.875		
33	R3		4.36	(800.00)					
								52.141	92.266
33	S1	1.96		(800.00)					
					25.00	46.375			
34	S1	1.75		(825.00)					
33	R1		0.01	(800.00)	8.33		0.042		
				0.01*25.00					
					8.33				
				0.01+0.02					
34	S2	0.01		(825.00)					
	S3	0.01			16.67	0.167			
33	R2		0.04	(800.00)					
	R3		4.36						
					25.00		116.250		
34	R1		4.90	(825.00)					
								46.542	116.292
34	S1	1.75		(825.00)					
	S2	0.01							
					4.37	9.177			
35	S1	2.44		(829.37)					
34	S3	0.01		(825.00)	4.37	0.022			
				0.01*4.37					
					4.37				
				0.01+0.00					
35	R1		0.00	(829.37)	0.00		0.000		
34	R1		4.90	(825.00)					
					4.37		22.134		
35	R2		5.23	(829.37)					
								9.199	22.134

Il Direttore dei Lavori	L'Impresa	Totale Articoli .....:	1029.588	6441.125
		A dedurre quantita' precedenti:		
		Quantita' da contabilizzare ..:		

BONIFICA

N. SEZIONE PROG.	FIG.	ELEMENTI DI CALCOLO	AREA ELEMENTARE mq	AREA FIGURA mq	NOTE
24 575.00	BO1	(0.24-0.22)x(1.73+1.74)/2	0.03		
		(0.28-0.24)x(1.75+1.73)/2	0.07		
		(0.56-0.28)x(1.76+1.75)/2	0.49		
		(0.57-0.56)x(1.76+1.76)/2	0.02		
		(0.58-0.57)x(1.75+1.76)/2	0.02		
		(0.66-0.58)x(1.75+1.75)/2	0.14		
		(1.65-0.66)x(1.75+1.75)/2	1.73		
		(2.28-1.65)x(1.72+1.75)/2	1.09		
		(2.75-2.28)x(1.70+1.72)/2	0.80		
		(2.96-2.75)x(1.68+1.70)/2	0.35		
		(3.50-2.96)x(1.52+1.68)/2	0.86		
		(3.51-3.50)x(1.52+1.52)/2	0.02		
		(3.61-3.51)x(1.45+1.52)/2	0.15		
		(3.62-3.61)x(1.47+1.45)/2	0.01		
		(3.64-3.62)x(1.45+1.45)/2	0.03		
		(3.79-3.64)x(1.50+1.45)/2	0.22		
		(3.85-3.79)x(1.49+1.50)/2	0.09		
		(4.07-3.85)x(1.33+1.49)/2	0.31		
		(4.95-4.07)x(0.77+1.33)/2	0.92		
		(5.17-4.95)x(0.62+0.77)/2	0.15		
		(5.42-5.17)x(0.24+0.62)/2	0.11		
		(5.43-5.42)x(0.24+0.24)/2	0.00		
		(5.48-5.43)x(0.09+0.24)/2	0.01		
		(5.50-5.48)x(0.06+0.09)/2	0.00		
		(5.51-5.50)x(0.03+0.05)/2	0.00		
		(5.52-5.51)x(0.08+0.03)/2	0.00		
		(5.64-5.52)x(0.23+0.30)/2	0.03		
		(6.05-5.64)x(-0.02+0.23)/2	0.04		
		(6.34-6.05)x(-0.07+-0.02)/2	-0.01		
		(5.62-6.34)x(-0.57+-0.57)/2	0.41		
		(5.52-5.62)x(-0.26+-0.26)/2	0.03		
		(5.43-5.52)x(-0.26+-0.26)/2	0.02		
		(5.42-5.43)x(-0.26+-0.26)/2	0.00		
		(5.00-5.42)x(-0.26+-0.26)/2	0.11		
		(4.22-5.00)x(0.24+0.24)/2	-0.19		
		(2.01-4.22)x(0.74+0.74)/2	-1.64		
		(0.25-2.01)x(1.24+1.24)/2	-2.18		
		(0.22-0.25)x(1.24+1.24)/2	-0.04		
				4.20	
25 600.00	BO1	(1.32-0.78)x(1.91+1.92)/2	1.03		
		(1.88-1.32)x(1.90+1.91)/2	1.07		
		(2.77-1.88)x(1.81+1.90)/2	1.65		
		(2.98-2.77)x(1.79+1.81)/2	0.38		
		(3.28-2.98)x(1.76+1.79)/2	0.53		
		(3.33-3.28)x(1.74+1.76)/2	0.09		
		(3.43-3.33)x(1.79+1.74)/2	0.18		
		(3.45-3.43)x(1.75+1.79)/2	0.04		
		(3.48-3.45)x(1.59+1.74)/2	0.05		
		(3.49-3.48)x(1.56+1.59)/2	0.02		
		(3.50-3.49)x(1.59+1.56)/2	0.02		
		(3.54-3.50)x(1.68+1.59)/2	0.07		
		(3.55-3.54)x(1.69+1.68)/2	0.02		
		(3.60-3.55)x(1.66+1.69)/2	0.08		
		(3.86-3.60)x(1.59+1.66)/2	0.42		
		(4.08-3.86)x(1.47+1.59)/2	0.34		
		(4.90-4.08)x(0.85+1.47)/2	0.95		
		(5.18-4.90)x(0.65+0.85)/2	0.21		
		(5.25-5.18)x(0.59+0.65)/2	0.04		
		(5.55-5.25)x(0.30+0.59)/2	0.13		
		(5.62-5.55)x(0.26+0.30)/2	0.02		
		(5.79-5.62)x(0.02+0.25)/2	0.02		
		(5.80-5.79)x(0.15+0.10)/2	0.00		
		(5.81-5.80)x(0.23+0.12)/2	0.00		
		(5.87-5.81)x(0.17+0.23)/2	0.01		
		(6.17-5.87)x(0.06+0.17)/2	0.03		
		(6.28-6.17)x(0.02+0.06)/2	0.00		
		(5.42-6.28)x(-0.48+-0.48)/2	0.41		
		(4.81-5.42)x(-0.08+-0.08)/2	0.05		
		(4.14-4.81)x(0.42+0.42)/2	-0.28		
		(0.78-4.14)x(0.92+0.92)/2	-3.09		
				4.49	
28 675.00	BO1	(-3.36--3.70)x(1.98+2.10)/2	0.69		
		(-2.94--3.36)x(1.83+1.98)/2	0.80		
		(-2.27--2.94)x(1.66+1.83)/2	1.17		
		(-1.84--2.27)x(1.55+1.66)/2	0.69		
		(-1.57--1.84)x(1.46+1.55)/2	0.41		
		(-0.74--1.57)x(1.22+1.46)/2	1.11		
		(-0.53--0.74)x(1.15+1.22)/2	0.25		
		(-0.26--0.53)x(1.11+1.15)/2	0.31		
		(-0.23--0.26)x(1.22+1.11)/2	0.03		
		(-0.10--0.23)x(1.58+1.22)/2	0.18		
		(-0.09--0.10)x(1.76+1.58)/2	0.02		
		(-0.08--0.09)x(1.54+1.76)/2	0.02		
		(-0.03--0.08)x(1.32+1.54)/2	0.07		
		(0.06--0.03)x(1.08+1.32)/2	0.11		
		(0.36-0.06)x(0.87+1.08)/2	0.29		
		(0.57-0.36)x(0.80+0.87)/2	0.18		
		(1.46-0.57)x(0.53+0.80)/2	0.59		
		(2.02-1.46)x(0.35+0.53)/2	0.25		
		(2.56-2.02)x(0.16+0.35)/2	0.14		
		(2.80-2.56)x(0.07+0.16)/2	0.03		
		(3.16-2.80)x(-0.08+0.07)/2	-0.00		
		(3.31-3.16)x(-0.10+-0.08)/2	-0.01		
		(3.34-3.31)x(-0.12+-0.10)/2	-0.00		
		(3.35-3.34)x(-0.12+-0.12)/2	-0.00		
		(3.36-3.35)x(-0.22+-0.12)/2	-0.00		
		(3.43-3.36)x(-0.15+-0.19)/2	-0.01		
		(3.63-3.43)x(-0.13+-0.15)/2	-0.03		
		(3.66-3.63)x(-0.13+-0.13)/2	-0.00		
		(3.81-3.66)x(-0.13+-0.13)/2	-0.02		
		(4.51-3.81)x(-0.12+-0.13)/2	-0.09		
		(2.71-4.51)x(-0.62+-0.62)/2	1.12		
		(1.24-2.71)x(-0.40+-0.40)/2	0.59		
		(0.05-1.24)x(0.10+0.10)/2	-0.12		
		(-0.08-0.05)x(0.60+0.60)/2	-0.08		
		(-0.10--0.08)x(1.10+1.10)/2	-0.02		
		(-2.05--0.10)x(1.10+1.10)/2	-2.15		
		A RIPORTARE mq	6.52		

BONIFICA

N. SEZIONE PROG.	FIG.	ELEMENTI DI CALCOLO	AREA ELEMENTARE mq	AREA FIGURA mq	NOTE
		RIPORTO mq	6.52		
		(-3.70--2.05)x(1.10+1.10)/2	-1.82		
				4.70	
29	BO1	(-1.61--2.08)x(1.80+2.00)/2	0.89		
700.00		(-0.73--1.61)x(1.37+1.80)/2	1.39		
		(-0.51--0.73)x(1.26+1.37)/2	0.29		
		(-0.16--0.51)x(1.10+1.26)/2	0.41		
		(0.59--0.16)x(0.77+1.10)/2	0.70		
		(1.06-0.59)x(0.56+0.77)/2	0.31		
		(1.69-1.06)x(0.24+0.56)/2	0.25		
		(2.68-1.69)x(-0.09+0.24)/2	0.07		
		(2.79-2.68)x(-0.12+-0.09)/2	-0.01		
		(3.23-2.79)x(-0.11+-0.12)/2	-0.05		
		(3.34-3.23)x(-0.09+-0.11)/2	-0.01		
		(3.37-3.34)x(-0.09+-0.09)/2	-0.00		
		(3.38-3.37)x(-0.21+-0.09)/2	-0.00		
		(3.39-3.38)x(0.04+-0.21)/2	-0.00		
		(3.42-3.39)x(0.19+0.04)/2	0.00		
		(3.44-3.42)x(0.01+0.19)/2	0.00		
		(3.48-3.44)x(-0.03+0.01)/2	-0.00		
		(3.53-3.48)x(-0.12+-0.03)/2	-0.00		
		(3.69-3.53)x(-0.11+-0.12)/2	-0.02		
		(3.89-3.69)x(-0.12+-0.11)/2	-0.02		
		(4.11-3.89)x(-0.11+-0.12)/2	-0.03		
		(3.45-4.11)x(-0.61+-0.61)/2	0.40		
		(3.39-3.45)x(-0.50+-0.50)/2	0.03		
		(2.40-3.39)x(-0.50+-0.50)/2	0.50		
		(1.16-2.40)x(-0.50+-0.50)/2	0.62		
		(-1.01-0.06)x(0.50+0.50)/2	-0.54		
		(-2.08--1.01)x(1.00+1.00)/2	-1.07		
				4.11	
30	BO1	(-0.28--0.59)x(1.83+1.93)/2	0.58		
725.00		(0.10--0.28)x(1.68+1.83)/2	0.67		
		(0.81-0.10)x(1.41+1.68)/2	1.10		
		(1.89-0.81)x(0.83+1.41)/2	1.21		
		(1.91-1.89)x(0.82+0.83)/2	0.02		
		(1.95-1.91)x(0.80+0.82)/2	0.03		
		(3.01-1.95)x(0.32+0.80)/2	0.59		
		(3.30-3.01)x(0.24+0.32)/2	0.08		
		(3.65-3.30)x(-0.07+0.24)/2	0.03		
		(3.76-3.65)x(-0.15+-0.06)/2	-0.01		
		(3.79-3.76)x(-0.20+-0.15)/2	-0.01		
		(3.81-3.79)x(0.01+-0.20)/2	-0.00		
		(3.87-3.81)x(0.03+0.01)/2	0.00		
		(3.80-3.87)x(-0.57+-0.57)/2	0.04		
		(3.66-3.80)x(-0.57+-0.57)/2	0.08		
		(3.65-3.66)x(-0.57+-0.57)/2	0.01		
		(2.77-3.65)x(-0.57+-0.57)/2	0.50		
		(1.69-2.77)x(-0.07+-0.07)/2	0.08		
		(0.75-1.69)x(0.43+0.43)/2	-0.40		
		(-0.59-0.75)x(0.93+0.93)/2	-1.25		
				3.35	
31	BO1	(-2.26--2.39)x(1.86+1.98)/2	0.25		
750.00		(-1.62--2.26)x(1.66+1.86)/2	1.13		
		(-1.16--1.62)x(1.56+1.66)/2	0.74		
		(-0.86--1.16)x(1.50+1.56)/2	0.46		
		(-0.06--0.86)x(1.36+1.50)/2	1.14		
		(0.93--0.06)x(1.04+1.36)/2	1.19		
		(1.04-0.93)x(1.01+1.04)/2	0.11		
		(1.22-1.04)x(0.95+1.01)/2	0.18		
		(2.14-1.22)x(0.66+0.95)/2	0.74		
		(2.72-2.14)x(0.53+0.66)/2	0.35		
		(3.24-2.72)x(0.39+0.53)/2	0.24		
		(3.34-3.24)x(0.37+0.39)/2	0.04		
		(2.90-3.34)x(-0.13+-0.13)/2	0.06		
		(1.12-2.90)x(-0.02+-0.02)/2	0.04		
		(-0.75-1.12)x(0.48+0.48)/2	-0.90		
		(-2.39--0.75)x(0.98+0.98)/2	-1.61		
				4.16	
32	BO1	(1.76-1.27)x(1.20+1.43)/2	0.64		
775.00		(2.37-1.76)x(0.95+1.20)/2	0.66		
		(3.33-2.37)x(0.55+0.95)/2	0.72		
		(3.47-3.33)x(0.50+0.55)/2	0.07		
		(3.48-3.47)x(0.48+0.50)/2	0.00		
		(4.20-3.48)x(-0.04+0.48)/2	0.16		
		(4.38-4.20)x(-0.21+-0.04)/2	-0.02		
		(4.39-4.38)x(0.03+-0.21)/2	-0.00		
		(4.57-4.39)x(0.13+0.03)/2	0.01		
		(4.95-4.57)x(0.10+0.13)/2	0.04		
		(4.39-4.95)x(-0.57+-0.57)/2	0.32		
		(4.24-4.39)x(-0.57+-0.57)/2	0.09		
		(3.55-4.24)x(-0.57+-0.57)/2	0.39		
		(2.42-3.55)x(-0.07+-0.07)/2	0.08		
		(1.27-2.42)x(0.43+0.43)/2	-0.49		
				2.67	
33	BO1	(-0.99--1.80)x(1.27+1.32)/2	1.05		
800.00		(-0.70--0.99)x(1.23+1.27)/2	0.36		
		(-0.24--0.70)x(1.23+1.23)/2	0.57		
		(0.40--0.24)x(1.20+1.23)/2	0.78		
		(0.80-0.40)x(1.09+1.20)/2	0.46		
		(1.50-0.80)x(1.01+1.09)/2	0.73		
		(2.59-1.50)x(0.71+1.01)/2	0.94		
		(2.60-2.59)x(0.70+0.70)/2	0.01		
		(2.88-2.60)x(0.64+0.70)/2	0.19		
		(2.19-2.88)x(0.14+0.14)/2	-0.10		
		(-1.80-2.19)x(0.32+0.32)/2	-1.28		
				3.71	
34	BO1	(-1.58--1.89)x(1.33+1.46)/2	0.43		
825.00		(-0.97--1.58)x(1.20+1.33)/2	0.77		
		(-0.48--0.97)x(1.13+1.20)/2	0.57		
		(-0.16--0.48)x(1.11+1.13)/2	0.36		
		(0.62--0.16)x(1.06+1.11)/2	0.85		
		(1.63-0.62)x(0.82+1.06)/2	0.95		
		(1.72-1.63)x(0.81+0.82)/2	0.07		
		(1.87-1.72)x(0.76+0.81)/2	0.12		
		(2.82-1.87)x(0.50+0.76)/2	0.60		
		A RIPORTARE mq	4.72		

BONIFICA

N. SEZIONE PROG.	FIG.	ELEMENTI DI CALCOLO	AREA ELEMENTARE mq	AREA FIGURA mq	NOTE
		RIPORTO mq	4.72		
		(3.21-2.82)x(0.40+0.50)/2	0.18		
		(2.99-3.21)x(-0.10+-0.10)/2	0.02		
		(1.04-2.99)x(-0.04+-0.04)/2	0.08		
		(-1.89-1.04)x(0.46+0.46)/2	-1.35		
				3.65	
35	BO1	(-1.04--1.07)x(1.17+1.17)/2	0.04		
829.37		(0.03--1.04)x(1.12+1.17)/2	1.23		
		(0.71-0.03)x(0.95+1.12)/2	0.70		
		(1.13-0.71)x(0.85+0.95)/2	0.38		
		(1.80-1.13)x(0.66+0.85)/2	0.51		
		(2.23-1.80)x(0.56+0.66)/2	0.26		
		(2.50-2.23)x(0.49+0.56)/2	0.14		
		(3.33-2.50)x(0.28+0.49)/2	0.32		
		(3.40-3.33)x(0.28+0.28)/2	0.02		
		(1.74-3.40)x(-0.22+-0.22)/2	0.37		
		(-1.07-1.74)x(0.17+0.17)/2	-0.48		
				3.49	

Il Direttore dei Lavori | L'Impresa

VEGETALE

N. SEZIONE PROG.	FIG.	ELEMENTI DI CALCOLO	LUNGHEZZA ELEMENTARE ml	LUNGHEZZA FIGURA ml	NOTE
1	b1	(-5.03--5.00)	0.03		
0.00		(-5.50--5.03)	0.47		
		(-5.60--5.50)	0.10		
				0.60	
1	b2	(1.53-1.50)	0.03		
0.00		(2.00-1.53)	0.47		
		(2.05-2.00)	0.05		
				0.55	
2	b1	(-5.03--5.00)	0.03		
25.00		(-5.50--5.03)	0.47		
		(-5.51--5.50)	0.01		
				0.51	
2	b2	(1.53-1.50)	0.03		
25.00		(2.00-1.53)	0.47		
		(2.08-2.00)	0.08		
				0.58	
3	b1	(-5.03--5.00)	0.03		
50.00		(-5.50--5.03)	0.47		
		(-5.52--5.50)	0.02		
				0.52	
3	b2	(1.53-1.50)	0.03		
50.00		(2.00-1.53)	0.47		
		(2.11-2.00)	0.11		
				0.61	
4	b2	(-5.03--5.00)	0.03		
75.00		(-5.50--5.03)	0.47		
		(-5.71--5.50)	0.21		
				0.71	
4	b1	(1.53-1.50)	0.03		
75.00		(2.00-1.53)	0.47		
		(2.42-2.00)	0.42		
				0.92	
5	b1	(-5.03--5.00)	0.03		
100.00		(-5.50--5.03)	0.47		
		(-5.75--5.50)	0.25		
				0.75	
5	b2	(1.53-1.50)	0.03		
100.00		(2.00-1.53)	0.47		
		(2.02-2.00)	0.02		
				0.52	
6	b2	(-5.03--5.00)	0.03		
125.00		(-5.50--5.03)	0.47		
		(-5.70--5.50)	0.20		
				0.70	
6	b1	(1.53-1.50)	0.03		
125.00		(2.00-1.53)	0.47		
		(2.78-2.00)	0.78		
				1.28	
7	b1	(-5.03--5.00)	0.03		
150.00		(-5.50--5.03)	0.47		
		(-5.56--5.50)	0.06		
				0.56	
7	b2	(1.53-1.50)	0.03		
150.00		(2.00-1.53)	0.47		
		(2.01-2.00)	0.01		
				0.51	
8	b1	(-5.03--5.00)	0.03		
175.00		(-5.50--5.03)	0.47		
		(-5.67--5.50)	0.17		
				0.67	
8	b2	(1.53-1.50)	0.03		
175.00		(2.00-1.53)	0.47		
		(2.20-2.00)	0.20		
				0.70	
9	b1	(-5.03--5.00)	0.03		
200.00		(-5.50--5.03)	0.47		
		(-5.56--5.50)	0.06		
				0.56	
9	b2	(1.53-1.50)	0.03		
200.00		(2.00-1.53)	0.47		
		(2.19-2.00)	0.19		
				0.69	
10	b2	(-5.03--5.00)	0.03		
225.00		(-5.50--5.03)	0.47		
		(-7.94--5.50)	2.44		
				2.94	
10	b1	(1.53-1.50)	0.03		
225.00		(2.00-1.53)	0.47		
		(4.12-2.00)	2.12		
				2.62	
11	b2	(-5.03--5.00)	0.03		
250.00		(-5.50--5.03)	0.47		
		(-9.95--5.50)	4.45		
				4.95	
11	b1	(1.53-1.50)	0.03		
250.00		(2.00-1.53)	0.47		
		(7.34-2.00)	5.34		
				5.84	
12	b2	(-5.03--5.00)	0.03		
275.00		(-5.50--5.03)	0.47		
		(-13.27--5.50)	7.77		
				8.27	
12	b1	(1.53-1.50)	0.03		
275.00		(2.00-1.53)	0.47		
		(7.36-2.00)	5.36		
				5.86	
13	b1	(-5.03--5.00)	0.03		
300.00		(-5.50--5.03)	0.47		
		(-12.33--5.50)	6.83		
				7.33	
13	b2	(1.53-1.50)	0.03		
300.00		(2.00-1.53)	0.47		
		(5.62-2.00)	3.62		
				4.12	
14	b2	(-5.03--5.00)	0.03		
325.00		(-5.50--5.03)	0.47		
		(-9.51--5.50)	4.01		
		A RIPORTARE ml	4.51		

VEGETALE

N. SEZIONE PROG.	FIG.	ELEMENTI DI CALCOLO	LUNGHEZZA ELEMENTARE ml	LUNGHEZZA FIGURA ml	NOTE
		RIPORTO ml	4.51		
				4.51	
14	b1	(1.53-1.50)	0.03		
325.00		(2.00-1.53)	0.47		
		(2.64-2.00)	0.64		
				1.14	
15	b2	(-5.03--5.00)	0.03		
350.00		(-5.50--5.03)	0.47		
		(-9.14--5.50)	3.64		
				4.14	
15	b1	(1.53-1.50)	0.03		
350.00		(2.00-1.53)	0.47		
		(2.53-2.00)	0.53		
				1.03	
16	b2	(-5.03--5.00)	0.03		
375.00		(-5.50--5.03)	0.47		
		(-9.08--5.50)	3.58		
				4.08	
16	b1	(1.53-1.50)	0.03		
375.00		(2.00-1.53)	0.47		
		(2.14-2.00)	0.14		
				0.64	
17	b2	(-5.03--5.00)	0.03		
400.00		(-5.50--5.03)	0.47		
		(-8.98--5.50)	3.48		
				3.98	
17	b1	(1.53-1.50)	0.03		
400.00		(2.00-1.53)	0.47		
		(2.28-2.00)	0.28		
				0.78	
18	b2	(-5.03--5.00)	0.03		
425.00		(-5.50--5.03)	0.47		
		(-8.96--5.50)	3.46		
				3.96	
18	b1	(1.53-1.50)	0.03		
425.00		(2.00-1.53)	0.47		
		(2.31-2.00)	0.31		
				0.81	
19	b2	(-5.03--5.00)	0.03		
450.00		(-5.50--5.03)	0.47		
		(-8.92--5.50)	3.42		
				3.92	
19	b1	(1.53-1.50)	0.03		
450.00		(2.00-1.53)	0.47		
		(2.28-2.00)	0.28		
				0.78	
20	b2	(-5.03--5.00)	0.03		
463.37		(-5.50--5.03)	0.47		
		(-8.90--5.50)	3.40		
				3.90	
20	b1	(1.53-1.50)	0.03		
463.37		(2.00-1.53)	0.47		
		(2.51-2.00)	0.51		
				1.01	
21	b2	(-5.03--5.00)	0.03		
500.00		(-5.50--5.03)	0.47		
		(-8.63--5.50)	3.13		
				3.63	
21	b1	(1.53-1.50)	0.03		
500.00		(2.00-1.53)	0.47		
		(2.30-2.00)	0.30		
				0.80	
22	b2	(-5.03--5.00)	0.03		
525.00		(-5.50--5.03)	0.47		
		(-7.02--5.50)	1.52		
				2.02	
22	b1	(1.53-1.50)	0.03		
525.00		(2.00-1.53)	0.47		
		(3.44-2.00)	1.44		
				1.94	
23	b1	(-5.03--5.00)	0.03		
550.00		(-5.50--5.03)	0.47		
		(-5.73--5.50)	0.23		
				0.73	
23	b3	(-2.53--2.50)	0.03		
550.00		(-3.00--2.53)	0.47		
		(-3.52--3.00)	0.52		
		(-6.21--3.52)	2.69		
		(-7.21--6.21)	1.00		
				4.71	
23	b2	(1.53-1.50)	0.03		
550.00		(2.00-1.53)	0.47		
		(5.42-2.00)	3.42		
				3.92	
23	b4	(1.00-13.91)	12.91		
550.00		(0.53-1.00)	0.47		
		(0.50-0.53)	0.03		
				13.41	
24	b2	(-5.03--5.00)	0.03		
575.00		(-5.50--5.03)	0.47		
		(-5.54--5.50)	0.04		
				0.54	
24	b1	(1.53-1.50)	0.03		
575.00		(2.00-1.53)	0.47		
		(2.93-2.00)	0.93		
				1.43	
25	b2	(-5.03--5.00)	0.03		
600.00		(-5.50--5.03)	0.47		
		(-5.51--5.50)	0.01		
				0.51	
25	b1	(1.53-1.50)	0.03		
600.00		(2.00-1.53)	0.47		
		(2.70-2.00)	0.70		
				1.20	
26	b2	(-5.03--5.00)	0.03		
625.00		(-5.50--5.03)	0.47		
		A RIPORTARE ml	0.50		

VEGETALE

N. SEZIONE PROG.	FIG.	ELEMENTI DI CALCOLO	LUNGHEZZA ELEMENTARE ml	LUNGHEZZA FIGURA ml	NOTE
		RIPORTO ml	0.50		
		(-5.64--5.50)	0.14		
				0.64	
26	b1	(1.53-1.50)	0.03		
625.00		(2.00-1.53)	0.47		
		(2.48-2.00)	0.48		
				0.98	
27	b2	(-5.03--5.00)	0.03		
650.00		(-5.50--5.03)	0.47		
		(-5.87--5.50)	0.37		
				0.87	
27	b1	(1.53-1.50)	0.03		
650.00		(2.00-1.53)	0.47		
		(3.15-2.00)	1.15		
				1.65	
28	b2	(-5.03--5.00)	0.03		
675.00		(-5.50--5.03)	0.47		
		(-6.87--5.50)	1.37		
				1.87	
28	b1	(1.53-1.50)	0.03		
675.00		(2.00-1.53)	0.47		
		(5.53-2.00)	3.53		
				4.03	
29	b2	(-5.03--5.00)	0.03		
700.00		(-5.50--5.03)	0.47		
		(-8.28--5.50)	2.78		
				3.28	
29	b1	(1.53-1.50)	0.03		
700.00		(2.00-1.53)	0.47		
		(5.45-2.00)	3.45		
				3.95	
30	b1	(-5.03--5.00)	0.03		
725.00		(-5.50--5.03)	0.47		
		(-7.53--5.50)	2.03		
				2.53	
30	b2	(1.53-1.50)	0.03		
725.00		(2.00-1.53)	0.47		
		(5.17-2.00)	3.17		
				3.67	
31	b2	(-5.03--5.00)	0.03		
750.00		(-5.50--5.03)	0.47		
		(-7.67--5.50)	2.17		
				2.67	
31	b1	(1.53-1.50)	0.03		
750.00		(2.00-1.53)	0.47		
		(4.78-2.00)	2.78		
				3.28	
32	b2	(-5.03--5.00)	0.03		
775.00		(-5.50--5.03)	0.47		
		(-6.85--5.50)	1.35		
				1.85	
32	b1	(1.53-1.50)	0.03		
775.00		(2.00-1.53)	0.47		
		(5.11-2.00)	3.11		
				3.61	
33	b2	(-5.03--5.00)	0.03		
800.00		(-5.50--5.03)	0.47		
		(-6.56--5.50)	1.06		
				1.56	
33	b1	(1.53-1.50)	0.03		
800.00		(2.00-1.53)	0.47		
		(4.49-2.00)	2.49		
				2.99	
34	b2	(-5.03--5.00)	0.03		
825.00		(-5.50--5.03)	0.47		
		(-6.61--5.50)	1.11		
				1.61	
34	b1	(1.53-1.50)	0.03		
825.00		(2.00-1.53)	0.47		
		(4.93-2.00)	2.93		
				3.43	
35	b2	(-5.03--5.00)	0.03		
829.37		(-5.50--5.03)	0.47		
		(-6.97--5.50)	1.47		
				1.97	
35	b1	(1.53-1.50)	0.03		
829.37		(2.00-1.53)	0.47		
		(4.97-2.00)	2.97		
				3.47	

Il Direttore dei Lavori | L'Impresa

BONIFICA

DALLA SEZ. DA PROG.	ALLA SEZ. A PROG.	SEZIONE	FIGURA	AREA	DISTANZA SEZIONI m	DISTANZA DI CALCOLO m	VOLUME PARZIALE mc	VOLUME TOTALE mc
23	24	24	BO1	4.20	25.00	12.50	52.500	
								52.500
24	25	24	BO1	4.20	25.00	12.50	52.500	
575.00	600.00	25	BO1	4.49	25.00	12.50	56.125	
								108.625
25	26	25	BO1	4.49	25.00	12.50	56.125	
								56.125
27	28	28	BO1	4.70	25.00	12.50	58.750	
								58.750
28	29	28	BO1	4.70	25.00	12.50	58.750	
675.00	700.00	29	BO1	4.11	25.00	12.50	51.375	
								110.125
29	30	29	BO1	4.11	25.00	12.50	51.375	
700.00	725.00	30	BO1	3.35	25.00	12.50	41.875	
								93.250
30	31	30	BO1	3.35	25.00	12.50	41.875	
725.00	750.00	31	BO1	4.16	25.00	12.50	52.000	
								93.875
31	32	31	BO1	4.16	25.00	12.50	52.000	
750.00	775.00	32	BO1	2.67	25.00	12.50	33.375	
								85.375
32	33	32	BO1	2.67	25.00	12.50	33.375	
775.00	800.00	33	BO1	3.71	25.00	12.50	46.375	
								79.750
33	34	33	BO1	3.71	25.00	12.50	46.375	
800.00	825.00	34	BO1	3.65	25.00	12.50	45.625	
								92.000
34	35	34	BO1	3.65	4.37	2.19	7.994	
825.00	829.37	35	BO1	3.49	4.37	2.19	7.643	
								15.637

Il Direttore dei Lavori	L'Impresa	TOTALE ARTICOLO	846.012

VEGETALE

DALLA SEZ. DA PROG.	ALLA SEZ. A PROG.	SEZIONE	FIGURA	LUNGHEZZA	DISTANZA SEZIONI ml	DISTANZA DI CALCOLO ml	AREA PARZIALE mq	AREA TOTALE mq
1	2	1	b1	0.60	25.00	12.50	7.50	
0.00	25.00	1	b2	0.55	25.00	12.50	6.88	
		2	b1	0.51	25.00	12.50	6.38	
		2	b2	0.58	25.00	12.50	7.25	
								28.01
2	3	2	b1	0.51	25.00	12.50	6.38	
25.00	50.00	2	b2	0.58	25.00	12.50	7.25	
		3	b1	0.52	25.00	12.50	6.50	
		3	b2	0.61	25.00	12.50	7.63	
								27.76
3	4	3	b1	0.52	25.00	12.50	6.50	
50.00	75.00	3	b2	0.61	25.00	12.50	7.63	
		4	b2	0.71	25.00	12.50	8.88	
		4	b1	0.92	25.00	12.50	11.50	
								34.51
4	5	4	b2	0.71	25.00	12.50	8.88	
75.00	100.00	4	b1	0.92	25.00	12.50	11.50	
		5	b1	0.75	25.00	12.50	9.38	
		5	b2	0.52	25.00	12.50	6.50	
								36.26
5	6	5	b1	0.75	25.00	12.50	9.38	
100.00	125.00	5	b2	0.52	25.00	12.50	6.50	
		6	b2	0.70	25.00	12.50	8.75	
		6	b1	1.28	25.00	12.50	16.00	
								40.63
6	7	6	b2	0.70	25.00	12.50	8.75	
125.00	150.00	6	b1	1.28	25.00	12.50	16.00	
		7	b1	0.56	25.00	12.50	7.00	
		7	b2	0.51	25.00	12.50	6.38	
								38.13
7	8	7	b1	0.56	25.00	12.50	7.00	
150.00	175.00	7	b2	0.51	25.00	12.50	6.38	
		8	b1	0.67	25.00	12.50	8.38	
		8	b2	0.70	25.00	12.50	8.75	
								30.51
8	9	8	b1	0.67	25.00	12.50	8.38	
175.00	200.00	8	b2	0.70	25.00	12.50	8.75	
		9	b1	0.56	25.00	12.50	7.00	
		9	b2	0.69	25.00	12.50	8.63	
								32.76
9	10	9	b1	0.56	25.00	12.50	7.00	
200.00	225.00	9	b2	0.69	25.00	12.50	8.63	
		10	b2	2.94	25.00	12.50	36.75	
		10	b1	2.62	25.00	12.50	32.75	
								85.13
10	11	10	b2	2.94	25.00	12.50	36.75	
225.00	250.00	10	b1	2.62	25.00	12.50	32.75	
		11	b2	4.95	25.00	12.50	61.88	
		11	b1	5.84	25.00	12.50	73.00	
								204.38
11	12	11	b2	4.95	25.00	12.50	61.88	
250.00	275.00	11	b1	5.84	25.00	12.50	73.00	
		12	b2	8.27	25.00	12.50	103.38	
		12	b1	5.86	25.00	12.50	73.25	
								311.51
12	13	12	b2	8.27	25.00	12.50	103.38	
275.00	300.00	12	b1	5.86	25.00	12.50	73.25	
		13	b1	7.33	25.00	12.50	91.63	
		13	b2	4.12	25.00	12.50	51.50	
								319.76
13	14	13	b1	7.33	25.00	12.50	91.63	
300.00	325.00	13	b2	4.12	25.00	12.50	51.50	
		14	b2	4.51	25.00	12.50	56.38	
		14	b1	1.14	25.00	12.50	14.25	
								213.76
14	15	14	b2	4.51	25.00	12.50	56.38	
325.00	350.00	14	b1	1.14	25.00	12.50	14.25	
		15	b2	4.14	25.00	12.50	51.75	
		15	b1	1.03	25.00	12.50	12.88	
								135.26
15	16	15	b2	4.14	25.00	12.50	51.75	
350.00	375.00	15	b1	1.03	25.00	12.50	12.88	
		16	b2	4.08	25.00	12.50	51.00	
		16	b1	0.64	25.00	12.50	8.00	
								123.63
16	17	16	b2	4.08	25.00	12.50	51.00	
375.00	400.00	16	b1	0.64	25.00	12.50	8.00	
		17	b2	3.98	25.00	12.50	49.75	
		17	b1	0.78	25.00	12.50	9.75	
								118.50
17	18	17	b2	3.98	25.00	12.50	49.75	
400.00	425.00	17	b1	0.78	25.00	12.50	9.75	
		18	b2	3.96	25.00	12.50	49.50	
		18	b1	0.81	25.00	12.50	10.13	
								119.13
18	19	18	b2	3.96	25.00	12.50	49.50	
425.00	450.00	18	b1	0.81	25.00	12.50	10.13	
		19	b2	3.92	25.00	12.50	49.00	
		19	b1	0.78	25.00	12.50	9.75	
								118.38
19	20	19	b2	3.92	13.37	6.69	26.22	
450.00	463.37	19	b1	0.78	13.37	6.69	5.22	
		20	b2	3.90	13.37	6.69	26.09	
		20	b1	1.01	13.37	6.69	6.76	
								64.29
20	21	20	b2	3.90	36.63	18.31	71.41	
463.37	500.00	20	b1	1.01	36.63	18.31	18.49	
		21	b2	3.63	36.63	18.31	66.47	
		21	b1	0.80	36.63	18.31	14.65	
								171.02
21	22	21	b2	3.63	25.00	12.50	45.38	
500.00	525.00	21	b1	0.80	25.00	12.50	10.00	
		22	b2	2.02	25.00	12.50	25.25	
		22	b1	1.94	25.00	12.50	24.25	
								104.88
22	23	22	b2	2.02	25.00	12.50	25.25	
525.00	550.00	22	b1	1.94	25.00	12.50	24.25	
							49.50	2358.20

VEGETALE

DALLA SEZ. DA PROG.	ALLA SEZ. A PROG.	SEZIONE	FIGURA	LUNGHEZZA	DISTANZA SEZIONI ml	DISTANZA DI CALCOLO ml	AREA PARZIALE mq	AREA TOTALE mq
						A RIPORTARE mq	49.50	2358.20
		23	b1	0.73	25.00	12.50	9.13	
		23	b3	4.71	25.00	12.50	58.88	
		23	b2	3.92	25.00	12.50	49.00	
		23	b4	13.41	25.00	12.50	167.63	
								334.14
23	24	23	b1	0.73	25.00	12.50	9.13	
550.00	575.00	23	b3	4.71	25.00	12.50	58.88	
		23	b2	3.92	25.00	12.50	49.00	
		23	b4	13.41	25.00	12.50	167.63	
		24	b2	0.54	25.00	12.50	6.75	
		24	b1	1.43	25.00	12.50	17.88	
								309.27
24	25	24	b2	0.54	25.00	12.50	6.75	
575.00	600.00	24	b1	1.43	25.00	12.50	17.88	
		25	b2	0.51	25.00	12.50	6.38	
		25	b1	1.20	25.00	12.50	15.00	
								46.01
25	26	25	b2	0.51	25.00	12.50	6.38	
600.00	625.00	25	b1	1.20	25.00	12.50	15.00	
		26	b2	0.64	25.00	12.50	8.00	
		26	b1	0.98	25.00	12.50	12.25	
								41.63
26	27	26	b2	0.64	25.00	12.50	8.00	
625.00	650.00	26	b1	0.98	25.00	12.50	12.25	
		27	b2	0.87	25.00	12.50	10.88	
		27	b1	1.65	25.00	12.50	20.63	
								51.76
27	28	27	b2	0.87	25.00	12.50	10.88	
650.00	675.00	27	b1	1.65	25.00	12.50	20.63	
		28	b2	1.87	25.00	12.50	23.38	
		28	b1	4.03	25.00	12.50	50.38	
								105.27
28	29	28	b2	1.87	25.00	12.50	23.38	
675.00	700.00	28	b1	4.03	25.00	12.50	50.38	
		29	b2	3.28	25.00	12.50	41.00	
		29	b1	3.95	25.00	12.50	49.38	
								164.14
29	30	29	b2	3.28	25.00	12.50	41.00	
700.00	725.00	29	b1	3.95	25.00	12.50	49.38	
		30	b1	2.53	25.00	12.50	31.62	
		30	b2	3.67	25.00	12.50	45.88	
								167.88
30	31	30	b1	2.53	25.00	12.50	31.62	
725.00	750.00	30	b2	3.67	25.00	12.50	45.88	
		31	b2	2.67	25.00	12.50	33.38	
		31	b1	3.28	25.00	12.50	41.00	
								151.88
31	32	31	b2	2.67	25.00	12.50	33.38	
750.00	775.00	31	b1	3.28	25.00	12.50	41.00	
		32	b2	1.85	25.00	12.50	23.13	
		32	b1	3.61	25.00	12.50	45.13	
								142.64
32	33	32	b2	1.85	25.00	12.50	23.13	
775.00	800.00	32	b1	3.61	25.00	12.50	45.13	
		33	b2	1.56	25.00	12.50	19.50	
		33	b1	2.99	25.00	12.50	37.38	
								125.14
33	34	33	b2	1.56	25.00	12.50	19.50	
800.00	825.00	33	b1	2.99	25.00	12.50	37.38	
		34	b2	1.61	25.00	12.50	20.13	
		34	b1	3.43	25.00	12.50	42.88	
								119.89
34	35	34	b2	1.61	4.37	2.19	3.53	
825.00	829.37	34	b1	3.43	4.37	2.19	7.51	
		35	b2	1.97	4.37	2.19	4.31	
		35	b1	3.47	4.37	2.19	7.60	
								22.95

Il Direttore dei Lavori	L'Impresa	TOTALE ARTICOLO	4140.80

Volume dalla sezione 1 alla sezione 35

ARTICOLO		VOLUME
STERRO	mc	1029.588
RIPORTO	mc	6441.125
BO BONIFICA	mc	846.012
b VEGETALE	mq	4140.80

	CALCOLO DELLE AREE		Foglio n. 1

STERRI E RIPORTI

N. SEZIONE PROG.	FIG.	ELEMENTI DI CALCOLO	AREA ELEMENTARE mq	AREA FIGURA mq	NOTE
1	S1	(-2.79--3.20)x(3.18+3.19)/2	1.31		
0.00		(-2.35--2.79)x(3.16+3.18)/2	1.39		
		(-1.76--2.35)x(3.14+3.16)/2	1.86		
		(-1.27--1.76)x(3.14+3.14)/2	1.54		
		(-0.74--1.27)x(3.14+3.14)/2	1.66		
		(-0.19--0.74)x(3.11+3.14)/2	1.72		
		(0.29--0.19)x(3.09+3.11)/2	1.49		
		(0.89-0.29)x(3.05+3.09)/2	1.84		
		(1.09-0.89)x(3.04+3.05)/2	0.61		
		(0.95-1.09)x(2.95+3.04)/2	-0.42		
		(0.50-0.95)x(2.89+2.95)/2	-1.31		
		(0.00-0.50)x(2.90+2.89)/2	-1.45		
		(-2.00-0.00)x(2.95+2.90)/2	-5.85		
		(-2.50--2.00)x(2.97+2.95)/2	-1.48		
		(-2.95--2.50)x(3.02+2.97)/2	-1.35		
		(-3.20--2.95)x(3.19+3.02)/2	-0.78		
				0.78	
2	S1	(-2.00--0.11)x(2.95+2.91)/2	-5.54		
20.00		(-2.50--2.00)x(2.97+2.95)/2	-1.48		
		(-2.95--2.50)x(3.02+2.97)/2	-1.35		
		(-3.26--2.95)x(3.23+3.02)/2	-0.97		
		(-3.01--3.26)x(3.23+3.23)/2	0.81		
		(-1.88--3.01)x(3.24+3.23)/2	3.66		
		(-1.77--1.88)x(3.24+3.24)/2	0.36		
		(-1.56--1.77)x(3.23+3.24)/2	0.68		
		(-0.54--1.56)x(3.22+3.23)/2	3.29		
		(-0.11--0.54)x(3.21+3.22)/2	1.38		
				0.84	
2	S2	(-0.03--0.11)x(3.21+3.21)/2	0.26		
20.00		(0.69--0.03)x(3.20+3.21)/2	2.31		
		(1.32-0.69)x(3.19+3.20)/2	2.01		
		(0.95-1.32)x(2.95+3.19)/2	-1.14		
		(0.50-0.95)x(2.89+2.95)/2	-1.31		
		(0.00-0.50)x(2.90+2.89)/2	-1.45		
		(-0.11-0.00)x(2.91+2.90)/2	-0.32		
				0.36	
3	R1	(-3.26--3.78)x(2.53+2.47)/2	1.30		
40.00		(-2.60--3.26)x(2.62+2.53)/2	1.70		
		(-1.98--2.60)x(2.66+2.62)/2	1.64		
		(-0.90--1.98)x(2.82+2.66)/2	2.96		
		(-0.69--0.90)x(2.85+2.82)/2	0.60		
		(-0.11--0.69)x(2.91+2.85)/2	1.67		
		(-2.00--0.11)x(2.95+2.91)/2	-5.54		
		(-2.50--2.00)x(2.97+2.95)/2	-1.48		
		(-2.95--2.50)x(3.02+2.97)/2	-1.35		
		(-3.78--2.95)x(2.47+3.02)/2	-2.28		
				0.78	
3	S1	(-0.07--0.11)x(2.91+2.91)/2	0.12		
40.00		(0.59--0.07)x(2.97+2.91)/2	1.94		
		(0.80-0.59)x(2.99+2.97)/2	0.63		
		(1.02-0.80)x(3.00+2.99)/2	0.66		
		(0.95-1.02)x(2.95+3.00)/2	-0.21		
		(0.50-0.95)x(2.89+2.95)/2	-1.31		
		(0.00-0.50)x(2.90+2.89)/2	-1.45		
		(-0.11-0.00)x(2.91+2.90)/2	-0.32		
				0.06	
4	R1	(-2.00--0.11)x(2.95+2.91)/2	-5.54		
60.00		(-2.50--2.00)x(2.97+2.95)/2	-1.48		
		(-2.95--2.50)x(3.02+2.97)/2	-1.35		
		(-3.86--2.95)x(2.42+3.02)/2	-2.48		
		(-3.34--3.86)x(2.36+2.42)/2	1.24		
		(-2.96--3.34)x(2.33+2.36)/2	0.89		
		(-1.77--2.96)x(2.36+2.33)/2	2.79		
		(-1.67--1.77)x(2.36+2.36)/2	0.24		
		(-1.64--1.67)x(2.36+2.36)/2	0.07		
		(-0.39--1.64)x(2.55+2.36)/2	3.07		
		(-0.11--0.39)x(2.61+2.55)/2	0.72		
				1.83	
4	R2	(0.06--0.11)x(2.64+2.61)/2	0.45		
60.00		(0.90-0.06)x(2.81+2.64)/2	2.29		
		(1.12-0.90)x(2.83+2.81)/2	0.62		
		(0.95-1.12)x(2.95+2.83)/2	-0.49		
		(0.50-0.95)x(2.89+2.95)/2	-1.31		
		(0.00-0.50)x(2.90+2.89)/2	-1.45		
		(-0.11-0.00)x(2.91+2.90)/2	-0.32		
				0.21	
5	R1	(-5.37--5.72)x(2.19+2.14)/2	0.76		
80.00		(-5.34--5.37)x(2.19+2.19)/2	0.07		
		(-3.97--5.34)x(2.15+2.19)/2	2.97		
		(-3.84--3.97)x(2.14+2.15)/2	0.28		
		(-2.56--3.84)x(1.97+2.14)/2	2.63		
		(-2.34--2.56)x(1.94+1.97)/2	0.43		
		(-1.73--2.34)x(1.93+1.94)/2	1.18		
		(-1.16--1.73)x(1.86+1.93)/2	1.08		
		(-1.00--1.16)x(1.87+1.86)/2	0.30		
		(-0.84--1.00)x(1.83+1.87)/2	0.30		
		(0.25--0.84)x(1.73+1.83)/2	1.94		
		(0.51-0.25)x(1.70+1.73)/2	0.45		
		(0.50-0.51)x(3.86+1.70)/2	-0.03		
		(-0.00-0.50)x(3.87+3.86)/2	-1.93		
		(-2.00--0.00)x(3.92+3.87)/2	-7.79		
		(-2.50--2.00)x(3.93+3.92)/2	-1.96		
		(-2.95--2.50)x(3.99+3.93)/2	-1.78		
		(-5.72--2.95)x(2.14+3.99)/2	-8.49		
				9.59	
6	R1	(-6.19--6.40)x(3.24+3.28)/2	0.68		
100.00		(-5.96--6.19)x(3.22+3.24)/2	0.74		
		(-5.13--5.96)x(3.06+3.22)/2	2.61		
		(-5.12--5.13)x(3.06+3.06)/2	0.03		
		(-5.09--5.12)x(3.06+3.06)/2	0.09		
		(-4.48--5.09)x(3.02+3.06)/2	1.85		
		(1.12--4.48)x(5.01+5.01)/2	28.06		
		(0.95-1.12)x(5.13+5.01)/2	-0.86		
		(0.50-0.95)x(5.07+5.13)/2	-2.29		
		(0.00-0.50)x(5.08+5.07)/2	-2.54		
		(-2.00-0.00)x(5.13+5.08)/2	-10.21		
		(-2.50--2.00)x(5.14+5.13)/2	-2.57		
		A RIPORTARE mq	15.59		

		CALCOLO DELLE AREE		Foglio n. 2	
STERRI E RIPORTI					
N. SEZIONE PROG.	FIG.	ELEMENTI DI CALCOLO	AREA ELEMENTARE mq	AREA FIGURA mq	NOTE
		RIPORTO mq	15.59		
		(-4.49--2.50)x(5.21+5.14)/2	-10.30		
		(-6.40--4.49)x(3.94+5.21)/2	-8.74		
				3.45	
6BIS	R1	(-3.82--4.57)x(3.35+3.36)/2	2.52		
109.45		(-3.56--3.82)x(3.34+3.35)/2	0.87		
		(-3.27--3.56)x(3.33+3.34)/2	0.97		
		(-2.84--3.27)x(3.29+3.33)/2	1.42		
		(-2.46--2.84)x(3.26+3.29)/2	1.24		
		(-1.70--2.46)x(3.18+3.26)/2	2.45		
		(-1.11--1.70)x(3.13+3.18)/2	1.86		
		(-0.13--1.11)x(3.04+3.13)/2	3.02		
		(0.25--0.13)x(3.02+3.04)/2	1.15		
		(1.44-0.25)x(2.95+3.02)/2	3.55		
		(1.60-1.44)x(2.94+2.95)/2	0.47		
		(2.67-1.60)x(2.93+2.94)/2	3.14		
		(2.96-2.67)x(2.93+2.93)/2	0.85		
		(3.00-2.96)x(2.93+2.93)/2	0.12		
		(3.09-3.00)x(2.93+2.93)/2	0.26		
		(0.95-3.09)x(4.36+2.93)/2	-7.80		
		(0.50-0.95)x(4.30+4.36)/2	-1.95		
		(0.00-0.50)x(4.31+4.30)/2	-2.15		
		(-2.00-0.00)x(4.36+4.31)/2	-8.67		
		(-2.50--2.00)x(4.38+4.36)/2	-2.19		
		(-2.95--2.50)x(4.43+4.38)/2	-1.98		
		(-4.57--2.95)x(3.36+4.43)/2	-6.31		
				7.16	
7	R1	(-2.46--3.03)x(3.27+3.28)/2	1.87		
120.00		(-2.09--2.46)x(3.26+3.27)/2	1.21		
		(-2.04--2.09)x(3.26+3.26)/2	0.16		
		(-0.74--2.04)x(3.15+3.26)/2	4.17		
		(-0.47--0.74)x(3.14+3.15)/2	0.85		
		(0.62--0.47)x(3.08+3.14)/2	3.39		
		(1.10-0.62)x(3.02+3.08)/2	1.46		
		(1.34-1.10)x(2.99+3.02)/2	0.72		
		(0.95-1.34)x(3.26+2.99)/2	-1.22		
		(0.50-0.95)x(3.20+3.26)/2	-1.45		
		(0.00-0.50)x(3.21+3.20)/2	-1.60		
		(-2.00-0.00)x(3.26+3.21)/2	-6.47		
		(-2.50--2.00)x(3.27+3.26)/2	-1.63		
		(-2.95--2.50)x(3.33+3.27)/2	-1.49		
		(-3.03--2.95)x(3.28+3.33)/2	-0.26		
				0.29	
8	S1	(-2.94--3.02)x(3.17+3.18)/2	0.25		
140.00		(-2.78--2.94)x(3.17+3.17)/2	0.51		
		(-2.70--2.78)x(3.17+3.17)/2	0.25		
		(-1.54--2.70)x(3.18+3.17)/2	3.68		
		(-0.89--1.54)x(3.17+3.18)/2	2.06		
		(-0.29--0.89)x(3.16+3.17)/2	1.90		
		(0.93--0.29)x(3.14+3.16)/2	3.84		
		(0.95-0.93)x(3.14+3.14)/2	0.06		
		(1.00-0.95)x(3.14+3.14)/2	0.16		
		(1.08-1.00)x(3.14+3.14)/2	0.25		
		(0.95-1.08)x(3.06+3.14)/2	-0.40		
		(0.50-0.95)x(3.00+3.06)/2	-1.36		
		(-0.00-0.50)x(3.01+3.00)/2	-1.50		
		(-2.00--0.00)x(3.06+3.01)/2	-6.07		
		(-2.50--2.00)x(3.07+3.06)/2	-1.53		
		(-2.95--2.50)x(3.13+3.07)/2	-1.40		
		(-3.02--2.95)x(3.18+3.13)/2	-0.22		
				0.48	
9	S1	(-2.08--2.93)x(3.11+3.13)/2	2.65		
160.00		(-1.69--2.08)x(3.11+3.11)/2	1.21		
		(-1.04--1.69)x(3.10+3.11)/2	2.02		
		(-0.39--1.04)x(3.09+3.10)/2	2.01		
		(0.01--0.39)x(3.09+3.09)/2	1.24		
		(0.91-0.01)x(3.09+3.09)/2	2.78		
		(1.00-0.91)x(3.09+3.09)/2	0.28		
		(0.95-1.00)x(3.06+3.09)/2	-0.15		
		(0.50-0.95)x(3.00+3.06)/2	-1.36		
		(0.00-0.50)x(3.01+3.00)/2	-1.50		
		(-2.00-0.00)x(3.06+3.01)/2	-6.07		
		(-2.50--2.00)x(3.07+3.06)/2	-1.53		
		(-2.93--2.50)x(3.13+3.07)/2	-1.33		
				0.25	
10	R1	(-2.93--3.31)x(2.92+2.89)/2	1.10		
180.00		(-2.84--2.93)x(2.93+2.92)/2	0.26		
		(-2.82--2.84)x(2.93+2.93)/2	0.06		
		(-1.79--2.82)x(2.95+2.93)/2	3.03		
		(-1.52--1.79)x(2.95+2.95)/2	0.80		
		(-0.75--1.52)x(2.93+2.95)/2	2.26		
		(-0.22--0.75)x(2.94+2.93)/2	1.56		
		(0.30--0.22)x(2.94+2.94)/2	1.53		
		(1.07-0.30)x(2.94+2.94)/2	2.26		
		(1.13-1.07)x(2.94+2.94)/2	0.18		
		(0.95-1.13)x(3.06+2.94)/2	-0.54		
		(0.50-0.95)x(3.00+3.06)/2	-1.36		
		(-0.00-0.50)x(3.01+3.00)/2	-1.50		
		(-2.00--0.00)x(3.06+3.01)/2	-6.07		
		(-2.50--2.00)x(3.07+3.06)/2	-1.53		
		(-2.95--2.50)x(3.13+3.07)/2	-1.40		
		(-3.31--2.95)x(2.89+3.13)/2	-1.08		
				0.44	
11	S1	(-2.85--3.12)x(3.23+3.25)/2	0.87		
200.00		(-1.92--2.85)x(3.21+3.23)/2	2.99		
		(-1.80--1.92)x(3.20+3.21)/2	0.38		
		(-1.76--1.80)x(3.20+3.20)/2	0.13		
		(-0.74--1.76)x(3.20+3.20)/2	3.26		
		(-0.13--0.74)x(3.20+3.20)/2	1.95		
		(0.32--0.13)x(3.21+3.20)/2	1.44		
		(1.06-0.32)x(3.20+3.21)/2	2.37		
		(1.17-1.06)x(3.20+3.20)/2	0.35		
		(0.95-1.17)x(3.06+3.20)/2	-0.69		
		(0.50-0.95)x(3.00+3.06)/2	-1.36		
		(0.00-0.50)x(3.01+3.00)/2	-1.50		
		(-2.00-0.00)x(3.06+3.01)/2	-6.07		
		A RIPORTARE mq	4.12		

STERRI E RIPORTI

N. SEZIONE PROG.	FIG.	ELEMENTI DI CALCOLO	AREA ELEMENTARE mq	AREA FIGURA mq	NOTE
		RIPORTO mq	4.12		
		(-2.50--2.00)x(3.07+3.06)/2	-1.53		
		(-2.95--2.50)x(3.13+3.07)/2	-1.40		
		(-3.12--2.95)x(3.25+3.13)/2	-0.54		
				0.65	
12	R1	(-2.72--3.29)x(3.33+3.30)/2	1.89		
220.00		(-2.37--2.72)x(3.35+3.33)/2	1.17		
		(-1.90--2.37)x(3.34+3.35)/2	1.57		
		(-1.26--1.90)x(3.31+3.34)/2	2.13		
		(-0.79--1.26)x(3.31+3.31)/2	1.56		
		(-0.14--0.79)x(3.30+3.31)/2	2.15		
		(0.73--0.14)x(3.30+3.30)/2	2.87		
		(0.97-0.73)x(3.29+3.30)/2	0.79		
		(1.14-0.97)x(3.30+3.29)/2	0.56		
		(1.18-1.14)x(3.30+3.30)/2	0.13		
		(0.95-1.18)x(3.45+3.30)/2	-0.78		
		(0.50-0.95)x(3.40+3.45)/2	-1.54		
		(0.00-0.50)x(3.41+3.40)/2	-1.70		
		(-2.00-0.00)x(3.46+3.41)/2	-6.87		
		(-2.50--2.00)x(3.47+3.46)/2	-1.73		
		(-2.95--2.50)x(3.53+3.47)/2	-1.58		
		(-3.29--2.95)x(3.30+3.53)/2	-1.16		
				0.54	
12BIS	R1	(-5.41--5.43)x(3.26+3.26)/2	0.07		
232.37		(-4.53--5.41)x(3.28+3.26)/2	2.88		
		(-4.35--4.53)x(3.28+3.28)/2	0.59		
		(-3.85--4.35)x(3.28+3.28)/2	1.64		
		(-3.29--3.85)x(3.27+3.28)/2	1.83		
		(-3.09--3.29)x(3.27+3.27)/2	0.65		
		(-2.23--3.09)x(3.27+3.27)/2	2.81		
		(-1.66--2.23)x(3.28+3.27)/2	1.87		
		(-1.17--1.66)x(3.28+3.28)/2	1.61		
		(-0.23--1.17)x(3.31+3.28)/2	3.10		
		(-0.11--0.23)x(3.31+3.31)/2	0.40		
		(0.23--0.11)x(3.30+3.31)/2	1.12		
		(0.95-0.23)x(3.28+3.30)/2	2.37		
		(1.20-0.95)x(3.27+3.28)/2	0.82		
		(2.01-1.20)x(3.24+3.27)/2	2.64		
		(2.63-2.01)x(3.23+3.24)/2	2.01		
		(3.06-2.63)x(3.21+3.23)/2	1.38		
		(3.41-3.06)x(3.20+3.21)/2	1.12		
		(0.95-3.41)x(4.84+3.20)/2	-9.89		
		(0.50-0.95)x(4.79+4.84)/2	-2.17		
		(0.00-0.50)x(4.80+4.79)/2	-2.40		
		(-2.00-0.00)x(4.85+4.80)/2	-9.65		
		(-2.50--2.00)x(4.86+4.85)/2	-2.43		
		(-2.95--2.50)x(4.92+4.86)/2	-2.20		
		(-5.43--2.95)x(3.26+4.92)/2	-10.14		
				9.97	
14	R1	(-4.91--5.20)x(2.30+2.30)/2	0.67		
260.00		(-4.42--4.91)x(2.29+2.30)/2	1.12		
		(-3.80--4.42)x(2.31+2.29)/2	1.43		
		(-3.64--3.80)x(2.32+2.31)/2	0.37		
		(-3.27--3.64)x(2.34+2.32)/2	0.86		
		(-2.86--3.27)x(2.36+2.34)/2	0.96		
		(-2.68--2.86)x(2.37+2.36)/2	0.43		
		(-2.25--2.68)x(2.38+2.37)/2	1.02		
		(-1.57--2.25)x(2.41+2.38)/2	1.63		
		(-1.30--1.57)x(2.42+2.41)/2	0.65		
		(-0.66--1.30)x(2.48+2.42)/2	1.57		
		(-0.52--0.66)x(2.49+2.48)/2	0.35		
		(-0.45--0.52)x(2.49+2.49)/2	0.17		
		(0.27--0.45)x(2.49+2.49)/2	1.79		
		(0.66-0.27)x(2.50+2.49)/2	0.97		
		(1.05-0.66)x(2.50+2.50)/2	0.98		
		(1.77-1.05)x(2.54+2.50)/2	1.81		
		(1.83-1.77)x(2.55+2.54)/2	0.15		
		(1.96-1.83)x(2.55+2.55)/2	0.33		
		(2.61-1.96)x(2.59+2.55)/2	1.67		
		(2.65-2.61)x(2.59+2.59)/2	0.10		
		(0.95-2.65)x(3.72+2.59)/2	-5.36		
		(0.50-0.95)x(3.67+3.72)/2	-1.66		
		(0.00-0.50)x(3.68+3.67)/2	-1.84		
		(-2.00-0.00)x(3.73+3.68)/2	-7.41		
		(-2.50--2.00)x(3.74+3.73)/2	-1.87		
		(-2.95--2.50)x(3.80+3.74)/2	-1.70		
		(-5.20--2.95)x(2.30+3.80)/2	-6.86		
				7.67	
15	R1	(-2.98--3.70)x(2.32+2.32)/2	1.67		
268.07		(-2.59--2.98)x(2.33+2.32)/2	0.91		
		(-2.20--2.59)x(2.31+2.33)/2	0.90		
		(-1.47--2.20)x(2.30+2.31)/2	1.68		
		(-1.42--1.47)x(2.30+2.30)/2	0.12		
		(-1.29--1.42)x(2.29+2.30)/2	0.30		
		(-0.64--1.29)x(2.27+2.29)/2	1.48		
		(-0.36--0.64)x(2.27+2.27)/2	0.64		
		(0.14--0.36)x(2.26+2.27)/2	1.13		
		(0.75-0.14)x(2.26+2.26)/2	1.38		
		(1.33-0.75)x(2.23+2.26)/2	1.30		
		(1.76-1.33)x(2.21+2.23)/2	0.95		
		(0.95-1.76)x(2.75+2.21)/2	-2.01		
		(0.50-0.95)x(2.70+2.75)/2	-1.23		
		(0.00-0.50)x(2.71+2.70)/2	-1.35		
		(-2.00-0.00)x(2.76+2.71)/2	-5.47		
		(-2.50--2.00)x(2.77+2.76)/2	-1.38		
		(-2.95--2.50)x(2.83+2.77)/2	-1.26		
		(-3.70--2.95)x(2.32+2.83)/2	-1.93		
				2.17	

N. SEZ.	FIG.	SUPERFICIE STERRO mq	SUPERFICIE RIPORTO mq	PUNTI DI PASSAGGIO (PROGRESSIVA m)	DISTANZA m	VOLUMI PARZIALI STERRO mc	VOLUMI PARZIALI RIPORTO mc	VOLUMI TOTALI STERRO mc	VOLUMI TOTALI RIPORTO mc
1	S1	0.78		(0.00)					
					20.00	19.800			
2	S1	0.84		(20.00)					
	S2	0.36							
								19.800	
2	S1	0.84		(20.00)	10.37	4.355			
				0.84*20.00					
				0.84+0.78	10.37				
3	R1		0.78	(40.00)	9.63		3.756		
2	S2	0.36		(20.00)					
					20.00	4.200			
3	S1	0.06		(40.00)					
								8.555	3.756
3	R1		0.78	(40.00)					
					20.00		26.100		
4	R1		1.83	(60.00)					
3	S1	0.06		(40.00)	4.44	0.133			
				0.06*20.00					
				0.06+0.21	4.44				
4	R2		0.21	(60.00)	15.56		1.634		
								0.133	27.734
4	R1		1.83	(60.00)					
	R2		0.21						
					20.00		116.300		
5	R1		9.59	(80.00)					
									116.300
5	R1		9.59	(80.00)					
					20.00		130.400		
6	R1		3.45	(100.00)					
									130.400
6	R1		3.45	(100.00)					
					9.45		50.132		
6BIS	R1		7.16	(109.45)					
									50.132
6BIS	R1		7.16	(109.45)					
					10.55		39.299		
7	R1		0.29	(120.00)					
									39.299
7	R1		0.29	(120.00)	7.53		1.092		
				0.29*20.00					
				0.29+0.48	7.53				
8	S1	0.48		(140.00)	12.47	2.993			
								2.993	1.092
8	S1	0.48		(140.00)					
					20.00	7.300			
9	S1	0.25		(160.00)					
								7.300	
9	S1	0.25		(160.00)	7.25	0.906			
				0.25*20.00					
				0.25+0.44	7.25				
10	R1		0.44	(180.00)	12.75		2.805		
								0.906	2.805
10	R1		0.44	(180.00)	8.07		1.775		
				0.44*20.00					
				0.44+0.65	8.07				
11	S1	0.65		(200.00)	11.93	3.877			
								3.877	1.775
11	S1	0.65		(200.00)	10.92	3.549			
				0.65*20.00					
				0.65+0.54	10.92				
12	R1		0.54	(220.00)	9.08		2.452		
								3.549	2.452
12	R1		0.54	(220.00)					
					12.37		65.004		
12BIS	R1		9.97	(232.37)					
									65.004
					A RIPORTARE :			47.113	440.749

N. SEZ.	FIG.	SUPERFICIE STERRO mq	SUPERFICIE RIPORTO mq	PUNTI DI PASSAGGIO (PROGRESSIVA m)	DISTANZA m	VOLUMI PARZIALI STERRO mc	VOLUMI PARZIALI RIPORTO mc	VOLUMI TOTALI STERRO mc	VOLUMI TOTALI RIPORTO mc
					RIPORTO :			47.113	440.749
14	R1		7.67	(260.00)					
					8.07		39.704		
15	R1		2.17	(268.07)					
									39.704

Il Direttore dei Lavori	L'Impresa	Totale Articoli .....:	47.113	480.453
		A dedurre quantita' precedenti:		
		Quantita' da contabilizzare ..:		

		CALCOLO DELLE LUNGHEZZE		Foglio n. 6	
VEGETALE					
N. SEZIONE PROG.	FIG.	ELEMENTI DI CALCOLO	LUNGHEZZA ELEMENTARE ml	LUNGHEZZA FIGURA ml	NOTE
1	b1	(-2.53--2.50)	0.03		
0.00		(-3.00--2.53)	0.47		
		(-3.07--3.00)	0.07		
				0.57	
1	b2	(0.53-0.50)	0.03		
0.00		(1.00-0.53)	0.47		
		(1.19-1.00)	0.19		
				0.69	
2	b1	(-2.53--2.50)	0.03		
20.00		(-3.00--2.53)	0.47		
		(-3.00--3.00)	0.00		
				0.50	
2	b2	(0.53-0.50)	0.03		
20.00		(1.00-0.53)	0.47		
		(1.06-1.00)	0.06		
				0.56	
3	b1	(-2.53--2.50)	0.03		
40.00		(-3.00--2.53)	0.47		
		(-4.21--3.00)	1.21		
				1.71	
3	b2	(0.53-0.50)	0.03		
40.00		(1.00-0.53)	0.47		
		(1.22-1.00)	0.22		
				0.72	
4	b1	(-2.53--2.50)	0.03		
60.00		(-3.00--2.53)	0.47		
		(-4.17--3.00)	1.17		
				1.67	
4	b2	(0.53-0.50)	0.03		
60.00		(1.00-0.53)	0.47		
		(1.43-1.00)	0.43		
				0.93	
5	b1	(-2.53--2.50)	0.03		
80.00		(-3.00--2.53)	0.47		
		(-6.16--3.00)	3.16		
				3.66	
6	b1	(-2.53--2.50)	0.03		
100.00		(-4.19--2.53)	1.66		
		(-6.40--4.19)	2.21		
				3.90	
6	b2	(0.53-0.50)	0.03		
100.00		(1.00-0.53)	0.47		
		(1.48-1.00)	0.48		
				0.98	
6BIS	b1	(-2.53--2.50)	0.03		
109.45		(-3.00--2.53)	0.47		
		(-4.92--3.00)	1.92		
				2.42	
6BIS	b2	(0.53-0.50)	0.03		
109.45		(1.00-0.53)	0.47		
		(3.45-1.00)	2.45		
				2.95	
7	b1	(-2.53--2.50)	0.03		
120.00		(-3.00--2.53)	0.47		
		(-3.38--3.00)	0.38		
				0.88	
7	b2	(0.53-0.50)	0.03		
120.00		(1.00-0.53)	0.47		
		(1.76-1.00)	0.76		
				1.26	
8	b1	(-2.53--2.50)	0.03		
140.00		(-3.00--2.53)	0.47		
		(-3.25--3.00)	0.25		
				0.75	
8	b2	(0.53-0.50)	0.03		
140.00		(1.00-0.53)	0.47		
		(1.18-1.00)	0.18		
				0.68	
9	b1	(-2.53--2.50)	0.03		
160.00		(-3.00--2.53)	0.47		
		(-3.31--3.00)	0.31		
				0.81	
9	b2	(0.53-0.50)	0.03		
160.00		(1.00-0.53)	0.47		
		(1.27-1.00)	0.27		
				0.77	
10	b1	(-2.53--2.50)	0.03		
180.00		(-3.00--2.53)	0.47		
		(-3.72--3.00)	0.72		
				1.22	
10	b2	(0.53-0.50)	0.03		
180.00		(1.00-0.53)	0.47		
		(1.48-1.00)	0.48		
				0.98	
11	b1	(-2.53--2.50)	0.03		
200.00		(-3.00--2.53)	0.47		
		(-3.14--3.00)	0.14		
				0.64	
11	b2	(0.53-0.50)	0.03		
200.00		(1.00-0.53)	0.47		
		(1.10-1.00)	0.10		
				0.60	
12	b1	(-2.53--2.50)	0.03		
220.00		(-3.00--2.53)	0.47		
		(-3.68--3.00)	0.68		
				1.18	
12	b2	(0.53-0.50)	0.03		
220.00		(1.00-0.53)	0.47		
		(1.52-1.00)	0.52		
				1.02	
12BIS	b1	(-2.53--2.50)	0.03		
232.37		(-3.00--2.53)	0.47		
		(-5.81--3.00)	2.81		
				3.31	
12BIS	b2	(0.53-0.50)	0.03		
232.37		(1.00-0.53)	0.47		
		(3.79-1.00)	2.79		
		A RIPORTARE ml	3.29		

	CALCOLO DELLE LUNGHEZZE		Foglio n. 7

VEGETALE

N. SEZIONE PROG.	FIG.	ELEMENTI DI CALCOLO	LUNGHEZZA ELEMENTARE ml	LUNGHEZZA FIGURA ml	NOTE
		RIPORTO ml	3.29		
				3.29	
13	b1	(-2.53--2.50)	0.03		
240.00		(-3.00--2.53)	0.47		
		(-3.67--3.00)	0.67		
				1.17	
13	b2	(0.53-0.50)	0.03		
240.00		(1.00-0.53)	0.47		
		(1.56-1.00)	0.56		
				1.06	
14	b1	(-2.53--2.50)	0.03		
260.00		(-3.00--2.53)	0.47		
		(-5.60--3.00)	2.60		
				3.10	
14	b2	(0.53-0.50)	0.03		
260.00		(1.00-0.53)	0.47		
		(2.98-1.00)	1.98		
				2.48	
15	b1	(-2.53--2.50)	0.03		
268.07		(-3.00--2.53)	0.47		
		(-4.07--3.00)	1.07		
				1.57	
15	b2	(0.53-0.50)	0.03		
268.07		(1.00-0.53)	0.47		
		(2.10-1.00)	1.10		
				1.60	

Il Direttore dei Lavori	L'Impresa	

VEGETALE

DALLA SEZ. DA PROG.	ALLA SEZ. A PROG.	SEZIONE	FIGURA	LUNGHEZZA	DISTANZA SEZIONI ml	DISTANZA DI CALCOLO ml	AREA PARZIALE mq	AREA TOTALE mq
1	2	1	b1	0.57	20.00	10.00	5.70	
0.00	20.00	1	b2	0.69	20.00	10.00	6.90	
		2	b1	0.50	20.00	10.00	5.00	
		2	b2	0.56	20.00	10.00	5.60	
								23.20
2	3	2	b1	0.50	20.00	10.00	5.00	
20.00	40.00	2	b2	0.56	20.00	10.00	5.60	
		3	b1	1.71	20.00	10.00	17.10	
		3	b2	0.72	20.00	10.00	7.20	
								34.90
3	4	3	b1	1.71	20.00	10.00	17.10	
40.00	60.00	3	b2	0.72	20.00	10.00	7.20	
		4	b1	1.67	20.00	10.00	16.70	
		4	b2	0.93	20.00	10.00	9.30	
								50.30
4	5	4	b1	1.67	20.00	10.00	16.70	
60.00	80.00	4	b2	0.93	20.00	10.00	9.30	
		5	b1	3.66	20.00	10.00	36.60	
								62.60
5	6	5	b1	3.66	20.00	10.00	36.60	
80.00	100.00	6	b1	3.90	20.00	10.00	39.00	
		6	b2	0.98	20.00	10.00	9.80	
								85.40
6	6BIS	6	b1	3.90	9.45	4.73	18.45	
100.00	109.45	6	b2	0.98	9.45	4.73	4.64	
		6BIS	b1	2.42	9.45	4.73	11.45	
		6BIS	b2	2.95	9.45	4.73	13.95	
								48.49
6BIS	7	6BIS	b1	2.42	10.55	5.27	12.75	
109.45	120.00	6BIS	b2	2.95	10.55	5.27	15.55	
		7	b1	0.88	10.55	5.27	4.64	
		7	b2	1.26	10.55	5.27	6.64	
								39.58
7	8	7	b1	0.88	20.00	10.00	8.80	
120.00	140.00	7	b2	1.26	20.00	10.00	12.60	
		8	b1	0.75	20.00	10.00	7.50	
		8	b2	0.68	20.00	10.00	6.80	
								35.70
8	9	8	b1	0.75	20.00	10.00	7.50	
140.00	160.00	8	b2	0.68	20.00	10.00	6.80	
		9	b1	0.81	20.00	10.00	8.10	
		9	b2	0.77	20.00	10.00	7.70	
								30.10
9	10	9	b1	0.81	20.00	10.00	8.10	
160.00	180.00	9	b2	0.77	20.00	10.00	7.70	
		10	b1	1.22	20.00	10.00	12.20	
		10	b2	0.98	20.00	10.00	9.80	
								37.80
10	11	10	b1	1.22	20.00	10.00	12.20	
180.00	200.00	10	b2	0.98	20.00	10.00	9.80	
		11	b1	0.64	20.00	10.00	6.40	
		11	b2	0.60	20.00	10.00	6.00	
								34.40
11	12	11	b1	0.64	20.00	10.00	6.40	
200.00	220.00	11	b2	0.60	20.00	10.00	6.00	
		12	b1	1.18	20.00	10.00	11.80	
		12	b2	1.02	20.00	10.00	10.20	
								34.40
12	12BIS	12	b1	1.18	12.37	6.19	7.30	
220.00	232.37	12	b2	1.02	12.37	6.19	6.31	
		12BIS	b1	3.31	12.37	6.19	20.49	
		12BIS	b2	3.29	12.37	6.19	20.37	
								54.47
12BIS	13	12BIS	b1	3.31	7.63	3.81	12.61	
232.37	240.00	12BIS	b2	3.29	7.63	3.81	12.53	
		13	b1	1.17	7.63	3.81	4.46	
		13	b2	1.06	7.63	3.81	4.04	
								33.64
13	14	13	b1	1.17	20.00	10.00	11.70	
240.00	260.00	13	b2	1.06	20.00	10.00	10.60	
		14	b1	3.10	20.00	10.00	31.00	
		14	b2	2.48	20.00	10.00	24.80	
								78.10
14	15	14	b1	3.10	8.07	4.03	12.49	
260.00	268.07	14	b2	2.48	8.07	4.03	9.99	
		15	b1	1.57	8.07	4.03	6.33	
		15	b2	1.60	8.07	4.03	6.45	
								35.26

Il Direttore dei Lavori	L'Impresa	TOTALE ARTICOLO	718.34

Volume dalla sezione 1 alla sezione 15

ARTICOLO		VOLUME
STERRO	mc	47.113
RIPORTO	mc	480.453
b VEGETALE	mq	718.34

	CALCOLO DELLE AREE		Foglio n. 1

STERRI E RIPORTI

N. SEZIONE PROG.	FIG.	ELEMENTI DI CALCOLO	AREA ELEMENTARE mq	AREA FIGURA mq	NOTE
1	R1	(-2.98--3.07)x(1.88+1.88)/2	0.17		
0.00		(-2.59--2.98)x(1.88+1.88)/2	0.73		
		(-1.87--2.59)x(1.87+1.88)/2	1.35		
		(-1.73--1.87)x(1.88+1.87)/2	0.26		
		(-2.00--1.73)x(1.89+1.88)/2	-0.51		
		(-2.50--2.00)x(1.90+1.89)/2	-0.95		
		(-2.95--2.50)x(1.96+1.90)/2	-0.87		
		(-3.07--2.95)x(1.88+1.96)/2	-0.23		
				0.05	
1	S1	(-1.73--1.52)x(1.88+1.87)/2	-0.39		
0.00		(-1.52--1.73)x(1.89+1.88)/2	0.40		
				0.01	
1	S2	(-0.79--1.52)x(1.94+1.89)/2	1.40		
0.00		(-0.77--0.79)x(1.94+1.94)/2	0.04		
		(-0.75--0.77)x(1.94+1.94)/2	0.04		
		(0.34--0.75)x(2.08+1.94)/2	2.19		
		(1.08-0.34)x(2.10+2.08)/2	1.55		
		(1.31-1.08)x(2.12+2.10)/2	0.49		
		(0.95-1.31)x(1.88+2.12)/2	-0.72		
		(0.50-0.95)x(1.82+1.88)/2	-0.83		
		(0.00-0.50)x(1.84+1.82)/2	-0.92		
		(-1.52-0.00)x(1.87+1.84)/2	-2.82		
				0.42	
2	R1	(-2.00--1.73)x(2.18+2.17)/2	-0.59		
15.00		(-2.50--2.00)x(2.19+2.18)/2	-1.09		
		(-2.95--2.50)x(2.25+2.19)/2	-1.00		
		(-3.38--2.95)x(1.97+2.25)/2	-0.91		
		(-2.99--3.38)x(1.99+1.97)/2	0.77		
		(-2.26--2.99)x(2.06+1.99)/2	1.48		
		(-1.73--2.26)x(2.14+2.06)/2	1.11		
				0.23	
2	R2	(-1.55--1.73)x(2.17+2.14)/2	0.39		
15.00		(-1.52--1.55)x(2.17+2.17)/2	0.07		
		(-1.73--1.52)x(2.17+2.17)/2	-0.46		
2	S1	(-0.80--1.52)x(2.27+2.17)/2	1.60		
15.00		(-0.12--0.80)x(2.33+2.27)/2	1.56		
		(0.66--0.12)x(2.36+2.33)/2	1.83		
		(1.21-0.66)x(2.35+2.36)/2	1.30		
		(0.95-1.21)x(2.18+2.35)/2	-0.59		
		(0.50-0.95)x(2.12+2.18)/2	-0.97		
		(-0.00-0.50)x(2.13+2.12)/2	-1.06		
		(-1.52--0.00)x(2.17+2.13)/2	-3.27		
				0.40	
3	R1	(-2.00--1.52)x(2.77+2.76)/2	-1.33		
30.00		(-2.50--2.00)x(2.78+2.77)/2	-1.39		
		(-2.95--2.50)x(2.84+2.78)/2	-1.26		
		(-3.30--2.95)x(2.61+2.84)/2	-0.95		
		(-3.26--3.30)x(2.61+2.61)/2	0.10		
		(-2.35--3.26)x(2.58+2.61)/2	2.36		
		(-1.90--2.35)x(2.57+2.58)/2	1.16		
		(-1.52--1.90)x(2.55+2.57)/2	0.97		
				0.34	
3	R2	(-0.79--1.52)x(2.51+2.55)/2	1.85		
30.00		(-0.54--0.79)x(2.49+2.51)/2	0.63		
		(0.76--0.54)x(2.44+2.49)/2	3.20		
		(0.83-0.76)x(2.44+2.44)/2	0.17		
		(1.28-0.83)x(2.46+2.44)/2	1.10		
		(1.40-1.28)x(2.47+2.46)/2	0.30		
		(0.95-1.40)x(2.76+2.47)/2	-1.18		
		(0.50-0.95)x(2.71+2.76)/2	-1.23		
		(0.00-0.50)x(2.72+2.71)/2	-1.36		
		(-1.52-0.00)x(2.76+2.72)/2	-4.16		
				0.68	
4	R1	(-3.85--5.08)x(3.07+2.99)/2	3.73		
43.32		(-3.53--3.85)x(3.09+3.07)/2	0.99		
		(-2.49--3.53)x(3.22+3.09)/2	3.28		
		(-1.98--2.49)x(3.28+3.22)/2	1.66		
		(-1.52--1.98)x(3.33+3.28)/2	1.52		
		(-1.12--1.52)x(3.33+3.33)/2	1.33		
		(-0.80--1.12)x(3.33+3.33)/2	1.07		
		(-0.43--0.80)x(3.30+3.33)/2	1.23		
		(0.24--0.43)x(3.20+3.30)/2	2.18		
		(1.13-0.24)x(3.05+3.20)/2	2.78		
		(1.60-1.13)x(2.94+3.05)/2	1.41		
		(2.68-1.60)x(2.72+2.94)/2	3.06		
		(2.97-2.68)x(2.67+2.72)/2	0.78		
		(3.58-2.97)x(2.58+2.67)/2	1.60		
		(0.95-3.58)x(4.33+2.58)/2	-9.09		
		(0.50-0.95)x(4.28+4.33)/2	-1.94		
		(0.00-0.50)x(4.29+4.28)/2	-2.14		
		(-2.00-0.00)x(4.34+4.29)/2	-8.63		
		(-2.50--2.00)x(4.35+4.34)/2	-2.17		
		(-2.95--2.50)x(4.41+4.35)/2	-1.97		
		(-5.08--2.95)x(2.99+4.41)/2	-7.88		
				7.20	

Il Direttore dei Lavori	L'Impresa	

N. SEZ.	FIG.	SUPERFICIE STERRO mq	SUPERFICIE RIPORTO mq	PUNTI DI PASSAGGIO (PROGRESSIVA m)	DISTANZA m	VOLUMI PARZIALI STERRO mc	VOLUMI PARZIALI RIPORTO mc	VOLUMI TOTALI STERRO mc	VOLUMI TOTALI RIPORTO mc
1	R1		0.05	(0.00)					
					15.00		2.100		
2	R1		0.23	(15.00)					
1	S1	0.01		(0.00)	15.00	0.075			
				0.01*15.00					
				———————————	15.00				
				0.01+0.00					
2	R2		0.00	(15.00)	0.00		0.000		
1	S2	0.42		(0.00)					
					15.00	6.150			
2	S1	0.40		(15.00)					
								6.225	2.100
2	R1		0.23	(15.00)					
	R2		0.00						
					15.00		4.275		
3	R1		0.34	(30.00)					
2	S1	0.40		(15.00)	5.56	1.112			
				0.40*15.00					
				———————————	5.56				
				0.40+0.68					
3	R2		0.68	(30.00)	9.44		3.210		
								1.112	7.485
3	R1		0.34	(30.00)					
	R2		0.68						
					13.32		54.745		
4	R1		7.20	(43.32)					
									54.745

Il Direttore dei Lavori	L'Impresa	Totale Articoli .....:	7.337	64.330
		A dedurre quantita' precedenti:		
		Quantita' da contabilizzare ..:		

	CALCOLO DELLE LUNGHEZZE		Foglio n. 3

VEGETALE

N. SEZIONE PROG.	FIG.	ELEMENTI DI CALCOLO	LUNGHEZZA ELEMENTARE ml	LUNGHEZZA FIGURA ml	NOTE
1	b1	(-2.53--2.50)	0.03		
0.00		(-3.00--2.53)	0.47		
		(-3.44--3.00)	0.44		
				0.94	
1	b2	(0.53-0.50)	0.03		
0.00		(1.00-0.53)	0.47		
		(1.01-1.00)	0.01		
				0.51	
2	b1	(-2.53--2.50)	0.03		
15.00		(-3.00--2.53)	0.47		
		(-3.76--3.00)	0.76		
				1.26	
2	b2	(0.53-0.50)	0.03		
15.00		(1.00-0.53)	0.47		
		(1.05-1.00)	0.05		
				0.55	
3	b1	(-2.53--2.50)	0.03		
30.00		(-3.00--2.53)	0.47		
		(-3.68--3.00)	0.68		
				1.18	
3	b2	(0.53-0.50)	0.03		
30.00		(1.00-0.53)	0.47		
		(1.74-1.00)	0.74		
				1.24	
4	b1	(-2.53--2.50)	0.03		
43.32		(-3.00--2.53)	0.47		
		(-5.53--3.00)	2.53		
				3.03	
4	b2	(0.53-0.50)	0.03		
43.32		(1.00-0.53)	0.47		
		(4.04-1.00)	3.04		
				3.54	

Il Direttore dei Lavori	L'Impresa	

VEGETALE

DALLA SEZ. DA PROG.	ALLA SEZ. A PROG.	SEZIONE	FIGURA	LUNGHEZZA	DISTANZA SEZIONI ml	DISTANZA DI CALCOLO ml	AREA PARZIALE mq	AREA TOTALE mq
1	2	1	b1	0.94	15.00	7.50	7.05	
0.00	15.00	1	b2	0.51	15.00	7.50	3.83	
		2	b1	1.26	15.00	7.50	9.45	
		2	b2	0.55	15.00	7.50	4.13	
								24.46
2	3	2	b1	1.26	15.00	7.50	9.45	
15.00	30.00	2	b2	0.55	15.00	7.50	4.13	
		3	b1	1.18	15.00	7.50	8.85	
		3	b2	1.24	15.00	7.50	9.30	
								31.73
3	4	3	b1	1.18	13.32	6.66	7.86	
30.00	43.32	3	b2	1.24	13.32	6.66	8.26	
		4	b1	3.03	13.32	6.66	20.18	
		4	b2	3.54	13.32	6.66	23.58	
								59.88

Volume dalla sezione 1 alla sezione 4

ARTICOLO		VOLUME
STERRO	mc	7.337
RIPORTO	mc	64.330
b VEGETALE	mq	116.07

	CALCOLO DELLE AREE		Foglio n. 1

STERRI E RIPORTI

N. SEZIONE PROG.	FIG.	ELEMENTI DI CALCOLO	AREA ELEMENTARE mq	AREA FIGURA mq	NOTE
1	R1	(-2.60--3.12)x(3.50+3.53)/2	1.83		
0.00		(-2.33--2.60)x(3.46+3.50)/2	0.94		
		(-1.79--2.33)x(3.44+3.46)/2	1.86		
		(-1.25--1.79)x(3.41+3.44)/2	1.85		
		(-0.98--1.25)x(3.43+3.41)/2	0.92		
		(-0.17--0.98)x(3.41+3.43)/2	2.77		
		(-0.14--0.17)x(3.41+3.41)/2	0.10		
		(0.65--0.14)x(3.35+3.41)/2	2.67		
		(0.91-0.65)x(3.40+3.35)/2	0.88		
		(1.46-0.91)x(3.45+3.40)/2	1.88		
		(1.98-1.46)x(3.55+3.45)/2	1.82		
		(2.27-1.98)x(3.57+3.55)/2	1.03		
		(3.06-2.27)x(3.67+3.57)/2	2.86		
		(3.08-3.06)x(3.67+3.67)/2	0.07		
		(3.14-3.08)x(3.67+3.67)/2	0.22		
		(3.90-3.14)x(3.67+3.67)/2	2.79		
		(4.14-3.90)x(3.66+3.67)/2	0.88		
		(4.71-4.14)x(3.62+3.66)/2	2.07		
		(4.87-4.71)x(3.62+3.62)/2	0.58		
		(2.95-4.87)x(4.90+3.62)/2	-8.18		
		(2.50-2.95)x(4.85+4.90)/2	-2.19		
		(-0.00-2.50)x(4.91+4.85)/2	-12.20		
		(-0.50--0.00)x(4.92+4.91)/2	-2.46		
		(-0.95--0.50)x(4.98+4.92)/2	-2.23		
		(-3.12--0.95)x(3.53+4.98)/2	-9.23		
				8.47	
2	R1	(-1.54--1.58)x(2.76+2.77)/2	0.11		
15.00		(-1.21--1.54)x(2.82+2.76)/2	0.92		
		(-0.09--1.21)x(2.96+2.82)/2	3.24		
		(-0.05--0.09)x(2.96+2.96)/2	0.12		
		(-0.01--0.05)x(2.97+2.96)/2	0.12		
		(1.12--0.01)x(3.07+2.97)/2	3.41		
		(2.12-1.12)x(2.96+3.07)/2	3.01		
		(2.29-2.12)x(2.93+2.96)/2	0.50		
		(2.49-2.29)x(2.90+2.93)/2	0.58		
		(3.43-2.49)x(2.79+2.90)/2	2.67		
		(2.95-3.43)x(3.11+2.79)/2	-1.42		
		(2.50-2.95)x(3.06+3.11)/2	-1.39		
		(-0.00-2.50)x(3.12+3.06)/2	-7.72		
		(-0.50--0.00)x(3.13+3.12)/2	-1.56		
		(-0.95--0.50)x(3.19+3.13)/2	-1.42		
		(-1.58--0.95)x(2.77+3.19)/2	-1.88		
				0.71	
3	R1	(-1.40--1.90)x(3.04+3.11)/2	1.54		
30.00		(-1.23--1.40)x(3.01+3.04)/2	0.51		
		(-0.99--1.23)x(2.98+3.01)/2	0.72		
		(-0.19--0.99)x(2.86+2.98)/2	2.34		
		(0.40--0.19)x(2.85+2.86)/2	1.68		
		(0.85-0.40)x(2.83+2.85)/2	1.28		
		(1.30-0.85)x(2.85+2.83)/2	1.28		
		(1.88-1.30)x(2.83+2.85)/2	1.65		
		(2.20-1.88)x(2.82+2.83)/2	0.90		
		(2.92-2.20)x(2.72+2.82)/2	1.99		
		(3.10-2.92)x(2.72+2.72)/2	0.49		
		(3.96-3.10)x(2.70+2.72)/2	2.33		
		(4.00-3.96)x(2.70+2.70)/2	0.11		
		(4.31-4.00)x(2.73+2.70)/2	0.84		
		(4.36-4.31)x(2.73+2.73)/2	0.14		
		(2.95-4.36)x(3.67+2.73)/2	-4.51		
		(2.50-2.95)x(3.62+3.67)/2	-1.64		
		(-0.00-2.50)x(3.68+3.62)/2	-9.13		
		(-0.50--0.00)x(3.69+3.68)/2	-1.84		
		(-0.95--0.50)x(3.75+3.69)/2	-1.67		
		(-1.90--0.95)x(3.11+3.75)/2	-3.26		
				4.25	
4	R1	(-0.55--0.57)x(2.52+2.52)/2	0.05		
45.00		(0.19--0.55)x(2.50+2.52)/2	1.86		
		(0.38-0.19)x(2.50+2.50)/2	0.47		
		(0.69-0.38)x(2.52+2.50)/2	0.78		
		(1.44-0.69)x(2.53+2.52)/2	1.89		
		(2.10-1.44)x(2.56+2.53)/2	1.68		
		(2.49-2.10)x(2.59+2.56)/2	1.00		
		(3.52-2.49)x(2.58+2.59)/2	2.66		
		(3.55-3.52)x(2.58+2.58)/2	0.08		
		(3.65-3.55)x(2.58+2.58)/2	0.26		
		(4.61-3.65)x(2.61+2.58)/2	2.49		
		(4.93-4.61)x(2.60+2.61)/2	0.83		
		(5.66-4.93)x(2.62+2.60)/2	1.91		
		(6.34-5.66)x(2.61+2.62)/2	1.78		
		(6.72-6.34)x(2.59+2.61)/2	0.99		
		(6.80-6.72)x(2.59+2.59)/2	0.21		
		(2.95-6.80)x(5.16+2.59)/2	-14.92		
		(2.50-2.95)x(5.10+5.16)/2	-2.31		
		(0.00-2.50)x(5.16+5.10)/2	-12.82		
		(-0.50-0.00)x(5.18+5.16)/2	-2.58		
		(-0.95--0.50)x(5.23+5.18)/2	-2.34		
		(-1.06--0.95)x(5.16+5.23)/2	-0.57		
		(-7.03--1.06)x(5.16+5.16)/2	-30.81		
		(-6.79--7.03)x(5.00+5.16)/2	1.22		
		(-0.57--6.79)x(5.00+5.00)/2	31.10		
				15.09	
5	R1	(-2.39--2.77)x(2.55+2.50)/2	0.96		
60.00		(-1.58--2.39)x(2.56+2.55)/2	2.07		
		(-1.31--1.58)x(2.58+2.56)/2	0.69		
		(-0.76--1.31)x(2.55+2.58)/2	1.41		
		(-0.75--0.76)x(5.00+2.55)/2	0.04		
		(3.31--0.75)x(5.00+5.00)/2	20.30		
		(2.95-3.31)x(5.24+5.00)/2	-1.84		
		(2.50-2.95)x(5.18+5.24)/2	-2.34		
		(0.00-2.50)x(5.24+5.18)/2	-13.03		
		(-0.50-0.00)x(5.26+5.24)/2	-2.63		
		(-0.95--0.50)x(5.31+5.26)/2	-2.38		
		(-2.41--0.95)x(4.34+5.31)/2	-7.04		
		(-2.77--2.41)x(4.34+4.34)/2	-1.56		
				5.35	
6	R1	(-2.40--2.47)x(2.35+2.34)/2	0.16		
75.00		(-1.98--2.40)x(2.40+2.35)/2	1.00		
		A RIPORTARE mq	1.16		

	CALCOLO DELLE AREE		Foglio n. 2

STERRI E RIPORTI

N. SEZIONE PROG.	FIG.	ELEMENTI DI CALCOLO	AREA ELEMENTARE mq	AREA FIGURA mq	NOTE
		RIPORTO mq	1.16		
		(-1.15--1.98)x(2.47+2.40)/2	2.02		
		(-0.90--1.15)x(2.49+2.47)/2	0.62		
		(-0.78--0.90)x(2.50+2.49)/2	0.30		
		(0.18--0.78)x(2.52+2.50)/2	2.41		
		(0.84-0.18)x(2.50+2.52)/2	1.66		
		(1.26-0.84)x(2.50+2.50)/2	1.05		
		(2.10-1.26)x(2.52+2.50)/2	2.11		
		(2.34-2.10)x(2.53+2.52)/2	0.61		
		(2.46-2.34)x(2.53+2.53)/2	0.30		
		(2.50-2.46)x(2.53+2.53)/2	0.10		
		(-0.00-2.50)x(3.87+3.81)/2	-9.60		
		(-0.50--0.00)x(3.88+3.87)/2	-1.94		
		(-0.95--0.50)x(3.94+3.88)/2	-1.76		
		(-1.37--0.95)x(3.66+3.94)/2	-1.60		
		(-2.47--1.37)x(3.66+3.66)/2	-4.03		
				6.59	
8	S1	(-0.40--0.83)x(2.25+2.24)/2	0.97		
105.00		(0.53--0.40)x(2.38+2.25)/2	2.15		
		(0.68-0.53)x(2.40+2.38)/2	0.36		
		(0.96-0.68)x(2.42+2.40)/2	0.67		
		(1.77-0.96)x(2.45+2.42)/2	1.97		
		(2.20-1.77)x(2.44+2.45)/2	1.05		
		(2.85-2.20)x(2.46+2.44)/2	1.59		
		(3.36-2.85)x(2.45+2.46)/2	1.25		
		(2.95-3.36)x(2.18+2.45)/2	-0.95		
		(2.50-2.95)x(2.12+2.18)/2	-0.97		
		(0.00-2.50)x(2.19+2.12)/2	-5.39		
		(-0.50-0.00)x(2.20+2.19)/2	-1.10		
		(-0.83--0.50)x(2.24+2.20)/2	-0.73		
				0.87	
9	S1	(-0.52--0.92)x(2.20+2.17)/2	0.87		
120.00		(-0.21--0.52)x(2.23+2.20)/2	0.69		
		(0.38--0.21)x(2.27+2.23)/2	1.33		
		(0.88-0.38)x(2.31+2.27)/2	1.15		
		(1.15-0.88)x(2.34+2.31)/2	0.63		
		(1.96-1.15)x(2.39+2.34)/2	1.92		
		(2.81-1.96)x(2.40+2.39)/2	2.04		
		(3.05-2.81)x(2.40+2.40)/2	0.58		
		(3.37-3.05)x(2.38+2.40)/2	0.76		
		(2.95-3.37)x(2.10+2.38)/2	-0.94		
		(2.50-2.95)x(2.05+2.10)/2	-0.93		
		(0.00-2.50)x(2.11+2.05)/2	-5.20		
		(-0.50-0.00)x(2.12+2.11)/2	-1.06		
		(-0.92--0.50)x(2.17+2.12)/2	-0.90		
				0.94	
10	S1	(-0.86--0.97)x(2.19+2.17)/2	0.24		
124.19		(-0.58--0.86)x(2.27+2.19)/2	0.62		
		(-0.06--0.58)x(2.29+2.27)/2	1.19		
		(0.50--0.06)x(2.30+2.29)/2	1.29		
		(0.80-0.50)x(2.32+2.30)/2	0.69		
		(1.59-0.80)x(2.40+2.32)/2	1.86		
		(2.47-1.59)x(2.35+2.40)/2	2.09		
		(2.68-2.47)x(2.33+2.35)/2	0.49		
		(3.06-2.68)x(2.32+2.33)/2	0.88		
		(3.28-3.06)x(2.30+2.32)/2	0.51		
		(2.95-3.28)x(2.08+2.30)/2	-0.72		
		(2.50-2.95)x(2.03+2.08)/2	-0.92		
		(0.00-2.50)x(2.09+2.03)/2	-5.15		
		(-0.50-0.00)x(2.10+2.09)/2	-1.05		
		(-0.95--0.50)x(2.16+2.10)/2	-0.96		
		(-0.97--0.95)x(2.17+2.16)/2	-0.04		
				1.02	

Il Direttore dei Lavori	L'Impresa	

N. SEZ.	FIG.	SUPERFICIE STERRO mq	SUPERFICIE RIPORTO mq	PUNTI DI PASSAGGIO (PROGRESSIVA m)	DISTANZA m	VOLUMI PARZIALI STERRO mc	VOLUMI PARZIALI RIPORTO mc	VOLUMI TOTALI STERRO mc	VOLUMI TOTALI RIPORTO mc
1	R1		8.47	(0.00)					
					15.00		68.850		
2	R1		0.71	(15.00)					
									68.850
2	R1		0.71	(15.00)					
					15.00		37.200		
3	R1		4.25	(30.00)					
									37.200
3	R1		4.25	(30.00)					
					15.00		145.050		
4	R1		15.09	(45.00)					
									145.050
4	R1		15.09	(45.00)					
					15.00		113.175		
5	R0		0.00	(60.00)					
4	R0		0.00	(45.00)					
					15.00		40.125		
5	R1		5.35	(60.00)					
									153.300
5	R1		5.35	(60.00)					
					15.00		89.550		
6	R1		6.59	(75.00)					
									89.550
8	S1	0.87		(105.00)					
					15.00	13.575			
9	S1	0.94		(120.00)					
								13.575	
9	S1	0.94		(120.00)					
					4.19	4.106			
10	S1	1.02		(124.19)					
								4.106	

Il Direttore dei Lavori	L'Impresa	Totale Articoli .....:	17.681	493.950
		A dedurre quantita' precedenti:		
		Quantita' da contabilizzare ..:		

		CALCOLO DELLE LUNGHEZZE		Foglio n. 4	
VEGETALE					
N. SEZIONE PROG.	FIG.	ELEMENTI DI CALCOLO	LUNGHEZZA ELEMENTARE ml	LUNGHEZZA FIGURA ml	NOTE
1	b2	(-0.53--0.50)	0.03		
0.00		(-1.00--0.53)	0.47		
		(-3.46--1.00)	2.46		
				2.96	
1	b1	(2.53-2.50)	0.03		
0.00		(3.00-2.53)	0.47		
		(5.22-3.00)	2.22		
				2.72	
2	b1	(-0.53--0.50)	0.03		
15.00		(-1.00--0.53)	0.47		
		(-1.91--1.00)	0.91		
				1.41	
2	b2	(2.53-2.50)	0.03		
15.00		(3.00-2.53)	0.47		
		(3.94-3.00)	0.94		
				1.44	
3	b1	(-0.53--0.50)	0.03		
30.00		(-1.00--0.53)	0.47		
		(-2.20--1.00)	1.20		
				1.70	
3	b2	(2.53-2.50)	0.03		
30.00		(3.00-2.53)	0.47		
		(4.69-3.00)	1.69		
				2.19	
4	b1	(-0.53--0.50)	0.03		
45.00		(-1.00--0.53)	0.47		
		(-1.12--1.00)	0.12		
		(-7.33--1.12)	6.21		
				6.83	
4	b2	(2.53-2.50)	0.03		
45.00		(3.00-2.53)	0.47		
		(7.13-3.00)	4.13		
				4.63	
5	b2	(-0.53--0.50)	0.03		
60.00		(-1.00--0.53)	0.47		
		(-2.77--1.00)	1.77		
				2.27	
5	b1	(2.53-2.50)	0.03		
60.00		(3.00-2.53)	0.47		
		(3.67-3.00)	0.67		
				1.17	
6	b1	(-0.53--0.50)	0.03		
75.00		(-1.00--0.53)	0.47		
		(-1.73--1.00)	0.73		
				1.23	
6	b1000	(3.00-3.00)	0.00		
				0.00	
6	b2	(3.00-3.00)	0.00		
				0.00	
6	b3	(3.00-3.00)	0.00		
				0.00	
6	b4	(3.00-3.00)	0.00		
				0.00	
6	b5	(3.00-3.00)	0.00		
				0.00	
6	b6	(3.00-3.00)	0.00		
				0.00	
6	b7	(3.00-3.00)	0.00		
				0.00	
6	b8	(3.00-3.00)	0.00		
				0.00	
6	b9	(3.00-3.00)	0.00		
				0.00	
6	b10	(3.00-3.00)	0.00		
				0.00	
6	b11	(3.00-3.00)	0.00		
				0.00	
6	b12	(3.00-3.00)	0.00		
				0.00	
6	b13	(3.00-3.00)	0.00		
				0.00	
6	b14	(3.00-3.00)	0.00		
				0.00	
6	b15	(3.00-3.00)	0.00		
				0.00	
6	b16	(3.00-3.00)	0.00		
				0.00	
6	b17	(3.00-3.00)	0.00		
				0.00	
6	b18	(3.00-3.00)	0.00		
				0.00	
6	b19	(3.00-3.00)	0.00		
				0.00	
6	b20	(3.00-3.00)	0.00		
				0.00	
6	b21	(3.00-3.00)	0.00		
				0.00	
6	b22	(3.00-3.00)	0.00		
				0.00	
6	b23	(3.00-3.00)	0.00		
				0.00	
6	b24	(3.00-3.00)	0.00		
				0.00	
6	b25	(3.00-3.00)	0.00		
				0.00	
6	b26	(3.00-3.00)	0.00		
				0.00	
6	b27	(3.00-3.00)	0.00		
				0.00	
6	b28	(3.00-3.00)	0.00		
				0.00	
6	b29	(3.00-3.00)	0.00		
				0.00	
6	b30	(3.00-3.00)	0.00		
				0.00	
6	b31	(3.00-3.00)	0.00		
				0.00	
		A RIPORTARE ml			

		CALCOLO DELLE LUNGHEZZE		Foglio n. 5
VEGETALE				
N. SEZIONE PROG.	FIG.	ELEMENTI DI CALCOLO	LUNGHEZZA ELEMENTARE ml	LUNGHEZZA FIGURA ml	NOTE
		RIPORTO ml			
6	b32	(3.00-3.00)	0.00	0.00	
6	b33	(3.00-3.00)	0.00	0.00	
6	b34	(3.00-3.00)	0.00	0.00	
6	b35	(3.00-3.00)	0.00	0.00	
6	b36	(3.00-3.00)	0.00	0.00	
6	b37	(3.00-3.00)	0.00	0.00	
6	b38	(3.00-3.00)	0.00	0.00	
6	b39	(3.00-3.00)	0.00	0.00	
6	b40	(3.00-3.00)	0.00	0.00	
6	b41	(3.00-3.00)	0.00	0.00	
6	b42	(3.00-3.00)	0.00	0.00	
6	b43	(3.00-3.00)	0.00	0.00	
6	b44	(3.00-3.00)	0.00	0.00	
6	b45	(3.00-3.00)	0.00	0.00	
6	b46	(3.00-3.00)	0.00	0.00	
6	b47	(3.00-3.00)	0.00	0.00	
6	b48	(3.00-3.00)	0.00	0.00	
6	b49	(3.00-3.00)	0.00	0.00	
6	b50	(3.00-3.00)	0.00	0.00	
6	b51	(3.00-3.00)	0.00	0.00	
6	b52	(3.00-3.00)	0.00	0.00	
6	b53	(3.00-3.00)	0.00	0.00	
6	b54	(3.00-3.00)	0.00	0.00	
6	b55	(3.00-3.00)	0.00	0.00	
6	b56	(3.00-3.00)	0.00	0.00	
6	b57	(3.00-3.00)	0.00	0.00	
6	b58	(3.00-3.00)	0.00	0.00	
6	b59	(3.00-3.00)	0.00	0.00	
6	b60	(3.00-3.00)	0.00	0.00	
6	b61	(3.00-3.00)	0.00	0.00	
6	b62	(3.00-3.00)	0.00	0.00	
6	b63	(3.00-3.00)	0.00	0.00	
6	b64	(3.00-3.00)	0.00	0.00	
6	b65	(3.00-3.00)	0.00	0.00	
6	b66	(3.00-3.00)	0.00	0.00	
6	b67	(3.00-3.00)	0.00	0.00	
6	b68	(3.00-3.00)	0.00	0.00	
6	b69	(3.00-3.00)	0.00	0.00	
6	b70	(3.00-3.00)	0.00	0.00	
6	b71	(3.00-3.00)	0.00	0.00	
6	b72	(3.00-3.00)	0.00	0.00	
6	b73	(3.00-3.00)	0.00	0.00	
6	b74	(3.00-3.00)	0.00	0.00	
6	b75	(3.00-3.00)	0.00	0.00	
6	b76	(3.00-3.00)	0.00	0.00	
6	b77	(3.00-3.00)	0.00	0.00	
6	b78	(3.00-3.00)	0.00	0.00	
6	b79	(3.00-3.00)	0.00	0.00	
6	b80	(3.00-3.00)	0.00	0.00	
6	b81	(3.00-3.00)	0.00	0.00	
6	b82	(3.00-3.00)	0.00	0.00	
6	b83	(3.00-3.00)	0.00	0.00	
6	b84	(3.00-3.00)	0.00	0.00	
		A RIPORTARE ml	0.00		

		CALCOLO DELLE LUNGHEZZE		Foglio n. 6
VEGETALE				
N. SEZIONE PROG.	FIG.	ELEMENTI DI CALCOLO	LUNGHEZZA ELEMENTARE ml	LUNGHEZZA FIGURA ml	NOTE
		RIPORTO ml	0.00		
6	b85	(3.00-3.00)	0.00	0.00	
6	b86	(3.00-3.00)	0.00	0.00	
6	b87	(3.00-3.00)	0.00	0.00	
6	b88	(3.00-3.00)	0.00	0.00	
6	b89	(3.00-3.00)	0.00	0.00	
6	b90	(3.00-3.00)	0.00	0.00	
6	b91	(3.00-3.00)	0.00	0.00	
6	b92	(3.00-3.00)	0.00	0.00	
6	b93	(3.00-3.00)	0.00	0.00	
6	b94	(3.00-3.00)	0.00	0.00	
6	b95	(3.00-3.00)	0.00	0.00	
6	b96	(3.00-3.00)	0.00	0.00	
6	b97	(3.00-3.00)	0.00	0.00	
6	b98	(3.00-3.00)	0.00	0.00	
6	b99	(3.00-3.00)	0.00	0.00	
6	b100	(3.00-3.00)	0.00	0.00	
6	b101	(3.00-3.00)	0.00	0.00	
6	b102	(3.00-3.00)	0.00	0.00	
6	b103	(3.00-3.00)	0.00	0.00	
6	b104	(3.00-3.00)	0.00	0.00	
6	b105	(3.00-3.00)	0.00	0.00	
6	b106	(3.00-3.00)	0.00	0.00	
6	b107	(3.00-3.00)	0.00	0.00	
6	b108	(3.00-3.00)	0.00	0.00	
6	b109	(3.00-3.00)	0.00	0.00	
6	b110	(3.00-3.00)	0.00	0.00	
6	b111	(3.00-3.00)	0.00	0.00	
6	b112	(3.00-3.00)	0.00	0.00	
6	b113	(3.00-3.00)	0.00	0.00	
6	b114	(3.00-3.00)	0.00	0.00	
6	b115	(3.00-3.00)	0.00	0.00	
6	b116	(3.00-3.00)	0.00	0.00	
6	b117	(3.00-3.00)	0.00	0.00	
6	b118	(3.00-3.00)	0.00	0.00	
6	b119	(3.00-3.00)	0.00	0.00	
6	b120	(3.00-3.00)	0.00	0.00	
6	b121	(3.00-3.00)	0.00	0.00	
6	b122	(3.00-3.00)	0.00	0.00	
6	b123	(3.00-3.00)	0.00	0.00	
6	b124	(3.00-3.00)	0.00	0.00	
6	b125	(3.00-3.00)	0.00	0.00	
6	b126	(3.00-3.00)	0.00	0.00	
6	b127	(3.00-3.00)	0.00	0.00	
6	b128	(3.00-3.00)	0.00	0.00	
6	b129	(3.00-3.00)	0.00	0.00	
6	b130	(3.00-3.00)	0.00	0.00	
6	b131	(3.00-3.00)	0.00	0.00	
6	b132	(3.00-3.00)	0.00	0.00	
6	b133	(3.00-3.00)	0.00	0.00	
6	b134	(3.00-3.00)	0.00	0.00	
6	b135	(3.00-3.00)	0.00	0.00	
6	b136	(3.00-3.00)	0.00	0.00	
		A RIPORTARE ml			

		CALCOLO DELLE LUNGHEZZE		Foglio n. 7	
VEGETALE					
N. SEZIONE PROG.	FIG.	ELEMENTI DI CALCOLO	LUNGHEZZA ELEMENTARE ml	LUNGHEZZA FIGURA ml	NOTE
		RIPORTO ml			
6	b137	(3.00-3.00)	0.00	0.00	
6	b138	(3.00-3.00)	0.00	0.00	
6	b139	(3.00-3.00)	0.00	0.00	
6	b140	(3.00-3.00)	0.00	0.00	
6	b141	(3.00-3.00)	0.00	0.00	
6	b142	(3.00-3.00)	0.00	0.00	
6	b143	(3.00-3.00)	0.00	0.00	
6	b144	(3.00-3.00)	0.00	0.00	
6	b145	(3.00-3.00)	0.00	0.00	
6	b146	(3.00-3.00)	0.00	0.00	
6	b147	(3.00-3.00)	0.00	0.00	
6	b148	(3.00-3.00)	0.00	0.00	
6	b149	(3.00-3.00)	0.00	0.00	
6	b150	(3.00-3.00)	0.00	0.00	
6	b151	(3.00-3.00)	0.00	0.00	
6	b152	(3.00-3.00)	0.00	0.00	
6	b153	(3.00-3.00)	0.00	0.00	
6	b154	(3.00-3.00)	0.00	0.00	
6	b155	(3.00-3.00)	0.00	0.00	
6	b156	(3.00-3.00)	0.00	0.00	
6	b157	(3.00-3.00)	0.00	0.00	
6	b158	(3.00-3.00)	0.00	0.00	
6	b159	(3.00-3.00)	0.00	0.00	
6	b160	(3.00-3.00)	0.00	0.00	
6	b161	(3.00-3.00)	0.00	0.00	
6	b162	(3.00-3.00)	0.00	0.00	
6	b163	(3.00-3.00)	0.00	0.00	
6	b164	(3.00-3.00)	0.00	0.00	
6	b165	(3.00-3.00)	0.00	0.00	
6	b166	(3.00-3.00)	0.00	0.00	
6	b167	(3.00-3.00)	0.00	0.00	
6	b168	(3.00-3.00)	0.00	0.00	
6	b169	(3.00-3.00)	0.00	0.00	
6	b170	(3.00-3.00)	0.00	0.00	
6	b171	(3.00-3.00)	0.00	0.00	
6	b172	(3.00-3.00)	0.00	0.00	
6	b173	(3.00-3.00)	0.00	0.00	
6	b174	(3.00-3.00)	0.00	0.00	
6	b175	(3.00-3.00)	0.00	0.00	
6	b176	(3.00-3.00)	0.00	0.00	
6	b177	(3.00-3.00)	0.00	0.00	
6	b178	(3.00-3.00)	0.00	0.00	
6	b179	(3.00-3.00)	0.00	0.00	
6	b180	(3.00-3.00)	0.00	0.00	
6	b181	(3.00-3.00)	0.00	0.00	
6	b182	(3.00-3.00)	0.00	0.00	
6	b183	(3.00-3.00)	0.00	0.00	
6	b184	(3.00-3.00)	0.00	0.00	
6	b185	(3.00-3.00)	0.00	0.00	
6	b186	(3.00-3.00)	0.00	0.00	
6	b187	(3.00-3.00)	0.00	0.00	
6	b188	(3.00-3.00)	0.00	0.00	
6	b189	(3.00-3.00)	0.00		
		A RIPORTARE ml	0.00		

		CALCOLO DELLE LUNGHEZZE		Foglio n. 8	
VEGETALE					
N. SEZIONE PROG.	FIG.	ELEMENTI DI CALCOLO	LUNGHEZZA ELEMENTARE ml	LUNGHEZZA FIGURA ml	NOTE
		RIPORTO ml	0.00		
6	b190	(3.00-3.00)	0.00	0.00	
6	b191	(3.00-3.00)	0.00	0.00	
6	b192	(3.00-3.00)	0.00	0.00	
6	b193	(3.00-3.00)	0.00	0.00	
6	b194	(3.00-3.00)	0.00	0.00	
6	b195	(3.00-3.00)	0.00	0.00	
6	b196	(3.00-3.00)	0.00	0.00	
6	b197	(3.00-3.00)	0.00	0.00	
6	b198	(3.00-3.00)	0.00	0.00	
6	b199	(3.00-3.00)	0.00	0.00	
6	b200	(3.00-3.00)	0.00	0.00	
6	b201	(3.00-3.00)	0.00	0.00	
6	b202	(3.00-3.00)	0.00	0.00	
6	b203	(3.00-3.00)	0.00	0.00	
6	b204	(3.00-3.00)	0.00	0.00	
6	b205	(3.00-3.00)	0.00	0.00	
6	b206	(3.00-3.00)	0.00	0.00	
6	b207	(3.00-3.00)	0.00	0.00	
6	b208	(3.00-3.00)	0.00	0.00	
6	b209	(3.00-3.00)	0.00	0.00	
6	b210	(3.00-3.00)	0.00	0.00	
6	b211	(3.00-3.00)	0.00	0.00	
6	b212	(3.00-3.00)	0.00	0.00	
6	b213	(3.00-3.00)	0.00	0.00	
6	b214	(3.00-3.00)	0.00	0.00	
6	b215	(3.00-3.00)	0.00	0.00	
6	b216	(3.00-3.00)	0.00	0.00	
6	b217	(3.00-3.00)	0.00	0.00	
6	b218	(3.00-3.00)	0.00	0.00	
6	b219	(3.00-3.00)	0.00	0.00	
6	b220	(3.00-3.00)	0.00	0.00	
6	b221	(3.00-3.00)	0.00	0.00	
6	b222	(3.00-3.00)	0.00	0.00	
6	b223	(3.00-3.00)	0.00	0.00	
6	b224	(3.00-3.00)	0.00	0.00	
6	b225	(3.00-3.00)	0.00	0.00	
6	b226	(3.00-3.00)	0.00	0.00	
6	b227	(3.00-3.00)	0.00	0.00	
6	b228	(3.00-3.00)	0.00	0.00	
6	b229	(3.00-3.00)	0.00	0.00	
6	b230	(3.00-3.00)	0.00	0.00	
6	b231	(3.00-3.00)	0.00	0.00	
6	b232	(3.00-3.00)	0.00	0.00	
6	b233	(3.00-3.00)	0.00	0.00	
6	b234	(3.00-3.00)	0.00	0.00	
6	b235	(3.00-3.00)	0.00	0.00	
6	b236	(3.00-3.00)	0.00	0.00	
6	b237	(3.00-3.00)	0.00	0.00	
6	b238	(3.00-3.00)	0.00	0.00	
6	b239	(3.00-3.00)	0.00	0.00	
6	b240	(3.00-3.00)	0.00	0.00	
6	b241	(3.00-3.00)	0.00	0.00	
		A RIPORTARE ml			

		CALCOLO DELLE LUNGHEZZE		Foglio n. 9
VEGETALE				
N. SEZIONE PROG.	FIG.	ELEMENTI DI CALCOLO	LUNGHEZZA ELEMENTARE ml	LUNGHEZZA FIGURA ml	NOTE
		RIPORTO ml			
6	b242	(3.00-3.00)	0.00	0.00	
6	b243	(3.00-3.00)	0.00	0.00	
6	b244	(3.00-3.00)	0.00	0.00	
6	b245	(3.00-3.00)	0.00	0.00	
6	b246	(3.00-3.00)	0.00	0.00	
6	b247	(3.00-3.00)	0.00	0.00	
6	b248	(3.00-3.00)	0.00	0.00	
6	b249	(3.00-3.00)	0.00	0.00	
6	b250	(3.00-3.00)	0.00	0.00	
6	b251	(3.00-3.00)	0.00	0.00	
6	b252	(3.00-3.00)	0.00	0.00	
6	b253	(3.00-3.00)	0.00	0.00	
6	b254	(3.00-3.00)	0.00	0.00	
6	b255	(3.00-3.00)	0.00	0.00	
6	b256	(3.00-3.00)	0.00	0.00	
6	b257	(3.00-3.00)	0.00	0.00	
6	b258	(3.00-3.00)	0.00	0.00	
6	b259	(3.00-3.00)	0.00	0.00	
6	b260	(3.00-3.00)	0.00	0.00	
6	b261	(3.00-3.00)	0.00	0.00	
6	b262	(3.00-3.00)	0.00	0.00	
6	b263	(3.00-3.00)	0.00	0.00	
6	b264	(3.00-3.00)	0.00	0.00	
6	b265	(3.00-3.00)	0.00	0.00	
6	b266	(3.00-3.00)	0.00	0.00	
6	b267	(3.00-3.00)	0.00	0.00	
6	b268	(3.00-3.00)	0.00	0.00	
6	b269	(3.00-3.00)	0.00	0.00	
6	b270	(3.00-3.00)	0.00	0.00	
6	b271	(3.00-3.00)	0.00	0.00	
6	b272	(3.00-3.00)	0.00	0.00	
6	b273	(3.00-3.00)	0.00	0.00	
6	b274	(3.00-3.00)	0.00	0.00	
6	b275	(3.00-3.00)	0.00	0.00	
6	b276	(3.00-3.00)	0.00	0.00	
6	b277	(3.00-3.00)	0.00	0.00	
6	b278	(3.00-3.00)	0.00	0.00	
6	b279	(3.00-3.00)	0.00	0.00	
6	b280	(3.00-3.00)	0.00	0.00	
6	b281	(3.00-3.00)	0.00	0.00	
6	b282	(3.00-3.00)	0.00	0.00	
6	b283	(3.00-3.00)	0.00	0.00	
6	b284	(3.00-3.00)	0.00	0.00	
6	b285	(3.00-3.00)	0.00	0.00	
6	b286	(3.00-3.00)	0.00	0.00	
6	b287	(3.00-3.00)	0.00	0.00	
6	b288	(3.00-3.00)	0.00	0.00	
6	b289	(3.00-3.00)	0.00	0.00	
6	b290	(3.00-3.00)	0.00	0.00	
6	b291	(3.00-3.00)	0.00	0.00	
6	b292	(3.00-3.00)	0.00	0.00	
6	b293	(3.00-3.00)	0.00	0.00	
6	b294	(3.00-3.00)	0.00	0.00	
		A RIPORTARE ml	0.00		

		CALCOLO DELLE LUNGHEZZE		Foglio n. 10	
VEGETALE					
N. SEZIONE PROG.	FIG.	ELEMENTI DI CALCOLO	LUNGHEZZA ELEMENTARE ml	LUNGHEZZA FIGURA ml	NOTE
		RIPORTO ml	0.00		
6	b295	(3.00-3.00)	0.00	0.00	
6	b296	(3.00-3.00)	0.00	0.00	
6	b297	(3.00-3.00)	0.00	0.00	
6	b298	(3.00-3.00)	0.00	0.00	
6	b299	(3.00-3.00)	0.00	0.00	
6	b300	(3.00-3.00)	0.00	0.00	
6	b301	(3.00-3.00)	0.00	0.00	
6	b302	(3.00-3.00)	0.00	0.00	
6	b303	(3.00-3.00)	0.00	0.00	
6	b304	(3.00-3.00)	0.00	0.00	
6	b305	(3.00-3.00)	0.00	0.00	
6	b306	(3.00-3.00)	0.00	0.00	
6	b307	(3.00-3.00)	0.00	0.00	
6	b308	(3.00-3.00)	0.00	0.00	
6	b309	(3.00-3.00)	0.00	0.00	
6	b310	(3.00-3.00)	0.00	0.00	
6	b311	(3.00-3.00)	0.00	0.00	
6	b312	(3.00-3.00)	0.00	0.00	
6	b313	(3.00-3.00)	0.00	0.00	
6	b314	(3.00-3.00)	0.00	0.00	
6	b315	(3.00-3.00)	0.00	0.00	
6	b316	(3.00-3.00)	0.00	0.00	
6	b317	(3.00-3.00)	0.00	0.00	
6	b318	(3.00-3.00)	0.00	0.00	
6	b319	(3.00-3.00)	0.00	0.00	
6	b320	(3.00-3.00)	0.00	0.00	
6	b321	(3.00-3.00)	0.00	0.00	
6	b322	(3.00-3.00)	0.00	0.00	
6	b323	(3.00-3.00)	0.00	0.00	
6	b324	(3.00-3.00)	0.00	0.00	
6	b325	(3.00-3.00)	0.00	0.00	
6	b326	(3.00-3.00)	0.00	0.00	
6	b327	(3.00-3.00)	0.00	0.00	
6	b328	(3.00-3.00)	0.00	0.00	
6	b329	(3.00-3.00)	0.00	0.00	
6	b330	(3.00-3.00)	0.00	0.00	
6	b331	(3.00-3.00)	0.00	0.00	
6	b332	(3.00-3.00)	0.00	0.00	
6	b333	(3.00-3.00)	0.00	0.00	
6	b334	(3.00-3.00)	0.00	0.00	
6	b335	(3.00-3.00)	0.00	0.00	
6	b336	(3.00-3.00)	0.00	0.00	
6	b337	(3.00-3.00)	0.00	0.00	
6	b338	(3.00-3.00)	0.00	0.00	
6	b339	(3.00-3.00)	0.00	0.00	
6	b340	(3.00-3.00)	0.00	0.00	
6	b341	(3.00-3.00)	0.00	0.00	
6	b342	(3.00-3.00)	0.00	0.00	
6	b343	(3.00-3.00)	0.00	0.00	
6	b344	(3.00-3.00)	0.00	0.00	
6	b345	(3.00-3.00)	0.00	0.00	
6	b346	(3.00-3.00)	0.00	0.00	
		A RIPORTARE ml			

		CALCOLO DELLE LUNGHEZZE		Foglio n. 11	
VEGETALE					
N. SEZIONE PROG.	FIG.	ELEMENTI DI CALCOLO	LUNGHEZZA ELEMENTARE ml	LUNGHEZZA FIGURA ml	NOTE
		RIPORTO ml			
6	b347	(3.00-3.00)	0.00	0.00	
6	b348	(3.00-3.00)	0.00	0.00	
6	b349	(3.00-3.00)	0.00	0.00	
6	b350	(3.00-3.00)	0.00	0.00	
6	b351	(3.00-3.00)	0.00	0.00	
6	b352	(3.00-3.00)	0.00	0.00	
6	b353	(3.00-3.00)	0.00	0.00	
6	b354	(3.00-3.00)	0.00	0.00	
6	b355	(3.00-3.00)	0.00	0.00	
6	b356	(3.00-3.00)	0.00	0.00	
6	b357	(3.00-3.00)	0.00	0.00	
6	b358	(3.00-3.00)	0.00	0.00	
6	b359	(3.00-3.00)	0.00	0.00	
6	b360	(3.00-3.00)	0.00	0.00	
6	b361	(3.00-3.00)	0.00	0.00	
6	b362	(3.00-3.00)	0.00	0.00	
6	b363	(3.00-3.00)	0.00	0.00	
6	b364	(3.00-3.00)	0.00	0.00	
6	b365	(3.00-3.00)	0.00	0.00	
6	b366	(3.00-3.00)	0.00	0.00	
6	b367	(3.00-3.00)	0.00	0.00	
6	b368	(3.00-3.00)	0.00	0.00	
6	b369	(3.00-3.00)	0.00	0.00	
6	b370	(3.00-3.00)	0.00	0.00	
6	b371	(3.00-3.00)	0.00	0.00	
6	b372	(3.00-3.00)	0.00	0.00	
6	b373	(3.00-3.00)	0.00	0.00	
6	b374	(3.00-3.00)	0.00	0.00	
6	b375	(3.00-3.00)	0.00	0.00	
6	b376	(3.00-3.00)	0.00	0.00	
6	b377	(3.00-3.00)	0.00	0.00	
6	b378	(3.00-3.00)	0.00	0.00	
6	b379	(3.00-3.00)	0.00	0.00	
6	b380	(3.00-3.00)	0.00	0.00	
6	b381	(3.00-3.00)	0.00	0.00	
6	b382	(3.00-3.00)	0.00	0.00	
6	b383	(3.00-3.00)	0.00	0.00	
6	b384	(3.00-3.00)	0.00	0.00	
6	b385	(3.00-3.00)	0.00	0.00	
6	b386	(3.00-3.00)	0.00	0.00	
6	b387	(3.00-3.00)	0.00	0.00	
6	b388	(3.00-3.00)	0.00	0.00	
6	b389	(3.00-3.00)	0.00	0.00	
6	b390	(3.00-3.00)	0.00	0.00	
6	b391	(3.00-3.00)	0.00	0.00	
6	b392	(3.00-3.00)	0.00	0.00	
6	b393	(3.00-3.00)	0.00	0.00	
6	b394	(3.00-3.00)	0.00	0.00	
6	b395	(3.00-3.00)	0.00	0.00	
6	b396	(3.00-3.00)	0.00	0.00	
6	b397	(3.00-3.00)	0.00	0.00	
6	b398	(3.00-3.00)	0.00	0.00	
6	b399	(3.00-3.00)	0.00	0.00	
		A RIPORTARE ml	0.00		

		CALCOLO DELLE LUNGHEZZE		Foglio n. 12	
VEGETALE					
N. SEZIONE PROG.	FIG.	ELEMENTI DI CALCOLO	LUNGHEZZA ELEMENTARE ml	LUNGHEZZA FIGURA ml	NOTE
		RIPORTO ml	0.00		
6	b400	(3.00-3.00)	0.00	0.00	
6	b401	(3.00-3.00)	0.00	0.00	
6	b402	(3.00-3.00)	0.00	0.00	
6	b403	(3.00-3.00)	0.00	0.00	
6	b404	(3.00-3.00)	0.00	0.00	
6	b405	(3.00-3.00)	0.00	0.00	
6	b406	(3.00-3.00)	0.00	0.00	
6	b407	(3.00-3.00)	0.00	0.00	
6	b408	(3.00-3.00)	0.00	0.00	
6	b409	(3.00-3.00)	0.00	0.00	
6	b410	(3.00-3.00)	0.00	0.00	
6	b411	(3.00-3.00)	0.00	0.00	
6	b412	(3.00-3.00)	0.00	0.00	
6	b413	(3.00-3.00)	0.00	0.00	
6	b414	(3.00-3.00)	0.00	0.00	
6	b415	(3.00-3.00)	0.00	0.00	
6	b416	(3.00-3.00)	0.00	0.00	
6	b417	(3.00-3.00)	0.00	0.00	
6	b418	(3.00-3.00)	0.00	0.00	
6	b419	(3.00-3.00)	0.00	0.00	
6	b420	(3.00-3.00)	0.00	0.00	
6	b421	(3.00-3.00)	0.00	0.00	
6	b422	(3.00-3.00)	0.00	0.00	
6	b423	(3.00-3.00)	0.00	0.00	
6	b424	(3.00-3.00)	0.00	0.00	
6	b425	(3.00-3.00)	0.00	0.00	
6	b426	(3.00-3.00)	0.00	0.00	
6	b427	(3.00-3.00)	0.00	0.00	
6	b428	(3.00-3.00)	0.00	0.00	
6	b429	(3.00-3.00)	0.00	0.00	
6	b430	(3.00-3.00)	0.00	0.00	
6	b431	(3.00-3.00)	0.00	0.00	
6	b432	(3.00-3.00)	0.00	0.00	
6	b433	(3.00-3.00)	0.00	0.00	
6	b434	(3.00-3.00)	0.00	0.00	
6	b435	(3.00-3.00)	0.00	0.00	
6	b436	(3.00-3.00)	0.00	0.00	
6	b437	(3.00-3.00)	0.00	0.00	
6	b438	(3.00-3.00)	0.00	0.00	
6	b439	(3.00-3.00)	0.00	0.00	
6	b440	(3.00-3.00)	0.00	0.00	
6	b441	(3.00-3.00)	0.00	0.00	
6	b442	(3.00-3.00)	0.00	0.00	
6	b443	(3.00-3.00)	0.00	0.00	
6	b444	(3.00-3.00)	0.00	0.00	
6	b445	(3.00-3.00)	0.00	0.00	
6	b446	(3.00-3.00)	0.00	0.00	
6	b447	(3.00-3.00)	0.00	0.00	
6	b448	(3.00-3.00)	0.00	0.00	
6	b449	(3.00-3.00)	0.00	0.00	
6	b450	(3.00-3.00)	0.00	0.00	
6	b451	(3.00-3.00)	0.00	0.00	
		A RIPORTARE ml			

		CALCOLO DELLE LUNGHEZZE		Foglio n. 13
VEGETALE				
N. SEZIONE PROG.	FIG.	ELEMENTI DI CALCOLO	LUNGHEZZA ELEMENTARE ml	LUNGHEZZA FIGURA ml	NOTE
		RIPORTO ml			
6	b452	(3.00-3.00)	0.00	0.00	
6	b453	(3.00-3.00)	0.00	0.00	
6	b454	(3.00-3.00)	0.00	0.00	
6	b455	(3.00-3.00)	0.00	0.00	
6	b456	(3.00-3.00)	0.00	0.00	
6	b457	(3.00-3.00)	0.00	0.00	
6	b458	(3.00-3.00)	0.00	0.00	
6	b459	(3.00-3.00)	0.00	0.00	
6	b460	(3.00-3.00)	0.00	0.00	
6	b461	(3.00-3.00)	0.00	0.00	
6	b462	(3.00-3.00)	0.00	0.00	
6	b463	(3.00-3.00)	0.00	0.00	
6	b464	(3.00-3.00)	0.00	0.00	
6	b465	(3.00-3.00)	0.00	0.00	
6	b466	(3.00-3.00)	0.00	0.00	
6	b467	(3.00-3.00)	0.00	0.00	
6	b468	(3.00-3.00)	0.00	0.00	
6	b469	(3.00-3.00)	0.00	0.00	
6	b470	(3.00-3.00)	0.00	0.00	
6	b471	(3.00-3.00)	0.00	0.00	
6	b472	(3.00-3.00)	0.00	0.00	
6	b473	(3.00-3.00)	0.00	0.00	
6	b474	(3.00-3.00)	0.00	0.00	
6	b475	(3.00-3.00)	0.00	0.00	
6	b476	(3.00-3.00)	0.00	0.00	
6	b477	(3.00-3.00)	0.00	0.00	
6	b478	(3.00-3.00)	0.00	0.00	
6	b479	(3.00-3.00)	0.00	0.00	
6	b480	(3.00-3.00)	0.00	0.00	
6	b481	(3.00-3.00)	0.00	0.00	
6	b482	(3.00-3.00)	0.00	0.00	
6	b483	(3.00-3.00)	0.00	0.00	
6	b484	(3.00-3.00)	0.00	0.00	
6	b485	(3.00-3.00)	0.00	0.00	
6	b486	(3.00-3.00)	0.00	0.00	
6	b487	(3.00-3.00)	0.00	0.00	
6	b488	(3.00-3.00)	0.00	0.00	
6	b489	(3.00-3.00)	0.00	0.00	
6	b490	(3.00-3.00)	0.00	0.00	
6	b491	(3.00-3.00)	0.00	0.00	
6	b492	(3.00-3.00)	0.00	0.00	
6	b493	(3.00-3.00)	0.00	0.00	
6	b494	(3.00-3.00)	0.00	0.00	
6	b495	(3.00-3.00)	0.00	0.00	
6	b496	(3.00-3.00)	0.00	0.00	
6	b497	(3.00-3.00)	0.00	0.00	
6	b498	(3.00-3.00)	0.00	0.00	
6	b499	(3.00-3.00)	0.00	0.00	
6	b500	(3.00-3.00)	0.00	0.00	
6	b501	(3.00-3.00)	0.00	0.00	
6	b502	(3.00-3.00)	0.00	0.00	
6	b503	(3.00-3.00)	0.00	0.00	
6	b504	(3.00-3.00)	0.00	0.00	
		A RIPORTARE ml	0.00		

		CALCOLO DELLE LUNGHEZZE		Foglio n. 14	
VEGETALE					
N. SEZIONE PROG.	FIG.	ELEMENTI DI CALCOLO	LUNGHEZZA ELEMENTARE ml	LUNGHEZZA FIGURA ml	NOTE
		RIPORTO ml	0.00		
6	b505	(3.00-3.00)	0.00	0.00	
6	b506	(3.00-3.00)	0.00	0.00	
6	b507	(3.00-3.00)	0.00	0.00	
6	b508	(3.00-3.00)	0.00	0.00	
6	b509	(3.00-3.00)	0.00	0.00	
6	b510	(3.00-3.00)	0.00	0.00	
6	b511	(3.00-3.00)	0.00	0.00	
6	b512	(3.00-3.00)	0.00	0.00	
6	b513	(3.00-3.00)	0.00	0.00	
6	b514	(3.00-3.00)	0.00	0.00	
6	b515	(3.00-3.00)	0.00	0.00	
6	b516	(3.00-3.00)	0.00	0.00	
6	b517	(3.00-3.00)	0.00	0.00	
6	b518	(3.00-3.00)	0.00	0.00	
6	b519	(3.00-3.00)	0.00	0.00	
6	b520	(3.00-3.00)	0.00	0.00	
6	b521	(3.00-3.00)	0.00	0.00	
6	b522	(3.00-3.00)	0.00	0.00	
6	b523	(3.00-3.00)	0.00	0.00	
6	b524	(3.00-3.00)	0.00	0.00	
6	b525	(3.00-3.00)	0.00	0.00	
6	b526	(3.00-3.00)	0.00	0.00	
6	b527	(3.00-3.00)	0.00	0.00	
6	b528	(3.00-3.00)	0.00	0.00	
6	b529	(3.00-3.00)	0.00	0.00	
6	b530	(3.00-3.00)	0.00	0.00	
6	b531	(3.00-3.00)	0.00	0.00	
6	b532	(3.00-3.00)	0.00	0.00	
6	b533	(3.00-3.00)	0.00	0.00	
6	b534	(3.00-3.00)	0.00	0.00	
6	b535	(3.00-3.00)	0.00	0.00	
6	b536	(3.00-3.00)	0.00	0.00	
6	b537	(3.00-3.00)	0.00	0.00	
6	b538	(3.00-3.00)	0.00	0.00	
6	b539	(3.00-3.00)	0.00	0.00	
6	b540	(3.00-3.00)	0.00	0.00	
6	b541	(3.00-3.00)	0.00	0.00	
6	b542	(3.00-3.00)	0.00	0.00	
6	b543	(3.00-3.00)	0.00	0.00	
6	b544	(3.00-3.00)	0.00	0.00	
6	b545	(3.00-3.00)	0.00	0.00	
6	b546	(3.00-3.00)	0.00	0.00	
6	b547	(3.00-3.00)	0.00	0.00	
6	b548	(3.00-3.00)	0.00	0.00	
6	b549	(3.00-3.00)	0.00	0.00	
6	b550	(3.00-3.00)	0.00	0.00	
6	b551	(3.00-3.00)	0.00	0.00	
6	b552	(3.00-3.00)	0.00	0.00	
6	b553	(3.00-3.00)	0.00	0.00	
6	b554	(3.00-3.00)	0.00	0.00	
6	b555	(3.00-3.00)	0.00	0.00	
6	b556	(3.00-3.00)	0.00	0.00	
		A RIPORTARE ml			

VEGETALE

N. SEZIONE PROG.	FIG.	ELEMENTI DI CALCOLO	LUNGHEZZA ELEMENTARE ml	LUNGHEZZA FIGURA ml	NOTE
		RIPORTO ml			
6	b557	(3.00-3.00)	0.00	0.00	
6	b558	(3.00-3.00)	0.00	0.00	
6	b559	(3.00-3.00)	0.00	0.00	
6	b560	(3.00-3.00)	0.00	0.00	
6	b561	(3.00-3.00)	0.00	0.00	
6	b562	(3.00-3.00)	0.00	0.00	
6	b563	(3.00-3.00)	0.00	0.00	
6	b564	(3.00-3.00)	0.00	0.00	
6	b565	(3.00-3.00)	0.00	0.00	
6	b566	(3.00-3.00)	0.00	0.00	
6	b567	(3.00-3.00)	0.00	0.00	
6	b568	(3.00-3.00)	0.00	0.00	
6	b569	(3.00-3.00)	0.00	0.00	
6	b570	(3.00-3.00)	0.00	0.00	
6	b571	(3.00-3.00)	0.00	0.00	
6	b572	(3.00-3.00)	0.00	0.00	
6	b573	(3.00-3.00)	0.00	0.00	
6	b574	(3.00-3.00)	0.00	0.00	
6	b575	(3.00-3.00)	0.00	0.00	
6	b576	(3.00-3.00)	0.00	0.00	
6	b577	(3.00-3.00)	0.00	0.00	
6	b578	(3.00-3.00)	0.00	0.00	
6	b579	(3.00-3.00)	0.00	0.00	
6	b580	(3.00-3.00)	0.00	0.00	
6	b581	(3.00-3.00)	0.00	0.00	
6	b582	(3.00-3.00)	0.00	0.00	
6	b583	(3.00-3.00)	0.00	0.00	
6	b584	(3.00-3.00)	0.00	0.00	
6	b585	(3.00-3.00)	0.00	0.00	
6	b586	(3.00-3.00)	0.00	0.00	
6	b587	(3.00-3.00)	0.00	0.00	
6	b588	(3.00-3.00)	0.00	0.00	
6	b589	(3.00-3.00)	0.00	0.00	
6	b590	(3.00-3.00)	0.00	0.00	
6	b591	(3.00-3.00)	0.00	0.00	
6	b592	(3.00-3.00)	0.00	0.00	
6	b593	(3.00-3.00)	0.00	0.00	
6	b594	(3.00-3.00)	0.00	0.00	
6	b595	(3.00-3.00)	0.00	0.00	
6	b596	(3.00-3.00)	0.00	0.00	
6	b597	(3.00-3.00)	0.00	0.00	
6	b598	(3.00-3.00)	0.00	0.00	
6	b599	(3.00-3.00)	0.00	0.00	
6	b600	(3.00-3.00)	0.00	0.00	
6	b601	(3.00-3.00)	0.00	0.00	
6	b602	(3.00-3.00)	0.00	0.00	
6	b603	(3.00-3.00)	0.00	0.00	
6	b604	(3.00-3.00)	0.00	0.00	
6	b605	(3.00-3.00)	0.00	0.00	
6	b606	(3.00-3.00)	0.00	0.00	
6	b607	(3.00-3.00)	0.00	0.00	
6	b608	(3.00-3.00)	0.00	0.00	
6	b609	(3.00-3.00)	0.00	0.00	
		A RIPORTARE ml	0.00		

VEGETALE

N. SEZIONE PROG.	FIG.	ELEMENTI DI CALCOLO	LUNGHEZZA ELEMENTARE ml	LUNGHEZZA FIGURA ml	NOTE
		RIPORTO ml	0.00		
6	b610	(3.00-3.00)	0.00	0.00	
6	b611	(3.00-3.00)	0.00	0.00	
6	b612	(3.00-3.00)	0.00	0.00	
6	b613	(3.00-3.00)	0.00	0.00	
6	b614	(3.00-3.00)	0.00	0.00	
6	b615	(3.00-3.00)	0.00	0.00	
6	b616	(3.00-3.00)	0.00	0.00	
6	b617	(3.00-3.00)	0.00	0.00	
6	b618	(3.00-3.00)	0.00	0.00	
6	b619	(3.00-3.00)	0.00	0.00	
6	b620	(3.00-3.00)	0.00	0.00	
6	b621	(3.00-3.00)	0.00	0.00	
6	b622	(3.00-3.00)	0.00	0.00	
6	b623	(3.00-3.00)	0.00	0.00	
6	b624	(3.00-3.00)	0.00	0.00	
6	b625	(3.00-3.00)	0.00	0.00	
6	b626	(3.00-3.00)	0.00	0.00	
6	b627	(3.00-3.00)	0.00	0.00	
6	b628	(3.00-3.00)	0.00	0.00	
6	b629	(3.00-3.00)	0.00	0.00	
6	b630	(3.00-3.00)	0.00	0.00	
6	b631	(3.00-3.00)	0.00	0.00	
6	b632	(3.00-3.00)	0.00	0.00	
6	b633	(3.00-3.00)	0.00	0.00	
6	b634	(3.00-3.00)	0.00	0.00	
6	b635	(3.00-3.00)	0.00	0.00	
6	b636	(3.00-3.00)	0.00	0.00	
6	b637	(3.00-3.00)	0.00	0.00	
6	b638	(3.00-3.00)	0.00	0.00	
6	b639	(3.00-3.00)	0.00	0.00	
6	b640	(3.00-3.00)	0.00	0.00	
6	b641	(3.00-3.00)	0.00	0.00	
6	b642	(3.00-3.00)	0.00	0.00	
6	b643	(3.00-3.00)	0.00	0.00	
6	b644	(3.00-3.00)	0.00	0.00	
6	b645	(3.00-3.00)	0.00	0.00	
6	b646	(3.00-3.00)	0.00	0.00	
6	b647	(3.00-3.00)	0.00	0.00	
6	b648	(3.00-3.00)	0.00	0.00	
6	b649	(3.00-3.00)	0.00	0.00	
6	b650	(3.00-3.00)	0.00	0.00	
6	b651	(3.00-3.00)	0.00	0.00	
6	b652	(3.00-3.00)	0.00	0.00	
6	b653	(3.00-3.00)	0.00	0.00	
6	b654	(3.00-3.00)	0.00	0.00	
6	b655	(3.00-3.00)	0.00	0.00	
6	b656	(3.00-3.00)	0.00	0.00	
6	b657	(3.00-3.00)	0.00	0.00	
6	b658	(3.00-3.00)	0.00	0.00	
6	b659	(3.00-3.00)	0.00	0.00	
6	b660	(3.00-3.00)	0.00	0.00	
6	b661	(3.00-3.00)	0.00	0.00	
		A RIPORTARE ml			

		CALCOLO DELLE LUNGHEZZE		Foglio n. 17	
VEGETALE					
N. SEZIONE PROG.	FIG.	ELEMENTI DI CALCOLO	LUNGHEZZA ELEMENTARE ml	LUNGHEZZA FIGURA ml	NOTE
		RIPORTO ml			
6	b662	(3.00-3.00)	0.00	0.00	
6	b663	(3.00-3.00)	0.00	0.00	
6	b664	(3.00-3.00)	0.00	0.00	
6	b665	(3.00-3.00)	0.00	0.00	
6	b666	(3.00-3.00)	0.00	0.00	
6	b667	(3.00-3.00)	0.00	0.00	
6	b668	(3.00-3.00)	0.00	0.00	
6	b669	(3.00-3.00)	0.00	0.00	
6	b670	(3.00-3.00)	0.00	0.00	
6	b671	(3.00-3.00)	0.00	0.00	
6	b672	(3.00-3.00)	0.00	0.00	
6	b673	(3.00-3.00)	0.00	0.00	
6	b674	(3.00-3.00)	0.00	0.00	
6	b675	(3.00-3.00)	0.00	0.00	
6	b676	(3.00-3.00)	0.00	0.00	
6	b677	(3.00-3.00)	0.00	0.00	
6	b678	(3.00-3.00)	0.00	0.00	
6	b679	(3.00-3.00)	0.00	0.00	
6	b680	(3.00-3.00)	0.00	0.00	
6	b681	(3.00-3.00)	0.00	0.00	
6	b682	(3.00-3.00)	0.00	0.00	
6	b683	(3.00-3.00)	0.00	0.00	
6	b684	(3.00-3.00)	0.00	0.00	
6	b685	(3.00-3.00)	0.00	0.00	
6	b686	(3.00-3.00)	0.00	0.00	
6	b687	(3.00-3.00)	0.00	0.00	
6	b688	(3.00-3.00)	0.00	0.00	
6	b689	(3.00-3.00)	0.00	0.00	
6	b690	(3.00-3.00)	0.00	0.00	
6	b691	(3.00-3.00)	0.00	0.00	
6	b692	(3.00-3.00)	0.00	0.00	
6	b693	(3.00-3.00)	0.00	0.00	
6	b694	(3.00-3.00)	0.00	0.00	
6	b695	(3.00-3.00)	0.00	0.00	
6	b696	(3.00-3.00)	0.00	0.00	
6	b697	(3.00-3.00)	0.00	0.00	
6	b698	(3.00-3.00)	0.00	0.00	
6	b699	(3.00-3.00)	0.00	0.00	
6	b700	(3.00-3.00)	0.00	0.00	
6	b701	(3.00-3.00)	0.00	0.00	
6	b702	(3.00-3.00)	0.00	0.00	
6	b703	(3.00-3.00)	0.00	0.00	
6	b704	(3.00-3.00)	0.00	0.00	
6	b705	(3.00-3.00)	0.00	0.00	
6	b706	(3.00-3.00)	0.00	0.00	
6	b707	(3.00-3.00)	0.00	0.00	
6	b708	(3.00-3.00)	0.00	0.00	
6	b709	(3.00-3.00)	0.00	0.00	
6	b710	(3.00-3.00)	0.00	0.00	
6	b711	(3.00-3.00)	0.00	0.00	
6	b712	(3.00-3.00)	0.00	0.00	
6	b713	(3.00-3.00)	0.00	0.00	
6	b714	(3.00-3.00)	0.00	0.00	
		A RIPORTARE ml	0.00		

VEGETALE

N. SEZIONE PROG.	FIG.	ELEMENTI DI CALCOLO	LUNGHEZZA ELEMENTARE ml	LUNGHEZZA FIGURA ml	NOTE
		RIPORTO ml	0.00		
6	b715	(3.00-3.00)	0.00	0.00	
6	b716	(3.00-3.00)	0.00	0.00	
6	b717	(3.00-3.00)	0.00	0.00	
6	b718	(3.00-3.00)	0.00	0.00	
6	b719	(3.00-3.00)	0.00	0.00	
6	b720	(3.00-3.00)	0.00	0.00	
6	b721	(3.00-3.00)	0.00	0.00	
6	b722	(3.00-3.00)	0.00	0.00	
6	b723	(3.00-3.00)	0.00	0.00	
6	b724	(3.00-3.00)	0.00	0.00	
6	b725	(3.00-3.00)	0.00	0.00	
6	b726	(3.00-3.00)	0.00	0.00	
6	b727	(3.00-3.00)	0.00	0.00	
6	b728	(3.00-3.00)	0.00	0.00	
6	b729	(3.00-3.00)	0.00	0.00	
6	b730	(3.00-3.00)	0.00	0.00	
6	b731	(3.00-3.00)	0.00	0.00	
6	b732	(3.00-3.00)	0.00	0.00	
6	b733	(3.00-3.00)	0.00	0.00	
6	b734	(3.00-3.00)	0.00	0.00	
6	b735	(3.00-3.00)	0.00	0.00	
6	b736	(3.00-3.00)	0.00	0.00	
6	b737	(3.00-3.00)	0.00	0.00	
6	b738	(3.00-3.00)	0.00	0.00	
6	b739	(3.00-3.00)	0.00	0.00	
6	b740	(3.00-3.00)	0.00	0.00	
6	b741	(3.00-3.00)	0.00	0.00	
6	b742	(3.00-3.00)	0.00	0.00	
6	b743	(3.00-3.00)	0.00	0.00	
6	b744	(3.00-3.00)	0.00	0.00	
6	b745	(3.00-3.00)	0.00	0.00	
6	b746	(3.00-3.00)	0.00	0.00	
6	b747	(3.00-3.00)	0.00	0.00	
6	b748	(3.00-3.00)	0.00	0.00	
6	b749	(3.00-3.00)	0.00	0.00	
6	b750	(3.00-3.00)	0.00	0.00	
6	b751	(3.00-3.00)	0.00	0.00	
6	b752	(3.00-3.00)	0.00	0.00	
6	b753	(3.00-3.00)	0.00	0.00	
6	b754	(3.00-3.00)	0.00	0.00	
6	b755	(3.00-3.00)	0.00	0.00	
6	b756	(3.00-3.00)	0.00	0.00	
6	b757	(3.00-3.00)	0.00	0.00	
6	b758	(3.00-3.00)	0.00	0.00	
6	b759	(3.00-3.00)	0.00	0.00	
6	b760	(3.00-3.00)	0.00	0.00	
6	b761	(3.00-3.00)	0.00	0.00	
6	b762	(3.00-3.00)	0.00	0.00	
6	b763	(3.00-3.00)	0.00	0.00	
6	b764	(3.00-3.00)	0.00	0.00	
6	b765	(3.00-3.00)	0.00	0.00	
6	b766	(3.00-3.00)	0.00	0.00	
		A RIPORTARE ml			

		CALCOLO DELLE LUNGHEZZE		Foglio n. 19	
VEGETALE					
N. SEZIONE PROG.	FIG.	ELEMENTI DI CALCOLO	LUNGHEZZA ELEMENTARE ml	LUNGHEZZA FIGURA ml	NOTE
		RIPORTO ml			
6	b767	(3.00-3.00)	0.00	0.00	
6	b768	(3.00-3.00)	0.00	0.00	
6	b769	(3.00-3.00)	0.00	0.00	
6	b770	(3.00-3.00)	0.00	0.00	
6	b771	(3.00-3.00)	0.00	0.00	
6	b772	(3.00-3.00)	0.00	0.00	
6	b773	(3.00-3.00)	0.00	0.00	
6	b774	(3.00-3.00)	0.00	0.00	
6	b775	(3.00-3.00)	0.00	0.00	
6	b776	(3.00-3.00)	0.00	0.00	
6	b777	(3.00-3.00)	0.00	0.00	
6	b778	(3.00-3.00)	0.00	0.00	
6	b779	(3.00-3.00)	0.00	0.00	
6	b780	(3.00-3.00)	0.00	0.00	
6	b781	(3.00-3.00)	0.00	0.00	
6	b782	(3.00-3.00)	0.00	0.00	
6	b783	(3.00-3.00)	0.00	0.00	
6	b784	(3.00-3.00)	0.00	0.00	
6	b785	(3.00-3.00)	0.00	0.00	
6	b786	(3.00-3.00)	0.00	0.00	
6	b787	(3.00-3.00)	0.00	0.00	
6	b788	(3.00-3.00)	0.00	0.00	
6	b789	(3.00-3.00)	0.00	0.00	
6	b790	(3.00-3.00)	0.00	0.00	
6	b791	(3.00-3.00)	0.00	0.00	
6	b792	(3.00-3.00)	0.00	0.00	
6	b793	(3.00-3.00)	0.00	0.00	
6	b794	(3.00-3.00)	0.00	0.00	
6	b795	(3.00-3.00)	0.00	0.00	
6	b796	(3.00-3.00)	0.00	0.00	
6	b797	(3.00-3.00)	0.00	0.00	
6	b798	(3.00-3.00)	0.00	0.00	
6	b799	(3.00-3.00)	0.00	0.00	
6	b800	(3.00-3.00)	0.00	0.00	
6	b801	(3.00-3.00)	0.00	0.00	
6	b802	(3.00-3.00)	0.00	0.00	
6	b803	(3.00-3.00)	0.00	0.00	
6	b804	(3.00-3.00)	0.00	0.00	
6	b805	(3.00-3.00)	0.00	0.00	
6	b806	(3.00-3.00)	0.00	0.00	
6	b807	(3.00-3.00)	0.00	0.00	
6	b808	(3.00-3.00)	0.00	0.00	
6	b809	(3.00-3.00)	0.00	0.00	
6	b810	(3.00-3.00)	0.00	0.00	
6	b811	(3.00-3.00)	0.00	0.00	
6	b812	(3.00-3.00)	0.00	0.00	
6	b813	(3.00-3.00)	0.00	0.00	
6	b814	(3.00-3.00)	0.00	0.00	
6	b815	(3.00-3.00)	0.00	0.00	
6	b816	(3.00-3.00)	0.00	0.00	
6	b817	(3.00-3.00)	0.00	0.00	
6	b818	(3.00-3.00)	0.00	0.00	
6	b819	(3.00-3.00)	0.00	0.00	
		A RIPORTARE ml	0.00		

		CALCOLO DELLE LUNGHEZZE		Foglio n. 20	
VEGETALE					
N. SEZIONE PROG.	FIG.	ELEMENTI DI CALCOLO	LUNGHEZZA ELEMENTARE ml	LUNGHEZZA FIGURA ml	NOTE
		RIPORTO ml	0.00		
6	b820	(3.00-3.00)	0.00	0.00	
6	b821	(3.00-3.00)	0.00	0.00	
6	b822	(3.00-3.00)	0.00	0.00	
6	b823	(3.00-3.00)	0.00	0.00	
6	b824	(3.00-3.00)	0.00	0.00	
6	b825	(3.00-3.00)	0.00	0.00	
6	b826	(3.00-3.00)	0.00	0.00	
6	b827	(3.00-3.00)	0.00	0.00	
6	b828	(3.00-3.00)	0.00	0.00	
6	b829	(3.00-3.00)	0.00	0.00	
6	b830	(3.00-3.00)	0.00	0.00	
6	b831	(3.00-3.00)	0.00	0.00	
6	b832	(3.00-3.00)	0.00	0.00	
6	b833	(3.00-3.00)	0.00	0.00	
6	b834	(3.00-3.00)	0.00	0.00	
6	b835	(3.00-3.00)	0.00	0.00	
6	b836	(3.00-3.00)	0.00	0.00	
6	b837	(3.00-3.00)	0.00	0.00	
6	b838	(3.00-3.00)	0.00	0.00	
6	b839	(3.00-3.00)	0.00	0.00	
6	b840	(3.00-3.00)	0.00	0.00	
6	b841	(3.00-3.00)	0.00	0.00	
6	b842	(3.00-3.00)	0.00	0.00	
6	b843	(3.00-3.00)	0.00	0.00	
6	b844	(3.00-3.00)	0.00	0.00	
6	b845	(3.00-3.00)	0.00	0.00	
6	b846	(3.00-3.00)	0.00	0.00	
6	b847	(3.00-3.00)	0.00	0.00	
6	b848	(3.00-3.00)	0.00	0.00	
6	b849	(3.00-3.00)	0.00	0.00	
6	b850	(3.00-3.00)	0.00	0.00	
6	b851	(3.00-3.00)	0.00	0.00	
6	b852	(3.00-3.00)	0.00	0.00	
6	b853	(3.00-3.00)	0.00	0.00	
6	b854	(3.00-3.00)	0.00	0.00	
6	b855	(3.00-3.00)	0.00	0.00	
6	b856	(3.00-3.00)	0.00	0.00	
6	b857	(3.00-3.00)	0.00	0.00	
6	b858	(3.00-3.00)	0.00	0.00	
6	b859	(3.00-3.00)	0.00	0.00	
6	b860	(3.00-3.00)	0.00	0.00	
6	b861	(3.00-3.00)	0.00	0.00	
6	b862	(3.00-3.00)	0.00	0.00	
6	b863	(3.00-3.00)	0.00	0.00	
6	b864	(3.00-3.00)	0.00	0.00	
6	b865	(3.00-3.00)	0.00	0.00	
6	b866	(3.00-3.00)	0.00	0.00	
6	b867	(3.00-3.00)	0.00	0.00	
6	b868	(3.00-3.00)	0.00	0.00	
6	b869	(3.00-3.00)	0.00	0.00	
6	b870	(3.00-3.00)	0.00	0.00	
6	b871	(3.00-3.00)	0.00	0.00	
		A RIPORTARE ml			

		CALCOLO DELLE LUNGHEZZE		Foglio n. 21	
VEGETALE					
N. SEZIONE PROG.	FIG.	ELEMENTI DI CALCOLO	LUNGHEZZA ELEMENTARE ml	LUNGHEZZA FIGURA ml	NOTE
		RIPORTO ml			
6	b872	(3.00-3.00)	0.00	0.00	
6	b873	(3.00-3.00)	0.00	0.00	
6	b874	(3.00-3.00)	0.00	0.00	
6	b875	(3.00-3.00)	0.00	0.00	
6	b876	(3.00-3.00)	0.00	0.00	
6	b877	(3.00-3.00)	0.00	0.00	
6	b878	(3.00-3.00)	0.00	0.00	
6	b879	(3.00-3.00)	0.00	0.00	
6	b880	(3.00-3.00)	0.00	0.00	
6	b881	(3.00-3.00)	0.00	0.00	
6	b882	(3.00-3.00)	0.00	0.00	
6	b883	(3.00-3.00)	0.00	0.00	
6	b884	(3.00-3.00)	0.00	0.00	
6	b885	(3.00-3.00)	0.00	0.00	
6	b886	(3.00-3.00)	0.00	0.00	
6	b887	(3.00-3.00)	0.00	0.00	
6	b888	(3.00-3.00)	0.00	0.00	
6	b889	(3.00-3.00)	0.00	0.00	
6	b890	(3.00-3.00)	0.00	0.00	
6	b891	(3.00-3.00)	0.00	0.00	
6	b892	(3.00-3.00)	0.00	0.00	
6	b893	(3.00-3.00)	0.00	0.00	
6	b894	(3.00-3.00)	0.00	0.00	
6	b895	(3.00-3.00)	0.00	0.00	
6	b896	(3.00-3.00)	0.00	0.00	
6	b897	(3.00-3.00)	0.00	0.00	
6	b898	(3.00-3.00)	0.00	0.00	
6	b899	(3.00-3.00)	0.00	0.00	
6	b900	(3.00-3.00)	0.00	0.00	
6	b901	(3.00-3.00)	0.00	0.00	
6	b902	(3.00-3.00)	0.00	0.00	
6	b903	(3.00-3.00)	0.00	0.00	
6	b904	(3.00-3.00)	0.00	0.00	
6	b905	(3.00-3.00)	0.00	0.00	
6	b906	(3.00-3.00)	0.00	0.00	
6	b907	(3.00-3.00)	0.00	0.00	
6	b908	(3.00-3.00)	0.00	0.00	
6	b909	(3.00-3.00)	0.00	0.00	
6	b910	(3.00-3.00)	0.00	0.00	
6	b911	(3.00-3.00)	0.00	0.00	
6	b912	(3.00-3.00)	0.00	0.00	
6	b913	(3.00-3.00)	0.00	0.00	
6	b914	(3.00-3.00)	0.00	0.00	
6	b915	(3.00-3.00)	0.00	0.00	
6	b916	(3.00-3.00)	0.00	0.00	
6	b917	(3.00-3.00)	0.00	0.00	
6	b918	(3.00-3.00)	0.00	0.00	
6	b919	(3.00-3.00)	0.00	0.00	
6	b920	(3.00-3.00)	0.00	0.00	
6	b921	(3.00-3.00)	0.00	0.00	
6	b922	(3.00-3.00)	0.00	0.00	
6	b923	(3.00-3.00)	0.00	0.00	
6	b924	(3.00-3.00)	0.00	0.00	
		A RIPORTARE ml	0.00		

VEGETALE

N. SEZIONE PROG.	FIG.	ELEMENTI DI CALCOLO	LUNGHEZZA ELEMENTARE ml	LUNGHEZZA FIGURA ml	NOTE
		RIPORTO ml	0.00		
				0.00	
6	b925	(3.00-3.00)	0.00		
				0.00	
6	b926	(3.00-3.00)	0.00		
				0.00	
6	b927	(3.00-3.00)	0.00		
				0.00	
6	b928	(3.00-3.00)	0.00		
				0.00	
6	b929	(3.00-3.00)	0.00		
				0.00	
6	b930	(3.00-3.00)	0.00		
				0.00	
6	b931	(3.00-3.00)	0.00		
				0.00	
6	b932	(3.00-3.00)	0.00		
				0.00	
6	b933	(3.00-3.00)	0.00		
				0.00	
6	b934	(3.00-3.00)	0.00		
				0.00	
6	b935	(3.00-3.00)	0.00		
				0.00	
6	b936	(3.00-3.00)	0.00		
				0.00	
6	b937	(3.00-3.00)	0.00		
				0.00	
6	b938	(3.00-3.00)	0.00		
				0.00	
6	b939	(3.00-3.00)	0.00		
				0.00	
6	b940	(3.00-3.00)	0.00		
				0.00	
6	b941	(3.00-3.00)	0.00		
				0.00	
6	b942	(3.00-3.00)	0.00		
				0.00	
6	b943	(3.00-3.00)	0.00		
				0.00	
6	b944	(3.00-3.00)	0.00		
				0.00	
6	b945	(3.00-3.00)	0.00		
				0.00	
6	b946	(3.00-3.00)	0.00		
				0.00	
6	b947	(3.00-3.00)	0.00		
				0.00	
6	b948	(3.00-3.00)	0.00		
				0.00	
6	b949	(3.00-3.00)	0.00		
				0.00	
6	b950	(3.00-3.00)	0.00		
				0.00	
6	b951	(3.00-3.00)	0.00		
				0.00	
6	b952	(3.00-3.00)	0.00		
				0.00	
6	b953	(3.00-3.00)	0.00		
				0.00	
6	b954	(3.00-3.00)	0.00		
				0.00	
6	b955	(3.00-3.00)	0.00		
				0.00	
6	b956	(3.00-3.00)	0.00		
				0.00	
6	b957	(3.00-3.00)	0.00		
				0.00	
6	b958	(3.00-3.00)	0.00		
				0.00	
6	b959	(3.00-3.00)	0.00		
				0.00	
6	b960	(3.00-3.00)	0.00		
				0.00	
6	b961	(3.00-3.00)	0.00		
				0.00	
6	b962	(3.00-3.00)	0.00		
				0.00	
6	b963	(3.00-3.00)	0.00		
				0.00	
6	b964	(3.00-3.00)	0.00		
				0.00	
6	b965	(3.00-3.00)	0.00		
				0.00	
6	b966	(3.00-3.00)	0.00		
				0.00	
6	b967	(3.00-3.00)	0.00		
				0.00	
6	b968	(3.00-3.00)	0.00		
				0.00	
6	b969	(3.00-3.00)	0.00		
				0.00	
6	b970	(3.00-3.00)	0.00		
				0.00	
6	b971	(3.00-3.00)	0.00		
				0.00	
6	b972	(3.00-3.00)	0.00		
				0.00	
6	b973	(3.00-3.00)	0.00		
				0.00	
6	b974	(3.00-3.00)	0.00		
				0.00	
6	b975	(3.00-3.00)	0.00		
				0.00	
6	b976	(3.00-3.00)	0.00		
				0.00	
		A RIPORTARE ml			

VEGETALE

N. SEZIONE PROG.	FIG.	ELEMENTI DI CALCOLO	LUNGHEZZA ELEMENTARE ml	LUNGHEZZA FIGURA ml	NOTE
		RIPORTO ml			
6	b977	(3.00-3.00)	0.00		
				0.00	
6	b978	(3.00-3.00)	0.00		
				0.00	
6	b979	(3.00-3.00)	0.00		
				0.00	
6	b980	(3.00-3.00)	0.00		
				0.00	
6	b981	(3.00-3.00)	0.00		
				0.00	
6	b982	(3.00-3.00)	0.00		
				0.00	
6	b983	(3.00-3.00)	0.00		
				0.00	
6	b984	(3.00-3.00)	0.00		
				0.00	
6	b985	(3.00-3.00)	0.00		
				0.00	
6	b986	(3.00-3.00)	0.00		
				0.00	
6	b987	(3.00-3.00)	0.00		
				0.00	
6	b988	(3.00-3.00)	0.00		
				0.00	
6	b989	(3.00-3.00)	0.00		
				0.00	
6	b990	(3.00-3.00)	0.00		
				0.00	
6	b991	(3.00-3.00)	0.00		
				0.00	
6	b992	(3.00-3.00)	0.00		
				0.00	
6	b993	(3.00-3.00)	0.00		
				0.00	
6	b994	(3.00-3.00)	0.00		
				0.00	
6	b995	(3.00-3.00)	0.00		
				0.00	
6	b996	(3.00-3.00)	0.00		
				0.00	
6	b997	(3.00-3.00)	0.00		
				0.00	
6	b998	(3.00-3.00)	0.00		
				0.00	
6	b999	(3.00-3.00)	0.00		
				0.00	
7	b1	(-0.53--0.50)	0.03		
90.00		(-1.00--0.53)	0.47		
		(-1.10--1.00)	0.10		
		(-1.26--1.10)	0.16		
				0.76	
7	b2	(2.53-2.50)	0.03		
90.00		(3.00-2.53)	0.47		
		(3.14-3.00)	0.14		
				0.64	
8	b1	(-0.53--0.50)	0.03		
105.00		(-1.00--0.53)	0.47		
		(-1.16--1.00)	0.16		
		(-1.28--1.16)	0.12		
				0.78	
8	b2	(2.53-2.50)	0.03		
105.00		(3.00-2.53)	0.47		
		(3.10-3.00)	0.10		
				0.60	
9	b1	(-0.53--0.50)	0.03		
120.00		(-1.00--0.53)	0.47		
		(-1.12--1.00)	0.12		
		(-1.45--1.12)	0.33		
				0.95	
9	b2	(2.53-2.50)	0.03		
120.00		(3.00-2.53)	0.47		
		(3.13-3.00)	0.13		
				0.63	
10	b1	(-0.53--0.50)	0.03		
124.19		(-1.00--0.53)	0.47		
		(-1.08--1.00)	0.08		
		(-1.49--1.08)	0.41		
				0.99	
10	b2	(2.53-2.50)	0.03		
124.19		(3.00-2.53)	0.47		
		(3.04-3.00)	0.04		
				0.54	

Il Direttore dei Lavori | L'Impresa

VEGETALE

DALLA SEZ. DA PROG.	ALLA SEZ. A PROG.	SEZIONE	FIGURA	LUNGHEZZA	DISTANZA SEZIONI ml	DISTANZA DI CALCOLO ml	AREA PARZIALE mq	AREA TOTALE mq
1	2	1	b2	2.96	15.00	7.50	22.20	
0.00	15.00	1	b1	2.72	15.00	7.50	20.40	
		2	b1	1.41	15.00	7.50	10.57	
		2	b2	1.44	15.00	7.50	10.80	
								63.97
2	3	2	b1	1.41	15.00	7.50	10.57	
15.00	30.00	2	b2	1.44	15.00	7.50	10.80	
		3	b1	1.70	15.00	7.50	12.75	
		3	b2	2.19	15.00	7.50	16.43	
								50.55
3	4	3	b1	1.70	15.00	7.50	12.75	
30.00	45.00	3	b2	2.19	15.00	7.50	16.43	
		4	b1	6.83	15.00	7.50	51.23	
		4	b2	4.63	15.00	7.50	34.73	
								115.14
4	5	4	b1	6.83	15.00	7.50	51.23	
45.00	60.00	4	b2	4.63	15.00	7.50	34.73	
		5	b2	2.27	15.00	7.50	17.02	
		5	b1	1.17	15.00	7.50	8.77	
								111.75
5	6	5	b2	2.27	15.00	7.50	17.02	
60.00	75.00	5	b1	1.17	15.00	7.50	8.77	
		6	b1	1.23	15.00	7.50	9.22	
		6	b1000	0.00	15.00	7.50	0.00	
		6	b2	0.00	15.00	7.50	0.00	
		6	b3	0.00	15.00	7.50	0.00	
		6	b4	0.00	15.00	7.50	0.00	
		6	b5	0.00	15.00	7.50	0.00	
		6	b6	0.00	15.00	7.50	0.00	
		6	b7	0.00	15.00	7.50	0.00	
		6	b8	0.00	15.00	7.50	0.00	
		6	b9	0.00	15.00	7.50	0.00	
		6	b10	0.00	15.00	7.50	0.00	
		6	b11	0.00	15.00	7.50	0.00	
		6	b12	0.00	15.00	7.50	0.00	
		6	b13	0.00	15.00	7.50	0.00	
		6	b14	0.00	15.00	7.50	0.00	
		6	b15	0.00	15.00	7.50	0.00	
		6	b16	0.00	15.00	7.50	0.00	
		6	b17	0.00	15.00	7.50	0.00	
		6	b18	0.00	15.00	7.50	0.00	
		6	b19	0.00	15.00	7.50	0.00	
		6	b20	0.00	15.00	7.50	0.00	
		6	b21	0.00	15.00	7.50	0.00	
		6	b22	0.00	15.00	7.50	0.00	
		6	b23	0.00	15.00	7.50	0.00	
		6	b24	0.00	15.00	7.50	0.00	
		6	b25	0.00	15.00	7.50	0.00	
		6	b26	0.00	15.00	7.50	0.00	
		6	b27	0.00	15.00	7.50	0.00	
		6	b28	0.00	15.00	7.50	0.00	
		6	b29	0.00	15.00	7.50	0.00	
		6	b30	0.00	15.00	7.50	0.00	
		6	b31	0.00	15.00	7.50	0.00	
		6	b32	0.00	15.00	7.50	0.00	
		6	b33	0.00	15.00	7.50	0.00	
		6	b34	0.00	15.00	7.50	0.00	
		6	b35	0.00	15.00	7.50	0.00	
		6	b36	0.00	15.00	7.50	0.00	
		6	b37	0.00	15.00	7.50	0.00	
		6	b38	0.00	15.00	7.50	0.00	
		6	b39	0.00	15.00	7.50	0.00	
		6	b40	0.00	15.00	7.50	0.00	
		6	b41	0.00	15.00	7.50	0.00	
		6	b42	0.00	15.00	7.50	0.00	
		6	b43	0.00	15.00	7.50	0.00	
		6	b44	0.00	15.00	7.50	0.00	
		6	b45	0.00	15.00	7.50	0.00	
		6	b46	0.00	15.00	7.50	0.00	
		6	b47	0.00	15.00	7.50	0.00	
		6	b48	0.00	15.00	7.50	0.00	
		6	b49	0.00	15.00	7.50	0.00	
		6	b50	0.00	15.00	7.50	0.00	
		6	b51	0.00	15.00	7.50	0.00	
		6	b52	0.00	15.00	7.50	0.00	
		6	b53	0.00	15.00	7.50	0.00	
		6	b54	0.00	15.00	7.50	0.00	
		6	b55	0.00	15.00	7.50	0.00	
		6	b56	0.00	15.00	7.50	0.00	
		6	b57	0.00	15.00	7.50	0.00	
		6	b58	0.00	15.00	7.50	0.00	
		6	b59	0.00	15.00	7.50	0.00	
		6	b60	0.00	15.00	7.50	0.00	
		6	b61	0.00	15.00	7.50	0.00	
		6	b62	0.00	15.00	7.50	0.00	
		6	b63	0.00	15.00	7.50	0.00	
		6	b64	0.00	15.00	7.50	0.00	
		6	b65	0.00	15.00	7.50	0.00	
		6	b66	0.00	15.00	7.50	0.00	
		6	b67	0.00	15.00	7.50	0.00	
		6	b68	0.00	15.00	7.50	0.00	
		6	b69	0.00	15.00	7.50	0.00	
		6	b70	0.00	15.00	7.50	0.00	
		6	b71	0.00	15.00	7.50	0.00	
		6	b72	0.00	15.00	7.50	0.00	
		6	b73	0.00	15.00	7.50	0.00	
		6	b74	0.00	15.00	7.50	0.00	
		6	b75	0.00	15.00	7.50	0.00	
		6	b76	0.00	15.00	7.50	0.00	
		6	b77	0.00	15.00	7.50	0.00	
		6	b78	0.00	15.00	7.50	0.00	
		6	b79	0.00	15.00	7.50	0.00	
		6	b80	0.00	15.00	7.50	0.00	
		6	b81	0.00	15.00	7.50	0.00	
		6	b82	0.00	15.00	7.50	0.00	
		6	b83	0.00	15.00	7.50	0.00	
		6	b84	0.00	15.00	7.50	0.00	
							35.01	341.41

VEGETALE

DALLA SEZ. DA PROG.	ALLA SEZ. A PROG.	SEZIONE	FIGURA	LUNGHEZZA	DISTANZA SEZIONI ml	DISTANZA DI CALCOLO ml	AREA PARZIALE mq	AREA TOTALE mq
						A RIPORTARE mq	35.01	341.41
		6	b85	0.00	15.00	7.50	0.00	
		6	b86	0.00	15.00	7.50	0.00	
		6	b87	0.00	15.00	7.50	0.00	
		6	b88	0.00	15.00	7.50	0.00	
		6	b89	0.00	15.00	7.50	0.00	
		6	b90	0.00	15.00	7.50	0.00	
		6	b91	0.00	15.00	7.50	0.00	
		6	b92	0.00	15.00	7.50	0.00	
		6	b93	0.00	15.00	7.50	0.00	
		6	b94	0.00	15.00	7.50	0.00	
		6	b95	0.00	15.00	7.50	0.00	
		6	b96	0.00	15.00	7.50	0.00	
		6	b97	0.00	15.00	7.50	0.00	
		6	b98	0.00	15.00	7.50	0.00	
		6	b99	0.00	15.00	7.50	0.00	
		6	b100	0.00	15.00	7.50	0.00	
		6	b101	0.00	15.00	7.50	0.00	
		6	b102	0.00	15.00	7.50	0.00	
		6	b103	0.00	15.00	7.50	0.00	
		6	b104	0.00	15.00	7.50	0.00	
		6	b105	0.00	15.00	7.50	0.00	
		6	b106	0.00	15.00	7.50	0.00	
		6	b107	0.00	15.00	7.50	0.00	
		6	b108	0.00	15.00	7.50	0.00	
		6	b109	0.00	15.00	7.50	0.00	
		6	b110	0.00	15.00	7.50	0.00	
		6	b111	0.00	15.00	7.50	0.00	
		6	b112	0.00	15.00	7.50	0.00	
		6	b113	0.00	15.00	7.50	0.00	
		6	b114	0.00	15.00	7.50	0.00	
		6	b115	0.00	15.00	7.50	0.00	
		6	b116	0.00	15.00	7.50	0.00	
		6	b117	0.00	15.00	7.50	0.00	
		6	b118	0.00	15.00	7.50	0.00	
		6	b119	0.00	15.00	7.50	0.00	
		6	b120	0.00	15.00	7.50	0.00	
		6	b121	0.00	15.00	7.50	0.00	
		6	b122	0.00	15.00	7.50	0.00	
		6	b123	0.00	15.00	7.50	0.00	
		6	b124	0.00	15.00	7.50	0.00	
		6	b125	0.00	15.00	7.50	0.00	
		6	b126	0.00	15.00	7.50	0.00	
		6	b127	0.00	15.00	7.50	0.00	
		6	b128	0.00	15.00	7.50	0.00	
		6	b129	0.00	15.00	7.50	0.00	
		6	b130	0.00	15.00	7.50	0.00	
		6	b131	0.00	15.00	7.50	0.00	
		6	b132	0.00	15.00	7.50	0.00	
		6	b133	0.00	15.00	7.50	0.00	
		6	b134	0.00	15.00	7.50	0.00	
		6	b135	0.00	15.00	7.50	0.00	
		6	b136	0.00	15.00	7.50	0.00	
		6	b137	0.00	15.00	7.50	0.00	
		6	b138	0.00	15.00	7.50	0.00	
		6	b139	0.00	15.00	7.50	0.00	
		6	b140	0.00	15.00	7.50	0.00	
		6	b141	0.00	15.00	7.50	0.00	
		6	b142	0.00	15.00	7.50	0.00	
		6	b143	0.00	15.00	7.50	0.00	
		6	b144	0.00	15.00	7.50	0.00	
		6	b145	0.00	15.00	7.50	0.00	
		6	b146	0.00	15.00	7.50	0.00	
		6	b147	0.00	15.00	7.50	0.00	
		6	b148	0.00	15.00	7.50	0.00	
		6	b149	0.00	15.00	7.50	0.00	
		6	b150	0.00	15.00	7.50	0.00	
		6	b151	0.00	15.00	7.50	0.00	
		6	b152	0.00	15.00	7.50	0.00	
		6	b153	0.00	15.00	7.50	0.00	
		6	b154	0.00	15.00	7.50	0.00	
		6	b155	0.00	15.00	7.50	0.00	
		6	b156	0.00	15.00	7.50	0.00	
		6	b157	0.00	15.00	7.50	0.00	
		6	b158	0.00	15.00	7.50	0.00	
		6	b159	0.00	15.00	7.50	0.00	
		6	b160	0.00	15.00	7.50	0.00	
		6	b161	0.00	15.00	7.50	0.00	
		6	b162	0.00	15.00	7.50	0.00	
		6	b163	0.00	15.00	7.50	0.00	
		6	b164	0.00	15.00	7.50	0.00	
		6	b165	0.00	15.00	7.50	0.00	
		6	b166	0.00	15.00	7.50	0.00	
		6	b167	0.00	15.00	7.50	0.00	
		6	b168	0.00	15.00	7.50	0.00	
		6	b169	0.00	15.00	7.50	0.00	
		6	b170	0.00	15.00	7.50	0.00	
		6	b171	0.00	15.00	7.50	0.00	
		6	b172	0.00	15.00	7.50	0.00	
		6	b173	0.00	15.00	7.50	0.00	
		6	b174	0.00	15.00	7.50	0.00	
		6	b175	0.00	15.00	7.50	0.00	
		6	b176	0.00	15.00	7.50	0.00	
		6	b177	0.00	15.00	7.50	0.00	
		6	b178	0.00	15.00	7.50	0.00	
		6	b179	0.00	15.00	7.50	0.00	
		6	b180	0.00	15.00	7.50	0.00	
		6	b181	0.00	15.00	7.50	0.00	
		6	b182	0.00	15.00	7.50	0.00	
		6	b183	0.00	15.00	7.50	0.00	
		6	b184	0.00	15.00	7.50	0.00	
		6	b185	0.00	15.00	7.50	0.00	
		6	b186	0.00	15.00	7.50	0.00	
		6	b187	0.00	15.00	7.50	0.00	
		6	b188	0.00	15.00	7.50	0.00	
		6	b189	0.00	15.00	7.50	0.00	
							35.01	341.41

VEGETALE

DALLA SEZ. DA PROG.	ALLA SEZ. A PROG.	SEZIONE	FIGURA	LUNGHEZZA	DISTANZA SEZIONI ml	DISTANZA DI CALCOLO ml	AREA PARZIALE mq	AREA TOTALE mq
						A RIPORTARE mq	35.01	341.41
		6	b190	0.00	15.00	7.50	0.00	
		6	b191	0.00	15.00	7.50	0.00	
		6	b192	0.00	15.00	7.50	0.00	
		6	b193	0.00	15.00	7.50	0.00	
		6	b194	0.00	15.00	7.50	0.00	
		6	b195	0.00	15.00	7.50	0.00	
		6	b196	0.00	15.00	7.50	0.00	
		6	b197	0.00	15.00	7.50	0.00	
		6	b198	0.00	15.00	7.50	0.00	
		6	b199	0.00	15.00	7.50	0.00	
		6	b200	0.00	15.00	7.50	0.00	
		6	b201	0.00	15.00	7.50	0.00	
		6	b202	0.00	15.00	7.50	0.00	
		6	b203	0.00	15.00	7.50	0.00	
		6	b204	0.00	15.00	7.50	0.00	
		6	b205	0.00	15.00	7.50	0.00	
		6	b206	0.00	15.00	7.50	0.00	
		6	b207	0.00	15.00	7.50	0.00	
		6	b208	0.00	15.00	7.50	0.00	
		6	b209	0.00	15.00	7.50	0.00	
		6	b210	0.00	15.00	7.50	0.00	
		6	b211	0.00	15.00	7.50	0.00	
		6	b212	0.00	15.00	7.50	0.00	
		6	b213	0.00	15.00	7.50	0.00	
		6	b214	0.00	15.00	7.50	0.00	
		6	b215	0.00	15.00	7.50	0.00	
		6	b216	0.00	15.00	7.50	0.00	
		6	b217	0.00	15.00	7.50	0.00	
		6	b218	0.00	15.00	7.50	0.00	
		6	b219	0.00	15.00	7.50	0.00	
		6	b220	0.00	15.00	7.50	0.00	
		6	b221	0.00	15.00	7.50	0.00	
		6	b222	0.00	15.00	7.50	0.00	
		6	b223	0.00	15.00	7.50	0.00	
		6	b224	0.00	15.00	7.50	0.00	
		6	b225	0.00	15.00	7.50	0.00	
		6	b226	0.00	15.00	7.50	0.00	
		6	b227	0.00	15.00	7.50	0.00	
		6	b228	0.00	15.00	7.50	0.00	
		6	b229	0.00	15.00	7.50	0.00	
		6	b230	0.00	15.00	7.50	0.00	
		6	b231	0.00	15.00	7.50	0.00	
		6	b232	0.00	15.00	7.50	0.00	
		6	b233	0.00	15.00	7.50	0.00	
		6	b234	0.00	15.00	7.50	0.00	
		6	b235	0.00	15.00	7.50	0.00	
		6	b236	0.00	15.00	7.50	0.00	
		6	b237	0.00	15.00	7.50	0.00	
		6	b238	0.00	15.00	7.50	0.00	
		6	b239	0.00	15.00	7.50	0.00	
		6	b240	0.00	15.00	7.50	0.00	
		6	b241	0.00	15.00	7.50	0.00	
		6	b242	0.00	15.00	7.50	0.00	
		6	b243	0.00	15.00	7.50	0.00	
		6	b244	0.00	15.00	7.50	0.00	
		6	b245	0.00	15.00	7.50	0.00	
		6	b246	0.00	15.00	7.50	0.00	
		6	b247	0.00	15.00	7.50	0.00	
		6	b248	0.00	15.00	7.50	0.00	
		6	b249	0.00	15.00	7.50	0.00	
		6	b250	0.00	15.00	7.50	0.00	
		6	b251	0.00	15.00	7.50	0.00	
		6	b252	0.00	15.00	7.50	0.00	
		6	b253	0.00	15.00	7.50	0.00	
		6	b254	0.00	15.00	7.50	0.00	
		6	b255	0.00	15.00	7.50	0.00	
		6	b256	0.00	15.00	7.50	0.00	
		6	b257	0.00	15.00	7.50	0.00	
		6	b258	0.00	15.00	7.50	0.00	
		6	b259	0.00	15.00	7.50	0.00	
		6	b260	0.00	15.00	7.50	0.00	
		6	b261	0.00	15.00	7.50	0.00	
		6	b262	0.00	15.00	7.50	0.00	
		6	b263	0.00	15.00	7.50	0.00	
		6	b264	0.00	15.00	7.50	0.00	
		6	b265	0.00	15.00	7.50	0.00	
		6	b266	0.00	15.00	7.50	0.00	
		6	b267	0.00	15.00	7.50	0.00	
		6	b268	0.00	15.00	7.50	0.00	
		6	b269	0.00	15.00	7.50	0.00	
		6	b270	0.00	15.00	7.50	0.00	
		6	b271	0.00	15.00	7.50	0.00	
		6	b272	0.00	15.00	7.50	0.00	
		6	b273	0.00	15.00	7.50	0.00	
		6	b274	0.00	15.00	7.50	0.00	
		6	b275	0.00	15.00	7.50	0.00	
		6	b276	0.00	15.00	7.50	0.00	
		6	b277	0.00	15.00	7.50	0.00	
		6	b278	0.00	15.00	7.50	0.00	
		6	b279	0.00	15.00	7.50	0.00	
		6	b280	0.00	15.00	7.50	0.00	
		6	b281	0.00	15.00	7.50	0.00	
		6	b282	0.00	15.00	7.50	0.00	
		6	b283	0.00	15.00	7.50	0.00	
		6	b284	0.00	15.00	7.50	0.00	
		6	b285	0.00	15.00	7.50	0.00	
		6	b286	0.00	15.00	7.50	0.00	
		6	b287	0.00	15.00	7.50	0.00	
		6	b288	0.00	15.00	7.50	0.00	
		6	b289	0.00	15.00	7.50	0.00	
		6	b290	0.00	15.00	7.50	0.00	
		6	b291	0.00	15.00	7.50	0.00	
		6	b292	0.00	15.00	7.50	0.00	
		6	b293	0.00	15.00	7.50	0.00	
		6	b294	0.00	15.00	7.50	0.00	
							35.01	341.41

VEGETALE

DALLA SEZ. DA PROG.	ALLA SEZ. A PROG.	SEZIONE	FIGURA	LUNGHEZZA	DISTANZA SEZIONI ml	DISTANZA DI CALCOLO ml	AREA PARZIALE mq	AREA TOTALE mq
						A RIPORTARE mq	35.01	341.41
		6	b295	0.00	15.00	7.50	0.00	
		6	b296	0.00	15.00	7.50	0.00	
		6	b297	0.00	15.00	7.50	0.00	
		6	b298	0.00	15.00	7.50	0.00	
		6	b299	0.00	15.00	7.50	0.00	
		6	b300	0.00	15.00	7.50	0.00	
		6	b301	0.00	15.00	7.50	0.00	
		6	b302	0.00	15.00	7.50	0.00	
		6	b303	0.00	15.00	7.50	0.00	
		6	b304	0.00	15.00	7.50	0.00	
		6	b305	0.00	15.00	7.50	0.00	
		6	b306	0.00	15.00	7.50	0.00	
		6	b307	0.00	15.00	7.50	0.00	
		6	b308	0.00	15.00	7.50	0.00	
		6	b309	0.00	15.00	7.50	0.00	
		6	b310	0.00	15.00	7.50	0.00	
		6	b311	0.00	15.00	7.50	0.00	
		6	b312	0.00	15.00	7.50	0.00	
		6	b313	0.00	15.00	7.50	0.00	
		6	b314	0.00	15.00	7.50	0.00	
		6	b315	0.00	15.00	7.50	0.00	
		6	b316	0.00	15.00	7.50	0.00	
		6	b317	0.00	15.00	7.50	0.00	
		6	b318	0.00	15.00	7.50	0.00	
		6	b319	0.00	15.00	7.50	0.00	
		6	b320	0.00	15.00	7.50	0.00	
		6	b321	0.00	15.00	7.50	0.00	
		6	b322	0.00	15.00	7.50	0.00	
		6	b323	0.00	15.00	7.50	0.00	
		6	b324	0.00	15.00	7.50	0.00	
		6	b325	0.00	15.00	7.50	0.00	
		6	b326	0.00	15.00	7.50	0.00	
		6	b327	0.00	15.00	7.50	0.00	
		6	b328	0.00	15.00	7.50	0.00	
		6	b329	0.00	15.00	7.50	0.00	
		6	b330	0.00	15.00	7.50	0.00	
		6	b331	0.00	15.00	7.50	0.00	
		6	b332	0.00	15.00	7.50	0.00	
		6	b333	0.00	15.00	7.50	0.00	
		6	b334	0.00	15.00	7.50	0.00	
		6	b335	0.00	15.00	7.50	0.00	
		6	b336	0.00	15.00	7.50	0.00	
		6	b337	0.00	15.00	7.50	0.00	
		6	b338	0.00	15.00	7.50	0.00	
		6	b339	0.00	15.00	7.50	0.00	
		6	b340	0.00	15.00	7.50	0.00	
		6	b341	0.00	15.00	7.50	0.00	
		6	b342	0.00	15.00	7.50	0.00	
		6	b343	0.00	15.00	7.50	0.00	
		6	b344	0.00	15.00	7.50	0.00	
		6	b345	0.00	15.00	7.50	0.00	
		6	b346	0.00	15.00	7.50	0.00	
		6	b347	0.00	15.00	7.50	0.00	
		6	b348	0.00	15.00	7.50	0.00	
		6	b349	0.00	15.00	7.50	0.00	
		6	b350	0.00	15.00	7.50	0.00	
		6	b351	0.00	15.00	7.50	0.00	
		6	b352	0.00	15.00	7.50	0.00	
		6	b353	0.00	15.00	7.50	0.00	
		6	b354	0.00	15.00	7.50	0.00	
		6	b355	0.00	15.00	7.50	0.00	
		6	b356	0.00	15.00	7.50	0.00	
		6	b357	0.00	15.00	7.50	0.00	
		6	b358	0.00	15.00	7.50	0.00	
		6	b359	0.00	15.00	7.50	0.00	
		6	b360	0.00	15.00	7.50	0.00	
		6	b361	0.00	15.00	7.50	0.00	
		6	b362	0.00	15.00	7.50	0.00	
		6	b363	0.00	15.00	7.50	0.00	
		6	b364	0.00	15.00	7.50	0.00	
		6	b365	0.00	15.00	7.50	0.00	
		6	b366	0.00	15.00	7.50	0.00	
		6	b367	0.00	15.00	7.50	0.00	
		6	b368	0.00	15.00	7.50	0.00	
		6	b369	0.00	15.00	7.50	0.00	
		6	b370	0.00	15.00	7.50	0.00	
		6	b371	0.00	15.00	7.50	0.00	
		6	b372	0.00	15.00	7.50	0.00	
		6	b373	0.00	15.00	7.50	0.00	
		6	b374	0.00	15.00	7.50	0.00	
		6	b375	0.00	15.00	7.50	0.00	
		6	b376	0.00	15.00	7.50	0.00	
		6	b377	0.00	15.00	7.50	0.00	
		6	b378	0.00	15.00	7.50	0.00	
		6	b379	0.00	15.00	7.50	0.00	
		6	b380	0.00	15.00	7.50	0.00	
		6	b381	0.00	15.00	7.50	0.00	
		6	b382	0.00	15.00	7.50	0.00	
		6	b383	0.00	15.00	7.50	0.00	
		6	b384	0.00	15.00	7.50	0.00	
		6	b385	0.00	15.00	7.50	0.00	
		6	b386	0.00	15.00	7.50	0.00	
		6	b387	0.00	15.00	7.50	0.00	
		6	b388	0.00	15.00	7.50	0.00	
		6	b389	0.00	15.00	7.50	0.00	
		6	b390	0.00	15.00	7.50	0.00	
		6	b391	0.00	15.00	7.50	0.00	
		6	b392	0.00	15.00	7.50	0.00	
		6	b393	0.00	15.00	7.50	0.00	
		6	b394	0.00	15.00	7.50	0.00	
		6	b395	0.00	15.00	7.50	0.00	
		6	b396	0.00	15.00	7.50	0.00	
		6	b397	0.00	15.00	7.50	0.00	
		6	b398	0.00	15.00	7.50	0.00	
		6	b399	0.00	15.00	7.50	0.00	
							35.01	341.41

VEGETALE

DALLA SEZ. DA PROG.	ALLA SEZ. A PROG.	SEZIONE	FIGURA	LUNGHEZZA	DISTANZA SEZIONI ml	DISTANZA DI CALCOLO ml	AREA PARZIALE mq	AREA TOTALE mq
						A RIPORTARE mq	35.01	341.41
		6	b400	0.00	15.00	7.50	0.00	
		6	b401	0.00	15.00	7.50	0.00	
		6	b402	0.00	15.00	7.50	0.00	
		6	b403	0.00	15.00	7.50	0.00	
		6	b404	0.00	15.00	7.50	0.00	
		6	b405	0.00	15.00	7.50	0.00	
		6	b406	0.00	15.00	7.50	0.00	
		6	b407	0.00	15.00	7.50	0.00	
		6	b408	0.00	15.00	7.50	0.00	
		6	b409	0.00	15.00	7.50	0.00	
		6	b410	0.00	15.00	7.50	0.00	
		6	b411	0.00	15.00	7.50	0.00	
		6	b412	0.00	15.00	7.50	0.00	
		6	b413	0.00	15.00	7.50	0.00	
		6	b414	0.00	15.00	7.50	0.00	
		6	b415	0.00	15.00	7.50	0.00	
		6	b416	0.00	15.00	7.50	0.00	
		6	b417	0.00	15.00	7.50	0.00	
		6	b418	0.00	15.00	7.50	0.00	
		6	b419	0.00	15.00	7.50	0.00	
		6	b420	0.00	15.00	7.50	0.00	
		6	b421	0.00	15.00	7.50	0.00	
		6	b422	0.00	15.00	7.50	0.00	
		6	b423	0.00	15.00	7.50	0.00	
		6	b424	0.00	15.00	7.50	0.00	
		6	b425	0.00	15.00	7.50	0.00	
		6	b426	0.00	15.00	7.50	0.00	
		6	b427	0.00	15.00	7.50	0.00	
		6	b428	0.00	15.00	7.50	0.00	
		6	b429	0.00	15.00	7.50	0.00	
		6	b430	0.00	15.00	7.50	0.00	
		6	b431	0.00	15.00	7.50	0.00	
		6	b432	0.00	15.00	7.50	0.00	
		6	b433	0.00	15.00	7.50	0.00	
		6	b434	0.00	15.00	7.50	0.00	
		6	b435	0.00	15.00	7.50	0.00	
		6	b436	0.00	15.00	7.50	0.00	
		6	b437	0.00	15.00	7.50	0.00	
		6	b438	0.00	15.00	7.50	0.00	
		6	b439	0.00	15.00	7.50	0.00	
		6	b440	0.00	15.00	7.50	0.00	
		6	b441	0.00	15.00	7.50	0.00	
		6	b442	0.00	15.00	7.50	0.00	
		6	b443	0.00	15.00	7.50	0.00	
		6	b444	0.00	15.00	7.50	0.00	
		6	b445	0.00	15.00	7.50	0.00	
		6	b446	0.00	15.00	7.50	0.00	
		6	b447	0.00	15.00	7.50	0.00	
		6	b448	0.00	15.00	7.50	0.00	
		6	b449	0.00	15.00	7.50	0.00	
		6	b450	0.00	15.00	7.50	0.00	
		6	b451	0.00	15.00	7.50	0.00	
		6	b452	0.00	15.00	7.50	0.00	
		6	b453	0.00	15.00	7.50	0.00	
		6	b454	0.00	15.00	7.50	0.00	
		6	b455	0.00	15.00	7.50	0.00	
		6	b456	0.00	15.00	7.50	0.00	
		6	b457	0.00	15.00	7.50	0.00	
		6	b458	0.00	15.00	7.50	0.00	
		6	b459	0.00	15.00	7.50	0.00	
		6	b460	0.00	15.00	7.50	0.00	
		6	b461	0.00	15.00	7.50	0.00	
		6	b462	0.00	15.00	7.50	0.00	
		6	b463	0.00	15.00	7.50	0.00	
		6	b464	0.00	15.00	7.50	0.00	
		6	b465	0.00	15.00	7.50	0.00	
		6	b466	0.00	15.00	7.50	0.00	
		6	b467	0.00	15.00	7.50	0.00	
		6	b468	0.00	15.00	7.50	0.00	
		6	b469	0.00	15.00	7.50	0.00	
		6	b470	0.00	15.00	7.50	0.00	
		6	b471	0.00	15.00	7.50	0.00	
		6	b472	0.00	15.00	7.50	0.00	
		6	b473	0.00	15.00	7.50	0.00	
		6	b474	0.00	15.00	7.50	0.00	
		6	b475	0.00	15.00	7.50	0.00	
		6	b476	0.00	15.00	7.50	0.00	
		6	b477	0.00	15.00	7.50	0.00	
		6	b478	0.00	15.00	7.50	0.00	
		6	b479	0.00	15.00	7.50	0.00	
		6	b480	0.00	15.00	7.50	0.00	
		6	b481	0.00	15.00	7.50	0.00	
		6	b482	0.00	15.00	7.50	0.00	
		6	b483	0.00	15.00	7.50	0.00	
		6	b484	0.00	15.00	7.50	0.00	
		6	b485	0.00	15.00	7.50	0.00	
		6	b486	0.00	15.00	7.50	0.00	
		6	b487	0.00	15.00	7.50	0.00	
		6	b488	0.00	15.00	7.50	0.00	
		6	b489	0.00	15.00	7.50	0.00	
		6	b490	0.00	15.00	7.50	0.00	
		6	b491	0.00	15.00	7.50	0.00	
		6	b492	0.00	15.00	7.50	0.00	
		6	b493	0.00	15.00	7.50	0.00	
		6	b494	0.00	15.00	7.50	0.00	
		6	b495	0.00	15.00	7.50	0.00	
		6	b496	0.00	15.00	7.50	0.00	
		6	b497	0.00	15.00	7.50	0.00	
		6	b498	0.00	15.00	7.50	0.00	
		6	b499	0.00	15.00	7.50	0.00	
		6	b500	0.00	15.00	7.50	0.00	
		6	b501	0.00	15.00	7.50	0.00	
		6	b502	0.00	15.00	7.50	0.00	
		6	b503	0.00	15.00	7.50	0.00	
		6	b504	0.00	15.00	7.50	0.00	
							35.01	341.41

VEGETALE

DALLA SEZ. DA PROG.	ALLA SEZ. A PROG.	SEZIONE	FIGURA	LUNGHEZZA	DISTANZA SEZIONI ml	DISTANZA DI CALCOLO ml	AREA PARZIALE mq	AREA TOTALE mq
						A RIPORTARE mq	35.01	341.41
		6	b505	0.00	15.00	7.50	0.00	
		6	b506	0.00	15.00	7.50	0.00	
		6	b507	0.00	15.00	7.50	0.00	
		6	b508	0.00	15.00	7.50	0.00	
		6	b509	0.00	15.00	7.50	0.00	
		6	b510	0.00	15.00	7.50	0.00	
		6	b511	0.00	15.00	7.50	0.00	
		6	b512	0.00	15.00	7.50	0.00	
		6	b513	0.00	15.00	7.50	0.00	
		6	b514	0.00	15.00	7.50	0.00	
		6	b515	0.00	15.00	7.50	0.00	
		6	b516	0.00	15.00	7.50	0.00	
		6	b517	0.00	15.00	7.50	0.00	
		6	b518	0.00	15.00	7.50	0.00	
		6	b519	0.00	15.00	7.50	0.00	
		6	b520	0.00	15.00	7.50	0.00	
		6	b521	0.00	15.00	7.50	0.00	
		6	b522	0.00	15.00	7.50	0.00	
		6	b523	0.00	15.00	7.50	0.00	
		6	b524	0.00	15.00	7.50	0.00	
		6	b525	0.00	15.00	7.50	0.00	
		6	b526	0.00	15.00	7.50	0.00	
		6	b527	0.00	15.00	7.50	0.00	
		6	b528	0.00	15.00	7.50	0.00	
		6	b529	0.00	15.00	7.50	0.00	
		6	b530	0.00	15.00	7.50	0.00	
		6	b531	0.00	15.00	7.50	0.00	
		6	b532	0.00	15.00	7.50	0.00	
		6	b533	0.00	15.00	7.50	0.00	
		6	b534	0.00	15.00	7.50	0.00	
		6	b535	0.00	15.00	7.50	0.00	
		6	b536	0.00	15.00	7.50	0.00	
		6	b537	0.00	15.00	7.50	0.00	
		6	b538	0.00	15.00	7.50	0.00	
		6	b539	0.00	15.00	7.50	0.00	
		6	b540	0.00	15.00	7.50	0.00	
		6	b541	0.00	15.00	7.50	0.00	
		6	b542	0.00	15.00	7.50	0.00	
		6	b543	0.00	15.00	7.50	0.00	
		6	b544	0.00	15.00	7.50	0.00	
		6	b545	0.00	15.00	7.50	0.00	
		6	b546	0.00	15.00	7.50	0.00	
		6	b547	0.00	15.00	7.50	0.00	
		6	b548	0.00	15.00	7.50	0.00	
		6	b549	0.00	15.00	7.50	0.00	
		6	b550	0.00	15.00	7.50	0.00	
		6	b551	0.00	15.00	7.50	0.00	
		6	b552	0.00	15.00	7.50	0.00	
		6	b553	0.00	15.00	7.50	0.00	
		6	b554	0.00	15.00	7.50	0.00	
		6	b555	0.00	15.00	7.50	0.00	
		6	b556	0.00	15.00	7.50	0.00	
		6	b557	0.00	15.00	7.50	0.00	
		6	b558	0.00	15.00	7.50	0.00	
		6	b559	0.00	15.00	7.50	0.00	
		6	b560	0.00	15.00	7.50	0.00	
		6	b561	0.00	15.00	7.50	0.00	
		6	b562	0.00	15.00	7.50	0.00	
		6	b563	0.00	15.00	7.50	0.00	
		6	b564	0.00	15.00	7.50	0.00	
		6	b565	0.00	15.00	7.50	0.00	
		6	b566	0.00	15.00	7.50	0.00	
		6	b567	0.00	15.00	7.50	0.00	
		6	b568	0.00	15.00	7.50	0.00	
		6	b569	0.00	15.00	7.50	0.00	
		6	b570	0.00	15.00	7.50	0.00	
		6	b571	0.00	15.00	7.50	0.00	
		6	b572	0.00	15.00	7.50	0.00	
		6	b573	0.00	15.00	7.50	0.00	
		6	b574	0.00	15.00	7.50	0.00	
		6	b575	0.00	15.00	7.50	0.00	
		6	b576	0.00	15.00	7.50	0.00	
		6	b577	0.00	15.00	7.50	0.00	
		6	b578	0.00	15.00	7.50	0.00	
		6	b579	0.00	15.00	7.50	0.00	
		6	b580	0.00	15.00	7.50	0.00	
		6	b581	0.00	15.00	7.50	0.00	
		6	b582	0.00	15.00	7.50	0.00	
		6	b583	0.00	15.00	7.50	0.00	
		6	b584	0.00	15.00	7.50	0.00	
		6	b585	0.00	15.00	7.50	0.00	
		6	b586	0.00	15.00	7.50	0.00	
		6	b587	0.00	15.00	7.50	0.00	
		6	b588	0.00	15.00	7.50	0.00	
		6	b589	0.00	15.00	7.50	0.00	
		6	b590	0.00	15.00	7.50	0.00	
		6	b591	0.00	15.00	7.50	0.00	
		6	b592	0.00	15.00	7.50	0.00	
		6	b593	0.00	15.00	7.50	0.00	
		6	b594	0.00	15.00	7.50	0.00	
		6	b595	0.00	15.00	7.50	0.00	
		6	b596	0.00	15.00	7.50	0.00	
		6	b597	0.00	15.00	7.50	0.00	
		6	b598	0.00	15.00	7.50	0.00	
		6	b599	0.00	15.00	7.50	0.00	
		6	b600	0.00	15.00	7.50	0.00	
		6	b601	0.00	15.00	7.50	0.00	
		6	b602	0.00	15.00	7.50	0.00	
		6	b603	0.00	15.00	7.50	0.00	
		6	b604	0.00	15.00	7.50	0.00	
		6	b605	0.00	15.00	7.50	0.00	
		6	b606	0.00	15.00	7.50	0.00	
		6	b607	0.00	15.00	7.50	0.00	
		6	b608	0.00	15.00	7.50	0.00	
		6	b609	0.00	15.00	7.50	0.00	
							35.01	341.41

VEGETALE

DALLA SEZ. DA PROG.	ALLA SEZ. A PROG.	SEZIONE	FIGURA	LUNGHEZZA	DISTANZA SEZIONI ml	DISTANZA DI CALCOLO ml	AREA PARZIALE mq	AREA TOTALE mq
						A RIPORTARE mq	35.01	341.41
		6	b610	0.00	15.00	7.50	0.00	
		6	b611	0.00	15.00	7.50	0.00	
		6	b612	0.00	15.00	7.50	0.00	
		6	b613	0.00	15.00	7.50	0.00	
		6	b614	0.00	15.00	7.50	0.00	
		6	b615	0.00	15.00	7.50	0.00	
		6	b616	0.00	15.00	7.50	0.00	
		6	b617	0.00	15.00	7.50	0.00	
		6	b618	0.00	15.00	7.50	0.00	
		6	b619	0.00	15.00	7.50	0.00	
		6	b620	0.00	15.00	7.50	0.00	
		6	b621	0.00	15.00	7.50	0.00	
		6	b622	0.00	15.00	7.50	0.00	
		6	b623	0.00	15.00	7.50	0.00	
		6	b624	0.00	15.00	7.50	0.00	
		6	b625	0.00	15.00	7.50	0.00	
		6	b626	0.00	15.00	7.50	0.00	
		6	b627	0.00	15.00	7.50	0.00	
		6	b628	0.00	15.00	7.50	0.00	
		6	b629	0.00	15.00	7.50	0.00	
		6	b630	0.00	15.00	7.50	0.00	
		6	b631	0.00	15.00	7.50	0.00	
		6	b632	0.00	15.00	7.50	0.00	
		6	b633	0.00	15.00	7.50	0.00	
		6	b634	0.00	15.00	7.50	0.00	
		6	b635	0.00	15.00	7.50	0.00	
		6	b636	0.00	15.00	7.50	0.00	
		6	b637	0.00	15.00	7.50	0.00	
		6	b638	0.00	15.00	7.50	0.00	
		6	b639	0.00	15.00	7.50	0.00	
		6	b640	0.00	15.00	7.50	0.00	
		6	b641	0.00	15.00	7.50	0.00	
		6	b642	0.00	15.00	7.50	0.00	
		6	b643	0.00	15.00	7.50	0.00	
		6	b644	0.00	15.00	7.50	0.00	
		6	b645	0.00	15.00	7.50	0.00	
		6	b646	0.00	15.00	7.50	0.00	
		6	b647	0.00	15.00	7.50	0.00	
		6	b648	0.00	15.00	7.50	0.00	
		6	b649	0.00	15.00	7.50	0.00	
		6	b650	0.00	15.00	7.50	0.00	
		6	b651	0.00	15.00	7.50	0.00	
		6	b652	0.00	15.00	7.50	0.00	
		6	b653	0.00	15.00	7.50	0.00	
		6	b654	0.00	15.00	7.50	0.00	
		6	b655	0.00	15.00	7.50	0.00	
		6	b656	0.00	15.00	7.50	0.00	
		6	b657	0.00	15.00	7.50	0.00	
		6	b658	0.00	15.00	7.50	0.00	
		6	b659	0.00	15.00	7.50	0.00	
		6	b660	0.00	15.00	7.50	0.00	
		6	b661	0.00	15.00	7.50	0.00	
		6	b662	0.00	15.00	7.50	0.00	
		6	b663	0.00	15.00	7.50	0.00	
		6	b664	0.00	15.00	7.50	0.00	
		6	b665	0.00	15.00	7.50	0.00	
		6	b666	0.00	15.00	7.50	0.00	
		6	b667	0.00	15.00	7.50	0.00	
		6	b668	0.00	15.00	7.50	0.00	
		6	b669	0.00	15.00	7.50	0.00	
		6	b670	0.00	15.00	7.50	0.00	
		6	b671	0.00	15.00	7.50	0.00	
		6	b672	0.00	15.00	7.50	0.00	
		6	b673	0.00	15.00	7.50	0.00	
		6	b674	0.00	15.00	7.50	0.00	
		6	b675	0.00	15.00	7.50	0.00	
		6	b676	0.00	15.00	7.50	0.00	
		6	b677	0.00	15.00	7.50	0.00	
		6	b678	0.00	15.00	7.50	0.00	
		6	b679	0.00	15.00	7.50	0.00	
		6	b680	0.00	15.00	7.50	0.00	
		6	b681	0.00	15.00	7.50	0.00	
		6	b682	0.00	15.00	7.50	0.00	
		6	b683	0.00	15.00	7.50	0.00	
		6	b684	0.00	15.00	7.50	0.00	
		6	b685	0.00	15.00	7.50	0.00	
		6	b686	0.00	15.00	7.50	0.00	
		6	b687	0.00	15.00	7.50	0.00	
		6	b688	0.00	15.00	7.50	0.00	
		6	b689	0.00	15.00	7.50	0.00	
		6	b690	0.00	15.00	7.50	0.00	
		6	b691	0.00	15.00	7.50	0.00	
		6	b692	0.00	15.00	7.50	0.00	
		6	b693	0.00	15.00	7.50	0.00	
		6	b694	0.00	15.00	7.50	0.00	
		6	b695	0.00	15.00	7.50	0.00	
		6	b696	0.00	15.00	7.50	0.00	
		6	b697	0.00	15.00	7.50	0.00	
		6	b698	0.00	15.00	7.50	0.00	
		6	b699	0.00	15.00	7.50	0.00	
		6	b700	0.00	15.00	7.50	0.00	
		6	b701	0.00	15.00	7.50	0.00	
		6	b702	0.00	15.00	7.50	0.00	
		6	b703	0.00	15.00	7.50	0.00	
		6	b704	0.00	15.00	7.50	0.00	
		6	b705	0.00	15.00	7.50	0.00	
		6	b706	0.00	15.00	7.50	0.00	
		6	b707	0.00	15.00	7.50	0.00	
		6	b708	0.00	15.00	7.50	0.00	
		6	b709	0.00	15.00	7.50	0.00	
		6	b710	0.00	15.00	7.50	0.00	
		6	b711	0.00	15.00	7.50	0.00	
		6	b712	0.00	15.00	7.50	0.00	
		6	b713	0.00	15.00	7.50	0.00	
		6	b714	0.00	15.00	7.50	0.00	
							35.01	341.41

VEGETALE

DALLA SEZ. DA PROG.	ALLA SEZ. A PROG.	SEZIONE	FIGURA	LUNGHEZZA	DISTANZA SEZIONI ml	DISTANZA DI CALCOLO ml	AREA PARZIALE mq	AREA TOTALE mq
						A RIPORTARE mq	35.01	341.41
		6	b715	0.00	15.00	7.50	0.00	
		6	b716	0.00	15.00	7.50	0.00	
		6	b717	0.00	15.00	7.50	0.00	
		6	b718	0.00	15.00	7.50	0.00	
		6	b719	0.00	15.00	7.50	0.00	
		6	b720	0.00	15.00	7.50	0.00	
		6	b721	0.00	15.00	7.50	0.00	
		6	b722	0.00	15.00	7.50	0.00	
		6	b723	0.00	15.00	7.50	0.00	
		6	b724	0.00	15.00	7.50	0.00	
		6	b725	0.00	15.00	7.50	0.00	
		6	b726	0.00	15.00	7.50	0.00	
		6	b727	0.00	15.00	7.50	0.00	
		6	b728	0.00	15.00	7.50	0.00	
		6	b729	0.00	15.00	7.50	0.00	
		6	b730	0.00	15.00	7.50	0.00	
		6	b731	0.00	15.00	7.50	0.00	
		6	b732	0.00	15.00	7.50	0.00	
		6	b733	0.00	15.00	7.50	0.00	
		6	b734	0.00	15.00	7.50	0.00	
		6	b735	0.00	15.00	7.50	0.00	
		6	b736	0.00	15.00	7.50	0.00	
		6	b737	0.00	15.00	7.50	0.00	
		6	b738	0.00	15.00	7.50	0.00	
		6	b739	0.00	15.00	7.50	0.00	
		6	b740	0.00	15.00	7.50	0.00	
		6	b741	0.00	15.00	7.50	0.00	
		6	b742	0.00	15.00	7.50	0.00	
		6	b743	0.00	15.00	7.50	0.00	
		6	b744	0.00	15.00	7.50	0.00	
		6	b745	0.00	15.00	7.50	0.00	
		6	b746	0.00	15.00	7.50	0.00	
		6	b747	0.00	15.00	7.50	0.00	
		6	b748	0.00	15.00	7.50	0.00	
		6	b749	0.00	15.00	7.50	0.00	
		6	b750	0.00	15.00	7.50	0.00	
		6	b751	0.00	15.00	7.50	0.00	
		6	b752	0.00	15.00	7.50	0.00	
		6	b753	0.00	15.00	7.50	0.00	
		6	b754	0.00	15.00	7.50	0.00	
		6	b755	0.00	15.00	7.50	0.00	
		6	b756	0.00	15.00	7.50	0.00	
		6	b757	0.00	15.00	7.50	0.00	
		6	b758	0.00	15.00	7.50	0.00	
		6	b759	0.00	15.00	7.50	0.00	
		6	b760	0.00	15.00	7.50	0.00	
		6	b761	0.00	15.00	7.50	0.00	
		6	b762	0.00	15.00	7.50	0.00	
		6	b763	0.00	15.00	7.50	0.00	
		6	b764	0.00	15.00	7.50	0.00	
		6	b765	0.00	15.00	7.50	0.00	
		6	b766	0.00	15.00	7.50	0.00	
		6	b767	0.00	15.00	7.50	0.00	
		6	b768	0.00	15.00	7.50	0.00	
		6	b769	0.00	15.00	7.50	0.00	
		6	b770	0.00	15.00	7.50	0.00	
		6	b771	0.00	15.00	7.50	0.00	
		6	b772	0.00	15.00	7.50	0.00	
		6	b773	0.00	15.00	7.50	0.00	
		6	b774	0.00	15.00	7.50	0.00	
		6	b775	0.00	15.00	7.50	0.00	
		6	b776	0.00	15.00	7.50	0.00	
		6	b777	0.00	15.00	7.50	0.00	
		6	b778	0.00	15.00	7.50	0.00	
		6	b779	0.00	15.00	7.50	0.00	
		6	b780	0.00	15.00	7.50	0.00	
		6	b781	0.00	15.00	7.50	0.00	
		6	b782	0.00	15.00	7.50	0.00	
		6	b783	0.00	15.00	7.50	0.00	
		6	b784	0.00	15.00	7.50	0.00	
		6	b785	0.00	15.00	7.50	0.00	
		6	b786	0.00	15.00	7.50	0.00	
		6	b787	0.00	15.00	7.50	0.00	
		6	b788	0.00	15.00	7.50	0.00	
		6	b789	0.00	15.00	7.50	0.00	
		6	b790	0.00	15.00	7.50	0.00	
		6	b791	0.00	15.00	7.50	0.00	
		6	b792	0.00	15.00	7.50	0.00	
		6	b793	0.00	15.00	7.50	0.00	
		6	b794	0.00	15.00	7.50	0.00	
		6	b795	0.00	15.00	7.50	0.00	
		6	b796	0.00	15.00	7.50	0.00	
		6	b797	0.00	15.00	7.50	0.00	
		6	b798	0.00	15.00	7.50	0.00	
		6	b799	0.00	15.00	7.50	0.00	
		6	b800	0.00	15.00	7.50	0.00	
		6	b801	0.00	15.00	7.50	0.00	
		6	b802	0.00	15.00	7.50	0.00	
		6	b803	0.00	15.00	7.50	0.00	
		6	b804	0.00	15.00	7.50	0.00	
		6	b805	0.00	15.00	7.50	0.00	
		6	b806	0.00	15.00	7.50	0.00	
		6	b807	0.00	15.00	7.50	0.00	
		6	b808	0.00	15.00	7.50	0.00	
		6	b809	0.00	15.00	7.50	0.00	
		6	b810	0.00	15.00	7.50	0.00	
		6	b811	0.00	15.00	7.50	0.00	
		6	b812	0.00	15.00	7.50	0.00	
		6	b813	0.00	15.00	7.50	0.00	
		6	b814	0.00	15.00	7.50	0.00	
		6	b815	0.00	15.00	7.50	0.00	
		6	b816	0.00	15.00	7.50	0.00	
		6	b817	0.00	15.00	7.50	0.00	
		6	b818	0.00	15.00	7.50	0.00	
		6	b819	0.00	15.00	7.50	0.00	
							35.01	341.41

VEGETALE

DALLA SEZ. DA PROG.	ALLA SEZ. A PROG.	SEZIONE	FIGURA	LUNGHEZZA	DISTANZA SEZIONI ml	DISTANZA DI CALCOLO ml	AREA PARZIALE mq	AREA TOTALE mq
						A RIPORTARE mq	35.01	341.41
		6	b820	0.00	15.00	7.50	0.00	
		6	b821	0.00	15.00	7.50	0.00	
		6	b822	0.00	15.00	7.50	0.00	
		6	b823	0.00	15.00	7.50	0.00	
		6	b824	0.00	15.00	7.50	0.00	
		6	b825	0.00	15.00	7.50	0.00	
		6	b826	0.00	15.00	7.50	0.00	
		6	b827	0.00	15.00	7.50	0.00	
		6	b828	0.00	15.00	7.50	0.00	
		6	b829	0.00	15.00	7.50	0.00	
		6	b830	0.00	15.00	7.50	0.00	
		6	b831	0.00	15.00	7.50	0.00	
		6	b832	0.00	15.00	7.50	0.00	
		6	b833	0.00	15.00	7.50	0.00	
		6	b834	0.00	15.00	7.50	0.00	
		6	b835	0.00	15.00	7.50	0.00	
		6	b836	0.00	15.00	7.50	0.00	
		6	b837	0.00	15.00	7.50	0.00	
		6	b838	0.00	15.00	7.50	0.00	
		6	b839	0.00	15.00	7.50	0.00	
		6	b840	0.00	15.00	7.50	0.00	
		6	b841	0.00	15.00	7.50	0.00	
		6	b842	0.00	15.00	7.50	0.00	
		6	b843	0.00	15.00	7.50	0.00	
		6	b844	0.00	15.00	7.50	0.00	
		6	b845	0.00	15.00	7.50	0.00	
		6	b846	0.00	15.00	7.50	0.00	
		6	b847	0.00	15.00	7.50	0.00	
		6	b848	0.00	15.00	7.50	0.00	
		6	b849	0.00	15.00	7.50	0.00	
		6	b850	0.00	15.00	7.50	0.00	
		6	b851	0.00	15.00	7.50	0.00	
		6	b852	0.00	15.00	7.50	0.00	
		6	b853	0.00	15.00	7.50	0.00	
		6	b854	0.00	15.00	7.50	0.00	
		6	b855	0.00	15.00	7.50	0.00	
		6	b856	0.00	15.00	7.50	0.00	
		6	b857	0.00	15.00	7.50	0.00	
		6	b858	0.00	15.00	7.50	0.00	
		6	b859	0.00	15.00	7.50	0.00	
		6	b860	0.00	15.00	7.50	0.00	
		6	b861	0.00	15.00	7.50	0.00	
		6	b862	0.00	15.00	7.50	0.00	
		6	b863	0.00	15.00	7.50	0.00	
		6	b864	0.00	15.00	7.50	0.00	
		6	b865	0.00	15.00	7.50	0.00	
		6	b866	0.00	15.00	7.50	0.00	
		6	b867	0.00	15.00	7.50	0.00	
		6	b868	0.00	15.00	7.50	0.00	
		6	b869	0.00	15.00	7.50	0.00	
		6	b870	0.00	15.00	7.50	0.00	
		6	b871	0.00	15.00	7.50	0.00	
		6	b872	0.00	15.00	7.50	0.00	
		6	b873	0.00	15.00	7.50	0.00	
		6	b874	0.00	15.00	7.50	0.00	
		6	b875	0.00	15.00	7.50	0.00	
		6	b876	0.00	15.00	7.50	0.00	
		6	b877	0.00	15.00	7.50	0.00	
		6	b878	0.00	15.00	7.50	0.00	
		6	b879	0.00	15.00	7.50	0.00	
		6	b880	0.00	15.00	7.50	0.00	
		6	b881	0.00	15.00	7.50	0.00	
		6	b882	0.00	15.00	7.50	0.00	
		6	b883	0.00	15.00	7.50	0.00	
		6	b884	0.00	15.00	7.50	0.00	
		6	b885	0.00	15.00	7.50	0.00	
		6	b886	0.00	15.00	7.50	0.00	
		6	b887	0.00	15.00	7.50	0.00	
		6	b888	0.00	15.00	7.50	0.00	
		6	b889	0.00	15.00	7.50	0.00	
		6	b890	0.00	15.00	7.50	0.00	
		6	b891	0.00	15.00	7.50	0.00	
		6	b892	0.00	15.00	7.50	0.00	
		6	b893	0.00	15.00	7.50	0.00	
		6	b894	0.00	15.00	7.50	0.00	
		6	b895	0.00	15.00	7.50	0.00	
		6	b896	0.00	15.00	7.50	0.00	
		6	b897	0.00	15.00	7.50	0.00	
		6	b898	0.00	15.00	7.50	0.00	
		6	b899	0.00	15.00	7.50	0.00	
		6	b900	0.00	15.00	7.50	0.00	
		6	b901	0.00	15.00	7.50	0.00	
		6	b902	0.00	15.00	7.50	0.00	
		6	b903	0.00	15.00	7.50	0.00	
		6	b904	0.00	15.00	7.50	0.00	
		6	b905	0.00	15.00	7.50	0.00	
		6	b906	0.00	15.00	7.50	0.00	
		6	b907	0.00	15.00	7.50	0.00	
		6	b908	0.00	15.00	7.50	0.00	
		6	b909	0.00	15.00	7.50	0.00	
		6	b910	0.00	15.00	7.50	0.00	
		6	b911	0.00	15.00	7.50	0.00	
		6	b912	0.00	15.00	7.50	0.00	
		6	b913	0.00	15.00	7.50	0.00	
		6	b914	0.00	15.00	7.50	0.00	
		6	b915	0.00	15.00	7.50	0.00	
		6	b916	0.00	15.00	7.50	0.00	
		6	b917	0.00	15.00	7.50	0.00	
		6	b918	0.00	15.00	7.50	0.00	
		6	b919	0.00	15.00	7.50	0.00	
		6	b920	0.00	15.00	7.50	0.00	
		6	b921	0.00	15.00	7.50	0.00	
		6	b922	0.00	15.00	7.50	0.00	
		6	b923	0.00	15.00	7.50	0.00	
		6	b924	0.00	15.00	7.50	0.00	
							35.01	341.41

VEGETALE

DALLA SEZ. DA PROG.	ALLA SEZ. A PROG.	SEZIONE	FIGURA	LUNGHEZZA	DISTANZA SEZIONI ml	DISTANZA DI CALCOLO ml	AREA PARZIALE mq	AREA TOTALE mq
						A RIPORTARE mq	35.01	341.41
		6	b925	0.00	15.00	7.50	0.00	
		6	b926	0.00	15.00	7.50	0.00	
		6	b927	0.00	15.00	7.50	0.00	
		6	b928	0.00	15.00	7.50	0.00	
		6	b929	0.00	15.00	7.50	0.00	
		6	b930	0.00	15.00	7.50	0.00	
		6	b931	0.00	15.00	7.50	0.00	
		6	b932	0.00	15.00	7.50	0.00	
		6	b933	0.00	15.00	7.50	0.00	
		6	b934	0.00	15.00	7.50	0.00	
		6	b935	0.00	15.00	7.50	0.00	
		6	b936	0.00	15.00	7.50	0.00	
		6	b937	0.00	15.00	7.50	0.00	
		6	b938	0.00	15.00	7.50	0.00	
		6	b939	0.00	15.00	7.50	0.00	
		6	b940	0.00	15.00	7.50	0.00	
		6	b941	0.00	15.00	7.50	0.00	
		6	b942	0.00	15.00	7.50	0.00	
		6	b943	0.00	15.00	7.50	0.00	
		6	b944	0.00	15.00	7.50	0.00	
		6	b945	0.00	15.00	7.50	0.00	
		6	b946	0.00	15.00	7.50	0.00	
		6	b947	0.00	15.00	7.50	0.00	
		6	b948	0.00	15.00	7.50	0.00	
		6	b949	0.00	15.00	7.50	0.00	
		6	b950	0.00	15.00	7.50	0.00	
		6	b951	0.00	15.00	7.50	0.00	
		6	b952	0.00	15.00	7.50	0.00	
		6	b953	0.00	15.00	7.50	0.00	
		6	b954	0.00	15.00	7.50	0.00	
		6	b955	0.00	15.00	7.50	0.00	
		6	b956	0.00	15.00	7.50	0.00	
		6	b957	0.00	15.00	7.50	0.00	
		6	b958	0.00	15.00	7.50	0.00	
		6	b959	0.00	15.00	7.50	0.00	
		6	b960	0.00	15.00	7.50	0.00	
		6	b961	0.00	15.00	7.50	0.00	
		6	b962	0.00	15.00	7.50	0.00	
		6	b963	0.00	15.00	7.50	0.00	
		6	b964	0.00	15.00	7.50	0.00	
		6	b965	0.00	15.00	7.50	0.00	
		6	b966	0.00	15.00	7.50	0.00	
		6	b967	0.00	15.00	7.50	0.00	
		6	b968	0.00	15.00	7.50	0.00	
		6	b969	0.00	15.00	7.50	0.00	
		6	b970	0.00	15.00	7.50	0.00	
		6	b971	0.00	15.00	7.50	0.00	
		6	b972	0.00	15.00	7.50	0.00	
		6	b973	0.00	15.00	7.50	0.00	
		6	b974	0.00	15.00	7.50	0.00	
		6	b975	0.00	15.00	7.50	0.00	
		6	b976	0.00	15.00	7.50	0.00	
		6	b977	0.00	15.00	7.50	0.00	
		6	b978	0.00	15.00	7.50	0.00	
		6	b979	0.00	15.00	7.50	0.00	
		6	b980	0.00	15.00	7.50	0.00	
		6	b981	0.00	15.00	7.50	0.00	
		6	b982	0.00	15.00	7.50	0.00	
		6	b983	0.00	15.00	7.50	0.00	
		6	b984	0.00	15.00	7.50	0.00	
		6	b985	0.00	15.00	7.50	0.00	
		6	b986	0.00	15.00	7.50	0.00	
		6	b987	0.00	15.00	7.50	0.00	
		6	b988	0.00	15.00	7.50	0.00	
		6	b989	0.00	15.00	7.50	0.00	
		6	b990	0.00	15.00	7.50	0.00	
		6	b991	0.00	15.00	7.50	0.00	
		6	b992	0.00	15.00	7.50	0.00	
		6	b993	0.00	15.00	7.50	0.00	
		6	b994	0.00	15.00	7.50	0.00	
		6	b995	0.00	15.00	7.50	0.00	
		6	b996	0.00	15.00	7.50	0.00	
		6	b997	0.00	15.00	7.50	0.00	
		6	b998	0.00	15.00	7.50	0.00	
		6	b999	0.00	15.00	7.50	0.00	
								35.01
6	7	6	b1	1.23	15.00	7.50	9.22	
75.00	90.00	6	b1000	0.00	15.00	7.50	0.00	
		6	b2	0.00	15.00	7.50	0.00	
		6	b3	0.00	15.00	7.50	0.00	
		6	b4	0.00	15.00	7.50	0.00	
		6	b5	0.00	15.00	7.50	0.00	
		6	b6	0.00	15.00	7.50	0.00	
		6	b7	0.00	15.00	7.50	0.00	
		6	b8	0.00	15.00	7.50	0.00	
		6	b9	0.00	15.00	7.50	0.00	
		6	b10	0.00	15.00	7.50	0.00	
		6	b11	0.00	15.00	7.50	0.00	
		6	b12	0.00	15.00	7.50	0.00	
		6	b13	0.00	15.00	7.50	0.00	
		6	b14	0.00	15.00	7.50	0.00	
		6	b15	0.00	15.00	7.50	0.00	
		6	b16	0.00	15.00	7.50	0.00	
		6	b17	0.00	15.00	7.50	0.00	
		6	b18	0.00	15.00	7.50	0.00	
		6	b19	0.00	15.00	7.50	0.00	
		6	b20	0.00	15.00	7.50	0.00	
		6	b21	0.00	15.00	7.50	0.00	
		6	b22	0.00	15.00	7.50	0.00	
		6	b23	0.00	15.00	7.50	0.00	
		6	b24	0.00	15.00	7.50	0.00	
		6	b25	0.00	15.00	7.50	0.00	
		6	b26	0.00	15.00	7.50	0.00	
		6	b27	0.00	15.00	7.50	0.00	
		6	b28	0.00	15.00	7.50	0.00	
							9.22	376.42

VEGETALE

DALLA SEZ. DA PROG.	ALLA SEZ. A PROG.	SEZIONE	FIGURA	LUNGHEZZA	DISTANZA SEZIONI ml	DISTANZA DI CALCOLO ml	AREA PARZIALE mq	AREA TOTALE mq
						A RIPORTARE mq	9.22	376.42
		6	b29	0.00	15.00	7.50	0.00	
		6	b30	0.00	15.00	7.50	0.00	
		6	b31	0.00	15.00	7.50	0.00	
		6	b32	0.00	15.00	7.50	0.00	
		6	b33	0.00	15.00	7.50	0.00	
		6	b34	0.00	15.00	7.50	0.00	
		6	b35	0.00	15.00	7.50	0.00	
		6	b36	0.00	15.00	7.50	0.00	
		6	b37	0.00	15.00	7.50	0.00	
		6	b38	0.00	15.00	7.50	0.00	
		6	b39	0.00	15.00	7.50	0.00	
		6	b40	0.00	15.00	7.50	0.00	
		6	b41	0.00	15.00	7.50	0.00	
		6	b42	0.00	15.00	7.50	0.00	
		6	b43	0.00	15.00	7.50	0.00	
		6	b44	0.00	15.00	7.50	0.00	
		6	b45	0.00	15.00	7.50	0.00	
		6	b46	0.00	15.00	7.50	0.00	
		6	b47	0.00	15.00	7.50	0.00	
		6	b48	0.00	15.00	7.50	0.00	
		6	b49	0.00	15.00	7.50	0.00	
		6	b50	0.00	15.00	7.50	0.00	
		6	b51	0.00	15.00	7.50	0.00	
		6	b52	0.00	15.00	7.50	0.00	
		6	b53	0.00	15.00	7.50	0.00	
		6	b54	0.00	15.00	7.50	0.00	
		6	b55	0.00	15.00	7.50	0.00	
		6	b56	0.00	15.00	7.50	0.00	
		6	b57	0.00	15.00	7.50	0.00	
		6	b58	0.00	15.00	7.50	0.00	
		6	b59	0.00	15.00	7.50	0.00	
		6	b60	0.00	15.00	7.50	0.00	
		6	b61	0.00	15.00	7.50	0.00	
		6	b62	0.00	15.00	7.50	0.00	
		6	b63	0.00	15.00	7.50	0.00	
		6	b64	0.00	15.00	7.50	0.00	
		6	b65	0.00	15.00	7.50	0.00	
		6	b66	0.00	15.00	7.50	0.00	
		6	b67	0.00	15.00	7.50	0.00	
		6	b68	0.00	15.00	7.50	0.00	
		6	b69	0.00	15.00	7.50	0.00	
		6	b70	0.00	15.00	7.50	0.00	
		6	b71	0.00	15.00	7.50	0.00	
		6	b72	0.00	15.00	7.50	0.00	
		6	b73	0.00	15.00	7.50	0.00	
		6	b74	0.00	15.00	7.50	0.00	
		6	b75	0.00	15.00	7.50	0.00	
		6	b76	0.00	15.00	7.50	0.00	
		6	b77	0.00	15.00	7.50	0.00	
		6	b78	0.00	15.00	7.50	0.00	
		6	b79	0.00	15.00	7.50	0.00	
		6	b80	0.00	15.00	7.50	0.00	
		6	b81	0.00	15.00	7.50	0.00	
		6	b82	0.00	15.00	7.50	0.00	
		6	b83	0.00	15.00	7.50	0.00	
		6	b84	0.00	15.00	7.50	0.00	
		6	b85	0.00	15.00	7.50	0.00	
		6	b86	0.00	15.00	7.50	0.00	
		6	b87	0.00	15.00	7.50	0.00	
		6	b88	0.00	15.00	7.50	0.00	
		6	b89	0.00	15.00	7.50	0.00	
		6	b90	0.00	15.00	7.50	0.00	
		6	b91	0.00	15.00	7.50	0.00	
		6	b92	0.00	15.00	7.50	0.00	
		6	b93	0.00	15.00	7.50	0.00	
		6	b94	0.00	15.00	7.50	0.00	
		6	b95	0.00	15.00	7.50	0.00	
		6	b96	0.00	15.00	7.50	0.00	
		6	b97	0.00	15.00	7.50	0.00	
		6	b98	0.00	15.00	7.50	0.00	
		6	b99	0.00	15.00	7.50	0.00	
		6	b100	0.00	15.00	7.50	0.00	
		6	b101	0.00	15.00	7.50	0.00	
		6	b102	0.00	15.00	7.50	0.00	
		6	b103	0.00	15.00	7.50	0.00	
		6	b104	0.00	15.00	7.50	0.00	
		6	b105	0.00	15.00	7.50	0.00	
		6	b106	0.00	15.00	7.50	0.00	
		6	b107	0.00	15.00	7.50	0.00	
		6	b108	0.00	15.00	7.50	0.00	
		6	b109	0.00	15.00	7.50	0.00	
		6	b110	0.00	15.00	7.50	0.00	
		6	b111	0.00	15.00	7.50	0.00	
		6	b112	0.00	15.00	7.50	0.00	
		6	b113	0.00	15.00	7.50	0.00	
		6	b114	0.00	15.00	7.50	0.00	
		6	b115	0.00	15.00	7.50	0.00	
		6	b116	0.00	15.00	7.50	0.00	
		6	b117	0.00	15.00	7.50	0.00	
		6	b118	0.00	15.00	7.50	0.00	
		6	b119	0.00	15.00	7.50	0.00	
		6	b120	0.00	15.00	7.50	0.00	
		6	b121	0.00	15.00	7.50	0.00	
		6	b122	0.00	15.00	7.50	0.00	
		6	b123	0.00	15.00	7.50	0.00	
		6	b124	0.00	15.00	7.50	0.00	
		6	b125	0.00	15.00	7.50	0.00	
		6	b126	0.00	15.00	7.50	0.00	
		6	b127	0.00	15.00	7.50	0.00	
		6	b128	0.00	15.00	7.50	0.00	
		6	b129	0.00	15.00	7.50	0.00	
		6	b130	0.00	15.00	7.50	0.00	
		6	b131	0.00	15.00	7.50	0.00	
		6	b132	0.00	15.00	7.50	0.00	
		6	b133	0.00	15.00	7.50	0.00	
							9.22	376.42

VEGETALE

DALLA SEZ. DA PROG.	ALLA SEZ. A PROG.	SEZIONE	FIGURA	LUNGHEZZA	DISTANZA SEZIONI ml	DISTANZA DI CALCOLO ml	AREA PARZIALE mq	AREA TOTALE mq
						A RIPORTARE mq	9.22	376.42
		6	b134	0.00	15.00	7.50	0.00	
		6	b135	0.00	15.00	7.50	0.00	
		6	b136	0.00	15.00	7.50	0.00	
		6	b137	0.00	15.00	7.50	0.00	
		6	b138	0.00	15.00	7.50	0.00	
		6	b139	0.00	15.00	7.50	0.00	
		6	b140	0.00	15.00	7.50	0.00	
		6	b141	0.00	15.00	7.50	0.00	
		6	b142	0.00	15.00	7.50	0.00	
		6	b143	0.00	15.00	7.50	0.00	
		6	b144	0.00	15.00	7.50	0.00	
		6	b145	0.00	15.00	7.50	0.00	
		6	b146	0.00	15.00	7.50	0.00	
		6	b147	0.00	15.00	7.50	0.00	
		6	b148	0.00	15.00	7.50	0.00	
		6	b149	0.00	15.00	7.50	0.00	
		6	b150	0.00	15.00	7.50	0.00	
		6	b151	0.00	15.00	7.50	0.00	
		6	b152	0.00	15.00	7.50	0.00	
		6	b153	0.00	15.00	7.50	0.00	
		6	b154	0.00	15.00	7.50	0.00	
		6	b155	0.00	15.00	7.50	0.00	
		6	b156	0.00	15.00	7.50	0.00	
		6	b157	0.00	15.00	7.50	0.00	
		6	b158	0.00	15.00	7.50	0.00	
		6	b159	0.00	15.00	7.50	0.00	
		6	b160	0.00	15.00	7.50	0.00	
		6	b161	0.00	15.00	7.50	0.00	
		6	b162	0.00	15.00	7.50	0.00	
		6	b163	0.00	15.00	7.50	0.00	
		6	b164	0.00	15.00	7.50	0.00	
		6	b165	0.00	15.00	7.50	0.00	
		6	b166	0.00	15.00	7.50	0.00	
		6	b167	0.00	15.00	7.50	0.00	
		6	b168	0.00	15.00	7.50	0.00	
		6	b169	0.00	15.00	7.50	0.00	
		6	b170	0.00	15.00	7.50	0.00	
		6	b171	0.00	15.00	7.50	0.00	
		6	b172	0.00	15.00	7.50	0.00	
		6	b173	0.00	15.00	7.50	0.00	
		6	b174	0.00	15.00	7.50	0.00	
		6	b175	0.00	15.00	7.50	0.00	
		6	b176	0.00	15.00	7.50	0.00	
		6	b177	0.00	15.00	7.50	0.00	
		6	b178	0.00	15.00	7.50	0.00	
		6	b179	0.00	15.00	7.50	0.00	
		6	b180	0.00	15.00	7.50	0.00	
		6	b181	0.00	15.00	7.50	0.00	
		6	b182	0.00	15.00	7.50	0.00	
		6	b183	0.00	15.00	7.50	0.00	
		6	b184	0.00	15.00	7.50	0.00	
		6	b185	0.00	15.00	7.50	0.00	
		6	b186	0.00	15.00	7.50	0.00	
		6	b187	0.00	15.00	7.50	0.00	
		6	b188	0.00	15.00	7.50	0.00	
		6	b189	0.00	15.00	7.50	0.00	
		6	b190	0.00	15.00	7.50	0.00	
		6	b191	0.00	15.00	7.50	0.00	
		6	b192	0.00	15.00	7.50	0.00	
		6	b193	0.00	15.00	7.50	0.00	
		6	b194	0.00	15.00	7.50	0.00	
		6	b195	0.00	15.00	7.50	0.00	
		6	b196	0.00	15.00	7.50	0.00	
		6	b197	0.00	15.00	7.50	0.00	
		6	b198	0.00	15.00	7.50	0.00	
		6	b199	0.00	15.00	7.50	0.00	
		6	b200	0.00	15.00	7.50	0.00	
		6	b201	0.00	15.00	7.50	0.00	
		6	b202	0.00	15.00	7.50	0.00	
		6	b203	0.00	15.00	7.50	0.00	
		6	b204	0.00	15.00	7.50	0.00	
		6	b205	0.00	15.00	7.50	0.00	
		6	b206	0.00	15.00	7.50	0.00	
		6	b207	0.00	15.00	7.50	0.00	
		6	b208	0.00	15.00	7.50	0.00	
		6	b209	0.00	15.00	7.50	0.00	
		6	b210	0.00	15.00	7.50	0.00	
		6	b211	0.00	15.00	7.50	0.00	
		6	b212	0.00	15.00	7.50	0.00	
		6	b213	0.00	15.00	7.50	0.00	
		6	b214	0.00	15.00	7.50	0.00	
		6	b215	0.00	15.00	7.50	0.00	
		6	b216	0.00	15.00	7.50	0.00	
		6	b217	0.00	15.00	7.50	0.00	
		6	b218	0.00	15.00	7.50	0.00	
		6	b219	0.00	15.00	7.50	0.00	
		6	b220	0.00	15.00	7.50	0.00	
		6	b221	0.00	15.00	7.50	0.00	
		6	b222	0.00	15.00	7.50	0.00	
		6	b223	0.00	15.00	7.50	0.00	
		6	b224	0.00	15.00	7.50	0.00	
		6	b225	0.00	15.00	7.50	0.00	
		6	b226	0.00	15.00	7.50	0.00	
		6	b227	0.00	15.00	7.50	0.00	
		6	b228	0.00	15.00	7.50	0.00	
		6	b229	0.00	15.00	7.50	0.00	
		6	b230	0.00	15.00	7.50	0.00	
		6	b231	0.00	15.00	7.50	0.00	
		6	b232	0.00	15.00	7.50	0.00	
		6	b233	0.00	15.00	7.50	0.00	
		6	b234	0.00	15.00	7.50	0.00	
		6	b235	0.00	15.00	7.50	0.00	
		6	b236	0.00	15.00	7.50	0.00	
		6	b237	0.00	15.00	7.50	0.00	
		6	b238	0.00	15.00	7.50	0.00	
							9.22	376.42

VEGETALE

DALLA SEZ. DA PROG.	ALLA SEZ. A PROG.	SEZIONE	FIGURA	LUNGHEZZA	DISTANZA SEZIONI ml	DISTANZA DI CALCOLO ml	AREA PARZIALE mq	AREA TOTALE mq
						A RIPORTARE mq	9.22	376.42
		6	b239	0.00	15.00	7.50	0.00	
		6	b240	0.00	15.00	7.50	0.00	
		6	b241	0.00	15.00	7.50	0.00	
		6	b242	0.00	15.00	7.50	0.00	
		6	b243	0.00	15.00	7.50	0.00	
		6	b244	0.00	15.00	7.50	0.00	
		6	b245	0.00	15.00	7.50	0.00	
		6	b246	0.00	15.00	7.50	0.00	
		6	b247	0.00	15.00	7.50	0.00	
		6	b248	0.00	15.00	7.50	0.00	
		6	b249	0.00	15.00	7.50	0.00	
		6	b250	0.00	15.00	7.50	0.00	
		6	b251	0.00	15.00	7.50	0.00	
		6	b252	0.00	15.00	7.50	0.00	
		6	b253	0.00	15.00	7.50	0.00	
		6	b254	0.00	15.00	7.50	0.00	
		6	b255	0.00	15.00	7.50	0.00	
		6	b256	0.00	15.00	7.50	0.00	
		6	b257	0.00	15.00	7.50	0.00	
		6	b258	0.00	15.00	7.50	0.00	
		6	b259	0.00	15.00	7.50	0.00	
		6	b260	0.00	15.00	7.50	0.00	
		6	b261	0.00	15.00	7.50	0.00	
		6	b262	0.00	15.00	7.50	0.00	
		6	b263	0.00	15.00	7.50	0.00	
		6	b264	0.00	15.00	7.50	0.00	
		6	b265	0.00	15.00	7.50	0.00	
		6	b266	0.00	15.00	7.50	0.00	
		6	b267	0.00	15.00	7.50	0.00	
		6	b268	0.00	15.00	7.50	0.00	
		6	b269	0.00	15.00	7.50	0.00	
		6	b270	0.00	15.00	7.50	0.00	
		6	b271	0.00	15.00	7.50	0.00	
		6	b272	0.00	15.00	7.50	0.00	
		6	b273	0.00	15.00	7.50	0.00	
		6	b274	0.00	15.00	7.50	0.00	
		6	b275	0.00	15.00	7.50	0.00	
		6	b276	0.00	15.00	7.50	0.00	
		6	b277	0.00	15.00	7.50	0.00	
		6	b278	0.00	15.00	7.50	0.00	
		6	b279	0.00	15.00	7.50	0.00	
		6	b280	0.00	15.00	7.50	0.00	
		6	b281	0.00	15.00	7.50	0.00	
		6	b282	0.00	15.00	7.50	0.00	
		6	b283	0.00	15.00	7.50	0.00	
		6	b284	0.00	15.00	7.50	0.00	
		6	b285	0.00	15.00	7.50	0.00	
		6	b286	0.00	15.00	7.50	0.00	
		6	b287	0.00	15.00	7.50	0.00	
		6	b288	0.00	15.00	7.50	0.00	
		6	b289	0.00	15.00	7.50	0.00	
		6	b290	0.00	15.00	7.50	0.00	
		6	b291	0.00	15.00	7.50	0.00	
		6	b292	0.00	15.00	7.50	0.00	
		6	b293	0.00	15.00	7.50	0.00	
		6	b294	0.00	15.00	7.50	0.00	
		6	b295	0.00	15.00	7.50	0.00	
		6	b296	0.00	15.00	7.50	0.00	
		6	b297	0.00	15.00	7.50	0.00	
		6	b298	0.00	15.00	7.50	0.00	
		6	b299	0.00	15.00	7.50	0.00	
		6	b300	0.00	15.00	7.50	0.00	
		6	b301	0.00	15.00	7.50	0.00	
		6	b302	0.00	15.00	7.50	0.00	
		6	b303	0.00	15.00	7.50	0.00	
		6	b304	0.00	15.00	7.50	0.00	
		6	b305	0.00	15.00	7.50	0.00	
		6	b306	0.00	15.00	7.50	0.00	
		6	b307	0.00	15.00	7.50	0.00	
		6	b308	0.00	15.00	7.50	0.00	
		6	b309	0.00	15.00	7.50	0.00	
		6	b310	0.00	15.00	7.50	0.00	
		6	b311	0.00	15.00	7.50	0.00	
		6	b312	0.00	15.00	7.50	0.00	
		6	b313	0.00	15.00	7.50	0.00	
		6	b314	0.00	15.00	7.50	0.00	
		6	b315	0.00	15.00	7.50	0.00	
		6	b316	0.00	15.00	7.50	0.00	
		6	b317	0.00	15.00	7.50	0.00	
		6	b318	0.00	15.00	7.50	0.00	
		6	b319	0.00	15.00	7.50	0.00	
		6	b320	0.00	15.00	7.50	0.00	
		6	b321	0.00	15.00	7.50	0.00	
		6	b322	0.00	15.00	7.50	0.00	
		6	b323	0.00	15.00	7.50	0.00	
		6	b324	0.00	15.00	7.50	0.00	
		6	b325	0.00	15.00	7.50	0.00	
		6	b326	0.00	15.00	7.50	0.00	
		6	b327	0.00	15.00	7.50	0.00	
		6	b328	0.00	15.00	7.50	0.00	
		6	b329	0.00	15.00	7.50	0.00	
		6	b330	0.00	15.00	7.50	0.00	
		6	b331	0.00	15.00	7.50	0.00	
		6	b332	0.00	15.00	7.50	0.00	
		6	b333	0.00	15.00	7.50	0.00	
		6	b334	0.00	15.00	7.50	0.00	
		6	b335	0.00	15.00	7.50	0.00	
		6	b336	0.00	15.00	7.50	0.00	
		6	b337	0.00	15.00	7.50	0.00	
		6	b338	0.00	15.00	7.50	0.00	
		6	b339	0.00	15.00	7.50	0.00	
		6	b340	0.00	15.00	7.50	0.00	
		6	b341	0.00	15.00	7.50	0.00	
		6	b342	0.00	15.00	7.50	0.00	
		6	b343	0.00	15.00	7.50	0.00	
							9.22	376.42

VEGETALE

DALLA SEZ. DA PROG.	ALLA SEZ. A PROG.	SEZIONE	FIGURA	LUNGHEZZA	DISTANZA SEZIONI ml	DISTANZA DI CALCOLO ml	AREA PARZIALE mq	AREA TOTALE mq
						A RIPORTARE mq	9.22	376.42
		6	b344	0.00	15.00	7.50	0.00	
		6	b345	0.00	15.00	7.50	0.00	
		6	b346	0.00	15.00	7.50	0.00	
		6	b347	0.00	15.00	7.50	0.00	
		6	b348	0.00	15.00	7.50	0.00	
		6	b349	0.00	15.00	7.50	0.00	
		6	b350	0.00	15.00	7.50	0.00	
		6	b351	0.00	15.00	7.50	0.00	
		6	b352	0.00	15.00	7.50	0.00	
		6	b353	0.00	15.00	7.50	0.00	
		6	b354	0.00	15.00	7.50	0.00	
		6	b355	0.00	15.00	7.50	0.00	
		6	b356	0.00	15.00	7.50	0.00	
		6	b357	0.00	15.00	7.50	0.00	
		6	b358	0.00	15.00	7.50	0.00	
		6	b359	0.00	15.00	7.50	0.00	
		6	b360	0.00	15.00	7.50	0.00	
		6	b361	0.00	15.00	7.50	0.00	
		6	b362	0.00	15.00	7.50	0.00	
		6	b363	0.00	15.00	7.50	0.00	
		6	b364	0.00	15.00	7.50	0.00	
		6	b365	0.00	15.00	7.50	0.00	
		6	b366	0.00	15.00	7.50	0.00	
		6	b367	0.00	15.00	7.50	0.00	
		6	b368	0.00	15.00	7.50	0.00	
		6	b369	0.00	15.00	7.50	0.00	
		6	b370	0.00	15.00	7.50	0.00	
		6	b371	0.00	15.00	7.50	0.00	
		6	b372	0.00	15.00	7.50	0.00	
		6	b373	0.00	15.00	7.50	0.00	
		6	b374	0.00	15.00	7.50	0.00	
		6	b375	0.00	15.00	7.50	0.00	
		6	b376	0.00	15.00	7.50	0.00	
		6	b377	0.00	15.00	7.50	0.00	
		6	b378	0.00	15.00	7.50	0.00	
		6	b379	0.00	15.00	7.50	0.00	
		6	b380	0.00	15.00	7.50	0.00	
		6	b381	0.00	15.00	7.50	0.00	
		6	b382	0.00	15.00	7.50	0.00	
		6	b383	0.00	15.00	7.50	0.00	
		6	b384	0.00	15.00	7.50	0.00	
		6	b385	0.00	15.00	7.50	0.00	
		6	b386	0.00	15.00	7.50	0.00	
		6	b387	0.00	15.00	7.50	0.00	
		6	b388	0.00	15.00	7.50	0.00	
		6	b389	0.00	15.00	7.50	0.00	
		6	b390	0.00	15.00	7.50	0.00	
		6	b391	0.00	15.00	7.50	0.00	
		6	b392	0.00	15.00	7.50	0.00	
		6	b393	0.00	15.00	7.50	0.00	
		6	b394	0.00	15.00	7.50	0.00	
		6	b395	0.00	15.00	7.50	0.00	
		6	b396	0.00	15.00	7.50	0.00	
		6	b397	0.00	15.00	7.50	0.00	
		6	b398	0.00	15.00	7.50	0.00	
		6	b399	0.00	15.00	7.50	0.00	
		6	b400	0.00	15.00	7.50	0.00	
		6	b401	0.00	15.00	7.50	0.00	
		6	b402	0.00	15.00	7.50	0.00	
		6	b403	0.00	15.00	7.50	0.00	
		6	b404	0.00	15.00	7.50	0.00	
		6	b405	0.00	15.00	7.50	0.00	
		6	b406	0.00	15.00	7.50	0.00	
		6	b407	0.00	15.00	7.50	0.00	
		6	b408	0.00	15.00	7.50	0.00	
		6	b409	0.00	15.00	7.50	0.00	
		6	b410	0.00	15.00	7.50	0.00	
		6	b411	0.00	15.00	7.50	0.00	
		6	b412	0.00	15.00	7.50	0.00	
		6	b413	0.00	15.00	7.50	0.00	
		6	b414	0.00	15.00	7.50	0.00	
		6	b415	0.00	15.00	7.50	0.00	
		6	b416	0.00	15.00	7.50	0.00	
		6	b417	0.00	15.00	7.50	0.00	
		6	b418	0.00	15.00	7.50	0.00	
		6	b419	0.00	15.00	7.50	0.00	
		6	b420	0.00	15.00	7.50	0.00	
		6	b421	0.00	15.00	7.50	0.00	
		6	b422	0.00	15.00	7.50	0.00	
		6	b423	0.00	15.00	7.50	0.00	
		6	b424	0.00	15.00	7.50	0.00	
		6	b425	0.00	15.00	7.50	0.00	
		6	b426	0.00	15.00	7.50	0.00	
		6	b427	0.00	15.00	7.50	0.00	
		6	b428	0.00	15.00	7.50	0.00	
		6	b429	0.00	15.00	7.50	0.00	
		6	b430	0.00	15.00	7.50	0.00	
		6	b431	0.00	15.00	7.50	0.00	
		6	b432	0.00	15.00	7.50	0.00	
		6	b433	0.00	15.00	7.50	0.00	
		6	b434	0.00	15.00	7.50	0.00	
		6	b435	0.00	15.00	7.50	0.00	
		6	b436	0.00	15.00	7.50	0.00	
		6	b437	0.00	15.00	7.50	0.00	
		6	b438	0.00	15.00	7.50	0.00	
		6	b439	0.00	15.00	7.50	0.00	
		6	b440	0.00	15.00	7.50	0.00	
		6	b441	0.00	15.00	7.50	0.00	
		6	b442	0.00	15.00	7.50	0.00	
		6	b443	0.00	15.00	7.50	0.00	
		6	b444	0.00	15.00	7.50	0.00	
		6	b445	0.00	15.00	7.50	0.00	
		6	b446	0.00	15.00	7.50	0.00	
		6	b447	0.00	15.00	7.50	0.00	
		6	b448	0.00	15.00	7.50	0.00	
							9.22	376.42

VEGETALE

DALLA SEZ. DA PROG.	ALLA SEZ. A PROG.	SEZIONE	FIGURA	LUNGHEZZA	DISTANZA SEZIONI ml	DISTANZA DI CALCOLO ml	AREA PARZIALE mq	AREA TOTALE mq
						A RIPORTARE mq	9.22	376.42
		6	b449	0.00	15.00	7.50	0.00	
		6	b450	0.00	15.00	7.50	0.00	
		6	b451	0.00	15.00	7.50	0.00	
		6	b452	0.00	15.00	7.50	0.00	
		6	b453	0.00	15.00	7.50	0.00	
		6	b454	0.00	15.00	7.50	0.00	
		6	b455	0.00	15.00	7.50	0.00	
		6	b456	0.00	15.00	7.50	0.00	
		6	b457	0.00	15.00	7.50	0.00	
		6	b458	0.00	15.00	7.50	0.00	
		6	b459	0.00	15.00	7.50	0.00	
		6	b460	0.00	15.00	7.50	0.00	
		6	b461	0.00	15.00	7.50	0.00	
		6	b462	0.00	15.00	7.50	0.00	
		6	b463	0.00	15.00	7.50	0.00	
		6	b464	0.00	15.00	7.50	0.00	
		6	b465	0.00	15.00	7.50	0.00	
		6	b466	0.00	15.00	7.50	0.00	
		6	b467	0.00	15.00	7.50	0.00	
		6	b468	0.00	15.00	7.50	0.00	
		6	b469	0.00	15.00	7.50	0.00	
		6	b470	0.00	15.00	7.50	0.00	
		6	b471	0.00	15.00	7.50	0.00	
		6	b472	0.00	15.00	7.50	0.00	
		6	b473	0.00	15.00	7.50	0.00	
		6	b474	0.00	15.00	7.50	0.00	
		6	b475	0.00	15.00	7.50	0.00	
		6	b476	0.00	15.00	7.50	0.00	
		6	b477	0.00	15.00	7.50	0.00	
		6	b478	0.00	15.00	7.50	0.00	
		6	b479	0.00	15.00	7.50	0.00	
		6	b480	0.00	15.00	7.50	0.00	
		6	b481	0.00	15.00	7.50	0.00	
		6	b482	0.00	15.00	7.50	0.00	
		6	b483	0.00	15.00	7.50	0.00	
		6	b484	0.00	15.00	7.50	0.00	
		6	b485	0.00	15.00	7.50	0.00	
		6	b486	0.00	15.00	7.50	0.00	
		6	b487	0.00	15.00	7.50	0.00	
		6	b488	0.00	15.00	7.50	0.00	
		6	b489	0.00	15.00	7.50	0.00	
		6	b490	0.00	15.00	7.50	0.00	
		6	b491	0.00	15.00	7.50	0.00	
		6	b492	0.00	15.00	7.50	0.00	
		6	b493	0.00	15.00	7.50	0.00	
		6	b494	0.00	15.00	7.50	0.00	
		6	b495	0.00	15.00	7.50	0.00	
		6	b496	0.00	15.00	7.50	0.00	
		6	b497	0.00	15.00	7.50	0.00	
		6	b498	0.00	15.00	7.50	0.00	
		6	b499	0.00	15.00	7.50	0.00	
		6	b500	0.00	15.00	7.50	0.00	
		6	b501	0.00	15.00	7.50	0.00	
		6	b502	0.00	15.00	7.50	0.00	
		6	b503	0.00	15.00	7.50	0.00	
		6	b504	0.00	15.00	7.50	0.00	
		6	b505	0.00	15.00	7.50	0.00	
		6	b506	0.00	15.00	7.50	0.00	
		6	b507	0.00	15.00	7.50	0.00	
		6	b508	0.00	15.00	7.50	0.00	
		6	b509	0.00	15.00	7.50	0.00	
		6	b510	0.00	15.00	7.50	0.00	
		6	b511	0.00	15.00	7.50	0.00	
		6	b512	0.00	15.00	7.50	0.00	
		6	b513	0.00	15.00	7.50	0.00	
		6	b514	0.00	15.00	7.50	0.00	
		6	b515	0.00	15.00	7.50	0.00	
		6	b516	0.00	15.00	7.50	0.00	
		6	b517	0.00	15.00	7.50	0.00	
		6	b518	0.00	15.00	7.50	0.00	
		6	b519	0.00	15.00	7.50	0.00	
		6	b520	0.00	15.00	7.50	0.00	
		6	b521	0.00	15.00	7.50	0.00	
		6	b522	0.00	15.00	7.50	0.00	
		6	b523	0.00	15.00	7.50	0.00	
		6	b524	0.00	15.00	7.50	0.00	
		6	b525	0.00	15.00	7.50	0.00	
		6	b526	0.00	15.00	7.50	0.00	
		6	b527	0.00	15.00	7.50	0.00	
		6	b528	0.00	15.00	7.50	0.00	
		6	b529	0.00	15.00	7.50	0.00	
		6	b530	0.00	15.00	7.50	0.00	
		6	b531	0.00	15.00	7.50	0.00	
		6	b532	0.00	15.00	7.50	0.00	
		6	b533	0.00	15.00	7.50	0.00	
		6	b534	0.00	15.00	7.50	0.00	
		6	b535	0.00	15.00	7.50	0.00	
		6	b536	0.00	15.00	7.50	0.00	
		6	b537	0.00	15.00	7.50	0.00	
		6	b538	0.00	15.00	7.50	0.00	
		6	b539	0.00	15.00	7.50	0.00	
		6	b540	0.00	15.00	7.50	0.00	
		6	b541	0.00	15.00	7.50	0.00	
		6	b542	0.00	15.00	7.50	0.00	
		6	b543	0.00	15.00	7.50	0.00	
		6	b544	0.00	15.00	7.50	0.00	
		6	b545	0.00	15.00	7.50	0.00	
		6	b546	0.00	15.00	7.50	0.00	
		6	b547	0.00	15.00	7.50	0.00	
		6	b548	0.00	15.00	7.50	0.00	
		6	b549	0.00	15.00	7.50	0.00	
		6	b550	0.00	15.00	7.50	0.00	
		6	b551	0.00	15.00	7.50	0.00	
		6	b552	0.00	15.00	7.50	0.00	
		6	b553	0.00	15.00	7.50	0.00	
							9.22	376.42

VEGETALE

DALLA SEZ. DA PROG.	ALLA SEZ. A PROG.	SEZIONE	FIGURA	LUNGHEZZA	DISTANZA SEZIONI ml	DISTANZA DI CALCOLO ml	AREA PARZIALE mq	AREA TOTALE mq
						A RIPORTARE mq	9.22	376.42
		6	b554	0.00	15.00	7.50	0.00	
		6	b555	0.00	15.00	7.50	0.00	
		6	b556	0.00	15.00	7.50	0.00	
		6	b557	0.00	15.00	7.50	0.00	
		6	b558	0.00	15.00	7.50	0.00	
		6	b559	0.00	15.00	7.50	0.00	
		6	b560	0.00	15.00	7.50	0.00	
		6	b561	0.00	15.00	7.50	0.00	
		6	b562	0.00	15.00	7.50	0.00	
		6	b563	0.00	15.00	7.50	0.00	
		6	b564	0.00	15.00	7.50	0.00	
		6	b565	0.00	15.00	7.50	0.00	
		6	b566	0.00	15.00	7.50	0.00	
		6	b567	0.00	15.00	7.50	0.00	
		6	b568	0.00	15.00	7.50	0.00	
		6	b569	0.00	15.00	7.50	0.00	
		6	b570	0.00	15.00	7.50	0.00	
		6	b571	0.00	15.00	7.50	0.00	
		6	b572	0.00	15.00	7.50	0.00	
		6	b573	0.00	15.00	7.50	0.00	
		6	b574	0.00	15.00	7.50	0.00	
		6	b575	0.00	15.00	7.50	0.00	
		6	b576	0.00	15.00	7.50	0.00	
		6	b577	0.00	15.00	7.50	0.00	
		6	b578	0.00	15.00	7.50	0.00	
		6	b579	0.00	15.00	7.50	0.00	
		6	b580	0.00	15.00	7.50	0.00	
		6	b581	0.00	15.00	7.50	0.00	
		6	b582	0.00	15.00	7.50	0.00	
		6	b583	0.00	15.00	7.50	0.00	
		6	b584	0.00	15.00	7.50	0.00	
		6	b585	0.00	15.00	7.50	0.00	
		6	b586	0.00	15.00	7.50	0.00	
		6	b587	0.00	15.00	7.50	0.00	
		6	b588	0.00	15.00	7.50	0.00	
		6	b589	0.00	15.00	7.50	0.00	
		6	b590	0.00	15.00	7.50	0.00	
		6	b591	0.00	15.00	7.50	0.00	
		6	b592	0.00	15.00	7.50	0.00	
		6	b593	0.00	15.00	7.50	0.00	
		6	b594	0.00	15.00	7.50	0.00	
		6	b595	0.00	15.00	7.50	0.00	
		6	b596	0.00	15.00	7.50	0.00	
		6	b597	0.00	15.00	7.50	0.00	
		6	b598	0.00	15.00	7.50	0.00	
		6	b599	0.00	15.00	7.50	0.00	
		6	b600	0.00	15.00	7.50	0.00	
		6	b601	0.00	15.00	7.50	0.00	
		6	b602	0.00	15.00	7.50	0.00	
		6	b603	0.00	15.00	7.50	0.00	
		6	b604	0.00	15.00	7.50	0.00	
		6	b605	0.00	15.00	7.50	0.00	
		6	b606	0.00	15.00	7.50	0.00	
		6	b607	0.00	15.00	7.50	0.00	
		6	b608	0.00	15.00	7.50	0.00	
		6	b609	0.00	15.00	7.50	0.00	
		6	b610	0.00	15.00	7.50	0.00	
		6	b611	0.00	15.00	7.50	0.00	
		6	b612	0.00	15.00	7.50	0.00	
		6	b613	0.00	15.00	7.50	0.00	
		6	b614	0.00	15.00	7.50	0.00	
		6	b615	0.00	15.00	7.50	0.00	
		6	b616	0.00	15.00	7.50	0.00	
		6	b617	0.00	15.00	7.50	0.00	
		6	b618	0.00	15.00	7.50	0.00	
		6	b619	0.00	15.00	7.50	0.00	
		6	b620	0.00	15.00	7.50	0.00	
		6	b621	0.00	15.00	7.50	0.00	
		6	b622	0.00	15.00	7.50	0.00	
		6	b623	0.00	15.00	7.50	0.00	
		6	b624	0.00	15.00	7.50	0.00	
		6	b625	0.00	15.00	7.50	0.00	
		6	b626	0.00	15.00	7.50	0.00	
		6	b627	0.00	15.00	7.50	0.00	
		6	b628	0.00	15.00	7.50	0.00	
		6	b629	0.00	15.00	7.50	0.00	
		6	b630	0.00	15.00	7.50	0.00	
		6	b631	0.00	15.00	7.50	0.00	
		6	b632	0.00	15.00	7.50	0.00	
		6	b633	0.00	15.00	7.50	0.00	
		6	b634	0.00	15.00	7.50	0.00	
		6	b635	0.00	15.00	7.50	0.00	
		6	b636	0.00	15.00	7.50	0.00	
		6	b637	0.00	15.00	7.50	0.00	
		6	b638	0.00	15.00	7.50	0.00	
		6	b639	0.00	15.00	7.50	0.00	
		6	b640	0.00	15.00	7.50	0.00	
		6	b641	0.00	15.00	7.50	0.00	
		6	b642	0.00	15.00	7.50	0.00	
		6	b643	0.00	15.00	7.50	0.00	
		6	b644	0.00	15.00	7.50	0.00	
		6	b645	0.00	15.00	7.50	0.00	
		6	b646	0.00	15.00	7.50	0.00	
		6	b647	0.00	15.00	7.50	0.00	
		6	b648	0.00	15.00	7.50	0.00	
		6	b649	0.00	15.00	7.50	0.00	
		6	b650	0.00	15.00	7.50	0.00	
		6	b651	0.00	15.00	7.50	0.00	
		6	b652	0.00	15.00	7.50	0.00	
		6	b653	0.00	15.00	7.50	0.00	
		6	b654	0.00	15.00	7.50	0.00	
		6	b655	0.00	15.00	7.50	0.00	
		6	b656	0.00	15.00	7.50	0.00	
		6	b657	0.00	15.00	7.50	0.00	
		6	b658	0.00	15.00	7.50	0.00	
							9.22	376.42

VEGETALE

DALLA SEZ. DA PROG.	ALLA SEZ. A PROG.	SEZIONE	FIGURA	LUNGHEZZA	DISTANZA SEZIONI ml	DISTANZA DI CALCOLO ml	AREA PARZIALE mq	AREA TOTALE mq
						A RIPORTARE mq	9.22	376.42
		6	b659	0.00	15.00	7.50	0.00	
		6	b660	0.00	15.00	7.50	0.00	
		6	b661	0.00	15.00	7.50	0.00	
		6	b662	0.00	15.00	7.50	0.00	
		6	b663	0.00	15.00	7.50	0.00	
		6	b664	0.00	15.00	7.50	0.00	
		6	b665	0.00	15.00	7.50	0.00	
		6	b666	0.00	15.00	7.50	0.00	
		6	b667	0.00	15.00	7.50	0.00	
		6	b668	0.00	15.00	7.50	0.00	
		6	b669	0.00	15.00	7.50	0.00	
		6	b670	0.00	15.00	7.50	0.00	
		6	b671	0.00	15.00	7.50	0.00	
		6	b672	0.00	15.00	7.50	0.00	
		6	b673	0.00	15.00	7.50	0.00	
		6	b674	0.00	15.00	7.50	0.00	
		6	b675	0.00	15.00	7.50	0.00	
		6	b676	0.00	15.00	7.50	0.00	
		6	b677	0.00	15.00	7.50	0.00	
		6	b678	0.00	15.00	7.50	0.00	
		6	b679	0.00	15.00	7.50	0.00	
		6	b680	0.00	15.00	7.50	0.00	
		6	b681	0.00	15.00	7.50	0.00	
		6	b682	0.00	15.00	7.50	0.00	
		6	b683	0.00	15.00	7.50	0.00	
		6	b684	0.00	15.00	7.50	0.00	
		6	b685	0.00	15.00	7.50	0.00	
		6	b686	0.00	15.00	7.50	0.00	
		6	b687	0.00	15.00	7.50	0.00	
		6	b688	0.00	15.00	7.50	0.00	
		6	b689	0.00	15.00	7.50	0.00	
		6	b690	0.00	15.00	7.50	0.00	
		6	b691	0.00	15.00	7.50	0.00	
		6	b692	0.00	15.00	7.50	0.00	
		6	b693	0.00	15.00	7.50	0.00	
		6	b694	0.00	15.00	7.50	0.00	
		6	b695	0.00	15.00	7.50	0.00	
		6	b696	0.00	15.00	7.50	0.00	
		6	b697	0.00	15.00	7.50	0.00	
		6	b698	0.00	15.00	7.50	0.00	
		6	b699	0.00	15.00	7.50	0.00	
		6	b700	0.00	15.00	7.50	0.00	
		6	b701	0.00	15.00	7.50	0.00	
		6	b702	0.00	15.00	7.50	0.00	
		6	b703	0.00	15.00	7.50	0.00	
		6	b704	0.00	15.00	7.50	0.00	
		6	b705	0.00	15.00	7.50	0.00	
		6	b706	0.00	15.00	7.50	0.00	
		6	b707	0.00	15.00	7.50	0.00	
		6	b708	0.00	15.00	7.50	0.00	
		6	b709	0.00	15.00	7.50	0.00	
		6	b710	0.00	15.00	7.50	0.00	
		6	b711	0.00	15.00	7.50	0.00	
		6	b712	0.00	15.00	7.50	0.00	
		6	b713	0.00	15.00	7.50	0.00	
		6	b714	0.00	15.00	7.50	0.00	
		6	b715	0.00	15.00	7.50	0.00	
		6	b716	0.00	15.00	7.50	0.00	
		6	b717	0.00	15.00	7.50	0.00	
		6	b718	0.00	15.00	7.50	0.00	
		6	b719	0.00	15.00	7.50	0.00	
		6	b720	0.00	15.00	7.50	0.00	
		6	b721	0.00	15.00	7.50	0.00	
		6	b722	0.00	15.00	7.50	0.00	
		6	b723	0.00	15.00	7.50	0.00	
		6	b724	0.00	15.00	7.50	0.00	
		6	b725	0.00	15.00	7.50	0.00	
		6	b726	0.00	15.00	7.50	0.00	
		6	b727	0.00	15.00	7.50	0.00	
		6	b728	0.00	15.00	7.50	0.00	
		6	b729	0.00	15.00	7.50	0.00	
		6	b730	0.00	15.00	7.50	0.00	
		6	b731	0.00	15.00	7.50	0.00	
		6	b732	0.00	15.00	7.50	0.00	
		6	b733	0.00	15.00	7.50	0.00	
		6	b734	0.00	15.00	7.50	0.00	
		6	b735	0.00	15.00	7.50	0.00	
		6	b736	0.00	15.00	7.50	0.00	
		6	b737	0.00	15.00	7.50	0.00	
		6	b738	0.00	15.00	7.50	0.00	
		6	b739	0.00	15.00	7.50	0.00	
		6	b740	0.00	15.00	7.50	0.00	
		6	b741	0.00	15.00	7.50	0.00	
		6	b742	0.00	15.00	7.50	0.00	
		6	b743	0.00	15.00	7.50	0.00	
		6	b744	0.00	15.00	7.50	0.00	
		6	b745	0.00	15.00	7.50	0.00	
		6	b746	0.00	15.00	7.50	0.00	
		6	b747	0.00	15.00	7.50	0.00	
		6	b748	0.00	15.00	7.50	0.00	
		6	b749	0.00	15.00	7.50	0.00	
		6	b750	0.00	15.00	7.50	0.00	
		6	b751	0.00	15.00	7.50	0.00	
		6	b752	0.00	15.00	7.50	0.00	
		6	b753	0.00	15.00	7.50	0.00	
		6	b754	0.00	15.00	7.50	0.00	
		6	b755	0.00	15.00	7.50	0.00	
		6	b756	0.00	15.00	7.50	0.00	
		6	b757	0.00	15.00	7.50	0.00	
		6	b758	0.00	15.00	7.50	0.00	
		6	b759	0.00	15.00	7.50	0.00	
		6	b760	0.00	15.00	7.50	0.00	
		6	b761	0.00	15.00	7.50	0.00	
		6	b762	0.00	15.00	7.50	0.00	
		6	b763	0.00	15.00	7.50	0.00	
							9.22	376.42

VEGETALE

DALLA SEZ. DA PROG.	ALLA SEZ. A PROG.	SEZIONE	FIGURA	LUNGHEZZA	DISTANZA SEZIONI ml	DISTANZA DI CALCOLO ml	AREA PARZIALE mq	AREA TOTALE mq
						A RIPORTARE mq	9.22	376.42
		6	b764	0.00	15.00	7.50	0.00	
		6	b765	0.00	15.00	7.50	0.00	
		6	b766	0.00	15.00	7.50	0.00	
		6	b767	0.00	15.00	7.50	0.00	
		6	b768	0.00	15.00	7.50	0.00	
		6	b769	0.00	15.00	7.50	0.00	
		6	b770	0.00	15.00	7.50	0.00	
		6	b771	0.00	15.00	7.50	0.00	
		6	b772	0.00	15.00	7.50	0.00	
		6	b773	0.00	15.00	7.50	0.00	
		6	b774	0.00	15.00	7.50	0.00	
		6	b775	0.00	15.00	7.50	0.00	
		6	b776	0.00	15.00	7.50	0.00	
		6	b777	0.00	15.00	7.50	0.00	
		6	b778	0.00	15.00	7.50	0.00	
		6	b779	0.00	15.00	7.50	0.00	
		6	b780	0.00	15.00	7.50	0.00	
		6	b781	0.00	15.00	7.50	0.00	
		6	b782	0.00	15.00	7.50	0.00	
		6	b783	0.00	15.00	7.50	0.00	
		6	b784	0.00	15.00	7.50	0.00	
		6	b785	0.00	15.00	7.50	0.00	
		6	b786	0.00	15.00	7.50	0.00	
		6	b787	0.00	15.00	7.50	0.00	
		6	b788	0.00	15.00	7.50	0.00	
		6	b789	0.00	15.00	7.50	0.00	
		6	b790	0.00	15.00	7.50	0.00	
		6	b791	0.00	15.00	7.50	0.00	
		6	b792	0.00	15.00	7.50	0.00	
		6	b793	0.00	15.00	7.50	0.00	
		6	b794	0.00	15.00	7.50	0.00	
		6	b795	0.00	15.00	7.50	0.00	
		6	b796	0.00	15.00	7.50	0.00	
		6	b797	0.00	15.00	7.50	0.00	
		6	b798	0.00	15.00	7.50	0.00	
		6	b799	0.00	15.00	7.50	0.00	
		6	b800	0.00	15.00	7.50	0.00	
		6	b801	0.00	15.00	7.50	0.00	
		6	b802	0.00	15.00	7.50	0.00	
		6	b803	0.00	15.00	7.50	0.00	
		6	b804	0.00	15.00	7.50	0.00	
		6	b805	0.00	15.00	7.50	0.00	
		6	b806	0.00	15.00	7.50	0.00	
		6	b807	0.00	15.00	7.50	0.00	
		6	b808	0.00	15.00	7.50	0.00	
		6	b809	0.00	15.00	7.50	0.00	
		6	b810	0.00	15.00	7.50	0.00	
		6	b811	0.00	15.00	7.50	0.00	
		6	b812	0.00	15.00	7.50	0.00	
		6	b813	0.00	15.00	7.50	0.00	
		6	b814	0.00	15.00	7.50	0.00	
		6	b815	0.00	15.00	7.50	0.00	
		6	b816	0.00	15.00	7.50	0.00	
		6	b817	0.00	15.00	7.50	0.00	
		6	b818	0.00	15.00	7.50	0.00	
		6	b819	0.00	15.00	7.50	0.00	
		6	b820	0.00	15.00	7.50	0.00	
		6	b821	0.00	15.00	7.50	0.00	
		6	b822	0.00	15.00	7.50	0.00	
		6	b823	0.00	15.00	7.50	0.00	
		6	b824	0.00	15.00	7.50	0.00	
		6	b825	0.00	15.00	7.50	0.00	
		6	b826	0.00	15.00	7.50	0.00	
		6	b827	0.00	15.00	7.50	0.00	
		6	b828	0.00	15.00	7.50	0.00	
		6	b829	0.00	15.00	7.50	0.00	
		6	b830	0.00	15.00	7.50	0.00	
		6	b831	0.00	15.00	7.50	0.00	
		6	b832	0.00	15.00	7.50	0.00	
		6	b833	0.00	15.00	7.50	0.00	
		6	b834	0.00	15.00	7.50	0.00	
		6	b835	0.00	15.00	7.50	0.00	
		6	b836	0.00	15.00	7.50	0.00	
		6	b837	0.00	15.00	7.50	0.00	
		6	b838	0.00	15.00	7.50	0.00	
		6	b839	0.00	15.00	7.50	0.00	
		6	b840	0.00	15.00	7.50	0.00	
		6	b841	0.00	15.00	7.50	0.00	
		6	b842	0.00	15.00	7.50	0.00	
		6	b843	0.00	15.00	7.50	0.00	
		6	b844	0.00	15.00	7.50	0.00	
		6	b845	0.00	15.00	7.50	0.00	
		6	b846	0.00	15.00	7.50	0.00	
		6	b847	0.00	15.00	7.50	0.00	
		6	b848	0.00	15.00	7.50	0.00	
		6	b849	0.00	15.00	7.50	0.00	
		6	b850	0.00	15.00	7.50	0.00	
		6	b851	0.00	15.00	7.50	0.00	
		6	b852	0.00	15.00	7.50	0.00	
		6	b853	0.00	15.00	7.50	0.00	
		6	b854	0.00	15.00	7.50	0.00	
		6	b855	0.00	15.00	7.50	0.00	
		6	b856	0.00	15.00	7.50	0.00	
		6	b857	0.00	15.00	7.50	0.00	
		6	b858	0.00	15.00	7.50	0.00	
		6	b859	0.00	15.00	7.50	0.00	
		6	b860	0.00	15.00	7.50	0.00	
		6	b861	0.00	15.00	7.50	0.00	
		6	b862	0.00	15.00	7.50	0.00	
		6	b863	0.00	15.00	7.50	0.00	
		6	b864	0.00	15.00	7.50	0.00	
		6	b865	0.00	15.00	7.50	0.00	
		6	b866	0.00	15.00	7.50	0.00	
		6	b867	0.00	15.00	7.50	0.00	
		6	b868	0.00	15.00	7.50	0.00	
							9.22	376.42

VEGETALE

DALLA SEZ. DA PROG.	ALLA SEZ. A PROG.	SEZIONE	FIGURA	LUNGHEZZA	DISTANZA SEZIONI ml	DISTANZA DI CALCOLO ml	AREA PARZIALE mq	AREA TOTALE mq
						A RIPORTARE mq	9.22	376.42
		6	b869	0.00	15.00	7.50	0.00	
		6	b870	0.00	15.00	7.50	0.00	
		6	b871	0.00	15.00	7.50	0.00	
		6	b872	0.00	15.00	7.50	0.00	
		6	b873	0.00	15.00	7.50	0.00	
		6	b874	0.00	15.00	7.50	0.00	
		6	b875	0.00	15.00	7.50	0.00	
		6	b876	0.00	15.00	7.50	0.00	
		6	b877	0.00	15.00	7.50	0.00	
		6	b878	0.00	15.00	7.50	0.00	
		6	b879	0.00	15.00	7.50	0.00	
		6	b880	0.00	15.00	7.50	0.00	
		6	b881	0.00	15.00	7.50	0.00	
		6	b882	0.00	15.00	7.50	0.00	
		6	b883	0.00	15.00	7.50	0.00	
		6	b884	0.00	15.00	7.50	0.00	
		6	b885	0.00	15.00	7.50	0.00	
		6	b886	0.00	15.00	7.50	0.00	
		6	b887	0.00	15.00	7.50	0.00	
		6	b888	0.00	15.00	7.50	0.00	
		6	b889	0.00	15.00	7.50	0.00	
		6	b890	0.00	15.00	7.50	0.00	
		6	b891	0.00	15.00	7.50	0.00	
		6	b892	0.00	15.00	7.50	0.00	
		6	b893	0.00	15.00	7.50	0.00	
		6	b894	0.00	15.00	7.50	0.00	
		6	b895	0.00	15.00	7.50	0.00	
		6	b896	0.00	15.00	7.50	0.00	
		6	b897	0.00	15.00	7.50	0.00	
		6	b898	0.00	15.00	7.50	0.00	
		6	b899	0.00	15.00	7.50	0.00	
		6	b900	0.00	15.00	7.50	0.00	
		6	b901	0.00	15.00	7.50	0.00	
		6	b902	0.00	15.00	7.50	0.00	
		6	b903	0.00	15.00	7.50	0.00	
		6	b904	0.00	15.00	7.50	0.00	
		6	b905	0.00	15.00	7.50	0.00	
		6	b906	0.00	15.00	7.50	0.00	
		6	b907	0.00	15.00	7.50	0.00	
		6	b908	0.00	15.00	7.50	0.00	
		6	b909	0.00	15.00	7.50	0.00	
		6	b910	0.00	15.00	7.50	0.00	
		6	b911	0.00	15.00	7.50	0.00	
		6	b912	0.00	15.00	7.50	0.00	
		6	b913	0.00	15.00	7.50	0.00	
		6	b914	0.00	15.00	7.50	0.00	
		6	b915	0.00	15.00	7.50	0.00	
		6	b916	0.00	15.00	7.50	0.00	
		6	b917	0.00	15.00	7.50	0.00	
		6	b918	0.00	15.00	7.50	0.00	
		6	b919	0.00	15.00	7.50	0.00	
		6	b920	0.00	15.00	7.50	0.00	
		6	b921	0.00	15.00	7.50	0.00	
		6	b922	0.00	15.00	7.50	0.00	
		6	b923	0.00	15.00	7.50	0.00	
		6	b924	0.00	15.00	7.50	0.00	
		6	b925	0.00	15.00	7.50	0.00	
		6	b926	0.00	15.00	7.50	0.00	
		6	b927	0.00	15.00	7.50	0.00	
		6	b928	0.00	15.00	7.50	0.00	
		6	b929	0.00	15.00	7.50	0.00	
		6	b930	0.00	15.00	7.50	0.00	
		6	b931	0.00	15.00	7.50	0.00	
		6	b932	0.00	15.00	7.50	0.00	
		6	b933	0.00	15.00	7.50	0.00	
		6	b934	0.00	15.00	7.50	0.00	
		6	b935	0.00	15.00	7.50	0.00	
		6	b936	0.00	15.00	7.50	0.00	
		6	b937	0.00	15.00	7.50	0.00	
		6	b938	0.00	15.00	7.50	0.00	
		6	b939	0.00	15.00	7.50	0.00	
		6	b940	0.00	15.00	7.50	0.00	
		6	b941	0.00	15.00	7.50	0.00	
		6	b942	0.00	15.00	7.50	0.00	
		6	b943	0.00	15.00	7.50	0.00	
		6	b944	0.00	15.00	7.50	0.00	
		6	b945	0.00	15.00	7.50	0.00	
		6	b946	0.00	15.00	7.50	0.00	
		6	b947	0.00	15.00	7.50	0.00	
		6	b948	0.00	15.00	7.50	0.00	
		6	b949	0.00	15.00	7.50	0.00	
		6	b950	0.00	15.00	7.50	0.00	
		6	b951	0.00	15.00	7.50	0.00	
		6	b952	0.00	15.00	7.50	0.00	
		6	b953	0.00	15.00	7.50	0.00	
		6	b954	0.00	15.00	7.50	0.00	
		6	b955	0.00	15.00	7.50	0.00	
		6	b956	0.00	15.00	7.50	0.00	
		6	b957	0.00	15.00	7.50	0.00	
		6	b958	0.00	15.00	7.50	0.00	
		6	b959	0.00	15.00	7.50	0.00	
		6	b960	0.00	15.00	7.50	0.00	
		6	b961	0.00	15.00	7.50	0.00	
		6	b962	0.00	15.00	7.50	0.00	
		6	b963	0.00	15.00	7.50	0.00	
		6	b964	0.00	15.00	7.50	0.00	
		6	b965	0.00	15.00	7.50	0.00	
		6	b966	0.00	15.00	7.50	0.00	
		6	b967	0.00	15.00	7.50	0.00	
		6	b968	0.00	15.00	7.50	0.00	
		6	b969	0.00	15.00	7.50	0.00	
		6	b970	0.00	15.00	7.50	0.00	
		6	b971	0.00	15.00	7.50	0.00	
		6	b972	0.00	15.00	7.50	0.00	
		6	b973	0.00	15.00	7.50	0.00	
							9.22	376.42

VEGETALE

DALLA SEZ. DA PROG.	ALLA SEZ. A PROG.	SEZIONE	FIGURA	LUNGHEZZA	DISTANZA SEZIONI ml	DISTANZA DI CALCOLO ml	AREA PARZIALE mq	AREA TOTALE mq
						A RIPORTARE mq	9.22	376.42
		6	b974	0.00	15.00	7.50	0.00	
		6	b975	0.00	15.00	7.50	0.00	
		6	b976	0.00	15.00	7.50	0.00	
		6	b977	0.00	15.00	7.50	0.00	
		6	b978	0.00	15.00	7.50	0.00	
		6	b979	0.00	15.00	7.50	0.00	
		6	b980	0.00	15.00	7.50	0.00	
		6	b981	0.00	15.00	7.50	0.00	
		6	b982	0.00	15.00	7.50	0.00	
		6	b983	0.00	15.00	7.50	0.00	
		6	b984	0.00	15.00	7.50	0.00	
		6	b985	0.00	15.00	7.50	0.00	
		6	b986	0.00	15.00	7.50	0.00	
		6	b987	0.00	15.00	7.50	0.00	
		6	b988	0.00	15.00	7.50	0.00	
		6	b989	0.00	15.00	7.50	0.00	
		6	b990	0.00	15.00	7.50	0.00	
		6	b991	0.00	15.00	7.50	0.00	
		6	b992	0.00	15.00	7.50	0.00	
		6	b993	0.00	15.00	7.50	0.00	
		6	b994	0.00	15.00	7.50	0.00	
		6	b995	0.00	15.00	7.50	0.00	
		6	b996	0.00	15.00	7.50	0.00	
		6	b997	0.00	15.00	7.50	0.00	
		6	b998	0.00	15.00	7.50	0.00	
		6	b999	0.00	15.00	7.50	0.00	
		7	b1	0.76	15.00	7.50	5.70	
		7	b2	0.64	15.00	7.50	4.80	
								19.72
7	8	7	b1	0.76	15.00	7.50	5.70	
90.00	105.00	7	b2	0.64	15.00	7.50	4.80	
		8	b1	0.78	15.00	7.50	5.85	
		8	b2	0.60	15.00	7.50	4.50	
								20.85
8	9	8	b1	0.78	15.00	7.50	5.85	
105.00	120.00	8	b2	0.60	15.00	7.50	4.50	
		9	b1	0.95	15.00	7.50	7.13	
		9	b2	0.63	15.00	7.50	4.72	
								22.20
9	10	9	b1	0.95	4.19	2.09	1.99	
120.00	124.19	9	b2	0.63	4.19	2.09	1.32	
		10	b1	0.99	4.19	2.09	2.07	
		10	b2	0.54	4.19	2.09	1.13	
								6.51

Il Direttore dei Lavori	L'Impresa	TOTALE ARTICOLO	445.70

Volume dalla sezione 1 alla sezione 10

ARTICOLO		VOLUME
STERRO	mc	17.681
RIPORTO	mc	493.950
b VEGETALE	mq	445.70

	CALCOLO DELLE AREE		Foglio n. 1

STERRI E RIPORTI

N. SEZIONE PROG.	FIG.	ELEMENTI DI CALCOLO	AREA ELEMENTARE mq	AREA FIGURA mq	NOTE
2	S1	(-1.84--2.10)x(2.08+2.08)/2	0.54		
20.00		(-1.64--1.84)x(2.07+2.08)/2	0.42		
		(-1.04--1.64)x(2.10+2.07)/2	1.25		
		(-0.55--1.04)x(2.10+2.10)/2	1.03		
		(-0.24--0.55)x(2.10+2.10)/2	0.65		
		(0.54--0.24)x(2.17+2.10)/2	1.67		
		(0.56-0.54)x(2.17+2.17)/2	0.04		
		(0.60-0.56)x(2.16+2.17)/2	0.09		
		(1.36-0.60)x(2.08+2.16)/2	1.61		
		(1.64-1.36)x(2.07+2.08)/2	0.58		
		(2.15-1.64)x(2.06+2.07)/2	1.05		
		(1.95-2.15)x(1.86+2.06)/2	-0.39		
		(1.50-1.95)x(1.80+1.86)/2	-0.82		
		(1.00-1.50)x(1.81+1.80)/2	-0.90		
		(-0.00-1.00)x(1.84+1.81)/2	-1.83		
		(-1.00--0.00)x(1.86+1.84)/2	-1.85		
		(-1.50--1.00)x(1.87+1.86)/2	-0.93		
		(-1.95--1.50)x(1.93+1.87)/2	-0.85		
		(-2.10--1.95)x(2.08+1.93)/2	-0.30		
				1.06	
3	S1	(-2.00--2.06)x(2.31+2.31)/2	0.14		
40.00		(-1.93--2.00)x(2.31+2.31)/2	0.16		
		(-1.69--1.93)x(2.32+2.31)/2	0.56		
		(-1.10--1.69)x(2.34+2.32)/2	1.37		
		(-0.93--1.10)x(2.35+2.34)/2	0.40		
		(-0.28--0.93)x(2.32+2.35)/2	1.52		
		(0.14--0.28)x(2.31+2.32)/2	0.97		
		(0.54-0.14)x(2.27+2.31)/2	0.92		
		(1.21-0.54)x(2.19+2.27)/2	1.49		
		(1.37-1.21)x(2.19+2.19)/2	0.35		
		(1.87-1.37)x(2.17+2.19)/2	1.09		
		(1.98-1.87)x(2.17+2.17)/2	0.24		
		(1.95-1.98)x(2.13+2.17)/2	-0.06		
		(1.50-1.95)x(2.07+2.13)/2	-0.94		
		(1.00-1.50)x(2.09+2.07)/2	-1.04		
		(-0.00-1.00)x(2.11+2.09)/2	-2.10		
		(-1.00--0.00)x(2.14+2.11)/2	-2.13		
		(-1.50--1.00)x(2.15+2.14)/2	-1.07		
		(-1.95--1.50)x(2.21+2.15)/2	-0.98		
		(-2.06--1.95)x(2.31+2.21)/2	-0.25		
				0.64	
4	R1	(-4.55--4.79)x(1.84+1.78)/2	0.43		
60.00		(-4.44--4.55)x(1.86+1.84)/2	0.20		
		(-4.11--4.44)x(1.96+1.86)/2	0.63		
		(-3.62--4.11)x(2.10+1.96)/2	0.99		
		(-3.48--3.62)x(2.16+2.10)/2	0.30		
		(-2.80--3.48)x(2.39+2.16)/2	1.55		
		(-2.40--2.80)x(2.44+2.39)/2	0.97		
		(-1.98--2.40)x(2.49+2.44)/2	1.04		
		(-1.33--1.98)x(2.52+2.49)/2	1.63		
		(-1.15--1.33)x(2.54+2.52)/2	0.46		
		(-0.55--1.15)x(2.57+2.54)/2	1.53		
		(-0.33--0.55)x(2.58+2.57)/2	0.57		
		(-0.26--0.33)x(2.58+2.58)/2	0.18		
		(0.49--0.26)x(2.62+2.58)/2	1.95		
		(0.81-0.49)x(2.64+2.62)/2	0.84		
		(1.39-0.81)x(2.69+2.64)/2	1.55		
		(1.88-1.39)x(2.73+2.69)/2	1.33		
		(2.14-1.88)x(2.74+2.73)/2	0.71		
		(2.95-2.14)x(2.77+2.74)/2	2.23		
		(2.96-2.95)x(2.77+2.77)/2	0.03		
		(3.01-2.96)x(2.77+2.77)/2	0.14		
		(3.20-3.01)x(2.77+2.77)/2	0.53		
		(1.95-3.20)x(3.60+2.77)/2	-3.98		
		(1.50-1.95)x(3.54+3.60)/2	-1.61		
		(1.00-1.50)x(3.55+3.54)/2	-1.77		
		(0.00-1.00)x(3.58+3.55)/2	-3.56		
		(-1.00-0.00)x(3.60+3.58)/2	-3.59		
		(-1.50--1.00)x(3.62+3.60)/2	-1.81		
		(-1.95--1.50)x(3.68+3.62)/2	-1.64		
		(-4.79--1.95)x(1.78+3.68)/2	-7.75		
				5.92	
5	R1	(-5.32--5.50)x(3.13+3.14)/2	0.56		
80.00		(-4.95--5.32)x(3.14+3.13)/2	1.16		
		(-4.49--4.95)x(3.14+3.14)/2	1.44		
		(-3.88--4.49)x(3.14+3.14)/2	1.92		
		(-3.67--3.88)x(3.15+3.14)/2	0.66		
		(-2.97--3.67)x(3.16+3.15)/2	2.21		
		(-2.85--2.97)x(3.16+3.16)/2	0.38		
		(-2.81--2.85)x(3.16+3.16)/2	0.13		
		(-2.03--2.81)x(3.17+3.16)/2	2.47		
		(-1.74--2.03)x(3.18+3.17)/2	0.92		
		(-1.20--1.74)x(3.16+3.18)/2	1.71		
		(-0.67--1.20)x(3.16+3.16)/2	1.67		
		(-0.38--0.67)x(3.17+3.16)/2	0.92		
		(0.40--0.38)x(3.18+3.17)/2	2.48		
		(0.44-0.40)x(3.17+3.18)/2	0.13		
		(0.59-0.44)x(3.17+3.17)/2	0.48		
		(1.27-0.59)x(3.14+3.17)/2	2.15		
		(1.47-1.27)x(3.15+3.14)/2	0.63		
		(2.09-1.47)x(2.99+3.15)/2	1.90		
		(2.54-2.09)x(2.84+2.99)/2	1.31		
		(2.91-2.54)x(2.63+2.84)/2	1.01		
		(3.61-2.91)x(2.21+2.63)/2	1.69		
		(3.74-3.61)x(2.13+2.21)/2	0.28		
		(4.15-3.74)x(1.90+2.13)/2	0.83		
		(4.56-4.15)x(1.69+1.90)/2	0.74		
		(4.68-4.56)x(1.62+1.69)/2	0.20		
		(5.38-4.68)x(1.20+1.62)/2	0.99		
		(5.75-5.38)x(1.05+1.20)/2	0.42		
		(6.21-5.75)x(1.22+1.05)/2	0.52		
		(6.82-6.21)x(1.35+1.22)/2	0.78		
		(7.47-6.82)x(1.75+1.35)/2	1.01		
		(1.95-7.47)x(5.43+1.75)/2	-19.82		
		(1.50-1.95)x(5.37+5.43)/2	-2.43		
		(1.00-1.50)x(5.38+5.37)/2	-2.69		
		(0.00-1.00)x(5.41+5.38)/2	-5.39		
		A RIPORTARE mq	3.37		

STERRI E RIPORTI

N. SEZIONE PROG.	FIG.	ELEMENTI DI CALCOLO	AREA ELEMENTARE mq	AREA FIGURA mq	NOTE
		RIPORTO mq	3.37		
		(-1.00-0.00)x(5.43+5.41)/2	-5.42		
		(-1.50--1.00)x(5.45+5.43)/2	-2.72		
		(-1.95--1.50)x(5.51+5.45)/2	-2.47		
		(-5.50--1.95)x(3.14+5.51)/2	-15.35		
				22.59	
6	R1	(-4.64--4.69)x(2.98+2.98)/2	0.15		
100.00		(-4.62--4.64)x(2.98+2.98)/2	0.06		
		(-3.62--4.62)x(2.99+2.98)/2	2.99		
		(-3.60--3.62)x(2.99+2.99)/2	0.06		
		(-2.59--3.60)x(3.03+2.99)/2	3.04		
		(-2.57--2.59)x(3.03+3.03)/2	0.06		
		(-1.56--2.57)x(3.04+3.03)/2	3.07		
		(-1.55--1.56)x(3.04+3.04)/2	0.03		
		(-0.53--1.55)x(3.07+3.04)/2	3.12		
		(-0.52--0.53)x(3.07+3.07)/2	0.03		
		(0.50--0.52)x(3.15+3.07)/2	3.17		
		(1.46-0.50)x(3.14+3.15)/2	3.02		
		(1.53-1.46)x(3.14+3.14)/2	0.22		
		(2.55-1.53)x(3.08+3.14)/2	3.17		
		(2.56-2.55)x(3.08+3.08)/2	0.03		
		(3.58-2.56)x(3.09+3.08)/2	3.15		
		(3.59-3.58)x(3.09+3.09)/2	0.03		
		(4.38-3.59)x(3.11+3.09)/2	2.45		
		(1.95-4.38)x(4.73+3.11)/2	-9.53		
		(1.50-1.95)x(4.67+4.73)/2	-2.11		
		(1.00-1.50)x(4.68+4.67)/2	-2.34		
		(-0.00-1.00)x(4.71+4.68)/2	-4.70		
		(-1.00--0.00)x(4.73+4.71)/2	-4.72		
		(-1.50--1.00)x(4.74+4.73)/2	-2.37		
		(-1.95--1.50)x(4.80+4.74)/2	-2.15		
		(-4.69--1.95)x(2.98+4.80)/2	-10.66		
				10.73	
7	S1	(-1.79--2.01)x(3.07+3.06)/2	0.67		
120.00		(-1.26--1.79)x(3.09+3.07)/2	1.63		
		(-0.72--1.26)x(3.10+3.09)/2	1.67		
		(0.21--0.72)x(3.11+3.10)/2	2.89		
		(0.34-0.21)x(3.12+3.11)/2	0.40		
		(0.68-0.34)x(3.11+3.12)/2	1.06		
		(1.41-0.68)x(3.10+3.11)/2	2.27		
		(1.69-1.41)x(3.11+3.10)/2	0.87		
		(2.13-1.69)x(3.10+3.11)/2	1.37		
		(1.95-2.13)x(2.93+3.10)/2	-0.54		
		(1.50-1.95)x(2.87+2.93)/2	-1.30		
		(1.00-1.50)x(2.88+2.87)/2	-1.44		
		(0.00-1.00)x(2.91+2.88)/2	-2.90		
		(-1.00-0.00)x(2.93+2.91)/2	-2.92		
		(-1.50--1.00)x(2.94+2.93)/2	-1.47		
		(-1.95--1.50)x(3.00+2.94)/2	-1.34		
		(-2.01--1.95)x(3.06+3.00)/2	-0.18		
				0.74	
8	S1	(-1.95--2.09)x(3.22+3.21)/2	0.45		
140.00		(-1.34--1.95)x(3.23+3.22)/2	1.97		
		(-0.89--1.34)x(3.25+3.23)/2	1.46		
		(-0.71--0.89)x(3.25+3.25)/2	0.59		
		(0.18--0.71)x(3.26+3.25)/2	2.90		
		(0.68-0.18)x(3.26+3.26)/2	1.63		
		(1.24-0.68)x(3.26+3.26)/2	1.83		
		(2.23-1.24)x(3.27+3.26)/2	3.23		
		(1.95-2.23)x(2.99+3.27)/2	-0.88		
		(1.49-1.95)x(2.93+2.99)/2	-1.36		
		(1.00-1.49)x(2.95+2.93)/2	-1.44		
		(-0.00-1.00)x(2.97+2.95)/2	-2.96		
		(-1.00--0.00)x(3.00+2.97)/2	-2.99		
		(-1.49--1.00)x(3.01+3.00)/2	-1.47		
		(-1.95--1.49)x(3.07+3.01)/2	-1.40		
		(-2.09--1.95)x(3.21+3.07)/2	-0.44		
				1.12	
9	S1	(-1.78--2.03)x(3.23+3.22)/2	0.81		
160.00		(-1.42--1.78)x(3.25+3.23)/2	1.17		
		(-0.99--1.42)x(3.28+3.25)/2	1.40		
		(-0.32--0.99)x(3.31+3.28)/2	2.21		
		(-0.20--0.32)x(3.31+3.31)/2	0.40		
		(0.12--0.20)x(3.32+3.31)/2	1.06		
		(0.78-0.12)x(3.34+3.32)/2	2.20		
		(1.19-0.78)x(3.35+3.34)/2	1.37		
		(1.88-1.19)x(3.36+3.35)/2	2.31		
		(2.27-1.88)x(3.38+3.36)/2	1.31		
		(1.95-2.27)x(3.07+3.38)/2	-1.03		
		(1.50-1.95)x(3.01+3.07)/2	-1.37		
		(1.00-1.50)x(3.02+3.01)/2	-1.51		
		(-0.00-1.00)x(3.05+3.02)/2	-3.04		
		(-1.00--0.00)x(3.07+3.05)/2	-3.06		
		(-1.50--1.00)x(3.08+3.07)/2	-1.54		
		(-1.95--1.50)x(3.14+3.08)/2	-1.40		
		(-2.03--1.95)x(3.22+3.14)/2	-0.25		
				1.04	
10	S1	(-1.40--2.03)x(3.32+3.30)/2	2.09		
180.00		(-0.95--1.40)x(3.32+3.32)/2	1.49		
		(-0.30--0.95)x(3.35+3.32)/2	2.17		
		(0.73--0.30)x(3.40+3.35)/2	3.48		
		(0.80-0.73)x(3.41+3.40)/2	0.24		
		(0.84-0.80)x(3.41+3.41)/2	0.14		
		(1.90-0.84)x(3.42+3.41)/2	3.62		
		(2.23-1.90)x(3.42+3.42)/2	1.13		
		(1.95-2.23)x(3.14+3.42)/2	-0.92		
		(1.50-1.95)x(3.08+3.14)/2	-1.40		
		(1.00-1.50)x(3.10+3.08)/2	-1.54		
		(-0.00-1.00)x(3.12+3.10)/2	-3.11		
		(-1.00--0.00)x(3.15+3.12)/2	-3.13		
		(-1.50--1.00)x(3.16+3.15)/2	-1.58		
		(-1.95--1.50)x(3.22+3.16)/2	-1.44		
		(-2.03--1.95)x(3.30+3.22)/2	-0.26		
				0.98	
11	S1	(-1.50--2.02)x(3.35+3.36)/2	1.74		
200.00		(-1.37--1.50)x(3.35+3.35)/2	0.44		
		A RIPORTARE mq	2.18		

STERRI E RIPORTI

N. SEZIONE PROG.	FIG.	ELEMENTI DI CALCOLO	AREA ELEMENTARE mq	AREA FIGURA mq	NOTE
		RIPORTO mq	2.18		
		(-1.29--1.37)x(3.35+3.35)/2	0.27		
		(-0.27--1.29)x(3.38+3.35)/2	3.43		
		(0.50--0.27)x(3.41+3.38)/2	2.61		
		(0.83-0.50)x(3.42+3.41)/2	1.13		
		(1.35-0.83)x(3.44+3.42)/2	1.78		
		(1.93-1.35)x(3.45+3.44)/2	2.00		
		(2.19-1.93)x(3.46+3.45)/2	0.90		
		(1.95-2.19)x(3.22+3.46)/2	-0.80		
		(1.50-1.95)x(3.16+3.22)/2	-1.44		
		(1.00-1.50)x(3.17+3.16)/2	-1.58		
		(-0.00-1.00)x(3.20+3.17)/2	-3.19		
		(-1.00--0.00)x(3.22+3.20)/2	-3.21		
		(-1.50--1.00)x(3.23+3.22)/2	-1.61		
		(-1.95--1.50)x(3.29+3.23)/2	-1.47		
		(-2.02--1.95)x(3.36+3.29)/2	-0.23		
				0.77	
12	S1	(-1.00--0.96)x(3.30+3.29)/2	-0.13		
220.00		(-1.50--1.00)x(3.31+3.30)/2	-1.65		
		(-1.64--1.50)x(3.33+3.31)/2	-0.46		
		(-1.60--1.64)x(3.33+3.33)/2	0.13		
		(-1.33--1.60)x(3.34+3.33)/2	0.90		
		(-0.96--1.33)x(3.37+3.34)/2	1.24		
				0.03	
12	S2	(-0.88--0.96)x(3.37+3.37)/2	0.27		
220.00		(-0.23--0.88)x(3.43+3.37)/2	2.21		
		(0.17--0.23)x(3.42+3.43)/2	1.37		
		(0.87-0.17)x(3.42+3.42)/2	2.39		
		(1.94-0.87)x(3.45+3.42)/2	3.68		
		(1.96-1.94)x(3.45+3.45)/2	0.07		
		(2.01-1.96)x(3.45+3.45)/2	0.17		
		(2.12-2.01)x(3.46+3.45)/2	0.38		
		(1.95-2.12)x(3.29+3.46)/2	-0.57		
		(1.50-1.95)x(3.23+3.29)/2	-1.47		
		(1.00-1.50)x(3.25+3.23)/2	-1.62		
		(0.00-1.00)x(3.27+3.25)/2	-3.26		
		(-0.96-0.00)x(3.29+3.27)/2	-3.15		
				0.47	
13	R1	(-1.95--1.71)x(3.44+3.41)/2	-0.82		
240.00		(-2.22--1.95)x(3.26+3.44)/2	-0.90		
		(-1.85--2.22)x(3.30+3.26)/2	1.21		
		(-1.71--1.85)x(3.31+3.30)/2	0.46		
				0.05	
13	R2	(-1.20--1.71)x(3.35+3.31)/2	1.70		
240.00		(-0.96--1.20)x(3.37+3.35)/2	0.81		
		(-1.00--0.96)x(3.37+3.37)/2	-0.13		
		(-1.50--1.00)x(3.38+3.37)/2	-1.69		
		(-1.71--1.50)x(3.41+3.38)/2	-0.71		
				0.02	
13	S1	(-0.91--0.96)x(3.37+3.37)/2	0.17		
240.00		(-0.15--0.91)x(3.41+3.37)/2	2.58		
		(-0.11--0.15)x(3.41+3.41)/2	0.14		
		(-0.10--0.11)x(3.41+3.41)/2	0.03		
		(-0.07--0.10)x(3.41+3.41)/2	0.10		
		(1.00--0.07)x(3.46+3.41)/2	3.68		
		(1.71-1.00)x(3.49+3.46)/2	2.47		
		(2.07-1.71)x(3.49+3.49)/2	1.26		
		(1.95-2.07)x(3.37+3.49)/2	-0.41		
		(1.50-1.95)x(3.31+3.37)/2	-1.50		
		(1.00-1.50)x(3.32+3.31)/2	-1.66		
		(-0.00-1.00)x(3.35+3.32)/2	-3.33		
		(-0.96--0.00)x(3.37+3.35)/2	-3.23		
				0.30	
14	R1	(-5.75--5.97)x(0.85+0.83)/2	0.18		
260.00		(-5.56--5.75)x(0.86+0.85)/2	0.16		
		(-5.26--5.56)x(0.94+0.86)/2	0.27		
		(-4.46--5.26)x(1.23+0.94)/2	0.87		
		(-3.97--4.46)x(1.62+1.23)/2	0.70		
		(-3.37--3.97)x(2.13+1.62)/2	1.13		
		(-2.39--3.37)x(3.12+2.13)/2	2.57		
		(-2.27--2.39)x(3.25+3.12)/2	0.38		
		(-2.19--2.27)x(3.27+3.25)/2	0.26		
		(-1.71--2.19)x(3.49+3.27)/2	1.62		
		(-1.95--1.71)x(3.52+3.49)/2	-0.84		
		(-5.97--1.95)x(0.83+3.52)/2	-8.74		
				1.44	
14	S1	(-1.00--0.96)x(3.45+3.44)/2	-0.14		
260.00		(-1.50--1.00)x(3.46+3.45)/2	-1.73		
		(-1.71--1.50)x(3.49+3.46)/2	-0.73		
		(-1.17--1.71)x(3.73+3.49)/2	1.95		
		(-0.96--1.17)x(3.71+3.73)/2	0.78		
				0.13	
14	S2	(-0.41--0.96)x(3.66+3.71)/2	2.03		
260.00		(-0.07--0.41)x(3.63+3.66)/2	1.24		
		(0.47--0.07)x(3.58+3.63)/2	1.95		
		(1.03-0.47)x(3.53+3.58)/2	1.99		
		(1.37-1.03)x(3.53+3.53)/2	1.20		
		(2.04-1.37)x(3.53+3.53)/2	2.37		
		(1.95-2.04)x(3.44+3.53)/2	-0.31		
		(1.50-1.95)x(3.38+3.44)/2	-1.53		
		(1.00-1.50)x(3.40+3.38)/2	-1.69		
		(0.00-1.00)x(3.42+3.40)/2	-3.41		
		(-0.96-0.00)x(3.44+3.42)/2	-3.29		
				0.55	

Il Direttore dei Lavori | L'Impresa

N. SEZ.	FIG.	SUPERFICIE STERRO mq	SUPERFICIE RIPORTO mq	PUNTI DI PASSAGGIO (PROGRESSIVA m)	DISTANZA m	VOLUMI PARZIALI STERRO mc	VOLUMI PARZIALI RIPORTO mc	VOLUMI TOTALI STERRO mc	VOLUMI TOTALI RIPORTO mc
2	S1	1.06		(20.00)					
					20.00	17.000			
3	S1	0.64		(40.00)					
								17.000	
3	S1	0.64		(40.00)	1.95	0.624			
				0.64*20.00					
				0.64+5.92	1.95				
4	R1		5.92	(60.00)	18.05		53.428		
								0.624	53.428
4	R1		5.92	(60.00)					
					20.00		285.100		
5	R1		22.59	(80.00)					
									285.100
5	R1		22.59	(80.00)					
					20.00		333.200		
6	R1		10.73	(100.00)					
									333.200
6	R1		10.73	(100.00)	18.71		100.379		
				10.73*20.00					
				10.73+0.74	18.71				
7	S1	0.74		(120.00)	1.29	0.477			
								0.477	100.379
7	S1	0.74		(120.00)					
					20.00	18.600			
8	S1	1.12		(140.00)					
								18.600	
8	S1	1.12		(140.00)					
					20.00	21.600			
9	S1	1.04		(160.00)					
								21.600	
9	S1	1.04		(160.00)					
					20.00	20.200			
10	S1	0.98		(180.00)					
								20.200	
10	S1	0.98		(180.00)					
					20.00	17.500			
11	S1	0.77		(200.00)					
								17.500	
11	S1	0.77		(200.00)					
					20.00	12.700			
12	S1	0.03		(220.00)					
	S2	0.47							
								12.700	
12	S1	0.03		(220.00)	6.00	0.090			
				0.03*20.00					
				0.03+0.07	6.00				
13	R1		0.05	(240.00)					
	R2		0.02		14.00		0.490		
12	S2	0.47		(220.00)					
					20.00	7.700			
13	S1	0.30		(240.00)					
								7.790	0.490
13	R1		0.05	(240.00)					
					20.00		14.900		
14	R1		1.44	(260.00)					
13	R2		0.02	(240.00)	2.67		0.027		
				0.02*20.00					
				0.02+0.13	2.67				
14	S1	0.13		(260.00)	17.33	1.126			
13	S1	0.30		(240.00)					
					20.00	8.500			
14	S2	0.55		(260.00)					
								9.626	14.927

Il Direttore dei Lavori	L'Impresa	Totale Articoli .....:	126.117	787.524
		A dedurre quantita' precedenti:		
		Quantita' da contabilizzare ..:		

	CALCOLO DELLE LUNGHEZZE		Foglio n. 5

USURA

N. SEZIONE PROG.	FIG.	ELEMENTI DI CALCOLO	LUNGHEZZA ELEMENTARE ml	LUNGHEZZA FIGURA ml	NOTE
1	a1	(-1.00--1.50)	0.50		
0.00		(0.00--1.00)	1.00		
		(1.00-0.00)	1.00		
		(1.50-1.00)	0.50		
				3.00	
2	a1	(-1.00--1.50)	0.50		
20.00		(0.00--1.00)	1.00		
		(1.00-0.00)	1.00		
		(1.50-1.00)	0.50		
				3.00	
3	a1	(-1.00--1.50)	0.50		
40.00		(0.00--1.00)	1.00		
		(1.00-0.00)	1.00		
		(1.50-1.00)	0.50		
				3.00	
4	a1	(-1.00--1.50)	0.50		
60.00		(0.00--1.00)	1.00		
		(1.00-0.00)	1.00		
		(1.50-1.00)	0.50		
				3.00	
5	a1	(-1.00--1.50)	0.50		
80.00		(0.00--1.00)	1.00		
		(1.00-0.00)	1.00		
		(1.50-1.00)	0.50		
				3.00	
6	a1	(-1.00--1.50)	0.50		
100.00		(0.00--1.00)	1.00		
		(1.00-0.00)	1.00		
		(1.50-1.00)	0.50		
				3.00	
7	a1	(-1.00--1.50)	0.50		
120.00		(0.00--1.00)	1.00		
		(1.00-0.00)	1.00		
		(1.50-1.00)	0.50		
				3.00	
8	a1	(-1.00--1.49)	0.49		
140.00		(0.00--1.00)	1.00		
		(1.00-0.00)	1.00		
		(1.49-1.00)	0.49		
				2.98	
9	a1	(-1.00--1.50)	0.50		
160.00		(0.00--1.00)	1.00		
		(1.00-0.00)	1.00		
		(1.50-1.00)	0.50		
				3.00	
10	a1	(-1.00--1.50)	0.50		
180.00		(0.00--1.00)	1.00		
		(1.00-0.00)	1.00		
		(1.50-1.00)	0.50		
				3.00	
11	a1	(-1.00--1.50)	0.50		
200.00		(0.00--1.00)	1.00		
		(1.00-0.00)	1.00		
		(1.50-1.00)	0.50		
				3.00	
12	a1	(-1.00--1.50)	0.50		
220.00		(0.00--1.00)	1.00		
		(1.00-0.00)	1.00		
		(1.50-1.00)	0.50		
				3.00	
13	a1	(-1.00--1.50)	0.50		
240.00		(0.00--1.00)	1.00		
		(1.00-0.00)	1.00		
		(1.50-1.00)	0.50		
				3.00	
14	a1	(-1.00--1.50)	0.50		
260.00		(0.00--1.00)	1.00		
		(1.00-0.00)	1.00		
		(1.50-1.00)	0.50		
				3.00	

Il Direttore dei Lavori	L'Impresa	

	CALCOLO DELLE LUNGHEZZE		Foglio n. 6

VEGETALE

N. SEZIONE PROG.	FIG.	ELEMENTI DI CALCOLO	LUNGHEZZA ELEMENTARE ml	LUNGHEZZA FIGURA ml	NOTE
1	b1	(-1.53--1.50)	0.03		
0.00		(-2.00--1.53)	0.47		
		(-2.13--2.00)	0.13		
				0.63	
1	b2	(1.53-1.50)	0.03		
0.00		(2.00-1.53)	0.47		
		(2.11-2.00)	0.11		
				0.61	
2	b1	(-1.53--1.50)	0.03		
20.00		(-2.00--1.53)	0.47		
		(-2.09--2.00)	0.09		
				0.59	
2	b2	(1.53-1.50)	0.03		
20.00		(2.00-1.53)	0.47		
		(2.01-2.00)	0.01		
				0.51	
3	b1	(-1.53--1.50)	0.03		
40.00		(-2.00--1.53)	0.47		
		(-2.16--2.00)	0.16		
				0.66	
3	b2	(1.53-1.50)	0.03		
40.00		(2.00-1.53)	0.47		
		(2.28-2.00)	0.28		
				0.78	
4	b1	(-1.53--1.50)	0.03		
60.00		(-2.00--1.53)	0.47		
		(-5.35--2.00)	3.35		
				3.85	
4	b2	(1.53-1.50)	0.03		
60.00		(2.00-1.53)	0.47		
		(3.55-2.00)	1.55		
				2.05	
5	b1	(-1.53--1.50)	0.03		
80.00		(-2.00--1.53)	0.47		
		(-5.85--2.00)	3.85		
				4.35	
5	b2	(1.53-1.50)	0.03		
80.00		(2.00-1.53)	0.47		
		(7.65-2.00)	5.65		
				6.15	
6	b1	(-1.53--1.50)	0.03		
100.00		(-2.00--1.53)	0.47		
		(-5.07--2.00)	3.07		
				3.57	
6	b2	(1.53-1.50)	0.03		
100.00		(2.00-1.53)	0.47		
		(4.73-2.00)	2.73		
				3.23	
7	b1	(-1.53--1.50)	0.03		
120.00		(-2.00--1.53)	0.47		
		(-2.23--2.00)	0.23		
				0.73	
7	b2	(1.53-1.50)	0.03		
120.00		(2.00-1.53)	0.47		
		(2.05-2.00)	0.05		
				0.55	
8	b1	(-1.53--1.49)	0.04		
140.00		(-1.99--1.53)	0.46		
		(-2.09--1.99)	0.10		
				0.60	
8	b2	(1.53-1.49)	0.04		
140.00		(1.99-1.53)	0.46		
		(2.07-1.99)	0.08		
				0.58	
9	b1	(-1.53--1.50)	0.03		
160.00		(-2.00--1.53)	0.47		
		(-2.22--2.00)	0.22		
				0.72	
9	b2	(1.53-1.50)	0.03		
160.00		(2.00-1.53)	0.47		
		(2.10-2.00)	0.10		
				0.60	
10	b1	(-1.53--1.50)	0.03		
180.00		(-2.00--1.53)	0.47		
		(-2.20--2.00)	0.20		
				0.70	
10	b2	(1.53-1.50)	0.03		
180.00		(2.00-1.53)	0.47		
		(2.07-2.00)	0.07		
				0.57	
11	b1	(-1.53--1.50)	0.03		
200.00		(-2.00--1.53)	0.47		
		(-2.21--2.00)	0.21		
				0.71	
11	b2	(1.53-1.50)	0.03		
200.00		(2.00-1.53)	0.47		
		(2.03-2.00)	0.03		
				0.53	
12	b1	(-1.53--1.50)	0.03		
220.00		(-2.00--1.53)	0.47		
		(-2.38--2.00)	0.38		
				0.88	
12	b2	(1.53-1.50)	0.03		
220.00		(2.00-1.53)	0.47		
		(2.06-2.00)	0.06		
				0.56	
13	b1	(-1.53--1.50)	0.03		
240.00		(-2.00--1.53)	0.47		
		(-5.73--2.00)	3.73		
				4.23	
13	b2	(1.53-1.50)	0.03		
240.00		(2.00-1.53)	0.47		
		(2.13-2.00)	0.13		
				0.63	
14	b1	(-1.53--1.50)	0.03		
260.00		(-2.00--1.53)	0.47		
		(-6.39--2.00)	4.39		
		A RIPORTARE ml	4.89		

	CALCOLO DELLE LUNGHEZZE		Foglio n. 7

VEGETALE

N. SEZIONE PROG.	FIG.	ELEMENTI DI CALCOLO	LUNGHEZZA ELEMENTARE ml	LUNGHEZZA FIGURA ml	NOTE
		RIPORTO ml	4.89		
				4.89	
14 260.00	b2	(1.53-1.50) (2.00-1.53) (2.17-2.00)	0.03 0.47 0.17		
				0.67	

Il Direttore dei Lavori	L'Impresa	

	CALCOLO DELLE LUNGHEZZE		Foglio n. 8

BINDER

N. SEZIONE PROG.	FIG.	ELEMENTI DI CALCOLO	LUNGHEZZA ELEMENTARE ml	LUNGHEZZA FIGURA ml	NOTE
1	c1	(-1.00--1.50)	0.50		
0.00		(0.00--1.00)	1.00		
		(1.00-0.00)	1.00		
		(1.50-1.00)	0.50		
				3.00	
2	c1	(-1.00--1.50)	0.50		
20.00		(0.00--1.00)	1.00		
		(1.00-0.00)	1.00		
		(1.50-1.00)	0.50		
				3.00	
3	c1	(-1.00--1.50)	0.50		
40.00		(0.00--1.00)	1.00		
		(1.00-0.00)	1.00		
		(1.50-1.00)	0.50		
				3.00	
4	c1	(-1.00--1.50)	0.50		
60.00		(0.00--1.00)	1.00		
		(1.00-0.00)	1.00		
		(1.50-1.00)	0.50		
				3.00	
5	c1	(-1.00--1.50)	0.50		
80.00		(0.00--1.00)	1.00		
		(1.00-0.00)	1.00		
		(1.50-1.00)	0.50		
				3.00	
6	c1	(-1.00--1.50)	0.50		
100.00		(0.00--1.00)	1.00		
		(1.00-0.00)	1.00		
		(1.50-1.00)	0.50		
				3.00	
7	c1	(-1.00--1.50)	0.50		
120.00		(0.00--1.00)	1.00		
		(1.00-0.00)	1.00		
		(1.50-1.00)	0.50		
				3.00	
8	c1	(-1.00--1.49)	0.49		
140.00		(0.00--1.00)	1.00		
		(1.00-0.00)	1.00		
		(1.49-1.00)	0.49		
				2.98	
9	c1	(-1.00--1.50)	0.50		
160.00		(0.00--1.00)	1.00		
		(1.00-0.00)	1.00		
		(1.50-1.00)	0.50		
				3.00	
10	c1	(-1.00--1.50)	0.50		
180.00		(0.00--1.00)	1.00		
		(1.00-0.00)	1.00		
		(1.50-1.00)	0.50		
				3.00	
11	c1	(-1.00--1.50)	0.50		
200.00		(0.00--1.00)	1.00		
		(1.00-0.00)	1.00		
		(1.50-1.00)	0.50		
				3.00	
12	c1	(-1.00--1.50)	0.50		
220.00		(0.00--1.00)	1.00		
		(1.00-0.00)	1.00		
		(1.50-1.00)	0.50		
				3.00	
13	c1	(-1.00--1.50)	0.50		
240.00		(0.00--1.00)	1.00		
		(1.00-0.00)	1.00		
		(1.50-1.00)	0.50		
				3.00	
14	c1	(-1.00--1.50)	0.50		
260.00		(0.00--1.00)	1.00		
		(1.00-0.00)	1.00		
		(1.50-1.00)	0.50		
				3.00	

Il Direttore dei Lavori	L'Impresa	

BASE

N. SEZIONE PROG.	FIG.	ELEMENTI DI CALCOLO	LUNGHEZZA ELEMENTARE ml	LUNGHEZZA FIGURA ml	NOTE
1	d1	(-1.00--1.50)	0.50		
0.00		(0.00--1.00)	1.00		
		(1.00-0.00)	1.00		
		(1.50-1.00)	0.50		
				3.00	
2	d1	(-1.00--1.50)	0.50		
20.00		(0.00--1.00)	1.00		
		(1.00-0.00)	1.00		
		(1.50-1.00)	0.50		
				3.00	
3	d1	(-1.00--1.50)	0.50		
40.00		(0.00--1.00)	1.00		
		(1.00-0.00)	1.00		
		(1.50-1.00)	0.50		
				3.00	
4	d1	(-1.00--1.50)	0.50		
60.00		(0.00--1.00)	1.00		
		(1.00-0.00)	1.00		
		(1.50-1.00)	0.50		
				3.00	
5	d1	(-1.00--1.50)	0.50		
80.00		(0.00--1.00)	1.00		
		(1.00-0.00)	1.00		
		(1.50-1.00)	0.50		
				3.00	
6	d1	(-1.00--1.50)	0.50		
100.00		(0.00--1.00)	1.00		
		(1.00-0.00)	1.00		
		(1.50-1.00)	0.50		
				3.00	
7	d1	(-1.00--1.50)	0.50		
120.00		(0.00--1.00)	1.00		
		(1.00-0.00)	1.00		
		(1.50-1.00)	0.50		
				3.00	
8	d1	(-1.00--1.49)	0.49		
140.00		(0.00--1.00)	1.00		
		(1.00-0.00)	1.00		
		(1.49-1.00)	0.49		
				2.98	
9	d1	(-1.00--1.50)	0.50		
160.00		(0.00--1.00)	1.00		
		(1.00-0.00)	1.00		
		(1.50-1.00)	0.50		
				3.00	
10	d1	(-1.00--1.50)	0.50		
180.00		(0.00--1.00)	1.00		
		(1.00-0.00)	1.00		
		(1.50-1.00)	0.50		
				3.00	
11	d1	(-1.00--1.50)	0.50		
200.00		(0.00--1.00)	1.00		
		(1.00-0.00)	1.00		
		(1.50-1.00)	0.50		
				3.00	
12	d1	(-1.00--1.50)	0.50		
220.00		(0.00--1.00)	1.00		
		(1.00-0.00)	1.00		
		(1.50-1.00)	0.50		
				3.00	
13	d1	(-1.00--1.50)	0.50		
240.00		(0.00--1.00)	1.00		
		(1.00-0.00)	1.00		
		(1.50-1.00)	0.50		
				3.00	
14	d1	(-1.00--1.50)	0.50		
260.00		(0.00--1.00)	1.00		
		(1.00-0.00)	1.00		
		(1.50-1.00)	0.50		
				3.00	

Il Direttore dei Lavori | L'Impresa

USURA

DALLA SEZ. DA PROG.	ALLA SEZ. A PROG.	SEZIONE	FIGURA	LUNGHEZZA	DISTANZA SEZIONI ml	DISTANZA DI CALCOLO ml	AREA PARZIALE mq	AREA TOTALE mq
1	2	1	a1	3.00	20.00	10.00	30.00	
0.00	20.00	2	a1	3.00	20.00	10.00	30.00	
								60.00
2	3	2	a1	3.00	20.00	10.00	30.00	
20.00	40.00	3	a1	3.00	20.00	10.00	30.00	
								60.00
3	4	3	a1	3.00	20.00	10.00	30.00	
40.00	60.00	4	a1	3.00	20.00	10.00	30.00	
								60.00
4	5	4	a1	3.00	20.00	10.00	30.00	
60.00	80.00	5	a1	3.00	20.00	10.00	30.00	
								60.00
5	6	5	a1	3.00	20.00	10.00	30.00	
80.00	100.00	6	a1	3.00	20.00	10.00	30.00	
								60.00
6	7	6	a1	3.00	20.00	10.00	30.00	
100.00	120.00	7	a1	3.00	20.00	10.00	30.00	
								60.00
7	8	7	a1	3.00	20.00	10.00	30.00	
120.00	140.00	8	a1	2.98	20.00	10.00	29.80	
								59.80
8	9	8	a1	2.98	20.00	10.00	29.80	
140.00	160.00	9	a1	3.00	20.00	10.00	30.00	
								59.80
9	10	9	a1	3.00	20.00	10.00	30.00	
160.00	180.00	10	a1	3.00	20.00	10.00	30.00	
								60.00
10	11	10	a1	3.00	20.00	10.00	30.00	
180.00	200.00	11	a1	3.00	20.00	10.00	30.00	
								60.00
11	12	11	a1	3.00	20.00	10.00	30.00	
200.00	220.00	12	a1	3.00	20.00	10.00	30.00	
								60.00
12	13	12	a1	3.00	20.00	10.00	30.00	
220.00	240.00	13	a1	3.00	20.00	10.00	30.00	
								60.00
13	14	13	a1	3.00	20.00	10.00	30.00	
240.00	260.00	14	a1	3.00	20.00	10.00	30.00	
								60.00
14	15	14	a1	3.00	20.00	10.00	30.00	
								30.00

VEGETALE

DALLA SEZ. DA PROG.	ALLA SEZ. A PROG.	SEZIONE	FIGURA	LUNGHEZZA	DISTANZA SEZIONI ml	DISTANZA DI CALCOLO ml	AREA PARZIALE mq	AREA TOTALE mq
1	2	1	b1	0.63	20.00	10.00	6.30	
0.00	20.00	1	b2	0.61	20.00	10.00	6.10	
		2	b1	0.59	20.00	10.00	5.90	
		2	b2	0.51	20.00	10.00	5.10	
								23.40
2	3	2	b1	0.59	20.00	10.00	5.90	
20.00	40.00	2	b2	0.51	20.00	10.00	5.10	
		3	b1	0.66	20.00	10.00	6.60	
		3	b2	0.78	20.00	10.00	7.80	
								25.40
3	4	3	b1	0.66	20.00	10.00	6.60	
40.00	60.00	3	b2	0.78	20.00	10.00	7.80	
		4	b1	3.85	20.00	10.00	38.50	
		4	b2	2.05	20.00	10.00	20.50	
								73.40
4	5	4	b1	3.85	20.00	10.00	38.50	
60.00	80.00	4	b2	2.05	20.00	10.00	20.50	
		5	b1	4.35	20.00	10.00	43.50	
		5	b2	6.15	20.00	10.00	61.50	
								164.00
5	6	5	b1	4.35	20.00	10.00	43.50	
80.00	100.00	5	b2	6.15	20.00	10.00	61.50	
		6	b1	3.57	20.00	10.00	35.70	
		6	b2	3.23	20.00	10.00	32.30	
								173.00
6	7	6	b1	3.57	20.00	10.00	35.70	
100.00	120.00	6	b2	3.23	20.00	10.00	32.30	
		7	b1	0.73	20.00	10.00	7.30	
		7	b2	0.55	20.00	10.00	5.50	
								80.80
7	8	7	b1	0.73	20.00	10.00	7.30	
120.00	140.00	7	b2	0.55	20.00	10.00	5.50	
		8	b1	0.60	20.00	10.00	6.00	
		8	b2	0.58	20.00	10.00	5.80	
								24.60
8	9	8	b1	0.60	20.00	10.00	6.00	
140.00	160.00	8	b2	0.58	20.00	10.00	5.80	
		9	b1	0.72	20.00	10.00	7.20	
		9	b2	0.60	20.00	10.00	6.00	
								25.00
9	10	9	b1	0.72	20.00	10.00	7.20	
160.00	180.00	9	b2	0.60	20.00	10.00	6.00	
		10	b1	0.70	20.00	10.00	7.00	
		10	b2	0.57	20.00	10.00	5.70	
								25.90
10	11	10	b1	0.70	20.00	10.00	7.00	
180.00	200.00	10	b2	0.57	20.00	10.00	5.70	
		11	b1	0.71	20.00	10.00	7.10	
		11	b2	0.53	20.00	10.00	5.30	
								25.10
11	12	11	b1	0.71	20.00	10.00	7.10	
200.00	220.00	11	b2	0.53	20.00	10.00	5.30	
		12	b1	0.88	20.00	10.00	8.80	
		12	b2	0.56	20.00	10.00	5.60	
								26.80
12	13	12	b1	0.88	20.00	10.00	8.80	
220.00	240.00	12	b2	0.56	20.00	10.00	5.60	
		13	b1	4.23	20.00	10.00	42.30	
		13	b2	0.63	20.00	10.00	6.30	
								63.00
13	14	13	b1	4.23	20.00	10.00	42.30	
240.00	260.00	13	b2	0.63	20.00	10.00	6.30	
		14	b1	4.89	20.00	10.00	48.90	
		14	b2	0.67	20.00	10.00	6.70	
								104.20
14	15	14	b1	4.89	20.00	10.00	48.90	
260.00	280.00	14	b2	0.67	20.00	10.00	6.70	
								55.60

BINDER

DALLA SEZ. DA PROG.	ALLA SEZ. A PROG.	SEZIONE	FIGURA	LUNGHEZZA	DISTANZA SEZIONI ml	DISTANZA DI CALCOLO ml	AREA PARZIALE mq	AREA TOTALE mq
1	2	1	c1	3.00	20.00	10.00	30.00	
0.00	20.00	2	c1	3.00	20.00	10.00	30.00	
								60.00
2	3	2	c1	3.00	20.00	10.00	30.00	
20.00	40.00	3	c1	3.00	20.00	10.00	30.00	
								60.00
3	4	3	c1	3.00	20.00	10.00	30.00	
40.00	60.00	4	c1	3.00	20.00	10.00	30.00	
								60.00
4	5	4	c1	3.00	20.00	10.00	30.00	
60.00	80.00	5	c1	3.00	20.00	10.00	30.00	
								60.00
5	6	5	c1	3.00	20.00	10.00	30.00	
80.00	100.00	6	c1	3.00	20.00	10.00	30.00	
								60.00
6	7	6	c1	3.00	20.00	10.00	30.00	
100.00	120.00	7	c1	3.00	20.00	10.00	30.00	
								60.00
7	8	7	c1	3.00	20.00	10.00	30.00	
120.00	140.00	8	c1	2.98	20.00	10.00	29.80	
								59.80
8	9	8	c1	2.98	20.00	10.00	29.80	
140.00	160.00	9	c1	3.00	20.00	10.00	30.00	
								59.80
9	10	9	c1	3.00	20.00	10.00	30.00	
160.00	180.00	10	c1	3.00	20.00	10.00	30.00	
								60.00
10	11	10	c1	3.00	20.00	10.00	30.00	
180.00	200.00	11	c1	3.00	20.00	10.00	30.00	
								60.00
11	12	11	c1	3.00	20.00	10.00	30.00	
200.00	220.00	12	c1	3.00	20.00	10.00	30.00	
								60.00
12	13	12	c1	3.00	20.00	10.00	30.00	
220.00	240.00	13	c1	3.00	20.00	10.00	30.00	
								60.00
13	14	13	c1	3.00	20.00	10.00	30.00	
240.00	260.00	14	c1	3.00	20.00	10.00	30.00	
								60.00
14	15	14	c1	3.00	20.00	10.00	30.00	
								30.00

BASE

DALLA SEZ. DA PROG.	ALLA SEZ. A PROG.	SEZIONE	FIGURA	LUNGHEZZA	DISTANZA SEZIONI ml	DISTANZA DI CALCOLO ml	AREA PARZIALE mq	AREA TOTALE mq
1	2	1	d1	3.00	20.00	10.00	30.00	
0.00	20.00	2	d1	3.00	20.00	10.00	30.00	
								60.00
2	3	2	d1	3.00	20.00	10.00	30.00	
20.00	40.00	3	d1	3.00	20.00	10.00	30.00	
								60.00
3	4	3	d1	3.00	20.00	10.00	30.00	
40.00	60.00	4	d1	3.00	20.00	10.00	30.00	
								60.00
4	5	4	d1	3.00	20.00	10.00	30.00	
60.00	80.00	5	d1	3.00	20.00	10.00	30.00	
								60.00
5	6	5	d1	3.00	20.00	10.00	30.00	
80.00	100.00	6	d1	3.00	20.00	10.00	30.00	
								60.00
6	7	6	d1	3.00	20.00	10.00	30.00	
100.00	120.00	7	d1	3.00	20.00	10.00	30.00	
								60.00
7	8	7	d1	3.00	20.00	10.00	30.00	
120.00	140.00	8	d1	2.98	20.00	10.00	29.80	
								59.80
8	9	8	d1	2.98	20.00	10.00	29.80	
140.00	160.00	9	d1	3.00	20.00	10.00	30.00	
								59.80
9	10	9	d1	3.00	20.00	10.00	30.00	
160.00	180.00	10	d1	3.00	20.00	10.00	30.00	
								60.00
10	11	10	d1	3.00	20.00	10.00	30.00	
180.00	200.00	11	d1	3.00	20.00	10.00	30.00	
								60.00
11	12	11	d1	3.00	20.00	10.00	30.00	
200.00	220.00	12	d1	3.00	20.00	10.00	30.00	
								60.00
12	13	12	d1	3.00	20.00	10.00	30.00	
220.00	240.00	13	d1	3.00	20.00	10.00	30.00	
								60.00
13	14	13	d1	3.00	20.00	10.00	30.00	
240.00	260.00	14	d1	3.00	20.00	10.00	30.00	
								60.00
14	15	14	d1	3.00	20.00	10.00	30.00	
								30.00

Volume dalla sezione 1 alla sezione 16

ARTICOLO		VOLUME
STERRO	mc	126.117
RIPORTO	mc	787.524
a USURA	mq	809.60
b VEGETALE	mq	890.20
c BINDER	mq	809.60
d BASE	mq	809.60

IDRAULICA

ALLEGATI AL COMPUTO METRICO ESTIMATIVO

RIPROFILATURA CANALE VECCHIA CONIA

movimenti terra

VECCHIA CORNIA

		CALCOLO DELLE AREE		Foglio n. 1	
RILEVATO					
N. SEZIONE PROG.	FIG.	ELEMENTI DI CALCOLO	AREA ELEMENTARE mq	AREA FIGURA mq	NOTE
1	A1	(-9.00--9.42)x(3.31+2.89)/2	1.30		
0.00		(-6.00--9.00)x(3.31+3.31)/2	9.93		
		(-4.60--6.00)x(1.91+3.31)/2	3.65		
		(-4.67--4.60)x(1.96+1.91)/2	-0.14		
		(-5.75--4.67)x(2.65+1.96)/2	-2.49		
		(-5.78--5.75)x(2.67+2.65)/2	-0.08		
		(-5.80--5.78)x(2.67+2.67)/2	-0.05		
		(-6.89--5.80)x(2.84+2.67)/2	-3.00		
		(-7.70--6.89)x(2.83+2.84)/2	-2.30		
		(-8.00--7.70)x(2.83+2.83)/2	-0.85		
		(-8.41--8.00)x(2.84+2.83)/2	-1.16		
		(-9.11--8.41)x(2.89+2.84)/2	-2.01		
		(-9.42--9.11)x(2.89+2.89)/2	-0.90		
				1.90	
1	A2	(6.00-5.44)x(3.31+2.75)/2	1.70		
0.00		(9.00-6.00)x(3.31+3.31)/2	9.93		
		(9.72-9.00)x(2.59+3.31)/2	2.12		
		(9.47-9.72)x(2.62+2.59)/2	-0.65		
		(8.67-9.47)x(2.68+2.62)/2	-2.12		
		(7.56-8.67)x(2.75+2.68)/2	-3.01		
		(7.55-7.56)x(2.76+2.75)/2	-0.03		
		(6.44-7.55)x(2.74+2.76)/2	-3.05		
		(5.65-6.44)x(2.75+2.74)/2	-2.17		
		(5.44-5.65)x(2.75+2.75)/2	-0.58		
				2.14	
2	A1	(-9.00--9.31)x(3.30+2.99)/2	0.97		
14.07		(-6.00--9.00)x(3.30+3.30)/2	9.90		
		(-4.24--6.00)x(1.54+3.30)/2	4.26		
		(-4.99--4.24)x(2.17+1.54)/2	-1.39		
		(-5.71--4.99)x(2.59+2.17)/2	-1.71		
		(-6.10--5.71)x(2.83+2.59)/2	-1.06		
		(-6.64--6.10)x(2.89+2.83)/2	-1.54		
		(-7.21--6.64)x(2.89+2.89)/2	-1.65		
		(-7.62--7.21)x(2.89+2.89)/2	-1.18		
		(-8.32--7.62)x(2.89+2.89)/2	-2.02		
		(-9.30--8.32)x(2.99+2.89)/2	-2.88		
		(-9.31--9.30)x(2.99+2.99)/2	-0.03		
				1.67	
2	A2	(6.00-5.55)x(3.30+2.85)/2	1.38		
14.07		(9.00-6.00)x(3.30+3.30)/2	9.90		
		(9.09-9.00)x(3.21+3.30)/2	0.29		
		(8.35-9.09)x(3.13+3.21)/2	-2.35		
		(7.85-8.35)x(3.07+3.13)/2	-1.55		
		(7.23-7.85)x(2.98+3.07)/2	-1.88		
		(6.66-7.23)x(2.93+2.98)/2	-1.68		
		(6.12-6.66)x(2.88+2.93)/2	-1.57		
		(5.74-6.12)x(2.86+2.88)/2	-1.09		
		(5.55-5.74)x(2.85+2.86)/2	-0.54		
				0.91	
3	A1	(-9.00--9.32)x(3.30+2.98)/2	1.00		
29.07		(-6.00--9.00)x(3.30+3.30)/2	9.90		
		(-4.05--6.00)x(1.35+3.30)/2	4.53		
		(-4.06--4.05)x(1.36+1.35)/2	-0.01		
		(-4.58--4.06)x(1.72+1.36)/2	-0.80		
		(-5.31--4.58)x(2.34+1.72)/2	-1.48		
		(-5.70--5.31)x(2.69+2.34)/2	-0.98		
		(-5.97--5.70)x(2.74+2.69)/2	-0.73		
		(-6.81--5.97)x(3.04+2.74)/2	-2.43		
		(-7.88--6.81)x(2.98+3.04)/2	-3.22		
		(-7.92--7.88)x(2.98+2.98)/2	-0.12		
		(-7.97--7.92)x(2.98+2.98)/2	-0.15		
		(-9.03--7.97)x(2.97+2.98)/2	-3.15		
		(-9.32--9.03)x(2.98+2.97)/2	-0.86		
				1.50	
3	A2	(6.00-5.77)x(3.30+3.07)/2	0.73		
29.07		(7.96-6.00)x(3.30+3.30)/2	6.47		
		(7.64-7.96)x(3.28+3.30)/2	-1.05		
		(7.38-7.64)x(3.25+3.28)/2	-0.85		
		(6.53-7.38)x(3.14+3.25)/2	-2.72		
		(5.77-6.53)x(3.07+3.14)/2	-2.36		
				0.22	
4	A1	(-9.00--9.19)x(3.29+3.10)/2	0.61		
44.07		(-6.00--9.00)x(3.29+3.29)/2	9.87		
		(-4.02--6.00)x(1.31+3.29)/2	4.55		
		(-4.18--4.02)x(1.38+1.31)/2	-0.22		
		(-4.91--4.18)x(1.84+1.38)/2	-1.18		
		(-5.29--4.91)x(2.21+1.84)/2	-0.77		
		(-6.24--5.29)x(2.85+2.21)/2	-2.40		
		(-6.40--6.24)x(2.98+2.85)/2	-0.47		
		(-6.64--6.40)x(3.02+2.98)/2	-0.72		
		(-7.51--6.64)x(3.08+3.02)/2	-2.65		
		(-8.14--7.51)x(3.08+3.08)/2	-1.94		
		(-8.63--8.14)x(3.07+3.08)/2	-1.51		
		(-9.19--8.63)x(3.10+3.07)/2	-1.73		
				1.44	
4	A2	(6.00-5.80)x(3.29+3.09)/2	0.64		
44.07		(9.00-6.00)x(3.29+3.29)/2	9.87		
		(9.10-9.00)x(3.19+3.29)/2	0.32		
		(9.03-9.10)x(3.19+3.19)/2	-0.22		
		(8.04-9.03)x(3.26+3.19)/2	-3.19		
		(7.12-8.04)x(3.22+3.26)/2	-2.98		
		(6.93-7.12)x(3.22+3.22)/2	-0.61		
		(6.66-6.93)x(3.19+3.22)/2	-0.87		
		(5.82-6.66)x(3.09+3.19)/2	-2.64		
		(5.80-5.82)x(3.09+3.09)/2	-0.06		
				0.26	
5	A1	(-9.00--9.18)x(3.28+3.10)/2	0.57		
59.14		(-6.00--9.00)x(3.28+3.28)/2	9.84		
		(-3.76--6.00)x(1.04+3.28)/2	4.84		
		(-4.50--3.76)x(1.66+1.04)/2	-1.00		
		(-4.86--4.50)x(1.92+1.66)/2	-0.64		
		(-5.43--4.86)x(2.46+1.92)/2	-1.25		
		(-5.96--5.43)x(2.93+2.46)/2	-1.43		
		(-6.30--5.96)x(2.98+2.93)/2	-1.00		
		(-7.06--6.30)x(3.16+2.98)/2	-2.33		
		(-8.11--7.06)x(3.09+3.16)/2	-3.28		
		(-8.16--8.11)x(3.08+3.09)/2	-0.15		
		A RIPORTARE mq	4.17		

	CALCOLO DELLE AREE		Foglio n. 2

RILEVATO

N. SEZIONE PROG.	FIG.	ELEMENTI DI CALCOLO	AREA ELEMENTARE mq	AREA FIGURA mq	NOTE
		RIPORTO mq	4.17		
		(-8.24--8.16)x(3.08+3.08)/2	-0.25		
		(-9.18--8.24)x(3.10+3.08)/2	-2.90		
				1.02	
5	A2	(6.00-5.90)x(3.28+3.18)/2	0.32		
59.14		(6.76-6.00)x(3.28+3.28)/2	2.49		
		(6.35-6.76)x(3.24+3.28)/2	-1.34		
		(6.15-6.35)x(3.22+3.24)/2	-0.65		
		(5.90-6.15)x(3.18+3.22)/2	-0.80		
				0.02	
5	A3	(9.00-7.82)x(3.28+3.28)/2	3.87		
59.14		(9.17-9.00)x(3.11+3.28)/2	0.54		
		(8.65-9.17)x(3.16+3.11)/2	-1.63		
		(8.35-8.65)x(3.20+3.16)/2	-0.95		
		(7.82-8.35)x(3.28+3.20)/2	-1.72		
				0.11	
6	A1	(-9.00--9.09)x(3.28+3.19)/2	0.29		
74.05		(-7.16--9.00)x(3.28+3.28)/2	6.04		
		(-7.19--7.16)x(3.28+3.28)/2	-0.10		
		(-8.13--7.19)x(3.21+3.28)/2	-3.05		
		(-8.92--8.13)x(3.20+3.21)/2	-2.53		
		(-9.09--8.92)x(3.19+3.20)/2	-0.54		
				0.11	
6	A2	(-6.00--7.00)x(3.28+3.28)/2	3.28		
74.05		(-5.30--6.00)x(2.58+3.28)/2	2.05		
		(-5.47--5.30)x(2.69+2.58)/2	-0.45		
		(-5.95--5.47)x(3.08+2.69)/2	-1.38		
		(-6.78--5.95)x(3.25+3.08)/2	-2.63		
		(-7.00--6.78)x(3.28+3.25)/2	-0.72		
				0.15	
6	A3	(6.00-5.81)x(3.28+3.09)/2	0.61		
74.05		(9.00-6.00)x(3.28+3.28)/2	9.84		
		(9.16-9.00)x(3.12+3.28)/2	0.51		
		(8.36-9.16)x(3.22+3.12)/2	-2.54		
		(8.25-8.36)x(3.23+3.22)/2	-0.35		
		(8.07-8.25)x(3.24+3.23)/2	-0.58		
		(7.16-8.07)x(3.24+3.24)/2	-2.95		
		(6.63-7.16)x(3.18+3.24)/2	-1.70		
		(6.07-6.63)x(3.11+3.18)/2	-1.76		
		(5.81-6.07)x(3.09+3.11)/2	-0.81		
				0.27	
7	A1	(-9.00--9.11)x(3.27+3.17)/2	0.35		
89.01		(-6.00--9.00)x(3.27+3.27)/2	9.81		
		(-5.55--6.00)x(2.83+3.27)/2	1.37		
		(-5.99--5.55)x(3.12+2.83)/2	-1.31		
		(-6.73--5.99)x(3.15+3.12)/2	-2.32		
		(-7.08--6.73)x(3.23+3.15)/2	-1.12		
		(-7.70--7.08)x(3.17+3.23)/2	-1.98		
		(-8.18--7.70)x(3.13+3.17)/2	-1.51		
		(-8.45--8.18)x(3.15+3.13)/2	-0.85		
		(-9.11--8.45)x(3.17+3.15)/2	-2.09		
				0.35	
7	A2	(6.00-5.59)x(3.27+2.86)/2	1.26		
89.01		(9.00-6.00)x(3.27+3.27)/2	9.81		
		(9.25-9.00)x(3.02+3.27)/2	0.79		
		(8.83-9.25)x(3.08+3.02)/2	-1.28		
		(8.21-8.83)x(3.19+3.08)/2	-1.94		
		(7.15-8.21)x(3.08+3.19)/2	-3.32		
		(7.12-7.15)x(3.07+3.08)/2	-0.09		
		(7.10-7.12)x(3.07+3.07)/2	-0.06		
		(6.03-7.10)x(2.88+3.07)/2	-3.18		
		(5.59-6.03)x(2.86+2.88)/2	-1.26		
				0.73	
8	A1	(-6.00--8.78)x(3.27+3.27)/2	9.09		
103.97		(-5.93--6.00)x(3.20+3.27)/2	0.23		
		(-6.03--5.93)x(3.19+3.20)/2	-0.32		
		(-6.25--6.03)x(3.17+3.19)/2	-0.70		
		(-7.12--6.25)x(3.10+3.17)/2	-2.73		
		(-7.98--7.12)x(3.14+3.10)/2	-2.68		
		(-8.22--7.98)x(3.14+3.14)/2	-0.75		
		(-8.32--8.22)x(3.16+3.14)/2	-0.31		
		(-8.62--8.32)x(3.23+3.16)/2	-0.96		
		(-8.78--8.62)x(3.27+3.23)/2	-0.52		
				0.35	
8	A2	(6.00-3.76)x(3.27+1.02)/2	4.80		
103.97		(9.00-6.00)x(3.27+3.27)/2	9.81		
		(9.19-9.00)x(3.08+3.27)/2	0.60		
		(8.17-9.19)x(3.00+3.08)/2	-3.10		
		(7.57-8.17)x(2.97+3.00)/2	-1.79		
		(7.08-7.57)x(2.95+2.97)/2	-1.45		
		(6.23-7.08)x(2.80+2.95)/2	-2.44		
		(5.99-6.23)x(2.74+2.80)/2	-0.66		
		(5.85-5.99)x(2.61+2.74)/2	-0.37		
		(4.89-5.85)x(1.91+2.61)/2	-2.17		
		(4.12-4.89)x(1.31+1.91)/2	-1.24		
		(3.80-4.12)x(1.04+1.31)/2	-0.38		
		(3.76-3.80)x(1.02+1.04)/2	-0.04		
				1.57	
9	A1	(-6.00--8.29)x(3.26+3.26)/2	7.47		
118.92		(-5.86--6.00)x(3.12+3.26)/2	0.45		
		(-6.07--5.86)x(3.09+3.12)/2	-0.65		
		(-6.57--6.07)x(3.07+3.09)/2	-1.54		
		(-7.16--6.57)x(3.07+3.07)/2	-1.81		
		(-7.51--7.16)x(3.13+3.07)/2	-1.08		
		(-8.25--7.51)x(3.24+3.13)/2	-2.36		
		(-8.29--8.25)x(3.26+3.24)/2	-0.13		
				0.35	
9	A2	(6.00-3.33)x(3.26+0.59)/2	5.14		
118.92		(9.00-6.00)x(3.26+3.26)/2	9.78		
		(9.29-9.00)x(2.97+3.26)/2	0.90		
		(9.22-9.29)x(2.96+2.97)/2	-0.21		
		(8.27-9.22)x(2.91+2.96)/2	-2.79		
		(8.13-8.27)x(2.90+2.91)/2	-0.41		
		(8.05-8.13)x(2.87+2.90)/2	-0.23		
		(7.04-8.05)x(2.53+2.87)/2	-2.73		
		(6.32-7.04)x(2.19+2.53)/2	-1.70		
		A RIPORTARE mq	7.75		

	CALCOLO DELLE AREE		Foglio n. 3

RILEVATO

N. SEZIONE PROG.	FIG.	ELEMENTI DI CALCOLO	AREA ELEMENTARE mq	AREA FIGURA mq	NOTE
		RIPORTO mq	7.75		
		(5.95-6.32)x(2.01+2.19)/2	-0.78		
		(5.30-5.95)x(1.62+2.01)/2	-1.18		
		(4.98-5.30)x(1.40+1.62)/2	-0.48		
		(4.85-4.98)x(1.33+1.40)/2	-0.18		
		(4.59-4.85)x(1.20+1.33)/2	-0.33		
		(3.76-4.59)x(0.71+1.20)/2	-0.79		
		(3.33-3.76)x(0.59+0.71)/2	-0.28		
				3.73	
10	A1	(-9.00--9.07)x(3.25+3.18)/2	0.23		
133.87		(-6.00--9.00)x(3.25+3.25)/2	9.75		
		(-5.80--6.00)x(3.06+3.25)/2	0.63		
		(-6.11--5.80)x(3.03+3.06)/2	-0.94		
		(-7.02--6.11)x(3.03+3.03)/2	-2.76		
		(-7.20--7.02)x(3.03+3.03)/2	-0.55		
		(-7.51--7.20)x(3.06+3.03)/2	-0.94		
		(-8.29--7.51)x(3.13+3.06)/2	-2.41		
		(-8.75--8.29)x(3.16+3.13)/2	-1.45		
		(-9.07--8.75)x(3.18+3.16)/2	-1.01		
				0.55	
10	A2	(6.00-3.12)x(3.25+0.37)/2	5.21		
133.87		(9.00-6.00)x(3.25+3.25)/2	9.75		
		(9.50-9.00)x(2.75+3.25)/2	1.50		
		(9.19-9.50)x(2.71+2.75)/2	-0.85		
		(8.53-9.19)x(2.43+2.71)/2	-1.70		
		(8.09-8.53)x(2.31+2.43)/2	-1.04		
		(7.34-8.09)x(1.95+2.31)/2	-1.60		
		(7.00-7.34)x(1.81+1.95)/2	-0.64		
		(6.80-7.00)x(1.71+1.81)/2	-0.35		
		(5.91-6.80)x(1.27+1.71)/2	-1.33		
		(5.07-5.91)x(0.85+1.27)/2	-0.89		
		(4.82-5.07)x(0.70+0.85)/2	-0.19		
		(4.37-4.82)x(0.56+0.70)/2	-0.28		
		(3.72-4.37)x(0.38+0.56)/2	-0.31		
		(3.35-3.72)x(0.38+0.38)/2	-0.14		
		(3.12-3.35)x(0.37+0.38)/2	-0.09		
				7.05	
11	A1	(-9.00--9.01)x(3.25+3.23)/2	0.03		
148.82		(-6.00--9.00)x(3.25+3.25)/2	9.75		
		(-5.84--6.00)x(3.08+3.25)/2	0.51		
		(-5.97--5.84)x(3.08+3.08)/2	-0.40		
		(-6.15--5.97)x(3.09+3.08)/2	-0.56		
		(-6.54--6.15)x(3.13+3.09)/2	-1.21		
		(-7.24--6.54)x(3.19+3.13)/2	-2.21		
		(-8.27--7.24)x(3.23+3.19)/2	-3.31		
		(-8.33--8.27)x(3.23+3.23)/2	-0.19		
		(-8.44--8.33)x(3.23+3.23)/2	-0.36		
		(-9.01--8.44)x(3.23+3.23)/2	-1.84		
				0.21	
11	A2	(6.00-3.14)x(3.25+0.38)/2	5.19		
148.82		(9.00-6.00)x(3.25+3.25)/2	9.75		
		(9.62-9.00)x(2.62+3.25)/2	1.82		
		(9.37-9.62)x(2.59+2.62)/2	-0.65		
		(9.15-9.37)x(2.55+2.59)/2	-0.57		
		(9.02-9.15)x(2.47+2.55)/2	-0.33		
		(8.06-9.02)x(1.98+2.47)/2	-2.14		
		(7.29-8.06)x(1.44+1.98)/2	-1.32		
		(6.96-7.29)x(1.21+1.44)/2	-0.44		
		(6.41-6.96)x(0.95+1.21)/2	-0.59		
		(5.87-6.41)x(0.74+0.95)/2	-0.46		
		(5.56-5.87)x(0.66+0.74)/2	-0.22		
		(4.78-5.56)x(0.44+0.66)/2	-0.43		
		(3.83-4.78)x(0.32+0.44)/2	-0.36		
		(3.69-3.83)x(0.30+0.32)/2	-0.04		
		(3.44-3.69)x(0.33+0.30)/2	-0.08		
		(3.14-3.44)x(0.38+0.33)/2	-0.11		
				9.02	
12	A1	(-6.00--6.35)x(3.24+3.24)/2	1.13		
163.77		(-5.95--6.00)x(3.19+3.24)/2	0.16		
		(-6.05--5.95)x(3.19+3.19)/2	-0.32		
		(-6.18--6.05)x(3.20+3.19)/2	-0.42		
		(-6.35--6.18)x(3.24+3.20)/2	-0.55		
12	A2	(6.00-3.34)x(3.24+0.58)/2	5.08		
163.77		(9.00-6.00)x(3.24+3.24)/2	9.72		
		(9.74-9.00)x(2.50+3.24)/2	2.12		
		(9.50-9.74)x(2.45+2.50)/2	-0.59		
		(9.11-9.50)x(2.39+2.45)/2	-0.94		
		(8.43-9.11)x(1.95+2.39)/2	-1.48		
		(8.02-8.43)x(1.65+1.95)/2	-0.74		
		(7.33-8.02)x(1.12+1.65)/2	-0.96		
		(6.93-7.33)x(0.91+1.12)/2	-0.41		
		(6.05-6.93)x(0.66+0.91)/2	-0.69		
		(5.83-6.05)x(0.58+0.66)/2	-0.14		
		(5.46-5.83)x(0.53+0.58)/2	-0.21		
		(4.74-5.46)x(0.46+0.53)/2	-0.36		
		(4.32-4.74)x(0.50+0.46)/2	-0.20		
		(3.65-4.32)x(0.54+0.50)/2	-0.35		
		(3.34-3.65)x(0.58+0.54)/2	-0.17		
				9.68	
13	A1	(-6.00--6.61)x(3.23+3.23)/2	1.97		
178.72		(-5.92--6.00)x(3.16+3.23)/2	0.26		
		(-6.22--5.92)x(3.17+3.16)/2	-0.95		
		(-6.61--6.22)x(3.23+3.17)/2	-1.25		
				0.03	
13	A2	(6.00-3.21)x(3.23+0.44)/2	5.12		
178.72		(9.00-6.00)x(3.23+3.23)/2	9.69		
		(9.76-9.00)x(2.47+3.23)/2	2.17		
		(9.07-9.76)x(2.41+2.47)/2	-1.68		
		(8.27-9.07)x(1.85+2.41)/2	-1.70		
		(7.98-8.27)x(1.67+1.85)/2	-0.51		
		(7.49-7.98)x(1.31+1.67)/2	-0.73		
		(6.89-7.49)x(0.90+1.31)/2	-0.66		
		(6.54-6.89)x(0.79+0.90)/2	-0.30		
		(5.80-6.54)x(0.54+0.79)/2	-0.49		
		(4.81-5.80)x(0.43+0.54)/2	-0.48		
		A RIPORTARE mq	10.43		

	CALCOLO DELLE AREE		Foglio n. 4

RILEVATO

N. SEZIONE PROG.	FIG.	ELEMENTI DI CALCOLO	AREA ELEMENTARE mq	AREA FIGURA mq	NOTE
		RIPORTO mq	10.43		
		(4.70-4.81)x(0.41+0.43)/2	-0.05		
		(4.52-4.70)x(0.39+0.41)/2	-0.07		
		(3.61-4.52)x(0.34+0.39)/2	-0.33		
		(3.21-3.61)x(0.44+0.34)/2	-0.16		
				9.82	
14	A1	(6.00-3.26)x(3.23+0.48)/2	5.08		
193.66		(9.00-6.00)x(3.23+3.23)/2	9.69		
		(9.70-9.00)x(2.53+3.23)/2	2.02		
		(9.51-9.70)x(2.51+2.53)/2	-0.48		
		(9.04-9.51)x(2.44+2.51)/2	-1.16		
		(8.76-9.04)x(2.24+2.44)/2	-0.66		
		(7.94-8.76)x(1.72+2.24)/2	-1.62		
		(7.03-7.94)x(1.03+1.72)/2	-1.25		
		(6.85-7.03)x(0.88+1.03)/2	-0.17		
		(6.54-6.85)x(0.76+0.88)/2	-0.25		
		(5.76-6.54)x(0.52+0.76)/2	-0.50		
		(5.31-5.76)x(0.45+0.52)/2	-0.22		
		(4.67-5.31)x(0.34+0.45)/2	-0.25		
		(3.58-4.67)x(0.39+0.34)/2	-0.40		
		(3.57-3.58)x(0.39+0.39)/2	-0.00		
		(3.26-3.57)x(0.48+0.39)/2	-0.13		
				9.70	
15	A1	(6.00-3.43)x(3.22+0.65)/2	4.97		
208.61		(9.00-6.00)x(3.22+3.22)/2	9.66		
		(9.82-9.00)x(2.40+3.22)/2	2.30		
		(9.68-9.82)x(2.35+2.40)/2	-0.33		
		(9.00-9.68)x(2.04+2.35)/2	-1.49		
		(8.56-9.00)x(1.63+2.04)/2	-0.81		
		(7.91-8.56)x(1.06+1.63)/2	-0.87		
		(7.53-7.91)x(0.94+1.06)/2	-0.38		
		(6.82-7.53)x(0.67+0.94)/2	-0.57		
		(5.80-6.82)x(0.50+0.67)/2	-0.60		
		(5.72-5.80)x(0.49+0.50)/2	-0.04		
		(5.59-5.72)x(0.47+0.49)/2	-0.06		
		(4.63-5.59)x(0.38+0.47)/2	-0.41		
		(4.08-4.63)x(0.52+0.38)/2	-0.25		
		(3.54-4.08)x(0.61+0.52)/2	-0.31		
		(3.43-3.54)x(0.65+0.61)/2	-0.07		
				10.74	
16	A1	(6.00-3.71)x(3.21+0.92)/2	4.73		
223.55		(9.00-6.00)x(3.21+3.21)/2	9.63		
		(10.18-9.00)x(2.03+3.21)/2	3.09		
		(10.08-10.18)x(1.97+2.03)/2	-0.20		
		(9.90-10.08)x(1.83+1.97)/2	-0.34		
		(8.99-9.90)x(1.07+1.83)/2	-1.32		
		(8.15-8.99)x(0.71+1.07)/2	-0.75		
		(7.89-8.15)x(0.59+0.71)/2	-0.17		
		(7.46-7.89)x(0.54+0.59)/2	-0.24		
		(6.80-7.46)x(0.48+0.54)/2	-0.34		
		(6.39-6.80)x(0.48+0.48)/2	-0.20		
		(5.70-6.39)x(0.44+0.48)/2	-0.32		
		(4.64-5.70)x(0.57+0.44)/2	-0.54		
		(4.61-4.64)x(0.57+0.57)/2	-0.02		
		(4.59-4.61)x(0.57+0.57)/2	-0.01		
		(4.55-4.59)x(0.59+0.57)/2	-0.02		
		(3.79-4.55)x(0.88+0.59)/2	-0.56		
		(3.71-3.79)x(0.92+0.88)/2	-0.07		
				12.35	
17	A1	(6.00-3.96)x(3.21+1.17)/2	4.47		
238.49		(9.00-6.00)x(3.21+3.21)/2	9.63		
		(10.39-9.00)x(1.82+3.21)/2	3.50		
		(10.37-10.39)x(1.80+1.82)/2	-0.04		
		(9.88-10.37)x(1.34+1.80)/2	-0.77		
		(9.08-9.88)x(0.80+1.34)/2	-0.86		
		(8.78-9.08)x(0.60+0.80)/2	-0.21		
		(8.59-8.78)x(0.56+0.60)/2	-0.11		
		(7.68-8.59)x(0.30+0.56)/2	-0.39		
		(6.81-7.68)x(0.21+0.30)/2	-0.22		
		(6.58-6.81)x(0.17+0.21)/2	-0.04		
		(6.22-6.58)x(0.23+0.17)/2	-0.07		
		(5.49-6.22)x(0.38+0.23)/2	-0.22		
		(5.03-5.49)x(0.59+0.38)/2	-0.22		
		(4.39-5.03)x(0.90+0.59)/2	-0.48		
		(3.96-4.39)x(1.17+0.90)/2	-0.45		
				13.52	
18	A1	(6.00-4.09)x(3.20+1.29)/2	4.29		
253.43		(9.00-6.00)x(3.20+3.20)/2	9.60		
		(10.63-9.00)x(1.57+3.20)/2	3.89		
		(9.65-10.63)x(0.73+1.57)/2	-1.13		
		(8.92-9.65)x(0.54+0.73)/2	-0.46		
		(8.55-8.92)x(0.41+0.54)/2	-0.18		
		(7.96-8.55)x(0.31+0.41)/2	-0.21		
		(7.59-7.96)x(0.25+0.31)/2	-0.10		
		(7.45-7.59)x(0.23+0.25)/2	-0.03		
		(6.80-7.45)x(0.20+0.23)/2	-0.14		
		(6.35-6.80)x(0.24+0.20)/2	-0.10		
		(6.01-6.35)x(0.34+0.24)/2	-0.10		
		(5.26-6.01)x(0.62+0.34)/2	-0.36		
		(5.21-5.26)x(0.64+0.62)/2	-0.03		
		(5.09-5.21)x(0.71+0.64)/2	-0.08		
		(4.16-5.09)x(1.24+0.71)/2	-0.91		
		(4.09-4.16)x(1.29+1.24)/2	-0.09		
				13.86	
19	A1	(6.00-4.48)x(3.19+1.67)/2	3.69		
268.37		(9.00-6.00)x(3.19+3.19)/2	9.57		
		(11.13-9.00)x(1.07+3.19)/2	4.54		
		(11.02-11.13)x(1.02+1.07)/2	-0.11		
		(10.52-11.02)x(0.72+1.02)/2	-0.44		
		(9.70-10.52)x(0.55+0.72)/2	-0.52		
		(9.42-9.70)x(0.51+0.55)/2	-0.15		
		(9.24-9.42)x(0.50+0.51)/2	-0.09		
		(8.32-9.24)x(0.43+0.50)/2	-0.43		
		(7.46-8.32)x(0.40+0.43)/2	-0.36		
		(7.22-7.46)x(0.38+0.40)/2	-0.09		
		(6.84-7.22)x(0.46+0.38)/2	-0.16		
		A RIPORTARE mq	15.45		

	CALCOLO DELLE AREE		Foglio n. 5

RILEVATO

N. SEZIONE PROG.	FIG.	ELEMENTI DI CALCOLO	AREA ELEMENTARE mq	AREA FIGURA mq	NOTE
		RIPORTO mq	15.45		
		(6.12-6.84)x(0.69+0.46)/2	-0.41		
		(5.53-6.12)x(1.03+0.69)/2	-0.51		
		(5.03-5.53)x(1.36+1.03)/2	-0.60		
		(4.48-5.03)x(1.67+1.36)/2	-0.83		
				13.10	
31	A1	(-10.00--10.91)x(3.12+2.21)/2	2.43		
447.77		(-7.00--10.00)x(3.12+3.12)/2	9.36		
		(-6.31--7.00)x(2.43+3.12)/2	1.91		
		(-6.47--6.31)x(2.34+2.43)/2	-0.38		
		(-7.31--6.47)x(1.85+2.34)/2	-1.76		
		(-7.54--7.31)x(1.73+1.85)/2	-0.41		
		(-7.63--7.54)x(1.68+1.73)/2	-0.15		
		(-8.60--7.63)x(1.18+1.68)/2	-1.39		
		(-9.10--8.60)x(1.42+1.18)/2	-0.65		
		(-9.67--9.10)x(1.62+1.42)/2	-0.87		
		(-10.58--9.67)x(2.12+1.62)/2	-1.70		
		(-10.73--10.58)x(2.19+2.12)/2	-0.32		
		(-10.91--10.73)x(2.21+2.19)/2	-0.40		
				5.67	
35	A1	(-9.00--9.30)x(3.06+2.76)/2	0.87		
567.31		(-6.00--9.00)x(3.06+3.06)/2	9.18		
		(-5.74--6.00)x(2.80+3.06)/2	0.76		
		(-6.07--5.74)x(2.81+2.80)/2	-0.93		
		(-6.78--6.07)x(2.83+2.81)/2	-2.00		
		(-7.06--6.78)x(2.83+2.83)/2	-0.79		
		(-7.85--7.06)x(2.83+2.83)/2	-2.24		
		(-8.53--7.85)x(2.82+2.83)/2	-1.92		
		(-8.91--8.53)x(2.82+2.82)/2	-1.07		
		(-9.30--8.91)x(2.76+2.82)/2	-1.09		
				0.77	
35	A2	(6.00-3.95)x(3.06+1.01)/2	4.17		
567.31		(7.28-6.00)x(3.06+3.06)/2	3.92		
		(7.05-7.28)x(3.01+3.06)/2	-0.70		
		(6.22-7.05)x(2.47+3.01)/2	-2.27		
		(5.99-6.22)x(2.33+2.47)/2	-0.55		
		(5.39-5.99)x(1.94+2.33)/2	-1.28		
		(4.93-5.39)x(1.62+1.94)/2	-0.82		
		(4.75-4.93)x(1.53+1.62)/2	-0.28		
		(3.95-4.75)x(1.01+1.53)/2	-1.02		
				1.17	
36	A1	(-9.00--9.45)x(3.05+2.60)/2	1.27		
587.65		(-6.00--9.00)x(3.05+3.05)/2	9.15		
		(-5.73--6.00)x(2.78+3.05)/2	0.79		
		(-5.97--5.73)x(2.78+2.78)/2	-0.67		
		(-6.06--5.97)x(2.78+2.78)/2	-0.25		
		(-6.22--6.06)x(2.77+2.78)/2	-0.44		
		(-7.13--6.22)x(2.74+2.77)/2	-2.51		
		(-7.70--7.13)x(2.69+2.74)/2	-1.55		
		(-8.19--7.70)x(2.65+2.69)/2	-1.31		
		(-9.17--8.19)x(2.63+2.65)/2	-2.59		
		(-9.25--9.17)x(2.62+2.63)/2	-0.21		
		(-9.45--9.25)x(2.60+2.62)/2	-0.52		
				1.16	
36	A2	(6.00-4.32)x(3.05+1.37)/2	3.71		
587.65		(9.00-6.00)x(3.05+3.05)/2	9.15		
		(9.49-9.00)x(2.56+3.05)/2	1.37		
		(8.84-9.49)x(2.22+2.56)/2	-1.55		
		(8.53-8.84)x(2.03+2.22)/2	-0.66		
		(7.77-8.53)x(1.63+2.03)/2	-1.39		
		(7.06-7.77)x(1.20+1.63)/2	-1.00		
		(6.71-7.06)x(1.02+1.20)/2	-0.39		
		(5.81-6.71)x(0.80+1.02)/2	-0.82		
		(5.65-5.81)x(0.78+0.80)/2	-0.13		
		(5.58-5.65)x(0.82+0.78)/2	-0.06		
		(4.58-5.58)x(1.24+0.82)/2	-1.03		
		(4.32-4.58)x(1.37+1.24)/2	-0.34		
				6.86	
37	A1	(-9.00--9.22)x(3.05+2.82)/2	0.65		
597.48		(-6.00--9.00)x(3.05+3.05)/2	9.15		
		(-5.91--6.00)x(2.95+3.05)/2	0.27		
		(-5.92--5.91)x(2.95+2.95)/2	-0.03		
		(-6.67--5.92)x(2.96+2.95)/2	-2.22		
		(-7.40--6.67)x(2.94+2.96)/2	-2.15		
		(-7.73--7.40)x(2.94+2.94)/2	-0.97		
		(-7.92--7.73)x(2.93+2.94)/2	-0.56		
		(-8.60--7.92)x(2.86+2.93)/2	-1.97		
		(-8.75--8.60)x(2.84+2.86)/2	-0.43		
		(-8.80--8.75)x(2.84+2.84)/2	-0.14		
		(-8.88--8.80)x(2.83+2.84)/2	-0.23		
		(-9.22--8.88)x(2.82+2.83)/2	-0.96		
				0.41	
37	A2	(6.00-4.72)x(3.05+1.77)/2	3.08		
597.48		(9.00-6.00)x(3.05+3.05)/2	9.15		
		(9.86-9.00)x(2.19+3.05)/2	2.25		
		(9.56-9.86)x(2.00+2.19)/2	-0.63		
		(9.30-9.56)x(1.81+2.00)/2	-0.50		
		(8.83-9.30)x(1.51+1.81)/2	-0.78		
		(8.23-8.83)x(1.14+1.51)/2	-0.79		
		(7.35-8.23)x(0.62+1.14)/2	-0.77		
		(7.17-7.35)x(0.50+0.62)/2	-0.10		
		(6.69-7.17)x(0.52+0.50)/2	-0.24		
		(6.10-6.69)x(0.68+0.52)/2	-0.35		
		(5.88-6.10)x(0.81+0.68)/2	-0.16		
		(5.04-5.88)x(1.50+0.81)/2	-0.97		
		(4.72-5.04)x(1.77+1.50)/2	-0.52		
				8.67	
39	A1	(-9.00--10.28)x(3.03+1.74)/2	3.05		
634.40		(-6.00--9.00)x(3.03+3.03)/2	9.09		
		(-5.42--6.00)x(2.45+3.03)/2	1.59		
		(-5.77--5.42)x(2.39+2.45)/2	-0.85		
		(-5.78--5.77)x(2.39+2.39)/2	-0.02		
		(-5.79--5.78)x(2.39+2.39)/2	-0.02		
		(-6.81--5.79)x(2.23+2.39)/2	-2.36		
		(-7.02--6.81)x(2.19+2.23)/2	-0.46		
		(-7.85--7.02)x(2.06+2.19)/2	-1.76		
		A RIPORTARE mq	8.26		

	CALCOLO DELLE AREE	Foglio n. 6

RILEVATO

N. SEZIONE PROG.	FIG.	ELEMENTI DI CALCOLO	AREA ELEMENTARE mq	AREA FIGURA mq	NOTE
		RIPORTO mq	8.26		
		(-8.27--7.85)x(1.94+2.06)/2	-0.84		
		(-8.89--8.27)x(1.78+1.94)/2	-1.15		
		(-9.52--8.89)x(1.76+1.78)/2	-1.12		
		(-9.93--9.52)x(1.73+1.76)/2	-0.72		
		(-10.28--9.93)x(1.74+1.73)/2	-0.61		
				3.82	
CONFLUENZA	F.G A1	(-9.00--9.97)x(3.03+2.06)/2	2.47		
634.40		(-6.00--9.00)x(3.03+3.03)/2	9.09		
		(-5.61--6.00)x(2.64+3.03)/2	1.11		
		(-5.81--5.61)x(2.62+2.64)/2	-0.53		
		(-6.32--5.81)x(2.56+2.62)/2	-1.32		
		(-7.01--6.32)x(2.49+2.56)/2	-1.74		
		(-7.06--7.01)x(2.48+2.49)/2	-0.12		
		(-7.09--7.06)x(2.48+2.48)/2	-0.07		
		(-7.79--7.09)x(2.38+2.48)/2	-1.70		
		(-8.37--7.79)x(2.31+2.38)/2	-1.36		
		(-8.52--8.37)x(2.29+2.31)/2	-0.35		
		(-8.73--8.52)x(2.25+2.29)/2	-0.48		
		(-9.25--8.73)x(2.17+2.25)/2	-1.15		
		(-9.64--9.25)x(2.11+2.17)/2	-0.83		
		(-9.97--9.64)x(2.06+2.11)/2	-0.69		
				2.33	
40	A1	(-9.00--9.68)x(3.02+2.34)/2	1.82		
650.02		(-6.00--9.00)x(3.02+3.02)/2	9.06		
		(-5.37--6.00)x(2.39+3.02)/2	1.70		
		(-5.81--5.37)x(2.44+2.39)/2	-1.06		
		(-5.99--5.81)x(2.44+2.44)/2	-0.44		
		(-7.12--5.99)x(2.40+2.44)/2	-2.73		
		(-7.64--7.12)x(2.38+2.40)/2	-1.24		
		(-8.43--7.64)x(2.37+2.38)/2	-1.88		
		(-9.28--8.43)x(2.35+2.37)/2	-2.01		
		(-9.68--9.28)x(2.34+2.35)/2	-0.94		
				2.28	
40	A2	(6.00-5.56)x(3.02+2.59)/2	1.23		
650.02		(7.03-6.00)x(3.02+3.02)/2	3.11		
		(6.00-7.03)x(2.72+3.02)/2	-2.96		
		(5.56-6.00)x(2.59+2.72)/2	-1.17		
				0.21	
43	A1	(-10.00--10.46)x(2.96+2.50)/2	1.26		
770.13		(-7.00--10.00)x(2.96+2.96)/2	8.88		
		(-6.59--7.00)x(2.56+2.96)/2	1.13		
		(-7.14--6.59)x(2.60+2.56)/2	-1.42		
		(-7.73--7.14)x(2.58+2.60)/2	-1.53		
		(-8.35--7.73)x(2.55+2.58)/2	-1.59		
		(-9.45--8.35)x(2.49+2.55)/2	-2.77		
		(-9.57--9.45)x(2.48+2.49)/2	-0.30		
		(-9.64--9.57)x(2.48+2.48)/2	-0.17		
		(-10.46--9.64)x(2.50+2.48)/2	-2.04		
				1.45	
43	A2	(7.00-6.27)x(2.96+2.23)/2	1.89		
770.13		(10.00-7.00)x(2.96+2.96)/2	8.88		
		(11.10-10.00)x(1.86+2.96)/2	2.65		
		(11.09-11.10)x(1.86+1.86)/2	-0.02		
		(10.59-11.09)x(1.90+1.86)/2	-0.94		
		(9.87-10.59)x(1.95+1.90)/2	-1.39		
		(9.46-9.87)x(1.97+1.95)/2	-0.80		
		(8.66-9.46)x(2.02+1.97)/2	-1.60		
		(7.55-8.66)x(2.14+2.02)/2	-2.31		
		(7.44-7.55)x(2.16+2.14)/2	-0.24		
		(7.25-7.44)x(2.17+2.16)/2	-0.41		
		(6.27-7.25)x(2.23+2.17)/2	-2.16		
				3.55	
44	A1	(-10.00--10.48)x(2.96+2.48)/2	1.31		
785.16		(-7.00--10.00)x(2.96+2.96)/2	8.88		
		(-6.44--7.00)x(2.40+2.96)/2	1.50		
		(-7.00--6.44)x(2.39+2.40)/2	-1.34		
		(-7.21--7.00)x(2.39+2.39)/2	-0.50		
		(-7.30--7.21)x(2.39+2.39)/2	-0.22		
		(-7.56--7.30)x(2.39+2.39)/2	-0.62		
		(-8.10--7.56)x(2.40+2.39)/2	-1.29		
		(-8.30--8.10)x(2.40+2.40)/2	-0.48		
		(-8.75--8.30)x(2.43+2.40)/2	-1.09		
		(-9.40--8.75)x(2.47+2.43)/2	-1.59		
		(-10.48--9.40)x(2.48+2.47)/2	-2.67		
				1.89	
44	A2	(7.00-6.14)x(2.96+2.10)/2	2.18		
785.16		(10.00-7.00)x(2.96+2.96)/2	8.88		
		(11.07-10.00)x(1.88+2.96)/2	2.59		
		(10.48-11.07)x(1.87+1.88)/2	-1.11		
		(10.30-10.48)x(1.87+1.87)/2	-0.34		
		(10.01-10.30)x(1.87+1.87)/2	-0.54		
		(9.21-10.01)x(1.89+1.87)/2	-1.50		
		(8.73-9.21)x(1.93+1.89)/2	-0.92		
		(8.11-8.73)x(1.98+1.93)/2	-1.21		
		(7.09-8.11)x(2.07+1.98)/2	-2.07		
		(7.02-7.09)x(2.07+2.07)/2	-0.14		
		(6.98-7.02)x(2.07+2.07)/2	-0.08		
		(6.14-6.98)x(2.10+2.07)/2	-1.75		
				3.99	
45	A1	(-10.00--10.32)x(2.95+2.63)/2	0.89		
800.11		(-7.00--10.00)x(2.95+2.95)/2	8.85		
		(-6.54--7.00)x(2.49+2.95)/2	1.25		
		(-6.59--6.54)x(2.49+2.49)/2	-0.12		
		(-7.32--6.59)x(2.45+2.49)/2	-1.80		
		(-8.34--7.32)x(2.40+2.45)/2	-2.47		
		(-8.42--8.34)x(2.40+2.40)/2	-0.19		
		(-8.56--8.42)x(2.41+2.40)/2	-0.34		
		(-9.51--8.56)x(2.56+2.41)/2	-2.36		
		(-10.08--9.51)x(2.60+2.56)/2	-1.47		
		(-10.32--10.08)x(2.63+2.60)/2	-0.63		
				1.61	
45	A2	(7.00-6.08)x(2.95+2.03)/2	2.29		
800.11		(10.00-7.00)x(2.95+2.95)/2	8.85		
		(11.27-10.00)x(1.68+2.95)/2	2.94		
		(10.89-11.27)x(1.70+1.68)/2	-0.64		
		A RIPORTARE mq	13.44		

	CALCOLO DELLE AREE		Foglio n. 7

RILEVATO

N. SEZIONE PROG.	FIG.	ELEMENTI DI CALCOLO	AREA ELEMENTARE mq	AREA FIGURA mq	NOTE
		RIPORTO mq	13.44		
		(10.19-10.89)x(1.73+1.70)/2	-1.20		
		(9.14-10.19)x(1.80+1.73)/2	-1.85		
		(9.09-9.14)x(1.80+1.80)/2	-0.09		
		(9.01-9.09)x(1.81+1.80)/2	-0.14		
		(8.00-9.01)x(1.93+1.81)/2	-1.89		
		(7.39-8.00)x(1.99+1.93)/2	-1.20		
		(6.90-7.39)x(2.04+1.99)/2	-0.99		
		(6.68-6.90)x(2.05+2.04)/2	-0.45		
		(6.08-6.68)x(2.03+2.05)/2	-1.22		
				4.41	
46	A1	(-10.00--10.60)x(2.94+2.34)/2	1.58		
815.05		(-7.00--10.00)x(2.94+2.94)/2	8.82		
		(-6.26--7.00)x(2.20+2.94)/2	1.90		
		(-6.34--6.26)x(2.20+2.20)/2	-0.18		
		(-6.64--6.34)x(2.20+2.20)/2	-0.66		
		(-7.44--6.64)x(2.21+2.20)/2	-1.76		
		(-7.92--7.44)x(2.21+2.21)/2	-1.06		
		(-8.53--7.92)x(2.21+2.21)/2	-1.35		
		(-9.57--8.53)x(2.31+2.21)/2	-2.35		
		(-9.63--9.57)x(2.31+2.31)/2	-0.14		
		(-9.66--9.63)x(2.31+2.31)/2	-0.07		
		(-10.60--9.66)x(2.34+2.31)/2	-2.19		
				2.54	
46	A2	(7.00-6.03)x(2.94+1.98)/2	2.39		
815.05		(10.00-7.00)x(2.94+2.94)/2	8.82		
		(11.25-10.00)x(1.69+2.94)/2	2.89		
		(11.17-11.25)x(1.69+1.69)/2	-0.14		
		(10.93-11.17)x(1.70+1.69)/2	-0.41		
		(10.07-10.93)x(1.70+1.70)/2	-1.46		
		(9.56-10.07)x(1.73+1.70)/2	-0.87		
		(8.98-9.56)x(1.75+1.73)/2	-1.01		
		(8.00-8.98)x(1.78+1.75)/2	-1.73		
		(7.89-8.00)x(1.79+1.78)/2	-0.20		
		(7.82-7.89)x(1.79+1.79)/2	-0.13		
		(6.79-7.82)x(1.90+1.79)/2	-1.90		
		(6.07-6.79)x(1.97+1.90)/2	-1.39		
		(6.03-6.07)x(1.98+1.97)/2	-0.08		
				4.78	
49	A1	(-10.00--11.19)x(2.88+1.69)/2	2.72		
949.46		(-7.00--10.00)x(2.88+2.88)/2	8.64		
		(-6.26--7.00)x(2.14+2.88)/2	1.86		
		(-7.09--6.26)x(2.06+2.14)/2	-1.74		
		(-7.21--7.09)x(2.05+2.06)/2	-0.25		
		(-7.28--7.21)x(2.05+2.05)/2	-0.14		
		(-8.31--7.28)x(2.00+2.05)/2	-2.09		
		(-9.04--8.31)x(2.03+2.00)/2	-1.47		
		(-9.40--9.04)x(2.05+2.03)/2	-0.73		
		(-10.01--9.40)x(1.91+2.05)/2	-1.21		
		(-10.50--10.01)x(1.78+1.91)/2	-0.90		
		(-10.79--10.50)x(1.74+1.78)/2	-0.51		
		(-11.19--10.79)x(1.69+1.74)/2	-0.69		
				3.49	
49	A2	(7.00-6.28)x(2.88+2.16)/2	1.81		
949.46		(10.00-7.00)x(2.88+2.88)/2	8.64		
		(10.90-10.00)x(1.98+2.88)/2	2.19		
		(10.40-10.90)x(2.03+1.98)/2	-1.00		
		(10.31-10.40)x(2.04+2.03)/2	-0.18		
		(10.26-10.31)x(2.04+2.04)/2	-0.10		
		(9.22-10.26)x(2.07+2.04)/2	-2.14		
		(8.50-9.22)x(2.15+2.07)/2	-1.52		
		(8.12-8.50)x(2.17+2.15)/2	-0.82		
		(7.49-8.12)x(2.22+2.17)/2	-1.38		
		(7.03-7.49)x(2.23+2.22)/2	-1.02		
		(6.36-7.03)x(2.16+2.23)/2	-1.47		
		(6.28-6.36)x(2.16+2.16)/2	-0.17		
				2.84	
50	A1	(-9.00--9.94)x(2.87+1.93)/2	2.26		
964.47		(-6.00--9.00)x(2.87+2.87)/2	8.61		
		(-5.26--6.00)x(2.13+2.87)/2	1.85		
		(-6.19--5.26)x(2.19+2.13)/2	-2.01		
		(-6.94--6.19)x(2.11+2.19)/2	-1.61		
		(-7.28--6.94)x(2.08+2.11)/2	-0.71		
		(-7.85--7.28)x(2.08+2.08)/2	-1.19		
		(-8.38--7.85)x(2.10+2.08)/2	-1.11		
		(-8.70--8.38)x(2.08+2.10)/2	-0.67		
		(-9.47--8.70)x(2.02+2.08)/2	-1.58		
		(-9.94--9.47)x(1.93+2.02)/2	-0.93		
				2.91	
50	A2	(6.00-5.18)x(2.87+2.05)/2	2.02		
964.47		(9.00-6.00)x(2.87+2.87)/2	8.61		
		(9.78-9.00)x(2.09+2.87)/2	1.93		
		(9.65-9.78)x(2.09+2.09)/2	-0.27		
		(9.15-9.65)x(2.10+2.09)/2	-1.05		
		(8.84-9.15)x(2.10+2.10)/2	-0.65		
		(8.05-8.84)x(2.09+2.10)/2	-1.66		
		(7.09-8.05)x(2.08+2.09)/2	-2.00		
		(6.95-7.09)x(2.08+2.08)/2	-0.29		
		(6.73-6.95)x(2.06+2.08)/2	-0.46		
		(5.86-6.73)x(2.03+2.06)/2	-1.78		
		(5.34-5.86)x(2.04+2.03)/2	-1.06		
		(5.18-5.34)x(2.05+2.04)/2	-0.33		
				3.01	
51	A1	(-9.00--9.96)x(2.86+1.90)/2	2.28		
979.54		(-6.00--9.00)x(2.86+2.86)/2	8.58		
		(-5.41--6.00)x(2.27+2.86)/2	1.51		
		(-5.62--5.41)x(2.25+2.27)/2	-0.47		
		(-6.31--5.62)x(2.22+2.25)/2	-1.54		
		(-6.71--6.31)x(2.16+2.22)/2	-0.88		
		(-7.40--6.71)x(2.09+2.16)/2	-1.47		
		(-8.46--7.40)x(2.10+2.09)/2	-2.22		
		(-8.50--8.46)x(2.10+2.10)/2	-0.08		
		(-8.56--8.50)x(2.10+2.10)/2	-0.13		
		(-9.59--8.56)x(2.02+2.10)/2	-2.12		
		(-9.96--9.59)x(1.90+2.02)/2	-0.73		
				2.73	
		A RIPORTARE mq			

	CALCOLO DELLE AREE		Foglio n. 8

RILEVATO

N. SEZIONE PROG.	FIG.	ELEMENTI DI CALCOLO	AREA ELEMENTARE mq	AREA FIGURA mq	NOTE
		RIPORTO mq			
51	A2	(6.00-5.28)x(2.86+2.13)/2	1.80		
979.54		(9.00-6.00)x(2.86+2.86)/2	8.58		
		(10.06-9.00)x(2.18+2.86)/2	2.67		
		(9.01-10.06)x(2.18+2.18)/2	-2.29		
		(9.00-9.01)x(2.18+2.18)/2	-0.02		
		(7.92-9.00)x(2.17+2.18)/2	-2.35		
		(7.25-7.92)x(2.15+2.17)/2	-1.45		
		(6.83-7.25)x(2.15+2.15)/2	-0.90		
		(6.11-6.83)x(2.15+2.15)/2	-1.55		
		(5.73-6.11)x(2.16+2.15)/2	-0.82		
		(5.51-5.73)x(2.15+2.16)/2	-0.47		
		(5.28-5.51)x(2.13+2.15)/2	-0.49		
				2.71	
52	A1	(-9.00--9.91)x(2.85+1.94)/2	2.18		
994.23		(-6.00--9.00)x(2.85+2.85)/2	8.55		
		(-5.32--6.00)x(2.17+2.85)/2	1.71		
		(-5.76--5.32)x(2.21+2.17)/2	-0.96		
		(-6.36--5.76)x(2.22+2.21)/2	-1.33		
		(-7.37--6.36)x(2.23+2.22)/2	-2.25		
		(-7.45--7.37)x(2.23+2.23)/2	-0.18		
		(-7.50--7.45)x(2.23+2.23)/2	-0.11		
		(-8.55--7.50)x(2.12+2.23)/2	-2.28		
		(-9.24--8.55)x(2.01+2.12)/2	-1.42		
		(-9.64--9.24)x(1.96+2.01)/2	-0.79		
		(-9.82--9.64)x(1.94+1.96)/2	-0.35		
		(-9.91--9.82)x(1.94+1.94)/2	-0.17		
				2.60	
52	A2	(6.00-5.19)x(2.85+2.04)/2	1.98		
994.23		(9.00-6.00)x(2.85+2.85)/2	8.55		
		(9.71-9.00)x(2.14+2.85)/2	1.77		
		(8.96-9.71)x(2.15+2.14)/2	-1.61		
		(8.52-8.96)x(2.14+2.15)/2	-0.94		
		(7.86-8.52)x(2.11+2.14)/2	-1.40		
		(7.34-7.86)x(2.11+2.11)/2	-1.10		
		(6.77-7.34)x(2.11+2.11)/2	-1.20		
		(6.43-6.77)x(2.08+2.11)/2	-0.71		
		(5.67-6.43)x(2.05+2.08)/2	-1.57		
		(5.19-5.67)x(2.04+2.05)/2	-0.98		
				2.79	
53	A1	(-9.00--10.34)x(2.84+1.50)/2	2.91		
1009.26		(-6.00--9.00)x(2.84+2.84)/2	8.52		
		(-5.19--6.00)x(2.03+2.84)/2	1.97		
		(-5.22--5.19)x(2.03+2.03)/2	-0.06		
		(-5.46--5.22)x(2.03+2.03)/2	-0.49		
		(-5.60--5.46)x(2.03+2.03)/2	-0.28		
		(-6.55--5.60)x(2.05+2.03)/2	-1.94		
		(-7.36--6.55)x(2.04+2.05)/2	-1.66		
		(-7.65--7.36)x(2.06+2.04)/2	-0.59		
		(-8.13--7.65)x(2.01+2.06)/2	-0.98		
		(-8.74--8.13)x(1.96+2.01)/2	-1.21		
		(-9.11--8.74)x(1.90+1.96)/2	-0.71		
		(-9.84--9.11)x(1.75+1.90)/2	-1.33		
		(-10.34--9.84)x(1.50+1.75)/2	-0.81		
				3.34	
53	A2	(6.00-5.26)x(2.84+2.10)/2	1.83		
1009.26		(9.00-6.00)x(2.84+2.84)/2	8.52		
		(9.73-9.00)x(2.11+2.84)/2	1.81		
		(5.26-9.73)x(2.10+2.11)/2	-9.41		
				2.75	
54	A1	(-9.00--9.96)x(2.83+1.87)/2	2.26		
1024.17		(-6.00--9.00)x(2.83+2.83)/2	8.49		
		(-5.46--6.00)x(2.29+2.83)/2	1.38		
		(-5.61--5.46)x(2.30+2.29)/2	-0.34		
		(-6.21--5.61)x(2.25+2.30)/2	-1.36		
		(-6.71--6.21)x(2.21+2.25)/2	-1.12		
		(-7.03--6.71)x(2.21+2.21)/2	-0.71		
		(-7.81--7.03)x(2.20+2.21)/2	-1.72		
		(-8.82--7.81)x(2.00+2.20)/2	-2.12		
		(-8.91--8.82)x(1.99+2.00)/2	-0.18		
		(-9.05--8.91)x(1.97+1.99)/2	-0.28		
		(-9.96--9.05)x(1.87+1.97)/2	-1.75		
				2.55	
55	A1	(-9.00--9.94)x(2.81+1.87)/2	2.20		
1039.02		(-6.00--9.00)x(2.81+2.81)/2	8.43		
		(-5.60--6.00)x(2.41+2.81)/2	1.04		
		(-5.70--5.60)x(2.40+2.41)/2	-0.24		
		(-6.24--5.70)x(2.30+2.40)/2	-1.27		
		(-6.80--6.24)x(2.18+2.30)/2	-1.25		
		(-7.74--6.80)x(2.17+2.18)/2	-2.04		
		(-7.89--7.74)x(2.17+2.17)/2	-0.33		
		(-8.65--7.89)x(2.01+2.17)/2	-1.59		
		(-8.98--8.65)x(1.95+2.01)/2	-0.65		
		(-9.72--8.98)x(1.88+1.95)/2	-1.42		
		(-9.94--9.72)x(1.87+1.88)/2	-0.41		
				2.47	
55	A2	(6.00-5.41)x(2.81+2.23)/2	1.49		
1039.02		(9.00-6.00)x(2.81+2.81)/2	8.43		
		(9.33-9.00)x(2.49+2.81)/2	0.87		
		(8.52-9.33)x(2.43+2.49)/2	-1.99		
		(7.69-8.52)x(2.36+2.43)/2	-1.99		
		(7.42-7.69)x(2.34+2.36)/2	-0.63		
		(6.97-7.42)x(2.34+2.34)/2	-1.05		
		(6.33-6.97)x(2.32+2.34)/2	-1.49		
		(5.95-6.33)x(2.29+2.32)/2	-0.88		
		(5.41-5.95)x(2.23+2.29)/2	-1.22		
				1.54	
56	A1	(-9.00--10.03)x(2.80+1.78)/2	2.36		
1053.86		(-6.00--9.00)x(2.80+2.80)/2	8.40		
		(-5.57--6.00)x(2.37+2.80)/2	1.11		
		(-5.80--5.57)x(2.32+2.37)/2	-0.54		
		(-5.84--5.80)x(2.32+2.32)/2	-0.09		
		(-5.92--5.84)x(2.31+2.32)/2	-0.19		
		(-6.94--5.92)x(2.17+2.31)/2	-2.28		
		(-7.59--6.94)x(2.19+2.17)/2	-1.42		
		(-8.04--7.59)x(2.19+2.19)/2	-0.99		
		A RIPORTARE mq	6.36		

	CALCOLO DELLE AREE		Foglio n. 9

RILEVATO

N. SEZIONE PROG.	FIG.	ELEMENTI DI CALCOLO	AREA ELEMENTARE mq	AREA FIGURA mq	NOTE
		RIPORTO mq	6.36		
		(-8.76--8.04)x(2.04+2.19)/2	-1.52		
		(-9.14--8.76)x(1.95+2.04)/2	-0.76		
		(-9.38--9.14)x(1.87+1.95)/2	-0.46		
		(-10.03--9.38)x(1.78+1.87)/2	-1.19		
				2.43	
56	A2	(6.00-5.54)x(2.80+2.34)/2	1.18		
1053.86		(9.00-6.00)x(2.80+2.80)/2	8.40		
		(9.18-9.00)x(2.63+2.80)/2	0.49		
		(8.54-9.18)x(2.54+2.63)/2	-1.65		
		(8.45-8.54)x(2.53+2.54)/2	-0.23		
		(8.30-8.45)x(2.51+2.53)/2	-0.38		
		(7.35-8.30)x(2.39+2.51)/2	-2.33		
		(6.82-7.35)x(2.40+2.39)/2	-1.27		
		(6.25-6.82)x(2.39+2.40)/2	-1.37		
		(5.54-6.25)x(2.34+2.39)/2	-1.68		
				1.16	
57	A1	(-9.00--10.12)x(2.79+1.67)/2	2.50		
1068.87		(-6.00--9.00)x(2.79+2.79)/2	8.37		
		(-5.40--6.00)x(2.19+2.79)/2	1.49		
		(-5.98--5.40)x(2.20+2.19)/2	-1.27		
		(-7.04--5.98)x(2.16+2.20)/2	-2.31		
		(-7.07--7.04)x(2.16+2.16)/2	-0.06		
		(-7.09--7.07)x(2.16+2.16)/2	-0.04		
		(-8.16--7.09)x(2.08+2.16)/2	-2.27		
		(-8.82--8.16)x(1.98+2.08)/2	-1.34		
		(-9.26--8.82)x(1.92+1.98)/2	-0.86		
		(-9.46--9.26)x(1.87+1.92)/2	-0.38		
		(-10.01--9.46)x(1.71+1.87)/2	-0.98		
		(-10.12--10.01)x(1.67+1.71)/2	-0.19		
				2.66	
58	A1	(-9.00--10.33)x(2.78+1.45)/2	2.81		
1083.72		(-6.00--9.00)x(2.78+2.78)/2	8.34		
		(-5.41--6.00)x(2.19+2.78)/2	1.47		
		(-6.03--5.41)x(2.14+2.19)/2	-1.34		
		(-6.40--6.03)x(2.10+2.14)/2	-0.78		
		(-7.12--6.40)x(2.01+2.10)/2	-1.48		
		(-8.12--7.12)x(1.92+2.01)/2	-1.96		
		(-8.22--8.12)x(1.91+1.92)/2	-0.19		
		(-8.39--8.22)x(1.88+1.91)/2	-0.32		
		(-9.31--8.39)x(1.74+1.88)/2	-1.67		
		(-9.83--9.31)x(1.58+1.74)/2	-0.86		
		(-10.33--9.83)x(1.45+1.58)/2	-0.76		
				3.26	
59	A1	(-9.00--10.92)x(2.77+0.85)/2	3.48		
1098.61		(-6.00--9.00)x(2.77+2.77)/2	8.31		
		(-5.36--6.00)x(2.13+2.77)/2	1.57		
		(-5.85--5.36)x(2.08+2.13)/2	-1.03		
		(-6.11--5.85)x(2.06+2.08)/2	-0.54		
		(-6.56--6.11)x(2.01+2.06)/2	-0.92		
		(-7.20--6.56)x(1.96+2.01)/2	-1.27		
		(-7.56--7.20)x(1.91+1.96)/2	-0.70		
		(-8.29--7.56)x(1.81+1.91)/2	-1.36		
		(-9.28--8.29)x(1.51+1.81)/2	-1.64		
		(-9.38--9.28)x(1.49+1.51)/2	-0.15		
		(-9.43--9.38)x(1.47+1.49)/2	-0.07		
		(-9.55--9.43)x(1.42+1.47)/2	-0.17		
		(-10.23--9.55)x(1.17+1.42)/2	-0.88		
		(-10.47--10.23)x(1.05+1.17)/2	-0.27		
		(-10.92--10.47)x(0.85+1.05)/2	-0.43		
				3.93	
60	A1	(-9.00--11.08)x(2.76+0.68)/2	3.58		
1113.66		(-6.00--9.00)x(2.76+2.76)/2	8.28		
		(-5.35--6.00)x(2.11+2.76)/2	1.58		
		(-6.05--5.35)x(2.01+2.11)/2	-1.44		
		(-6.38--6.05)x(1.96+2.01)/2	-0.66		
		(-6.88--6.38)x(1.90+1.96)/2	-0.96		
		(-7.48--6.88)x(1.82+1.90)/2	-1.12		
		(-7.87--7.48)x(1.78+1.82)/2	-0.70		
		(-8.58--7.87)x(1.68+1.78)/2	-1.23		
		(-9.68--8.58)x(1.50+1.68)/2	-1.75		
		(-9.69--9.68)x(1.49+1.50)/2	-0.01		
		(-10.79--9.69)x(0.88+1.49)/2	-1.30		
		(-11.08--10.79)x(0.68+0.88)/2	-0.23		
				4.04	
61	A1	(-9.00--11.16)x(2.75+0.59)/2	3.61		
1128.36		(-6.00--9.00)x(2.75+2.75)/2	8.25		
		(-5.38--6.00)x(2.13+2.75)/2	1.51		
		(-6.04--5.38)x(2.08+2.13)/2	-1.39		
		(-6.46--6.04)x(2.03+2.08)/2	-0.86		
		(-6.71--6.46)x(1.99+2.03)/2	-0.50		
		(-7.55--6.71)x(1.85+1.99)/2	-1.61		
		(-8.46--7.55)x(1.75+1.85)/2	-1.64		
		(-8.65--8.46)x(1.72+1.75)/2	-0.33		
		(-8.95--8.65)x(1.66+1.72)/2	-0.51		
		(-9.74--8.95)x(1.44+1.66)/2	-1.22		
		(-10.32--9.74)x(1.10+1.44)/2	-0.74		
		(-10.84--10.32)x(0.78+1.10)/2	-0.49		
		(-11.16--10.84)x(0.59+0.78)/2	-0.22		
				3.86	
62	A1	(-9.00--11.40)x(2.74+0.34)/2	3.70		
1143.61		(-6.00--9.00)x(2.74+2.74)/2	8.22		
		(-5.59--6.00)x(2.33+2.74)/2	1.04		
		(-5.69--5.59)x(2.26+2.33)/2	-0.23		
		(-6.15--5.69)x(2.09+2.26)/2	-1.00		
		(-6.79--6.15)x(1.84+2.09)/2	-1.26		
		(-7.19--6.79)x(1.75+1.84)/2	-0.72		
		(-7.89--7.19)x(1.61+1.75)/2	-1.18		
		(-8.98--7.89)x(1.50+1.61)/2	-1.69		
		(-8.99--8.98)x(1.50+1.50)/2	-0.01		
		(-10.08--8.99)x(0.98+1.50)/2	-1.35		
		(-10.77--10.08)x(0.62+0.98)/2	-0.55		
		(-11.18--10.77)x(0.39+0.62)/2	-0.21		
		(-11.40--11.18)x(0.34+0.39)/2	-0.08		
				4.68	
63	A1	(-9.00--11.43)x(2.73+0.29)/2	3.67		
		A RIPORTARE mq	3.67		

	CALCOLO DELLE AREE		Foglio n. 10

RILEVATO

N. SEZIONE PROG.	FIG.	ELEMENTI DI CALCOLO	AREA ELEMENTARE mq	AREA FIGURA mq	NOTE
		RIPORTO mq	3.67		
1158.51		(-6.00--9.00)x(2.73+2.73)/2	8.19		
		(-5.29--6.00)x(2.02+2.73)/2	1.69		
		(-5.84--5.29)x(1.97+2.02)/2	-1.10		
		(-6.58--5.84)x(1.90+1.97)/2	-1.43		
		(-6.93--6.58)x(1.87+1.90)/2	-0.66		
		(-7.52--6.93)x(1.79+1.87)/2	-1.08		
		(-8.03--7.52)x(1.72+1.79)/2	-0.90		
		(-8.33--8.03)x(1.62+1.72)/2	-0.50		
		(-9.12--8.33)x(1.37+1.62)/2	-1.18		
		(-10.09--9.12)x(0.92+1.37)/2	-1.11		
		(-10.22--10.09)x(0.86+0.92)/2	-0.12		
		(-10.28--10.22)x(0.83+0.86)/2	-0.05		
		(-10.44--10.28)x(0.75+0.83)/2	-0.13		
		(-11.07--10.44)x(0.40+0.75)/2	-0.36		
		(-11.31--11.07)x(0.32+0.40)/2	-0.09		
		(-11.43--11.31)x(0.29+0.32)/2	-0.04		
				4.80	
64	A1	(-9.00--11.66)x(2.72+0.05)/2	3.68		
1173.31		(-6.00--9.00)x(2.72+2.72)/2	8.16		
		(-5.17--6.00)x(1.88+2.72)/2	1.91		
		(-5.82--5.17)x(1.83+1.88)/2	-1.21		
		(-5.95--5.82)x(1.82+1.83)/2	-0.24		
		(-6.01--5.95)x(1.81+1.82)/2	-0.11		
		(-6.18--6.01)x(1.80+1.81)/2	-0.31		
		(-6.81--6.18)x(1.75+1.80)/2	-1.12		
		(-7.04--6.81)x(1.71+1.75)/2	-0.40		
		(-7.55--7.04)x(1.62+1.71)/2	-0.85		
		(-8.13--7.55)x(1.52+1.62)/2	-0.91		
		(-9.14--8.13)x(1.30+1.52)/2	-1.42		
		(-9.23--9.14)x(1.28+1.30)/2	-0.12		
		(-9.28--9.23)x(1.25+1.28)/2	-0.06		
		(-10.32--9.28)x(0.65+1.25)/2	-0.99		
		(-11.01--10.32)x(0.30+0.65)/2	-0.33		
		(-11.41--11.01)x(0.08+0.30)/2	-0.08		
		(-11.66--11.41)x(0.05+0.08)/2	-0.02		
				5.58	
65	A1	(-9.00--11.80)x(2.70+-0.10)/2	3.64		
1188.09		(-6.00--9.00)x(2.70+2.70)/2	8.10		
		(-5.25--6.00)x(1.95+2.70)/2	1.74		
		(-5.70--5.25)x(1.87+1.95)/2	-0.86		
		(-5.78--5.70)x(1.85+1.87)/2	-0.15		
		(-5.82--5.78)x(1.84+1.85)/2	-0.07		
		(-6.85--5.82)x(1.58+1.84)/2	-1.76		
		(-7.32--6.85)x(1.49+1.58)/2	-0.72		
		(-7.92--7.32)x(1.37+1.49)/2	-0.86		
		(-8.83--7.92)x(1.13+1.37)/2	-1.14		
		(-8.99--8.83)x(1.10+1.13)/2	-0.18		
		(-9.38--8.99)x(0.89+1.10)/2	-0.39		
		(-10.05--9.38)x(0.52+0.89)/2	-0.47		
		(-10.33--10.05)x(0.40+0.52)/2	-0.13		
		(-11.12--10.33)x(-0.01+0.40)/2	-0.15		
		(-11.56--11.12)x(-0.10+-0.01)/2	0.02		
		(-11.80--11.56)x(-0.10+-0.10)/2	0.02		
				6.64	
65	A2	(6.00-5.65)x(2.70+2.36)/2	0.89		
1188.09		(9.00-6.00)x(2.70+2.70)/2	8.10		
		(10.01-9.00)x(2.13+2.70)/2	2.44		
		(9.00-10.01)x(2.15+2.13)/2	-2.16		
		(8.10-9.00)x(2.29+2.15)/2	-2.00		
		(7.73-8.10)x(2.32+2.29)/2	-0.85		
		(7.03-7.73)x(2.36+2.32)/2	-1.64		
		(6.22-7.03)x(2.36+2.36)/2	-1.91		
		(5.96-6.22)x(2.36+2.36)/2	-0.61		
		(5.65-5.96)x(2.36+2.36)/2	-0.73		
				1.53	
66	A1	(-9.00--11.71)x(2.69+-0.02)/2	3.62		
1203.44		(-6.00--9.00)x(2.69+2.69)/2	8.07		
		(-5.03--6.00)x(1.72+2.69)/2	2.14		
		(-5.60--5.03)x(1.54+1.72)/2	-0.93		
		(-5.80--5.60)x(1.40+1.54)/2	-0.29		
		(-6.65--5.80)x(1.00+1.40)/2	-1.02		
		(-7.10--6.65)x(0.69+1.00)/2	-0.38		
		(-7.69--7.10)x(0.26+0.69)/2	-0.28		
		(-8.39--7.69)x(0.04+0.26)/2	-0.11		
		(-8.73--8.39)x(-0.10+0.04)/2	0.01		
		(-9.68--8.73)x(-0.07+-0.10)/2	0.08		
		(-9.78--9.68)x(-0.08+-0.07)/2	0.01		
		(-10.19--9.78)x(-0.06+-0.08)/2	0.03		
		(-10.82--10.19)x(-0.03+-0.06)/2	0.03		
		(-10.97--10.82)x(-0.03+-0.03)/2	0.00		
		(-11.71--10.97)x(-0.02+-0.03)/2	0.02		
				11.00	
67	A1	(-9.00--11.22)x(2.68+0.46)/2	3.49		
1218.76		(-6.00--9.00)x(2.68+2.68)/2	8.04		
		(-4.08--6.00)x(0.76+2.68)/2	3.30		
		(-4.37--4.08)x(0.60+0.76)/2	-0.20		
		(-5.14--4.37)x(0.20+0.60)/2	-0.31		
		(-5.41--5.14)x(0.04+0.20)/2	-0.03		
		(-6.43--5.41)x(-0.13+0.04)/2	0.05		
		(-6.46--6.43)x(-0.14+-0.13)/2	0.00		
		(-6.47--6.46)x(-0.14+-0.14)/2	0.00		
		(-6.55--6.47)x(-0.13+-0.14)/2	0.01		
		(-7.35--6.55)x(-0.11+-0.13)/2	0.10		
		(-7.50--7.35)x(-0.12+-0.11)/2	0.02		
		(-7.73--7.50)x(-0.11+-0.12)/2	0.03		
		(-8.54--7.73)x(-0.06+-0.11)/2	0.07		
		(-9.02--8.54)x(-0.02+-0.06)/2	0.02		
		(-9.59--9.02)x(0.01+-0.02)/2	0.00		
		(-10.31--9.59)x(0.09+0.01)/2	-0.04		
		(-10.63--10.31)x(0.08+0.09)/2	-0.03		
		(-11.22--10.63)x(0.46+0.08)/2	-0.16		
				14.36	
68	A1	(-9.00--10.23)x(2.67+1.44)/2	2.53		
1233.97		(-6.00--9.00)x(2.67+2.67)/2	8.01		
		(-3.34--6.00)x(0.01+2.67)/2	3.56		
		A RIPORTARE mq	14.10		

	CALCOLO DELLE AREE		Foglio n. 11

RILEVATO

N. SEZIONE PROG.	FIG.	ELEMENTI DI CALCOLO	AREA ELEMENTARE mq	AREA FIGURA mq	NOTE
		RIPORTO mq	14.10		
		(-3.42--3.34)x(0.00+0.01)/2	-0.00		
		(-4.16--3.42)x(-0.03+0.00)/2	0.01		
		(-4.33--4.16)x(-0.04+-0.03)/2	0.01		
		(-5.20--4.33)x(-0.07+-0.04)/2	0.05		
		(-5.63--5.20)x(-0.08+-0.07)/2	0.03		
		(-6.25--5.63)x(-0.10+-0.08)/2	0.06		
		(-6.92--6.25)x(-0.16+-0.10)/2	0.09		
		(-7.29--6.92)x(-0.16+-0.16)/2	0.06		
		(-7.54--7.29)x(-0.13+-0.16)/2	0.04		
		(-7.90--7.54)x(0.00+-0.13)/2	0.02		
		(-8.04--7.90)x(0.07+0.00)/2	-0.00		
		(-8.18--8.04)x(0.19+0.07)/2	-0.02		
		(-8.19--8.18)x(0.02+0.17)/2	-0.00		
		(-8.29--8.19)x(0.16+0.02)/2	-0.01		
		(-8.32--8.29)x(0.24+0.16)/2	-0.01		
		(-8.37--8.32)x(0.29+0.24)/2	-0.01		
		(-8.38--8.37)x(0.30+0.29)/2	-0.00		
		(-8.42--8.38)x(0.33+0.30)/2	-0.01		
		(-8.86--8.42)x(0.66+0.33)/2	-0.22		
		(-9.38--8.86)x(1.04+0.66)/2	-0.44		
		(-10.17--9.38)x(1.41+1.04)/2	-0.97		
		(-10.23--10.17)x(1.44+1.41)/2	-0.09		
				12.69	
69 1249.22	A1	(-9.00--9.68)x(2.66+1.97)/2	1.57		
		(-6.00--9.00)x(2.66+2.66)/2	7.98		
		(-3.38--6.00)x(0.04+2.66)/2	3.54		
		(-3.56--3.38)x(0.04+0.04)/2	-0.01		
		(-3.95--3.56)x(0.03+0.04)/2	-0.01		
		(-4.85--3.95)x(0.07+0.03)/2	-0.04		
		(-5.00--4.85)x(0.07+0.07)/2	-0.01		
		(-5.05--5.00)x(0.07+0.07)/2	-0.00		
		(-5.24--5.05)x(0.24+0.07)/2	-0.03		
		(-5.25--5.24)x(0.13+0.11)/2	-0.00		
		(-5.40--5.25)x(0.21+0.01)/2	-0.02		
		(-5.43--5.40)x(0.25+0.21)/2	-0.01		
		(-5.53--5.43)x(0.31+0.25)/2	-0.03		
		(-5.97--5.53)x(0.68+0.31)/2	-0.22		
		(-6.04--5.97)x(0.74+0.68)/2	-0.05		
		(-6.15--6.04)x(0.80+0.74)/2	-0.08		
		(-7.09--6.15)x(1.48+0.80)/2	-1.07		
		(-7.43--7.09)x(1.64+1.48)/2	-0.53		
		(-7.56--7.43)x(1.70+1.64)/2	-0.22		
		(-7.60--7.56)x(1.70+1.70)/2	-0.07		
		(-7.63--7.60)x(1.61+1.70)/2	-0.05		
		(-7.65--7.63)x(1.58+1.61)/2	-0.03		
		(-7.68--7.65)x(1.74+1.61)/2	-0.05		
		(-7.72--7.68)x(1.82+1.76)/2	-0.07		
		(-7.76--7.72)x(1.80+1.82)/2	-0.07		
		(-7.91--7.76)x(1.84+1.80)/2	-0.27		
		(-8.13--7.91)x(1.88+1.84)/2	-0.41		
		(-8.73--8.13)x(1.92+1.88)/2	-1.14		
		(-9.17--8.73)x(1.97+1.92)/2	-0.86		
		(-9.68--9.17)x(1.97+1.97)/2	-1.00		
				6.74	
69 1249.22	A2	(6.00-5.89)x(2.66+2.55)/2	0.29		
		(9.00-6.00)x(2.66+2.66)/2	7.98		
		(9.05-9.00)x(2.61+2.66)/2	0.13		
		(8.57-9.05)x(2.58+2.61)/2	-1.25		
		(8.04-8.57)x(2.56+2.58)/2	-1.36		
		(7.53-8.04)x(2.55+2.56)/2	-1.30		
		(6.78-7.53)x(2.55+2.55)/2	-1.91		
		(6.49-6.78)x(2.55+2.55)/2	-0.74		
		(5.89-6.49)x(2.55+2.55)/2	-1.53		
				0.31	
70 1264.33	A1	(-9.00--9.46)x(2.65+2.18)/2	1.11		
		(-6.00--9.00)x(2.65+2.65)/2	7.95		
		(-5.16--6.00)x(1.81+2.65)/2	1.87		
		(-5.20--5.16)x(1.81+1.81)/2	-0.07		
		(-5.94--5.20)x(1.89+1.81)/2	-1.37		
		(-6.19--5.94)x(1.91+1.89)/2	-0.47		
		(-6.68--6.19)x(1.93+1.91)/2	-0.94		
		(-7.27--6.68)x(1.94+1.93)/2	-1.14		
		(-8.29--7.27)x(2.07+1.94)/2	-2.05		
		(-8.35--8.29)x(2.07+2.07)/2	-0.12		
		(-8.38--8.35)x(2.08+2.07)/2	-0.06		
		(-8.83--8.38)x(2.13+2.08)/2	-0.95		
		(-8.93--8.83)x(2.13+2.13)/2	-0.21		
		(-8.96--8.93)x(2.15+2.13)/2	-0.06		
		(-8.97--8.96)x(2.15+2.15)/2	-0.02		
		(-9.00--8.97)x(2.16+2.12)/2	-0.06		
		(-9.06--9.00)x(2.19+2.16)/2	-0.13		
		(-9.08--9.06)x(2.15+2.19)/2	-0.04		
		(-9.12--9.08)x(2.17+2.15)/2	-0.09		
		(-9.29--9.12)x(2.19+2.17)/2	-0.37		
		(-9.43--9.29)x(2.18+2.19)/2	-0.31		
		(-9.46--9.43)x(2.18+2.18)/2	-0.07		
				2.40	
70 1264.33	A2	(6.00-4.55)x(2.65+1.20)/2	2.79		
		(9.00-6.00)x(2.65+2.65)/2	7.95		
		(9.23-9.00)x(2.41+2.65)/2	0.58		
		(8.93-9.23)x(2.42+2.41)/2	-0.72		
		(7.86-8.93)x(2.39+2.42)/2	-2.57		
		(7.85-7.86)x(2.39+2.39)/2	-0.02		
		(7.84-7.85)x(2.39+2.39)/2	-0.02		
		(6.77-7.84)x(2.34+2.39)/2	-2.53		
		(6.33-6.77)x(2.29+2.34)/2	-1.02		
		(6.28-6.33)x(2.29+2.29)/2	-0.11		
		(6.13-6.28)x(2.28+2.29)/2	-0.34		
		(6.12-6.13)x(2.34+2.28)/2	-0.02		
		(6.11-6.12)x(2.32+2.34)/2	-0.02		
		(6.08-6.11)x(2.29+2.32)/2	-0.07		
		(6.05-6.08)x(2.29+2.29)/2	-0.07		
		(5.82-6.05)x(2.09+2.29)/2	-0.50		
		(5.76-5.82)x(2.05+2.09)/2	-0.12		
		(5.69-5.76)x(1.95+2.05)/2	-0.14		
		A RIPORTARE mq	3.05		

	CALCOLO DELLE AREE		Foglio n. 12

RILEVATO

N. SEZIONE PROG.	FIG.	ELEMENTI DI CALCOLO	AREA ELEMENTARE mq	AREA FIGURA mq	NOTE
		RIPORTO mq	3.05		
		(5.42-5.69)x(1.77+1.95)/2	-0.50		
		(4.61-5.42)x(1.25+1.77)/2	-1.22		
		(4.58-4.61)x(1.22+1.25)/2	-0.04		
		(4.55-4.58)x(1.20+1.22)/2	-0.04		
				1.25	
71	A1	(-9.00--9.42)x(2.64+2.23)/2	1.02		
1273.46		(-6.00--9.00)x(2.64+2.64)/2	7.92		
		(-5.32--6.00)x(1.96+2.64)/2	1.56		
		(-5.33--5.32)x(1.97+1.96)/2	-0.02		
		(-5.35--5.33)x(1.96+1.97)/2	-0.04		
		(-5.39--5.35)x(1.96+1.96)/2	-0.08		
		(-5.41--5.39)x(1.97+1.96)/2	-0.04		
		(-5.46--5.41)x(1.98+1.97)/2	-0.10		
		(-5.58--5.46)x(1.99+1.98)/2	-0.24		
		(-5.63--5.58)x(1.99+1.99)/2	-0.10		
		(-6.39--5.63)x(2.12+1.99)/2	-1.56		
		(-6.43--6.39)x(2.13+2.12)/2	-0.09		
		(-6.55--6.43)x(2.15+2.13)/2	-0.26		
		(-6.64--6.55)x(2.15+2.15)/2	-0.19		
		(-7.66--6.64)x(2.17+2.15)/2	-2.20		
		(-8.45--7.66)x(2.18+2.17)/2	-1.72		
		(-8.76--8.45)x(2.18+2.18)/2	-0.68		
		(-8.88--8.76)x(2.20+2.18)/2	-0.26		
		(-9.09--8.88)x(2.21+2.20)/2	-0.46		
		(-9.12--9.09)x(2.21+2.21)/2	-0.07		
		(-9.13--9.12)x(2.21+2.21)/2	-0.02		
		(-9.15--9.13)x(2.21+2.21)/2	-0.04		
		(-9.21--9.15)x(2.22+2.21)/2	-0.13		
		(-9.28--9.21)x(2.22+2.22)/2	-0.16		
		(-9.42--9.28)x(2.23+2.22)/2	-0.31		
				1.73	
71	A2	(6.00-4.59)x(2.64+1.23)/2	2.73		
1273.46		(9.00-6.00)x(2.64+2.64)/2	7.92		
		(9.40-9.00)x(2.24+2.64)/2	0.98		
		(8.86-9.40)x(2.24+2.24)/2	-1.21		
		(7.84-8.86)x(2.24+2.24)/2	-2.28		
		(7.76-7.84)x(2.24+2.24)/2	-0.18		
		(7.63-7.76)x(2.23+2.24)/2	-0.29		
		(6.66-7.63)x(2.14+2.23)/2	-2.12		
		(6.26-6.66)x(2.13+2.14)/2	-0.85		
		(6.22-6.26)x(2.13+2.13)/2	-0.09		
		(6.05-6.22)x(2.11+2.13)/2	-0.36		
		(5.98-6.05)x(2.10+2.11)/2	-0.15		
		(5.94-5.98)x(2.09+2.11)/2	-0.08		
		(5.93-5.94)x(2.09+2.09)/2	-0.02		
		(5.75-5.93)x(1.98+2.09)/2	-0.37		
		(5.65-5.75)x(1.88+1.98)/2	-0.19		
		(5.56-5.65)x(1.80+1.88)/2	-0.17		
		(4.82-5.56)x(1.36+1.80)/2	-1.17		
		(4.59-4.82)x(1.23+1.36)/2	-0.30		
				1.80	

Il Direttore dei Lavori	L'Impresa	

	CALCOLO DELLE AREE		Foglio n. 13

STERRO

N. SEZIONE PROG.	FIG.	ELEMENTI DI CALCOLO	AREA ELEMENTARE mq	AREA FIGURA mq	NOTE
1	B1	(-3.89--4.60)x(1.38+1.91)/2	1.17		
0.00		(-3.56--3.89)x(1.10+1.38)/2	0.41		
		(-3.09--3.56)x(0.90+1.10)/2	0.47		
		(-2.44--3.09)x(0.65+0.90)/2	0.50		
		(-1.98--2.44)x(0.58+0.65)/2	0.28		
		(-1.33--1.98)x(0.47+0.58)/2	0.34		
		(-0.43--1.33)x(0.46+0.47)/2	0.42		
		(-0.22--0.43)x(0.47+0.46)/2	0.10		
		(-0.07--0.22)x(0.50+0.47)/2	0.07		
		(0.89--0.07)x(0.69+0.50)/2	0.57		
		(1.84-0.89)x(1.18+0.69)/2	0.89		
		(2.00-1.84)x(1.25+1.18)/2	0.19		
		(2.23-2.00)x(1.42+1.25)/2	0.31		
		(3.11-2.23)x(2.09+1.42)/2	1.54		
		(3.74-3.11)x(2.34+2.09)/2	1.40		
		(4.22-3.74)x(2.60+2.34)/2	1.19		
		(4.89-4.22)x(2.70+2.60)/2	1.78		
		(5.33-4.89)x(2.75+2.70)/2	1.20		
		(5.44-5.33)x(2.75+2.75)/2	0.30		
		(3.00-5.44)x(0.31+2.75)/2	-3.73		
		(-3.00-3.00)x(0.31+0.31)/2	-1.86		
		(-4.60--3.00)x(1.91+0.31)/2	-1.78		
				5.76	
2	B1	(-3.98--4.24)x(1.33+1.54)/2	0.37		
14.07		(-3.88--3.98)x(1.25+1.33)/2	0.13		
		(-3.80--3.88)x(1.22+1.25)/2	0.10		
		(-2.77--3.80)x(0.78+1.22)/2	1.03		
		(-1.89--2.77)x(0.56+0.78)/2	0.59		
		(-1.65--1.89)x(0.49+0.56)/2	0.13		
		(-1.32--1.65)x(0.49+0.49)/2	0.16		
		(-0.54--1.32)x(0.51+0.49)/2	0.39		
		(0.01--0.54)x(0.62+0.51)/2	0.31		
		(0.57-0.01)x(0.71+0.62)/2	0.37		
		(1.34-0.57)x(1.03+0.71)/2	0.67		
		(1.68-1.34)x(1.20+1.03)/2	0.38		
		(1.92-1.68)x(1.39+1.20)/2	0.31		
		(2.79-1.92)x(2.05+1.39)/2	1.50		
		(3.83-2.79)x(2.63+2.05)/2	2.43		
		(3.90-3.83)x(2.68+2.63)/2	0.19		
		(4.00-3.90)x(2.69+2.68)/2	0.27		
		(5.01-4.00)x(2.82+2.69)/2	2.78		
		(5.55-5.01)x(2.85+2.82)/2	1.53		
		(3.00-5.55)x(0.30+2.85)/2	-4.02		
		(-3.00-3.00)x(0.30+0.30)/2	-1.80		
		(-4.24--3.00)x(1.54+0.30)/2	-1.14		
				6.68	
3	B1	(-3.47--4.05)x(0.94+1.35)/2	0.66		
29.07		(-2.65--3.47)x(0.66+0.94)/2	0.66		
		(-2.36--2.65)x(0.58+0.66)/2	0.18		
		(-2.16--2.36)x(0.57+0.58)/2	0.11		
		(-1.25--2.16)x(0.48+0.57)/2	0.48		
		(-0.25--1.25)x(0.61+0.48)/2	0.54		
		(-0.14--0.25)x(0.62+0.61)/2	0.07		
		(0.01--0.14)x(0.65+0.62)/2	0.10		
		(0.97-0.01)x(0.94+0.65)/2	0.76		
		(1.47-0.97)x(1.24+0.94)/2	0.54		
		(2.08-1.47)x(1.71+1.24)/2	0.90		
		(2.67-2.08)x(2.17+1.71)/2	1.14		
		(3.19-2.67)x(2.54+2.17)/2	1.22		
		(3.57-3.19)x(2.64+2.54)/2	0.98		
		(4.30-3.57)x(2.89+2.64)/2	2.02		
		(5.33-4.30)x(3.03+2.89)/2	3.05		
		(5.42-5.33)x(3.04+3.03)/2	0.27		
		(5.47-5.42)x(3.04+3.04)/2	0.15		
		(5.77-5.47)x(3.07+3.04)/2	0.92		
		(3.00-5.77)x(0.30+3.07)/2	-4.67		
		(-3.00-3.00)x(0.30+0.30)/2	-1.80		
		(-4.05--3.00)x(1.35+0.30)/2	-0.87		
				7.41	
4	B1	(-3.98--4.02)x(1.29+1.31)/2	0.05		
44.07		(-3.07--3.98)x(0.90+1.29)/2	1.00		
		(-2.42--3.07)x(0.72+0.90)/2	0.53		
		(-1.96--2.42)x(0.58+0.72)/2	0.30		
		(-1.32--1.96)x(0.60+0.58)/2	0.38		
		(-0.85--1.32)x(0.64+0.60)/2	0.29		
		(-0.51--0.85)x(0.78+0.64)/2	0.24		
		(0.26--0.51)x(1.06+0.78)/2	0.71		
		(1.34-0.26)x(1.54+1.06)/2	1.40		
		(1.37-1.34)x(1.55+1.54)/2	0.05		
		(1.40-1.37)x(1.57+1.55)/2	0.05		
		(2.48-1.40)x(2.27+1.57)/2	2.07		
		(3.30-2.48)x(2.72+2.27)/2	2.05		
		(3.60-3.30)x(2.91+2.72)/2	0.84		
		(4.00-3.60)x(2.94+2.91)/2	1.17		
		(4.71-4.00)x(2.99+2.94)/2	2.11		
		(5.21-4.71)x(3.04+2.99)/2	1.51		
		(5.80-5.21)x(3.09+3.04)/2	1.81		
		(3.00-5.80)x(0.29+3.09)/2	-4.73		
		(-3.00-3.00)x(0.29+0.29)/2	-1.74		
		(-4.02--3.00)x(1.31+0.29)/2	-0.82		
				9.27	
5	B1	(-2.69--3.76)x(0.63+1.04)/2	0.89		
59.14		(-2.66--2.69)x(0.62+0.63)/2	0.02		
		(-2.61--2.66)x(0.61+0.62)/2	0.03		
		(-1.56--2.61)x(0.47+0.61)/2	0.57		
		(-0.88--1.56)x(0.53+0.47)/2	0.34		
		(-0.46--0.88)x(0.55+0.53)/2	0.23		
		(0.21--0.46)x(0.78+0.55)/2	0.45		
		(0.64-0.21)x(0.95+0.78)/2	0.37		
		(0.92-0.64)x(1.09+0.95)/2	0.29		
		(1.74-0.92)x(1.48+1.09)/2	1.05		
		(2.73-1.74)x(2.30+1.48)/2	1.87		
		(2.85-2.73)x(2.38+2.30)/2	0.28		
		(3.02-2.85)x(2.48+2.38)/2	0.41		
		(3.95-3.02)x(2.94+2.48)/2	2.52		
		(4.54-3.95)x(2.99+2.94)/2	1.75		
		(5.05-4.54)x(3.05+2.99)/2	1.54		
		A RIPORTARE mq	12.61		

	CALCOLO DELLE AREE		Foglio n. 14

STERRO

N. SEZIONE PROG.	FIG.	ELEMENTI DI CALCOLO	AREA ELEMENTARE mq	AREA FIGURA mq	NOTE
		RIPORTO mq	12.61		
		(5.84-5.05)x(3.17+3.05)/2	2.46		
		(5.90-5.84)x(3.18+3.17)/2	0.19		
		(3.00-5.90)x(0.28+3.18)/2	-5.02		
		(-3.00-3.00)x(0.28+0.28)/2	-1.68		
		(-3.76--3.00)x(1.04+0.28)/2	-0.50		
				8.06	
5	B2	(7.25-6.76)x(3.34+3.28)/2	1.62		
59.14		(7.64-7.25)x(3.31+3.34)/2	1.30		
		(7.82-7.64)x(3.28+3.31)/2	0.59		
		(6.76-7.82)x(3.28+3.28)/2	-3.48		
				0.03	
6	B1	(-4.86--5.30)x(2.27+2.58)/2	1.07		
74.05		(-3.81--4.86)x(1.40+2.27)/2	1.93		
		(-3.76--3.81)x(1.36+1.40)/2	0.07		
		(-3.74--3.76)x(1.35+1.36)/2	0.03		
		(-2.67--3.74)x(0.75+1.35)/2	1.12		
		(-2.01--2.67)x(0.60+0.75)/2	0.45		
		(-1.58--2.01)x(0.48+0.60)/2	0.23		
		(-0.84--1.58)x(0.49+0.48)/2	0.36		
		(-0.49--0.84)x(0.51+0.49)/2	0.17		
		(-0.28--0.49)x(0.57+0.51)/2	0.11		
		(0.61--0.28)x(0.76+0.57)/2	0.59		
		(1.45-0.61)x(1.26+0.76)/2	0.85		
		(1.70-1.45)x(1.38+1.26)/2	0.33		
		(1.81-1.70)x(1.47+1.38)/2	0.16		
		(2.13-1.81)x(1.71+1.47)/2	0.51		
		(2.61-2.13)x(2.08+1.71)/2	0.91		
		(2.79-2.61)x(2.23+2.08)/2	0.39		
		(3.18-2.79)x(2.44+2.23)/2	0.91		
		(3.88-3.18)x(2.83+2.44)/2	1.84		
		(4.91-3.88)x(3.01+2.83)/2	3.01		
		(4.98-4.91)x(3.03+3.01)/2	0.21		
		(5.10-4.98)x(3.04+3.03)/2	0.36		
		(5.81-5.10)x(3.09+3.04)/2	2.18		
		(3.00-5.81)x(0.28+3.09)/2	-4.73		
		(-3.00-3.00)x(0.28+0.28)/2	-1.68		
		(-5.30--3.00)x(2.58+0.28)/2	-3.29		
				8.09	
7	B1	(-5.00--5.55)x(2.46+2.83)/2	1.45		
89.01		(-4.90--5.00)x(2.41+2.46)/2	0.24		
		(-4.73--4.90)x(2.28+2.41)/2	0.40		
		(-3.81--4.73)x(1.72+2.28)/2	1.84		
		(-3.25--3.81)x(1.42+1.72)/2	0.88		
		(-2.71--3.25)x(1.12+1.42)/2	0.69		
		(-1.76--2.71)x(0.67+1.12)/2	0.85		
		(-1.66--1.76)x(0.62+0.67)/2	0.06		
		(-1.62--1.66)x(0.61+0.62)/2	0.02		
		(-0.86--1.62)x(0.40+0.61)/2	0.38		
		(-0.53--0.86)x(0.37+0.40)/2	0.13		
		(-0.06--0.53)x(0.40+0.37)/2	0.18		
		(0.56--0.06)x(0.48+0.40)/2	0.27		
		(0.74-0.56)x(0.51+0.48)/2	0.09		
		(1.21-0.74)x(0.70+0.51)/2	0.28		
		(1.66-1.21)x(0.85+0.70)/2	0.35		
		(1.92-1.66)x(0.98+0.85)/2	0.24		
		(2.75-1.92)x(1.36+0.98)/2	0.97		
		(3.64-2.75)x(2.20+1.36)/2	1.58		
		(3.84-3.64)x(2.36+2.20)/2	0.46		
		(4.18-3.84)x(2.54+2.36)/2	0.83		
		(4.93-4.18)x(2.84+2.54)/2	2.02		
		(5.37-4.93)x(2.86+2.84)/2	1.25		
		(5.59-5.37)x(2.86+2.86)/2	0.63		
		(3.00-5.59)x(0.27+2.86)/2	-4.05		
		(-3.00-3.00)x(0.27+0.27)/2	-1.62		
		(-5.55--3.00)x(2.83+0.27)/2	-3.95		
				6.47	
8	B1	(-5.65--5.93)x(3.23+3.20)/2	0.90		
103.97		(-4.94--5.65)x(3.27+3.23)/2	2.31		
		(-4.53--4.94)x(3.04+3.27)/2	1.29		
		(-3.85--4.53)x(2.76+3.04)/2	1.97		
		(-2.80--3.85)x(1.82+2.76)/2	2.40		
		(-2.75--2.80)x(1.79+1.82)/2	0.09		
		(-2.68--2.75)x(1.74+1.79)/2	0.12		
		(-1.66--2.68)x(1.16+1.74)/2	1.48		
		(-1.07--1.66)x(0.94+1.16)/2	0.62		
		(-0.57--1.07)x(0.72+0.94)/2	0.42		
		(0.29--0.57)x(0.49+0.72)/2	0.52		
		(0.52-0.29)x(0.43+0.49)/2	0.11		
		(0.66-0.52)x(0.44+0.43)/2	0.06		
		(1.62-0.66)x(0.43+0.44)/2	0.42		
		(2.39-1.62)x(0.60+0.43)/2	0.40		
		(2.71-2.39)x(0.66+0.60)/2	0.20		
		(3.26-2.71)x(0.84+0.66)/2	0.41		
		(3.76-3.26)x(1.02+0.84)/2	0.46		
		(3.00-3.76)x(0.27+1.02)/2	-0.49		
		(-3.00-3.00)x(0.27+0.27)/2	-1.62		
		(-5.93--3.00)x(3.20+0.27)/2	-5.08		
				6.99	
9	B1	(-9.54--9.58)x(3.82+3.84)/2	0.15		
118.92		(-9.35--9.54)x(3.70+3.82)/2	0.71		
		(-9.23--9.35)x(3.66+3.70)/2	0.44		
		(-8.29--9.23)x(3.26+3.66)/2	3.25		
		(-9.00--8.29)x(3.26+3.26)/2	-2.31		
		(-9.58--9.00)x(3.84+3.26)/2	-2.06		
				0.18	
9	B2	(-5.78--5.86)x(3.13+3.12)/2	0.25		
118.92		(-4.98--5.78)x(3.20+3.13)/2	2.53		
		(-4.05--4.98)x(3.22+3.20)/2	2.99		
		(-3.88--4.05)x(3.23+3.22)/2	0.55		
		(-3.60--3.88)x(3.09+3.23)/2	0.88		
		(-2.79--3.60)x(2.62+3.09)/2	2.31		
		(-2.32--2.79)x(2.22+2.62)/2	1.14		
		(-1.70--2.32)x(1.70+2.22)/2	1.22		
		(-0.63--1.70)x(1.06+1.70)/2	1.48		
		(-0.61--0.63)x(1.04+1.06)/2	0.02		
		A RIPORTARE mq	13.37		

	CALCOLO DELLE AREE		Foglio n. 15

STERRO

N. SEZIONE PROG.	FIG.	ELEMENTI DI CALCOLO	AREA ELEMENTARE mq	AREA FIGURA mq	NOTE
		RIPORTO mq	13.37		
		(-0.59--0.61)x(1.03+1.04)/2	0.02		
		(0.48--0.59)x(0.59+1.03)/2	0.87		
		(1.14-0.48)x(0.45+0.59)/2	0.34		
		(1.58-1.14)x(0.34+0.45)/2	0.17		
		(2.33-1.58)x(0.38+0.34)/2	0.27		
		(2.67-2.33)x(0.41+0.38)/2	0.13		
		(2.87-2.67)x(0.47+0.41)/2	0.09		
		(3.33-2.87)x(0.59+0.47)/2	0.24		
		(3.00-3.33)x(0.26+0.59)/2	-0.14		
		(-3.00-3.00)x(0.26+0.26)/2	-1.56		
		(-5.86--3.00)x(3.12+0.26)/2	-4.83		
				8.97	
10	B1	(-5.30--5.80)x(3.10+3.06)/2	1.54		
133.87		(-5.02--5.30)x(3.11+3.10)/2	0.87		
		(-4.54--5.02)x(3.16+3.11)/2	1.50		
		(-3.92--4.54)x(3.22+3.16)/2	1.98		
		(-3.57--3.92)x(3.21+3.22)/2	1.13		
		(-2.83--3.57)x(3.20+3.21)/2	2.37		
		(-1.84--2.83)x(2.70+3.20)/2	2.92		
		(-1.74--1.84)x(2.66+2.70)/2	0.27		
		(-1.57--1.74)x(2.52+2.66)/2	0.44		
		(-0.65--1.57)x(1.74+2.52)/2	1.96		
		(-0.10--0.65)x(1.34+1.74)/2	0.85		
		(0.45--0.10)x(1.03+1.34)/2	0.65		
		(1.40-0.45)x(0.61+1.03)/2	0.78		
		(1.54-1.40)x(0.55+0.61)/2	0.08		
		(1.62-1.54)x(0.54+0.55)/2	0.04		
		(2.63-1.62)x(0.34+0.54)/2	0.44		
		(3.12-2.63)x(0.37+0.34)/2	0.17		
		(3.00-3.12)x(0.25+0.37)/2	-0.04		
		(-3.00-3.00)x(0.25+0.25)/2	-1.50		
		(-5.80--3.00)x(3.06+0.25)/2	-4.63		
				11.82	
11	B1	(-5.47--5.84)x(3.07+3.08)/2	1.14		
148.82		(-5.17--5.47)x(3.07+3.07)/2	0.92		
		(-5.05--5.17)x(3.07+3.07)/2	0.37		
		(-4.81--5.05)x(3.10+3.07)/2	0.74		
		(-3.96--4.81)x(3.17+3.10)/2	2.66		
		(-3.08--3.96)x(3.24+3.17)/2	2.82		
		(-2.87--3.08)x(3.25+3.24)/2	0.68		
		(-2.50--2.87)x(3.22+3.25)/2	1.20		
		(-1.78--2.50)x(3.09+3.22)/2	2.27		
		(-1.35--1.78)x(2.75+3.09)/2	1.26		
		(-0.68--1.35)x(2.26+2.75)/2	1.68		
		(0.37--0.68)x(1.41+2.26)/2	1.93		
		(0.41-0.37)x(1.38+1.41)/2	0.06		
		(0.47-0.41)x(1.35+1.38)/2	0.08		
		(1.50-0.47)x(0.82+1.35)/2	1.12		
		(2.10-1.50)x(0.64+0.82)/2	0.44		
		(2.59-2.10)x(0.47+0.64)/2	0.27		
		(3.14-2.59)x(0.38+0.47)/2	0.23		
		(3.00-3.14)x(0.25+0.38)/2	-0.04		
		(-3.00-3.00)x(0.25+0.25)/2	-1.50		
		(-5.84--3.00)x(3.08+0.25)/2	-4.73		
				13.60	
12	B1	(-9.51--9.59)x(3.81+3.83)/2	0.31		
163.77		(-9.46--9.51)x(3.81+3.81)/2	0.19		
		(-9.38--9.46)x(3.80+3.81)/2	0.30		
		(-8.37--9.38)x(3.65+3.80)/2	3.76		
		(-7.78--8.37)x(3.54+3.65)/2	2.12		
		(-7.28--7.78)x(3.46+3.54)/2	1.75		
		(-6.41--7.28)x(3.26+3.46)/2	2.92		
		(-6.35--6.41)x(3.24+3.26)/2	0.20		
		(-9.00--6.35)x(3.24+3.24)/2	-8.59		
		(-9.59--9.00)x(3.83+3.24)/2	-2.09		
				0.87	
12	B2	(-5.09--5.95)x(3.11+3.19)/2	2.71		
163.77		(-4.32--5.09)x(3.14+3.11)/2	2.41		
		(-4.00--4.32)x(3.16+3.14)/2	1.01		
		(-3.44--4.00)x(3.22+3.16)/2	1.79		
		(-2.91--3.44)x(3.28+3.22)/2	1.72		
		(-2.59--2.91)x(3.27+3.28)/2	1.05		
		(-1.81--2.59)x(3.27+3.27)/2	2.55		
		(-0.87--1.81)x(2.86+3.27)/2	2.88		
		(-0.72--0.87)x(2.82+2.86)/2	0.43		
		(-0.47--0.72)x(2.59+2.82)/2	0.68		
		(0.37--0.47)x(1.79+2.59)/2	1.84		
		(0.86-0.37)x(1.48+1.79)/2	0.80		
		(1.46-0.86)x(1.07+1.48)/2	0.76		
		(2.49-1.46)x(0.71+1.07)/2	0.92		
		(2.56-2.49)x(0.69+0.71)/2	0.05		
		(2.59-2.56)x(0.69+0.69)/2	0.02		
		(3.34-2.59)x(0.58+0.69)/2	0.48		
		(3.00-3.34)x(0.24+0.58)/2	-0.14		
		(-3.00-3.00)x(0.24+0.24)/2	-1.44		
		(-5.95--3.00)x(3.19+0.24)/2	-5.06		
				15.46	
13	B1	(-9.50--10.00)x(4.20+4.23)/2	2.11		
178.72		(-9.02--9.50)x(4.03+4.20)/2	1.98		
		(-8.41--9.02)x(3.83+4.03)/2	2.40		
		(-7.36--8.41)x(3.37+3.83)/2	3.78		
		(-7.31--7.36)x(3.35+3.37)/2	0.17		
		(-7.29--7.31)x(3.35+3.35)/2	0.07		
		(-6.61--7.29)x(3.23+3.35)/2	2.24		
		(-9.00--6.61)x(3.23+3.23)/2	-7.72		
		(-10.00--9.00)x(4.23+3.23)/2	-3.73		
				1.30	
13	B2	(-5.56--5.92)x(3.15+3.16)/2	1.14		
178.72		(-5.13--5.56)x(3.12+3.15)/2	1.35		
		(-4.39--5.13)x(3.17+3.12)/2	2.33		
		(-4.04--4.39)x(3.20+3.17)/2	1.11		
		(-3.83--4.04)x(3.20+3.20)/2	0.67		
		(-2.94--3.83)x(3.23+3.20)/2	2.86		
		(-2.10--2.94)x(3.21+3.23)/2	2.70		
		(-1.85--2.10)x(3.21+3.21)/2	0.80		
		A RIPORTARE mq	12.96		

	CALCOLO DELLE AREE		Foglio n. 16

STERRO

N. SEZIONE PROG.	FIG.	ELEMENTI DI CALCOLO	AREA ELEMENTARE mq	AREA FIGURA mq	NOTE
		RIPORTO mq	12.96		
		(-1.42--1.85)x(3.08+3.21)/2	1.35		
		(-0.76--1.42)x(2.82+3.08)/2	1.95		
		(-0.37--0.76)x(2.46+2.82)/2	1.03		
		(0.33--0.37)x(1.82+2.46)/2	1.50		
		(1.35-0.33)x(1.15+1.82)/2	1.51		
		(1.43-1.35)x(1.10+1.15)/2	0.09		
		(1.46-1.43)x(1.08+1.10)/2	0.03		
		(1.55-1.46)x(1.04+1.08)/2	0.10		
		(2.26-1.55)x(0.69+1.04)/2	0.61		
		(2.52-2.26)x(0.58+0.69)/2	0.17		
		(3.08-2.52)x(0.47+0.58)/2	0.29		
		(3.21-3.08)x(0.44+0.47)/2	0.06		
		(3.00-3.21)x(0.23+0.44)/2	-0.07		
		(-3.00-3.00)x(0.23+0.23)/2	-1.38		
		(-5.92--3.00)x(3.16+0.23)/2	-4.95		
				15.25	
14 193.66	B1	(-5.34--6.14)x(3.27+3.36)/2	2.65		
		(-5.16--5.34)x(3.26+3.27)/2	0.59		
		(-5.06--5.16)x(3.27+3.26)/2	0.33		
		(-4.07--5.06)x(3.30+3.27)/2	3.25		
		(-3.61--4.07)x(3.35+3.30)/2	1.53		
		(-2.98--3.61)x(3.38+3.35)/2	2.12		
		(-2.37--2.98)x(3.40+3.38)/2	2.07		
		(-1.89--2.37)x(3.42+3.40)/2	1.64		
		(-1.61--1.89)x(3.28+3.42)/2	0.94		
		(-0.79--1.61)x(2.98+3.28)/2	2.57		
		(0.12--0.79)x(2.26+2.98)/2	2.38		
		(0.30-0.12)x(2.15+2.26)/2	0.40		
		(0.60-0.30)x(1.89+2.15)/2	0.61		
		(1.39-0.60)x(1.27+1.89)/2	1.25		
		(1.85-1.39)x(1.05+1.27)/2	0.53		
		(2.48-1.85)x(0.73+1.05)/2	0.56		
		(3.26-2.48)x(0.48+0.73)/2	0.47		
		(3.00-3.26)x(0.23+0.48)/2	-0.09		
		(-3.00-3.00)x(0.23+0.23)/2	-1.38		
		(-6.14--3.00)x(3.36+0.23)/2	-5.64		
				16.78	
15 208.61	B1	(-5.20--6.25)x(3.23+3.47)/2	3.52		
		(-4.57--5.20)x(3.23+3.23)/2	2.03		
		(-4.11--4.57)x(3.21+3.23)/2	1.48		
		(-3.32--4.11)x(3.28+3.21)/2	2.56		
		(-3.02--3.32)x(3.30+3.28)/2	0.99		
		(-2.84--3.02)x(3.31+3.30)/2	0.59		
		(-1.92--2.84)x(3.32+3.31)/2	3.05		
		(-1.11--1.92)x(3.16+3.32)/2	2.62		
		(-0.83--1.11)x(3.14+3.16)/2	0.88		
		(-0.35--0.83)x(2.87+3.14)/2	1.44		
		(0.26--0.35)x(2.50+2.87)/2	1.64		
		(0.62-0.26)x(2.22+2.50)/2	0.85		
		(1.35-0.62)x(1.63+2.22)/2	1.41		
		(2.35-1.35)x(1.05+1.63)/2	1.34		
		(2.45-2.35)x(0.98+1.05)/2	0.10		
		(2.62-2.45)x(0.92+0.98)/2	0.16		
		(3.43-2.62)x(0.65+0.92)/2	0.64		
		(3.00-3.43)x(0.22+0.65)/2	-0.19		
		(-3.00-3.00)x(0.22+0.22)/2	-1.32		
		(-6.25--3.00)x(3.47+0.22)/2	-6.00		
				17.79	
16 223.55	B1	(-5.88--6.09)x(3.32+3.30)/2	0.70		
		(-5.25--5.88)x(3.37+3.32)/2	2.11		
		(-4.21--5.25)x(3.43+3.37)/2	3.54		
		(-4.17--4.21)x(3.43+3.43)/2	0.14		
		(-4.16--4.17)x(3.43+3.43)/2	0.03		
		(-3.37--4.16)x(3.37+3.43)/2	2.69		
		(-3.06--3.37)x(3.37+3.37)/2	1.04		
		(-2.58--3.06)x(3.33+3.37)/2	1.61		
		(-1.97--2.58)x(3.30+3.33)/2	2.02		
		(-1.78--1.97)x(3.30+3.30)/2	0.63		
		(-1.29--1.78)x(3.31+3.30)/2	1.62		
		(-0.87--1.29)x(3.32+3.31)/2	1.39		
		(-0.62--0.87)x(3.27+3.32)/2	0.82		
		(0.22--0.62)x(3.17+3.27)/2	2.70		
		(1.13-0.22)x(2.70+3.17)/2	2.67		
		(1.32-1.13)x(2.63+2.70)/2	0.51		
		(1.63-1.32)x(2.37+2.63)/2	0.77		
		(2.42-1.63)x(1.71+2.37)/2	1.61		
		(2.89-2.42)x(1.44+1.71)/2	0.74		
		(3.51-2.89)x(1.02+1.44)/2	0.76		
		(3.71-3.51)x(0.92+1.02)/2	0.19		
		(3.00-3.71)x(0.21+0.92)/2	-0.40		
		(-3.00-3.00)x(0.21+0.21)/2	-1.26		
		(-6.09--3.00)x(3.30+0.21)/2	-5.42		
				21.21	
17 238.49	B1	(-5.64--6.17)x(3.38+3.37)/2	1.79		
		(-5.49--5.64)x(3.38+3.38)/2	0.51		
		(-5.25--5.49)x(3.38+3.38)/2	0.81		
		(-4.39--5.25)x(3.38+3.38)/2	2.91		
		(-3.86--4.39)x(3.37+3.38)/2	1.79		
		(-3.30--3.86)x(3.36+3.37)/2	1.88		
		(-2.39--3.30)x(3.29+3.36)/2	3.03		
		(-2.20--2.39)x(3.28+3.29)/2	0.62		
		(-1.46--2.20)x(3.21+3.28)/2	2.40		
		(-1.10--1.46)x(3.19+3.21)/2	1.15		
		(-0.30--1.10)x(3.17+3.19)/2	2.54		
		(-0.00--0.30)x(3.16+3.17)/2	0.95		
		(0.48--0.00)x(3.14+3.16)/2	1.51		
		(1.10-0.48)x(3.09+3.14)/2	1.93		
		(1.48-1.10)x(2.86+3.09)/2	1.13		
		(2.19-1.48)x(2.48+2.86)/2	1.90		
		(3.26-2.19)x(1.62+2.48)/2	2.19		
		(3.29-3.26)x(1.59+1.62)/2	0.05		
		(3.35-3.29)x(1.55+1.59)/2	0.09		
		(3.96-3.35)x(1.17+1.55)/2	0.83		
		(3.00-3.96)x(0.21+1.17)/2	-0.66		
		(-3.00-3.00)x(0.21+0.21)/2	-1.26		
		A RIPORTARE mq	28.09		

	CALCOLO DELLE AREE		Foglio n. 17

STERRO

N. SEZIONE PROG.	FIG.	ELEMENTI DI CALCOLO	AREA ELEMENTARE mq	AREA FIGURA mq	NOTE
		RIPORTO mq	28.09		
		(-6.17--3.00)x(3.37+0.21)/2	-5.67		
				22.42	
18	B1	(-5.72--6.09)x(3.31+3.29)/2	1.22		
253.43		(-5.31--5.72)x(3.33+3.31)/2	1.36		
		(-4.62--5.31)x(3.36+3.33)/2	2.31		
		(-3.54--4.62)x(3.37+3.36)/2	3.63		
		(-3.53--3.54)x(3.37+3.37)/2	0.03		
		(-3.51--3.53)x(3.37+3.37)/2	0.07		
		(-2.43--3.51)x(3.31+3.37)/2	3.61		
		(-1.76--2.43)x(3.25+3.31)/2	2.20		
		(-1.33--1.76)x(3.21+3.25)/2	1.39		
		(-0.64--1.33)x(3.18+3.21)/2	2.20		
		(-0.23--0.64)x(3.17+3.18)/2	1.30		
		(0.02--0.23)x(3.13+3.17)/2	0.79		
		(0.87-0.02)x(3.07+3.13)/2	2.63		
		(1.80-0.87)x(2.77+3.07)/2	2.72		
		(1.96-1.80)x(2.72+2.77)/2	0.44		
		(2.22-1.96)x(2.58+2.72)/2	0.69		
		(3.06-2.22)x(2.04+2.58)/2	1.94		
		(3.58-3.06)x(1.69+2.04)/2	0.97		
		(4.09-3.58)x(1.29+1.69)/2	0.76		
		(3.00-4.09)x(0.20+1.29)/2	-0.81		
		(-3.00-3.00)x(0.20+0.20)/2	-1.20		
		(-6.09--3.00)x(3.29+0.20)/2	-5.39		
				22.86	
19	B1	(-5.95--6.10)x(3.30+3.30)/2	0.49		
268.37		(-4.99--5.95)x(3.34+3.30)/2	3.19		
		(-4.85--4.99)x(3.35+3.34)/2	0.47		
		(-4.63--4.85)x(3.35+3.35)/2	0.74		
		(-3.76--4.63)x(3.37+3.35)/2	2.92		
		(-3.21--3.76)x(3.35+3.37)/2	1.85		
		(-2.66--3.21)x(3.33+3.35)/2	1.84		
		(-1.77--2.66)x(3.32+3.33)/2	2.96		
		(-1.56--1.77)x(3.31+3.32)/2	0.70		
		(-1.43--1.56)x(3.31+3.31)/2	0.43		
		(-0.46--1.43)x(3.25+3.31)/2	3.18		
		(0.35--0.46)x(3.22+3.25)/2	2.62		
		(0.64-0.35)x(3.21+3.22)/2	0.93		
		(1.10-0.64)x(3.18+3.21)/2	1.47		
		(1.73-1.10)x(3.09+3.18)/2	1.98		
		(2.13-1.73)x(2.88+3.09)/2	1.19		
		(2.83-2.13)x(2.54+2.88)/2	1.90		
		(3.90-2.83)x(1.99+2.54)/2	2.42		
		(3.93-3.90)x(1.98+1.99)/2	0.06		
		(3.97-3.93)x(1.96+1.98)/2	0.08		
		(4.48-3.97)x(1.67+1.96)/2	0.93		
		(3.00-4.48)x(0.19+1.67)/2	-1.38		
		(-3.00-3.00)x(0.19+0.19)/2	-1.14		
		(-6.10--3.00)x(3.30+0.19)/2	-5.41		
				24.42	
20	B1	(-5.76--6.16)x(3.36+3.35)/2	1.34		
283.31		(-5.08--5.76)x(3.38+3.36)/2	2.29		
		(-4.67--5.08)x(3.40+3.38)/2	1.39		
		(-3.99--4.67)x(3.44+3.40)/2	2.33		
		(-2.89--3.99)x(3.48+3.44)/2	3.81		
		(-1.79--2.89)x(3.47+3.48)/2	3.82		
		(-1.11--1.79)x(3.47+3.47)/2	2.36		
		(-0.69--1.11)x(3.46+3.47)/2	1.46		
		(-0.51--0.69)x(3.46+3.46)/2	0.62		
		(-0.02--0.51)x(3.46+3.46)/2	1.70		
		(0.29--0.02)x(3.46+3.46)/2	1.07		
		(0.41-0.29)x(3.46+3.46)/2	0.42		
		(0.67-0.41)x(3.46+3.46)/2	0.90		
		(1.50-0.67)x(3.47+3.46)/2	2.88		
		(2.45-1.50)x(3.47+3.47)/2	3.30		
		(2.60-2.45)x(3.47+3.47)/2	0.52		
		(2.85-2.60)x(3.47+3.47)/2	0.87		
		(3.70-2.85)x(3.44+3.47)/2	2.94		
		(4.23-3.70)x(3.47+3.44)/2	1.83		
		(4.80-4.23)x(3.48+3.47)/2	1.98		
		(5.71-4.80)x(3.56+3.48)/2	3.20		
		(5.89-5.71)x(3.57+3.56)/2	0.64		
		(6.01-5.89)x(3.58+3.57)/2	0.43		
		(6.45-6.01)x(3.64+3.58)/2	1.59		
		(3.00-6.45)x(0.19+3.64)/2	-6.61		
		(-3.00-3.00)x(0.19+0.19)/2	-1.14		
		(-6.16--3.00)x(3.35+0.19)/2	-5.59		
				30.35	
21	B1	(-5.75--6.18)x(3.37+3.36)/2	1.45		
298.25		(-5.31--5.75)x(3.38+3.37)/2	1.49		
		(-4.34--5.31)x(3.43+3.38)/2	3.30		
		(-4.22--4.34)x(3.44+3.43)/2	0.41		
		(-4.01--4.22)x(3.45+3.44)/2	0.72		
		(-3.12--4.01)x(3.48+3.45)/2	3.08		
		(-2.56--3.12)x(3.48+3.48)/2	1.95		
		(-2.02--2.56)x(3.46+3.48)/2	1.87		
		(-1.15--2.02)x(3.49+3.46)/2	3.02		
		(-0.92--1.15)x(3.49+3.49)/2	0.80		
		(-0.78--0.92)x(3.48+3.49)/2	0.49		
		(0.18--0.78)x(3.44+3.48)/2	3.32		
		(0.99-0.18)x(3.46+3.44)/2	2.79		
		(1.27-0.99)x(3.45+3.46)/2	0.97		
		(1.72-1.27)x(3.45+3.45)/2	1.55		
		(2.37-1.72)x(3.46+3.45)/2	2.25		
		(2.77-2.37)x(3.50+3.46)/2	1.39		
		(3.47-2.77)x(3.60+3.50)/2	2.49		
		(4.55-3.47)x(3.52+3.60)/2	3.84		
		(4.57-4.55)x(3.52+3.52)/2	0.07		
		(4.59-4.57)x(3.52+3.52)/2	0.07		
		(5.66-4.59)x(3.54+3.52)/2	3.78		
		(6.33-5.66)x(3.54+3.54)/2	2.37		
		(6.36-6.33)x(3.54+3.54)/2	0.11		
		(3.00-6.36)x(0.18+3.54)/2	-6.25		
		(-3.00-3.00)x(0.18+0.18)/2	-1.08		
		(-6.18--3.00)x(3.36+0.18)/2	-5.63		
		A RIPORTARE mq	30.62		

	CALCOLO DELLE AREE		Foglio n. 18

STERRO

N. SEZIONE PROG.	FIG.	ELEMENTI DI CALCOLO	AREA ELEMENTARE mq	AREA FIGURA mq	NOTE
		RIPORTO mq	30.62		
				30.62	
22	B1	(-5.71--6.18)x(3.35+3.35)/2	1.57		
313.19		(-5.52--5.71)x(3.36+3.35)/2	0.64		
		(-5.21--5.52)x(3.37+3.36)/2	1.04		
		(-4.43--5.21)x(3.41+3.37)/2	2.64		
		(-3.95--4.43)x(3.40+3.41)/2	1.63		
		(-3.33--3.95)x(3.42+3.40)/2	2.11		
		(-2.30--3.33)x(3.45+3.42)/2	3.54		
		(-2.24--2.30)x(3.45+3.45)/2	0.21		
		(-2.20--2.24)x(3.45+3.45)/2	0.14		
		(-1.14--2.20)x(3.53+3.45)/2	3.70		
		(-0.45--1.14)x(3.49+3.53)/2	2.42		
		(-0.05--0.45)x(3.46+3.49)/2	1.39		
		(0.62--0.05)x(3.47+3.46)/2	2.32		
		(1.05-0.62)x(3.46+3.47)/2	1.49		
		(1.31-1.05)x(3.46+3.46)/2	0.90		
		(2.14-1.31)x(3.49+3.46)/2	2.88		
		(3.06-2.14)x(3.46+3.49)/2	3.20		
		(3.24-3.06)x(3.45+3.46)/2	0.62		
		(3.53-3.24)x(3.46+3.45)/2	1.00		
		(4.33-3.53)x(3.51+3.46)/2	2.79		
		(4.82-4.33)x(3.51+3.51)/2	1.72		
		(5.43-4.82)x(3.49+3.51)/2	2.13		
		(6.30-5.43)x(3.47+3.49)/2	3.03		
		(3.00-6.30)x(0.17+3.47)/2	-6.01		
		(-3.00-3.00)x(0.17+0.17)/2	-1.02		
		(-6.18--3.00)x(3.35+0.17)/2	-5.60		
				30.48	
23	B1	(-5.67--6.20)x(3.35+3.37)/2	1.78		
328.13		(-5.31--5.67)x(3.36+3.35)/2	1.21		
		(-4.58--5.31)x(3.38+3.36)/2	2.46		
		(-3.56--4.58)x(3.51+3.38)/2	3.51		
		(-3.48--3.56)x(3.52+3.51)/2	0.28		
		(-3.36--3.48)x(3.52+3.52)/2	0.42		
		(-2.39--3.36)x(3.56+3.52)/2	3.43		
		(-1.80--2.39)x(3.59+3.56)/2	2.11		
		(-1.29--1.80)x(3.60+3.59)/2	1.83		
		(-0.44--1.29)x(3.57+3.60)/2	3.05		
		(-0.20--0.44)x(3.56+3.57)/2	0.86		
		(-0.05--0.20)x(3.56+3.56)/2	0.53		
		(0.90--0.05)x(3.52+3.56)/2	3.36		
		(1.33-0.90)x(3.55+3.52)/2	1.52		
		(1.99-1.33)x(3.55+3.55)/2	2.34		
		(2.47-1.99)x(3.53+3.55)/2	1.70		
		(3.09-2.47)x(3.50+3.53)/2	2.18		
		(3.46-3.09)x(3.49+3.50)/2	1.29		
		(4.18-3.46)x(3.45+3.49)/2	2.50		
		(5.21-4.18)x(3.44+3.45)/2	3.55		
		(5.28-5.21)x(3.45+3.44)/2	0.24		
		(5.39-5.28)x(3.44+3.45)/2	0.38		
		(6.25-5.39)x(3.42+3.44)/2	2.95		
		(3.00-6.25)x(0.17+3.42)/2	-5.83		
		(-3.00-3.00)x(0.17+0.17)/2	-1.02		
		(-6.20--3.00)x(3.37+0.17)/2	-5.66		
				30.97	
24	B1	(-5.89--6.18)x(3.36+3.35)/2	0.97		
343.07		(-5.03--5.89)x(3.35+3.36)/2	2.89		
		(-4.79--5.03)x(3.35+3.35)/2	0.80		
		(-4.68--4.79)x(3.36+3.35)/2	0.37		
		(-4.40--4.68)x(3.36+3.36)/2	0.94		
		(-3.89--4.40)x(3.38+3.36)/2	1.72		
		(-3.69--3.89)x(3.39+3.38)/2	0.68		
		(-3.25--3.69)x(3.42+3.39)/2	1.50		
		(-2.59--3.25)x(3.48+3.42)/2	2.28		
		(-1.53--2.59)x(3.49+3.48)/2	3.69		
		(-1.50--1.53)x(3.49+3.49)/2	0.10		
		(-1.48--1.50)x(3.49+3.49)/2	0.07		
		(-0.40--1.48)x(3.56+3.49)/2	3.81		
		(0.30--0.40)x(3.53+3.56)/2	2.48		
		(0.70-0.30)x(3.52+3.53)/2	1.41		
		(1.34-0.70)x(3.51+3.52)/2	2.25		
		(1.80-1.34)x(3.50+3.51)/2	1.61		
		(2.08-1.80)x(3.50+3.50)/2	0.98		
		(2.89-2.08)x(3.49+3.50)/2	2.83		
		(3.86-2.89)x(3.47+3.49)/2	3.38		
		(3.99-3.86)x(3.47+3.47)/2	0.45		
		(4.21-3.99)x(3.46+3.47)/2	0.76		
		(5.09-4.21)x(3.44+3.46)/2	3.04		
		(5.64-5.09)x(3.38+3.44)/2	1.88		
		(6.18-5.64)x(3.34+3.38)/2	1.81		
		(3.00-6.18)x(0.16+3.34)/2	-5.56		
		(-3.00-3.00)x(0.16+0.16)/2	-0.96		
		(-6.18--3.00)x(3.35+0.16)/2	-5.58		
				30.60	
25	B1	(-6.10--6.13)x(3.29+3.29)/2	0.10		
358.01		(-5.66--6.10)x(3.31+3.29)/2	1.45		
		(-5.00--5.66)x(3.34+3.31)/2	2.19		
		(-4.61--5.00)x(3.34+3.34)/2	1.30		
		(-3.91--4.61)x(3.34+3.34)/2	2.34		
		(-2.87--3.91)x(3.35+3.34)/2	3.48		
		(-2.81--2.87)x(3.35+3.35)/2	0.20		
		(-2.72--2.81)x(3.36+3.35)/2	0.30		
		(-1.72--2.72)x(3.46+3.36)/2	3.41		
		(-1.13--1.72)x(3.50+3.46)/2	2.05		
		(-0.63--1.13)x(3.55+3.50)/2	1.76		
		(0.23--0.63)x(3.53+3.55)/2	3.04		
		(0.47-0.23)x(3.53+3.53)/2	0.85		
		(0.61-0.47)x(3.52+3.53)/2	0.49		
		(1.56-0.61)x(3.45+3.52)/2	3.31		
		(2.35-1.56)x(3.46+3.45)/2	2.73		
		(2.65-2.35)x(3.47+3.46)/2	1.04		
		(3.17-2.65)x(3.45+3.47)/2	1.80		
		(3.75-3.17)x(3.42+3.45)/2	1.99		
		(4.09-3.75)x(3.43+3.42)/2	1.16		
		(4.84-4.09)x(3.44+3.43)/2	2.58		
		A RIPORTARE mq	37.57		

	CALCOLO DELLE AREE		Foglio n. 19

STERRO

N. SEZIONE PROG.	FIG.	ELEMENTI DI CALCOLO	AREA ELEMENTARE mq	AREA FIGURA mq	NOTE
		RIPORTO mq	37.57		
		(5.83-4.84)x(3.44+3.44)/2	3.41		
		(5.94-5.83)x(3.44+3.44)/2	0.38		
		(6.11-5.94)x(3.43+3.44)/2	0.58		
		(6.27-6.11)x(3.43+3.43)/2	0.55		
		(3.00-6.27)x(0.16+3.43)/2	-5.87		
		(-3.00-3.00)x(0.16+0.16)/2	-0.96		
		(-6.13--3.00)x(3.29+0.16)/2	-5.40		
				30.26	
26 372.95	B1	(-5.27--6.16)x(3.33+3.31)/2	2.95		
		(-4.43--5.27)x(3.36+3.33)/2	2.81		
		(-4.17--4.43)x(3.38+3.36)/2	0.88		
		(-3.74--4.17)x(3.39+3.38)/2	1.46		
		(-3.07--3.74)x(3.41+3.39)/2	2.28		
		(-2.64--3.07)x(3.42+3.41)/2	1.47		
		(-1.97--2.64)x(3.45+3.42)/2	2.30		
		(-0.90--1.97)x(3.51+3.45)/2	3.72		
		(-0.87--0.90)x(3.52+3.51)/2	0.11		
		(-0.85--0.87)x(3.52+3.52)/2	0.07		
		(0.23--0.85)x(3.58+3.52)/2	3.83		
		(0.94-0.23)x(3.52+3.58)/2	2.52		
		(1.33-0.94)x(3.49+3.52)/2	1.37		
		(1.50-1.33)x(3.48+3.49)/2	0.59		
		(1.95-1.50)x(3.47+3.48)/2	1.56		
		(2.30-1.95)x(3.45+3.47)/2	1.21		
		(2.43-2.30)x(3.46+3.45)/2	0.45		
		(2.73-2.43)x(3.47+3.46)/2	1.04		
		(3.53-2.73)x(3.50+3.47)/2	2.79		
		(4.52-3.53)x(3.47+3.50)/2	3.45		
		(4.63-4.52)x(3.47+3.47)/2	0.38		
		(4.79-4.63)x(3.47+3.47)/2	0.56		
		(5.73-4.79)x(3.43+3.47)/2	3.24		
		(6.26-5.73)x(3.41+3.43)/2	1.81		
		(3.00-6.26)x(0.15+3.41)/2	-5.80		
		(-3.00-3.00)x(0.15+0.15)/2	-0.90		
		(-6.16--3.00)x(3.31+0.15)/2	-5.47		
				30.68	
27 387.90	B1	(-5.86--6.12)x(3.28+3.26)/2	0.85		
		(-5.49--5.86)x(3.29+3.28)/2	1.22		
		(-4.89--5.49)x(3.30+3.29)/2	1.98		
		(-4.39--4.89)x(3.31+3.30)/2	1.65		
		(-3.73--4.39)x(3.28+3.31)/2	2.17		
		(-3.29--3.73)x(3.28+3.28)/2	1.44		
		(-2.30--3.29)x(3.34+3.28)/2	3.28		
		(-2.20--2.30)x(3.34+3.34)/2	0.33		
		(-2.02--2.20)x(3.36+3.34)/2	0.60		
		(-1.10--2.02)x(3.41+3.36)/2	3.11		
		(-0.53--1.10)x(3.42+3.41)/2	1.95		
		(0.00--0.53)x(3.44+3.42)/2	1.82		
		(0.85-0.00)x(3.43+3.44)/2	2.92		
		(1.10-0.85)x(3.43+3.43)/2	0.86		
		(1.25-1.10)x(3.43+3.43)/2	0.51		
		(2.20-1.25)x(3.41+3.43)/2	3.25		
		(3.03-2.20)x(3.42+3.41)/2	2.83		
		(3.29-3.03)x(3.42+3.42)/2	0.89		
		(3.72-3.29)x(3.42+3.42)/2	1.47		
		(4.39-3.72)x(3.42+3.42)/2	2.29		
		(4.81-4.39)x(3.40+3.42)/2	1.43		
		(5.49-4.81)x(3.37+3.40)/2	2.30		
		(6.20-5.49)x(3.34+3.37)/2	2.38		
		(3.00-6.20)x(0.14+3.34)/2	-5.57		
		(-3.00-3.00)x(0.14+0.14)/2	-0.84		
		(-6.12--3.00)x(3.26+0.14)/2	-5.30		
				29.82	
28 402.84	B1	(-6.03--6.14)x(3.28+3.28)/2	0.36		
		(-5.64--6.03)x(3.28+3.28)/2	1.28		
		(-5.40--5.64)x(3.29+3.28)/2	0.79		
		(-4.54--5.40)x(3.29+3.29)/2	2.83		
		(-3.65--4.54)x(3.22+3.29)/2	2.90		
		(-3.45--3.65)x(3.21+3.22)/2	0.64		
		(-3.11--3.45)x(3.20+3.21)/2	1.09		
		(-2.35--3.11)x(3.23+3.20)/2	2.44		
		(-1.89--2.35)x(3.23+3.23)/2	1.49		
		(-1.26--1.89)x(3.26+3.23)/2	2.04		
		(-0.20--1.26)x(3.36+3.26)/2	3.51		
		(-0.16--0.20)x(3.36+3.36)/2	0.13		
		(-0.14--0.16)x(3.36+3.36)/2	0.07		
		(0.94--0.14)x(3.38+3.36)/2	3.64		
		(1.62-0.94)x(3.36+3.38)/2	2.29		
		(2.03-1.62)x(3.36+3.36)/2	1.38		
		(2.72-2.03)x(3.34+3.36)/2	2.31		
		(3.13-2.72)x(3.33+3.34)/2	1.37		
		(3.37-3.13)x(3.33+3.33)/2	0.80		
		(4.22-3.37)x(3.34+3.33)/2	2.83		
		(5.12-4.22)x(3.33+3.34)/2	3.00		
		(5.32-5.12)x(3.32+3.33)/2	0.67		
		(5.64-5.32)x(3.31+3.32)/2	1.06		
		(6.16-5.64)x(3.29+3.31)/2	1.72		
		(3.00-6.16)x(0.14+3.29)/2	-5.42		
		(-3.00-3.00)x(0.14+0.14)/2	-0.84		
		(-6.14--3.00)x(3.28+0.14)/2	-5.37		
				29.01	
29 417.81	B1	(-5.58--6.15)x(3.31+3.28)/2	1.88		
		(-4.71--5.58)x(3.30+3.31)/2	2.88		
		(-4.52--4.71)x(3.29+3.30)/2	0.63		
		(-4.03--4.52)x(3.27+3.29)/2	1.61		
		(-3.45--4.03)x(3.25+3.27)/2	1.89		
		(-3.23--3.45)x(3.24+3.25)/2	0.71		
		(-2.39--3.23)x(3.24+3.24)/2	2.72		
		(-1.75--2.39)x(3.23+3.24)/2	2.07		
		(-1.32--1.75)x(3.21+3.23)/2	1.38		
		(-0.28--1.32)x(3.22+3.21)/2	3.34		
		(-0.26--0.28)x(3.22+3.22)/2	0.06		
		(-0.21--0.26)x(3.22+3.22)/2	0.16		
		(0.80--0.21)x(3.23+3.22)/2	3.26		
		(1.20-0.80)x(3.26+3.23)/2	1.30		
		A RIPORTARE mq	23.89		

	CALCOLO DELLE AREE		Foglio n. 20

STERRO

N. SEZIONE PROG.	FIG.	ELEMENTI DI CALCOLO	AREA ELEMENTARE mq	AREA FIGURA mq	NOTE
		RIPORTO mq	23.89		
		(1.87-1.20)x(3.29+3.26)/2	2.19		
		(2.67-1.87)x(3.27+3.29)/2	2.62		
		(2.93-2.67)x(3.29+3.27)/2	0.85		
		(3.61-2.93)x(3.21+3.29)/2	2.21		
		(4.00-3.61)x(3.17+3.21)/2	1.24		
		(4.75-4.00)x(3.18+3.17)/2	2.38		
		(5.06-4.75)x(3.18+3.18)/2	0.99		
		(5.62-5.06)x(3.20+3.18)/2	1.79		
		(6.08-5.62)x(3.21+3.20)/2	1.47		
		(3.00-6.08)x(0.13+3.21)/2	-5.14		
		(-3.00-3.00)x(0.13+0.13)/2	-0.78		
		(-6.15--3.00)x(3.28+0.13)/2	-5.37		
				28.34	
30 432.79	B1	(-6.56--6.96)x(3.13+3.08)/2	1.24		
		(-6.17--6.56)x(3.13+3.13)/2	1.22		
		(-5.50--6.17)x(3.15+3.13)/2	2.10		
		(-4.69--5.50)x(3.19+3.15)/2	2.57		
		(-4.43--4.69)x(3.21+3.19)/2	0.83		
		(-3.75--4.43)x(3.18+3.21)/2	2.17		
		(-3.37--3.75)x(3.17+3.18)/2	1.21		
		(-3.22--3.37)x(3.17+3.17)/2	0.48		
		(-2.30--3.22)x(3.16+3.17)/2	2.91		
		(-1.74--2.30)x(3.15+3.16)/2	1.77		
		(-1.24--1.74)x(3.14+3.15)/2	1.57		
		(-0.27--1.24)x(3.12+3.14)/2	3.04		
		(-0.17--0.27)x(3.12+3.12)/2	0.31		
		(-0.12--0.17)x(3.11+3.12)/2	0.16		
		(0.07--0.12)x(3.11+3.11)/2	0.59		
		(0.71-0.07)x(3.11+3.11)/2	1.99		
		(0.89-0.71)x(3.11+3.11)/2	0.56		
		(1.21-0.89)x(3.11+3.11)/2	1.00		
		(1.95-1.21)x(3.12+3.11)/2	2.31		
		(2.68-1.95)x(3.14+3.12)/2	2.28		
		(3.02-2.68)x(3.16+3.14)/2	1.07		
		(3.89-3.02)x(3.17+3.16)/2	2.75		
		(4.08-3.89)x(3.17+3.17)/2	0.60		
		(4.16-4.08)x(3.16+3.17)/2	0.25		
		(5.15-4.16)x(3.12+3.16)/2	3.11		
		(5.63-5.15)x(3.12+3.12)/2	1.50		
		(6.21-5.63)x(3.10+3.12)/2	1.80		
		(6.97-6.21)x(3.09+3.10)/2	2.35		
		(4.00-6.97)x(0.12+3.09)/2	-4.77		
		(-4.00-4.00)x(0.12+0.12)/2	-0.96		
		(-6.96--4.00)x(3.08+0.12)/2	-4.74		
				33.27	
31 447.77	B1	(-6.15--6.31)x(2.51+2.43)/2	0.40		
		(-5.41--6.15)x(2.96+2.51)/2	2.02		
		(-4.68--5.41)x(3.10+2.96)/2	2.21		
		(-4.35--4.68)x(3.20+3.10)/2	1.04		
		(-4.16--4.35)x(3.20+3.20)/2	0.61		
		(-3.49--4.16)x(3.19+3.20)/2	2.14		
		(-3.33--3.49)x(3.19+3.19)/2	0.51		
		(-3.28--3.33)x(3.19+3.19)/2	0.16		
		(-3.20--3.28)x(3.19+3.19)/2	0.26		
		(-2.22--3.20)x(3.19+3.19)/2	3.13		
		(-1.73--2.22)x(3.17+3.19)/2	1.56		
		(-1.15--1.73)x(3.16+3.17)/2	1.84		
		(-0.25--1.15)x(3.17+3.16)/2	2.85		
		(-0.09--0.25)x(3.16+3.17)/2	0.51		
		(0.33--0.09)x(3.16+3.16)/2	1.33		
		(0.98-0.33)x(3.15+3.16)/2	2.05		
		(1.22-0.98)x(3.14+3.15)/2	0.75		
		(2.04-1.22)x(3.11+3.14)/2	2.56		
		(2.70-2.04)x(3.10+3.11)/2	2.05		
		(3.10-2.70)x(3.09+3.10)/2	1.24		
		(4.15-3.10)x(3.12+3.09)/2	3.26		
		(4.17-4.15)x(3.12+3.12)/2	0.06		
		(4.18-4.17)x(3.12+3.12)/2	0.03		
		(5.23-4.18)x(3.17+3.12)/2	3.30		
		(5.65-5.23)x(3.14+3.17)/2	1.33		
		(6.30-5.65)x(3.12+3.14)/2	2.03		
		(6.96-6.30)x(3.07+3.12)/2	2.04		
		(4.00-6.96)x(0.12+3.07)/2	-4.72		
		(-4.00-4.00)x(0.12+0.12)/2	-0.96		
		(-6.31--4.00)x(2.43+0.12)/2	-2.95		
				32.64	
IMB TM VC1 449.81	B1	(-7.04--7.27)x(1.93+1.79)/2	0.43		
		(-6.82--7.04)x(2.06+1.93)/2	0.44		
		(-5.98--6.82)x(2.54+2.06)/2	1.93		
		(-5.35--5.98)x(2.81+2.54)/2	1.69		
		(-4.91--5.35)x(3.03+2.81)/2	1.28		
		(-4.67--4.91)x(3.09+3.03)/2	0.73		
		(-3.85--4.67)x(3.18+3.09)/2	2.57		
		(-3.79--3.85)x(3.18+3.18)/2	0.19		
		(-2.79--3.79)x(3.23+3.18)/2	3.21		
		(-2.40--2.79)x(3.21+3.23)/2	1.26		
		(-1.72--2.40)x(3.20+3.21)/2	2.18		
		(-0.92--1.72)x(3.17+3.20)/2	2.55		
		(-0.66--0.92)x(3.16+3.17)/2	0.82		
		(0.03--0.66)x(3.17+3.16)/2	2.18		
		(0.41-0.03)x(3.18+3.17)/2	1.21		
		(0.55-0.41)x(3.17+3.18)/2	0.44		
		(1.47-0.55)x(3.14+3.17)/2	2.90		
		(2.03-1.47)x(3.12+3.14)/2	1.75		
		(2.54-2.03)x(3.10+3.12)/2	1.59		
		(3.50-2.54)x(3.09+3.10)/2	2.97		
		(3.60-3.50)x(3.09+3.09)/2	0.31		
		(3.85-3.60)x(3.10+3.09)/2	0.77		
		(4.66-3.85)x(3.14+3.10)/2	2.53		
		(4.98-4.66)x(3.14+3.14)/2	1.00		
		(5.73-4.98)x(3.15+3.14)/2	2.36		
		(6.45-5.73)x(3.09+3.15)/2	2.25		
		(6.79-6.45)x(3.08+3.09)/2	1.05		
		(7.67-6.79)x(3.04+3.08)/2	2.69		
		(7.86-7.67)x(3.04+3.04)/2	0.58		
		A RIPORTARE mq	45.86		

	CALCOLO DELLE AREE		Foglio n. 21

STERRO

N. SEZIONE PROG.	FIG.	ELEMENTI DI CALCOLO	AREA ELEMENTARE mq	AREA FIGURA mq	NOTE
		RIPORTO mq	45.86		
		(7.93-7.86)x(3.04+3.04)/2	0.21		
		(8.51-7.93)x(3.03+3.04)/2	1.76		
		(5.00-8.51)x(-0.48+3.03)/2	-4.48		
		(-5.00-5.00)x(-0.48+-0.48)/2	4.80		
		(-7.27--5.00)x(1.79+-0.48)/2	-1.49		
				46.66	
32	B1	(-7.39--7.43)x(1.92+1.93)/2	0.08		
477.80		(-6.48--7.39)x(2.08+1.92)/2	1.82		
		(-6.32--6.48)x(2.10+2.08)/2	0.33		
		(-6.26--6.32)x(2.12+2.10)/2	0.13		
		(-5.26--6.26)x(2.18+2.12)/2	2.15		
		(-4.79--5.26)x(2.53+2.18)/2	1.11		
		(-4.20--4.79)x(2.93+2.53)/2	1.61		
		(-3.31--4.20)x(3.09+2.93)/2	2.68		
		(-3.13--3.31)x(3.08+3.09)/2	0.56		
		(-2.66--3.13)x(3.14+3.08)/2	1.46		
		(-2.07--2.66)x(3.12+3.14)/2	1.85		
		(-1.84--2.07)x(3.12+3.12)/2	0.72		
		(-1.00--1.84)x(3.12+3.12)/2	2.62		
		(-0.36--1.00)x(3.15+3.12)/2	2.01		
		(0.06--0.36)x(3.16+3.15)/2	1.33		
		(1.11-0.06)x(3.14+3.16)/2	3.31		
		(1.13-1.11)x(3.14+3.14)/2	0.06		
		(1.16-1.13)x(3.14+3.14)/2	0.09		
		(2.19-1.16)x(3.11+3.14)/2	3.22		
		(2.59-2.19)x(3.12+3.11)/2	1.25		
		(3.25-2.59)x(3.13+3.12)/2	2.06		
		(4.06-3.25)x(3.11+3.13)/2	2.53		
		(4.32-4.06)x(3.11+3.11)/2	0.81		
		(4.98-4.32)x(3.08+3.11)/2	2.04		
		(5.38-4.98)x(3.07+3.08)/2	1.23		
		(6.13-5.38)x(3.06+3.07)/2	2.30		
		(6.45-6.13)x(3.06+3.06)/2	0.98		
		(7.01-6.45)x(3.07+3.06)/2	1.72		
		(7.51-7.01)x(3.08+3.07)/2	1.54		
		(8.49-7.51)x(3.13+3.08)/2	3.04		
		(8.58-8.49)x(3.13+3.13)/2	0.28		
		(8.62-8.58)x(3.13+3.13)/2	0.13		
		(5.00-8.62)x(-0.50+3.13)/2	-4.76		
		(-5.00-5.00)x(-0.50+-0.50)/2	5.00		
		(-7.43--5.00)x(1.93+-0.50)/2	-1.74		
				45.55	
33	B1	(-7.27--7.43)x(1.90+1.93)/2	0.31		
492.52		(-7.23--7.27)x(1.90+1.90)/2	0.08		
		(-7.13--7.23)x(1.88+1.90)/2	0.19		
		(-6.17--7.13)x(1.73+1.88)/2	1.73		
		(-5.80--6.17)x(1.72+1.73)/2	0.64		
		(-5.10--5.80)x(1.67+1.72)/2	1.19		
		(-4.32--5.10)x(1.89+1.67)/2	1.39		
		(-4.04--4.32)x(1.91+1.89)/2	0.53		
		(-3.30--4.04)x(2.29+1.91)/2	1.55		
		(-2.98--3.30)x(2.42+2.29)/2	0.75		
		(-2.85--2.98)x(2.47+2.42)/2	0.32		
		(-1.91--2.85)x(2.74+2.47)/2	2.45		
		(-1.37--1.91)x(2.87+2.74)/2	1.51		
		(-0.85--1.37)x(3.01+2.87)/2	1.53		
		(0.10--0.85)x(3.14+3.01)/2	2.92		
		(0.22-0.10)x(3.16+3.14)/2	0.38		
		(0.52-0.22)x(3.16+3.16)/2	0.95		
		(1.12-0.52)x(3.16+3.16)/2	1.90		
		(1.28-1.12)x(3.16+3.16)/2	0.51		
		(1.58-1.28)x(3.17+3.16)/2	0.95		
		(2.35-1.58)x(3.20+3.17)/2	2.45		
		(3.05-2.35)x(3.19+3.20)/2	2.24		
		(3.41-3.05)x(3.18+3.19)/2	1.15		
		(4.34-3.41)x(3.20+3.18)/2	2.97		
		(4.47-4.34)x(3.20+3.20)/2	0.42		
		(4.53-4.47)x(3.20+3.20)/2	0.19		
		(5.54-4.53)x(3.18+3.20)/2	3.22		
		(6.00-5.54)x(3.17+3.18)/2	1.46		
		(6.60-6.00)x(3.17+3.17)/2	1.90		
		(7.48-6.60)x(3.13+3.17)/2	2.77		
		(7.67-7.48)x(3.12+3.13)/2	0.59		
		(8.16-7.67)x(3.12+3.12)/2	1.53		
		(8.63-8.16)x(3.12+3.12)/2	1.47		
		(5.00-8.63)x(-0.50+3.12)/2	-4.76		
		(-5.00-5.00)x(-0.50+-0.50)/2	5.00		
		(-7.43--5.00)x(1.93+-0.50)/2	-1.74		
				42.64	
34	B1	(-8.22--8.35)x(2.83+2.83)/2	0.37		
522.83		(-7.88--8.22)x(2.76+2.83)/2	0.95		
		(-7.16--7.88)x(2.64+2.76)/2	1.94		
		(-6.76--7.16)x(2.53+2.64)/2	1.03		
		(-6.10--6.76)x(2.24+2.53)/2	1.57		
		(-5.30--6.10)x(1.98+2.24)/2	1.69		
		(-5.03--5.30)x(1.90+1.98)/2	0.52		
		(-4.93--5.03)x(1.86+1.90)/2	0.19		
		(-3.97--4.93)x(1.60+1.86)/2	1.66		
		(-3.45--3.97)x(1.43+1.60)/2	0.79		
		(-2.90--3.45)x(1.27+1.43)/2	0.74		
		(-1.98--2.90)x(0.94+1.27)/2	1.02		
		(-1.84--1.98)x(0.89+0.94)/2	0.13		
		(-1.48--1.84)x(1.07+0.89)/2	0.35		
		(-0.77--1.48)x(1.42+1.07)/2	0.88		
		(-0.50--0.77)x(1.67+1.42)/2	0.42		
		(0.29--0.50)x(2.43+1.67)/2	1.62		
		(0.97-0.29)x(3.03+2.43)/2	1.86		
		(1.35-0.97)x(3.37+3.03)/2	1.22		
		(2.34-1.35)x(3.46+3.37)/2	3.38		
		(2.42-2.34)x(3.47+3.46)/2	0.28		
		(2.45-2.42)x(3.46+3.47)/2	0.10		
		(3.48-2.45)x(3.11+3.46)/2	3.38		
		(3.92-3.48)x(3.14+3.11)/2	1.37		
		(4.55-3.92)x(3.16+3.14)/2	1.98		
		(5.40-4.55)x(3.22+3.16)/2	2.71		
		A RIPORTARE mq	32.15		

	CALCOLO DELLE AREE		Foglio n. 22

STERRO

N. SEZIONE PROG.	FIG.	ELEMENTI DI CALCOLO	AREA ELEMENTARE mq	AREA FIGURA mq	NOTE
		RIPORTO mq	32.15		
		(5.61-5.40)x(3.23+3.22)/2	0.68		
		(6.16-5.61)x(3.23+3.23)/2	1.78		
		(6.68-6.16)x(3.22+3.23)/2	1.68		
		(6.88-6.68)x(3.22+3.22)/2	0.64		
		(7.74-6.88)x(3.22+3.22)/2	2.77		
		(8.35-7.74)x(3.22+3.22)/2	1.96		
		(8.75-8.35)x(3.23+3.22)/2	1.29		
		(5.00-8.75)x(-0.52+3.23)/2	-5.08		
		(-5.00-5.00)x(-0.52+-0.52)/2	5.20		
		(-8.35--5.00)x(2.83+-0.52)/2	-3.87		
				39.20	
USC TM VC1 551.31	B1	(-8.20--8.39)x(2.85+2.85)/2	0.54		
		(-7.65--8.20)x(2.82+2.85)/2	1.56		
		(-6.73--7.65)x(2.79+2.82)/2	2.58		
		(-6.58--6.73)x(2.78+2.79)/2	0.42		
		(-6.20--6.58)x(2.78+2.78)/2	1.06		
		(-5.52--6.20)x(2.79+2.78)/2	1.89		
		(-5.25--5.52)x(2.79+2.79)/2	0.75		
		(-4.45--5.25)x(2.79+2.79)/2	2.23		
		(-3.78--4.45)x(2.76+2.79)/2	1.86		
		(-3.39--3.78)x(2.76+2.76)/2	1.08		
		(-2.38--3.39)x(2.68+2.76)/2	2.75		
		(-2.32--2.38)x(2.68+2.68)/2	0.16		
		(-2.30--2.32)x(2.68+2.68)/2	0.05		
		(-1.26--2.30)x(2.67+2.68)/2	2.78		
		(-0.83--1.26)x(2.50+2.67)/2	1.11		
		(-0.20--0.83)x(2.24+2.50)/2	1.49		
		(0.65--0.20)x(1.39+2.24)/2	1.54		
		(0.87-0.65)x(1.20+1.39)/2	0.28		
		(1.44-0.87)x(0.91+1.20)/2	0.60		
		(1.93-1.44)x(0.68+0.91)/2	0.39		
		(2.12-1.93)x(0.83+0.68)/2	0.14		
		(3.00-2.12)x(1.25+0.83)/2	0.92		
		(3.60-3.00)x(1.98+1.25)/2	0.97		
		(4.06-3.60)x(2.48+1.98)/2	1.03		
		(4.32-4.06)x(2.78+2.48)/2	0.68		
		(5.13-4.32)x(3.17+2.78)/2	2.41		
		(5.26-5.13)x(3.19+3.17)/2	0.41		
		(6.19-5.26)x(3.22+3.19)/2	2.98		
		(6.55-6.19)x(3.23+3.22)/2	1.16		
		(7.25-6.55)x(3.22+3.23)/2	2.26		
		(8.02-7.25)x(3.28+3.22)/2	2.50		
		(8.32-8.02)x(3.30+3.28)/2	0.99		
		(8.82-8.32)x(3.29+3.30)/2	1.65		
		(5.00-8.82)x(-0.53+3.29)/2	-5.27		
		(-5.00-5.00)x(-0.53+-0.53)/2	5.30		
		(-8.39--5.00)x(2.85+-0.53)/2	-3.93		
				39.32	
35 567.31	B1	(-5.72--5.74)x(2.80+2.80)/2	0.06		
		(-5.58--5.72)x(2.79+2.80)/2	0.39		
		(-4.65--5.58)x(2.74+2.79)/2	2.57		
		(-4.10--4.65)x(2.77+2.74)/2	1.52		
		(-3.59--4.10)x(2.78+2.77)/2	1.42		
		(-2.63--3.59)x(2.74+2.78)/2	2.65		
		(-2.52--2.63)x(2.73+2.74)/2	0.30		
		(-2.25--2.52)x(2.74+2.73)/2	0.74		
		(-1.46--2.25)x(2.73+2.74)/2	2.16		
		(-1.15--1.46)x(2.69+2.73)/2	0.84		
		(-0.40--1.15)x(2.63+2.69)/2	1.99		
		(0.03--0.40)x(2.57+2.63)/2	1.12		
		(0.67-0.03)x(2.43+2.57)/2	1.60		
		(1.57-0.67)x(2.09+2.43)/2	2.03		
		(1.73-1.57)x(2.01+2.09)/2	0.33		
		(1.80-1.73)x(1.96+2.01)/2	0.14		
		(2.80-1.80)x(1.13+1.96)/2	1.54		
		(3.27-2.80)x(1.13+1.13)/2	0.53		
		(3.86-3.27)x(0.95+1.13)/2	0.61		
		(3.95-3.86)x(1.01+0.95)/2	0.09		
		(3.00-3.95)x(0.06+1.01)/2	-0.51		
		(-3.00-3.00)x(0.06+0.06)/2	-0.36		
		(-5.74--3.00)x(2.80+0.06)/2	-3.92		
				17.84	
36 587.65	B1	(-5.65--5.73)x(2.78+2.78)/2	0.22		
		(-5.14--5.65)x(2.77+2.78)/2	1.42		
		(-5.00--5.14)x(2.77+2.77)/2	0.39		
		(-4.75--5.00)x(2.77+2.77)/2	0.69		
		(-3.93--4.75)x(2.78+2.77)/2	2.28		
		(-3.27--3.93)x(2.76+2.78)/2	1.83		
		(-2.87--3.27)x(2.76+2.76)/2	1.10		
		(-1.83--2.87)x(2.72+2.76)/2	2.85		
		(-1.80--1.83)x(2.72+2.72)/2	0.08		
		(-1.79--1.80)x(2.72+2.72)/2	0.03		
		(-0.74--1.79)x(2.76+2.72)/2	2.88		
		(-0.32--0.74)x(2.80+2.76)/2	1.17		
		(0.32--0.32)x(2.85+2.80)/2	1.81		
		(1.16-0.32)x(2.84+2.85)/2	2.39		
		(1.39-1.16)x(2.81+2.84)/2	0.65		
		(1.99-1.39)x(2.56+2.81)/2	1.61		
		(2.45-1.99)x(2.35+2.56)/2	1.13		
		(2.63-2.45)x(2.26+2.35)/2	0.41		
		(3.52-2.63)x(1.87+2.26)/2	1.84		
		(4.11-3.52)x(1.47+1.87)/2	0.99		
		(4.32-4.11)x(1.37+1.47)/2	0.30		
		(3.00-4.32)x(0.05+1.37)/2	-0.94		
		(-3.00-3.00)x(0.05+0.05)/2	-0.30		
		(-5.73--3.00)x(2.78+0.05)/2	-3.86		
				20.97	
37 597.48	B1	(-5.60--5.91)x(2.94+2.95)/2	0.91		
		(-4.77--5.60)x(2.95+2.94)/2	2.44		
		(-4.54--4.77)x(2.95+2.95)/2	0.68		
		(-4.45--4.54)x(2.95+2.95)/2	0.27		
		(-3.48--4.45)x(2.96+2.95)/2	2.87		
		(-2.97--3.48)x(2.96+2.96)/2	1.51		
		(-2.41--2.97)x(2.95+2.96)/2	1.65		
		(-1.50--2.41)x(3.00+2.95)/2	2.71		
		A RIPORTARE mq	13.04		

		CALCOLO DELLE AREE		Foglio n. 23
STERRO				
N. SEZIONE PROG.	FIG.	ELEMENTI DI CALCOLO	AREA ELEMENTARE mq	AREA FIGURA mq	NOTE
		RIPORTO mq	13.04		
		(-1.35--1.50)x(3.01+3.00)/2	0.45		
		(-0.95--1.35)x(3.03+3.01)/2	1.21		
		(-0.28--0.95)x(3.07+3.03)/2	2.04		
		(0.40--0.28)x(3.16+3.07)/2	2.12		
		(0.78-0.40)x(3.19+3.16)/2	1.21		
		(1.24-0.78)x(3.23+3.19)/2	1.48		
		(1.85-1.24)x(3.28+3.23)/2	1.99		
		(2.07-1.85)x(3.26+3.28)/2	0.72		
		(2.87-2.07)x(3.20+3.26)/2	2.58		
		(2.91-2.87)x(3.19+3.20)/2	0.13		
		(2.93-2.91)x(3.18+3.19)/2	0.06		
		(3.97-2.93)x(2.36+3.18)/2	2.88		
		(4.40-3.97)x(2.03+2.36)/2	0.94		
		(4.72-4.40)x(1.77+2.03)/2	0.61		
		(3.00-4.72)x(0.05+1.77)/2	-1.57		
		(-3.00-3.00)x(0.05+0.05)/2	-0.30		
		(-5.91--3.00)x(2.95+0.05)/2	-4.37		
				25.22	
38	B1	(-5.58--5.99)x(3.03+3.03)/2	1.24		
612.15		(-5.44--5.58)x(3.03+3.03)/2	0.42		
		(-5.38--5.44)x(3.03+3.03)/2	0.18		
		(-4.37--5.38)x(3.04+3.03)/2	3.07		
		(-3.91--4.37)x(3.05+3.04)/2	1.40		
		(-3.31--3.91)x(3.04+3.05)/2	1.83		
		(-2.43--3.31)x(3.05+3.04)/2	2.68		
		(-2.24--2.43)x(3.05+3.05)/2	0.58		
		(-1.76--2.24)x(3.04+3.05)/2	1.46		
		(-1.18--1.76)x(3.03+3.04)/2	1.76		
		(-0.95--1.18)x(3.03+3.03)/2	0.70		
		(-0.11--0.95)x(3.05+3.03)/2	2.55		
		(0.52--0.11)x(3.02+3.05)/2	1.91		
		(0.95-0.52)x(3.02+3.02)/2	1.30		
		(1.02-0.95)x(3.08+3.02)/2	0.21		
		(1.03-1.02)x(3.05+3.08)/2	0.03		
		(1.14-1.03)x(3.06+3.05)/2	0.34		
		(1.17-1.14)x(3.10+3.06)/2	0.09		
		(1.18-1.17)x(3.19+3.10)/2	0.03		
		(1.19-1.18)x(3.18+3.19)/2	0.03		
		(1.20-1.19)x(3.19+3.13)/2	0.03		
		(1.21-1.20)x(3.27+3.19)/2	0.03		
		(1.41-1.21)x(2.95+3.27)/2	0.62		
		(1.42-1.41)x(2.96+2.96)/2	0.03		
		(1.43-1.42)x(2.95+2.96)/2	0.03		
		(1.48-1.43)x(3.14+2.95)/2	0.15		
		(1.51-1.48)x(3.27+3.14)/2	0.10		
		(1.52-1.51)x(2.93+2.92)/2	0.03		
		(1.62-1.52)x(2.93+2.94)/2	0.29		
		(2.01-1.62)x(2.91+2.93)/2	1.14		
		(2.06-2.01)x(2.91+2.91)/2	0.15		
		(3.08-2.06)x(2.99+2.91)/2	3.01		
		(3.47-3.08)x(2.98+2.99)/2	1.16		
		(4.14-3.47)x(3.01+2.98)/2	2.01		
		(4.25-4.14)x(3.05+3.01)/2	0.33		
		(5.05-4.25)x(3.08+3.05)/2	2.45		
		(5.21-5.05)x(3.06+3.08)/2	0.49		
		(5.36-5.21)x(3.05+3.06)/2	0.46		
		(5.88-5.36)x(3.04+3.05)/2	1.58		
		(5.99-5.88)x(3.03+3.04)/2	0.33		
		(3.00-5.99)x(0.04+3.03)/2	-4.59		
		(-3.00-3.00)x(0.04+0.04)/2	-0.24		
		(-5.99--3.00)x(3.03+0.04)/2	-4.59		
				26.81	
39	B1	(-4.89--5.42)x(2.53+2.45)/2	1.32		
634.40		(-4.74--4.89)x(2.56+2.53)/2	0.38		
		(-4.00--4.74)x(2.66+2.56)/2	1.93		
		(-3.70--4.00)x(2.71+2.66)/2	0.81		
		(-3.10--3.70)x(2.80+2.71)/2	1.65		
		(-2.66--3.10)x(2.88+2.80)/2	1.25		
		(-2.21--2.66)x(2.94+2.88)/2	1.31		
		(-1.62--2.21)x(3.04+2.94)/2	1.76		
		(-1.32--1.62)x(3.08+3.04)/2	0.92		
		(-0.58--1.32)x(3.19+3.08)/2	2.32		
		(-0.43--0.58)x(3.20+3.19)/2	0.48		
		(0.44--0.43)x(3.25+3.20)/2	2.81		
		(0.46-0.44)x(3.25+3.25)/2	0.07		
		(0.47-0.46)x(3.25+3.25)/2	0.03		
		(1.50-0.47)x(3.22+3.25)/2	3.33		
		(1.72-1.50)x(3.22+3.22)/2	0.71		
		(2.54-1.72)x(3.20+3.22)/2	2.63		
		(2.96-2.54)x(3.20+3.20)/2	1.34		
		(3.58-2.96)x(3.21+3.20)/2	1.99		
		(4.21-3.58)x(3.21+3.21)/2	2.02		
		(4.62-4.21)x(3.21+3.21)/2	1.32		
		(5.46-4.62)x(3.21+3.21)/2	2.70		
		(5.66-5.46)x(3.21+3.21)/2	0.64		
		(6.18-5.66)x(3.21+3.21)/2	1.67		
		(3.00-6.18)x(0.03+3.21)/2	-5.15		
		(-3.00-3.00)x(0.03+0.03)/2	-0.18		
		(-5.42--3.00)x(2.45+0.03)/2	-3.00		
				27.06	
CONFLUENZA	F.G B1	(-5.59--5.61)x(2.64+2.64)/2	0.05		
634.40		(-5.29--5.59)x(2.68+2.64)/2	0.80		
		(-4.86--5.29)x(2.73+2.68)/2	1.16		
		(-4.54--4.86)x(2.76+2.73)/2	0.88		
		(-4.12--4.54)x(2.81+2.76)/2	1.17		
		(-3.56--4.12)x(2.88+2.81)/2	1.59		
		(-3.39--3.56)x(2.90+2.88)/2	0.49		
		(-3.26--3.39)x(2.91+2.90)/2	0.38		
		(-2.66--3.26)x(2.97+2.91)/2	1.76		
		(-1.98--2.66)x(3.06+2.97)/2	2.05		
		(-1.92--1.98)x(3.07+3.06)/2	0.18		
		(-1.84--1.92)x(3.08+3.07)/2	0.25		
		(-1.19--1.84)x(3.14+3.08)/2	2.02		
		(-0.71--1.19)x(3.19+3.14)/2	1.52		
		(-0.46--0.71)x(3.20+3.19)/2	0.80		
		A RIPORTARE mq	15.10		

	CALCOLO DELLE AREE	Foglio n. 24

STERRO

N. SEZIONE PROG.	FIG.	ELEMENTI DI CALCOLO	AREA ELEMENTARE mq	AREA FIGURA mq	NOTE
		RIPORTO mq	15.10		
		(-0.12--0.46)x(3.22+3.20)/2	1.09		
		(0.57--0.12)x(3.25+3.22)/2	2.23		
		(1.60-0.57)x(3.22+3.25)/2	3.33		
		(1.74-1.60)x(3.22+3.22)/2	0.45		
		(1.84-1.74)x(3.22+3.22)/2	0.32		
		(2.47-1.84)x(3.20+3.22)/2	2.02		
		(3.12-2.47)x(3.19+3.20)/2	2.08		
		(3.21-3.12)x(3.19+3.19)/2	0.29		
		(3.32-3.21)x(3.19+3.19)/2	0.35		
		(3.94-3.32)x(3.20+3.19)/2	1.98		
		(4.40-3.94)x(3.20+3.20)/2	1.47		
		(4.67-4.40)x(3.20+3.20)/2	0.86		
		(5.05-4.67)x(3.21+3.20)/2	1.22		
		(5.41-5.05)x(3.21+3.21)/2	1.16		
		(5.67-5.41)x(3.21+3.21)/2	0.83		
		(6.14-5.67)x(3.21+3.21)/2	1.51		
		(6.18-6.14)x(3.21+3.21)/2	0.13		
		(3.00-6.18)x(0.03+3.21)/2	-5.15		
		(-3.00-3.00)x(0.03+0.03)/2	-0.18		
		(-5.61--3.00)x(2.64+0.03)/2	-3.48		
				27.61	
40 650.02	B1	(-5.07--5.37)x(2.36+2.39)/2	0.71		
		(-4.50--5.07)x(2.30+2.36)/2	1.33		
		(-4.35--4.50)x(2.28+2.30)/2	0.34		
		(-3.19--4.35)x(2.04+2.28)/2	2.51		
		(-2.71--3.19)x(2.03+2.04)/2	0.98		
		(-1.87--2.71)x(2.06+2.03)/2	1.72		
		(-1.06--1.87)x(2.09+2.06)/2	1.68		
		(-0.56--1.06)x(2.10+2.09)/2	1.05		
		(0.58--0.56)x(1.85+2.10)/2	2.25		
		(0.75-0.58)x(1.85+1.85)/2	0.31		
		(1.41-0.75)x(1.88+1.85)/2	1.23		
		(2.06-1.41)x(1.90+1.88)/2	1.23		
		(2.23-2.06)x(1.91+1.90)/2	0.32		
		(3.37-2.23)x(2.01+1.91)/2	2.23		
		(3.87-3.37)x(2.11+2.01)/2	1.03		
		(4.68-3.87)x(2.33+2.11)/2	1.80		
		(5.52-4.68)x(2.57+2.33)/2	2.06		
		(5.56-5.52)x(2.59+2.57)/2	0.10		
		(3.00-5.56)x(0.02+2.59)/2	-3.34		
		(-3.00-3.00)x(0.02+0.02)/2	-0.12		
		(-5.37--3.00)x(2.39+0.02)/2	-2.86		
				16.56	
IMB TM VC2 674.90	B1	(-6.38--7.27)x(1.49+1.43)/2	1.30		
		(-5.50--6.38)x(1.69+1.49)/2	1.40		
		(-5.14--5.50)x(1.85+1.69)/2	0.64		
		(-4.32--5.14)x(2.14+1.85)/2	1.64		
		(-3.89--4.32)x(2.29+2.14)/2	0.95		
		(-3.70--3.89)x(2.31+2.29)/2	0.44		
		(-2.64--3.70)x(2.27+2.31)/2	2.43		
		(-1.90--2.64)x(2.39+2.27)/2	1.72		
		(-1.40--1.90)x(2.47+2.39)/2	1.22		
		(-0.28--1.40)x(2.74+2.47)/2	2.92		
		(-0.15--0.28)x(2.78+2.74)/2	0.36		
		(-0.09--0.15)x(2.77+2.78)/2	0.17		
		(1.10--0.09)x(2.85+2.77)/2	3.34		
		(1.71-1.10)x(2.98+2.85)/2	1.78		
		(2.34-1.71)x(3.03+2.98)/2	1.89		
		(3.51-2.34)x(3.00+3.03)/2	3.53		
		(3.59-3.51)x(2.99+3.00)/2	0.24		
		(3.77-3.59)x(2.98+2.99)/2	0.54		
		(4.84-3.77)x(2.93+2.98)/2	3.16		
		(5.31-4.84)x(2.91+2.93)/2	1.37		
		(6.08-5.31)x(2.88+2.91)/2	2.23		
		(7.11-6.08)x(2.93+2.88)/2	2.99		
		(7.33-7.11)x(2.94+2.93)/2	0.65		
		(7.81-7.33)x(2.96+2.94)/2	1.42		
		(8.58-7.81)x(2.98+2.96)/2	2.29		
		(8.84-8.58)x(3.00+2.98)/2	0.78		
		(5.25-8.84)x(-0.59+3.00)/2	-4.33		
		(-5.25-5.25)x(-0.59+-0.59)/2	6.19		
		(-7.27--5.25)x(1.43+-0.59)/2	-0.85		
				42.41	
41 699.22	B1	(-8.66--8.87)x(3.10+3.01)/2	0.64		
		(-7.94--8.66)x(3.49+3.10)/2	2.37		
		(-7.43--7.94)x(3.77+3.49)/2	1.85		
		(-7.17--7.43)x(3.83+3.77)/2	0.99		
		(-6.20--7.17)x(3.88+3.83)/2	3.74		
		(-5.31--6.20)x(3.75+3.88)/2	3.40		
		(-4.98--5.31)x(3.68+3.75)/2	1.23		
		(-4.34--4.98)x(3.62+3.68)/2	2.34		
		(-3.75--4.34)x(3.55+3.62)/2	2.12		
		(-3.44--3.75)x(3.56+3.55)/2	1.10		
		(-2.52--3.44)x(3.56+3.56)/2	3.28		
		(-1.58--2.52)x(3.58+3.56)/2	3.36		
		(-1.29--1.58)x(3.57+3.58)/2	1.04		
		(-0.73--1.29)x(3.57+3.57)/2	2.00		
		(-0.06--0.73)x(3.55+3.57)/2	2.39		
		(0.28--0.06)x(3.58+3.55)/2	1.21		
		(1.16-0.28)x(3.64+3.58)/2	3.18		
		(2.14-1.16)x(3.72+3.64)/2	3.61		
		(2.39-2.14)x(3.73+3.72)/2	0.93		
		(2.87-2.39)x(3.70+3.73)/2	1.78		
		(3.62-2.87)x(3.63+3.70)/2	2.75		
		(3.77-3.62)x(3.62+3.63)/2	0.54		
		(4.01-3.77)x(3.62+3.62)/2	0.87		
		(4.51-4.01)x(3.65+3.62)/2	1.82		
		(4.85-4.51)x(3.72+3.65)/2	1.25		
		(5.87-4.85)x(3.88+3.72)/2	3.88		
		(6.08-5.87)x(3.90+3.88)/2	0.82		
		(6.48-6.08)x(3.95+3.90)/2	1.57		
		(7.30-6.48)x(4.08+3.95)/2	3.29		
		(7.73-7.30)x(4.03+4.08)/2	1.74		
		(8.21-7.73)x(3.95+4.03)/2	1.92		
		(8.53-8.21)x(3.82+3.95)/2	1.24		
		A RIPORTARE mq	64.25		

	CALCOLO DELLE AREE		Foglio n. 25

STERRO

N. SEZIONE PROG.	FIG.	ELEMENTI DI CALCOLO	AREA ELEMENTARE mq	AREA FIGURA mq	NOTE
		RIPORTO mq	64.25		
		(8.95-8.53)x(3.65+3.82)/2	1.57		
		(9.35-8.95)x(3.50+3.65)/2	1.43		
		(5.25-9.35)x(-0.60+3.50)/2	-5.94		
		(-5.25-5.25)x(-0.60+-0.60)/2	6.30		
		(-8.87--5.25)x(3.01+-0.60)/2	-4.36		
				63.25	
42	B1	(-6.22--6.30)x(0.40+0.43)/2	0.03		
734.59		(-5.13--6.22)x(0.16+0.40)/2	0.31		
		(-4.99--5.13)x(0.13+0.16)/2	0.02		
		(-4.92--4.99)x(0.12+0.13)/2	0.01		
		(-3.77--4.92)x(0.11+0.12)/2	0.13		
		(-3.06--3.77)x(0.11+0.11)/2	0.08		
		(-2.54--3.06)x(0.13+0.11)/2	0.06		
		(-1.52--2.54)x(0.18+0.13)/2	0.16		
		(-1.31--1.52)x(0.19+0.18)/2	0.04		
		(-1.20--1.31)x(0.19+0.19)/2	0.02		
		(-0.08--1.20)x(0.28+0.19)/2	0.26		
		(0.66--0.08)x(0.45+0.28)/2	0.27		
		(1.15-0.66)x(0.70+0.45)/2	0.28		
		(2.08-1.15)x(1.25+0.70)/2	0.91		
		(2.38-2.08)x(1.43+1.25)/2	0.40		
		(2.53-2.38)x(1.52+1.43)/2	0.22		
		(3.60-2.53)x(1.96+1.52)/2	1.86		
		(4.39-3.60)x(2.12+1.96)/2	1.61		
		(4.83-4.39)x(2.17+2.12)/2	0.94		
		(5.69-4.83)x(2.26+2.17)/2	1.90		
		(6.06-5.69)x(2.30+2.26)/2	0.84		
		(6.25-6.06)x(2.32+2.30)/2	0.44		
		(7.29-6.25)x(2.43+2.32)/2	2.47		
		(8.11-7.29)x(2.58+2.43)/2	2.05		
		(8.52-8.11)x(2.66+2.58)/2	1.07		
		(8.53-8.52)x(2.66+2.66)/2	0.03		
		(5.25-8.53)x(-0.62+2.66)/2	-3.35		
		(-5.25-5.25)x(-0.62+-0.62)/2	6.51		
		(-6.30--5.25)x(0.43+-0.62)/2	0.10		
				19.67	
USC TM VC2	B1	(-8.17--8.42)x(2.56+2.54)/2	0.64		
756.16		(-7.96--8.17)x(2.58+2.56)/2	0.54		
		(-7.85--7.96)x(2.59+2.58)/2	0.28		
		(-6.73--7.85)x(2.56+2.59)/2	2.88		
		(-5.99--6.73)x(2.57+2.56)/2	1.90		
		(-5.50--5.99)x(2.57+2.57)/2	1.26		
		(-4.56--5.50)x(2.48+2.57)/2	2.37		
		(-4.27--4.56)x(2.45+2.48)/2	0.71		
		(-4.12--4.27)x(2.45+2.45)/2	0.37		
		(-3.04--4.12)x(2.41+2.45)/2	2.62		
		(-2.26--3.04)x(2.45+2.41)/2	1.90		
		(-1.82--2.26)x(2.49+2.45)/2	1.09		
		(-0.96--1.82)x(2.45+2.49)/2	2.12		
		(-0.59--0.96)x(2.44+2.45)/2	0.90		
		(-0.40--0.59)x(2.44+2.44)/2	0.46		
		(0.64--0.40)x(2.42+2.44)/2	2.53		
		(1.46-0.64)x(2.42+2.42)/2	1.98		
		(1.87-1.46)x(2.42+2.42)/2	0.99		
		(2.65-1.87)x(2.44+2.42)/2	1.90		
		(3.10-2.65)x(2.45+2.44)/2	1.10		
		(3.33-3.10)x(2.45+2.45)/2	0.56		
		(4.32-3.33)x(2.46+2.45)/2	2.43		
		(5.19-4.32)x(2.41+2.46)/2	2.12		
		(5.55-5.19)x(2.40+2.41)/2	0.87		
		(6.26-5.55)x(2.42+2.40)/2	1.71		
		(6.78-6.26)x(2.44+2.42)/2	1.26		
		(7.05-6.78)x(2.47+2.44)/2	0.66		
		(8.01-7.05)x(2.57+2.47)/2	2.42		
		(8.42-8.01)x(2.54+2.57)/2	1.05		
		(5.25-8.42)x(-0.63+2.54)/2	-3.03		
		(-5.25-5.25)x(-0.63+-0.63)/2	6.62		
		(-8.42--5.25)x(2.54+-0.63)/2	-3.03		
				42.18	
43	B1	(-6.11--6.59)x(2.52+2.56)/2	1.22		
770.13		(-5.92--6.11)x(2.51+2.52)/2	0.48		
		(-5.82--5.92)x(2.50+2.51)/2	0.25		
		(-4.71--5.82)x(2.53+2.50)/2	2.79		
		(-3.91--4.71)x(2.52+2.53)/2	2.02		
		(-3.49--3.91)x(2.52+2.52)/2	1.06		
		(-2.77--3.49)x(2.51+2.52)/2	1.81		
		(-2.28--2.77)x(2.51+2.51)/2	1.23		
		(-2.17--2.28)x(2.50+2.51)/2	0.28		
		(-2.00--2.17)x(2.50+2.50)/2	0.42		
		(-1.43--2.00)x(2.47+2.50)/2	1.42		
		(-1.06--1.43)x(2.46+2.47)/2	0.91		
		(-0.09--1.06)x(2.39+2.46)/2	2.35		
		(0.15--0.09)x(2.36+2.39)/2	0.57		
		(0.57-0.15)x(2.36+2.36)/2	0.99		
		(1.37-0.57)x(2.34+2.36)/2	1.88		
		(1.82-1.37)x(2.35+2.34)/2	1.06		
		(2.58-1.82)x(2.35+2.35)/2	1.79		
		(3.73-2.58)x(2.30+2.35)/2	2.67		
		(3.80-3.73)x(2.30+2.30)/2	0.16		
		(3.91-3.80)x(2.29+2.30)/2	0.25		
		(5.01-3.91)x(2.25+2.29)/2	2.50		
		(5.64-5.01)x(2.24+2.25)/2	1.41		
		(6.23-5.64)x(2.24+2.24)/2	1.32		
		(6.27-6.23)x(2.23+2.24)/2	0.09		
		(4.00-6.27)x(-0.04+2.23)/2	-2.49		
		(-4.00-4.00)x(-0.04+-0.04)/2	0.32		
		(-6.59--4.00)x(2.56+-0.04)/2	-3.26		
				25.50	
44	B1	(-6.12--6.44)x(2.40+2.40)/2	0.77		
785.16		(-5.26--6.12)x(2.42+2.40)/2	2.07		
		(-5.02--5.26)x(2.43+2.42)/2	0.58		
		(-4.63--5.02)x(2.42+2.43)/2	0.95		
		(-3.93--4.63)x(2.40+2.42)/2	1.69		
		(-3.51--3.93)x(2.37+2.40)/2	1.00		
		(-2.83--3.51)x(2.29+2.37)/2	1.58		
		A RIPORTARE mq	8.64		

	CALCOLO DELLE AREE		Foglio n. 26

STERRO

N. SEZIONE PROG.	FIG.	ELEMENTI DI CALCOLO	AREA ELEMENTARE mq	AREA FIGURA mq	NOTE
		RIPORTO mq	8.64		
		(-1.76--2.83)x(2.25+2.29)/2	2.43		
		(-1.74--1.76)x(2.25+2.25)/2	0.05		
		(-1.70--1.74)x(2.25+2.25)/2	0.09		
		(-0.64--1.70)x(2.23+2.25)/2	2.37		
		(-0.01--0.64)x(2.23+2.23)/2	1.40		
		(0.45--0.01)x(2.23+2.23)/2	1.03		
		(1.23-0.45)x(2.20+2.23)/2	1.73		
		(1.55-1.23)x(2.19+2.20)/2	0.70		
		(1.74-1.55)x(2.19+2.19)/2	0.42		
		(2.64-1.74)x(2.17+2.19)/2	1.96		
		(3.48-2.64)x(2.15+2.17)/2	1.81		
		(3.74-3.48)x(2.15+2.15)/2	0.56		
		(4.16-3.74)x(2.13+2.15)/2	0.90		
		(4.83-4.16)x(2.12+2.13)/2	1.42		
		(5.23-4.83)x(2.11+2.12)/2	0.85		
		(5.92-5.23)x(2.11+2.11)/2	1.46		
		(6.14-5.92)x(2.10+2.11)/2	0.46		
		(4.00-6.14)x(-0.04+2.10)/2	-2.20		
		(-4.00-4.00)x(-0.04+-0.04)/2	0.32		
		(-6.44--4.00)x(2.40+-0.04)/2	-2.88		
				23.52	
45 800.11	B1	(-6.23--6.54)x(2.49+2.49)/2	0.77		
		(-5.63--6.23)x(2.50+2.49)/2	1.50		
		(-5.14--5.63)x(2.50+2.50)/2	1.23		
		(-4.84--5.14)x(2.49+2.50)/2	0.75		
		(-4.04--4.84)x(2.46+2.49)/2	1.98		
		(-3.09--4.04)x(2.38+2.46)/2	2.30		
		(-2.95--3.09)x(2.37+2.38)/2	0.33		
		(-2.70--2.95)x(2.35+2.37)/2	0.59		
		(-1.85--2.70)x(2.25+2.35)/2	1.96		
		(-1.34--1.85)x(2.23+2.25)/2	1.14		
		(-0.76--1.34)x(2.20+2.23)/2	1.28		
		(0.23--0.76)x(2.16+2.20)/2	2.16		
		(0.34-0.23)x(2.15+2.16)/2	0.24		
		(0.40-0.34)x(2.15+2.15)/2	0.13		
		(1.43-0.40)x(2.18+2.15)/2	2.23		
		(2.15-1.43)x(2.16+2.18)/2	1.56		
		(2.53-2.15)x(2.15+2.16)/2	0.82		
		(3.16-2.53)x(2.11+2.15)/2	1.34		
		(3.62-3.16)x(2.09+2.11)/2	0.97		
		(3.90-3.62)x(2.07+2.09)/2	0.58		
		(4.72-3.90)x(2.02+2.07)/2	1.68		
		(5.65-4.72)x(2.02+2.02)/2	1.88		
		(5.81-5.65)x(2.02+2.02)/2	0.32		
		(5.88-5.81)x(2.03+2.02)/2	0.14		
		(6.08-5.88)x(2.03+2.03)/2	0.41		
		(4.00-6.08)x(-0.05+2.03)/2	-2.06		
		(-4.00-4.00)x(-0.05+-0.05)/2	0.40		
		(-6.54--4.00)x(2.49+-0.05)/2	-3.10		
				23.53	
46 815.05	B1	(-6.17--6.26)x(2.20+2.20)/2	0.20		
		(-5.25--6.17)x(2.21+2.20)/2	2.03		
		(-4.42--5.25)x(2.21+2.21)/2	1.83		
		(-4.15--4.42)x(2.21+2.21)/2	0.60		
		(-3.71--4.15)x(2.20+2.21)/2	0.97		
		(-3.06--3.71)x(2.19+2.20)/2	1.43		
		(-2.67--3.06)x(2.18+2.19)/2	0.85		
		(-1.97--2.67)x(2.17+2.18)/2	1.52		
		(-0.92--1.97)x(2.17+2.17)/2	2.28		
		(-0.87--0.92)x(2.17+2.17)/2	0.11		
		(-0.78--0.87)x(2.17+2.17)/2	0.20		
		(0.22--0.78)x(2.13+2.17)/2	2.15		
		(0.75-0.22)x(2.13+2.13)/2	1.13		
		(1.32-0.75)x(2.17+2.13)/2	1.23		
		(2.15-1.32)x(2.13+2.17)/2	1.78		
		(2.41-2.15)x(2.11+2.13)/2	0.55		
		(2.57-2.41)x(2.10+2.11)/2	0.34		
		(3.51-2.57)x(2.07+2.10)/2	1.96		
		(4.32-3.51)x(2.10+2.07)/2	1.69		
		(4.60-4.32)x(2.09+2.10)/2	0.59		
		(5.07-4.60)x(2.06+2.09)/2	0.98		
		(5.70-5.07)x(2.01+2.06)/2	1.28		
		(6.03-5.70)x(1.98+2.01)/2	0.66		
		(4.00-6.03)x(-0.06+1.98)/2	-1.95		
		(-4.00-4.00)x(-0.06+-0.06)/2	0.48		
		(-6.26--4.00)x(2.20+-0.06)/2	-2.42		
				22.47	
IMB TM VC3 834.80	B1	(-8.25--9.13)x(3.37+3.22)/2	2.90		
		(-7.53--8.25)x(3.40+3.37)/2	2.44		
		(-7.16--7.53)x(3.36+3.40)/2	1.25		
		(-6.99--7.16)x(3.36+3.36)/2	0.57		
		(-6.53--6.99)x(3.35+3.36)/2	1.54		
		(-6.19--6.53)x(3.33+3.35)/2	1.14		
		(-6.06--6.19)x(3.30+3.33)/2	0.43		
		(-5.78--6.06)x(3.28+3.30)/2	0.92		
		(-4.97--5.78)x(3.18+3.28)/2	2.62		
		(-4.04--4.97)x(2.98+3.18)/2	2.86		
		(-3.87--4.04)x(2.95+2.98)/2	0.50		
		(-3.60--3.87)x(2.93+2.95)/2	0.79		
		(-2.78--3.60)x(2.91+2.93)/2	2.39		
		(-2.29--2.78)x(2.87+2.91)/2	1.42		
		(-1.68--2.29)x(2.88+2.87)/2	1.75		
		(-0.67--1.68)x(2.80+2.88)/2	2.87		
		(-0.59--0.67)x(2.79+2.80)/2	0.22		
		(-0.54--0.59)x(2.77+2.79)/2	0.14		
		(0.51--0.54)x(2.52+2.77)/2	2.78		
		(1.21-0.51)x(2.32+2.52)/2	1.69		
		(1.60-1.21)x(2.16+2.32)/2	0.87		
		(2.26-1.60)x(2.10+2.16)/2	1.41		
		(2.69-2.26)x(2.06+2.10)/2	0.89		
		(2.96-2.69)x(2.07+2.06)/2	0.56		
		(3.79-2.96)x(2.06+2.07)/2	1.71		
		(4.70-3.79)x(2.00+2.06)/2	1.85		
		(4.88-4.70)x(1.99+2.00)/2	0.36		
		(5.18-4.88)x(1.98+1.99)/2	0.60		
		A RIPORTARE mq	39.47		

	CALCOLO DELLE AREE		Foglio n. 27

STERRO

N. SEZIONE PROG.	FIG.	ELEMENTI DI CALCOLO	AREA ELEMENTARE mq	AREA FIGURA mq	NOTE
		RIPORTO mq	39.47		
		(5.98-5.18)x(1.94+1.98)/2	1.57		
		(6.45-5.98)x(1.92+1.94)/2	0.91		
		(7.07-6.45)x(1.86+1.92)/2	1.17		
		(7.73-7.07)x(1.82+1.86)/2	1.21		
		(5.25-7.73)x(-0.66+1.82)/2	-1.44		
		(-5.25-5.25)x(-0.66+-0.66)/2	6.93		
		(-9.13--5.25)x(3.22+-0.66)/2	-4.97		
				44.85	
47 863.32	B1	(-7.18--7.96)x(2.00+2.03)/2	1.57		
		(-6.87--7.18)x(1.98+2.00)/2	0.62		
		(-6.36--6.87)x(2.01+1.98)/2	1.02		
		(-5.78--6.36)x(2.05+2.01)/2	1.18		
		(-5.43--5.78)x(2.02+2.05)/2	0.71		
		(-4.68--5.43)x(1.97+2.02)/2	1.50		
		(-3.69--4.68)x(2.00+1.97)/2	1.97		
		(-3.59--3.69)x(2.00+2.00)/2	0.20		
		(-3.43--3.59)x(2.00+2.00)/2	0.32		
		(-2.49--3.43)x(2.01+2.00)/2	1.88		
		(-1.94--2.49)x(2.02+2.01)/2	1.11		
		(-1.40--1.94)x(2.00+2.02)/2	1.09		
		(-0.50--1.40)x(1.92+2.00)/2	1.76		
		(-0.31--0.50)x(1.91+1.92)/2	0.36		
		(-0.19--0.31)x(1.89+1.91)/2	0.23		
		(0.79--0.19)x(1.85+1.89)/2	1.83		
		(1.24-0.79)x(1.86+1.85)/2	0.83		
		(1.88-1.24)x(1.90+1.86)/2	1.20		
		(2.43-1.88)x(1.82+1.90)/2	1.02		
		(2.98-2.43)x(1.77+1.82)/2	0.99		
		(3.31-2.98)x(1.76+1.77)/2	0.58		
		(4.07-3.31)x(1.74+1.76)/2	1.33		
		(5.05-4.07)x(1.76+1.74)/2	1.71		
		(5.17-5.05)x(1.77+1.76)/2	0.21		
		(5.36-5.17)x(1.78+1.77)/2	0.34		
		(6.26-5.36)x(1.83+1.78)/2	1.62		
		(6.80-6.26)x(1.79+1.83)/2	0.98		
		(7.36-6.80)x(1.75+1.79)/2	0.99		
		(7.67-7.36)x(1.75+1.75)/2	0.54		
		(5.25-7.67)x(-0.68+1.75)/2	-1.29		
		(-5.25-5.25)x(-0.68+-0.68)/2	7.14		
		(-7.96--5.25)x(2.03+-0.68)/2	-1.83		
				33.71	
48 904.61	B1	(-8.08--8.15)x(2.21+2.21)/2	0.15		
		(-7.16--8.08)x(2.33+2.21)/2	2.09		
		(-6.98--7.16)x(2.36+2.33)/2	0.42		
		(-6.88--6.98)x(2.35+2.36)/2	0.24		
		(-5.89--6.88)x(2.33+2.35)/2	2.32		
		(-5.13--5.89)x(2.35+2.33)/2	1.78		
		(-4.79--5.13)x(2.33+2.35)/2	0.80		
		(-4.23--4.79)x(2.30+2.33)/2	1.30		
		(-3.70--4.23)x(2.27+2.30)/2	1.21		
		(-3.38--3.70)x(2.27+2.27)/2	0.73		
		(-2.61--3.38)x(2.29+2.27)/2	1.76		
		(-1.63--2.61)x(2.21+2.29)/2	2.21		
		(-1.51--1.63)x(2.20+2.21)/2	0.26		
		(-1.30--1.51)x(2.21+2.20)/2	0.46		
		(-0.42--1.30)x(2.27+2.21)/2	1.97		
		(0.11--0.42)x(2.25+2.27)/2	1.20		
		(0.68-0.11)x(2.23+2.25)/2	1.28		
		(1.62-0.68)x(2.12+2.23)/2	2.04		
		(1.77-1.62)x(2.10+2.12)/2	0.32		
		(1.86-1.77)x(2.09+2.10)/2	0.19		
		(2.87-1.86)x(2.05+2.09)/2	2.09		
		(3.61-2.87)x(2.04+2.05)/2	1.51		
		(3.96-3.61)x(2.04+2.04)/2	0.71		
		(4.12-3.96)x(2.04+2.04)/2	0.33		
		(4.55-4.12)x(2.07+2.04)/2	0.88		
		(4.92-4.55)x(2.10+2.07)/2	0.77		
		(5.06-4.92)x(2.10+2.10)/2	0.29		
		(5.36-5.06)x(2.13+2.10)/2	0.63		
		(6.15-5.36)x(2.19+2.13)/2	1.71		
		(7.11-6.15)x(2.17+2.19)/2	2.09		
		(7.25-7.11)x(2.17+2.17)/2	0.30		
		(7.48-7.25)x(2.15+2.17)/2	0.50		
		(8.02-7.48)x(2.07+2.15)/2	1.14		
		(5.25-8.02)x(-0.69+2.07)/2	-1.91		
		(-5.25-5.25)x(-0.69+-0.69)/2	7.24		
		(-8.15--5.25)x(2.21+-0.69)/2	-2.20		
				38.81	
USC TM VC3 932.83	B1	(-7.92--8.21)x(2.26+2.25)/2	0.65		
		(-7.61--7.92)x(2.27+2.26)/2	0.70		
		(-7.44--7.61)x(2.26+2.27)/2	0.39		
		(-6.52--7.44)x(2.28+2.26)/2	2.09		
		(-6.10--6.52)x(2.24+2.28)/2	0.95		
		(-5.43--6.10)x(2.12+2.24)/2	1.46		
		(-4.93--5.43)x(2.14+2.12)/2	1.06		
		(-4.34--4.93)x(2.20+2.14)/2	1.28		
		(-4.00--4.34)x(2.21+2.20)/2	0.75		
		(-3.25--4.00)x(2.23+2.21)/2	1.66		
		(-2.28--3.25)x(2.31+2.23)/2	2.20		
		(-2.16--2.28)x(2.32+2.31)/2	0.28		
		(-1.94--2.16)x(2.31+2.32)/2	0.51		
		(-1.07--1.94)x(2.28+2.31)/2	2.00		
		(-0.57--1.07)x(2.29+2.28)/2	1.14		
		(0.02--0.57)x(2.32+2.29)/2	1.36		
		(1.05-0.02)x(2.36+2.32)/2	2.41		
		(1.12-1.05)x(2.36+2.36)/2	0.17		
		(1.15-1.12)x(2.35+2.36)/2	0.07		
		(2.21-1.15)x(2.32+2.35)/2	2.48		
		(2.87-2.21)x(2.22+2.32)/2	1.50		
		(3.30-2.87)x(2.13+2.22)/2	0.94		
		(4.05-3.30)x(2.11+2.13)/2	1.59		
		(4.39-4.05)x(2.11+2.11)/2	0.72		
		(4.59-4.39)x(2.10+2.11)/2	0.42		
		(5.48-4.59)x(2.11+2.10)/2	1.87		
		(6.31-5.48)x(2.07+2.11)/2	1.73		
		A RIPORTARE mq	32.38		

		CALCOLO DELLE AREE		Foglio n. 28	
STERRO					
N. SEZIONE PROG.	FIG.	ELEMENTI DI CALCOLO	AREA ELEMENTARE mq	AREA FIGURA mq	NOTE
		RIPORTO mq	32.38		
		(6.57-6.31)x(2.06+2.07)/2	0.54		
		(7.04-6.57)x(2.08+2.06)/2	0.97		
		(7.66-7.04)x(2.11+2.08)/2	1.30		
		(8.02-7.66)x(2.09+2.11)/2	0.76		
		(8.05-8.02)x(2.09+2.09)/2	0.06		
		(5.25-8.05)x(-0.71+2.09)/2	-1.93		
		(-5.25-5.25)x(-0.71+-0.71)/2	7.46		
		(-8.21--5.25)x(2.25+-0.71)/2	-2.28		
				39.26	
49	B1	(-6.12--6.26)x(2.15+2.14)/2	0.30		
949.46		(-5.53--6.12)x(2.16+2.15)/2	1.27		
		(-5.02--5.53)x(2.18+2.16)/2	1.11		
		(-4.18--5.02)x(2.18+2.18)/2	1.83		
		(-3.93--4.18)x(2.18+2.18)/2	0.54		
		(-3.78--3.93)x(2.17+2.18)/2	0.33		
		(-2.83--3.78)x(2.14+2.17)/2	2.05		
		(-2.02--2.83)x(2.20+2.14)/2	1.76		
		(-1.74--2.02)x(2.20+2.20)/2	0.62		
		(-1.26--1.74)x(2.20+2.20)/2	1.06		
		(-0.64--1.26)x(2.20+2.20)/2	1.36		
		(-0.27--0.64)x(2.19+2.20)/2	0.81		
		(0.46--0.27)x(2.19+2.19)/2	1.60		
		(1.49-0.46)x(2.14+2.19)/2	2.23		
		(1.55-1.49)x(2.13+2.14)/2	0.13		
		(1.66-1.55)x(2.13+2.13)/2	0.23		
		(2.65-1.66)x(2.13+2.13)/2	2.11		
		(3.24-2.65)x(2.10+2.13)/2	1.25		
		(3.74-3.24)x(2.10+2.10)/2	1.05		
		(4.57-3.74)x(2.05+2.10)/2	1.72		
		(4.84-4.57)x(2.05+2.05)/2	0.55		
		(4.99-4.84)x(2.06+2.05)/2	0.31		
		(5.93-4.99)x(2.15+2.06)/2	1.98		
		(6.28-5.93)x(2.16+2.15)/2	0.75		
		(4.00-6.28)x(-0.12+2.16)/2	-2.33		
		(-4.00-4.00)x(-0.12+-0.12)/2	0.96		
		(-6.26--4.00)x(2.14+-0.12)/2	-2.28		
				23.30	
50	B1	(-5.19--5.26)x(2.12+2.13)/2	0.15		
964.47		(-5.09--5.19)x(2.12+2.12)/2	0.21		
		(-4.93--5.09)x(2.12+2.12)/2	0.34		
		(-4.25--4.93)x(2.11+2.12)/2	1.44		
		(-4.00--4.25)x(2.15+2.11)/2	0.53		
		(-3.46--4.00)x(2.19+2.15)/2	1.17		
		(-2.90--3.46)x(2.24+2.19)/2	1.24		
		(-2.66--2.90)x(2.26+2.24)/2	0.54		
		(-2.02--2.66)x(2.27+2.26)/2	1.45		
		(-1.81--2.02)x(2.27+2.27)/2	0.48		
		(-1.68--1.81)x(2.26+2.27)/2	0.29		
		(-0.71--1.68)x(2.25+2.26)/2	2.19		
		(0.07--0.71)x(2.20+2.25)/2	1.74		
		(0.38-0.07)x(2.18+2.20)/2	0.68		
		(0.52-0.38)x(2.17+2.18)/2	0.30		
		(0.90-0.52)x(2.14+2.17)/2	0.82		
		(1.32-0.90)x(2.11+2.14)/2	0.89		
		(1.48-1.32)x(2.11+2.11)/2	0.34		
		(1.83-1.48)x(2.10+2.11)/2	0.74		
		(2.57-1.83)x(2.07+2.10)/2	1.54		
		(3.58-2.57)x(2.06+2.07)/2	2.09		
		(3.67-3.58)x(2.06+2.06)/2	0.19		
		(3.82-3.67)x(2.06+2.06)/2	0.31		
		(4.76-3.82)x(2.08+2.06)/2	1.95		
		(5.18-4.76)x(2.05+2.08)/2	0.87		
		(3.00-5.18)x(-0.13+2.05)/2	-2.09		
		(-3.00-3.00)x(-0.13+-0.13)/2	0.78		
		(-5.26--3.00)x(2.13+-0.13)/2	-2.26		
				18.92	
51	B1	(-5.21--5.41)x(2.28+2.27)/2	0.46		
979.54		(-4.53--5.21)x(2.27+2.28)/2	1.55		
		(-4.12--4.53)x(2.27+2.27)/2	0.93		
		(-3.22--4.12)x(2.28+2.27)/2	2.05		
		(-3.02--3.22)x(2.28+2.28)/2	0.46		
		(-2.69--3.02)x(2.29+2.28)/2	0.75		
		(-1.93--2.69)x(2.30+2.29)/2	1.74		
		(-1.48--1.93)x(2.30+2.30)/2	1.03		
		(-0.83--1.48)x(2.29+2.30)/2	1.49		
		(0.24--0.83)x(2.20+2.29)/2	2.40		
		(0.26-0.24)x(2.20+2.20)/2	0.04		
		(0.27-0.26)x(2.20+2.20)/2	0.02		
		(1.35-0.27)x(2.08+2.20)/2	2.31		
		(2.01-1.35)x(2.07+2.08)/2	1.37		
		(2.45-2.01)x(2.07+2.07)/2	0.91		
		(3.18-2.45)x(2.05+2.07)/2	1.50		
		(3.54-3.18)x(2.03+2.05)/2	0.73		
		(3.76-3.54)x(2.05+2.03)/2	0.45		
		(4.64-3.76)x(2.10+2.05)/2	1.83		
		(5.28-4.64)x(2.13+2.10)/2	1.35		
		(3.00-5.28)x(-0.14+2.13)/2	-2.27		
		(-3.00-3.00)x(-0.14+-0.14)/2	0.84		
		(-5.41--3.00)x(2.27+-0.14)/2	-2.57		
				19.37	
52	B1	(-5.26--5.32)x(2.16+2.17)/2	0.13		
994.23		(-4.42--5.26)x(2.21+2.16)/2	1.84		
		(-4.17--4.42)x(2.23+2.21)/2	0.55		
		(-4.02--4.17)x(2.24+2.23)/2	0.34		
		(-3.08--4.02)x(2.29+2.24)/2	2.13		
		(-2.28--3.08)x(2.32+2.29)/2	1.84		
		(-1.98--2.28)x(2.34+2.32)/2	0.70		
		(-1.48--1.98)x(2.33+2.34)/2	1.17		
		(-0.89--1.48)x(2.30+2.33)/2	1.37		
		(-0.54--0.89)x(2.28+2.30)/2	0.80		
		(0.21--0.54)x(2.22+2.28)/2	1.69		
		(1.20-0.21)x(2.22+2.22)/2	2.20		
		(1.30-1.20)x(2.22+2.22)/2	0.22		
		(1.46-1.30)x(2.22+2.22)/2	0.36		
		(2.14-1.46)x(2.21+2.22)/2	1.51		
		A RIPORTARE mq	16.85		

	CALCOLO DELLE AREE		Foglio n. 29

STERRO

N. SEZIONE PROG.	FIG.	ELEMENTI DI CALCOLO	AREA ELEMENTARE mq	AREA FIGURA mq	NOTE
		RIPORTO mq	16.85		
		(2.39-2.14)x(2.19+2.21)/2	0.55		
		(2.94-2.39)x(2.11+2.19)/2	1.18		
		(3.49-2.94)x(2.08+2.11)/2	1.15		
		(3.73-3.49)x(2.05+2.08)/2	0.50		
		(4.40-3.73)x(2.04+2.05)/2	1.37		
		(4.58-4.40)x(2.03+2.04)/2	0.37		
		(4.69-4.58)x(2.03+2.03)/2	0.22		
		(5.19-4.69)x(2.04+2.03)/2	1.02		
		(3.00-5.19)x(-0.15+2.04)/2	-2.07		
		(-3.00-3.00)x(-0.15+-0.15)/2	0.90		
		(-5.32--3.00)x(2.17+-0.15)/2	-2.34		
				19.70	
53 1009.26	B1	(-4.36--5.19)x(2.04+2.03)/2	1.69		
		(-3.85--4.36)x(2.06+2.04)/2	1.05		
		(-3.27--3.85)x(2.07+2.06)/2	1.20		
		(-2.30--3.27)x(2.07+2.07)/2	2.01		
		(-2.17--2.30)x(2.07+2.07)/2	0.27		
		(-2.09--2.17)x(2.07+2.07)/2	0.17		
		(-1.08--2.09)x(2.09+2.07)/2	2.10		
		(-0.34--1.08)x(2.12+2.09)/2	1.56		
		(0.02--0.34)x(2.13+2.12)/2	0.77		
		(0.62-0.02)x(2.13+2.13)/2	1.28		
		(1.11-0.62)x(2.13+2.13)/2	1.04		
		(1.41-1.11)x(2.13+2.13)/2	0.64		
		(2.21-1.41)x(2.12+2.13)/2	1.70		
		(2.57-2.21)x(2.11+2.12)/2	0.76		
		(3.31-2.57)x(2.07+2.11)/2	1.55		
		(3.53-3.31)x(2.07+2.07)/2	0.46		
		(4.40-3.53)x(2.07+2.07)/2	1.80		
		(4.92-4.40)x(2.10+2.07)/2	1.08		
		(5.26-4.92)x(2.10+2.10)/2	0.71		
		(3.00-5.26)x(-0.16+2.10)/2	-2.19		
		(-3.00-3.00)x(-0.16+-0.16)/2	0.96		
		(-5.19--3.00)x(2.03+-0.16)/2	-2.05		
				18.56	
54 1024.17	B1	(-5.24--5.46)x(2.27+2.29)/2	0.50		
		(-4.52--5.24)x(2.21+2.27)/2	1.61		
		(-3.45--4.52)x(2.21+2.21)/2	2.36		
		(-3.42--3.45)x(2.21+2.21)/2	0.07		
		(-3.40--3.42)x(2.21+2.21)/2	0.04		
		(-3.36--3.40)x(2.22+2.21)/2	0.09		
		(-2.61--3.36)x(2.26+2.22)/2	1.68		
		(-2.32--2.61)x(2.27+2.26)/2	0.66		
		(-1.66--2.32)x(2.39+2.27)/2	1.54		
		(-1.22--1.66)x(2.41+2.39)/2	1.06		
		(-0.52--1.22)x(2.32+2.41)/2	1.66		
		(-0.12--0.52)x(2.27+2.32)/2	0.92		
		(0.13--0.12)x(2.30+2.27)/2	0.57		
		(0.98-0.13)x(2.39+2.30)/2	1.99		
		(1.92-0.98)x(2.54+2.39)/2	2.32		
		(2.08-1.92)x(2.56+2.54)/2	0.41		
		(2.33-2.08)x(2.57+2.56)/2	0.64		
		(3.18-2.33)x(2.54+2.57)/2	2.17		
		(3.72-3.18)x(2.43+2.54)/2	1.34		
		(5.69-3.72)x(2.52+2.43)/2	4.88		
		(3.00-5.69)x(-0.17+2.52)/2	-3.16		
		(-3.00-3.00)x(-0.17+-0.17)/2	1.02		
		(-5.46--3.00)x(2.29+-0.17)/2	-2.61		
				21.76	
55 1039.02	B1	(-4.80--5.60)x(2.50+2.41)/2	1.96		
		(-4.61--4.80)x(2.51+2.50)/2	0.48		
		(-4.50--4.61)x(2.49+2.51)/2	0.28		
		(-3.51--4.50)x(2.41+2.49)/2	2.43		
		(-2.75--3.51)x(2.51+2.41)/2	1.87		
		(-2.42--2.75)x(2.54+2.51)/2	0.83		
		(-1.86--2.42)x(2.49+2.54)/2	1.41		
		(-1.33--1.86)x(2.44+2.49)/2	1.31		
		(-1.01--1.33)x(2.44+2.44)/2	0.78		
		(-0.23--1.01)x(2.44+2.44)/2	1.90		
		(0.73--0.23)x(2.34+2.44)/2	2.29		
		(0.86-0.73)x(2.32+2.34)/2	0.30		
		(0.92-0.86)x(2.32+2.32)/2	0.14		
		(1.09-0.92)x(2.33+2.32)/2	0.40		
		(1.72-1.09)x(2.34+2.33)/2	1.47		
		(1.95-1.72)x(2.34+2.34)/2	0.54		
		(2.47-1.95)x(2.32+2.34)/2	1.21		
		(3.05-2.47)x(2.30+2.32)/2	1.34		
		(4.03-3.05)x(2.25+2.30)/2	2.23		
		(4.14-4.03)x(2.24+2.25)/2	0.25		
		(4.21-4.14)x(2.24+2.24)/2	0.16		
		(5.24-4.21)x(2.21+2.24)/2	2.29		
		(5.41-5.24)x(2.23+2.21)/2	0.38		
		(3.00-5.41)x(-0.19+2.23)/2	-2.46		
		(-3.00-3.00)x(-0.19+-0.19)/2	1.14		
		(-5.60--3.00)x(2.41+-0.19)/2	-2.89		
				22.04	
56 1053.86	B1	(-4.74--5.57)x(2.58+2.37)/2	2.05		
		(-4.28--4.74)x(2.46+2.58)/2	1.16		
		(-3.64--4.28)x(2.51+2.46)/2	1.59		
		(-3.07--3.64)x(2.55+2.51)/2	1.44		
		(-2.54--3.07)x(2.65+2.55)/2	1.38		
		(-2.21--2.54)x(2.59+2.65)/2	0.86		
		(-1.45--2.21)x(2.44+2.59)/2	1.91		
		(-0.42--1.45)x(2.38+2.44)/2	2.48		
		(-0.35--0.42)x(2.37+2.38)/2	0.17		
		(-0.23--0.35)x(2.37+2.37)/2	0.28		
		(0.75--0.23)x(2.32+2.37)/2	2.30		
		(1.37-0.75)x(2.27+2.32)/2	1.42		
		(1.85-1.37)x(2.25+2.27)/2	1.08		
		(2.62-1.85)x(2.21+2.25)/2	1.72		
		(2.95-2.62)x(2.19+2.21)/2	0.73		
		(3.16-2.95)x(2.18+2.19)/2	0.46		
		(4.05-3.16)x(2.17+2.18)/2	1.94		
		(4.95-4.05)x(2.30+2.17)/2	2.01		
		(5.15-4.95)x(2.32+2.30)/2	0.46		
		A RIPORTARE mq	25.44		

		CALCOLO DELLE AREE		Foglio n. 30
STERRO				
N. SEZIONE PROG.	FIG.	ELEMENTI DI CALCOLO	AREA ELEMENTARE mq	AREA FIGURA mq	NOTE
		RIPORTO mq	25.44		
		(5.46-5.15)x(2.34+2.32)/2	0.72		
		(5.54-5.46)x(2.34+2.34)/2	0.19		
		(3.00-5.54)x(-0.20+2.34)/2	-2.72		
		(-3.00-3.00)x(-0.20+-0.20)/2	1.20		
		(-5.57--3.00)x(2.37+-0.20)/2	-2.79		
				22.04	
57	B1	(-5.36--5.40)x(2.19+2.19)/2	0.09		
1068.87		(-4.89--5.36)x(2.20+2.19)/2	1.03		
		(-4.08--4.89)x(2.22+2.20)/2	1.79		
		(-3.79--4.08)x(2.23+2.22)/2	0.65		
		(-3.63--3.79)x(2.24+2.23)/2	0.36		
		(-2.70--3.63)x(2.30+2.24)/2	2.11		
		(-1.90--2.70)x(2.31+2.30)/2	1.84		
		(-1.61--1.90)x(2.31+2.31)/2	0.67		
		(-1.11--1.61)x(2.31+2.31)/2	1.16		
		(-0.52--1.11)x(2.31+2.31)/2	1.36		
		(-0.17--0.52)x(2.30+2.31)/2	0.81		
		(0.58--0.17)x(2.31+2.30)/2	1.73		
		(0.92-0.58)x(2.32+2.31)/2	0.79		
		(1.67-0.92)x(2.33+2.32)/2	1.74		
		(1.86-1.67)x(2.34+2.33)/2	0.44		
		(2.76-1.86)x(2.33+2.34)/2	2.10		
		(3.29-2.76)x(2.37+2.33)/2	1.25		
		(3.86-3.29)x(2.39+2.37)/2	1.36		
		(4.82-3.86)x(2.44+2.39)/2	2.32		
		(4.95-4.82)x(2.45+2.44)/2	0.32		
		(5.02-4.95)x(2.45+2.45)/2	0.17		
		(5.70-5.02)x(2.49+2.45)/2	1.68		
		(3.00-5.70)x(-0.21+2.49)/2	-3.08		
		(-3.00-3.00)x(-0.21+-0.21)/2	1.26		
		(-5.40--3.00)x(2.19+-0.21)/2	-2.38		
				21.57	
58	B1	(-5.40--5.41)x(2.20+2.19)/2	0.02		
1083.72		(-4.94--5.40)x(2.23+2.20)/2	1.02		
		(-4.26--4.94)x(2.30+2.23)/2	1.54		
		(-3.85--4.26)x(2.35+2.30)/2	0.95		
		(-2.96--3.85)x(2.42+2.35)/2	2.12		
		(-2.76--2.96)x(2.44+2.42)/2	0.49		
		(-2.40--2.76)x(2.44+2.44)/2	0.88		
		(-1.67--2.40)x(2.43+2.44)/2	1.78		
		(-1.24--1.67)x(2.44+2.43)/2	1.05		
		(-0.58--1.24)x(2.44+2.44)/2	1.61		
		(0.47--0.58)x(2.43+2.44)/2	2.56		
		(0.52-0.47)x(2.43+2.43)/2	0.12		
		(0.59-0.52)x(2.43+2.43)/2	0.17		
		(1.61-0.59)x(2.39+2.43)/2	2.46		
		(2.19-1.61)x(2.39+2.39)/2	1.39		
		(2.70-2.19)x(2.39+2.39)/2	1.22		
		(3.58-2.70)x(2.38+2.39)/2	2.10		
		(3.79-3.58)x(2.38+2.38)/2	0.50		
		(3.91-3.79)x(2.39+2.38)/2	0.29		
		(5.76-3.91)x(2.55+2.39)/2	4.57		
		(3.00-5.76)x(-0.22+2.55)/2	-3.22		
		(-3.00-3.00)x(-0.22+-0.22)/2	1.32		
		(-5.41--3.00)x(2.19+-0.22)/2	-2.37		
				22.57	
59	B1	(-5.02--5.36)x(2.17+2.13)/2	0.73		
1098.61		(-4.13--5.02)x(2.18+2.17)/2	1.94		
		(-3.92--4.13)x(2.19+2.18)/2	0.46		
		(-3.57--3.92)x(2.20+2.19)/2	0.77		
		(-2.83--3.57)x(2.24+2.20)/2	1.64		
		(-2.41--2.83)x(2.28+2.24)/2	0.95		
		(-1.74--2.41)x(2.37+2.28)/2	1.56		
		(-0.69--1.74)x(2.42+2.37)/2	2.51		
		(-0.65--0.69)x(2.42+2.42)/2	0.10		
		(-0.58--0.65)x(2.42+2.42)/2	0.17		
		(0.44--0.58)x(2.42+2.42)/2	2.47		
		(0.97-0.44)x(2.41+2.42)/2	1.28		
		(1.53-0.97)x(2.42+2.41)/2	1.35		
		(2.42-1.53)x(2.45+2.42)/2	2.17		
		(2.62-2.42)x(2.46+2.45)/2	0.49		
		(2.74-2.62)x(2.46+2.46)/2	0.30		
		(3.71-2.74)x(2.51+2.46)/2	2.41		
		(4.46-3.71)x(2.54+2.51)/2	1.89		
		(4.81-4.46)x(2.55+2.54)/2	0.89		
		(5.41-4.81)x(2.57+2.55)/2	1.54		
		(5.83-5.41)x(2.60+2.57)/2	1.09		
		(3.00-5.83)x(-0.23+2.60)/2	-3.35		
		(-3.00-3.00)x(-0.23+-0.23)/2	1.38		
		(-5.36--3.00)x(2.13+-0.23)/2	-2.24		
				22.50	
60	B1	(-5.28--5.35)x(2.12+2.11)/2	0.15		
1113.66		(-4.94--5.28)x(2.14+2.12)/2	0.72		
		(-4.18--4.94)x(2.20+2.14)/2	1.65		
		(-4.09--4.18)x(2.20+2.20)/2	0.20		
		(-3.07--4.09)x(2.27+2.20)/2	2.28		
		(-2.41--3.07)x(2.30+2.27)/2	1.51		
		(-1.97--2.41)x(2.33+2.30)/2	1.02		
		(-1.30--1.97)x(2.35+2.33)/2	1.57		
		(-0.87--1.30)x(2.36+2.35)/2	1.01		
		(-0.59--0.87)x(2.36+2.36)/2	0.66		
		(0.23--0.59)x(2.38+2.36)/2	1.94		
		(1.23-0.23)x(2.38+2.38)/2	2.38		
		(1.34-1.23)x(2.38+2.38)/2	0.26		
		(1.50-1.34)x(2.38+2.38)/2	0.38		
		(2.44-1.50)x(2.37+2.38)/2	2.23		
		(3.05-2.44)x(2.40+2.37)/2	1.45		
		(5.84-3.05)x(2.60+2.40)/2	6.97		
		(3.00-5.84)x(-0.24+2.60)/2	-3.35		
		(-3.00-3.00)x(-0.24+-0.24)/2	1.44		
		(-5.35--3.00)x(2.11+-0.24)/2	-2.20		
				22.27	
61	B1	(-5.36--5.38)x(2.14+2.13)/2	0.04		
1128.36		(-4.95--5.36)x(2.16+2.14)/2	0.88		
		(-4.27--4.95)x(2.21+2.16)/2	1.49		
		A RIPORTARE mq	2.41		

	CALCOLO DELLE AREE		Foglio n. 31

STERRO

N. SEZIONE PROG.	FIG.	ELEMENTI DI CALCOLO	AREA ELEMENTARE mq	AREA FIGURA mq	NOTE
		RIPORTO mq	2.41		
		(-3.20--4.27)x(2.31+2.21)/2	2.42		
		(-3.17--3.20)x(2.31+2.31)/2	0.07		
		(-3.12--3.17)x(2.32+2.31)/2	0.12		
		(-2.07--3.12)x(2.36+2.32)/2	2.46		
		(-1.45--2.07)x(2.34+2.36)/2	1.46		
		(-0.98--1.45)x(2.33+2.34)/2	1.10		
		(-0.20--0.98)x(2.31+2.33)/2	1.81		
		(0.12--0.20)x(2.31+2.31)/2	0.74		
		(0.82-0.12)x(2.33+2.31)/2	1.62		
		(1.21-0.82)x(2.35+2.33)/2	0.91		
		(2.06-1.21)x(2.36+2.35)/2	2.00		
		(2.31-2.06)x(2.36+2.36)/2	0.59		
		(2.71-2.31)x(2.36+2.36)/2	0.94		
		(3.40-2.71)x(2.38+2.36)/2	1.64		
		(3.82-3.40)x(2.40+2.38)/2	1.00		
		(4.50-3.82)x(2.46+2.40)/2	1.65		
		(5.57-4.50)x(2.56+2.46)/2	2.69		
		(5.59-5.57)x(2.56+2.56)/2	0.05		
		(5.63-5.59)x(2.56+2.56)/2	0.10		
		(5.82-5.63)x(2.57+2.56)/2	0.49		
		(3.00-5.82)x(-0.25+2.57)/2	-3.27		
		(-3.00-3.00)x(-0.25+-0.25)/2	1.50		
		(-5.38--3.00)x(2.13+-0.25)/2	-2.24		
				22.26	
62 1143.61	B1	(5.28-5.99)x(2.70+2.73)/2	-1.93		
		(5.23-5.28)x(2.70+2.70)/2	-0.13		
		(4.49-5.23)x(2.78+2.70)/2	-2.03		
		(4.20-4.49)x(2.78+2.78)/2	-0.81		
		(3.56-4.20)x(2.82+2.78)/2	-1.79		
		(3.11-3.56)x(2.86+2.82)/2	-1.28		
		(2.38-3.11)x(2.76+2.86)/2	-2.05		
		(2.01-2.38)x(2.75+2.76)/2	-1.02		
		(1.77-2.01)x(2.71+2.75)/2	-0.66		
		(0.91-1.77)x(2.62+2.71)/2	-2.29		
		(-0.02-0.91)x(2.69+2.62)/2	-2.47		
		(-0.19--0.02)x(2.69+2.69)/2	-0.46		
		(-0.46--0.19)x(2.80+2.69)/2	-0.74		
		(-1.29--0.46)x(3.18+2.80)/2	-2.48		
		(-1.81--1.29)x(3.15+3.18)/2	-1.65		
		(-2.39--1.81)x(3.14+3.15)/2	-1.82		
		(-3.30--2.39)x(3.00+3.14)/2	-2.79		
		(-3.49--3.30)x(2.98+3.00)/2	-0.57		
		(-3.61--3.49)x(2.95+2.98)/2	-0.36		
		(-4.59--3.61)x(2.77+2.95)/2	-2.80		
		(-5.02--4.59)x(2.69+2.77)/2	-1.17		
		(-5.59--5.02)x(2.33+2.69)/2	-1.43		
		(-3.00--5.59)x(-0.26+2.33)/2	2.68		
		(3.00--3.00)x(-0.26+-0.26)/2	-1.56		
		(5.99-3.00)x(2.73+-0.26)/2	3.69		
				27.92	
63 1158.51	B1	(-4.82--5.29)x(2.06+2.02)/2	0.96		
		(-4.74--4.82)x(2.07+2.06)/2	0.17		
		(-4.61--4.74)x(2.06+2.07)/2	0.27		
		(-3.65--4.61)x(2.07+2.06)/2	1.98		
		(-3.07--3.65)x(2.04+2.07)/2	1.19		
		(-2.55--3.07)x(2.02+2.04)/2	1.06		
		(-1.69--2.55)x(1.97+2.02)/2	1.72		
		(-1.46--1.69)x(1.96+1.97)/2	0.45		
		(-0.72--1.46)x(1.92+1.96)/2	1.44		
		(-0.36--0.72)x(1.90+1.92)/2	0.69		
		(0.44--0.36)x(1.87+1.90)/2	1.51		
		(0.73-0.44)x(1.86+1.87)/2	0.54		
		(1.23-0.73)x(1.96+1.86)/2	0.96		
		(1.83-1.23)x(2.09+1.96)/2	1.22		
		(2.19-1.83)x(2.18+2.09)/2	0.77		
		(2.92-2.19)x(2.36+2.18)/2	1.66		
		(3.95-2.92)x(2.61+2.36)/2	2.56		
		(4.02-3.95)x(2.63+2.61)/2	0.18		
		(4.14-4.02)x(2.65+2.63)/2	0.32		
		(5.11-4.14)x(2.86+2.65)/2	2.67		
		(5.70-5.11)x(2.82+2.86)/2	1.68		
		(6.09-5.70)x(2.82+2.82)/2	1.10		
		(3.00-6.09)x(-0.27+2.82)/2	-3.94		
		(-3.00-3.00)x(-0.27+-0.27)/2	1.62		
		(-5.29--3.00)x(2.02+-0.27)/2	-2.00		
				20.78	
64 1173.31	B1	(-4.86--5.17)x(1.91+1.88)/2	0.59		
		(-4.09--4.86)x(1.91+1.91)/2	1.47		
		(-3.76--4.09)x(1.91+1.91)/2	0.63		
		(-3.21--3.76)x(1.91+1.91)/2	1.05		
		(-2.67--3.21)x(1.91+1.91)/2	1.03		
		(-2.35--2.67)x(1.90+1.91)/2	0.61		
		(-1.58--2.35)x(1.90+1.90)/2	1.46		
		(-0.62--1.58)x(2.01+1.90)/2	1.88		
		(-0.49--0.62)x(2.02+2.01)/2	0.26		
		(-0.25--0.49)x(2.14+2.02)/2	0.50		
		(0.61--0.25)x(2.55+2.14)/2	2.02		
		(1.11-0.61)x(2.76+2.55)/2	1.33		
		(1.70-1.11)x(3.01+2.76)/2	1.70		
		(2.72-1.70)x(3.27+3.01)/2	3.20		
		(2.79-2.72)x(3.29+3.27)/2	0.23		
		(2.84-2.79)x(3.29+3.29)/2	0.16		
		(3.89-2.84)x(3.30+3.29)/2	3.46		
		(4.37-3.89)x(3.17+3.30)/2	1.55		
		(6.09-4.37)x(2.81+3.17)/2	5.14		
		(3.00-6.09)x(-0.28+2.81)/2	-3.91		
		(-3.00-3.00)x(-0.28+-0.28)/2	1.68		
		(-5.17--3.00)x(1.88+-0.28)/2	-1.74		
				24.30	
65 1188.09	B1	(-4.72--5.25)x(2.05+1.95)/2	1.06		
		(-4.31--4.72)x(2.12+2.05)/2	0.85		
		(-3.65--4.31)x(2.24+2.12)/2	1.44		
		(-2.81--3.65)x(2.28+2.24)/2	1.90		
		(-2.58--2.81)x(2.30+2.28)/2	0.53		
		(-2.03--2.58)x(2.32+2.30)/2	1.27		
		A RIPORTARE mq	7.05		

	CALCOLO DELLE AREE		Foglio n. 32

STERRO

N. SEZIONE PROG.	FIG.	ELEMENTI DI CALCOLO	AREA ELEMENTARE mq	AREA FIGURA mq	NOTE
		RIPORTO mq	7.05		
		(-1.51--2.03)x(2.33+2.32)/2	1.21		
		(-0.80--1.51)x(2.33+2.33)/2	1.65		
		(-0.45--0.80)x(2.33+2.33)/2	0.82		
		(0.20--0.45)x(2.30+2.33)/2	1.50		
		(0.62-0.20)x(2.28+2.30)/2	0.96		
		(1.65-0.62)x(2.37+2.28)/2	2.39		
		(1.69-1.65)x(2.38+2.37)/2	0.10		
		(1.71-1.69)x(2.38+2.38)/2	0.05		
		(2.76-1.71)x(2.44+2.38)/2	2.53		
		(3.21-2.76)x(2.41+2.44)/2	1.09		
		(3.83-3.21)x(2.40+2.41)/2	1.49		
		(4.72-3.83)x(2.37+2.40)/2	2.12		
		(4.89-4.72)x(2.37+2.37)/2	0.40		
		(5.32-4.89)x(2.36+2.37)/2	1.02		
		(5.65-5.32)x(2.36+2.36)/2	0.78		
		(3.00-5.65)x(-0.30+2.36)/2	-2.73		
		(-3.00-3.00)x(-0.30+-0.30)/2	1.80		
		(-5.25--3.00)x(1.95+-0.30)/2	-1.86		
				22.37	
66 1203.44	B1	(-4.75--5.03)x(1.81+1.72)/2	0.49		
		(-4.56--4.75)x(1.88+1.81)/2	0.35		
		(-3.71--4.56)x(2.02+1.88)/2	1.66		
		(-3.51--3.71)x(2.06+2.02)/2	0.41		
		(-3.22--3.51)x(2.09+2.06)/2	0.60		
		(-2.47--3.22)x(2.16+2.09)/2	1.59		
		(-1.93--2.47)x(2.23+2.16)/2	1.19		
		(-1.43--1.93)x(2.31+2.23)/2	1.14		
		(-0.63--1.43)x(2.45+2.31)/2	1.90		
		(-0.38--0.63)x(2.51+2.45)/2	0.62		
		(0.66--0.38)x(2.78+2.51)/2	2.75		
		(0.68-0.66)x(2.79+2.79)/2	0.06		
		(1.71-0.68)x(2.86+2.79)/2	2.91		
		(1.95-1.71)x(2.79+2.86)/2	0.68		
		(2.75-1.95)x(2.58+2.79)/2	2.15		
		(3.24-2.75)x(2.49+2.58)/2	1.24		
		(3.79-3.24)x(2.34+2.49)/2	1.33		
		(4.54-3.79)x(2.34+2.34)/2	1.75		
		(4.84-4.54)x(2.34+2.34)/2	0.70		
		(5.66-4.84)x(2.36+2.34)/2	1.93		
		(3.00-5.66)x(-0.31+2.36)/2	-2.73		
		(-3.00-3.00)x(-0.31+-0.31)/2	1.86		
		(-5.03--3.00)x(1.72+-0.31)/2	-1.43		
				23.15	
67 1218.76	B1	(-3.85--4.08)x(0.89+0.76)/2	0.19		
		(-3.32--3.85)x(1.21+0.89)/2	0.56		
		(-2.56--3.32)x(1.58+1.21)/2	1.06		
		(-2.28--2.56)x(1.71+1.58)/2	0.46		
		(-1.26--2.28)x(2.16+1.71)/2	1.97		
		(-1.24--1.26)x(2.18+2.16)/2	0.04		
		(-1.12--1.24)x(2.22+2.18)/2	0.26		
		(-0.19--1.12)x(2.48+2.22)/2	2.19		
		(0.03--0.19)x(2.51+2.48)/2	0.55		
		(0.85-0.03)x(2.62+2.51)/2	2.10		
		(1.32-0.85)x(2.66+2.62)/2	1.24		
		(1.90-1.32)x(2.71+2.66)/2	1.56		
		(2.61-1.90)x(2.76+2.71)/2	1.94		
		(2.94-2.61)x(2.78+2.76)/2	0.91		
		(3.16-2.94)x(2.80+2.78)/2	0.61		
		(3.98-3.16)x(2.85+2.80)/2	2.32		
		(4.32-3.98)x(2.85+2.85)/2	0.97		
		(5.03-4.32)x(2.84+2.85)/2	2.02		
		(5.20-5.03)x(2.84+2.84)/2	0.48		
		(6.07-5.20)x(2.82+2.84)/2	2.46		
		(6.13-6.07)x(2.82+2.82)/2	0.17		
		(3.00-6.13)x(-0.32+2.82)/2	-3.91		
		(-3.00-3.00)x(-0.32+-0.32)/2	1.92		
		(-4.08--3.00)x(0.76+-0.32)/2	-0.24		
				21.83	
68 1233.97	B1	(-3.16--3.34)x(0.02+0.01)/2	0.00		
		(-3.14--3.16)x(0.02+0.02)/2	0.00		
		(-3.13--3.14)x(0.02+0.02)/2	0.00		
		(-2.94--3.13)x(0.08+0.02)/2	0.01		
		(-2.89--2.94)x(0.07+0.08)/2	0.00		
		(-2.84--2.89)x(0.02+0.07)/2	0.00		
		(-2.81--2.84)x(0.09+0.02)/2	0.00		
		(-2.80--2.81)x(0.10+0.09)/2	0.00		
		(-2.79--2.80)x(0.07+0.10)/2	0.00		
		(-2.78--2.79)x(0.09+0.07)/2	0.00		
		(-2.77--2.78)x(0.03+0.09)/2	0.00		
		(-2.75--2.77)x(0.08+0.03)/2	0.00		
		(-2.67--2.75)x(0.14+0.08)/2	0.01		
		(-2.29--2.67)x(0.24+0.14)/2	0.07		
		(-2.07--2.29)x(0.33+0.24)/2	0.06		
		(-1.75--2.07)x(0.51+0.33)/2	0.13		
		(-1.03--1.75)x(0.89+0.51)/2	0.50		
		(-0.46--1.03)x(1.23+0.89)/2	0.60		
		(0.02--0.46)x(1.52+1.23)/2	0.66		
		(0.34-0.02)x(1.73+1.52)/2	0.52		
		(1.06-0.34)x(2.21+1.73)/2	1.42		
		(1.14-1.06)x(2.26+2.21)/2	0.18		
		(1.45-1.14)x(2.43+2.26)/2	0.73		
		(1.50-1.45)x(2.50+2.43)/2	0.12		
		(1.63-1.50)x(2.69+2.50)/2	0.34		
		(1.65-1.63)x(2.61+2.69)/2	0.05		
		(1.67-1.65)x(2.61+2.61)/2	0.05		
		(1.73-1.67)x(2.64+2.61)/2	0.16		
		(1.77-1.73)x(2.62+2.64)/2	0.11		
		(2.10-1.77)x(2.68+2.62)/2	0.87		
		(2.11-2.10)x(2.69+2.68)/2	0.03		
		(2.13-2.11)x(2.69+2.69)/2	0.05		
		(3.15-2.13)x(2.89+2.69)/2	2.85		
		(3.42-3.15)x(2.88+2.89)/2	0.78		
		(4.19-3.42)x(2.90+2.88)/2	2.23		
		(4.71-4.19)x(2.92+2.90)/2	1.51		
		(5.24-4.71)x(2.92+2.92)/2	1.55		
		A RIPORTARE mq	15.59		

		CALCOLO DELLE AREE		Foglio n. 33	
STERRO					
N. SEZIONE PROG.	FIG.	ELEMENTI DI CALCOLO	AREA ELEMENTARE mq	AREA FIGURA mq	NOTE
		RIPORTO mq	15.59		
		(6.01-5.24)x(2.94+2.92)/2	2.26		
		(6.27-6.01)x(2.95+2.94)/2	0.77		
		(3.00-6.27)x(-0.33+2.95)/2	-4.28		
		(-3.00-3.00)x(-0.33+-0.33)/2	1.98		
		(-3.34--3.00)x(0.01+-0.33)/2	0.05		
				16.37	
69	B1	(-2.91--3.38)x(0.05+0.04)/2	0.02		
1249.22		(-2.47--2.91)x(0.07+0.05)/2	0.03		
		(-1.87--2.47)x(0.08+0.07)/2	0.05		
		(-0.98--1.87)x(0.11+0.08)/2	0.08		
		(-0.82--0.98)x(0.12+0.11)/2	0.02		
		(-0.72--0.82)x(0.13+0.12)/2	0.01		
		(-0.29--0.72)x(0.12+0.13)/2	0.05		
		(-0.13--0.29)x(0.12+0.12)/2	0.02		
		(-0.00--0.13)x(0.08+0.12)/2	0.01		
		(0.03--0.00)x(0.09+0.08)/2	0.00		
		(0.06-0.03)x(-0.00+0.09)/2	0.00		
		(0.10-0.06)x(0.06+-0.00)/2	0.00		
		(0.11-0.10)x(0.06+0.03)/2	0.00		
		(0.13-0.11)x(0.08+0.06)/2	0.00		
		(0.15-0.13)x(0.07+0.08)/2	0.00		
		(0.19-0.15)x(0.16+0.07)/2	0.00		
		(0.20-0.19)x(0.17+0.16)/2	0.00		
		(0.22-0.20)x(0.17+0.17)/2	0.00		
		(0.31-0.22)x(0.22+0.17)/2	0.02		
		(1.27-0.31)x(0.58+0.22)/2	0.38		
		(1.61-1.27)x(0.78+0.58)/2	0.23		
		(2.31-1.61)x(1.23+0.78)/2	0.70		
		(2.90-2.31)x(1.61+1.23)/2	0.84		
		(3.35-2.90)x(1.92+1.61)/2	0.79		
		(3.52-3.35)x(2.00+1.92)/2	0.33		
		(3.80-3.52)x(2.20+2.00)/2	0.59		
		(3.83-3.80)x(2.19+2.20)/2	0.07		
		(3.84-3.83)x(2.20+2.19)/2	0.02		
		(3.89-3.84)x(2.45+2.20)/2	0.12		
		(3.94-3.89)x(2.40+2.41)/2	0.12		
		(4.06-3.94)x(2.39+2.40)/2	0.29		
		(4.12-4.06)x(2.38+2.39)/2	0.14		
		(4.40-4.12)x(2.47+2.38)/2	0.68		
		(5.27-4.40)x(2.54+2.47)/2	2.18		
		(5.44-5.27)x(2.54+2.54)/2	0.43		
		(5.48-5.44)x(2.55+2.54)/2	0.10		
		(5.89-5.48)x(2.55+2.55)/2	1.05		
		(3.00-5.89)x(-0.34+2.55)/2	-3.19		
		(-3.00-3.00)x(-0.34+-0.34)/2	2.04		
		(-3.38--3.00)x(0.04+-0.34)/2	0.06		
				8.28	
70	B1	(-5.03--5.06)x(1.72+1.71)/2	0.05		
1264.33		(-4.93--5.03)x(1.66+1.72)/2	0.17		
		(-4.79--4.93)x(1.64+1.66)/2	0.23		
		(-4.66--4.79)x(1.55+1.64)/2	0.21		
		(-4.32--4.66)x(1.38+1.55)/2	0.50		
		(-4.03--4.32)x(1.22+1.38)/2	0.38		
		(-3.45--4.03)x(0.81+1.22)/2	0.59		
		(-2.95--3.45)x(0.47+0.81)/2	0.32		
		(-2.80--2.95)x(0.38+0.47)/2	0.06		
		(-2.64--2.80)x(0.16+0.38)/2	0.04		
		(-2.57--2.64)x(0.10+0.16)/2	0.01		
		(-2.53--2.57)x(0.12+0.10)/2	0.00		
		(-2.52--2.53)x(0.07+0.12)/2	0.00		
		(-2.51--2.52)x(0.05+0.07)/2	0.00		
		(-2.47--2.51)x(0.00+0.05)/2	0.00		
		(-2.46--2.47)x(0.05+0.06)/2	0.00		
		(-2.45--2.46)x(0.14+0.05)/2	0.00		
		(-2.34--2.45)x(0.06+0.16)/2	0.01		
		(-1.89--2.34)x(-0.11+0.06)/2	-0.01		
		(-1.87--1.89)x(-0.12+-0.11)/2	-0.00		
		(-1.83--1.87)x(-0.12+-0.12)/2	-0.00		
		(-0.79--1.83)x(-0.15+-0.12)/2	-0.14		
		(-0.22--0.79)x(-0.15+-0.15)/2	-0.09		
		(0.29--0.22)x(-0.14+-0.15)/2	-0.07		
		(1.32-0.29)x(-0.14+-0.14)/2	-0.14		
		(1.37-1.32)x(-0.13+-0.14)/2	-0.01		
		(1.40-1.37)x(-0.13+-0.13)/2	-0.00		
		(2.45-1.40)x(-0.05+-0.13)/2	-0.09		
		(2.71-2.45)x(0.04+-0.05)/2	-0.00		
		(2.72-2.71)x(0.01+0.04)/2	0.00		
		(2.74-2.72)x(0.04+0.01)/2	0.00		
		(2.75-2.74)x(0.04+0.04)/2	0.00		
		(2.76-2.75)x(0.06+0.05)/2	0.00		
		(2.79-2.76)x(0.03+0.06)/2	0.00		
		(2.94-2.79)x(0.14+0.03)/2	0.01		
		(2.99-2.94)x(0.13+0.14)/2	0.01		
		(3.22-2.99)x(0.26+0.13)/2	0.04		
		(3.53-3.22)x(0.44+0.26)/2	0.11		
		(4.55-3.53)x(1.20+0.44)/2	0.84		
		(3.00-4.55)x(-0.35+1.20)/2	-0.66		
		(-3.00-3.00)x(-0.35+-0.35)/2	2.10		
		(-5.06--3.00)x(1.71+-0.35)/2	-1.40		
				3.07	
71	B1	(-4.88--5.32)x(1.75+1.96)/2	0.82		
1273.46		(-4.72--4.88)x(1.69+1.75)/2	0.28		
		(-4.13--4.72)x(1.32+1.69)/2	0.89		
		(-3.62--4.13)x(1.01+1.32)/2	0.59		
		(-3.25--3.62)x(0.75+1.01)/2	0.33		
		(-2.45--3.25)x(0.21+0.75)/2	0.38		
		(-2.27--2.45)x(0.09+0.21)/2	0.03		
		(-2.22--2.27)x(0.05+0.09)/2	0.00		
		(-2.20--2.22)x(0.03+0.05)/2	0.00		
		(-2.09--2.20)x(-0.01+0.03)/2	0.00		
		(-1.22--2.09)x(-0.12+-0.01)/2	-0.06		
		(-1.05--1.22)x(-0.15+-0.12)/2	-0.02		
		(-0.81--1.05)x(-0.15+-0.15)/2	-0.04		
		(0.05--0.81)x(-0.15+-0.15)/2	-0.13		
		(0.60-0.05)x(-0.16+-0.15)/2	-0.09		
		A RIPORTARE mq	2.98		

	CALCOLO DELLE AREE		Foglio n. 34

STERRO

N. SEZIONE PROG.	FIG.	ELEMENTI DI CALCOLO	AREA ELEMENTARE mq	AREA FIGURA mq	NOTE
		RIPORTO mq	2.98		
		(1.15-0.60)x(-0.17+-0.16)/2	-0.09		
		(1.39-1.15)x(-0.18+-0.17)/2	-0.04		
		(2.01-1.39)x(-0.20+-0.18)/2	-0.12		
		(2.18-2.01)x(-0.20+-0.20)/2	-0.03		
		(2.41-2.18)x(0.04+-0.20)/2	-0.02		
		(2.45-2.41)x(0.05+0.04)/2	0.00		
		(2.47-2.45)x(0.05+0.05)/2	0.00		
		(2.48-2.47)x(0.05+0.05)/2	0.00		
		(2.49-2.48)x(0.04+0.04)/2	0.00		
		(2.57-2.49)x(0.06+0.04)/2	0.00		
		(3.04-2.57)x(0.17+0.06)/2	0.05		
		(3.36-3.04)x(0.32+0.17)/2	0.08		
		(3.76-3.36)x(0.86+0.32)/2	0.24		
		(3.94-3.76)x(1.02+0.86)/2	0.17		
		(3.95-3.94)x(1.05+1.04)/2	0.01		
		(3.98-3.95)x(1.05+1.05)/2	0.03		
		(4.04-3.98)x(1.05+1.05)/2	0.06		
		(4.46-4.04)x(1.15+1.05)/2	0.46		
		(4.59-4.46)x(1.23+1.15)/2	0.15		
		(3.00-4.59)x(-0.36+1.23)/2	-0.69		
		(-3.00-3.00)x(-0.36+-0.36)/2	2.16		
		(-5.32--3.00)x(1.96+-0.36)/2	-1.86		
				3.54	

Il Direttore dei Lavori	L'Impresa	

	COMPUTO DEI VOLUMI		Foglio n. 35

RILEVATO

DALLA SEZ. DA PROG.	ALLA SEZ. A PROG.	SEZIONE	FIGURA	AREA	DISTANZA SEZIONI m	DISTANZA DI CALCOLO m	VOLUME PARZIALE mc	VOLUME TOTALE mc
1	2	1	A1	1.90	14.07	7.04	13.376	
0.00	14.07	1	A2	2.14	14.07	7.04	15.066	
		2	A1	1.67	14.07	7.04	11.757	
		2	A2	0.91	14.07	7.04	6.406	
								46.605
2	3	2	A1	1.67	15.00	7.50	12.525	
14.07	29.07	2	A2	0.91	15.00	7.50	6.825	
		3	A1	1.50	15.00	7.50	11.250	
		3	A2	0.22	15.00	7.50	1.650	
								32.250
3	4	3	A1	1.50	15.00	7.50	11.250	
29.07	44.07	3	A2	0.22	15.00	7.50	1.650	
		4	A1	1.44	15.00	7.50	10.800	
		4	A2	0.26	15.00	7.50	1.950	
								25.650
4	5	4	A1	1.44	15.07	7.54	10.858	
44.07	59.14	4	A2	0.26	15.07	7.54	1.960	
		5	A1	1.02	15.07	7.54	7.691	
		5	A2	0.02	15.07	7.54	0.151	
		5	A3	0.11	15.07	7.54	0.829	
								21.489
5	6	5	A1	1.02	14.91	7.45	7.599	
59.14	74.05	5	A2	0.02	14.91	7.45	0.149	
		5	A3	0.11	14.91	7.45	0.820	
		6	A1	0.11	14.91	7.45	0.820	
		6	A2	0.15	14.91	7.45	1.117	
		6	A3	0.27	14.91	7.45	2.012	
								12.517
6	7	6	A1	0.11	14.96	7.48	0.823	
74.05	89.01	6	A2	0.15	14.96	7.48	1.122	
		6	A3	0.27	14.96	7.48	2.020	
		7	A1	0.35	14.96	7.48	2.618	
		7	A2	0.73	14.96	7.48	5.460	
								12.043
7	8	7	A1	0.35	14.96	7.48	2.618	
89.01	103.97	7	A2	0.73	14.96	7.48	5.460	
		8	A1	0.35	14.96	7.48	2.618	
		8	A2	1.57	14.96	7.48	11.744	
								22.440
8	9	8	A1	0.35	14.95	7.48	2.618	
103.97	118.92	8	A2	1.57	14.95	7.48	11.744	
		9	A1	0.35	14.95	7.48	2.618	
		9	A2	3.73	14.95	7.48	27.900	
								44.880
9	10	9	A1	0.35	14.95	7.48	2.618	
118.92	133.87	9	A2	3.73	14.95	7.48	27.900	
		10	A1	0.55	14.95	7.48	4.114	
		10	A2	7.05	14.95	7.48	52.734	
								87.366
10	11	10	A1	0.55	14.95	7.47	4.109	
133.87	148.82	10	A2	7.05	14.95	7.47	52.663	
		11	A1	0.21	14.95	7.47	1.569	
		11	A2	9.02	14.95	7.47	67.379	
								125.720
11	12	11	A1	0.21	14.95	7.48	1.571	
148.82	163.77	11	A2	9.02	14.95	7.48	67.470	
		12	A1	0.00	14.95	7.48	0.000	
		12	A2	9.68	14.95	7.48	72.406	
								141.447
12	13	12	A1	0.00	14.95	7.47	0.000	
12	13	12	A2	9.68	14.95	7.47	72.310	
163.77	178.72	13	A1	0.03	14.95	7.47	0.224	
		13	A2	9.82	14.95	7.47	73.355	
								145.889
13	14	13	A1	0.03	14.94	7.47	0.224	
178.72	193.66	13	A2	9.82	14.94	7.47	73.355	
		14	A1	9.70	14.94	7.47	72.459	
								146.038
14	15	14	A1	9.70	14.95	7.48	72.556	
193.66	208.61	15	A1	10.74	14.95	7.48	80.335	
								152.891
15	16	15	A1	10.74	14.94	7.47	80.228	
208.61	223.55	16	A1	12.35	14.94	7.47	92.254	
								172.482
16	17	16	A1	12.35	14.94	7.47	92.254	
223.55	238.49	17	A1	13.52	14.94	7.47	100.994	
								193.248
17	18	17	A1	13.52	14.94	7.47	100.994	
238.49	253.43	18	A1	13.86	14.94	7.47	103.534	
								204.528
18	19	18	A1	13.86	14.94	7.47	103.534	
253.43	268.37	19	A1	13.10	14.94	7.47	97.857	
								201.391
19	20	19	A1	13.10	14.94	7.47	97.857	
								97.857
30	31	31	A1	5.67	14.98	7.49	42.468	
								42.468
31	IMB TM VC1	31	A1	5.67	2.04	1.02	5.783	
								5.783
USC TM VC1	35	35	A1	0.77	16.00	8.00	6.160	
551.31	567.31	35	A2	1.17	16.00	8.00	9.360	
								15.520
35	36	35	A1	0.77	20.34	10.17	7.831	
567.31	587.65	35	A2	1.17	20.34	10.17	11.899	
		36	A1	1.16	20.34	10.17	11.797	
		36	A2	6.86	20.34	10.17	69.766	
								101.293
36	37	36	A1	1.16	9.83	4.92	5.707	
587.65	597.48	36	A2	6.86	9.83	4.92	33.751	
		37	A1	0.41	9.83	4.92	2.017	
		37	A2	8.67	9.83	4.92	42.656	
								84.131
37	38	37	A1	0.41	14.67	7.33	3.005	
597.48	612.15	37	A2	8.67	14.67	7.33	63.551	
								66.556
38	39	39	A1	3.82	22.25	11.13	42.517	
								42.517
								2244.999

	COMPUTO DEI VOLUMI				Foglio n. 36		
RILEVATO							
DALLA SEZ. DA PROG. / ALLA SEZ. A PROG.	SEZIONE	FIGURA	AREA	DISTANZA SEZIONI m	DISTANZA DI CALCOLO m	VOLUME PARZIALE mc	VOLUME TOTALE mc
					A RIPORTARE mc		2244.999
CONFLUENZA F.G40	CONFLUENZA	F.G A1	2.33	15.62	7.81	18.197	
634.40 650.02	40	A1	2.28	15.62	7.81	17.807	
	40	A2	0.21	15.62	7.81	1.640	
							37.644
40 IMB TM VC2	40	A1	2.28	24.88	12.44	28.363	
650.02 674.90	40	A2	0.21	24.88	12.44	2.612	
							30.975
USC TM VC2 43	43	A1	1.45	13.97	6.99	10.136	
756.16 770.13	43	A2	3.55	13.97	6.99	24.814	
							34.950
43 44	43	A1	1.45	15.03	7.51	10.890	
770.13 785.16	43	A2	3.55	15.03	7.51	26.660	
	44	A1	1.89	15.03	7.51	14.194	
	44	A2	3.99	15.03	7.51	29.965	
							81.709
44 45	44	A1	1.89	14.95	7.48	14.137	
785.16 800.11	44	A2	3.99	14.95	7.48	29.845	
	45	A1	1.61	14.95	7.48	12.043	
	45	A2	4.41	14.95	7.48	32.987	
							89.012
45 46	45	A1	1.61	14.94	7.47	12.027	
800.11 815.05	45	A2	4.41	14.94	7.47	32.943	
	46	A1	2.54	14.94	7.47	18.974	
	46	A2	4.78	14.94	7.47	35.707	
							99.651
46 IMB TM VC3	46	A1	2.54	19.75	9.88	25.095	
815.05 834.80	46	A2	4.78	19.75	9.88	47.226	
							72.321
USC TM VC3 49	49	A1	3.49	16.63	8.31	29.002	
932.83 949.46	49	A2	2.84	16.63	8.31	23.600	
							52.602
49 50	49	A1	3.49	15.01	7.50	26.175	
949.46 964.47	49	A2	2.84	15.01	7.50	21.300	
	50	A1	2.91	15.01	7.50	21.825	
	50	A2	3.01	15.01	7.50	22.575	
							91.875
50 51	50	A1	2.91	15.07	7.53	21.912	
964.47 979.54	50	A2	3.01	15.07	7.53	22.665	
	51	A1	2.73	15.07	7.53	20.557	
	51	A2	2.71	15.07	7.53	20.406	
							85.540
51 52	51	A1	2.73	14.69	7.35	20.066	
979.54 994.23	51	A2	2.71	14.69	7.35	19.918	
	52	A1	2.60	14.69	7.35	19.110	
	52	A2	2.79	14.69	7.35	20.506	
							79.600
52 53	52	A1	2.60	15.03	7.51	19.526	
994.23 1009.26	52	A2	2.79	15.03	7.51	20.953	
	53	A1	3.34	15.03	7.51	25.083	
	53	A2	2.75	15.03	7.51	20.653	
							86.215
53 54	53	A1	3.34	14.91	7.46	24.916	
1009.26 1024.17	53	A2	2.75	14.91	7.46	20.515	
	54	A1	2.55	14.91	7.46	19.023	
							64.454
54 55	54	A1	2.55	14.85	7.42	18.921	
1024.17 1039.02	55	A1	2.47	14.85	7.42	18.327	
	55	A2	1.54	14.85	7.42	11.427	
							48.675
55 56	55	A1	2.47	14.84	7.42	18.327	
1039.02 1053.86	55	A2	1.54	14.84	7.42	11.427	
	56	A1	2.43	14.84	7.42	18.031	
	56	A2	1.16	14.84	7.42	8.607	
							56.392
56 57	56	A1	2.43	15.01	7.50	18.225	
1053.86 1068.87	56	A2	1.16	15.01	7.50	8.700	
	57	A1	2.66	15.01	7.50	19.950	
							46.875
57 58	57	A1	2.66	14.85	7.43	19.764	
1068.87 1083.72	58	A1	3.26	14.85	7.43	24.222	
							43.986
58 59	58	A1	3.26	14.89	7.44	24.254	
1083.72 1098.61	59	A1	3.93	14.89	7.44	29.239	
							53.493
59 60	59	A1	3.93	15.05	7.53	29.593	
1098.61 1113.66	60	A1	4.04	15.05	7.53	30.421	
							60.014
60 61	60	A1	4.04	14.70	7.35	29.694	
1113.66 1128.36	61	A1	3.86	14.70	7.35	28.371	
							58.065
61 62	61	A1	3.86	15.25	7.63	29.452	
1128.36 1143.61	62	A1	4.68	15.25	7.63	35.708	
							65.160
62 63	62	A1	4.68	14.90	7.45	34.866	
1143.61 1158.51	63	A1	4.80	14.90	7.45	35.760	
							70.626
63 64	63	A1	4.80	14.80	7.40	35.520	
1158.51 1173.31	64	A1	5.58	14.80	7.40	41.292	
							76.812
64 65	64	A1	5.58	14.78	7.39	41.236	
1173.31 1188.09	65	A1	6.64	14.78	7.39	49.070	
	65	A2	1.53	14.78	7.39	11.307	
							101.613
65 66	65	A1	6.64	15.35	7.68	50.995	
1188.09 1203.44	65	A2	1.53	15.35	7.68	11.750	
	66	A1	11.00	15.35	7.68	84.480	
							147.225
66 67	66	A1	11.00	15.32	7.66	84.260	
1203.44 1218.76	67	A1	14.36	15.32	7.66	109.998	
							194.258
67 68	67	A1	14.36	15.21	7.61	109.280	
1218.76 1233.97	68	A1	12.69	15.21	7.61	96.571	
							205.851
68 69	68	A1	12.69	15.25	7.63	96.825	
1233.97 1249.22	69	A1	6.74	15.25	7.63	51.426	
						148.251	4380.592

	COMPUTO DEI VOLUMI		Foglio n. 37

RILEVATO

DALLA SEZ. DA PROG.	ALLA SEZ. A PROG.	SEZIONE	FIGURA	AREA	DISTANZA SEZIONI m	DISTANZA DI CALCOLO m	VOLUME PARZIALE mc	VOLUME TOTALE mc
						A RIPORTARE mc	148.251	4380.592
		69	A2	0.31	15.25	7.63	2.365	
								150.616
69	70	69	A1	6.74	15.11	7.55	50.887	
1249.22	1264.33	69	A2	0.31	15.11	7.55	2.341	
		70	A1	2.40	15.11	7.55	18.120	
		70	A2	1.25	15.11	7.55	9.438	
								80.786
70	71	70	A1	2.40	9.13	4.57	10.968	
1264.33	1273.46	70	A2	1.25	9.13	4.57	5.713	
		71	A1	1.73	9.13	4.57	7.906	
		71	A2	1.80	9.13	4.57	8.226	
								32.813

Il Direttore dei Lavori	L'Impresa	TOTALE ARTICOLO	4644.807

	COMPUTO DEI VOLUMI		Foglio n. 38

STERRO

DALLA SEZ. DA PROG.	ALLA SEZ. A PROG.	SEZIONE	FIGURA	AREA	DISTANZA SEZIONI m	DISTANZA DI CALCOLO m	VOLUME PARZIALE mc	VOLUME TOTALE mc
1	2	1	B1	5.76	14.07	7.04	40.550	
0.00	14.07	2	B1	6.68	14.07	7.04	47.027	
								87.577
2	3	2	B1	6.68	15.00	7.50	50.100	
14.07	29.07	3	B1	7.41	15.00	7.50	55.575	
								105.675
3	4	3	B1	7.41	15.00	7.50	55.575	
29.07	44.07	4	B1	9.27	15.00	7.50	69.525	
								125.100
4	5	4	B1	9.27	15.07	7.54	69.896	
44.07	59.14	5	B1	8.06	15.07	7.54	60.772	
		5	B2	0.03	15.07	7.54	0.226	
								130.894
5	6	5	B1	8.06	14.91	7.45	60.047	
59.14	74.05	5	B2	0.03	14.91	7.45	0.224	
		6	B1	8.09	14.91	7.45	60.270	
								120.541
6	7	6	B1	8.09	14.96	7.48	60.513	
74.05	89.01	7	B1	6.47	14.96	7.48	48.396	
								108.909
7	8	7	B1	6.47	14.96	7.48	48.396	
89.01	103.97	8	B1	6.99	14.96	7.48	52.285	
								100.681
8	9	8	B1	6.99	14.95	7.48	52.285	
103.97	118.92	9	B1	0.18	14.95	7.48	1.346	
		9	B2	8.97	14.95	7.48	67.096	
								120.727
9	10	9	B1	0.18	14.95	7.48	1.346	
118.92	133.87	9	B2	8.97	14.95	7.48	67.096	
		10	B1	11.82	14.95	7.48	88.414	
								156.856
10	11	10	B1	11.82	14.95	7.47	88.295	
133.87	148.82	11	B1	13.60	14.95	7.47	101.592	
								189.887
11	12	11	B1	13.60	14.95	7.48	101.728	
148.82	163.77	12	B1	0.87	14.95	7.48	6.508	
		12	B2	15.46	14.95	7.48	115.641	
								223.877
12	13	12	B1	0.87	14.95	7.47	6.499	
163.77	178.72	12	B2	15.46	14.95	7.47	115.486	
		13	B1	1.30	14.95	7.47	9.711	
		13	B2	15.25	14.95	7.47	113.917	
								245.613
13	14	13	B1	1.30	14.94	7.47	9.711	
178.72	193.66	13	B2	15.25	14.94	7.47	113.917	
		14	B1	16.78	14.94	7.47	125.347	
								248.975
14	15	14	B1	16.78	14.95	7.48	125.514	
193.66	208.61	15	B1	17.79	14.95	7.48	133.069	
								258.583
15	16	15	B1	17.79	14.94	7.47	132.891	
208.61	223.55	16	B1	21.21	14.94	7.47	158.439	
								291.330
16	17	16	B1	21.21	14.94	7.47	158.439	
223.55	238.49	17	B1	22.42	14.94	7.47	167.477	
								325.916
17	18	17	B1	22.42	14.94	7.47	167.477	
238.49	253.43	18	B1	22.86	14.94	7.47	170.764	
								338.241
18	19	18	B1	22.86	14.94	7.47	170.764	
253.43	268.37	19	B1	24.42	14.94	7.47	182.417	
								353.181
19	20	19	B1	24.42	14.94	7.47	182.417	
268.37	283.31	20	B1	30.35	14.94	7.47	226.715	
								409.132
20	21	20	B1	30.35	14.94	7.47	226.715	
283.31	298.25	21	B1	30.62	14.94	7.47	228.731	
								455.446
21	22	21	B1	30.62	14.94	7.47	228.731	
298.25	313.19	22	B1	30.48	14.94	7.47	227.686	
								456.417
22	23	22	B1	30.48	14.94	7.47	227.686	
313.19	328.13	23	B1	30.97	14.94	7.47	231.346	
								459.032
23	24	23	B1	30.97	14.94	7.47	231.346	
328.13	343.07	24	B1	30.60	14.94	7.47	228.582	
								459.928
24	25	24	B1	30.60	14.94	7.47	228.582	
343.07	358.01	25	B1	30.26	14.94	7.47	226.042	
								454.624
25	26	25	B1	30.26	14.94	7.47	226.042	
358.01	372.95	26	B1	30.68	14.94	7.47	229.180	
								455.222
26	27	26	B1	30.68	14.95	7.47	229.180	
372.95	387.90	27	B1	29.82	14.95	7.47	222.755	
								451.935
27	28	27	B1	29.82	14.94	7.47	222.755	
387.90	402.84	28	B1	29.01	14.94	7.47	216.705	
								439.460
28	29	28	B1	29.01	14.97	7.49	217.285	
402.84	417.81	29	B1	28.34	14.97	7.49	212.267	
								429.552
29	30	29	B1	28.34	14.98	7.49	212.267	
417.81	432.79	30	B1	33.27	14.98	7.49	249.192	
								461.459
30	31	30	B1	33.27	14.98	7.49	249.192	
432.79	447.77	31	B1	32.64	14.98	7.49	244.474	
								493.666
31	IMB TM VC1	31	B1	32.64	2.04	1.02	33.293	
447.77	449.81	IMB TM VC1	B1	46.66	2.04	1.02	47.593	
								80.886
IMB TM VC1	32	IMB TM VC1	B1	46.66	27.99	14.00	653.240	
449.81	477.80	32	B1	45.55	27.99	14.00	637.700	
								1290.940
32	33	32	B1	45.55	14.72	7.36	335.248	
477.80	492.52	33	B1	42.64	14.72	7.36	313.830	
								649.078
								10979.340

	COMPUTO DEI VOLUMI		Foglio n. 39

STERRO

DALLA SEZ. DA PROG.	ALLA SEZ. A PROG.	SEZIONE	FIGURA	AREA	DISTANZA SEZIONI m	DISTANZA DI CALCOLO m	VOLUME PARZIALE mc	VOLUME TOTALE mc
						A RIPORTARE mc		10979.340
33	34	33	B1	42.64	30.31	15.16	646.422	
492.52	522.83	34	B1	39.20	30.31	15.16	594.272	
								1240.694
34	USC TM VC1	34	B1	39.20	28.48	14.24	558.208	
522.83	551.31	USC TM VC1	B1	39.32	28.48	14.24	559.917	
								1118.125
USC TM VC1	35	USC TM VC1	B1	39.32	16.00	8.00	314.560	
551.31	567.31	35	B1	17.84	16.00	8.00	142.720	
								457.280
35	36	35	B1	17.84	20.34	10.17	181.433	
567.31	587.65	36	B1	20.97	20.34	10.17	213.265	
								394.698
36	37	36	B1	20.97	9.83	4.92	103.172	
587.65	597.48	37	B1	25.22	9.83	4.92	124.082	
								227.254
37	38	37	B1	25.22	14.67	7.33	184.863	
597.48	612.15	38	B1	26.81	14.67	7.33	196.517	
								381.380
38	39	38	B1	26.81	22.25	11.13	298.395	
612.15	634.40	39	B1	27.06	22.25	11.13	301.178	
								599.573
CONFLUENZA F.G40		CONFLUENZA	F.G B1	27.61	15.62	7.81	215.634	
634.40	650.02	40	B1	16.56	15.62	7.81	129.334	
								344.968
40	IMB TM VC2	40	B1	16.56	24.88	12.44	206.006	
650.02	674.90	IMB TM VC2	B1	42.41	24.88	12.44	527.580	
								733.586
IMB TM VC2	41	IMB TM VC2	B1	42.41	24.32	12.16	515.706	
674.90	699.22	41	B1	63.25	24.32	12.16	769.120	
								1284.826
41	42	41	B1	63.25	35.37	17.69	1118.893	
699.22	734.59	42	B1	19.67	35.37	17.69	347.962	
								1466.855
42	USC TM VC2	42	B1	19.67	21.57	10.78	212.043	
734.59	756.16	USC TM VC2	B1	42.18	21.57	10.78	454.700	
								666.743
USC TM VC2	43	USC TM VC2	B1	42.18	13.97	6.99	294.838	
756.16	770.13	43	B1	25.50	13.97	6.99	178.245	
								473.083
43	44	43	B1	25.50	15.03	7.51	191.505	
770.13	785.16	44	B1	23.52	15.03	7.51	176.635	
								368.140
44	45	44	B1	23.52	14.95	7.48	175.930	
785.16	800.11	45	B1	23.53	14.95	7.48	176.004	
								351.934
45	46	45	B1	23.53	14.94	7.47	175.769	
800.11	815.05	46	B1	22.47	14.94	7.47	167.851	
								343.620
46	IMB TM VC3	46	B1	22.47	19.75	9.88	222.004	
815.05	834.80	IMB TM VC3	B1	44.85	19.75	9.88	443.118	
								665.122
IMB TM VC3	47	IMB TM VC3	B1	44.85	28.52	14.26	639.561	
834.80	863.32	47	B1	33.71	28.52	14.26	480.705	
								1120.266
47	48	47	B1	33.71	41.29	20.64	695.774	
863.32	904.61	48	B1	38.81	41.29	20.64	801.038	
								1496.812
48	USC TM VC3	48	B1	38.81	28.22	14.11	547.609	
904.61	932.83	USC TM VC3	B1	39.26	28.22	14.11	553.959	
								1101.568
USC TM VC3	49	USC TM VC3	B1	39.26	16.63	8.31	326.251	
932.83	949.46	49	B1	23.30	16.63	8.31	193.623	
								519.874
49	50	49	B1	23.30	15.01	7.50	174.750	
949.46	964.47	50	B1	18.92	15.01	7.50	141.900	
								316.650
50	51	50	B1	18.92	15.07	7.53	142.468	
964.47	979.54	51	B1	19.37	15.07	7.53	145.856	
								288.324
51	52	51	B1	19.37	14.69	7.35	142.369	
979.54	994.23	52	B1	19.70	14.69	7.35	144.795	
								287.164
52	53	52	B1	19.70	15.03	7.51	147.947	
994.23	1009.26	53	B1	18.56	15.03	7.51	139.386	
								287.333
53	54	53	B1	18.56	14.91	7.46	138.458	
1009.26	1024.17	54	B1	21.76	14.91	7.46	162.330	
								300.788
54	55	54	B1	21.76	14.85	7.42	161.459	
1024.17	1039.02	55	B1	22.04	14.85	7.42	163.537	
								324.996
55	56	55	B1	22.04	14.84	7.42	163.537	
1039.02	1053.86	56	B1	22.04	14.84	7.42	163.537	
								327.074
56	57	56	B1	22.04	15.01	7.50	165.300	
1053.86	1068.87	57	B1	21.57	15.01	7.50	161.775	
								327.075
57	58	57	B1	21.57	14.85	7.43	160.265	
1068.87	1083.72	58	B1	22.57	14.85	7.43	167.695	
								327.960
58	59	58	B1	22.57	14.89	7.44	167.921	
1083.72	1098.61	59	B1	22.50	14.89	7.44	167.400	
								335.321
59	60	59	B1	22.50	15.05	7.53	169.425	
1098.61	1113.66	60	B1	22.27	15.05	7.53	167.693	
								337.118
60	61	60	B1	22.27	14.70	7.35	163.684	
1113.66	1128.36	61	B1	22.26	14.70	7.35	163.611	
								327.295
61	62	61	B1	22.26	15.25	7.63	169.844	
1128.36	1143.61	62	B1	27.92	15.25	7.63	213.030	
								382.874
62	63	62	B1	27.92	14.90	7.45	208.004	
1143.61	1158.51	63	B1	20.78	14.90	7.45	154.811	
								362.815
								30868.528

	COMPUTO DEI VOLUMI		Foglio n. 40

STERRO

DALLA SEZ. DA PROG.	ALLA SEZ. A PROG.	SEZIONE	FIGURA	AREA	DISTANZA SEZIONI m	DISTANZA DI CALCOLO m	VOLUME PARZIALE mc	VOLUME TOTALE mc
						A RIPORTARE mc		30868.528
63	64	63	B1	20.78	14.80	7.40	153.772	
1158.51	1173.31	64	B1	24.30	14.80	7.40	179.820	
								333.592
64	65	64	B1	24.30	14.78	7.39	179.577	
1173.31	1188.09	65	B1	22.37	14.78	7.39	165.314	
								344.891
65	66	65	B1	22.37	15.35	7.68	171.802	
1188.09	1203.44	66	B1	23.15	15.35	7.68	177.792	
								349.594
66	67	66	B1	23.15	15.32	7.66	177.329	
1203.44	1218.76	67	B1	21.83	15.32	7.66	167.218	
								344.547
67	68	67	B1	21.83	15.21	7.61	166.126	
1218.76	1233.97	68	B1	16.37	15.21	7.61	124.576	
								290.702
68	69	68	B1	16.37	15.25	7.63	124.903	
1233.97	1249.22	69	B1	8.28	15.25	7.63	63.176	
								188.079
69	70	69	B1	8.28	15.11	7.55	62.514	
1249.22	1264.33	70	B1	3.07	15.11	7.55	23.179	
								85.693
70	71	70	B1	3.07	9.13	4.57	14.030	
1264.33	1273.46	71	B1	3.54	9.13	4.57	16.178	
								30.208

Il Direttore dei Lavori	L'Impresa	TOTALE ARTICOLO	32835.834

	COMPUTO DEI VOLUMI		Foglio n. 41

Volume dalla sezione 1 alla sezione 71

ARTICOLO		VOLUME
A RILEVATO	mc	4644.807
B STERRO	mc	32835.834

ALLEGATI AL COMPUTO METRICO ESTIMATIVO

RIROOFILATURA CANALE BASE GEODETICA

movimenti terra

BASE GEODETICA

		CALCOLO DELLE AREE		Foglio n. 1
RILEVATO				
N. SEZIONE PROG.	FIG.	ELEMENTI DI CALCOLO	AREA ELEMENTARE mq	AREA FIGURA mq	NOTE
1	A1	(-6.00--6.46)x(3.20+3.20)/2	1.47		
0.00		(-5.60--6.00)x(2.80+3.20)/2	1.20		
		(-6.11--5.60)x(2.93+2.80)/2	-1.46		
		(-6.46--6.11)x(3.16+2.93)/2	-1.07		
				0.14	
1	A2	(6.00-4.70)x(3.20+1.90)/2	3.31		
0.00		(7.16-6.00)x(3.20+3.20)/2	3.71		
		(6.86-7.16)x(2.95+3.20)/2	-0.92		
		(6.84-6.86)x(2.93+2.95)/2	-0.06		
		(6.80-6.84)x(2.90+2.93)/2	-0.12		
		(5.82-6.80)x(2.50+2.90)/2	-2.65		
		(5.81-5.82)x(2.49+2.50)/2	-0.02		
		(5.80-5.81)x(2.49+2.49)/2	-0.02		
		(5.69-5.80)x(2.54+2.49)/2	-0.28		
		(5.62-5.69)x(2.36+2.54)/2	-0.17		
		(5.61-5.62)x(2.36+2.36)/2	-0.02		
		(4.80-5.61)x(1.96+2.36)/2	-1.75		
		(4.79-4.80)x(1.95+1.96)/2	-0.02		
		(4.78-4.79)x(1.94+1.95)/2	-0.02		
		(4.70-4.78)x(1.90+1.94)/2	-0.15		
				0.82	
2	A1	(-6.00--7.71)x(3.19+3.19)/2	5.45		
15.10		(-3.58--6.00)x(0.77+3.19)/2	4.79		
		(-3.66--3.58)x(0.78+0.77)/2	-0.06		
		(-3.74--3.66)x(0.80+0.78)/2	-0.06		
		(-3.83--3.74)x(0.82+0.80)/2	-0.07		
		(-3.89--3.83)x(0.81+0.82)/2	-0.05		
		(-3.93--3.89)x(0.78+0.81)/2	-0.03		
		(-3.95--3.93)x(0.69+0.78)/2	-0.01		
		(-3.96--3.95)x(0.74+0.74)/2	-0.01		
		(-4.64--3.96)x(1.24+0.74)/2	-0.67		
		(-4.71--4.64)x(1.31+1.24)/2	-0.09		
		(-4.99--4.71)x(1.49+1.31)/2	-0.39		
		(-5.76--4.99)x(2.00+1.49)/2	-1.34		
		(-5.86--5.76)x(2.06+2.00)/2	-0.20		
		(-6.31--5.86)x(2.35+2.06)/2	-0.99		
		(-6.72--6.31)x(2.60+2.35)/2	-1.01		
		(-6.81--6.72)x(2.65+2.60)/2	-0.24		
		(-7.58--6.81)x(3.12+2.65)/2	-2.22		
		(-7.71--7.58)x(3.19+3.12)/2	-0.41		
				2.39	
2	A2	(6.00-5.21)x(3.19+2.39)/2	2.20		
15.10		(9.00-6.00)x(3.19+3.19)/2	9.57		
		(9.50-9.00)x(2.69+3.19)/2	1.47		
		(8.92-9.50)x(2.66+2.69)/2	-1.55		
		(8.81-8.92)x(2.65+2.66)/2	-0.29		
		(8.29-8.81)x(2.63+2.65)/2	-1.37		
		(7.95-8.29)x(2.62+2.63)/2	-0.89		
		(7.88-7.95)x(2.61+2.62)/2	-0.18		
		(7.09-7.88)x(2.57+2.61)/2	-2.05		
		(6.83-7.09)x(2.54+2.57)/2	-0.66		
		(6.22-6.83)x(2.51+2.54)/2	-1.54		
		(5.78-6.22)x(2.48+2.51)/2	-1.10		
		(5.36-5.78)x(2.42+2.48)/2	-1.03		
		(5.21-5.36)x(2.39+2.42)/2	-0.36		
				2.22	
3	A1	(-9.00--9.84)x(3.18+2.33)/2	2.31		
30.11		(-6.00--9.00)x(3.18+3.18)/2	9.54		
		(-3.02--6.00)x(0.19+3.18)/2	5.02		
		(-3.07--3.02)x(0.19+0.19)/2	-0.01		
		(-3.38--3.07)x(0.21+0.19)/2	-0.06		
		(-4.15--3.38)x(0.19+0.21)/2	-0.15		
		(-4.19--4.15)x(0.19+0.19)/2	-0.01		
		(-4.30--4.19)x(0.20+0.19)/2	-0.02		
		(-5.00--4.30)x(0.26+0.20)/2	-0.16		
		(-5.23--5.00)x(0.27+0.26)/2	-0.06		
		(-5.81--5.23)x(0.39+0.27)/2	-0.19		
		(-6.31--5.81)x(0.45+0.39)/2	-0.21		
		(-6.62--6.31)x(0.49+0.45)/2	-0.15		
		(-7.39--6.62)x(0.59+0.49)/2	-0.42		
		(-7.40--7.39)x(0.59+0.59)/2	-0.01		
		(-7.49--7.40)x(0.62+0.59)/2	-0.05		
		(-7.56--7.49)x(0.64+0.62)/2	-0.04		
		(-7.62--7.56)x(0.74+0.64)/2	-0.04		
		(-7.67--7.62)x(0.65+0.74)/2	-0.03		
		(-7.68--7.67)x(0.76+0.76)/2	-0.01		
		(-7.92--7.68)x(0.90+0.76)/2	-0.20		
		(-7.99--7.92)x(0.92+0.90)/2	-0.06		
		(-8.08--7.99)x(0.98+0.92)/2	-0.09		
		(-8.21--8.08)x(1.05+0.98)/2	-0.13		
		(-8.40--8.21)x(1.05+1.05)/2	-0.20		
		(-8.47--8.40)x(1.09+1.05)/2	-0.07		
		(-9.05--8.47)x(1.54+1.09)/2	-0.76		
		(-9.55--9.05)x(2.07+1.54)/2	-0.90		
		(-9.84--9.55)x(2.33+2.07)/2	-0.64		
				12.20	
3	A2	(6.00-5.41)x(3.18+2.58)/2	1.70		
30.11		(9.00-6.00)x(3.18+3.18)/2	9.54		
		(9.76-9.00)x(2.41+3.18)/2	2.12		
		(9.59-9.76)x(2.42+2.41)/2	-0.41		
		(8.82-9.59)x(2.46+2.42)/2	-1.88		
		(8.78-8.82)x(2.46+2.46)/2	-0.10		
		(8.67-8.78)x(2.47+2.46)/2	-0.27		
		(7.97-8.67)x(2.56+2.47)/2	-1.76		
		(7.74-7.97)x(2.59+2.56)/2	-0.59		
		(7.16-7.74)x(2.64+2.59)/2	-1.52		
		(6.66-7.16)x(2.69+2.64)/2	-1.33		
		(6.35-6.66)x(2.68+2.69)/2	-0.83		
		(5.58-6.35)x(2.59+2.68)/2	-2.03		
		(5.54-5.58)x(2.58+2.59)/2	-0.10		
		(5.42-5.54)x(2.58+2.58)/2	-0.31		
		(5.41-5.42)x(2.58+2.58)/2	-0.03		
				2.20	
4	A1	(-9.00--11.71)x(3.16+0.45)/2	4.89		
45.11		(-6.00--9.00)x(3.16+3.16)/2	9.48		
		(-4.36--6.00)x(1.52+3.16)/2	3.84		
		(-4.69--4.36)x(1.28+1.52)/2	-0.46		
		A RIPORTARE mq	17.75		

BASE GEODETICA

		CALCOLO DELLE AREE		Foglio n. 2
RILEVATO				
N. SEZIONE PROG.	FIG.	ELEMENTI DI CALCOLO	AREA ELEMENTARE mq	AREA FIGURA mq	NOTE
		RIPORTO mq	17.75		
		(-4.79--4.69)x(1.20+1.28)/2	-0.12		
		(-4.83--4.79)x(1.18+1.20)/2	-0.05		
		(-5.60--4.83)x(0.67+1.18)/2	-0.71		
		(-5.91--5.60)x(0.48+0.67)/2	-0.18		
		(-5.99--5.91)x(0.42+0.48)/2	-0.04		
		(-6.14--5.99)x(0.29+0.42)/2	-0.05		
		(-6.24--6.14)x(0.28+0.29)/2	-0.03		
		(-6.31--6.24)x(0.33+0.28)/2	-0.02		
		(-6.77--6.31)x(0.13+0.33)/2	-0.11		
		(-6.90--6.77)x(0.24+0.13)/2	-0.02		
		(-6.94--6.90)x(0.31+0.24)/2	-0.01		
		(-6.99--6.94)x(0.24+0.31)/2	-0.01		
		(-7.22--6.99)x(0.20+0.24)/2	-0.05		
		(-7.93--7.22)x(0.21+0.20)/2	-0.15		
		(-8.03--7.93)x(0.22+0.21)/2	-0.02		
		(-8.07--8.03)x(0.21+0.22)/2	-0.01		
		(-8.84--8.07)x(0.24+0.21)/2	-0.17		
		(-9.15--8.84)x(0.25+0.24)/2	-0.08		
		(-9.28--9.15)x(0.25+0.25)/2	-0.03		
		(-10.02--9.28)x(0.21+0.25)/2	-0.17		
		(-10.09--10.02)x(0.27+0.21)/2	-0.02		
		(-10.12--10.09)x(0.30+0.27)/2	-0.01		
		(-10.17--10.12)x(0.34+0.30)/2	-0.02		
		(-10.23--10.17)x(0.35+0.34)/2	-0.02		
		(-10.47--10.23)x(0.37+0.35)/2	-0.09		
		(-11.17--10.47)x(0.48+0.37)/2	-0.30		
		(-11.28--11.17)x(0.50+0.48)/2	-0.05		
		(-11.31--11.28)x(0.51+0.50)/2	-0.02		
		(-11.32--11.31)x(0.50+0.51)/2	-0.01		
		(-11.52--11.32)x(0.46+0.50)/2	-0.10		
		(-11.62--11.52)x(0.46+0.46)/2	-0.05		
		(-11.71--11.62)x(0.45+0.46)/2	-0.04		
				14.99	
4 45.11	A2	(6.00-5.21)x(3.16+2.38)/2	2.19		
		(9.00-6.00)x(3.16+3.16)/2	9.48		
		(10.28-9.00)x(1.88+3.16)/2	3.23		
		(9.80-10.28)x(2.06+1.88)/2	-0.95		
		(9.22-9.80)x(2.22+2.06)/2	-1.24		
		(8.99-9.22)x(2.27+2.22)/2	-0.52		
		(8.28-8.99)x(2.37+2.27)/2	-1.65		
		(8.18-8.28)x(2.39+2.37)/2	-0.24		
		(8.14-8.18)x(2.39+2.39)/2	-0.10		
		(7.37-8.14)x(2.38+2.39)/2	-1.84		
		(7.06-7.37)x(2.38+2.38)/2	-0.74		
		(6.56-7.06)x(2.38+2.38)/2	-1.19		
		(5.98-6.56)x(2.39+2.38)/2	-1.38		
		(5.75-5.98)x(2.38+2.39)/2	-0.55		
		(5.21-5.75)x(2.38+2.38)/2	-1.29		
				3.21	
5 59.73	A1	(-9.00--11.93)x(3.15+0.22)/2	4.94		
		(-6.00--9.00)x(3.15+3.15)/2	9.45		
		(-5.34--6.00)x(2.49+3.15)/2	1.86		
		(-5.38--5.34)x(2.48+2.49)/2	-0.10		
		(-5.59--5.38)x(2.46+2.48)/2	-0.52		
		(-6.22--5.59)x(2.44+2.46)/2	-1.54		
		(-6.40--6.22)x(2.43+2.44)/2	-0.44		
		(-6.46--6.40)x(2.43+2.43)/2	-0.15		
		(-7.21--6.46)x(2.32+2.43)/2	-1.78		
		(-7.54--7.21)x(2.30+2.32)/2	-0.76		
		(-8.02--7.54)x(2.10+2.30)/2	-1.06		
		(-8.62--8.02)x(1.74+2.10)/2	-1.15		
		(-8.83--8.62)x(1.56+1.74)/2	-0.35		
		(-9.46--8.83)x(0.92+1.56)/2	-0.78		
		(-9.64--9.46)x(0.74+0.92)/2	-0.15		
		(-9.70--9.64)x(0.70+0.74)/2	-0.04		
		(-10.45--9.70)x(0.45+0.70)/2	-0.43		
		(-10.78--10.45)x(0.32+0.45)/2	-0.13		
		(-11.26--10.78)x(0.30+0.32)/2	-0.15		
		(-11.86--11.26)x(0.22+0.30)/2	-0.16		
		(-11.93--11.86)x(0.22+0.22)/2	-0.02		
				6.54	
5 59.73	A2	(6.00-5.30)x(3.15+2.45)/2	1.96		
		(9.00-6.00)x(3.15+3.15)/2	9.45		
		(10.17-9.00)x(1.98+3.15)/2	3.00		
		(10.00-10.17)x(1.98+1.98)/2	-0.34		
		(9.81-10.00)x(1.98+1.98)/2	-0.38		
		(9.75-9.81)x(1.98+1.98)/2	-0.12		
		(9.00-9.75)x(1.97+1.98)/2	-1.48		
		(8.67-9.00)x(1.97+1.97)/2	-0.65		
		(8.19-8.67)x(1.92+1.97)/2	-0.93		
		(7.59-8.19)x(1.87+1.92)/2	-1.14		
		(7.38-7.59)x(1.88+1.87)/2	-0.39		
		(6.75-7.38)x(1.87+1.88)/2	-1.18		
		(6.57-6.75)x(1.87+1.87)/2	-0.34		
		(6.51-6.57)x(1.87+1.87)/2	-0.11		
		(5.76-6.51)x(2.27+1.87)/2	-1.55		
		(5.43-5.76)x(2.44+2.27)/2	-0.78		
		(5.30-5.43)x(2.45+2.44)/2	-0.32		
				4.70	
6 73.50	A1	(-9.00--9.73)x(3.14+2.41)/2	2.03		
		(-6.00--9.00)x(3.14+3.14)/2	9.42		
		(-5.42--6.00)x(2.56+3.14)/2	1.65		
		(-6.09--5.42)x(2.58+2.56)/2	-1.72		
		(-6.30--6.09)x(2.58+2.58)/2	-0.54		
		(-6.94--6.30)x(2.51+2.58)/2	-1.63		
		(-7.35--6.94)x(2.47+2.51)/2	-1.02		
		(-7.80--7.35)x(2.43+2.47)/2	-1.10		
		(-8.40--7.80)x(2.40+2.43)/2	-1.45		
		(-8.66--8.40)x(2.39+2.40)/2	-0.62		
		(-9.45--8.66)x(2.40+2.39)/2	-1.89		
		(-9.51--9.45)x(2.40+2.40)/2	-0.14		
		(-9.73--9.51)x(2.41+2.40)/2	-0.53		
				2.46	
6 73.50	A2	(6.00-4.91)x(3.14+2.05)/2	2.83		
		(9.00-6.00)x(3.14+3.14)/2	9.42		
		A RIPORTARE mq	12.25		

BASE GEODETICA

		CALCOLO DELLE AREE		Foglio n. 3
RILEVATO				
N. SEZIONE PROG.	FIG.	ELEMENTI DI CALCOLO	AREA ELEMENTARE mq	AREA FIGURA mq	NOTE
		RIPORTO mq	12.25		
		(10.07-9.00)x(2.07+3.14)/2	2.79		
		(9.47-10.07)x(2.05+2.07)/2	-1.24		
		(9.34-9.47)x(2.04+2.05)/2	-0.27		
		(8.77-9.34)x(2.04+2.04)/2	-1.16		
		(8.48-8.77)x(2.04+2.04)/2	-0.59		
		(8.42-8.48)x(2.04+2.04)/2	-0.12		
		(7.63-8.42)x(2.04+2.04)/2	-1.61		
		(7.37-7.63)x(2.04+2.04)/2	-0.53		
		(6.77-7.37)x(2.06+2.04)/2	-1.23		
		(6.31-6.77)x(2.05+2.06)/2	-0.95		
		(5.91-6.31)x(2.05+2.05)/2	-0.82		
		(5.26-5.91)x(2.06+2.05)/2	-1.34		
		(5.06-5.26)x(2.05+2.06)/2	-0.41		
		(4.91-5.06)x(2.05+2.05)/2	-0.31		
				4.46	
9 148.20	A1	(-9.00--9.42)x(3.08+2.66)/2	1.21		
		(-6.00--9.00)x(3.08+3.08)/2	9.24		
		(-3.63--6.00)x(0.70+3.08)/2	4.48		
		(-3.76--3.63)x(0.65+0.70)/2	-0.09		
		(-4.40--3.76)x(0.38+0.65)/2	-0.33		
		(-4.47--4.40)x(0.38+0.38)/2	-0.03		
		(-5.43--4.47)x(0.29+0.38)/2	-0.32		
		(-5.61--5.43)x(0.28+0.29)/2	-0.05		
		(-6.46--5.61)x(0.28+0.28)/2	-0.24		
		(-6.76--6.46)x(0.29+0.28)/2	-0.09		
		(-7.49--6.76)x(0.36+0.29)/2	-0.24		
		(-7.90--7.49)x(0.77+0.36)/2	-0.23		
		(-8.52--7.90)x(1.48+0.77)/2	-0.70		
		(-9.05--8.52)x(2.22+1.48)/2	-0.98		
		(-9.42--9.05)x(2.66+2.22)/2	-0.90		
				10.73	
9 148.20	A2	(6.00-5.38)x(3.08+2.45)/2	1.71		
		(9.00-6.00)x(3.08+3.08)/2	9.24		
		(10.05-9.00)x(2.03+3.08)/2	2.68		
		(10.03-10.05)x(2.03+2.03)/2	-0.04		
		(9.27-10.03)x(2.25+2.03)/2	-1.63		
		(9.00-9.27)x(2.33+2.25)/2	-0.62		
		(8.13-9.00)x(2.40+2.33)/2	-2.06		
		(7.97-8.13)x(2.42+2.40)/2	-0.39		
		(6.98-7.97)x(2.44+2.42)/2	-2.41		
		(6.94-6.98)x(2.44+2.44)/2	-0.10		
		(6.53-6.94)x(2.44+2.44)/2	-1.00		
		(5.91-6.53)x(2.44+2.44)/2	-1.51		
		(5.84-5.91)x(2.44+2.44)/2	-0.17		
		(5.38-5.84)x(2.45+2.44)/2	-1.12		
				2.58	
10 162.24	A1	(-6.00--8.18)x(3.07+3.07)/2	6.69		
		(-3.29--6.00)x(0.36+3.07)/2	4.65		
		(-3.53--3.29)x(0.34+0.36)/2	-0.08		
		(-3.76--3.53)x(0.33+0.34)/2	-0.08		
		(-4.59--3.76)x(0.74+0.33)/2	-0.44		
		(-4.77--4.59)x(0.83+0.74)/2	-0.14		
		(-4.81--4.77)x(0.84+0.83)/2	-0.03		
		(-5.09--4.81)x(1.35+0.84)/2	-0.31		
		(-5.79--5.09)x(2.54+1.35)/2	-1.36		
		(-5.86--5.79)x(2.59+2.54)/2	-0.18		
		(-5.94--5.86)x(2.56+2.59)/2	-0.21		
		(-6.09--5.94)x(2.63+2.56)/2	-0.39		
		(-6.91--6.09)x(2.87+2.63)/2	-2.26		
		(-7.36--6.91)x(2.95+2.87)/2	-1.31		
		(-7.96--7.36)x(3.05+2.95)/2	-1.80		
		(-8.18--7.96)x(3.07+3.05)/2	-0.67		
				2.08	
10 162.24	A2	(6.00-5.41)x(3.07+2.47)/2	1.63		
		(9.00-6.00)x(3.07+3.07)/2	9.21		
		(9.52-9.00)x(2.55+3.07)/2	1.46		
		(8.83-9.52)x(2.55+2.55)/2	-1.76		
		(8.53-8.83)x(2.55+2.55)/2	-0.77		
		(7.78-8.53)x(2.53+2.55)/2	-1.90		
		(7.19-7.78)x(2.51+2.53)/2	-1.49		
		(6.73-7.19)x(2.50+2.51)/2	-1.15		
		(5.85-6.73)x(2.48+2.50)/2	-2.19		
		(5.68-5.85)x(2.47+2.48)/2	-0.42		
		(5.41-5.68)x(2.47+2.47)/2	-0.67		
				1.95	
11 171.23	A1	(-6.00--7.29)x(3.06+3.06)/2	3.95		
		(-5.92--6.00)x(2.98+3.06)/2	0.24		
		(-6.06--5.92)x(2.97+2.98)/2	-0.42		
		(-6.09--6.06)x(2.97+2.97)/2	-0.09		
		(-6.14--6.09)x(2.99+2.97)/2	-0.15		
		(-6.22--6.14)x(3.00+2.99)/2	-0.24		
		(-6.37--6.22)x(2.99+3.00)/2	-0.45		
		(-6.63--6.37)x(3.03+2.99)/2	-0.78		
		(-6.96--6.63)x(3.05+3.03)/2	-1.00		
		(-7.29--6.96)x(3.06+3.05)/2	-1.01		
				0.05	
11 171.23	A2	(6.00-5.39)x(3.06+2.44)/2	1.68		
		(9.00-6.00)x(3.06+3.06)/2	9.18		
		(9.33-9.00)x(2.73+3.06)/2	0.96		
		(8.92-9.33)x(2.73+2.73)/2	-1.12		
		(8.23-8.92)x(2.70+2.73)/2	-1.87		
		(7.81-8.23)x(2.69+2.70)/2	-1.13		
		(7.21-7.81)x(2.63+2.69)/2	-1.60		
		(6.70-7.21)x(2.58+2.63)/2	-1.33		
		(6.60-6.70)x(2.56+2.58)/2	-0.26		
		(6.29-6.60)x(2.49+2.56)/2	-0.78		
		(6.13-6.29)x(2.48+2.49)/2	-0.40		
		(6.03-6.13)x(2.52+2.48)/2	-0.25		
		(5.96-6.03)x(2.51+2.52)/2	-0.18		
		(5.65-5.96)x(2.40+2.51)/2	-0.76		
		(5.64-5.65)x(2.40+2.40)/2	-0.02		
		(5.60-5.64)x(2.52+2.40)/2	-0.10		
		(5.59-5.60)x(2.53+2.52)/2	-0.03		
		(5.39-5.59)x(2.44+2.53)/2	-0.50		
				1.49	
		A RIPORTARE mq			

BASE GEODETICA

	CALCOLO DELLE AREE		Foglio n. 4

RILEVATO

N. SEZIONE PROG.	FIG.	ELEMENTI DI CALCOLO	AREA ELEMENTARE mq	AREA FIGURA mq	NOTE
		RIPORTO mq			
12	A1	(6.00-4.02)x(3.05+1.08)/2	4.09		
180.66		(6.01-6.00)x(3.05+3.05)/2	0.03		
		(5.75-6.01)x(0.80+3.05)/2	-0.50		
		(5.70-5.75)x(0.17+0.80)/2	-0.02		
		(5.60-5.70)x(0.22+0.17)/2	-0.02		
		(5.57-5.60)x(0.92+0.22)/2	-0.02		
		(5.55-5.57)x(0.90+0.92)/2	-0.02		
		(5.54-5.55)x(0.21+0.22)/2	-0.00		
		(5.52-5.54)x(0.93+0.21)/2	-0.01		
		(5.51-5.52)x(0.96+0.95)/2	-0.01		
		(5.15-5.51)x(0.54+0.96)/2	-0.27		
		(5.12-5.15)x(0.52+0.54)/2	-0.02		
		(4.99-5.12)x(0.40+0.52)/2	-0.06		
		(4.97-4.99)x(0.41+0.40)/2	-0.01		
		(4.95-4.97)x(0.41+0.41)/2	-0.01		
		(4.91-4.95)x(0.41+0.41)/2	-0.02		
		(4.90-4.91)x(0.41+0.41)/2	-0.00		
		(4.89-4.90)x(0.41+0.41)/2	-0.00		
		(4.88-4.89)x(0.42+0.41)/2	-0.00		
		(4.87-4.88)x(0.43+0.42)/2	-0.00		
		(4.85-4.87)x(0.44+0.43)/2	-0.01		
		(4.83-4.85)x(0.45+0.44)/2	-0.01		
		(4.78-4.83)x(0.47+0.45)/2	-0.02		
		(4.62-4.78)x(0.55+0.47)/2	-0.08		
		(4.10-4.62)x(1.06+0.55)/2	-0.42		
		(4.02-4.10)x(1.08+1.06)/2	-0.09		
				2.50	
12	A2	(9.00-6.09)x(3.05+3.05)/2	8.88		
180.66		(9.13-9.00)x(2.92+3.05)/2	0.39		
		(9.01-9.13)x(2.91+2.92)/2	-0.35		
		(8.55-9.01)x(2.83+2.91)/2	-1.32		
		(7.78-8.55)x(2.37+2.83)/2	-2.00		
		(6.68-7.78)x(1.79+2.37)/2	-2.29		
		(6.66-6.68)x(1.83+1.79)/2	-0.04		
		(6.49-6.66)x(2.00+1.83)/2	-0.33		
		(6.37-6.49)x(2.45+2.00)/2	-0.27		
		(6.28-6.37)x(2.48+2.45)/2	-0.22		
		(6.09-6.28)x(3.05+2.48)/2	-0.53		
				1.92	
14	A1	(-9.00--9.39)x(3.03+2.64)/2	1.11		
206.63		(-6.00--9.00)x(3.03+3.03)/2	9.09		
		(-5.89--6.00)x(2.92+3.03)/2	0.33		
		(-6.47--5.89)x(2.87+2.92)/2	-1.68		
		(-7.49--6.47)x(2.81+2.87)/2	-2.90		
		(-7.78--7.49)x(2.79+2.81)/2	-0.81		
		(-8.91--7.78)x(2.71+2.79)/2	-3.11		
		(-9.09--8.91)x(2.69+2.71)/2	-0.49		
		(-9.13--9.09)x(2.68+2.69)/2	-0.11		
		(-9.39--9.13)x(2.64+2.68)/2	-0.69		
				0.74	

Il Direttore dei Lavori	L'Impresa	

BASE GEODETICA

		CALCOLO DELLE AREE		Foglio n. 5
STERRO				
N. SEZIONE PROG.	FIG.	ELEMENTI DI CALCOLO	AREA ELEMENTARE mq	AREA FIGURA mq	NOTE
1	B1	(-5.56--5.60)x(2.79+2.80)/2	0.11		
0.00		(-5.53--5.56)x(2.79+2.79)/2	0.08		
		(-5.46--5.53)x(2.76+2.79)/2	0.19		
		(-5.17--5.46)x(2.48+2.76)/2	0.76		
		(-4.81--5.17)x(2.06+2.48)/2	0.82		
		(-4.73--4.81)x(2.06+2.06)/2	0.16		
		(-4.59--4.73)x(1.99+2.06)/2	0.28		
		(-4.57--4.59)x(1.97+1.97)/2	0.04		
		(-4.51--4.57)x(2.10+1.97)/2	0.12		
		(-4.45--4.51)x(2.13+2.10)/2	0.13		
		(-4.08--4.45)x(1.81+2.13)/2	0.73		
		(-3.83--4.08)x(1.59+1.81)/2	0.43		
		(-3.47--3.83)x(1.32+1.59)/2	0.52		
		(-3.41--3.47)x(1.36+1.32)/2	0.08		
		(-2.75--3.41)x(1.12+1.36)/2	0.82		
		(-2.39--2.75)x(1.04+1.12)/2	0.39		
		(-1.52--2.39)x(0.67+1.04)/2	0.74		
		(-1.47--1.52)x(0.65+0.67)/2	0.03		
		(-1.42--1.47)x(0.63+0.65)/2	0.03		
		(-1.29--1.42)x(0.56+0.63)/2	0.08		
		(-0.84--1.29)x(0.23+0.56)/2	0.18		
		(-0.81--0.84)x(0.23+0.23)/2	0.01		
		(-0.79--0.81)x(0.23+0.23)/2	0.00		
		(-0.77--0.79)x(0.23+0.23)/2	0.00		
		(-0.76--0.77)x(0.23+0.23)/2	0.00		
		(-0.37--0.76)x(0.35+0.23)/2	0.11		
		(-0.34--0.37)x(0.36+0.35)/2	0.01		
		(0.64--0.34)x(0.39+0.36)/2	0.37		
		(0.69-0.64)x(0.39+0.39)/2	0.02		
		(1.69-0.69)x(0.33+0.39)/2	0.36		
		(1.71-1.69)x(0.33+0.33)/2	0.01		
		(1.73-1.71)x(0.32+0.33)/2	0.01		
		(2.73-1.73)x(0.45+0.32)/2	0.39		
		(2.74-2.73)x(0.45+0.45)/2	0.00		
		(3.68-2.74)x(1.06+0.45)/2	0.71		
		(3.76-3.68)x(1.11+1.06)/2	0.09		
		(3.77-3.76)x(1.11+1.11)/2	0.01		
		(3.93-3.77)x(1.38+1.11)/2	0.20		
		(3.98-3.93)x(1.48+1.38)/2	0.07		
		(4.10-3.98)x(1.58+1.48)/2	0.18		
		(4.39-4.10)x(1.72+1.57)/2	0.48		
		(4.70-4.39)x(1.90+1.72)/2	0.56		
		(3.00-4.70)x(0.20+1.90)/2	-1.79		
		(-3.00-3.00)x(0.20+0.20)/2	-1.20		
		(-5.60--3.00)x(2.80+0.20)/2	-3.90		
				3.42	
2	B1	(-8.02--8.12)x(3.22+3.19)/2	0.32		
15.10		(-7.86--8.02)x(3.27+3.22)/2	0.52		
		(-7.71--7.86)x(3.19+3.27)/2	0.48		
		(-8.12--7.71)x(3.19+3.19)/2	-1.31		
				0.01	
2	B2	(-3.27--3.58)x(0.72+0.77)/2	0.23		
15.10		(-2.61--3.27)x(0.63+0.72)/2	0.45		
		(-2.40--2.61)x(0.58+0.63)/2	0.13		
		(-1.56--2.40)x(0.41+0.58)/2	0.42		
		(-1.54--1.56)x(0.40+0.41)/2	0.01		
		(-1.44--1.54)x(0.39+0.40)/2	0.04		
		(-0.68--1.44)x(0.26+0.39)/2	0.25		
		(-0.51--0.68)x(0.23+0.26)/2	0.04		
		(0.18--0.51)x(0.35+0.23)/2	0.20		
		(0.53-0.18)x(0.42+0.35)/2	0.13		
		(1.05-0.53)x(0.40+0.42)/2	0.21		
		(1.58-1.05)x(0.44+0.40)/2	0.22		
		(1.72-1.58)x(0.29+0.44)/2	0.05		
		(1.82-1.72)x(0.20+0.29)/2	0.02		
		(1.88-1.82)x(0.20+0.20)/2	0.01		
		(1.92-1.88)x(0.20+0.20)/2	0.01		
		(1.93-1.92)x(0.19+0.20)/2	0.00		
		(-3.00-1.93)x(0.19+0.19)/2	-0.94		
		(-3.58--3.00)x(0.77+0.19)/2	-0.28		
				1.20	
2	B3	(2.17-2.16)x(0.21+0.19)/2	0.00		
15.10		(2.18-2.17)x(0.19+0.21)/2	0.00		
		(2.19-2.18)x(0.22+0.19)/2	0.00		
		(2.21-2.19)x(0.24+0.22)/2	0.00		
		(2.24-2.21)x(0.25+0.24)/2	0.01		
		(2.28-2.24)x(0.31+0.25)/2	0.01		
		(2.34-2.28)x(0.38+0.31)/2	0.02		
		(2.44-2.34)x(0.43+0.38)/2	0.04		
		(2.63-2.44)x(0.65+0.43)/2	0.10		
		(2.77-2.63)x(0.79+0.65)/2	0.10		
		(3.43-2.77)x(1.47+0.79)/2	0.75		
		(3.64-3.43)x(1.68+1.47)/2	0.33		
		(3.68-3.64)x(1.73+1.68)/2	0.07		
		(4.50-3.68)x(2.18+1.73)/2	1.60		
		(4.73-4.50)x(2.31+2.18)/2	0.52		
		(5.21-4.73)x(2.39+2.31)/2	1.13		
		(3.00-5.21)x(0.19+2.39)/2	-2.85		
		(2.16-3.00)x(0.19+0.19)/2	-0.16		
				1.67	
3	B1	(-2.94--3.02)x(0.19+0.19)/2	0.02		
30.11		(-2.79--2.94)x(0.24+0.19)/2	0.03		
		(-2.68--2.79)x(0.31+0.24)/2	0.03		
		(-2.60--2.68)x(0.37+0.31)/2	0.03		
		(-2.53--2.60)x(0.36+0.37)/2	0.03		
		(-2.48--2.53)x(0.36+0.36)/2	0.02		
		(-2.44--2.48)x(0.39+0.36)/2	0.02		
		(-2.40--2.44)x(0.37+0.39)/2	0.02		
		(-2.37--2.40)x(0.36+0.37)/2	0.01		
		(-2.11--2.37)x(0.37+0.36)/2	0.09		
		(-3.00--2.11)x(0.18+0.18)/2	-0.16		
		(-3.02--3.00)x(0.19+0.18)/2	-0.00		
				0.14	
3	B2	(-2.09--2.11)x(0.25+0.18)/2	0.00		
30.11		(-2.07--2.09)x(0.31+0.25)/2	0.01		
		(-2.04--2.07)x(0.37+0.31)/2	0.01		
		(-2.01--2.04)x(0.28+0.37)/2	0.01		
		A RIPORTARE mq	0.03		

BASE GEODETICA

		CALCOLO DELLE AREE		Foglio n. 6	
STERRO					
N. SEZIONE PROG.	FIG.	ELEMENTI DI CALCOLO	AREA ELEMENTARE mq	AREA FIGURA mq	NOTE
		RIPORTO mq	0.03		
		(-1.99--2.01)x(0.33+0.28)/2	0.01		
		(-1.76--1.99)x(0.50+0.33)/2	0.10		
		(-1.06--1.76)x(0.91+0.50)/2	0.49		
		(-0.94--1.06)x(0.98+0.91)/2	0.11		
		(-0.91--0.94)x(0.99+0.98)/2	0.03		
		(-0.13--0.91)x(1.43+0.99)/2	0.94		
		(0.17--0.13)x(1.83+1.43)/2	0.49		
		(0.68-0.17)x(2.30+1.83)/2	1.05		
		(1.26-0.68)x(2.44+2.30)/2	1.37		
		(1.49-1.26)x(2.44+2.44)/2	0.56		
		(2.18-1.49)x(2.52+2.44)/2	1.71		
		(2.30-2.18)x(2.54+2.52)/2	0.30		
		(2.34-2.30)x(2.54+2.54)/2	0.10		
		(3.11-2.34)x(2.57+2.54)/2	1.97		
		(3.42-3.11)x(2.60+2.57)/2	0.80		
		(3.92-3.42)x(2.61+2.60)/2	1.30		
		(4.50-3.92)x(2.59+2.61)/2	1.51		
		(4.73-4.50)x(2.59+2.59)/2	0.60		
		(5.41-4.73)x(2.58+2.59)/2	1.76		
		(3.00-5.41)x(0.18+2.58)/2	-3.33		
		(-2.11-3.00)x(0.18+0.18)/2	-0.92		
				10.98	
4 45.11	B1	(-3.98--4.36)x(1.79+1.52)/2	0.63		
		(-3.75--3.98)x(1.99+1.79)/2	0.43		
		(-3.17--3.75)x(2.19+1.99)/2	1.21		
		(-2.66--3.17)x(2.38+2.19)/2	1.17		
		(-2.36--2.66)x(2.41+2.38)/2	0.72		
		(-1.58--2.36)x(2.48+2.41)/2	1.91		
		(-1.55--1.58)x(2.49+2.48)/2	0.07		
		(-1.44--1.55)x(2.50+2.49)/2	0.27		
		(-0.74--1.44)x(2.59+2.50)/2	1.78		
		(-0.50--0.74)x(2.61+2.59)/2	0.62		
		(0.07--0.50)x(2.62+2.61)/2	1.49		
		(0.58-0.07)x(2.62+2.62)/2	1.34		
		(0.88-0.58)x(2.61+2.62)/2	0.78		
		(1.66-0.88)x(2.55+2.61)/2	2.01		
		(1.69-1.66)x(2.55+2.55)/2	0.08		
		(1.80-1.69)x(2.54+2.55)/2	0.28		
		(2.50-1.80)x(2.48+2.54)/2	1.76		
		(2.74-2.50)x(2.46+2.48)/2	0.59		
		(3.31-2.74)x(2.42+2.46)/2	1.39		
		(3.82-3.31)x(2.40+2.42)/2	1.23		
		(4.13-3.82)x(2.39+2.40)/2	0.74		
		(4.90-4.13)x(2.37+2.39)/2	1.83		
		(4.94-4.90)x(2.37+2.37)/2	0.09		
		(5.04-4.94)x(2.38+2.37)/2	0.24		
		(5.21-5.04)x(2.38+2.38)/2	0.40		
		(3.00-5.21)x(0.16+2.38)/2	-2.81		
		(-3.00-3.00)x(0.16+0.16)/2	-0.96		
		(-4.36--3.00)x(1.52+0.16)/2	-1.14		
				18.15	
5 59.73	B1	(-4.78--5.34)x(2.51+2.49)/2	1.40		
		(-4.30--4.78)x(2.52+2.51)/2	1.21		
		(-3.96--4.30)x(2.52+2.52)/2	0.86		
		(-3.21--3.96)x(2.53+2.52)/2	1.89		
		(-3.15--3.21)x(2.53+2.53)/2	0.15		
		(-2.97--3.15)x(2.55+2.53)/2	0.46		
		(-2.34--2.97)x(2.58+2.55)/2	1.62		
		(-2.13--2.34)x(2.58+2.58)/2	0.54		
		(-1.53--2.13)x(2.56+2.58)/2	1.54		
		(-1.05--1.53)x(2.54+2.56)/2	1.22		
		(-0.72--1.05)x(2.53+2.54)/2	0.84		
		(0.03--0.72)x(2.48+2.53)/2	1.88		
		(0.09-0.03)x(2.48+2.48)/2	0.15		
		(0.27-0.09)x(2.48+2.48)/2	0.45		
		(0.90-0.27)x(2.47+2.48)/2	1.56		
		(1.11-0.90)x(2.47+2.47)/2	0.52		
		(1.71-1.11)x(2.46+2.47)/2	1.48		
		(2.19-1.71)x(2.46+2.46)/2	1.18		
		(2.52-2.19)x(2.45+2.46)/2	0.81		
		(3.27-2.52)x(2.42+2.45)/2	1.83		
		(3.33-3.27)x(2.42+2.42)/2	0.15		
		(3.51-3.33)x(2.42+2.42)/2	0.44		
		(4.14-3.51)x(2.42+2.42)/2	1.52		
		(4.35-4.14)x(2.43+2.42)/2	0.51		
		(4.95-4.35)x(2.46+2.43)/2	1.47		
		(5.30-4.95)x(2.45+2.46)/2	0.86		
		(3.00-5.30)x(0.15+2.45)/2	-2.99		
		(-3.00-3.00)x(0.15+0.15)/2	-0.90		
		(-5.34--3.00)x(2.49+0.15)/2	-3.09		
				19.56	
6 73.50	B1	(-5.25--5.42)x(2.55+2.56)/2	0.43		
		(-5.23--5.25)x(2.55+2.55)/2	0.05		
		(-5.14--5.23)x(2.55+2.55)/2	0.23		
		(-4.20--5.14)x(2.49+2.55)/2	2.37		
		(-3.92--4.20)x(2.49+2.49)/2	0.70		
		(-3.15--3.92)x(2.49+2.49)/2	1.92		
		(-2.56--3.15)x(2.50+2.49)/2	1.47		
		(-2.10--2.56)x(2.49+2.50)/2	1.15		
		(-1.20--2.10)x(2.47+2.49)/2	2.23		
		(-1.04--1.20)x(2.46+2.47)/2	0.39		
		(-0.50--1.04)x(2.45+2.46)/2	1.33		
		(-0.09--0.50)x(2.44+2.45)/2	1.00		
		(0.01--0.09)x(2.44+2.44)/2	0.24		
		(0.77-0.01)x(2.47+2.44)/2	1.87		
		(1.06-0.77)x(2.45+2.47)/2	0.71		
		(1.63-1.06)x(2.25+2.45)/2	1.34		
		(2.11-1.63)x(2.10+2.25)/2	1.04		
		(2.48-2.11)x(2.01+2.10)/2	0.76		
		(3.16-2.48)x(1.92+2.01)/2	1.34		
		(4.14-3.16)x(2.02+1.92)/2	1.93		
		(4.21-4.14)x(2.02+2.02)/2	0.14		
		(4.91-4.21)x(2.05+2.02)/2	1.42		
		(3.00-4.91)x(0.14+2.05)/2	-2.09		
		(-3.00-3.00)x(0.14+0.14)/2	-0.84		
		A RIPORTARE mq	21.13		

BASE GEODETICA

		CALCOLO DELLE AREE		Foglio n. 7	
STERRO					
N. SEZIONE PROG.	FIG.	ELEMENTI DI CALCOLO	AREA ELEMENTARE mq	AREA FIGURA mq	NOTE
		RIPORTO mq	21.13		
		(-5.42--3.00)x(2.56+0.14)/2	-3.27		
				17.86	
IMB TM	B1	(-8.02--8.45)x(2.48+2.48)/2	1.07		
91.46		(-7.42--8.02)x(2.53+2.48)/2	1.50		
		(-6.99--7.42)x(2.55+2.53)/2	1.09		
		(-6.28--6.99)x(2.58+2.55)/2	1.82		
		(-5.96--6.28)x(2.61+2.58)/2	0.83		
		(-5.13--5.96)x(2.60+2.61)/2	2.16		
		(-4.93--5.13)x(2.60+2.60)/2	0.52		
		(-3.99--4.93)x(2.54+2.60)/2	2.42		
		(-3.89--3.99)x(2.53+2.54)/2	0.25		
		(-3.05--3.89)x(2.51+2.53)/2	2.12		
		(-2.88--3.05)x(2.50+2.51)/2	0.43		
		(-2.86--2.88)x(2.50+2.50)/2	0.05		
		(-1.95--2.86)x(2.49+2.50)/2	2.27		
		(-1.83--1.95)x(2.49+2.49)/2	0.30		
		(-1.01--1.83)x(2.47+2.49)/2	2.03		
		(-0.80--1.01)x(2.46+2.47)/2	0.52		
		(-0.07--0.80)x(2.45+2.46)/2	1.79		
		(0.23--0.07)x(2.44+2.45)/2	0.73		
		(0.86-0.23)x(2.32+2.44)/2	1.50		
		(1.26-0.86)x(2.25+2.32)/2	0.91		
		(1.80-1.26)x(2.07+2.25)/2	1.17		
		(2.29-1.80)x(1.92+2.07)/2	0.98		
		(2.88-2.29)x(1.87+1.92)/2	1.12		
		(3.32-2.88)x(1.82+1.87)/2	0.81		
		(3.67-3.32)x(1.92+1.82)/2	0.65		
		(4.35-3.67)x(2.03+1.92)/2	1.34		
		(4.61-4.35)x(2.02+2.03)/2	0.53		
		(5.38-4.61)x(2.06+2.02)/2	1.57		
		(5.55-5.38)x(2.05+2.06)/2	0.35		
		(6.41-5.55)x(2.01+2.05)/2	1.75		
		(6.48-6.41)x(2.02+2.01)/2	0.14		
		(7.24-6.48)x(2.03+2.02)/2	1.54		
		(7.44-7.24)x(2.03+2.03)/2	0.41		
		(7.46-7.44)x(2.03+2.03)/2	0.04		
		(8.00-7.46)x(2.02+2.03)/2	1.09		
		(5.50-8.00)x(-0.48+2.02)/2	-1.93		
		(-5.50-5.50)x(-0.48+-0.48)/2	5.28		
		(-8.45--5.50)x(2.48+-0.48)/2	-2.95		
				38.20	
7	B1	(-8.13--8.21)x(2.24+2.23)/2	0.18		
106.80		(-7.51--8.13)x(2.40+2.24)/2	1.44		
		(-6.99--7.51)x(2.42+2.40)/2	1.25		
		(-6.48--6.99)x(2.42+2.42)/2	1.23		
		(-5.84--6.48)x(2.39+2.42)/2	1.54		
		(-5.45--5.84)x(2.40+2.39)/2	0.93		
		(-4.70--5.45)x(2.39+2.40)/2	1.80		
		(-4.42--4.70)x(2.39+2.39)/2	0.67		
		(-3.55--4.42)x(2.34+2.39)/2	2.06		
		(-3.39--3.55)x(2.34+2.34)/2	0.37		
		(-2.41--3.39)x(2.29+2.34)/2	2.27		
		(-2.36--2.41)x(2.29+2.29)/2	0.11		
		(-1.91--2.36)x(2.34+2.29)/2	1.04		
		(-1.33--1.91)x(2.41+2.34)/2	1.38		
		(-1.26--1.33)x(2.41+2.41)/2	0.17		
		(-0.30--1.26)x(2.38+2.41)/2	2.30		
		(-0.12--0.30)x(2.38+2.38)/2	0.43		
		(0.73--0.12)x(2.40+2.38)/2	2.03		
		(1.03-0.73)x(2.41+2.40)/2	0.72		
		(1.76-1.03)x(2.42+2.41)/2	1.76		
		(2.17-1.76)x(2.39+2.42)/2	0.99		
		(2.79-2.17)x(2.37+2.39)/2	1.48		
		(3.32-2.79)x(2.25+2.37)/2	1.22		
		(3.82-3.32)x(2.21+2.25)/2	1.12		
		(4.24-3.82)x(2.02+2.21)/2	0.89		
		(4.85-4.24)x(1.91+2.02)/2	1.20		
		(5.61-4.85)x(1.88+1.91)/2	1.44		
		(5.88-5.61)x(1.88+1.88)/2	0.51		
		(6.75-5.88)x(1.95+1.88)/2	1.67		
		(6.91-6.75)x(1.96+1.95)/2	0.31		
		(7.90-6.91)x(1.97+1.96)/2	1.95		
		(7.95-7.90)x(1.97+1.97)/2	0.10		
		(7.96-7.95)x(1.97+1.97)/2	0.02		
		(5.50-7.96)x(-0.49+1.97)/2	-1.82		
		(-5.50-5.50)x(-0.49+-0.49)/2	5.39		
		(-8.21--5.50)x(2.23+-0.49)/2	-2.36		
				37.79	
8	B1	(-7.44--7.62)x(1.76+1.62)/2	0.30		
122.35		(-6.98--7.44)x(2.10+1.76)/2	0.89		
		(-6.30--6.98)x(2.29+2.10)/2	1.49		
		(-5.95--6.30)x(2.39+2.29)/2	0.82		
		(-5.15--5.95)x(2.44+2.39)/2	1.93		
		(-4.92--5.15)x(2.46+2.44)/2	0.56		
		(-4.01--4.92)x(2.43+2.46)/2	2.22		
		(-3.89--4.01)x(2.42+2.43)/2	0.29		
		(-2.86--3.89)x(2.33+2.42)/2	2.45		
		(-1.83--2.86)x(2.31+2.33)/2	2.39		
		(-1.72--1.83)x(2.31+2.31)/2	0.25		
		(-0.80--1.72)x(2.36+2.31)/2	2.15		
		(-0.57--0.80)x(2.36+2.36)/2	0.54		
		(0.23--0.57)x(2.39+2.36)/2	1.90		
		(0.57-0.23)x(2.40+2.39)/2	0.81		
		(1.26-0.57)x(2.41+2.40)/2	1.66		
		(1.72-1.26)x(2.42+2.41)/2	1.11		
		(2.29-1.72)x(2.42+2.42)/2	1.38		
		(2.86-2.29)x(2.42+2.42)/2	1.38		
		(3.32-2.86)x(2.42+2.42)/2	1.11		
		(4.01-3.32)x(2.40+2.42)/2	1.66		
		(4.35-4.01)x(2.40+2.40)/2	0.82		
		(5.15-4.35)x(2.51+2.40)/2	1.96		
		(5.38-5.15)x(2.51+2.51)/2	0.58		
		(5.57-5.38)x(2.44+2.51)/2	0.47		
		(6.41-5.57)x(2.14+2.44)/2	1.92		
		(7.43-6.41)x(1.91+2.14)/2	2.07		
		A RIPORTARE mq	35.11		

BASE GEODETICA

		CALCOLO DELLE AREE		Foglio n. 8
STERRO				
N. SEZIONE PROG.	FIG.	ELEMENTI DI CALCOLO	AREA ELEMENTARE mq	AREA FIGURA mq	NOTE
		RIPORTO mq	35.11		
		(7.44-7.43)x(1.91+1.91)/2	0.02		
		(7.96-7.44)x(1.96+1.91)/2	1.01		
		(5.50-7.96)x(-0.50+1.96)/2	-1.80		
		(-5.50-5.50)x(-0.50+-0.50)/2	5.50		
		(-7.62--5.50)x(1.62+-0.50)/2	-1.19		
				38.65	
USC TM	B1	(-5.61--6.42)x(0.82+0.40)/2	0.49		
137.90		(-5.43--5.61)x(0.93+0.82)/2	0.16		
		(-4.46--5.43)x(1.54+0.93)/2	1.20		
		(-4.40--4.46)x(1.59+1.54)/2	0.09		
		(-3.81--4.40)x(1.90+1.59)/2	1.03		
		(-3.37--3.81)x(2.15+1.90)/2	0.89		
		(-3.32--3.37)x(2.16+2.15)/2	0.11		
		(-2.34--3.32)x(2.38+2.16)/2	2.22		
		(-2.17--2.34)x(2.38+2.38)/2	0.40		
		(-1.31--2.17)x(2.39+2.38)/2	2.05		
		(-1.03--1.31)x(2.39+2.39)/2	0.67		
		(-0.27--1.03)x(2.38+2.39)/2	1.81		
		(0.12--0.27)x(2.39+2.38)/2	0.93		
		(0.76-0.12)x(2.39+2.39)/2	1.53		
		(1.26-0.76)x(2.41+2.39)/2	1.20		
		(1.79-1.26)x(2.41+2.41)/2	1.28		
		(2.41-1.79)x(2.42+2.41)/2	1.50		
		(2.82-2.41)x(2.43+2.42)/2	0.99		
		(3.55-2.82)x(2.42+2.43)/2	1.77		
		(3.85-3.55)x(2.43+2.42)/2	0.73		
		(4.70-3.85)x(2.42+2.43)/2	2.06		
		(4.88-4.70)x(2.42+2.42)/2	0.44		
		(5.84-4.88)x(2.42+2.42)/2	2.32		
		(5.91-5.84)x(2.42+2.42)/2	0.17		
		(6.48-5.91)x(2.42+2.42)/2	1.38		
		(6.94-6.48)x(2.42+2.42)/2	1.11		
		(7.83-6.94)x(2.40+2.42)/2	2.14		
		(7.97-7.83)x(2.38+2.40)/2	0.33		
		(8.13-7.97)x(2.32+2.38)/2	0.38		
		(8.29-8.13)x(2.27+2.32)/2	0.37		
		(5.50-8.29)x(-0.51+2.27)/2	-2.46		
		(-5.50-5.50)x(-0.51+-0.51)/2	5.61		
		(-6.42--5.50)x(0.40+-0.51)/2	0.05		
				34.95	
9	B1	(-3.37--3.63)x(0.81+0.70)/2	0.20		
148.20		(-3.32--3.37)x(0.84+0.81)/2	0.04		
		(-2.33--3.32)x(1.36+0.84)/2	1.09		
		(-2.18--2.33)x(1.44+1.36)/2	0.21		
		(-1.30--2.18)x(1.89+1.44)/2	1.47		
		(-1.03--1.30)x(1.96+1.89)/2	0.52		
		(-0.27--1.03)x(2.21+1.96)/2	1.58		
		(0.11--0.27)x(2.21+2.21)/2	0.84		
		(0.76-0.11)x(2.17+2.21)/2	1.42		
		(1.26-0.76)x(2.22+2.17)/2	1.10		
		(1.79-1.26)x(2.28+2.22)/2	1.19		
		(2.40-1.79)x(2.30+2.28)/2	1.40		
		(2.82-2.40)x(2.32+2.30)/2	0.97		
		(3.55-2.82)x(2.39+2.32)/2	1.72		
		(3.85-3.55)x(2.41+2.39)/2	0.72		
		(4.69-3.85)x(2.46+2.41)/2	2.05		
		(4.88-4.69)x(2.47+2.46)/2	0.47		
		(5.38-4.88)x(2.45+2.47)/2	1.23		
		(3.00-5.38)x(0.08+2.45)/2	-3.01		
		(-3.00-3.00)x(0.08+0.08)/2	-0.48		
		(-3.63--3.00)x(0.70+0.08)/2	-0.25		
				14.48	
10	B1	(-2.71--3.29)x(0.41+0.36)/2	0.22		
162.24		(-2.19--2.71)x(0.40+0.41)/2	0.21		
		(-1.66--2.19)x(0.38+0.40)/2	0.21		
		(-0.85--1.66)x(0.67+0.38)/2	0.43		
		(-0.62--0.85)x(0.73+0.67)/2	0.16		
		(0.24--0.62)x(1.48+0.73)/2	0.95		
		(0.43-0.24)x(1.65+1.48)/2	0.30		
		(0.49-0.43)x(1.67+1.65)/2	0.10		
		(1.48-0.49)x(2.12+1.67)/2	1.88		
		(1.83-1.48)x(2.18+2.12)/2	0.75		
		(2.53-1.83)x(2.27+2.18)/2	1.56		
		(3.17-2.53)x(2.31+2.27)/2	1.47		
		(3.58-3.17)x(2.33+2.31)/2	0.95		
		(4.51-3.58)x(2.46+2.33)/2	2.23		
		(4.63-4.51)x(2.47+2.46)/2	0.30		
		(5.07-4.63)x(2.47+2.47)/2	1.09		
		(5.41-5.07)x(2.47+2.47)/2	0.84		
		(3.00-5.41)x(0.07+2.47)/2	-3.06		
		(-3.00-3.00)x(0.07+0.07)/2	-0.42		
		(-3.29--3.00)x(0.36+0.07)/2	-0.06		
				10.11	
11	B1	(-8.86--9.05)x(3.10+3.11)/2	0.59		
171.23		(-8.85--8.86)x(3.10+3.10)/2	0.03		
		(-8.69--8.85)x(3.13+3.10)/2	0.50		
		(-8.60--8.69)x(3.16+3.13)/2	0.28		
		(-8.55--8.60)x(3.18+3.16)/2	0.16		
		(-8.51--8.55)x(3.18+3.18)/2	0.13		
		(-8.50--8.51)x(3.22+3.18)/2	0.03		
		(-8.48--8.50)x(3.18+3.22)/2	0.06		
		(-8.47--8.48)x(3.18+3.18)/2	0.03		
		(-7.81--8.47)x(3.09+3.18)/2	2.07		
		(-7.74--7.81)x(3.07+3.09)/2	0.22		
		(-7.29--7.74)x(3.06+3.07)/2	1.38		
		(-9.00--7.29)x(3.06+3.06)/2	-5.23		
		(-9.05--9.00)x(3.11+3.06)/2	-0.15		
				0.10	
11	B2	(-5.91--5.92)x(2.98+2.98)/2	0.03		
171.23		(-5.73--5.91)x(2.92+2.98)/2	0.53		
		(-5.68--5.73)x(2.91+2.92)/2	0.15		
		(-5.56--5.68)x(2.92+2.91)/2	0.35		
		(-5.52--5.56)x(2.91+2.92)/2	0.12		
		(-5.06--5.52)x(2.82+2.91)/2	1.32		
		(-4.41--5.06)x(2.67+2.82)/2	1.78		
		A RIPORTARE mq	4.28		

		CALCOLO DELLE AREE		Foglio n. 9	
STERRO					
N. SEZIONE PROG.	FIG.	ELEMENTI DI CALCOLO	AREA ELEMENTARE mq	AREA FIGURA mq	NOTE
		RIPORTO mq	4.28		
		(-3.48--4.41)x(2.17+2.67)/2	2.25		
		(-3.29--3.48)x(2.06+2.17)/2	0.40		
		(-3.16--3.29)x(1.94+2.06)/2	0.26		
		(-2.18--3.16)x(0.99+1.94)/2	1.44		
		(-1.84--2.18)x(0.83+0.99)/2	0.31		
		(-1.55--1.84)x(0.69+0.83)/2	0.22		
		(-1.15--1.55)x(0.51+0.69)/2	0.24		
		(-1.13--1.15)x(0.31+0.51)/2	0.01		
		(-1.08--1.13)x(0.44+0.31)/2	0.02		
		(-1.07--1.08)x(0.44+0.44)/2	0.00		
		(-0.81--1.07)x(0.44+0.44)/2	0.11		
		(0.04--0.81)x(0.43+0.44)/2	0.37		
		(0.64-0.04)x(0.32+0.43)/2	0.22		
		(1.15-0.64)x(0.28+0.32)/2	0.15		
		(1.38-1.15)x(0.23+0.28)/2	0.06		
		(1.39-1.38)x(0.23+0.23)/2	0.00		
		(1.63-1.39)x(0.24+0.23)/2	0.06		
		(1.70-1.63)x(0.26+0.24)/2	0.02		
		(1.85-1.70)x(0.25+0.26)/2	0.04		
		(1.87-1.85)x(0.28+0.23)/2	0.01		
		(1.89-1.87)x(0.33+0.28)/2	0.01		
		(1.96-1.89)x(0.39+0.33)/2	0.03		
		(2.26-1.96)x(0.58+0.39)/2	0.15		
		(2.53-2.26)x(0.75+0.58)/2	0.18		
		(3.37-2.53)x(1.32+0.75)/2	0.87		
		(4.43-3.37)x(2.05+1.32)/2	1.79		
		(4.48-4.43)x(2.08+2.05)/2	0.10		
		(4.54-4.48)x(2.10+2.08)/2	0.13		
		(5.39-4.54)x(2.44+2.10)/2	1.93		
		(3.00-5.39)x(0.06+2.44)/2	-2.99		
		(-3.00-3.00)x(0.06+0.06)/2	-0.36		
		(-5.92--3.00)x(2.98+0.06)/2	-4.44		
				7.87	
12 180.66	B1	(-8.23--9.15)x(3.19+3.20)/2	2.94		
		(-8.18--8.23)x(3.19+3.19)/2	0.16		
		(-8.08--8.18)x(3.19+3.19)/2	0.32		
		(-6.95--8.08)x(3.17+3.19)/2	3.59		
		(-6.37--6.95)x(3.16+3.17)/2	1.84		
		(-5.72--6.37)x(3.14+3.16)/2	2.05		
		(-4.50--5.72)x(3.11+3.14)/2	3.81		
		(-4.48--4.50)x(3.10+3.10)/2	0.06		
		(-3.27--4.48)x(3.09+3.10)/2	3.74		
		(-3.19--3.27)x(3.11+3.09)/2	0.25		
		(-3.15--3.19)x(3.22+3.11)/2	0.13		
		(-3.10--3.15)x(3.12+3.22)/2	0.16		
		(-2.66--3.10)x(3.08+3.12)/2	1.36		
		(-2.40--2.66)x(3.10+3.08)/2	0.80		
		(-2.04--2.40)x(3.11+3.10)/2	1.12		
		(-1.75--2.04)x(3.08+3.11)/2	0.90		
		(-1.35--1.75)x(3.03+3.08)/2	1.22		
		(-1.19--1.35)x(2.99+3.03)/2	0.48		
		(-1.10--1.19)x(2.98+2.99)/2	0.27		
		(-1.05--1.10)x(2.99+2.98)/2	0.15		
		(-1.01--1.05)x(2.99+2.99)/2	0.12		
		(-0.86--1.01)x(2.97+2.99)/2	0.45		
		(-0.84--0.86)x(2.99+2.97)/2	0.06		
		(-0.81--0.84)x(2.94+2.99)/2	0.09		
		(-0.77--0.81)x(2.93+2.94)/2	0.12		
		(0.42--0.77)x(2.54+2.93)/2	3.25		
		(0.68-0.42)x(2.44+2.54)/2	0.65		
		(1.09-0.68)x(2.22+2.44)/2	0.96		
		(1.64-1.09)x(1.93+2.22)/2	1.14		
		(2.71-1.64)x(1.45+1.93)/2	1.81		
		(2.87-2.71)x(1.38+1.45)/2	0.23		
		(2.96-2.87)x(1.34+1.38)/2	0.12		
		(4.02-2.96)x(1.08+1.34)/2	1.28		
		(3.00-4.02)x(0.05+1.08)/2	-0.58		
		(-3.00-3.00)x(0.05+0.05)/2	-0.30		
		(-6.00--3.00)x(3.05+0.05)/2	-4.65		
		(-9.00--6.00)x(3.05+3.05)/2	-9.15		
		(-9.15--9.00)x(3.20+3.05)/2	-0.47		
				20.48	
13 192.21	B1	(-8.50--9.18)x(3.23+3.22)/2	2.19		
		(-8.12--8.50)x(3.23+3.23)/2	1.23		
		(-7.09--8.12)x(3.22+3.23)/2	3.32		
		(-6.63--7.09)x(3.22+3.22)/2	1.48		
		(-5.68--6.63)x(3.23+3.22)/2	3.06		
		(-5.14--5.68)x(3.23+3.23)/2	1.74		
		(-4.27--5.14)x(3.22+3.23)/2	2.81		
		(-3.64--4.27)x(3.22+3.22)/2	2.03		
		(-2.86--3.64)x(3.22+3.22)/2	2.51		
		(-2.15--2.86)x(3.22+3.22)/2	2.29		
		(-1.45--2.15)x(3.21+3.22)/2	2.25		
		(-0.66--1.45)x(3.20+3.21)/2	2.53		
		(-0.04--0.66)x(3.20+3.20)/2	1.98		
		(0.83--0.04)x(3.19+3.20)/2	2.78		
		(1.38-0.83)x(3.19+3.19)/2	1.75		
		(2.32-1.38)x(3.18+3.19)/2	2.99		
		(2.79-2.32)x(3.17+3.18)/2	1.49		
		(3.82-2.79)x(3.14+3.17)/2	3.25		
		(4.20-3.82)x(3.14+3.14)/2	1.19		
		(5.31-4.20)x(3.11+3.14)/2	3.47		
		(5.61-5.31)x(3.12+3.11)/2	0.93		
		(6.80-5.61)x(3.12+3.12)/2	3.71		
		(7.02-6.80)x(3.12+3.12)/2	0.69		
		(8.29-7.02)x(3.11+3.12)/2	3.96		
		(8.43-8.29)x(3.11+3.11)/2	0.44		
		(9.06-8.43)x(3.11+3.11)/2	1.96		
		(9.00-9.06)x(3.04+3.11)/2	-0.18		
		(6.00-9.00)x(3.04+3.04)/2	-9.12		
		(3.00-6.00)x(0.04+3.04)/2	-4.62		
		(-3.00-3.00)x(0.04+0.04)/2	-0.24		
		(-6.00--3.00)x(3.04+0.04)/2	-4.62		
		(-9.00--6.00)x(3.04+3.04)/2	-9.12		
		(-9.18--9.00)x(3.22+3.04)/2	-0.56		
		A RIPORTARE mq	29.57		

BASE GEODETICA

	CALCOLO DELLE AREE		Foglio n. 10

STERRO

N. SEZIONE PROG.	FIG.	ELEMENTI DI CALCOLO	AREA ELEMENTARE mq	AREA FIGURA mq	NOTE
		RIPORTO mq	29.57		
				29.57	
14 206.63	B1	(-5.85--5.89)x(2.92+2.92)/2	0.12		
		(-5.15--5.85)x(2.96+2.92)/2	2.06		
		(-4.20--5.15)x(3.00+2.96)/2	2.83		
		(-3.84--4.20)x(3.01+3.00)/2	1.08		
		(-2.56--3.84)x(3.10+3.01)/2	3.91		
		(-2.53--2.56)x(3.10+3.10)/2	0.09		
		(-2.43--2.53)x(3.11+3.10)/2	0.31		
		(-1.22--2.43)x(3.16+3.11)/2	3.79		
		(-1.08--1.22)x(3.17+3.16)/2	0.44		
		(-0.91--1.08)x(3.18+3.17)/2	0.54		
		(-0.35--0.91)x(3.21+3.18)/2	1.79		
		(0.09--0.35)x(3.23+3.21)/2	1.42		
		(0.73-0.09)x(3.24+3.23)/2	2.07		
		(1.40-0.73)x(3.22+3.24)/2	2.16		
		(2.38-1.40)x(3.20+3.22)/2	3.15		
		(2.71-2.38)x(3.20+3.20)/2	1.06		
		(4.02-2.71)x(3.19+3.20)/2	4.19		
		(4.03-4.02)x(3.19+3.19)/2	0.03		
		(4.05-4.03)x(3.19+3.19)/2	0.06		
		(5.34-4.05)x(3.20+3.19)/2	4.12		
		(5.66-5.34)x(3.20+3.20)/2	1.02		
		(6.65-5.66)x(3.20+3.20)/2	3.17		
		(7.31-6.65)x(3.20+3.20)/2	2.11		
		(7.96-7.31)x(3.20+3.20)/2	2.08		
		(8.95-7.96)x(3.20+3.20)/2	3.17		
		(9.17-8.95)x(3.20+3.20)/2	0.70		
		(9.00-9.17)x(3.03+3.20)/2	-0.53		
		(6.00-9.00)x(3.03+3.03)/2	-9.09		
		(3.00-6.00)x(0.03+3.03)/2	-4.59		
		(-3.00-3.00)x(0.03+0.03)/2	-0.18		
		(-5.89--3.00)x(2.92+0.03)/2	-4.26		
				28.82	

Il Direttore dei Lavori	L'Impresa	

	COMPUTO DEI VOLUMI		Foglio n. 11

RILEVATO

DALLA SEZ. DA PROG.	ALLA SEZ. A PROG.	SEZIONE	FIGURA	AREA	DISTANZA SEZIONI m	DISTANZA DI CALCOLO m	VOLUME PARZIALE mc	VOLUME TOTALE mc
1	2	1	A1	0.14	15.10	7.55	1.057	
0.00	15.10	1	A2	0.82	15.10	7.55	6.191	
		2	A1	2.39	15.10	7.55	18.044	
		2	A2	2.22	15.10	7.55	16.761	
								42.053
2	3	2	A1	2.39	15.01	7.50	17.925	
15.10	30.11	2	A2	2.22	15.01	7.50	16.650	
		3	A1	12.20	15.01	7.50	91.500	
		3	A2	2.20	15.01	7.50	16.500	
								142.575
3	4	3	A1	12.20	15.00	7.50	91.500	
30.11	45.11	3	A2	2.20	15.00	7.50	16.500	
		4	A1	14.99	15.00	7.50	112.425	
		4	A2	3.21	15.00	7.50	24.075	
								244.500
4	5	4	A1	14.99	14.62	7.31	109.577	
45.11	59.73	4	A2	3.21	14.62	7.31	23.465	
		5	A1	6.54	14.62	7.31	47.807	
		5	A2	4.70	14.62	7.31	34.357	
								215.206
5	6	5	A1	6.54	13.77	6.89	45.061	
59.73	73.50	5	A2	4.70	13.77	6.89	32.383	
		6	A1	2.46	13.77	6.89	16.949	
		6	A2	4.46	13.77	6.89	30.729	
								125.122
6	IMB TM	6	A1	2.46	17.96	8.98	22.091	
73.50	91.46	6	A2	4.46	17.96	8.98	40.051	
								62.142
USC TM	9	9	A1	10.73	10.30	5.15	55.260	
137.90	148.20	9	A2	2.58	10.30	5.15	13.287	
								68.547
9	10	9	A1	10.73	14.04	7.02	75.325	
148.20	162.24	9	A2	2.58	14.04	7.02	18.112	
		10	A1	2.08	14.04	7.02	14.602	
		10	A2	1.95	14.04	7.02	13.689	
								121.728
10	11	10	A1	2.08	8.99	4.49	9.339	
162.24	171.23	10	A2	1.95	8.99	4.49	8.755	
		11	A1	0.05	8.99	4.49	0.225	
		11	A2	1.49	8.99	4.49	6.690	
								25.009
11	12	11	A1	0.05	9.43	4.72	0.236	
171.23	180.66	11	A2	1.49	9.43	4.72	7.033	
		12	A1	2.50	9.43	4.72	11.800	
		12	A2	1.92	9.43	4.72	9.062	
								28.131
12	13	12	A1	2.50	11.55	5.78	14.450	
180.66	192.21	12	A2	1.92	11.55	5.78	11.098	
								25.548
13	14	14	A1	0.74	14.42	7.21	5.335	
								5.335

Il Direttore dei Lavori	L'Impresa	TOTALE ARTICOLO	1105.896

	COMPUTO DEI VOLUMI		Foglio n. 12

STERRO

DALLA SEZ. DA PROG.	ALLA SEZ. A PROG.	SEZIONE	FIGURA	AREA	DISTANZA SEZIONI m	DISTANZA DI CALCOLO m	VOLUME PARZIALE mc	VOLUME TOTALE mc
1	2	1	B1	3.42	15.10	7.55	25.821	
0.00	15.10	2	B1	0.01	15.10	7.55	0.075	
		2	B2	1.20	15.10	7.55	9.060	
		2	B3	1.67	15.10	7.55	12.608	
								47.564
2	3	2	B1	0.01	15.01	7.50	0.075	
15.10	30.11	2	B2	1.20	15.01	7.50	9.000	
		2	B3	1.67	15.01	7.50	12.525	
		3	B1	0.14	15.01	7.50	1.050	
		3	B2	10.98	15.01	7.50	82.350	
								105.000
3	4	3	B1	0.14	15.00	7.50	1.050	
30.11	45.11	3	B2	10.98	15.00	7.50	82.350	
		4	B1	18.15	15.00	7.50	136.125	
								219.525
4	5	4	B1	18.15	14.62	7.31	132.676	
45.11	59.73	5	B1	19.56	14.62	7.31	142.984	
								275.660
5	6	5	B1	19.56	13.77	6.89	134.768	
59.73	73.50	6	B1	17.86	13.77	6.89	123.055	
								257.823
6	IMB TM	6	B1	17.86	17.96	8.98	160.383	
73.50	91.46	IMB TM	B1	38.20	17.96	8.98	343.036	
								503.419
IMB TM	7	IMB TM	B1	38.20	15.34	7.67	292.994	
91.46	106.80	7	B1	37.79	15.34	7.67	289.849	
								582.843
7	8	7	B1	37.79	15.55	7.77	293.628	
106.80	122.35	8	B1	38.65	15.55	7.77	300.310	
								593.938
8	USC TM	8	B1	38.65	15.55	7.78	300.697	
122.35	137.90	USC TM	B1	34.95	15.55	7.78	271.911	
								572.608
USC TM	9	USC TM	B1	34.95	10.30	5.15	179.993	
137.90	148.20	9	B1	14.48	10.30	5.15	74.572	
								254.565
9	10	9	B1	14.48	14.04	7.02	101.650	
148.20	162.24	10	B1	10.11	14.04	7.02	70.972	
								172.622
10	11	10	B1	10.11	8.99	4.49	45.394	
162.24	171.23	11	B1	0.10	8.99	4.49	0.449	
		11	B2	7.87	8.99	4.49	35.336	
								81.179
11	12	11	B1	0.10	9.43	4.72	0.472	
171.23	180.66	11	B2	7.87	9.43	4.72	37.146	
		12	B1	20.48	9.43	4.72	96.666	
								134.284
12	13	12	B1	20.48	11.55	5.78	118.374	
180.66	192.21	13	B1	29.57	11.55	5.78	170.915	
								289.289
13	14	13	B1	29.57	14.42	7.21	213.200	
192.21	206.63	14	B1	28.82	14.42	7.21	207.792	
								420.992

Il Direttore dei Lavori	L'Impresa	TOTALE ARTICOLO	4511.311

	COMPUTO DEI VOLUMI		Foglio n. 13

Volume dalla sezione 1 alla sezione 14

ARTICOLO			VOLUME
A RILEVATO	mc		1105.896
B STERRO	mc		4511.311

ALLEGATI AL COMPUTO METRICO ESTIMATIVO

IDRAULICA PIATTAFORMA STRADALE

elementi di raccolta

ANAS - SS.398 VIA VAL DI CORNIA - Bretella di collegamento btra l'Autostrada Tirrenica A12 e il Porto di Piombino - LOTTO 1 -Svincolo di Geodetica-Gagnc
PROGETTO ESECUTIVO: COMPUTO METRICO ESTIMATIVO - ALLEGATO: IDRAULICA PIATTAFORMA STRADALE - ELEMENTI DI RACCOLTA

POSIZIONE ED INDICAZIONE ELEMENTO					CANALETTA LATERALE			CANALETTA CENTRALE			CADITOIA MURO	CADITOIA VIADOTTO	CADITOIA SCATOLARE	POZZETTO SALTO/COLLEG.
POSIZIONE	ELEMENTO	PK INIZIO	PK FINE	L(m)	L(m)	imbocchi	caditoie	L(m)	imbocchi	caditoie	caditoie	caditoie	caditoie	chiusino
ELEMENTI SMALTIMENTO ACQUE - IMPIANTO N.1														
ASSE PRINCIPALE-CS	CANALETTA LATERALE	120,00	390,00	270,00	270,00									
ASSE PRINCIPALE-CD	CANALETTA LATERALE	120,00	420,00	300,00	300,00									
RAMPA 1	CANALETTA LATERALE	150,00	330,65	180,70	180,70									
RAMPA 3	CANALETTA LATERALE	0,00	180,00	180,00	180,00									
RAMPA 3	CADITOIA SU MURO	180,00	210,00	30,00										
RAMPA 3	CANALETTA LATERALE	210,00	270,00	60,00	60,00									
ASSE PRINCIPALE-CS	CANALETTA LATERALE	465,00	570,00	105,00	105,00									
ASSE PRINCIPALE-CS	CADITOIA SU MURO	570,00	585,00	15,00										
ASSE PRINCIPALE-CS	CANALETTA LATERALE	585,00	675,00	90,00	90,00									
ASSE PRINCIPALE-CD	CANALETTA LATERALE	525,00	690,00	165,00	165,00									
ASSE PRINCIPALE-CD	CADITOIA SU MURO	690,00	690,00	8,00										
ELEMENTI SMALTIMENTO ACQUE - IMPIANTO N.2														
SP40-CD	CANALETTA LATERALE	150,00	210,00	60,00	60,00									
SP40-CS	CANALETTA LATERALE	105,00	210,00	105,00	105,00									
RAMPA 4	CANALETTA LATERALE	0,00	165,00	165,00	165,00									
VIADOTTO SP.40	-		-	-								20		
ELEMENTI SMALTIMENTO ACQUE - IMPIANTO N.3														
SP40-CD	CANALETTA LATERALE	420,00	450,00	30,00	30,00									
SP40-CS	CANALETTA LATERALE	420,00	480,00	60,00	60,00									
RAMPA 1	CANALETTA LATERALE	15,00	150,00	135,00	135,00									
RAMPA 2	CANALETTA LATERALE	210,00	330,00	120,00	120,00									
VIADOTTO SP.40	-		-	-								22		
ELEMENTI SMALTIMENTO ACQUE - IMPIANTO N.4														
ASSE PRINCIPALE-CS	CANALETTA LATERALE	705,00	750,00	45,00	45,00									
ASSE PRINCIPALE-CD	CANALETTA LATERALE	735,00	915,00	180,00	180,00									
RAMPA 4	CANALETTA LATERALE	165,00	410,66	245,70	245,70									
RAMPA 2	CANALETTA LATERALE	0,00	210,00	210,00	210,00									
ASSE PRINCIPALE-CS	CANALETTA LATERALE	825,00	1 131,80	306,80	306,80									
ASSE PRINCIPALE-CD	CANALETTA LATERALE	1 005,00	1 131,80	126,80	126,80									

ANAS - SS.398 VIA VAL DI CORNIA - Bretella di collegamento btra l'Autostrada Tirrenica A12 e il Porto di Piombino - LOTTO 1 -Svincolo di Geodetica-Gagnc
PROGETTO ESECUTIVO: COMPUTO METRICO ESTIMATIVO - ALLEGATO: IDRAULICA PIATTAFORMA STRADALE - ELEMENTI DI RACCOLTA

POSIZIONE ED INDICAZIONE ELEMENTO					CANALETTA LATERALE			CANALETTA CENTRALE			CADITOIA MURO	CADITOIA VIADOTTO	CADITOIA SCATOLARE	POZZETTO SALTO/COLLEG.
POSIZIONE	ELEMENTO	PK INIZIO	PK FINE	L(m)	L(m)	imbocchi	caditoie	L(m)	imbocchi	caditoie	caditoie	caditoie	caditoie	chiusino
ELEMENTI SMALTIMENTO ACQUE - IMPIANTO N.5														
ASSE PRINCIPALE-CS	CANALETTA LATERALE	1 965,00	2 730,00	765,00	765,00									
ASSE PRINCIPALE-CD	CANALETTA LATERALE	1 950,00	2 595,00	645,00	645,00									
ASSE PRINCIPALE-CD	CANALETTA CENTRALE	2 595,00	2 730,00	135,00				135,00						
SCATOLARE	-		-	-									40	
ELEMENTI SMALTIMENTO ACQUE - IMPIANTO N.6														
ASSE PRINCIPALE-CS	CANALETTA LATERALE	2 730,00	2 880,00	150,00	150,00									
ASSE PRINCIPALE-CD	CANALETTA CENTRALE	2 730,00	2 835,00	105,00				105,00						
ASSE PRINCIPALE-CD	CANALETTA CENTRALE	2 595,00	2 730,00	135,00				135,00						
ASSE PRINCIPALE-CS	CANALETTA CENTRALE	2 835,00	3 000,00	165,00				165,00						
ASSE PRINCIPALE-CD	CANALETTA LATERALE	2 835,00	2 970,00	135,00	135,00									
ASSE PRINCIPALE-CD	CADITOIA SU MURO	2 970,00	3 000,00	30,00										
ELEMENTI SMALTIMENTO ACQUE - IMPIANTO N.7														
ASSE PRINCIPALE-CS	CANALETTA CENTRALE	3 090,00	3 135,00	45,00				45,00						
ASSE PRINCIPALE-CD	CANALETTA LATERALE	3 090,00	3 135,00	45,00										
VIADOTTO CORNIA	-		-	-								14		
ELEMENTI SMALTIMENTO ACQUE - IMPIANTO N.8														
SCATOLARE	-		-	-									120	
			TOTALI	**5 548,00**	**4 835,00**	**499**	**211**	**585,00**	**90**	**22**	**9**	**56**	**160**	**25**

ALLEGATI AL COMPUTO METRICO ESTIMATIVO

IDRAULICA PIATTAFORMA STRADALE

collettori fognari correnti

COLLETTORI FOGNARI CORRENTI - ASSE PRINCIPALE

SEZIONI TIPO PER COMPUTO

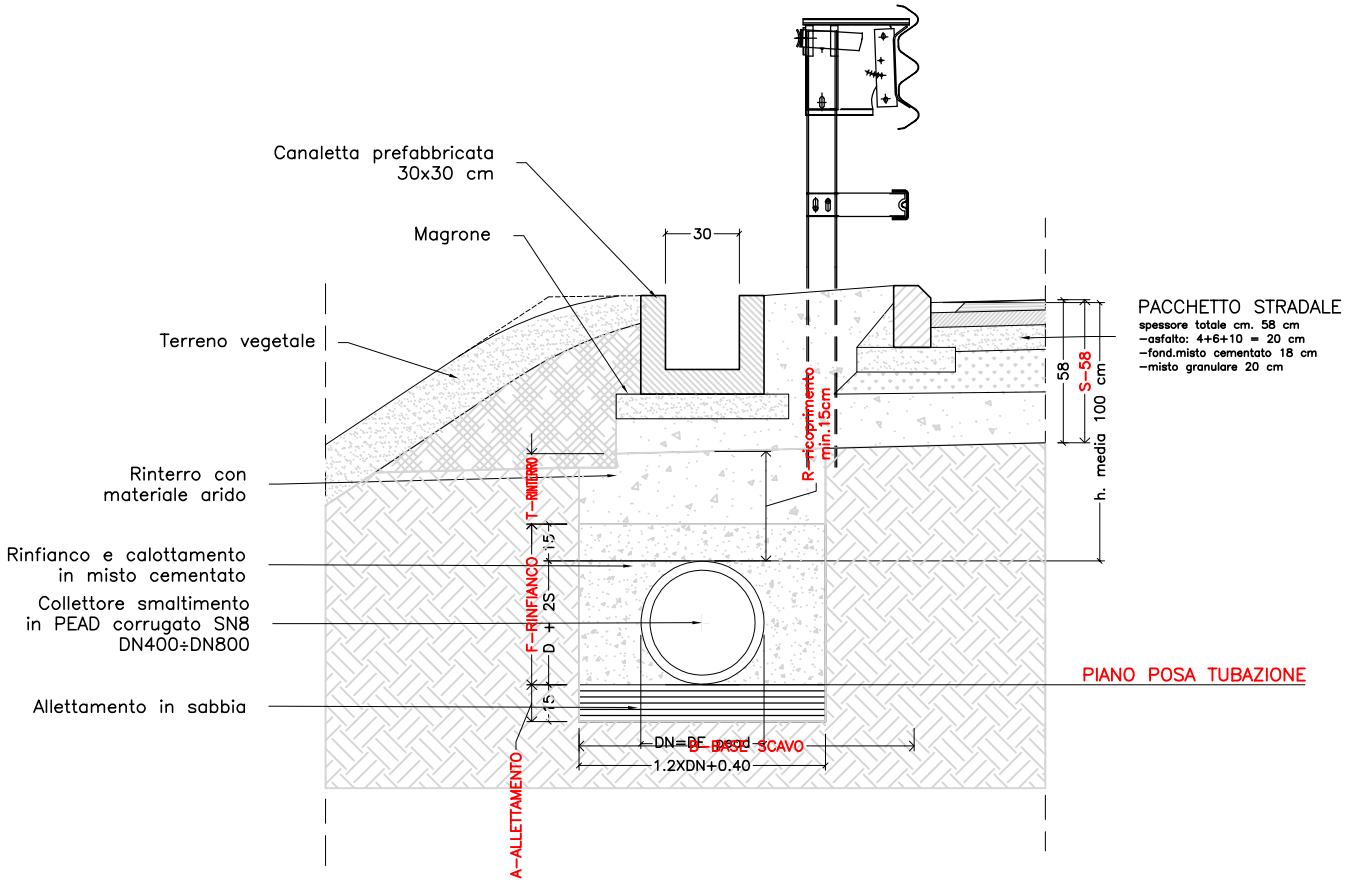

COLLETTORI FOGNARI CORRENTI - VIABILITA' SECONDARIA

SEZIONI TIPO PER COMPUTO

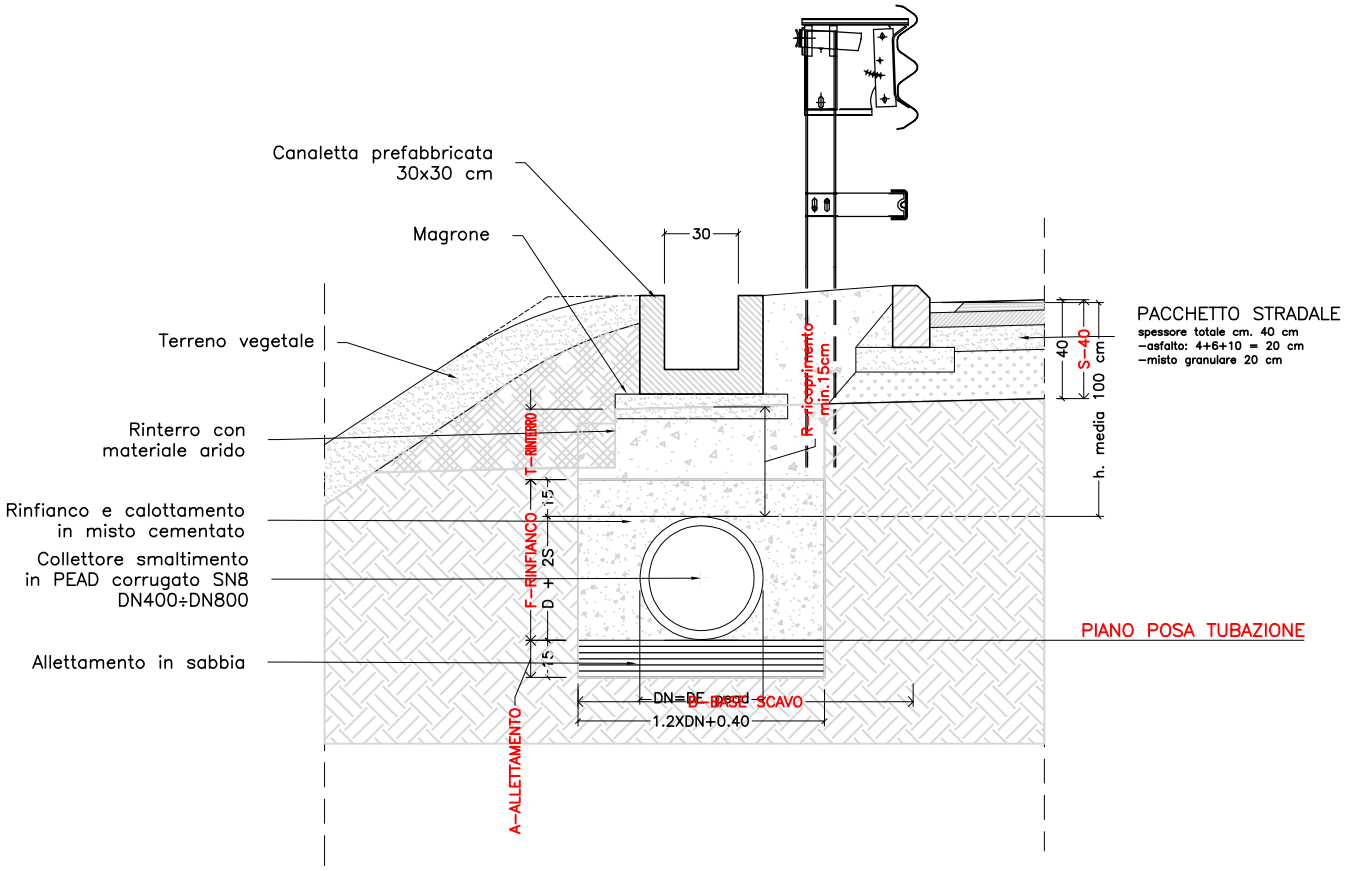

ANAS - SS.398 VIA VAL DI CORNIA - Bretella di collegamento btra l'Autostrada Tirrenica A12 e il Porto di Piombino - LOTTO 1 -Svincolo di Geodetica-Gagno
PROGETTO ESECUTIVO: COMPUTO METRICO ESTIMATIVO - ALLEGATO: IDRAULICA PIATTAFORMA STRADALE - COLLETTORI CORRENTI

PICCHETTI-TRATTO			QUOTA SCORRIMENTO (q.assolute m)			TUBAZIONE		VERIFICA SEZIONE DI POSA			SEZIONE DI POSA - COMPUTO					VOLUMI PER COMPUTO (mc)					TUBAZIONI IN PEAD							TUBAZIONI IN ACCIAIO			
monte	valle	Lunghezza	monte	valle	ΔH	Materiale	DN	P.med piano posa	S pac.strada	R ricoprimento	B b-scavo	H h.scavo	A h.allett.	F h.rinf.	T h.rintero	SCAVO	SCAVO>2m	ALLETAM.	RINFIANCO	RINTERRO	315	400	500	630	800	1000	1200	200	300	400	500
IMPIANTO N.1																															
RAMO 1-A																															
1-A-01	1-A-02	8,00	4,47	4,44	0,03	PEAD	400	1,40	0,58	0,42	0,880	0,97	0,15	0,55	0,27	6,83		1,06	2,87	1,90		8,00									
1-A-02	1-A-03	11,60	4,44	4,40	0,04	PEAD	400	1,40	0,58	0,42	0,880	0,97	0,15	0,55	0,27	9,90		1,53	4,16	2,76		11,60									
1-A-03	1-A-04	23,10	4,40	4,33	0,07	PEAD	400	1,40	0,58	0,42	0,880	0,97	0,15	0,55	0,27	19,72		3,05	8,28	5,49		23,10									
1-A-04	1-A-05	26,75	4,33	4,25	0,08	PEAD	400	1,40	0,58	0,42	0,880	0,97	0,15	0,55	0,27	22,83		3,53	9,59	6,36		26,75									
1-A-05	1-A-06	25,10	4,25	4,17	0,08	PEAD	400	1,40	0,58	0,42	0,880	0,97	0,15	0,55	0,27	21,43		3,31	8,99	5,96		25,10									
1-A-06	1-A-07	25,00	4,17	4,09	0,08	PEAD	400	1,40	0,58	0,42	0,880	0,97	0,15	0,55	0,27	21,34		3,30	8,96	5,94		25,00									
1-A-07	1-A-08	25,00	4,09	4,02	0,07	PEAD	400	1,40	0,58	0,42	0,880	0,97	0,15	0,55	0,27	21,34		3,30	8,96	5,94		25,00									
1-A-08	1-A-09	20,35	4,02	3,96	0,06	PEAD	400	1,40	0,58	0,42	0,880	0,97	0,15	0,55	0,27	17,37		2,69	7,29	4,84		20,35									
1-A-09	1-B-09	9,50	3,96	2,80	1,16	PEAD	400	1,40	0,58	0,42	0,880	0,97	0,15	0,55	0,27	8,11		1,25	3,40	2,26		9,50									
RAMO 1-B																															
1-B-01	1-B-02	25,00	8,54	7,55	0,99	PEAD	400	1,40	0,40	0,60	0,880	1,15	0,15	0,55	0,45	25,30		3,30	8,96	9,90		25,00									
1-B-02	1-B-03	17,60	7,55	6,70	0,85	PEAD	400	1,40	0,40	0,60	0,880	1,15	0,15	0,55	0,45	17,81		2,32	6,31	6,97		17,60									
1-B-03	1-B-04	6,60	6,70	6,37	0,33	PEAD	400	1,40	0,40	0,60	0,880	1,15	0,15	0,55	0,45	6,68		0,87	2,37	2,61		6,60									
1-B-04	1-B-05	22,70	6,37	5,23	1,14	PEAD	400	1,40	0,40	0,60	0,880	1,15	0,15	0,55	0,45	22,97		3,00	8,13	8,99		22,70									
1-B-05	1-B-06	2,50	5,23	5,11	0,12	PEAD	400	1,40	0,40	0,60	0,880	1,15	0,15	0,55	0,45	2,53		0,33	0,90	0,99		2,50									
1-B-06	1-B-07	25,00	5,11	3,97	1,14	PEAD	400	1,40	0,40	0,60	0,880	1,15	0,15	0,55	0,45	25,30		3,30	8,96	9,90		25,00									
1-B-07	1-B-08	25,00	3,97	3,21	0,76	PEAD	400	1,40	0,40	0,60	0,880	1,15	0,15	0,55	0,45	25,30		3,30	8,96	9,90		25,00									
1-B-08	1-B-09	28,70	3,21	2,80	0,41	PEAD	400	1,40	0,40	0,60	0,880	1,15	0,15	0,55	0,45	29,04		3,79	10,28	11,37		28,70									
1-B-09	1-B-10	21,40	2,80	2,74	0,06	PEAD	500	1,50	0,58	0,42	1,000	1,07	0,15	0,65	0,27	22,90		3,21	9,71	5,78			21,40								
1-B-10	1-B-11	24,70	2,74	2,67	0,07	PEAD	630	1,63	0,58	0,42	1,156	1,20	0,15	0,78	0,27	34,26		4,28	14,57	7,71				24,70							
1-B-11	1-B-12	25,00	2,67	2,60	0,07	PEAD	630	1,63	0,58	0,42	1,156	1,20	0,15	0,78	0,27	34,68		4,34	14,75	7,80				25,00							
1-B-12	1-B-13	25,00	2,60	2,52	0,08	PEAD	630	1,63	0,58	0,42	1,156	1,20	0,15	0,78	0,27	34,68		4,34	14,75	7,80				25,00							
1-B-13	1-B-14	25,00	2,52	2,45	0,07	PEAD	630	1,63	0,58	0,42	1,156	1,20	0,15	0,78	0,27	34,68		4,34	14,75	7,80				25,00							
1-B-14	1-B-15	25,00	2,45	2,37	0,08	PEAD	630	1,63	0,58	0,42	1,156	1,20	0,15	0,78	0,27	34,68		4,34	14,75	7,80				25,00							
1-B-15	1-B-16	25,00	2,37	2,30	0,07	PEAD	630	1,63	0,58	0,42	1,156	1,20	0,15	0,78	0,27	34,68		4,34	14,75	7,80				25,00							
1-B-16	1-B-17	25,00	2,30	2,22	0,08	PEAD	630	1,63	0,58	0,42	1,156	1,20	0,15	0,78	0,27	34,68		4,34	14,75	7,80				25,00							
1-B-17	1-B-18	36,80	2,22	2,11	0,11	PEAD	630	1,63	0,58	0,42	1,156	1,20	0,15	0,78	0,27	51,05		6,38	21,71	11,49				36,80							
1-B-18	1-B-19	25,00	2,11	2,04	0,07	PEAD	630	1,63	0,58	0,42	1,156	1,20	0,15	0,78	0,27	34,68		4,34	14,75	7,80				25,00							
1-B-19	1-B-20	25,00	2,04	1,96	0,08	PEAD	630	1,63	0,58	0,42	1,156	1,20	0,15	0,78	0,27	34,68		4,34	14,75	7,80				25,00							
1-B-20	1-B-21	25,00	1,96	1,89	0,07	PEAD	800	1,80	0,58	0,42	1,360	1,37	0,15	0,95	0,27	46,58		5,10	19,73	9,18					25,00						
1-B-21	1-B-22	25,00	1,89	1,81	0,08	PEAD	800	1,80	0,58	0,42	1,360	1,37	0,15	0,95	0,27	46,58		5,10	19,73	9,18					25,00						
1-B-22	1-B-23	25,00	1,81	1,73	0,08	PEAD	800	1,80	0,58	0,42	1,360	1,37	0,15	0,95	0,27	46,58		5,10	19,73	9,18					25,00						
1-B-23	1-B-24	25,00	1,73	1,66	0,07	PEAD	800	1,80	0,58	0,42	1,360	1,37	0,15	0,95	0,27	46,58		5,10	19,73	9,18					25,00						
1-B-24	1-B-25	25,15	1,66	1,62	0,04	PEAD	800	1,80	0,58	0,42	1,360	1,37	0,15	0,95	0,27	46,86		5,13	19,85	9,24					25,15						
1-B-25	1-D-20	20,35	1,62	1,62	0,00	PEAD	800	1,80	0,58	0,42	1,360	1,37	0,15	0,95	0,27	37,92		4,15	16,06	7,47					20,35						
RAMO 1-C																															
1-C-01	1-C-02	25,00	4,42	4,34	0,08	PEAD	400	1,40	0,58	0,42	0,880	0,97	0,15	0,55	0,27	21,34		3,30	8,96	5,94		25,00									
1-C-02	1-C-03	25,00	4,34	4,26	0,08	PEAD	400	1,40	0,58	0,42	0,880	0,97	0,15	0,55	0,27	21,34		3,30	8,96	5,94		25,00									
1-C-03	1-C-04	24,45	4,26	4,19	0,07	PEAD	400	1,40	0,58	0,42	0,880	0,97	0,15	0,55	0,27	20,87		3,23	8,76	5,81		24,45									
1-C-04	1-C-05	27,45	4,19	4,10	0,09	PEAD	400	1,40	0,58	0,42	0,880	0,97	0,15	0,55	0,27	23,43		3,62	9,84	6,52		27,45									
1-C-05	1-C-06	8,50	4,10	4,07	0,03	PEAD	400	1,40	0,58	0,42	0,880	0,97	0,15	0,55	0,27	7,26		1,12	3,05	2,02		8,50									
1-C-06	1-C-07	8,40	4,07	4,05	0,02	PEAD	400	1,40	0,58	0,42	0,880	0,97	0,15	0,55	0,27	7,17		1,11	3,01	2,00		8,40									
1-C-07	1-C-08	25,00	4,05	3,97	0,08	PEAD	400	1,40	0,58	0,42	0,880	0,97	0,15	0,55	0,27	21,34		3,30	8,96	5,94		25,00									
1-C-08	1-C-09	25,00	3,97	3,85	0,12	PEAD	400	1,40	0,58	0,42	0,880	0,97	0,15	0,55	0,27	21,34		3,30	8,96	5,94		25,00									
1-C-09	1-C-10	24,90	3,85	3,81	0,04	PEAD	500	1,50	0,58	0,42	1,000	1,07	0,15	0,65	0,27	26,64		3,74	11,30	6,72			24,90								
1-C-10	1-C-11	28,80	3,81	3,74	0,07	PEAD	500	1,50	0,58	0,42	1,000	1,07	0,15	0,65	0,27	30,82		4,32	13,07	7,78			28,80								
1-C-11	1-D-06	10,15	3,74	3,50	0,24	PEAD	500	1,50	0,58	0,42	1,000	1,07	0,15	0,65	0,27	10,86		1,52	4,60	2,74			10,15								

ANAS - SS.398 VIA VAL DI CORNIA - Bretella di collegamento btra l'Autostrada Tirrenica A12 e il Porto di Piombino - LOTTO 1 -Svincolo di Geodetica-Gagno
PROGETTO ESECUTIVO: COMPUTO METRICO ESTIMATIVO - ALLEGATO: IDRAULICA PIATTAFORMA STRADALE - COLLETTORI CORRENTI

PICCHETTI-TRATTO			QUOTA SCORRIMENTO (q.assolute m)			TUBAZIONE		VERIFICA SEZIONE DI POSA			SEZIONE DI POSA - COMPUTO					VOLUMI PER COMPUTO (mc)					TUBAZIONI IN PEAD							TUBAZIONI IN ACCIAIO			
monte	valle	Lunghezza	monte	valle	ΔH	Materiale	DN	P.med piano posa	S pac.strada	R ricoprimento	B b-scavo	H h.scavo	A h.allett.	F h.rinf.	T h.rintero	SCAVO	SCAVO>2m	ALLETAM.	RINFIANCO	RINTERRO	315	400	500	630	800	1000	1200	200	300	400	500
RAMO 1-D																															
1-D-01	1-D-02	17,65	6,84	6,80	0,04	PEAD	500	1,50	0,40	0,60	1,000	1,25	0,15	0,65	0,45	22,06		2,65	8,01	7,94			17,65								
1-D-02	1-D-03	20,85	6,80	6,54	0,26	PEAD	500	1,50	0,40	0,60	1,000	1,25	0,15	0,65	0,45	26,06		3,13	9,46	9,38			20,85								
1-D-03	1-D-04	24,30	6,54	6,04	0,50	PEAD	500	1,50	0,40	0,60	1,000	1,25	0,15	0,65	0,45	30,38		3,65	11,02	10,94			24,30								
1-D-04	1-D-05	29,00	6,04	5,20	0,84	PEAD	500	1,50	0,40	0,60	1,000	1,25	0,15	0,65	0,45	36,25		4,35	13,16	13,05			29,00								
1-D-05	1-D-06	24,85	5,20	3,50	1,70	PEAD	500	1,50	0,40	0,60	1,000	1,25	0,15	0,65	0,45	31,06		3,73	11,27	11,18			24,85								
1-D-06	1-D-07	25,00	3,50	3,40	0,10	PEAD	630	1,63	0,58	0,42	1,156	1,20	0,15	0,78	0,27	34,68		4,34	14,75	7,80				25,00							
1-D-07	1-D-08	25,00	3,40	3,32	0,08	PEAD	630	1,63	0,58	0,42	1,156	1,20	0,15	0,78	0,27	34,68		4,34	14,75	7,80				25,00							
1-D-08	1-D-09	25,00	3,32	3,01	0,31	PEAD	630	1,63	0,58	0,42	1,156	1,20	0,15	0,78	0,27	34,68		4,34	14,75	7,80				25,00							
1-D-09	1-D-10	25,00	3,01	2,94	0,07	PEAD	630	1,63	0,58	0,42	1,156	1,20	0,15	0,78	0,27	34,68		4,34	14,75	7,80				25,00							
1-D-10	1-D-11	25,00	2,94	2,86	0,08	PEAD	630	1,63	0,58	0,42	1,156	1,20	0,15	0,78	0,27	34,68		4,34	14,75	7,80				25,00							
1-D-11	1-D-12	25,00	2,86	2,79	0,07	PEAD	630	1,63	0,58	0,42	1,156	1,20	0,15	0,78	0,27	34,68		4,34	14,75	7,80				25,00							
1-D-12	1-D-13	25,00	2,79	2,71	0,08	PEAD	630	1,63	0,58	0,42	1,156	1,20	0,15	0,78	0,27	34,68		4,34	14,75	7,80				25,00							
1-D-13	1-D-14	25,00	2,71	2,64	0,07	PEAD	630	1,63	0,58	0,42	1,156	1,20	0,15	0,78	0,27	34,68		4,34	14,75	7,80				25,00							
1-D-14	1-D-15	25,00	2,64	2,56	0,08	PEAD	630	1,63	0,58	0,42	1,156	1,20	0,15	0,78	0,27	34,68		4,34	14,75	7,80				25,00							
1-D-15	1-D-16	25,00	2,56	2,21	0,35	PEAD	630	1,63	0,58	0,42	1,156	1,20	0,15	0,78	0,27	34,68		4,34	14,75	7,80				25,00							
1-D-16	1-D-17	25,00	2,21	1,98	0,23	PEAD	630	1,63	0,58	0,42	1,156	1,20	0,15	0,78	0,27	34,68		4,34	14,75	7,80				25,00							
1-D-17	1-D-18	25,00	1,98	1,82	0,16	PEAD	630	1,63	0,58	0,42	1,156	1,20	0,15	0,78	0,27	34,68		4,34	14,75	7,80				25,00							
1-D-18	1-D-19	25,00	1,82	1,62	0,20	PEAD	630	1,63	0,58	0,42	1,156	1,20	0,15	0,78	0,27	34,68		4,34	14,75	7,80				25,00							
1-D-19	1-D-20	7,65	1,62	1,60	0,02	PEAD	800	1,80	0,58	0,42	1,360	1,37	0,15	0,95	0,27	14,25		1,56	6,04	2,81					7,65						

ANAS - SS.398 VIA VAL DI CORNIA - Bretella di collegamento btra l'Autostrada Tirrenica A12 e il Porto di Piombino - LOTTO 1 -Svincolo di Geodetica-Gagno
PROGETTO ESECUTIVO: COMPUTO METRICO ESTIMATIVO - ALLEGATO: IDRAULICA PIATTAFORMA STRADALE - COLLETTORI CORRENTI

PICCHETTI-TRATTO			QUOTA SCORRIMENTO (q.assolute m)			TUBAZIONE		VERIFICA SEZIONE DI POSA			SEZIONE DI POSA - COMPUTO					VOLUMI PER COMPUTO (mc)					TUBAZIONI IN PEAD							TUBAZIONI IN ACCIAIO			
monte	valle	Lunghezza	monte	valle	ΔH	Materiale	DN	P.med piano posa	S pac.strada	R ricoprimento	B b-scavo	H h.scavo	A h.allett.	F h.rinf.	T h.rintero	SCAVO	SCAVO>2m	ALLETAM.	RINFIANCO	RINTERRO	315	400	500	630	800	1000	1200	200	300	400	500
IMPIANTO N.2																															
RAMO 2-A																															
2-A-01	2-A-02	12,05	12,20	12,03	0,17	ACCIAIO	200																					12,05			
2-A-02	2-A-03	10,00	12,03	11,88	0,15	ACCIAIO	200																					10,00			
2-A-03	2-A-04	10,00	11,88	11,68	0,20	ACCIAIO	200																					10,00			
2-A-04	2-A-05	10,00	11,68	11,00	0,68	ACCIAIO	200																					10,00			
2-A-05	2-A-06	10,00	11,00	10,71	0,29	ACCIAIO	200																					10,00			
2-A-06	2-A-07	10,00	10,71	10,42	0,29	ACCIAIO	200																					10,00			
2-A-07	2-A-08	10,00	10,42	10,14	0,28	ACCIAIO	200																					10,00			
2-A-08	2-A-09	10,00	10,14	9,85	0,29	ACCIAIO	200																					10,00			
2-A-09	2-A-10	10,00	9,85	9,57	0,28	ACCIAIO	200																					10,00			
2-A-10	2-A-11	8,10	9,57	9,30	0,27	ACCIAIO	200																					8,10			
2-A-11	2-A-11b	10,40	9,30	8,22	1,08	PEAD	400	1,40	0,40	0,60	0,880	1,15	0,15	0,55	0,45	10,52		1,37	3,73	4,12		10,40									
2-A-11b	2-A-12	25,00	8,22	6,43	1,79	PEAD	400	1,40	0,40	0,60	0,880	1,15	0,15	0,55	0,45	25,30		3,30	8,96	9,90		25,00									
2-A-12	2-A-13	25,00	6,43	4,56	1,87	PEAD	400	1,40	0,40	0,60	0,880	1,15	0,15	0,55	0,45	25,30		3,30	8,96	9,90		25,00									
2-A-13	2-A-14	25,00	4,56	3,34	1,22	PEAD	400	1,40	0,40	0,60	0,880	1,15	0,15	0,55	0,45	25,30		3,30	8,96	9,90		25,00									
2-A-14	2-C-09	11,40	3,34	3,25	0,09	PEAD	400	1,40	0,40	0,60	0,880	1,15	0,15	0,55	0,45	11,54		1,50	4,09	4,51		11,40									
RAMO 2-B																															
2-B-01	2-B-02	9,65	12,20	12,03	0,17	ACCIAIO	200	1,20	0,40	0,60	0,640	0,95	0,15	0,35	0,45	5,87		0,93	1,86	2,78								9,65			
2-B-02	2-B-03	10,00	12,03	11,88	0,15	ACCIAIO	200	1,20	0,40	0,60	0,640	0,95	0,15	0,35	0,45	6,08		0,96	1,93	2,88								10,00			
2-B-03	2-B-04	10,00	11,88	11,68	0,20	ACCIAIO	200	1,20	0,40	0,60	0,640	0,95	0,15	0,35	0,45	6,08		0,96	1,93	2,88								10,00			
2-B-04	2-B-05	10,00	11,68	11,00	0,68	ACCIAIO	200	1,20	0,40	0,60	0,640	0,95	0,15	0,35	0,45	6,08		0,96	1,93	2,88								10,00			
2-B-05	2-B-06	10,00	11,00	10,71	0,29	ACCIAIO	200	1,20	0,40	0,60	0,640	0,95	0,15	0,35	0,45	6,08		0,96	1,93	2,88								10,00			
2-B-06	2-B-07	10,00	10,71	10,42	0,29	ACCIAIO	200	1,20	0,40	0,60	0,640	0,95	0,15	0,35	0,45	6,08		0,96	1,93	2,88								10,00			
2-B-07	2-B-08	10,00	10,42	10,14	0,28	ACCIAIO	200	1,20	0,40	0,60	0,640	0,95	0,15	0,35	0,45	6,08		0,96	1,93	2,88								10,00			
2-B-08	2-B-09	10,00	10,14	9,85	0,29	ACCIAIO	200	1,20	0,40	0,60	0,640	0,95	0,15	0,35	0,45	6,08		0,96	1,93	2,88								10,00			
2-B-09	2-B-10	10,00	9,85	9,57	0,28	ACCIAIO	200	1,20	0,40	0,60	0,640	0,95	0,15	0,35	0,45	6,08		0,96	1,93	2,88								10,00			
2-B-10	2-B-11	10,00	9,57	8,88	0,69	ACCIAIO	200	1,20	0,40	0,60	0,640	0,95	0,15	0,35	0,45	6,08		0,96	1,93	2,88								10,00			
2-B-11	2-B-12	25,90	8,88	7,10	1,78	PEAD	400	1,40	0,40	0,60	0,880	1,15	0,15	0,55	0,45	26,21		3,42	9,28	10,26		25,90									
2-B-12	2-B-13	27,60	7,10	5,60	1,50	PEAD	400	1,40	0,40	0,60	0,880	1,15	0,15	0,55	0,45	27,93		3,64	9,89	10,93		27,60									
2-B-13	2-C-07	6,70	5,60	5,19	0,41	PEAD	400	1,40	0,40	0,60	0,880	1,15	0,15	0,55	0,45	6,78		0,88	2,40	2,65		6,70									
RAMO 2-C																															
2-C-01	2-C-02	14,90	8,81	8,61	0,20	PEAD	400	1,40	0,40	0,60	0,880	1,15	0,15	0,55	0,45	15,08		1,97	5,34	5,90		14,90									
2-C-02	2-C-03	19,80	8,61	8,34	0,27	PEAD	400	1,40	0,40	0,60	0,880	1,15	0,15	0,55	0,45	20,04		2,61	7,10	7,84		19,80									
2-C-03	2-C-04	25,00	8,34	8,00	0,34	PEAD	400	1,40	0,40	0,60	0,880	1,15	0,15	0,55	0,45	25,30		3,30	8,96	9,90		25,00									
2-C-04	2-C-05	25,00	8,00	7,19	0,81	PEAD	400	1,40	0,40	0,60	0,880	1,15	0,15	0,55	0,45	25,30		3,30	8,96	9,90		25,00									
2-C-05	2-C-06	25,00	7,19	5,91	1,28	PEAD	400	1,40	0,40	0,60	0,880	1,15	0,15	0,55	0,45	25,30		3,30	8,96	9,90		25,00									
2-C-06	2-C-07	12,65	5,91	5,19	0,72	PEAD	400	1,40	0,40	0,60	0,880	1,15	0,15	0,55	0,45	12,80		1,67	4,53	5,01		12,65									
2-C-07	2-C-08	12,55	5,19	4,63	0,56	PEAD	500	1,50	0,40	0,60	1,000	1,25	0,15	0,65	0,45	15,69		1,88	5,69	5,65			12,55								
2-C-08	2-C-09	21,90	4,63	3,25	1,38	PEAD	500	1,50	0,40	0,60	1,000	1,25	0,15	0,65	0,45	27,38		3,29	9,93	9,86			21,90								

ANAS - SS.398 VIA VAL DI CORNIA - Bretella di collegamento btra l'Autostrada Tirrenica A12 e il Porto di Piombino - LOTTO 1 -Svincolo di Geodetica-Gagno
PROGETTO ESECUTIVO: COMPUTO METRICO ESTIMATIVO - ALLEGATO: IDRAULICA PIATTAFORMA STRADALE - COLLETTORI CORRENTI

PICCHETTI-TRATTO			QUOTA SCORRIMENTO (q.assolute m)			TUBAZIONE		VERIFICA SEZIONE DI POSA			SEZIONE DI POSA - COMPUTO					VOLUMI PER COMPUTO (mc)					TUBAZIONI IN PEAD							TUBAZIONI IN ACCIAIO			
monte	valle	Lunghezza	monte	valle	ΔH	Materiale	DN	P.med piano posa	S pac.strada	R ricoprimento	B b-scavo	H h.scavo	A h.allett.	F h.rinf.	T h.rintero	SCAVO	SCAVO>2m	ALLETAM.	RINFIANCO	RINTERRO	315	400	500	630	800	1000	1200	200	300	400	500
IMPIANTO N.3																															
RAMO 3-A																															
3-A-01	3-A-02	10,00	12,00	11,83	0,17	ACCIAIO	200																					10,00			
3-A-02	3-A-03	10,00	11,83	11,66	0,17	ACCIAIO	200																					10,00			
3-A-03	3-A-04	10,00	11,66	11,49	0,17	ACCIAIO	200																					10,00			
3-A-04	3-A-05	10,00	11,49	11,32	0,17	ACCIAIO	200																					10,00			
3-A-05	3-A-06	10,00	11,32	11,15	0,17	ACCIAIO	200																					10,00			
3-A-06	3-A-07	10,00	11,15	10,66	0,49	ACCIAIO	200																					10,00			
3-A-07	3-A-08	10,00	10,66	10,13	0,53	ACCIAIO	200																					10,00			
3-A-08	3-A-09	10,00	10,13	9,63	0,50	ACCIAIO	200																					10,00			
3-A-09	3-A-10	10,00	9,63	9,12	0,51	ACCIAIO	200																					10,00			
3-A-10	3-A-11	10,00	9,12	8,61	0,51	ACCIAIO	200																					10,00			
3-A-11	3-A-12	9,05	8,61	8,15	0,46	ACCIAIO	200																					9,05			
3-A-12	3-A-13	25,00	8,15	6,47	1,68	PEAD	400	1,40	0,40	0,60	0,880	1,15	0,15	0,55	0,45	25,30		3,30	8,96	9,90		25,00									
3-A-13	3-A-14	25,00	6,47	4,48	1,99	PEAD	400	1,40	0,40	0,60	0,880	1,15	0,15	0,55	0,45	25,30		3,30	8,96	9,90		25,00									
3-A-14	3-C-04	9,30	4,48	4,40	0,08	PEAD	400	1,40	0,40	0,60	0,880	1,15	0,15	0,55	0,45	9,41		1,23	3,33	3,68		9,30									
RAMO 3-B																															
3-B-01	3-B-02	10,00	12,05	11,97	0,08	ACCIAIO	200																					10,00			
3-B-02	3-B-03	10,00	11,97	11,89	0,08	ACCIAIO	200																					10,00			
3-B-03	3-B-04	10,00	11,89	11,86	0,03	ACCIAIO	200																					10,00			
3-B-04	3-B-05	10,00	11,86	11,42	0,44	ACCIAIO	200																					10,00			
3-B-05	3-B-06	10,00	11,42	11,17	0,25	ACCIAIO	200																					10,00			
3-B-06	3-B-07	10,00	11,17	10,77	0,40	ACCIAIO	200																					10,00			
3-B-07	3-B-08	10,00	10,77	10,36	0,41	ACCIAIO	200																					10,00			
3-B-08	3-B-09	10,00	10,36	9,94	0,42	ACCIAIO	200																					10,00			
3-B-09	3-B-10	10,00	9,94	9,36	0,58	ACCIAIO	200																					10,00			
3-B-10	3-B-11	10,00	9,36	8,77	0,59	ACCIAIO	200																					10,00			
3-B-11	3-B-12	8,30	8,77	8,28	0,49	ACCIAIO	200																					8,30			
3-B-12	3-B-13	28,00	8,28	6,62	1,66	PEAD	400	1,40	0,40	0,60	0,880	1,15	0,15	0,55	0,45	28,34		3,70	10,03	11,09		28,00									
3-B-13	3-D-03	9,30	6,62	6,12	0,50	PEAD	400	1,40	0,40	0,60	0,880	1,15	0,15	0,55	0,45	9,41		1,23	3,33	3,68		9,30									
RAMO 3-C																															
3-C-01	3-C-02	15,40	6,51	5,94	0,57	PEAD	500	1,50	0,40	0,60	1,000	1,25	0,15	0,65	0,45	19,25		2,31	6,99	6,93			15,40								
3-C-02	3-C-03	25,00	5,94	5,62	0,32	PEAD	500	1,50	0,40	0,60	1,000	1,25	0,15	0,65	0,45	31,25		3,75	11,34	11,25			25,00								
3-C-03	3-C-04	26,80	5,62	4,40	1,22	PEAD	500	1,50	0,40	0,60	1,000	1,25	0,15	0,65	0,45	33,50		4,02	12,16	12,06			26,80								
3-C-04	3-C-05	23,30	4,40	3,35	1,05	PEAD	500	1,50	0,40	0,60	1,000	1,25	0,15	0,65	0,45	29,13		3,50	10,57	10,49			23,30								
3-C-05	3-C-06	25,00	3,35	2,77	0,58	PEAD	500	1,50	0,40	0,60	1,000	1,25	0,15	0,65	0,45	31,25		3,75	11,34	11,25			25,00								
3-C-06	3-D-06	15,30	2,77	2,75	0,02	PEAD	500	1,50	0,40	0,60	1,000	1,25	0,15	0,65	0,45	19,13		2,30	6,94	6,89			15,30								
RAMO 3-D																															
3-D-01	3-D-02	20,70	7,65	7,04	0,61	PEAD	400	1,40	0,40	0,60	0,880	1,15	0,15	0,55	0,45	20,95		2,73	7,42	8,20		20,70									
3-D-02	3-D-03	31,00	7,04	6,12	0,92	PEAD	400	1,40	0,40	0,60	0,880	1,15	0,15	0,55	0,45	31,37		4,09	11,11	12,28		31,00									
3-D-03	3-D-04	19,30	6,12	4,78	1,34	PEAD	500	1,50	0,40	0,60	1,000	1,25	0,15	0,65	0,45	24,13		2,90	8,76	8,69			19,30								
3-D-04	3-D-05	24,60	4,78	3,60	1,18	PEAD	500	1,50	0,40	0,60	1,000	1,25	0,15	0,65	0,45	30,75		3,69	11,16	11,07			24,60								
3-D-05	3-D-06	26,70	3,60	2,75	0,85	PEAD	500	1,50	0,40	0,60	1,000	1,25	0,15	0,65	0,45	33,38		4,01	12,11	12,02			26,70								

ANAS - SS.398 VIA VAL DI CORNIA - Bretella di collegamento btra l'Autostrada Tirrenica A12 e il Porto di Piombino - LOTTO 1 -Svincolo di Geodetica-Gagno
PROGETTO ESECUTIVO: COMPUTO METRICO ESTIMATIVO - ALLEGATO: IDRAULICA PIATTAFORMA STRADALE - COLLETTORI CORRENTI

PICCHETTI-TRATTO			QUOTA SCORRIMENTO (q.assolute m)			TUBAZIONE		VERIFICA SEZIONE DI POSA			SEZIONE DI POSA - COMPUTO					VOLUMI PER COMPUTO (mc)					TUBAZIONI IN PEAD							TUBAZIONI IN ACCIAIO			
monte	valle	Lunghezza	monte	valle	ΔH	Materiale	DN	P.med piano posa	S pac.strada	R ricoprimento	B b-scavo	H h.scavo	A h.allett.	F h.rinf.	T h.rintero	SCAVO	SCAVO>2m	ALLETAM.	RINFIANCO	RINTERRO	315	400	500	630	800	1000	1200	200	300	400	500
IMPIANTO N.4																															
RAMO 4-A																															
4-A-01	4-A-02	25,00	7,46	6,47	0,99	PEAD	500	1,50	0,40	0,60	1,000	1,25	0,15	0,65	0,45	31,25		3,75	11,34	11,25			25,00								
4-A-02	4-A-03	25,10	6,47	5,47	1,00	PEAD	500	1,50	0,40	0,60	1,000	1,25	0,15	0,65	0,45	31,38		3,77	11,39	11,30			25,10								
4-A-03	4-A-04	24,85	5,47	4,48	0,99	PEAD	500	1,50	0,40	0,60	1,000	1,25	0,15	0,65	0,45	31,06		3,73	11,27	11,18			24,85								
4-A-04	4-A-05	21,70	4,48	4,20	0,28	PEAD	500	1,50	0,40	0,60	1,000	1,25	0,15	0,65	0,45	27,13		3,26	9,84	9,77			21,70								
4-A-05	4-B-01	10,30	4,20	4,08	0,12	PEAD	500	1,50	0,58	0,42	1,000	1,07	0,15	0,65	0,27	11,02		1,55	4,67	2,78			10,30								
RAMO 4-B																															
4-B-01	4-B-02	14,50	3,40	3,33	0,07	PEAD	630	1,63	0,58	0,42	1,156	1,20	0,15	0,78	0,27	20,11		2,51	8,55	4,53				14,50							
4-B-02	4-B-03	25,40	3,33	3,20	0,13	PEAD	800	1,80	0,58	0,42	1,360	1,37	0,15	0,95	0,27	47,33		5,18	20,05	9,33					25,40						
RAMO 4-C																															
4-C-01	4-C-02	25,00	5,37	5,24	0,13	PEAD	400	1,40	0,58	0,42	0,880	0,97	0,15	0,55	0,27	21,34		3,30	8,96	5,94		25,00									
4-C-02	4-C-03	24,85	5,24	5,12	0,12	PEAD	400	1,40	0,58	0,42	0,880	0,97	0,15	0,55	0,27	21,21		3,28	8,90	5,90		24,85									
4-C-03	4-C-04	25,00	5,12	5,00	0,12	PEAD	400	1,40	0,58	0,42	0,880	0,97	0,15	0,55	0,27	21,34		3,30	8,96	5,94		25,00									
4-C-04	4-C-05	25,15	5,00	4,88	0,12	PEAD	400	1,40	0,58	0,42	0,880	0,97	0,15	0,55	0,27	21,47		3,32	9,01	5,98		25,15									
4-C-05	4-C-06	25,00	4,88	4,77	0,11	PEAD	400	1,40	0,58	0,42	0,880	0,97	0,15	0,55	0,27	21,34		3,30	8,96	5,94		25,00									
4-C-06	4-C-07	25,00	4,77	4,65	0,12	PEAD	400	1,40	0,58	0,42	0,880	0,97	0,15	0,55	0,27	21,34		3,30	8,96	5,94		25,00									
4-C-07	4-C-08	25,00	4,65	4,60	0,05	PEAD	500	1,50	0,58	0,42	1,000	1,07	0,15	0,65	0,27	26,75		3,75	11,34	6,75			25,00								
4-C-08	4-C-09	25,00	4,60	4,55	0,05	PEAD	500	1,50	0,58	0,42	1,000	1,07	0,15	0,65	0,27	26,75		3,75	11,34	6,75			25,00								
4-C-09	4-C-10	25,00	4,55	4,50	0,05	PEAD	500	1,50	0,58	0,42	1,000	1,07	0,15	0,65	0,27	26,75		3,75	11,34	6,75			25,00								
4-C-10	4-C-11	25,00	4,50	4,43	0,07	PEAD	500	1,50	0,58	0,42	1,000	1,07	0,15	0,65	0,27	26,75		3,75	11,34	6,75			25,00								
4-C-11	4-C-12	25,00	4,43	4,37	0,06	PEAD	500	1,50	0,58	0,42	1,000	1,07	0,15	0,65	0,27	26,75		3,75	11,34	6,75			25,00								
4-C-12	4-C-13	25,00	4,37	4,30	0,07	PEAD	500	1,50	0,58	0,42	1,000	1,07	0,15	0,65	0,27	26,75		3,75	11,34	6,75			25,00								
4-C-13	4-C-14	25,00	4,30	4,26	0,04	PEAD	500	1,50	0,58	0,42	1,000	1,07	0,15	0,65	0,27	26,75		3,75	11,34	6,75			25,00								
4-C-14	4-C-15	25,00	4,26	4,23	0,03	PEAD	630	1,63	0,58	0,42	1,156	1,20	0,15	0,78	0,27	34,68		4,34	14,75	7,80				25,00							
4-C-15	4-A-05	28,60	4,23	4,20	0,03	PEAD	630	1,63	0,58	0,42	1,156	1,20	0,15	0,78	0,27	39,67		4,96	16,87	8,93				28,60							
RAMO 4-D																															
4-D-01	4-D-02	25,00	5,35	5,23	0,12	PEAD	400	1,40	0,58	0,42	0,880	0,97	0,15	0,55	0,27	21,34		3,30	8,96	5,94		25,00									
4-D-02	4-D-03	25,40	5,23	5,12	0,11	PEAD	400	1,40	0,58	0,42	0,880	0,97	0,15	0,55	0,27	21,68		3,35	9,10	6,04		25,40									
4-D-03	4-D-04	24,85	5,12	4,99	0,13	PEAD	400	1,40	0,58	0,42	0,880	0,97	0,15	0,55	0,27	21,21		3,28	8,90	5,90		24,85									
4-D-04	4-D-05	25,15	4,99	4,87	0,12	PEAD	400	1,40	0,58	0,42	0,880	0,97	0,15	0,55	0,27	21,47		3,32	9,01	5,98		25,15									
4-D-05	4-D-06	25,00	4,87	4,75	0,12	PEAD	400	1,40	0,58	0,42	0,880	0,97	0,15	0,55	0,27	21,34		3,30	8,96	5,94		25,00									
4-D-06	4-D-07	25,00	4,75	4,68	0,07	PEAD	400	1,40	0,58	0,42	0,880	0,97	0,15	0,55	0,27	21,34		3,30	8,96	5,94		25,00									
4-D-07	4-D-08	25,00	4,68	4,60	0,08	PEAD	400	1,40	0,58	0,42	0,880	0,97	0,15	0,55	0,27	21,34		3,30	8,96	5,94		25,00									
4-D-08	4-D-09	24,85	4,60	4,53	0,07	PEAD	500	1,50	0,58	0,42	1,000	1,07	0,15	0,65	0,27	26,59		3,73	11,27	6,71			24,85								
4-D-09	4-F-07	11,85	4,53	4,47	0,06	PEAD	500	1,50	0,58	0,42	1,000	1,07	0,15	0,65	0,27	12,68		1,78	5,38	3,20			11,85								
RAMO 4-E																															
4-E-01	4-E-02	25,00	4,42	4,30	0,12	PEAD	500	1,50	0,58	0,42	1,000	1,07	0,15	0,65	0,27	26,75		3,75	11,34	6,75			25,00								
4-E-02	4-E-03	25,00	4,30	4,17	0,13	PEAD	630	1,63	0,58	0,42	1,156	1,20	0,15	0,78	0,27	34,68		4,34	14,75	7,80				25,00							
4-E-03	4-E-04	25,00	4,17	4,05	0,12	PEAD	630	1,63	0,58	0,42	1,156	1,20	0,15	0,78	0,27	34,68		4,34	14,75	7,80				25,00							
4-E-04	4-E-05	25,00	4,05	3,92	0,13	PEAD	630	1,63	0,58	0,42	1,156	1,20	0,15	0,78	0,27	34,68		4,34	14,75	7,80				25,00							
4-E-05	4-E-06	25,00	3,92	3,80	0,12	PEAD	630	1,63	0,58	0,42	1,156	1,20	0,15	0,78	0,27	34,68		4,34	14,75	7,80				25,00							
4-E-06	4-E-07	25,00	3,80	3,67	0,13	PEAD	630	1,63	0,58	0,42	1,156	1,20	0,15	0,78	0,27	34,68		4,34	14,75	7,80				25,00							
4-E-07	4-E-08	24,90	3,67	3,55	0,12	PEAD	630	1,63	0,58	0,42	1,156	1,20	0,15	0,78	0,27	34,54		4,32	14,69	7,77				24,90							
4-E-08	4-E-09	4,95	3,55	3,42	0,13	PEAD	630	1,63	0,58	0,42	1,156	1,20	0,15	0,78	0,27	6,87		0,86	2,92	1,54				4,95							
4-E-09	4-B-02	22,75	3,42	3,20	0,22	PEAD	630	1,63	0,58	0,42	1,156	1,20	0,15	0,78	0,27	31,56		3,94	13,42	7,10				22,75							
RAMO 4-F																															
4-F-01	4-F-02	25,00	8,25	8,05	0,20	PEAD	400	1,40	0,40	0,60	0,880	1,15	0,15	0,55	0,45	25,30		3,30	8,96	9,90		25,00									
4-F-02	4-F-03	25,00	8,05	7,35	0,70	PEAD	400	1,40	0,40	0,60	0,880	1,15	0,15	0,55	0,45	25,30		3,30	8,96	9,90		25,00									
4-F-03	4-F-04	24,75	7,35	6,65	0,70	PEAD	400	1,40	0,40	0,60	0,880	1,15	0,15	0,55	0,45	25,05		3,27	8,87	9,80		24,75									
4-F-04	4-F-05	25,00	6,65	5,86	0,79	PEAD	400	1,40	0,40	0,60	0,880	1,15	0,15	0,55	0,45	25,30		3,30	8,96	9,90		25,00									
4-F-05	4-F-06	25,00	5,86	5,06	0,80	PEAD	400	1,40	0,40	0,60	0,880	1,15	0,15	0,55	0,45	25,30		3,30	8,96	9,90		25,00									
4-F-06	4-F-07	13,30	5,06	4,47	0,59	PEAD	400	1,40	0,40	0,60	0,880	1,15	0,15	0,55	0,45	13,46		1,76	4,77	5,27		13,30									
4-F-07	4-E-01	9,40	4,47	4,42	0,05	PEAD	400	1,40	0,58	0,42	0,880	0,97	0,15	0,55	0,27	8,02		1,24	3,37	2,23		9,40									

PICCHETTI-TRATTO			QUOTA SCORRIMENTO (q.assolute m)			TUBAZIONE		VERIFICA SEZIONE DI POSA			SEZIONE DI POSA - COMPUTO					VOLUMI PER COMPUTO (mc)					TUBAZIONI IN PEAD							TUBAZIONI IN ACCIAIO			
monte	valle	Lunghezza	monte	valle	ΔH	Materiale	DN	P.med piano posa	S pac.strada	R ricoprimento	B b-scavo	H h.scavo	A h.allett.	F h.rinf.	T h.rintero	SCAVO	SCAVO>2m	ALLETAM.	RINFIANCO	RINTERRO	315	400	500	630	800	1000	1200	200	300	400	500
IMPIANTO N.5																															
RAMO 5-A																															
5-A-01	5-A-02	10,00	12,50	12,43	0,07	ACCIAIO	200																					10,00			
5-A-02	5-A-03	10,00	12,43	12,35	0,08	ACCIAIO	200																					10,00			
5-A-03	5-A-04	10,00	12,35	12,28	0,07	ACCIAIO	200																					10,00			
5-A-04	5-A-05	10,00	12,28	12,20	0,08	ACCIAIO	200																					10,00			
5-A-05	5-A-06	10,00	12,20	12,13	0,07	ACCIAIO	200																					10,00			
5-A-06	5-A-07	10,00	12,13	12,05	0,08	ACCIAIO	200																					10,00			
5-A-07	5-A-08	10,00	12,05	11,90	0,15	ACCIAIO	200																					10,00			
5-A-08	5-A-09	10,00	11,90	11,75	0,15	ACCIAIO	200																					10,00			
5-A-09	5-A-10	10,00	11,75	11,60	0,15	ACCIAIO	200																					10,00			
5-A-10	5-A-11	10,00	11,60	11,30	0,30	ACCIAIO	200																					10,00			
5-A-11	5-A-12	10,00	11,30	11,15	0,15	ACCIAIO	200																					10,00			
5-A-12	5-A-13	10,00	11,15	10,92	0,23	ACCIAIO	200																					10,00			
5-A-13	5-A-14	10,00	10,92	10,70	0,22	ACCIAIO	200																					10,00			
5-A-14	5-A-15	10,00	10,70	10,47	0,23	ACCIAIO	200																					10,00			
5-A-15	5-A-16	10,00	10,47	10,24	0,23	ACCIAIO	200																					10,00			
5-A-16	5-A-17	10,00	10,24	10,02	0,22	ACCIAIO	300																						10,00		
5-A-17	5-A-18	10,00	10,02	9,79	0,23	ACCIAIO	300																						10,00		
5-A-18	5-A-19	10,00	9,79	9,56	0,23	ACCIAIO	300																						10,00		
5-A-19	5-A-20	10,00	9,56	9,32	0,24	ACCIAIO	300																						10,00		
5-A-20	5-A-21	8,00	9,32	9,05	0,27	ACCIAIO	300																						8,00		
5-A-21	5-A-22	9,00	9,05	8,52	0,53	ACCIAIO	300																						9,00		
5-A-22	5-A-23	23,50	8,52	7,93	0,59	PEAD	400	1,40	0,58	0,42	0,880	0,97	0,15	0,55	0,27	20,06		3,10	8,42	5,58		23,50									
5-A-23	5-A-24	25,00	7,93	7,31	0,62	PEAD	400	1,40	0,58	0,42	0,880	0,97	0,15	0,55	0,27	21,34		3,30	8,96	5,94		25,00									
5-A-24	5-A-25	25,00	7,31	6,69	0,62	PEAD	400	1,40	0,58	0,42	0,880	0,97	0,15	0,55	0,27	21,34		3,30	8,96	5,94		25,00									
5-A-25	5-A-26	25,00	6,69	6,06	0,63	PEAD	400	1,40	0,58	0,42	0,880	0,97	0,15	0,55	0,27	21,34		3,30	8,96	5,94		25,00									
5-A-26	5-A-27	25,00	6,06	5,44	0,62	PEAD	400	1,40	0,58	0,42	0,880	0,97	0,15	0,55	0,27	21,34		3,30	8,96	5,94		25,00									
5-A-27	5-A-28	25,00	5,44	4,82	0,62	PEAD	400	1,40	0,58	0,42	0,880	0,97	0,15	0,55	0,27	21,34		3,30	8,96	5,94		25,00									
5-A-28	5-A-29	25,00	4,82	4,20	0,62	PEAD	400	1,40	0,58	0,42	0,880	0,97	0,15	0,55	0,27	21,34		3,30	8,96	5,94		25,00									
5-A-29	5-A-30	25,00	4,20	3,97	0,23	PEAD	500	1,50	0,58	0,42	1,000	1,07	0,15	0,65	0,27	26,75		3,75	11,34	6,75			25,00								
5-A-30	5-A-31	25,00	3,97	3,95	0,02	PEAD	500	1,50	0,58	0,42	1,000	1,07	0,15	0,65	0,27	26,75		3,75	11,34	6,75			25,00								
5-A-31	5-A-32	17,90	3,95	3,76	0,19	PEAD	630	1,63	0,58	0,42	1,156	1,20	0,15	0,78	0,27	24,83		3,10	10,56	5,59				17,90							
5-A-32	5-D-17	23,30	3,76	3,63	0,13	PEAD	630	1,63	0,58	0,42	1,156	1,20	0,15	0,78	0,27	32,32		4,04	13,75	7,27				23,30							
RAMO 5-B																															
5-B-01	5-B-02	10,00	12,50	12,43	0,07	ACCIAIO	200																					10,00			
5-B-02	5-B-03	10,00	12,43	12,35	0,08	ACCIAIO	200																					10,00			
5-B-03	5-B-04	10,00	12,35	12,28	0,07	ACCIAIO	200																					10,00			
5-B-04	5-B-05	10,00	12,28	12,20	0,08	ACCIAIO	200																					10,00			
5-B-05	5-B-06	10,00	12,20	12,13	0,07	ACCIAIO	200																					10,00			
5-B-06	5-B-07	10,00	12,13	12,05	0,08	ACCIAIO	200																					10,00			
5-B-07	5-B-08	10,00	12,05	11,90	0,15	ACCIAIO	200																					10,00			
5-B-08	5-B-09	10,00	11,90	11,75	0,15	ACCIAIO	200																					10,00			
5-B-09	5-B-10	10,00	11,75	11,60	0,15	ACCIAIO	200																					10,00			
5-B-10	5-B-11	10,00	11,60	11,30	0,30	ACCIAIO	200																					10,00			
5-B-11	5-B-12	10,00	11,30	11,15	0,15	ACCIAIO	200																					10,00			
5-B-12	5-B-13	10,00	11,15	10,92	0,23	ACCIAIO	200																					10,00			
5-B-13	5-B-14	10,00	10,92	10,70	0,22	ACCIAIO	200																					10,00			
5-B-14	5-B-15	10,00	10,70	10,47	0,23	ACCIAIO	200																					10,00			
5-B-15	5-B-16	10,00	10,47	10,24	0,23	ACCIAIO	200																					10,00			
5-B-16	5-B-17	10,00	10,24	10,02	0,22	ACCIAIO	300																						10,00		
5-B-17	5-B-18	10,00	10,02	9,97	0,05	ACCIAIO	300																						10,00		
5-B-18	5-B-19	7,95	9,97	9,79	0,18	ACCIAIO	300																						7,95		
5-B-19	5-B-20	11,05	9,79	9,49	0,30	ACCIAIO	300																						11,05		
5-B-20	5-B-21	25,80	9,49	8,78	0,71	PEAD	400	1,40	0,58	0,42	0,880	0,97	0,15	0,55	0,27	22,02		3,41	9,25	6,13		25,80									
5-B-21	5-B-22	24,30	8,78	8,15	0,63	PEAD	400	1,40	0,58	0,42	0,880	0,97	0,15	0,55	0,27	20,74		3,21	8,71	5,77		24,30									
5-B-22	5-B-23	25,00	8,15	7,38	0,77	PEAD	400	1,40	0,58	0,42	0,880	0,97	0,15	0,55	0,27	21,34		3,30	8,96	5,94		25,00									
5-B-23	5-B-24	25,00	7,38	6,65	0,73	PEAD	400	1,40	0,58	0,42	0,880	0,97	0,15	0,55	0,27	21,34		3,30	8,96	5,94		25,00									
5-B-24	5-B-25	24,85	6,65	5,95	0,70	PEAD	400	1,40	0,58	0,42	0,880	0,97	0,15	0,55	0,27	21,21		3,28	8,90	5,90		24,85									
5-B-25	5-B-26	25,40	5,95	5,37	0,58	PEAD	400	1,40	0,58	0,42	0,880	0,97	0,15	0,55	0,27	21,68		3,35	9,10	6,04		25,40									
5-B-26	5-B-27	24,60	5,37	4,83	0,54	PEAD	400	1,40	0,58	0,42	0,880	0,97	0,15	0,55	0,27	21,00		3,25	8,82	5,84		24,60									
5-B-27	5-B-28	24,75	4,83	4,30	0,53	PEAD	400	1,40	0,58	0,42	0,880	0,97	0,15	0,55	0,27	21,13		3,27	8,87	5,88		24,75									
5-B-28	5-B-29	25,10	4,30	4,14	0,16	PEAD	500	1,50	0,58	0,42	1,000	1,07	0,15	0,65	0,27	26,86		3,77	11,39	6,78			25,10								
5-B-29	5-B-30	25,00	4,14	3,98	0,16	PEAD	500	1,50	0,58	0,42	1,000	1,07	0,15	0,65	0,27	26,75		3,75	11,34	6,75			25,00								
5-B-30	5-D-17	9,30	3,98	3,93	0,05	PEAD	500	1,50	0,58	0,42	1,000	1,07	0,15	0,65	0,27	9,95		1,40	4,22	2,51			9,30								

ANAS - SS.398 VIA VAL DI CORNIA - Bretella di collegamento btra l'Autostrada Tirrenica A12 e il Porto di Piombino - LOTTO 1 -Svincolo di Geodetica-Gagno
PROGETTO ESECUTIVO: COMPUTO METRICO ESTIMATIVO - ALLEGATO: IDRAULICA PIATTAFORMA STRADALE - COLLETTORI CORRENTI

PICCHETTI-TRATTO			QUOTA SCORRIMENTO (q.assolute m)			TUBAZIONE		VERIFICA SEZIONE DI POSA			SEZIONE DI POSA - COMPUTO					VOLUMI PER COMPUTO (mc)					TUBAZIONI IN PEAD							TUBAZIONI IN ACCIAIO			
monte	valle	Lunghezza	monte	valle	ΔH	Materiale	DN	P.med piano posa	S pac.strada	R ricoprimento	B b-scavo	H h.scavo	A h.allett.	F h.rinf.	T h.rintero	SCAVO	SCAVO>2m	ALLETAM.	RINFIANCO	RINTERRO	315	400	500	630	800	1000	1200	200	300	400	500
RAMO 5-C																															
5-C-01	5-C-02	24,20	4,72	4,69	0,03	PEAD	500	1,50	0,58	0,42	1,000	1,07	0,15	0,65	0,27	25,89		3,63	10,98	6,53			24,20								
5-C-02	5-C-03	25,40	4,69	4,65	0,04	PEAD	500	1,50	0,58	0,42	1,000	1,07	0,15	0,65	0,27	27,18		3,81	11,52	6,86			25,40								
5-C-03	5-C-04	25,00	4,65	4,61	0,04	PEAD	500	1,50	0,58	0,42	1,000	1,07	0,15	0,65	0,27	26,75		3,75	11,34	6,75			25,00								
5-C-04	5-C-05	31,35	4,61	4,57	0,04	PEAD	500	1,50	0,58	0,42	1,000	1,07	0,15	0,65	0,27	33,54		4,70	14,22	8,46			31,35								
5-C-05	5-C-06	9,80	4,57	4,55	0,02	PEAD	500	1,50	0,58	0,42	1,000	1,07	0,15	0,65	0,27	10,49		1,47	4,45	2,65			9,80								
5-C-06	5-C-07	33,90	4,55	4,49	0,06	PEAD	630	1,63	0,58	0,42	1,156	1,20	0,15	0,78	0,27	47,03		5,88	20,00	10,58				33,90							
5-C-07	5-C-08	24,75	4,49	4,45	0,04	PEAD	630	1,63	0,58	0,42	1,156	1,20	0,15	0,78	0,27	34,33		4,29	14,60	7,72				24,75							
5-C-08	5-C-09	25,20	4,45	4,40	0,05	PEAD	630	1,63	0,58	0,42	1,156	1,20	0,15	0,78	0,27	34,96		4,37	14,87	7,87				25,20							
5-C-09	5-C-10	25,10	4,40	4,36	0,04	PEAD	630	1,63	0,58	0,42	1,156	1,20	0,15	0,78	0,27	34,82		4,35	14,81	7,83				25,10							
5-C-10	5-C-11	24,80	4,36	4,32	0,04	PEAD	630	1,63	0,58	0,42	1,156	1,20	0,15	0,78	0,27	34,40		4,30	14,63	7,74				24,80							
5-C-11	5-C-12	25,00	4,32	4,27	0,05	PEAD	630	1,63	0,58	0,42	1,156	1,20	0,15	0,78	0,27	34,68		4,34	14,75	7,80				25,00							
5-C-12	5-C-13	25,00	4,27	4,23	0,04	PEAD	630	1,63	0,58	0,42	1,156	1,20	0,15	0,78	0,27	34,68		4,34	14,75	7,80				25,00							
5-C-13	5-C-14	25,15	4,23	4,18	0,05	PEAD	630	1,63	0,58	0,42	1,156	1,20	0,15	0,78	0,27	34,89		4,36	14,84	7,85				25,15							
5-C-14	5-C-15	25,00	4,18	4,14	0,04	PEAD	800	1,80	0,58	0,42	1,360	1,37	0,15	0,95	0,27	46,58		5,10	19,73	9,18					25,00						
5-C-15	5-C-16	25,00	4,14	4,10	0,04	PEAD	800	1,80	0,58	0,42	1,360	1,37	0,15	0,95	0,27	46,58		5,10	19,73	9,18					25,00						
5-C-16	5-C-17	25,00	4,10	4,05	0,05	PEAD	800	1,80	0,58	0,42	1,360	1,37	0,15	0,95	0,27	46,58		5,10	19,73	9,18					25,00						
5-C-17	5-C-18	25,00	4,05	3,99	0,06	PEAD	800	1,80	0,58	0,42	1,360	1,37	0,15	0,95	0,27	46,58		5,10	19,73	9,18					25,00						
5-C-18	5-C-19	24,90	3,99	3,92	0,07	PEAD	800	1,80	0,58	0,42	1,360	1,37	0,15	0,95	0,27	46,39		5,08	19,65	9,14					24,90						
5-C-19	5-C-20	25,00	3,92	3,85	0,07	PEAD	800	1,80	0,58	0,42	1,360	1,37	0,15	0,95	0,27	46,58		5,10	19,73	9,18					25,00						
5-C-20	5-C-21	25,00	3,85	3,78	0,07	PEAD	800	1,80	0,58	0,42	1,360	1,37	0,15	0,95	0,27	46,58		5,10	19,73	9,18					25,00						
5-C-21	5-A-32	6,00	3,78	3,76	0,02	PEAD	800	1,80	0,58	0,42	1,360	1,37	0,15	0,95	0,27	11,18		1,22	4,74	2,20					6,00						
RAMO 5-D																															
5-D-01	5-D-02	25,00	4,70	4,66	0,04	PEAD	500	1,50	0,58	0,42	1,000	1,07	0,15	0,65	0,27	26,75		3,75	11,34	6,75			25,00								
5-D-02	5-D-03	25,00	4,66	4,62	0,04	PEAD	500	1,50	0,58	0,42	1,000	1,07	0,15	0,65	0,27	26,75		3,75	11,34	6,75			25,00								
5-D-03	5-D-04	25,00	4,62	4,58	0,04	PEAD	500	1,50	0,58	0,42	1,000	1,07	0,15	0,65	0,27	26,75		3,75	11,34	6,75			25,00								
5-D-04	5-D-05	25,00	4,58	4,53	0,05	PEAD	500	1,50	0,58	0,42	1,000	1,07	0,15	0,65	0,27	26,75		3,75	11,34	6,75			25,00								
5-D-05	5-D-06	25,00	4,53	4,49	0,04	PEAD	500	1,50	0,58	0,42	1,000	1,07	0,15	0,65	0,27	26,75		3,75	11,34	6,75			25,00								
5-D-06	5-D-07	25,00	4,49	4,45	0,04	PEAD	500	1,50	0,58	0,42	1,000	1,07	0,15	0,65	0,27	26,75		3,75	11,34	6,75			25,00								
5-D-07	5-D-08	25,00	4,45	4,39	0,06	PEAD	500	1,50	0,58	0,42	1,000	1,07	0,15	0,65	0,27	26,75		3,75	11,34	6,75			25,00								
5-D-08	5-D-09	25,00	4,39	4,32	0,07	PEAD	500	1,50	0,58	0,42	1,000	1,07	0,15	0,65	0,27	26,75		3,75	11,34	6,75			25,00								
5-D-09	5-D-10	25,00	4,32	4,25	0,07	PEAD	500	1,50	0,58	0,42	1,000	1,07	0,15	0,65	0,27	26,75		3,75	11,34	6,75			25,00								
5-D-10	5-D-11	25,00	4,25	4,18	0,07	PEAD	500	1,50	0,58	0,42	1,000	1,07	0,15	0,65	0,27	26,75		3,75	11,34	6,75			25,00								
5-D-11	5-D-12	25,00	4,18	4,12	0,06	PEAD	500	1,50	0,58	0,42	1,000	1,07	0,15	0,65	0,27	26,75		3,75	11,34	6,75			25,00								
5-D-12	5-D-13	25,00	4,12	4,05	0,07	PEAD	500	1,50	0,58	0,42	1,000	1,07	0,15	0,65	0,27	26,75		3,75	11,34	6,75			25,00								
5-D-13	5-D-14	25,00	4,05	4,02	0,03	PEAD	630	1,63	0,58	0,42	1,156	1,20	0,15	0,78	0,27	34,68		4,34	14,75	7,80				25,00							
5-D-14	5-D-15	25,00	4,02	3,98	0,04	PEAD	630	1,63	0,58	0,42	1,156	1,20	0,15	0,78	0,27	34,68		4,34	14,75	7,80				25,00							
5-D-15	5-D-16	25,20	3,98	3,95	0,03	PEAD	630	1,63	0,58	0,42	1,156	1,20	0,15	0,78	0,27	34,96		4,37	14,87	7,87				25,20							
5-D-16	5-D-17	15,50	3,95	3,63	0,32	PEAD	630	1,63	0,58	0,42	1,156	1,20	0,15	0,78	0,27	21,50		2,69	9,14	4,84				15,50							
RAMO 5-E																															
5-E-01	5-E-02	19,80	5,25	5,21	0,04	PEAD	400	1,40	0,58	0,42	0,880	0,97	0,15	0,55	0,27	16,90		2,61	7,10	4,70		19,80									
5-E-02	5-E-03	24,95	5,21	5,15	0,06	PEAD	400	1,40	0,58	0,42	0,880	0,97	0,15	0,55	0,27	21,30		3,29	8,94	5,93		24,95									
5-E-03	5-E-04	24,80	5,15	5,04	0,11	PEAD	500	1,50	0,58	0,42	1,000	1,07	0,15	0,65	0,27	26,54		3,72	11,25	6,70			24,80								
5-E-04	5-E-05	25,20	5,04	4,93	0,11	PEAD	500	1,50	0,58	0,42	1,000	1,07	0,15	0,65	0,27	26,96		3,78	11,43	6,80			25,20								
5-E-05	5-E-06	25,60	4,93	4,82	0,11	PEAD	500	1,50	0,58	0,42	1,000	1,07	0,15	0,65	0,27	27,39		3,84	11,61	6,91			25,60								
5-E-06	5-C-06	11,75	4,82	4,55	0,27	PEAD	500	1,50	0,58	0,42	1,000	1,07	0,15	0,65	0,27	12,57		1,76	5,33	3,17			11,75								

ANAS - SS.398 VIA VAL DI CORNIA - Bretella di collegamento btra l'Autostrada Tirrenica A12 e il Porto di Piombino - LOTTO 1 -Svincolo di Geodetica-Gagno
PROGETTO ESECUTIVO: COMPUTO METRICO ESTIMATIVO - ALLEGATO: IDRAULICA PIATTAFORMA STRADALE - COLLETTORI CORRENTI

PICCHETTI-TRATTO			QUOTA SCORRIMENTO (q.assolute m)			TUBAZIONE		VERIFICA SEZIONE DI POSA			SEZIONE DI POSA - COMPUTO					VOLUMI PER COMPUTO (mc)					TUBAZIONI IN PEAD							TUBAZIONI IN ACCIAIO			
monte	valle	Lunghezza	monte	valle	ΔH	Materiale	DN	P.med piano posa	S pac.strada	R ricoprimento	B b-scavo	H h.scavo	A h.allett.	F h.rinf.	T h.rintero	SCAVO	SCAVO>2m	ALLETAM.	RINFIANCO	RINTERRO	315	400	500	630	800	1000	1200	200	300	400	500
IMPIANTO N.6																															
RAMO 6-A																															
6-A-01	6-A-02	25,00	9,30	9,13	0,17	PEAD	500	1,50	0,58	0,42	1,000	1,07	0,15	0,65	0,27	26,75		3,75	11,34	6,75			25,00								
6-A-02	6-A-03	25,00	9,13	8,97	0,16	PEAD	500	1,50	0,58	0,42	1,000	1,07	0,15	0,65	0,27	26,75		3,75	11,34	6,75			25,00								
6-A-03	6-A-04	25,20	8,97	8,80	0,17	PEAD	500	1,50	0,58	0,42	1,000	1,07	0,15	0,65	0,27	26,96		3,78	11,43	6,80			25,20								
6-A-04	6-A-05	24,90	8,80	8,43	0,37	PEAD	500	1,50	0,58	0,42	1,000	1,07	0,15	0,65	0,27	26,64		3,74	11,30	6,72			24,90								
6-A-05	6-A-06	25,15	8,43	7,77	0,66	PEAD	500	1,50	0,58	0,42	1,000	1,07	0,15	0,65	0,27	26,91		3,77	11,41	6,79			25,15								
6-A-06	6-A-07	24,80	7,77	7,05	0,72	PEAD	500	1,50	0,58	0,42	1,000	1,07	0,15	0,65	0,27	26,54		3,72	11,25	6,70			24,80								
6-A-07	6-A-08	14,65	7,05	6,77	0,28	PEAD	630	1,63	0,58	0,42	1,156	1,20	0,15	0,78	0,27	20,32		2,54	8,64	4,57				14,65							
6-A-08	6-A-09	25,60	6,77	6,27	0,50	PEAD	630	1,63	0,58	0,42	1,156	1,20	0,15	0,78	0,27	35,51		4,44	15,10	7,99				25,60							
6-A-09	6-A-10	24,80	6,27	5,79	0,48	PEAD	630	1,63	0,58	0,42	1,156	1,20	0,15	0,78	0,27	34,40		4,30	14,63	7,74				24,80							
6-A-10	6-A-11	24,70	5,79	5,30	0,49	PEAD	630	1,63	0,58	0,42	1,156	1,20	0,15	0,78	0,27	34,26		4,28	14,57	7,71				24,70							
6-A-11	6-A-12	16,20	5,30	4,40	0,90	PEAD	630	1,63	0,58	0,42	1,156	1,20	0,15	0,78	0,27	22,47		2,81	9,56	5,06				16,20							
RAMO 6-B																															
6-B-01	6-B-02	14,25	8,60	8,46	0,14	PEAD	500	1,50	0,58	0,42	1,000	1,07	0,15	0,65	0,27	15,25		2,14	6,46	3,85			14,25								
6-B-02	6-B-03	14,95	8,46	8,31	0,15	PEAD	500	1,50	0,58	0,42	1,000	1,07	0,15	0,65	0,27	16,00		2,24	6,78	4,04			14,95								
6-B-03	6-B-04	24,65	8,31	8,06	0,25	PEAD	500	1,50	0,58	0,42	1,000	1,07	0,15	0,65	0,27	26,38		3,70	11,18	6,66			24,65								
6-B-04	6-B-05	25,00	8,06	7,81	0,25	PEAD	500	1,50	0,58	0,42	1,000	1,07	0,15	0,65	0,27	26,75		3,75	11,34	6,75			25,00								
6-B-05	6-B-06	25,10	7,81	7,56	0,25	PEAD	500	1,50	0,58	0,42	1,000	1,07	0,15	0,65	0,27	26,86		3,77	11,39	6,78			25,10								
6-B-06	6-B-07	24,95	7,56	7,31	0,25	PEAD	500	1,50	0,58	0,42	1,000	1,07	0,15	0,65	0,27	26,70		3,74	11,32	6,74			24,95								
6-B-07	6-B-08	17,85	7,31	7,10	0,21	PEAD	500	1,50	0,58	0,42	1,000	1,07	0,15	0,65	0,27	19,10		2,68	8,10	4,82			17,85								
6-B-08	6-A-07	11,50	7,10	7,05	0,05	PEAD	500	1,50	0,58	0,42	1,000	1,07	0,15	0,65	0,27	12,31		1,73	5,22	3,11			11,50								
RAMO 6-C																															
6-C-01	6-C-02	15,10	8,35	7,86	0,49	PEAD	400	1,40	0,58	0,42	0,880	0,97	0,15	0,55	0,27	12,89		1,99	5,41	3,59		15,10									
6-C-02	6-C-03	25,00	7,86	7,04	0,82	PEAD	400	1,40	0,58	0,42	0,880	0,97	0,15	0,55	0,27	21,34		3,30	8,96	5,94		25,00									
6-C-03	6-C-04	25,00	7,04	6,22	0,82	PEAD	400	1,40	0,58	0,42	0,880	0,97	0,15	0,55	0,27	21,34		3,30	8,96	5,94		25,00									
6-C-04	6-C-05	25,00	6,22	5,40	0,82	PEAD	400	1,40	0,58	0,42	0,880	0,97	0,15	0,55	0,27	21,34		3,30	8,96	5,94		25,00									
6-C-05	6-C-06	25,00	5,40	5,07	0,33	PEAD	400	1,40	0,58	0,42	0,880	0,97	0,15	0,55	0,27	21,34		3,30	8,96	5,94		25,00									
6-C-06	6-C-07	25,00	5,07	4,74	0,33	PEAD	500	1,50	0,58	0,42	1,000	1,07	0,15	0,65	0,27	26,75		3,75	11,34	6,75			25,00								
6-C-07	6-C-08	8,90	4,74	4,60	0,14	PEAD	500	1,50	0,58	0,42	1,000	1,07	0,15	0,65	0,27	9,52		1,34	4,04	2,40			8,90								
6-C-08	6-A-12	11,60	4,60	4,40	0,20	PEAD	500	1,50	0,58	0,42	1,000	1,07	0,15	0,65	0,27	12,41		1,74	5,26	3,13			11,60								

ANAS - SS.398 VIA VAL DI CORNIA - Bretella di collegamento btra l'Autostrada Tirrenica A12 e il Porto di Piombino - LOTTO 1 -Svincolo di Geodetica-Gagno
PROGETTO ESECUTIVO: COMPUTO METRICO ESTIMATIVO - ALLEGATO: IDRAULICA PIATTAFORMA STRADALE - COLLETTORI CORRENTI

PICCHETTI-TRATTO			QUOTA SCORRIMENTO (q.assolute m)			TUBAZIONE		VERIFICA SEZIONE DI POSA			SEZIONE DI POSA - COMPUTO					VOLUMI PER COMPUTO (mc)					TUBAZIONI IN PEAD							TUBAZIONI IN ACCIAIO			
monte	valle	Lunghezza	monte	valle	ΔH	Materiale	DN	P.med piano posa	S pac.strada	R ricoprimento	B b-scavo	H h.scavo	A h.allett.	F h.rinf.	T h.rintero	SCAVO	SCAVO>2m	ALLETAM.	RINFIANCO	RINTERRO	315	400	500	630	800	1000	1200	200	300	400	500
IMPIANTO N.7																															
RAMO 7-A																															
7-A-01	7-A-02	11,70	9,32	9,20	0,12	ACCIAIO	200																					11,70			
7-A-02	7-A-03	10,40	9,20	8,99	0,21	ACCIAIO	200																					10,40			
7-A-03	7-A-04	10,00	8,99	8,79	0,20	ACCIAIO	200																					10,00			
7-A-04	7-A-05	9,60	8,79	8,60	0,19	ACCIAIO	200																					9,60			
7-A-05	7-A-06	10,00	8,60	8,40	0,20	ACCIAIO	200																					10,00			
7-A-06	7-A-07	10,15	8,40	8,20	0,20	ACCIAIO	200																					10,15			
7-A-07	7-A-08	14,10	8,20	7,92	0,28	ACCIAIO	200																					14,10			
7-A-08	7-A-09	8,85	7,92	7,75	0,17	ACCIAIO	200																					8,85			
7-A-09	7-A-10	3,50	7,75	7,66	0,09	PEAD	400	1,40	0,58	0,42	0,880	0,97	0,15	0,55	0,27	2,99		0,46	1,25	0,83		3,50									
7-A-10	7-A-11	25,10	7,66	7,02	0,64	PEAD	400	1,40	0,58	0,42	0,880	0,97	0,15	0,55	0,27	21,43		3,31	8,99	5,96		25,10									
7-A-11	7-A-12	13,20	7,02	6,69	0,33	PEAD	400	1,40	0,58	0,42	0,880	0,97	0,15	0,55	0,27	11,27		1,74	4,73	3,14		13,20									
7-A-12	7-B-12	11,70	6,69	6,37	0,32	PEAD	400	1,40	0,58	0,42	0,880	0,97	0,15	0,55	0,27	9,99		1,54	4,19	2,78		11,70									
RAMO 7-B																															
7-B-01	7-B-02	8,90	8,72	8,52	0,20	ACCIAIO	200																					8,90			
7-B-02	7-B-03	10,00	8,52	8,33	0,19	ACCIAIO	200																					10,00			
7-B-03	7-B-04	10,00	8,33	8,15	0,18	ACCIAIO	200																					10,00			
7-B-04	7-B-05	10,00	8,15	7,97	0,18	ACCIAIO	200																					10,00			
7-B-05	7-B-06	10,00	7,97	7,79	0,18	ACCIAIO	200																					10,00			
7-B-06	7-B-07	10,00	7,79	7,60	0,19	ACCIAIO	200																					10,00			
7-B-07	7-B-08	14,05	7,60	7,34	0,26	ACCIAIO	200																					14,05			
7-B-08	7-B-09	9,15	7,34	7,18	0,16	ACCIAIO	200																					9,15			
7-B-09	7-B-10	3,40	7,18	7,11	0,07	PEAD	400	1,40	0,58	0,42	0,880	0,97	0,15	0,55	0,27	2,90		0,45	1,22	0,81		3,40									
7-B-10	7-B-11	25,00	7,11	6,62	0,49	PEAD	400	1,40	0,58	0,42	0,880	0,97	0,15	0,55	0,27	21,34		3,30	8,96	5,94		25,00									
7-B-11	7-B-12	13,00	6,62	6,37	0,25	PEAD	400	1,40	0,58	0,42	0,880	0,97	0,15	0,55	0,27	11,10		1,72	4,66	3,09		13,00									

PICCHETTI-TRATTO			QUOTA SCORRIMENTO (q.assolute m)			TUBAZIONE		VERIFICA SEZIONE DI POSA			SEZIONE DI POSA - COMPUTO					VOLUMI PER COMPUTO (mc)					TUBAZIONI IN PEAD							TUBAZIONI IN ACCIAIO			
monte	valle	Lunghezza	monte	valle	ΔH	Materiale	DN	P.med piano posa	S pac.strada	R ricoprimento	B b-scavo	H h.scavo	A h.allett.	F h.rinf.	T h.rintero	SCAVO	SCAVO>2m	ALLETAM.	RINFIANCO	RINTERRO	315	400	500	630	800	1000	1200	200	300	400	500
IMPIANTO N.8																															
RAMO 8-A																															
8-A-01	8-A-02	13,50	12,60	12,54	0,06	ACCIAIO	200																					13,50			
8-A-02	8-A-03	10,00	12,54	12,50	0,04	ACCIAIO	200																					10,00			
8-A-03	8-A-04	10,00	12,50	12,45	0,05	ACCIAIO	200																					10,00			
8-A-04	8-A-05	10,00	12,45	12,41	0,04	ACCIAIO	200																					10,00			
8-A-05	8-A-06	10,00	12,41	12,37	0,04	ACCIAIO	200																					10,00			
8-A-06	8-A-07	10,00	12,37	12,32	0,05	ACCIAIO	200																					10,00			
8-A-07	8-A-08	10,00	12,32	12,28	0,04	ACCIAIO	300																						10,00		
8-A-08	8-A-09	10,00	12,28	12,24	0,04	ACCIAIO	300																						10,00		
8-A-09	8-A-10	10,00	12,24	12,17	0,07	ACCIAIO	300																						10,00		
8-A-10	8-A-11	10,00	12,17	12,05	0,12	ACCIAIO	300																						10,00		
8-A-11	8-A-12	10,00	12,05	11,93	0,12	ACCIAIO	300																						10,00		
8-A-12	8-A-13	10,00	11,93	11,81	0,12	ACCIAIO	300																						10,00		
8-A-13	8-A-14	10,00	11,81	11,69	0,12	ACCIAIO	300																						10,00		
8-A-14	8-A-15	10,00	11,69	11,57	0,12	ACCIAIO	300																						10,00		
8-A-15	8-A-16	10,00	11,57	11,45	0,12	ACCIAIO	300																						10,00		
8-A-16	8-A-17	10,00	11,45	11,33	0,12	ACCIAIO	300																						10,00		
8-A-17	8-A-18	10,00	11,33	11,14	0,19	ACCIAIO	300																						10,00		
8-A-18	8-A-19	10,00	11,14	10,95	0,19	ACCIAIO	300																						10,00		
8-A-19	8-A-20	10,00	10,95	10,75	0,20	ACCIAIO	300																						10,00		
8-A-20	8-A-21	10,00	10,75	10,55	0,20	ACCIAIO	300																						10,00		
8-A-21	8-A-22	10,00	10,55	10,35	0,20	ACCIAIO	300																						10,00		
8-A-22	8-A-23	10,00	10,35	10,15	0,20	ACCIAIO	300																						10,00		
8-A-23	8-A-24	10,00	10,15	9,89	0,26	ACCIAIO	300																						10,00		
8-A-24	8-A-25	10,00	9,89	9,62	0,27	ACCIAIO	300																						10,00		
8-A-25	8-A-26	10,00	9,62	9,36	0,26	ACCIAIO	300																						10,00		
8-A-26	8-A-27	10,00	9,36	9,09	0,27	ACCIAIO	300																						10,00		
8-A-27	8-A-28	10,00	9,09	8,83	0,26	ACCIAIO	300																						10,00		
8-A-28	8-A-29	10,00	8,83	8,17	0,66	ACCIAIO	300																						10,00		
8-A-29	8-A-30	10,00	8,17	7,90	0,27	ACCIAIO	300																						10,00		
8-A-30	8-A-31	10,00	7,90	7,64	0,26	ACCIAIO	300																						10,00		
8-A-31	8-A-32	10,00	7,64	7,37	0,27	ACCIAIO	300																						10,00		
8-A-32	8-A-33	10,00	7,37	7,01	0,36	ACCIAIO	300																						10,00		
8-A-33	8-A-34	10,00	7,01	6,74	0,27	ACCIAIO	300																						10,00		
8-A-34	8-A-35	10,00	6,74	6,48	0,26	ACCIAIO	300																						10,00		
8-A-35	8-A-36	10,00	6,48	6,38	0,10	ACCIAIO	400																							10,00	
8-A-36	8-A-37	10,00	6,38	6,27	0,11	ACCIAIO	400																							10,00	
8-A-37	8-A-38	10,00	6,27	6,07	0,20	ACCIAIO	400																							10,00	
8-A-38	8-A-39	10,00	6,07	5,97	0,10	ACCIAIO	400																							10,00	
8-A-39	8-A-40	10,00	5,97	5,86	0,11	ACCIAIO	400																							10,00	
8-A-40	8-A-41	10,00	5,86	5,76	0,10	ACCIAIO	400																							10,00	
8-A-41	8-A-42	10,00	5,76	5,66	0,10	ACCIAIO	400																							10,00	
8-A-42	8-A-43	10,00	5,66	5,55	0,11	ACCIAIO	400																							10,00	
8-A-43	8-A-44	10,00	5,55	5,45	0,10	ACCIAIO	400																							10,00	
8-A-44	8-A-45	10,00	5,45	5,21	0,24	ACCIAIO	400																							10,00	
8-A-45	8-A-46	10,00	5,21	5,18	0,03	ACCIAIO	500																								10,00
8-A-46	8-A-47	10,00	5,18	5,14	0,04	ACCIAIO	500																								10,00
8-A-47	8-A-48	10,00	5,14	5,10	0,04	ACCIAIO	500																								10,00
8-A-48	8-A-49	10,00	5,10	5,07	0,03	ACCIAIO	500																								10,00
8-A-49	8-A-50	10,00	5,07	5,03	0,04	ACCIAIO	500																								10,00
8-A-50	8-A-51	10,00	5,03	4,99	0,04	ACCIAIO	500																								10,00
8-A-51	8-A-52	10,00	4,99	4,96	0,03	ACCIAIO	500																								10,00
8-A-52	8-A-53	10,00	4,96	4,92	0,04	ACCIAIO	500																								10,00
8-A-53	8-A-54	10,00	4,92	4,88	0,04	ACCIAIO	500																								10,00
8-A-54	8-A-55	10,00	4,88	4,85	0,03	ACCIAIO	500																								10,00
8-A-55	8-A-56	10,00	4,85	4,81	0,04	ACCIAIO	500																								10,00
8-A-56	8-A-57	10,00	4,81	4,77	0,04	ACCIAIO	500																								10,00
8-A-57	8-A-58	10,00	4,77	4,74	0,03	ACCIAIO	500																								10,00
8-A-58	8-A-59	10,00	4,74	4,70	0,04	ACCIAIO	500																								10,00
8-A-59	8-A-60	10,00	4,70	4,65	0,05	ACCIAIO	500																								10,00
8-A-60	8-A-61	10,00	4,65	4,59	0,06	ACCIAIO	500																								10,00

ANAS - SS.398 VIA VAL DI CORNIA - Bretella di collegamento btra l'Autostrada Tirrenica A12 e il Porto di Piombino - LOTTO 1 -Svincolo di Geodetica-Gagno
PROGETTO ESECUTIVO: COMPUTO METRICO ESTIMATIVO - ALLEGATO: IDRAULICA PIATTAFORMA STRADALE - COLLETTORI CORRENTI

PICCHETTI-TRATTO			QUOTA SCORRIMENTO (q.assolute m)			TUBAZIONE		VERIFICA SEZIONE DI POSA			SEZIONE DI POSA - COMPUTO					VOLUMI PER COMPUTO (mc)					TUBAZIONI IN PEAD							TUBAZIONI IN ACCIAIO			
monte	valle	Lunghezza	monte	valle	ΔH	Materiale	DN	P.med piano posa	S pac.strada	R ricoprimento	B b-scavo	H h.scavo	A h.allett.	F h.rinf.	T h.rintero	SCAVO	SCAVO>2m	ALLETAM.	RINFIANCO	RINTERRO	315	400	500	630	800	1000	1200	200	300	400	500
RAMO 8-B																															
8-B-01	8-B-02	13,80	12,60	12,54	0,06	ACCIAIO	200																					13,80			
8-B-02	8-B-03	10,00	12,54	12,50	0,04	ACCIAIO	200																					10,00			
8-B-03	8-B-04	10,00	12,50	12,45	0,05	ACCIAIO	200																					10,00			
8-B-04	8-B-05	10,00	12,45	12,41	0,04	ACCIAIO	200																					10,00			
8-B-05	8-B-06	10,00	12,41	12,37	0,04	ACCIAIO	200																					10,00			
8-B-06	8-B-07	10,00	12,37	12,32	0,05	ACCIAIO	200																					10,00			
8-B-07	8-B-08	10,00	12,32	12,28	0,04	ACCIAIO	300																						10,00		
8-B-08	8-B-09	10,00	12,28	12,24	0,04	ACCIAIO	300																						10,00		
8-B-09	8-B-10	10,00	12,24	12,17	0,07	ACCIAIO	300																						10,00		
8-B-10	8-B-11	10,00	12,17	12,05	0,12	ACCIAIO	300																						10,00		
8-B-11	8-B-12	10,00	12,05	11,93	0,12	ACCIAIO	300																						10,00		
8-B-12	8-B-13	10,00	11,93	11,81	0,12	ACCIAIO	300																						10,00		
8-B-13	8-B-14	10,00	11,81	11,69	0,12	ACCIAIO	300																						10,00		
8-B-14	8-B-15	10,00	11,69	11,57	0,12	ACCIAIO	300																						10,00		
8-B-15	8-B-16	10,00	11,57	11,45	0,12	ACCIAIO	300																						10,00		
8-B-16	8-B-17	10,00	11,45	11,33	0,12	ACCIAIO	300																						10,00		
8-B-17	8-B-18	10,00	11,33	11,14	0,19	ACCIAIO	300																						10,00		
8-B-18	8-B-19	10,00	11,14	10,95	0,19	ACCIAIO	300																						10,00		
8-B-19	8-B-20	10,00	10,95	10,75	0,20	ACCIAIO	300																						10,00		
8-B-20	8-B-21	10,00	10,75	10,55	0,20	ACCIAIO	300																						10,00		
8-B-21	8-B-22	10,00	10,55	10,35	0,20	ACCIAIO	300																						10,00		
8-B-22	8-B-23	10,00	10,35	10,15	0,20	ACCIAIO	300																						10,00		
8-B-23	8-B-24	10,00	10,15	9,89	0,26	ACCIAIO	300																						10,00		
8-B-24	8-B-25	10,00	9,89	9,62	0,27	ACCIAIO	300																						10,00		
8-B-25	8-B-26	10,00	9,62	9,36	0,26	ACCIAIO	300																						10,00		
8-B-26	8-B-27	10,00	9,36	9,09	0,27	ACCIAIO	300																						10,00		
8-B-27	8-B-28	10,00	9,09	8,83	0,26	ACCIAIO	300																						10,00		
8-B-28	8-B-29	10,00	8,83	8,17	0,66	ACCIAIO	300																						10,00		
8-B-29	8-B-30	10,00	8,17	7,90	0,27	ACCIAIO	300																						10,00		
8-B-30	8-B-31	10,00	7,90	7,64	0,26	ACCIAIO	300																						10,00		
8-B-31	8-B-32	10,00	7,64	7,37	0,27	ACCIAIO	300																						10,00		
8-B-32	8-B-33	10,00	7,37	7,01	0,36	ACCIAIO	300																						10,00		
8-B-33	8-B-34	10,00	7,01	6,74	0,27	ACCIAIO	300																						10,00		
8-B-34	8-B-35	10,00	6,74	6,48	0,26	ACCIAIO	300																						10,00		
8-B-35	8-B-36	10,00	6,48	6,38	0,10	ACCIAIO	400																							10,00	
8-B-36	8-B-37	10,00	6,38	6,27	0,11	ACCIAIO	400																							10,00	
8-B-37	8-B-38	10,00	6,27	6,07	0,20	ACCIAIO	400																							10,00	
8-B-38	8-B-39	10,00	6,07	5,97	0,10	ACCIAIO	400																							10,00	
8-B-39	8-B-40	10,00	5,97	5,86	0,11	ACCIAIO	400																							10,00	
8-B-40	8-B-41	10,00	5,86	5,76	0,10	ACCIAIO	400																							10,00	
8-B-41	8-B-42	10,00	5,76	5,66	0,10	ACCIAIO	400																							10,00	
8-B-42	8-B-43	10,00	5,66	5,55	0,11	ACCIAIO	400																							10,00	
8-B-43	8-B-44	10,00	5,55	5,45	0,10	ACCIAIO	400																							10,00	
8-B-44	8-B-45	10,00	5,45	5,21	0,24	ACCIAIO	400																							10,00	
8-B-45	8-B-46	10,00	5,21	5,18	0,03	ACCIAIO	500																								10,00
8-B-46	8-B-47	10,00	5,18	5,14	0,04	ACCIAIO	500																								10,00
8-B-47	8-B-48	10,00	5,14	5,10	0,04	ACCIAIO	500																								10,00
8-B-48	8-B-49	10,00	5,10	5,07	0,03	ACCIAIO	500																								10,00
8-B-49	8-B-50	10,00	5,07	5,03	0,04	ACCIAIO	500																								10,00
8-B-50	8-B-51	10,00	5,03	4,99	0,04	ACCIAIO	500																								10,00
8-B-51	8-B-52	10,00	4,99	4,96	0,03	ACCIAIO	500																								10,00
8-B-52	8-B-53	10,00	4,96	4,92	0,04	ACCIAIO	500																								10,00
8-B-53	8-B-54	10,00	4,92	4,88	0,04	ACCIAIO	500																								10,00
8-B-54	8-B-55	10,00	4,88	4,85	0,03	ACCIAIO	500																								10,00
8-B-55	8-B-56	10,00	4,85	4,81	0,04	ACCIAIO	500																								10,00
8-B-56	8-B-57	10,00	4,81	4,77	0,04	ACCIAIO	500																								10,00
8-B-57	8-B-58	10,00	4,77	4,74	0,03	ACCIAIO	500																								10,00
8-B-58	8-B-59	10,00	4,74	4,70	0,04	ACCIAIO	500																								10,00
8-B-59	8-B-60	10,00	4,70	4,65	0,05	ACCIAIO	500																								10,00
8-B-60	8-B-61	10,00	4,65	4,61	0,04	ACCIAIO	500																								10,00
8-B-61	8-A-61	25,25	4,61	4,59	0,02	PEAD	630	1,63	0,58	0,42	1,156	1,20	0,15	0,78	0,27	35,03		4,38	14,90	7,88				25,25							
		7 623,45														**6332,57**	**0,00**	**838,46**	**2 590,73**	**1 715,42**	**0,00**	**2 024,75**	**1 747,70**	**1 304,20**	**359,45**	**0,00**	**0,00**	**1 011,35**	**656,00**	**200,00**	**320,00**
																								5 436,10					**2 187,35**		

ALLEGATI AL COMPUTO METRICO ESTIMATIVO

IDRAULICA

SMALTIMENTO ACQUE METEORICHE DI LINEA:

pozzetti collettori fognari correnti

POZZETTI COLLETTORI FOGNARI CORRENTI
ASSE PRINCIPALE
SEZIONI TIPO PER COMPUTO

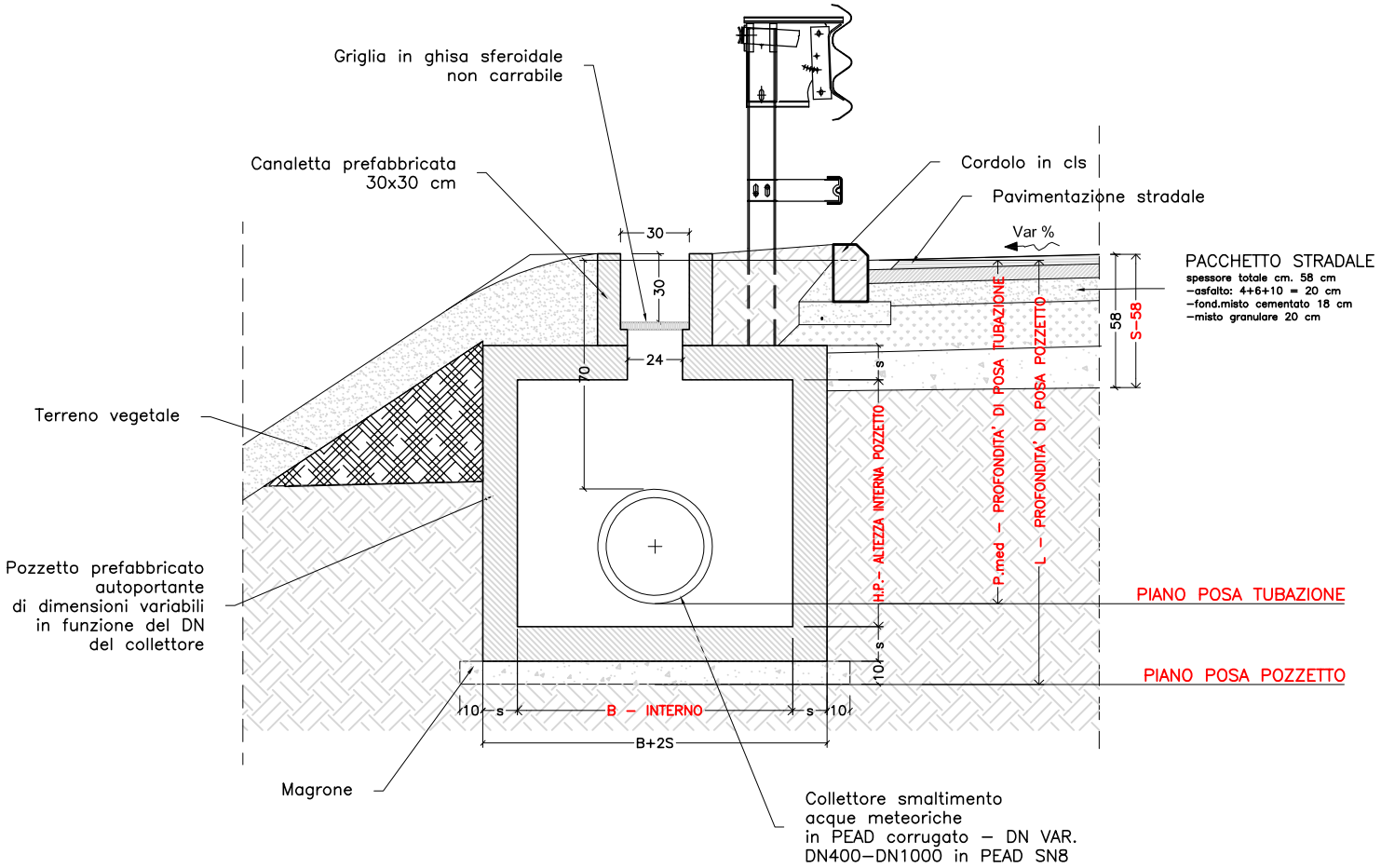

TABELLA POZZETTI STRADALI				
Materiale	D_{ext} [mm]	D_{int} [mm]	B [mm]	Dim. scavo minimo
PEAD	315	273	1000	1500 x 1500
PEAD	400	344	1000	1500 x 1500
PEAD	500	427	1200	1700 x 1700
PEAD	630	533	1200	1700 x 1700
PEAD	800	691	1500	2000 x 2000
PEAD	1000	855	1500	2000 x 2000
PEAD	1200	1024	2000	2500 x 2500
CLS	1680	1400	2000	2500 x 2500

POZZETTI COLLETTORI FOGNARI CORRENTI
VIABILITA' SECONDARIA
SEZIONI TIPO PER COMPUTO

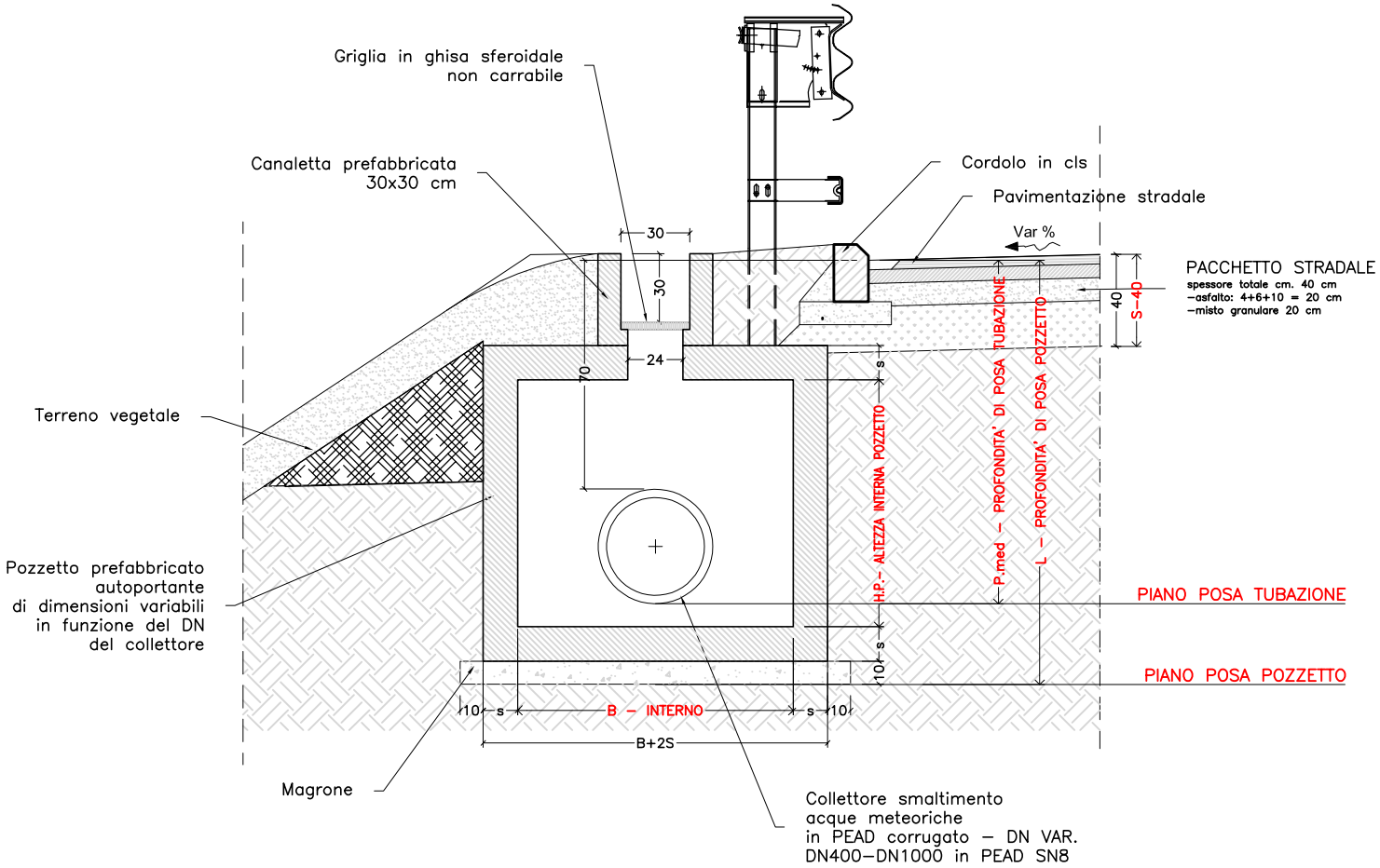

TABELLA POZZETTI STRADALI				
Materiale	D_{ext} [mm]	D_{int} [mm]	B [mm]	Dim. scavo minimo
PEAD	315	273	1000	1500 x 1500
PEAD	400	344	1000	1500 x 1500
PEAD	500	427	1200	1700 x 1700
PEAD	630	533	1200	1700 x 1700
PEAD	800	691	1500	2000 x 2000
PEAD	1000	855	1500	2000 x 2000
PEAD	1200	1024	2000	2500 x 2500
CLS	1680	1400	2000	2500 x 2500

ANAS - SS.398 VIA VAL DI CORNIA - Bretella di collegamento btra l'Autostrada Tirrenica A12 e il Porto di Piombino - LOTTO 1 -Svincolo di Geodetica-Gagno
PROGETTO ESECUTIVO: COMPUTO METRICO ESTIMATIVO - ALLEGATO: IDRAULICA PIATTAFORMA STRADALE - POZZETTI COLLETTORI CORRENTI

PICCHETTO	TUBAZIONE		VERIFICA SEZIONE DI POSA			SEZIONE DI POSA - COMPUTO						POZZETTI: ELEMENTO BASE					POZZETTI: ELEMENTI PROLUNGA												SOLETTA DI CHIUSURA			
nome pozz.	Materiale	DN	P.med p.posa tubo	L. p.posa pozz.	H.P. h.int. pozz.	TIPO POZZETTO	AREA SCAVO		ALTEZZA SCAVO	VOLUME SCAVO	VOLUME POZZETTO	VOLUME RINTERRO	H.base (m)	A B:100	B B:120	C B:150	D B:200	H.prolunga (m)	Prolunghe corte	Prolunghe lunghe	A 100x50	A 100x100	B 120x50	B 120x100	C 150x50	C 150x100	D 200x50	D 200x80	A B:100	B B:120	C B:150	D B:200
IMPIANTO N.1																																
RAMO 1-A																																
1-A-01	PEAD	400	1,40	1,65	0,82	A	1,50	1,50	1,03	2,32	1,74	0,58	1,00	1															1			
1-A-02	PEAD	400	1,40	1,65	0,82	A	1,50	1,50	1,03	2,32	1,74	0,58	1,00	1															1			
1-A-03	PEAD	400	1,40	1,65	0,82	A	1,50	1,50	1,03	2,32	1,74	0,58	1,00	1															1			
1-A-04	PEAD	400	1,50	1,75	0,92	A	1,50	1,50	1,13	2,54	1,91	0,63	1,00	1															1			
1-A-05	PEAD	400	1,50	1,75	0,92	A	1,50	1,50	1,13	2,54	1,91	0,63	1,00	1															1			
1-A-06	PEAD	400	1,63	1,88	1,05	A	1,50	1,50	1,26	2,84	2,13	0,71	1,00	1				0,05	1		1								1			
1-A-07	PEAD	400	1,63	1,88	1,05	A	1,50	1,50	1,26	2,84	2,13	0,71	1,00	1				0,05	1		1								1			
1-A-08	PEAD	400	1,63	1,88	1,05	A	1,50	1,50	1,26	2,84	2,13	0,71	1,00	1				0,05	1		1								1			
1-A-09	PEAD	400	1,63	1,88	1,05	A	1,50	1,50	1,26	2,84	2,13	0,71	1,00	1				0,05	1		1								1			
RAMO 1-B																																
1-B-01	PEAD	400	1,40	1,65	0,82	A	1,50	1,50	1,03	2,32	1,74	0,58	1,00	1															1			
1-B-02	PEAD	400	1,40	1,65	0,82	A	1,50	1,50	1,03	2,32	1,74	0,58	1,00	1															1			
1-B-03	PEAD	400	1,40	1,65	0,82	A	1,50	1,50	1,03	2,32	1,74	0,58	1,00	1															1			
1-B-04	PEAD	400	1,40	1,65	0,82	A	1,50	1,50	1,03	2,32	1,74	0,58	1,00	1															1			
1-B-05	PEAD	400	1,40	1,65	0,82	A	1,50	1,50	1,03	2,32	1,74	0,58	1,00	1															1			
1-B-06	PEAD	400	1,40	1,65	0,82	A	1,50	1,50	1,03	2,32	1,74	0,58	1,00	1															1			
1-B-07	PEAD	400	1,40	1,65	0,82	A	1,50	1,50	1,03	2,32	1,74	0,58	1,00	1															1			
1-B-08	PEAD	400	1,40	1,65	0,82	A	1,50	1,50	1,03	2,32	1,74	0,58	1,00	1															1			
1-B-09	PEAD	500	1,80	2,05	1,22	B	1,70	1,70	1,43	4,13	3,22	0,92	1,00		1			0,22	1				1							1		
1-B-10	PEAD	630	1,80	2,05	1,22	B	1,70	1,70	1,43	4,13	3,22	0,92	1,00		1			0,22	1				1							1		
1-B-11	PEAD	630	2,00	2,25	1,42	B	1,70	1,70	1,63	4,71	3,67	1,04	1,00		1			0,42	1				1							1		
1-B-12	PEAD	630	2,00	2,25	1,42	B	1,70	1,70	1,63	4,71	3,67	1,04	1,00		1			0,42	1				1							1		
1-B-13	PEAD	630	2,00	2,25	1,42	B	1,70	1,70	1,63	4,71	3,67	1,04	1,00		1			0,42	1				1							1		
1-B-14	PEAD	630	2,00	2,25	1,42	B	1,70	1,70	1,63	4,71	3,67	1,04	1,00		1			0,42	1				1							1		
1-B-15	PEAD	630	2,00	2,25	1,42	B	1,70	1,70	1,63	4,71	3,67	1,04	1,00		1			0,42	1				1							1		
1-B-16	PEAD	630	2,00	2,25	1,42	B	1,70	1,70	1,63	4,71	3,67	1,04	1,00		1			0,42	1				1							1		
1-B-17	PEAD	630	2,00	2,25	1,42	B	1,70	1,70	1,63	4,71	3,67	1,04	1,00		1			0,42	1				1							1		
1-B-18	PEAD	630	2,00	2,25	1,42	B	1,70	1,70	1,63	4,71	3,67	1,04	1,00		1			0,42	1				1							1		
1-B-19	PEAD	630	2,00	2,25	1,42	B	1,70	1,70	1,63	4,71	3,67	1,04	1,00		1			0,42	1				1							1		
1-B-20	PEAD	800	2,00	2,25	1,42	C	2,00	2,00	1,63	6,52	5,28	1,24	1,00			1		0,42	1						1						1	
1-B-21	PEAD	800	2,00	2,25	1,42	C	2,00	2,00	1,63	6,52	5,28	1,24	1,00			1		0,42	1						1						1	
1-B-22	PEAD	800	2,00	2,25	1,42	C	2,00	2,00	1,63	6,52	5,28	1,24	1,00			1		0,42	1						1						1	
1-B-23	PEAD	800	2,20	2,45	1,62	C	2,00	2,00	1,83	7,32	5,93	1,39	0,80			1		0,82	2						2						1	
1-B-24	PEAD	800	2,20	2,45	1,62	C	2,00	2,00	1,83	7,32	5,93	1,39	0,80			1		0,82	2						2						1	
1-B-25	PEAD	800	2,20	2,45	1,62	C	2,00	2,00	1,83	7,32	5,93	1,39	0,80			1		0,82	2						2						1	
RAMO 1-C																																
1-C-01	PEAD	400	1,40	1,65	0,82	A	1,50	1,50	1,03	2,32	1,74	0,58	1,00	1															1			
1-C-02	PEAD	400	1,40	1,65	0,82	A	1,50	1,50	1,03	2,32	1,74	0,58	1,00	1															1			
1-C-03	PEAD	400	1,50	1,75	0,92	A	1,50	1,50	1,13	2,54	1,91	0,63	1,00	1															1			
1-C-04	PEAD	400	1,50	1,75	0,92	A	1,50	1,50	1,13	2,54	1,91	0,63	1,00	1															1			
1-C-05	PEAD	400	1,63	1,88	1,05	A	1,50	1,50	1,26	2,84	2,13	0,71	1,00	1				0,05	1		1								1			
1-C-06	PEAD	400	1,63	1,88	1,05	A	1,50	1,50	1,26	2,84	2,13	0,71	1,00	1				0,05	1		1								1			
1-C-07	PEAD	400	1,63	1,88	1,05	A	1,50	1,50	1,26	2,84	2,13	0,71	1,00	1				0,05	1		1								1			
1-C-08	PEAD	400	1,63	1,88	1,05	A	1,50	1,50	1,26	2,84	2,13	0,71	1,00	1				0,05	1		1								1			
1-C-09	PEAD	500	1,80	2,05	1,22	B	1,70	1,70	1,43	4,13	3,22	0,92	1,00		1			0,22	1				1							1		
1-C-10	PEAD	500	1,80	2,05	1,22	B	1,70	1,70	1,43	4,13	3,22	0,92	1,00		1			0,22	1				1							1		
1-C-11	PEAD	500	1,80	2,05	1,22	B	1,70	1,70	1,43	4,13	3,22	0,92	1,00		1			0,22	1				1							1		
RAMO 1-D																																
1-D-01	PEAD	500	1,50	1,75	0,92	B	1,70	1,70	1,13	3,27	2,54	0,72	1,00		1															1		
1-D-02	PEAD	500	1,50	1,75	0,92	B	1,70	1,70	1,13	3,27	2,54	0,72	1,00		1															1		
1-D-03	PEAD	500	1,50	1,75	0,92	B	1,70	1,70	1,13	3,27	2,54	0,72	1,00		1															1		
1-D-04	PEAD	500	1,50	1,75	0,92	B	1,70	1,70	1,13	3,27	2,54	0,72	1,00		1															1		
1-D-05	PEAD	500	1,50	1,75	0,92	B	1,70	1,70	1,13	3,27	2,54	0,72	1,00		1															1		
1-D-06	PEAD	630	1,80	2,05	1,22	B	1,70	1,70	1,43	4,13	3,22	0,92	1,00		1			0,22	1				1							1		
1-D-07	PEAD	630	1,80	2,05	1,22	B	1,70	1,70	1,43	4,13	3,22	0,92	1,00		1			0,22	1				1							1		
1-D-08	PEAD	630	1,80	2,05	1,22	B	1,70	1,70	1,43	4,13	3,22	0,92	1,00		1			0,22	1				1							1		
1-D-09	PEAD	630	2,00	2,25	1,42	B	1,70	1,70	1,63	4,71	3,67	1,04	1,00		1			0,42	1				1							1		
1-D-10	PEAD	630	2,00	2,25	1,42	B	1,70	1,70	1,63	4,71	3,67	1,04	1,00		1			0,42	1				1							1		
1-D-11	PEAD	630	2,00	2,25	1,42	B	1,70	1,70	1,63	4,71	3,67	1,04	1,00		1			0,42	1				1							1		
1-D-12	PEAD	630	2,00	2,25	1,42	B	1,70	1,70	1,63	4,71	3,67	1,04	1,00		1			0,42	1				1							1		
1-D-13	PEAD	630	2,00	2,25	1,42	B	1,70	1,70	1,63	4,71	3,67	1,04	1,00		1			0,42	1				1							1		
1-D-14	PEAD	630	2,00	2,25	1,42	B	1,70	1,70	1,63	4,71	3,67	1,04	1,00		1			0,42	1				1							1		
1-D-15	PEAD	630	2,00	2,25	1,42	B	1,70	1,70	1,63	4,71	3,67	1,04	1,00		1			0,42	1				1							1		
1-D-16	PEAD	630	2,00	2,25	1,42	B	1,70	1,70	1,63	4,71	3,67	1,04	1,00		1			0,42	1				1							1		
1-D-17	PEAD	630	2,00	2,25	1,42	B	1,70	1,70	1,63	4,71	3,67	1,04	1,00		1			0,42	1				1							1		
1-D-18	PEAD	630	2,00	2,25	1,42	B	1,70	1,70	1,63	4,71	3,67	1,04	1,00		1			0,42	1				1							1		
1-D-19	PEAD	800	2,00	2,25	1,42	C	2,00	2,00	1,63	6,52	5,28	1,24	1,00			1		0,42	1						1						1	

ANAS - SS.398 VIA VAL DI CORNIA - Bretella di collegamento btra l'Autostrada Tirrenica A12 e il Porto di Piombino - LOTTO 1 -Svincolo di Geodetica-Gagno
PROGETTO ESECUTIVO: COMPUTO METRICO ESTIMATIVO - ALLEGATO: IDRAULICA PIATTAFORMA STRADALE - POZZETTI COLLETTORI CORRENTI

PICCHETTO	TUBAZIONE		VERIFICA SEZIONE DI POSA			SEZIONE DI POSA - COMPUTO						POZZETTI: ELEMENTO BASE					POZZETTI: ELEMENTI PROLUNGA											SOLETTA DI CHIUSURA			
nome pozz.	Materiale	DN	P.med p.posa tubo	L. p.posa pozz.	H.P. h.int. pozz.	TIPO POZZETTO	AREA SCAVO		ALTEZZA SCAVO	VOLUME SCAVO	VOLUME POZZETTO	VOLUME RINTERRO	H.base (m)	A B:100	B B:120	C B:150	D B:200	H.prolunga (m)	Prolunghe corte	Prolunghe lunghe	A 100x50	A 100x100	B 120x50	B 120x100	C 150x50	C 150x100	D 200x50	D 200x80	A B:100	B B:120	C B:150	D B:200
IMPIANTO N.2																															
RAMO 2-A																															
2-A-01	ACCIAIO	200																													
2-A-02	ACCIAIO	200																													
2-A-03	ACCIAIO	200																													
2-A-04	ACCIAIO	200																													
2-A-05	ACCIAIO	200																													
2-A-06	ACCIAIO	200																													
2-A-07	ACCIAIO	200																													
2-A-08	ACCIAIO	200																													
2-A-09	ACCIAIO	200																													
2-A-10	ACCIAIO	200																													
2-A-11	PEAD	400	1,40	1,65	0,82	A	1,50	1,50	1,03	2,32	1,74	0,58	1,00	1														1			
2-A-11b	PEAD	400	1,40	1,65	0,82	A	1,50	1,50	1,03	2,32	1,74	0,58	1,00	1														1			
2-A-12	PEAD	400	1,40	1,65	0,82	A	1,50	1,50	1,03	2,32	1,74	0,58	1,00	1														1			
2-A-13	PEAD	400	1,40	1,65	0,82	A	1,50	1,50	1,03	2,32	1,74	0,58	1,00	1														1			
2-A-14	PEAD	400	1,40	1,65	0,82	A	1,50	1,50	1,03	2,32	1,74	0,58	1,00	1														1			
RAMO 2-B																															
2-B-01	ACCIAIO	200																													
2-B-02	ACCIAIO	200																													
2-B-03	ACCIAIO	200																													
2-B-04	ACCIAIO	200																													
2-B-05	ACCIAIO	200																													
2-B-06	ACCIAIO	200																													
2-B-07	ACCIAIO	200																													
2-B-08	ACCIAIO	200																													
2-B-09	ACCIAIO	200																													
2-B-10	ACCIAIO	200																													
2-B-11	PEAD	400	1,40	1,65	0,82	A	1,50	1,50	1,03	2,32	1,74	0,58	1,00	1														1			
2-B-12	PEAD	400	1,40	1,65	0,82	A	1,50	1,50	1,03	2,32	1,74	0,58	1,00	1														1			
2-B-13	PEAD	400	1,40	1,65	0,82	A	1,50	1,50	1,03	2,32	1,74	0,58	1,00	1														1			
RAMO 2-C																															
2-C-01	PEAD	400	1,40	1,65	0,82	A	1,50	1,50	1,03	2,32	1,74	0,58	1,00	1														1			
2-C-02	PEAD	400	1,40	1,65	0,82	A	1,50	1,50	1,03	2,32	1,74	0,58	1,00	1														1			
2-C-03	PEAD	400	1,40	1,65	0,82	A	1,50	1,50	1,03	2,32	1,74	0,58	1,00	1														1			
2-C-04	PEAD	400	1,40	1,65	0,82	A	1,50	1,50	1,03	2,32	1,74	0,58	1,00	1														1			
2-C-05	PEAD	400	1,40	1,65	0,82	A	1,50	1,50	1,03	2,32	1,74	0,58	1,00	1														1			
2-C-06	PEAD	400	1,40	1,65	0,82	A	1,50	1,50	1,03	2,32	1,74	0,58	1,00	1														1			
2-C-07	PEAD	500	1,40	1,65	0,82	B	1,70	1,70	1,03	2,98	2,32	0,66	1,00		1														1		
2-C-08	PEAD	500	1,40	1,65	0,82	B	1,70	1,70	1,03	2,98	2,32	0,66	1,00		1														1		

ANAS - SS.398 VIA VAL DI CORNIA - Bretella di collegamento btra l'Autostrada Tirrenica A12 e il Porto di Piombino - LOTTO 1 -Svincolo di Geodetica-Gagno
PROGETTO ESECUTIVO: COMPUTO METRICO ESTIMATIVO - ALLEGATO: IDRAULICA PIATTAFORMA STRADALE - POZZETTI COLLETTORI CORRENTI

PICCHETTO	TUBAZIONE		VERIFICA SEZIONE DI POSA			SEZIONE DI POSA - COMPUTO							POZZETTI: ELEMENTO BASE					POZZETTI: ELEMENTI PROLUNGA											SOLETTA DI CHIUSURA			
nome pozz.	Materiale	DN	P.med p.posa tubo	L. p.posa pozz.	H.P. h.int. pozz.	TIPO POZZETTO	AREA SCAVO		ALTEZZA SCAVO	VOLUME SCAVO	VOLUME POZZETTO	VOLUME RINTERRO	H.base (m)	A B:100	B B:120	C B:150	D B:200	H.prolunga (m)	Prolunghe corte	Prolunghe lunghe	A 100x50	A 100x100	B 120x50	B 120x100	C 150x50	C 150x100	D 200x50	D 200x80	A B:100	B B:120	C B:150	D B:200
IMPIANTO N.3																																
RAMO 3-A																																
3-A-01	ACCIAIO	200																														
3-A-02	ACCIAIO	200																														
3-A-03	ACCIAIO	200																														
3-A-04	ACCIAIO	200																														
3-A-05	ACCIAIO	200																														
3-A-06	ACCIAIO	200																														
3-A-07	ACCIAIO	200																														
3-A-08	ACCIAIO	200																														
3-A-09	ACCIAIO	200																														
3-A-10	ACCIAIO	200																														
3-A-11	ACCIAIO	200																														
3-A-12	PEAD	400	1,40	1,65	0,82	A	1,50	1,50	1,03	2,32	1,74	0,58	1,00	1															1			
3-A-13	PEAD	400	1,40	1,65	0,82	A	1,50	1,50	1,03	2,32	1,74	0,58	1,00	1															1			
3-A-14	PEAD	400	1,50	1,75	0,92	A	1,50	1,50	1,13	2,54	1,91	0,63	1,00	1															1			
RAMO 3-B																																
3-B-01	ACCIAIO	200																														
3-B-02	ACCIAIO	200																														
3-B-03	ACCIAIO	200																														
3-B-04	ACCIAIO	200																														
3-B-05	ACCIAIO	200																														
3-B-06	ACCIAIO	200																														
3-B-07	ACCIAIO	200																														
3-B-08	ACCIAIO	200																														
3-B-09	ACCIAIO	200																														
3-B-10	ACCIAIO	200																														
3-B-11	ACCIAIO	200																														
3-B-12	PEAD	400	1,40	1,65	0,82	A	1,50	1,50	1,03	2,32	1,74	0,58	1,00	1															1			
3-B-13	PEAD	400	1,50	1,75	0,92	A	1,50	1,50	1,13	2,54	1,91	0,63	1,00	1															1			
RAMO 3-C																																
3-C-01	PEAD	500	1,50	1,75	0,92	B	1,70	1,70	1,13	3,27	2,54	0,72	1,00		1															1		
3-C-02	PEAD	500	1,50	1,75	0,92	B	1,70	1,70	1,13	3,27	2,54	0,72	1,00		1															1		
3-C-03	PEAD	500	1,50	1,75	0,92	B	1,70	1,70	1,13	3,27	2,54	0,72	1,00		1															1		
3-C-04	PEAD	500	1,50	1,75	0,92	B	1,70	1,70	1,13	3,27	2,54	0,72	1,00		1															1		
3-C-05	PEAD	500	1,50	1,75	0,92	B	1,70	1,70	1,13	3,27	2,54	0,72	1,00		1															1		
3-C-06	PEAD	500	1,50	1,75	0,92	B	1,70	1,70	1,13	3,27	2,54	0,72	1,00		1															1		
RAMO 3-D																																
3-D-01	PEAD	400	1,50	1,75	0,92	A	1,50	1,50	1,13	2,54	1,91	0,63	1,00	1															1			
3-D-02	PEAD	400	1,50	1,75	0,92	A	1,50	1,50	1,13	2,54	1,91	0,63	1,00	1															1			
3-D-03	PEAD	500	1,50	1,75	0,92	B	1,70	1,70	1,13	3,27	2,54	0,72	1,00		1															1		
3-D-04	PEAD	500	1,50	1,75	0,92	B	1,70	1,70	1,13	3,27	2,54	0,72	1,00		1															1		
3-D-05	PEAD	500	1,50	1,75	0,92	B	1,70	1,70	1,13	3,27	2,54	0,72	1,00		1															1		

ANAS - SS.398 VIA VAL DI CORNIA - Bretella di collegamento btra l'Autostrada Tirrenica A12 e il Porto di Piombino - LOTTO 1 -Svincolo di Geodetica-Gagno
PROGETTO ESECUTIVO: COMPUTO METRICO ESTIMATIVO - ALLEGATO: IDRAULICA PIATTAFORMA STRADALE - POZZETTI COLLETTORI CORRENTI

PICCHETTO	TUBAZIONE		VERIFICA SEZIONE DI POSA			SEZIONE DI POSA - COMPUTO							POZZETTI: ELEMENTO BASE					POZZETTI: ELEMENTI PROLUNGA												SOLETTA DI CHIUSURA			
nome pozz.	Materiale	DN	P.med p.posa tubo	L. p.posa pozz.	H.P. h.int. pozz.	TIPO POZZETTO	AREA SCAVO		ALTEZZA SCAVO	VOLUME SCAVO	VOLUME POZZETTO	VOLUME RINTERRO	H.base (m)	A B:100	B B:120	C B:150	D B:200	H.prolunga (m)	Prolunghe corte	Prolunghe lunghe	A 100x50	A 100x100	B 120x50	B 120x100	C 150x50	C 150x100	D 200x50	D 200x80	A B:100	B B:120	C B:150	D B:200
IMPIANTO N.4																																	
RAMO 4-A																																	
4-A-01	PEAD	500	1,50	1,75	0,92	B	1,70	1,70	1,13	3,27	2,54	0,72	1,00		1															1		
4-A-02	PEAD	500	1,50	1,75	0,92	B	1,70	1,70	1,13	3,27	2,54	0,72	1,00		1															1		
4-A-03	PEAD	500	1,50	1,75	0,92	B	1,70	1,70	1,13	3,27	2,54	0,72	1,00		1															1		
4-A-04	PEAD	500	1,50	1,75	0,92	B	1,70	1,70	1,13	3,27	2,54	0,72	1,00		1															1		
4-A-05	PEAD	630	1,80	2,05	1,22	B	1,70	1,70	1,43	4,13	3,22	0,92	1,00		1			0,22	1				1							1		
RAMO 4-B																																	
4-B-01	PEAD	630	1,80	2,05	1,22	B	1,70	1,70	1,43	4,13	3,22	0,92	1,00		1			0,22	1				1							1		
4-B-02	PEAD	800	2,00	2,25	1,42	C	2,00	2,00	1,63	6,52	5,28	1,24	1,00			1		0,42	1						1						1	
RAMO 4-C																																	
4-C-01	PEAD	400	1,40	1,65	0,82	A	1,50	1,50	1,03	2,32	1,74	0,58	1,00	1															1				
4-C-02	PEAD	400	1,40	1,65	0,82	A	1,50	1,50	1,03	2,32	1,74	0,58	1,00	1															1				
4-C-03	PEAD	400	1,50	1,75	0,92	A	1,50	1,50	1,13	2,54	1,91	0,63	1,00	1															1				
4-C-04	PEAD	400	1,50	1,75	0,92	A	1,50	1,50	1,13	2,54	1,91	0,63	1,00	1															1				
4-C-05	PEAD	400	1,63	1,88	1,05	A	1,50	1,50	1,26	2,84	2,13	0,71	1,00	1				0,05	1		1								1				
4-C-06	PEAD	400	1,63	1,88	1,05	A	1,50	1,50	1,26	2,84	2,13	0,71	1,00	1				0,05	1		1								1				
4-C-07	PEAD	500	1,80	2,05	1,22	B	1,70	1,70	1,43	4,13	3,22	0,92	1,00		1			0,22	1				1							1		
4-C-08	PEAD	500	1,80	2,05	1,22	B	1,70	1,70	1,43	4,13	3,22	0,92	1,00		1			0,22	1				1							1		
4-C-09	PEAD	500	1,80	2,05	1,22	B	1,70	1,70	1,43	4,13	3,22	0,92	1,00		1			0,22	1				1							1		
4-C-10	PEAD	500	1,80	2,05	1,22	B	1,70	1,70	1,43	4,13	3,22	0,92	1,00		1			0,22	1				1							1		
4-C-11	PEAD	500	1,80	2,05	1,22	B	1,70	1,70	1,43	4,13	3,22	0,92	1,00		1			0,22	1				1							1		
4-C-12	PEAD	500	1,80	2,05	1,22	B	1,70	1,70	1,43	4,13	3,22	0,92	1,00		1			0,22	1				1							1		
4-C-13	PEAD	500	1,80	2,05	1,22	B	1,70	1,70	1,43	4,13	3,22	0,92	1,00		1			0,22	1				1							1		
4-C-14	PEAD	630	1,80	2,05	1,22	B	1,70	1,70	1,43	4,13	3,22	0,92	1,00		1			0,22	1				1							1		
4-C-15	PEAD	630	1,80	2,05	1,22	B	1,70	1,70	1,43	4,13	3,22	0,92	1,00		1			0,22	1				1							1		
RAMO 4-D																																	
4-D-01	PEAD	400	1,40	1,65	0,82	A	1,50	1,50	1,03	2,32	1,74	0,58	1,00	1															1				
4-D-02	PEAD	400	1,40	1,65	0,82	A	1,50	1,50	1,03	2,32	1,74	0,58	1,00	1															1				
4-D-03	PEAD	400	1,50	1,75	0,92	A	1,50	1,50	1,13	2,54	1,91	0,63	1,00	1															1				
4-D-04	PEAD	400	1,50	1,75	0,92	A	1,50	1,50	1,13	2,54	1,91	0,63	1,00	1															1				
4-D-05	PEAD	400	1,63	1,88	1,05	A	1,50	1,50	1,26	2,84	2,13	0,71	1,00	1				0,05	1		1								1				
4-D-06	PEAD	400	1,63	1,88	1,05	A	1,50	1,50	1,26	2,84	2,13	0,71	1,00	1				0,05	1		1								1				
4-D-07	PEAD	400	1,63	1,88	1,05	A	1,50	1,50	1,26	2,84	2,13	0,71	1,00	1				0,05	1		1								1				
4-D-08	PEAD	500	1,80	2,05	1,22	B	1,70	1,70	1,43	4,13	3,22	0,92	1,00		1			0,22	1				1							1		
4-D-09	PEAD	500	1,80	2,05	1,22	B	1,70	1,70	1,43	4,13	3,22	0,92	1,00		1			0,22	1				1							1		
RAMO 4-E																																	
4-E-01	PEAD	500	1,80	2,05	1,22	B	1,70	1,70	1,43	4,13	3,22	0,92	1,00		1			0,22	1				1							1		
4-E-02	PEAD	630	1,80	2,05	1,22	B	1,70	1,70	1,43	4,13	3,22	0,92	1,00		1			0,22	1				1							1		
4-E-03	PEAD	630	1,80	2,05	1,22	B	1,70	1,70	1,43	4,13	3,22	0,92	1,00		1			0,22	1				1							1		
4-E-04	PEAD	630	1,80	2,05	1,22	B	1,70	1,70	1,43	4,13	3,22	0,92	1,00		1			0,22	1				1							1		
4-E-05	PEAD	630	1,80	2,05	1,22	B	1,70	1,70	1,43	4,13	3,22	0,92	1,00		1			0,22	1				1							1		
4-E-06	PEAD	630	1,80	2,05	1,22	B	1,70	1,70	1,43	4,13	3,22	0,92	1,00		1			0,22	1				1							1		
4-E-07	PEAD	630	1,80	2,05	1,22	B	1,70	1,70	1,43	4,13	3,22	0,92	1,00		1			0,22	1				1							1		
4-E-08	PEAD	630	1,80	2,05	1,22	B	1,70	1,70	1,43	4,13	3,22	0,92	1,00		1			0,22	1				1							1		
4-E-09	PEAD	630	1,80	2,05	1,22	B	1,70	1,70	1,43	4,13	3,22	0,92	1,00		1			0,22	1				1							1		
RAMO 4-F																																	
4-F-01	PEAD	400	1,40	1,65	0,82	A	1,50	1,50	1,03	2,32	1,74	0,58	1,00	1															1				
4-F-02	PEAD	400	1,40	1,65	0,82	A	1,50	1,50	1,03	2,32	1,74	0,58	1,00	1															1				
4-F-03	PEAD	400	1,40	1,65	0,82	A	1,50	1,50	1,03	2,32	1,74	0,58	1,00	1															1				
4-F-04	PEAD	400	1,40	1,65	0,82	A	1,50	1,50	1,03	2,32	1,74	0,58	1,00	1															1				
4-F-05	PEAD	400	1,40	1,65	0,82	A	1,50	1,50	1,03	2,32	1,74	0,58	1,00	1															1				
4-F-06	PEAD	400	1,40	1,65	0,82	A	1,50	1,50	1,03	2,32	1,74	0,58	1,00	1															1				
4-F-07	PEAD	500	1,80	2,05	1,22	B	1,70	1,70	1,43	4,13	3,22	0,92	1,00		1			0,22	1				1							1		

ANAS - SS.398 VIA VAL DI CORNIA - Bretella di collegamento btra l'Autostrada Tirrenica A12 e il Porto di Piombino - LOTTO 1 -Svincolo di Geodetica-Gagno
PROGETTO ESECUTIVO: COMPUTO METRICO ESTIMATIVO - ALLEGATO: IDRAULICA PIATTAFORMA STRADALE - POZZETTI COLLETTORI CORRENTI

PICCHETTO	TUBAZIONE		VERIFICA SEZIONE DI POSA			SEZIONE DI POSA - COMPUTO						POZZETTI: ELEMENTO BASE					POZZETTI: ELEMENTI PROLUNGA											SOLETTA DI CHIUSURA			
nome pozz.	Materiale	DN	P.med p.posa tubo	L. p.posa pozz.	H.P. h.int. pozz.	TIPO POZZETTO	AREA SCAVO		ALTEZZA SCAVO	VOLUME SCAVO	VOLUME POZZETTO	VOLUME RINTERRO	H.base (m)	A B:100	B B:120	C B:150	D B:200	H.prolunga (m)	Prolunghe corte	Prolunghe lunghe	A 100x50	A 100x100	B 120x50	B 120x100	C 150x50	C 150x100	D 200x50	D 200x80	A B:100	B B:120	C B:150	D B:200
IMPIANTO N.5																																
RAMO 5-A																																
5-A-01	ACCIAIO	200																														
5-A-02	ACCIAIO	200																														
5-A-03	ACCIAIO	200																														
5-A-04	ACCIAIO	200																														
5-A-05	ACCIAIO	200																														
5-A-06	ACCIAIO	200																														
5-A-07	ACCIAIO	200																														
5-A-08	ACCIAIO	200																														
5-A-09	ACCIAIO	200																														
5-A-10	ACCIAIO	200																														
5-A-11	ACCIAIO	200																														
5-A-12	ACCIAIO	200																														
5-A-13	ACCIAIO	200																														
5-A-14	ACCIAIO	200																														
5-A-15	ACCIAIO	200																														
5-A-16	ACCIAIO	300																														
5-A-17	ACCIAIO	300																														
5-A-18	ACCIAIO	300																														
5-A-19	ACCIAIO	300																														
5-A-20	ACCIAIO	300																														
5-A-21	ACCIAIO	300																														
5-A-22	PEAD	400	1,50	1,75	0,92	A	1,50	1,50	1,13	2,54	1,91	0,63	1,00	1															1			
5-A-23	PEAD	400	1,50	1,75	0,92	A	1,50	1,50	1,13	2,54	1,91	0,63	1,00	1															1			
5-A-24	PEAD	400	1,63	1,88	1,05	A	1,50	1,50	1,26	2,84	2,13	0,71	1,00	1				0,05	1		1								1			
5-A-25	PEAD	400	1,63	1,88	1,05	A	1,50	1,50	1,26	2,84	2,13	0,71	1,00	1				0,05	1		1								1			
5-A-26	PEAD	400	1,63	1,88	1,05	A	1,50	1,50	1,26	2,84	2,13	0,71	1,00	1				0,05	1		1								1			
5-A-27	PEAD	400	1,63	1,88	1,05	A	1,50	1,50	1,26	2,84	2,13	0,71	1,00	1				0,05	1		1								1			
5-A-28	PEAD	400	1,63	1,88	1,05	A	1,50	1,50	1,26	2,84	2,13	0,71	1,00	1				0,05	1		1								1			
5-A-29	PEAD	500	1,80	2,05	1,22	B	1,70	1,70	1,43	4,13	3,22	0,92	1,00		1			0,22	1				1							1		
5-A-30	PEAD	500	1,80	2,05	1,22	B	1,70	1,70	1,43	4,13	3,22	0,92	1,00		1			0,22	1				1							1		
5-A-31	PEAD	630	1,80	2,05	1,22	B	1,70	1,70	1,43	4,13	3,22	0,92	1,00		1			0,22	1				1							1		
5-A-32	PEAD	800	1,80	2,05	1,22	C	2,00	2,00	1,43	5,72	4,63	1,09	1,00			1		0,22	1						1						1	
RAMO 5-B																																
5-B-01	ACCIAIO	200																														
5-B-02	ACCIAIO	200																														
5-B-03	ACCIAIO	200																														
5-B-04	ACCIAIO	200																														
5-B-05	ACCIAIO	200																														
5-B-06	ACCIAIO	200																														
5-B-07	ACCIAIO	200																														
5-B-08	ACCIAIO	200																														
5-B-09	ACCIAIO	200																														
5-B-10	ACCIAIO	200																														
5-B-11	ACCIAIO	200																														
5-B-12	ACCIAIO	200																														
5-B-13	ACCIAIO	200																														
5-B-14	ACCIAIO	200																														
5-B-15	ACCIAIO	200																														
5-B-16	ACCIAIO	300																														
5-B-17	ACCIAIO	300																														
5-B-18	ACCIAIO	300																														
5-B-19	ACCIAIO	300																														
5-B-20	PEAD	400	1,50	1,75	0,92	A	1,50	1,50	1,13	2,54	1,91	0,63	1,00	1															1			
5-B-21	PEAD	400	1,50	1,75	0,92	A	1,50	1,50	1,13	2,54	1,91	0,63	1,00	1															1			
5-B-22	PEAD	400	1,50	1,75	0,92	A	1,50	1,50	1,13	2,54	1,91	0,63	1,00	1															1			
5-B-23	PEAD	400	1,50	1,75	0,92	A	1,50	1,50	1,13	2,54	1,91	0,63	1,00	1															1			
5-B-24	PEAD	400	1,63	1,88	1,05	A	1,50	1,50	1,26	2,84	2,13	0,71	1,00	1				0,05	1		1								1			
5-B-25	PEAD	400	1,63	1,88	1,05	A	1,50	1,50	1,26	2,84	2,13	0,71	1,00	1				0,05	1		1								1			
5-B-26	PEAD	400	1,63	1,88	1,05	A	1,50	1,50	1,26	2,84	2,13	0,71	1,00	1				0,05	1		1								1			
5-B-27	PEAD	400	1,63	1,88	1,05	A	1,50	1,50	1,26	2,84	2,13	0,71	1,00	1				0,05	1		1								1			
5-B-28	PEAD	500	1,80	2,05	1,22	B	1,70	1,70	1,43	4,13	3,22	0,92	1,00		1			0,22	1				1							1		
5-B-29	PEAD	500	1,80	2,05	1,22	B	1,70	1,70	1,43	4,13	3,22	0,92	1,00		1			0,22	1				1							1		
5-B-30	PEAD	500	1,80	2,05	1,22	B	1,70	1,70	1,43	4,13	3,22	0,92	1,00		1			0,22	1				1							1		

ANAS - SS.398 VIA VAL DI CORNIA - Bretella di collegamento btra l'Autostrada Tirrenica A12 e il Porto di Piombino - LOTTO 1 -Svincolo di Geodetica-Gagno
PROGETTO ESECUTIVO: COMPUTO METRICO ESTIMATIVO - ALLEGATO: IDRAULICA PIATTAFORMA STRADALE - POZZETTI COLLETTORI CORRENTI

PICCHETTO	TUBAZIONE		VERIFICA SEZIONE DI POSA			SEZIONE DI POSA - COMPUTO							POZZETTI: ELEMENTO BASE					POZZETTI: ELEMENTI PROLUNGA												SOLETTA DI CHIUSURA			
nome pozz.	Materiale	DN	P.med p.posa tubo	L. p.posa pozz.	H.P. h.int. pozz.	TIPO POZZETTO	AREA SCAVO		ALTEZZA SCAVO	VOLUME SCAVO	VOLUME POZZETTO	VOLUME RINTERRO	H.base (m)	A B:100	B B:120	C B:150	D B:200	H.prolunga (m)	Prolunghe corte	Prolunghe lunghe	A 100x50	A 100x100	B 120x50	B 120x100	C 150x50	C 150x100	D 200x50	D 200x80	A B:100	B B:120	C B:150	D B:200
RAMO 5-C																																	
5-C-01	PEAD	500	1,40	1,65	0,82	B	1,70	1,70	1,03	2,98	2,32	0,66	1,00		1															1		
5-C-02	PEAD	500	1,50	1,75	0,92	B	1,70	1,70	1,13	3,27	2,54	0,72	1,00		1															1		
5-C-03	PEAD	500	1,63	1,88	1,05	B	1,70	1,70	1,26	3,64	2,84	0,81	1,00		1			0,05	1				1							1		
5-C-04	PEAD	500	1,63	1,88	1,05	B	1,70	1,70	1,26	3,64	2,84	0,81	1,00		1			0,05	1				1							1		
5-C-05	PEAD	500	1,63	1,88	1,05	B	1,70	1,70	1,26	3,64	2,84	0,81	1,00		1			0,05	1				1							1		
5-C-06	PEAD	630	1,80	2,05	1,22	B	1,70	1,70	1,43	4,13	3,22	0,92	1,00		1			0,22	1				1							1		
5-C-07	PEAD	630	2,00	2,25	1,42	B	1,70	1,70	1,63	4,71	3,67	1,04	1,00		1			0,42	1				1							1		
5-C-08	PEAD	630	2,00	2,25	1,42	B	1,70	1,70	1,63	4,71	3,67	1,04	1,00		1			0,42	1				1							1		
5-C-09	PEAD	630	2,00	2,25	1,42	B	1,70	1,70	1,63	4,71	3,67	1,04	1,00		1			0,42	1				1							1		
5-C-10	PEAD	630	2,00	2,25	1,42	B	1,70	1,70	1,63	4,71	3,67	1,04	1,00		1			0,42	1				1							1		
5-C-11	PEAD	630	2,00	2,25	1,42	B	1,70	1,70	1,63	4,71	3,67	1,04	1,00		1			0,42	1				1							1		
5-C-12	PEAD	630	2,00	2,25	1,42	B	1,70	1,70	1,63	4,71	3,67	1,04	1,00		1			0,42	1				1							1		
5-C-13	PEAD	630	2,00	2,25	1,42	B	1,70	1,70	1,63	4,71	3,67	1,04	1,00		1			0,42	1				1							1		
5-C-14	PEAD	800	2,00	2,25	1,42	C	2,00	2,00	1,63	6,52	5,28	1,24	1,00			1		0,42	1						1						1	
5-C-15	PEAD	800	2,00	2,25	1,42	C	2,00	2,00	1,63	6,52	5,28	1,24	1,00			1		0,42	1						1						1	
5-C-16	PEAD	800	2,00	2,25	1,42	C	2,00	2,00	1,63	6,52	5,28	1,24	1,00			1		0,42	1						1						1	
5-C-17	PEAD	800	2,00	2,25	1,42	C	2,00	2,00	1,63	6,52	5,28	1,24	1,00			1		0,42	1						1						1	
5-C-18	PEAD	800	2,00	2,25	1,42	C	2,00	2,00	1,63	6,52	5,28	1,24	1,00			1		0,42	1						1						1	
5-C-19	PEAD	800	2,00	2,25	1,42	C	2,00	2,00	1,63	6,52	5,28	1,24	1,00			1		0,42	1						1						1	
5-C-20	PEAD	800	2,00	2,25	1,42	C	2,00	2,00	1,63	6,52	5,28	1,24	1,00			1		0,42	1						1						1	
5-C-21	PEAD	800	2,00	2,25	1,42	C	2,00	2,00	1,63	6,52	5,28	1,24	1,00			1		0,42	1						1						1	
RAMO 5-D																																	
5-D-01	PEAD	500	1,40	1,65	0,82	B	1,70	1,70	1,03	2,98	2,32	0,66	1,00		1															1		
5-D-02	PEAD	500	1,50	1,75	0,92	B	1,70	1,70	1,13	3,27	2,54	0,72	1,00		1															1		
5-D-03	PEAD	500	1,63	1,88	1,05	B	1,70	1,70	1,26	3,64	2,84	0,81	1,00		1			0,05	1				1							1		
5-D-04	PEAD	500	1,63	1,88	1,05	B	1,70	1,70	1,26	3,64	2,84	0,81	1,00		1			0,05	1				1							1		
5-D-05	PEAD	500	1,63	1,88	1,05	B	1,70	1,70	1,26	3,64	2,84	0,81	1,00		1			0,05	1				1							1		
5-D-06	PEAD	500	1,80	2,05	1,22	B	1,70	1,70	1,43	4,13	3,22	0,92	1,00		1			0,22	1				1							1		
5-D-07	PEAD	500	1,80	2,05	1,22	B	1,70	1,70	1,43	4,13	3,22	0,92	1,00		1			0,22	1				1							1		
5-D-08	PEAD	500	1,80	2,05	1,22	B	1,70	1,70	1,43	4,13	3,22	0,92	1,00		1			0,22	1				1							1		
5-D-09	PEAD	500	1,80	2,05	1,22	B	1,70	1,70	1,43	4,13	3,22	0,92	1,00		1			0,22	1				1							1		
5-D-10	PEAD	500	1,80	2,05	1,22	B	1,70	1,70	1,43	4,13	3,22	0,92	1,00		1			0,22	1				1							1		
5-D-11	PEAD	500	1,80	2,05	1,22	B	1,70	1,70	1,43	4,13	3,22	0,92	1,00		1			0,22	1				1							1		
5-D-12	PEAD	500	1,80	2,05	1,22	B	1,70	1,70	1,43	4,13	3,22	0,92	1,00		1			0,22	1				1							1		
5-D-13	PEAD	630	2,00	2,25	1,42	B	1,70	1,70	1,63	4,71	3,67	1,04	1,00		1			0,42	1				1							1		
5-D-14	PEAD	630	2,00	2,25	1,42	B	1,70	1,70	1,63	4,71	3,67	1,04	1,00		1			0,42	1				1							1		
5-D-15	PEAD	630	2,00	2,25	1,42	B	1,70	1,70	1,63	4,71	3,67	1,04	1,00		1			0,42	1				1							1		
5-D-16	PEAD	630	2,00	2,25	1,42	B	1,70	1,70	1,63	4,71	3,67	1,04	1,00		1			0,42	1				1							1		
RAMO 5-E																																	
5-E-01	PEAD	400	1,40	1,65	0,82	A	1,50	1,50	1,03	2,32	1,74	0,58	1,00	1															1				
5-E-02	PEAD	400	1,40	1,65	0,82	A	1,50	1,50	1,03	2,32	1,74	0,58	1,00	1															1				
5-E-03	PEAD	500	1,50	1,75	0,92	B	1,70	1,70	1,13	3,27	2,54	0,72	1,00		1															1		
5-E-04	PEAD	500	1,50	1,75	0,92	B	1,70	1,70	1,13	3,27	2,54	0,72	1,00		1															1		
5-E-05	PEAD	500	1,50	1,75	0,92	B	1,70	1,70	1,13	3,27	2,54	0,72	1,00		1															1		
5-E-06	PEAD	500	1,50	1,75	0,92	B	1,70	1,70	1,13	3,27	2,54	0,72	1,00		1															1		

ANAS - SS.398 VIA VAL DI CORNIA - Bretella di collegamento btra l'Autostrada Tirrenica A12 e il Porto di Piombino - LOTTO 1 -Svincolo di Geodetica-Gagno
PROGETTO ESECUTIVO: COMPUTO METRICO ESTIMATIVO - ALLEGATO: IDRAULICA PIATTAFORMA STRADALE - POZZETTI COLLETTORI CORRENTI

PICCHETTO	TUBAZIONE		VERIFICA SEZIONE DI POSA			SEZIONE DI POSA - COMPUTO							POZZETTI: ELEMENTO BASE					POZZETTI: ELEMENTI PROLUNGA											SOLETTA DI CHIUSURA			
nome pozz.	Materiale	DN	P.med p.posa tubo	L. p.posa pozz.	H.P. h.int. pozz.	TIPO POZZETTO	AREA SCAVO		ALTEZZA SCAVO	VOLUME SCAVO	VOLUME POZZETTO	VOLUME RINTERRO	H.base (m)	A B:100	B B:120	C B:150	D B:200	H.prolunga (m)	Prolunghe corte	Prolunghe lunghe	A 100x50	A 100x100	B 120x50	B 120x100	C 150x50	C 150x100	D 200x50	D 200x80	A B:100	B B:120	C B:150	D B:200
IMPIANTO N.6																																
RAMO 6-A																																
6-A-01	PEAD	500	1,50	1,75	0,92	B	1,70	1,70	1,13	3,27	2,54	0,72	1,00		1															1		
6-A-02	PEAD	500	1,50	1,75	0,92	B	1,70	1,70	1,13	3,27	2,54	0,72	1,00		1															1		
6-A-03	PEAD	500	1,50	1,75	0,92	B	1,70	1,70	1,13	3,27	2,54	0,72	1,00		1															1		
6-A-04	PEAD	500	1,50	1,75	0,92	B	1,70	1,70	1,13	3,27	2,54	0,72	1,00		1															1		
6-A-05	PEAD	500	1,50	1,75	0,92	B	1,70	1,70	1,13	3,27	2,54	0,72	1,00		1															1		
6-A-06	PEAD	500	1,50	1,75	0,92	B	1,70	1,70	1,13	3,27	2,54	0,72	1,00		1															1		
6-A-07	PEAD	630	1,63	1,88	1,05	B	1,70	1,70	1,26	3,64	2,84	0,81	1,00		1			0,05	1				1							1		
6-A-08	PEAD	630	1,63	1,88	1,05	B	1,70	1,70	1,26	3,64	2,84	0,81	1,00		1			0,05	1				1							1		
6-A-09	PEAD	630	1,63	1,88	1,05	B	1,70	1,70	1,26	3,64	2,84	0,81	1,00		1			0,05	1				1							1		
6-A-10	PEAD	630	1,63	1,88	1,05	B	1,70	1,70	1,26	3,64	2,84	0,81	1,00		1			0,05	1				1							1		
6-A-11	PEAD	630	1,63	1,88	1,05	B	1,70	1,70	1,26	3,64	2,84	0,81	1,00		1			0,05	1				1							1		
RAMO 6-B																																
6-B-01	PEAD	500	1,50	1,75	0,92	B	1,70	1,70	1,13	3,27	2,54	0,72	1,00		1															1		
6-B-02	PEAD	500	1,50	1,75	0,92	B	1,70	1,70	1,13	3,27	2,54	0,72	1,00		1															1		
6-B-03	PEAD	500	1,50	1,75	0,92	B	1,70	1,70	1,13	3,27	2,54	0,72	1,00		1															1		
6-B-04	PEAD	500	1,50	1,75	0,92	B	1,70	1,70	1,13	3,27	2,54	0,72	1,00		1															1		
6-B-05	PEAD	500	1,50	1,75	0,92	B	1,70	1,70	1,13	3,27	2,54	0,72	1,00		1															1		
6-B-06	PEAD	500	1,50	1,75	0,92	B	1,70	1,70	1,13	3,27	2,54	0,72	1,00		1															1		
6-B-07	PEAD	500	1,50	1,75	0,92	B	1,70	1,70	1,13	3,27	2,54	0,72	1,00		1															1		
6-B-08	PEAD	630	1,50	1,75	0,92	B	1,70	1,70	1,13	3,27	2,54	0,72	1,00		1															1		
RAMO 6-C																																
6-C-01	PEAD	400	1,40	1,65	0,82	A	1,50	1,50	1,03	2,32	1,74	0,58	1,00	1															1			
6-C-02	PEAD	400	1,40	1,65	0,82	A	1,50	1,50	1,03	2,32	1,74	0,58	1,00	1															1			
6-C-03	PEAD	400	1,40	1,65	0,82	A	1,50	1,50	1,03	2,32	1,74	0,58	1,00	1															1			
6-C-04	PEAD	400	1,40	1,65	0,82	A	1,50	1,50	1,03	2,32	1,74	0,58	1,00	1															1			
6-C-05	PEAD	400	1,40	1,65	0,82	A	1,50	1,50	1,03	2,32	1,74	0,58	1,00	1															1			
6-C-06	PEAD	500	1,50	1,75	0,92	B	1,70	1,70	1,13	3,27	2,54	0,72	1,00		1															1		
6-C-07	PEAD	500	1,50	1,75	0,92	B	1,70	1,70	1,13	3,27	2,54	0,72	1,00		1															1		
6-C-08	PEAD	500	1,50	1,75	0,92	B	1,70	1,70	1,13	3,27	2,54	0,72	1,00		1															1		

ANAS - SS.398 VIA VAL DI CORNIA - Bretella di collegamento btra l'Autostrada Tirrenica A12 e il Porto di Piombino - LOTTO 1 -Svincolo di Geodetica-Gagno
PROGETTO ESECUTIVO: COMPUTO METRICO ESTIMATIVO - ALLEGATO: IDRAULICA PIATTAFORMA STRADALE - POZZETTI COLLETTORI CORRENTI

PICCHETTO	TUBAZIONE		VERIFICA SEZIONE DI POSA			SEZIONE DI POSA - COMPUTO						POZZETTI: ELEMENTO BASE					POZZETTI: ELEMENTI PROLUNGA											SOLETTA DI CHIUSURA			
nome pozz.	Materiale	DN	P.med p.posa tubo	L. p.posa pozz.	H.P. h.int. pozz.	TIPO POZZETTO	AREA SCAVO		ALTEZZA SCAVO	VOLUME SCAVO	VOLUME POZZETTO	VOLUME RINTERRO	H.base (m)	A B:100	B B:120	C B:150	D B:200	H.prolunga (m)	Prolunghe corte	Prolunghe lunghe	A 100x50	A 100x100	B 120x50	B 120x100	C 150x50	C 150x100	D 200x50	D 200x80	A B:100	B B:120	C B:150	D B:200
IMPIANTO N.7																															
RAMO 7-A																															
7-A-01	ACCIAIO	200																													
7-A-02	ACCIAIO	200																													
7-A-03	ACCIAIO	200																													
7-A-04	ACCIAIO	200																													
7-A-05	ACCIAIO	200																													
7-A-06	ACCIAIO	200																													
7-A-07	ACCIAIO	200																													
7-A-08	ACCIAIO	200																													
7-A-09	PEAD	400	1,40	1,65	0,82	A	1,50	1,50	1,03	2,32	1,74	0,58	1,00	1														1			
7-A-10	PEAD	400	1,50	1,75	0,92	A	1,50	1,50	1,13	2,54	1,91	0,63	1,00	1														1			
7-A-11	PEAD	400	1,50	1,75	0,92	A	1,50	1,50	1,13	2,54	1,91	0,63	1,00	1														1			
7-A-12	PEAD	400	1,50	1,75	0,92	A	1,50	1,50	1,13	2,54	1,91	0,63	1,00	1														1			
RAMO 7-B																															
7-B-01	ACCIAIO	200																													
7-B-02	ACCIAIO	200																													
7-B-03	ACCIAIO	200																													
7-B-04	ACCIAIO	200																													
7-B-05	ACCIAIO	200																													
7-B-06	ACCIAIO	200																													
7-B-07	ACCIAIO	200																													
7-B-08	ACCIAIO	200																													
7-B-09	PEAD	400	1,50	1,75	0,92	A	1,50	1,50	1,13	2,54	1,91	0,63	1,00	1														1			
7-B-10	PEAD	400	1,50	1,75	0,92	A	1,50	1,50	1,13	2,54	1,91	0,63	1,00	1														1			
7-B-11	PEAD	400	1,50	1,75	0,92	A	1,50	1,50	1,13	2,54	1,91	0,63	1,00	1														1			

ANAS - SS.398 VIA VAL DI CORNIA - Bretella di collegamento btra l'Autostrada Tirrenica A12 e il Porto di Piombino - LOTTO 1 -Svincolo di Geodetica-Gagno
PROGETTO ESECUTIVO: COMPUTO METRICO ESTIMATIVO - ALLEGATO: IDRAULICA PIATTAFORMA STRADALE - POZZETTI COLLETTORI CORRENTI

PICCHETTO	TUBAZIONE		VERIFICA SEZIONE DI POSA			SEZIONE DI POSA - COMPUTO						POZZETTI: ELEMENTO BASE					POZZETTI: ELEMENTI PROLUNGA											SOLETTA DI CHIUSURA			
nome pozz.	Materiale	DN	P.med p.posa tubo	L. p.posa pozz.	H.P. h.int. pozz.	TIPO POZZETTO	AREA SCAVO	ALTEZZA SCAVO	VOLUME SCAVO	VOLUME POZZETTO	VOLUME RINTERRO	H.base (m)	A B:100	B B:120	C B:150	D B:200	H.prolunga (m)	Prolunghe corte	Prolunghe lunghe	A 100x50	A 100x100	B 120x50	B 120x100	C 150x50	C 150x100	D 200x50	D 200x80	A B:100	B B:120	C B:150	D B:200
IMPIANTO N.8																															
RAMO 8-A																															
8-A-01	ACCIAIO	200																													
8-A-02	ACCIAIO	200																													
8-A-03	ACCIAIO	200																													
8-A-04	ACCIAIO	200																													
8-A-05	ACCIAIO	200																													
8-A-06	ACCIAIO	200																													
8-A-07	ACCIAIO	300																													
8-A-08	ACCIAIO	300																													
8-A-09	ACCIAIO	300																													
8-A-10	ACCIAIO	300																													
8-A-11	ACCIAIO	300																													
8-A-12	ACCIAIO	300																													
8-A-13	ACCIAIO	300																													
8-A-14	ACCIAIO	300																													
8-A-15	ACCIAIO	300																													
8-A-16	ACCIAIO	300																													
8-A-17	ACCIAIO	300																													
8-A-18	ACCIAIO	300																													
8-A-19	ACCIAIO	300																													
8-A-20	ACCIAIO	300																													
8-A-21	ACCIAIO	300																													
8-A-22	ACCIAIO	300																													
8-A-23	ACCIAIO	300																													
8-A-24	ACCIAIO	300																													
8-A-25	ACCIAIO	300																													
8-A-26	ACCIAIO	300																													
8-A-27	ACCIAIO	300																													
8-A-28	ACCIAIO	300																													
8-A-29	ACCIAIO	300																													
8-A-30	ACCIAIO	300																													
8-A-31	ACCIAIO	300																													
8-A-32	ACCIAIO	300																													
8-A-33	ACCIAIO	300																													
8-A-34	ACCIAIO	300																													
8-A-35	ACCIAIO	400																													
8-A-36	ACCIAIO	400																													
8-A-37	ACCIAIO	400																													
8-A-38	ACCIAIO	400																													
8-A-39	ACCIAIO	400																													
8-A-40	ACCIAIO	400																													
8-A-41	ACCIAIO	400																													
8-A-42	ACCIAIO	400																													
8-A-43	ACCIAIO	400																													
8-A-44	ACCIAIO	400																													
8-A-45	ACCIAIO	500																													
8-A-46	ACCIAIO	500																													
8-A-47	ACCIAIO	500																													
8-A-48	ACCIAIO	500																													
8-A-49	ACCIAIO	500																													
8-A-50	ACCIAIO	500																													
8-A-51	ACCIAIO	500																													
8-A-52	ACCIAIO	500																													
8-A-53	ACCIAIO	500																													
8-A-54	ACCIAIO	500																													
8-A-55	ACCIAIO	500																													
8-A-56	ACCIAIO	500																													
8-A-57	ACCIAIO	500																													
8-A-58	ACCIAIO	500																													
8-A-59	ACCIAIO	500																													
8-A-60	ACCIAIO	500																													

ANAS - SS.398 VIA VAL DI CORNIA - Bretella di collegamento btra l'Autostrada Tirrenica A12 e il Porto di Piombino - LOTTO 1 -Svincolo di Geodetica-Gagno
PROGETTO ESECUTIVO: COMPUTO METRICO ESTIMATIVO - ALLEGATO: IDRAULICA PIATTAFORMA STRADALE - POZZETTI COLLETTORI CORRENTI

PICCHETTO	TUBAZIONE		VERIFICA SEZIONE DI POSA			SEZIONE DI POSA - COMPUTO						POZZETTI: ELEMENTO BASE					POZZETTI: ELEMENTI PROLUNGA												SOLETTA DI CHIUSURA			
nome pozz.	Materiale	DN	P.med p.posa tubo	L. p.posa pozz.	H.P. h.int. pozz.	TIPO POZZETTO	AREA SCAVO		ALTEZZA SCAVO	VOLUME SCAVO	VOLUME POZZETTO	VOLUME RINTERRO	H.base (m)	A B:100	B B:120	C B:150	D B:200	H.prolunga (m)	Prolunghe corte	Prolunghe lunghe	A 100x50	A 100x100	B 120x50	B 120x100	C 150x50	C 150x100	D 200x50	D 200x80	A B:100	B B:120	C B:150	D B:200
RAMO 8-B																																
8-B-01	ACCIAIO	200																														
8-B-02	ACCIAIO	200																														
8-B-03	ACCIAIO	200																														
8-B-04	ACCIAIO	200																														
8-B-05	ACCIAIO	200																														
8-B-06	ACCIAIO	200																														
8-B-07	ACCIAIO	300																														
8-B-08	ACCIAIO	300																														
8-B-09	ACCIAIO	300																														
8-B-10	ACCIAIO	300																														
8-B-11	ACCIAIO	300																														
8-B-12	ACCIAIO	300																														
8-B-13	ACCIAIO	300																														
8-B-14	ACCIAIO	300																														
8-B-15	ACCIAIO	300																														
8-B-16	ACCIAIO	300																														
8-B-17	ACCIAIO	300																														
8-B-18	ACCIAIO	300																														
8-B-19	ACCIAIO	300																														
8-B-20	ACCIAIO	300																														
8-B-21	ACCIAIO	300																														
8-B-22	ACCIAIO	300																														
8-B-23	ACCIAIO	300																														
8-B-24	ACCIAIO	300																														
8-B-25	ACCIAIO	300																														
8-B-26	ACCIAIO	300																														
8-B-27	ACCIAIO	300																														
8-B-28	ACCIAIO	300																														
8-B-29	ACCIAIO	300																														
8-B-30	ACCIAIO	300																														
8-B-31	ACCIAIO	300																														
8-B-32	ACCIAIO	300																														
8-B-33	ACCIAIO	300																														
8-B-34	ACCIAIO	300																														
8-B-35	ACCIAIO	400																														
8-B-36	ACCIAIO	400																														
8-B-37	ACCIAIO	400																														
8-B-38	ACCIAIO	400																														
8-B-39	ACCIAIO	400																														
8-B-40	ACCIAIO	400																														
8-B-41	ACCIAIO	400																														
8-B-42	ACCIAIO	400																														
8-B-43	ACCIAIO	400																														
8-B-44	ACCIAIO	400																														
8-B-45	ACCIAIO	500																														
8-B-46	ACCIAIO	500																														
8-B-47	ACCIAIO	500																														
8-B-48	ACCIAIO	500																														
8-B-49	ACCIAIO	500																														
8-B-50	ACCIAIO	500																														
8-B-51	ACCIAIO	500																														
8-B-52	ACCIAIO	500																														
8-B-53	ACCIAIO	500																														
8-B-54	ACCIAIO	500																														
8-B-55	ACCIAIO	500																														
8-B-56	ACCIAIO	500																														
8-B-57	ACCIAIO	500																														
8-B-58	ACCIAIO	500																														
8-B-59	ACCIAIO	500																														
8-B-60	ACCIAIO	500																														
8-B-61	PEAD	630	2,00	2,25	1,42	B	1,70	1,70	1,63	4,71	3,67	1,04	1,00		1			0,42	1				1							1		
										865	**670**	**194**		**94**	**132**	**17**	**0**		**129**	**0**	**22**	**0**	**87**	**0**	**20**	**0**	**0**	**0**	**94**	**132**	**17**	**0**
														243							**129**				**0**				**243**			