Sez. GA-3
Progr.: 4+069.55
Scala : 1:200
Q.Rif. : 60.00

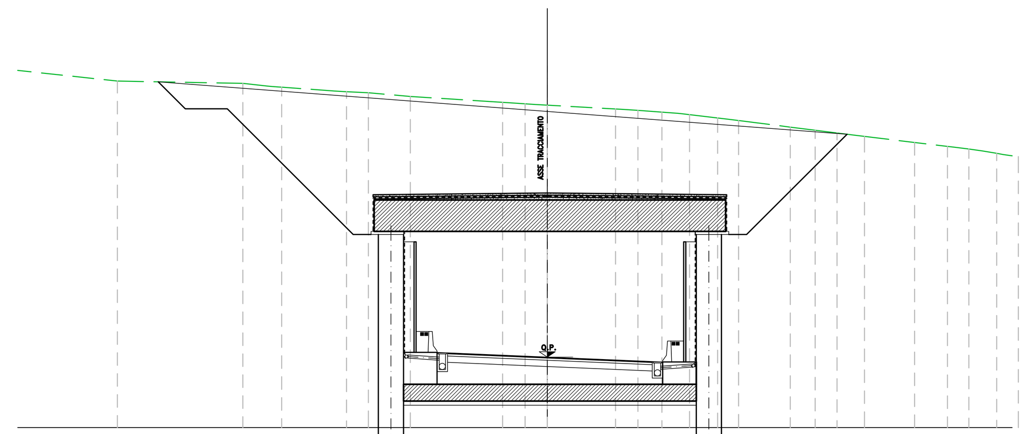

PROGRESSIVE TERRENO	-20.48, -14.51, -13.19, -12.66, -10.35, -9.83, -9.30, -8.53, -6.53, -2.13, -1.62, -1.06, -0.52, 0.00, 3.25, 4.32, 4.96, 5.46, 5.99, 6.78, 7.68, 8.31, 9.12, 9.93, 11.58, 12.28, 12.88, 13.81, 14.69, 15.53, 17.51, 19.07, 19.59, 20.92, 21.52, 22.45, 23.00
PARZIALI TERRENO	5.98, 1.17, 2.31, 0.77, 2.00, 3.98, 3.25, 0.76, 1.50, 1.97, 1.57, 0.83, 0.49, 0.71
QUOTE TERRENO	76.54, 76.43, 76.29, 76.25, 76.08, 76.04, 76.02, 75.99, 75.81, 75.52, 75.49, 75.45, 75.42, 75.39, 75.21, 75.14, 75.09, 75.06, 75.02, 74.94, 74.83, 74.75, 74.65, 74.55, 74.34, 74.25, 74.18, 74.06, 73.95, 73.85, 73.60, 73.42, 73.36, 73.17, 73.07, 72.93
PROGRESSIVE PROGETTO	-6.90, -6.70, -6.45, -5.80, -5.25, -4.80, -3.75, -2.62, 2.64, 3.75, 4.81, 5.25, 6.84, 6.90
PARZIALI PROGETTO	0.25, 0.56, 0.45, 1.05, 1.12, 2.62, 2.63, 1.12, 1.05, 0.45, 1.41
QUOTE PROGETTO	64.48, 64.37, 64.24, 63.89, 63.59, 63.57, 63.52, 63.48, 63.36, 63.25, 63.20, 63.16, 63.14, 62.99, 62.99

Sez. GA-7
Progr.: 4+169.55
Scala : 1:200
Q.Rif. : 60.00

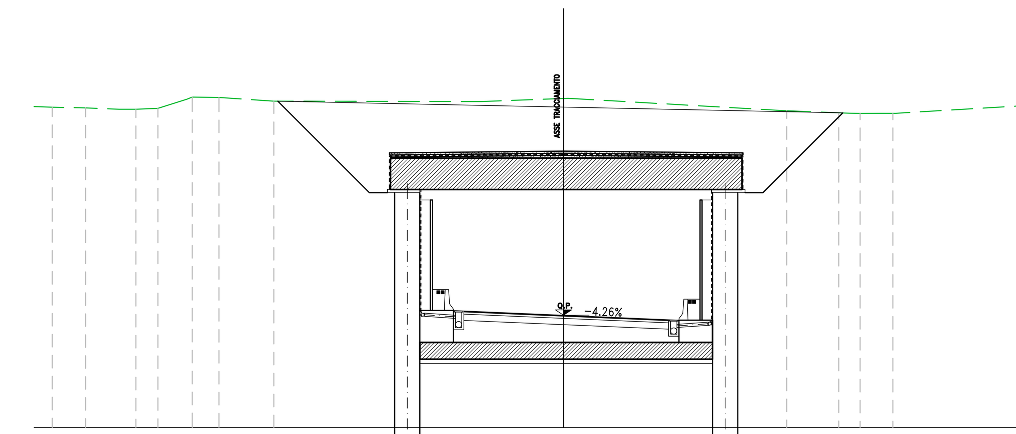

PROGRESSIVE TERRENO	-24.37, -22.78, -21.18, -20.38, -19.33, -17.70, -16.43, -13.81, -3.95, 0.00, 10.63, 13.11, 13.81, 14.96, 15.69
PARZIALI TERRENO	2.35, 1.58, 1.60, 0.80, 1.05, 1.38, 1.27, 2.62, 9.86, 3.95, 10.42, 2.18, 0.69, 0.83, 0.65, 7.40
QUOTE TERRENO	75.29, 75.26, 75.19, 75.20, 75.24, 75.78, 75.76, 75.58, 75.56, 75.71, 75.12, 75.03, 75.00, 75.00, 75.00
PROGRESSIVE PROGETTO	-6.46, -6.30, -5.91, -5.20, -3.63, 3.75, 5.21, 5.54, 6.90
PARZIALI PROGETTO	0.37, 0.66, 1.46, 3.63, 3.64, 1.46, 1.36
QUOTE PROGETTO	66.40, 66.28, 66.02, 65.58, 65.52, 65.36, 65.20, 65.14, 65.17, 65.71

Sez. GA-0A
Progr.: 3+994.56
Scala : 1:200
Q.Rif. : 50.00

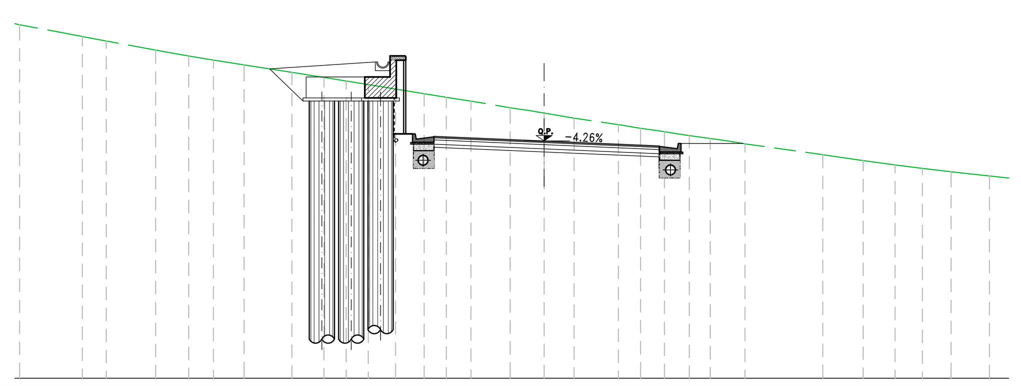

PROGRESSIVE TERRENO	-25.01, -22.82, -22.02, -21.38, -20.88, -19.25, -18.53, -17.76, -16.95, -16.43, -15.77, -14.31, -12.79, -12.02, -11.22, -10.50, -9.44, -8.85, -7.93, -7.08, -6.13, -5.33, -4.27, -3.49, -1.62, -0.66, 0.00, 1.43, 3.54, 4.60, 5.27, 6.44, 7.16, 7.92, 8.73, 9.57, 13.29, 13.82, 15.21, 16.73, 18.04, 19.40, 20.23, 21.23
PARZIALI TERRENO	2.19, 1.63, 0.72, 0.76, 0.81, 0.52, 0.66, 1.03, 1.42, 0.70, 0.68, 0.67, 0.64, 0.59, 0.53, 0.67, 0.78, 1.87, 0.96, 0.66, 0.97, 2.11, 0.84, 0.71, 0.84, 3.60, 1.29, 1.29, 1.31, 1.29, 0.67, 1.00, 0.99
QUOTE TERRENO	66.45, 66.29, 66.17, 66.08, 65.78, 65.65, 65.51, 65.37, 65.28, 65.17, 64.94, 64.71, 64.59, 64.46, 64.35, 64.17, 64.08, 63.93, 63.79, 63.64, 63.50, 63.33, 63.22, 62.90, 62.76, 62.65, 62.40, 62.09, 61.92, 61.83, 61.64, 61.54, 61.43, 61.32, 61.18, 60.66, 60.58, 60.39, 60.18, 60.00, 59.85, 59.76, 59.65
PROGRESSIVE PROGETTO	-12.22, -9.94, -7.74, -7.11, -6.55, -5.73, -5.24, -4.68, -3.74, -2.34, 0.00, 1.41, 3.76, 4.32, 5.26, 6.26, 6.75, 7.57, 7.94, 8.53
PARZIALI PROGETTO	2.28, 2.19, 0.63, 0.57, 0.82, 0.49, 0.56, 0.94, 1.40, 2.34, 1.40, 2.35, 0.56, 0.94, 0.82, 0.49, 0.63, 0.37, 0.58
QUOTE PROGETTO	64.67, 63.15, 61.69, 61.69, 61.46, 61.51, 61.54, 61.52, 61.48, 61.42, 61.32, 61.26, 61.16, 61.14, 61.10, 61.04, 61.01, 61.23, 61.23, 61.32

Sez. GA-4
Progr.: 4+094.55
Scala : 1:200
Q.Rif. : 60.00

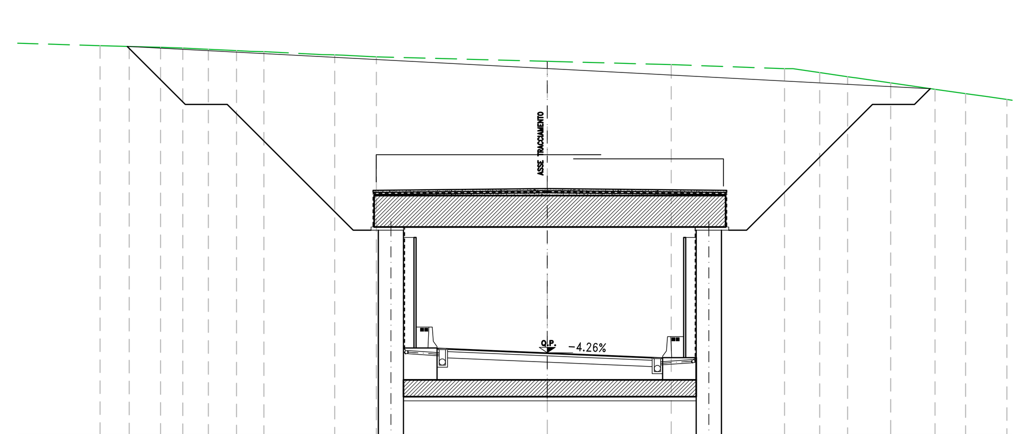

PROGRESSIVE TERRENO	-21.31, -20.67, -19.92, -18.43, -17.71, -17.00, -16.15, -15.43, -14.81, -14.14, -13.50, -10.68, -10.13, -9.01, -8.15, 0.00, 5.91, 11.31, 12.98, 14.31, 15.04, 16.37, 17.29, 18.48, 19.14, 19.94, 20.91, 21.90
PARZIALI TERRENO	0.64, 0.75, 1.49, 0.64, 2.82, 1.03, 0.87, 8.15, 5.91, 5.40, 1.27, 1.33, 1.33, 0.50, 1.19, 0.66, 0.80, 0.98, 0.99, 1.05
QUOTE TERRENO	78.59, 78.58, 78.56, 78.52, 78.50, 78.47, 78.43, 78.39, 78.36, 78.33, 78.31, 78.17, 78.16, 78.11, 78.06, 77.85, 77.69, 77.50, 77.31, 77.12, 77.01, 76.82, 76.69, 76.51, 76.42, 76.31
PROGRESSIVE PROGETTO	-6.90, -6.13, -5.25, -3.75, -3.27, 0.48, 3.75, 5.25, 6.28, 6.71, 6.90
PARZIALI PROGETTO	0.60, 0.74, 1.31, 0.48, 3.27, 0.48, 3.27, 1.31, 0.85, 0.43
QUOTE PROGETTO	65.18, 64.70, 64.17, 64.10, 64.08, 63.94, 63.92, 63.78, 63.72, 63.62, 63.57, 63.55

Sez. GA-8
Progr.: 4+194.55
Scala : 1:200
Q.Rif. : 60.00

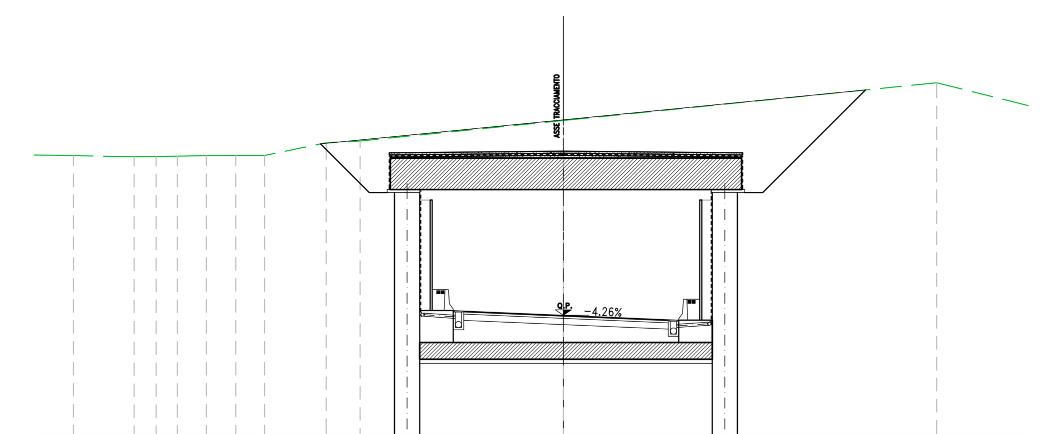

PROGRESSIVE TERRENO	-23.88, -23.36, -20.64, -20.12, -18.99, -18.41, -17.02, -15.62, -14.24, -11.31, -9.69, 0.00, 17.80
PARZIALI TERRENO	2.36, 0.71, 1.06, 1.20, 1.37, 2.94, 1.62, 9.69, 17.80, 4.76
QUOTE TERRENO	73.36, 73.35, 73.30, 73.30, 73.31, 73.32, 73.35, 73.35, 73.36, 73.97, 74.05, 75.03, 76.83
PROGRESSIVE PROGETTO	-6.89, -6.71, -6.22, -5.54, -5.24, -4.73, -3.74, -2.46, 1.29, 3.76, 4.27, 5.26, 6.17, 6.91
PARZIALI PROGETTO	0.43, 0.46, 0.36, 0.30, 0.51, 0.99, 1.28, 2.46, 1.28, 2.47, 0.51, 0.99, 0.73, 0.74
QUOTE PROGETTO	66.83, 66.73, 66.47, 66.11, 65.95, 65.93, 65.89, 65.84, 65.73, 65.68, 65.57, 65.55, 65.51, 65.86, 66.19

Sez. GA-1
Progr.: 4+019.55
Scala : 1:200
Q.Rif. : 50.00

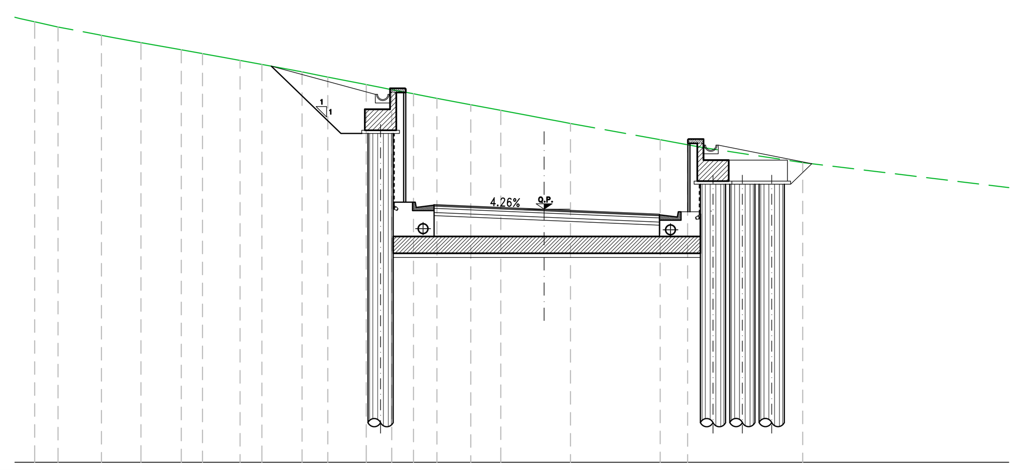

PROGRESSIVE TERRENO	-24.99, -24.29, -23.73, -23.18, -21.11, -20.17, -19.22, -18.23, -17.27, -16.29, -15.31, -14.42, -13.46, -11.55, -11.03, -10.32, -9.08, -8.48, -7.97, -7.27, -5.79, -5.11, -3.50, -2.07, -0.77, 0.00, 0.80, 5.53, 6.14, 6.84, 7.50, 12.33
PARZIALI TERRENO	1.91, 0.91, 0.86, 0.99, 0.93, 0.87, 0.84, 0.81, 0.76, 1.42, 0.51, 1.24, 1.04, 1.22, 1.43, 1.30, 0.77, 0.80, 4.28, 4.68, 14.50
QUOTE TERRENO	71.13, 70.98, 70.85, 70.73, 70.33, 70.16, 69.98, 69.81, 69.64, 69.46, 69.28, 69.12, 68.95, 68.59, 68.49, 68.34, 68.11, 67.99, 67.89, 67.74, 67.46, 67.33, 67.03, 66.77, 66.51, 66.37, 66.22, 65.36, 65.25, 65.12, 65.00, 64.27
PROGRESSIVE PROGETTO	-21.75, -17.25, -15.25, -7.75, -6.90, -6.56, -5.25, -3.75, 0.00, 3.75, 5.25, 6.77, 7.96, 11.59
PARZIALI PROGETTO	4.49, 2.00, 7.50, 0.85, 1.31, 1.50, 3.75, 3.75, 1.50, 1.31, 1.00, 3.62
QUOTE PROGETTO	70.46, 67.46, 67.42, 62.42, 62.42, 62.20, 62.28, 62.21, 62.05, 61.89, 61.83, 61.74, 61.97, 64.38

Sez. GA-5
Progr.: 4+119.55
Scala : 1:200
Q.Rif. : 60.00

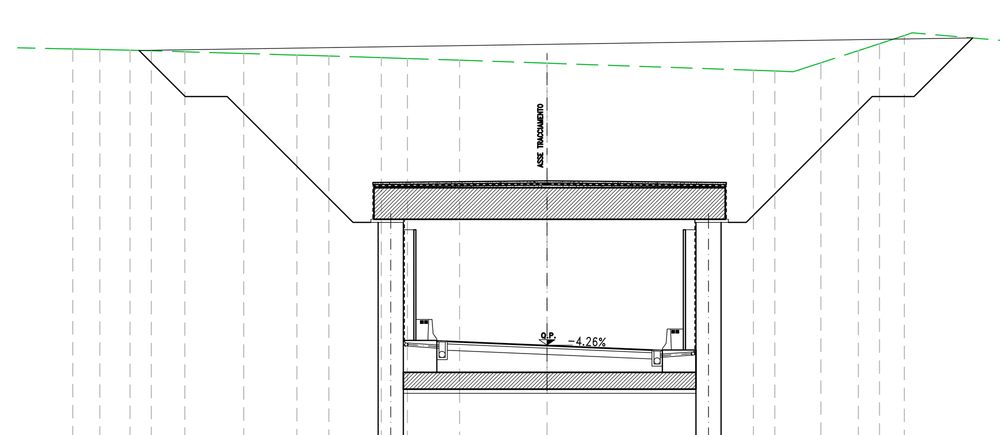

PROGRESSIVE TERRENO	-23.09, -22.12, -21.32, -20.63, -19.88, -18.86, -17.27, -15.07, -14.46, -12.44, -11.92, -10.99, -10.40, -8.89, -7.90, -6.66, -4.17, 0.00, 9.84, 10.42, 11.38, 13.06, 14.85, 15.85, 16.47, 17.04, 22.25
PARZIALI TERRENO	0.52, 0.69, 0.75, 0.81, 1.51, 1.87, 2.02, 0.52, 0.61, 0.59, 1.51, 1.00, 1.24, 2.49, 4.17, 9.84, 0.52, 1.31, 1.79, 1.01, 0.62, 4.84
QUOTE TERRENO	78.59, 78.58, 78.56, 78.54, 78.53, 78.50, 78.45, 78.39, 78.37, 78.31, 78.29, 78.27, 78.25, 78.20, 78.17, 78.13, 78.05, 77.91, 77.57, 77.55, 77.51, 77.93, 78.51, 78.84, 79.04, 79.23, 78.94
PROGRESSIVE PROGETTO	-6.36, -6.07, -5.80, -5.23, -4.36, -3.73, -1.56, 0.00, 1.61, 3.77, 4.64, 5.27, 6.54, 6.92
PARZIALI PROGETTO	0.29, 0.57, 0.87, 0.63, 2.17, 1.56, 1.59, 2.16, 0.87, 0.63, 1.08, 0.38
QUOTE PROGETTO	65.51, 65.29, 65.09, 64.69, 64.65, 64.63, 64.53, 64.47, 64.40, 64.31, 64.27, 64.24, 64.11, 64.07

Sez. GA-9-IMBOCCO
Progr.: 4+219.55
Scala : 1:200
Q.Rif. : 60.00

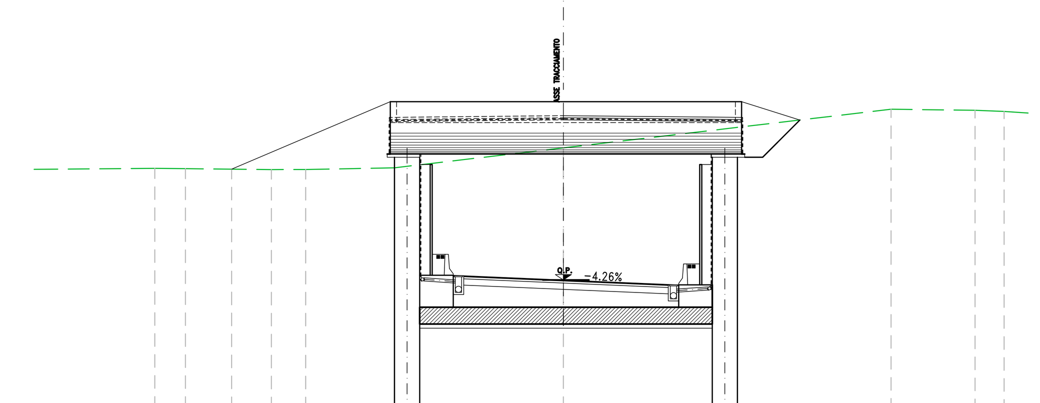

PROGRESSIVE TERRENO	-19.48, -18.02, -15.82, -13.92, -12.29, -8.05, 0.00, 15.62, 19.63, 21.01, 22.25
PARZIALI TERRENO	7.51, 1.46, 2.20, 1.90, 1.63, 4.24, 8.05, 15.62, 4.00, 1.38, 1.23
QUOTE TERRENO	71.37, 71.35, 71.33, 71.31, 71.31, 71.39, 72.34, 74.19, 74.14, 74.08, 74.00
PROGRESSIVE PROGETTO	-6.89, -5.89, -5.24, -4.42, -3.74, -1.69, 1.72, 3.76, 4.45, 5.26, 6.52, 6.91
PARZIALI PROGETTO	0.90, 0.65, 0.82, 0.68, 2.05, 1.69, 1.71, 2.04, 0.68, 0.82, 1.06, 0.40
QUOTE PROGETTO	67.07, 66.59, 66.27, 66.24, 66.21, 66.12, 66.05, 65.97, 65.89, 65.86, 65.82, 66.36, 66.56

Sez. GA-2-IMBOCCO
Progr.: 4+044.55
Scala : 1:200
Q.Rif. : 60.00

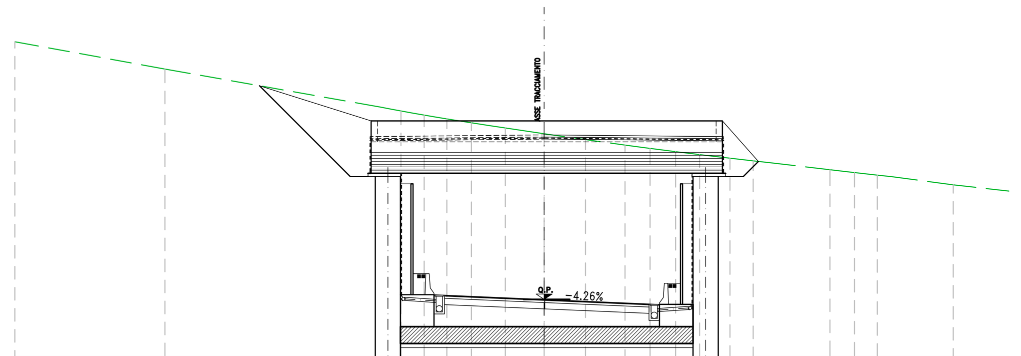

PROGRESSIVE TERRENO	-25.23, -18.08, -7.46, -6.95, -6.42, -5.72, -4.64, -4.10, -3.47, -2.73, -1.85, -0.81, 0.00, 1.97, 3.86, 4.44, 5.05, 6.27, 7.41, 8.86, 9.96, 10.80, 13.63, 14.41, 15.16, 15.88, 16.57, 19.50
PARZIALI TERRENO	7.15, 10.28, 1.08, 0.54, 0.63, 0.74, 0.88, 1.04, 0.81, 1.52, 1.88, 0.59, 0.61, 1.22, 1.14, 1.17, 1.10, 0.84, 2.83, 2.93, 2.65
QUOTE TERRENO	75.00, 73.70, 71.82, 71.73, 71.63, 71.51, 71.33, 71.24, 71.14, 71.03, 70.89, 70.74, 70.62, 70.34, 70.08, 70.00, 69.92, 69.77, 69.65, 69.46, 69.33, 69.24, 68.91, 68.82, 68.73, 68.65, 68.58, 68.19, 67.89
PROGRESSIVE PROGETTO	-6.87, -6.55, -5.22, -4.27, -3.72, -2.36, 2.42, 3.78, 4.73, 5.28, 5.89, 6.60, 6.90, 6.93
PARZIALI PROGETTO	0.32, 1.33, 0.96, 0.54, 1.36, 2.36, 2.39, 1.36, 0.96, 0.54, 0.44, 0.62
QUOTE PROGETTO	63.79, 63.63, 62.96, 62.92, 62.89, 62.83, 62.73, 62.63, 62.57, 62.53, 62.51, 62.68, 62.96, 63.07, 63.08

Sez. GA-6
Progr.: 4+144.55
Scala : 1:200
Q.Rif. : 60.00

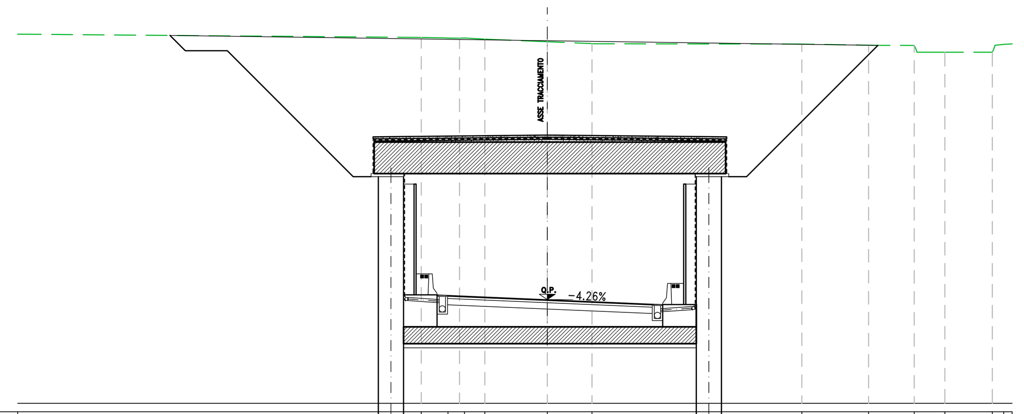

PROGRESSIVE TERRENO	-6.01, -4.73, -3.94, -2.97, 0.00, 2.13, 12.13, 15.31, 17.49, 18.95, 21.21, 21.75
PARZIALI TERRENO	23.24, 1.13, 0.55, 0.97, 2.97, 2.13, 9.87, 3.18, 1.82, 1.33, 2.26
QUOTE TERRENO	77.42, 77.39, 77.40, 77.34, 77.22, 77.13, 77.11, 77.05, 77.04, 76.72, 76.72, 77.09
PROGRESSIVE PROGETTO	-5.24, -5.24, -4.42, -3.74, -1.69, 2.06, 3.76, 4.58, 5.26, 6.16, 6.65, 6.91
PARZIALI PROGETTO	0.82, 0.68, 2.05, 1.69, 2.05, 1.70, 0.82, 0.68, 0.70, 0.49, 0.26
QUOTE PROGETTO	65.16, 65.16, 65.13, 65.10, 65.01, 64.94, 64.85, 64.78, 64.74, 64.72, 64.95, 64.57, 64.54

Sez. GA-10
Progr.: 4+232.07
Scala : 1:200
Q.Rif. : 60.00

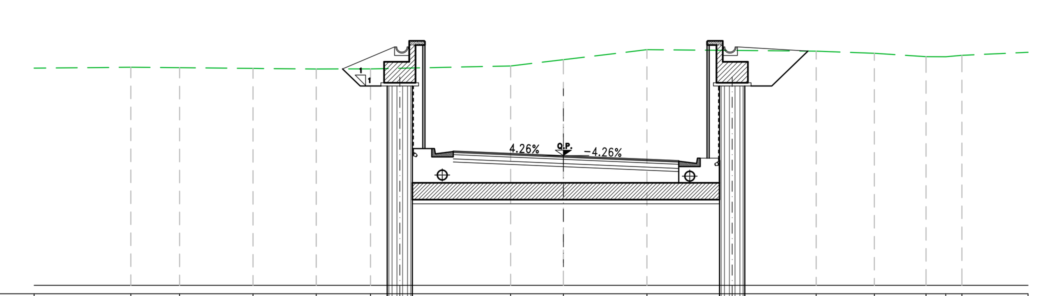

PROGRESSIVE TERRENO	-20.62, -18.30, -14.80, -11.78, -9.20, -2.51, 0.00, 3.99, 12.05, 14.83, 17.29, 18.23, 19.00
PARZIALI TERRENO	2.33, 3.50, 3.01, 2.59, 6.68, 2.51, 3.99, 8.07, 2.77, 2.47, 0.94, 0.77, 4.14
QUOTE TERRENO	70.40, 70.38, 70.34, 70.31, 70.32, 70.46, 70.76, 71.24, 71.16, 71.06, 70.90, 70.90, 70.97
PROGRESSIVE PROGETTO	-13.41, -7.75, -6.90, -6.56, -5.25, -3.75, 3.75, 5.25, 6.72, 7.91, 15.31
PARZIALI PROGETTO	5.66, 0.85, 1.31, 1.50, 3.75, 3.75, 1.50, 1.31, 1.00, 7.39
QUOTE PROGETTO	70.33, 66.56, 66.56, 66.33, 66.41, 66.35, 66.19, 66.03, 65.96, 65.88, 66.10, 71.03

anas
GRUPPO FS ITALIANE

Direzione Progettazione e Realizzazione Lavori

S.S. n.626 della "Valle del Salso"

Lotti 7° e 8° e completamento della Tangenziale di Gela

Itinerario Gela - Agrigento - Castelvetrano

PROGETTO DEFINITIVO — COD. PA83

PROGETTAZIONE: ANAS - DIREZIONE PROGETTAZIONE E REALIZZAZIONE LAVORI

PROGETTISTA:
Responsabile Integrazioni specialistiche Dott. Ing. Giovanni Piazza
Responsabile Tracciato stradale Dott. Ing. Massimo Capasso
Responsabile Strutture Dott. Ing. Giovanni Piazza
Responsabile Idraulica, Geotecnica e Impianti Dott. Ing. Sergio Di Maio
Responsabile Ambiente e SIA Dott. Ing. Francesco Ventura

GEOLOGO:
Geol. Enrico Curcuruto

COORDINATORE SICUREZZA IN FASE DI PROGETTAZIONE:
Dott. ing. Sergio Di Maio

VISTO: IL RESPONSABILE DEL PROCEDIMENTO
Dott. Ing. Maria Coppola

GRUPPO DI PROGETTAZIONE: LOTTI SpA ingegneria; VIA INGEGNERIA; SERING INGEGNERIA; vdp; BRENG BRIDGE ENGINEERING

OPERE D'ARTE MAGGIORI
GALLERIE ARTIFICIALI
GALLERIA ARTIFICIALE POGGIO VIPERA
SEZIONI TRASVERSALI

Dott. Ing. GIOVANNI PIAZZA — ORDINE INGEGNERI ROMA n. A-27296 settore a-b-c

CODICE PROGETTO (PROGETTO / LIV. PROG. / ANNO)	NOME FILE	REVISIONE	SCALA:
DPPA0083 D 19	PA83_P00GA01STRSZ01_A — CODICE ELAB. P00GA01STRSZ01	A	1:200

REV.	DESCRIZIONE	DATA	REDATTO	VERIFICATO	APPROVATO
D		-	-	-	-
C		-	-	-	-
B		-	-	-	-
A	EMISSIONE	FEBB. 2020	C.FILIPPUCCI	G.PIAZZA	G.PIAZZA

A0 1189 x 841