SEZIONE B159
PROGRESSIVA 40750.00

FD SCAVO FOSSO DX	m?	0.84
FS SCAVO FOSSO SX	m?	0.83
RI RILEVATO	m?	149.38
SC SCAVO	m?	0.40
SD STRADELLO DX	m?	0.79
SS STRADELLO SX	m?	0.80
an ANTICAPILLARE	m	35.32
bo BONIFICA	m	35.32
ga GEOTESSILE ANTICAPIL		35.32
sc SCOTICO	m	43.42
sp SUPERCOMPATTATO	m	8.78
su SUB BALLAST	m	8.40
v TERRENO VEGETALE	m	26.47

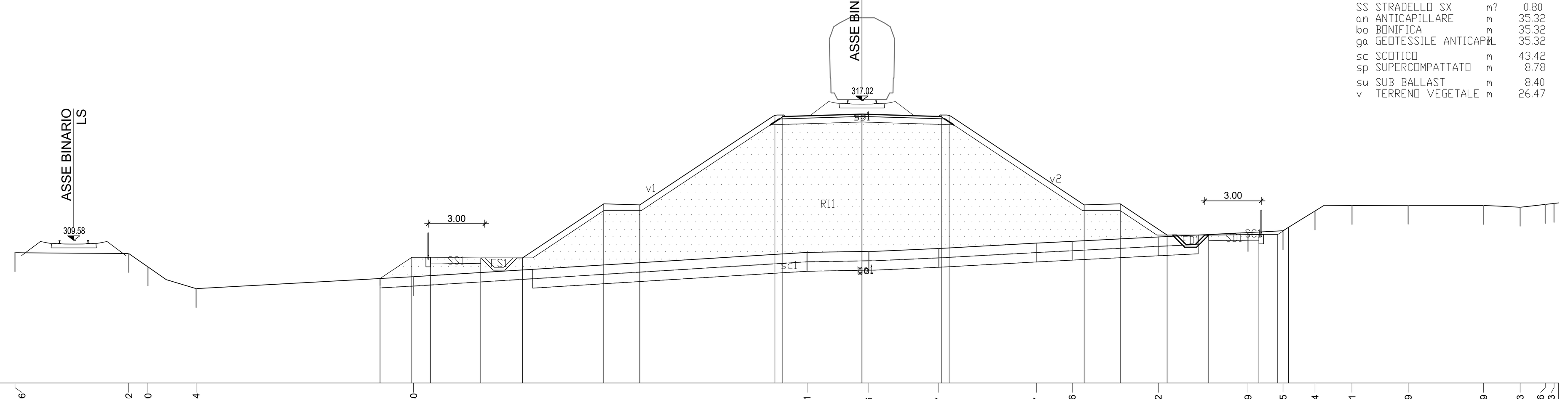

PROGRESSIVE TERRENO	-44.96, -38.92, -37.90, -35.34, -23.80, -2.91, 0.36, 4.07, 9.27, 11.16, 15.72, 20.49, 22.35, 24.04, 26.01, 28.99, 32.99, 34.93, 36.26, 36.73
PARZIALI TERRENO	3.55, 6.04, 1.02, 2.56, 11.54, 20.89, 3.27, 3.71, 5.20, 1.89, 4.56, 4.77, 1.86, 1.69, 1.97, 2.98, 4.00, 1.94, 1.33, 1.86
QUOTE TERRENO	308.93, 308.88, 308.17, 307.02, 307.66, 308.94, 309.00, 309.15, 309.44, 309.53, 309.76, 310.00, 310.10, 311.15, 311.44, 311.45, 311.44, 311.34, 311.50, 311.55
PROGRESSIVE PROGETTO	-25.58, -23.89, -22.89, -20.23, -18.02, -13.71, -11.79, -4.62, -4.20, 0.00, 4.20, 4.62, 11.79, 13.70, 16.19, 18.41, 21.07, 22.07, 22.63
PARZIALI PROGETTO	1.69, 1.00, 2.66, 2.21, 4.31, 1.92, 7.17, 0.42, 4.20, 4.20, 0.42, 7.17, 1.91, 2.49, 2.22, 2.66, 1.00, 0.56
QUOTE PROGETTO	307.56, 308.68, 308.68, 308.65, 308.65, 311.53, 311.47, 316.25, 316.17, 316.30, 316.17, 316.25, 311.47, 311.53, 309.87, 309.87, 309.90, 309.90, 310.27

SEZIONE B160
PROGRESSIVA 40800.00

FD SCAVO FOSSO DX	m?	0.83
FS SCAVO FOSSO SX	m?	0.82
RI RILEVATO	m?	117.49
SC SCAVO	m?	0.12
SD STRADELLO DX	m?	0.80
SS STRADELLO SX	m?	0.80
an ANTICAPILLARE	m	27.96
bo BONIFICA	m	27.96
ga GEOTESSILE ANTICAPIL		27.96
sc SCOTICO	m	34.61
sp SUPERCOMPATTATO	m	8.78
su SUB BALLAST	m	8.40
v TERRENO VEGETALE	m	21.44

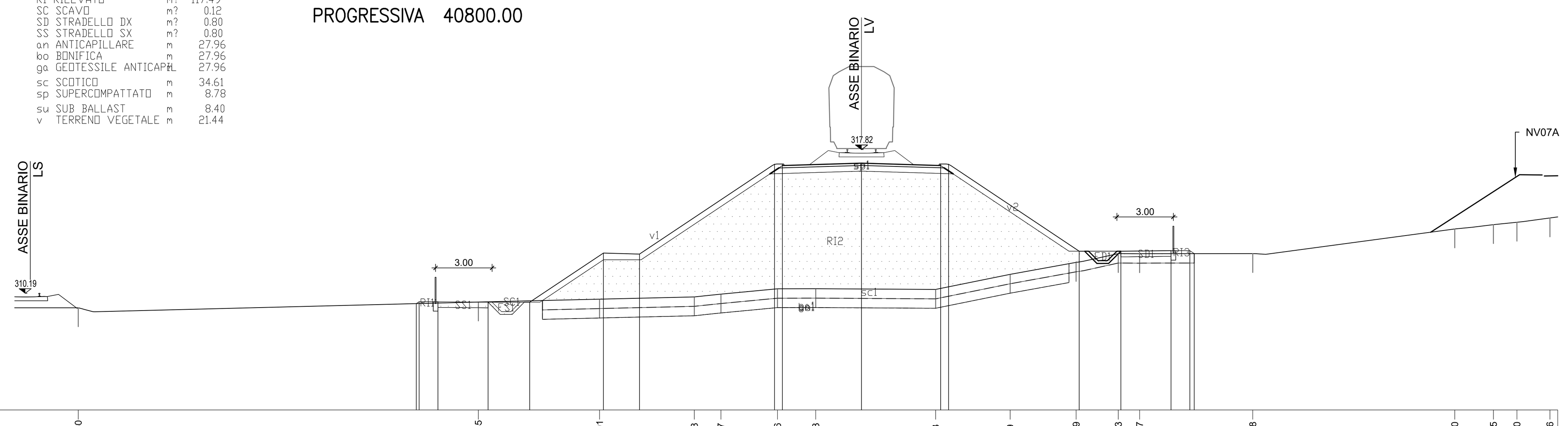

PROGRESSIVE TERRENO	-41.60, -20.35, -13.91, -8.88, -7.47, -4.46, -2.43, 3.93, 7.89, 11.39, 13.63, 14.77, 20.78, 31.50, 33.55, 34.80, 36.56
PARZIALI TERRENO	6.61, 21.25, 6.44, 5.03, 1.41, 3.01, 2.03, 6.36, 3.96, 3.50, 2.24, 1.14, 6.01, 10.72, 2.05, 1.25, 1.76, 1.53
QUOTE TERRENO	309.42, 309.73, 309.88, 310.00, 310.15, 310.43, 310.43, 310.40, 311.20, 311.83, 312.30, 312.29, 312.30, 313.60, 313.83, 313.96, 314.19
PROGRESSIVE PROGETTO	-23.65, -23.49, -22.49, -19.83, -17.62, -13.71, -11.79, -4.62, -4.20, 0.00, 4.20, 4.62, 11.56, 13.77, 16.43, 17.43, 17.67
PARZIALI PROGETTO	0.16, 1.00, 2.66, 2.21, 3.91, 1.92, 7.17, 0.42, 4.20, 4.20, 0.42, 6.94, 2.21, 2.66, 1.00, 0.24
QUOTE PROGETTO	309.65, 309.75, 309.75, 309.72, 309.72, 312.33, 312.27, 317.05, 316.97, 317.10, 316.97, 317.05, 312.42, 312.42, 312.45, 312.45, 312.30

SEZIONE B161
PROGRESSIVA 40850.00

FD SCAVO FOSSO DX	m?	0.81
FS SCAVO FOSSO SX	m?	0.84
RI RILEVATO	m?	81.37
SC SCAVO	m?	0.94
SD STRADELLO DX	m?	0.80
SS STRADELLO SX	m?	0.80
an ANTICAPILLARE	m	29.94
bo BONIFICA	m	29.94
ga GEOTESSILE ANTICAPIL		29.94
sc SCOTICO	m	29.94
sp SUPERCOMPATTATO	m	8.78
su SUB BALLAST	m	8.40
v TERRENO VEGETALE	m	18.61

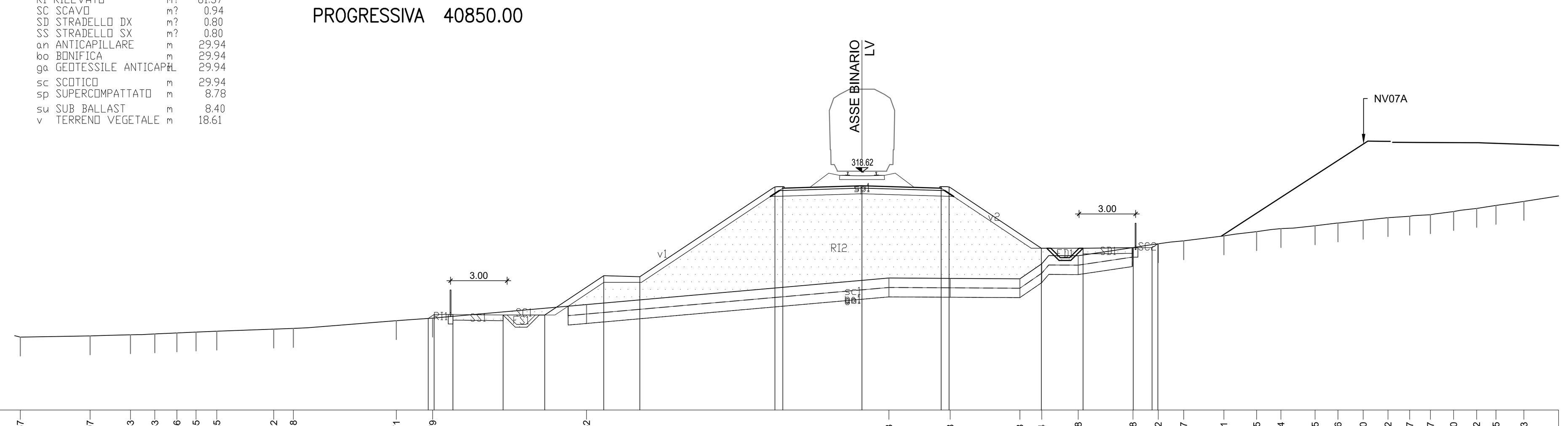

PROGRESSIVE TERRENO	-44.67, -40.97, -38.83, -37.53, -36.36, -35.35, -34.25, -31.22, -30.18, -24.71, -22.79, -14.62, 1.43, 4.68, 8.38, 9.54, 11.48, 14.38, 15.72, 17.07, 19.21, 20.95, 22.24, 24.05, 25.26, 26.60, 27.92, 29.07, 30.17, 31.40, 32.62, 33.65, 35.13
PARZIALI TERRENO	1.61, 3.70, 2.14, 1.30, 1.17, 1.01, 1.10, 3.03, 1.04, 5.47, 1.92, 8.17, 16.05, 3.25, 3.70, 1.16, 1.94, 2.90, 1.34, 1.35, 2.14, 1.74, 1.29, 1.81, 1.21, 1.34, 1.32, 1.15, 1.10, 1.23, 1.22, 1.03, 1.48, 1.97
QUOTE TERRENO	309.87, 309.93, 309.99, 310.04, 310.09, 310.14, 310.18, 310.29, 310.33, 310.74, 310.88, 311.59, 313.00, 312.98, 312.96, 313.76, 314.19, 314.62, 314.82, 314.98, 315.24, 315.46, 315.63, 315.78, 315.92, 316.07, 316.21, 316.28, 316.36, 316.53, 316.70, 316.86, 317.07
PROGRESSIVE PROGETTO	-23.02, -22.71, -21.71, -19.05, -16.84, -13.71, -11.79, -4.62, -4.20, 0.00, 4.20, 4.62, 9.52, 11.73, 14.40, 15.40, 15.70
PARZIALI PROGETTO	0.31, 1.00, 2.66, 2.21, 3.13, 1.92, 7.17, 0.42, 4.20, 4.20, 0.42, 4.90, 2.21, 2.67, 1.00, 0.30
QUOTE PROGETTO	310.86, 311.07, 311.07, 311.04, 311.04, 313.13, 313.07, 317.85, 317.77, 317.90, 317.77, 317.85, 314.58, 314.58, 314.61, 314.61, 314.82

SEZIONE B162
PROGRESSIVA 40900.00

FD SCAVO FOSSO DX	m?	0.83
FS SCAVO FOSSO SX	m?	0.83
RI RILEVATO	m?	39.73
SC SCAVO	m?	1.80
SS STRADELLO SX	m?	0.80
an ANTICAPILLARE	m	21.26
bo BONIFICA	m	21.26
ga GEOTESSILE ANTICAPIL		21.26
sc SCOTICO	m	22.30
sp SUPERCOMPATTATO	m	8.59
su SUB BALLAST	m	8.40
v TERRENO VEGETALE	m	12.99

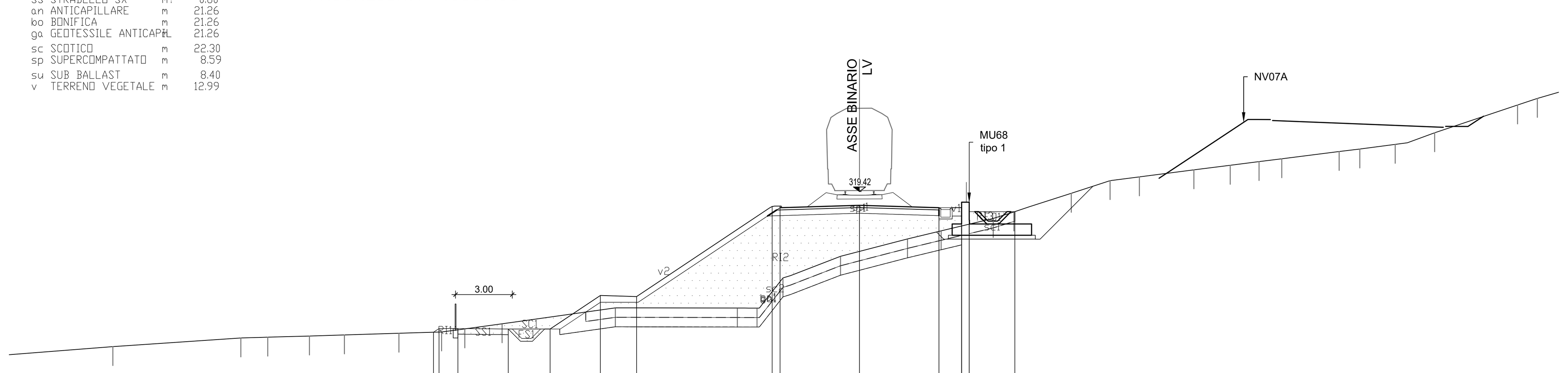

PROGRESSIVE TERRENO	-39.49, -32.72, -31.30, -29.09, -27.24, -24.36, -22.11, -20.88, -18.90, -12.91, -6.46, -5.42, -4.05, -1.00, 2.54, 4.32, 7.07, 8.16, 11.20, 13.25, 14.80, 17.69, 19.61, 21.13, 22.33, 25.37, 26.46, 28.33, 30.42, 34.81, 35.85
PARZIALI TERRENO	10.51, 6.77, 1.42, 2.21, 1.85, 2.88, 2.25, 1.23, 1.98, 5.99, 6.45, 1.04, 1.37, 3.05, 3.54, 1.78, 2.75, 1.09, 3.04, 2.05, 1.55, 2.89, 1.92, 1.52, 1.20, 3.04, 1.09, 1.87, 2.09, 4.39, 1.04, 1.13
QUOTE TERRENO	311.22, 311.68, 311.72, 311.78, 311.84, 311.93, 312.00, 312.16, 312.43, 313.27, 313.26, 313.26, 314.85, 316.00, 316.92, 317.35, 318.00, 318.34, 319.33, 320.00, 320.20, 320.57, 320.81, 321.01, 321.16, 321.54, 321.67, 321.92, 322.53, 324.00, 324.35
PROGRESSIVE PROGETTO	-22.53, -22.24, -21.24, -18.58, -16.37, -13.71, -11.79, -4.62, -4.20, 0.00, 4.20, 5.40, 5.40, 5.80, 5.80, 8.22
PARZIALI PROGETTO	0.29, 1.00, 2.66, 2.21, 2.66, 1.92, 7.17, 0.42, 4.20, 4.20, 1.20, 0.40, 2.42
QUOTE PROGETTO	311.99, 312.18, 312.18, 312.15, 312.15, 313.93, 313.87, 318.65, 318.57, 318.70, 318.57, 318.57, 318.86, 318.86, 318.36, 318.36

SEZIONE B163
PROGRESSIVA 40950.00

FD SCAVO FOSSO DX	m?	0.82
FS SCAVO FOSSO SX	m?	0.84
RI RILEVATO	m?	2.37
SC SCAVO	m?	6.15
SS STRADELLO SX	m?	0.80
an ANTICAPILLARE	m	11.33
bo BONIFICA	m	11.33
ga GEOTESSILE ANTICAPIL		11.33
sc SCOTICO	m	26.75
sp SUPERCOMPATTATO	m	8.59
su SUB BALLAST	m	8.40
v TERRENO VEGETALE	m	8.03

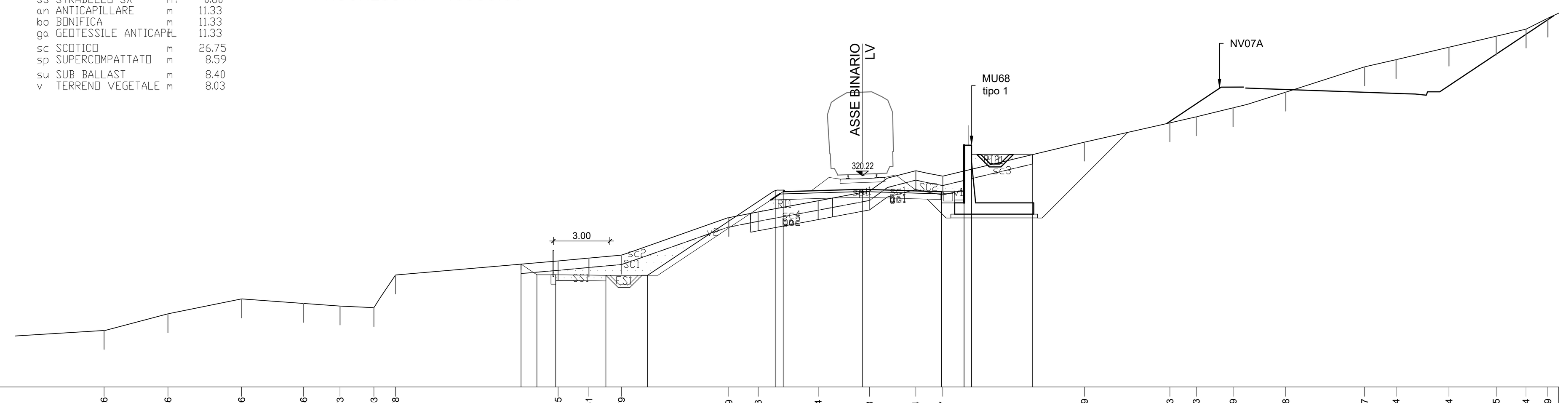

PROGRESSIVE TERRENO	-40.26, -36.86, -32.96, -29.66, -27.73, -25.93, -24.78, -16.15, -14.51, -12.79, -7.09, -5.53, -2.34, 0.38, 2.84, 4.27, 11.79, 16.33, 17.73, 19.69, 22.48, 26.67, 28.34, 31.14, 33.65, 35.24, 36.39
PARZIALI TERRENO	9.74, 3.40, 3.90, 3.30, 1.93, 1.80, 1.15, 8.63, 1.64, 1.72, 5.70, 1.56, 3.19, 2.72, 2.46, 1.43, 7.52, 4.54, 1.40, 1.96, 2.79, 4.19, 1.67, 2.80, 2.51, 1.59, 1.15, 3.10
QUOTE TERRENO	312.00, 312.88, 313.67, 313.44, 313.30, 313.21, 314.95, 315.69, 315.84, 316.00, 318.00, 318.29, 318.89, 319.40, 320.48, 320.20, 322.00, 323.02, 323.35, 323.82, 324.65, 326.00, 326.38, 327.04, 327.62, 328.00, 328.58
PROGRESSIVE PROGETTO	-18.12, -17.28, -16.28, -13.61, -11.40, -4.62, -4.20, 0.00, 4.20, 5.40, 5.40, 5.80, 5.80, 9.03
PARZIALI PROGETTO	0.84, 1.00, 2.67, 2.21, 6.78, 0.42, 4.20, 4.20, 1.20, 0.40, 3.23
QUOTE PROGETTO	315.52, 314.96, 314.96, 314.93, 314.93, 319.45, 319.37, 319.50, 319.37, 321.84, 319.37, 321.84, 321.34, 321.34

SEZIONE B164
PROGRESSIVA 41000.00

FD SCAVO FOSSO DX	m?	0.83
FS SCAVO FOSSO SX	m?	0.83
RI RILEVATO	m?	1.58
SD STRADELLO DX	m?	0.80
sc SCOTICO	m	22.26
sp SUPERCOMPATTATO	m	8.59
su SUB BALLAST	m	8.40
v TERRENO VEGETALE	m	2.87

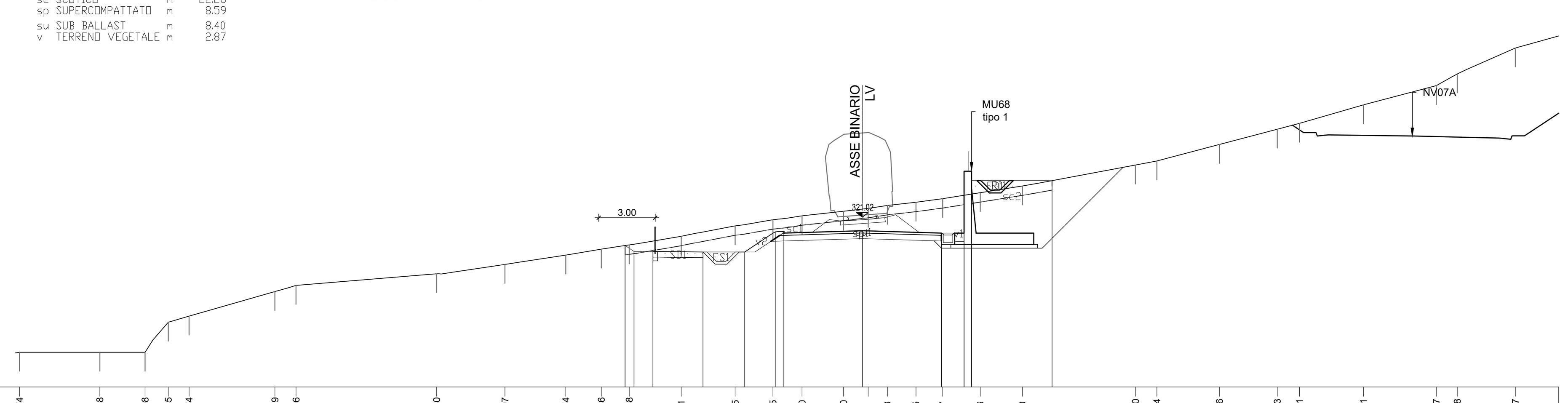

PROGRESSIVE TERRENO	-44.74, -40.48, -38.08, -36.85, -35.74, -31.19, -30.06, -22.60, -18.97, -15.74, -13.86, -12.38, -9.61, -6.75, -4.75, -3.20, -1.00, 0.31, 1.33, 2.85, 4.27, 6.26, 8.50, 14.50, 15.64, 18.96, 22.03, 23.21, 26.61, 30.47, 31.58, 34.67
PARZIALI TERRENO	3.87, 4.26, 2.40, 1.23, 1.11, 4.55, 1.13, 7.46, 3.63, 3.23, 1.88, 1.48, 2.77, 2.86, 2.00, 1.55, 2.20, 1.31, 1.02, 1.52, 1.42, 1.99, 2.24, 6.00, 1.14, 3.32, 3.07, 1.18, 3.40, 3.86, 1.11, 3.09, 6.73
QUOTE TERRENO	313.84, 313.84, 313.84, 315.44, 315.76, 317.07, 317.40, 318.01, 318.51, 319.00, 319.32, 319.55, 320.00, 320.56, 320.88, 321.09, 321.33, 321.48, 321.64, 321.81, 322.00, 322.32, 322.67, 323.79, 324.00, 324.88, 325.69, 326.00, 326.98, 328.00, 328.62, 330.00
PROGRESSIVE PROGETTO	-12.59, -12.12, -11.12, -8.46, -6.24, -4.62, -4.20, 0.00, 4.20, 5.40, 5.40, 5.80, 5.80, 10.07
PARZIALI PROGETTO	0.47, 1.00, 2.66, 2.22, 1.62, 0.42, 4.20, 4.20, 1.20, 0.40, 4.27
QUOTE PROGETTO	319.51, 319.20, 319.20, 319.17, 319.17, 320.25, 320.17, 320.30, 320.17, 320.17, 323.46, 323.46, 322.96, 322.96

SEZIONE B165
PROGRESSIVA 41050.00

FD SCAVO FOSSO DX	m?	0.83
FS SCAVO FOSSO SX	m?	0.84
RI RILEVATO	m?	7.64
SC SCAVO	m?	3.08
SS STRADELLO SX	m?	0.80
an ANTICAPILLARE	m	15.40
bo BONIFICA	m	15.40
ga GEOTESSILE ANTICAPIL		15.40
sc SCOTICO	m	15.75
sp SUPERCOMPATTATO	m	8.59
su SUB BALLAST	m	8.40
v TERRENO VEGETALE	m	6.62

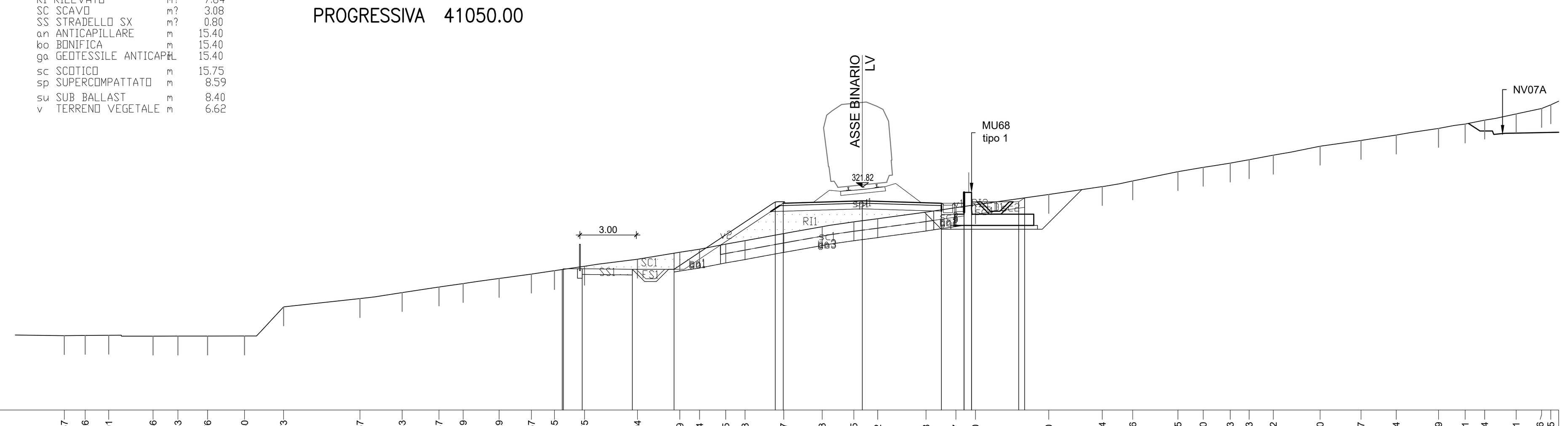

PROGRESSIVE TERRENO	-42.37, -41.26, -40.01, -37.66, -36.33, -34.76, -32.80, -30.73, -26.67, -24.43, -22.47, -21.19, -19.29, -17.57, -16.35, -14.75, -11.94, -9.69, -8.64, -7.25, -6.23, -4.17, -2.13, -0.45, 0.82, 3.38, 4.97, 6.00, 9.90, 12.74, 14.36, 16.75, 18.10, 19.53, 20.53, 21.82, 24.30, 26.47, 28.34, 30.59, 32.01, 33.04, 34.71, 36.06, 36.55
PARZIALI TERRENO	2.95, 1.11, 1.25, 2.35, 1.33, 1.57, 1.96, 2.07, 4.06, 2.24, 1.96, 1.28, 1.90, 1.72, 1.22, 1.60, 2.81, 2.25, 1.05, 1.39, 1.02, 2.06, 2.04, 1.68, 1.27, 2.56, 1.59, 1.03, 3.90, 2.84, 1.62, 2.39, 1.35, 1.43, 1.00, 1.29, 2.48, 2.17, 1.87, 2.25, 1.42, 1.03, 1.67, 1.35, 1.88
QUOTE TERRENO	313.95, 313.96, 313.96, 313.92, 313.92, 313.92, 313.93, 315.47, 315.91, 316.23, 316.53, 316.71, 316.98, 317.21, 317.39, 317.63, 318.00, 318.37, 318.54, 318.80, 318.98, 319.36, 319.73, 319.98, 320.15, 320.50, 320.74, 320.89, 321.44, 321.86, 322.16, 322.65, 322.88, 323.10, 323.28, 323.52, 324.00, 324.30, 324.59, 324.94, 325.18, 325.38, 325.71, 326.00, 326.20
PROGRESSIVE PROGETTO	-15.93, -15.87, -14.87, -12.21, -10.00, -4.62, -4.20, 0.00, 4.20, 5.40, 5.40, 5.80, 5.80, 8.30, 8.62
PARZIALI PROGETTO	0.06, 1.00, 2.66, 2.21, 5.38, 0.42, 4.20, 4.20, 1.20, 0.40, 2.50, 0.32
QUOTE PROGETTO	317.45, 317.49, 317.49, 317.47, 317.47, 321.05, 320.97, 321.10, 320.97, 320.97, 321.55, 321.55, 321.05, 321.05, 321.26

SEZIONE B166
PROGRESSIVA 41065.99

FD SCAVO FOSSO DX	m?	0.82
FS SCAVO FOSSO SX	m?	0.84
RI RILEVATO	m?	55.94
SC SCAVO	m?	1.76
SD STRADELLO DX	m?	0.80
SS STRADELLO SX	m?	0.79
an ANTICAPILLARE	m	27.81
bo BONIFICA	m	27.81
ga GEOTESSILE ANTICAPIL		27.81
sc SCOTICO	m	27.81
sp SUPERCOMPATTATO	m	8.78
su SUB BALLAST	m	8.40
v TERRENO VEGETALE	m	15.79

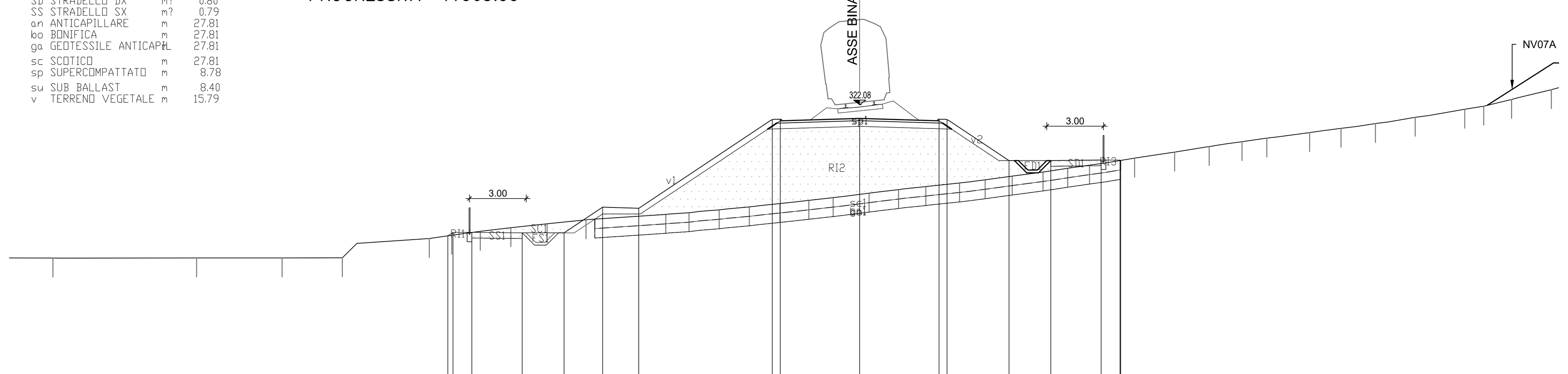

PROGRESSIVE TERRENO	-42.67, -35.07, -30.55, -27.36, -22.76, -21.57, -20.07, -18.45, -16.53, -14.47, -10.25, -9.03, -7.43, -5.83, -4.22, -2.69, -1.40, 0.50, 2.06, 3.50, 5.28, 6.64, 8.07, 9.70, 11.00, 12.16, 14.54, 16.66, 18.49, 20.22, 21.54, 23.80, 25.46, 27.28, 29.38, 32.00, 33.01, 34.48, 36.58
PARZIALI TERRENO	7.33, 7.60, 4.52, 3.19, 4.60, 1.19, 1.50, 1.62, 1.92, 2.06, 4.22, 1.22, 1.60, 1.60, 1.61, 1.53, 1.29, 1.90, 1.56, 1.44, 1.78, 1.36, 1.43, 1.63, 1.30, 1.16, 2.38, 2.12, 1.83, 1.73, 1.32, 2.26, 1.66, 1.82, 2.10, 2.62, 1.01, 1.47, 2.10, 1.59
QUOTE TERRENO	313.96, 313.97, 313.97, 313.98, 315.00, 315.17, 315.38, 315.57, 315.78, 315.99, 316.27, 316.36, 316.52, 316.67, 316.85, 317.02, 317.16, 317.40, 317.59, 317.74, 317.93, 318.10, 318.30, 318.52, 318.71, 318.88, 319.25, 319.57, 319.87, 320.12, 320.31, 320.60, 320.83, 321.08, 321.41, 321.84, 322.00, 322.36, 322.87
PROGRESSIVE PROGETTO	-21.78, -21.51, -20.51, -17.85, -15.64, -13.60, -11.68, -4.62, -4.20, 0.00, 4.20, 4.62, 7.90, 10.11, 12.77, 13.77, 13.80
PARZIALI PROGETTO	0.27, 1.00, 2.66, 2.21, 2.04, 1.92, 7.06, 0.42, 4.20, 4.20, 0.42, 3.28, 2.21, 2.66, 1.00, 0.03
QUOTE PROGETTO	315.14, 315.32, 315.32, 315.30, 315.30, 316.66, 316.60, 321.31, 321.23, 321.35, 321.23, 321.31, 319.12, 319.12, 319.15, 319.15, 319.13

COMMITTENTE: RFI RETE FERROVIARIA ITALIANA – GRUPPO FERROVIE DELLO STATO ITALIANE

PROGETTAZIONE: ITALFERR – GRUPPO FERROVIE DELLO STATO ITALIANE

DIRETTRICE FERROVIARIA MESSINA - CATANIA - PALERMO

NUOVO COLLEGAMENTO PALERMO - CATANIA

U.O. INFRASTRUTTURE SUD

PROGETTO DEFINITIVO

TRATTA LERCARA DIR. - CALTANISSETTA XIRBI (LOTTO 3)

TRACCIATI
Infrastruttura Ferroviaria
Sezioni trasversali - Tav. 47 di 50

SCALA: 1:200

COMMESSA	LOTTO	FASE	ENTE	TIPO DOC.	OPERA/DISCIPLINA	PROGR.	REV.
RS3T	30	D	78	W9	IF0001	047	D

Rev.	Descrizione	Redatto	Data	Verificato	Data	Approvato	Data	Autorizzato Data
A	Emissione Esecutiva	ATI Sintagma Rocksoil - Edin	Dic-2019	A.Di Costanzo	Dic-2019	A.Barreca	Dic-2019	D.Tiberti Apr-2020
B	Emissione Esecutiva	ATI Sintagma Rocksoil - Edin	Gen-2020	A.Di Costanzo	Gen-2020	A.Barreca	Gen-2020	
C	Emissione Esecutiva	ATI Sintagma Rocksoil - Edin	Feb-2020	A.Di Costanzo	Feb-2020	A.Barreca	Feb-2020	
D	Emissione Esecutiva	ATI Sintagma Rocksoil - Edin	Apr-2020	A.Di Costanzo	Apr-2020	A.Barreca	Apr-2020	

File: RS3T.3.0.D.78.W9.IF.00.0.1.047.D | n. Elab.: 78_109