SEZIONE VLS15
PROGRESSIVA 2000.00

BA BALLAST	m²	2.92
FD SCAVO FOSSO DX	m²	0.82
MD SCAVO MURO DX	m²	2.23
MS SCAVO MURO SX	m²	11.13
RI RILEVATO	m²	10.80
SC SCAVO	m²	33.95
SD STRADELLO DX	m²	0.80
sc SCOTICO	m	33.22
sp SUPERCOMPATTATO	m	8.40
su SUB BALLAST	m	8.40
v TERRENO VEGETALE	m	0.50

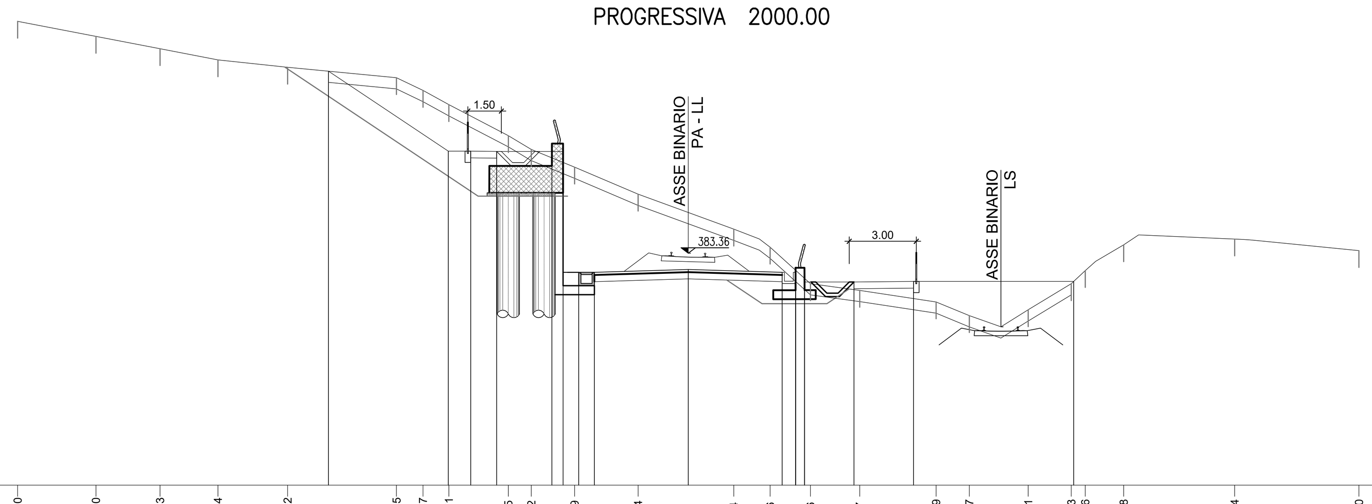

PROGRESSIVE TERRENO	-30.00 -26.50 -23.63 -21.04 -17.92 -13.05 -11.87 -10.71 -8.05 -7.02 -5.09 -2.24 2.04 3.66 5.46 7.67 11.09 12.57 15.21 17.13 17.76 19.48 24.44 30.00
PARZIALI TERRENO	3.50 2.87 2.59 3.12 4.87 1.18 1.16 2.66 1.03 1.93 2.85 4.28 1.62 1.80 2.21 3.42 1.48 2.64 1.92 0.63 1.72 4.96 5.56
QUOTE TERRENO	393.72 393.05 392.50 392.00 391.67 391.21 390.64 390.00 388.61 388.00 387.21 386.00 384.44 383.63 382.00 381.70 381.18 380.57 380.84 382.00 382.58 383.74 383.99 383.48
PROGRESSIVE PROGETTO	-16.09 -10.73 -9.73 -8.57 -6.10 -5.60 -4.90 -4.20 0.00 4.20 4.80 4.80 5.20 5.20 7.41 10.07 17.24
PARZIALI PROGETTO	5.36 1.00 1.16 2.47 0.50 0.70 0.70 4.20 4.20 0.60 0.40 2.21 2.66 7.17
QUOTE PROGETTO	391.49 387.92 387.92 387.91 388.26 388.26 382.51 382.51 382.64 382.51 382.51 382.71 382.08 382.71 382.08 382.10 382.10

SEZIONE VLS16
PROGRESSIVA 2050.00

BA BALLAST	m²	3.02
FD SCAVO FOSSO DX	m²	0.83
RI RILEVATO	m²	7.60
SD STRADELLO DX	m²	0.80
an ANTICAPILLARE	m	10.81
bo BONIFICA	m	10.81
ga GEOTESSILE ANTICAPIL	m	10.81
sc SCOTICO	m	25.50
sp SUPERCOMPATTATO	m	8.78
su SUB BALLAST	m	8.40
v TERRENO VEGETALE	m	4.41

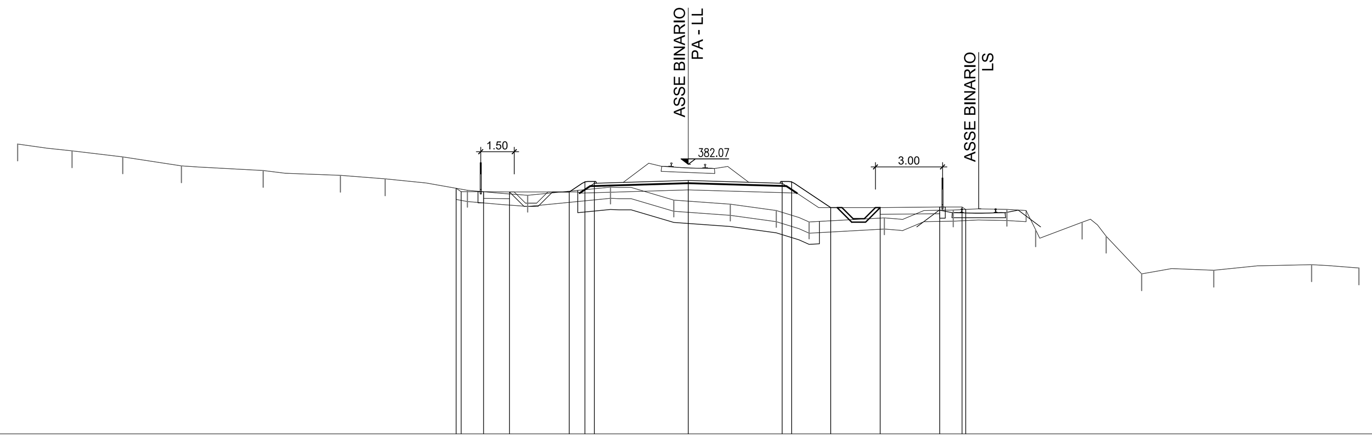

PROGRESSIVE TERRENO	-30.00 -27.57 -25.30 -22.67 -19.01 -15.56 -13.56 -9.88 -7.18 -3.48 -0.65 1.88 3.94 5.41 8.77 11.85 14.25 15.54 17.62 18.69 20.28 23.51 27.88 30.00
PARZIALI TERRENO	2.43 2.27 2.63 3.66 3.45 2.00 3.68 2.70 3.70 2.83 2.53 2.06 1.47 3.36 3.08 2.40 1.29 2.08 1.07 1.59 3.23 4.37 2.12
QUOTE TERRENO	382.98 382.67 382.40 382.00 381.79 381.57 381.42 380.90 380.68 381.04 380.47 380.29 380.00 379.49 379.67 380.02 380.05 379.14 379.48 378.85 377.16 377.33 377.57 377.43
PROGRESSIVE PROGETTO	-10.39 -10.16 -9.16 -8.00 -5.32 -4.62 -4.20 0.00 4.20 4.62 6.37 8.59 11.25 12.25 12.41
PARZIALI PROGETTO	0.23 1.00 1.16 2.68 0.70 0.42 4.20 4.20 0.42 1.75 2.22 2.66 1.00 0.16
QUOTE PROGETTO	380.99 380.84 380.84 380.83 380.83 381.30 381.22 381.34 381.22 381.30 380.13 380.13 380.16 380.16 380.05

SEZIONE VLS17
PROGRESSIVA 2100.00

BA BALLAST	m²	2.98
FD SCAVO FOSSO DX	m²	0.84
MS SCAVO MURO SX	m²	1.30
RI RILEVATO	m²	5.05
SC SCAVO	m²	40.65
SD STRADELLO DX	m²	0.80
sc SCOTICO	m	30.82
sp SUPERCOMPATTATO	m	8.59
su SUB BALLAST	m	8.40
v TERRENO VEGETALE	m	3.58

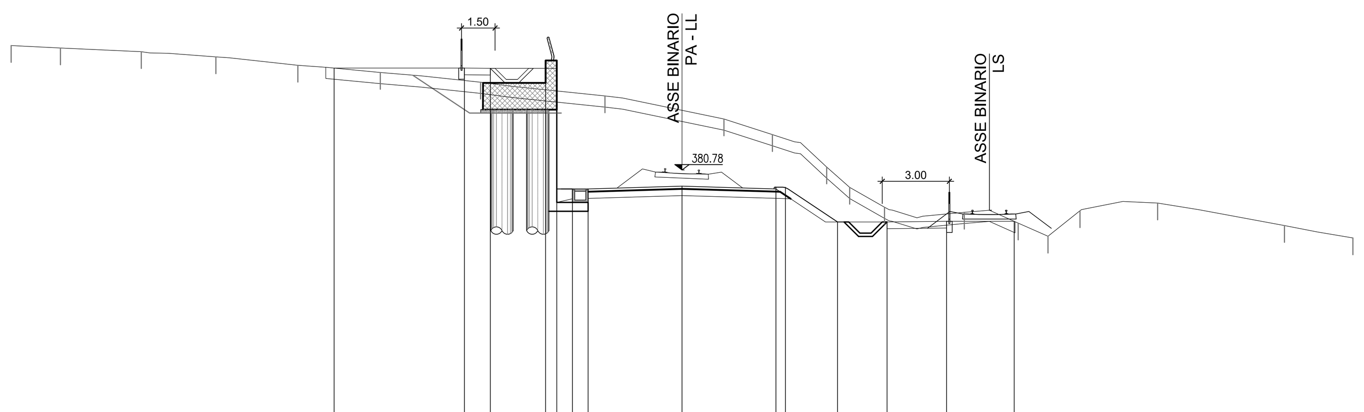

PROGRESSIVE TERRENO	-30.00 -27.79 -24.18 -20.85 -17.18 -13.49 -9.01 -3.44 1.88 4.04 6.47 7.50 9.06 12.62 15.03 16.36 17.79 21.27 26.94 30.00
PARZIALI TERRENO	2.21 3.61 3.33 3.67 3.69 4.48 5.57 5.32 2.16 2.43 1.03 1.56 3.56 2.41 1.33 1.43 3.48 5.67 3.06
QUOTE TERRENO	386.35 386.24 386.07 385.84 385.46 385.14 384.71 384.09 383.06 382.36 380.91 380.00 379.11 378.88 378.40 377.81 378.95 379.29 378.29 377.73
PROGRESSIVE PROGETTO	-15.56 -9.73 -8.57 -6.10 -5.60 -4.90 -4.20 0.00 4.20 4.62 6.96 9.17 11.83 14.85
PARZIALI PROGETTO	5.83 1.16 2.47 0.50 0.70 0.70 4.20 4.20 0.42 2.34 2.21 2.66 3.02
QUOTE PROGETTO	385.34 385.34 385.33 385.68 385.68 379.93 379.93 380.05 379.93 380.01 378.45 378.45 378.48 378.48

SEZIONE VLS18
PROGRESSIVA 2150.00

BA BALLAST	m²	2.93
FD SCAVO FOSSO DX	m²	0.84
MD SCAVO MURO DX	m²	2.69
RI RILEVATO	m²	37.03
SC SCAVO	m²	0.69
SD STRADELLO DX	m²	0.79
an ANTICAPILLARE	m	13.15
bo BONIFICA	m	13.15
ga GEOTESSILE ANTICAPIL	m	13.15
sc SCOTICO	m	32.01
sp SUPERCOMPATTATO	m	8.59
su SUB BALLAST	m	8.40
v TERRENO VEGETALE	m	4.65

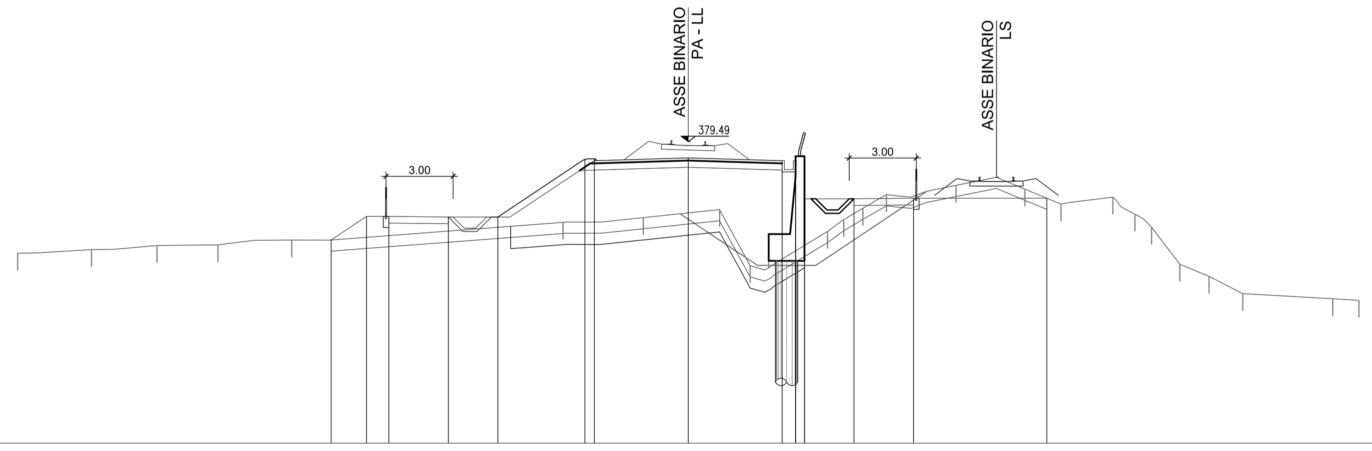

PROGRESSIVE TERRENO	-30.00 -26.69 -23.76 -21.04 -17.74 -5.60 -2.01 1.40 2.77 6.23 6.96 7.81 8.86 11.98 15.06 16.67 18.99 19.98 20.73 21.99 23.29 24.81 28.83 30.00
PARZIALI TERRENO	3.31 2.93 2.72 3.30 12.14 3.59 3.41 1.37 3.46 0.73 0.85 1.05 3.12 3.08 1.61 2.32 0.99 0.75 1.26 1.30 1.52 4.02 1.17
QUOTE TERRENO	374.49 374.66 374.84 374.87 375.08 375.88 376.09 376.45 373.94 375.47 376.00 376.51 377.12 377.53 377.36 376.69 377.00 376.24 375.66 374.00 373.46 372.69 372.46 372.38
PROGRESSIVE PROGETTO	-15.97 -14.39 -13.39 -10.73 -8.52 -4.62 -4.20 0.00 4.20 4.80 4.80 5.20 5.20 7.41 10.07 16.04
PARZIALI PROGETTO	1.58 1.00 2.66 2.21 3.90 0.42 4.20 4.20 0.60 0.40 2.21 2.66 5.97
QUOTE PROGETTO	375.09 376.14 376.14 376.11 376.11 378.71 378.63 378.76 378.63 378.63 378.83 376.93 378.83 376.93 376.96 376.96

SEZIONE VLS19
PROGRESSIVA 2200.00

BA BALLAST	m²	2.81
RI RILEVATO	m²	72.85
SC SCAVO	m²	10.86
sp SUPERCOMPATTATO	m	8.78
su SUB BALLAST	m	8.40
v TERRENO VEGETALE	m	10.28

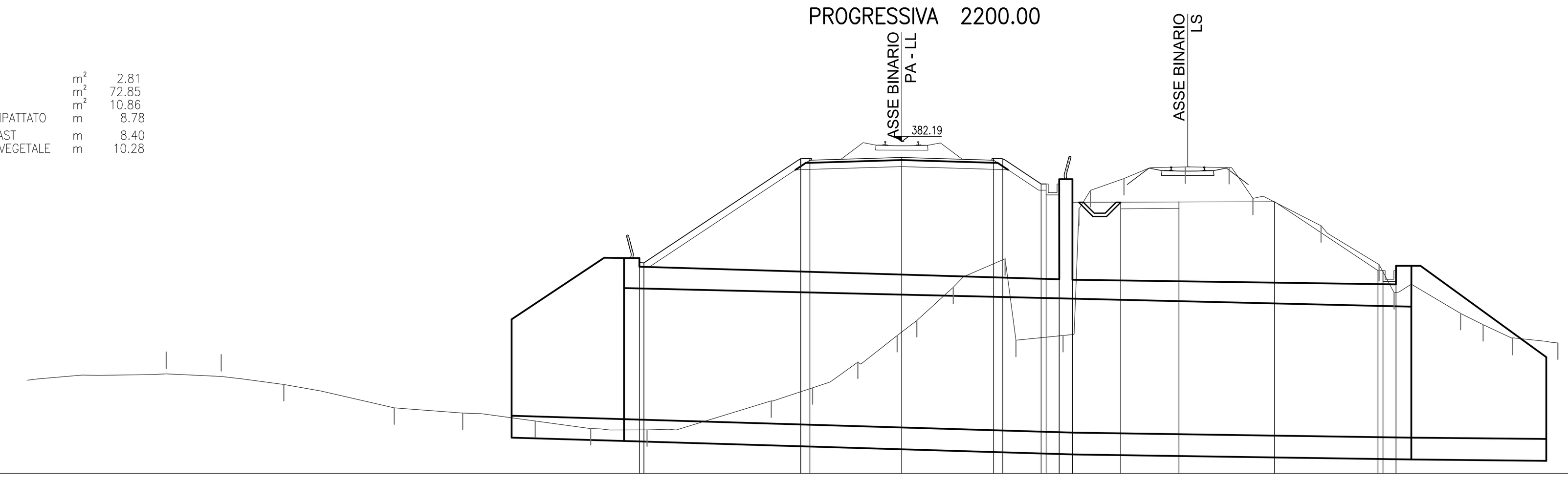

PROGRESSIVE TERRENO	-33.64 -31.12 -28.26 -23.21 -20.08 -16.76 -14.22 -11.65 -5.97 -4.08 -2.01 -0.21 0.69 2.36 4.73 5.22 7.37 8.10 8.63 10.16 12.96 14.97 16.06 19.18 21.83 22.51 25.55 26.59 27.92 30.00
PARZIALI TERRENO	3.24 2.86 5.05 3.13 3.32 2.54 2.57 5.68 1.89 2.07 1.80 0.90 1.67 2.37 0.49 2.15 0.73 0.53 1.53 2.80 2.01 1.09 3.12 2.65 0.68 3.04 1.04 1.33 2.08
QUOTE TERRENO	367.56 367.44 367.07 366.00 365.76 365.40 365.05 364.99 366.32 366.92 368.10 369.31 370.00 371.52 372.83 369.10 369.31 375.11 375.96 376.50 377.03 377.01 375.59 374.34 372.56 371.27 370.32 369.81 369.18 368.97
PROGRESSIVE PROGETTO	-12.00 -11.79 -4.62 -4.20 0.00 4.20 4.62 6.37 6.60 7.20 7.20 7.80 7.80 10.01 12.68 17.05 21.78 22.00 22.60
PARZIALI PROGETTO	0.21 7.17 0.42 4.20 4.20 0.42 1.75 0.23 0.60 0.60 2.21 2.67 4.37 4.73 0.22 0.60
QUOTE PROGETTO	372.65 372.64 377.42 377.34 377.47 377.34 377.41 376.25 376.25 376.47 376.25 376.47 375.41 375.41 375.44 375.44 372.29 372.29 372.29

SEZIONE VLS20
PROGRESSIVA 2250.00

BA BALLAST	m²	2.79
FD SCAVO FOSSO DX	m²	0.82
MD SCAVO MURO DX	m²	1.86
RI RILEVATO	m²	30.01
SC SCAVO	m²	1.56
SD STRADELLO DX	m²	0.80
an ANTICAPILLARE	m	15.29
bo BONIFICA	m	15.29
ga GEOTESSILE ANTICAPIL	m	15.29
sc SCOTICO	m	34.08
sp SUPERCOMPATTATO	m	8.59
su SUB BALLAST	m	8.40
v TERRENO VEGETALE	m	6.61

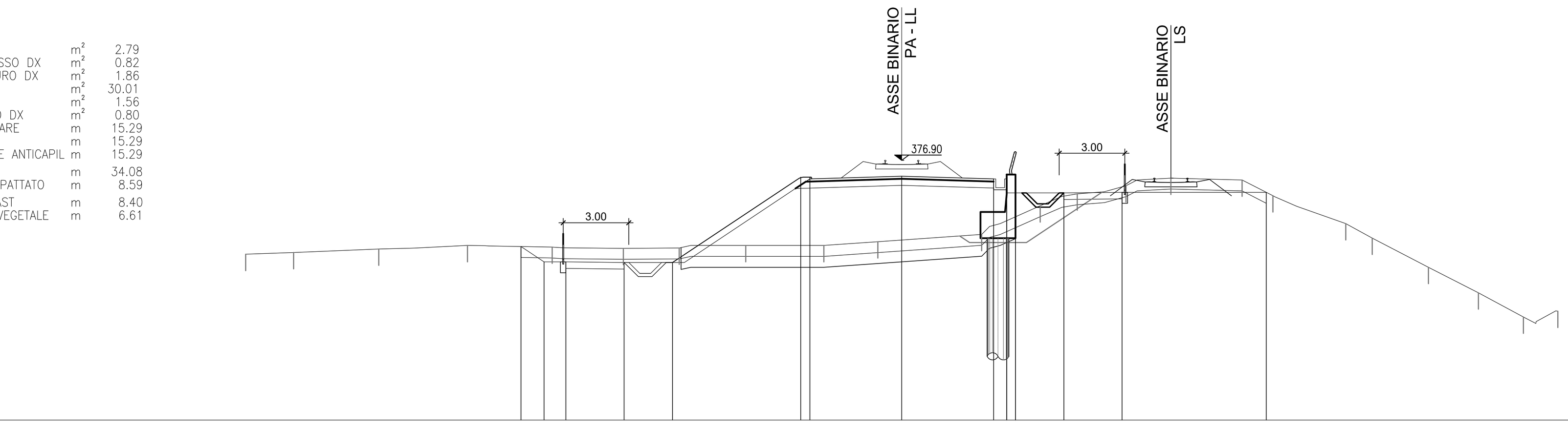

PROGRESSIVE TERRENO	-30.00 -27.81 -23.91 -19.86 -15.99 -12.73 -10.18 -7.13 -3.56 -1.09 3.66 6.33 8.02 10.25 12.31 15.56 16.97 20.31 21.51 24.09 26.37 28.43 30.00
PARZIALI TERRENO	2.19 3.90 4.05 3.87 3.26 2.55 3.05 3.57 2.47 4.75 2.67 1.69 2.23 2.06 3.25 1.41 3.34 1.20 2.58 2.28 2.06 1.57
QUOTE TERRENO	372.60 372.67 372.84 373.00 372.92 372.87 372.88 373.00 373.00 373.17 373.51 374.82 375.37 375.74 376.08 376.00 375.28 374.00 373.34 372.00 370.83 369.72 369.99
PROGRESSIVE PROGETTO	-17.41 -16.36 -15.36 -12.70 -10.48 -4.62 -4.20 0.00 4.20 4.80 4.80 5.20 5.20 7.41 10.07 16.67
PARZIALI PROGETTO	1.05 1.00 2.66 2.22 5.86 0.42 4.20 4.20 0.60 0.40 2.21 2.66 6.60
QUOTE PROGETTO	372.95 372.25 372.25 372.22 372.22 376.13 376.05 376.17 376.05 376.05 376.25 375.41 376.25 375.41 375.43 375.43

SEZIONE VLS21
PROGRESSIVA 2300.00

BA BALLAST	m²	2.90
FD SCAVO FOSSO DX	m²	0.82
RI RILEVATO	m²	11.70
SC SCAVO	m²	0.61
SD STRADELLO DX	m²	0.79
an ANTICAPILLARE	m	11.83
bo BONIFICA	m	11.83
ga GEOTESSILE ANTICAPIL	m	11.83
sc SCOTICO	m	27.76
sp SUPERCOMPATTATO	m	8.78
su SUB BALLAST	m	8.40
v TERRENO VEGETALE	m	4.39

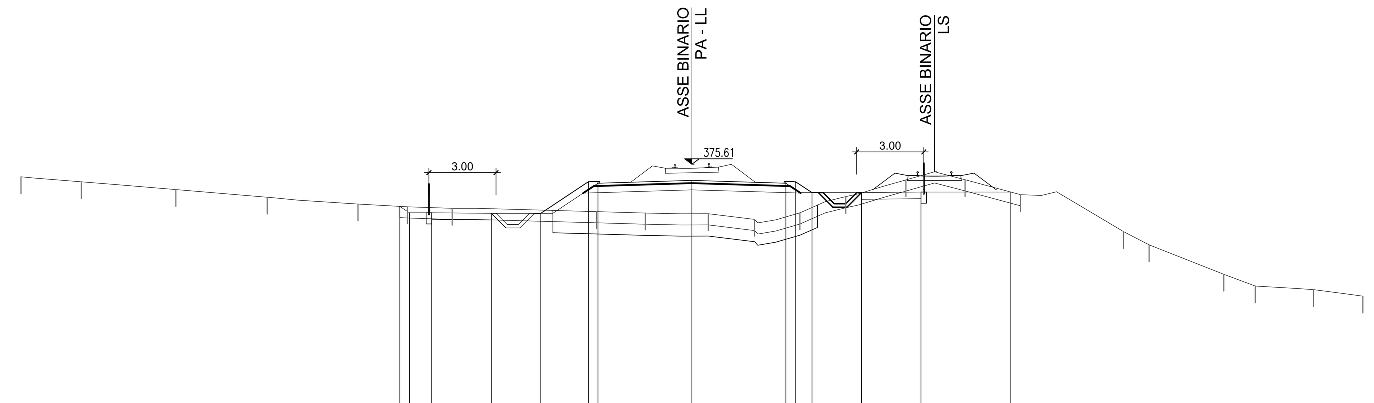

PROGRESSIVE TERRENO	-30.00 -27.31 -23.08 -18.99 -14.93 -12.73 -10.72 -4.26 -2.09 0.73 2.80 4.83 6.88 9.57 12.22 14.70 19.30 20.44 23.78 25.19 27.79 30.00
PARZIALI TERRENO	2.69 4.23 4.09 4.06 2.20 2.01 6.46 2.17 2.82 2.07 2.03 2.05 2.69 2.65 2.48 4.60 1.14 3.34 1.41 2.60 2.21
QUOTE TERRENO	375.04 374.82 374.47 374.13 373.83 373.70 373.63 373.49 373.42 373.39 373.14 373.43 374.16 374.91 374.92 374.25 372.60 372.00 370.68 370.16 370.00 369.71
PROGRESSIVE PROGETTO	-13.06 -12.63 -11.63 -8.97 -6.76 -4.62 -4.20 0.00 4.20 4.62 5.37 7.58 10.24 14.26
PARZIALI PROGETTO	0.43 1.00 2.66 2.21 2.14 0.42 4.20 4.20 0.42 0.75 2.21 2.66 4.02
QUOTE PROGETTO	373.72 373.44 373.44 373.41 373.41 374.84 374.76 374.88 374.76 374.84 374.34 374.34 374.37 374.37

SEZIONE VLS22
PROGRESSIVA 2350.00

BA BALLAST	m²	3.00
FD SCAVO FOSSO DX	m²	0.83
MS SCAVO MURO SX	m²	1.12
RI RILEVATO	m²	17.06
SC SCAVO	m²	26.25
SD STRADELLO DX	m²	0.79
sc SCOTICO	m	35.21
sp SUPERCOMPATTATO	m	8.59
su SUB BALLAST	m	8.40
v TERRENO VEGETALE	m	2.32

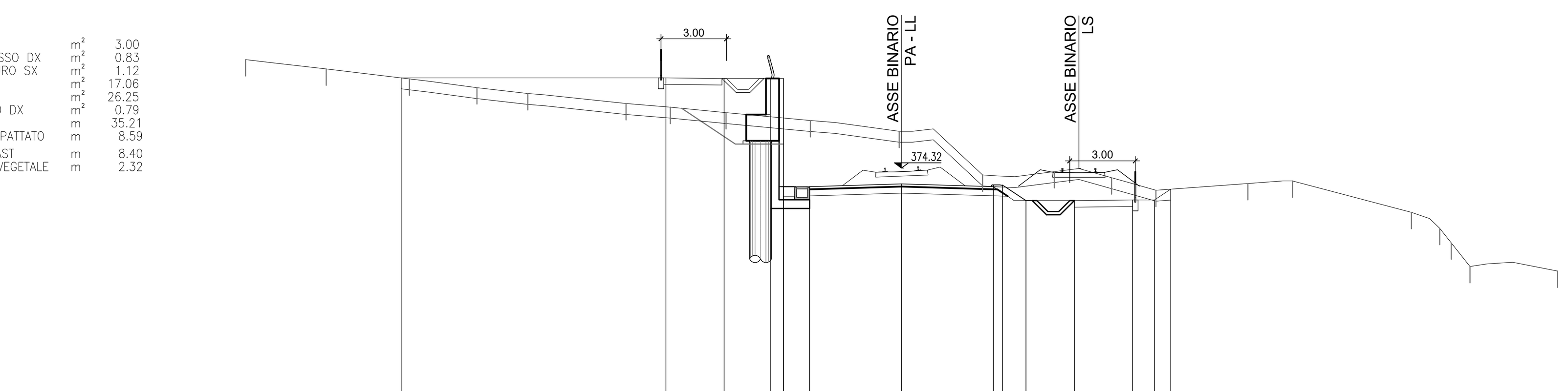

PROGRESSIVE TERRENO	-30.00 -26.31 -22.51 -19.42 -17.09 -12.60 -10.58 -8.03 -4.17 -0.11 3.71 6.99 9.61 11.64 15.85 17.88 23.33 24.62 25.15 26.01 30.00
PARZIALI TERRENO	3.69 3.80 3.09 2.33 4.49 2.02 2.55 3.86 4.06 3.82 3.28 2.62 2.03 4.21 2.03 5.45 1.29 0.53 0.86 3.99
QUOTE TERRENO	379.29 378.86 378.40 378.00 377.73 377.27 377.10 376.86 376.49 376.00 374.00 374.15 373.87 373.30 373.61 373.73 372.29 371.55 370.89 369.81 369.60
PROGRESSIVE PROGETTO	-22.89 -10.77 -8.11 -6.00 -5.40 -5.40 -4.20 0.00 4.20 4.62 5.70 7.91 10.57 11.57 12.32
PARZIALI PROGETTO	12.12 2.66 2.11 0.60 1.20 4.20 4.20 0.42 1.08 2.21 2.66 1.00 0.75
QUOTE PROGETTO	378.45 378.45 378.42 378.42 373.46 378.42 373.46 373.59 373.46 373.54 372.83 372.83 372.85 372.85 373.35

COMMITTENTE: RFI RETE FERROVIARIA ITALIANA GRUPPO FERROVIE DELLO STATO ITALIANE

PROGETTAZIONE: ITALFERR GRUPPO FERROVIE DELLO STATO ITALIANE

DIRETTRICE FERROVIARIA MESSINA - CATANIA - PALERMO

NUOVO COLLEGAMENTO PALERMO - CATANIA

U.O. INFRASTRUTTURE CENTRO

PROGETTO DEFINITIVO

TRATTA CALTANISSETTA XIRBI - NUOVA ENNA (LOTTO 4A)

TRACCIATI
Infrastruttura Ferroviaria
Sezioni trasversali variante linea storica - Tav. 3 di 4

SCALA: 1:200

COMMESSA	LOTTO	FASE	ENTE	TIPO DOC.	OPERA/DISCIPLINA	PROGR.	REV.
RS3U	40	D	29	W9	IF0401	003	D

Rev.	Descrizione	Redatto	Data	Verificato	Data	Approvato	Data	Autorizzato Data
A	Emissione Esecutiva	ATI Sintagma Rocksoil - Edin	Dic-2019	F.Bonetta-M.Tinacci	Dic-2019	A.Barreca	Dic-2019	F.Arduini Apr-2020
B	Emissione Esecutiva	ATI Sintagma Rocksoil - Edin	Gen-2020	F.Bonetta-M.Tinacci	Gen-2020	A.Barreca	Gen-2020	
C	Emissione Esecutiva	ATI Sintagma Rocksoil - Edin	Feb-2020	F.Bonetta-M.Tinacci	Feb-2020	A.Barreca	Feb-2020	
D	Emissione Esecutiva	ATI Sintagma	Apr-2020	F.Bonetta-M.Tinacci	Apr-2020	A.Barreca	Apr-2020	

File: RS3U.4.0.D.29.W9.IF.04.0.1.003.D | n. Elab.: 29_097