## Sezione no. 43 Km 1788.00

FD SCAVO FOSSO DX m² 1.43
FS SCAVO FOSSO SX m² 0.23
RI RILEVATO m² 72.22
a USURA m 9.00
ac ANTICAPILLARE m 27.50
ba BASE m 9.00
bi BINDER m 9.00
bo BONIFICA m 27.50
fo FONDAZIONE m 9.00
ge GEOTESSUTO m 27.50
sc SCOTICO m 27.50
v TERRENO VEGETALE m 22.36

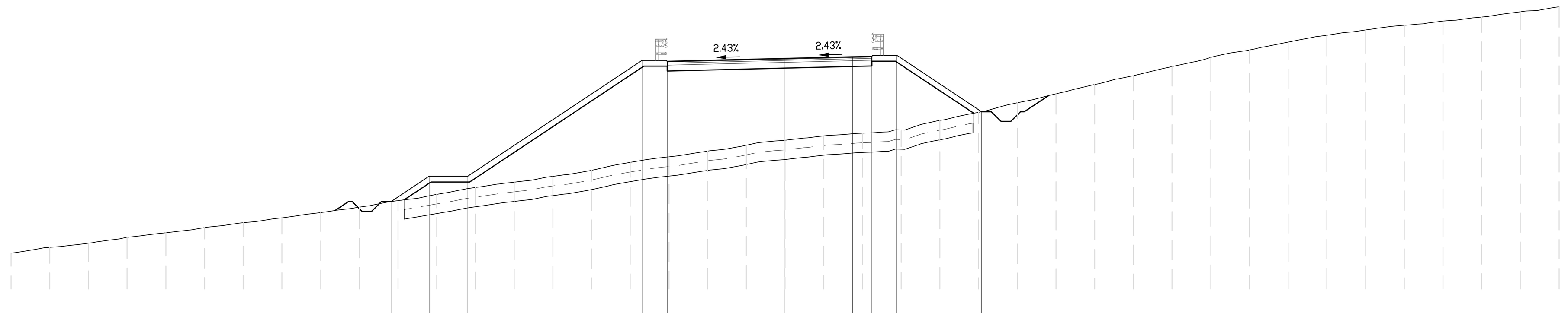


366 1: 200

| | | | | | | | | | | | | | | | | | | | | | | | | | | | | | | | | | | | | | | | | | |
|---|---|---|---|---|---|---|---|---|---|---|---|---|---|---|---|---|---|---|---|---|---|---|---|---|---|---|---|---|---|---|---|---|---|---|---|---|---|---|---|---|---|
| QUOTE PROGETTO | 374.53 | 375.84 | 375.84 | 381.84 | 381.79 | 381.85 | 381.94 | 382.02 | 382.05 | 382.10 | 379.18 |
| PARZIALI PROGETTO | 1.97 | 2.00 | 9.00 | 1.30 | 2.57 | 3.52 | 3.48 | 1.00 | 1.30 | 4.38 |
| QUOTE TERRENO | 371.85 | 372.16 | 372.37 | 372.68 | 372.91 | 373.18 | 373.43 | 373.68 | 373.96 | 374.24 | 374.57 | 374.90 | 375.26 | 375.53 | 375.84 | 376.15 | 376.56 | 376.84 | 377.14 | 377.45 | 377.71 | 377.93 | 378.07 | 378.24 | 378.73 | 379.15 | 379.65 | 380.11 | 380.59 | 381.05 | 381.52 | 381.99 | 382.38 | 382.78 | 383.14 | 383.41 | 383.65 | 383.87 | 384.08 | 384.36 | 384.61 |
| PARZIALI TERRENO | 2.00 | 2.00 | 2.00 | 2.00 | 2.00 | 2.00 | 2.00 | 2.00 | 2.00 | 2.00 | 2.00 | 2.00 | 2.00 | 2.00 | 2.00 | 2.00 | 2.00 | 2.00 | 2.00 | 2.00 | 2.00 | 2.00 | 2.00 | 2.00 | 2.00 | 2.00 | 2.00 | 2.00 | 2.00 | 2.00 | 2.00 | 2.00 | 2.00 | 2.00 | 2.00 | 2.00 | 2.00 | 2.00 | 2.00 | 2.00 |

## Sezione no. 44 Km 1812.91

FD SCAVO FOSSO DX m² 0.93
FS SCAVO FOSSO SX m² 0.21
RI RILEVATO m² 79.16
a USURA m 9.00
ac ANTICAPILLARE m 27.82
ba BASE m 9.00
bi BINDER m 9.00
bo BONIFICA m 27.82
fo FONDAZIONE m 9.00
ge GEOTESSUTO m 27.82
sc SCOTICO m 27.82
v TERRENO VEGETALE m 22.85

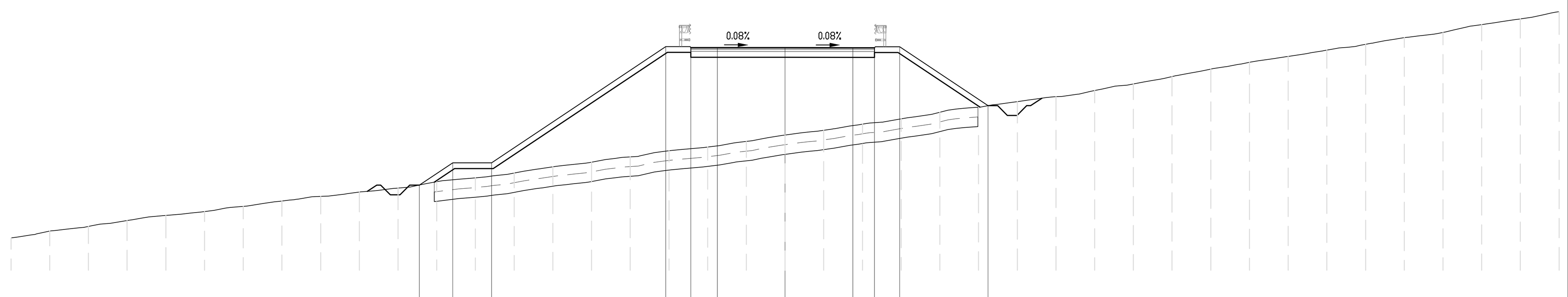


367 1: 200

| | | | | | | | | | | | | | | | | | | | | | | | | | | | | | | | | | | | | | | | | | |
|---|---|---|---|---|---|---|---|---|---|---|---|---|---|---|---|---|---|---|---|---|---|---|---|---|---|---|---|---|---|---|---|---|---|---|---|---|---|---|---|---|---|
| QUOTE PROGETTO | 375.39 | 376.55 | 376.55 | 382.55 | 382.50 | 382.50 | 382.49 | 382.49 | 382.49 | 382.54 | 379.49 |
| PARZIALI PROGETTO | 1.73 | 2.00 | 9.00 | 1.30 | 1.37 | 3.50 | 3.50 | 1.12 | 1.30 | 4.57 |
| QUOTE TERRENO | 372.67 | 373.02 | 373.26 | 373.56 | 373.83 | 374.02 | 374.30 | 374.57 | 374.81 | 375.03 | 375.24 | 375.57 | 375.77 | 376.02 | 376.34 | 376.58 | 376.85 | 377.17 | 377.36 | 377.65 | 377.98 | 378.23 | 378.54 | 378.82 | 379.16 | 379.42 | 379.70 | 379.96 | 380.28 | 380.62 | 381.00 | 381.38 | 381.74 | 382.04 | 382.36 | 382.66 | 383.02 | 383.28 | 383.68 | 383.98 | 384.35 |
| PARZIALI TERRENO | 2.00 | 2.00 | 2.00 | 2.00 | 2.00 | 2.00 | 2.00 | 2.00 | 2.00 | 2.00 | 2.00 | 2.00 | 2.00 | 2.00 | 2.00 | 2.00 | 2.00 | 2.00 | 2.00 | 2.00 | 2.00 | 2.00 | 2.00 | 2.00 | 2.00 | 2.00 | 2.00 | 2.00 | 2.00 | 2.00 | 2.00 | 2.00 | 2.00 | 2.00 | 2.00 | 2.00 | 2.00 | 2.00 | 2.00 | 2.00 |

## Sezione no. 45 Km 1837.00

FD SCAVO FOSSO DX m² 1.07
FS SCAVO FOSSO SX m² 0.30
RI RILEVATO m² 111.67
a USURA m 9.00
ac ANTICAPILLARE m 30.87
ba BASE m 9.00
bi BINDER m 9.00
bo BONIFICA m 30.87
fo FONDAZIONE m 9.00
ge GEOTESSUTO m 30.87
sc SCOTICO m 30.87
v TERRENO VEGETALE m 26.44

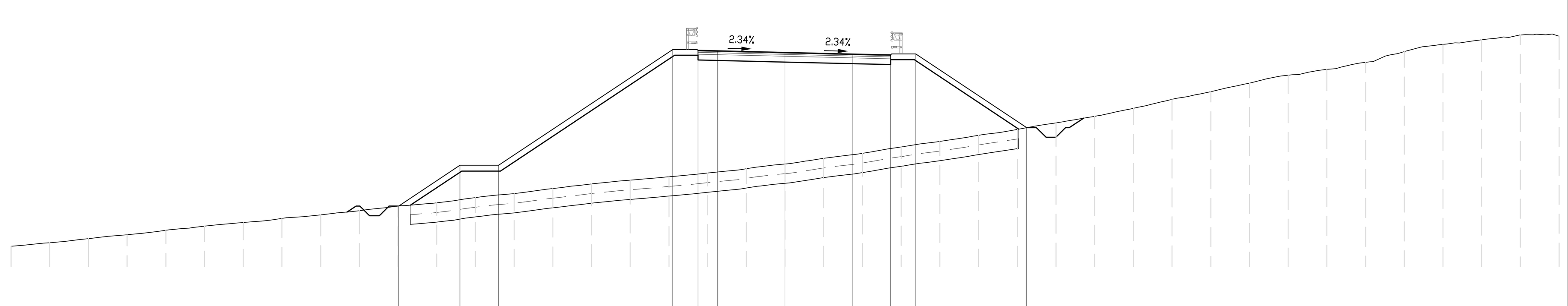


368 1: 200

| | | | | | | | | | | | | | | | | | | | | | | | | | | | | | | | | | | | | | | | | | |
|---|---|---|---|---|---|---|---|---|---|---|---|---|---|---|---|---|---|---|---|---|---|---|---|---|---|---|---|---|---|---|---|---|---|---|---|---|---|---|---|---|---|
| QUOTE PROGETTO | 375.14 | 377.25 | 377.25 | 383.25 | 383.20 | 383.18 | 383.10 | 383.01 | 382.97 | 383.02 | 379.20 |
| PARZIALI PROGETTO | 3.17 | 2.00 | 9.00 | 1.30 | 1.00 | 3.50 | 3.50 | 1.96 | 1.30 | 5.73 |
| QUOTE TERRENO | 373.05 | 373.24 | 373.45 | 373.65 | 373.88 | 374.10 | 374.29 | 374.50 | 374.68 | 374.90 | 375.13 | 375.30 | 375.57 | 375.78 | 376.05 | 376.28 | 376.48 | 376.65 | 376.85 | 377.07 | 377.31 | 377.61 | 377.87 | 378.20 | 378.49 | 378.80 | 379.11 | 379.45 | 379.79 | 380.20 | 380.67 | 381.06 | 381.50 | 381.92 | 382.22 | 382.59 | 383.14 | 383.51 | 383.75 | 384.00 | 383.94 |
| PARZIALI TERRENO | 2.00 | 2.00 | 2.00 | 2.00 | 2.00 | 2.00 | 2.00 | 2.00 | 2.00 | 2.00 | 2.00 | 2.00 | 2.00 | 2.00 | 2.00 | 2.00 | 2.00 | 2.00 | 2.00 | 2.00 | 2.00 | 2.00 | 2.00 | 2.00 | 2.00 | 2.00 | 2.00 | 2.00 | 2.00 | 2.00 | 2.00 | 2.00 | 2.00 | 2.00 | 2.00 | 2.00 | 2.00 | 2.00 | 2.00 | 2.00 |

## Sezione no. 46 Km 1861.91

FD SCAVO FOSSO DX m² 0.98
FS SCAVO FOSSO SX m² 0.37
RI RILEVATO m² 32.94
a USURA m 9.75
ac ANTICAPILLARE m 19.40
ba BASE m 9.77
bi BINDER m 9.77
bo BONIFICA m 19.40
fo FONDAZIONE m 9.77
ge GEOTESSUTO m 19.40
sc SCOTICO m 19.40
v TERRENO VEGETALE m 12.30

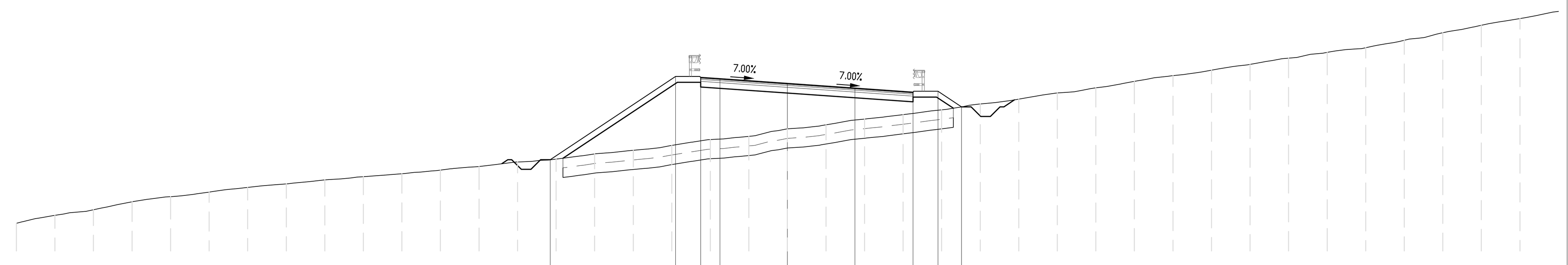


371 1: 200

| | | | | | | | | | | | | | | | | | | | | | | | | | | | | | | | | | | | | | | | | |
|---|---|---|---|---|---|---|---|---|---|---|---|---|---|---|---|---|---|---|---|---|---|---|---|---|---|---|---|---|---|---|---|---|---|---|---|---|---|---|---|---|
| QUOTE PROGETTO | 379.75 | 384.08 | 384.03 | 383.96 | 383.72 | 383.47 | 383.26 | 383.31 | 382.50 |
| PARZIALI PROGETTO | 6.50 | 1.30 | 1.00 | 3.50 | 3.50 | 3.01 | 1.30 | 1.22 |
| QUOTE TERRENO | 376.44 | 376.86 | 377.15 | 377.56 | 377.83 | 378.07 | 378.31 | 378.49 | 378.70 | 378.87 | 379.02 | 379.21 | 379.40 | 379.63 | 379.78 | 380.05 | 380.24 | 380.49 | 380.80 | 380.97 | 381.36 | 381.57 | 381.86 | 382.10 | 382.35 | 382.66 | 382.90 | 383.22 | 383.50 | 383.83 | 384.13 | 384.41 | 384.71 | 385.04 | 385.34 | 385.58 | 385.97 | 386.36 | 386.75 | 387.10 |
| PARZIALI TERRENO | 2.00 | 2.00 | 2.00 | 2.00 | 2.00 | 2.00 | 2.00 | 2.00 | 2.00 | 2.00 | 2.00 | 2.00 | 2.00 | 2.00 | 2.00 | 2.00 | 2.00 | 2.00 | 2.00 | 2.00 | 2.00 | 2.00 | 2.00 | 2.00 | 2.00 | 2.00 | 2.00 | 2.00 | 2.00 | 2.00 | 2.00 | 2.00 | 2.00 | 2.00 | 2.00 | 2.00 | 2.00 | 2.00 | 2.00 |

## Sezione no. 47 Km 1900.00

FD SCAVO FOSSO DX m² 0.36
FS SCAVO FOSSO SX m² 0.18
RI RILEVATO m² 0.86
SC SCAVO m² 18.04
a USURA m 10.30
ac ANTICAPILLARE m 2.72
ba BASE m 10.32
bi BINDER m 10.32
bo BONIFICA m 2.72
fo FONDAZIONE m 10.32
ge GEOTESSUTO m 2.72
sc SCOTICO m 14.89
v TERRENO VEGETALE m 3.61

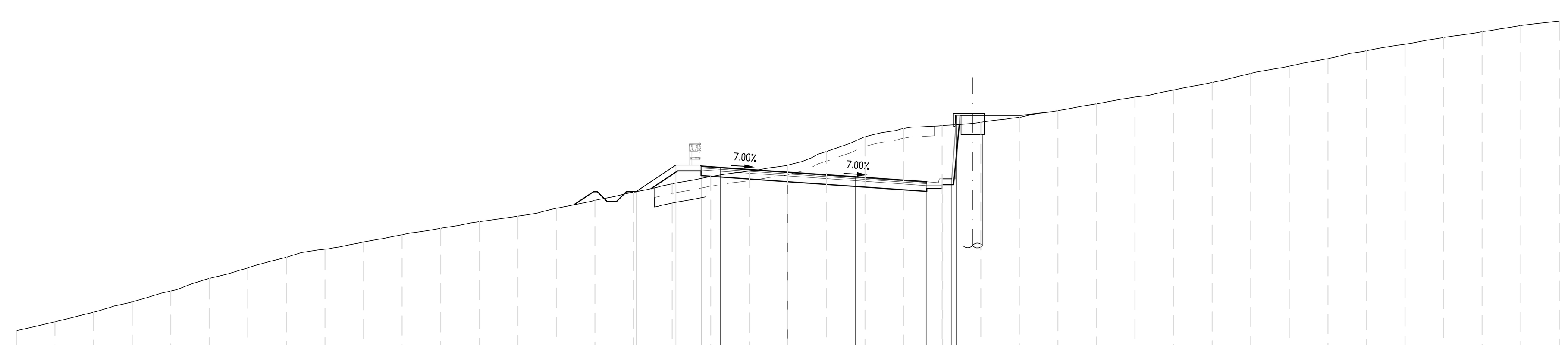


371 1: 200

| | | | | | | | | | | | | | | | | | | | | | | | | | | | | | | | | | | | | | | | | | |
|---|---|---|---|---|---|---|---|---|---|---|---|---|---|---|---|---|---|---|---|---|---|---|---|---|---|---|---|---|---|---|---|---|---|---|---|---|---|---|---|---|---|
| QUOTE PROGETTO | 383.65 | 385.04 | 384.99 | 384.92 | 384.67 | 384.43 | 384.17 | 384.32 | 384.32 | 387.62 |
| PARZIALI PROGETTO | 2.08 | 1.30 | 1.00 | 3.50 | 3.50 | 3.70 | 0.80 | 0.50 | 0.25 |
| QUOTE TERRENO | 376.44 | 376.90 | 377.40 | 377.94 | 378.50 | 379.15 | 379.70 | 380.25 | 380.67 | 381.04 | 381.42 | 381.75 | 382.10 | 382.38 | 382.79 | 383.20 | 383.63 | 384.06 | 384.44 | 384.73 | 385.03 | 385.74 | 386.50 | 386.93 | 387.08 | 387.26 | 387.52 | 387.86 | 388.22 | 388.56 | 388.93 | 389.33 | 389.79 | 390.17 | 390.57 | 390.97 | 391.32 | 391.66 | 391.96 | 392.28 | 392.51 |
| PARZIALI TERRENO | 2.00 | 2.00 | 2.00 | 2.00 | 2.00 | 2.00 | 2.00 | 2.00 | 2.00 | 2.00 | 2.00 | 2.00 | 2.00 | 2.00 | 2.00 | 2.00 | 2.00 | 2.00 | 2.00 | 2.00 | 2.00 | 2.00 | 2.00 | 2.00 | 2.00 | 2.00 | 2.00 | 2.00 | 2.00 | 2.00 | 2.00 | 2.00 | 2.00 | 2.00 | 2.00 | 2.00 | 2.00 | 2.00 | 2.00 | 2.00 |

## Sezione no. 48 Km 1950.00

FD SCAVO FOSSO DX m² 1.92
FS SCAVO FOSSO SX m² 0.34
a USURA m 10.30
ba BASE m 10.32
bi BINDER m 10.32

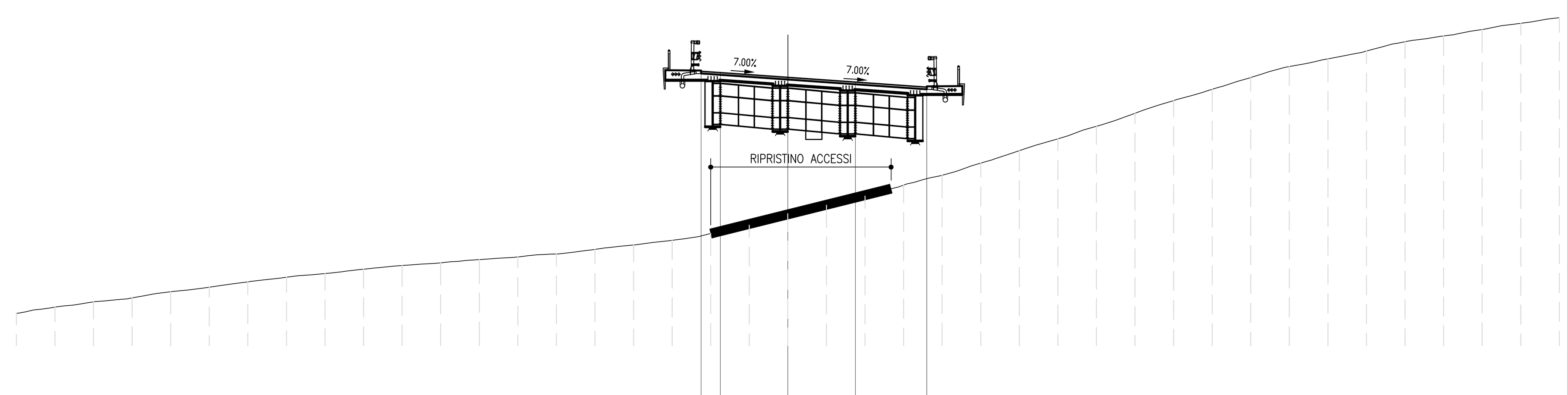


368 1: 200

| | | | | | | | | | | | | | | | | | | | | | | | | | | | | | | | | | | | | | | | | | |
|---|---|---|---|---|---|---|---|---|---|---|---|---|---|---|---|---|---|---|---|---|---|---|---|---|---|---|---|---|---|---|---|---|---|---|---|---|---|---|---|---|---|
| QUOTE PROGETTO | 386.24 | 386.17 | 385.92 | 385.68 | 385.42 |
| PARZIALI PROGETTO | 1.00 | 3.50 | 3.50 | 3.70 |
| QUOTE TERRENO | 373.68 | 374.00 | 374.27 | 374.48 | 374.80 | 375.03 | 375.31 | 375.55 | 375.74 | 375.97 | 376.16 | 376.30 | 376.46 | 376.60 | 376.76 | 377.00 | 377.22 | 377.46 | 377.82 | 378.25 | 378.84 | 379.28 | 379.76 | 380.33 | 380.84 | 381.47 | 382.11 | 382.73 | 383.38 | 384.06 | 384.71 | 385.30 | 385.91 | 386.48 | 386.87 | 387.28 | 387.76 | 388.07 | 388.40 | 388.72 | 389.01 |
| PARZIALI TERRENO | 2.00 | 2.00 | 2.00 | 2.00 | 2.00 | 2.00 | 2.00 | 2.00 | 2.00 | 2.00 | 2.00 | 2.00 | 2.00 | 2.00 | 2.00 | 2.00 | 2.00 | 2.00 | 2.00 | 2.00 | 2.00 | 2.00 | 2.00 | 2.00 | 2.00 | 2.00 | 2.00 | 2.00 | 2.00 | 2.00 | 2.00 | 2.00 | 2.00 | 2.00 | 2.00 | 2.00 | 2.00 | 2.00 | 2.00 | 2.00 |

## LEGENDA MOVIMENTI TERRA

Sezione no. 58 Km 2410.00

FD SCAVO FOSSO DX m² 0.54
FS SCAVO FOSSO SX m² 0.60
RI RILEVATO m² 108.31
a USURA m 9.00
ac ANTICAPILLARE m 27.95
ba BASE m 9.00
bi BINDER m 9.00
bo BONIFICA m 27.95
fo FONDAZIONE m 9.00
ge GEOTESSUTO m 27.95
sc SCOTICO m 27.95
v TERRENO VEGETALE m 23.60

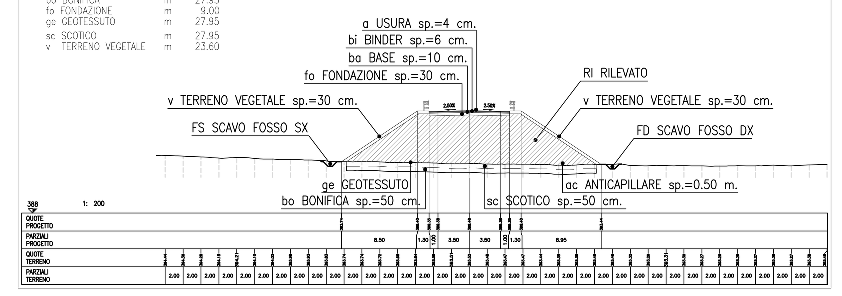


Sezione no. 108 Km 4575.00

FD SCAVO FOSSO DX m² 0.54
FS SCAVO FOSSO SX m² 0.50
SC SCAVO m² 61.00
a USURA m 9.00
ba BASE m 9.00
bi BINDER m 9.00
fo FONDAZIONE m 9.00
sc SCOTICO m 21.67
v TERRENO VEGETALE m 11.83

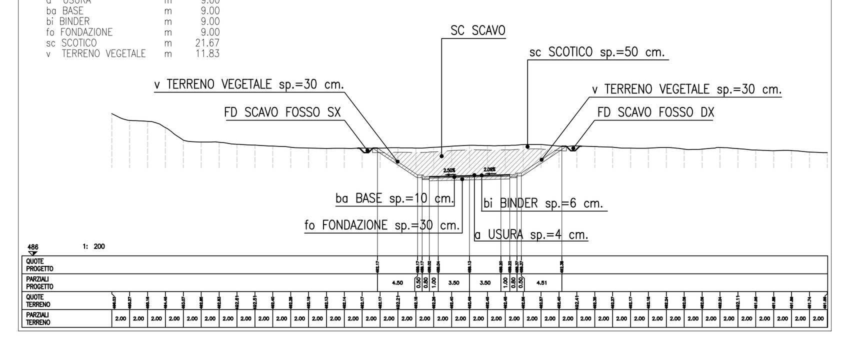


COMMITTENTE:

RFI RETE FERROVIARIA ITALIANA
GRUPPO FERROVIE DELLO STATO ITALIANE

PROGETTAZIONE:

ITALFERR
GRUPPO FERROVIE DELLO STATO ITALIANE

**U.O. INFRASTRUTTURE NORD**

**PROGETTO DEFINITIVO**

**DIRETTRICE FERROVIARIA MESSINA - CATANIA - PALERMO**
**NUOVO COLLEGAMENTO PALERMO - CATANIA**

**RADDOPPIO TRATTA FIUMETORTO - LERCARA DIRAMAZIONE**
**LOTTO 1+2**

VIABILITA'

NV20 - Nuova viabilità di collegamento Roccapalumba-Lercara
Sezioni trasversali - Tav. 8/24

SCALA: 1:200

| COMMESSA | LOTTO | FASE | ENTE | TIPO DOC. | OPERA/DISCIPLINA | PROGR. | REV. |
|---|---|---|---|---|---|---|---|
| RS3Z | 00 | D | 26 | W9 | NV2000 | 008 | C |

| Rev. | Descrizione | Redatto | Data | Verificato | Data | Approvato | Data | Autorizzato Data |
|---|---|---|---|---|---|---|---|---|
| A | EMISSIONE ESECUTIVA | C. INTEGRA | Gennaio 2020 | L. STOPPINI | Gennaio 2020 | A. BARRECA | Gennaio 2020 | F. SACCHI Settembre 2021 |
| B | 1° AGG. A CONSEGNA CSLLPP | C. INTEGRA | Maggio 2020 | L. STOPPINI | Maggio 2020 | A. BARRECA | Maggio 2020 | |
| C | AGGIORNAMENTO PER CDS | C. INTEGRA | Settembre 2021 | L. STOPPINI | Settembre 2021 | A. BARRECA | Settembre 2021 | |

File: RS3Z00D26W9NV2000008C.DWG n. Elab.:

SCALA DI STAMPA: 1=1