SEZIONE 1125

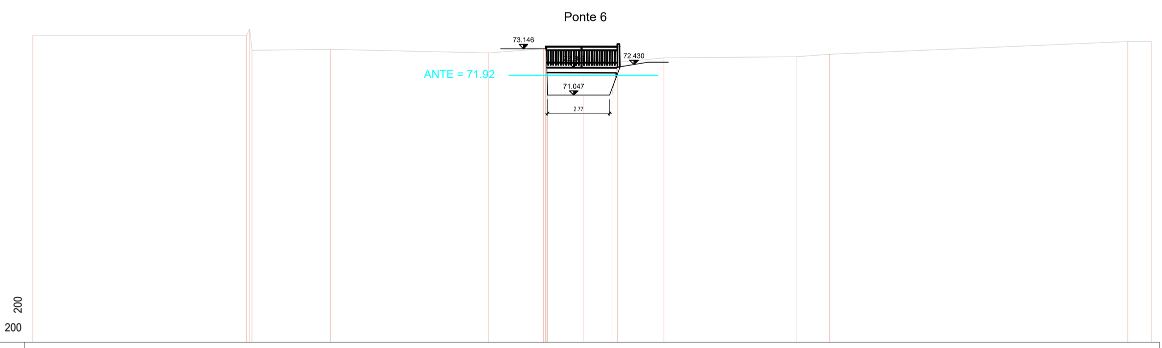

60.00 200

DISTANZE PROGRESSIVE	0.00, [illegible], 13.30, 20.38, [illegible], 24.60, 25.89, 26.15, 28.21, 34.12, 35.61, 48.95, 50.00
DISTANZE PARZIALI	9.55, [illegible], 3.50, 7.08, 2.45, [illegible], 1.59, 0.00, 1.29, 0.26, 2.06, 5.91, 1.49, 13.34, 1.05
QUOTE	73.69, [illegible], 73.08, 72.92, [illegible], 71.05, 71.05, 72.51, 72.70, 72.75, 72.86, 73.43, 73.43

SEZIONE 1042.7

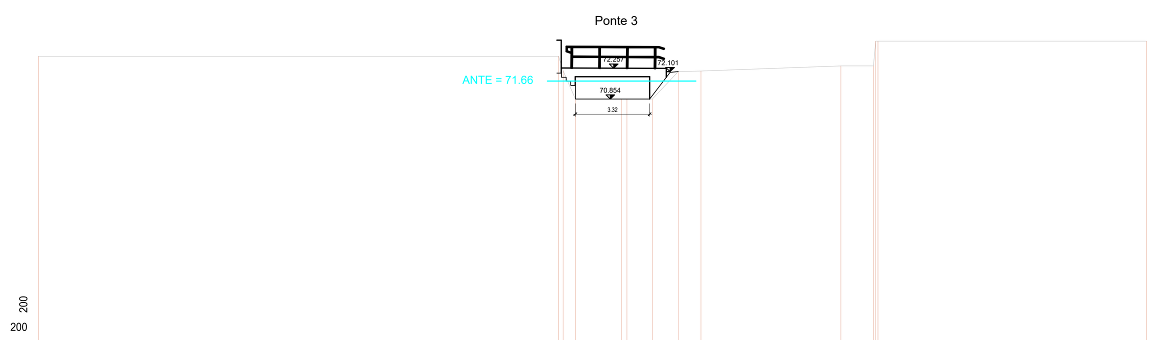

60.00 200

DISTANZE PROGRESSIVE	0.00, [illegible], 24.01, 26.08, 26.32, 27.45, 28.61, 29.63, 35.88, [illegible], 49.55
DISTANZE PARZIALI	23.26, 0.20, 0.55, 2.07, 0.24, 1.13, 1.16, 1.02, 6.25, 1.46, 0.10, 12.01
QUOTE	72.77, [illegible], 70.85, 70.85, 70.85, 70.85, 72.08, 72.11, 72.34, [illegible], 73.45

SEZIONE 984.4

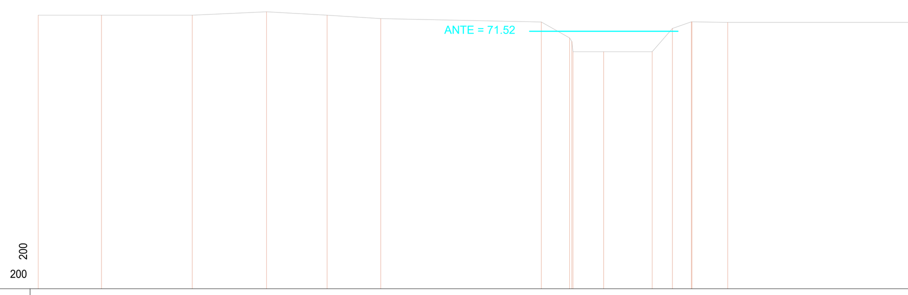

60.00 200

DISTANZE PROGRESSIVE	0.00, 2.83, 6.88, 10.20, 12.91, 15.31, 22.49, [illegible], 25.28, 27.44, 28.35, [illegible], 30.82, 38.98
DISTANZE PARZIALI	2.83, 4.05, 3.32, 2.71, 2.40, 7.18, 1.26, [illegible], 1.38, 2.16, 0.91, 0.84, 0.03, 1.60, 8.16
QUOTE	72.24, 72.24, 72.24, 72.39, 72.24, 72.08, 71.93, [illegible], 70.60, 70.60, 71.65, 71.94, 71.92, 71.92

SEZIONE 1111.9

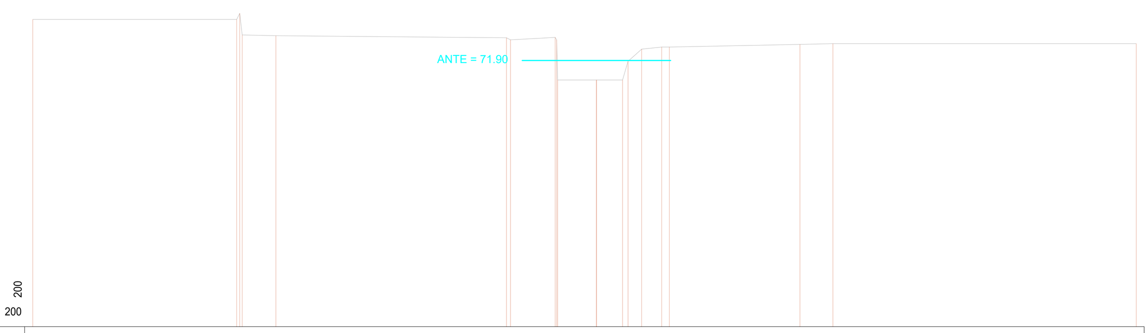

60.00 200

DISTANZE PROGRESSIVE	0.00, [illegible], 10.87, [illegible], [illegible], 25.21, [illegible], 27.23, [illegible], 34.31, 35.78, 49.34
DISTANZE PARZIALI	9.12, [illegible], 1.50, 10.32, 0.17, 2.00, [illegible], 1.74, 0.00, 1.17, 0.74, 0.61, 0.90, 0.34, 5.84, 1.47, 13.56
QUOTE	73.74, [illegible], 73.01, [illegible], [illegible], 71.03, [illegible], 72.41, 72.50, 72.50, 72.62, 72.65, 72.65

SEZIONE 1034.2

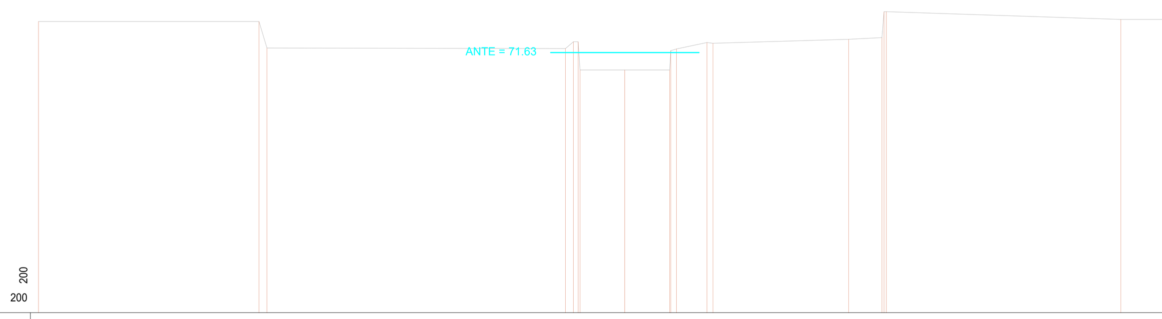

60.00 200

DISTANZE PROGRESSIVE	0.00, 9.86, 10.21, [illegible], 26.21, [illegible], 29.88, 30.15, 36.21, [illegible], 48.38, 50.43
DISTANZE PARZIALI	9.86, 0.35, 13.35, [illegible], 2.00, 2.00, [illegible], 1.36, 0.27, 6.06, 1.49, 0.10, 10.48, 2.05
QUOTE	73.02, 73.02, 71.83, [illegible], 70.85, [illegible], 72.08, 72.04, 72.22, [illegible], 73.11, 73.11

SEZIONE 975

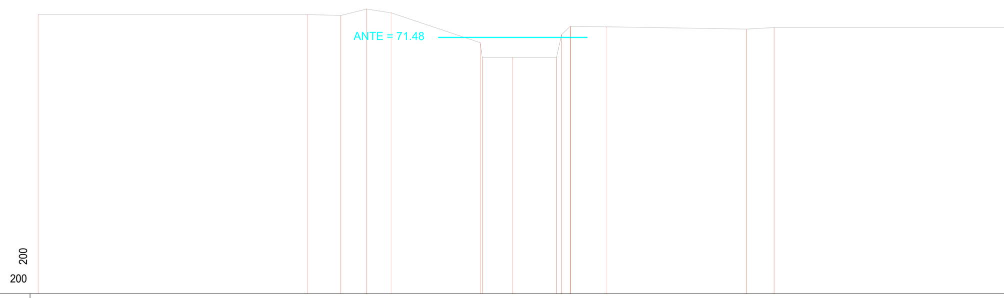

60.00 200

DISTANZE PROGRESSIVE	0.00, 12.04, 13.54, 14.70, 15.79, [illegible], 21.24, [illegible], 25.44, 31.69, 32.93, 43.32
DISTANZE PARZIALI	12.04, 1.50, 1.16, 1.09, 3.99, 0.09, 1.37, 1.95, [illegible], 1.62, 6.25, 1.24, 10.39
QUOTE	72.50, 72.50, 72.46, 72.75, 72.58, [illegible], 70.58, [illegible], 71.95, 71.85, 71.92, 71.92

SEZIONE 1083

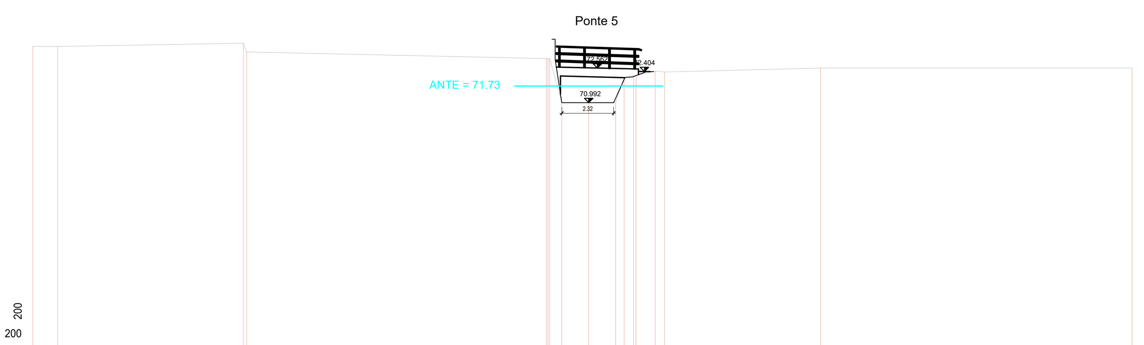

60.00 200

DISTANZE PROGRESSIVE	0.00, 1.12, [illegible], [illegible], 23.66, 24.86, 26.06, [illegible], 27.83, 28.26, 35.23, 49.16
DISTANZE PARZIALI	1.12, 8.30, 0.15, 13.40, [illegible], 1.20, 1.20, 0.38, 0.43, 0.13, 0.85, 0.43, 6.97, 13.93
QUOTE	73.50, 73.50, [illegible], [illegible], 70.99, 70.99, [illegible], 72.40, 72.36, 72.54, 72.54

SEZIONE 1006.4

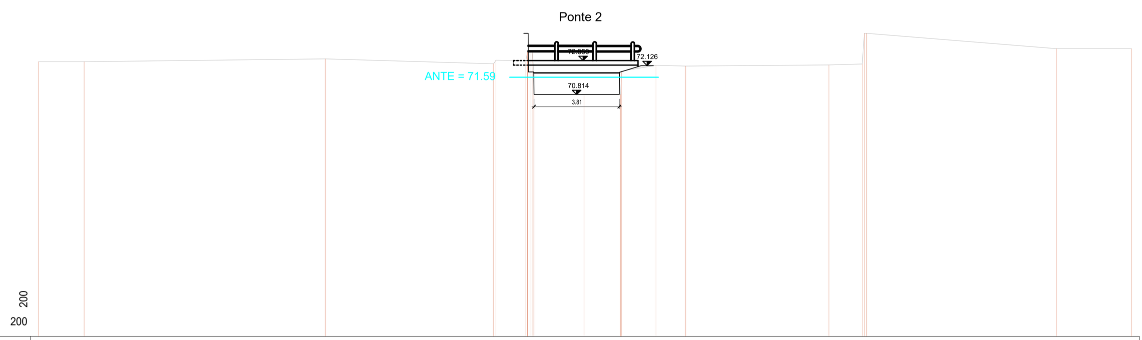

60.00 200

DISTANZE PROGRESSIVE	0.00, 2.04, 12.82, [illegible], [illegible], 24.39, [illegible], 27.60, 28.93, 35.33, [illegible], 45.50, 48.85
DISTANZE PARZIALI	2.04, 10.78, 7.53, 0.10, 1.34, [illegible], 2.24, 1.63, 0.03, 1.55, 1.33, 6.40, 1.49, 0.10, 8.48, 3.35
QUOTE	72.28, 72.28, 72.41, [illegible], [illegible], 70.81, [illegible], 72.12, 72.09, 72.14, [illegible], 72.87, 72.87

SEZIONE 1075

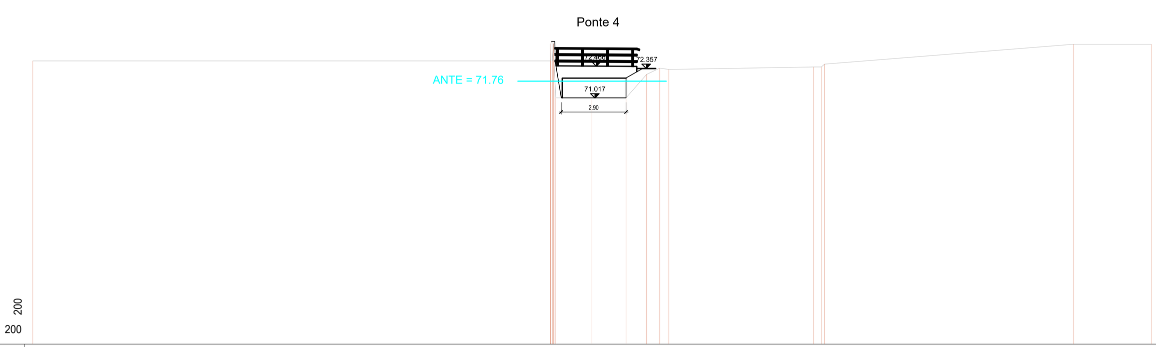

60.00 200

DISTANZE PROGRESSIVE	0.00, [illegible], 25.00, 26.52, 27.44, 28.03, 28.43, [illegible], 46.52, 50.00
DISTANZE PARZIALI	23.14, [illegible], 1.62, 1.52, 0.92, 0.59, 0.40, 6.46, [illegible], 11.13, 3.48
QUOTE	72.67, [illegible], 71.02, 71.02, 72.07, 72.25, 72.29, [illegible], 73.41, 73.41

SEZIONE 1000

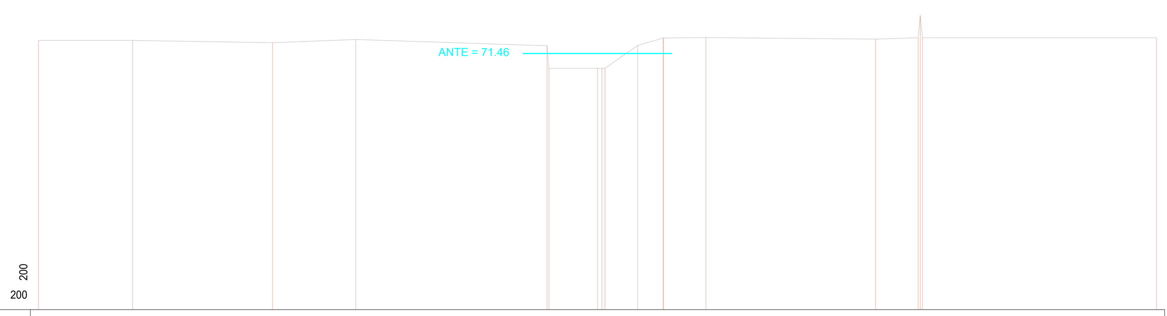

60.00 200

DISTANZE PROGRESSIVE	0.00, 4.21, 10.47, 14.19, [illegible], [illegible], 26.80, [illegible], 29.85, 37.43, [illegible], 50.00
DISTANZE PARZIALI	4.21, 6.26, 3.72, 8.55, 0.09, 2.17, [illegible], 1.47, 1.13, 0.03, 1.89, 7.58, 1.91, [illegible], 10.47
QUOTE	72.04, 72.04, 71.94, 72.08, [illegible], [illegible], 71.81, 72.15, 72.17, 72.10, [illegible], 72.16

SEZIONE 1061.6

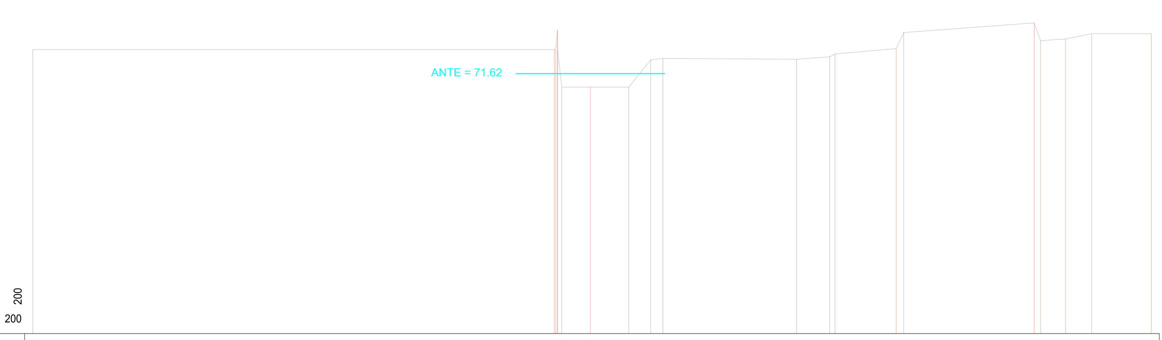

60.00 200

DISTANZE PROGRESSIVE	0.00, [illegible], 24.94, 26.66, 27.64, 28.18, 34.16, 35.64, 35.88, 38.61, 38.95, [illegible], 46.19, 47.36, 50.02
DISTANZE PARZIALI	23.33, [illegible], 1.28, 1.72, 0.98, 0.54, 5.98, 1.48, 0.24, 2.73, 0.34, 5.83, 0.29, 1.12, 1.17, 2.66
QUOTE	72.70, [illegible], 71.02, 71.02, 72.24, 72.30, 72.26, 72.37, 72.50, 72.74, 73.46, [illegible], 73.17, 73.41, 73.41

SEZIONE 995

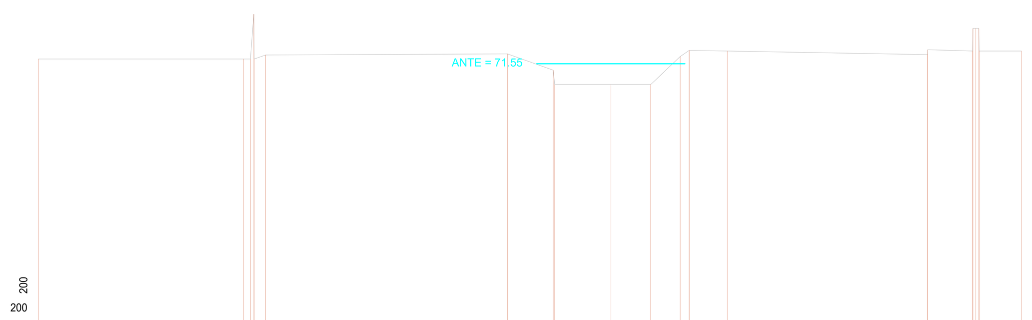

60.00 200

DISTANZE PROGRESSIVE	0.00, [illegible], 10.16, 20.98, [illegible], 25.61, 27.39, 28.71, [illegible], 30.84, 39.78, [illegible], 43.98
DISTANZE PARZIALI	9.17, [illegible], 10.82, 2.05, 0.07, 2.51, 1.78, 1.32, [illegible], 1.70, 8.94, 0.01, 2.00, [illegible], 1.89
QUOTE	71.76, [illegible], 71.94, 71.99, [illegible], 70.62, 70.62, 71.87, 72.15, 72.12, [illegible], [illegible], 72.12

COMMITTENTE:

RFI RETE FERROVIARIA ITALIANA
GRUPPO FERROVIE DELLO STATO ITALIANE

CUP: J54H17000130009

PROGETTAZIONE:

ITALFERR
GRUPPO FERROVIE DELLO STATO ITALIANE

DIREZIONE TECNICA
U.O. INFRASTRUTTURE NORD

PROGETTO DEFINITIVO PER APPALTO

COMPLETAMENTO DEL NODO DI UDINE - PRG E ACC DEL P.M. CARGNACCO E OPERE SOSTITUTIVE DEI PL INTERFERENTI

IDRAULICA ROGGIA PALMA
Sezioni trasversali ante operam
Tav.2 di 2

SCALA: 1:200

COMMESSA	LOTTO	FASE	ENTE	TIPO DOC.	OPERA/DISCIPLINA	PROGR.	REV.
IZ09	00	D	26	W9	IN0100	002	A

Rev.	Descrizione	Redatto	Data	Verificato	Data	Approvato	Data	Autorizzato Data
A	Emissione definitiva	F. Serrau	Settembre 2019	M. Ventura	Settembre 2019	S. Lo Presti	Settembre 2019	F. Sacchi Settembre 2019

File: IZ0900D26W9IN0100002A.dwg | n.Elab.: