SEZIONE 1400

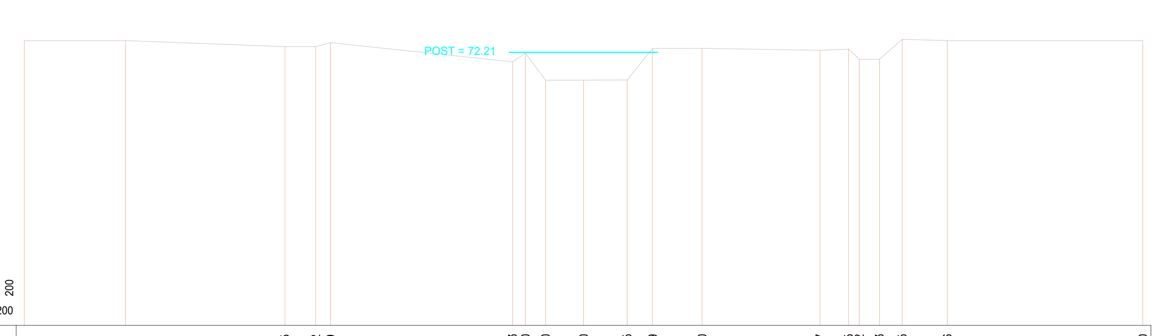

DISTANZE PROGRESSIVE	0.00	4.52	11.65	13.02	13.69	21.83	22.40	23.30	25.00	26.95	28.09	30.30	35.57	36.85	37.32	38.23	39.25	41.26	50.00
DISTANZE PARZIALI	4.52	7.13	1.37	0.67	8.14	0.57	0.90	1.70	1.95	1.14	2.21	5.27	1.28	0.47	0.91	1.02	2.01	8.74	
QUOTE	72.73	72.73	72.46	72.46	72.64	71.78	72.17	70.96	70.96	70.97	72.38	72.38	72.30	72.35	71.89	71.89	72.79	72.73	72.73

TOMBINO EST

SEZIONE 1325

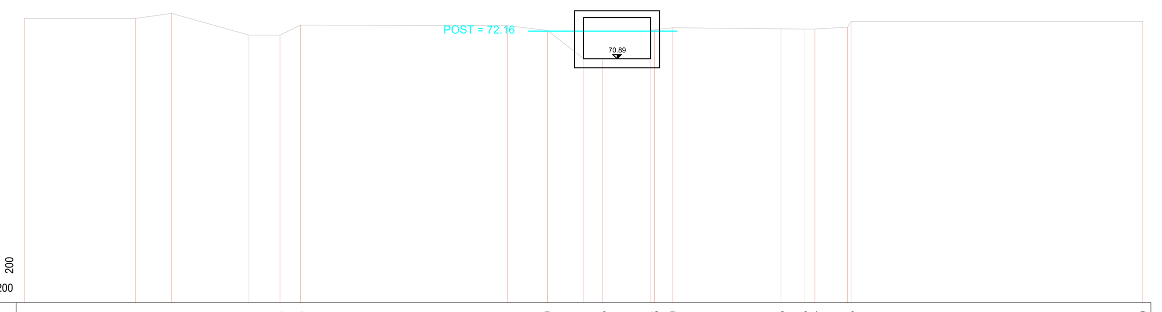

DISTANZE PROGRESSIVE	0.00	4.96	6.58	10.04	11.43	12.35	21.61	23.39	25.01	25.86	[illegible]	[illegible]	28.99	33.83	34.86	35.34	[illegible]	[illegible]	50.00
DISTANZE PARZIALI	4.96	1.62	3.46	1.39	0.92	9.26	1.78	1.62	0.85	2.15	0.17	0.81	4.84	1.03	0.48	1.47	0.15	13.04	
QUOTE	72.72	72.72	72.95	71.98	71.98	72.42	72.40	72.18	70.92	70.92	[illegible]	[illegible]	72.31	72.26	72.25	72.25	[illegible]	[illegible]	72.59

SEZIONE 1300

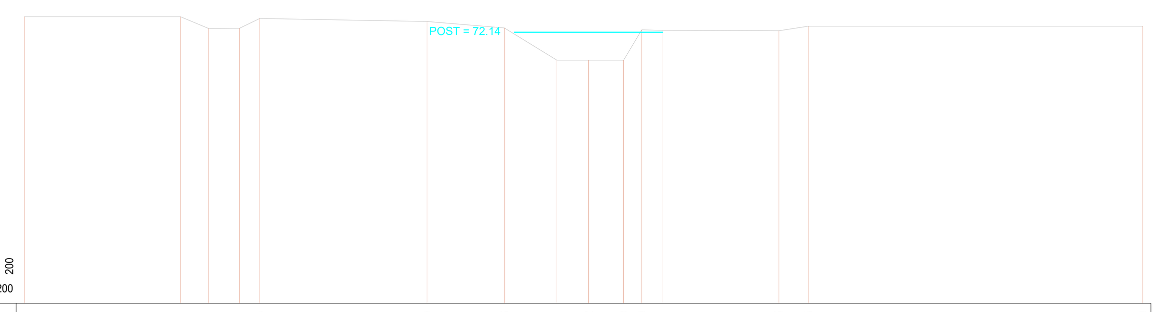

DISTANZE PROGRESSIVE	0.00	6.99	8.24	9.62	10.53	18.00	21.46	23.81	25.22	26.79	27.60	28.51	33.73	35.05	50.00
DISTANZE PARZIALI	6.99	1.25	1.38	0.91	7.47	3.46	2.35	1.41	1.57	0.81	0.91	5.22	1.32	14.95	
QUOTE	72.83	72.83	72.32	72.32	72.76	72.63	72.34	70.89	70.89	70.89	72.25	72.23	72.21	72.42	72.42

SEZIONE 1275

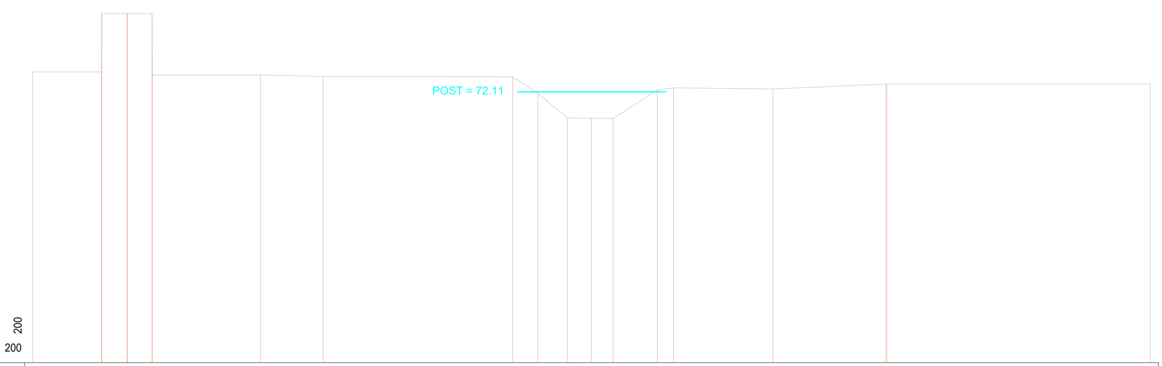

DISTANZE PROGRESSIVE	0.00	3.08	[illegible]	[illegible]	10.19	12.99	21.47	22.60	23.93	25.00	25.97	27.94	28.67	33.12	[illegible]	50.00		
DISTANZE PARZIALI	3.08	0.01	[illegible]	[illegible]	0.01	4.84	2.80	8.48	1.13	1.33	1.07	0.97	1.97	0.73	4.45	5.05	0.04	11.79
QUOTE	73.00	[illegible]	75.61	[illegible]	72.87	72.80	72.78	72.04	70.94	70.93	70.92	72.19	72.29	72.24	72.46	72.46		

Ponte 11

SEZIONE 1205.9

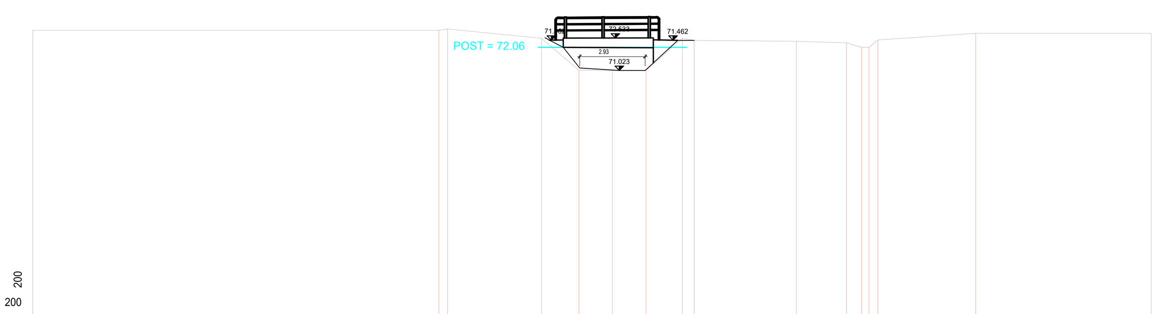

DISTANZE PROGRESSIVE	0.00	18.17	18.56	22.76	24.44	25.94	27.44	29.07	29.59	34.17	36.41	[illegible]	[illegible]	[illegible]	42.18	50.04
DISTANZE PARZIALI	18.17	0.39	4.20	1.68	1.50	1.50	1.63	0.52	4.58	2.24	0.68	[illegible]	0.40	4.37	7.86	
QUOTE	72.82	72.82	72.88	72.46	71.03	71.02	71.02	72.46	72.37	72.33	72.26	[illegible]	[illegible]	[illegible]	72.68	72.68

SEZIONE 1200

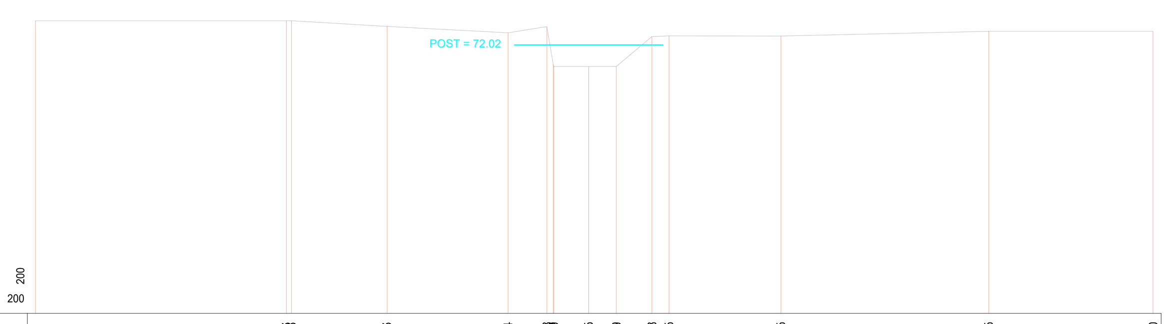

DISTANZE PROGRESSIVE	0.00	[illegible]	[illegible]	15.73	21.14	[illegible]	[illegible]	[illegible]	24.75	25.99	27.58	28.35	33.35	42.65	50.00	
DISTANZE PARZIALI	11.23	0.23	4.27	5.41	1.74	[illegible]	[illegible]	1.56	1.24	1.59	0.77	5.00	9.30	7.35		
QUOTE	73.10	[illegible]	[illegible]	72.85	72.56	[illegible]	[illegible]	[illegible]	71.05	71.05	72.39	72.43	72.42	72.63	72.63	

Ponte 10

SEZIONE 1190.3

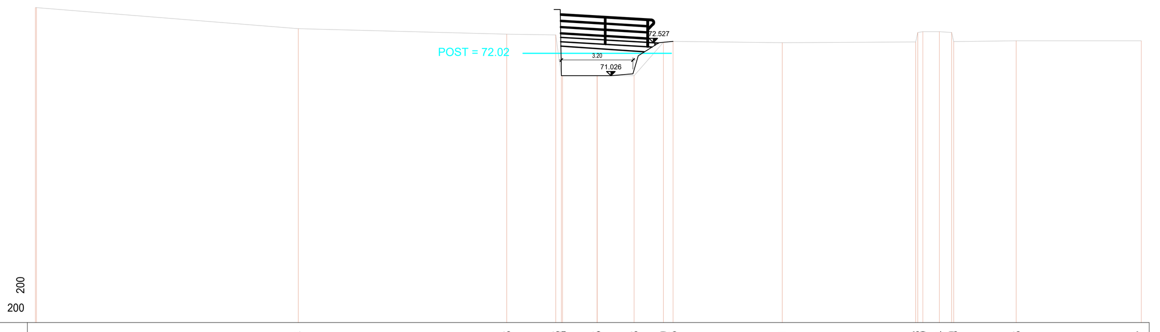

DISTANZE PROGRESSIVE	[illegible]	11.76	21.08	[illegible]	[illegible]	25.13	26.78	28.09	28.53	33.41	[illegible]	[illegible]	40.44	[illegible]	43.88	49.47		
DISTANZE PARZIALI	0.04	11.72	9.32	2.20	[illegible]	1.55	0.00	1.65	1.31	0.44	4.88	5.97	[illegible]	0.74	0.55	0.09	2.80	5.59
QUOTE	[illegible]	73.12	72.88	[illegible]	71.03	71.03	72.51	72.56	72.50	[illegible]	72.99	[illegible]	72.58	72.58				

SEZIONE 1185.58

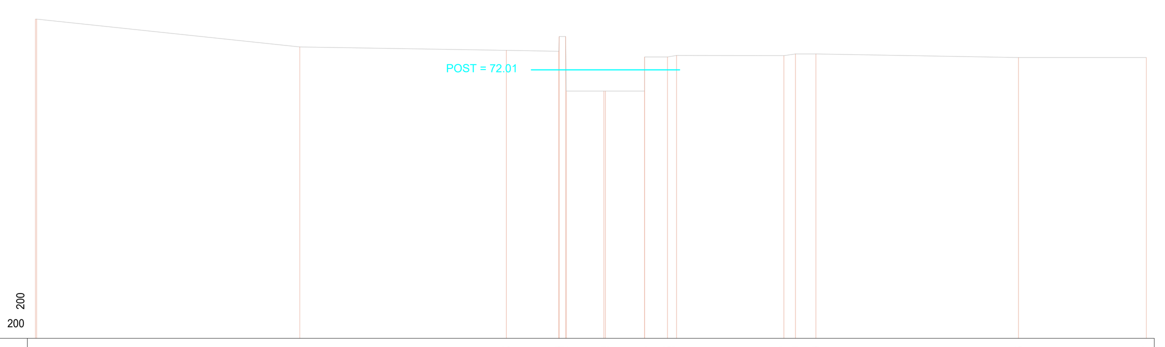

DISTANZE PROGRESSIVE	[illegible]	11.82	21.06	[illegible]	[illegible]	27.24	28.26	28.67	33.47	33.99	34.90	43.96	49.67		
DISTANZE PARZIALI	0.05	11.77	9.24	2.34	[illegible]	1.68	0.07	1.75	1.02	0.41	4.80	0.52	0.91	9.06	5.71
QUOTE	[illegible]	73.03	72.88	[illegible]	[illegible]	[illegible]	72.58	72.65	72.64	72.72	72.72	72.56	72.56		

TOMBINO CENTRALE SEDE FERROVIARIA

SEZIONE 1175

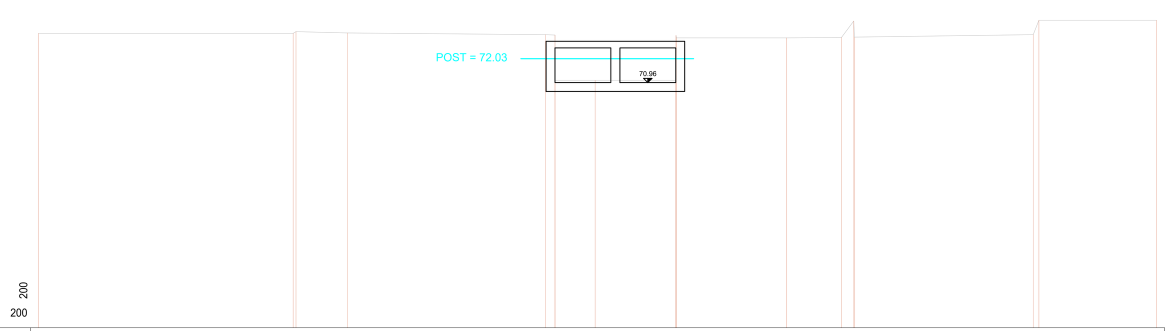

DISTANZE PROGRESSIVE	0.00	[illegible]	13.81	22.67	23.10	24.90	[illegible]	33.45	35.91	[illegible]	[illegible]	50.00			
DISTANZE PARZIALI	11.39	0.13	2.29	8.86	0.43	1.80	3.60	[illegible]	4.92	2.46	0.55	[illegible]	8.00	0.25	5.26
QUOTE	73.16	[illegible]	73.18	73.10	73.08	71.06	[illegible]	72.96	72.98	[illegible]	[illegible]	73.75			

SEZIONE 1150

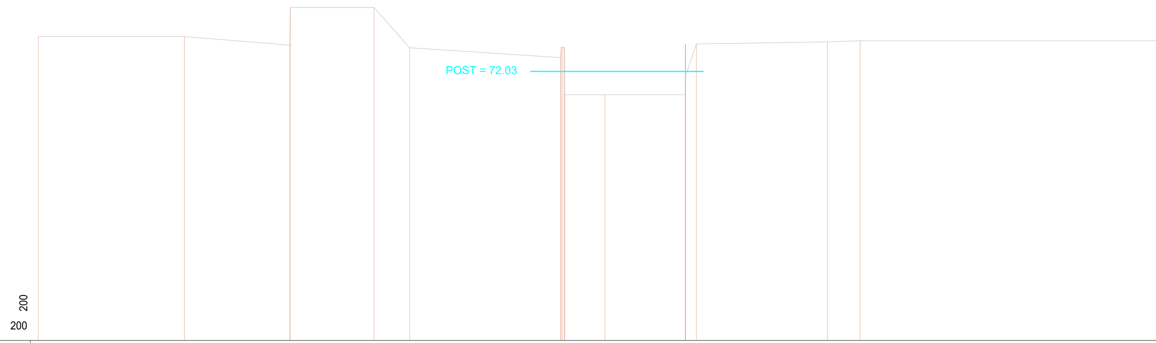

DISTANZE PROGRESSIVE	0.00	6.53	[illegible]	15.01	16.61	[illegible]	25.34	28.94	29.43	35.29	36.75	50.00	
DISTANZE PARZIALI	6.53	4.72	0.02	3.74	1.60	6.75	[illegible]	1.80	3.60	0.49	5.86	1.46	13.25
QUOTE	73.59	73.59	[illegible]	74.89	73.09	[illegible]	70.99	[illegible]	73.26	73.35	73.40	73.40	

Ponte 7

SEZIONE 1133.7

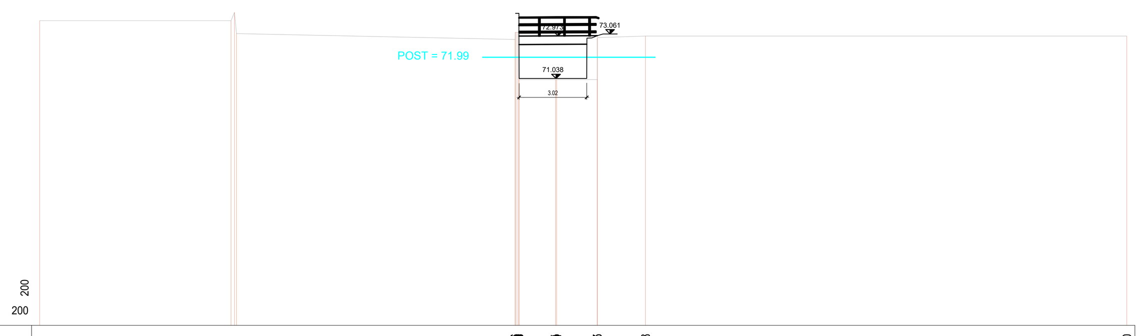

DISTANZE PROGRESSIVE	0.00	[illegible]	[illegible]	[illegible]	24.93	27.08	48.60		
DISTANZE PARZIALI	8.55	0.15	12.45	[illegible]	1.62	0.06	1.82	2.15	21.52
QUOTE	73.62	[illegible]	[illegible]	[illegible]	[illegible]	72.93	72.93		

Ponte 6

SEZIONE 1125

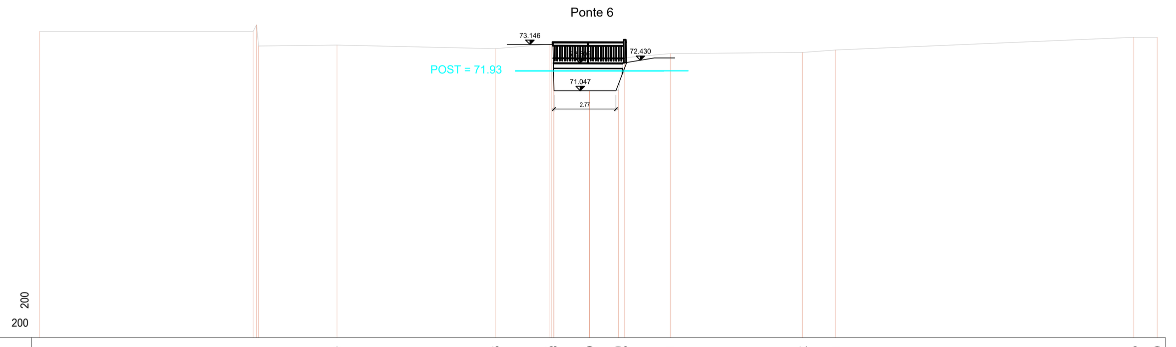

DISTANZE PROGRESSIVE	0.00	[illegible]	13.30	20.38	[illegible]	24.60	25.89	26.15	28.21	34.12	35.61	48.95	50.00		
DISTANZE PARZIALI	9.55	0.15	3.50	7.08	2.45	[illegible]	1.59	1.29	0.00	0.26	2.06	5.91	1.49	13.34	1.05
QUOTE	73.69	[illegible]	73.08	72.92	[illegible]	71.05	71.05	72.51	72.70	72.75	72.86	73.43	73.43		

COMMITTENTE:

RFI RETE FERROVIARIA ITALIANA
GRUPPO FERROVIE DELLO STATO ITALIANE

CUP: J54H17000130009

PROGETTAZIONE:

ITALFERR
GRUPPO FERROVIE DELLO STATO ITALIANE

DIREZIONE TECNICA
U.O. INFRASTRUTTURE NORD

PROGETTO DEFINITIVO PER APPALTO

COMPLETAMENTO DEL NODO DI UDINE - PRG E ACC DEL P.M. CARGNACCO E OPERE SOSTITUTIVE DEI PL INTERFERENTI

IDRAULICA RIO PALMA
Sezioni trasversali post operam
Tav.1 di 2

SCALA: 1:200

COMMESSA	LOTTO	FASE	ENTE	TIPO DOC.	OPERA/DISCIPLINA	PROGR.	REV.
IZ09	00	D	26	W9	IN0100	003	A

Rev.	Descrizione	Redatto	Data	Verificato	Data	Approvato	Data	Autorizzato Data
A	Emissione definitiva	F. Serrau	Settembre 2019	M. Ventura	Settembre 2019	S. Lo Presti	Settembre 2019	F. Sacchi Settembre 2019

File: IZ0900D26W9IN0100003A.dwg | n.Elab.: