TM06 TOMBINO PARTE 3

PIANTA SPICCATO PARETI

SCALA 1:50

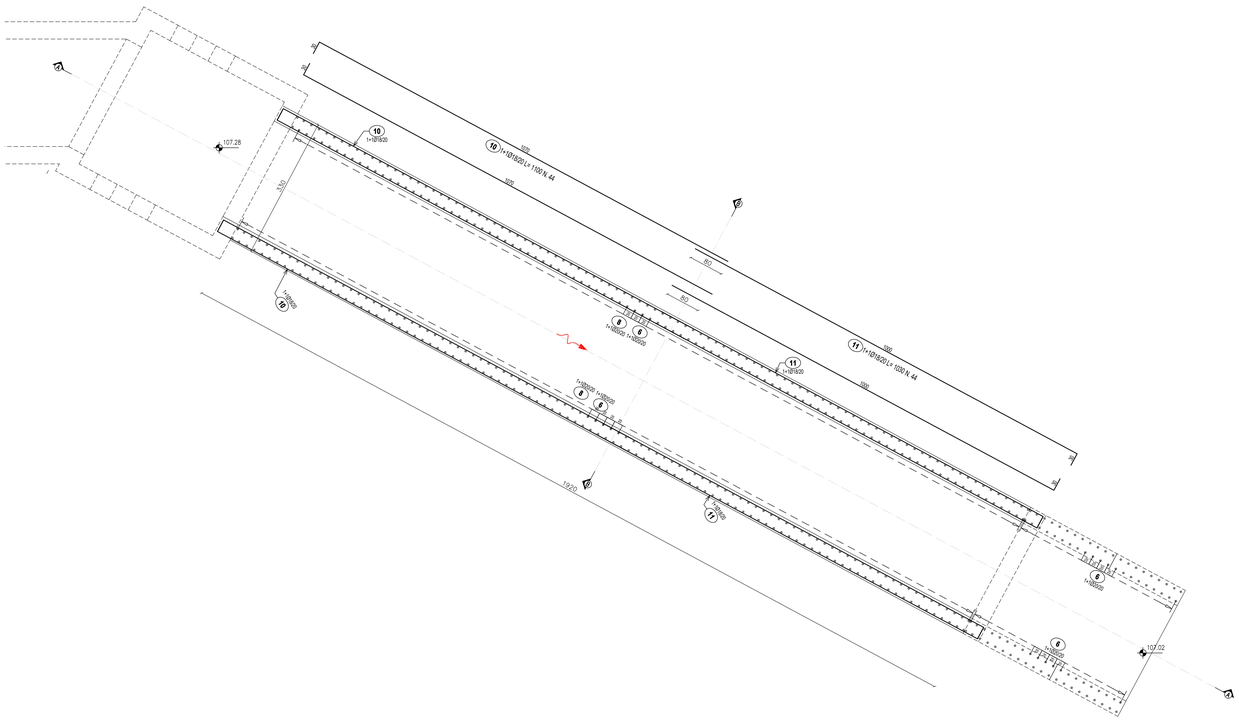
107.28
107.02
10 1+1Ø18/20
10 1+1Ø18/20 L= 1100 N. 44
11 1+1Ø18/20 L= 1030 N. 44
11 1+1Ø18/20
10 1+1Ø18/20
8 1+1Ø20/20
6 1+1Ø20/20
9 1+1Ø20/20
7 1+1Ø20/20
6 1+1Ø20/20
7 1+1Ø20/20
6 1+1Ø20/20
7 1+1Ø20/20
6