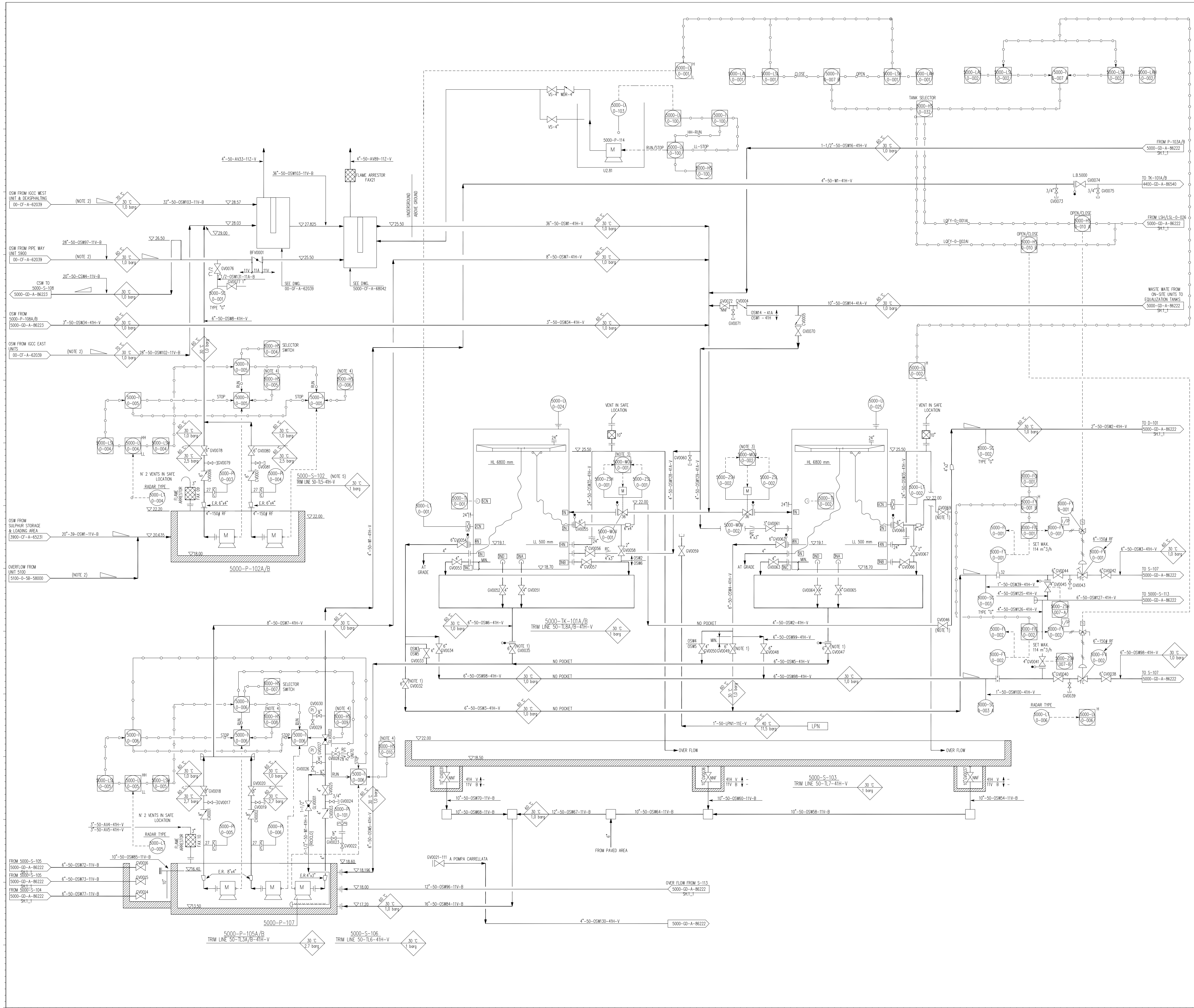

NOMENCLATURE

ATM	VENT TO ATMOSPHERE	IFLO	INSTRUMENT FLUSHING OIL
BA	ACID FLARE	IA	INSTRUMENT AIR
BD	MAIN FLARE	LBFW	BOILER FEED WATER AT 140°C
CC	COLD CONDENSATE	LCC	LOW PRESSURE CLEAN CONDENSATE
CLDR	CLOSE DRAIN	LN	LOW PRESSURE NAPHTHA
CSW	CLEAN SEWERS	LOC	LOW PRESSURE OILY CONDENSATE
CWR	COOLING WATER RETURN	LPN	LOW PRESSURE NITROGEN
CWS	COOLING WATER SUPPLY	LS	LOW PRESSURE STEAM
CY	CHEMICAL SEWERS	MBFW	BOILER FEED WATER AT 195°C
DMW	DEMINERALIZED WATER	MCC	MEDIUM PRESSURE CLEAN CONDENSATE
DW	POTABLE WATER	MOC	MEDIUM PRESSURE OILY CONDENSATE
FG	FUEL GAS	MS	MEDIUM PRESSURE STEAM
FLO	FLUSHING OIL	OSW	OILY SEWERS
HC	HOT CONDENSATE	PCW	PROCESS CONDENSATE WATER
HCC	HIGH PRESSURE CLEAN COND.	PW	DESALINATED WATER
HDW	HIGH PRESSURE DEMIWATER	RWR	MACHINERY COOLING WATER RETURN
HFLO	HIGH PRESSURE FLUSHING OIL	RWS	MACHINERY COOLING WATER SUPPLY
HN	HIGH PRESSURE NAPHTHA	SOR	SEAL OIL RETURN
HOC	HIGH PRESSURE OILY COND.	SOS	SEAL OIL SUPPLY
HOR	HOT OIL RETURN	SSW	SANITARY SEWERS
HOS	HOT OIL SUPPLY	SY	ACCIDENTALLY OILY SEWERS
HPN	HIGH PRESSURE NITROGEN	UA	UTILITY AIR
HS	HIGH PRESSURE STEAM	UW	UTILITY WATER
BDC	B.D. COLLECTING SYSTEM	VLS	VERY LOW PRESSURE STEAM

DESIGN DATA

PUMP

ITEM N.	SERVICE	RATED CAPACITY	DENSITY AT PUMP TEMP.	PRESSURE SUCTION/DISCH.	ABSORBED POWER
		[m^3/h]	[kg/m^3]	[barg]	[kW]
5000-P-102A/B	OILY SEWER WATER FROM STORAGE & LOADING AREA	153	1000	0/1.57	5.9
5000-P-105A/B	OILY DRAINS TO EQUALIZATION TANK	100	1000	0/1.96	8
5000-P-107	H2O DA S-106 A 3200-TK-101-A/B	70	1000	0/6.92	24.3

SUMP

ITEM N.	SERVICE	LENGTH x WIDTH	HEIGHT	NOMINAL CAPACITY	DES. TEMP.
		[mm x mm]	[mm]	[m^3]	[deg. °C]
5000-S-102	OILY SEWER WATER FROM STORAGE & LOADING AREA	3000 x 3000	4200	22	60
5000-S-103	BASIN FOR 5000-TK-101A/B	-	-	8000	60
5000-S-106	DRAINS OILY SEWER WATER EQUIPMENTS	5000 x 2000	5100	21	60

TANK

ITEM N.	SERVICE	I.D. x HEIGHT	NOMINAL CAPACITY	DES. TEMP.	DES. PRESS.
		[mm x mm]	[m^3]	[deg. °C]	[atm]
5000-TK-101A/B	OILY SEWER EQUALIZATION TANK	3600 x 8500	6500	60	1

GENERAL NOTES

1) FOR NOTES SYMBOLS & DETAILS SEE DWG.0-50-01.
2) ALL INSTRUMENT TAGS SHOWN ON THIS P&I HAVE DIGITS "5000" AS A PREFIX.
3) FOR SAMPLE CONNECTION ARRANGEMENT SEE DWG. N° 00-GA-A-60063.

+NOTES

1) VALVES POSITIONED OUTSIDE DIKE.
2) IT IS SPECIFIED THE TYPE OF STREAM ONLY.
OILY SEWER WATER NETWORK IS SHOWN ON DWG. 00-CF-A-62039.
3) OPEN/CLOSE COMMANDS AND STATUS INDICATION AVAILABLE ON A UNIQUE DCS POINT.
LOCAL CONTROL STATION IS ALSO PROVIDED.
4) START/STOP COMMANDS AND STATUS RUN.
INDICATION AVAILABLE ON A UNIQUE DCS POINT.
LOCAL CONTROL STATION IS ALSO PROVIDED.
5) LOCATED IN LIQUID SULPHUR LOADING AREA (UNIT 3900).

Il presente disegno costituisce un nuovo formato elettronico del disegno di stesso numero Rev. 16 emesso dal consorzio Snamprogetti-Foster Wheeler

REV.	DATA	DESCRIZIONE	PREP.	DIS.	CONTR.	APPR.
18	20/05/2014	REVISIONATO PER COSTRUZIONE S11/609		C.T.	S.C.	S.C.
17	21-01-14	NUMERATI ELEMENTI D'IMPIANTO S.12/802.3B		LA PLACA	RUGGERO	NOBILE
16	28-07-11	ALIMENTAZIONE 3200 TK-101A/B CON H2O DA 5000 AS BUILT COMM. IES S.09/606		MARANO	MALLIA	SAVASTA
15	20/07/09	AS BUILT COMM. S04/607		FICHERA G.	PELLICCIARI RIZZA S.	SANTORO SUMMA
14	17/07/08	AS BUILT COMM. S06/621		FASONE	NOBILE	NOBILE
13	09-11-05	AS BUILT COMM. S04/607		PAVANO	FEDERICO	RUGGIERI
12	27-09-05	AS BUILT COMM. S04/106		PAVANO	FEDERICO	RUGGIERI
11	05-09-03	AS BUILT AL 05/09/03	SALAMONE	MARANO	MAJURI	BONANNO
10	18-11-02	AS BUILT AL 18/11/02		SALAMONE	MAJURI	BONANNO
9	11-12-00	AS BUILT REVISION AT NOVEMBER / 2000		ROPPOLO	BETTINO	LA MANTIA
8	31-05-99	REVISED AS BUILT		ROPPOLO	BETTINO	LA MANTIA
7	20-04-98	REVISED AS PER FURTHER MECC.		ROPPOLO	BETTINO	LA MANTIA
6	30-10-97	REVISED AS PER FINAL MECHANIZATION		ROPPOLO	BETTINO	LA MANTIA

ISAB Energy

Questo disegno non può essere né riprodotto né comunicato a terzi, senza l'approvazione della ISAB Energy.

OGGETTO: UNIT 5000 — IMPIANTO: 5000

TITOLO: OIL SEWER WATER
P&I DIAGRAM (1 OF 4)

DIS.	CONTR.	APPR.

DATA	SCALA	COMM.

N. 5000-GD-A-86221 sh.1_1 — REV. 18

1189 MM X 840 MM - SIZE A0