PROGETTO IMPIANTO DI RETE E-DISTRIBUZIONE

LINEE ELETTRICHE 15 KV INTERRATE - N. 2 CABINE ELETTRICHE DI CONSEGNA UTENTE 15 KV
OPERE DI RETE PER LA CONSEGNA DI UN LOTTO DI IMPIANTI DA FONTE SOLARE DA REALIZZARE IN LOCALITA' "CODDU FAGONI" IN AGRO DEL COMUNE DI SAN NICOLO' D'ARCIDANO

PROGETTO DEFINITIVO OPERE DI RETE

LIV. PROG.	Codice rintracc.	Tipo Documento	Numero Documento	Numero Fogli	Totale Fogli	Nome File	DATA	Scala
PD	T0737400	TAV	C007	91	92		mag 2021	varie

STANDARD TECNICI

Revisioni					
Rev.	Data Emissione	Descrizione Revisione	Eseguito	Verificato	Approvato
00	mag 2021	emissione			

PROGETTAZIONE

ORDINE DEGLI INGEGNERI TRAPANI
Ing. Pipitone Giuseppe N° 788

GESTORE DI RETE

e-distribuzione

RICHIEDENTE

GC SNARC s.r.l.
Piazza Walther von Vogelweide, 8
39100 BOLZANO (BZ)

Firmato digitalmente da: MARKUS RUEDIGER VOGEL
Luogo: Treviso
Data: 28/02/2023 11:56:11

LOC. CODDU FAGONI - POD IT001E028075316 - ENELTEL 28075316 - SAN NICOLO' D'ARCIDANO

LOC. CODDU FAGONI - POD IT001E028075286 - ENELTEL 28075286 - SAN NICOLO' D'ARCIDANO

Protezioni meccaniche: tubi in polietilene

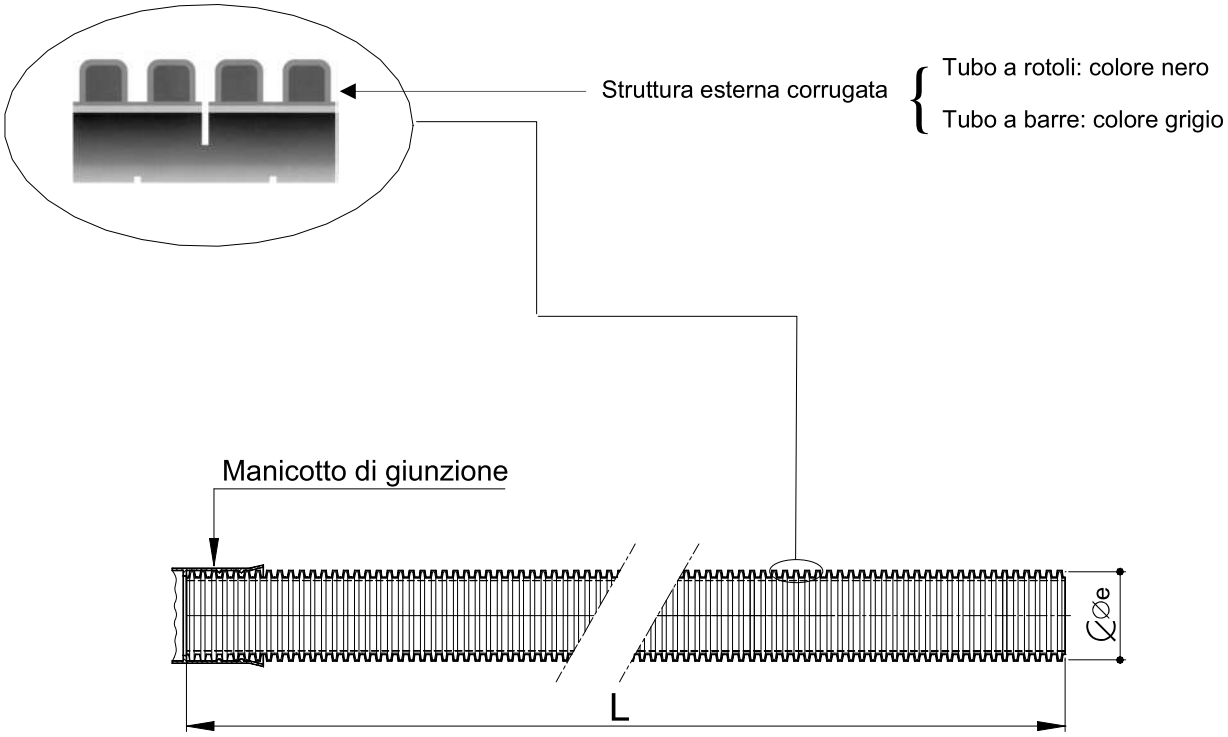

Conformi alle Norme CEI EN 50086-2-4 (23-46) (tubo "N" normale)

- resistenza all'urto:
  - tubo ∅e 25450 mm: 15 J;
  - tubo ∅e 63 mm: 20 J;
  - tubo ∅e 125 mm: 28 J;
  - tubo **∅e 160 mm: 40 J.**

Tipo	Diametro esterno [mm]	L [m]	Marcature	Matricola[1]	Tabella
Tubo "corrugato" in rotoli	25	50	(da applicare alle estremità del tubo) • sigla o marchio del costruttore • materiale impiegato • anno di fabbricazione • CEI EN 50086-2-2 CEI EN 50086-2-4/tipo **"N"**	295510	DS 4247
	32	50		295511	
	50	50		295512	
	63	50		295513	
	125	50		295514	
	160	**25**		**295515**	
Tubo "corrugato" in barre	125	6	(da applicare sulla superficie esterna con passo ≤ 1 m) • sigla o marchio del costruttore • diametro nominale esterno in mm	295526	DS 4235

(1) Materiale di fornitura impresa o acquistabile a catalogo on-line (piattaforma Ariba-Buyer).

DIREZIONE RETE - SUPPORTO INGEGNERIA

UNDERGROUND MEDIUM VOLTAGE CABLES

Countries I&N	
Argentina	**C. Espinoza**
Brazil	**R. Alves**
Chile	**D. Gonzalez**
Colombia	**J. C. Gomez**
Italy	**L. Giansante**
Peru	**R. Sanchez**
Romania	**V. Obrejan**
Spain	**J. Gonzalez**

	Elaborated by	Verified by	Approved by
Global I&N – O&M/NCS	**J.P. Goossens**	**N. Cammalleri**	**M.Mazzotti**

This document is intellectual property of ENEL Group distribution companies; reproduction or distribution of its contents in any way or by any means whatsoever is subject to the prior approval of the above mentioned companies which will safeguard their rights under the civil and penal codes. This document is for Internal Use.

Revision	Data	List of modifications
00	06/11/2013	First emission
01	30/11/2014	Second emission
02	20/02/2015	Third emission
03	29/04/2016	Updated Common List
04	15/01//2018	Common list optimization Harmonization Routine, Sample and Type tests CPR requirements addition Cable Types reduction Technical Check-list
05	11/2018	Country codes included in the common list Local Section C amendment (Cable designation)

INDEX

1 SCOPE 5

2 LIST OF COMPONENTS 5

3 REFERENCE LAWS AND STANDARDS 5

3.1 Laws 5

3.2 European & International Standards 5

3.3 Local Standards 7

3.4 Replaced Local Standards 8

4 CABLES CLASSIFICATION 8

5 DESIGN AND MANUFACTURE 11

5.1 Conductor 11

5.1.1 Aluminum conductors 11

5.1.2 Copper conductors 11

5.2 Conductor screen 12

5.3 Insulation 12

5.4 Insulation screen 13

5.5 Conductor screen, Insulation and Insulation screen application 13

5.6 Longitudinal water-tightness 13

5.7 Earth screen 13

5.8 Outer Sheath 15

5.9 Ampacity and Short-circuit rating 16

5.10 Constructive aspects 16

5.11 Cable designation and marking 16

5.11.1 Cable designation 16

5.11.2 Marking 16

6 TESTS 17

6.1 Test classification 17

6.1.1 Acceptance tests 17

6.1.2 Routine tests 17

6.1.3 Sample test 17

6.1.4 Type test 17

6.2 Sampling and acceptance criteria 17

6.3 Routine tests list 19

6.4 Sample tests list 20

6.5 Type tests list 22

7 GUARANTEE 26

8 CONDITIONS OF SUPPLY 26

9 TECHNICAL CHECK-LIST 27

9.1 Technical check-list examples 29

9.1.1 Type I 12/20(24) kV 1x400 mm^2 XLPE insulation, PE outer sheath 29

9.1.2 Type I 18/30 (36) kV 1x400 mm^2 XLPE insulation, PO outer sheath 31

9.1.3 Type III 15/25 (31) kV 1x400 mm^2 XLPE insulation, PE outer sheath 33

9.1.4 Type IV 18/30 (36) kV 1x400 mm^2 XLPE insulation, PO outer sheath 35

LOCAL SECTION A – CODENSA 37

LOCAL SECTION B – ENEL DISTRIBUCIÓN PERÚ 40

LOCAL SECTION C – ENEL DISTRIBUCIÓN CHILE 43

LOCAL SECTION D – ENEL DISTRIBUIÇÃO CEARÁ, RIO AND GOIÁS **46**

LOCAL SECTION E – E-DISTRIBUZIONE, E-DISTRIBUTIE BANAT, DOBROGEA AND MUNTENIA. **49**

LOCAL SECTION F – ENDESA DISTRIBUCIÓN ELÉCTRICA **51**

COMMON LIST **60**

1 SCOPE

The aim of this document is to provide technical requirements for the supply of MV cables to be used in the distribution networks of Enel Group Distribution Companies, listed below:

Codensa	*Colombia*
Enel distribución Perú	*Perú*
Edesur	*Argentina*
e-distributie Banat	*Romania*
e-distributie Dobrogea	*Romania*
e-distributie Muntenia	*Romania*
e-distribuzione	*Italy*
Endesa Distribución Eléctrica	*Spain*
Enel distribución Chile	*Chile*
Enel Distribuição Ceará	*Brazil*
Enel Distribuição Rio	*Brazil*
Enel Distribuição Goiás	*Brazil*

This standard specifies the construction, dimensions and test requirements that must be accomplished by medium voltage cables with rated voltage Uo/U (Umax) = 8,7/15(17,5) kV, 12/20(24) kV, 15/25 (31) kV, 18/30(36) kV and 20/34,5(37,95) kV to be used in distribution systems by the utilities mentioned above.
This standard replaces all the local standards used up to now by all the Distribution Companies, as long as local regulation allows it.

2 LIST OF COMPONENTS

The list of components with the main requirements, which is an integral part of the present document, is reported in the common list attached.

3 REFERENCE LAWS AND STANDARDS

The list of reference laws and standards are mentioned below in this document.

3.1 Laws

See Local Sections.

3.2 European & International Standards

- EN 50575 “Power, control and communication cables - Cables for general applications in construction works subject to reaction to fire requirements”.
- EN 13501-6 “Fire classification of construction products and building elements - Part 6: Classification using data from reaction to fire tests on electric cables”.

- HD 605 S2 “Electric cables - Additional test methods”.
- HD 620 S2 “Distribution cables with extruded insulation for rated voltages from 3,6/6 (7,2) kV up to and including 20,8/36 (42) kV.
- IEC 60228 “Conductors of insulated cables”.
- IEC 60230 “Impulse tests on cables and their accessories”.
- IEC 60332-1-2 “Tests on electric and optical fibre cables under fire conditions Part 1-2: Test for vertical flame propagation for a single insulated wire or cable - Procedure for 1 kW pre-mixed flame”
- IEC 60502-2 “Power cables with extruded insulation and their accessories for rated voltages from 1 kV (Um = 1,2 kV) up to 30 kV (Um = 36 kV) - Part 2: Cables for rated voltages from 6 kV (Um = 7,2 kV) up to 30 kV (Um = 36 kV)”.
- IEC 60754-1 ”Test on gases evolved during combustion of materials from cables - Part 1: Determination of the halogen acid gas content”.
- IEC 60754-2 “Test on gases evolved during combustion of materials from cables - Part 2: Determination of acidity (by pH measurement) and conductivity”.
- IEC 60811-100 “Electric and optical fibre cables - Test methods for non-metallic materials - Part 100: General”.
- IEC 60811-201 “Electric and optical fibre cables - Test methods for non-metallic materials - Part 201: General tests - Measurement of insulation thickness”.
- IEC 60811-202: “Electric and optical fibre cables - Test methods for non-metallic materials - Part 202: General tests - Measurement of thickness of non-metallic sheath”.
- IEC 60811-401 “Electric and optical fibre cables - Test methods for non-metallic materials - Part 401: Miscellaneous tests - Thermal ageing methods - Ageing in an air oven”.
- IEC 60811-402 “Electric and optical fibre cables - Test methods for non-metallic materials - Part 402: Miscellaneous tests - Water absorption tests”.
- IEC 60811-406 “Electric and optical fibre cables - Test methods for non-metallic materials - Part 406: Miscellaneous tests - Resistance to stress cracking of polyethylene and polypropylene compounds”.
- IEC 60811-412 “Electric and optical fibre cables - Test methods for non-metallic materials - Part 412: Miscellaneous tests - Thermal ageing methods - Ageing in an air bomb”
- IEC 60811-501 “Electric and optical fibre cables - Test methods for non-metallic materials - Part 501: Mechanical tests - Tests for determining the mechanical properties of insulating and sheathing compounds”.
- IEC 60811-502: “Electric and optical fibre cables - Test methods for non-metallic materials - Part 502: Mechanical tests - Shrinkage test for insulations”.

- IEC 60811-503 “Electric and optical fibre cables - Test methods for non-metallic materials - Part 503: Mechanical tests - Shrinkage test for sheaths”.
- IEC 60811-505: “Electric and optical fibre cables - Test methods for non-metallic materials - Part 505: Mechanical tests - Elongation at low temperature for insulations and sheaths”.
- IEC 60811-507: “Electric and optical fibre cables - Test methods for non-metallic materials - Part 507: Mechanical tests - Hot set test for cross-linked materials”.
- IEC 60811-508: “Electric and optical fibre cables - Test methods for non-metallic materials - Part 508: Mechanical tests - Pressure test at high temperature for insulation and sheaths”.
- IEC 60811-509: “Electric and optical fibre cables - Test methods for non-metallic materials - Part 509: Mechanical tests - Test for resistance of insulations and sheaths to cracking (heat shock test)”.
- IEC 60811-510 “Electric and optical fibre cables - Test methods for non-metallic materials - Part 510: Mechanical tests - Methods specific to polyethylene and polypropylene compounds - Wrapping test after thermal ageing in air”.
- IEC 60811-511 “Electric and optical fibre cables - Test methods for non-metallic materials - Part 511: Mechanical tests - Measurement of the melt flow index of polyethylene compounds”.
- IEC 60811-605 “Electric and optical fibre cables - Test methods for non-metallic materials - Part 605: Physical tests - Measurement of carbon black and/or mineral filler in polyethylene compounds”.
- IEC 60811-606 “Electric and optical fibre cables - Test methods for non-metallic materials - Part 606: Physical tests - Methods for determining the density”.
- IEC 60811-607 “Electric and optical fibre cables - Test methods for non-metallic materials - Part 607: Physical tests - Test for the assessment of carbon black dispersion in polyethylene and polypropylene”.
- IEC 60885-2 “Electrical test methods for electric cables -- Part 2: Partial discharge tests”.
- IEC 60885-3 “Electrical test methods for electric cables. Part 3: Test methods for partial discharge measurements on lengths of extruded power cables”.
- IEC 61034-2 “Measurement of smoke density of cables burning under defined conditions -- Part 2: Test procedure and requirements”.
- IEC 62230 “Electric cables - Spark-test method”.
- ISO 2859-1 “Sampling procedures for inspection by attributes -- Part 1: Sampling schemes indexed by acceptance quality limit (AQL) for lot-by-lot inspection”.

3.3 Local Standards

See Local Section.

3.4 Replaced Local Standards

See Local Section.

4 CABLES CLASSIFICATION

In Table 1 a general description of types of cables depicted in this standard are summarized.
Detailed characteristics are described in section 5.

TYPE	DESCRIPTION
I	Single-core or three single cores bundled cables, with aluminum conductor, cross-linked polyethylene (XLPE) insulation, laminated aluminum foil earth screen and polyolefin / polyethylene outer sheath, without reaction to fire class.
II	Single-core or three single cores bundled cables, with aluminum conductor, high performance polypropilene thermoplastic elastomer (HPTE) reduced thickness insulation, laminated aluminum foil earth screen and polyolefin /polyethylene outer sheath.
III	Single-core or three single cores bundled cables, with aluminum or copper conductor, cross-linked polyethylene insulation, copper wires earth screen and polyolefin/polyethylene outer sheath.
IV	Single-core or three single cores bundled cables, with aluminum conductor, cross-linked polyethylene (XLPE) insulation, laminated aluminum foil earth screen and polyolefin outer sheath with reaction to fire class

Table 1 Type of cables

Typical lay-out of different type of cables in single core and three single core bundled (Triplex) configuration are shown in Figure 1, Figure 2 and Figure 3, Figure 4 and Figure 5.

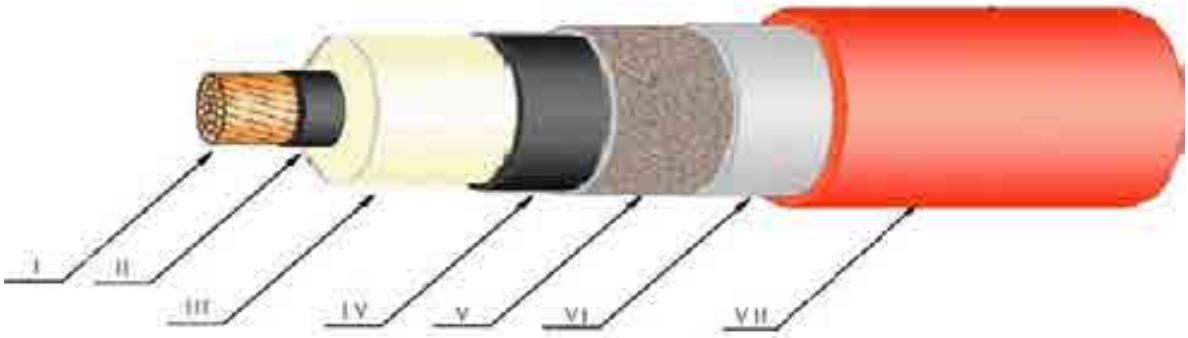

I – Aluminum Conductor
II – Conductor screen
III –Insulation
IV – Insulation screen
V – Longitudinal watertightness
VI – Aluminum foil earth screen
VII – Outer sheath

Figure 1 Type I or Type II single-core cable

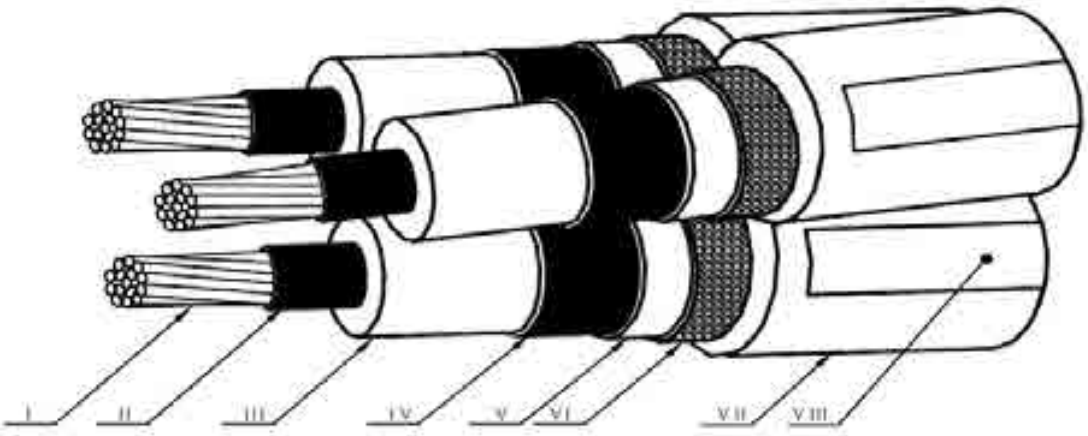

I – Aluminum Conductor
II – Conductor screen
III –Insulation
IV – Insulation screen
V – Longitudinal watertightness
VI – Aluminum foil earth screen
VII – Outer sheath
VIII – Marking

Figure 2 Type I or Type II three single-core bundled cables (Triplex)

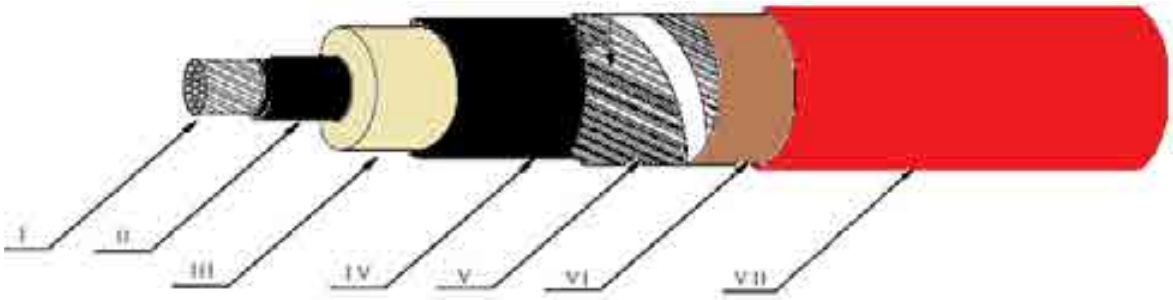

I –Cu or Al Conductor
II – Conductor screen
III –Insulation
IV – Insulation screen
V – Copper wires earth screen
VI – Longitudinal watertightness
VII – Outer sheath

Figure 3 Type III single-core cable

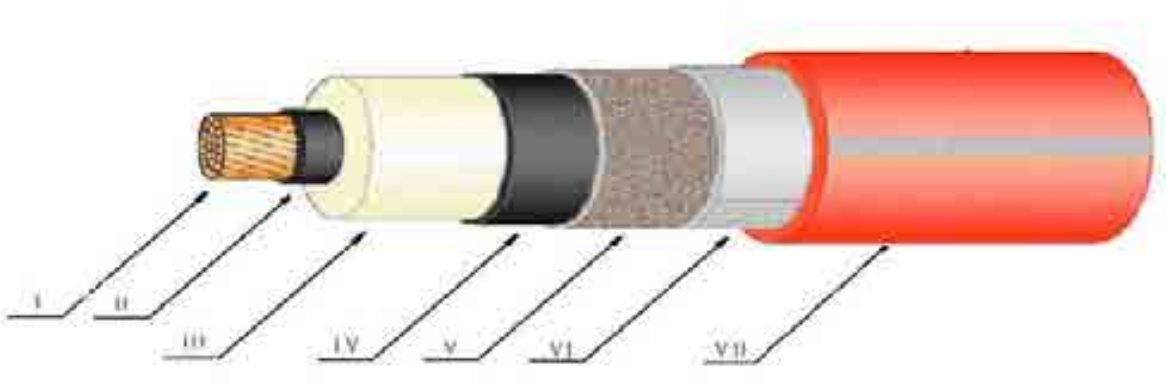

I – Aluminum Conductor
II – Conductor screen
III –Insulation
IV – Insulation screen
V – Longitudinal watertightness
VI – Aluminum foil earth screen
VII – Outer sheath

Figure 4 Type IV II single-core cable with minimum fire reaction Eca

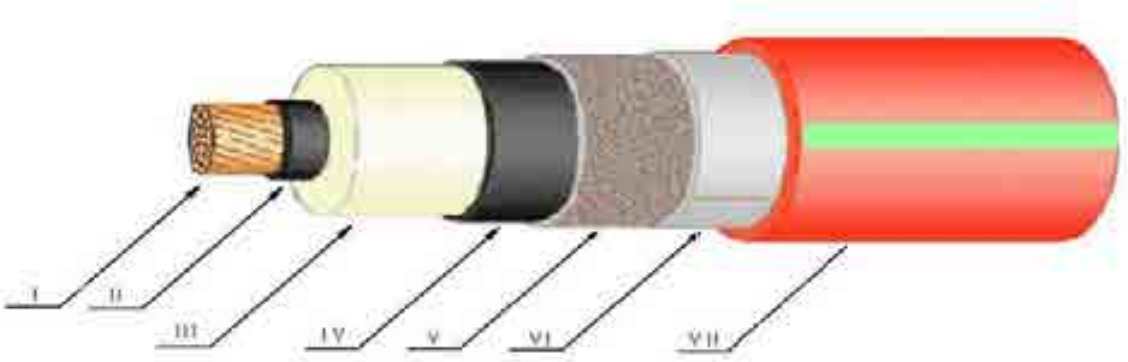

I – Aluminum Conductor
II – Conductor screen
III –Insulation
IV – Insulation screen
V – Longitudinal watertightness
VI – Aluminum foil earth screen
VII – Outer sheath

Figure 5 Type IV single-core cable with minimum fire reaction Cca-s1b,d2,a1

Note:Figures above are for illustrative purposes only.

5 DESIGN AND MANUFACTURE

5.1 Conductor

5.1.1 Aluminum conductors

The aluminum conductors shall be stranded compacted circular class 2, complying all the features specified herein and in standard IEC 60228. Conductor material shall be AAC-1350, i.e. 99,5% aluminum content.
In Table 2 aluminum conductors for cables specified in this document are depicted.

Nominal cross-section [mm²]	Minimum number of wires	Diameter of conductors [mm]		Maximum resistance of conductor at 20°C [Ω/km]
		Minimum	Maximum	
95	15	11,0	12,0	0,320
150	15	13,7	15,0	0,206
185	30	15,3	16,8	0,164
240	30	17,6	19,2	0,125
400	53	22,3	24,6	0,0778

Table 2 Stranded compacted aluminum conductors characteristics

5.1.2 Copper conductors

The copper conductors shall be stranded compacted circular class 2, complying all the features specified herein and in standard IEC 60228. Copper purity shall not be less than 99,9%

.Nominal cross-section [mm²]	Minimum number of wires	Diameter of conductors [mm]		Maximum resistance of conductor at 20°C [Ω/km]
		Minimum	Maximum	
70	12	9,3	10,2	0,268
120	18	12,3	13,5	0,153
240	34	17,6	19,2	0,0754
400	53	22,3	24,6	0,0470

Table 3 Stranded compacted copper conductors characteristics

5.2 Conductor screen

It shall consist of a fully bonded layer of black semi-conductive cross-linked[1] compound. It shall be extruded over the conductor to provide a smooth surface without causing any damage to the conductor or insulation and ensuring material compatibility.

The conductor screen minimum thickness measured and accepted at any point shall not be less than 0,3 mm. In addition, the average of all the measures shall not be less than the nominal thickness (0,5 mm).

5.3 Insulation

The insulation shall be applied by a suitable extrusion process, and shall form a compact and homogenous body. In addition, it shall be possible to remove it without creating any damage to the conductor.

The insulating material shall be:

Type I, Type III and Type IV: cross-linked polyethylene; compliant with the characteristics required herein this document. Such XLPE compound can comply all the characteristics described in Standard IEC 60502-2 and standard HD 620 S2 part 1 for DIX 3 compound.

The XLPE insulation must allow maximum conductor temperatures of 90 °C in normal operation and 250 °C under short circuit condition by at least 5 seconds.

Type II: high performance polypropylene thermoplastic elastomer (HPTE) in compliance with standard CEI 20-86

The insulation minimum thickness measured and accepted at any point of the cable shall not be less than 90% of the nominal value minus 0,1 mm.

$$t_{min} \geq 0,9\ t_n - 0,1$$

Where:

t_{min}: minimum insulation thickness in millimeters

t_n : nominal thickness in millimeters

In Table 3 nominal and minimum thickness are shown.

[1] For **Type II** cables a HPTE extruded compound shall be used.

Rated Voltage Uo/U (Umax) [kV]	Nominal thickness [mm]	Minimum thickness [mm]
8,7/15 (17,5)	4,5	4,0
12/20 (24)	4,9	4,31
15/25 (31)	6,6	5,84
18/30 (36)	7,25	6,43
20/34,5 (37,95)	8	7,1

Table 4 Insulation thickness values.

5.4 Insulation screen

A black layer of cross-linked[2] semi-conductive compound shall be applied over the insulation. Such layer shall be compatible with insulation temperatures in normal operation and during short circuit.

The insulation screen shall be easily strippable. The compound mechanical properties before aging are: minimum tensile strength same as 7 N/mm^2 and a minimum elongation at break same as 150%.

Unless otherwise indicated in the Common List, the insulation screen minimum thickness measured and accepted at any point shall not be less than 0,3 mm. In addition, the average of all the measures shall not be less than the nominal thickness (0,5 mm).

5.5 Conductor screen, Insulation and Insulation screen application

The conductor screen, the insulation and the insulation screen shall be extruded in one operation, i.e. triple extrusion process. It is not permitted using any type of lacquer or other material between this layers.

5.6 Longitudinal water-tightness

A tape made of suitable semi-conductive material shall be applied in order to achieve longitudinal water-tightness in the region of the metal layers according to IEC 60502-2 §19.24. Such tape shall be applied without harming the adjacent layers and could work as additional separator layer as well. The swelling tape shall be applied with a minimum overlap same as 10%.

5.7 Earth screen

For **Type I**, **Type II** and **Type IV** cables a poly-laminated aluminum foil with minimum thickness same as 0,3 mm shall be applied over the swelling tape, forming a longitudinal pipe with overlapping glued edges at least

[2] For **Type II** cable a HPTE extruded compound shall be used.

of 5 mm. Besides nullifying the electric field outside the cable and drain the current during short-circuits the aluminum tape screen is intended to ensure radial water-tightness. The aluminum tape screen shall be firmly bonded to the outer sheath.

For **Type III** cables the earth screen shall be made with a continuous crown of annealed copper wires, with diameter between 0,5 and 1,0 mm, arranged in an open helix with step not greater than 20 times the cable diameter below the metallic screen. It shall be used at least 30 wires distributed evenly over the circumference. The mechanical clamping of the copper wires shall be ensured without using copper tape or band copper strips (only for equalizing purposes)

Type I, Type II & Type IV cables		
Cross-section [mm²]	Aluminum foil screen	
	Theoretical Cross-section [mm²]	Maximum resistance at 20 °C [Ω/km]
95	22,5	1,344
150	25,5	1,186
185	27,0	1,120
240	30,0	1,008
400	34,5	0,877

Table 5 Type I, Type II and Type IV cables 12/20(24) kV aluminum foil screen main characteristics

Type I & Type IV cables		
Cross-section [mm²]	Aluminum foil screen	
	Theoretical Cross-section [mm²]	Maximum resistance at 20 °C [Ω/km]
95	27,0	1,120
150	30,0	1,008
185	31,5	0,960
240	34,5	0,877
400	39,0	0,775

Table 6 Type I and Type IV cables 18/30(36) kV aluminum foil screen main characteristics

Type III cables	
Earth screen Cross-section [mm²]	Maximum resistance at 20 °C [Ω/km]
16	1,15
25	0,727
50	0,387

Table 7 Type III copper wires screen main characteristics

5.8 Outer Sheath

The outer sheath shall be resistant to moisture, abrasion and UV.

Unless otherwise indicated the outer sheath color shall be red.

The material shall be polyethylene compliant with the characteristics required herein.

The minimum thickness of the outer sheath measured and accepted at any point of the cable shall not be less than 80% of the nominal value minus 0,2 mm.

$$t_{min} \geq 0,8\ t_n - 0,2$$

Where:

t_{min}: minimum thickness in millimeters

t_n: nominal thickness in millimeters

In Table 8 rated and minimum thickness of the polyolefin outer sheath are shown.

Cross-section [mm²]	Sheath nominal thickness [mm]	Sheath minimum thickness [mm]
70	2,5	1,8
95	2,75	2
120	2,75	2
150	2,75	2
185	2,75	2
240	3,0	2,2
400	3,0	2,2

Table 8 Type I, Type II & Type III PO outer sheath thickness

For **Endesa:**

- **Type I** cables DMZ1 polyolefin of standard HD 620 S2 part 1 shall be used.
- **Type IV** cables DMZ2 polyolefin of standard HD 620 S2 part 1 shall be used.
- For **Type IV** cables the outer sheath color shall be:
  - **Fire reaction class Eca cables**: red with two grey longitudinal stripes.
  - **Fire reaction class Cca–s1b,d2,a1 cables:** red with two green longitudinal stripes.
- The nominal thickness of the outer sheath shall be same as 2,75 mm. In addition, the minimum thickness measured and accepted at any point of the cable shall not be less than 2,0 mm.

5.9 Ampacity and Short-circuit rating

The ampacity and short-circuit rating **estimated** values shall be given for network design purposes.

Unless otherwise indicated in local sections, such ampacity values shall be calculated in steady state condition, for single core laying and triplex laying, when installed in open air, directly buried and buried in duct using the following operational conditions:

- Maximum conductor temperature 90 °C
- Ambient air temperature 40 °C
- Ground temperature 20 °C
- Depth of laying 0,8 m
- Soil thermal resistivity 1,5 K m/W
- Earthenware ducts thermal resistivity 1,2 K m/W
- Both end bonding

Regarding short-circuit rating adiabatic and non-adiabatic values shall be calculated using the following conditions:

- Conductor initial temperature 90 °C
- Conductor final temperature 250 °C
- Tape foil screen initial temperature 75 °C
- Tape foil screen final temperature 150 °C
- Copper wires screen initial temperature 80 °C
- Copper wires screen final temperature 180 °C
- Short-circuit duration: 0,5 s and 1 s

For reference values see local section.

5.10 Constructive aspects

Three core cables shall be bundled to the left (anti-clockwise). The length of lay shall be up to 40D where D is intended as one phase external diameter.

5.11 Cable designation and marking

5.11.1 Cable designation

See Local Section.

5.11.2 Marking

The marking must be indelible paint, easily legible and carried out by indenting or embossing above the surface of the outer sheath in a continuous way.

Durability shall be checked by the test given in sub-clause 2.5.4 of standard HD 605.

Specific characteristics are detailed in Local Section.

6 TESTS

For **Endesa** tests see Local Section F.

6.1 Test classification

6.1.1 Acceptance tests

Acceptance tests (routine tests and sample tests) shall be carried out in the Supplier's facilities.

6.1.2 Routine tests

Routine tests shall be performed at 100% of delivered spools to demonstrate product integrity.

6.1.3 Sample test

Sample tests are carried out over samples taken from a complete cable (See Table 9 in sub-clause 6.2 for sampling) in order to verify that the finished product meet the design specifications.

6.1.4 Type test

Type tests shall be performed before supplying a type of cable covered by this standard in order to demonstrate satisfactory performance characteristics to meet the intended application.

When type tests have been successfully performed on one type cable covered herein with a specific cross-section, rated voltage and construction characteristics, the type approval could be accepted as valid as long as the following conditions are met:

- The conductor cross-section is not larger than that of the tested cable.
- The cable as similar constructions as that of the tested cable, i.e. utilizes same materials, (conductor, screens, insulation, earth screen, outer sheath) and the same manufacturing process.
- The rated voltage not exceeds that of the tested cable.

When design, manufacturing process or materials are changed (which might affect the performance characteristics of the cable), the relevant type tests shall be repeated.

Cables shall undergo type tests and acceptance tests for type approval.

6.2 Sampling and acceptance criteria

In order to determine acceptability of a lot, an inspection by attributes following a simple sampling plan shall be performed, in compliance with standard ISO 2859-0 and ISO 2859-1.

Specifically, AQL=1,5%, level II, rejecting any "minor, major or critical" defect in the inspection.

The costs of rejected materials will be charged to the bidder. The approval or rejection of each one of the samples will be according to what is required in standard ISO 2859-1 for each one of the trials. In detail, if a lot doesn't comply with what is required in the electric resistance test according to the approval requirements of the reference standard, the Inspector can carry out such test to all the units that make up the lot.

If only a single spool is purchased, it must be tested according to what is indicated for a single sample.

Amount of reels	Numbers of samples	Acceptable Level	Rejection Level
2 - 8	2	0	1
9 - 15	3	0	1
16 - 25	5	0	1
26 - 50	8	0	1
51 - 90	13	0	1
91 - 150	20	1	2
151 - 280	32	1	2
281 - 500	50	2	3
501 - 1200	80	3	4
1201 - 3200	125	5	6
3201 - 10000	200	7	8
>10000	315	10	11

Table 9: Samples and Grade of Acceptance to Each of the Trials

6.3 Routine tests list

N°	Test	Requirements	Test method
1	Voltage Test Test voltage Test duration Test Result	 3,5 Uo 5 min No breakdown	IEC 60502-2 sub-clause 16.4
2	Conductor electrical resistance measurement	See sub-clause 5.1	IEC 60502-2 sub-clause 16.2
3	Earth Screen electrical resistance measurement	See sub-clause 5.7	IEC 60502-2 sub-clause 16.2
4	Partial discharge test Applied voltage before test Applied voltage duration Max. discharge magnitude Sensitivity level	After Voltage test N°1 2 Uo ≤ 60 s 5 pC ≤ 5 pC	IEC 60885-3
5	Outer sheath voltage test (spark test) Test result Test voltage DC AC	 No breakdown 25 kV 15 kV	IEC 62230

6.4 Sample tests list

N°	Test	Requirements	Test method
1	Conformity to the approved type e.g.: marking, colors, number conductor wires, insulation and outer sheath application, etc. Lay length (Pitch) measurement	Cables shall comply characteristics described herein	Constructive characteristics, i.e. marking, number of conductor wires, colors shall be inspected by visual examination.
2	Cable mass per unit length	The value shall be recorded	HD 605 sub-clause 2.1.13.1
3	Conductor diameter measurement	See sub-clause 5.1	IEC 60811-203
4	Conductor screen thickness measurement	See sub-clause 5.2	IEC 60811-201
5	Insulation screen thickness measurement	See sub-clause 5.4	IEC 60811-202
6	Insulation screen strippability test Min. force required Max. force required	 4 N 45 N	IEC 60502-2 sub-clause 19.23
7	Insulation thickness measurement	See sub-clause 5.3	IEC 60811-201
8	Insulation mechanical properties* Before ageing on sample Minimum tensile strength Minimum elongation at break	 12,5 MPa 200%	IEC 60811-501
9	Insulation hot set test * Temperature Duration Mechanical stress Maximum elongation under load Maximum residual elongation	 200 °C 15 min 0,2 MPa 175% 15%	IEC 60811-507
10	Voltage Test (Complete cable) Test voltage Test duration Sample length Test Result	 4 Uo 4 h > 5 m per core No breakdown	IEC 60502-2 sub-clause 17.9

*For HPTE insulation applicability and reference values are given in standard CEI 20-86

N°	Test	Requirements	Test method
11	Tan δ measurement as function of the voltage* Tan δ at Uo Tan δ maximum variation between 0,5 Uo and 2 Uo	 Tan δ≤40x10^{-4} Tan δ≤20x10^{-4}	HD 605 3.11.3.1
12	Aluminum tape screen (**Type I and Type II cables**) Thickness Sample dimension (cut together with outer sheath) Overlap of tape foil	 See sub-clause 5.7 Ring 50 mm long Min 5 mm	Five measurements along the circumference and at a distance of 10 mm from each edge shall be taken by micrometer on a sample of the tape fully detached from the outer sheath (i.e. detachment may be done by immersion in acetic acid at 80 °C or other suitable method).. Visual examination
13	Copper wires screen (**Type III cables**) Cross-sectional area Minimum number of wires	 See sub-clause 5.7 30	HD 605 sub clause 2.1.4.3
14	Sheath thickness measurement	See sub-clause 5.8	IEC 60811-202
15	Sheath mechanical properties Before ageing on sample Minimum tensile strength Minimum elongation at break	 12,5 MPa 300%	IEC 60811-501

* For HPTE insulation applicability and reference values are given in standard CEI 20-86

6.5 Type tests list

N°	Test	Requirements	Test method
1	Sequential electrical tests Sample	15 m of cable 15 to 20 m	
1.1	Partial discharge test Test Voltage Discharge magnitude	 2 Uo ≤ 5 pC	IEC 60885-3
1.2	Partial discharge measurement after bending test Cycles Test cylinder Discharge magnitude	 3 20(d+D)±5% ≤ 5 pC	IEC 60502-2 sub-clause 18.2.4
1.3	Tan δ measurement as a function of the temperature Test voltage Tan δ at (20 ± 3) °C Tan δ at (90 ± 5) °C	 Uo ≤ $20x10^{-4}$ ≤ $40x10^{-4}$	IEC 60502-2 sub-clause 18.2.6
1.4	Thermal cycle test followed by partial discharge test Discharge magnitude	 ≤ 5 pC	IEC 60502-2 sub-clause 18.2.7
1.5	Impulse test followed by a voltage test Test result	 No breakdown	IEC 60502-2 sub-clause 18.2.8
1.6	High voltage test A.C test voltage Duration test Test result	 4 Uo 4 h No breakdown	IEC 60502-2 sub-clause 18.2.9

N°	Test	Requirements	Test method
2	Insulation resistance at 90 °C* Volume resistivity [Ω·cm]	10^{12}	IEC 60502-2 sub-clause 18.3.3
3	Insulation mechanical properties After ageing on sample* Temperature Duration T1 *Minimum Tensile strength* Maximum variation T1/T0 *Minimum elongation at break* Maximum variation T1/T0	 135 °C 168 h ±25% ±25%	IEC 60811-501 IEC 60811-401
4	Insulation water absorption test (Gravimetric method)* Temperature Duration Maximum variation of mass	 85 °C 336 h 1 mg/cm^2	IEC 60811-402
5	Insulation shrinkage test* Duration Temperature Maximum shrinkage	 1 h 130 °C 4%	IEC 60811-502
6	Insulation screen resistivity measurement Volume resistivity Oven temperature	 ≤500 Ω·m 90±2 °C	IEC 60502-2 Annex D
7	Insulation screen mechanical properties Minimum tensile strength Minimum elongation at break	 7 MPa 150%	IEC 60811-501 sub clause 4.3
8	Insulation screen strippability test (at 0 °C, 20 °C, 40 °C) Min. force required Max. force required	 4 N 45 N	IEC 60502-2 sub-clause 19.23

*For HPTE insulation, applicability and reference values are given in standard CEI 20-86

N°	Test	Requirements	Test method
9	Earth screen adhesion test (**Type I and Type II cables**) Minimum strength	 >12 N	HD 605 sub-clause 2.4.17.1
10	Sheath mechanical properties After ageing on sample Temperature Duration T1 Minimum elongation at break	 110±2 °C 240 h 300%	IEC 60811-501 IEC 60811-401
11	Sheath pressure test at high temperature Duration Temperature Maximum depth of indentation	 6 h 115±5 °C 30%	IEC 60811-508
12	Test at low temperature (Sheath) Elongation test at low temperature Temperature Minimum elongation	 -15±2 °C 20%	IEC 60811-505
13	Sheath shrinkage test Cycles Duration Temperature Maximum shrinkage	 5 5 h 80±2 °C 3%	IEC 60811-503
14	Sheath abrasion resistance test Temperature Mass Speed Number of scratches	 20±5 °C 20 kg 0,3 ±15% m/s 8	HD 605 Sub-clause 2.4.22

N°	Test	Requirements	Test method
15	Sheath water absorption test Temperature Duration Maximum variation of mass	(Gravimetric method) 85±2 °C 336 h 5 mg/cm^2	IEC 60811-402
16	Sheath UV ray resistance test Tensile strength max variation Elongation at break max variation Discoloration	 15% 15% Poor	HD 605 Sub clause 2.4.23
17	Test under fire conditions* (Complete cable)	The cable shall be classified Minimum class **Fca**	EN 50575 sub-clause 4.1
18	Non contamination test (Complete cable) XLPE Insulation** Temperature Duration T2 *Tensile strength* max variation T2/T0 *Elongation at break.* Max variation T2/T0 PO Sheath Temperature Duration T1 *Elongation at break* Maximun variation T1/T0	 100 °C 168 h ±25% ±25% 100 °C 168 h ±25%	IEC 60811-501 IEC 60811-401 sub-clause 4.2.3.4
19	Longitudinal water-tightness test	IEC 60502-2 Annex F	IEC 60502-2 Annex F
20	Radial water-tightness test and corrosion resistance test (Complete cable) (**Type I** and **Type II** cables)	No corrosion	HD 605 sub-clause 5.5

*Only for Italy and Romania

** HPTE insulation reference values are given in standard CEI 20-86

7 GUARANTEE

Requirement of warranty will be indicated in the request for bids, indicating periods and standards.

8 CONDITIONS OF SUPPLY

See Local Section

9 TECHNICAL CHECK-LIST

The following chart indicates the minimum technical information that suppliers shall give in the tender.

Item	Description	Unit	Required	Offered
1	**GENERAL INFORMATION**			
1.1	Supplier	-	Info	
1.2	Factory	-	Info	
2	**MAIN FEATURES**			
2.1	Distribution Company and Country	-		
2.2	Country Code	-		
2.3	GS Type Code			
2.4	Nominal Voltage Uo/U (Umax)	[kV]		
2.5	Type I, Type II, Type III or Type IV	-		
2.6	Disposition	[n x mm^2]		
3	**CONDUCTOR**			
3.1	Material	-		
3.2	Nominal cross-section	[mm^2]		
3.3	Minimum number of wires of conductor	-		
3.4	Minimum diameter	[mm]		
3.5	Maximum diameter	[mm]		
3.6	Maximum resistance of conductor at 20°C	[Ω/ km]		
3.7	Stranding Type	-		
4	**CONDUCTOR SCREEN**			
4.1	Material			
4.2	Nominal thickness	[mm]		
4.3	Minimum thickness	[mm]		
4.4	Maximum potential gradient at Uo	[kV/mm]		
5	**INSULATION**			
5.1	Material	-		
5.2	Nominal thickness	[mm]		
5.3	Minimum thickness	[mm]		
5.4	Color	-		
6	**INSULATION SCREEN**			
6.1	Material			
6.2	Nominal thickness	[mm]		
6.3	Minimum thickness	[mm]		
6.4	Maximum potential gradient at Uo	[kV/mm]		

Item	Description	Unit	Required	Offered
7	**LONGITUDINAL WATER-TIGHTNESS**			
7.1	Material			
7.2	Nominal thickness	[mm]		
7.3	Minimum overlap	[%]		
8	**EARTH SCREEN**			
8.1	Minimum thickness (when aluminum foil)	[mm]		
8.2	Cross-section	[mm^2]		
8.3	Maximum resistance at 20°C	[Ω/ km]		
8.4	Wires diameter (when copper wires)	[mm]		
8.5	Number of wires (when copper wires)			
9	**OUTER SHEATH**			
9.1	Material			
9.2	Nominal thickness	[mm]		
9.3	Minimum thickness	[mm]		
9.4	Color			
10	**ADDITIONAL FEATURES**			
10.1	Maximum total diameter	[mm]		
10.2	Drum Type			
10.3	Total length in one drum	[m]		
10.4	One phase weight	[kg/km]		
10.5	Total weight	[kg/km]		
10.6	Ampacity (see clause 5.9 for conditions)	[A]		
10.7	Conductor SC current (see clause 5.9)	[kA]		
10.8	Earth screen SC current (see clause 5.9)	[kA]		
10.10	Fire reaction Class (EN 50575 if apply)			
10.11	Positive sequence reactance	[Ω/ km]		
10.12	Positive sequence capacitance	[μF/km]		
10.13	Zero sequence resistance at 20 °C	[Ω/ km]		
10.14	Zero sequence reactance	[Ω/ km]		
10.15	Zero sequene capacitance	[μF/km]		
10.16	Minimum bending radius	[mm]		
10.17	Maximum pulling tension	[kg]		
10.18	Min. admissible installation temperature	[°C]		

9.1 Technical check-list examples

9.1.1 Type I 12/20(24) kV 1x400 mm² XLPE insulation, PE outer sheath

Item	Description	Unit	Required	Offered
1	**GENERAL INFORMATION**			
1.1	Supplier	-	Informative	
1.2	Factory	-	Informative	
2	**MAIN FEATURES**			
2.1	Distribution Company and Country	-	ED-Peru	
2.2	Country Code	-	6802746	
2.3	GS Type Code		GSC001/012	
2.4	Nominal Voltage Uo/U (Umax)	[kV]	12/20(24)	
2.5	Type I, Type II, Type III or Type IV	-	Type I	
2.6	Disposition	[n x mm²]	1x400	
3	**CONDUCTOR**			
3.1	Material	-	Aluminum	
3.2	Nominal cross-section	[mm²]	400	
3.3	Minimum number of wires of conductor	-	53	
3.4	Minimum diameter	[mm]	22,3	
3.5	Maximum diameter	[mm]	24,6	
3.6	Maximum resistance of conductor at 20°C	[Ω/ km]	0,0778	
3.7	Stranding Type	-	Compacted Class 2	
4	**CONDUCTOR SCREEN**			
4.1	Material		Informative	
4.2	Nominal thickness	[mm]	0,5	
4.3	Minimum thickness	[mm]	0,3	
4.4	Maximum potential gradient at Uo	[kV/mm]	Informative	
5	**INSULATION**			
5.1	Material	-	XLPE	
5.2	Nominal thickness	[mm]	Informative	
5.3	Minimum thickness	[mm]	4,31	
5.4	Color	-	Informative	
6	**INSULATION SCREEN**			
6.1	Material		informative	
6.2	Nominal thickness	[mm]	0,5	
6.3	Minimum thickness	[mm]	0,3	
6.4	Maximum potential gradient at Uo (info)	[kV/mm]	Informative	
7	**LONGITUDINAL WATER-TIGHTNESS**			
7.1	Material		Informative	
7.2	Nominal thickness	[mm]	Informative	
7.3	Minimum overlap	[%]	10	

Item	Description	Unit	Required	Offered
8	**EARTH SCREEN**			
8.1	Minimum thickness (when aluminum foil)	[mm]	0,3	
8.2	Cross-section	[mm2]	34,5	
8.3	Maximum resistance at 20°C	[Ω/ km]	0,876	
8.4	Wires diameter (when copper wires)	[mm]	-	
8.5	Number of wires (when copper wires)		-	
9	**OUTER SHEATH**			
9.1	Material		POLYETHYLENE	
9.2	Nominal thickness	[mm]	Informative	
9.3	Minimum thickness	[mm]	2,2	
9.4	Color		RED	
10	**ADDITIONAL FEATURES**			
10.1	Maximum total diameter	[mm]	Informative	
10.2	Drum Type		Informative	
10.3	Total length in one drum	[m]	Informative	
10.4	One phase weight	[kg/km]	Informative	
10.5	Total weight	[kg/km]	Informative	
10.6	Ampacity (see clause 5.9 for conditions)	[A]	Calculated	
10.7	Conductor SC current (see clause 5.9)	[kA]	Informative	
10.8	Earth screen SC current (see clause 5.9)	[kA]	Informative	
10.10	Fire reaction Class (EN 50575 if apply)		No	
10.11	Positive sequence reactance	[Ω/ km]	Informative	
10.12	Positive sequence capacitance	[μF/km]	Informative	
10.13	Zero sequence resistance at 20 °C	[Ω/ km]	Informative	
10.14	Zero sequence reactance	[Ω/ km]	Informative	
10.15	Zero sequence capacitance	[μF/km]	Informative	
10.16	Minimum bending radius	[mm]	Informative	
10.17	Maximum pulling tension	[kg]	Informative	
10.18	Min. admissible installation temperature	[°C]	Informative	

9.1.2 Type I 18/30 (36) kV 1x400 mm^2 XLPE insulation, PO outer sheath

Item	Description	Unit	Required	Offered
1	**GENERAL INFORMATION**			
1.1	Supplier	-	Informative	
1.2	Factory	-	Informative	
2	**MAIN FEATURES**			
2.1	Distribution Company and Country	-	EE-Spain	
2.2	Country Code	-	330016	
2.3	GS Type Code		GSC001/023	
2.4	Nominal Voltage Uo/U (Umax)	[kV]	18/30(36)	
2.5	Type I, Type II, Type III or Type IV	-	Type I	
2.6	Disposition	[n x mm^2]	1x400	
3	**CONDUCTOR**			
3.1	Material	-	Aluminum	
3.2	Nominal cross-section	[mm^2]	400	
3.3	Minimum number of wires of conductor	-	53	
3.4	Minimum diameter	[mm]	22,3	
3.5	Maximum diameter	[mm]	24,6	
3.6	Maximum resistance of conductor at 20°C	[Ω/ km]	0,0778	
3.7	Stranding Type	-	Compacted Class 2	
4	**CONDUCTOR SCREEN**			
4.1	Material		Informative	
4.2	Nominal thickness	[mm]	0,5	
4.3	Minimum thickness	[mm]	0,3	
4.4	Maximum potential gradient at Uo	[kV/mm]	Informative	
5	**INSULATION**			
5.1	Material	-	XLPE	
5.2	Nominal thickness	[mm]	Informative	
5.3	Minimum thickness	[mm]	6,43	
5.4	Color	-	Informative	
6	**INSULATION SCREEN**			
6.1	Material		informative	
6.2	Nominal thickness	[mm]	0,5	
6.3	Minimum thickness	[mm]	0,3	
6.4	Maximum potential gradient at Uo (info)	[kV/mm]	Informative	
7	**LONGITUDINAL WATER-TIGHTNESS**			
7.1	Material		Informative	
7.2	Nominal thickness	[mm]	Informative	
7.3	Minimum overlap	[%]	10	

Item	Description	Unit	Required	Offered
8	**EARTH SCREEN**			
8.1	Minimum thickness (when aluminum foil)	[mm]	0,3	
8.2	Cross-section	[mm2]	39,0	
8.3	Maximum resistance at 20°C	[Ω/ km]	0,775	
8.4	Wires diameter (when copper wires)		-	
8.5	Number of wires (when copper wires)		-	
9	**OUTER SHEATH**			
9.1	Material		DMZ1	
9.2	Nominal thickness		Informative	
9.3	Minimum thickness		2,0	
9.4	Color		RED	
10	**ADDITIONAL FEATURES**			
10.1	Maximum total diameter	[mm]	Informative	
10.2	Drum Type		Informative	
10.3	Total length in one drum	[m]	Informative	
10.4	One phase weight	[kg/km]	Informative	
10.5	Total weight	[kg/km]	Informative	
10.6	Ampacity (see local section for conditions)	[A]	Calculated	
10.7	Conductor SC current (see clause 5.9)	[kA]	Informative	
10.8	Earth screen SC current (see clause 5.9)	[kA]	Informative	
10.10	Fire reaction Class (EN 50575 if apply)		No	
10.11	Positive sequence reactance	[Ω/ km]	Informative	
10.12	Positive sequence capacitance	[μF/km]	Informative	
10.13	Zero sequence resistance at 20 °C	[Ω/ km]	Informative	
10.14	Zero sequence reactance	[Ω/ km]	Informative	
10.15	Zero sequence capacitance	[μF/km]	Informative	
10.16	Minimum bending radius	[mm]	Informative	
10.17	Maximum pulling tension	[kg]	Informative	
10.18	Min. admissible installation temperature	[°C]	Informative	

9.1.3 Type III 15/25 (31) kV 1x400 mm^2 XLPE insulation, PE outer sheath

Item	Description	Unit	Required	Offered
1	**GENERAL INFORMATION**			
1.1	Supplier	-	Informative	
1.2	Factory	-	Informative	
2	**MAIN FEATURES**			
2.1	Distribution Company and Country	-	ED-CHILE	
2.2	Country Code	-	330224	
2.3	GS Type Code		GSC001/030	
2.4	Nominal Voltage Uo/U (Umax)	[kV]	15/25(31)	
2.5	Type I, Type II, Type III or Type IV	-	Type III	
2.6	Disposition	[n x mm^2]	1x400	
3	**CONDUCTOR**			
3.1	Material	-	Aluminum	
3.2	Nominal cross-section	[mm^2]	400	
3.3	Minimum number of wires of conductor	-	53	
3.4	Minimum diameter	[mm]	22,3	
3.5	Maximum diameter	[mm]	24,6	
3.6	Maximum resistance of conductor at 20°C	[Ω/ km]	0,0778	
3.7	Stranding Type	-	Compacted Class 2	
4	**CONDUCTOR SCREEN**			
4.1	Material		Informative	
4.2	Nominal thickness	[mm]	0,5	
4.3	Minimum thickness	[mm]	0,3	
4.4	Maximum potential gradient at Uo	[kV/mm]	Informative	
5	**INSULATION**			
5.1	Material	-	XLPE	
5.2	Nominal thickness	[mm]	Informative	
5.3	Minimum thickness	[mm]	5,84	
5.4	Color	-	Informative	
6	**INSULATION SCREEN**			
6.1	Material		informative	
6.2	Nominal thickness	[mm]	0,5	
6.3	Minimum thickness	[mm]	0,3	
6.4	Maximum potential gradient at Uo (info)	[kV/mm]	Informative	
7	**LONGITUDINAL WATER-TIGHTNESS**			
7.1	Material		Informative	
7.2	Nominal thickness	[mm]	Informative	
7.3	Minimum overlap	[%]	10	

Item	Description	Unit	Required	Offered
8	**EARTH SCREEN**			
8.1	Minimum thickness (when aluminum foil)	[mm]	-	
8.2	Cross-section	[mm2]	50	
8.3	Maximum resistance at 20°C	[Ω/ km]	0,387	
8.4	Wires diameter (when copper wires)	[mm]	0,5-1,0 mm	
8.5	Min. number of wires (when Cu wires)		30	
9	**OUTER SHEATH**			
9.1	Material		POLYETHYLENE	
9.2	Nominal thickness		Informative	
9.3	Minimum thickness		2,2	
9.4	Color		BLUE	
10	**ADDITIONAL FEATURES**			
10.1	Maximum total diameter	[mm]	Informative	
10.2	Drum Type		Informative	
10.3	Total length in one drum	[m]	Informative	
10.4	One phase weight	[kg/km]	Informative	
10.5	Total weight	[kg/km]	Informative	
10.6	Ampacity (see 5.9 for conditions)	[A]	Calculated	
10.7	Conductor SC current (see clause 5.9)	[kA]	Informative	
10.8	Earth screen SC current (see clause 5.9)	[kA]	Informative	
10.10	Fire reaction Class (EN 50575 if apply)		No	
10.11	Positive sequence reactance	[Ω/ km]	Informative	
10.12	Positive sequence capacitance	[μF/km]	Informative	
10.13	Zero sequence resistance at 20 °C	[Ω/ km]	Informative	
10.14	Zero sequence reactance	[Ω/ km]	Informative	
10.15	Zero sequence capacitance	[μF/km]	Informative	
10.16	Minimum bending radius	[mm]	Informative	
10.17	Maximum pulling tension	[kg]	Informative	
10.18	Min. admissible installation temperature	[°C]	Informative	

9.1.4 Type IV 18/30 (36) kV 1x400 mm^2 XLPE insulation, PO outer sheath

Item	Description	Unit	Required	Offered
1	**GENERAL INFORMATION**			
1.1	Supplier	-	Informative	
1.2	Factory	-	Informative	
2	**MAIN FEATURES**			
2.1	Distribution Company and Country	-	EE-Spain	
2.2	Country Code	-	340030	
2.3	GS Type Code		GSC001/026	
2.4	Nominal Voltage Uo/U (Umax)	[kV]	12/20(24)	
2.5	Type I, Type II, Type III or Type IV	-	Type IV	
2.6	Disposition	[n x mm^2]	1x400	
3	**CONDUCTOR**			
3.1	Material	-	Aluminum	
3.2	Nominal cross-section	[mm^2]	400	
3.3	Minimum number of wires of conductor	-	53	
3.4	Minimum diameter	[mm]	22,3	
3.5	Maximum diameter	[mm]	24,6	
3.6	Maximum resistance of conductor at 20°C	[Ω/ km]	0,0778	
3.7	Stranding Type	-	Compacted Class 2	
4	**CONDUCTOR SCREEN**			
4.1	Material		Informative	
4.2	Nominal thickness	[mm]	0,5	
4.3	Minimum thickness	[mm]	0,3	
4.4	Maximum potential gradient at Uo	[kV/mm]	Informative	
5	**INSULATION**			
5.1	Material	-	XLPE	
5.2	Nominal thickness	[mm]	Informative	
5.3	Minimum thickness	[mm]	6,43	
5.4	Color	-	Informative	
6	**INSULATION SCREEN**			
6.1	Material		informative	
6.2	Nominal thickness	[mm]	0,5	
6.3	Minimum thickness	[mm]	0,3	
6.4	Maximum potential gradient at Uo (info)	[kV/mm]	Informative	
7	**LONGITUDINAL WATER-TIGHTNESS**			
7.1	Material		Informative	
7.2	Nominal thickness	[mm]	Informative	
7.3	Minimum overlap	[%]	10	

Item	Description	Unit	Required	Offered
8	**EARTH SCREEN**			
8.1	Minimum thickness (when aluminum foil)	[mm]	0,3	
8.2	Cross-section	[mm2]	39,0	
8.3	Maximum resistance at 20°C	[Ω/ km]	0,775	
8.4	Wires diameter (when copper wires)		-	
8.5	Number of wires (when copper wires)		-	
9	**OUTER SHEATH**			
9.1	Material		DMZ2	
9.2	Nominal thickness		Informative	
9.3	Minimum thickness		2,0	
9.4	Color		RED WITH TWO GREY STRIPS	
11	**ADDITIONAL FEATURES**			
10.1	Maximum total diameter	[mm]	Informative	
10.2	Drum Type		Informative	
10.3	Total length in one drum	[m]	Informative	
10.4	One phase weight	[kg/km]	Informative	
10.5	Total weight	[kg/km]	Informative	
10.6	Ampacity (see local section for conditions)	[A]	Calculated	
10.7	Conductor SC current (see clause 5.9)	[kA]	Informative	
10.8	Earth screen SC current (see clause 5.9)	[kA]	Informative	
10.10	Fire reaction Class (EN 50575 if apply)		**Eca**	
10.11	Positive sequence reactance	[Ω/ km]	Informative	
10.12	Positive sequence capacitance	[μF/km]	Informative	
10.13	Zero sequence resistance at 20 °C	[Ω/ km]	Informative	
10.14	Zero sequence reactance	[Ω/ km]	Informative	
10.15	Zero sequence capacitance	[μF/km]	Informative	
10.16	Minimum bending radius	[mm]	Informative	
10.17	Maximum pulling tension	[kg]	Informative	
10.18	Min. admissible installation temperature	[°C]	Informative	

LOCAL SECTION A – Codensa

N°	TITLE	DESCRIPTION
3.3	Local Standards	• RETIE- Reglamento técnico de instalaciones eléctricas. • Resolución CREG No.024 – Comisión de Regulación de Energía y Gas • Resolución CREG No.070 - Comisión de Regulación de Energía y Gas • NTC1340 Tensiones y frecuencia nominales en sistemas de energía eléctrica en redes de servicio público. (20/34,5/(37,95) kV).
3.4	Replaced Local Standards	E-MT-002
5.3	Insulation	The XLPE compound shall have tree retardant characteristics, complying standard ASTM D6097
5.8	Outer Sheath	The outer sheath shall be **black**, with a colored strip in order to identify the phases complying the following indications: Phase A: Black outer sheath with a violet strip Phase B: Black outer sheath with a brown strip Phase C: Black outer sheath with a red strip
5.11.2	Marking	Markings shall be indelible spaced from each other 1 meter maximum. The following information shall be marked: Manufacturer name or trademark BOG-CUN Year of manufacture Rated Voltage Uo/U(Umax) Insulation material Cable cross-section [mm^2] Metric marking Phase identification using violet, brown and red strips.
8	CONDITIONS OF SUPPLY	Packaging and Labelling Cables shall be delivered on spools made of wood or metal, such spool will not be returned. Characteristics are indicated in Figure A, dimensions are depicted in Table A. The total length of the supplied cable shall not be less than that requested in the purchase order and shall not be longer by any more than 5%. The maximum gross weight of the packaged spool must not exceed 3500 kg.

LOCAL SECTION A – Codensa

N°	TITLE	DESCRIPTION
8	CONDITIONS OF SUPPLY	The ends of the cables on each spool must be protected with caps or hoods that prevent the entry of moisture These ends internally secured to the spools, must be mechanically protected against possible damages resulting from handling and transportation of each spool, leaving both ends accessible through the use of an internal helix or reel on each spool. When distance between manufacturing facilities and Enel Distribución Colombia storage center is less than 200 km and is necessary only one mean of transportation, It is mandatory to use internal helix for cables cross-section greater of equal to 120 mm².However, moisture protection on both visible ends of the cables, mechanical protection, and careful handling shall be applied. Some Purchase orders could request 2,000 m of maximum length per spool and/or pre-joined cables. The supplier shall process RETIE certification in order to deliverer the order. Spools made of wood shall be treated according to the international requirements for the control of plant disease, avoiding the compounds “Pentachlorophenol” and “Creosote”. The treatment must include, at least: highly toxic to xylophagous organisms, high penetration and holding power, chemical stability, non-corrosive substances to metals that could affect the physical characteristics of wood. 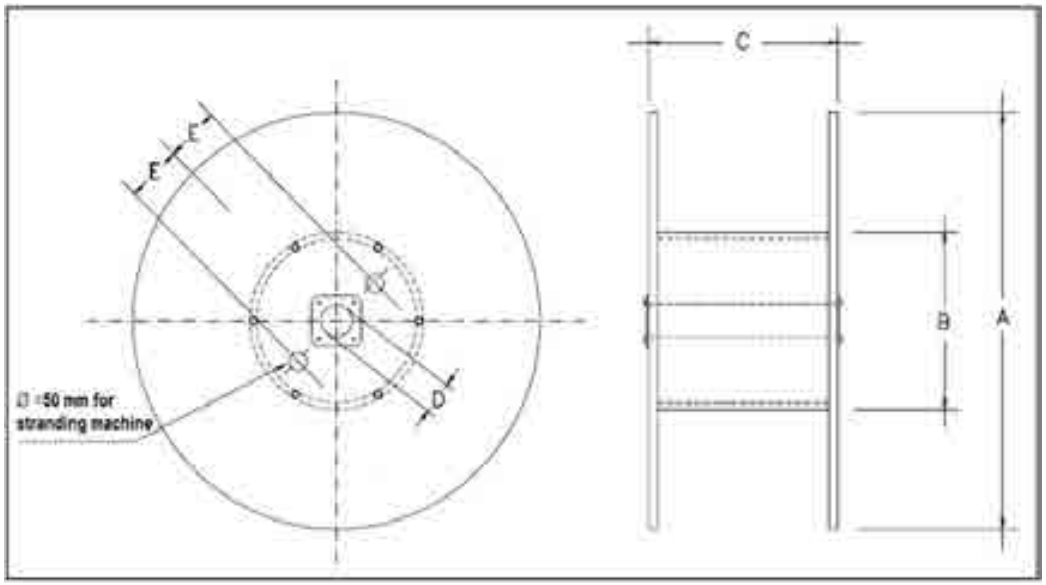 Figure A

LOCAL SECTION A – Codensa

<table>
<tr><th>N°</th><th>TITLE</th><th>DESCRIPTION</th></tr>
<tr><td>8</td><td>CONDITIONS OF SUPPLY</td><td>
<u>Dimensions:</u>
<table>
<tr><th>A(1)</th><th>B</th><th>C(1)</th><th>D(2)</th><th>E</th></tr>
<tr><td>mm</td><td>mm</td><td>mm</td><td>mm</td><td>mm</td></tr>
<tr><td>2000</td><td>(3)</td><td>1120</td><td>80</td><td>(4)</td></tr>
</table>
Table A
Notes:
(1) Maximum value.
(2) Minimum value.
(3) Two times the minimum bending radius indicated by the supplier.
(4) 300 or 180 mm according to spool type (large or small, respectively)

The spools must contain:
• An external protection built with wooden flanges fixed on the wooden spools or some equivalent for metal spools, being secured with tapes or straps.
• Indication with an arrow of the rolling direction.
• A stainless steel plate for identification purposes. Such plate shall be applied in both flanges and shall have the following information (in Spanish):
1) Manufacturer name
2) Country of origin
3) BOG-CUN
4) Purchase order N°
5) Rated Voltage Uo/U (Umax)
6) Insulation material
7) Cable cross-section [mm^2]
8) Spool number of the corresponding delivered batch
9) Net and gross weight [kg]
10) Configuration type (unipolar, triplex, quadruplex).
11) Cable length [m]
</td></tr>
<tr><td>9</td><td>TECHNICAL CHECK-LIST</td><td>Besides all technical information provided according the common part, ISO certifications, Certification of conformity with this Global Standard and RETIE certification shall be indicated.</td></tr>
</table>

LOCAL SECTION B – Enel distribución Perú

N°	TITLE	DESCRIPTION
3.3	Local Standards	• CÓDIGO NACIONAL DE ELECTRICIDAD (CNE) – SIMINISTRO – 2011 • NORMA TÉCNICA DE CALIDAD DE LOS SERVICIOS ELECTRICOS
3.4	Replaced Local Standards	E-MT-002
5.9	Ampacity and Short-circuit rating	Same as main part 5.9 but with depth of laying same as 1 m.
5.11.1	Cable designation	A: Aluminum conductor R: Round Stranded E4: XLPE cross-linked polyethylene insulation H5: aluminum tape screen PE: polyethylene outer sheath Uo/U (Umax) = Rated voltage in kV Corss-section [mm2] Example of designation code: ARE4H5PE 12/20 (24) kV 1x95 mm2 Single core 95 mm^2 round compact aluminum conductors, insulated with XLPE, with an aluminum tape screen, and polyethylene outer sheath
5.11.2	Marking	The outer sheath should be marked with high aligned characters. The distance between the end of a mark and the beginning of the next one will be less than or equal to 1 m and shall contain, in the order listed the following inscriptions: • Name of Distribution Company • Name of the Manufacturer (XXXXXX) • Cable designation • The year and month of manufacture • The metric could be indicated at a distance less than 1 meter. Marking example: ENEL DISTRIBUCIÓN PERU XXXX ARE4H5PE 12/20(24) kV 1x95 mm2 2017 12 0000

LOCAL SECTION B – Enel distribución Perú

N°	TITLE	DESCRIPTION
8	CONDITIONS OF SUPPLY	Packaging and Labelling Cables shall be delivered on spools made of wood or metal, such spool will not be returned. Characteristics are indicated in Figure A, dimensions are depicted in Table A. The total length of the supplied cable shall not be less than that requested in the purchase order and shall not be longer by any more than 5%. The maximum gross weight of the packaged spool must not exceed 3500 kg. The ends of the cables on each spool must be protected with caps or hoods that prevent the entry of moisture. These ends internally secured to the spools, must be mechanically protected against possible damages resulting from handling and transportation of each spool, leaving both ends accessible through the use of an internal helix or reel on each spool. When distance between manufacturing facilities and Enel Distribución Perú storage center is less than 200 km and is necessary only one mean of transportation, It is mandatory to use internal helix for cables cross-section greater of equal to 120 mm².However, moisture protection on both visible ends of the cables, mechanical protection, and careful handling shall be applied. Some Purchase orders could request 2,000 m of maximum length per spool and/or pre-joined cables. Spools made of wood shall be treated according to the international requirements for the control of plant disease, avoiding the compounds “Pentachlorophenol” and “Creosote”. The treatment must include, at least: highly toxic to xylophagous organisms, high penetration and holding power, chemical stability, non-corrosive substances to metals that could affect the physical characteristics of wood. 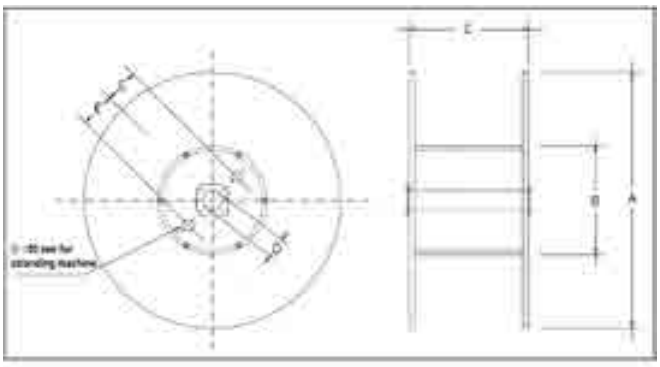 Figure A

LOCAL SECTION B – Enel distribución Perú

<table>
<tr><th>N°</th><th>TITLE</th><th>DESCRIPTION</th></tr>
<tr><td>8</td><td>CONDITIONS OF SUPPLY</td><td>
<u>Dimensions:</u>
<table>
<tr><th>A(1)</th><th>B</th><th>C(1)</th><th>D(2)</th><th>E</th></tr>
<tr><td>mm</td><td>mm</td><td>mm</td><td>mm</td><td>mm</td></tr>
<tr><td>2000</td><td>(3)</td><td>1120</td><td>80</td><td>(4)</td></tr>
</table>
Table A
Notes:
(1) Maximum value.
(2) Minimum value.
(3) Two times the minimum bending radius indicated by the supplier.
(4) 300 or 180 mm according to spool type (large or small, respectively)
The spools must contain:

An external protection built with wooden flanges fixed on the wooden spools or some equivalent for metal spools, being secured with tapes or straps.
Indication with an arrow of the rolling direction.
A stainless steel plate or label for identification purposes. Such plate/label shall be applied in both flanges and shall have the following information (in Spanish):

Enel Distribución Peru
Name of the manufacturer
Country of origin of the item
Country code
Description of item
Year and month of manufacture
Number of the spool within the delivered batch.
Cable length, in meters.
the metric initial (m)
the metric final (m)
Manufacture standard
Purchase Order N°
Rated Voltage (12/20(24) kV)
Insulation material and type
Conductor caliber (mm²)
Net weight and gross weight in kg.
Weight of the coil in kg
Weight of one meter of cable in kg
Cable type
Cable length, in meters.
Coil dimension in mm.

Note: is a label is used it shall be resistant to UV ray, tearing, chemical substances.
</td></tr>
</table>

LOCAL SECTION C – Enel distribución Chile

N°	TITLE	DESCRIPTION
3.3	Local Standards	• Reglamentos NSEC N°5 y NSEC4 /2003
5.8	Outer sheath	The outer sheath color shall be blue
5.11.2	Cable designation	CA2: Stranded compacted aluminum conductor CCU: Stranded compacted copper conductor XR: XLPE insulation HCO: Copper wires earth screen PE: polyethylene outer sheath
5.11.2	Marking	The outer sheath should be marked with high aligned characters. The distance between the end of a mark and the beginning of the next one will be less than or equal to 1 m and shall contain, in the order listed the following inscriptions: Property Name Manufacturer name or trademark Cable designation Cross-section [mm^2] Rated Voltage Uo/U(Umax) Year of manufacture Metric marking Phase identification with numbers, veins or stripes of color. **Marking Example:** **Enel distribucion Chile NNN CA2-XR-HCO-PE 1x400 mm2 15/25 kV 2017-12 0000** Single-core cable stranded compact Class 2 aluminum conductor, XLPE insulation, copper wires screen and polyethylene outer sheath 400 mm2, Uo/U 15/25 kV, manufactured in 2017, month 12

LOCAL SECTION C – Enel distribución Chile

N°	TITLE	DESCRIPTION
8	CONDITIONS OF SUPPLY	Packaging and Labelling Cables shall be delivered on spools made of wood or metal, such spool will not be returned. Characteristics are indicated in Figure A, dimensions are depicted in Table A. The total length of the supplied cable shall not be less than that requested in the purchase order and shall not be longer by any more than 5%. The maximum gross weight of the packaged spool must not exceed 3500 kg. The ends of the cables on each spool must be protected with caps or hoods that prevent the entry of moisture. These ends internally secured to the spools, must be mechanically protected against possible damages resulting from handling and transportation of each spool, leaving both ends accessible through the use of an internal helix or reel on each spool. When distance between manufacturing facilities and Enel Distribución Chile storage center is less than 200 km and is necessary only one mean of transportation, It is mandatory to use internal helix for cables cross-section greater of equal to 120 mm².However, moisture protection on both visible ends of the cables, mechanical protection, and careful handling shall be applied. Some Purchase orders could request 2,000 m of maximum length per spool and/or pre-joined cables. Spools made of wood shall be treated according to the international requirements for the control of plant disease, avoiding the compounds “Pentachlorophenol” and “Creosote”. The treatment must include, at least: highly toxic to xylophagous organisms, high penetration and holding power, chemical stability, non-corrosive substances to metals that could affect the physical characteristics of wood. 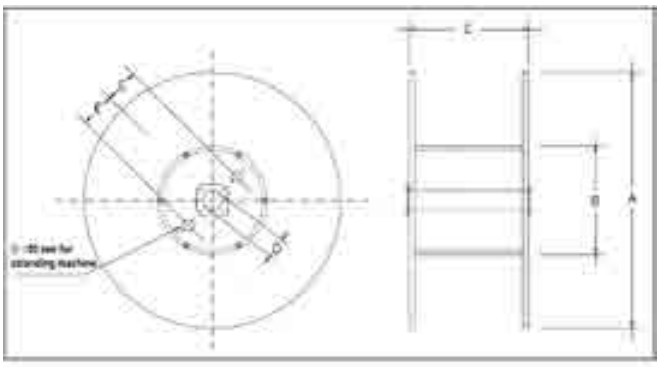 Figure A

LOCAL SECTION C – Enel distribución Chile

<table>
<tr><th>N°</th><th>TITLE</th><th>DESCRIPTION</th></tr>
<tr><td>8</td><td>CONDITIONS OF SUPPLY</td><td>
<u>Dimensions:</u>

<table>
<tr><th>A(1)</th><th>B</th><th>C(3)</th><th>D(2)</th><th>E</th></tr>
<tr><td>mm</td><td>mm</td><td>mm</td><td>mm</td><td>mm</td></tr>
<tr><td>2000</td><td>(3)</td><td>1120</td><td>80</td><td>(4)</td></tr>
</table>

Table A

Notes:
(1) Maximum value.
(2) Minimum value.
(3) Two times the minimum bending radius indicated by the supplier.
(4) 300 or 180 mm according to spool type (large or small, respectively)

The spools must contain:

- An external protection built with wooden flanges fixed on the wooden spools or some equivalent for metal spools, being secured with tapes or straps.
- Indication with an arrow of the rolling direction.
- A stainless steel plate for identification purposes. Such plate shall be applied in both flanges and shall have the following information (in Spanish):
  1) Manufacturer name
  2) Country of origin
  3) Enel distribucion Chile
  4) Purchase order N°
  5) Rated Voltage Uo/U (Umax)
  6) Cable designation
  7) Cable cross-section [mm^2]
  8) Spool number of the corresponding delivered batch
  9) Net and gross weight [kg]
  10) Configuration type (unipolar, triplex, quadruplex).
  11) Cable length [m]
  12) Year and month of manufacture
  13) Weight of the coil [kg]
  14) Cable type
  15) Coil dimensions [mm]
</td></tr>
</table>

LOCAL SECTION D – Enel Distribuição Ceará, Rio and Goiás

N°	TITLE	DESCRIPTION
3.3	Local Standards	PMA 210.10.1 “Cabo multiplexado de MT, aluminio, 12/20 kV, com e sem fibra optica”
5.11.1	Cable designation	Type of conductor - A: Aluminum R: Round Stranded E4: XLPE cross-linked polyethylene insulation H1: copper wires earth screen E: PE outer sheath X: Triples configuration Rated Voltage: Uo/U Conductor cross-section Example **ARE4H1EX 8,7/15 kV 185 mm2**
5.11.2	Marking	The distance between the end of a mark and the beginning of the next one will be less than or equal to 1 m and shall contain, in the order listed the following inscriptions: • The property stands • Cable designation • The name or trademark of the manufacturer • The identification letter of the manufacturing • The year and month of manufacture • The metric indicated only in phase 1 (for triplex configuration); also supports sealed ink. Alternatively to the aforementioned method, it could be stamped at a distance less than 1 meter. • Identification of the phase, repeated at least 100 mm in the interval between two successive of entries. Example: Triplex cable , marking in phase 1 cable: Enel Distribuição Goias ARE4H1EX 8,7/15 kV 185 mm2 XXXXXX 2017 12 0000 FASE 1 ... FASE 1 Single core cable: Enel Distribuição Goias ARE4H1E 8,7/15 kV 185 mm2 XXXXXX 2017 12 0000

LOCAL SECTION D – Enel Distribuição Ceará, Rio and Goiás

N°	TITLE	DESCRIPTION
8	CONDITIONS OF SUPPLY	Packaging and Labelling Cables shall be delivered on spools made of wood or metal, such spool will not be returned. Characteristics are indicated in Figure A, dimensions are depicted in Table A. The total length of the supplied cable shall not be less than that requested in the purchase order and shall not be longer by any more than 5%. The maximum gross weight of the packaged spool must not exceed 3500 kg. The ends of the cables on each spool must be protected with caps or hoods that prevent the entry of moisture. These ends internally secured to the spools, must be mechanically protected against possible damages resulting from handling and transportation of each spool, leaving both ends accessible through the use of an internal helix or reel on each spool. When distance between manufacturing facilities and distribution company storage center is less than 200 km and is necessary only one mean of transportation, It is mandatory to use internal helix for cables cross-section greater of equal to 120 mm².However, moisture protection on both visible ends of the cables, mechanical protection, and careful handling shall be applied. Some Purchase orders could request 2,000 m of maximum length per spool and/or pre-joined cables. Spools made of wood shall be treated according to the international requirements for the control of plant disease, avoiding the compounds “Pentachlorophenol” and “Creosote”. The treatment must include, at least: highly toxic to xylophagous organisms, high penetration and holding power, chemical stability, non-corrosive substances to metals that could affect the physical characteristics of wood. 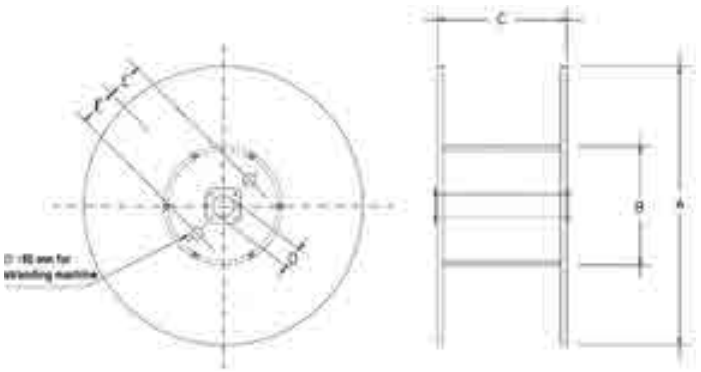 Figure A

LOCAL SECTION D – Enel Distribuição Ceará, Rio and Goiás

N°	TITLE	DESCRIPTION
8	CONDITIONS OF SUPPLY	Dimensions: A(1) B C(3) D(2) E mm mm mm mm mm 2000 (3) 1120 80 (4) Table A Notes: (1) Maximum value. (2) Minimum value. (3) Two times the minimum bending radius indicated by the supplier. (4) 300 or 180 mm according to spool type (large or small, respectively) The spools must contain: • An external protection built with wooden flanges fixed on the wooden spools or some equivalent for metal spools, being secured with tapes or straps. • Indication with an arrow of the rolling direction. • A stainless steel plate for identification purposes. Such plate shall be applied in both flanges and shall have the following information (in Portuguese): 16) Manufacturer name 17) Country of origin 18) ENEL RIO/ENEL CEARÁ/ENEL GOIÁS (according to purchase) 19) Purchase order N° 20) Rated Voltage Uo/U (Umax) 21) Insulation material 22) Cable cross-section [mm^2] 23) Spool number of the corresponding delivered batch 24) Net and gross weight [kg] 25) Configuration type (unipolar, triplex, quadruplex). 26) Cable length [m]

LOCAL SECTION E – e-distribuzione, e-distributie Banat, Dobrogea and Muntenia.

N°	TITLE	DESCRIPTION
3.3	Local Standards	• GUI 102/GUI 120 RO "Bobine per il trasporto di cavi elettrici, cavi ottici e conduttori per linee elettriche di media e bassa tensione" • PVR 006 "Operational Note Vendor Rating Control: BARCODES Warranty and Traceability of Enel Distribution Materials".
5.11.1	Cable designation	A: Aluminum conductor R: Round Stranded E4: XLPE insulation P1: HPTE insulation H5: aluminum foil earth screen E: polyethylene outer sheath X: Three single core cables bundled together
5.11.2	Marking	The distance between the end of a mark and the beginning of the next one will be less than or equal to 1 m and shall contain, in the order listed the following inscriptions: • The property stands: e-distribuzione, e-distributie Banat, e-distributie Dobrogea e-distributie Muntenia • Cable designation (see 5.11.2) (ARE4H5EX) • Rated voltage Uo/U [kV] (12/20 Kv) • Cross-section. (185) • Reaction to fire class (**CPR**) • The name or trademark of the manufacturer (XXXXXX) • The identification letter of the manufacturing (B) • The index of the project: to choose exponentially (01, 02, 03…) this index must be modified with every construction variation of the single core (phase or neutral) • The year and month of manufacture (2017 12) • Identification of the phase, repeated at least 100 mm in the interval between two successive of entries (FASE X) (When triplex) • The metric indicated only in phase 1; also supports sealed ink. Alternatively to the aforementioned method, it could be stamped at a distance less than 1 meter.

LOCAL SECTION E – e-distribuzione, e-distributie Banat, Dobrogea and Muntenia.

<table>
<tr><th>N°</th><th>TITLE</th><th>DESCRIPTION</th></tr>
<tr><td>8</td><td>CONDITIONS OF SUPPLY</td><td>
Marking example Triplex (on phase 1):
e-distribuzione ARE4H5EX 12/20 kV 150 CPR XXXXXX B 01 2017 12 CPR 0000 FASE 1 ... FASE 1
Marking example single core:
e-distribuzione ARE4H5E 12/20 kV 150 CPR XXXXXX B 01 2017 12 CPR 0000

Cable length and type of coil.
<table>
<tr><th>Formation [n° x mm^2]</th><th>Maximum Length [m]</th><th>Coil Type (GUI 102)</th></tr>
<tr><td>1x185</td><td>1000</td><td>20</td></tr>
<tr><td>3x1x95</td><td>400</td><td>22</td></tr>
<tr><td>3x1x185</td><td>300</td><td>22</td></tr>
<tr><td>3x1x240</td><td>300</td><td>22</td></tr>
</table>
The far end of the cables shall be protected against the moisture.
Due to traceability in the network a bar code shall be applied on the flanges of the drum. Such bar code shall be in compliance with technical specification PVR006.
Drum characteristics shall be in compliance with the standard GUI102.

Following standard EN 50575, the CE marking and labelling shall be in accordance with the general principles set out in Article 30 of regulation (EC) No. 765/2008 and shall be affixed visibly, legibly and indelibly to the product labels affixed to the reels, coils or drums.
In compliance with standard EN 50575 in particular annex V of the EU Construction Products Regulation n° 305/2011 (CPR) the supplier shall elaborate a Declaration of performance (DoP) and shall dispose a CE marking in function of the assessment and verification of constancy of performance (AVCP).
</td></tr>
</table>

LOCAL SECTION F – Endesa Distribución Eléctrica

N°	TITLE	DESCRIPTION
3.1	Laws	• R.D. 614/2001, de 8 de junio, sobre disposiciones mínimas para la protección de la salud y seguridad de los trabajadores frente al riesgo eléctrico. • Real Decreto 223/2008 de 15 de febrero, por el que aprueba el Reglamento sobre condiciones técnicas y garantías de seguridad en líneas eléctricas de alta tensión y sus instrucciones técnicas complementarias ITC-LAT 01 a 09 (R.L.A.T.) • Reglamento (UE) nº 305/2011 del Parlamento Europeo y del Consejo, de 9 de marzo de 2011, por el que se establecen condiciones armonizadas para la comercialización de productos de construcción y se deroga la Directiva 89/106/CEE del Consejo.
3.3	Local Standards	• UNE 21167: Bobinas de madera para cables aislados de transporte y distribución. • UNE 211435 “Guía para la elección de cables eléctricos de tensión asignada superior o igual a 0,6/1 kV para circuitos de distribución.” • UNE 211006 “Ensayos previos a la puesta en servicio de sistemas de cables eléctricos de alta tensión en corriente alterna.” • UNE 211605. Climatic ageing test of outer covering cables. • UNE 211620 “Distribution cables with extruded insulation and aluminum tape” screen for rated voltages from 3,6/6 (7,2) kV to 20,8/36 (42) kV”. • Norma DND001 Cables Aislados Para Redes Aéreas Y Subterráneas De Media Tensión Hasta 30 Kv
5.8	Outer Sheath	For Type I cables without reaction to fire class the material shall be polyolefin DMZ1 of standard HD 620. S2 part 1 For Type IV with reaction to fire class the material shall be polyolefin DMZ2 of standard HD 620. S2 part 1 The nominal thickness shall be same as 2,75 mm. In addition, the minimum thickness of the outer sheath measured and accepted at any point of the cable shall not be less than 2,0 mm. The minimum fire reaction for Type IV cables shall be: • E_{ca} for 10E-7 (S) cables • C_{ca}-s1b,d2,a1 for 10E-8 (AS) cables The outer sheath material shall be free of heavy metals, halogens or volatile hydrocarbons

LOCAL SECTION F – Endesa Distribución Eléctrica

N°	TITLE	DESCRIPTION
5.9	Ampacity and Short-circuit rating	Ampacity and short-circuit ratings for conductor and screen shall comply the conditions stated in ITC06 from "Reglamento sobre condiciones tecnicas y garantias de seguridad en lineas electricas de AT (Real decreto 223/2008 15-02)
5.11.1	Cable designation	The designation code is defined as follows: R = cross-linked polyethylene H5 = Aluminum foil screen Z1 = polyolefin Composite Reaction to fire requirements: (S): 10E-7 Type according to UNE 211620 (Eca class) (AS) = 10E-8 Type according to UNE 211620 (Cca-s1b,d2,a1 class) Uo/U = Rated voltage in kV 1 (unipolar cables) x (rated cross-section of the phase conductor, measured in mm2) K (round and compact conductor) Al (Aluminum conductor) Quality markings: In the case of certified cable i.e. AENOR. Example of designation code RH5Z1 12/20 kV 1 x 95 k Al Single core cable with 95 mm^2round compact aluminum conductor, insulated with XLPE, covered with an aluminum tape screen, sheathed with polyolefin for 12/20 kV voltage operation without reaction to fire class RH5Z1 (S) 18/30 kV 1 x 240 k Al Single core cable with 240 mm^2round compact aluminum conductor, insulated with XLPE, covered with an aluminum tape screen, sheathed with polyolefin for 18/30 kV voltage operation with Eca reaction to fire class.
5.11.2	Marking	Cables shall be have easily legible and indelible marking containing the following information: • Manufacturer name and / or trademark, • The complete description of the cable (Cable designation 5.11.2) • Fire class, according to EN 50575 sub-clause 4.1 (Only for Type IV cables) • The last two digits of the year of manufacture.

LOCAL SECTION F – Endesa Distribución Eléctrica

N°	TITLE	DESCRIPTION
5.11.2	Marking	• Additional markings: · Traceability: the manufacturer shall include in the outer sheath some element in order to trace the cable, for instance a lot number. · Certification: when the cable is certificate with a quality marking. The marking shall be indelible, easily legible and be performed by incision or embossed on the outer sheath. The distance between the end of a mark and the beginning of the next one will be less than or equal to 300 mm. Marking example: (manufacturer) RH5Z1 (AS) 12/20 kV 1 x 240 K Cca-1sb,d2,a1 17 (additional markings) Following standard EN 50575 for **Type IV** cables the CE marking and labelling shall be in accordance with the general principles set out in Article 30 of regulation (EC) No. 765/2008 and shall be affixed visibly, legibly and indelibly to the product labels affixed to the reels, coils or drums.
6	TESTS	All test shall be performed in accordance with standard UNE 211620 For Non-electrical Type tests (Clause 3.4 of UNE 211620 N° 4 “Semiconducting screens tests”) the minimum value from subclause 5.2 and sub clause 5.4 from GSC001 shall be satisfied, as shown in the following table: Conductor screen thickness measurement — Nominal thickness: 0,5 mm; Minimum at any point: 0,3 mm — IEC 60811-203 Insulation screen thickness measurement — Nominal thickness: 0,5 mm; Minimum at any point: 0,3 mm — IEC 60811-203

8	CONDITIONS OF SUPPLY	Reels shall be in compliance with the Standard UNE 21167 “Bobinas de Madera para cables asilados de trasnporte y distribucion” 1) Technical report (TR) The technical report (TR) must consist of the documents described below. It is specified that some requirements in the following paragraphs are preceded by the word “Prescription”, and others by the word “Indication”. In the first case the requirements are normative, therefore satisfying them is a necessary (but not sufficient) condition for acceptance during the trial period. In the second case, however, the content of the required information is not binding for acceptance during the trial period. 2) Technical document. Technical working drawing of the coil, including representation of the two sections (longitudinal and transversal) completed with all the dimensional measurements and with the points where the drum is anchored to the flanges highlighted (enlarged diagram of the part). The following dimensional characteristics must be provided: • Parts in wood: <table><tr><td>For the flange</td><td>Board width Diameter Thickness Diameter of axial hole Counter-flage thickness</td></tr><tr><td>Coil width</td><td></td></tr><tr><td>For the Drum</td><td>Board width diameter width Staves thickness</td></tr><tr><td>For the tie rods</td><td>Number diameter Length</td></tr></table>Metal parts • Dimensional and number of metal components (tie rods, support and fixing plates)

LOCAL SECTION F – Endesa Distribución Eléctrica

N°	TITLE	DESCRIPTION
8	CONDITIONS OF SUPPLY	3) Photographic documentation. The following documentation shall be delivered: • A side view and a front view photo (for a total of at least 6 photos) showing: -The empty coil; -The coil with wound cable without external cover; -The coil complete with external cover • The detailed view of the identification plate where the coil and supply data are provided (at an enlargement level such as to allow the information photographed to be read). 4) Technical data sheet of the wood. Prescriptions: Wood species coming from conifers or other wood of documented equivalent performance characteristics must be used. The wood used must be free of fungi and insects; the boards must be without non-adherent (dead) chamfers and knobs Instructions: The percentage of maximum humidity of the wood at the end of the coil fabrication process shall be stated. The description of any treatments that the wood undergoes shall be provided. 5) Technical data sheet of the metals. Instructions: The type of material used shall be stated. 6) Construction methods. Prescriptions: The coil must not, in any case, have metallic projections of any kind (they could in fact cause cuts or injuries during handling). Any wooden parts must not be painted. The outer surface of the drum and that inside the flange must be planed and the boards forming the flanges must be put close to each other; the nailing of the boards for the flanges must be riveted on the outside and the nail head must penetrate inside the boards by riveting.

LOCAL SECTION F – Endesa Distribución Eléctrica

N°	TITLE	DESCRIPTION
8	CONDITIONS OF SUPPLY	The boards of the drum must have chamfered edges and be put close to each other; uneven boards or steps between two boards or between boards and metal tie rods are not allowed. Instructions: Specify the welding type/technique (if present) and the anti-oxidation treatments. 7) Protections The cables must be protected in such a way as to prevent damage or tampering during transport and handling, also within the sphere of ENDESA. If the bidder plans to use a type of protection as an alternative to staves, it must not be made with materials that during disposal are classifiable as hazardous waste; in any case, all protections that are alternatives to staves must be explicitly approved by ENDESA during homologation or during the tender process. The free ends of the cable must be properly protected against the penetration of water and moisture during transport, storage (which may also be outdoors) and lying. The finished and inspected cable coils at the Constructor's facilities cannot be parked without staves or equivalent protections in zones exposed to bad weather (sun, rain, etc.) and to accidental impacts unless for the time necessary for their staving or similar protection. Unless otherwise provided in the purchase order letter, the protection (staving or other) of the coils must be executed 100%. The spacing between the external layer of the cable and the staving must be sufficient for preventing damage to the cable and in any case never less than **50 mm**; to comply with said prescription, sizes of length reduced up to the minimum allowed can be preferred, if necessary.

LOCAL SECTION F – Endesa Distribución Eléctrica

N°	TITLE	DESCRIPTION
8	CONDITIONS OF SUPPLY	8) Labeling. At least the following data shall be shown in addition to what is required in the order on the external surface of at least one of the **flanges of the transport coil**, or on the **packaging of every single skein**, with clearly legible and indelible characters, if applicable: • The ENDESA code of the cable; • The name or trademark of the company that owns the coil; • The name of the Constructor of the cable; • The code and formation of the cable; • The type and code of the coil; • The total gross weight (only for the sizes on coil) • The net weight; • The weight of one meter of cable; • The actual length of the size; • The details of the ENDESA order; • The number and date of notice of shipment or, for the skeins, the number of the production lot (job no.). **Note: The two external faces of the flanges for coils made of wood and the two opposing faces of the pallets, which can be used for shipping several types of cable, must bear the mark demonstrating that the wood used for their construction has been treated as required in directive 2000/29/EC, referred to in SECTION8.2 7.2.** For **Type IV** cables following standard EN 50575, the CE marking and labelling shall be in accordance with the general principles set out in Article 30 of regulation (EC) No. 765/2008 and shall be affixed visibly, legibly and indelibly to the product labels affixed to the reels, coils or drums. The CE markings shall be followed by: • The last two digits of the year in which it was first affixed • The name and the registered address of the manufacturer, or the identifiying mark allowing identification of the name and address of the manufacturer easily and without ambiguity.

LOCAL SECTION F – Endesa Distribución Eléctrica

N°	TITLE	DESCRIPTION
8	CONDITIONS OF SUPPLY	• The unique identification code of the product-type • The reference number of the declaration of performance • The class of the performance declared • The date reference to the harmonized technical specification applied • The identification number of the notified body • The intended use as laid down in the appli9ed harmonized technical specification. CE marking example for products subject to AVCP system 1+ (**Type IV** cables with reaction to fire Cca-1sb,d2,a1 (10E-8 (AS)) . CE XXXX AnyCo Ltd, PO Box 21, B-1050, Brussels, Belgium 14 (A indicar por el fabricante) EN 50575:2014 (A indicar por el fabricante) Suministro de electricidad en edificios y en otras obras de ingeniería civil con el objetivo de limitar la generación y propagación de fuego y humo Reacción al fuego: C_{ca}-s1b, d2, a1 Sustancias peligrosas: Ninguna *Marcado CE, consistente en el símbolo "CE"* *Número de identificación del organismo de certificación de producto* *Nombre y dirección registrada del fabricante, o marca identificativa* *Los dos últimos dígitos del año en que se fijó el marcado por primera vez* *Número de referencia de la Declaración de Prestaciones (DoP)* *Código de la norma europea de aplicación, como se cita en el DOUE* *Código de identificación único del producto-tipo* *Uso previsto del producto como se indica en la norma europea aplicable* *Clase de prestaciones*

LOCAL SECTION F – Endesa Distribución Eléctrica

N°	TITLE	DESCRIPTION
8	CONDITIONS OF SUPPLY	CE marking example for products subject to AVCP system 3 (**Type IV** cables with reaction to fire Eca (10E-7 (S)) . 9) Transport In order to facilitate unloading, drums should be arranged in the vehicle with a distance between the covers for inputting the charging and discharging means, so that either can be discharged with handling means with forks. For **Type IV** cables, in compliance with standard EN 50575 in particular annex V of the EU Construction Products Regulation n° 305/2011 (CPR) the supplier shall elaborate a Declaration of performance (DoP) and shall dispose a CE marking in function of the assessment and verification of constancy of performance (AVCP).

COMMON LIST

GS Type Code	Distribution Company and Country	Country Code	Rated Voltage Uo/U(Umax) [kV]	Cross-section [mm²]	Type of cable	Conductor material	Conductor screen nominal thickness [mm]	Conductor screen minimum thickness [mm]	Insulation material	Nominal insulation thcikness [mm]	Minimum insulation thcikness [mm]	Insulation Screen Nominal thickness [mm]	Insulation Screen Minimum thickness [mm]	Longitudinal watertightness (Yes/Not)	Earth Screen type	Copper wires screen cross-section [mm2]	Aluminum screen minimum thickness [mm]	Outer sheath material	Sheath nominal thickness [mm]	Sheath minimun thickness [mm]	Sheath color	Constructive Characteristics	Minimum fire class reaction
GSC001/001	ED- Romania	332283	12/20(24)	95	I	ALUMINUM	0,5	0,3	XLPE	4,9	4,31	0,5	0,3	YES	ALUMINUM FOIL	-	0,3	POLYETHYLENE	2,75	2	RED	TRIPLEX	Fca
					I	ALUMINUM	0,5	0,3	XLPE	4,9	4,31	0,5	0,3	YES	ALUMINUM FOIL	-	0,3	POLYETHYLENE	2,75	2	RED	TRIPLEX	Fca
GSC001/002	ED- Romania	332284	12/20(24)	185	I	ALUMINUM	0,5	0,3	XLPE	4,9	4,31	0,5	0,3	YES	ALUMINUM FOIL	-	0,3	POLYETHYLENE	2,75	2	RED	TRIPLEX	Fca
				8	I	ALUMINUM	0,5	0,3	XLPE	4,9	4,31	0,5	0,3	YES	ALUMINUM FOIL	-	0,3	POLYETHYLENE	2,75	2	RED	TRIPLEX	Fca
GSC001/003	ED- Romania	332286	12/20(24)	185	I	ALUMINUM	0,5	0,3	XLPE	4,9	4,31	0,5	0,3	YES	ALUMINUM FOIL	-	0,3	POLYETHYLENE	2,75	2	RED	SINGLE CORE	Fca
					I	ALUMINUM	0,5	0,3	XLPE	4,9	4,31	0,5	0,3	YES	ALUMINUM FOIL	-	0,3	POLYETHYLENE	2,75	2	RED	SINGLE CORE	Fca
GSC001/004	ED- Romania	332285	12/20(24)	240	I	ALUMINUM	0,5	0,3	XLPE	4,9	4,31	0,5	0,3	YES	ALUMINUM FOIL	-	0,3	POLYETHYLENE	3	2,2	RED	TRIPLEX	Fca
					I	ALUMINUM	0,5	0,3	XLPE	4,9	4,31	0,5	0,3	YES	ALUMINUM FOIL	-	0,3	POLYETHYLENE	3	2,2	RED	TRIPLEX	Fca
GSC001/005	ED- Romania	332283	12/20(24)	95	II	ALUMINUM	0,5	0,3	HPTE	4,9	4,31	0,5	0,3	YES	ALUMINUM FOIL	-	0,3	POLYETHYLENE	2,75	2	RED	TRIPLEX	Fca
GSC001/005	ED-Italy	332283	12/20(24)	95	II	ALUMINUM	0,5	0,3	HPTE	4,9	4,31	0,5	0,3	YES	ALUMINUM FOIL	-	0,3	POLYETHYLENE	2,75	2	RED	TRIPLEX	Fca
GSC001/006	ED- Romania	332284	12/20(24)	185	II	ALUMINUM	0,5	0,3	HPTE	4,9	4,31	0,5	0,3	YES	ALUMINUM FOIL	-	0,3	POLYETHYLENE	2,75	2	RED	TRIPLEX	Fca
GSC001/006	ED-Italy	332284	12/20(24)	185	II	ALUMINUM	0,5	0,3	HPTE	4,9	4,31	0,5	0,3	YES	ALUMINUM FOIL	-	0,3	POLYETHYLENE	2,75	2	RED	TRIPLEX	Fca
GSC001/007	ED- Romania	332286	12/20(24)	185	II	ALUMINUM	0,5	0,3	HPTE	4,9	4,31	0,5	0,3	YES	ALUMINUM FOIL	-	0,3	POLYETHYLENE	2,75	2	RED	SINGLE CORE	Fca
GSC001/007	ED-Italy	332286	12/20(24)	185	II	ALUMINUM	0,5	0,3	HPTE	4,9	4,31	0,5	0,3	YES	ALUMINUM FOIL	-	0,3	POLYETHYLENE	2,75	2	RED	SINGLE CORE	Fca
GSC001/008	ED- Romania	332285	12/20(24)	240	II	ALUMINUM	0,5	0,3	HPTE	4,9	4,31	0,5	0,3	YES	ALUMINUM FOIL	-	0,3	POLYETHYLENE	3	2,2	RED	TRIPLEX	Fca
GSC001/008	ED-Italy	332285	12/20(24)	240	II	ALUMINUM	0,5	0,3	HPTE	4,9	4,31	0,5	0,3	YES	ALUMINUM FOIL	-	0,3	POLYETHYLENE	3	2,2	RED	TRIPLEX	Fca
GSC001/009	ED-Peru	T330108	12/20(24)	95	I	ALUMINUM	0,5	0,3	XLPE	4,9	4,31	0,5	0,3	YES	ALUMINUM FOIL	-	0,3	POLYETHYLENE	2,75	2	RED	SINGLE CORE	-
GSC001/010	ED-Peru	T330107	12/20(24)	150	I	ALUMINUM	0,5	0,3	XLPE	4,9	4,31	0,5	0,3	YES	ALUMINUM FOIL	-	0,3	POLYETHYLENE	2,75	2	RED	SINGLE CORE	-

GS Type Code	Distribution Company and Country	Country Code	Rated Voltage Uo/U(Umax) [kV]	Cross-section [mm2]	Type of cable	Conductor material	Conductor screen nominal thickness [mm]	Conductor screen minimum thickness [mm]	Insulation material	Nominal insulation thcikness [mm]	Minimum insulation thcikness [mm]	Insulation Screen Nominal thickness [mm]	Insulation Screen Minimum thickness [mm]	Longitudinal watertightness (Yes/Not)	Earth Screen type	Copper wires screen cross-section [mm2]	Aluminum screen minimum thickness [mm]	Outer sheath material	Sheath nominal thickness [mm]	Sheath minimun thickness [mm]	Sheath color	Constructive Characteristics	Minimum fire class reaction
GSC001/011	ED-Peru	6802745	12/20(24)	240	I	ALUMINUM	0,5	0,3	XLPE	4,9	4,31	0,5	0,3	YES	ALUMINUM FOIL	-	0,3	POLYETHYLENE	3	2,2	RED	SINGLE CORE	-
GSC001/012	ED-Peru	6802746	12/20(24)	400	I	ALUMINUM	0,5	0,3	XLPE	4,9	4,31	0,5	0,3	YES	ALUMINUM FOIL	-	0,3	POLYETHYLENE	3	2,2	RED	SINGLE CORE	-
GSC001/013	EE-Spain	330010	12/20(24)	95	I	ALUMINUM	0,5	0,3	XLPE	4,9	4,31	0,5	0,3	YES	ALUMINUM FOIL	-	0,3	DMZ1	2,75	2	RED	SINGLE CORE	-
GSC001/014	EE-Spain	330011	12/20(24)	150	I	ALUMINUM	0,5	0,3	XLPE	4,9	4,31	0,5	0,3	YES	ALUMINUM FOIL	-	0,3	DMZ1	2,75	2	RED	SINGLE CORE	-
GSC001/015	EE-Spain	330012	12/20(24)	240	I	ALUMINUM	0,5	0,3	XLPE	4,9	4,31	0,5	0,3	YES	ALUMINUM FOIL	-	0,3	DMZ1	2,75	2	RED	SINGLE CORE	-
GSC001/016	EE-Spain	330013	12/20(24)	400	I	ALUMINUM	0,5	0,3	XLPE	4,9	4,31	0,5	0,3	YES	ALUMINUM FOIL	-	0,3	DMZ1	2,75	2	RED	SINGLE CORE	-
GSC001/017	EE-Spain	330033	12/20(24)	240	IV	ALUMINUM	0,5	0,3	XLPE	4,9	4,31	0,5	0,3	YES	ALUMINUM FOIL	-	0,3	DMZ2	2,75	2	RED WITH TWO GREY STRIPS	SINGLE CORE	Eca
GSC001/018	EE-Spain	330028	12/20(24)	240	IV	ALUMINUM	0,5	0,3	XLPE	4,9	4,31	0,5	0,3	YES	ALUMINUM FOIL	-	0,3	DMZ2	2,75	2	RED WITH TWO GREEN STRIPS	SINGLE CORE	Cca-s1b,d2,a1
GSC001/019	EE-Spain	330032	12/20(24)	400	IV	ALUMINUM	0,5	0,3	XLPE	4,9	4,31	0,5	0,3	YES	ALUMINUM FOIL	-	0,3	DMZ2	2,75	2	RED WITH TWO GREY STRIPS	SINGLE CORE	Eca
GSC001/020	EE-Spain	330018	12/20(24)	400	IV	ALUMINUM	0,5	0,3	XLPE	4,9	4,31	0,5	0,3	YES	ALUMINUM FOIL	-	0,3	DMZ2	2,75	2	RED WITH TWO GREEN STRIPS	SINGLE CORE	Cca-s1b,d2,a1
GSC001/021	EE-Spain	330014	18/30(36)	150	I	ALUMINUM	0,5	0,3	XLPE	7,25	6,43	0,5	0,3	YES	ALUMINUM FOIL	-	0,3	DMZ1	2,75	2	RED	SINGLE CORE	-
GSC001/022	EE-Spain	330015	18/30(36)	240	I	ALUMINUM	0,5	0,3	XLPE	7,25	6,43	0,5	0,3	YES	ALUMINUM FOIL	-	0,3	DMZ1	2,75	2	RED	SINGLE CORE	-
GSC001/023	EE-Spain	330016	18/30(36)	400	I	ALUMINUM	0,5	0,3	XLPE	7,25	6,43	0,5	0,3	YES	ALUMINUM FOIL	-	0,3	DMZ1	2,75	2	RED	SINGLE CORE	-
GSC001/024	EE-Spain	340020	18/30(36)	240	IV	ALUMINUM	0,5	0,3	XLPE	7,25	6,43	0,5	0,3	YES	ALUMINUM FOIL	-	0,3	DMZ2	2,75	2	RED WITH TWO GREY STRIPS	SINGLE CORE	Eca
GSC001/025	EE-Spain	330037	18/30(36)	240	IV	ALUMINUM	0,5	0,3	XLPE	7,25	6,43	0,5	0,3	YES	ALUMINUM FOIL	-	0,3	DMZ2	2,75	2	RED WITH TWO GREEN STRIPS	SINGLE CORE	Cca-s1b,d2,a1

GS Type Code	Distribution Company and Country	Country Code	Rated Voltage Uo/U(Umax) [kV]	Cross-section [mm2]	Type of cable	Conductor material	Conductor screen nominal thickness [mm]	Conductor screen minimum thickness [mm]	Insulation material	Nominal insulation thcikness [mm]	Minimum insulation thcikness [mm]	Insulation Screen Nominal thickness [mm]	Insulation Screen Minimum thickness [mm]	Longitudinal watertightness (Yes/Not)	Earth Screen type	Copper wires screen cross-section [mm2]	Aluminum screen minimum thickness [mm]	Outer sheath material	Sheath nominal thickness [mm]	Sheath minimun thickness [mm]	Sheath color	Constructive Characteristics	Minimum fire class reaction
GSC001/026	EE-Spain	340030	18/30(36)	400	IV	ALUMINUM	0,5	0,3	XLPE	7,25	6,43	0,5	0,3	YES	ALUMINUM FOIL	-	0,3	DMZ2	2,75	2	RED WITH TWO GREY STRIPS	SINGLE CORE	Eca
GSC001/027	EE-Spain	330036	18/30(36)	400	IV	ALUMINUM	0,5	0,3	XLPE	7,25	6,43	0,5	0,3	YES	ALUMINUM FOIL	-	0,3	DMZ2	2,75	2	RED WITH TWO GREEN STRIPS	SINGLE CORE	Cca-s1b,d2,a1
GSC001/028	ED-Chile	330278	15/25(31)	150	III	ALUMINUM	0,5	0,3	XLPE	6,6	5,84	0,5	0,3	YES	COPPER WIRES	25	-	POLYETHYLENE	2,75	2	BLUE	SINGLE CORE	-
GSC001/029	ED-Chile	330223	15/25(31)	240	III	ALUMINUM	0,5	0,3	XLPE	6,6	5,84	0,5	0,3	YES	COPPER WIRES	25	-	POLYETHYLENE	3	2,2	BLUE	SINGLE CORE	-
GSC001/030	ED-Chile	330224	15/25(31)	400	III	ALUMINUM	0,5	0,3	XLPE	6,6	5,84	0,5	0,3	YES	COPPER WIRES	50	-	POLYETHYLENE	3	2,2	BLUE	SINGLE CORE	-
GSC001/032	ES-Argentine	0101-0274	18/30(36)	185	III	ALUMINUM	0,5	0,3	XLPE	8	7,1	1	0,8	YES	COPPER WIRES	25	-	POLYETHYLENE	2,75	2	RED	SINGLE CORE	-
GSC001/033	CD-Colombia	6793744	20/34(37.95)	240	III	ALUMINUM	0,5	0,3	XLPE	8	7,1	1	0,9	YES	COPPER WIRES	25	-	POLYETHYLENE	3	2,2	BLACK	TRIPLEX	-
GSC001/034	CD-Colombia	T330020	8.7/15(17.5)	95	III	ALUMINUM	0,5	0,3	XLPE	4,5	4,0	0,5	0,3	YES	COPPER WIRES	25	-	POLYETHYLENE	2,75	2	BLACK	TRIPLEX	-
GSC001/035	RJ/CE/GO-BRASIL	T330003	8.7/15(17.5)	95	III	ALUMINUM	0,5	0,3	XLPE	4,5	4,0	0,5	0,3	YES	COPPER WIRES	16	-	POLYETHYLENE	2,75	2	BLACK	SINGLE CORE	-
GSC001/037	ES-Argentine	UMV7	8.7/15(17.5)	95	III	ALUMINUM	0,5	0,3	XLPE	4,5	4,0	0,5	0,3	YES	COPPER WIRES	25	-	POLYETHYLENE	2,75	2	BLACK	TRIPLEX	-
GSC001/038	RJ/CE/GO-BRASIL	T330004	8.7/15(17.5)	95	III	ALUMINUM	0,5	0,3	XLPE	4,5	4,0	0,5	0,3	YES	COPPER WIRES	16	-	POLYETHYLENE	2,75	2	BLACK	TRIPLEX	-
GSC001/039	CD-Colombia	6793787	8.7/15(17.5)	150	III	ALUMINUM	0,5	0,3	XLPE	4,5	4,0	0,5	0,3	YES	COPPER WIRES	25	-	POLYETHYLENE	2,75	2	BLACK	TRIPLEX	-
GSC001/040	RJ/CE/GO-BRASIL	T330005	8.7/15(17.5)	150	III	ALUMINUM	0,5	0,3	XLPE	4,5	4,0	0,5	0,3	YES	COPPER WIRES	25	-	POLYETHYLENE	2,75	2	BLACK	SINGLE CORE	-
GSC001/041	ES-Argentine	0101-0268	8.7/15(17.5)	185	III	ALUMINUM	0,5	0,3	XLPE	4,5	4,0	0,5	0,3	YES	COPPER WIRES	50	-	POLYETHYLENE	2,75	2	BLACK	SINGLE CORE	-
GSC001/042	CD-Colombia	6793716	8.7/15(17.5)	185	III	ALUMINUM	0,5	0,3	XLPE	4,5	4,0	0,5	0,3	YES	COPPER WIRES	25	-	POLYETHYLENE	2,75	2	BLACK	TRIPLEX	-
GSC001/045	RJ/CE/GO-BRASIL	6776421	8.7/15(17.5)	185	III	ALUMINUM	0,5	0,3	XLPE	4,5	4,0	0,5	0,3	YES	COPPER WIRES	25	-	POLYETHYLENE	2,75	2	BLACK	SINGLE CORE	-
GSC001/046	RJ/CE/GO-BRASIL	6805960	8.7/15(17.5)	240	III	ALUMINUM	0,5	0,3	XLPE	4,5	4,0	0,5	0,3	YES	COPPER WIRES	25	-	POLYETHYLENE	3	2,2	BLACK	SINGLE CORE	-

GS Type Code	Distribution Company and Country	Country Code	Rated Voltage Uo/U(Umax) [kV]	Cross-section [mm2]	Type of cable	Conductor material	Conductor screen nominal thickness [mm]	Conductor screen minimum thickness [mm]	Insulation material	Nominal insulation thcikness [mm]	Minimum insulation thcikness [mm]	Insulation Screen Nominal thickness [mm]	Insulation Screen Minimum thickness [mm]	Longitudinal watertightness (Yes/Not)	Earth Screen type	Copper wires screen cross-section [mm2]	Aluminum screen minimum thickness [mm]	Outer sheath material	Sheath nominal thickness [mm]	Sheath minimun thickness [mm]	Sheath color	Constructive Characteristics	Minimum fire class reaction
GSC001/047	ES-Argentine	0101-0277	8.7/15(17.5)	240	III	COPPER	0,5	0,3	XLPE	4,5	4,0	0,5	0,3	YES	COPPER WIRES	50	-	POLYETHYLENE	3	2,2	RED	SINGLE CORE	-
GSC001/048	CD-Colombia	6791555	8.7/15(17.5)	240	III	ALUMINUM	0,5	0,3	XLPE	4,5	4,0	0,5	0,3	YES	COPPER WIRES	25	-	POLYETHYLENE	3	2,2	BLACK	TRIPLEX	-
GSC001/049	RJ/CE/GO-BRASIL	6804341	8.7/15(17.5)	400	III	ALUMINUM	0,5	0,3	XLPE	4,5	4,0	0,5	0,3	YES	COPPER WIRES	50	-	POLYETHYLENE	3	2,2	BLACK	SINGLE CORE	-
GSC001/051	ES-Argentine	0101-0458	8.7/15(17.5)	400	III	ALUMINUM	0,5	0,3	XLPE	4,5	4,0	0,5	0,3	YES	COPPER WIRES	50	-	POLYETHYLENE	3	2,2	BLACK	SINGLE CORE	-
GSC001/053	ED-Chile	330199	15/25(31)	70	III	COPPER	0,5	0,3	XLPE	6,6	5,84	0,5	0,3	YES	COPPER WIRES	25	-	POLYETHYLENE	2,5	1,8	BLUE	SINGLE CORE	-
GSC001/054	ED-Chile	330200	15/25(31)	120	III	COPPER	0,5	0,3	XLPE	6,6	5,84	0,5	0,3	YES	COPPER WIRES	25	-	POLYETHYLENE	2,75	2	BLUE	SINGLE CORE	-
GSC001/055	ED-Chile	330201	15/25(31)	240	III	COPPER	0,5	0,3	XLPE	6,6	5,84	0,5	0,3	YES	COPPER WIRES	50	-	POLYETHYLENE	3	2,2	BLUE	SINGLE CORE	-
GSC001/056	ED-Chile	350064	15/25(31)	400	III	COPPER	0,5	0,3	XLPE	6,6	5,84	0,5	0,3	YES	COPPER WIRES	50	-	POLYETHYLENE	3	2,2	BLUE	SINGLE CORE	-
GSC001/057	ES-Argentine	0101-0486	8.7/15(17.5)	240	III	ALUMINUM	0,5	0,3	XLPE	4,5	4	0,5	0,3	YES	COPPER WIRES	50	-	POLYETHYLENE	3	2,2	Red	SINGLE CORE	

GS Type Code	Distribution Company and Country	Country Code	TAM Description
GSC001/001	ED- Romania	332283	MV UNDERGROUND TRIPLEX CABLES 95 mm2 ALUMINUM CONDUCTORXLPE INSULATION ALUMINUM FOIL SCREEN POLYETHYLENE SHEATH
GSC001/001			
GSC001/002	ED- Romania	332284	MV UNDERGROUND TRIPLEX CABLES 185 mm2 ALUMINUM CONDUCTORXLPE INSULATION ALUMINUM FOIL SCREEN POLYETHYLENE SHEATH
GSC001/002			
GSC001/003	ED- Romania	332286	MV UNDERGROUND SINGLE CORE CABLES 185 mm2 ALUMINUM CONDUCTORXLPE INSULATION ALUMINUM FOIL SCREEN POLYETHYLENE SHEATH
GSC001/003			
GSC001/004	ED- Romania	332285	MV UNDERGROUND TRIPLEX CABLES 240 mm2 ALUMINUM CONDUCTORXLPE INSULATION ALUMINUM FOIL SCREEN POLYETHYLENE SHEATH
GSC001/004			
GSC001/005	ED- Romania	332283	MV UNDERGROUND TRIPLEX CABLES 95 mm2 ALUMINUM CONDUCTORHPTE INSULATION ALUMINUM FOIL SCREEN POLYETHYLENE SHEATH
GSC001/005	ED-Italy	332283	MV UNDERGROUND TRIPLEX CABLES 95 mm2 ALUMINUM CONDUCTORHPTE INSULATION ALUMINUM FOIL SCREEN POLYETHYLENE SHEATH
GSC001/006	ED- Romania	332284	MV UNDERGROUND TRIPLEX CABLES 185 mm2 ALUMINUM CONDUCTORHPTE INSULATION ALUMINUM FOIL SCREEN POLYETHYLENE SHEATH
GSC001/006	ED-Italy	332284	MV UNDERGROUND TRIPLEX CABLES 185 mm2 ALUMINUM CONDUCTORHPTE INSULATION ALUMINUM FOIL SCREEN POLYETHYLENE SHEATH
GSC001/007	ED- Romania	332286	MV UNDERGROUND SINGLE CORE CABLES 185 mm2 ALUMINUM CONDUCTORHPTE INSULATION ALUMINUM FOIL SCREEN POLYETHYLENE SHEATH
GSC001/007	ED-Italy	332286	MV UNDERGROUND SINGLE CORE CABLES 185 mm2 ALUMINUM CONDUCTORHPTE INSULATION ALUMINUM FOIL SCREEN POLYETHYLENE SHEATH
GSC001/008	ED- Romania	332285	MV UNDERGROUND TRIPLEX CABLES 240 mm2 ALUMINUM CONDUCTORHPTE INSULATION ALUMINUM FOIL SCREEN POLYETHYLENE SHEATH
GSC001/008	ED-Italy	332285	MV UNDERGROUND TRIPLEX CABLES 240 mm2 ALUMINUM CONDUCTORHPTE INSULATION ALUMINUM FOIL SCREEN POLYETHYLENE SHEATH
GSC001/009	ED-Peru	T330108	MV UNDERGROUND SINGLE CORE CABLES 95 mm2 ALUMINUM CONDUCTORXLPE INSULATION ALUMINUM FOIL SCREEN POLYETHYLENE SHEATH
GSC001/010	ED-Peru	T330107	MV UNDERGROUND SINGLE CORE CABLES 150 mm2 ALUMINUM CONDUCTORXLPE INSULATION ALUMINUM FOIL SCREEN POLYETHYLENE SHEATH
GSC001/011	ED-Peru	6802745	MV UNDERGROUND SINGLE CORE CABLES 240 mm2 ALUMINUM CONDUCTORXLPE INSULATION ALUMINUM FOIL SCREEN POLYETHYLENE SHEATH
GSC001/012	ED-Peru	6802746	MV UNDERGROUND SINGLE CORE CABLES 400 mm2 ALUMINUM CONDUCTORXLPE INSULATION ALUMINUM FOIL SCREEN POLYETHYLENE SHEATH

GS Type Code	Distribution Company and Country	Country Code	TAM Description
GSC001/013	EE-Spain	330010	MV UNDERGROUND SINGLE CORE CABLES 95 mm2 ALUMINUM CONDUCTORXLPE INSULATION ALUMINUM FOIL SCREEN DMZ1 SHEATH
GSC001/014	EE-Spain	330011	MV UNDERGROUND SINGLE CORE CABLES 150 mm2 ALUMINUM CONDUCTORXLPE INSULATION ALUMINUM FOIL SCREEN DMZ1 SHEATH
GSC001/015	EE-Spain	330012	MV UNDERGROUND SINGLE CORE CABLES 240 mm2 ALUMINUM CONDUCTORXLPE INSULATION ALUMINUM FOIL SCREEN DMZ1 SHEATH
GSC001/016	EE-Spain	330013	MV UNDERGROUND SINGLE CORE CABLES 400 mm2 ALUMINUM CONDUCTORXLPE INSULATION ALUMINUM FOIL SCREEN DMZ1 SHEATH
GSC001/017	EE-Spain	330033	MV UNDERGROUND SINGLE CORE CABLES 240 mm2 ALUMINUM CONDUCTORXLPE INSULATION ALUMINUM FOIL SCREEN DMZ2 SHEATH
GSC001/018	EE-Spain	330028	MV UNDERGROUND SINGLE CORE CABLES 240 mm2 ALUMINUM CONDUCTORXLPE INSULATION ALUMINUM FOIL SCREEN DMZ2 SHEATH
GSC001/019	EE-Spain	330032	MV UNDERGROUND SINGLE CORE CABLES 400 mm2 ALUMINUM CONDUCTORXLPE INSULATION ALUMINUM FOIL SCREEN DMZ2 SHEATH
GSC001/020	EE-Spain	330018	MV UNDERGROUND SINGLE CORE CABLES 400 mm2 ALUMINUM CONDUCTORXLPE INSULATION ALUMINUM FOIL SCREEN DMZ2 SHEATH
GSC001/021	EE-Spain	330014	MV UNDERGROUND SINGLE CORE CABLES 150 mm2 ALUMINUM CONDUCTORXLPE INSULATION ALUMINUM FOIL SCREEN DMZ1 SHEATH
GSC001/022	EE-Spain	330015	MV UNDERGROUND SINGLE CORE CABLES 240 mm2 ALUMINUM CONDUCTORXLPE INSULATION ALUMINUM FOIL SCREEN DMZ1 SHEATH
GSC001/023	EE-Spain	330016	MV UNDERGROUND SINGLE CORE CABLES 400 mm2 ALUMINUM CONDUCTORXLPE INSULATION ALUMINUM FOIL SCREEN DMZ1 SHEATH
GSC001/024	EE-Spain	340020	MV UNDERGROUND SINGLE CORE CABLES 240 mm2 ALUMINUM CONDUCTORXLPE INSULATION ALUMINUM FOIL SCREEN DMZ2 SHEATH
GSC001/025	EE-Spain	330037	MV UNDERGROUND SINGLE CORE CABLES 240 mm2 ALUMINUM CONDUCTORXLPE INSULATION ALUMINUM FOIL SCREEN DMZ2 SHEATH
GSC001/026	EE-Spain	340030	MV UNDERGROUND SINGLE CORE CABLES 400 mm2 ALUMINUM CONDUCTORXLPE INSULATION ALUMINUM FOIL SCREEN DMZ2 SHEATH
GSC001/027	EE-Spain	330036	MV UNDERGROUND SINGLE CORE CABLES 400 mm2 ALUMINUM CONDUCTORXLPE INSULATION ALUMINUM FOIL SCREEN DMZ2 SHEATH
GSC001/028	ED-Chile	330278	MV UNDERGROUND SINGLE CORE CABLES 150 mm2 ALUMINUM CONDUCTORXLPE INSULATION COPPER WIRES SCREEN POLYETHYLENE SHEATH
GSC001/029	ED-Chile	330223	MV UNDERGROUND SINGLE CORE CABLES 240 mm2 ALUMINUM CONDUCTORXLPE INSULATION COPPER WIRES SCREEN POLYETHYLENE SHEATH
GSC001/030	ED-Chile	330224	MV UNDERGROUND SINGLE CORE CABLES 400 mm2 ALUMINUM CONDUCTORXLPE INSULATION COPPER WIRES SCREEN POLYETHYLENE SHEATH
GSC001/032	ES-Argentine	0101-0274	MV UNDERGROUND SINGLE CORE CABLES 185 mm2 ALUMINUM CONDUCTORXLPE INSULATION COPPER WIRES SCREEN POLYETHYLENE SHEATH

GS Type Code	Distribution Company and Country	Country Code	TAM Description
GSC001/033	CD-Colombia	6793744	MV UNDERGROUND TRIPLEX CABLES 240 mm2 ALUMINUM CONDUCTORXLPE INSULATION COPPER WIRES SCREEN POLYETHYLENE SHEATH
GSC001/034	CD-Colombia	T330020	MV UNDERGROUND TRIPLEX CABLES 95 mm2 ALUMINUM CONDUCTORXLPE INSULATION COPPER WIRES SCREEN POLYETHYLENE SHEATH
GSC001/035	RJ/CE/GO-BRASIL	T330003	MV UNDERGROUND SINGLE CORE CABLES 95 mm2 ALUMINUM CONDUCTORXLPE INSULATION COPPER WIRES SCREEN POLYETHYLENE SHEATH
GSC001/037	ES-Argentine	UMV7	MV UNDERGROUND TRIPLEX CABLES 95 mm2 ALUMINUM CONDUCTORXLPE INSULATION COPPER WIRES SCREEN POLYETHYLENE SHEATH
GSC001/038	RJ/CE/GO-BRASIL	T330004	MV UNDERGROUND TRIPLEX CABLES 95 mm2 ALUMINUM CONDUCTORXLPE INSULATION COPPER WIRES SCREEN POLYETHYLENE SHEATH
GSC001/039	CD-Colombia	6793787	MV UNDERGROUND TRIPLEX CABLES 150 mm2 ALUMINUM CONDUCTORXLPE INSULATION COPPER WIRES SCREEN POLYETHYLENE SHEATH
GSC001/040	RJ/CE/GO-BRASIL	T330005	MV UNDERGROUND SINGLE CORE CABLES 150 mm2 ALUMINUM CONDUCTORXLPE INSULATION COPPER WIRES SCREEN POLYETHYLENE SHEATH
GSC001/041	ES-Argentine	0101-0268	MV UNDERGROUND SINGLE CORE CABLES 185 mm2 ALUMINUM CONDUCTORXLPE INSULATION COPPER WIRES SCREEN POLYETHYLENE SHEATH
GSC001/042	CD-Colombia	6793716	MV UNDERGROUND TRIPLEX CABLES 185 mm2 ALUMINUM CONDUCTORXLPE INSULATION COPPER WIRES SCREEN POLYETHYLENE SHEATH
GSC001/045	RJ/CE/GO-BRASIL	6776421	MV UNDERGROUND SINGLE CORE CABLES 185 mm2 ALUMINUM CONDUCTORXLPE INSULATION COPPER WIRES SCREEN POLYETHYLENE SHEATH
GSC001/046	RJ/CE/GO-BRASIL	6805960	MV UNDERGROUND SINGLE CORE CABLES 240 mm2 ALUMINUM CONDUCTORXLPE INSULATION COPPER WIRES SCREEN POLYETHYLENE SHEATH
GSC001/047	ES-Argentine	0101-0277	MV UNDERGROUND SINGLE CORE CABLES 240 mm2 COPPER CONDUCTORXLPE INSULATION COPPER WIRES SCREEN POLYETHYLENE SHEATH
GSC001/048	CD-Colombia	6791555	MV UNDERGROUND TRIPLEX CABLES 240 mm2 ALUMINUM CONDUCTORXLPE INSULATION COPPER WIRES SCREEN POLYETHYLENE SHEATH
GSC001/049	RJ/CE/GO-BRASIL	6804341	MV UNDERGROUND SINGLE CORE CABLES 400 mm2 ALUMINUM CONDUCTORXLPE INSULATION COPPER WIRES SCREEN POLYETHYLENE SHEATH
GSC001/051	ES-Argentine	0101-0458	MV UNDERGROUND SINGLE CORE CABLES 400 mm2 ALUMINUM CONDUCTORXLPE INSULATION COPPER WIRES SCREEN POLYETHYLENE SHEATH
GSC001/053	ED-Chile	330199	MV UNDERGROUND SINGLE CORE CABLES 70 mm2 COPPER CONDUCTORXLPE INSULATION COPPER WIRES SCREEN POLYETHYLENE SHEATH
GSC001/054	ED-Chile	330200	MV UNDERGROUND SINGLE CORE CABLES 120 mm2 COPPER CONDUCTORXLPE INSULATION COPPER WIRES SCREEN POLYETHYLENE SHEATH
GSC001/055	ED-Chile	330201	MV UNDERGROUND SINGLE CORE CABLES 240 mm2 COPPER CONDUCTORXLPE INSULATION COPPER WIRES SCREEN POLYETHYLENE SHEATH
GSC001/056	ED-Chile	350064	MV UNDERGROUND SINGLE CORE CABLES 400 mm2 COPPER CONDUCTORXLPE INSULATION COPPER WIRES SCREEN POLYETHYLENE SHEATH

GSC001/057	ES-Argentine	0101-0486	MV UNDERGROUND SINGLE CORE CABLES 240 mm2 ALUMINUM CONDUCTORXLPE INSULATION COPPER WIRES SCREEN POLYETHYLENE SHEATH

CAVI PER MEDIA TENSIONE UNIPOLARI ISOLATI CON GOMMA ETILENPROPILENICA AD ALTO MODULO ELASTICO SCHERMATI SOTTO GUAINA DI PVC Sigla RG7H1R 12/20 kV

Il presente documento è di proprietà intellettuale delle società e-distribuzione S.p.A.; ogni riproduzione o divulgazione dello stesso dovrà avvenire con la preventiva autorizzazione della suddetta società la quale tutelerà i propri diritti in sede civile e penale a termini di legge.

This document is intellectual property of e-distribuzione S.p.A.; reproduction or distribution of its contents in any way or by any means whatsoever is subject to the prior approval of the above mentioned company which will safeguard its rights under the civil and penal codes.

Edizione	Data	Natura della modifica
04	Giugno 2006	
05	15/01/2018	Inserimento classificazione CPR

	Emissione	Collaborazioni	Verifiche	Approvazione
Ente	**DIS-O&M-DCS**		**DIS-O&M-DCS**	**DIS-O&M-DCS**
	S. Di Cesare		**L. Giansante**	**G. Valtorta**

Copyright 2018. All rights reserved.

INDICE

1. Tensione nominale di isolamento 4

2. Prescrizioni costruttive 4

3. Classificazione CPR 5

4. Stampigliature 5

5. Imballo e pezzature 6

6. Norme e prescrizioni per la costruzione, il collaudo e la fornitura 6

7. Unità di misura 6

Copyright 2018. All rights reserved.

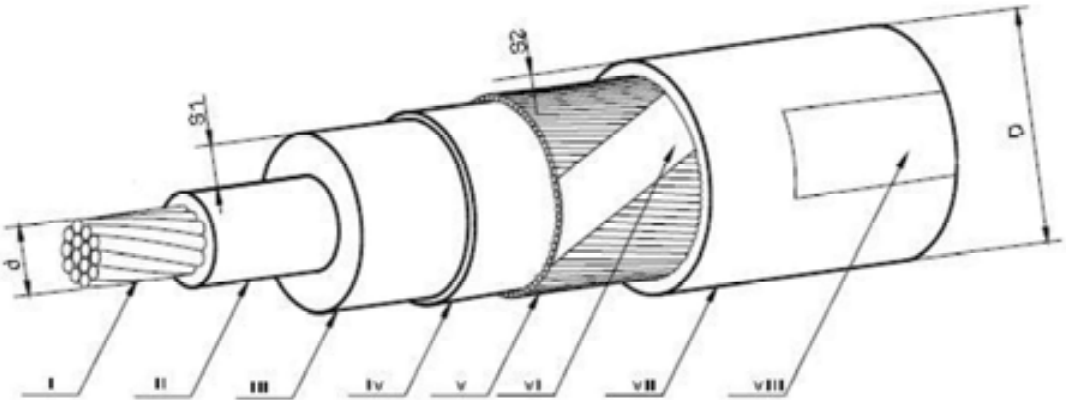

I - Conduttore
II - Strato semiconduttore
III - Isolante
IV - Strato semiconduttore
V - Schermo
VI - Nastro equalizzatore (eventuale)
VII - Guaina di PVC
VIII - Stampigliatura

PROSPETTO I - Caratteristiche dei cavi

1	2	3	4	5	6	7	8	9
Matricola	Tipo	Numero dei conduttori per sez. nominale	Massa	PORTATE (1)				Corrente termica di corto circuito
				posa in aria cavi disposti:		posa interrata cavi disposti:		
			Nominale	in piano	a trifoglio	in piano	a trifoglio	(2)
		($n^{\circ} \times mm^2$)	(Kg/Km)	(A)	A)	(A)	A)	(kA)
332022	DC 4372/1	1 x 25	870	182	157	156	150	5,0
332023	DC 4372/2	1 x 50	1130	264	228	220	212	10,1
332024	DC 4372/3	1 x 95	1690	402	347	322	311	19,0
332025	DC 4372/4	1 x 150	2230	525	454	409	396	30,0
332026	DC 4372/5	1 x 240	3190	712	617	535	520	48,0
332027	DC 4372/6	1 x 400	4700	937	818	680	664	80,0
332028	DC 4372/7	1 x 630	7340	1226	1083	857	840	126,0

(1). I valori di portata valgono in regime permanente per tre cavi posati nelle condizioni indicate nel prospetto, per temperatura del conduttore non superiore a 90 °C ed inoltre:
- per temperatura ambiente 30°;
- per posa direttamente interrata: profondità di posa 1,20 m, temperatura del terreno 20 °C, resistività termica del terreno 1° C. m/ W
- per posa in tubazioni si può assumere una portata pari all' 80 % della corrispondente portata relativa alla disposizione a trifoglio.

Nella disposizione a trifoglio i cavi sono a contatto nella disposizione in piano la distanza fra le generatrici affacciate è "D".

(2). I valori della corrente termica di corto circuito valgono nelle seguenti condizioni:

durata del corto circuito 0,5 s ; temperatura iniziale dei conduttori pari alla temperatura massima ammissibile in regime permanente (90° C.); temperatura finale dei conduttori 250° C.

Esempio di descrizione ridotta:

CAVO 1P MT RG7H1R 12/20 kV xxxmm[2]

Copyright 2018. All rights reserved.

PROSPETTO II - Caratteristiche delle anime

1	2	3	4	5	6	7	8	9	10
Sezione nomin. delle anime	Numero dei fili del conduttore	Diametro sul con-duttore	Spessore medio dell' isolante	Diametro sull' isolante		Spessore medio della guaina di PVC	Diametro Esterno D		Resistenza elettrica a 20° C
(mm²)	min. (n°)	d (mm)	S1 min. (mm)	min. (mm)	max. (mm)	S2 min. (mm)	min. (mm)	max. (mm)	max. (Ω/ km)
25	6	6,1 -0,1 +0,2	5,5	17,7	19,3	2,2	23,9	26,9	0,727
50	6	8,1 -0,1 +0,2	5,5	19,8	21,6	2,2	26,0	29,0	0,387
95	15	11,4 -0,1 +0,2	5,5	23,1	25,0	2,2	29,3	32,5	0,193
150	18	14,2 -0,2 +0,2	5,5	25,9	27,9	2,2	32,1	35,5	0,124
240	34	18,3 -0,2 +0,3	5,5	29,8	32,0	2,2	36,0	40,0	0,075
400	53	23,1 -0,3 +0,3	5,5	35,0	37,3	2,4	41,6	45,6	0,047
630	53	30,1 -0,5 +0,5	5,5	42,7	45,1	2,8	50,1	54,1	0,028

1. Tensione nominale di isolamento

Uo/U=12/20 kV, per sistemi con tensione massima Um = 24 kV.

2. Prescrizioni costruttive

- Conduttori di rame ricotto non stagnato a corda rigida rotonda compatta.

Copyright 2018. All rights reserved.

- Strato semiconduttore estruso sul conduttore.
- Isolante: gomma etilenpropilenica ad alto modulo elastico;
- Strato semiconduttore estruso sopra l'isolante pelabile a freddo.
- Schermo: fili di rame ricotto non stagnati, disposti secondo un'elica unidirezionale o a senso periodicamente invertito (S/Z), con nastro equalizzatore di rame non stagnato. In alternativa al nastro equalizzatore possono essere usati uno o più fili di rame disposti longitudinalmente. In ogni caso il rapporto tra la lunghezza dei fili rettificati e la corrispondente lunghezza dell'anima deve risultare maggiore di 1,0.
- Eventuale nastro non igroscopico.
- Rivestimento protettivo: guaina di PVC (HD 620 TYPE DMV13) o (IEC 60502.2 TYPE ST2) di colore rosso.

3. Classificazione CPR

Deve essere documentata la classificazione CPR dei cavi in oggetto come da EN50575.

4. Stampigliature

In conformità a quanto prescritto nella Tabella DC 4908 sulla guaina esterna deve essere riportata per impressione in rilievo una stampigliatura indelebile, ripetuta con passo non superiore a 1 m, contenente le seguenti iscrizioni nell'ordine indicato:

a) - sigla di proprietà seguita da:
- sigla UNEL (completa di tensione)
- sezione del conduttore,
- nome o il marchio del Costruttore
- lettera identificante lo stabilimento di costruzione
- indice di progetto
- anno e mese di fabbricazione
- classificazione CPR

b) la metratura (è ammessa anche la stampigliatura ad inchiostro indelebile).

Esempio di stampigliatura sulla guaina esterna del cavo:

e-distribuzione RG7H1R 12/20 kV 240 XXXXX B 01 2018 12 CPR Xxx[1] - 0000

[1] Xxx – Classificazione CPR

Copyright 2018. All rights reserved.

Sia la bobina che il cavo devono essere marchiati CE ai sensi del Regolamento CPR (EN50575).

5. Imballo e pezzature

- Pezzature e grandezza delle bobine CNR-CEI UNEL 09812 - 74 da impiegare:

- cavo 1 x 25	1000 m su bobina 20;
- cavo 1 x 50	1000 m su bobina 20;
- cavo 1 x 95	700 m su bobina 20;
- cavo 1 x 150	500 m su bobina 20;
- cavo 1 x 240	500 m su bobina 20;
- cavo 1 x 400	500 m su bobina 20;
- cavo 1 x 630	350 m su bobina 20;

- La testa esterna del cavo avvolto su bobina deve essere attrezzata con idoneo dispositivo per il tiro (allo studio).

6. Norme e prescrizioni per la costruzione, il collaudo e la fornitura

- Costruzione:	HD 620 S1; IEC 60502-2
- Collaudo:	Prescrizioni e-distribuzione DC 4586, DC 4586a
- Fornitura:	Prescrizioni e-distribuzione DC 4938

7. Unità di misura

Metro.

Copyright 2018. All rights reserved.

Enel L'ENERGIA CHE TI ASCOLTA. *Enel Distribuzione*	**NORMA COMUNE** ***TERMINALI UNIPOLARI PER INTERNO E PER ESTERNO PER CAVI MT12/20 kV CON ISOLAMENTO ESTRUSO*** **ITALIANO** – ESPAÑOL	endesa *Distribución Eléctrica*
DJ4457	*NCDJ4457 Rev.: 00 Data: 28/01/2010*	DND004

Il presente documento è di proprietà intellettuale delle società ENEL Distribuzione S.p.A. e ENDESA Distribución Eléctrica S.L.; ogni riproduzione o divulgazione dello stesso dovrà avvenire con la preventiva autorizzazione delle suddette società le quali tuteleranno i propri diritti in sede civile e penale a termini di legge.

El presente documento es de propiedad intelectual de la sociedad enel distribuzione s.p.a. y endesa distribución eléctrica s.l.; queda prohibida la reproducción o divulgación del mismo sin autorización previa de las susodichas sociedades, las cuales concurrirán ante el órgano civil o penal oportuno en defensa de sus derechos.

This document is intellectual property of ENEL Distribuzione S.p.A. and ENDESA Distribución Eléctrica S.L; reproduction or distribution of its contents in any way or by any means whatsoever is subject to the prior approval of the above mentioned companies which will safeguard its rights under the civil and penal codes.

Revisione	Data	Natura della modifica
00	28/01/2010	Prima emissione

Enel Distribuzione			Endesa Distribución Eléctrica		
Emissione	**Verifica**	**Approvazione**	**Emisión**	**Verificación**	**Aprobación**
DIS-IUN-UML	**DIS-IUN-UML**	**DIS-IUN**	**DyM MT/BT**	**DyM MT/BT**	**DyM**
V. Spinelli	**R. Grimaldi**	**E. Di Marino**	**C. Francisco**	**J. Caldú**	**A. Pérez**

Copyright 2009. All rights reserved.

INDICE

1 SCOPO

2 CAMPO DI APPLICAZIONE

3 IDENTIFICAZIONE COMPONENTI

4 CARATTERISTICHE TECNICHE

5 PRESCRIZIONI DI RIFERIMENTO

6 DEFINIZIONI

7 UNITA' DI MISURA

8 CARATTERISTICHE COSTRUTTIVE

8.1 Caratteristiche generali
8.2 Caratteristiche particolari

9 PRESCRIZIONI PER LA FORNITURA

9.1 Marcatura
9.2 Imballo

Copyright 2009. All rights reserved.

1. SCOPO

Le presenti prescrizioni hanno lo scopo di definire le caratteristiche costruttive dei terminali unipolari per interno e per esterno per cavi MT isolati in materiale estruso.
Le presenti prescrizioni sono relative alle caratteristiche comuni Enel-Endesa.

2. CAMPO DI APPLICAZIONE

Le presenti prescrizioni si applicano ai terminali unipolari per uso interno e per uso esterno per cavi MT 12/20 kV con tensione massima 24 kV.

3. IDENTIFICAZIONE COMPONENTI

Dimensioni in mm

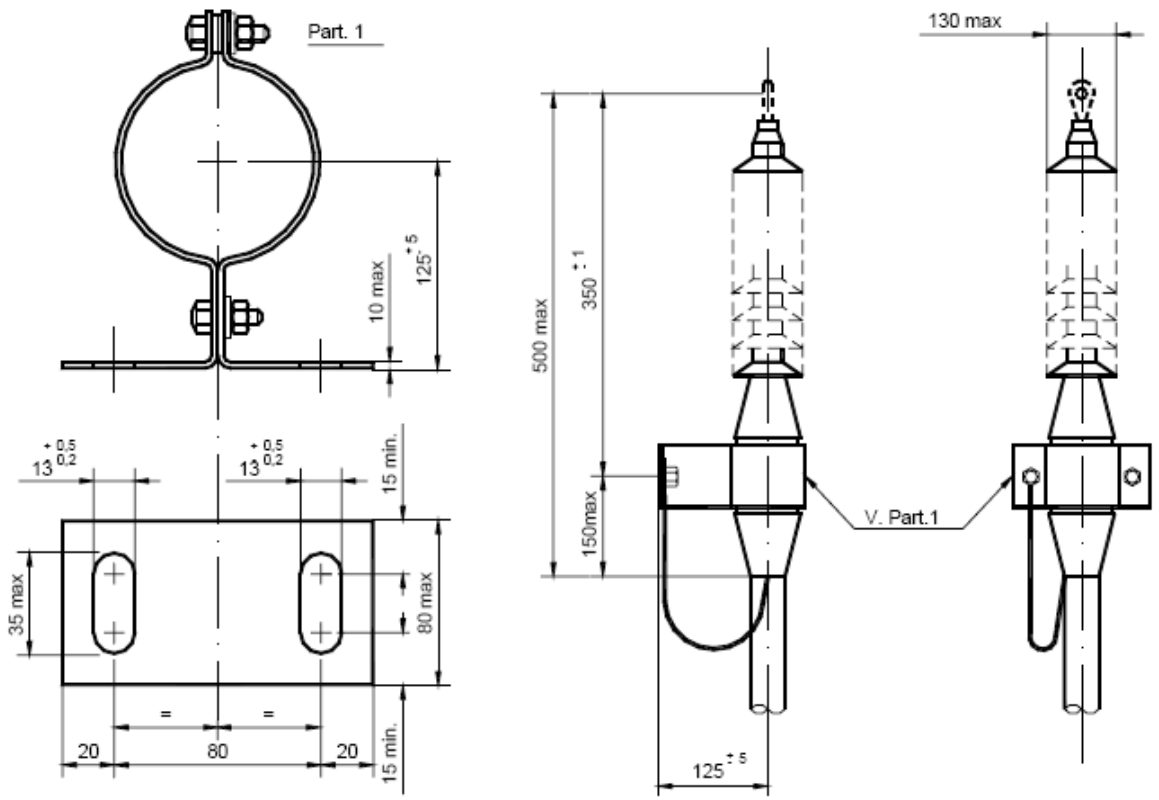

Fig. 1 Terminale per uso interno

Copyright 2009. All rights reserved.

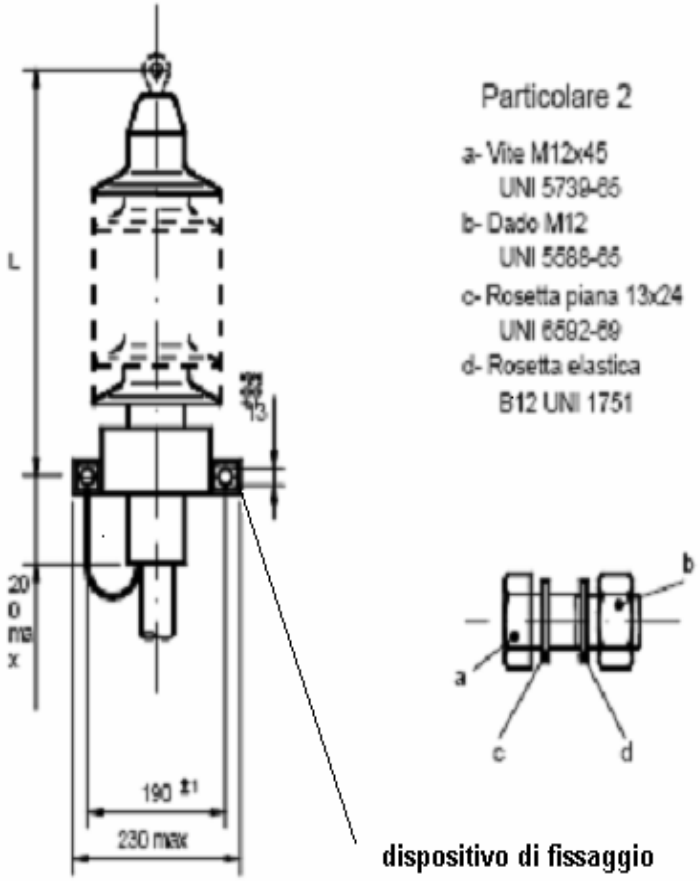

Fig. 2 Terminale per uso esterno

Copyright 2009. All rights reserved.

4. CARATTERISTICHE TECNICHE

Le principali caratteristiche tecniche sono riportate nelle sottostante tabella:

Tipologia Terminale		interno	interno	esterno	esterno
Matricola Enel		273040	271050	273064	273068
Matricola Endesa		6700896 (95 mm^2) 6700060 (150 mm^2) 6700061 (240 mm^2)	6702073 (95 mm^2) 6702074 (150 mm^2) 6702075 (240 mm^2)	6700054 (150 mm^2) 6700055 (240 mm^2)	6702067 (150 mm^2) 6702068 (240 mm^2)
Caratteristiche del cavo	Tensione nominale di isolamento Uo/20	12/20	12/20	12/20	12/20
	Sezioni del cavo (mm^2)	70 ÷ 240	70 ÷ 240	70 ÷ 240	70 ÷ 240
	Diametri min/max sull'isolante (mm)	19 ÷ 32	19 ÷ 32	19 ÷ 32	19 ÷ 32
	Tipo di schermo	Fili Cu e Tubo Al	Fili Cu e Tubo Al	Fili Cu e Tubo Al	Fili Cu e Tubo Al
Soluzione costruttiva		Retraibile a caldo	Retraibile a freddo	Retraibile a caldo	Retraibile a freddo
Tensione nominale di isolamento verso terra U0		12			
Tensione di prova a frequenza industriale		50			
Tensione di prova ad impulso (kVcresta)		125			
Salinità di tenuta a 18 kV (Kg/m3)		//		56	
Linea di fuga nominale minima (mm)		//		550	
Altezza L (mm)		//		350-450	

5. PRESCRIZIONI DI RIFERIMENTO

Per quanto non specificato valgono le prescrizioni della Norma Cenelec HD 629-1.

6. DEFINIZIONI

Per le definizioni si rimanda alla Norma Cenelec HD 629-1 per quanto applicabili.

7. UNITA' DI MISURA

L'unità di misura con la quale deve essere espressa la quantità di materiale è il numero.

Copyright 2009. All rights reserved.

8 CARATTERISTICHE COSTRUTTIVE

8.1 Caratteristiche generali

a) Resistenza alla corrosione, alle infiltrazioni, all'umidità ed alla polvere

Le superfici esterne dei terminali devono resistere alle condizioni di umidità e di polvere che possono verificarsi nell'uso normale; gli involucri devono garantire la non infiltrazione dell'umidità e della polvere e in corrispondenza delle sigillature non si devono verificare ristagni d'acqua nelle normali condizioni d'installazione previste.

Circa l'affidabilità nel tempo delle sigillature, il Costruttore deve fornire idonea documentazione del materiale impiegato, delle sue caratteristiche di invecchiamento, dei particolari di realizzazione e di montaggio.Le parti metalliche devono essere resistenti all'ossidazione; l'impiego di vernici, smalti o materie similari non è considerato sufficiente ad assicurare la protezione richiesta.

Inoltre devono essere prese particolari precauzioni per evitare il rischio di corrosione derivante dal contatto di metalli di natura diversa.

Tutte le parti di materiale ferroso a contatto con l'aria devono essere zincate:

- nei terminali per interno, con rivestimento elettrolitico di zinco non inferiore a Fe Zn 12 III ISO 4721;
- nei terminali per esterno, a caldo secondo la Norma ISO 1461, assicurando lo spessore medio dello strato di Zn pari a 86 µm.

b) Riscaldamento

Tutti i materiali costituenti l'accessorio devono sopportare, senza pregiudizio per il corretto funzionamento dell'accessorio e del cavo, le condizioni di riscaldamento previste durante il montaggio e l'esercizio.

c) Resistenza dei terminali al fuoco ed alle correnti superficiali

L'involucro esterno deve presentare una sufficiente resistenza al fuoco.

L'isolatore passante deve essere di materiale resistente alle correnti superficiali.

d) Compatibilità dei materiali

Tutte le parti elementari degli accessori devono essere realizzate con materiali che possano coesistere a contatto tra di loro e con quelli costituenti il cavo, senza pregiudizio per la funzionalità.

e) Le istruzioni e la definizione di eventuali dime devono essere preventivamente concordate con Enel/Endesa.

8.2 Caratteristiche particolari

Il terminale prevede in particolare:

a) un elemento per il controllo del campo elettrico realizzato con tubo o nastro ad elevata costante dielettrica, da applicare sull'isolante del cavo e da collegare direttamente al semiconduttore del cavo stesso;

b) un isolatore passante, realizzato con uno o più elementi di materiale retraibile, resistente alle correnti superficiali ed avente caratteristiche adatte per assicurare la salinità di tenuta prescritta;

c) il dispositivo di fissaggio prescritto;

Copyright 2009. All rights reserved.

d) il collegamento di terra dello schermo metallico del cavo;
e) il bullone di acciaio inossidabile austenitico .

La realizzazione del terminale deve prevedere:

a) Collegamento a terra dello schermo metallico del cavo

1) Nel caso di cavo con schermo a fili il collegamento a terra dello schermo deve essere realizzato utilizzando gli stessi fili di rame dello schermo del cavo riuniti insieme e terminati con un capocorda ad attacco piatto diritto, avente un foro adatto per viti M12, applicato mediante compressione effettuata con la matrice e i punzoni indicati in fig.3; inoltre deve essere previsto un dispositivo per il bloccaggio degli schermi metallici dei cavi, che non deve danneggiare i semiconduttori o gli isolanti.

2) Nel caso di cavo con schermo realizzato con tubo di alluminio tipo 'polilam" il collegamento a terra dello schermo deve essere costituito dalle seguenti parti elementari:

- una piastra rettangolare di rame duro stagnato di spessore 0,5 ± 0,05 mm, con rivestimento di stagno di spessore minimo 0,5 µm. La piastra deve avere le dimensioni di fig. 4 e deve essere curvata su un cilindro di diametro 25 ± 2 mm; sulla faccia convessa della piastra devono essere riportate 65 asperità disposte come prescritto in figura. Tali asperità devono avere la geometria data a titolo indicativo nella stessa figura, allo scopo di permettere sia di forare il nastro longitudinale di alluminio del cavo, per ottenere un soddisfacente contatto con lo schermo, sia di penetrare parzialmente nella guaina termoplastica esterna del cavo, per impedire spostamenti o rimozioni del dispositivo.
- una treccia flessibile di rame ricotto stagnato di sezione 16 mm2 avente una lunghezza tale da permetterne l'agevole fissaggio nella posizione prescritta. Una estremità di tale treccia deve essere fissata mediante saldatura a stagno alla piastra suddetta nella posizione indicata in fig. 4; l'altra estremità deve essere munita di capocorda di rame stagnato ad attacco piatto diritto applicato mediante compressione ed avente un foro adatto per viti M12.

N.B: Il kit del terminale deve contenere tutti gli elementi necessari alla realizzazione del collegamento a terra dello schermo metallico secondo le 2 suddette modalità.

b) Fissaggio dei terminali

I terminali devono essere muniti del dispositivo di fissaggio indicati nella figura 1 e 2; qualora esso sia realizzato con materiale magnetico non deve formare spira chiusa.
Tale dispositivo deve realizzare un efficace collegamento a terra di tutte le parti esterne del terminale realizzate con materiale metallico.

9 PRESCRIZIONI PER LA FORNITURA

9.1 Marcatura

Il terminale deve riportare le seguenti indicazioni:

a) nome del Costruttore;
b) anno e, ove possibile, mese di costruzione (esempio: 00/2);

In particolare le indicazioni suddette devono essere poste sull'isolatore passante e sul dispositivo di fissaggio, ottenute per incisione o rilievo sulle parti metalliche e mediante serigrafia sugli altri materiali.

Copyright 2009. All rights reserved.

9.2 Imballo

I terminali devono essere forniti in imballi singoli sui quali devono essere riportate le seguenti indicazioni:

- matricola ENEL o ENDESA,
- nome del Costruttore,
- tipo di terminale (es.terminale per esterno autoretraibile)
- tipo dei cavi cui l'accessorio è destinato, materiale conduttore e sezione ammesse
- anno e mese di confezionamento,
- n° matricola assegnato dal Costruttore (serial number)
- codice a barre
- numero del lotto di produzione
- sigla di identificazione,
- corrente nominale in A,
- tensione massima Um in kV,
- eventuale data di scadenza dei materiali.

Ogni imballo deve contenere tutte le parti elementari ed i materiali necessari per il corretto montaggio ed installazione dei giunti e deve essere corredato di un elenco di tutto quanto in esso contenuto, comprese le istruzioni per il montaggio approvate da ENEL e da ENDESA.

Inoltre all'interno del Kit deve essere inserita una targhetta autoadesiva sulla quale devono essere riportate le seguenti informazioni:

- nome del Costruttore
- anno e mese di confezionamento
- n° matricola assegnato dal Costruttore (serial number)
- matricola ENEL
- codice a barre (composizione del tracciato da concordare con ENEL) che deve contenere almeno le informazioni di cui sopra.

Per Enel, la spedizione ed il trasporto (di più imballi singoli) devono rispettare le prescrizioni previste dal documento **GUI 101 Ed.1 del Novembre 2006.**

Copyright 2009. All rights reserved.

Dimensioni in mm
H = 11,0 ± 0,1
L = 9,0 ± 0,1
R = 4,0 ± 0,1
r = 1,0
α = 15°

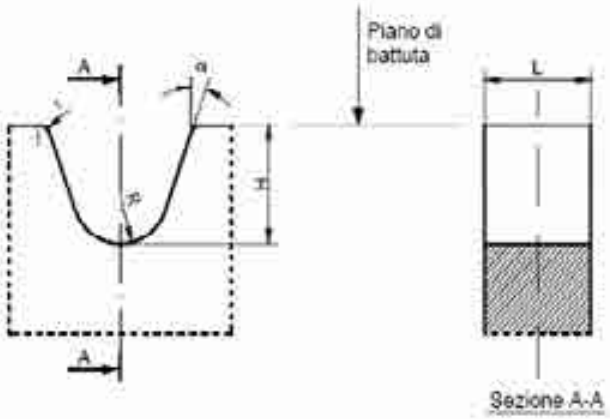

A = 10,0 ± 0,1
B = 9,0 ± 0,1
H = 7,5 ± 0,1
H1 = 3,0
H2 = 4,5
R1 = 2,0
R2 = 1,5
R3 = 2,0
α = 24°
β = 20°

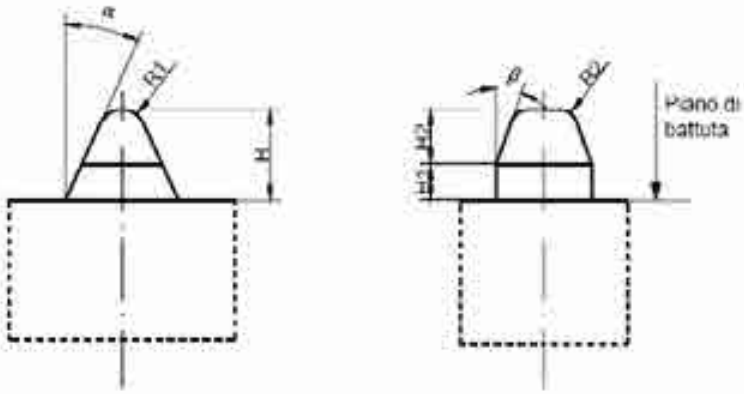

Fig. 3 Matrice e punzone per connettore per collegamento a terra dello schermo a fili del cavo estruso

Copyright 2009. All rights reserved.

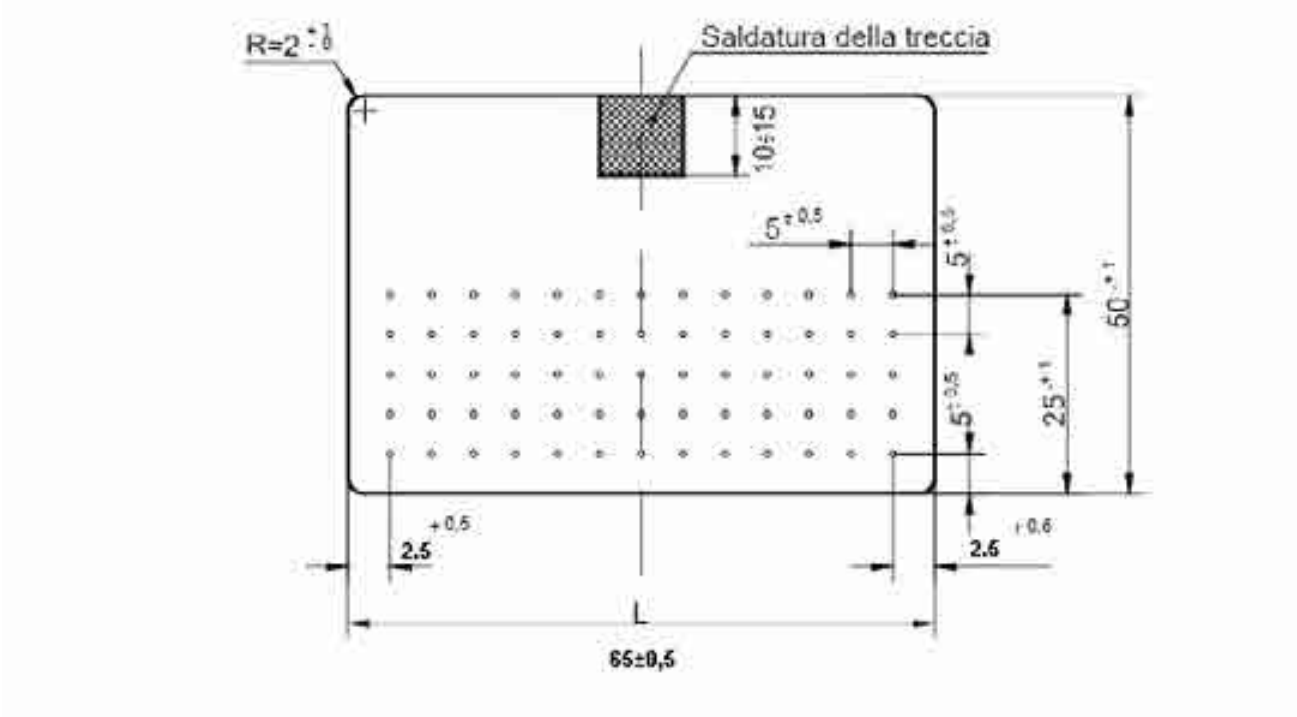

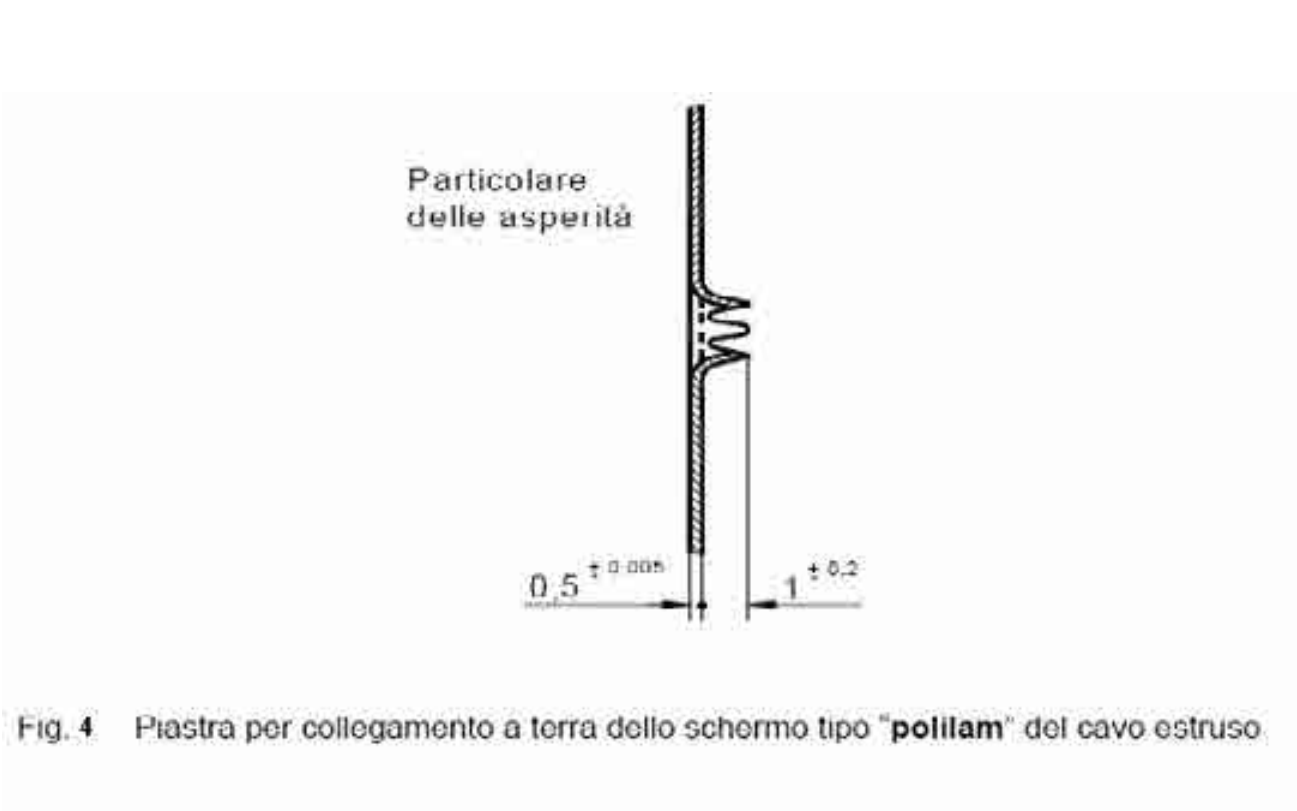

Fig. 4 Piastra per collegamento a terra dello schermo tipo "**polilam**" del cavo estruso

Copyright 2009. All rights reserved.

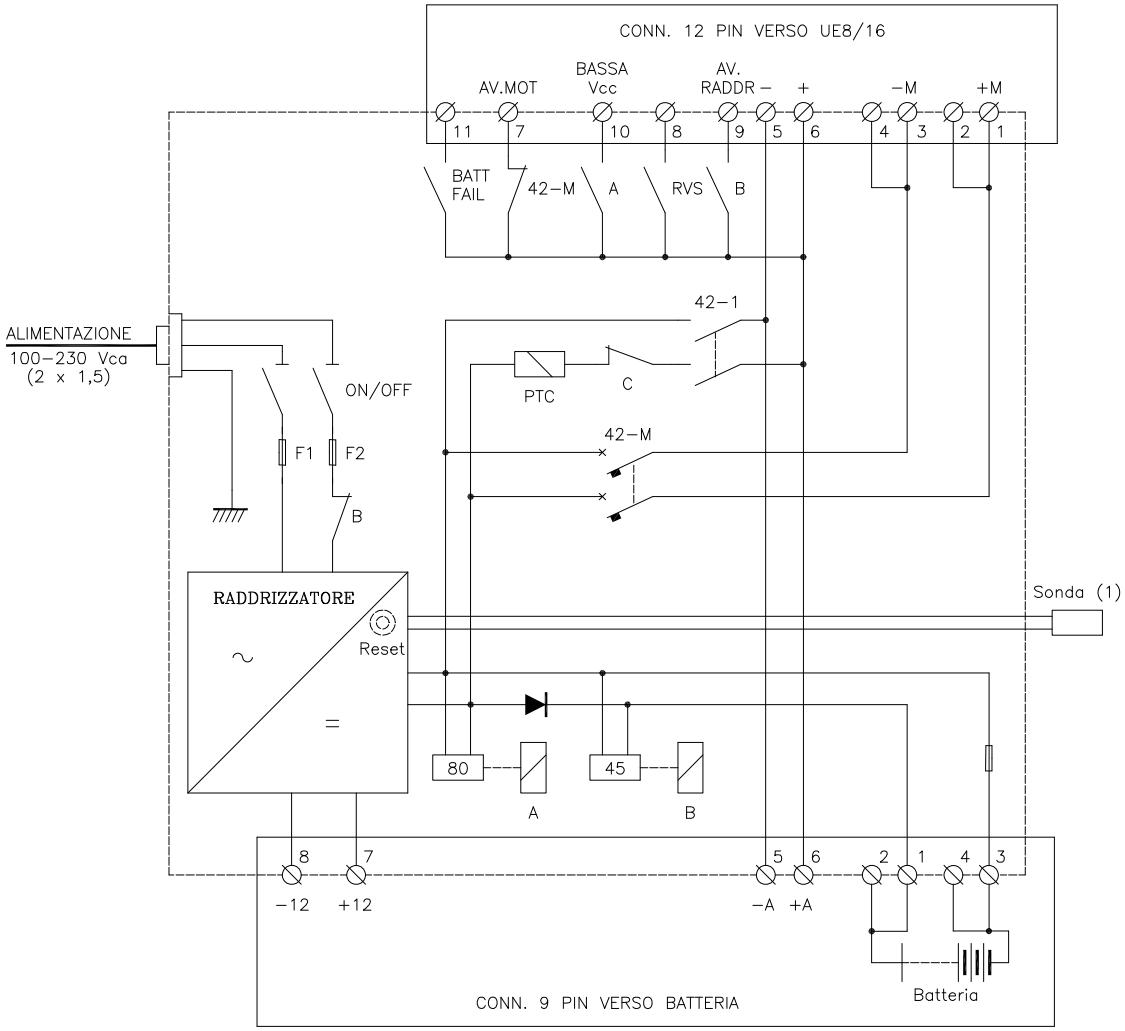

Figura 1 - Schema di principio dell'alimentatore

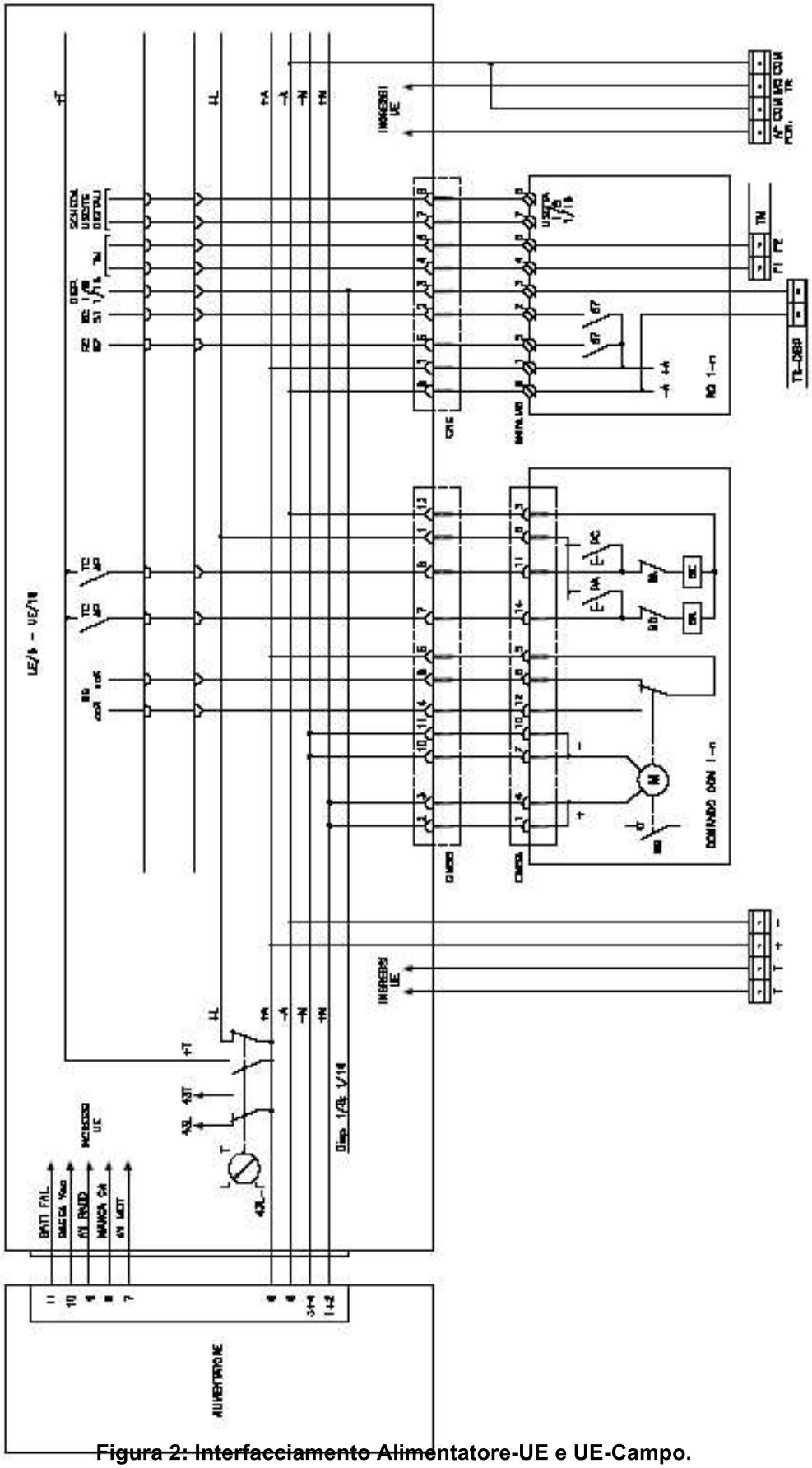

Figura 2: Interfacciamento Alimentatore-UE e UE-Campo.

IR ING TEA

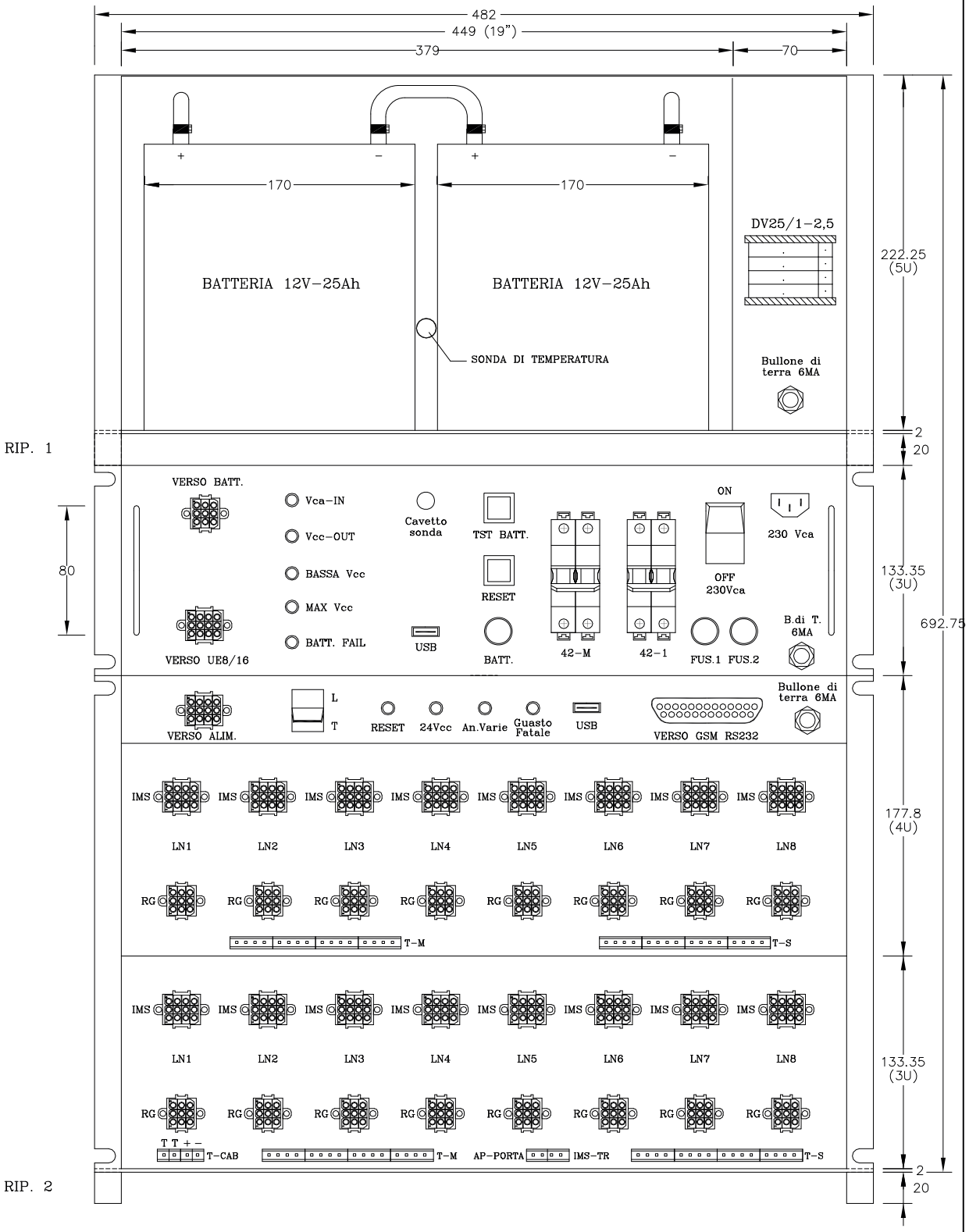

Figura 3: UP - Vista Frontale

IR ING TEA

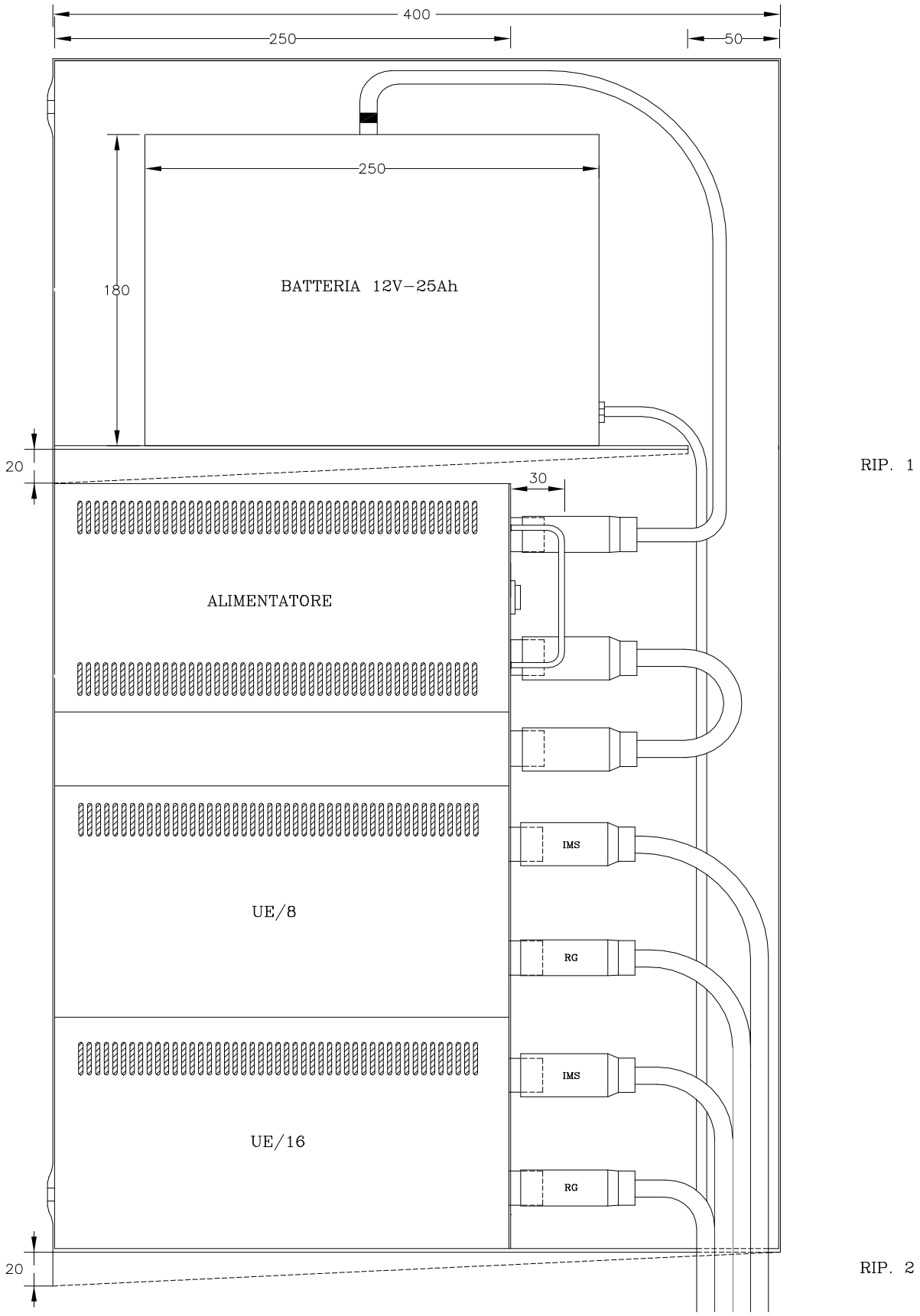

Fig. 3: UP - Vista laterale

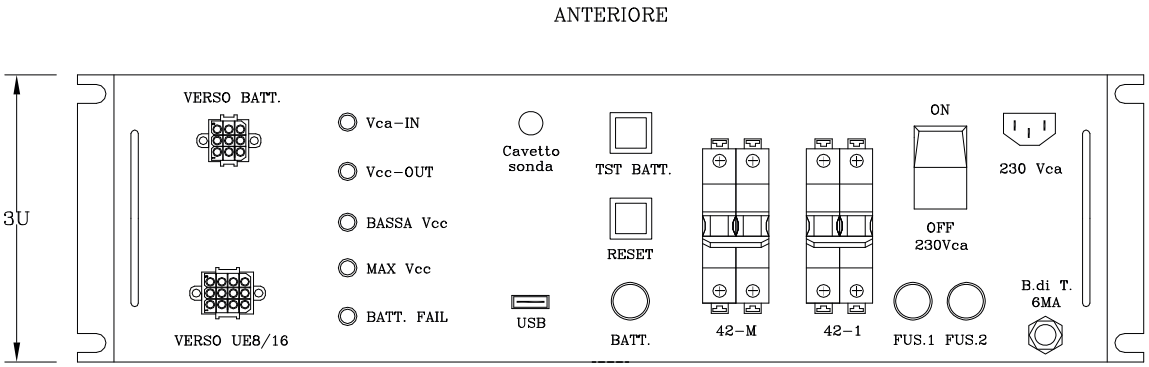

ALIMENTATORE

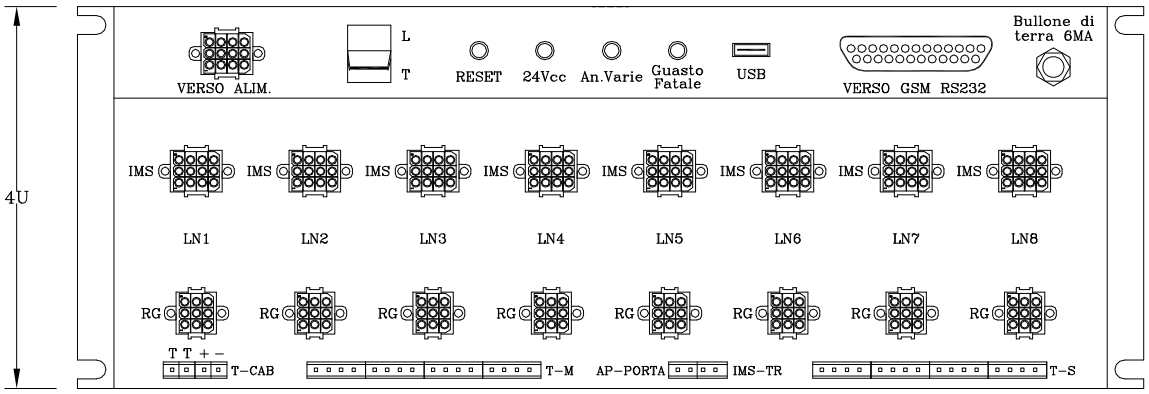

UE 8

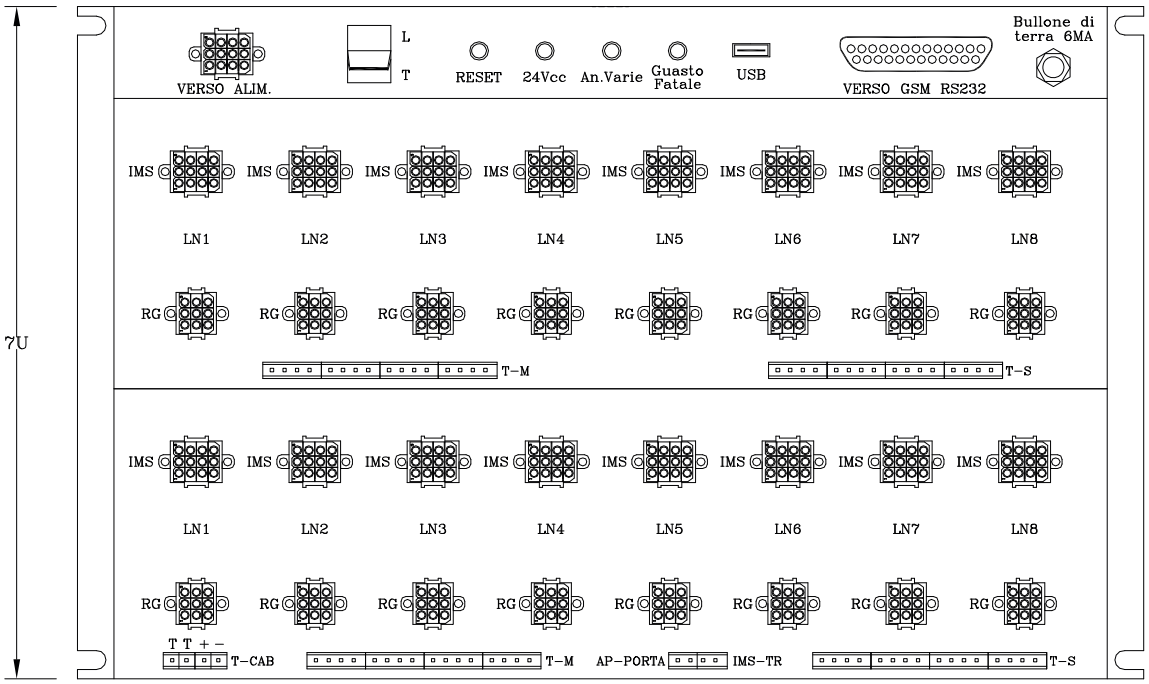

UE 16

Figura 4: Vista frontale - Pannelli

(**)	MATRICOLA	I (kA) (*)	TIPO	IMS	SCOMPARTO
U	16 10 50	12.5	DY 404	DY 513	U
N	16 10 51	16	NDY 404 /16		

(*) Corrente di breve durata nominale ammissibile
(**) U= Unificato N= Normalizzato

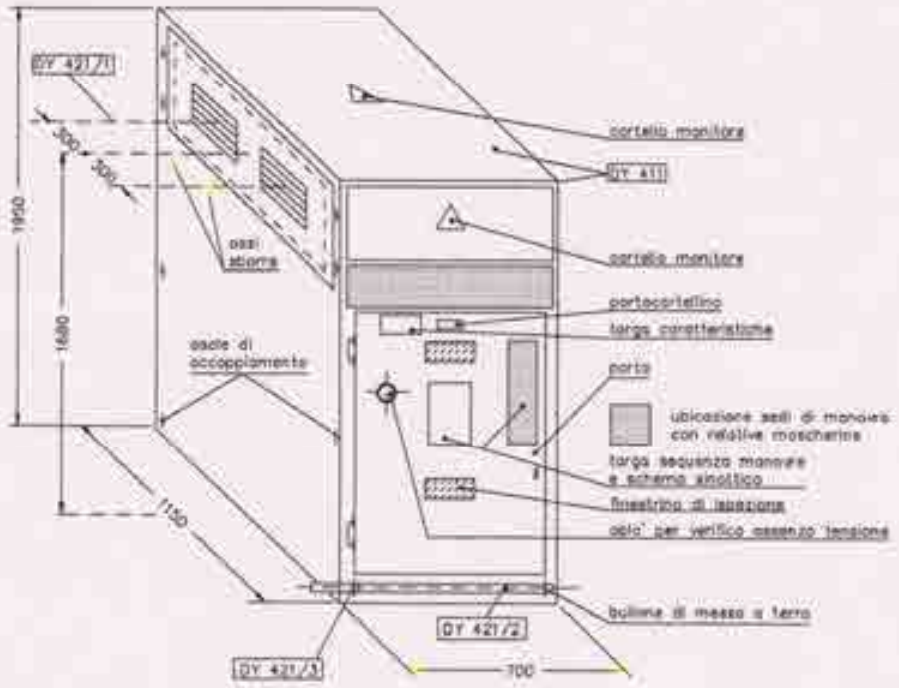

SCHEMA ELETTRICO DELLO SCOMPARTO

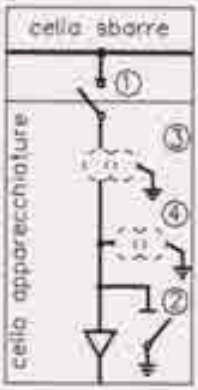

① interruttore di manovra – sezionatore

② Sezionatore di messa a terra

③ N° 2 trasformatori di corrente DY 4131 ovvero
N° 3 trasformatori di corrente DY 4133

④ N° 2 trasformatori di tensione a due poli DY 4133 ovvero
N° 2 trasformatori di corrente a due poli DY 4143

Designazione Ridotta:

S	C	O	M	P		U		2	4	k	V		X	X		K	A		I	M	S		C	A	B		S	E	C								

ACQUISTI, APPALTI E UNIFICAZIONE - UNIFICAZIONE IMPIANTI

Enel Distribuzione	CABINE SECONDARIE **APPARECCHIATURA PREFABBRICATA CON INVOLUCRO METALLICO 24Kv -SCOMPARTO "IM"** (LINEA CON IMS MOTORIZZATO ISOLATO IN ARIA ED ALIMENTATO IN CORRENTE CONTINUA)	16 10 E **DY 406** Dicembre 1999 Ed. 2 - 1/10

(**)	MATRICOLA	I (kA) (*)	TIPO	RIVELATORE PRESENZA TENSIONE	IMS	SCOMPARTO
U	16 10 70	12.5	DY 406	-	DY 513 con comando elettrico 24 vcc TIPO DY 1050	IM
N	16 10 71	16	NDY 406 /16	-		
U	16 10 72	12,5	DY 406 /1	X (N° 3 DJ1054+DY811)		
N	16 10 73	16	NDY 406 /116	X (N° 3 DJ1054+DY811)		

(*) Corrente di breve durata nominale ammissibile
(**) U= Unificato N= Normalizzato

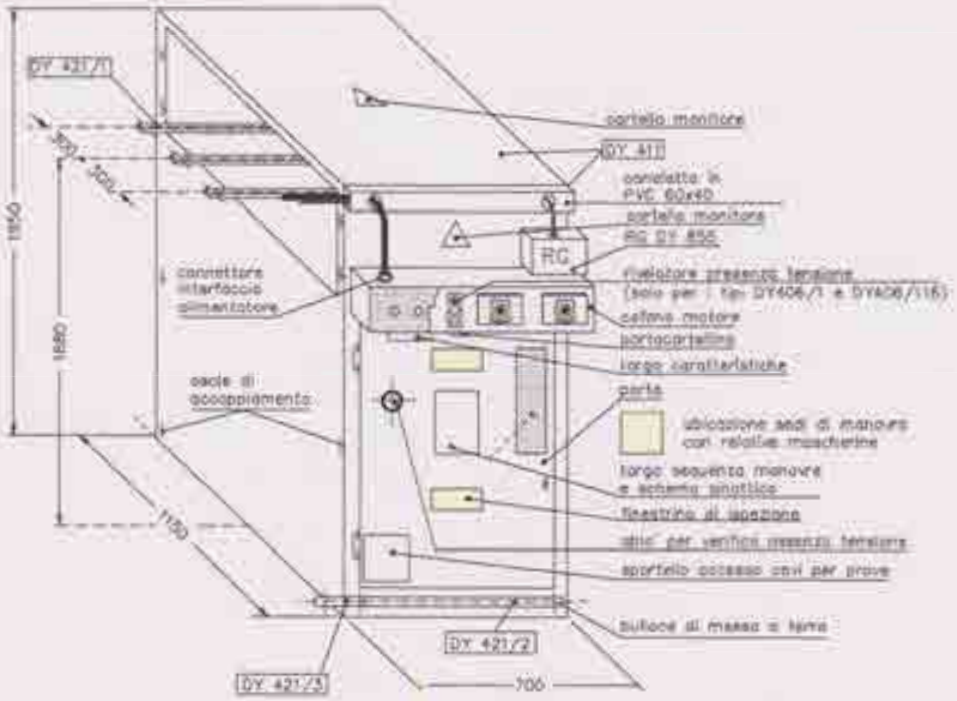

Designazione ridotta:

S	C	O	M	P	A	R	T	O		I	M		2	4	k	V		X	X	X	X	X	X	X	X	X	X	X	X	X	X	X	X	X	X	X	X